M67001.AR.004734
MCB CAMP LEJEUNE
5090.3a

FINAL PRELIMINARY ASSESSMENT/SITE INSPECTION REPORT SITE UXO 8 FORMER LEJEUNE CANTONMENT 2.36 INCH BAZOOKA RANGE, CS CHAMBER, AND NBC TRAINING TRAIL, AND D-7 GAS CHAMBER MCB CAMP LEJEUNE NC

12/1/2011

CH2M HILL

Final

Preliminary Assessment/Site Inspection Report Site UXO-08, Former Lejeune Cantonment 2.36-inch Bazooka Range, Base CS Chamber, and NBC Training Trail (ASR# 2.182), and D-7 Gas Chamber (ASR# 2.80)

Marine Corps Base Camp Lejeune
Jacksonville, North Carolina

Contract Task Order 0168

December 2011

Prepared for

Department of the Navy
Naval Facilities Engineering Command
Mid-Atlantic Division

Under the

NAVFAC CLEAN III Program
Contract N62470-02-D-3052

Prepared by

CH2MHILL.

Contents

Acronyms and Abbreviations ..... **vii**

1. Introduction **1-1**
1.1 Objectives and Approach 1-1
1.2 Report Organization 1-1

2. Site Background **2-1**
2.1 MCB CamLej Location and Description 2-1
2.2 Site Location and Description 2-1
2.3 Site History 2-2
2.3.1 Land Use 2-2
2.3.2 Munitions Use 2-3
2.4 Previous Investigations 2-4
2.5 Regional Climate 2-6
2.6 Regional Geology and Hydrogeology 2-6
2.7 Regional Water Usage 2-6
2.8 Site UXO-08 Geology and Hydrogeology 2-6
2.8.1 Site Geology 2-6
2.8.2 Site Hydrogeology 2-7
2.9 Site Topography, Drainage, and Surface Features 2-7

3. Field Investigation Activities **3-1**
3.1 Site Preparation and Support 3-1
3.1.1 MEC Avoidance 3-1
3.1.2 Surveying 3-1
3.1.3 Vegetation Clearance 3-1
3.2 Digital Geophysical Mapping 3-2
3.2.1 Site UXO-08 Geophysical Prove-Out 3-2
3.2.2 Site UXO-08 Digital Geophysical Mapping Survey 3-2
3.2.3 Hadnot Point Construction Area Geophysical Mapping Survey 3-2
3.2.4 Data Quality Objectives 3-2
3.2.5 Quality Control 3-3
3.3 Hadnot Point Construction Area Anomaly Investigation 3-3
3.4 Environmental Investigation Activities 3-5
3.4.1 Surface Soil Sampling 3-5
3.4.2 Subsurface Soil Sampling 3-8
3.4.3 Groundwater Sampling 3-10
3.4.4 Surface Water and Sediment Sampling 3-13
3.4.5 Quality Assurance and Quality Control Sampling 3-14
3.5 Investigation-derived Waste Management 3-14

4. Investigation Results **4-1**
4.1 Digital Geophysical Mapping Results 4-1
4.1.1 Site UXO-08 4-1
4.1.2 HPCA 4-1

4.2 Intrusive Investigation Results ... 4-1
4.3 Environmental Investigation Results ... 4-3
4.3.1 Surface Soil ... 4-3
4.3.2 Subsurface Soil ... 4-8
4.3.3 Groundwater ... 4-13
4.3.4 Surface Water ... 4-19
4.3.5 Sediment ... 4-20
4.3.6 Post-Detonation Surface Soil ... 4-21

5. Human Health Risk Assessment ... 5-1
5.1 Human Health Conceptual Site Model ... 5-2
5.2 Phase I—Human Health Risk-based Screening and Risk Ratio Evaluation ... 5-3
5.2.1 Methodology ... 5-3
5.2.2 Human Health Risk Screening Results ... 5-4
5.3 Phase II—Human Health Risk Assessment ... 5-6
5.3.1 Identification of COPCs ... 5-7
5.3.2 Exposure Assessment ... 5-8
5.3.3 Toxicity Assessment ... 5-9
5.3.4 Risk Characterization ... 5-10
5.3.5 Risk Assessment Results ... 5-11
5.4 Uncertainty Associated with Human Health Assessment ... 5-13
5.5 Human Health Risk Summary ... 5-15

6. Ecological Risk Screening ... 6-1
6.1 Screening Methodology ... 6-1
6.2 Ecological Risk Screening Results ... 6-2
6.2.1 Results for Soil ... 6-2
6.2.2 Results for Groundwater ... 6-3
6.2.3 Results for Surface Water ... 6-3
6.2.4 Results for Sediment ... 6-4
6.3 Uncertainty ... 6-4
6.4 Conclusion ... 6-6

7. Conclusions and Recommendations ... 7-1
7.1 Digital Geophysical Mapping ... 7-1
7.2 Surface Soil ... 7-1
7.3 Subsurface Soil ... 7-2
7.4 Groundwater ... 7-3
7.5 Surface Water ... 7-4
7.6 Sediment ... 7-4
7.7 Post-Detonation Surface Soil ... 7-4
7.8 No Further Action Recommendation ... 7-5

8. References ... 8-1

Appendixes

A Munitions Response Site Prioritization Protocol Site Summary Submittal to Quality Assurance Panel
B Archival Search Report for the Site Inspection
C Geophysical Investigation Reports (C-1 and C-2)
D Geophysical Prove-out Report
E Data Validation Summary Reports
F Soil Boring Logs
G Groundwater Sampling Sheets
H Well Completion Diagrams
I Data Tables and Raw Analytical Data
J Human Health Risk Assessment Tables
K ProUCL Data
L Ecological Risk Screening Tables
M Regulatory Concurrence Letters

Tables

2-1 OU 1 and Site UXO-08 Historical Investigations and Remedial Actions
2-2 Hydrostratigraphic Units of the North Carolina Coastal Plain
2-3 Well Construction and Groundwater Elevation Information

3-1 Digital Geophysical Mapping Instruments Standardization Tests and Acceptance Criteria
3-2 Groundwater Field Sampling Parameters
3-3 Quality Assurance/Quality Control Sampling Program

5-1 Samples Used in the Risk Assessment
5-2 Summary of COPCs
5-3 Summary of RME Cancer Risks and Hazard Indices

Figures (presented at the end of each section)

1-1 Base Location Map

2-1 Site UXO-08 Site Map
2-2 OU-1 Site Map
2-3 Water Table Potentiometric Surface Map - August 2008

3-1 Overview of Digital Geophysical Mapping Quality Control Program
3-2 Environmental Sampling Locations (January 2007 and June 2008)
3-3 Hadnot Point Construction Area, Environmental Sample Locations (November 2008-January 2009)
3-4 Post Office Intersection Area, Environmental Sampling Locations (November 2008–January 2009)
3-5 Fitness Center Environmental Sampling Locations (November 2008-January 2009)

4-1 Digital Geophysical Mapping Results
4-2 Geophysical Anomalies Selected for Intrusive Investigation

4-3 Surface Soil Exceedances (January 2007 and June 2008 Samples)
4-4 Surface Soil VOC and SVOC Exceedances, Hadnot Point Construction Area (November 2008-January 2009 Samples)
4-5 Surface Soil Metals Exceedances, Hadnot Point Construction Area (November 2008-January 2009 Samples)
4-6 Surface Soil Exceedances, Post Office Intersection Area (November 2008- January 2009 Samples)
4-7 Surface Soil Exceedances, Fitness Center (November 2008-January 2009)
4-8 Subsurface Soil Exceedances (January 2007 and June 2008 Samples)
4-9 Subsurface Soil Exceedances, Hadnot Point Construction Area (November 2008-January 2009)
4-10 Subsurface Soil Exceedances, Fitness Center (November 2008-January 2009)
4-11 Groundwater Exceedances, Site UXO-08 and Hadnot Point Construction Area
4-12 Groundwater Exceedances, Fitness Center (November 2008-January 2009)
4-13 Sediment and Surface Water Exceedances
4-14 Post Detonation Surface Soil Exceedances

5-1 Conceptual Site Model for HHRA
5-2 Site 78 Land Use Controls and Groundwater Treatment System

Acronyms and Abbreviations

ASR	Archival Search Report
BBG	Base background
bgs	below ground surface
BTEX	benzene, toluene, ethylbenzene, and total xylenes
bTOC	below top of casing
CERCLA	Comprehensive Environmental Response, Compensation, and Liability Act
CLEAN	Comprehensive Long-Term Environmental Action—Navy
cm/s	centimeters per second
COC	constituents of concern
COPC	contaminant of potential concern
CR	carcinogenic risk
CR′	contact rate
CS	o-chlorobenzylidene malononitrile
CSF	cancer slope factor
CSM	conceptual site model
CTO	contract task order
CWM	chemical warfare materiel
^{o}F	degrees Fahrenheit
days/yr	days per year
DCA	dichloroethane
DCE	dichloroethene
DDD	dichlorodiphenyldichloroethane
DDE	dichlorodiphenyldichloroethene
DDT	dichlorodiphenyltrichloroethane
DGM	digital geophysical mapping
DMM	discarded military munition
DO	dissolved oxygen
DPT	direct push technology
DQO	data quality objective
DRO	diesel range organics
EC50	effect concentration for 50 percent of organisms
EcoSSL	ecological soil screening level
ELCR	excess lifetime carcinogenic risk
EM61	EM61-MK2 Electromagnetic System
EPC	exposure point concentration
ESV	ecological screening value
FC	Fitness Center
FID	flame ionization detector
ft/day	feet per day

ft/ft	feet per foot
GI	gastrointestinal
gpd/ft	gallons per day per foot
GPO	geophysical prove-out
GRO	gasoline-range organics
HHRA	Human Health Risk Assessment
HHRS	Human Health Risk Screening
HI	hazard index
HPCA	Hadnot Point Construction Area
HPIA	Hadnot Point Industrial Area
HQ	hazard quotient
IDW	investigation-derived waste
IRA	Interim Remedial Action
IUR	inhalation unit risk factor
kg	kilogram
LTM	long-term monitoring
LUC	land use control
µg/kg	micrograms per kilogram
µg/L	micrograms per liter
m	meter
MADEP	Massachusetts Department of Environmental Protection
MC	munitions constituents
MCB CamLej	Marine Corps Base Camp Lejeune
MCL	maximum contaminant level
MEC	munitions and explosives of concern
mg/kg	milligrams per kilogram
mg/kg-day	milligrams per kilogram per day
mg/L	milligrams per liter
MILCON	military construction
MMRP	Military Munitions Response Program
MPP	Master Project Plans
MPPEH	material potentially presenting an explosive hazard
MRP	Munitions Response Program
MRSPP	Munitions Response Site Prioritization Protocol
MS/MSD	matrix spike/matrix spike duplicate
mV	millivolt
NAVFAC	Naval Facilities Engineering Command
NBC	nuclear, biological, and chemical
NC 2B Standard	NCAC 02B Surface Water Standard
NCAC	North Carolina Administrative Code
NCDENR	North Carolina Department of Environment and Natural Resources
NC SSL	North Carolina Soil Screening Level
NCEA	National Center for Environmental Assessment
NC 2L Standard	North Carolina Groundwater Quality Standard

NRWQC	National Recommended Water Quality Criteria
NTU	nephelometric turbidity unit
ORP	oxidation-reduction potential
OU	operable unit
PA	Preliminary Assessment
PAH	polynuclear aromatic hydrocarbon
PCB	polychlorinated biphenyl
PID	photoionization detector
POIA	Post Office Intersection Area
PPE	personal protective equipment
PPRTV	Provisional Peer Reviewed Toxicity Value
PRG	preliminary remediation goal
QA	quality assurance
QC	quality control
RAGS	Risk Assessment Guidance for Superfund
RCRA	Resource Conservation and Recovery Act
RDX	hexahydro-1,3,5-trinitro-1,3,5-triazine
RfC	inhalation reference concentration
RfD	reference dose
RI	Remedial Investigation
RME	reasonable maximum exposure
ROD	Record of Decision
RSL	Regional Screening Level
SI	Site Inspection
SOP	standard operating procedure
SU	standard unit
SVOC	semivolatile organic compound
TAL	Target Analyte List
TCE	trichloroethene
TCL	Target Compound List
TOC	total organic carbon
TPH	total petroleum hydrocarbons
UCL	upper confidence limit
UD	not detected
UF	uncertainty factor
USAE	USA Environmental, Inc.
USACE	United States Army Corps of Engineers
USEPA	United States Environmental Protection Agency
UST	underground storage tank
UXO	unexploded ordnance
VOC	volatile organic compound
VC	vinyl chloride

SECTION 1

Introduction

Marine Corps Base Camp Lejeune (MCB CamLej) is in the process of investigating closed ranges at the Base following the Comprehensive Environmental Response, Compensation, and Liability Act (CERCLA) investigation process. Due to historical activities conducted at Military Munitions Response Program (MMRP) Site Unexploded Ordnance (UXO)-08 (**Figure 1-1**), a Preliminary Assessment (PA)/Site Inspection (SI) was performed.

This PA/SI was conducted by CH2M HILL under the Naval Facilities Engineering Command (NAVFAC), Comprehensive Long-term Environmental Action—Navy (CLEAN) III Contract N62470-02-D-3052, Contract Task Order (CTO) 0168 and CTO 109, as well as the NAVFAC– Mid Atlantic Division, Multi-Media Program under Contract N62470-07-D-0501 Task Order (TO)-009.

1.1 Objectives and Approach

The objective of the PA/SI was to evalute the potential presence and nature of impacts to environmental media at Site UXO-08 resulting from the use of military munitions at the site.

The approach used to accomplish the stated objectives included the following:

- Research of historical activities that may have resulted in environmental or MEC contamination at the site, including a review of archival records and interviews with current and former installation personnel.
- Evaluation of the potential impacts to the environment by conducting soil, groundwater, sediment, and surface water investigations.
- Ecological and human health risk screenings.
- Digital geophysical mapping (DGM) to identify the number and density of geophysical anomalies that represent potential subsurface MEC.
- Intrusive investigation of a percentage of the geophysical anomalies identified during the DGM survey as representing potential subsurface MEC.

1.2 Report Organization

This PA/SI report is organized as follows:

- Section 1, Introduction
- Section 2, Site Background
- Section 3, Field Investigation Activities
- Section 4, Investigation Results
- Section 5, Human Health Risk Assessment
- Section 6, Ecological Risk Screening
- Section 7, Conclusions and Recommendations

- Section 8, References
- Appendix A, Munitions Response Site Prioritization Protocol Site Summary Submittal to Quality Assurance Panel
- Appendix B, Archival Search Report for the Site Inspection
- Appendix C, Geophysical Investigation Reports (C-1 and C-2)
- Appendix D, Geophysical Prove-out Report
- Appendix E, Data Validation Summary Reports
- Appendix F, Soil Boring Logs
- Appendix G, Groundwater Sampling Sheets
- Appendix H, Well Completion Diagrams
- Appendix I, Data Tables and Raw Analytical Data
- AppendixJ, Human Health Risk Assessment Tables
- Appendix K, ProUCL Data
- Appendix L, Ecological Risk Screening Tables

Figures and tables are provided at the end of each respective section.

\\aphrodite\proj\USNavFacEngCom\CampLejeune\MapFiles\Sit_UXO_08\PA_SI\Figure 1-1 Base Location Map.mxd

Legend

- Highways
- Site UXO-08
- Installation Boundary

N

0 7,500 15,000 30,000 Feet

1 inch = 15,000 feet

Figure 1-1
Base Location Map
Site UXO-08
PA/SI Report
MCB CamLej
North Carolina

CH2MHILL

Generated by: ***Lael Feist*** Checked by: ***David Seed***

SECTION 2

Site Background

This section presents a brief summary of regional and site-specific information, including location, site setting, physical characteristics, and history.

2.1 MCB CamLej Location and Description

MCB CamLej encompasses approximately 236 square miles of land in Onslow County, North Carolina, adjacent to the southern boundary of the City of Jacksonville. Jacksonville is the largest city near MCB CamLej and contains approximately half of the county's total population. Since 1990, much of the MCB CamLej complex has been part of Jacksonville. The remaining areas adjacent to the Base are generally rural.

MCB CamLej is bordered by the Atlantic Ocean to the south and east, U.S. Route 17 to the west, and State Route 24 to the north, and is bisected by the New River, which flows into the Atlantic Ocean in a southeasterly direction. The MCB CamLej complex consists of six geographical locations under the jurisdiction of the Base command. These areas include Camp Geiger, Montford Point, Courthouse Bay, Mainside, the Greater Sandy Run Area, and the Rifle Range Area. **Figure 1-1** shows the location of Site UXO-08 within MCB CamLej.

2.2 Site Location and Description

Site UXO-08 is located in the Mainside area of MCB CamLej and encompasses an area of approximately 144 acres bounded by Holcomb Boulevard to the northwest, McHugh Boulevard to the southwest, Louis Road to the southeast, and Gum Street to the northeast (**Figure 2-1**). MCB CamLej is planning military construction (MILCON) projects within the Hadnot Point Industrial Area (HPIA), which is bounded by Sneads Ferry Road to the northeast, Holcomb Boulevard to the northwest, Louis Road to the southeast, and Main Service Road/McHugh Boulevard to the southwest. The MILCON plan consists of several areas that overlap Site UXO-08 (31 overlapping acres): the Hadnot Point Construction Area (HPCA), the Post Office Intersection Area (POIA), and the Fitness Center (FC), as shown on **Figure 2-1**.

Site UXO-08 is located within one of the cantonment areas of MCB CamLej. This cantonment area includes sites used for housing and recreation as well as those used by the military and civilian work force for maintenance, medical care, welfare, and administration (Mier, 1989).

The proposed HPCA encompasses approximately 109 acres and is bounded by Louis Road to the southeast, Ash Street to the northeast, East Road to the northwest, and athletic fields to the southwest. The majority of the HPCA is paved (e.g., roadways, parking lots, loading dock areas, storage lots); however, occasional wooded and grassy areas are also present. Site UXO-08 encompasses approximately 29 acres of the HPCA (southwest of Gum Street).

The POIA is located at the intersection of McHugh Boulevard and Louis Road and encompasses approximately 2.5 acres. In addition to paved roadways and sidewalks, the

POIA contains grassy areas on each corner. The northwest quarter of the POIA is located within Site UXO-08.

The FC site is located on the northeast side of McHugh Boulevard and encompasses approximately 4 acres including two entry driveways, a small parking lot, grassy areas, and two buildings used for athletics. The FC site is located entirely within Site UXO-08.

W.P.T. Hill Field, also known as "the parade grounds," is located within Site UXO-08 along the southeastern side of Holcomb Boulevard. This field is an expansive lawn used for ceremonies, receptions, parades, and other formal assemblies. It is also the site of community gatherings, open-air concerts, and athletic facilities (e.g., running track, softball fields). The parade grounds frequently serves as a helicopter landing zone for both administrative and tactical helicopter lifts (MCB CamLej, 2005). The field is surrounded by industrial and administrative areas.

The primary land uses within Site UXO-08 are industrial and administrative. The eastern and northeastern portions of Site UXO-08 are primarily industrial and include a coal power plant and coal yard, while areas to the west and southwest primarily house administrative buildings and associated roadways and parking lots.

2.3 Site History

In May and August 2007, CH2M HILL conducted a detailed investigative review of existing information regarding Site UXO-08. The review emphasized obtaining information regarding historical activities that may have resulted in environmental contamination at Site UXO-08. Information obtained during this effort is presented in the ASR (**Appendix B**).

2.3.1 Land Use

The HPIA was constructed in the late 1930s and consisted of approximately 75 buildings and facilities, including maintenance shops, gas stations, administrative offices, warehouses, and storage yards (Baker, 1994a). Spills and leaks have occurred in the HPIA over the years, impacting the soil and groundwater in the area. Most of these spills and leaks have consisted of petroleum-related products and solvents from underground storage tanks (USTs), drums, and uncontained waste storage areas (Baker, 1994a). The HPIA, HPCA, POIA, and FC sites are within the boundary of Operable Unit (OU) 1. OU 1, which consists of Installation Restoration Program (IRP) Sites 21, 24, and 78, is bordered by Holcomb Boulevard to the northwest, Sneads Ferry Road to the northeast, and McHugh Boulevard to the southwest (**Figure 2-2)**; the site is bordered to the southeast by Cogdels Creek.

Land planning for the recreational area west of the HPIA began in late April 1941. The area included permanent administrative, housing, and subsistence buildings for the First Marine Division and was purchased under the name Area D (Louis Berger Group, 2002). W.P.T. Hill Field appears to have been originally located on approximately 10 tracts of various sizes (Jordan, 2005). At the time of purchase in November 1941 and September 1942, the tracts contained structures such as a school, cabins, cribs, smokehouses, stables, and barns (Navy, 1941; 1942). The facility at that time was known as Marine Barracks New River, North Carolina, a name that was changed to Marine Corps Camp Lejeune in 1942 (Global Security, 2005).

In March and April 1943, athletic fields were constructed on the land that now makes up Site UXO-08. The athletic fields were located on the eastern side of Holcomb Boulevard, opposite the Post Administration Building, and encompassed a parade ground, four baseball diamonds, and a football stadium with a quarter-mile track around it (CH2M HILL, 2009).

From the late 1940s to 1980, Site 24, also known as the Industrial Fly Ash Dump, was used for the disposal of fly ash, cinders, solvents, used paint-stripping compounds, sewage sludge, and water treatment sludge. An estimated 31,500 tons of fly ash and an estimated 45,000 gallons of stripping compounds were disposed of at the site (CH2M HILL, 2009).

From 1950 to 1951, a pit located in the northern portion of Site 21, also known as the Transformer Storage Lot 140, was used as a drainage receptor for oil from transformers; however, the quantity of oil is unknown. Surface discharge of transformer oils was also reported. In 1958, the pest control shop was moved from Building 712 (Site 2) to Building 1105, located in the southern portion of Site 21. From 1958 to 1977, Building 1105 was used for pesticide mixing and as a cleaning area for pesticide application equipment. Overland discharge of wastewater generated during cleaning operations was documented. The estimated quantity of wastewater discharged was approximately 350 gallons per week in 1977 (CH2M HILL, 2009).

2.3.2 Munitions Use

Areas of interest within Site UXO-08 identified by the Range Identification and Preliminary Assessment Report (United States Army Corps of Engineers [USACE], 2001) included:

- Suspected former 2.36-inch Bazooka Range, former Base o-chlorobenzylidene malononitrile (CS) Chamber, and former Nuclear, Biological, and Chemical (NBC) Training Trail (ASR #2.182)
- Alternate location of the Former Base CS Chamber
- Former D-7 Gas Chamber (ASR #2.80)

The Base CS Chamber and NBC Training Trail (ASR # 2.182) were located between the proposed POIA and FC sites, as shown on **Figure 2-1**, to simulate chemical exposure scenarios. The NBC Training Trail was used to demonstrate decontamination procedures soldiers were required to conduct before they could leave the facility. Base mapping indicates that historical records are not consistent with respect to the actual location of the Base CS Chamber; therefore, both locations (Base CS Chamber and the alternate location of the Base CS Chamber) are shown on **Figure 2-1**. The MCB CamLej CS Gas Chamber was used between 1985 and 1987. This gas chamber was identified in the Range Identification and Preliminary Assessment Report (USACE, 2001), which listed the following agents, chemical agent simulants, and munitions as having reportedly been used at this location:

- CS, a non-lethal riot control agent
- Simulants Chemical Agent, Polyethylene Glycol 200
- Training Set, Chemical Agent Identification, Simulants M72A1/A2
- Blister Agent Simulant, Molasses Residuum
- Training Ammunitions (e.g., tear gas grenades)

- Atomic Explosion Simulator DVC 39-1
- Atomic Simulator (fabricated locally in accordance with FM 30-101)
- Artillery Simulator, M110

No information is available to provide an estimated quantity of usage (USACE, 2001).

The Range Identification and Preliminary Assessment Report (USACE, 2001) identified a second gas chamber in the vicinity of the proposed FC site: the D7 Gas Chamber (ASR#2.80), reportedly located across McHugh Boulevard from the FC site, as shown on **Figure 2-1**. The D7 Gas Chamber (ASR#2.80) is estimated to have been in use from 1953 to 1961, and only tear gas was reportedly used (USACE, 2001). Neither gas chamber within Site UXO-08 is reported to contain used chemical warfare materiel (CWM).

The 2002 Range Inventory Report (URS, 2002) indicated the presence of a suspected firing range within Site UXO-08, designated as the Lejeune Cantonment 2.36-inch Bazooka Range. Retired Base Explosive Ordnance Disposal personnel (Richardson, 2007) reported responding to the identification of potential bazooka rounds on several occasions at various locations within the parade grounds during the 1970s and 1990s. The suspected range was not identified in any other historical documents reviewed during this archival research effort. The Site UXO-08 area is not associated with an active impact area, range, range fan, or danger zone.

2.4 Previous Investigations

Several site investigations have been performed in and around Site UXO-08 dating back to 1983. The majority of these studies were completed for OU 1, which encompasses approximately 690 acres and consists of Site 21, Site 24, and Site 78. Site 78 encompasses Site UXO-08 (**Figure 2-2**). Historical investigations and remedial actions at the site associated with OU 1 are summarized in **Table 2-1**.

Within Site 78, there are three distinct areas of impacted groundwater. The northern area in the vicinity of Buildings 901 and 903 is impacted primarily with chlorinated volatile organic compounds (VOCs); the central area is impacted with petroleum-related VOCs associated with the Hadnot Point Fuel Farm; and the southern area in the vicinity of Buildings 1601 and 1709 is impacted primarily with chlorinated VOCs. Groundwater in the northern and southern areas is primarily impacted by VOCs, including benzene, toluene, ethylbenzene, and total xylenes (BTEX), tetrachloroethene, trichloroethene (TCE), vinyl chloride (VC), 1,1-dichloroethene (DCE), cis-1,2-DCE, and trans-1,2-DCE.

Two separate groundwater pump-and-treat systems have been in operation at Site 78 since 1994 to treat contaminated groundwater and to prevent offsite contaminant migration. Long-term monitoring (LTM) began at Site 78 in 1995 and is ongoing. Land use controls (LUCs) were implemented at OU 1 in 2001 and updated in 2002 to prevent exposure to contaminated groundwater. The LUCs include aquifer use control boundaries, non-industrial use control boundaries, and intrusive activities control boundaries for groundwater.

TABLE 2-1
OU 1 and Site UXO-08 Historical Investigations and Remedial Actions
Site UXO-08 Former Cantonment Bazooka Range, Base CS Chamber, NBC Training Trail, and D-7 Gas Chamber
PA/SI Report
MCB CamLej, North Carolina

Investigation Phase	Date	Conclusions
IAS (WAR, 1983)	1983	The IAS identified Sites 21 and 24 as potential sources of contamination and recommended performing a Confirmation Study.
Confirmation Study (ESE, 1990)	1984-1988	The Confirmation Study confirmed the presence of VOCs related to fuels and/or solvents in groundwater and nearby water supply wells. Site 78 was created to investigate the entire Hadnot Point Industrial Area.
Hadnot Point Fuel Farm (Site 22) Groundwater Study (O'Brien and Gere Engineers, 1990)	1990	The study concluded that fuel losses likely occurred predominantly through leaks in the transfer lines or valves. Analysis indicated that floating product had contributed to significant levels of dissolved petroleum compounds in groundwater. Based on the results of this study, a product recovery/groundwater treatment system was designed for the fuel farm and began operation in 1991.
Supplemental Characterization Study (ESE, 1992)	1990-1991	The study confirmed findings from previous investigations and identified dissolved petroleum compounds in groundwater downgradient of the fuel farm. VOCs, SVOCs, pesticides, and PCBs were identified in Site 78 soil samples.
RI (ESE, 1992)	1991	The RI concluded that TCE was present only in soils associated with a UST at Building 902.
IRA RI/FS (Baker, 1992a), and ROD (Baker, 1992b)	1992	The IRA RI identified three contaminant plumes within the Surficial aquifer at Site 78; however, one plume was determined to be associated with the Hadnot Point Fuel Farm and was addressed under the UST Program. Of the two remaining plumes, one was located in the northern area of Site 78 and the other was in the southern area of the site. Recommended addressing Surficial groundwater at Site 78 with two onsite pump-and-treat systems to contain the two plumes as the preferred alternative for remediating groundwater. The systems began operation in December 1994.
RI (Baker, 1994a)	1993	Analytical results indicated that groundwater in the Surficial and Castle Hayne aquifers had been impacted by VOCs and metals. Potential risks to human health and ecological receptors were identified.
FS (Baker, 1994a)	1994	Developed and screened remedial alternatives for addressing soil and groundwater contamination.
PRAP (Baker, 1994b) and ROD (Baker, 1994c)	1994	Recommended addressing soil and groundwater contamination with excavation and offsite disposal of soil, extension of the IRA treatment systems, and implementation of LUCs and LTM.
Remedy-in-Place (OHM, 1996)	1995	Approximately 811 tons of contaminated soil were excavated from OU 1 and transported offsite for incineration and land disposal. LUCs were implemented.
Supplemental Investigation (CH2M HILL, 2002)	2002	Identified VOCs in soil samples collected from within several known "hot spots" and concluded that the plume at Site 78 South extends further south and southwest than delineated during previous investigations.
ORC and HRC Pilot Study (Baker, 2003)	2003	Recommended the continuation of LTM in order to observe reductions in contaminant concentrations under natural conditions.

FS = Feasibility Study; HRC = Hydrogen Release Compound; IAS = Initial Assessment Study; IRA = Interim Remedial Action; LTM = long-term monitoring; LUC = land use control; ORC = Oxygen Release Compound; PCB = polychlorinated biphenyl; PRAP = Proposed Remedial Action Plan; RI = Remedial Investigation; ROD = Record of Decision; SVOC = semivolatile organic compound; TCE = trichloroethene; UST = underground storage tank; VOC = volatile organic compound

2.5 Regional Climate

Mild winters and hot, humid summers generally characterize climatic conditions within southeastern North Carolina and at MCB CamLej. Winters are usually short and mild with occasional brief cold periods. Summers are long and relatively hot and humid. Average annual precipitation in the area is approximately 50 inches. The average ambient air temperature is 63 degrees Fahrenheit (°F) (USDA, 2002).

2.6 Regional Geology and Hydrogeology

Regional geology and hydrogeology at MCB CamLej are discussed in Sections 1.6 and 1.7 of the MRP Master Project Plans (CH2M HILL, 2008b).

2.7 Regional Water Usage

Regionally in southeastern North Carolina, the Castle Hayne aquifer may be used as a potable source of domestic water supply and for watering lawns and filling swimming pools. Potable water supplies for MCB CamLej and the surrounding residential areas are provided by water supply wells that pump groundwater from the Castle Hayne aquifer. Although freshwater is present within the Surficial, Castle Hayne, Beaufort, and Peedee aquifers, all of which are located below MCB CamLej, only the Castle Hayne aquifer is used by MCB CamLej as a water supply source (Cardinell et al, 1993).

Two active public water supply wells were identified off-Base north of U.S. Route 17 within a 4-mile radius of the HPCA, POIA, and FC (NC OneMap, 2009). Forty-six water supply wells are located on-Base within a 4-mile radius of the HPCA, POIA, and FC sites, 32 of which are known to be active water supply wells serving the Hadnot Point and Holcomb Boulevard well fields (CH2M HILL, 2010b). MCB CamLej controls all the land between the HPCA, POIA, and FC sites and associated groundwater discharge points.

According to the Wellhead Protection Plan, the HPCA, POIA, and FC sites are located outside of any delineated wellhead protection areas (AHEC, 2002).

2.8 Site UXO-08 Geology and Hydrogeology

2.8.1 Site Geology

The regional stratigraphic framework of the Lower Coastal Plain in North Carolina is summarized on **Table 2-2**. Three of the upper Tertiary Formations (Yorktown, Eastover, and Pungo River) shown on **Table 2-2** are not present in the vicinity of MCB CamLej.

The *Remedial Investigation Report, Operable Unit No. 1 (Sites 21, 24 & 78), Marine Corps Base Camp Lejeune, North Carolina* (Remedial Investigation [RI] Report) (Baker, 1994a) provides details regarding site-specific geology and hydrogeology at Site 78, which encompasses Site UXO-08. At Site 78, interfingering beds of sand, clay, sandy clay, and silt, characteristic of the Undifferentiated Formation, typically extend from ground surface to a depth between 25 and 30 feet below ground surface (bgs). Beneath the Undifferentiated Formation lies the Belgrade Formation (Upper Castle Hayne confining unit), which has been encountered at some sites at MCB CamLej, was not encountered at Site 78. Underlying the Undifferentiated Formation at Site 78 is the River Bend Formation, which is predominantly composed of silty,

medium to coarse grained sand with shell fragments cemented sands, and occurs at approximately 25 to 150 feet bgs.

2.8.2 Site Hydrogeology

The Surficial aquifer resides within the Undifferentiated Formation, and the Castle Hayne aquifer resides locally within the River Bend Formation. Depth to groundwater ranges from 8 to 20 feet bgs. The Belgrade Formation, which acts as a confining unit between the Surficial and the Castle Hayne aquifers in some areas of MCB CamLej, was not encountered.

Based on permeability ("slug") tests and pumping tests conducted at Site 78, the average hydraulic conductivity of the Surficial aquifer ranges from 0.3 to 17 feet per day (ft/day) (1.1×10^{-3} centimeters per second [cm/s] to 6.0×10^{-3} cm/s), and the transmissivity ranges from 3 to 525 gallons per day per foot (gpd/ft).

The average hydraulic conductivity of the Upper Castle Hayne aquifer ranges from 14 to 91 ft/day (4.9×10^{-3} to 3.2×10^{-2} cm/s), and the transmissivity ranges from 6,100 to 183,300 gpd/ft (ESE, 1990).

Well gauging data from August 7, 2008 (**Table 2-3**) suggest that groundwater flow in the Surficial aquifer is southwest toward the New River. **Figure 2-3** depicts the potentiometric surface of the Surficial aquifer in August 2008. Significant elevated water table readings have been observed in the vicinity of monitoring well IR78-GW02, suggesting that there is perched groundwater overlying small confining layers within the Surficial aquifer, resulting in radial groundwater flow and locally increased hydraulic gradients. The horizontal hydraulic gradient was calculated using monitoring wells located outside of the region of groundwater mounding, and was estimated to be 0.003 feet per foot (ft/ft).

2.9 Site Topography, Drainage, and Surface Features

The topography of the site is generally flat and the majority of Site UXO-08 has been cleared of trees, though some wooded areas remain in the southern portion of the property. Cleared areas contain either buildings, pavement, grass, or landscaping. A small unnamed stream exists in the woods in the southeastern portion of the site, as shown on **Figure 2-1**. Surface water drainage appears to generally follow the topography at Site UXO-08 toward this surface water body. The water body flows into a drainage ditch that joins an unnamed tributary of Cogdels Creek downstream. Cogdels Creek flows into the New River.

TABLE 2-2
Hydrostratigraphic Units of the North Carolina Coastal Plain
Site UXO-08 Former Lejeune Cantonment Bazooka Range, Base CS Chamber, and NBC Training Trail
MCB CamLej, North Carolina

Geologic Units			Hydrogeologic Units
System	**Series**	**Formation**	**Aquifer and Confining Unit**
Quaternary	Holocene/Pleistocene	Undifferentiated	Surficial Aquifer
Tertiary	Miocene	Yorktown[a]	Yorktown confining unit
			Yorktown Aquifer
		Eastover[a]	Pungo River confining unit
		Pungo River[a]	Pungo River Aquifer
		Belgrade[b]	Castle Hayne confining unit
	Oligocene	River Bend	Castle Hayne Aquifer
			Beaufort confining unit[c]
			Beaufort Aquifer
	Eocene	Castle Hayne	
	Paleocene	Beaufort	Peedee Confining Unit
Cretaceous	Upper Cretaceous	Peedee	
		Black Creek and Middendorf	Black Creek confining unit
			Black Creek Aquifer
		Cape Fear	Upper Cape Fear confining unit
			Upper cape Fear Aquifer
			Lower Cape Fear confining unit
			Lower Cape Fear Aquifer
	Lower Cretaceous	Unnamed deposits[a]	Lower Cretaceous confining unit
			Lower Cretaceous
Pre-Cretaceous basement rocks			

Notes:

a Geologic and hydrologic units probably not present beneath MCB Camp Lejeune

b Constitutes part of the surficial aquifer and Castle Hayne confining unit in the study area.

c Estimated to be confined to deposits of Paleocene age in the study area.

Source: Harned et al., 1989.

Generated by: Daniel Brown

Checked by: Jennifer Wheat

TABLE 2-3
Well Construction and Groundwater Elevation Information
Site UXO-08 Former Cantonment Bazooka Range, Base CS Chamber, NBC Training Trail, and D-7 Gas Chamber
PA/SI Report
MCB CamLej, North Carolina

Well ID	Screened Interval (ft bgs)	Bottom of Well (ft bTOC)	Surveyed Top of Casing Elevation (ft msl)	Depth to Water January 2007 (ft bTOC)	Depth to Water August 2008 (ft bTOC)	Depth to Water November 2008 (ft bTOC)	Groundwater Elevation January 2007 (ft msl)	Groundwater Elevation August 2008 (ft msl)	Groundwater Elevation November 2008 (ft msl)
IR78-GW01	5-25	25.00	32.92	9.35	20.57	18.98	23.57	12.35	13.94
IR78-GW02	5-20	20.00	32.15	6.47	7.14	7.41	25.68	25.01	24.74
IR78-GW04-1	5-24.5	24.50	31.63	18.22	20.78	NM	13.41	10.85	NM
IR78-GW11	5-25	25.00	28.22	11.08	13.61	13.84	17.14	14.61	14.38
IR78-GW42	3.9-23.2	23.00	28.52	15.95	18.61	18.85	12.57	9.91	9.67
IR78-GW50	18-23	23.00	29.32	NM	18.75	NM	NM	10.57	NM
IR78-GW54	15-25	25.00	28.50	NM	19.25	NM	NM	9.25	NM
IR78-GW55	--	--	29.13	NM	19.95	NM	NM	9.18	NM
IR78-GW56	24.6-29.6	29.60	29.21	16.50	18.84	18.70	12.71	10.37	10.51
IR78-GW59	20-25	25.00	28.11	NM	18.04	18.11	NM	10.07	10.00
IR78-GW61	24-29	29.00	24.19	NM	14.85	14.84	NM	9.34	9.35
IR78-GW62	25-30	30.00	25.62	NM	18.06	NM	NM	7.56	NM
IR78-GW63	24-29	29.00	27.97	NM	19.35	NM	NM	8.62	NM
IR78-GW64	23-28	28.00	26.90	NM	18.31	NM	NM	8.59	NM
IR78-GW65	27-32	32.00	27.91	NM	19.01	NM	NM	8.90	NM
IR78-GW66	N/A	N/A	27.28	NM	17.99	NM	NM	9.29	NM
IR78-GW68	N/A	N/A	28.03	NM	NM	NM	NM	NM	NM
MR08-TW01	16-26	26.00	27.33	NA	NA	20.84	NA	NA	6.49
MR08-TW02	16-26	26.00	26.98	NA	NA	20.53	NA	NA	6.45
MR08-TW03	17-27	27.00	27.40	NA	NA	21.10	NA	NA	6.30
MR08-TW04	17.5-27.5	27.50	26.88	NA	NA	20.86	NA	NA	6.02
MR08-TW05	18-28	28.00	27.70	NA	NA	21.72	NA	NA	5.98
MR08-TW06	16-26	26.00	27.70	NA	NA	21.82	NA	NA	5.88
MR08-TW07	16-26	26.00	27.39	NA	NA	21.52	NA	NA	5.87
MR08-TW08	16-26	26.00	25.00	NA	NA	19.22	NA	NA	5.78
MR08-TW09	15-25	25.00	23.68	NA	NA	17.76	NA	NA	5.92
MR08-TW10	15-25	25.00	23.82	NA	NA	17.62	NA	NA	6.20

TABLE 2-3
Well Construction and Groundwater Elevation Information
Site UXO-08 Former Cantonment Bazooka Range, Base CS Chamber, NBC Training Trail, and D-7 Gas Chamber
PA/SI Report
MCB CamLej, North Carolina

Well ID	Screened Interval (ft bgs)	Bottom of Well (ft bTOC)	Surveyed Top of Casing Elevation (ft msl)	Depth to Water January 2007 (ft bTOC)	Depth to Water August 2008 (ft bTOC)	Depth to Water November 2008 (ft bTOC)	Groundwater Elevation January 2007 (ft msl)	Groundwater Elevation August 2008 (ft msl)	Groundwater Elevation November 2008 (ft msl)
MR08-TW11	14-24	24.00	23.73	NA	NA	17.41	NA	NA	6.32
MR08-TW13	16-26	26.00	26.88	NA	NA	20.28	NA	NA	6.60
MR08-TW14	16-26	26.00	27.80	NA	NA	20.31	NA	NA	7.49
MR08-TW15	16.5-26.5	26.50	26.93	NA	NA	20.05	NA	NA	6.88
MR08-TW16	17-27	27.00	26.76	NA	NA	19.81	NA	NA	6.95
MR08-TW17	16-26	26.00	26.94	NA	NA	19.60	NA	NA	7.34
MR08-TW18	16-26	26.00	26.92	NA	NA	19.57	NA	NA	7.35
MR08-TW19	15.5-25.5	25.50	26.72	NA	NA	19.35	NA	NA	7.37
MR08-TW20	16-26	26.00	27.47	NA	NA	20.22	NA	NA	7.25
MR08-TW21	17-27	27.00	27.08	NA	NA	20.18	NA	NA	6.90
MR08-TW22	15-25	25.00	27.21	NA	NA	20.33	NA	NA	6.88
MR08-TW23	14-24	24.00	23.23	NA	NA	16.12	NA	NA	7.11
MR08-TW24	16-26	26.00	26.62	NA	NA	19.53	NA	NA	7.09
MR08-TW25	16-26	26.00	23.94	NA	NA	16.40	NA	NA	7.54
MR08-TW26	16-26	26.00	26.16	NA	NA	18.16	NA	NA	8.00

Notes:
bgs = below ground surface; bTOC = below top of casing; ft = feet, foot; msl = above mean sea level; NA = not applicable, well not constructed; NM = not measured

\\NORTHEND\PROJ\USNAVFACENGCOM\CAMPLEJEUNE\MAPFILES\SITE_UXO_08\PA_SI\2011\FIGURE_2_1_SITE_MAP_UXO-08_AND_HPIA.MXD

Legend

- Culvert
- Surface Water Course Centerline
- Site UXO-08 Boundary
- Fitness Center
- Hadnot Point Construction Area
- Post Office Intersection Area
- Former Base CS Gas Chamber
- Former D-7 Gas Chamber
- W.P.T. Hill Field (Parade Grounds)
- Alternate Location of Base CS Gas Chamber
- IRP Site 78 Boundary

N

0 300 600 1,200 Feet

1 inch = 600 feet

Figure 2-1
Site Map
Site UXO-08 PA/SI Report
MCB CamLej
North Carolina

CH2MHILL

Generated by: ***Lael Feist*** Checked by: ***David Seed***

\\NORTHEND\PROJ\USNAVFACENGCOM\CAMPLEJEUNE\MAPFILES\SITE_UXO_08\PA_SI\2011\FIGURE_2_2_OU1_SITE_MAP.MXD

Legend

- Non-Industrial Use Control Boundary
- IRP Site 21, 24, and 78 Boundaries
- Site UXO-08 Boundary
- Operable Unit 1 Boundary
- Hadnot Point Construction Area (HPCA)

N

0 500 1,000 2,000 Feet

1 inch = 1,000 feet

Figure 2-2
OU-1 Site Map
Site UXO-08 PA/SI Report
MCB CamLej
North Carolina

CH2MHILL

Generated by: ***Lael Feist*** Checked by: ***David Seed***

\\NORTHEND\PROJ\USNAVFACENGCOM\CAMPLEJEUNE\MAPFILES\SITE_UXO_08\PA_SI\2011\FIGURE_2_3_SHALLOW_GW_CONTOUR.MXD

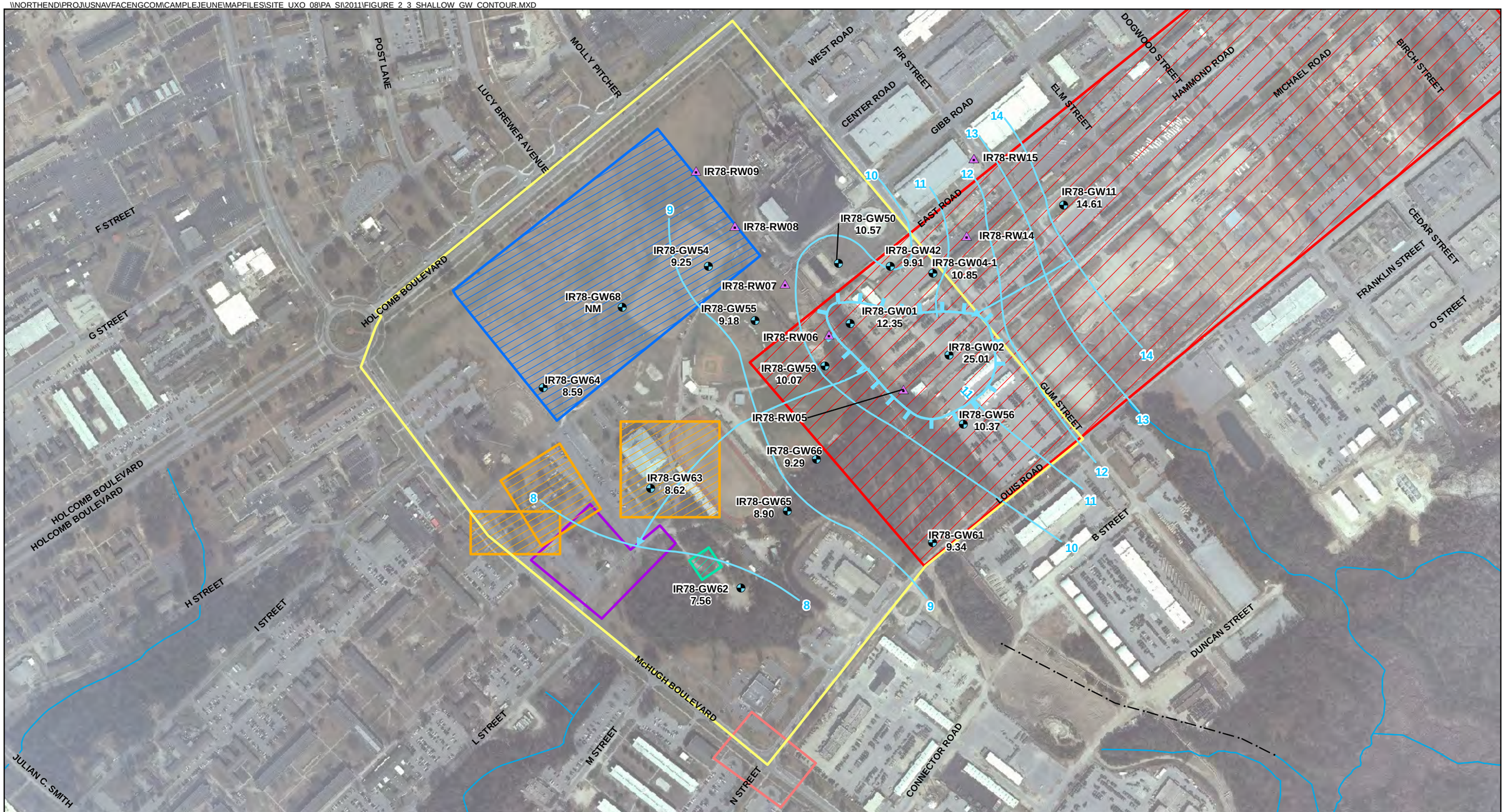

Legend

- Groundwater Recovery Well
- Groundwater Monitoring Well
- Culvert
- Surface Water Course Centerline
- Water Table Potentiometric Surface (August 2008)
- Area of Perched Groundwater
- Direction of Groundwater Flow
- Fitness Center
- Hadnot Point Construction Area
- Post Office Intersection Area
- Former Base CS Gas Chamber
- Former D-7 Gas Chamber
- W.P.T. Hill Field (Parade Grounds)
- Site UXO-08 Boundary

Notes:
NM - Not Measured
10.53 - Groundwater Elevations are feet above mean sea level
Potentiometric surface contours have been interpolated between monitoring well locations and actual conditions may vary.

N

0 225 450 900 Feet

1 inch = 450 feet

Figure 2-3
Water Table Potentiometric Surface Map - August 2008
Site UXO-08 PA/SI Report
MCB CamLej
North Carolina

CH2MHILL

Generated by: ***Lael Feist*** Checked by: ***David Seed***

SECTION 3

Field Investigation Activities

Field activities were conducted at Site UXO-08 between December 2006 and October 2010, in accordance with the Munitions Response Program (MRP) Master Project Plans (MPP) (CH2M HILL, 2008a). Initial activities at Site UXO-08 were conducted under the *Work Plan for Site Inspection at Site UXO-08 Bazooka Range and Gas Chambers* (CH2M HILL, 2006a) and the *Site-Specific Work Plan Addendum for Preliminary Assessment/Site Inspection UXO-08, Former Lejeune Cantonment Bazooka Range, Base CS Chamber, and NBC Training Trail* (CH2M HILL, 2008b). Additional field activities, conducted from October 2008 through January 2009, addressed the 8.5-acre portion of UXO-08 that overlaps with planned MILCON, and were conducted under the *Site-Specific Work Plan Addendum for Focused Preliminary Assessment/Site Inspection Hadnot Point Construction Area, Post Office Intersection Area, and Fitness Center* (CH2M HILL, 2008c). Intrusive investigation of geophysical anomalies was conducted under the *Site-specific Work Plan Addendum for Intrusive Investigation at the 202K MILCON Areas at Site UXO-08, Former Cantonment Area Bazooka Range* (CH2M HILL, 2010a).

3.1 Site Preparation and Support

3.1.1 MEC Avoidance

During utility locating and soil boring activities, MEC avoidance was conducted by qualified UXO technicians from USA Environmental, Inc. (USAE) or CH2M HILL, in accordance with the Explosives Safety Submission Determination Requests (CH2M HILL, 2006b; 2008d). No material potentially presenting an explosive hazard (MPPEH) was encountered.

3.1.2 Surveying

MA Engineering Consultants, Inc. of Cary, North Carolina and Lanier Surveying of Swansboro, North Carolina, both North Carolina-licensed surveyors, were subcontracted to survey Site UXO-08 in preparation for the DGM activities. The surveyors established a network of 50-meter (m) by 50-m grids corresponding to the North Carolina State Plane coordinate system and used wooden stakes to denote each grid node.

3.1.3 Vegetation Clearance

Vegetation was removed from an 8.5-acre area within the HPCA, which overlaps with Site UXO-08. Vegetation less than 6 inches in diameter was cut to within 6 inches of the ground surface, mulched, and left in place. Trees larger than 6 inches in diameter were left undisturbed. All vegetation clearing was performed by East Coast Land Improvement of Jacksonville, North Carolina.

3.2 Digital Geophysical Mapping

The DGM activities were performed to identify geophysical anomalies representing potential subsurface MEC. The initial DGM survey of UXO-08 conducted in December 2006 and January 2007 was performed by USAE, with quality control (QC) provided jointly by USAE and CH2M HILL. An additional DGM survey was performed by ARM Geophysics of Hershey, Pennsylvania in the HPCA within the 8.5-acre portion of UXO-08 that overlaps with planned MILCON. The second phase of DGM was completed from December 2008 through January 2009, with QC provided jointly by ARM Geophysics and CH2M HILL. A summary of the DGM activities is provided below; the Geophysical Investigation Reports are provided in **Appendixes C-1 and C-2**.

3.2.1 Site UXO-08 Geophysical Prove-Out

Before the start of the initial DGM work at Site UXO-08, a Geophysical Prove-out (GPO) was completed by USAE to demonstrate that the selected geophysical equipment met project-specific data quality objectives (DQOs). The GPO was conducted at a GPO plot established by CH2M HILL and was performed in accordance with the *Final Work Plan for Site Inspection at Site UXO-08 Bazooka Range and Gas Chambers* (CH2M HILL, 2006a). USAE's GPO report is provided as an appendix to **Appendix D**. The results of ARM Geophysics' GPO are included in their Geophyscial Investigation Report in **Appendix C-2**.

3.2.2 Site UXO-08 Digital Geophysical Mapping Survey

In December 2006 and January 2007, DGM activities were performed using both a towed array and single-coil EM61-MK2 Electromagnetic System (EM61) connected to a Real-Time Kinematic Global Positioning System unit. The EM61 system was used in areas where vegetation prevented the use of a towed array system. Positioning for the single-coil system was performed using a fiducial method described in Section 5.3 of **Appendix C-1**.

The DGM activities covered a total of 68.66 acres (approximately 47.7 percent of the site), with the remainder being inaccessible due to the presence of buildings, pavement, dense vegetation, and other objects obstructing the path of the survey instruments.

3.2.3 Hadnot Point Construction Area Geophysical Mapping Survey

In December 2008 and January 2009, additional DGM activities were performed by ARM Geophysics in the 8.5-acre area of UXO-08 that overlaps with the HPCA within the planned MILCON area. The majority of this area had been excluded from the initial DGM survey due to the presence of dense vegetation. To facilitate the DGM activities, vegetation less than 6 inches in diameter was removed from the 8.5-acre area within the HPCA. Following a review of the GPO results, a single-coil EM61 was selected for use in this survey.

The additional DGM activities covered a total of 6.2 acres. Approximately 2.3 acres of the 8.5-acre area were inaccessible due to the presence of a surface water body, swampy areas with heavy vegeation, and cultural features, such as steam pipes and metal fences.

3.2.4 Data Quality Objectives

All DQOs outlined in the Work Plans (CH2M HILL, 2006a, 2008b) were met during the DGM surveys.

3.2.5 Quality Control

The DGM activities conducted at Site UXO-08 included an extensive QC program as summarized on **Figure 3-1**.

Before the start of DGM, the geophysical systems were field tested as specified in the applicable Work Plan (CH2M HILL, 2006a; 2008b). A summary of the DGM standardization and acceptance criteria tests is presented in **Table 3-1**. Both the DGM subcontractor and CH2M HILL performed QC checks of geophysical data and data deliverables at each step of the processing path.

During the DGM survey of the HPCA, one of eight QC seed items was missed, QC seed #5 (buried 7 inches bgs). A root cause analysis (RCA) was conducted to determine the cause of the missed seed item. The Corrective Action Plan (CAP) involved testing the equipment used on the GPO plot to determine if the instrument was functioning properly and recollecting the DGM data in the grid where the seed item was missed. Re-collection of the DGM data confirmed that the instrument was functioning properly; in addition, the seed item was not located using the geophysical system or by hand excavation at the reported coordinates. It was determined to be buried at an incorrect location.

A separate RCA was performed and a CAP was developed to address an issue with DGM data collected on January 22, 2009. The data were collected with an improper "High Power" setting on the field computer; the cause was determined to be operator error and failure to check all settings. The data were corrected by manually adjusting the control files, which corrected the raw data records, followed by reprocessing all affected data.

All tests outlined in the work plan were performed on the DGM instruments at the appropriate intervals (e.g., daily, weekly, at start of project), and the results of these tests were checked by USAE's and ARM Geophysics' QC geophysicists prior to delivery to CH2M HILL and subsequently checked by the CH2M HILL QC geophysicist.

3.3 Hadnot Point Construction Area Anomaly Investigation

In October 2010, select geophysical anomalies were investigated to assess the nature and extent of potential subsurface MEC. These activities were conducted in accordance with the *Site-specific Work Plan Addendum for Intrusive Investigation at the 202K MILCON Areas at Site UXO-08, Former Cantonment Area Bazooka Range* (CH2M HILL, 2010a).

A total of 3,291 anomalies representing potential subsurface MEC were identified and approximately 344 of these anomalies were selected for investigation using the "estimating a proportion" statistical sampling approach described in the Site-specific Work Plan Addendum (CH2M HILL, 2010a). This statistical sampling approach indicated that 344 geophysical anomalies (of the 3,291 total) needed to be classified to determine with 95% confidence and ±/- 5% sampling error the proportion of MEC to non-MEC geophysical anomalies at the site.

TABLE 3-1
Digital Geophysical Mapping Instruments Standardization Tests and Acceptance Criteria
Site UXO-08 Former Cantonment Bazooka Range, Base CS Chamber, NBC Training Trail, and D-7 Gas Chamber
PA/SI Report
MCB CamLej, North Carolina

Test	Test Description	Acceptance Criteria	Power On	Beginning of Day	Beginning and End of Day	First Time Instr. Used	2% of Total Area Surveyed
1	Equipment Warm-up	Equipment specific (typically 5 minutes)	X				
2	Record Sensor Positions	1 m 10 cm *(HPCA DGM activity)*		X			
3	Personnel Test	Based on instrument used. Personnel, clothing, etc. should have: - no effect on instrument response. - <2 mV (EM-61-MK2 channel 3) or 2nT on instrument response *(HPCA DGM activity)*		X			
4	Vibration Test (Cable Shake)	Data profile does not exhibit data spikes		X			
5	Static Background and Static Spike	±20 percent of standard item response, after background correction			X		
6	Six Line Test	Repeatability of response amplitude ±20 percent, Positional Accuracy ±20 cm				X	
7	Repeat Data	Repeatability of response amplitude ±20 percent, Positional Accuracy ±20 cm					X

Note:
cm = centimeter; DGM = digital geophysical mapping; HPCA = Hadnot Point Construction Area; m = meter; mV = millivolt; nT =nanoTesla

Selected anomalies were reacquired and UXO technicians, using hand tools, dug to depths up to 2 feet bgs to identify the source of each anomaly. As a QC activity, at least 10 percent of the intrusively investigated anomaly locations were re-inspected using an EM61 geophysical instrument to determine whether all detectable metallic items within a 3-foot radius of the hole to a depth of 2 feet had been removed.

3.4 Environmental Investigation Activities

The initial environmental investigation activities at Site UXO-08 were conducted in January 2007, in accordance with the SI Work Plan (CH2M HILL, 2006a) and included both soil and groundwater sampling. Based on the January 2007 analytical results, additional soil and groundwater sampling was performed between June and August 2008, in accordance with the *Site-Specific Work Plan Addendum for the Preliminary Assessment/Site Inspection, Site UXO-08 – Former Lejeune Cantonment Bazooka Range, Base CS Chamber, and NBC Training Trail* (CH2M HILL, 2008b). Surface water and sediment sampling was conducted in November 2008 in accordance with the *Site-Specific Work Plan Addendum for the PA/SI at Site UXO-08* (CH2M HILL, 2008b).

In November and December 2008, and January 2009, additional surface and subsurface soil, surface water, sediment, and groundwater samples were collected in the HPCA, POIA , and FC area in accordance with the *Site-Specific Work Plan Addendum for Focused PA/SI Hadnot Point Construction Area, Post Office Intersection Area, and Fitness Center* (CH2M HILL, 2008c).

3.4.1 Surface Soil Sampling

Site UXO-08

In January 2007, 29 surface soil samples (designated MR08-SS01 through MR08-SS29) (**Figure 3-2**) were collected in general accordance with the TR-02-1 approach. This approach is described in the *Guide for Characterization of Sites Contaminated with Energetic Materials* (Thiboutot et al., 2002). Soil samples were collected by compositing a minimum of 10 sample aliquots from random locations within each 1-m × 1-m sampling location at depths from 0 to 2 inches bgs. The TR-02-1 surface soil samples were submitted to Empirical Laboratories in Nashville, Tennessee and Sierra Foothill Laboratories, Inc. in Jackson, California and analyzed for explosives residues (SW-846 United States Environmental Protection Agency [USEPA] Method 8330).

The analytical results for the January 2007 samples were validated by DataQual Environmental Services, LLC. Data validation summary reports are provided in **Appendix E**.

In June 2008, two sampling approaches, TR-02-1 and discrete sampling, were used to collect 12 surface soil samples (designated MR08-SS30 through MR08-SS41). Samples for explosives and metals analysis were collected using the TR-02-1 approach, which is appropriate for characterization of munitions constituents (MC). Samples for all other analyses were collected using the discrete sampling approach. The surface soil samples were submitted to GPL Laboratories Inc., in Frederick, Maryland and analyzed for explosives residues, as well as the analytical groups that exceeded screening levels in subsurface soil samples collected in January 2007 (SVOCs, pesticides/ PCBs, and metals). The June 2008 surface soil sample locations are shown on **Figure 3-2**.

The TR-02-01 sampling approach was used to collect samples for the following analyses:

- Explosives residues (SW-846 USEPA Method 8330)
- Perchlorate (USEPA Method 6850)
- Total metals (ILM05)

The discrete sampling approach was used to collect samples from 0 to 6 inches bgs for the following:

- Target Compound List (TCL) SVOCs (OLM04)
- TCL pesticides/PCBs (OLM04). Discrete surface soil samples were collected from 0 to 6 inches bgs

The laboratory analytical data for the June 2008 samples were validated by Environmental Data Services, Inc. Data validation summary reports are provided in **Appendix E**.

Hadnot Point Construction Area

In December 2008, 84 surface soil samples (MR08-SS050 through MR08-SS133) were collected from soil borings within the HPCA, at locations where the planned MILCON area overlaps with Site UXO-08. The surface soil sample locations for the HPCA are shown on **Figure 3-3**. Both discrete and TR-02-1 samples were collected at each sampling location.

Discrete surface soil samples were collected from 0 to 6 inches bgs for:

- VOC (USEPA Method 8260B) using Terra Core soil samplers with in-field preservation.

TR-02-1 samples were collected over a 1-foot by 1-foot area for the following analyses:

- SVOCs (OLM04.3)
- Resource Conservation and Recovery Act (RCRA) metals and antimony, copper, and zinc (USEPA Method 6010B/6020/7471A)
- Explosives residues (USEPA Method 8330)
- Perchlorate (USEPA Method 6850).

Soil samples from the HPCA were sent to Empirical Laboratories for VOCs analysis, Katahdin Analytical Services of Scarborough, Maine for SVOCs analysis, and Microbac Laboratories in Marietta, Ohio for remaining analyses.

The analytical results from the HPCA sampling event were validated by Environmental Data Services, Inc. Data validation summary reports are provided in **Appendix E**.

Post Office Intersection Area

In November 2008, four surface soil samples (MR08-SS374 though MR08-SS377) were collected from the POIA, at locations where the planned MILCON area overlaps with Site UXO-08. The November and December 2008 and January 2009 surface soil sampling locations for the POIA are shown in **Figure 3-4**. Both discrete and TR-02-1 samples were collected at each sampling location.

Discrete surface soil samples were collected from 0 to 6 inches bgs for:

- VOC (USEPA Method 8260B) using Terra Core soil samplers with in-field preservation.

TR-02-1 samples were collected over a 1-foot by 1-foot area for the following analyses:

- SVOCs (OLM04.3)
- RCRA metals and antimony, copper, and zinc (USEPA Method 6010B/6020/7471A)
- Explosives residues (USEPA Method 8330)
- Perchlorate (USEPA Method 6850).

Soil samples from the POIA were sent to Empirical Laboratories for VOCs analysis, Katahdin Analytical Services SVOCs analysis, and Microbac Laboratories for remaining analyses.

The analytical results from the POIA sampling event were validated by Environmental Data Services, Inc. Data validation summary reports are provided in **Appendix E**.

Fitness Center Area

In November 2008, 12 surface soil samples (MR08-SS388 through MR08-SS399) were collected from the FC area, at locations where the planned MILCON area overlaps with Site UXO-08. The November and December 2009 and January 2009 surface soil sampling locations for the FC area are shown in **Figure 3-5**. Both discrete and TR-02-1 samples were collected at each sampling location.

Discrete surface soil samples were collected from 0 to 6 inches bgs for:

- VOC (USEPA Method 8260B) using Terra Core soil samplers with in-field preservation.

TR-02-1 samples were collected over a 1-foot by 1-foot area for the following analyses:

- SVOCs (OLM04.3)
- RCRA metals and antimony, copper, and zinc (USEPA Method 6010B/6020/7471A)
- Explosives residues (USEPA Method 8330)
- Perchlorate (USEPA Method 6850).

Soil samples from the FC area were sent to Empirical Laboratories for VOCs analysis, Katahdin Analytical Services for SVOCs analysis, and Microbac Laboratories for remaining analyses.

The analytical results from the FC area sampling event were validated by Environmental Data Services, Inc. Data validation summary reports are provided in **Appendix E**.

Post-Detonation Sampling

In October, 2010, three post-detonation surface soil samples were collected from the detonation location of the recovered DMM item within Site UXO-08 using the TR-02-01 sampling approach. Samples MR08-SS01-10D and MR08-SS01D-10D were collected from the detonation crater and sample MR08-SS02-10D was collected 15 m from the crater. Post-detonation surface soil samples were analyzed for:

- Explosives residues (USEPA Method 8330)
- Perchlorate (USEPA Method 6850)

- SVOCs (OLM04.3)
- Total metals (ILM05)

3.4.2 Subsurface Soil Sampling

Site UXO-08

In January 2007, nine soil borings were attempted using direct push technology (DPT) in Site UXO-08, as indicated on **Figure 3-2**. Only eight of the nine borings were completed, as a subsurface obstruction at MR08-IS27 prevented a soil boring from being completed at this location. Two of the soil borings (MR08-IS21 and MR08-IS22) were installed at locations near the former Site UXO-08 Gas Chamber.

Continuous soil cores were collected in disposable acetate liners using a 4-foot Geoprobe® Macrocore sampler to a depth just below the water table, which ranged from 4 to 12 feet bgs. DPT drilling was conducted by North Carolina-licensed well driller, Probe Technology, Inc. of Concord, North Carolina. Recovered soil cores were described by the CH2M HILL geologist in accordance with the Unified Soil Classification System. In addition, the CH2M HILL geologist screened each soil core for the presence of VOCs using a TVA-1000 photoionization detector/flame ionization detector (PID/FID). Soil boring logs are provided in **Appendix F**.

Following completion of each soil boring, a discrete soil sample was collected from an unsaturated portion of the soil core immediately above the estimated water table. A total of eight subsurface soil samples (designated MR08-IS21 through MR08-IS26, MR08-IS28, and MR08-IS29) were collected from the locations indicated on **Figure 3-2**. Subsurface soil samples were submitted to Empirical Laboratories and Sierra Foothill Laboratories, Inc., and analyzed for the following:

- TCL VOCs (USEPA Method 8260)
- TCL SVOCs (USEPA Method 8270C)
- TCL pesticides (OLM04)
- TCL PCBs (OLM04)
- Target Analyte List (TAL) metals and cyanide (ILM05)
- Explosives residues (USEPA Method 8330)
- Total petroleum hydrocarbons (TPH) (USEPA Methods 8015 and 9071)
- Total organic carbon (TOC) (USEPA Methods 9060)

The analytical data was validated by DataQual Environmental Services, LLC. Data validation summary reports are provided in **Appendix E**.

In July 2008, six additional DPT soil borings (designated MR08-IS38 through MR08-IS43) were completed at the locations shown on **Figure 3-2**. Drilling was conducted by North Carolina-licensed well driller, Parratt-Wolff, Inc. of Hillsborough, North Carolina. The soil borings and soil sampling were completed using the procedure described above. A total of six subsurface soil samples were collected from the locations shown on **Figure 3-2**. Subsurface soil samples were submitted to GPL Laboratories, Inc. and analyzed for:

- Explosives residues (SW-846 USEPA Method 8330)
- Perchlorate (USEPA Method 6850)
- Total metals (ILM05)

- TCL SVOCs (OLM04)
- Pesticides (OLM04)
- PCBs (OLM04)

The analytical data was validated by Environmental Data Services, Inc. Data validation summary reports are provided in **Appendix E**.

Hadnot Point Construction Area

In December 2008, 84 subsurface soil samples (MR08-IS050 through MR08-IS133) were collected from the HCPA (as shown on **Figure 3-3**).

Subsurface soil samples were recovered from the soil borings using DPT equipment operated by Parratt-Wolff. The samples were collected from the 2-foot interval just above the water table, which ranged from 3 to 11 feet bgs in the HPCA. If the 2-foot interval above the water table encroached upon the surface soil sample interval, then a subsurface soil sample was not collected. Continuous soil cores were collected in disposable acetate sleeves using a Geoprobe MacroCore sampler. Subsurface soils were screened for VOCs and classified as described above. Soil boring logs are provided in **Appendix F**.

Soils to be analyzed for VOCs were collected directly from the acetate sleeves using Terra Core™ soil samplers with in-field preservation. Subsurface soil samples were submitted for laboratory analysis of:

- VOCs USEPA Method 8260B)
- SVOCs (OLM04.3)
- RCRA metals and antimony, copper, and zinc (USEPA Method 6010B/6020/7471A)
- Explosives residues (USEPA Method 8330)
- Perchlorate (USEPA Method 6850) analysis

The samples were sent to Empirical Laboratories for VOCs analysis, Katahdin Analytical Services for SVOCs analysis, and Microbac Laboratories for the remaining analyses.

Soil data from the HPCA were validated by Environmental Data Services, Inc. Data validation summary reports are provided in **Appendix E**.

POIA

In November 2008, four subsurface soil samples (MR08-IS374 through MR08-IS377) were collected from the POIA (as shown on **Figure 3-4**).

Subsurface soil samples were recovered from the soil borings using DPT equipment operated by Parratt-Wolff. Subsurface soil samples were collected from the 2-foot interval just above the water table, which ranged from 17 to 21 feet bgs in the POIA. Continuous soil cores were collected in disposable acetate sleeves using a Geoprobe MacroCore sampler. Subsurface soils were screened for VOCs and classified as described above. Soil boring logs are provided in **Appendix F**.

Soils to be analyzed for VOCs were collected directly from the acetate sleeves using Terra Core™ soil samplers with in-field preservation. Subsurface soil samples were submitted for laboratory analysis of:

- VOCs USEPA Method 8260B)

- SVOCs (OLM04.3)
- RCRA metals and antimony, copper, and zinc (USEPA Method 6010B/6020/7471A)
- Explosives residues (USEPA Method 8330)
- Perchlorate (USEPA Method 6850) analysis

The samples were sent to Empirical Laboratories for VOCs analysis, Katahdin Analytical Services for SVOCs analysis, and Microbac Laboratories for remaining analyses.

Soil data from the POIA were validated by Environmental Data Services, Inc. Data validation summary reports are provided in **Appendix E**.

Fitness Center Area

In November 2008, 12 subsurface soil samples (MR08-IS388 through MR08-IS399) were collected from the FC area (as shown on **Figure 3-5)**.

Subsurface soil samples were recovered from the soil borings using DPT equipment operated by Parratt-Wolff. Subsurface soil samples were collected from the 2-foot interval just above the water table, which ranged from 16 to 20 feet bgs in the FC area. Continuous soil cores were collected in disposable acetate sleeves using a Geoprobe MacroCore sampler. Subsurface soils were screened for VOCs and classified as described above. Soil boring logs are provided in **Appendix F**.

Soils to be analyzed for VOCs were collected directly from the acetate sleeves using Terra Core™ soil samplers with in-field preservation. Subsurface soil samples were submitted for laboratory analysis of:

- VOCs USEPA (Method 8260B)
- SVOCs (OLM04.3)
- RCRA metals and antimony, copper, and zinc (USEPA Method 6010B/6020/7471A)
- Explosives residues (USEPA Method 8330)
- Perchlorate (USEPA Method 6850) analysis

The samples were sent to Empirical Laboratories for VOCs analysis, Katahdin Analytical Services for SVOCs analysis, and Microbac Laboratories for remaining analyses.

Soil data from the FC area were validated by Environmental Data Services, Inc. Data validation summary reports are provided in **Appendix E**.

3.4.3 Groundwater Sampling

UXO-08

In January 2007, groundwater samples were collected from six existing monitoring wells (IR78- GW01, IR78- GW02, IR78- GW04, IR78- GW11, IR78- GW42, and IR78- GW56) associated with Site 78 in the area that overlaps with Site UXO-08, as shown by **Figure 3-2**. Before purging and sampling were performed, water level measurements were recorded using an electronic water level indicator.

Each well was purged using a peristaltic pump with disposable polyethylene tubing, in accordance with the low-flow purging procedures described in the *Work Plan for Site Inspection at Site UXO-08 Bazooka Range and Gas Chambers* (CH2M HILL, 2006a). Water quality parameters (specific conductance, pH, turbidity, temperature, dissolved oxygen

[DO], and oxidation-reduction potential [ORP]) were measured and recorded while purging, using a Horiba U-22 water quality meter and a Lamotte 2020 Portable Turbidity Meter. Field parameters are summarized in **Table 3-2**. Groundwater sampling sheets are provided in **Appendix G**.

Groundwater samples were collected after water quality parameters stabilized over three successive readings and at least one well volume was purged from the monitoring well. Parameters were considered stable when: pH measurements remained within 0.1 standard units (SUs), specific conductivity varied by no more than 3 percent, temperature varied by no more than 10 percent, and turbidity varied by no more than 10 percent or was as low as practicable. Groundwater samples for VOC analysis were collected using the drinking straw method: the polyethylene tubing was disconnected from the peristaltic pump and the top of the polyethylene tubing was covered to hold water in place. The polyethylene tubing was then removed from the monitoring well and the water contained therein was placed in the appropriate sample containers. Following collection of the VOC samples, the tubing was returned to the well, and groundwater samples for the remaining analyses were collected directly from the pump discharge. New dedicated polyethylene tubing was used to sample each monitoring well.

Groundwater samples were submitted to Empirical Laboratories and Sierra Foothill Laboratory, Inc. for the following analyses:

- TCL VOCs (USEPA Method 8260)
- TCL SVOCs (USEPA Method 8270C)
- TCL pesticides (OLM04)
- TCL PCBs (OLM04)
- Total and dissolved TAL metals (ILM05)
- Total cyanide (ILM05)
- Explosives residues (USEPA Method 8330)
- Perchlorate (USEPA Method 6850)
- TPH (USEPA Methods 8015 and 1664)

The analytical data were validated by DataQual Environmental Services, LLC. Data validation summary reports are provided in **Appendix E**.

Based on the findings of the January 2007 groundwater investigation, additional groundwater samples were collected in July and August 2008 from 13 pre-existing Site 78 monitoring wells (IR78-GW04, IR78-GW50, IR78-GW54, IR78-GW55, IR78-GW56, IR78-GW59, IR78-GW61, IR78-GW62, IR78-GW63, IR78-GW64, IR78-GW65, IR78-GW66, and IR78-GW68), as shown on **Figure 3-2**.

Prior to groundwater sampling, a complete round of water level measurements was recorded using an electronic water level meter. Water level measurements were converted to water level elevations using the top-of-casing elevation survey data; the August 2008 data were used to construct a potentiometric surface map of the water table (**Figure 2-3**). Groundwater sampling was completed in accordance with the *Low-Flow Groundwater Sampling from Monitoring Wells* standard operating procedure (SOP) in the MRP MPP (CH2M HILL, 2008a).

Groundwater samples were submitted to GPL Laboratories, Inc. and analyzed for:

- Total and dissolved TAL metals (ILM05)
- Explosives residues (USEPA Method 8330)
- Perchlorate (USEPA Method 6850)

The July and August 2008 groundwater samples were not analyzed for analytical groups that did not exceed screening levels in 2007 (SVOCs and pesticides/PCBs) or constituents considered to be unrelated to Site 78 (VOCs and TPH).

The analytical data were validated by Environmental Data Services, Inc. Data validation summary reports are provided in **Appendix E**.

HPCA

In November 2008, groundwater samples were collected using peristaltic pumps from existing monitoring wells within the HPCA (IR78-GW01, -GW03, GW04-2, -GW42, -GW56, -GW57, -GW59) as shown in **Figure 3- 2,** in accordance with Section 3.11 of the MRP MPP (CH2M HILL, 2008a).

During purging, the following water quality parameters were measured using a Horiba U-22 water quality meter: conductivity, DO, pH, temperature, and ORP; turbidity was measured using a Hanna 98703 turbidity meter. Groundwater samples were collected after water quality parameters had stabilized over consecutive readings and at least one well volume had been purged. Stabilization occurred when pH measurements remained within 0.1 SU, specific conductivity varied by no more than 10 percent, temperature remained constant for 3 consecutive readings, and turbidity was either below 10 nephelometric turbidity units (NTUs) or within 10 percent for 3 consecutive readings. If water quality parameters did not stabilize, at least three well volumes were purged prior to sampling. Water quality field parameters are listed in **Table 3-2**. Groundwater sampling sheets are provided in **Appendix G**.

Groundwater samples were collected directly from the disposable tubing into pre-preserved laboratory-prepared sample bottles. Once collected in appropriately labeled containers, groundwater samples were immediately packed on ice in coolers and shipped via FedEx to Empirical Laboratories for VOCs analysis, Katahdin Analytical Services for SVOCs analysis, and Microbac Laboratories for remaining RCRA metals analyses. Groundwater samples collected from monitoring wells within the Site UXO-08 boundary were also analyzed for antimony, copper, zinc, explosives residues, and perchlorate by Microbac Laboratories. Groundwater sampling sheets are provided in **Appendix G**.

Groundwater data from the HPCA were validated by Environmental Data Services, Inc. Data validation summary reports are provided in **Appendix E**.

POIA

As part of the Focused PA/SI at the HPCA, POIA, and FC, 16 temporary groundwater monitoring wells were installed concurrently with subsurface sampling within Site UXO-08 in November 2008. A total of four wells that overlapped with Site UXO-08 (MR08-TW01 through MR08-TW04) were installed at the POIA with10-foot screens and depths ranging from 26 to 27.5 ft bgs, as shown in **Figure 3-4.** Well completion diagrams are provided in **Appendix H**.

In November 2008, groundwater samples were collected from these temporary monitoring wells in accordance with Section 3.11 of the Base Master Project Plans, as noted in the preceding HPCA groundwater sampling discussion. Water quality field parameters are summarized in **Table 3-2**. Groundwater sampling sheets are provided in **Appendix G**.

Like the HPCA samples, POIA groundwater samples were shipped via FedEx to Empirical Laboratories for VOCs analysis, Katahdin Analytical Services for SVOCs analysis, and Microbac Laboratories for the remaining RCRA metals analyses. Groundwater samples collected from monitoring wells within the Site UXO-08 boundary were also analyzed for antimony, copper, zinc, explosives residues, and perchlorate by Microbac Laboratories. Groundwater sampling sheets are provided in **Appendix G**.

Groundwater data from the POIA were validated by Environmental Data Services, Inc. Data validation summary reports are provided in **Appendix E**.

FC Area

As part of the Focused PA/SI at the HPCA, POIA, and FC, 16 temporary groundwater monitoring wells were installed within Site UXO-08 in November 2008. A total of 12 wells (MR08-TW15 though MR08-TW26) were installed with 10-foot screens and depths ranging from 24 to 27 feet bgs at the FC site. The well locations in the FC area are shown in **Figure-35**. Well completion diagrams are provided in **Appendix H**.

In November 2008, groundwater samples were collected from the FC area temporary monitoring wells in accordance with Section 3.11 of the Base Master Project Plans, as noted in the preceding HPCA groundwater sampling discussion. Water quality field parameters are summarized in **Table 3-2**. Groundwater sampling sheets are provided in **Appendix G**.

Like the HPCA and POIA samples, FC area groundwater samples were shipped via FedEx to Empirical Laboratories for VOCs analysis, Katahdin Analytical Services for SVOCs analysis, and Microbac Laboratories for the remaining RCRA metals analyses. Groundwater samples collected from monitoring wells within the Site UXO-08 boundary were also analyzed for antimony, copper, zinc, explosives residues, and perchlorate by Microbac Laboratories. Groundwater sampling sheets are provided in **Appendix G**.

Groundwater data from the FC area were validated by Environmental Data Services, Inc. Data validation summary reports are provided in **Appendix E**.

3.4.4 Surface Water and Sediment Sampling

On November 11, 2008, three surface water and sediment samples were collected from a stream in the HPCA, in the area that overlaps with Site UXO-08, as shown on **Figure 3-3**. Surface water samples were collected directly into pre-preserved laboratory sample bottles. Sediment samples were collected by advancing a stainless steel trowel approximately 3 to 4 inches into the sediment. Samples were collected from downstream to upstream to avoid cross-contamination by sediment suspension.

Surface water and sediment samples were analyzed for the following:

- VOCs (USEPA Method 8260B)
- SVOCs (USEPA Method 8270C)
- RCRA metals, antimony, copper, and zinc (USEPA Method 6010B/6020/7471A)

- Explosives residues (USEPA Method 8330)
- Perchlorate (USEPA Method 6850)

Samples were shipped via FedEx to Empirical Laboratories for VOCs analysis, Katahdin Analytical Services for SVOCs analysis, and Microbac Laboratories for the remaining analyses. Sediment and surface soil data from the HPCA were validated by Environmental Data Services, Inc. Data validation summary reports are provided in **Appendix E**.

3.4.5 Quality Assurance and Quality Control Sampling

Appropriate QA/QC sampling was performed in accordance with the investigation-specific work plans (CH2M HILL, 2006a, CH2M HILL, 2008b and CH2M HILL, 2008c), including the use of trip blanks, field blanks, equipment blanks, duplicates, and matrix spike (MS)/matrix spike duplicates (MSDs). Required QA/QC samples and the frequency of collection are shown in **Table 3-3.**

3.5 Investigation-derived Waste Management

Investigation-derived waste (IDW) was managed in accordance with the Base Waste Management Plan (CH2M HILL, 2008e). IDW generated during field events consisted of soil cuttings from the soil borings and monitoring wells, well development and purge water, decontamination fluids, disposable equipment, and used personal protective equipment (PPE). Soil cuttings from borings were spread around each borehole. The liquid wastes were disposed of at the wastewater treatment facility located at Lot 203 of MCB CamLej. Disposable materials, including PPE, plastic sheeting, paper towels, and aluminum foil, were disposed of in an MCB CamLej trash receptacle.

TABLE 3-2
Groundwater Field Sampling Parameters
Site UXO-08 Former Lejeune Cantonment, Bazooka Range, Base CS Chamber, and NBC Training Trail
MCB CamLej, North Carolina

January 2007						
Monitoring Well ID	IR78-GW01	IR78-GW02	IR78-GW04-1	IR78-GW11	IR78-GW42	IR78-GW56
Sample Date	01/08/07	01/09/07	01/08/07	01/09/07	01/08/07	01/09/08
Field Parameters						
Dissolved Oxygen (mg/L)	5.25	5.78	0.38	8.04	4.87	3.68
Oxidation Reduction Potential (mV)	25	9	272	252	26	52
pH	5.72	6.16	5.84	5.33	5.85	6.85
Specific Conductance (mS/cm)	0.58	0.348	¯15*	0.145	0.541	0.657
Temperature (C)	17.4	19.22	29.2*	18.85	19.09	21.4
Turbidity (NTU)	0.0	0.0	50.8	0.0	0.0	0.0

July-August 2008											
Monitoring Well ID	IR78-GW50	IR78-GW55	IR78-GW56	IR78-GW59	IR78-GW61	IR78-GW62	IR78-GW63	IR78-GW64	IR78-GW65	IR78-GW66	IR78-GW68
Sample Date	07/08/08	07/08/08	07/09/08	07/08/08	07/08/08	07/08/08	07/08/08	07/08/08	07/07/08	07/07/08	7/8/2008
Field Parameters											
Dissolved Oxygen (mg/L)	0.76	0	0.41	0.08	0.48	0.17	0	0.03	0	0.21	0.01
Oxidation Reduction Potential (mV)	-59	-95	153	-23	61	360	7	-84	-62	-115	-32
pH	6.05	6.55	6.64	6.68	4.35	4.15	5.88	6.17	6.69	6.59	6.6
Specific Conductance (mS/cm)	1.23	0.88	0.774	0.575	0.236	0.217	0.491	0.612	0.655	0.673	1.16
Temperature (C)	22.19	20.96	22.68	19.76	22.63	21.20	25.79	19.51	19.88	19.58	20.31
Turbidity (NTU)	0.0	24.5	68	33.4	0.0	0.9	0.0	25.6	0.0	25.9	22.1

July-August 2008 (continued)		
Monitoring Well ID	IR-78-GW54-08C	IR-78-GW04-08C
Sample Date	8/22/2008	8/25/2008
Field Parameters		
Dissolved Oxygen (mg/L)	6.92	4.77
Oxidation Reduction Potential (mV)	-26	-100
pH	6.78	6.16
Specific Conductance (mS/cm)	0.809	0.277
Temperature (C)	21.8	30.4*
Turbidity (NTU)	21.6	18.7

TABLE 3-2 *(Continued)*
Groundwater Field Sampling Parameters
Site UXO-08 Former Lejeune Cantonment Bazooka Range, Base CS Chamber, and NBC Training Trail
MCB Camp Lejeune, North Carolina

November 2008									
Monitoring Well ID	MR08-TW01	MR08-TW02	MR08-TW03	MR08-TW04	MR08-TW05	MR08-TW06	MR08-TW07**	MR08-TW08	MR08-TW09
Sample Date	11/17/08	11/18/08	11/18/08	11/20/08	11/17/08	11/17/08	11/15/08	11/15/08	11/17/08
Field Parameters									
Dissolved Oxygen (mg/L)	3.98	5.26	5.47	2.07	3.85	2.72	2.26	3.15	1.74
Oxidation Reduction Potential (mV)	89	75	6	23	160	185	-157	-48	-157
pH	5.00	5.34	5.47	5.52	4.24	4.33	5.42	4.78	5.82
Specific Conductance (mS/cm)	0.299	0.392	0.322	0.397	0.407	0.379	0.407	0.249	0.382
Temperature (C)	22.40	20.3	19.33	20.3	19.22	18.00	26.73	22.08	22.78
Turbidity (NTU)	3.24	2.80	4.30	6.90	5.88	7.21	306	6.74	9.07

November 2008									
Monitoring Well ID	MR08-TW10	MR08-TW11	MR08-TW13	MR08-TW14	MR08-TW15	MR08-TW16	MR08-TW17	MR08-TW18	MR08-TW19
Sample Date	11/17/08	11/17/2008	11/17/2008	11/17/2008	11/21/08	11/21/2008	11/20/2008	11/20/08	11/20/2008
Field Parameters									
Dissolved Oxygen (mg/L)	2.95	2.6	4.86	4.77	3.77	1.69	0.66	0.00	0.05
Oxidation Reduction Potential (mV)	-66	81	160	88	56	57	-118	-297	-134
pH	5.08	4.77	4.32	4.77	4.85	4.83	5.09	5.52	4.64
Specific Conductance (mS/cm)	0.214	0.33	0.364	0.21	0.239	0.230	0.458	0.648	0.255
Temperature (C)	23.32	22.3	23.5	24.4	19.8	21.4	20.3	21.6	19.9
Turbidity (NTU)	6.88	6.80	5.90	8.96	3.40	4.32	7.60	7.20	7.60

November 2008							
Monitoring Well ID	MR08-TW20	MR08-TW21	MR08-TW22	MR08-TW23	MR08-TW24	MR08-25	MR08-26
Sample Date	11/20/08	11/21/2008	11/21/2008	11/21/2008	11/20/08	11/20/2008	11/20/2008
Field Parameters							
Dissolved Oxygen (mg/L)	0.26	0.00	0.41	0.58	0.00	0.00	1.05
Oxidation Reduction Potential (mV)	-217	-297	-106	-90	-282	-286	42
pH	4.65	5.30	4.73	6.08	5.57	5.72	4.12
Specific Conductance (mS/cm)	0.346	0.162	0.168	0.559	0.339	0.293	0.223
Temperature (C)	18.9	22.5	21.1	20.2	20.4	19.6	18.1
Turbidity (NTU)	6.20	6.90	4.60	3.91	8.20	5.72	9.23

*Values may represent equipment error
**During purging well purged dry; samples collected as well recharged without parameter stabilization
Generated by: Lael Feist
Checked by: David Seed

TABLE 3-3
Quality Assurance/*Quality Control Sampling Program*
Site UXO-08 Former Cantonment Bazooka Range, Base CS Chamber, NBC Training Trail, and D-7 Gas Chamber
PA/SI Report
MCB CamLej, North Carolina

Sample Type	Description	Frequency	Analytes
Trip Blank	Designed to detect contamination of environmental samples during transport from the field to the laboratory. A trip blank is a VOC sample bottle filled with laboratory analyte-free water, transported to the site, handled like a sample, and returned to the laboratory for analysis. Trip blanks must not be opened in the field.	One per every cooler of soil and water samples sent to the laboratory for VOC analysis	VOCs only
Field Blank	Designed to detect contamination in the laboratory-supplied analyte-free water. A field blank is poured directly into the sample bottle. It shall be handled like a sample and transported to the laboratory for analysis.	One field blank from each source of analyte-free water for each sampling event, where a sampling event is defined as 1 week	All laboratory analyses requested for the environmental samples collected at the site for that week
Equipment Blank	Designed to detect contamination of environmental samples caused by inadequate decontamination of sampling equipment. An equipment blank is analyte-free water that is poured into or pumped through the sampling device, transferred to a sample bottle, and transported to the laboratory for analysis.	One per each day of sampling	All laboratory analyses requested for environmental samples collected at the site on that day
Field Duplicate	Designed to check precision of data in the laboratory. A field duplicate is a sample collected in addition to the native sample at the same sampling location during the same sampling event.	10 percent	Same parameters as native sample
MS/MSD	Designed to evaluate potential matrix interferences, accuracy, and precision. Three aliquots of a single sample – one native and two spiked with the same concentration of matrix spike compounds – are analyzed.	5 percent	Same parameters as native sample

MS = matrix spike; MSD = matrix spike duplicate

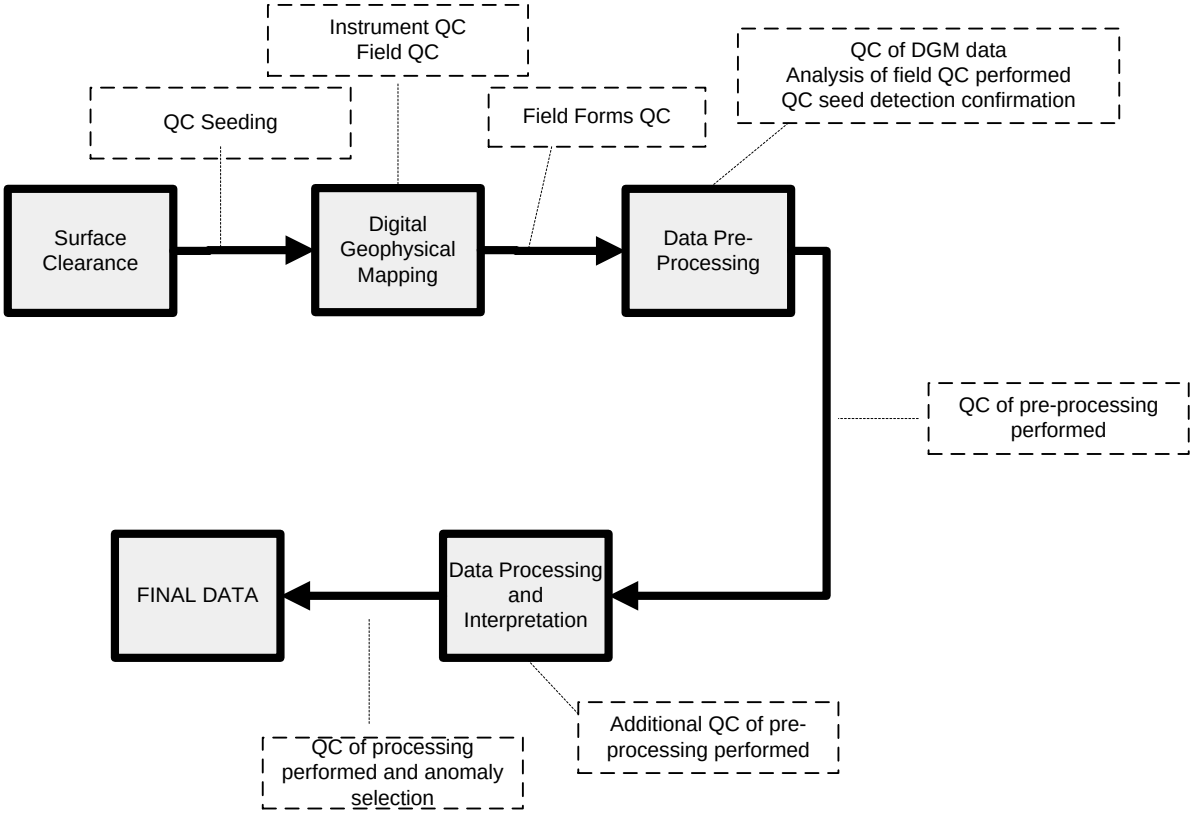

Figure 3-1
Overview of DGM QC Program
Site UXO-08
PA/SI Report
MCB CampLej
North Carolina

\\NORTHEND\PROJ\USNAVFACENGCOM\CAMPLEJEUNE\MAPFILES\SITE_UXO_08\PA_SI\2011\FIGURE_3_2_ENVIRONMENTAL_SAMPLING_LOCATIONS.MXD MARTESE 2/18/2011 13:23:19

Legend

- Surface Soil Sample
- Surface/Subsurface Soil Sample
- Subsurface Soil Sample
- Groundwater Monitoring Well
- Culvert
- Surface Water Course Centerline
- Site UXO-08 Boundary
- Former Base CS Gas Chamber
- Former D-7 Gas Chamber
- W.P.T. Hill Field (Parade Grounds)
- Fitness Center
- Hadnot Point Construction Area
- Post Office Intersection Area

N

0 225 450 900 Feet

1 inch = 450 feet

Figure 3-2
Environmental Sampling Locations (January 2007 and June 2008)
Site UXO-08 PA/SI Report
MCB CamLej
North Carolina

CH2MHILL

Generated by: ***Lael Feist*** Checked by: ***David Seed***

\\NORTHENDPROJ\USNAVFACENGCOM\CAMPLEJEUNE\MAPFILES\SITE_UXO_08\PA_SI\2011\FIGURE_3_3_HPCA_ENVIRO_SAMPLE_LOCATION_MAP.MXD MARTESE 2/18/2011 13:36:59

Legend

- Monitoring Well
- Surface Water and Sediment Sample
- Soil Boring
- Surface Water Course Centerline
- Construction Area
- Site UXO-08 Boundary
- Hadnot Point Construction Area
- Post Office Intersection Area

N

0 200 400 800 Feet

1 inch = 200 feet

Figure 3-3
Hadnot Point Construction Area
Environmental Sample Locations (November 2008-January 2009)
Site UXO-08 PA/SI Report
MCB CamLej
North Carolina

CH2MHILL

Generated by: ***Lael Feist*** Checked by: ***David Seed***

\\NORTHEND\PROJ\USNAVFACENGCOM\CAMPLEJEUNE\MAPFILES\SITE_UXO_08\PA_SI\2011\FIGURE_3_4_POIA_SOIL_SAMPLE_LOCATION_MAP.MXD MARTESE 2/18/2011 13:45:25

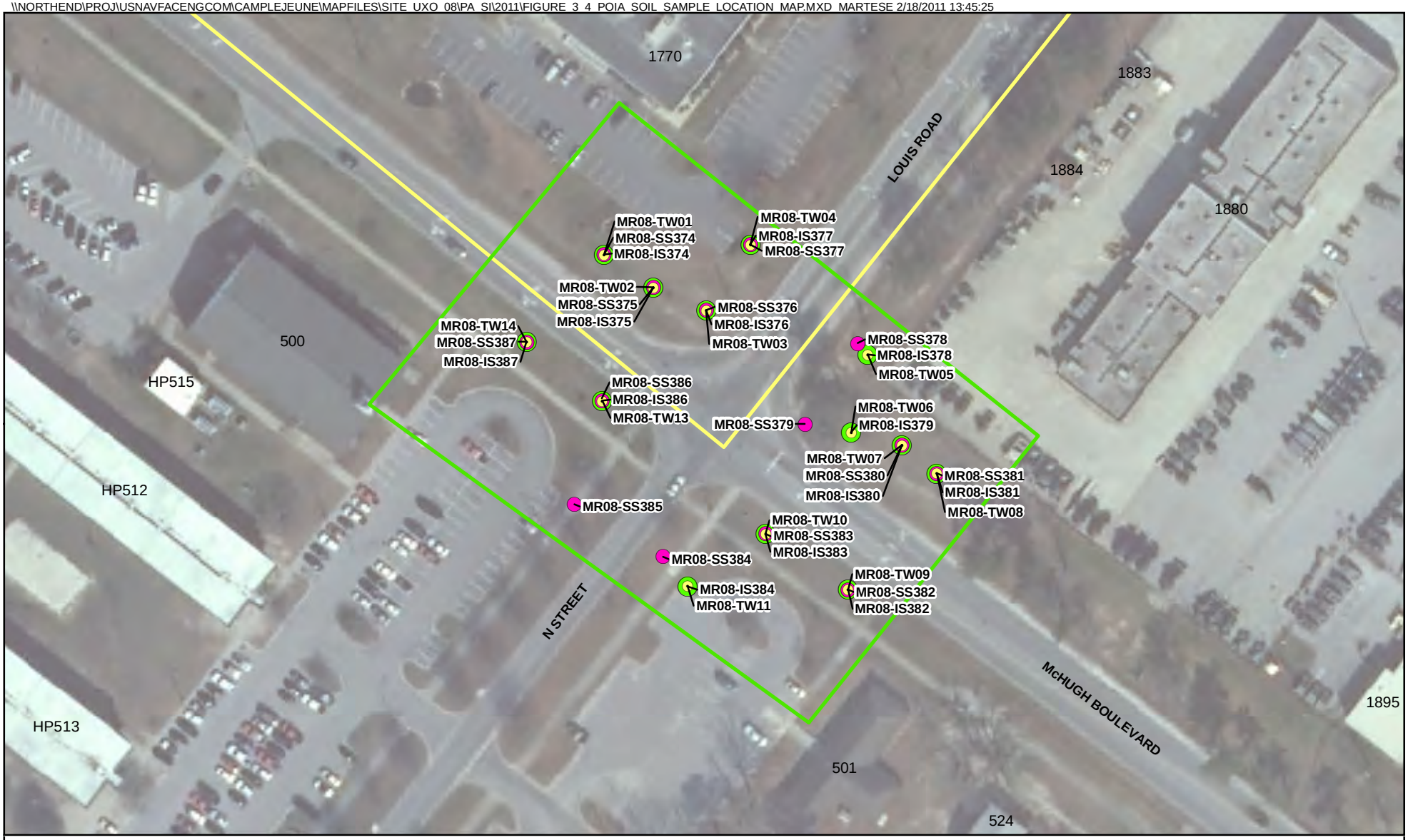

Legend

- Surface Soil Sample
- Subsurface Soil Sample/Temporary Monitoring Well
- Surface/Subsurface Soil Sample/Temporary Monitoring Well
- Post Office Intersection Area
- Site UXO-08 Boundary

N

0 50 100 200 Feet

1 inch = 100 feet

Figure 3-4
Post Office Intersection Area
Environmental Sample Locations (November 2008-January 2009)
Site UXO-08 PA/SI Report
MCB CamLej
North Carolina

CH2MHILL

Generated by: ***Lael Feist*** Checked by: ***David Seed***

\\NORTHEND\PROJ\USNAVFACENGCOM\CAMPLEJEUNE\MAPFILES\SITE_UXO_08\PA_SI\2011\FIGURE_3_5_FC_SOIL_SAMPLE_LOCATION_MAP.MXD MARTESE 2/18/2011 13:55:23

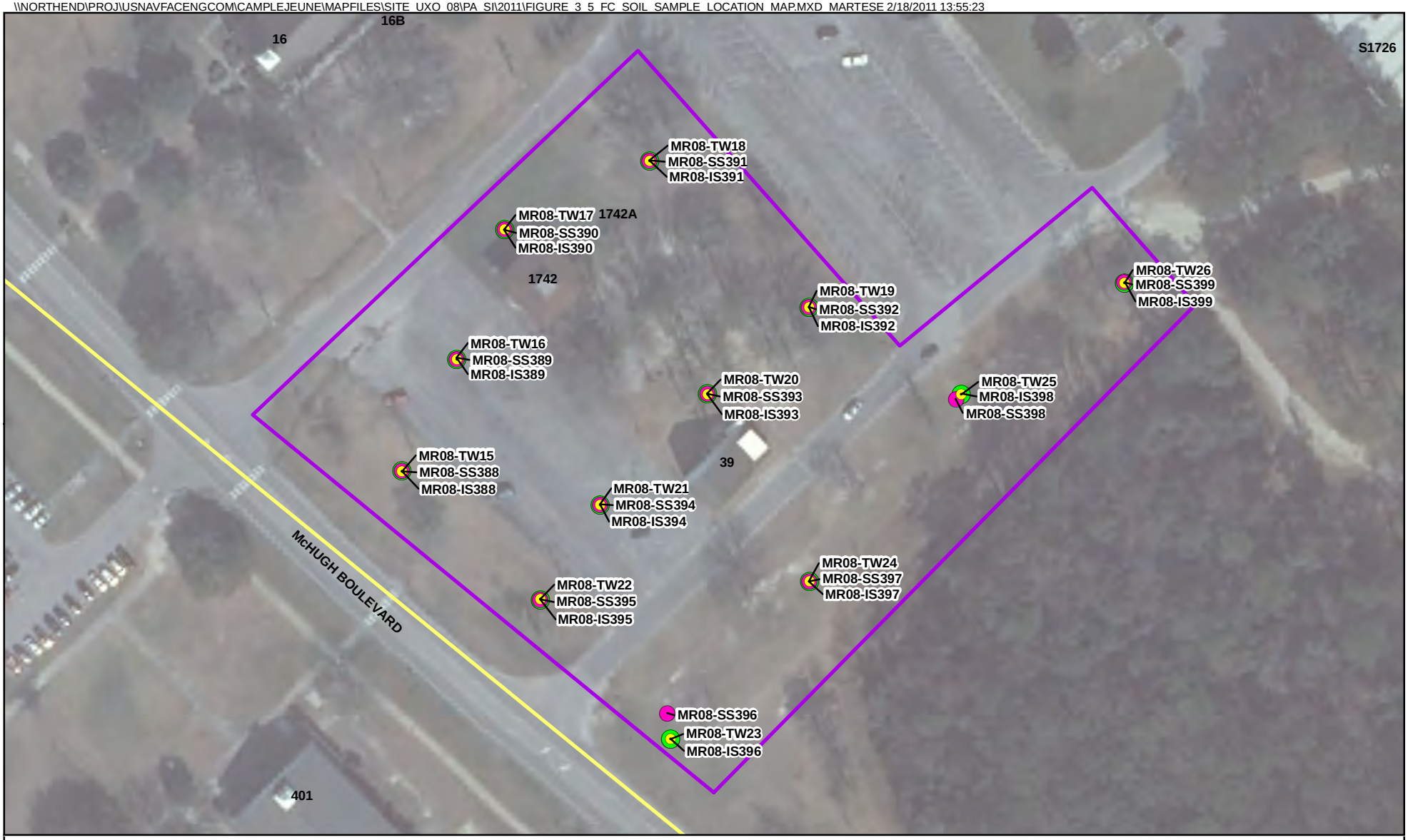

Legend

- Surface Soil Sample
- Subsurface Soil Sample/Temporary Monitoring Well
- Surface/Subsurface Soil Sample/Temporary Monitoring Well
- Fitness Center
- Site UXO-08 Boundary

N

0 50 100 200 Feet

1 inch = 100 feet

Figure 3-5
Fitness Center Environmental Sample Locations (November 2008-January 2009)
Site UXO-08 PA/SI Report
MCB CamLej
North Carolina

CH2MHILL

Generated by: ***Lael Feist*** Checked by: ***David Seed***

SECTION 4

Investigation Results

This section presents the findings of the investigation activities conducted at Site UXO-08 between January 2007 and October 2010.

4.1 Digital Geophysical Mapping Results

4.1.1 Site UXO-08

During the initial DGM survey, approximately 69 of the 144 acres at UXO-08 were geophysically surveyed as part of the PA/SI activities. The remaining 75 acres were not accessible for DGM because of the presence of buildings, pavement, and dense vegetation.

A total of 16,212 anomalies with a signal greater than 5 mV were identified as representing potential subsurface MEC. A threshold of 5 mV was chosen because it is the lowest amplitude at which a metallic item can be positively distinguished from signal noise, based on the size of the MEC items potentially present at the site (e.g., 2.36-inch bazooka rounds). These anomalies are shown on **Figure 4-1** along with anomalies from later DGM efforts that are discussed below. The Geophysical Investigation Report is provided in **Appendix C-1.**

4.1.2 HPCA

Following vegetation clearance in the HPCA in December 2008, additional DGM surveying of the HPCA where it overlapped with Site UXO-08 was completed over 6.2 acres of the site (Figure 11 of the Geophysical Investigation Report in **Appendix D**). An additional 2.3 acres of the HPCA were not accessible to the DGM equipment (EM61) due to the presence of a surface water body, areas with heavy vegetation, and cultural features, such as steam pipes and metal fences.

A total of 1,512 additional anomalies with a signal greater than 5 mV were identified as potentially representing subsurface MEC. These anomalies are shown with all Site UXO-08 anomalies on **Figure 4-1.** The Geophysical Investigation Report is provided in **Appendix C-2.**

The December 2008 through January 2009 DGM survey identified 43 polygon targets (areas of elevated EM response defined by a polygon rather than an individual isolated target anomaly), as shown on Figure 12 of the Geophysical Investigation Report in **Appendix C-2**.

4.2 Intrusive Investigation Results

Of the 3,291 anomalies identified in the portion of Site UXO-08 that overlapped with the 202K MILCON area, 411 anomalies were investigated in October 2010 (as shown on **Figure 4-2**). The following table presents the distribution of anomalies investigated in each planned MILCON area.

Area	Total Geophysical Anomalies
HPCA	2,171
FC	837
POIA	283
Total	3,291

On October 17, 2010, one MEC item was found at a depth of 2 inches bgs. This item was determined to be a discarded military munition (DMM) and was identified as a Cartridge, 40mm White Star Parachute, M583A1. The item was disposed of by controlled detonation using donor explosives. **Figure 4-2** shows the discovery location of the DMM and the demolition location. Following demolition of the DMM item, three confirmation surface soil samples were collected from 0 to 2 inches bgs for MC analysis **(Section 3.4.1)**. Analytical results from the post-detonation sample are summarized in **Section 4.3.6**.

Investigation of the remaining anomalies did not yield evidence of munitions use in the areas investigated, as shown in the following table. The majority of items encountered consisted of cultural debris such as scrap metal not associated with munitions. Obstructions encountered included power and sewer lines, utility poles, roads, and trailers.

Item Category	Number of Anomaly Locations
DMM (MEC)	1
Cultural Debris	349
Obstructions	22
No Contact	34
Undetermined-greater than 2-foot depth	5
TOTAL	411

4.3 Environmental Investigation Results

The following subsections summarize the soil, surface water, sediment, and groundwater laboratory data collected during the PA/SI. All analytical data are presented in **Appendix H**.

4.3.1 Surface Soil

Following the third-party data validation of the laboratory analytical data, surface soil samples were screened against the following standards:

- North Carolina soil screening levels (NC SSLs)
- Adjusted[1] USEPA Industrial and Residential Regional Screening Levels (RSLs) for Chemical Contaminant Tables (USEPA, 2010a)
- MCB CamLej background soil concentrations (two times the mean Base background [BBG] soil concentration), available for metals only (Baker, 2001)

The January 2010 USEPA RSLs replaced the 2004 USEPA Region 9 Residential Soil and Tap Water Preliminary Remediation Goals (PRGs), which were the proposed screening values in the Work Plan (CH2M HILL, 2008b). The RSLs for non-carcinogenic compounds were adjusted by dividing by 10 to conservatively account for exposure to multiple analytes. The methodology for calculating NC SSLs for contaminant migration from soil to groundwater was developed to identify chemical concentrations in soil that have the potential to impact groundwater. The NC SSLs are back-calculated from acceptable groundwater concentrations and take into consideration fate and transport parameters (NCDENR, 2010a).

The detected concentrations of specific target analytes for surface soil are presented in **Appendix I**. Sample results for Site UXO-08 (for areas that do not overlap with planned MILCON areas), HPCA, POIA, and FC area surface soils are discussed below.

Surface Soil – Site UXO-08

Figure 4-3 illustrates the locations of UXO-08 surface soil samples where target analytes were detected at concentrations greater than two times the mean BBG concentration (for metals) <u>and</u> greater than at least one of the screening levels (NC SSLs or the Adjusted RSLs). Analytical results are summarized as follows:

- **VOCs** were not detected above screening levels in any of the surface soil samples collected at Site UXO-08.
- **SVOCs:** The following table presents a summary of the frequency of exceedances of screening levels for samples analyzed for SVOCs.

Analyte	Frequency of Detection (# detected / # analyzed)	Minimum Concentration (µg/kg)	Maximum Concentration (µg/kg)	Screening Values (µg/kg)		Frequency of Exceedances
Benzo(a)pyrene	4 / 14	50J	140J	NC SSL	59	3
				Residential RSL	15	4
Benzo(b) fluoranthene	1 / 14	UD	180J	Residential RSL	150	1

µg/kg = microgram; UD = not detected; J - Analyte present, value may or may not be accurate or precise

- **Pesticides:** the pesticide **dieldrin** exceeded screening values in samples collected from Site UXO-08.

Analyte	Frequency of Detection (# detected / # analyzed)	Minimum Concentration (µg/kg)	Maximum Concentration (µg/kg)	Screening Criteria (µg/kg)		Frequency of Exceedances
Dieldrin	6/6	0.05 J	49	NC SSL	0.81	3
				Residential RSL	30	1

- **PCBs** were only analyzed in the surface soil samples collected in June 2008 (MR08-SS30 through MR08-SS41); however, PCBs were not detected.
- **Explosives residues** were detected in Site UXO-08 surface soil samples, but the concentrations did not exceed the screening levels. **Perchlorate** was not detected in any of the UXO-08 surface soil samples above screening levels.
- **Metals:** The following table presents a summary of the metals that exceeded screening values in samples collected from Site UXO-08.

Analyte	Frequency of Detection (# detected / # analyzed)	Minimum Concentration (mg/kg)	Maximum Concentration (mg/kg)	Screening Criteria (mg/kg)		Frequency of Exceedances
Aluminum	14/14	1,960	5,680	2X Mean BBG	5,487	2
Arsenic	14/14	0.77	8 J	NC SSL	5.8	1
				2X Mean BBG	0.626	14
				Residential RSL	0.39	14
				Industrial RSL	1.6	10
Barium	4/14	17.8	22.8	2x Mean BBG	14.5	4
Beryllium	14/14	0.072 J	0.25 J	2x Mean BBG	0.103	11
Cadmium	14/14	0.038 J	0.96	2x Mean BBG	0.033	14
Calcium	12/14	532	297,000	2x Mean BBG	6,360	2
Chromium	14/14	4.8	11.7	NC SSL	3.8	14
				2X Mean BBG	6.05	7
				Residential RSL	0.29	14
				Industrial RSL	5.6	10
Cobalt	13/14	0.22 J	7.9	2x Mean BBG	0.294	8
				Residential RSL	2.3	1

Analyte	Frequency of Detection (# detected / # analyzed)	Minimum Concentration (mg/kg)	Maximum Concentration (mg/kg)	Screening Criteria (mg/kg)		Frequency of Exceedances
Copper	12/14	2	5,260	NC SSL	700	1
				2X Mean BBG	4.83	5
				Residential RSL	310	1
				Industrial RSL	4,100	1
Iron	14/14	1,610	5,000	NC SSL	150	14
				2X Mean BBG	3,245	4
Lead	14/14	6.8	40.3	2x Mean BBG	12.3	7
Magnesium	5/14	539	3,790	2X Mean BBG	238	5
Manganese	14/14	6.8	351	NC SSL	65	2
				2X Mean BBG	13.7	13
				Residential RSL	180	1
Nickel	14/14	1 J	33.7	2X Mean BBG	1.21	11
Selenium	4/14	0.41 J	0.73 J	2X Mean BBG	0.563	1
Thallium	1/14	1.1 J	1.1 J	2X Mean BBG	0.36	1
Vanadium	14/14	5.6	15.4	2X Mean BBG	8.9	8
Zinc	14/14	7.8 J	96.9 J	2X Mean BBG	10.8	13

Surface Soil – HPCA

- **VOCs** were not detected above screening levels in any of the HPCA surface soil samples.
- **Figure 4-4** illustrates the locations of HPCA surface soil samples where **SVOCs** were detected at concentrations greater than at least one of the screening levels (NC SSLs or the Adjusted RSLs). The following table presents a summary of the VOCs that exceeded screening values in the samples collected from the HPCA.

Analyte	Frequency of Detection (# detected / # analyzed)	Minimum Concentration (µg/kg)	Maximum Concentration (µg/kg)	Screening Criteria (µg/kg)		Frequency of Exceedances
Benzo(a)anthracene	65 / 91	2.5 J	220	NC SSL	180	1
				Residential RSL	150	1
Benzo(a)pyrene	56 / 91	5.6 J	340	NC SSL	59	3
				Residential RSL	15	27
				Industrial RSL	210	1
Benzo(b)fluoranthene	51 / 91	7.6 J	500	Residential RSL	150	3
Dibenzo(a,h)anthracene	20 / 91	2.2 J	75	Residential RSL	15	4
Hexachlorobenzene	3 / 91	1.6 J	5.8 J	NC SSL	2.6	2

- **Explosives residues** were detected in HPCA surface soil samples, although the concentrations did not exceed the screening levels. **Perchlorate** was not detected in any of the HPCA surface soil samples above screening levels.

- **Metals:** The following table presents a summary of the metals that exceeded screening values in samples collected from the HPCA. **Figure 4-5** illustrates the locations of HPCA surface soil samples where target metals were detected at concentrations greater than two times BBG values and at least one of the screening levels (NC SSLs or the Adjusted RSLs).

Analyte	Frequency of Detection (# detected / # analyzed)	Minimum Concentration (mg/kg)	Maximum Concentration (mg/kg)	Screening Criteria (mg/kg)		Frequency of Exceedances
Antimony	63/92	0.469 J	10.7	2X Mean BBG	0.447	63
				Residential RSL	3.1	6
Arsenic	91/92	0.175 J	16.7	NC SSL	5.8	21
				2X Mean BBG	0.626	71
				Residential RSL	0.39	81
				Industrial RSL	1.6	47
Barium	92/92	2.15 J	910	NC SSL	580	1
				2x Mean BBG	14.5	31
Cadmium	82/92	0.0618 J	11.3	NC SSL	3	1
				2x Mean BBG	0.033	81
				Residential RSL	7	1
Chromium	84/92	1.520	147	NC SSL	3.8	60
				2X Mean BBG	6.05	31
				Residential RSL	0.29	84
				Industrial RSL	5.6	34
Copper	85/92	0.825 J	184	2X Mean BBG	4.83	27
Lead	92/92	1.13 J	224	2x Mean BBG	12.3	53
Mercury	45/92	0.0224 J	9.22	NC SSL	1	1
				2X Mean BBG	0.081	15
				Residential RSL	2.3	1
Selenium	81/92	0.131 J	5.25	NC SSL	2.1	2
				2X Mean BBG	0.563	16
Silver	49/92	0218 J	108	NC SSL	3.4	1
				2X Mean BBG	0.563	49
				Residential RSL	39	1
Zinc	85/92	0.432 J	886	2X Mean BBG	10.8	58

Surface Soil – POIA

- **VOCs** were not detected above screening levels in any of the POIA surface soil samples.
- One **SVOC, benzo(a)pyrene,** was detected in sample MR08-SS374 (25 micrograms per kilogram [µg/kg]) at a concentration exceeding the Adjusted RSL for Residential Soil (15 µg/kg).
- **Explosives residues** were detected in POIA surface soil samples, but the concentrations did not exceed the screening values. **Perchlorate** was not detected in any of the POIA surface soil samples above screening values.
- **Metals: Figure 4-6** illustrates the locations at the POIA where surface soil samples exceeded screening values for metals. The following table presents a summary of the metals that exceeded screening values in samples collected from the POIA.

Analyte	Frequency of Detection (# detected / # analyzed)	Minimum Concentration (mg/kg)	Maximum Concentration (mg/kg)	Screening Criteria (mg/kg)		Frequency of Exceedances
Antimony	2/6	0.662 J	1.05 J	2X Mean BBG	0.447	2
Arsenic	6/6	0.567	3.66	2X Mean BBG	0.626	5
				Residential RSL	0.39	6
				Industrial RSL	1.6	3
Barium	6/6	11.3	19	2x Mean BBG	14.5	3
Cadmium	6/6	0.0572 J	0.344	2x Mean BBG	0.033	6
Chromium	6/6	5.98 J	10.3	NC SSL	3.8	6
				2X Mean BBG	6.05	5
				Residential RSL	0.29	6
				Industrial RSL	5.6	6
Lead	6/6	4.72	56	2x Mean BBG	12.3	3
Zinc	6/6	2.38	36.8	2X Mean BBG	10.8	3

Surface Soil – FC Area

- **Figure 4-7** illustrates the locations of FC area surface soil samples where target analytes were detected at concentrations greater than two times the mean BBG concentration (for metals) and at least one of the screening levels (NC SSLs or the Adjusted RSLs).
- **VOCs:** The following table presents a summary of the VOCs that exceeded screening values in samples collected from the FC area.

Analyte	Frequency of Detection (# detected / # analyzed)	Minimum Concentration (µg/kg)	Maximum Concentration (µg/kg)	Screening Criteria (µg/kg)		Frequency of Exceedances
Chloromethane	2/2	27	29	NC SSL	15	2
Methylene chloride	2/2	91	130	NC SSL	23	2

- Five **SVOCs,** benzo(a)anthracene, benzo(a)pyrene**,** benzo(b)fluoranthene, dibenzo(a,h)anthracene, and indeno(1,2,3)pyrene, were detected in FC area surface soil samples in excess of regulatory screening values. The following table presents a summary of SVOC exceedances.
- **Explosives residues** were detected in FC area surface soil samples, but the concentrations did not exceed the screening levels. **Perchlorate** was not detected in any of the HPCA surface soil samples above screening levels.

Analyte	Frequency of Detection (# detected / # analyzed)	Minimum Concentration (µg/kg)	Maximum Concentration (µg/kg)	Screening Criteria (µg/kg)		Frequency of Exceedances
Benzo(a)anthracene	14 / 14	45	230	NC SSL	180	1
				Residential RSL	150	3
Benzo(a)pyrene	14 / 14	22	290	NC SSL	59	12
				Residential RSL	15	1
				Industrial RSL	210	14
Benzo(b)fluoranthene	13 / 14	83	760 J	NC SSL	600	1
				Residential RSL	150	7
Dibenz(a,h)anthracene	12 / 14	18	65	Residential RSL	15	12
Indeno(1,2,3-cd)pyrene	13 / 14	52	220	Residential RSL	150	3

- **Metals:** The following table presents a summary of the metals that exceeded screening values in samples collected from the FC area**.**

Analyte	Frequency of Detection (# detected / # analyzed)	Minimum Concentration (mg/kg)	Maximum Concentration (mg/kg)	Screening Criteria (mg/kg)		Frequency of Exceedances
Antimony	7/14	0.448 J	0.754 J	2X Mean BBG	0.447	7
Arsenic	14/14	0.558	6.1	NC SSL	5.8	1
				2X Mean BBG	0.626	13
				Residential RSL	0.39	14
				Industrial RSL	1.6	5
Barium	14/14	8.43	25.9	2x Mean BBG	14.5	2
Cadmium	13/14	0.0523 J	0.277	2x Mean BBG	0.033	13
Chromium	14/14	3.26	7.95	NC SSL	3.8	10
				2X Mean BBG	6.05	4
				Residential RSL	0.29	14
				Industrial RSL	5.6	7
Copper	12/14	0.922 J	61.1	2X Mean BBG	4.83	7
Lead	14/14	3.10	64.6	2x Mean BBG	12.3	11
Mercury	4/14	0.258 J	0.182	2X Mean BBG	0.081	1
Silver	9/14	0.262 J	1.92	2X Mean BBG	0.563	9
Zinc	14/14	4.39	38.2	2X Mean BBG	10.8	10

4.3.2 Subsurface Soil

Following the third-party data validation of the laboratory analytical data, subsurface soil samples were screened against the following standards:

- NC SSLs
- Adjusted USEPA Industrial and Residential RSLs for Chemical Contaminant Tables (USEPA, 2010a)

- MCB CamLej background soil concentrations (two times the mean BBG soil concentration), available for metals only (Baker, 2001)

The detected concentrations of specific target analytes for subsurface soil are presented in **Appendix I**. Sample results for Site UXO-08 (for areas that do not overlap with planned MILCON areas), HPCA, POIA, and FC area subsurface soils are discussed below.

Subsurface Soil – Site UXO-08

Figure 4-8 illustrates the locations of Site UXO-08 subsurface soil samples where target analytes were detected at concentrations greater than two times the mean BBG concentration (for metals) and at least one of the screening levels (NC SSLs or the Adjusted RSLs).

- **VOCs** were not detected above screening levels in any of the Site UXO-08 subsurface soil samples.
- **SVOCs:** The following table presents a summary of SVOCs that exceeded screening values in samples collected from Site UXO-08.

Analyte	Frequency of Detection (# detected / # analyzed)	Minimum Concentration (µg/kg)	Maximum Concentration (µg/kg)	Screening Criteria (µg/kg)		Frequency of Exceedances
Benzo[a]anthracene	1/16	UD	1,000	Residential Soil RSL	180	1
				NC SSL	150	1
Benzo[a]pyrene	1/16	UD	2,500	Residential Soil RSL	15	1
				Industrial Soil RSL	210	1
				NC SSL	59	1
Benzo[b]fluoranthene	1/16	UD	3,300	Residential Soil RSL	150	1
				Industrial Soil RSL	2,100	1
				NC SSL	600	1
Dibenz[a,h]anthracene	1/16	UD	600	Residential Soil RSL	15	1
				Industrial Soil RSL	215	1
				NC SSL	190	1
Indeno[1,2,3-cd]pyrene	1/16	UD	2,500	Residential Soil RSL	150	1
				Industrial Soil RSL	2,000	1

- **Pesticides:** The following table presents the pesticide that exceeded screening values in samples collected from Site UXO-08.

Analyte	Frequency of Detection (# detected / # analyzed)	Minimum Concentration (µmg/kg)	Maximum Concentration (µg/kg)	Screening Criteria (µg/kg)		Frequency of Exceedances
Dieldrin	3/3	1.1 J	4.1 J	NC SSL	0.475	3

- **Explosives residues** were not detected in any of the Site UXO-08 subsurface soil samples.
- **Perchlorate** was not detected in Site UXO-08 subsurface soil samples.

- **Metals:** The following table presents a summary of the metals that exceeded screening values in samples collected from Site UXO-08, in the area that does not overlap with planned MILCON area.

Analyte	Frequency of Detection (# detected / # analyzed)	Minimum Concentration (mg/kg)	Maximum Concentration (mg/kg)	Screening Criteria (mg/kg)		Frequency of Exceedances
Aluminum	16/16	1,950	15,000	2X Mean BBG	10,369	4
				Residential RSL	7,700	5
Antimony	9/16	0.25 J	3.8 J	2X Mean BBG	0.36	2
				Residential RSL	3.1	2
Arsenic	12/16	0.37	3.2	2X Mean BBG	2.12	2
				Residential RSL	0.39	10
				Industrial RSL	1.6	4
Barium	9/16	2.4 J	38.8	2x Mean BBG	16.6	2
Beryllium	9/16	0.036 J	0.29 J	2x Mean BBG	0.165	2
Cadmium	3/16	0.2 J	0.99	2x Mean BBG	0.023	3
Calcium	7/16	339 J	103,000 J	2x Mean BBG	441	5
Chromium	16/16	4.7	21.9 J	NC SSL	3.8	16
				2X Mean BBG	14.5	3
				Residential RSL	0.29	16
				Industrial RSL	5.6	12
Cobalt	9/16	0.08 J	1.6 J	2x Mean BBG	0.822	3
Copper	9/16	0.56 J	23.7	2X Mean BBG	2.56	2
Iron	16/16	880	9,190	NC SSL	150	16
				2X Mean BBG	5,439	3
				Residential RSL	5,500	3
Lead	16/16	2.5	248	2x Mean BBG	8.49	2
Magnesium	8/16	125 J	1,860	2X Mean BBG	363	4
Manganese	14/16	2.2 J	52.5 J	2X Mean BBG	9.25	3
Nickel	13/16	0.24 J	7.2	2X Mean BBG	2.27	3
Potassium	8/16	111	665	2X Mean BBG	361	4
Selenium	1/16	0.93 J	0.93 J	2X Mean BBG	0.505	1
Sodium	2/16	135 J	246 J	2X Mean BBG	68.3	2
Vanadium	16/16	4.5 J	22.7	2X Mean BBG	17.2	3
Zinc	4/16	11.3	233	2X Mean BBG	6.59	4

- Samples MR08-IS21 through MR08-IS28 collected at Site UXO-08 were subjected to **PCB** and **TPH- gasoline range organics (GRO)** analyses. Both PCBs and TPH-GRO were not detected above screening levels.

Subsurface Soil – HPCA

- **VOCs:** The following table presents a summary of the VOCs that exceeded screening values in samples collected from the HPCA.

Analyte	Frequency of Detection (# detected / # analyzed)	Minimum Concentration (µg/kg)	Maximum Concentration (µg/kg)	Screening Criteria (µg/kg)		Frequency of Exceedances
Benzene	1/1	UD	10 J	NC SSL	7.3	1
VC	1/1	UD	12 J	NC SSL	0.19	1

- **SVOCs:** The following table presents a summary of the SVOCs that exceeded screening values in samples collected from the HPCA.

Analyte	Frequency of Detection (# detected / # analyzed)	Minimum Concentration (µg/kg)	Maximum Concentration (µg/kg)	Screening Criteria (µg/kg)		Frequency of Exceedances
Benzo(a)pyrene	1/1	UD	80	Residential Soil RSL	15	1
Dibenzo(a,h)anthracene	1/1	UD	16	Residential Soil RSL	15	1

- **Metals:** The following table presents a summary of the metals that exceeded screening values in subsurface soil samples collected from HPCA.

Analyte	Frequency of Detection (# detected / # analyzed)	Minimum Concentration (mg/kg)	Maximum Concentration (mg/kg)	Screening Criteria (mg/kg)		Frequency of Exceedances
Antimony	8/88	0.418 J	3.22	2X Mean BBG	0.36	8
				Residential RSL	3.1	1
Arsenic	79/88	0.0846 J	10.5	NC SSL	5.8	2
				2X Mean BBG	2.12	2
				Residential RSL	0.39	39
				Industrial RSL	1.6	3
Barium	88/88	0.519	231	2x Mean BBG	16.6	2
Cadmium	12/88	0.038	2.56	2x Mean BBG	0.023	12
Chromium	88/88	1.23	35.3	NC SSL	3.8	55
				2X Mean BBG	14.5	3
				Residential RSL	0.29	88
				Industrial RSL	5.6	24
Copper	49/88	0.449 J	46.9	2X Mean BBG	2.56	3
Lead	88/88	1	94.6	2x Mean BBG	8.49	5
Mercury	9/88	0.02	1.13	NC SSL	1	1
				2X Mean BBG	0.071	1
Selenium	58/88	0.242 J	2.35	NC SSL	2.1	1
				2X Mean BBG	0.505	11
Silver	9/88	0.236 J	25.6	NC SSL	2.1	1
				2X Mean BBG	0.129	9
Zinc	84/88	0.432 J	240	2X Mean BBG	6.59	5

Subsurface Soil – POIA

- **VOCs, SVOCs, explosives residues,** and **perchlorate** were not detected above screening levels in any of the POIA subsurface soil samples.
- **Metals:** The following table presents a summary of the metal that exceeded screening values in subsurface soil samples collected from the POIA. Chromium was detected above regulatory screening values in six POIA subsurface samples; however, detected concentrations did not exceed two times the BBG concentration.

Analyte	Frequency of Detection (# detected / # analyzed)	Minimum Concentration (mg/kg)	Maximum Concentration (mg/kg)	Screening Criteria (mg/kg)		Frequency of Exceedances
Chromium	6/6	3.57	6.4	NC SSL	3.8	5
				Residential RSL	0.29	6
				Industrial RSL	5.6	2

Subsurface Soil – FC Area

- **VOCs, SVOCs, explosives residues,** and **perchlorate** were not detected above screening levels in any of the POIA subsurface soil samples.
- **Metals:** The following table presents a summary the metals that exceeded screening values in subsurface soil samples collected from the FC area.

Analyte	Frequency of Detection (# detected / # analyzed)	Minimum Concentration (mg/kg)	Maximum Concentration (mg/kg)	Screening Criteria (mg/kg)		Frequency of Exceedances
Antimony	1/14	0.518 J	0.518 J	2X Mean BBG	0.36	1
Arsenic	14/14	0.0984 J	5.91	NC SSL	5.8	1
				2X Mean BBG	2.12	1
				Residential RSL	0.39	5
				Industrial RSL	1.6	1
Cadmium	1/14	0.04 J	0.04 J	2x Mean BBG	0.023	1
Chromium	14/14	3	12.6	NC SSL	3.8	12
				Residential RSL	0.29	14
				Industrial RSL	5.6	11
Silver	5/14	0.227 J	0.29 J	2X Mean BBG	0.129	5

4.3.3 Groundwater

The laboratory analytical data pertaining to the groundwater samples were screened against the North Carolina Groundwater Quality Standards (NCGWQS)(NCDENR, 2010b), USEPA Adjusted Tap Water RSLs, and two times the mean BBG groundwater concentrations (Baker, 2002). Analytical results for perchlorate were also evaluated for compliance with the Perchlorate Release Management Policy, updated on April 22, 2009. The policy specifies that Department of Defense facilities must use a PRG of 15 µg/L for perchlorate when there is a potential drinking water exposure pathway.

Data tables for all sites within Site UXO-08 are presented in **Appendix I**. A summary of the analytical results is also provided below**.**

Groundwater – Site UXO-08

- **Figure 4-11** presents Site UXO-08 groundwater results exceeding two times the mean BBG value and at least one other criterion.
- The following table presents a summary of the VOCs that exceeded screening values in samples collected from Site UXO-08.

Analyte	Frequency of Detection (# detected / # analyzed)	Minimum Concentration (µg/L)	Maximum Concentration (µg/L)	Screening Criteria (µg/L)		Frequency of Exceedances
cis-1,2 DCE	5/11	0.44 J	83	Tap Water RSL	7.3	3
				NC 2L	70	1
TCE	3/11	0.76 J	4.2	Tap Water RSL	2	1
				NC 2L	3	1
VC	1/11	7.7	7.7	Tap Water RSL	.016	1
				NC 2L	.03	1

- Only one SVOC, caprolactam, was detected in the groundwater samples collected from Site UXO-08. No SVOCs were detected in excess of the screening values.
- One **explosives residue, 4-nitrotoluene**, was detected in groundwater at Site UXO-08. 4-Nitrotoluene was detected at a maximum concentration of 0.11 J µg/L (IR78-GW68), but did not exceed the screening values. **Perchlorate** was detected at a maximum concentration of 0.915 µg/L (IR78-GW54), but did not exceed the screening values.
- **Total Metals**: The following table presents a summary of the total metals that exceeded screening values in samples collected from Site UXO-08.

Analyte	**Frequency of Detection** (# detections / # analyzed)	**Minimum Concentration** (µg/L)	**Maximum Concentration** (µg/L)	**Screening Criteria** (µg/L)		**Frequency of Exceedances**
Aluminum	4 / 13	69 J	1,940	2X Mean BBG	1,886	1
Antimony	2 / 16	1.32	*1.52*	Tap Water RSL	1.5	1
Arsenic	7 /16	0.908 J	11.8	2X Mean BBG	5.77	3
				Tap Water RSL	0.045	7
				NC 2L	10	1
Barium	5 / 16	28.2	119 J	2X Mean BBG	86.2	1
Beryllium	3 / 13	0.55 J	1.3 J	2X Mean BBG	0.308	3
Calcium	13 / 13	5,650	182,000	2X Mean BBG	69,078	10
Chromium	4 / 16	0.98 J	1.9 J	Tap Water RSL	0.043	4
Cobalt	5 / 13	2.7 J	16.4 J	2X Mean BBG	3.4	3
				Tap Water RSL	1.1	5
Copper	2 / 16	2.9 J	6 J	2X Mean BBG	2.8	2.0
Iron	13 / 13	208 J	29,200 J	2X Mean BBG	5,999	3
				Tap Water RSL	2,600	11
				NC 2L	300	11
Magnesium	12 / 13	3,440 J	15,200 J	2X Mean BBG	6,363	8
Manganese	13 / 13	54.1	500 J	2X Mean BBG	214	6
				Tap Water RSL	88	9
				NC 2L	50	13
Mercury	7 / 16	0.067 J	0.114 J	2X Mean BBG	0.1	2
Nickel	5 / 13	5.5 J	15.7 J	2X Mean BBG	7.97	2
Potassium	10 / 13	1,290 J	6,780	2X Mean BBG	3,277	3
Sodium	13 / 13	6,130	25,400	2X Mean BBG	22,508	2
Thallium	1 / 13	4.8 J	4.8 J	2X Mean BBG	3.78	1
				NC 2L	2.00	1
Zinc	8 / 16	12.4 J	194	2X Mean BBG	42.1	2

- **Dissolved Metals:** The following table presents a summary of the dissolved metals that exceeded screening values in samples collected from Site UXO-08.

Analyte	Frequency of Detection (# detections / # analyzed)	Minimum Concentration (µg/L)	Maximum Concentration (µg/L)	Screening Criteria (µg/L)		Frequency of Exceedances
Antimony, Dissolved	1 / 13	3.5 J	3.5 J	2X Mean BBG	3.28	1
				Tap Water RSL	1.5	1
Arsenic, Dissolved	2 / 13	10.3	11.2	2X Mean BBG	5.77	2
				Tap Water RSL	0.045	2
				NC 2L	10	2
Barium, Dissolved	2 / 13	55.2 J	118 J	2X Mean BBG	86.2	1
Beryllium, Dissolved	2 / 13	0.71 J	0.72 J	2X Mean BBG	0.308	2
Calcium, Dissolved	13 / 13	5,450	193,000	2X Mean BBG	69,078	10
Chromium, Dissolved	2 / 13	1.1 J	1.2 J	Tap Water RSL	0.043	2
Cobalt, Dissolved	5 / 13	2.9 J	15.5 J	2X Mean BBG	3.4	3
				Tap Water RSL	1.1	5
Iron, Dissolved	12 / 13	185	28900 J	2X Mean BBG	5,999	3
				Tap Water RSL	2,600	7
				NC 2L	300	11
Magnesium, Dissolved	10 / 13	5,840	14,600 J	2X Mean BBG	6,363	8
Manganese, Dissolved	13 / 13	49.4	477 J	2X Mean BBG	214	6
				Tap Water RSL	88	12
				NC 2L	50	9
Mercury, Dissolved	7 / 13	0.042 J	0.11 J	2X Mean BBG	0.1	1
Nickel, Dissolved	3 / 13	6.8 J	16.1 J	2X Mean BBG	7.97	2
Potassium, Dissolved	11 / 13	1,370 J	5,760	2X Mean BBG	3,277	3
Sodium, Dissolved	13 / 13	8,300	25,100	2X Mean BBG	22,508	1
Zinc, Dissolved	7 / 13	5 J	216	2X Mean BBG	42.1	1

Groundwater – HPCA

- **Figure 4-11** presents the results of the groundwater investigation within the HPCA exceeding two times the mean BBG value and at least one other criterion.
- **VOCs:** The following table presents a summary of the **VOCs** that exceeded screening values in samples collected from the HCPA.

Analyte	Frequency of Detection (# detections / # analyzed)	Minimum Concentration (µg/L)	Maximum Concentration (µg/L)	Screening Criteria (µg/L)		Frequency of Exceedances
1,1-Dichloroethane	6 / 17	1.5	190	Tap Water RSL	2.4	4
				NC 2L	6	4
1,1-Dichloroethene	8 / 17	0.27 J	27 J	NC 2L	7	4
1,2-Dichloroethane	1 / 17	0.82 J	0.82 J	Tap Water RSL	0.15	1
				NC 2L	0.4	1
Benzene	5 / 17	0.16 J	5.2	Tap Water RSL	0.41	5
				NC 2L	1	5
cis-1,2-Dichloroethene	14 / 17	0.38 J	870	Tap Water RSL	7.3	5
				NC 2L	70	4
TCE	10 / 17	0.51 J	130	Tap Water RSL	2	8
				NC 2L	3	7
VC	8 / 17	0.23 J	180	Tap Water RSL	0.016	8
				NC 2L	0.03	8

- **SVOCs:** The following table presents a summary of the SVOCs that exceeded screening values in samples collected from the HCPA.

Analyte	Frequency of Detection (# detected / # analyzed)	Minimum Concentration (µg/L)	Maximum Concentration (µg/L)	Screening Criteria (µg/L)		Frequency of Exceedances
Bis[2-ethylhexyl]phthalate	3/3	4	6 J	Tap Water RSL	4.8	2
				NC 2L	3	3
Naphthalene	1/1	3.1J	3.1 J	Tap Water RSL	0.14	3

- The HPCA groundwater samples were not analyzed for **pesticides or PCBs.**
- The following table presents a summary of the **explosives residues 1,3-dinitrobenzene and nitroglycerin** detected above screening values in HPCA groundwater samples.

Analyte	Frequency of Detection (# detected / # analyzed)	Minimum Concentration (µg/L)	Maximum Concentration (µg/L)	Screening Criteria (µg/L)		Frequency of Exceedances
1,3-dinitrobenzene	1/1	0.39	0.39	Tap Water RSL	0.37	1
nitroglycerin	1/1	2.7J	2.7 J	Tap Water RSL	0.37	1

- **Total Metals:** The following table presents a summary of the total metals that exceeded screening values in samples collected from the HCPA.

Analyte	Frequency of Detection (# detections / # analyzed)	Minimum Concentration (µg/L)	Maximum Concentration (µg/L)	Screening Criteria (µg/L)		Frequency of Exceedances
Aluminum	3 / 6	573	3,120	2X Mean BBG	1,886	1
Antimony	2 / 15	7.67	7.8 J	2X Mean BBG	3.28	2
				Tap Water RSL	1.5	2
Arsenic	12 / 15	0.4 J	16.4	2X Mean BBG	5.77	3
				Tap Water RSL	0.045	12
				NC 2L	10	3
Barium	13 / 15	26.1	124	2X Mean BBG	86.2	3
Calcium	6 / 6	32,600	117,000	2X Mean BBG	69,078	3
Chromium	3 / 15	2.4 J	3.7 J	2X Mean BBG	3.13	1
				Tap Water RSL	0.043	2
Iron	5 / 6	155	71,300	2X Mean BBG	5,999	4
				Tap Water RSL	2,600	4
				NC 2L	300	4
Manganese	6 / 6	15.1	1,330 J	2X Mean BBG	214	1
				Tap Water RSL	88	1
				NC 2L	50	4
Mercury	1 / 15	0.12 J	0.12 J	2X Mean BBG	0.1	1
Potassium	5/ 6	1,270 J	3970 J	2X Mean BBG	3,277	2
Selenium	4 /15	1.14 J	3.66	2X Mean BBG	3.14	1
Vanadium	2 / 6	8.8 J	34.5 J	2X Mean BBG	4.72	2

- **Dissolved Metals:** The following table indicates the dissolved metals that exceeded screening values in samples collected from the HCPA.

Analyte	Frequency of Detection (# detections / # analyzed)	Minimum Concentration (µg/L)	Maximum Concentration (µg/L)	Screening Criteria (µg/L)		Frequency of Exceedances
Barium, Dissolved	4 / 7	33.8 J	93.4 J	2X Mean BBG	86.2	1
Calcium, Dissolved	7 / 7	32,100	185,000	2X Mean BBG	69,078	1
Chromium, Dissolved	1 / 7	1.2 J	1.2 J	Tap Water RSL	0.043	1
Iron, Dissolved	4 / 7	5,800	35,300	2X Mean BBG	5,999	2
				Tap Water RSL	2,600	4
				NC 2L	300	4
Manganese, Dissolved	5 / 7	29	1,290 J	2X Mean BBG	214	1
				Tap Water RSL	88	1
				NC 2L	50	4
Potassium, Dissolved	5 / 7	1,270 J	3,980 J	2X Mean BBG	3,277	2
Vanadium, Dissolved	1 / 7	8.7 J	8.7 J	2X Mean BBG	4.72	1

Groundwater – POIA

- One **VOC,** toluene, was detected in a sample from MR08-TW04 (12 micrograms per liter [µg/L]), at a concentration below two times the mean BBG value, and below regulatory screening values. VOCs have been documented to be related to Site 78 and are being addressed under an approved Record of Decision (ROD); therefore, the groundwater samples collected in 2008 from wells MR08-TW01 through MR08-TW26 were not analyzed for VOCs.
- **SVOCs** were not detected in groundwater samples collected within the POIA.
- **Pesticides** and **PCBs** were not detected in the groundwater samples collected in 2007; therefore, the 2008 POIA groundwater samples were not analyzed for pesticides or PCBs.
- **Explosives residues** were not detected in any of the groundwater samples collected at the POIA.
- **Perchlorate** was detected in all samples, but at concentrations below the USEPA Tap Water RSL (2.6 µg/L).
- **Total Metals:** The following table indicates the total metals that exceeded screening values in samples collected from the POIA. Samples were not analyzed for dissolved metals.

Analyte	Frequency of Detection (# detections / # analyzed)	Minimum Concentration (µg/L)	Maximum Concentration (µg/L)	Location of Maximum Concentration	Screening Criteria (µg/L)		Frequency of Exceedances
Arsenic	2 / 6	0.279 J	0.282 J	MR08-TW03D	Tap Water RSL	0.045	2
Barium	6 / 6	12.4	96	MR08-TW01	2X Mean BBG	86.2	1
Selenium	6 / 6	1.47 J	5.03	MR08-TW03	2X Mean BBG	3.14	3

Groundwater – FC Area

- **Figure 4-12** presents FC area groundwater results exceeding two times the mean BBG value and at least one other criterion.
- Two **VOCs, toluene and ethylbenzene,** were detected in FC area groundwater samples; however, detected concentrations did not exceed two times the mean BBG value or regulatory screening values. VOCs have been documented to be related to Site 78 and are being addressed under an approved ROD; therefore, the groundwater samples collected in 2008 from wells MR08-TW01 through MR08-TW26 were not analyzed for VOCs.
- **SVOCs** were not detected in any groundwater samples from the FC area.
- **Pesticides** and **PCBs** were not detected in the groundwater samples collected in 2007; therefore, the 2008 FC area groundwater samples were not analyzed for pesticides or PCBs.

- **Explosives residues** were not detected in any of the groundwater samples collected at the FC area. **Perchlorate** was detected in 11 of 14 samples, but at concentrations below the USEPA Tap Water RSL (2.6 µg/L).
- **Total Metals:** The following table presents a summary of the total metals that exceeded screening values in samples collected from the FC area. Samples were not analyzed for dissolved metals.

Analyte	Frequency of Detection (# detections / # analyzed)	Minimum Concentration (µg/L)	Maximum Concentration (µg/L)	Screening Criteria (µg/L)		Frequency of Exceedances
Antimony	1 / 14	1.72	1.72	Tap Water RSL	1.5	1
Arsenic	13 / 14	0.383 J	31.8	2X Mean BBG	5.77	1
				Tap Water RSL	0.045	13
				NC 2L	10	1
Barium	14 / 14	30.3	170	2X Mean BBG	86.2	7
Chromium	8 / 14	2.62 J	18.9	2X Mean BBG	3.13	7
				Tap Water RSL	0.043	7
				NC 2L	10	1
Copper	2 / 14	13.4 J	14.1 J	2X Mean BBG	2.76	2
Lead	10 / 14	0.256 J	7.74	2X Mean BBG	2.8	1

4.3.4 Surface Water

Surface water results were compared to the North Carolina Surface Water Quality Standards (NCSWQS) for human health and water supply (NCDENR, 2010b), the USEPA Tap Water RSLs (USEPA, 2010a), and the National Recommended Water Quality Criteria (NRWQC) for Human Health (organisms and water + organisms criteria) (USEPA, 2010d). **Appendix I** presents a summary of the surface water results compared to the screening levels. Results exceeding one or more screening levels are shown on **Figure 4-13**. A summary of the analytical results is also provided below**.**

- **VOCs** were not detected in any surface water samples at concentrations exceeding screening levels.
- **Bis(2-ethylhexyl)phthalate** was the only **SVOC** detected in surface water above screening levels, as shown in the following table.

Analyte	Frequency of Detection (# detected / # analyzed)	Minimum Concentration (µg/L)	Maximum Concentration (µg/L)	Screening Criteria (µg/L)		Frequency of Exceedances
Bis(2-ethylhexyl)phthalate	1/1	2J	2 J	NRWQC	1.2	1

- **Perchlorate** was detected in all three surface water samples, with two samples exceeding the USEPA Adjusted Tap Water RSL (2.6 µg/L).

Analyte	Frequency of Detection (# detected / # analyzed)	Minimum Concentration (µg/L)	Maximum Concentration (µg/L)	Screening Criteria (µg/L)		Frequency of Exceedances
Perchlorate	3/3	3.9	5.8	Tap Water RSL	2.6	2

- **Total Metals:** The following table presents a summary of the total metals that exceeded screening values in samples collected from surface water samples.

Analyte	Frequency of Detection (# detected / # analyzed)	Minimum Concentration (µg/L)	Maximum Concentration (µg/L)	Screening Criteria (µg/L)		Frequency of Exceedances
Total arsenic	3/3	.807	3.26	Tap Water RSL	0.045	3
				NRWQC	0.018	3
Total cadmium	1/3	1.41	1.99	Tap Water RSL	1.8	1
Total chromium	3/3	9.73	15	Tap Water RSL	11	2
Total copper	1/3	118	162	Tap Water RSL	150	1

4.3.5 Sediment

The sediment results were compared to the Adjusted USEPA Soil RSLs (USEPA, 2010a). **Appendix I** presents the sediment results compared to the screening levels. Results exceeding at least one of the screening levels are shown on **Figure 4-13**. A summary of the analytical results is also provided below.

- **VOCs, explosives residues,** and **perchlorate** were not detected at concentrations in excess of the screening levels.
- One **SVOC (benzo[a]pyrene)** was detected at concentrations above the USEPA Adjusted Residential Soil RSL, as shown in the following table. No SVOCs exceeded the USEPA Adjusted Industrial Soil RSLs.

Analyte	Frequency of Detection (# detected / # analyzed)	Minimum Concentration (µg/kg)	Maximum Concentration (µg/kg)	Screening Criteria (µg/kg)		Frequency of Exceedances
Benzo[a]pyrene	2/3	12U	62	Residential Soil RSL	15	2

- **Metals:** The following table indicates the metals that exceeded screening values in samples collected from sediment.

Analyte	Frequency of Detection (# detected / # analyzed)	Minimum Concentration (mg/kg)	Maximum Concentration (mg/kg)	Screening Criteria (mg/kg)		Frequency of Exceedances
Antimony	1/3	0.65	9.56	Residential Soil RSL	3.1	1
Arsenic	3/3	0.807	52.4	Residential Soil RSL	0.39	3
				Industrial Soil RSL	1.6	2
Chromium	3/3	2.33	46.5	Residential Soil RSL	0.29	3
				Industrial Soil RSL	5.6	2

4.3.6 Post-Detonation Surface Soil

Detected analytical constituents were compared to two times the mean BBG concentration and the project action limits: USEPA RSLs for Residential and Industrial Soils (USEPA, 2010a) and NC SSLs (NCDENR, 2010b). The detected concentrations of specific target analytes for the post-detonation samples are summarized in **Appendix I**. Results exceeding at least one of the screening levels are shown on **Figure 4-14**. A summary of the analytical results is provided below.

- **One SVOC, nitrobenzene,** was detected in one sample (MR08-SS02, 141 PM (estimated due to matrix interference) µg/kg) at a concentration below USEPA RSLs.
- Five **explosives residues, 1,3-dinitrobenzene, 2,4,6-trinitrotoluene, perchlorate, hexahydro-1,3,5-trinitro-1,3,5-triazine (RDX), and tetryl,** were detected in post-detonation soil samples. None of the detected concentrations exceeded USEPA RSLs; there are no NC SSLs for explosives residues.
- **Metals**
  - The following table presents a summary of the metals which exceeded screening values in post-detonation soil samples.

Analyte	Frequency of Detection (# detected / # analyzed)	Minimum Concentration (mg/kg)	Maximum Concentration (mg/kg)	Screening Values (mg/kg)		Frequency of Exceedances
Aluminum	3 / 3	7,570	9,260	2X Mean BBG	5,487	3
				Residential RSL	7,700	2
Arsenic	3 / 3	1.25	1.35	2X Mean BBG	0.626	3
				Residential RSL	0.39	3
Barium	3 / 3	15.5	17.4	2x Mean BBG	14.5	3
Chromium	3 / 3	9.46	10.6	NC SSL	3.8	3
				2X Mean BBG	6.05	3
				Residential RSL	0.29	3
				Industrial RSL	5.6	3
Cobalt	3 / 3	0.331 J	0.337 J	2x Mean BBG	0.294	3
Iron	3 / 3	4,750	5,950	NC SSL	150	3
				2X Mean BBG	3,245	3
				Residential RSL	5,500	2
Magnesium	3 / 3	3.54 N	14.9 N	2X Mean BBG	13.7	1
Nickel	3 / 3	1.68	2.25	2X Mean BBG	1.21	3
Selenium	3 / 3	0.464	0.634	2X Mean BBG	0.563	2
Vanadium	3 / 3	13.4	15.4	2X Mean BBG	8.9	3

N - Tentative Identification, consider present, special methods may be needed to confirm its presence or absence in future sampling efforts

\\NORTHEND\PROJ\USNAVFACENGCOM\CAMPLEJEUNE\CUSTOM\TEMPLATES\11X17_LANDSCAPE.MXT MRISSING 8/24/2010 09:16:36

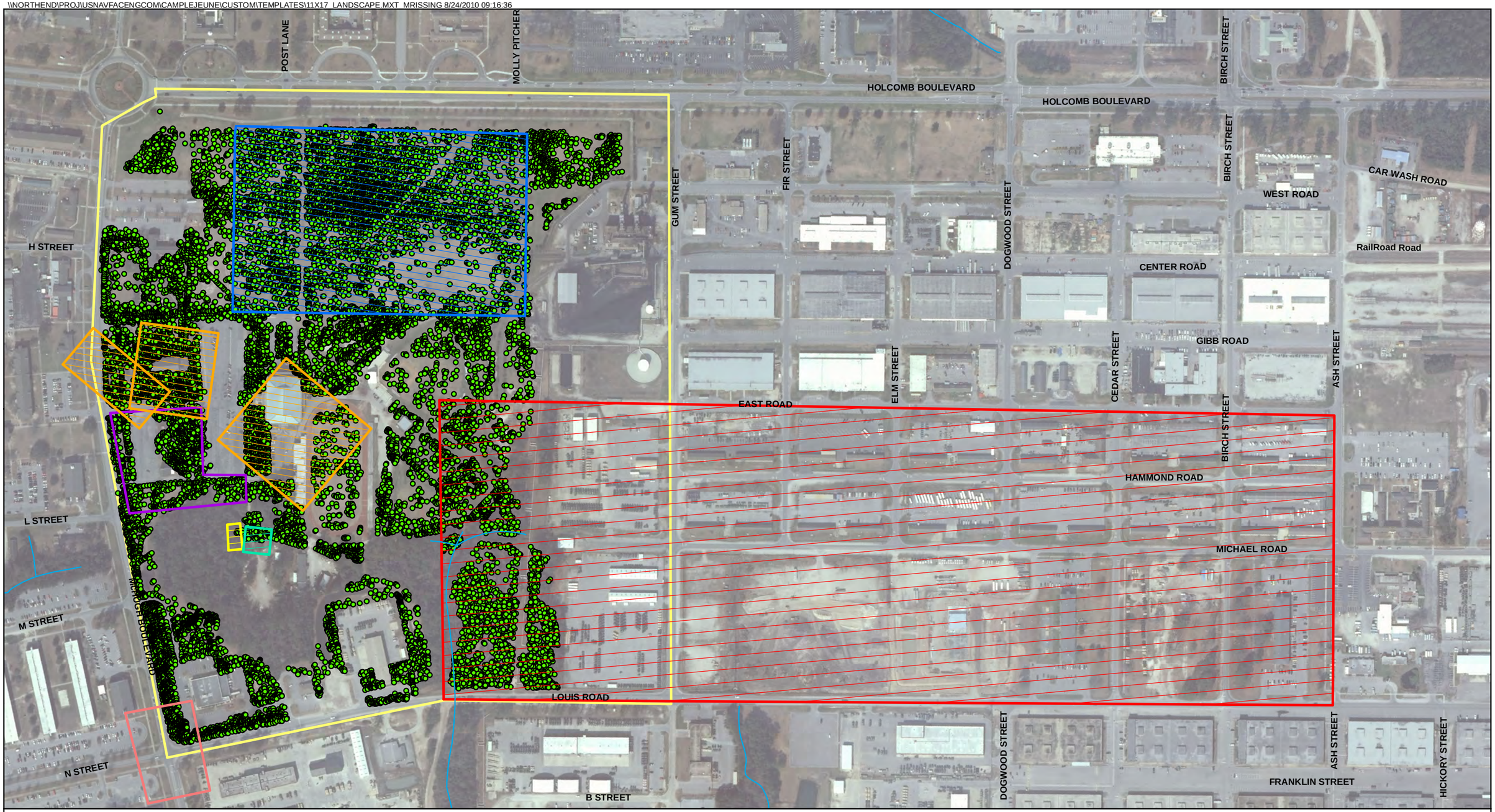

Legend

- Geophysical Anomaly (greater than 5 mV)
- Surface Water Centerline
- Former Base CS Gas Chamber
- Former D-7 Gas Chamber
- W.P.T. Hill Field (Parade Grounds)
- Alternate Location of Base CS Gas Chamber
- Fitness Center
- Hadnot Point Construction Area
- Post Office Intersection Area
- Site UXO-08 Boundary

N

0 200 400 800 Feet

1 inch = 400 feet

Figure 4-1
DGM Result
Site UXO-08 PA/SI Report
MCB CamLej
North Carolina

CH2MHILL

\\NORTHEND\PROJ\USNAVFACENGCOM\CAMPLEJEUNE\MAPFILES\SITE_UXO_08\PA_SI\2011\FIGURE_4_2_GEOPHYSICAL_ANOMALIES_SELECTED_FOR_INTRUSIVE_INVESTIGATION.MXD MARTESE 2/18/2011 14:19:29

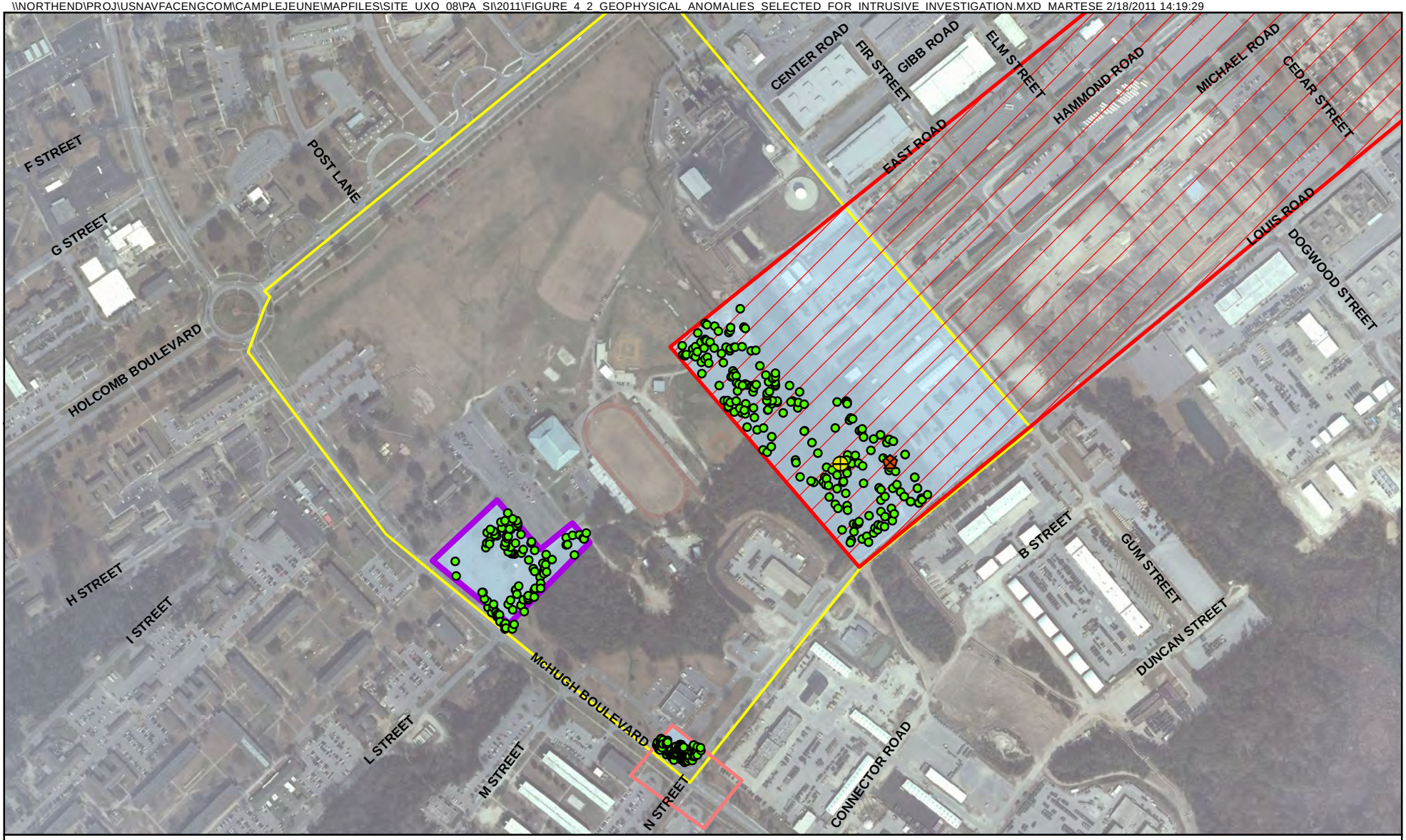

Legend

- Geophysical Anomaly (greater than 5 mV)
- 40mm White Star Parachute, M583A1
- Detonation Location
- Hadnot Point Construction Area
- Post Office Intersection Area
- Fitness Center
- Site UXO-08 Boundary
- 202K MILCON Areas at Site UXO-08

N

0 300 600 1,200 Feet

1 inch = 600 feet

Figure 4-2
Geophysical Anomalies Selected for Intrusive Investigation
Site UXO-08 PA/SI Report
MCB CamLej
North Carolina

CH2MHILL

Generated by: *Lael Feist* Checked by: *David Seed*

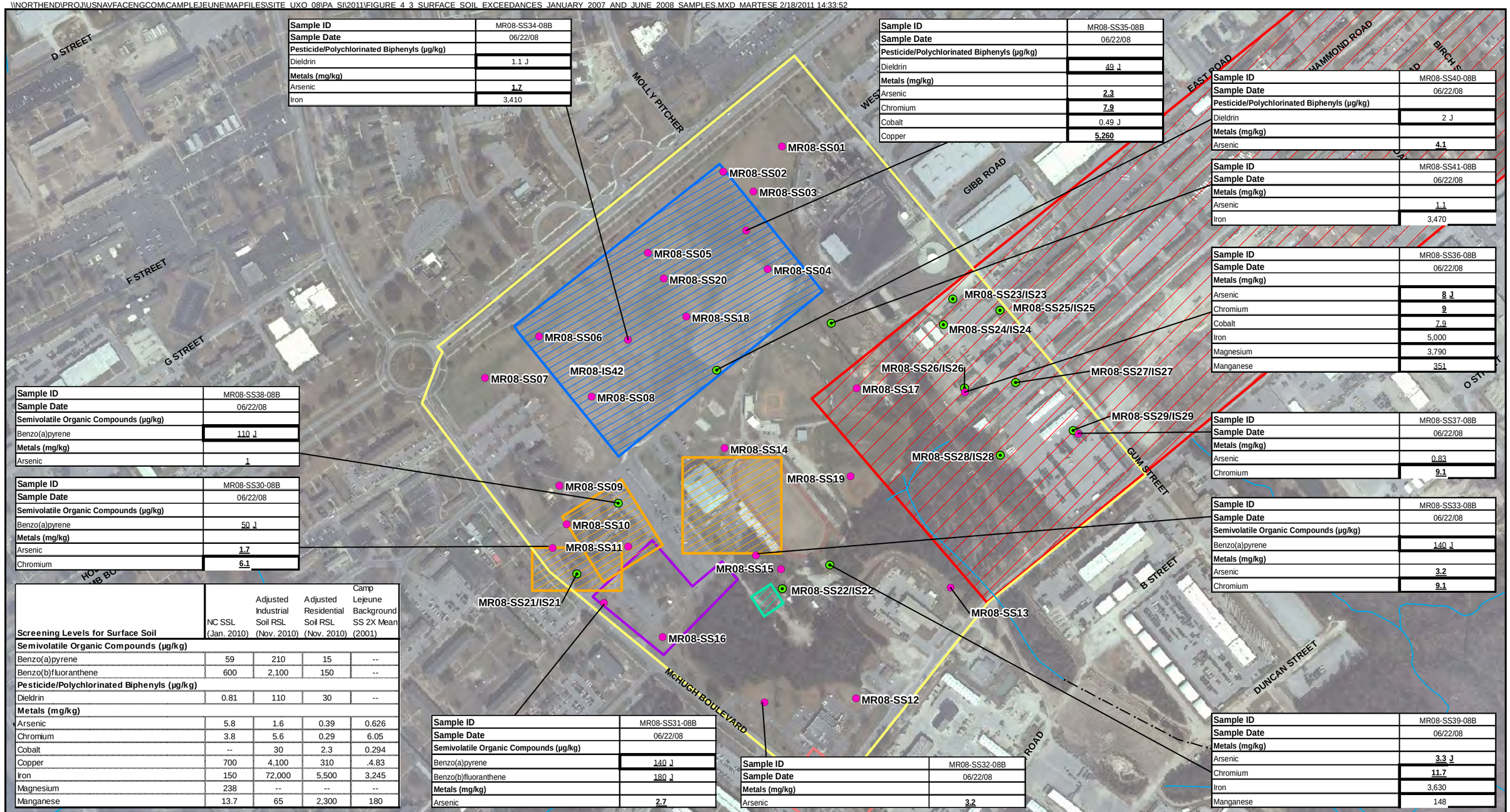

Sample ID	MR08-SS34-08B
Sample Date	06/22/08
Pesticide/Polychlorinated Biphenyls (µg/kg)	
Dieldrin	1.1 J
Metals (mg/kg)	
Arsenic	1.7
Iron	3,410

Sample ID	MR08-SS35-08B
Sample Date	06/22/08
Pesticide/Polychlorinated Biphenyls (µg/kg)	
Dieldrin	49 J
Metals (mg/kg)	
Arsenic	2.3
Chromium	7.9
Cobalt	0.49 J
Copper	5,260

Sample ID	MR08-SS40-08B
Sample Date	06/22/08
Pesticide/Polychlorinated Biphenyls (µg/kg)	
Dieldrin	2 J
Metals (mg/kg)	
Arsenic	4.1

Sample ID	MR08-SS41-08B
Sample Date	06/22/08
Metals (mg/kg)	
Arsenic	1.1
Iron	3,470

Sample ID	MR08-SS36-08B
Sample Date	06/22/08
Metals (mg/kg)	
Arsenic	8 J
Chromium	9
Cobalt	7.9
Iron	5,000
Magnesium	3,790
Manganese	351

Sample ID	MR08-SS37-08B
Sample Date	06/22/08
Metals (mg/kg)	
Arsenic	0.83
Chromium	9.1

Sample ID	MR08-SS33-08B
Sample Date	06/22/08
Semivolatile Organic Compounds (µg/kg)	
Benzo(a)pyrene	140 J
Metals (mg/kg)	
Arsenic	3.2
Chromium	9.1

Sample ID	MR08-SS39-08B
Sample Date	06/22/08
Metals (mg/kg)	
Arsenic	3.3 J
Chromium	11.7
Iron	3,630
Manganese	148

Sample ID	MR08-SS38-08B
Sample Date	06/22/08
Semivolatile Organic Compounds (µg/kg)	
Benzo(a)pyrene	110 J
Metals (mg/kg)	
Arsenic	1

Sample ID	MR08-SS30-08B
Sample Date	06/22/08
Semivolatile Organic Compounds (µg/kg)	
Benzo(a)pyrene	50 J
Metals (mg/kg)	
Arsenic	1.7
Chromium	6.1

Screening Levels for Surface Soil	NC SSL (Jan. 2010)	Adjusted Industrial Soil RSL (Nov. 2010)	Adjusted Residential Soil RSL (Nov. 2010)	Camp Lejeune Background SS 2X Mean (2001)
Semivolatile Organic Compounds (µg/kg)				
Benzo(a)pyrene	59	210	15	--
Benzo(b)fluoranthene	600	2,100	150	--
Pesticide/Polychlorinated Biphenyls (µg/kg)				
Dieldrin	0.81	110	30	--
Metals (mg/kg)				
Arsenic	5.8	1.6	0.39	0.626
Chromium	3.8	5.6	0.29	6.05
Cobalt	--	30	2.3	0.294
Copper	700	4,100	310	.4.83
Iron	150	72,000	5,500	3,245
Magnesium	238	--	--	--
Manganese	13.7	65	2,300	180

Sample ID	MR08-SS31-08B
Sample Date	06/22/08
Semivolatile Organic Compounds (µg/kg)	
Benzo(a)pyrene	140 J
Benzo(b)fluoranthene	180 J
Metals (mg/kg)	
Arsenic	2.7

Sample ID	MR08-SS32-08B
Sample Date	06/22/08
Metals (mg/kg)	
Arsenic	3.2

Legend

- Surface Soil Sample
- Surface/Subsurface Soil Sample
- Culvert
- Surface Water Course Centerline
- Site UXO-08 Boundary
- Fitness Center
- Former Base CS Gas Chamber
- Former D-7 Gas Chamber
- W.P.T. Hill Field (Parade Grounds)
- Hadnot Point Construction Area
- Post Office Intersection Area

Notes:
J - Analyte present, value may or may not be accurate or precise
Bold box indicates exceedance of NC SSLs
Bold text indicates exceedance of Adjusted Industrial Soil RSLs
Underline indicates exceedance of Adjusted Residential Soil RSLs
-Data displayed for metals exceed both two times the Base background levels and an additional screening criterion
-mg/kg - Milligrams per kilogram
-µg/kg - Micrograms per kilogram

N

0 225 450 900 Feet

1 inch = 450 feet

Figure 4-3
Surface Soil Exceedances (January 2007 and June 2008 Samples)
Site UXO-08 PA/SI Report
MCB CamLej
North Carolina

CH2MHILL

Generated by: ***Lael Feist*** Checked by: ***David Seed***

\\NORTHEND\PROJ\USNAVFACENGCOM\CAMPLEJEUNE\MAPFILES\SITE_UXO_08\PA_SI\2011\FIGURE_4_4_SURFACE_SOIL_SVOC_EXCEEDANCES_11X17.MXD MARTESE 2/18/2011 15:28:13

Legend

- Hadnot Point Construction Area
- Site UXO-08 Boundary

Exceedances

- RSL Industrial Soil Adjusted (November 2010)
- RSL Residential Soil Adjusted (November 2010)
- NC SSL (January 2010)

N

0 200 400 Feet

1 inch = 200 feet

Figure 4-4
Surface Soil VOC and SVOC Exceedances, Hadnot Point Construction Area
(November 2008-January 2009 Samples)
Site UXO-08 PA/SI Report
MCB CamLej
North Carolina

CH2MHILL

Generated by: ***Lael Feist*** Checked by: ***David Seed***

\\NORTHEND\PROJ\USNAVFACENGCOM\CAMPLEJEUNE\MAPFILES\SITE_UXO_08\PA_SI\2011\FIGURE_4_5_SURFACE_SOIL_METALS_EXCEEDANCES_11X17.MXD MARTESE 2/18/2011 15:39:23

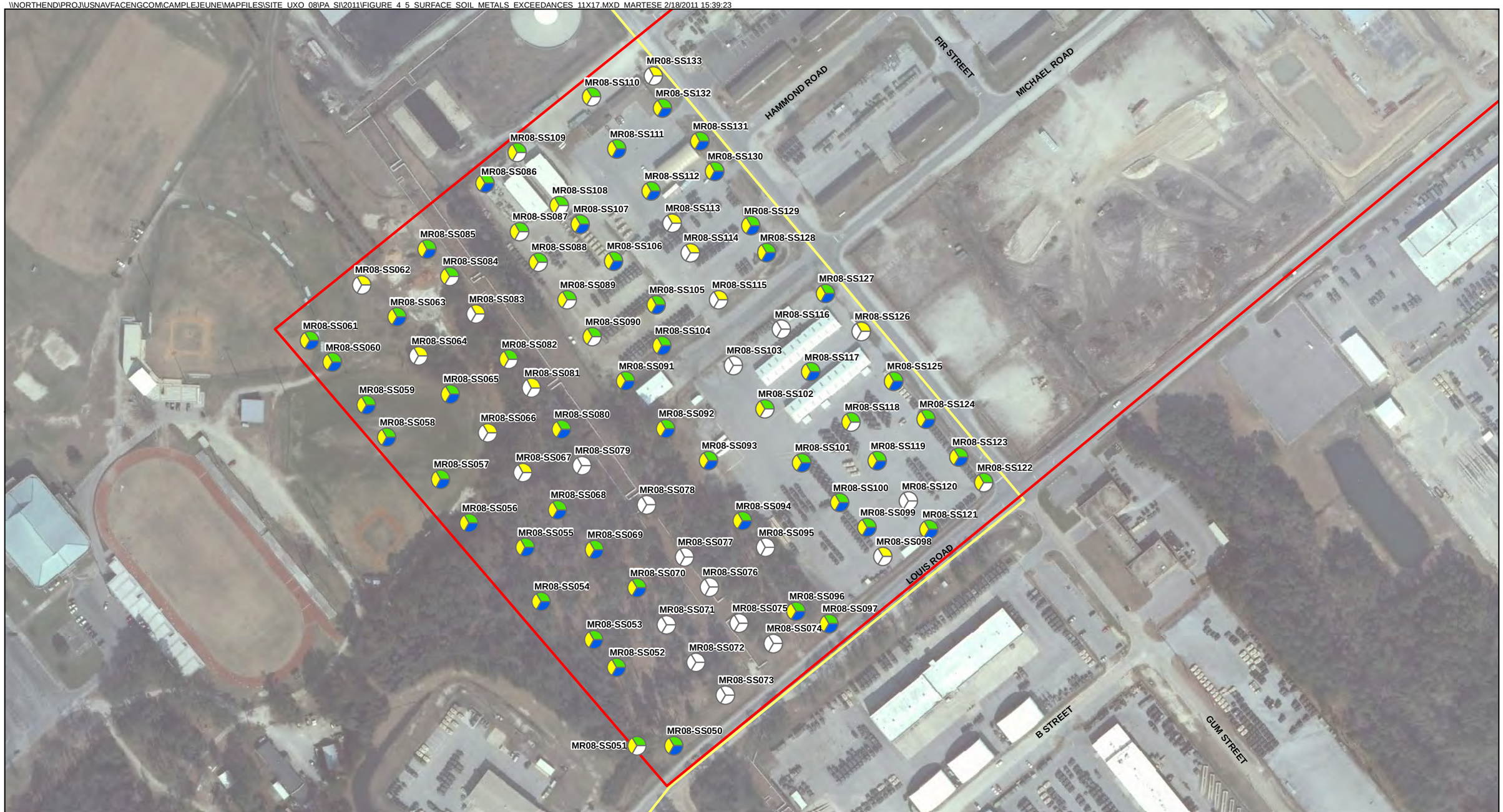

Legend

- Site UXO-08 Boundary
- Hadnot Point Construction Area

Exceedances

- RSL Industrial Soil Adjusted (November 2010)
- RSL Residential Soil Adjusted (November 2010)
- NC SSL (January 2010)

Note:
-Data displayed for metals exceed both two times the Base background levels and an additional screening criterion

N

0 200 400 Feet

1 inch = 200 feet

Figure 4-5
Surface Soil Metals Exceedances, Hadnot Point Construction Area
(November 2008-January 2009 Samples)
Site UXO-08 PA/SI Report
MCB CamLej
North Carolina

CH2MHILL

Generated by: ***Lael Feist*** Checked by: ***David Seed***

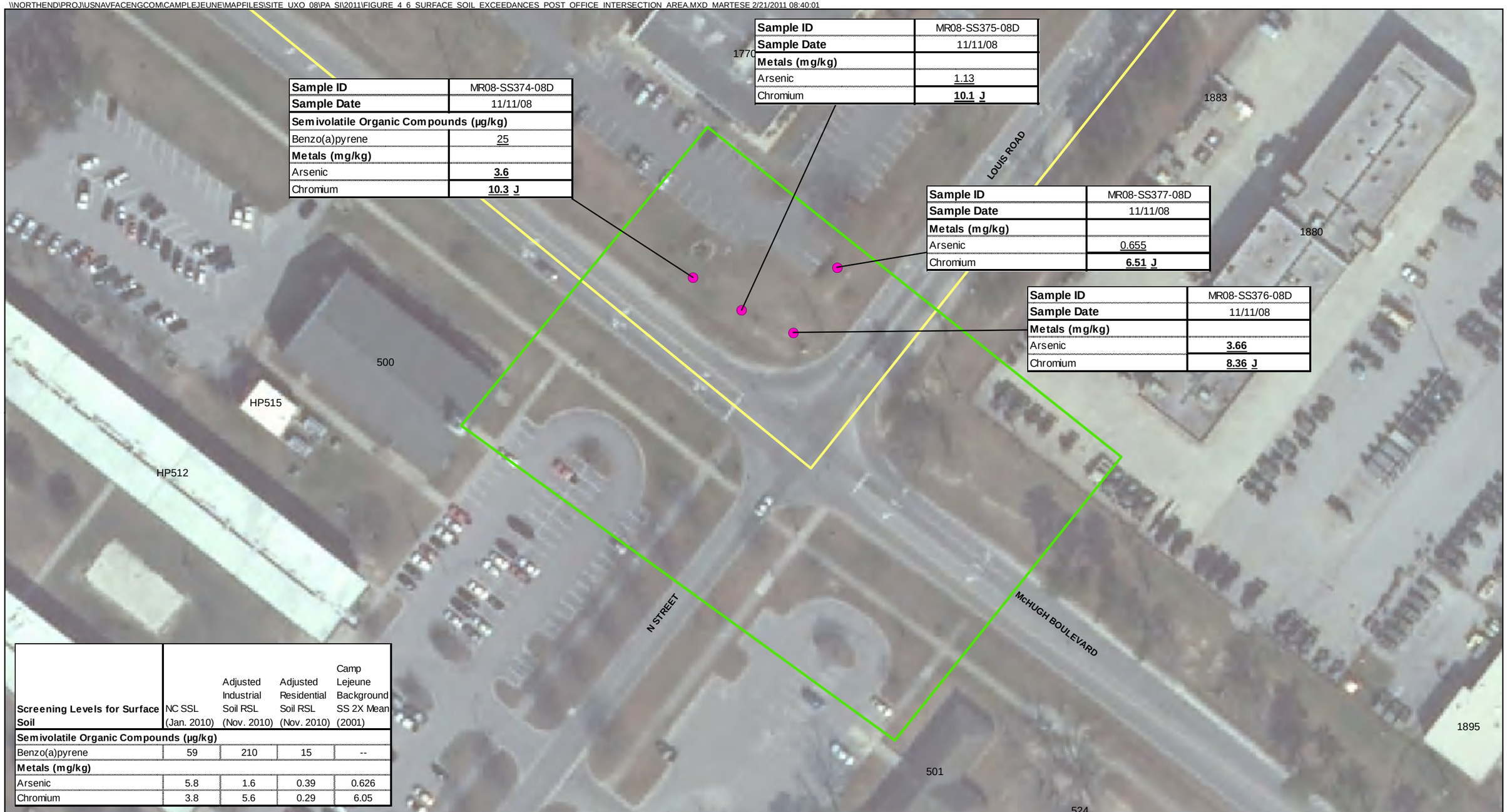

Sample ID	MR08-SS375-08D
Sample Date	11/11/08
Metals (mg/kg)	
Arsenic	1.13
Chromium	**10.1 J**

Sample ID	MR08-SS374-08D
Sample Date	11/11/08
Semivolatile Organic Compounds (µg/kg)	
Benzo(a)pyrene	25
Metals (mg/kg)	
Arsenic	**3.6**
Chromium	**10.3 J**

Sample ID	MR08-SS377-08D
Sample Date	11/11/08
Metals (mg/kg)	
Arsenic	0.655
Chromium	**6.51 J**

Sample ID	MR08-SS376-08D
Sample Date	11/11/08
Metals (mg/kg)	
Arsenic	**3.66**
Chromium	**8.36 J**

Screening Levels for Surface Soil	NC SSL (Jan. 2010)	Adjusted Industrial Soil RSL (Nov. 2010)	Adjusted Residential Soil RSL (Nov. 2010)	Camp Lejeune Background SS 2X Mean (2001)
Semivolatile Organic Compounds (µg/kg)				
Benzo(a)pyrene	59	210	15	--
Metals (mg/kg)				
Arsenic	5.8	1.6	0.39	0.626
Chromium	3.8	5.6	0.29	6.05

Legend
- Surface Soil Sample
- Site UXO-08 Boundary
- Post Office Intersection Area

Notes:
J - Analyte present, value may or may not be accurate or precise
Bold box indicates exceedance of NC SSLs
Bold text indicates exceedance of Adjusted Industrial Soil RSLs
Underline indicates exceedance of Adjusted Residential Soil RSLs
-Data displayed for metals exceed both two times the Base background levels and an additional screening criterion
-mg/kg - Milligrams per kilogram
-µg/kg - Micrograms per kilogram

N

0 70 140 Feet

1 inch = 70 feet

Figure 4-6
Surface Soil Exceedances, Post Office Intersection Area
(November 2008-January 2009 Samples)
Site UXO-08 PA/SI Report
MCB CamLej
North Carolina

CH2MHILL

Generated by: ***Lael Feist*** Checked by: ***David Seed***

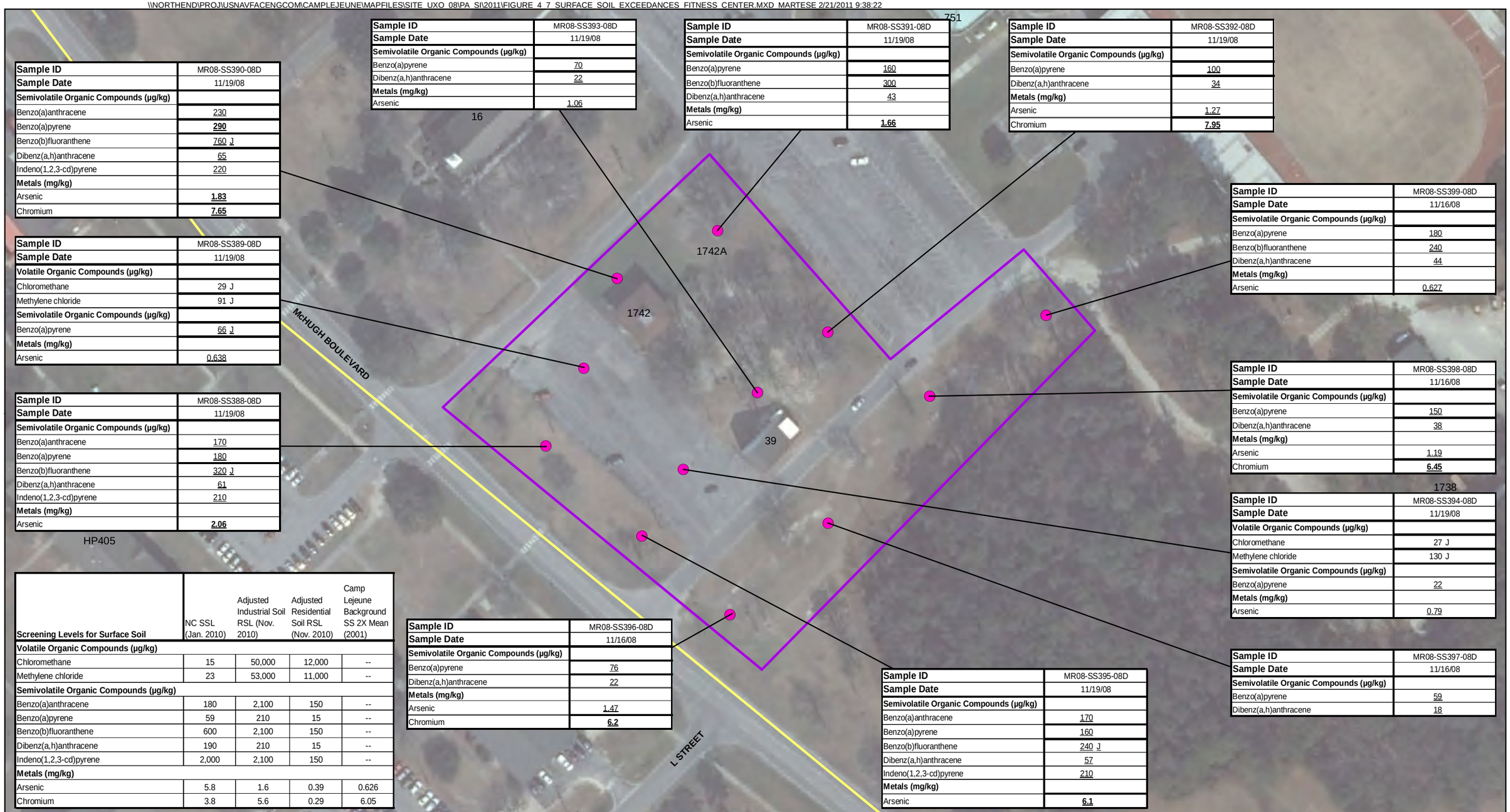

Sample ID	MR08-SS390-08D
Sample Date	11/19/08
Semivolatile Organic Compounds (µg/kg)	
Benzo(a)anthracene	230
Benzo(a)pyrene	**290**
Benzo(b)fluoranthene	760 J
Dibenz(a,h)anthracene	65
Indeno(1,2,3-cd)pyrene	220
Metals (mg/kg)	
Arsenic	**1.83**
Chromium	**7.65**

Sample ID	MR08-SS389-08D
Sample Date	11/19/08
Volatile Organic Compounds (µg/kg)	
Chloromethane	29 J
Methylene chloride	91 J
Semivolatile Organic Compounds (µg/kg)	
Benzo(a)pyrene	66 J
Metals (mg/kg)	
Arsenic	0.638

Sample ID	MR08-SS388-08D
Sample Date	11/19/08
Semivolatile Organic Compounds (µg/kg)	
Benzo(a)anthracene	170
Benzo(a)pyrene	180
Benzo(b)fluoranthene	320 J
Dibenz(a,h)anthracene	61
Indeno(1,2,3-cd)pyrene	210
Metals (mg/kg)	
Arsenic	**2.06**

Sample ID	MR08-SS393-08D
Sample Date	11/19/08
Semivolatile Organic Compounds (µg/kg)	
Benzo(a)pyrene	70
Dibenz(a,h)anthracene	22
Metals (mg/kg)	
Arsenic	1.06

Sample ID	MR08-SS391-08D
Sample Date	11/19/08
Semivolatile Organic Compounds (µg/kg)	
Benzo(a)pyrene	160
Benzo(b)fluoranthene	300
Dibenz(a,h)anthracene	43
Metals (mg/kg)	
Arsenic	**1.66**

Sample ID	MR08-SS392-08D
Sample Date	11/19/08
Semivolatile Organic Compounds (µg/kg)	
Benzo(a)pyrene	100
Dibenz(a,h)anthracene	34
Metals (mg/kg)	
Arsenic	1.27
Chromium	**7.95**

Sample ID	MR08-SS399-08D
Sample Date	11/16/08
Semivolatile Organic Compounds (µg/kg)	
Benzo(a)pyrene	180
Benzo(b)fluoranthene	240
Dibenz(a,h)anthracene	44
Metals (mg/kg)	
Arsenic	0.627

Sample ID	MR08-SS398-08D
Sample Date	11/16/08
Semivolatile Organic Compounds (µg/kg)	
Benzo(a)pyrene	150
Dibenz(a,h)anthracene	38
Metals (mg/kg)	
Arsenic	1.19
Chromium	**6.45**

Sample ID	MR08-SS394-08D
Sample Date	11/19/08
Volatile Organic Compounds (µg/kg)	
Chloromethane	27 J
Methylene chloride	130 J
Semivolatile Organic Compounds (µg/kg)	
Benzo(a)pyrene	22
Metals (mg/kg)	
Arsenic	0.79

Sample ID	MR08-SS397-08D
Sample Date	11/16/08
Semivolatile Organic Compounds (µg/kg)	
Benzo(a)pyrene	59
Dibenz(a,h)anthracene	18

Sample ID	MR08-SS396-08D
Sample Date	11/16/08
Semivolatile Organic Compounds (µg/kg)	
Benzo(a)pyrene	76
Dibenz(a,h)anthracene	22
Metals (mg/kg)	
Arsenic	1.47
Chromium	**6.2**

Sample ID	MR08-SS395-08D
Sample Date	11/19/08
Semivolatile Organic Compounds (µg/kg)	
Benzo(a)anthracene	170
Benzo(a)pyrene	160
Benzo(b)fluoranthene	240 J
Dibenz(a,h)anthracene	57
Indeno(1,2,3-cd)pyrene	210
Metals (mg/kg)	
Arsenic	**6.1**

Screening Levels for Surface Soil	NC SSL (Jan. 2010)	Adjusted Industrial Soil RSL (Nov. 2010)	Adjusted Residential Soil RSL (Nov. 2010)	Camp Lejeune Background SS 2X Mean (2001)
Volatile Organic Compounds (µg/kg)				
Chloromethane	15	50,000	12,000	--
Methylene chloride	23	53,000	11,000	--
Semivolatile Organic Compounds (µg/kg)				
Benzo(a)anthracene	180	2,100	150	--
Benzo(a)pyrene	59	210	15	--
Benzo(b)fluoranthene	600	2,100	150	--
Dibenz(a,h)anthracene	190	210	15	--
Indeno(1,2,3-cd)pyrene	2,000	2,100	150	--
Metals (mg/kg)				
Arsenic	5.8	1.6	0.39	0.626
Chromium	3.8	5.6	0.29	6.05

Legend
- Surface Soil Sample
- Buildings
- Fitness Center
- Site UXO-08 Boundary

Notes:
J - Analyte present, value may or may not be accurate or precise
Bold box indicates exceedance of NC SSLs
Bold text indicates exceedance of Adjusted Industrial Soil RSLs
Underline indicates exceedance of Adjusted Residential Soil RSLs
-Data displayed for metals exceed both two times the Base background levels and an additional screening criterion
-mg/kg - Milligrams per kilogram
-µg/kg - Micrograms per kilogram

N

0 50 100 200 Feet

1 inch = 100 feet

Figure 4-7
Surface Soil Exceedances, Fitness Center
(November 2008-January 2009)
Site UXO-08 PA/SI Report
MCB CamLej
North Carolina

CH2MHILL

Generated by: ***Lael Feist*** Checked by: ***David Seed***

\\NORTHEND\PROJ\USNAVFACENGCOM\CAMPLEJEUNE\MAPFILES\SITE_UXO_08\PA_SI\2011\FIGURE_4_8_SUBSURFACE_SOIL_EXCEEDANCES_JANUARY_2007_AND_JUNE_2008_SAMPLES.MXD MARTESE 2/21/2011 9:49:04

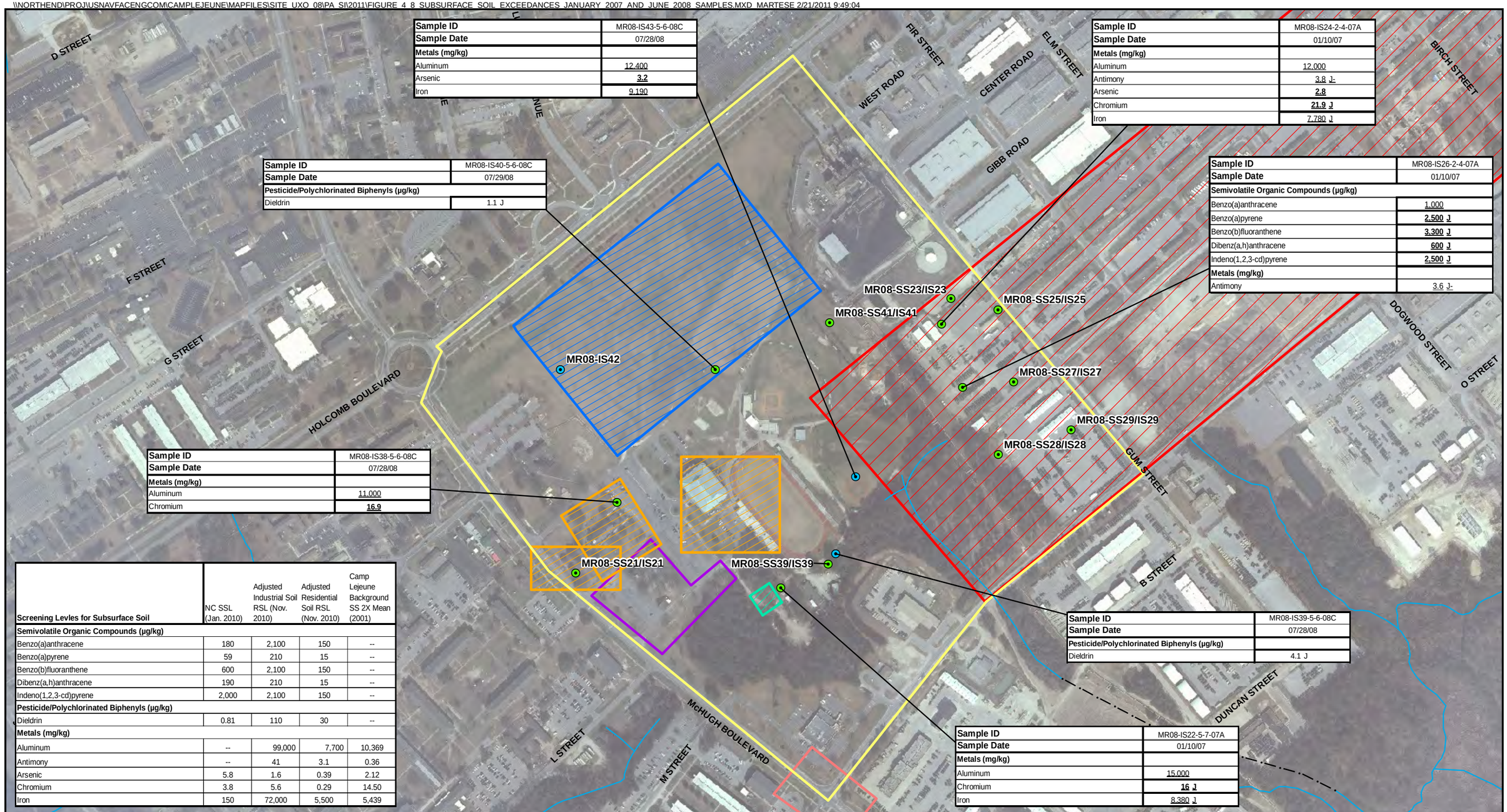

Sample ID	MR08-IS43-5-6-08C
Sample Date	07/28/08
Metals (mg/kg)	
Aluminum	12,400
Arsenic	**3.2**
Iron	9,190

Sample ID	MR08-IS24-2-4-07A
Sample Date	01/10/07
Metals (mg/kg)	
Aluminum	12,000
Antimony	3.8 J-
Arsenic	**2.8**
Chromium	**21.9 J**
Iron	7,780 J

Sample ID	MR08-IS40-5-6-08C
Sample Date	07/29/08
Pesticide/Polychlorinated Biphenyls (µg/kg)	
Dieldrin	1.1 J

Sample ID	MR08-IS26-2-4-07A
Sample Date	01/10/07
Semivolatile Organic Compounds (µg/kg)	
Benzo(a)anthracene	1,000
Benzo(a)pyrene	**2,500 J**
Benzo(b)fluoranthene	**3,300 J**
Dibenz(a,h)anthracene	**600 J**
Indeno(1,2,3-cd)pyrene	**2,500 J**
Metals (mg/kg)	
Antimony	3.6 J-

Sample ID	MR08-IS38-5-6-08C
Sample Date	07/28/08
Metals (mg/kg)	
Aluminum	11,000
Chromium	**16.9**

Screening Levles for Subsurface Soil	NC SSL (Jan. 2010)	Adjusted Industrial Soil RSL (Nov. 2010)	Adjusted Residential Soil RSL (Nov. 2010)	Camp Lejeune Background SS 2X Mean (2001)
Semivolatile Organic Compounds (µg/kg)				
Benzo(a)anthracene	180	2,100	150	--
Benzo(a)pyrene	59	210	15	--
Benzo(b)fluoranthene	600	2,100	150	--
Dibenz(a,h)anthracene	190	210	15	--
Indeno(1,2,3-cd)pyrene	2,000	2,100	150	--
Pesticide/Polychlorinated Biphenyls (µg/kg)				
Dieldrin	0.81	110	30	--
Metals (mg/kg)				
Aluminum	--	99,000	7,700	10,369
Antimony	--	41	3.1	0.36
Arsenic	5.8	1.6	0.39	2.12
Chromium	3.8	5.6	0.29	14.50
Iron	150	72,000	5,500	5,439

Sample ID	MR08-IS39-5-6-08C
Sample Date	07/28/08
Pesticide/Polychlorinated Biphenyls (µg/kg)	
Dieldrin	4.1 J

Sample ID	MR08-IS22-5-7-07A
Sample Date	01/10/07
Metals (mg/kg)	
Aluminum	15,000
Chromium	**16 J**
Iron	8,380 J

Legend

- Surface/Subsurface Soil Sample
- Subsurface Soil Sample
- Culvert
- Surface Water Course Centerline
- Site UXO-08 Boundary
- Fitness Center
- Former Base CS Gas Chamber
- Former D-7 Gas Chamber
- W.P.T. Hill Field (Parade Grounds)
- Hadnot Point Construction Area
- Post Office Intersection Area

Notes:
J - Analyte present, value may or may not be accurate or precise
J- - Analyte present, value may be biased low, actual value may be higher
Bold box indicates exceedance of NC SSLs
Bold text indicates exceedance of Adjusted Industrial Soil RSLs
Underline indicates exceedance of Adjusted Residential Soil RSLs
-Data displayed for metals exceed both two times the Base background levels and an additional screening criterion
-mg/kg - Milligrams per kilogram
-µg/kg - Micrograms per kilogram

Figure 4-8
Subsurface Soil Exceedances (January 2007 and June 2008 Samples)
Site UXO-08 PA/SI Report
MCB CamLej
North Carolina

N
0 225 450 900 Feet
1 inch = 450 feet

CH2MHILL

Generated by: ***Lael Feist*** Checked by: ***David Seed***

\\NORTHEND\PROJ\USNAVFACENGCOM\CAMPLEJEUNE\MAPFILES\SITE_UXO_08\PA_SI\2011\FIGURE_4_9_SUBSURFACE_SOIL_EXCEEDANCES_HADNOT_POINT_CONSTRUCTION_AREA.MXD MARTESE 2/21/2011 11:28:34

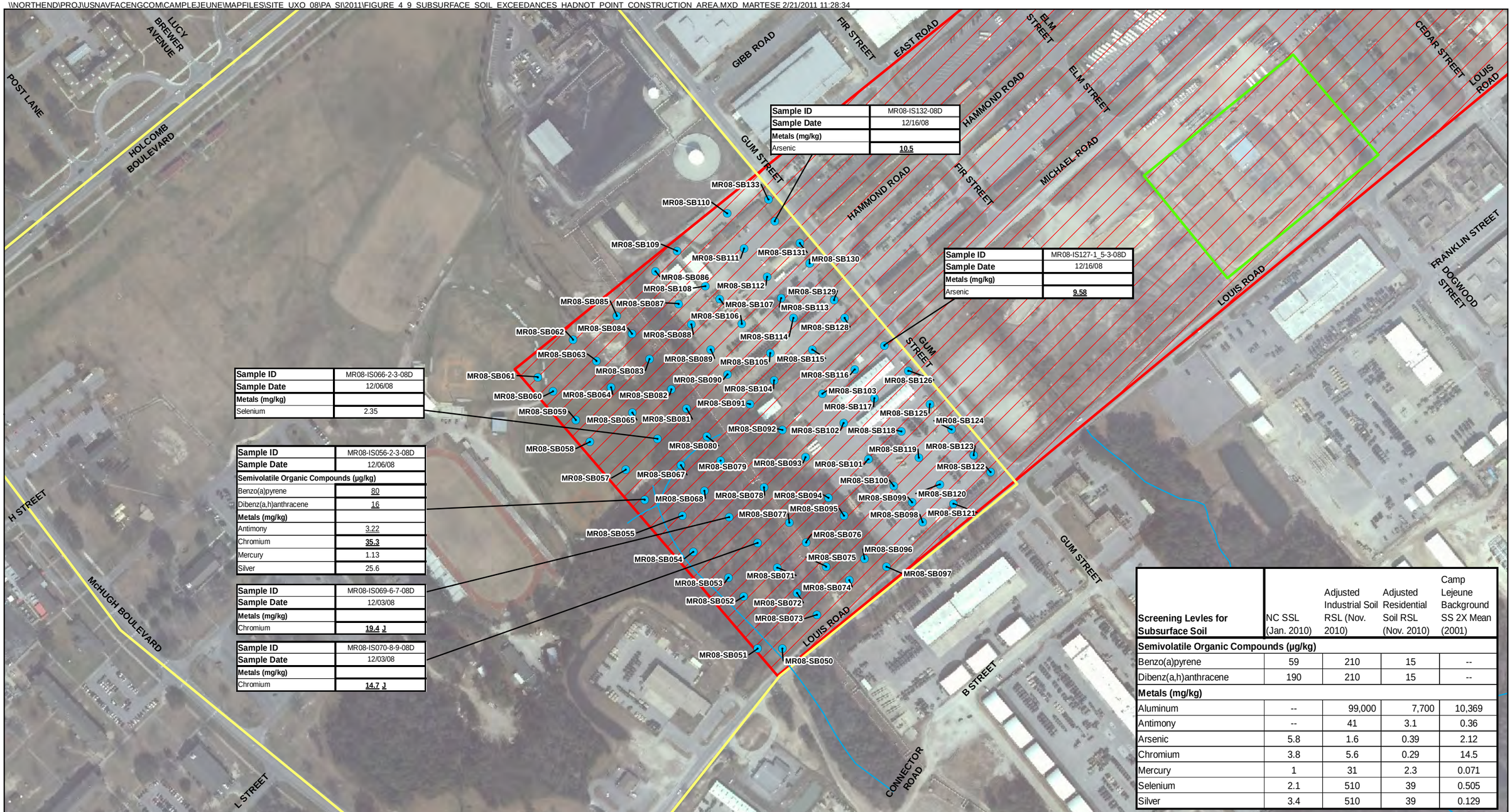

Sample ID	MR08-IS132-08D
Sample Date	12/16/08
Metals (mg/kg)	
Arsenic	**10.5**

Sample ID	MR08-IS127-1_5-3-08D
Sample Date	12/16/08
Metals (mg/kg)	
Arsenic	**9.58**

Sample ID	MR08-IS066-2-3-08D
Sample Date	12/06/08
Metals (mg/kg)	
Selenium	2.35

Sample ID	MR08-IS056-2-3-08D
Sample Date	12/06/08
Semivolatile Organic Compounds (µg/kg)	
Benzo(a)pyrene	80
Dibenz(a,h)anthracene	16
Metals (mg/kg)	
Antimony	3.22
Chromium	**35.3**
Mercury	1.13
Silver	25.6

Sample ID	MR08-IS069-6-7-08D
Sample Date	12/03/08
Metals (mg/kg)	
Chromium	**19.4** J

Sample ID	MR08-IS070-8-9-08D
Sample Date	12/03/08
Metals (mg/kg)	
Chromium	**14.7** J

Screening Levles for Subsurface Soil	NC SSL (Jan. 2010)	Adjusted Industrial Soil RSL (Nov. 2010)	Adjusted Residential Soil RSL (Nov. 2010)	Camp Lejeune Background SS 2X Mean (2001)
Semivolatile Organic Compounds (µg/kg)				
Benzo(a)pyrene	59	210	15	--
Dibenz(a,h)anthracene	190	210	15	--
Metals (mg/kg)				
Aluminum	--	99,000	7,700	10,369
Antimony	--	41	3.1	0.36
Arsenic	5.8	1.6	0.39	2.12
Chromium	3.8	5.6	0.29	14.5
Mercury	1	31	2.3	0.071
Selenium	2.1	510	39	0.505
Silver	3.4	510	39	0.129

Legend
- Subsurface Soil Sample
- Surface Water Course Centerline
- Construction Area
- Site UXO-08 Boundary
- Hadnot Point Construction Area
- Post Office Intersection Area

Notes:
J - Analyte present, value may or may not be accurate or precise
Bold box indicates exceedance of NC SSLs
Bold text indicates exceedance of Adjusted Industrial Soil RSLs
Underline indicates exceedance of Adjusted Residential Soil RSLs
-Data displayed for metals exceed both two times the Base background levels and an additional screening criterion
-mg/kg - Milligrams per kilogram
-µg/kg - Micrograms per kilogram

N

0 150 300 600 Feet

1 inch = 300 feet

Figure 4-9
Subsurface Soil Exceedances, Hadnot Point Construction Area
(November 2008-January 2009)
Site UXO-08 PA/SI Report
MCB CamLej
North Carolina

CH2MHILL

Generated by: ***Lael Feist*** Checked by: ***David Seed***

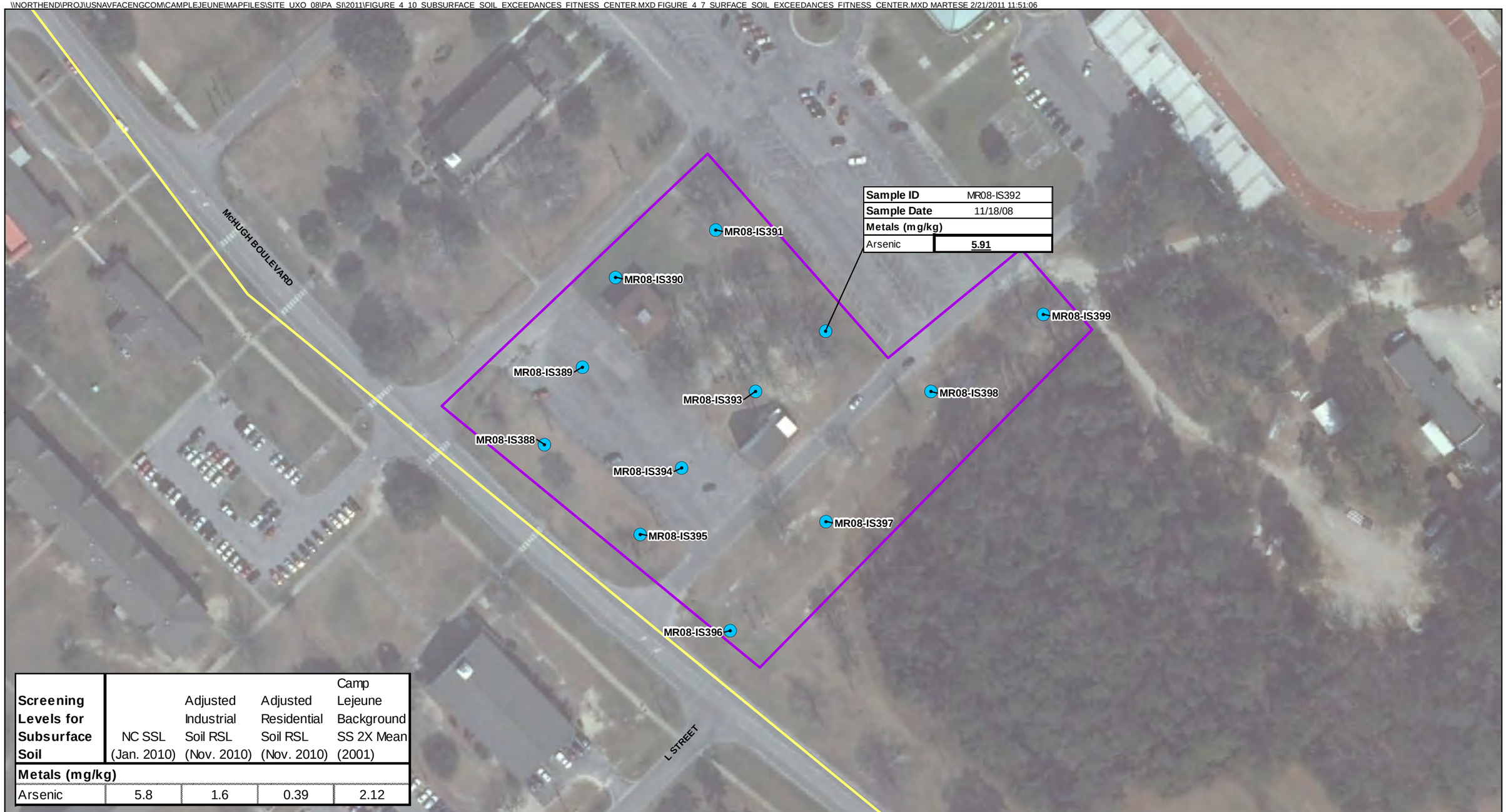

Screening Levels for Subsurface Soil	NC SSL (Jan. 2010)	Adjusted Industrial Soil RSL (Nov. 2010)	Adjusted Residential Soil RSL (Nov. 2010)	Camp Lejeune Background SS 2X Mean (2001)
Metals (mg/kg)				
Arsenic	5.8	1.6	0.39	2.12

Legend
- Subsurface Soil Sample
- Fitness Center
- Site UXO-08 Boundary

Notes:
J - Analyte present, value may or may not be accurate or precise
Bold box indicates exceedance of NC SSLs
Bold text indicates exceedance of Adjusted Industrial Soil RSLs
Underline indicates exceedance of Adjusted Residential Soil RSLs
-Data displayed for metals exceed both two times the Base background levels and an additional screening criterion
-mg/kg - Milligrams per kilogram

N

0 50 100 200 Feet

1 inch = 100 feet

Figure 4-10
Subsurface Soil Exceedances, Fitness Center
(November 2008-January 2009)
Site UXO-08 PA/SI Report
MCB CamLej
North Carolina

CH2MHILL

Generated by: ***Lael Feist*** Checked by: ***David Seed***

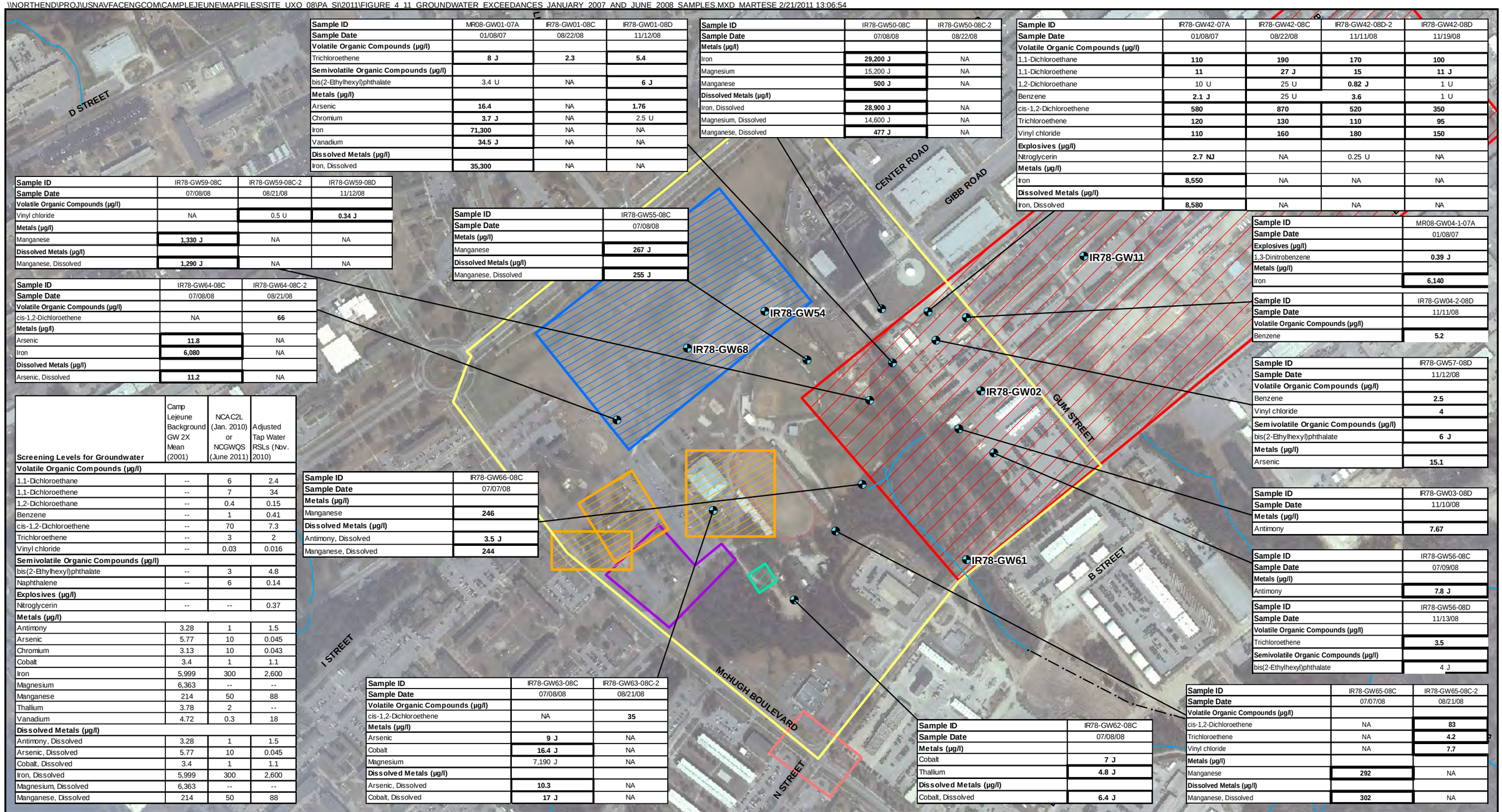

Sample ID	MR08-GW01-07A	IR78-GW01-08C	IR78-GW01-08D
Sample Date	01/08/07	08/22/08	11/12/08
Volatile Organic Compounds (µg/l)			
Trichloroethene	**8 J**	**2.3**	**5.4**
Semivolatile Organic Compounds (µg/l)			
bis(2-Ethylhexyl)phthalate	3.4 U	NA	**6 J**
Metals (µg/l)			
Arsenic	**16.4**	NA	**1.76**
Chromium	**3.7 J**	NA	2.5 U
Iron	**71,300**	NA	NA
Vanadium	**34.5 J**	NA	NA
Dissolved Metals (µg/l)			
Iron, Dissolved	**35,300**	NA	NA

Sample ID	IR78-GW50-08C	IR78-GW50-08C-2
Sample Date	07/08/08	08/22/08
Metals (µg/l)		
Iron	**29,200 J**	NA
Magnesium	15,200 J	NA
Manganese	**500 J**	NA
Dissolved Metals (µg/l)		
Iron, Dissolved	**28,900 J**	NA
Magnesium, Dissolved	14,600 J	NA
Manganese, Dissolved	**477 J**	NA

Sample ID	IR78-GW42-07A	IR78-GW42-08C	IR78-GW42-08D-2	IR78-GW42-08D
Sample Date	01/08/07	08/22/08	11/11/08	11/19/08
Volatile Organic Compounds (µg/l)				
1,1-Dichloroethane	**110**	**190**	**170**	**100**
1,1-Dichloroethene	**11**	**27 J**	**15**	**11 J**
1,2-Dichloroethane	10 U	25 U	**0.82 J**	1 U
Benzene	**2.1 J**	25 U	**3.6**	1 U
cis-1,2-Dichloroethene	**580**	**870**	**520**	**350**
Trichloroethene	**120**	**130**	**110**	**95**
Vinyl chloride	**110**	**160**	**180**	**150**
Explosives (µg/l)				
Nitroglycerin	**2.7 NJ**	NA	0.25 U	NA
Metals (µg/l)				
Iron	**8,550**	NA	NA	NA
Dissolved Metals (µg/l)				
Iron, Dissolved	**8,580**	NA	NA	NA

Sample ID	IR78-GW59-08C	IR78-GW59-08C-2	IR78-GW59-08D
Sample Date	07/08/08	08/21/08	11/12/08
Volatile Organic Compounds (µg/l)			
Vinyl chloride	NA	0.5 U	**0.34 J**
Metals (µg/l)			
Manganese	**1,330 J**	NA	NA
Dissolved Metals (µg/l)			
Manganese, Dissolved	**1,290 J**	NA	NA

Sample ID	IR78-GW55-08C
Sample Date	07/08/08
Metals (µg/l)	
Manganese	**267 J**
Dissolved Metals (µg/l)	
Manganese, Dissolved	**255 J**

Sample ID	MR08-GW04-1-07A
Sample Date	01/08/07
Explosives (µg/l)	
1,3-Dinitrobenzene	**0.39 J**
Metals (µg/l)	
Iron	**6,140**

Sample ID	IR78-GW64-08C	IR78-GW64-08C-2
Sample Date	07/08/08	08/21/08
Volatile Organic Compounds (µg/l)		
cis-1,2-Dichloroethene	NA	**66**
Metals (µg/l)		
Arsenic	**11.8**	NA
Iron	**6,080**	NA
Dissolved Metals (µg/l)		
Arsenic, Dissolved	**11.2**	NA

Sample ID	IR78-GW04-2-08D
Sample Date	11/11/08
Volatile Organic Compounds (µg/l)	
Benzene	**5.2**

Sample ID	IR78-GW57-08D
Sample Date	11/12/08
Volatile Organic Compounds (µg/l)	
Benzene	**2.5**
Vinyl chloride	**4**
Semivolatile Organic Compounds (µg/l)	
bis(2-Ethylhexyl)phthalate	**6 J**
Metals (µg/l)	
Arsenic	**15.1**

Screening Levels for Groundwater	Camp Lejeune Background GW 2X Mean (2001)	NCAC2L (Jan. 2010) or NCGWQS (June 2011)	Adjusted Tap Water RSLs (Nov. 2010)
Volatile Organic Compounds (µg/l)			
1,1-Dichloroethane	--	6	2.4
1,1-Dichloroethene	--	7	34
1,2-Dichloroethane	--	0.4	0.15
Benzene	--	1	0.41
cis-1,2-Dichloroethene	--	70	7.3
Trichloroethene	--	3	2
Vinyl chloride	--	0.03	0.016
Semivolatile Organic Compounds (µg/l)			
bis(2-Ethylhexyl)phthalate	--	3	4.8
Naphthalene	--	6	0.14
Explosives (µg/l)			
Nitroglycerin	--	--	0.37
Metals (µg/l)			
Antimony	3.28	1	1.5
Arsenic	5.77	10	0.045
Chromium	3.13	10	0.043
Cobalt	3.4	1	1.1
Iron	5,999	300	2,600
Magnesium	6,363	--	--
Manganese	214	50	88
Thallium	3.78	2	--
Vanadium	4.72	0.3	18
Dissolved Metals (µg/l)			
Antimony, Dissolved	3.28	1	1.5
Arsenic, Dissolved	5.77	10	0.045
Cobalt, Dissolved	3.4	1	1.1
Iron, Dissolved	5,999	300	2,600
Magnesium, Dissolved	6,363	--	--
Manganese, Dissolved	214	50	88

Sample ID	IR78-GW66-08C
Sample Date	07/07/08
Metals (µg/l)	
Manganese	**246**
Dissolved Metals (µg/l)	
Antimony, Dissolved	**3.5 J**
Manganese, Dissolved	**244**

Sample ID	IR78-GW03-08D
Sample Date	11/10/08
Metals (µg/l)	
Antimony	**7.67**

Sample ID	IR78-GW56-08C
Sample Date	07/09/08
Metals (µg/l)	
Antimony	**7.8 J**

Sample ID	IR78-GW56-08D
Sample Date	11/13/08
Volatile Organic Compounds (µg/l)	
Trichloroethene	**3.5**
Semivolatile Organic Compounds (µg/l)	
bis(2-Ethylhexyl)phthalate	4 J

Sample ID	IR78-GW63-08C	IR78-GW63-08C-2
Sample Date	07/08/08	08/21/08
Volatile Organic Compounds (µg/l)		
cis-1,2-Dichloroethene	NA	**35**
Metals (µg/l)		
Arsenic	**9 J**	NA
Cobalt	**16.4 J**	NA
Magnesium	7,190 J	NA
Dissolved Metals (µg/l)		
Arsenic, Dissolved	**10.3**	NA
Cobalt, Dissolved	**17 J**	NA

Sample ID	IR78-GW62-08C
Sample Date	07/08/08
Metals (µg/l)	
Cobalt	**7 J**
Thallium	**4.8 J**
Dissolved Metals (µg/l)	
Cobalt, Dissolved	**6.4 J**

Sample ID	IR78-GW65-08C	IR78-GW65-08C-2
Sample Date	07/07/08	08/21/08
Volatile Organic Compounds (µg/l)		
cis-1,2-Dichloroethene	NA	**83**
Trichloroethene	NA	**4.2**
Vinyl chloride	NA	**7.7**
Metals (µg/l)		
Manganese	**292**	NA
Dissolved Metals (µg/l)		
Manganese, Dissolved	**302**	NA

Legend

- Groundwater Monitoring Well
- Culvert
- Surface Water Course Centerline
- Site UXO-08 Boundary
- Fitness Center
- Former Base CS Gas Chamber
- Former D-7 Gas Chamber
- W.P.T. Hill Field (Parade Grounds)
- Hadnot Point Construction Area
- Post Office Intersection Area

Notes:
J - Analyte present, value may or may not be accurate or precise
U- The material was analyzed for, but not detected
Bold box indicates exceedance of NCAC2L or NCGWQS
Bold text indicates exceedance of Adjusted Tap Water RSL
NA- not analyzed
-Data displayed for metals exceed both two times the Base background levels and an additional screening criterion
-µg/L - Micrograms per liter

N

0 250 500 1,000 Feet

1 inch = 500 feet

Figure 4-11
Groundwater Exceedances, Site UXO-08 and Hadnot Point Construction Area
Site UXO-08 PA/SI Report
MCB CamLej
North Carolina

CH2MHILL

Generated by: ***Lael Feist*** Checked by: ***David Seed***

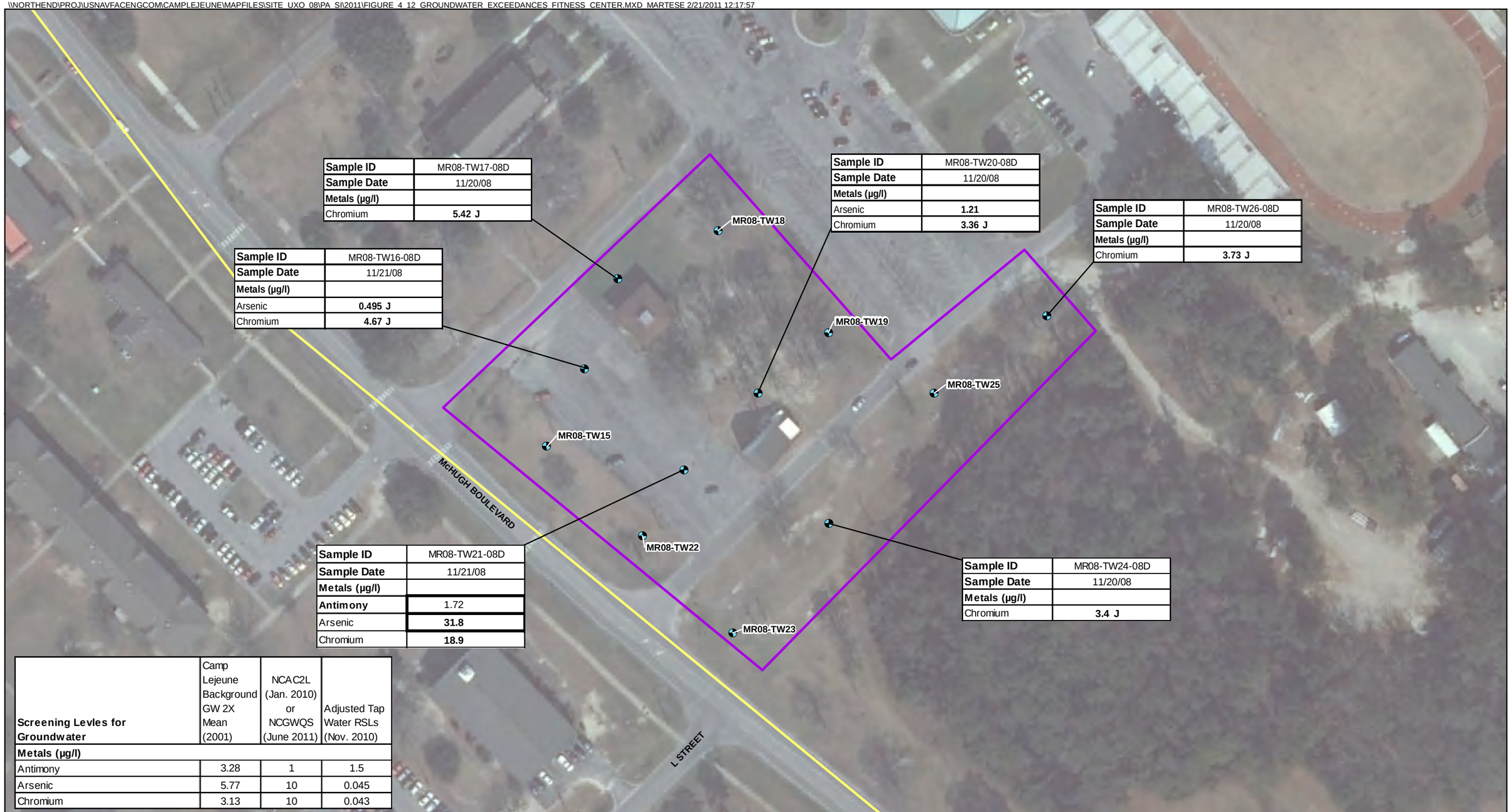

Sample ID	MR08-TW17-08D
Sample Date	11/20/08
Metals (µg/l)	
Chromium	**5.42 J**

Sample ID	MR08-TW16-08D
Sample Date	11/21/08
Metals (µg/l)	
Arsenic	**0.495 J**
Chromium	**4.67 J**

Sample ID	MR08-TW20-08D
Sample Date	11/20/08
Metals (µg/l)	
Arsenic	**1.21**
Chromium	**3.36 J**

Sample ID	MR08-TW26-08D
Sample Date	11/20/08
Metals (µg/l)	
Chromium	**3.73 J**

Sample ID	MR08-TW21-08D
Sample Date	11/21/08
Metals (µg/l)	
Antimony	1.72
Arsenic	**31.8**
Chromium	**18.9**

Sample ID	MR08-TW24-08D
Sample Date	11/20/08
Metals (µg/l)	
Chromium	**3.4 J**

Screening Levles for Groundwater	Camp Lejeune Background GW 2X Mean (2001)	NCAC2L (Jan. 2010) or NCGWQS (June 2011)	Adjusted Tap Water RSLs (Nov. 2010)
Metals (µg/l)			
Antimony	3.28	1	1.5
Arsenic	5.77	10	0.045
Chromium	3.13	10	0.043

Legend
- Groundwater Sample
- Fitness Center
- Site UXO-08 Boundary

Notes:
J - Analyte present, value may or may not be accurate or precise
Bold box indicates exceedance of NCAC2L or NCGWQS
Bold text indicates exceedance of Adjusted Tap Water RSL
-Data displayed for metals exceed both two times the Base background levels and an additional screening criterion
-µg/L - Micrograms per liter

N

0 50 100 200 Feet

1 inch = 100 feet

Figure 4-12
Groundwater Exceedances, Fitness Center
(November 2008-January 2009)
Site UXO-08 PA/SI Report
MCB CamLej
North Carolina

CH2MHILL

Generated by: ***Lael Feist*** Checked by: ***David Seed***

\\NORTHEND\PROJ\USNAVFACENGCOM\CAMPLEJEUNE\MAPFILES\SITE_UXO_08\PA_SI\2011\FIGURE_4_13_SD_AND_SW_EXCEEDANCES_JANUARY_2007_AND_JUNE_2008_SAMPLES.MXD MARTESE 2/21/2011 12:35:22

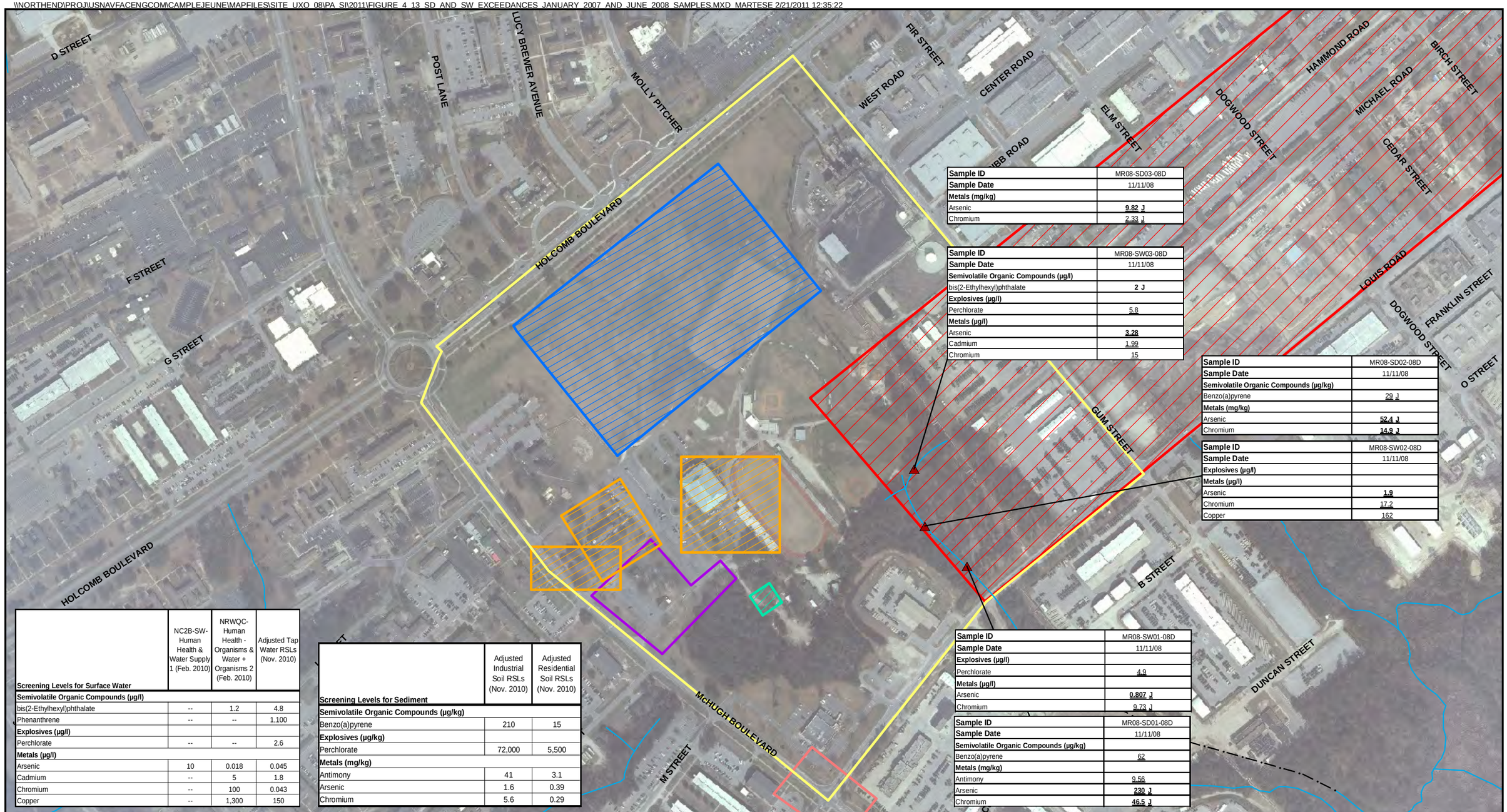

Sample ID	MR08-SD03-08D
Sample Date	11/11/08
Metals (mg/kg)	
Arsenic	**9.82 J**
Chromium	2.33 J

Sample ID	MR08-SW03-08D
Sample Date	11/11/08
Semivolatile Organic Compounds (µg/l)	
bis(2-Ethylhexyl)phthalate	**2 J**
Explosives (µg/l)	
Perchlorate	5.8
Metals (µg/l)	
Arsenic	**3.28**
Cadmium	1.99
Chromium	15

Sample ID	MR08-SD02-08D
Sample Date	11/11/08
Semivolatile Organic Compounds (µg/kg)	
Benzo(a)pyrene	29 J
Metals (mg/kg)	
Arsenic	**52.4 J**
Chromium	**14.9 J**

Sample ID	MR08-SW02-08D
Sample Date	11/11/08
Explosives (µg/l)	
Metals (µg/l)	
Arsenic	**1.9**
Chromium	17.2
Copper	162

Sample ID	MR08-SW01-08D
Sample Date	11/11/08
Explosives (µg/l)	
Perchlorate	4.9
Metals (µg/l)	
Arsenic	**0.807 J**
Chromium	9.73 J

Sample ID	MR08-SD01-08D
Sample Date	11/11/08
Semivolatile Organic Compounds (µg/kg)	
Benzo(a)pyrene	62
Metals (mg/kg)	
Antimony	9.56
Arsenic	**230 J**
Chromium	**46.5 J**

Screening Levels for Surface Water	NC2B-SW-Human Health & Water Supply 1 (Feb. 2010)	NRWQC-Human Health - Organisms & Water + Organisms 2 (Feb. 2010)	Adjusted Tap Water RSLs (Nov. 2010)
Semivolatile Organic Compounds (µg/l)			
bis(2-Ethylhexyl)phthalate	--	1.2	4.8
Phenanthrene	--	--	1,100
Explosives (µg/l)			
Perchlorate	--	--	2.6
Metals (µg/l)			
Arsenic	10	0.018	0.045
Cadmium	--	5	1.8
Chromium	--	100	0.043
Copper	--	1,300	150

Screening Levels for Sediment	Adjusted Industrial Soil RSLs (Nov. 2010)	Adjusted Residential Soil RSLs (Nov. 2010)
Semivolatile Organic Compounds (µg/kg)		
Benzo(a)pyrene	210	15
Explosives (µg/kg)		
Perchlorate	72,000	5,500
Metals (mg/kg)		
Antimony	41	3.1
Arsenic	1.6	0.39
Chromium	5.6	0.29

Legend

- Surface Water and Sediment Sample
- Culvert
- Surface Water Course Centerline
- Site UXO-08 Boundary
- Fitness Center
- Former Base CS Gas Chamber
- Former D-7 Gas Chamber
- W.P.T. Hill Field (Parade Grounds)
- Hadnot Point Construction Area
- Post Office Intersection Area

Notes: Surface Water
J - Analyte present, value may or may not be accurate or precise
Bold text indicates exceedance of NRWQC-Human Health - Water+ Organisms
Underlined text indicates exceedance of Adjusted Tap Water RSLs
-µg/L - Micrograms per liter

Notes: Sediment
J - Analyte present, value may or may not be accurate or precise
Bold text indicates exceedance of Adjusted Industrial Soil RSLs
Underline indicates exceedance of Adjusted Residential Soil RSLs
-mg/kg - Milligrams per kilogram
-µg/L - Micrograms per liter

N

0 225 450 900 Feet

1 inch = 450 feet

Figure 4-13
Sediment and Surface Water Exceedances
Site UXO-08 PA/SI Report
MCB CamLej
North Carolina

CH2MHILL

Generated by: ***Lael Feist*** Checked by: ***David Seed***

\\NORTHEND\PROJ\USNAVFACENGCOM\CAMPLEJEUNE\MAPFILES\SITE_UXO_08\PA_SI\2011\FIGURE_4_14_POST_DETONATION_SURFACE_SOIL_EXCEEDANCES.MXD MARTESE 2/21/2011 12:44:47

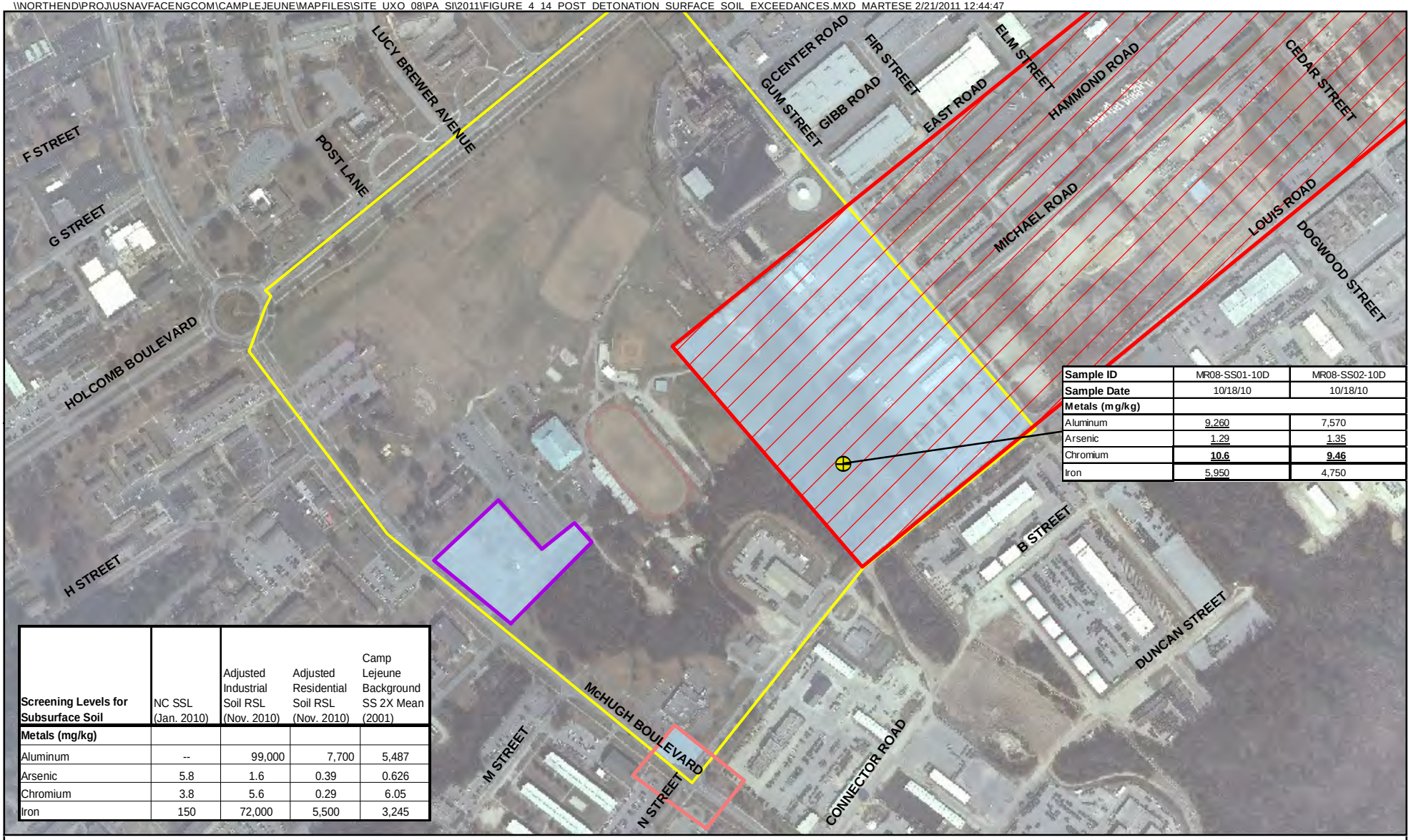

Sample ID	MR08-SS01-10D	MR08-SS02-10D
Sample Date	10/18/10	10/18/10
Metals (mg/kg)		
Aluminum	9,260	7,570
Arsenic	1.29	1.35
Chromium	**10.6**	**9.46**
Iron	5,950	4,750

Screening Levels for Subsurface Soil	NC SSL (Jan. 2010)	Adjusted Industrial Soil RSL (Nov. 2010)	Adjusted Residential Soil RSL (Nov. 2010)	Camp Lejeune Background SS 2X Mean (2001)
Metals (mg/kg)				
Aluminum	--	99,000	7,700	5,487
Arsenic	5.8	1.6	0.39	0.626
Chromium	3.8	5.6	0.29	6.05
Iron	150	72,000	5,500	3,245

Legend

- Post Detonation Surface Soil Sample
- Hadnot Point Construction Area
- Post Office Intersection Area
- Fitness Center
- Site UXO-08 Boundary
- 202K MILCON Areas at Site UXO-08

Notes:
Bold box indicates exceedance of NC SSLs
Bold text indicates exceedance of Adjusted Industrial Soil RSLs
Underline indicates exceedance of Adjusted Residential Soil RSLs
-Data displayed for metals exceed both two times the Base background levels and an additional screening criterion
-mg/kg - Milligrams per kilogram

N

0 300 600 1,200 Feet

1 inch = 600 feet

Figure 4-14
Post-Detonation Surface Soil Exceedances
Site UXO-08 PA/SI Report
MCB CamLej
North Carolina

CH2MHILL

Generated by: ***Lael Feist*** Checked by: ***David Seed***

SECTION 5

Human Health Risk Assessment

The soil, groundwater, surface water, and sediment analytical sample data discussed in **Section 4** were evaluated to determine the potential for human health risks associated with exposure to these media. The risk evaluation was performed in two phases. The first phase included (1) a conservative preliminary Human Health Risk Screening (HHRS) using appropriate human health risk-based screening values and MCB CamLej background concentrations (for inorganics in soil and groundwater only) and (2) a risk ratio evaluation. If any of the media indicated the potential for unacceptable human health risks related to constituents historically used at the Site UXO-08, that medium was carried forward to the second phase of the risk evaluation. The second phase of the risk evaluation was a complete Human Health Risk Assessment (HHRA). Only those media that showed the potential for site-related human health risks based on the first phase were carried forward to the second phase of evaluation.

The data evaluated during both phases of the risk assessment are presented in **Appendix H**, and the samples carried to the second phase of the risk evaluation are identified on **Table 5-1.** The data included in the risk evaluation were all validated. The validated data were evaluated to determine the reliability of the data for use in the HHRA. A review of the data identified the following criteria for data usability:

- Estimated values flagged with a J, J+, or J- qualifier were treated as detected concentrations
- For duplicate samples, the maximum concentration between the two samples was used as the sample concentration
- Unfiltered groundwater samples were analyzed in the risk evaluations following USEPA Region 4 guidance (USEPA, 2000).

TABLE 5-1
Samples Used in the Risk Assessment
Site UXO-08 Former Cantonment Bazooka Range, Base CS Chamber, NBC Training Trail, and D-7 Gas Chamber PA/SI Report
MCB CamLej, North Carolina

Media	Station Identifier	Sample Identifier	Date Collected	Analytes
Sediment	MR08-SD01	MR08-SD01-08D	11-Nov-08	VOCs, SVOCs, Explosives, Metals
	MR08-SD02	MR08-SD01D-08D[a]	11-Nov-08	VOCs, SVOCs, Explosives, Metals
	MR08-SD02	MR08-SD02-08D	11-Nov-08	VOCs, SVOCs, Explosives, Metals
	MR08-SD03	MR08-SD03-08D	11-Nov-08	VOCs, SVOCs, Explosives, Metals

[a] Duplicate sample of sample listed above

5.1 Human Health Conceptual Site Model

The human health conceptual site model (CSM) presents an overview of site conditions, potential contaminant migration pathways, and exposure pathways to potential receptors. The human health CSM for soil, groundwater, surface water, and sediment is presented in **Figure 5-1**. Table 1 in **Appendix J** summarizes the potential exposure pathways and scenarios considered. **Section 2** presents the site history and setting, which are summarized below.

Site UXO-08 is located in the Hadnot Point area of MCB CamLej and encompasses approximately 144 acres (**Figure 2-1**). Site UXO-08 consists of administrative and industrial buildings, athletic fields, parade grounds, and landscaped areas. In addition, there are some wooded areas in the southern portion of Site UXO-08. An unnamed stream is present in the wooded area in the southeastern portion of the site.

Potential current receptors include visitors, trespassers, and Base/industrial workers. The current trespassers/visitors and Base/industrial workers may come in contact with surface soil, surface water, sediment, and post-detonation surface soil. Exposure routes may include incidental ingestion of and dermal contact with the surface soil, surface water, and sediment, and inhalation of particulate emissions from the surface soil. Based on the site history, VOCs were not used at Site UXO-08; therefore, inhalation of VOC emissions from site media is not a potential site-related exposure route. However, it was evaluated if VOCs were detected in a medium, although these compounds are not considered site-related.

Future site use is not expected to change significantly from current site use; therefore, potential future receptors include current receptors, and construction workers who perform any future construction projects at the site. Additionally, although future residents are unlikely at this site, they were included as a worst-case scenario, to evaluate unrestricted future site use. Future receptors could be exposed to surface soil and subsurface soil if future construction at the site results in reworking the soil, and exposing the subsurface soil at the ground surface. Exposure routes for future exposure to the surface soil and subsurface soil are the same as those for current surface soil, incidental ingestion of and dermal contact with the soil, and inhalation of particulate emissions from the soil. The construction worker could also be exposed to the surface water and sediment, through incidental ingestion and dermal contact.

Potable water supplies for MCB CamLej and the surrounding residential area are provided by water supply wells that pump groundwater from the Castle Hayne aquifer; as a result, there is no current exposure to shallow groundwater at Site UXO-08. There are no active water supply wells within a 0.85-mile radius of Site UXO-08. The groundwater use patterns are already established for the Base and area around Site UXO-08, so use of shallow groundwater from Site UXO-08 for industrial or residential purposes is unlikely. Additionally, the Surficial aquifer at MCB CamLej is not suitable for potable water use due to high levels of dissolved solids and hardness, as well as fluctuating water levels that negatively affect water yields. However, state and federal governing policies assume that underground freshwater resources are potable, and should be maintained as such; therefore, a potable use scenario was evaluated in this risk assessment. It was conservatively assumed that, if future residential development of the site occurs, residents could potentially use the

groundwater as a potable water supply. The residents would be exposed through ingestion, and dermal contact and inhalation while bathing. Additionally, due to the groundwater depth (from approximately 5 to 24 feet bgs), construction workers could be exposed to the groundwater through dermal contact and inhalation of vapors in an excavation during construction activities.

5.2 Phase I—Human Health Risk-based Screening and Risk Ratio Evaluation

The methodology and results of the human health risk-based screening and risk ratio evaluation are described below.

5.2.1 Methodology

The HHRS was conducted in three steps using a risk ratio technique (Navy, 2000). If contaminants of potential concern (COPCs) were identified after Step 1, the COPCs were evaluated in Step 2. If COPCs were identified after Step 2, the COPCs were evaluated in Step 3. The three-step screening process is described below:

Step 1

The maximum detected constituent concentrations for each medium were compared to USEPA RSLs (USEPA, 2010a), other HHRS levels (if appropriate), and two times the mean BBG concentration (for inorganics in soil and groundwater). RSLs based on noncarcinogenic effects were divided by 10 to account for exposure to multiple constituents (i.e., were adjusted to a hazard quotient [HQ] of 0.1, from the HQ of 1.0 used in the RSL table). RSLs based on carcinogenic endpoints were used as presented in the RSL table, and are based on a carcinogenic risk of 1×10^{-6}.

The soil and sediment data were compared to Residential Soil RSLs, which are more conservative (i.e., lower) than Industrial Soil RSLs. Although construction workers, industrial workers, and residents are potential receptors for soil (**Section 5.1**), the soil data were only screened against Residential Soil RSLs. Residential Soil RSLs are more conservative (i.e., lower) than Industrial Soil RSLs and are therefore protective of all potential receptors (e.g., residents, industrial workers, construction workers).

The groundwater data were compared to USEPA Tap Water RSLs. Groundwater data were also compared to the National Primary Drinking Water Regulations Maximum Contaminant Levels (MCLs) (USEPA, 2009) and the North Carolina maximum allowable concentrations (15A NCAC 2L) NC 2L Standards; however, these comparisons were not used to identify the groundwater COPCs to carry forward to Step 2.

Generally, the surface water data were compared to one of two sets of standards:

- The NCAC 2B water quality standards for human health and water supply (if available), or the NRWQC for human health (water and organisms criteria). If neither of these were available, the Adjusted Tap Water RSL was used for comparison.
- The NRWQC for Human Health, organism only; however, if an organisms only value was not available, the water + organisms criterion was used, if available.

If neither of these were available for a detected constituent, the Tap Water RSL was used for comparison.

If the maximum detected concentration in soil, groundwater, surface water, or sediment exceeded the appropriate screening value and background concentration, the screening level risk evaluation proceeded to Step 2.

Step 2

For constituents identified as COPCs in Step 1, a corresponding risk level was calculated using the following equation:

$$\textit{corresponding risk level} = \frac{\textit{concentration} \times \textit{acceptable risk level}}{\textit{RSL}}$$

The concentration was the maximum detected concentration (the same concentration that was used in Step 1). The acceptable risk level was 1.0 for noncarcinogens and 10^{-6} for carcinogens. RSLs for noncarcinogenic effects were not divided by 10 as was done in Step 1, butwere used as presented in the RSL table. The corresponding risk level was calculated using the equation above. All of the corresponding risk levels for each constituent within a medium were summed to calculate the cumulative corresponding hazard index (HI) (for noncarcinogens) and cumulative corresponding carcinogenic risk (for carcinogens). A cumulative corresponding HI was also calculated for each target organ/effect. If the cumulative corresponding HI for a target organ/effect was greater than 0.5, or the cumulative corresponding carcinogenic risk was greater than 5×10^{-5}, the constituents contributing to these values were retained as COPCs and carried forward to Step 3.

Step 3

A corresponding risk level was calculated as discussed above for Step 2; however, the 95 percent upper confidence limit (UCL) was used in place of the maximum detected concentration, if more than five samples were available for that medium, to obtain a more site-specific risk ratio. If the cumulative corresponding HI by target organ/effect was greater than 0.5, or the cumulative corresponding carcinogenic risk was greater than 5×10^{-5}, then constituents contributing to these values were considered COPCs.

ProUCL Version 4.00.05 (USEPA, 2010b) was used to test the data distribution and calculate the 95 percent UCL used for the Step 3 risk ratio calculations (**Appendix J**).

5.2.2 Human Health Risk Screening Results

The human health risk-based screening (comparison to risk-based criteria and background levels, Step 1) and risk ratio evaluation (Steps 2 and 3) were performed for surface soil, subsurface soil, groundwater, surface water, and sediment.

Surface Soil Risk Screening

Tables 2.1 through 2.1b of **Appendix J** present the risk-based screening and risk ratio evaluation for surface soil. As shown on Table 2.1 in **Appendix J**, seven polynuclear aromatic hydrocarbons (PAHs), one pesticide, and nine metals were retained as COPCs. Although only five of the PAHs had maximum detected concentrations exceeding the screening level, the other two detected carcinogenic PAHs were retained as COPCs, in accordance with USEPA Region 4 guidance (USEPA, 2000), because they are in the same

chemical class as other constituents retained as COPCs. Based on Step 2 of the screening process (Table 2.1a of **Appendix J**), the seven PAHs, one pesticide, and three of the metals were identified as COPCs. After Step 3 (Table 2.1b of **Appendix J**), all surface soil COPCs identified in the previous step were eliminated. Therefore, exposure to surface soil would not be expected to result in any unacceptable human health risks based on potential human exposure and risk.

Subsurface Soil Risk Screening

Tables 2.2 through 2.2b of **Appendix J** present the risk-based screening and risk ratio evaluation for subsurface soil. As shown on Table 2.2 of **Appendix J**, seven PAHs and five metals were retained as COPCs. Although only five of the PAHs had maximum detected concentrations exceeding the screening level, the other two detected carcinogenic PAHs were retained as COPCs following USEPA Region 4 guidance (USEPA, 2000). Based on Step 2 of the screening process (Table 2.2a of **Appendix J**), the seven PAHs and two of the metals were identified as COPCs. After Step 3 (Table 2.2b of **Appendix J**), all COPCs were eliminated; therefore, exposure to subsurface soil would not be expected to result in any unacceptable human health risks based on potential human exposure and risk.

Groundwater Risk Screening

The risk-based screening and risk ratio evaluation for groundwater data are presented in Tables 2.3 through 2.3b of **Appendix J**. As shown on Table 2.3 of **Appendix J**, six VOCs, two SVOCs, three explosives residue chemicals, and seven metals exceeded the first step of the screening and were selected as COPCs for evaluation in Step 2. Based on Step 2 (Table 2.3a of **Appendix J**), six VOCs, two SVOCs, two explosives residue chemicals, and six metals were retained as COPCs. After Step 3 (Table 2.3b of **Appendix J**), the six VOCs (1,1-dichloroethane [1,1-DCA], 1,2-DCA, benzene, cis-1,2-DCE, TCE, and VC), two SVOCs (bis[2-ethylhexyl]phthalate and naphthalene), two explosives (2,4-dinitrotoluene and nitroglycerin), and five metals (arsenic, chromium, cobalt, iron, and vanadium) were retained as COPCs.

The three-step screening process showed risk related to exposure to VOCs and metals (the carcinogenic risk and noncarcinogenic hazard associated with the two explosives was a small part of the total risk, contributing a carcinogenic risk less than $1x10^{-6}$ and a noncarcinogenic hazard less than 1.0); this is consistent with the findings in the RI Report (Baker, 1994a). Based on the Site 78 RI, groundwater at Site 78 (which encompasses Site UXO-08) has been impacted by VOCs and metals, primarily due to former operational/ disposal practices conducted within the industrial area (Baker, 1994a). Because there are no historical records of the VOCs and metals identified as COPCs in the preliminary human health risk-based screening being used at Site UXO-08, it is assumed that the presence of these constituents is related to historical activities at Site 78 or is naturally occurring. Groundwater contamination at Site 78 is being addressed in accordance with the selected remedy for that site (LUCs, continuation of the IRA groundwater treatment system, and LTM [Baker, 1994b;c]). Groundwater recovery wells associated with the IRA groundwater treatment system and LUCs at Site UXO-08 are shown in **Figure 5-2**. The aquifer use control boundary and intrusive activities control boundary LUCs restrict the use of groundwater in the area and limit potential human exposure. Therefore, because groundwater does not appear to be impacted by activities at Site UXO-08 and groundwater contamination in the

Site UXO-08 area is being addressed under Site 78, further evaluation (e.g., a Phase II risk evaluation) was not performed for groundwater.

Surface Water

Tables 2.4 and 2.4a of **Appendix J** present the risk-based screening for surface water. As shown on Table 2.4 of **Appendix J**, perchlorate was the only constituent that exceeded the first step of the screening and was selected as a COPC. Since the screening criteria for surface water are not necessarily based on a fixed risk level, the Step 2 screening (risk ratio) could not be performed. Therefore, the perchlorate concentration was compared to the Tap Water RSL, which is based on potable use of water and is also conservative for this evaluation, as the most likely exposure to the surface water (dermal contact and incidental ingestion) would be much lower than the exposure assumed for the Tap Water RSL development, and is based on a fixed risk level. Based on the comparison of the maximum detected concentration to the Tap Water RSL, perchlorate (Table 2.4a of **Appendix J)**, was eliminated as a COPC for surface water. Therefore, exposure to surface water would not be expected to result in any unacceptable human health risks based on potential human exposure and risk.

Sediment

Tables 2.5 and 2.5a of **Appendix J** present the risk-based screening and risk ratio evaluation for sediment. As shown on Table 2.5 of **Appendix J**, five PAHs and three metals exceeded the first step of the screening and were selected as COPCs for evaluation in Step 2. Three of the detected carcinogenic PAHs were retained as COPCs in accordance with USEPA Region 4 guidance (USEPA, 2000), not because they exceeded the screening levels, but because they are in the same chemical class as other COPCs. Based on Step 2 (risk ratio using maximum detected concentrations, Table 2.5a of **Appendix J**), the five PAHs and two of the metals were identified as COPCs. Due to the small sample size (<5 samples), Step 3 screening was not performed; therefore, sediment was evaluated in the Phase II risk evaluation.

Post-Detonation Surface Soil Risk Screening

Tables 2.6 through 2.6b of **Appendix J** present the risk-based screening and risk ratio evaluation for the post-detonation surface soil. As shown on Table 2.6 of **Appendix J**, four metals were retained as COPCs. Based on Step 2 of the screening process (Table 2.6a of **Appendix J**), all COPCs were eliminated; therefore, exposure to post-detonation surface soil would not be expected to result in any unacceptable human health risks based on potential human exposure and risk.

5.3 Phase II—Human Health Risk Assessment

An HHRA was performed for sediment based on the Phase I human health-risk based screening and risk ratio evaluations. Supplemental information used in this HHRA and the risk calculations are presented in **Appendix J** and include the *Risk Assessment Guidance for Superfund: Volume I – Human Health Evaluation Manual, Part D, Standardized Planning, Reporting, and Review of Superfund Risk Assessments* (RAGS Part D) (USEPA, 2001a) tables and additional supporting tables. Guidance documents used for preparing the risk assessment include RAGS Part A (USEPA, 1989), RAGS Part D, RAGS Part E (USEPA, 2004), and

USEPA Region 4 *Supplemental Guidance to RAGS: Region 4 Bulletins, Human Health Risk Assessment Bulletins* (USEPA, 2000).

The primary objective of the Phase II HHRA was to assess the health risks associated with exposure to sediment under current and future conditions. The risk assessment consisted of the following components:

- **Identification of COPCs**—Identification of the chemicals found onsite and selection of the COPCs. COPCs are the focus of the subsequent evaluation in the risk assessment
- **Exposure Assessment**—Identification of the potential pathways of human exposure, and estimation of the magnitude, frequency, and duration of these exposures
- **Toxicity Assessment**—Compilation of the toxicity values used for developing numerical risk estimates for the COPCs
- **Risk Characterization**—Integration of the results of the exposure and toxicity assessments to develop numerical estimates of health risks
- **Uncertainty Assessment**—Identification and discussion of sources of uncertainty in the risk assessment

5.3.1 Identification of COPCs

The sediment data evaluated in the risk assessment are included in **Appendix H.** The COPC screening for the sediment is presented in Table 2.5 of **Appendix J**. The methodology used to select the COPCs for quantitative evaluation in the HHRA was the same as Step 1 of the Phase I risk screening evaluation.

Table 5-2 identifies the chemicals that were selected as COPCs for sediment.

TABLE 5-2
Chemicals Selected as of COPCs for Sediment
Site UXO-08 Former Cantonment Bazooka Range, Base CS Chamber, NBC Training Trail, and D-7 Gas Chamber PA/SI Report
MCB CamLej, North Carolina

Sediment
Benzo(a)anthracene
Benzo(a)pyrene
Benzo(b)fluoranthene
Benzo(k)fluoranthene
Indeno(1,2,3-cd)pyrene
Antimony
Arsenic
Chromium

5.3.2 Exposure Assessment

Exposure assessment is the estimation of the likelihood, magnitude, frequency, duration, and routes of exposure to a chemical. Exposure refers to the potential contact of a receptor with a chemical. Exposure can occur when contaminants migrate from a source to an exposure point, or when a receptor comes into direct contact with contaminated media.

The four components of exposure assessment include:

- Characterization of exposure setting
- Identification of exposure pathways
- Quantification of exposure
- Estimation of chemical intakes

Characterization of Exposure Setting

Descriptions and the history of MCB CamLej and Site UXO-08 are included in **Sections 2.1 through 2.3**.

Identification of Exposure Pathways

An exposure pathway can be described as the physical course that a COPC takes from the point of release to a receptor. To be complete, an exposure pathway must have all of the following components:

- A source (e.g., constituent residues in soil)
- A mechanism for chemical release and migration (e.g., leaching)
- An environmental transport medium (e.g., groundwater)
- An exposure point (e.g., potable use of the groundwater)
- A route of intake (e.g., ingestion of groundwater used as a drinking water source)

In the absence of any one of these components, an exposure pathway is considered incomplete and, by definition, there is no risk or hazard. In some cases, a receptor may contact a source directly, eliminating the release and transport pathways.

The potential exposure pathways for site-related media are shown in the CSM (**Figure 5-1** and Table 1, **Appendix J**) and were discussed in **Section 5.1**. Potential current receptors exposed to sediment include Base/industrial workers and adult, youth, and child trespassers/who may contact the sediment while onsite. In summary, the potential current land use exposure pathways for sediment include:

- **Base/industrial worker—**Incidental ingestion of and dermal contact with sediment
- **Trespasser/visitor (adult, youth, and child)—**Incidental ingestion of and dermal contact with sediment

Potential future receptors exposed to sediment are the same as the potential current receptors.

Quantification of Exposure

Exposure is quantified by estimating the exposure point concentrations (EPCs) of COPCs in environmental media and the COPC intake by the receptor.

EPCs are estimated constituent concentrations that a receptor may contact and are specific to each exposure medium. EPCs may be directly measured or estimated using environmental fate and transport models. Constituent concentrations in soil were measured. Fate and transport modeling was not conducted to estimate the EPCs.

Only three sediment samples were collected and evaluated in the risk assessment. Therefore, the maximum detected concentration was used as the sediment EPC. Table 3.1.RME in **Appendix J** presents the EPCs for the sediment COPCs.

Estimation of Chemical Intakes

Chemical intake is the amount of the chemical constituent entering the receptor's body. The quantification of exposure is based on an estimate of the average daily intake, the average amount of the chemical contaminant entering the receptor's body per day. Chemical intakes are generally expressed as follows:

$$ADI = \frac{C \times CR' \times EF \times ED}{BW \times AT}$$

Where:

ADI = average daily intake (milligrams per kilograms per day [mg/kg-day])
C = chemical concentration (milligrams per kilogram [mg/kg])
CR' = contact rate (milligrams per day)
EF = exposure frequency (days per year [days/yr])
ED = exposure duration (years)
BW = body weight (kg)
AT = averaging time (days)

The intake equation requires exposure parameters that are specific to each exposure pathway. Many of the exposure parameters have default values, which were used for this assessment. These assumptions, based on estimates of body weights, media intake levels, and exposure frequencies and duration, are provided in USEPA guidance. Tables 4.1.RME and 4.2.RME of **Appendix J,** identify the reasonable maximum exposure (RME) parameters and intake equations for each of the scenarios evaluated in the risk assessment.

5.3.3 Toxicity Assessment

Toxicity assessment defines the relationship between the magnitude of exposure and possible severity of adverse effects, and weighs the quality of available toxicological evidence. Toxicity assessment generally consists of two steps:

- Hazard identification
- Dose-response assessment

Hazard identification is the process of determining the potential adverse effects from exposure to the constituent along with the type of health effect involved. Dose-response assessment is the process of quantitatively evaluating the toxicity information and characterizing the relationship between the dose of the constituent administered or received and the incidence of adverse health effects in the exposed population. Toxicity criteria (e.g., reference doses, slope factors) are derived from the dose-response relationship.

USEPA recommends that a tiered approach be used to obtain the toxicity values, reference doses (RfDs), inhalation reference concentrations (RfCs), cancer slope factors (CSFs), and inhalation unit risk factors (IURs) used to calculate non-cancer and cancer risks (USEPA, 2003b). The sources of toxicity values are as follows:

- USEPA's Integrated Risk Information System database (USEPA, 2010c)
- Provisional Peer Reviewed Toxicity Value (PPRTV) database maintained by USEPA's National Center for Environmental Assessment (NCEA) and the Superfund Health Risk Technical Support Center.
- Other USEPA and non-USEPA sources including:
  - NCEA
  - Agency for Toxic Substances and Disease Registry
  - Health Effects Assessment Summary Tables (USEPA, 1997)
  - California Environmental Protection Agency
  - USEPA's Office of Water
  - World Health Organization

The use of provisional toxicity values, such as those from the PPRTV database, increases the uncertainty of the quantitative risk estimate.

USEPA-derived oral and inhalation chronic and subchronic RfDs and RfCs, and associated uncertainty factors (UFs) and modifying factors, for the COPCs are listed in Tables 5.1 and 5.2 of **Appendix J**. USEPA-derived oral CSFs and IURs are listed in Tables 6.1 and 6.2 of **Appendix J**.

Dermal RfDs and CSFs were estimated from oral RfDs and CSFs using an oral to dermal adjustment factor. This factor is designed to convert the orally administered dose toxicity factors to dermally absorbed dose toxicity factors (USEPA, 2004). The oral RfDs were converted to dermal RfDs by multiplying by the oral to dermal adjustment factor (gastrointestinal [GI] absorption factor) and the oral CSFs were converted to dermal CSFs by dividing by the GI absorption factor. If a chemical-specific GI absorption factor was not available or was greater than 50 percent, a GI absorption factor of 100 percent was assumed. The dermal RfDs are included in Table 5.1**, Appendix J**. The dermal CSFs are presented in Table 6.1**, Appendix J**.

5.3.4 Risk Characterization

Risk characterization combines the results of the previous elements of the risk assessment to evaluate the potential health risks associated with exposure to the COPCs. The risk characterization is then used as an integral component in remedial decision-making.

Noncarcinogenic and Carcinogenic Risk Estimation Methods

Potential human health risks are discussed independently for carcinogenic and noncarcinogenic chemicals because of the different toxicological endpoints, relevant exposure duration, and methods used to characterize risk. Some chemicals may produce both noncarcinogenic and carcinogenic effects, and were evaluated in both groups. The methodology used to estimate noncarcinogenic hazards and carcinogenic risks are described below.

Noncarcinogenic health risks are estimated by comparing the calculated intake to an RfD. The calculated intake divided by the RfD is equal to the HQ:

$$HQ = Intake / RfD$$

The intake and RfD represent the same exposure period (i.e., chronic or subchronic) and the same exposure route (i.e., oral intakes are divided by oral RfDs). An HQ that exceeds 1.0 (i.e., the intake exceeds the RfD) indicates that there is a potential for adverse health effects associated with exposure to that constituent.

To assess the potential for noncarcinogenic health effects posed by exposure to multiple constituents, an HI approach is used (USEPA, 1986). This approach assumes that noncarcinogenic hazards associated with exposure to more than one constituent are additive and the HQs for individual constituents are added together. Synergistic or antagonistic interactions between constituents are not considered. The HI may exceed 1.0 even if all of the individual HQs are less than 1.0. HIs are also added across exposure routes and media to estimate the total noncarcinogenic health effects to a receptor posed by exposure through multiple routes and media. A HI greater than 1.0 indicates that there is some potential for adverse noncarcinogenic health effects associated with exposure to the constituents of concern (COCs), possibly warranting remedial action. However, if the HI is greater than 1.0, the HI is calculated for each target organ/effect, to determine if the HI for a specific target organ/effect is greater than 1.0. If the HI for each target organ/is not above 1.0, it can be assumed that there is no unacceptable noncarcinogenic hazard to the receptor.

The potential for carcinogenic effects due to exposure to the COPCs is evaluated by estimating the excess lifetime carcinogenic risk (ELCR). ELCR is the incremental increase in the probability of developing cancer during one's lifetime in addition to the background probability of developing cancer. For example, an individual exposed to a carcinogen with a calculated cancer risk of 2×10^{-6} indicates that the probability of the individual getting cancer increases by 2 in a million above background levels.

ELCR is calculated by multiplying the intake by the CSF.

$$ELCR = Intake \times CSF$$

The combined risk from exposure to multiple constituents was evaluated by adding the risks from individual constituents. Risks are also added across the exposure routes and media if an individual would be exposed through multiple routes and to multiple media.

When a cumulative cancer risk to an individual receptor under the assumed RME exposure conditions at the site exceeds 100 in a million (i.e., 10^{-4} excess cancer risk), CERCLA generally requires remedial action to reduce risks at the site (USEPA, 1991). If the cumulative risk is less than 10^{-4}, action generally is not required, but may be warranted if a risk-based chemical-specific standard (e.g., MCL) is exceeded.

5.3.5 Risk Assessment Results

The results of the risk characterization for sediment are presented below by receptor. The risks are calculated in Tables 7.1.RME through 7.6.RME of **Appendix J**. The risks are summarized in Tables 9.1.RME through 9.6.RME, and of **Appendix J**. A summary of the RME results is shown in **Table 5-3**.

TABLE 5-3
Summary of RME Cancer Risks and Hazard Indices
Site UXO-08 Former Cantonment Bazooka Range, Base CS Chamber, NBC Training Trail, and D-7 Gas Chamber
PA/SI Report
MCB CamLej, North Carolina

Receptor	Media	Exposure Route	Cancer Risk	Chemicals with Cancer Risks $>10^{-4}$	Chemicals with Cancer Risks $>10^{-5}$ and $<10^{-4}$	Chemicals with Cancer Risks $>10^{-6}$ and $<10^{-5}$	Hazard Index	Chemicals with HI>1.0
Current/Future Industrial Worker	Sediment	Ingestion	2.6E-06			Arsenic	1.6E-02	
		Dermal Contact	3.1E-06			Arsenic	1.8E-02	
		Inhalation	NA				NA	
		Total	5.7E-06			Arsenic	3.4E-02	
	All Media	Total	5.7E-06				3.4E-02	
Current/Future Trespasser/Visitor Adult	Sediment	Ingestion	1.1E-05		Arsenic		7.1E-02	
		Dermal Contact	2.3E-05		Arsenic		1.4E-01	
		Inhalation	NA				NA	
		Total	3.5E-05				2.1E-01	
	All Media	Total	3.5E-05				2.1E-01	
Current/Future Trespasser/Visitor Youth	Sediment	Ingestion	7.2E-06			Arsenic	1.1E-01	
		Dermal Contact	1.1E-05		Arsenic		1.6E-01	
		Inhalation	NA				NA	
		Total	1.8E-05				2.7E-01	
	All Media	Total	1.8E-05				2.7E-01	
Current/Future Trespasser/Visitor Child	Sediment	Ingestion	2.6E-05		Arsenic	Chromium	6.6E-01	
		Dermal Contact	4.5E-06			Arsenic	1.1E-01	
		Inhalation	NA				NA	
		Total	3.0E-05				7.7E-01	
	All Media	Total	3.0E-05				7.7E-01	
Future Industrial Worker	Sediment	Ingestion	2.6E-06			Arsenic	1.6E-02	
		Dermal Contact	3.1E-06			Arsenic	1.8E-02	
		Inhalation	NA				NA	
		Total	5.7E-06				3.4E-02	
	All Media	Total	5.7E-06				3.4E-02	
Future Construction Worker	Sediment	Ingestion	3.1E-06			Arsenic	4.6E-01	
		Dermal Contact	7.8E-07				1.1E-01	
		Inhalation	NA				NA	
		Total	3.8E-06				5.7E-01	
	All Media	Total	3.8E-06				5.7E-01	

Current/Future Industrial Worker (Table 9.1.RME, Appendix J)

The risk assessment assumed that an industrial worker could be exposed to sediment through incidental ingestion and dermal contact. The RME noncarcinogenic hazard (HI = 0.34) is below USEPA's target HI of 1.0. The RME carcinogenic risk (CR = 5.7×10^{-6}) is within USEPA's target risk range of 1×10^{-6} to 1×10^{-4}.

Current/Future Trespasser/Visitor Adult (Table 9.2.RME, Appendix J)

The risk assessment assumed that a trespasser/visitor adult could be exposed to sediment through incidental ingestion and dermal contact. The RME noncarcinogenic hazard (HI = 0.21) is below USEPA's target HI of 1.0. The RME carcinogenic risk (CR = 3.5×10^{-5}) is within USEPA's target risk range of 1×10^{-6} to 1×10^{-4}.

Current/Future Trespasser/Visitor Youth (Table 9.3.RME, Appendix J)

The risk assessment assumed that a youth trespasser/visitor (aged 7 to 16 years) could be exposed to sediment through incidental ingestion and dermal contact. The RME noncarcinogenic hazard (HI = 0.27) is below USEPA's target HI of 1.0. The RME carcinogenic risk (CR = 1.8×10^{-5}) is within USEPA's target risk range of 1×10^{-6} to 1×10^{-4}.

Current/Future Trespasser/Visitor Child (Table 9.4.RME, Appendix J)

The risk assessment assumed that a child trespasser/visitor (aged 0 to 6 years) could be exposed to sediment through incidental ingestion and dermal contact. The RME noncarcinogenic hazard (HI = 0.77) is below USEPA's target HI of 1.0. The RME carcinogenic risk (CR = 3.0×10^{-5}) is within USEPA's target risk range of 1×10^{-6} to 1×10^{-4}.

Future Industrial Worker (Table 9.5.RME, Appendix J)

The risk assessment assumed that a future industrial worker could be exposed to sediment through incidental ingestion and dermal contact. The RME noncarcinogenic hazard (HI = 0.03) is below USEPA's target HI of 1.0. The RME carcinogenic risk (CR = 5.7×10^{-6}) is within USEPA's acceptable cancer risk range of 1×10^{-6} to 1×10^{-4}.

Future Construction Worker (Table 9.6.RME, Appendix J)

The risk assessment assumed that a future construction worker could be exposed to sediment through incidental ingestion and dermal contact during excavation and construction activities. The RME noncarcinogenic hazard (HI = 0.57) is below USEPA's target HI of 1.0. The RME carcinogenic risk (CR = 3.8×10^{-6}) is within USEPA's acceptable cancer risk range of 1×10^{-6} to 1×10^{-4}.

5.4 Uncertainty Associated with Human Health Assessment

The risk measures used in HHRA are not fully probabilistic estimates of risk, but are estimates based on a set of assumptions about exposure and toxicity. Thus it is important to specify the assumptions and uncertainties inherent in the risk assessment to place the risk estimates in proper perspective (USEPA, 1989).

General Uncertainty in COPC Selection

The general assumptions used in the COPC selection process were conservative so that true COPCs would not be eliminated from the quantitative risk assessment and that the highest risk was estimated. Residential screening levels were used to select the COPCs for all of the scenarios evaluated in the HHRA, including non-residential scenarios.

Uncertainty Associated with Exposure Assessment

Uncertainty in the exposure assessment was generally treated with conservative decision rules and assumptions and, therefore, the uncertainty likely overestimates actual exposure to COPCs.

The exposure factors used for the quantitation of exposure were conservative and reflect worst-case or upper-bound assumptions on the exposure. The reliability of the values chosen for the exposure factors also contributes substantially to the uncertainty of the resulting risk estimates. Because most of the exposure factors are worst-case or upper-bound assumptions, the resulting risks are worst-case and likely overestimate the actual risk.

Uncertainty Associated with Toxicity Assessment

Uncertainty associated with the noncarcinogenic toxicity factors is included in Tables 5.1 and 5.2 of **Appendix J**. Several UFs were applied by USEPA to extrapolate dose points from animal studies to humans. The UFs for the COPCs range between 1 and 1,000. Additional modification factors are also used based on the professional judgment of USEPA. As a result, there is a high degree of uncertainty in the noncarcinogenic toxicity criteria based on the available scientific data for each constituent. The noncarcinogenic toxicity factors are most likely an overestimate of actual toxicity.

The uncertainty associated with CSFs is mostly associated with the low dose extrapolation, where carcinogenicity at low doses is assumed to be a linear response. This is a conservative assumption, which introduces a high degree of uncertainty into slope factors that are extrapolated from this area of the dose-response curve. The CSFs are based on the assumption that there is no threshold level for carcinogenicity; however, most of the experimental studies indicate the existence of a threshold level. Therefore, CSFs developed by USEPA represent upper-bound estimates. CRs generated in this assessment should be regarded as upper-bound estimates on the potential CRs, rather than accurate representations of CRs. The true CRs are likely to be less than the predicted values (USEPA, 1989).

There is a high degree of uncertainty associated with the oral to dermal adjustment factors (based on constituent-specific GI absorption factors) used to transform the oral RfDs and CSFs based on administered doses to dermal RfDs and CSFs based on absorbed doses. It is not known if the adjustment factor results in an underestimation or overestimation of the actual toxicity associated with dermal exposure.

Uncertainty in Risk Characterization

The uncertainties identified in each component of the risk assessment ultimately contribute to uncertainty in risk characterization.

5.5 Human Health Risk Summary

The human health risk evaluation for surface soil, subsurface soil, groundwater, surface water, and sediment at Site UXO-08 was performed in two phases. The first phase entailed comparing the site data to appropriate human health risk-based screening values and performing a risk ratio evaluation to determine if a complete HHRA was necessary for any of the media. If a medium indicated the potential for unacceptable human health risks based on the human health risk-based screening and risk ratio evaluation (COPCs were retained after this evaluation), that medium was carried forward to the second phase of evaluation, a complete HHRA.

The Phase I risk screening evaluation indicated the potential for unacceptable risks associated with exposure to groundwater and sediment.

A complete risk assessment was performed for sediment, but not for groundwater. It was determined that the COPCs identified for the groundwater (VOCs and metals) are likely not related to activities at Site UXO-08, so they were not considered site-related COPCs. Additionally, groundwater contamination at Site 78 is being addressed in accordance with the selected remedy for that site (LUCs, continuation of the IRA groundwater treatment system, and LTM [Baker, 1994b). The aquifer use control boundary and intrusive activities control boundary restrict the use of groundwater in the area and limit potential human exposure. Therefore, a complete risk assessment was not performed.

The complete HHRA evaluated exposure to:

- Sediment for future construction workers, industrial workers, and trespasser/visitor adults

Table 5-3 and Tables 9.1.RME through 9.6.RME of **Appendix J** summarize the RME cancer risks and noncarcinogenic HIs.

Exposure to sediment for all of the receptors evaluated in the HHRA would not result in any noncarcinogenic hazards or carcinogenic risks above USEPA target levels.

Primary Source	Primary Release Mechanism	Secondary Source	Secondary Release Mechanism	Exposure Media	Exposure Route	Potential Human Receptors: Future			Potential Human Receptors: Current/Future			
						Residential Adult	Residential Child	Construction Worker	Base/ Industrial Worker	Trespasser/Visitor Adult	Trespasser/Visitor Youth	Trespasser/Visitor Child
Agents, chemical agent stimulants, and munitions	Use of agents, chemical agent stimulants, and munitions at the site	Soil		Surface Soil[1,2]	Ingestion	X	X	X	X	X	X	X
					Dermal Contact	X	X	X	X	X	X	X
					Inhalation	X	X	X	X	X	X	X
				Subsurface Soil[1,2]	Ingestion	X	X	X	X	NA	NA	NA
					Dermal Contact	X	X	X	X	NA	NA	NA
					Inhalation	X	X	X	X	NA	NA	NA
			Runoff	Surface Water[1,3]	Ingestion	NA	NA	X	X	X	X	X
					Dermal Contact	NA	NA	X	X	X	X	X
					Inhalation	NA	NA	NA	NA	NA	NA	NA
			Runoff	Sediment[3,4]	Ingestion	NA	NA	X	X	X	X	X
					Dermal Contact	NA	NA	X	X	X	X	X
					Inhalation	NA	NA	NA	NA	NA	NA	NA
			Leaching	Groundwater [1]	Ingestion	X	X	NA	NA	NA	NA	NA
					Dermal Contact	X	X	X	NA	NA	NA	NA
					Inhalation	X	X	X	NA	NA	NA	NA

[1] Screening level evaluation for soil, surface water, and groundwater
[2] Current exposure evaluated for surface soil, and future exposure evaluated for surface soil and subsurface soil
[3] Trespasser/visitor exposure scenario would be representative of future residential/worker exposure to surface water and/or sediment
[4] Screening level and baseline risk evaluation for sediment
NA - Not Applicable or pathway is incomplete
X - Potentially complete exposure pathways

FIGURE 5-1

Conceptual Site Model for HHRA
Site UXO-08, Former Lejeune Cantonment Bazooka Range, Base CS Chamber, and NBC Training Trail
MCB Camp Lejeune, North Carolina

\\NORTHEND\PROJ\USNAVFACENGCOM\CAMPLEJEUNE\MAPFILES\SITE_UXO_08\PA_SI\2011\FIGURE_5_2_SITE_78_LAND_USE_CONTROLS_AND_GROUNDWATER_TREATMENT_SYSTEM.MXD MRISSING 3/8/2011 13:28:53

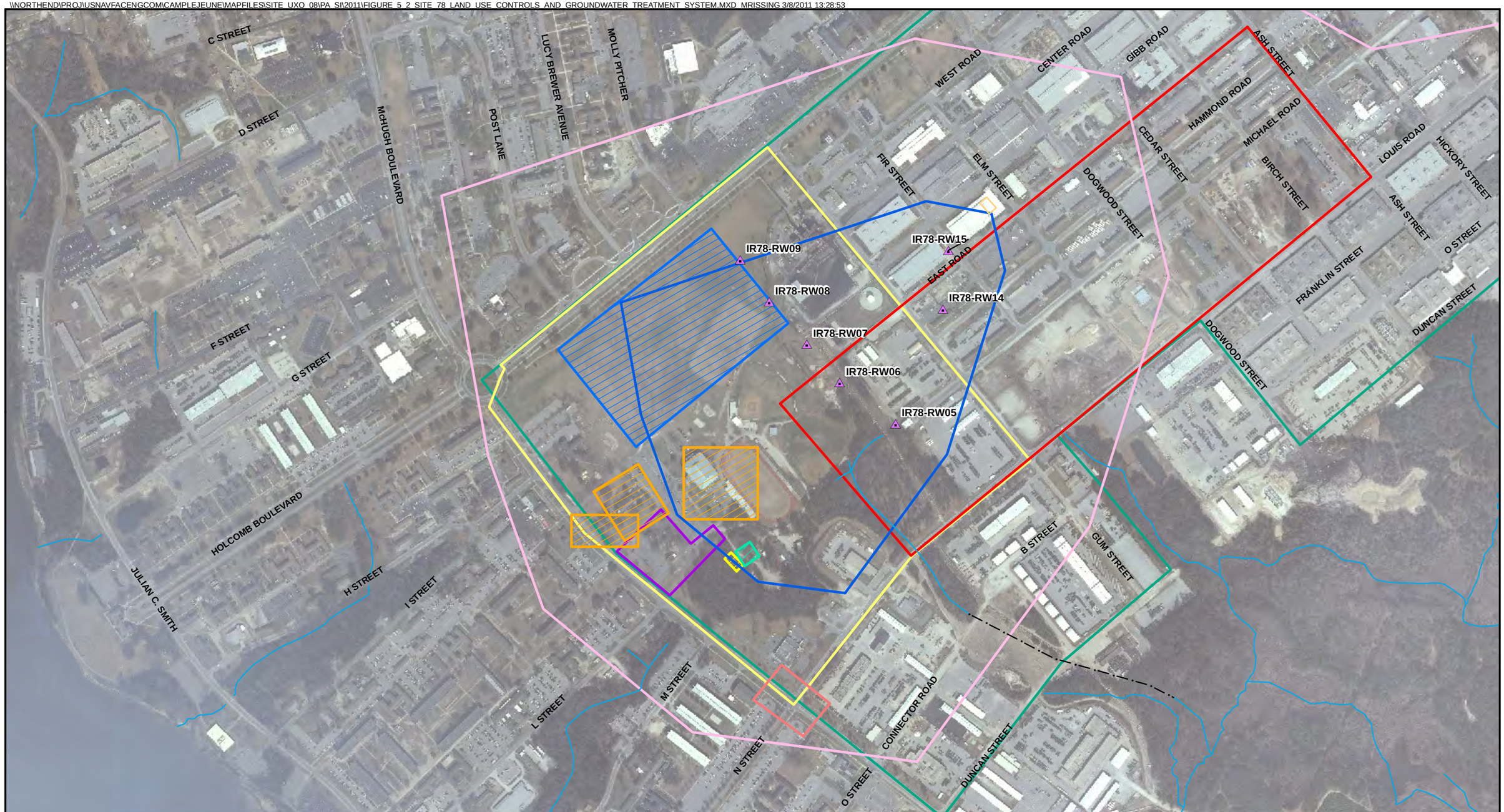

Legend

- Recovery Well
- Culvert
- Surface Water Course Centerline
- Fitness Center
- Post Office Intersection Area
- Hadnot Point Construction Area
- Site UXO-08
- IRP Site 78
- Former Base CS Gas Chamber
- Former D-7 Gas Chamber
- W.P.T. Hill Field (Parade Grounds)
- Alternate Location of Base CS Gas Chamber
- Aquifer Use Control Boundary
- Non-Industrial Use Control Boundary
- Intrusive Activities Control Boundary (Groundwater)

N

0 300 600 1,200 Feet

1 inch = 600 feet

Figure 5-2
Site 78 Land Use Controls and Groundwater Treatment System
Site UXO-08 PA/SI Report
MCB CamLej
North Carolina

CH2MHILL

Generated by: ***Keith LaTorre*** Checked by: ***Lael Feist***

SECTION 6

Ecological Risk Screening

Site UXO-08 consists of administrative and industrial buildings, athletic fields, parade grounds, and landscaped areas. Wooded areas and an unnamed stream are present in the southern portion of the site. Potential terrestrial receptors at Site UXO-08 include plants, soil invertebrates, mammals, reptiles, and birds. Receptors inhabiting the stream could include invertebrates, amphibians, and fish.

6.1 Screening Methodology

The analytical results for surface soil, subsurface soil, groundwater, and surface water discussed in Section 4 were screened against Ecological Screening Values (ESVs) intended to be protective of ecological receptors. For each medium, the maximum detected concentration or maximum detection limit for non-detected constituents was compared to the ESVs to derive an HQ. ESVs were obtained from the following sources:

- *Region 4 Recommended Ecological Screening Value*s (USEPA, 2001b)
- *National Recommended Water Quality Criteria* (USEPA, 2010d)
- *Ecological Soil Screening Levels* (USEPA, 2008)
- *Guidelines for Performing Screening Level Ecological Risk Assessment within North Carolina* (NCDENR, 2008)
- *'Redbook' Surface Waters and Wetlands Standards* (NCDENR, 2007)

For soil, the USEPA ecological soil screening levels (EcoSSL) were preferentially selected over Region 4 or NCDENR values. When no EcoSSL was available for a constituent, the lower of the Region 4 and NCDENR value was selected.

A selection hierarchy was also applied to surface water and groundwater. When USEPA NRWQC for freshwater (chronic) and NC 2B surface water standards for freshwater aquatic life were available for a constituent, the lower of the two values was chosen as the screening value. When no NC 2B surface water standard was available for a constituent, the NRWQC was preferentially selected over the Region 4 value. However, when no NRWQC was available for a constituent, the lower of the NC 2B surface water standard and the Region 4 value was selected as the ESV for that constituent, as described in the NCDENR Screening-Level Ecological Risk Assessment guidance (2008).

For sediment, USEPA Region 4 values were used as the ESVs.

In groundwater, data for metals were available as total and dissolved. For surface water, analyses were for total metals only. The screening results for each medium are discussed below.

6.2 Ecological Risk Screening Results

6.2.1 Results for Soil

Surface Soil

Fifteen detected constituents (aluminum, cadmium, copper, iron, lead, manganese, selenium, thallium, vanadium, zinc, dieldrin, benzo[a]pyrene, fluoranthene, phenanthrene, and pyrene) had maximum concentrations in excess of the available ESVs (Table K-1 of **Appendix K)**. The maximum concentrations of all the inorganics were also greater than two times the mean BBG surface soil concentrations (Baker, 2001). When the site-wide average concentrations of these constituents were compared to ESVs, constituents that exceeded were aluminum, lead, selenium, thallium, vanadium, dieldrin, benzo(a)pyrene, fluoranthene, phenanthrene, and pyrene.

The average concentration of aluminum was 4,050 mg/kg, similar to two times the mean BBG surface soil concentration (2,744 mg/kg). In addition, concentrations in surface soil were consistent across Site UXO-08, suggesting that concentrations may represent naturally occurring site conditions. The average lead concentration of 15 mg/kg was higher than the USEPA EcoSSL, but was lower than the USEPA Region 4 ESV of 50 mg/kg. Thallium was detected in only 1 of 12 samples at a concentration of 1.1 mg/kg, slightly over the ESV of 1.0 mg/kg. Likewise, selenium was detected in only 4 of 12 samples with a concentration (0.73 mg/kg), only slightly over the ESV of 0.63 mg/kg. The HQ associated with the average vanadium concentration was 1.4. In addition, all vanadium detections were below the maximum detected background surface soil concentration (Baker, 2001).

The averages of the detections for benzo(a)pyrene (110 µg/kg), fluoranthene (215 µg/kg), phenanthrene (108 µg/kg), and pyrene (196 µg/kg) were near the USEPA Region 4 ESV (100 µg/kg) and, for comparison purposes, below the ESVs used by USEPA Region 5 (USEPA, 2003a). For dieldrin, the average concentration (5.6 µg/kg) only slightly exceeded the ESV of 4.9 µg/kg.

Overall, metals in Site UXO-08 surface soil are not expected to pose a risk to ecological receptors.

Subsurface Soil

Aluminum, antimony, cadmium, iron, lead, selenium, vanadium, zinc, 4,4'–dichlorodiphenyldichloroethane (4,4'-DDD), 4,4'-dichlorodiphenyldichloroethene (4,4'-DDE), 4,4'-dichlorodiphenyltrichloroethane (4,4'-DDT), endrin, benzo(a)pyrene, benzo(b) fluoranthene, benzo(g, h, i)perylene, benzo(k) fluoranthene, chrysene, fluoranthene, indeno(1,2,3-cd) pyrene, and pyrene were detected in subsurface soil with maximum concentrations in excess of ESVs (Table K-2 in **Appendix K).**

As discussed for surface soil, the concentrations of aluminum were relatively consistent across Site UXO-08, suggesting that the concentrations may represent naturally occurring site conditions. The average concentration of antimony (3.7 mg/kg) was higher than the USEPA EcoSSL, but approximately equal to the USEPA Region 4 ESV (3.5 mg/kg). The average concentration of iron (3,668 mg/kg) was similar to two times the mean BBG subsurface soil concentration (2,719 mg/kg). Selenium was detected in only 1 of 5 samples with a concentration (0.93 mg/kg) slightly over the ESV of 0.63 mg/kg. The average

concentration of vanadium in subsurface soil was almost identical to that in surface soil, again suggesting that concentrations represent what is naturally occurring at Site UXO-08. The average concentration of lead (55 mg/kg) exceeded the USEPA EcoSSL but was only slightly higher than the USEPA Region 4 ESV (50 mg/kg). Zinc was detected in 3 of 5 samples with a maximum of 230 mg/kg and a site-wide average of 54 mg/kg. The site-wide average was only slightly higher than the USEPA EcoSSL of 46 mg/kg and the USEPA Region 4 ESV (50 mg/kg).

As indicated above, 12 organic compounds had maximum concentrations above the ESVs (4,4'–DDD, 4,4'-DDE, 4,4'-DDT, endrin, benzo[a]pyrene, benzo[b]fluoranthene, benzo[g,h,i]-perylene, benzo[k]fluoranthene, chrysene, fluoranthene, indeno[1, 2, 3-cd]pyrene, and pyrene). Of these, only five had average concentrations in excess of ESVs. The average concentrations were all less than USEPA Region 5 screening values (USEPA, 2003a). In addition, PAHs were detected at only one location and there is limited access to subsurface soils.

Overall, metals in Site UXO-08 subsurface soil are not expected to pose a risk to ecological receptor populations.

6.2.2 Results for Groundwater

Six constituents (aluminum, beryllium, iron, mercury, thallium, and zinc) had maximum concentrations (based on analysis for total metals) in excess of available ESVs (Table K-3 of **Appendix K)**. NRWQC for aquatic receptors are expressed in terms of dissolved metals (USEPA, 2010d), due to the dissolved fraction being the more bioavailable. As such, the results for filtered samples for each of the six inorganics are discussed below.

Of the 13 PA/SI dissolved metal samples, aluminum was detected in only 1 of them. For dissolved beryllium, there was only 1 sample with a detection in excess of the ESV and the exceedance was small (0.72 µg/L versus 0.53 µg/L). Ferrous iron has been detected at high concentration in the Surficial aquifer at MCB CamLej; therefore, the iron detected in the PA/SI groundwater samples is expected to be naturally occurring. The average dissolved mercury concentration for the PA/SI samples was 0.073 µg/L. This is near the two times the mean BBG for MCB CamLej of 0.05 µg/L. Thallium was not detected in filtered samples. Dissolved zinc was detected in 8 of the samples at concentrations ranging from 5 to 216 µg/L. Of the 8 detections of zinc, 6 of the concentrations were less than an order of magnitude greater than (at or below 17 µg/L) the ESV of 5 µg/L. The NRWQC for zinc is 120 µg/L; only 1 sample had a concentration in excess of the NRWQC.

Overall, metals in site groundwater are not expected to pose a risk to ecological receptor populations.

6.2.3 Results for Surface Water

Detected concentrations of arsenic, cadmium, chromium, copper, lead, selenium, zinc, and bis(2-ethylhexyl)phthalate exceeded ESVs (Table K-4 of **Appendix K**). The inorganics may pose a risk to aquatic receptors and warrant further consideration. Bis(2-ethylhexyl) - phthalate was detected in one of three samples and is a common laboratory contaminant (CDTSC, 2006); it is not expected to pose a risk to ecological receptor populations at the site.

6.2.4 Results for Sediment

Detected concentrations of antimony, arsenic, cadmium, copper, lead, mercury, zinc, 2-methylnaphthalene, benzo(a)anthracene, bis(2-ethylhexyl)phthalate, fluoranthene, fluorene, naphthalene, and phenanthrene exceeded ESVs (Table K-5 in **Appendix K**). With the exception of mercury, zinc, benzo(a)anthracene, and fluorene, average concentrations also exceeded ESVs. There was only one exceedance for bis(2-ethylhexyl) phthalate and it is a known laboratory contaminant (CDTSC, 2006). As such, it is not expected to pose a risk to sediment receptors. The screening results indicate that antimony, arsenic, cadmium, copper, lead, and PAHs in sediment may pose a risk to ecological receptors.

6.3 Uncertainty

ESVs were not available for comparison for the following detected concentrations:

- **Soil—**2-nitrotoluene, 3-nitrotoluene, perchlorate, RDX, calcium, magnesium, potassium, sodium, alpha-chlordane, gamma-chlordane, chlordane, bis(2-ethylhexyl)phthalate, and caprolactam
- **Groundwater—**1,3-dinitrobenzene, 4-amino-2,6-dinitrotoluene, 4-nitrotoluene, nitroglycerin perchlorate, barium, calcium, cobalt, magnesium, manganese, sodium, vanadium, caprolactam, C10-C40 petroleum hydrocarbons, TPH-GRO, 1,1-DCA, 1,1-DCE, benzene, cis-1,2-dichlorethene, tert-butyl methyl ether, toluene, trans-1,2-dichlorethene, TCE, and VC
- **Surface Water—**perchlorate, barium, and phenanthrene
- **Sediment—**perchlorate, barium, selenium, hexachlorobenzene, 2-butanone, and acetone
- Calcium, magnesium, manganese, potassium, and sodium are mineral nutrients (State of North Carolina, 2008). Bis(2-ethylhexyl)phthalate, 2-butanone, and acetone are common laboratory contaminants (CDTSC, 2006); none of these constituents expected to pose risk at the site

In soil, several constituents (2-nitrotoluene, 3-nitrotoluene, RDX, and caprolactam) were detected at concentrations less than 1 mg/kg at low frequency (i.e., only 1 or 2 detections). As such, these constituents are unlikely to pose a risk to ecological receptor populations. The maximum concentration of chlordane in soil was less than the USEPA Region 5 screening value of 224 µg/kg (USEPA, 2003a).

Groundwater also had several constituents (1,3-dinitrobenzene, 4-amino-2,6-dinitrotoluene, and 4-nitrotoluene) detected at low concentrations (e.g., less than 1 mg/kg) and at low frequencies (e.g., between 1 and 3 detections). None of these constituents are expected to pose a risk to ecological receptor populations. The concentration of nitroglycerin, which was also detected in groundwater, was less than the National Research Council Canada freshwater quality guideline of 10 µg/L (NRCC, 2006).

Barium, cobalt, and vanadium were detected in groundwater. Of these, barium and cobalt were detected in filtered samples. Of the 13 filtered groundwater samples, barium was detected in only 2 samples (average detected concentration was 103 µg/L) and cobalt was detected in 4 samples (average detected concentration was 7.4 µg/L). For barium, Suter and

Tsao (1996) have reported a secondary chronic value of 4 µg/L and a secondary acute value of 110 µg/L. In general, exceedances of surface water criteria in groundwater samples have a low probability of posing a risk to receptor populations because organisms are not directly exposed to groundwater. There would typically be attenuation during transport and then dilution upon discharge to a surface water body. However, barium was also detected in all surface water samples. The maximum and average concentrations in site surface water were 39.1 mg/L and 31.8 mg/L, respectively. These concentrations may pose a risk to ecological receptors. The link between the groundwater monitoring wells in which barium was detected and the stream should be considered further. Likewise, consideration should be given to collecting dissolved data for surface water. For cobalt, Buchman (2008) presents acute and chronic values of 1,500 and 3 µg/L, respectively. Given the low average detected concentration of cobalt (7.4 µg/L) at Site UXO-08, risk to ecological receptors upon discharge is unlikely.

Caprolactam was detected in 2 of 6 groundwater samples with a maximum concentration of 4.3 µg/L. If caprolactam discharges to surface water, the concentration would be diluted so it is not expected to pose a risk to ecological receptor populations. It has a half-life of 2 to 20 days and is not expected to bioaccumulate (Vincoli, 1997).

In groundwater, TPH-GRO was found in 1 of 6 samples at a concentration of 210 µg/L. This is less than surface water quality guidelines developed by Massachusetts Department of Environmental Protection (MADEP) for ranges of aliphatics and aromatics that are likely constituents of gasoline (guidelines range from 250 µg/L to 1,800 µg/L) (MADEP, 2002). The maximum concentration of TPH-diesel range organics (DRO) C10-C40 petroleum hydrocarbons at the site was 770 µg/L with an average of 310 µg/L. According to MADEP (2002), the surface water quality guidelines for fractions that correspond to this range are 540 to 2,100 µg/L. Neither of the detected TPH fractions is expected to pose a risk to receptor populations.

Nine VOCs with no screening value were detected in groundwater. None are expected to pose a risk to ecological receptors at Site UXO-08. As described above, transport to discharge points and dilution upon discharge would likely lower the VOC concentrations substantially. Chronic surface water ESVs were available for eight of the nine compounds (Buchman, 2008). They are as follows:

- 1,1-DCA – 47 µg/L
- 1,1-DCE – 25 µg/L
- benzene – 46 µg/L
- cis-1,2-DCE – 590 µg/L
- toluene - 9.8 µg/L
- trans-1,2-DCE – 590 µg/L
- TCE – 21 µg/L
- VC – 930 µg/L

Assuming a 10-fold dilution factor upon discharge, none of the maximum concentrations would exceed these screening values. In addition, none of these constituents were identified as posing a risk in surface water or sediment at Site UXO-08.

Perchlorate was detected in 3 of 12 soil samples at a maximum concentration of 26 µg/kg. Comparison to surface soil toxicity benchmarks suggests that this level does not pose a risk. Callahan and Sprenger (1998), Parsons (2002), and Landrum et al. (2006) have published toxicological studies on the effects of perchlorate on terrestrial invertebrates. Callahan and Sprenger (1998) found that the concentration at which 50 percent of earthworms died was 4,450 mg/kg. In the same study, the lowest no effect concentration for lettuce (a common species used for toxicity testing of plants) was 20 mg/kg. In a more recent study, Landrum et al. (2006) reported a sublethal EC50 (effect concentration for 50 percent of organisms) of 1.3 mg/kg. The maximum concentration detected at Site UXO-08 was less than all of these benchmarks.

Data for of perchlorate detected in groundwater and surface water samples were similar to those in soil. The maximum concentration of perchlorate in both media was less than a water quality criterion of 9,300 µg/L developed by Dean et al. (2004). More recent toxicological studies have shown that amphibians may be the most sensitive ecological receptor for perchlorate. Based on extensive research of available literature, the United States Army Center for Health Promotion and Preventative Medicine (USA CHPPM, 2007) calculated a no effects concentration for amphibians at 23 µg/L, a value that is higher than the maximum surface water concentration at Site UXO-08 (6.3 µg/L).

Phenanthrene was detected in 1 of 3 surface water samples at a low concentration (0.072 µg/L). The chronic values for phenanthrene cited in Buchman (2008) are 6.3 and 3.6 µg/L, significantly higher than the detection at Site UXO-08.

In sediment, ESVs were not available for six detected constituents: perchlorate, barium, selenium, hexachlorobenzene, 2-butanone, and acetone.

The maximum barium detection was 308 mg/kg in sediments. This is approximately 50 times the mean BBG concentration in surface soil at MCB CamLej. Review of Buchman (2008) shows marine sediment threshold effect levels of 130 and 100 µg/kg, far lower than the concentration detected at Site UXO-08. Similarly, the concentration of selenium in Site UXO-08 sediment (maximum of 16.6 mg/kg and average of 7.9 mg/kg) was higher than an apparent effects threshold presented in Buchman (2008). Selenium was also elevated above the average surface soil background concentration (0.28 mg/kg). Both barium and selenium in sediment may pose a risk to ecological receptors and therefore warrant further assessment.

Hexachlorobenzene was detected in 2 of 3 samples at a maximum concentration of 9.2 µg/kg. Buchman (2008) cites a lowest effect level of 20 µg/kg in sediment. As such, hexachlorobenzene is not expected to pose a risk to ecological receptors.

6.4 Conclusion

The results of the ecological risk screening indicate that soil and groundwater are not expected to pose a threat to ecological receptor populations; however, potential risks were identified for the stream at Site UXO-08. In sediment, antimony, arsenic, barium, cadmium, copper, lead, selenium, and PAHs may pose a threat. In surface water, barium, cadmium, chromium, copper, lead, selenium, and zinc may pose a risk. It is important to note that the inorganic data for surface water were total rather than dissolved concentrations. The dissolved fraction is considered most bioavailable to aquatic receptors.

SECTION 7

Conclusions and Recommendations

This section presents the conclusions from the investigation results, the human health screening, and the ecological risk screening. Recommendations based on these conclusions are also presented in this section.

7.1 Digital Geophysical Mapping

Following DGM protocol at MCB CamLej, approximately 47.9 percent of Site UXO-08 was surveyed yielding a total of 16,212 geophysical anomalies potentially representing subsurface MEC. The highest density of anomalies was observed in the southern portion of the site. Additional DGM was completed over 72.9 percent (6.2 acres) of the HPCA that overlapped with Site UXO-08 yielding an additional 1,512 geophysical anomalies potentially representing subsurface MEC. The combined DGM surveys resulted in 3,291 anomalies representing potential subsurface MEC being identified in the overlapping portions of the MILCON areas that lie within Site UXO-08. An intrusive investigation of 411 of these anomalies was performed in October 2010. Only one MEC item, a cartridge 40mm White Star Parachute, M583A1, was identified and it was subsequently destroyed onsite. Investigation of the remaining anomalies provided no evidence of munitions use in the areas investigated. No other MEC/MPPEH was found. Since the MEC item was determined to be DMM, which has no relation to the suspected bazooka firing range or gas chambers, it was considered unlikely that the bazooka firing range was located in this area and that munitions-related items associated with the former gas chambers and NBC Training Trail are no longer expected to be present.

No further MR actions are required at this site.

7.2 Surface Soil

Site UXO-08

Two SVOCs (benzo[a]pyrene, and benzo[b]fluoranthene) and one pesticide, dieldrin, were detected in surface soil samples collected from Site UXO-08 at concentrations exceeding screening levels. In addition, seven metals were detected in surface soil at concentrations exceeding both two times the mean BBG concentration and screening levels, including arsenic, chromium, cobalt, copper, iron, manganese, and magnesium.

HPCA

Five SVOCs (benzo(a)anthracene, benzo(a)pyrene, benzo(b)fluoranthene, dibenz(a,h)anthracene, and hexachlorobenzene) were detected in HPCA surface soil at concentrations exceeding screening levels. In addition, eight metals (antimony, arsenic, barium, cadmium, chromium, mercury, selenium, and silver) were detected in HPCA surface soil at concentrations exceeding both two times the mean BBG concentration and screening levels.

POIA

One SVOC, benzo(a)pyrene was detected in POIA surface soil exceeding the USEPA Adjusted RSL for Residential Soil. Two metals, arsenic and chromium, were detected in POIA surface soil at concentrations exceeding both two times the mean BBG concentration and screening levels.

FC

Two VOCs (chloromethane and methylene chloride) and five SVOCs (benzo[a]anthracene, benzo[a[pyrene, benzo[b]fluoranthene, dibenzo[a,h]anthracene, and indeno[1,2,3]pyrene), were detected in FC area surface soil exceeding screening levels. Two metals (arsenic and chromium) were detected in FC area surface soil at concentrations exceeding both two times the mean BBG concentration and screening levels.

Risk Assessment

No unacceptable risks to human health or ecological receptors were identified as a result of constituents detected in surface soil within Site UXO-08 and the MILCON areas; therefore, no further assessment is recommended.

7.3 Subsurface Soil

Site UXO-08

Five SVOCs (benzo[a]anthracene, benzo[a]pyrene, benzo[b]fluoranthene, dibenz[a,h]-anthracene, and indeno[1,2,3-cd]pyrene) and one pesticide (dieldrin) were detected in subsurface soil samples collected from Site UXO-08 at concentrations exceeding screening levels. In addition, five metals were detected in subsurface soil at concentrations exceeding both two times the mean BBG concentration and screening levels, including aluminum, antimony, arsenic, chromium and iron.

HPCA

Two VOCs (benzene and VC) and two SVOCs (benzo[a]pyrene and dibenz[a,h]anthracene) were detected in subsurface soil samples collected from the HPCA at concentrations exceeding screening levels. In addition, six metals were detected in subsurface soil at concentrations exceeding both two times the mean BBG concentration and screening levels: antimony, arsenic, chromium, mercury, selenium, and silver.

POIA

VOCs, SVOCs, explosives residues, and perchlorate were not detected above screening levels in POIA subsurface soil. One metal, chromium, was detected in subsurface soil at concentrations exceeding both two times the mean BBG concentration and screening levels in POIA subsurface soil.

FC

VOCs, SVOCs, explosives residues, and perchlorate were not detected above screening levels in FC area subsurface soil. Two metals, arsenic and chromium, were detected in subsurface soil at concentrations exceeding both two times the mean BBG concentration and screening levels in FC area subsurface soil.

Risk Assessment

No unacceptable risks to human health or ecological receptors were identified as a result of constituents detected in subsurface soil within Site UXO-08 and the MILCON areas; therefore, no further assessment is recommended.

7.4 Groundwater

UXO-08

Three VOCs (cis-1,2-DCE, TCE, and VC) and three explosives residue compounds (1,3-dinitrobenzene, 2,4-dinitrotoluene, and nitroglycerin) were detected in a single groundwater sample collected from Site UXO-08 at concentrations exceeding screening levels. Five total metals and four dissolved metals were detected in groundwater at concentrations exceeding both two times the mean BBG concentration and screening levels, including arsenic, cobalt, iron, manganese, thallium, dissolved antimony, dissolved arsenic, dissolved cobalt, and dissolved manganese.

HPCA

Seven VOCs (1,1-DCA, 1,1-DCE, 1,2-DCA, benzene, cis-1,2-DCE, TCE, and VC) and two SVOCs (bis[2-ehtylhexyl]phthalate and naphthalene) were detected in groundwater samples collected from the HPCA at concentrations exceeding screening levels. Two explosives residues (1,3-dinitrobenzene and nitroglycerin) were also detected at concentrations exceeding screening levels. Five total metals (antimony, arsenics, chromium, iron, and manganese) and two dissolved metals (iron and manganese) were detected in HPCA groundwater at concentrations exceeding both two times the mean BBG concentration and screening levels.

POIA

No VOCs, SVOCs, explosives residues, or perchlorate were detected at concentrations exceeding screening levels in POIA groundwater. No total metals in POIA groundwater were detected at concentrations exceeding both two times the mean BBG concentration and screening levels. POIA groundwater was not analyzed for dissolved metals.

FC

No VOCs were detected at concentrations exceeding screening levels in FC groundwater. SVOCs, pesticides, PCBs, and explosives residues were not detected in any FC groundwater samples. Perchlorate was detected at concentrations below the USEPA Tap Water RSL. Two total metals (arsenic and chromium) were detected at concentrations exceeding both two times the mean BBG concentration and screening levels. Samples were not analyzed for dissolved metals.

Risk Assessment

The Phase I human health risk screening evaluation indicated the potential for risk associated with exposure to groundwater at Site UXO-08. However, it was determined that the constituents identified in groundwater (VOCs and metals) are likely not related to activities at Site UXO-08, so they were not considered site-related COPCs. Additionally, groundwater contamination at Site 78 is being addressed in accordance with the selected remedy for that site (LUCs, continuation of the IRA groundwater treatment system, and

LTM [Baker, 1994b;c]). The aquifer use control boundary and intrusive activities control boundary restrict the use of groundwater in the area and limit potential human exposure. Therefore, a complete risk assessment was not performed. No unacceptable risks to ecological receptors were identified as a result of constituents detected in the groundwater at Site UXO-08. No further assessment of groundwater at Site UXO-08 is recommended.

7.5 Surface Water

VOCs were not detected in surface water samples collected from the HPCA within Site UXO-08. One SVOC, bis(2-ethylhexyl)phthalate, was detected at a concentration exceeding screening levels in surface water sample MR08-SW03 in the HPCA. Four metals, including arsenic, cadmium, chromium, and copper, were detected at concentrations exceeding screening levels. Explosives residues were not detected in any surface water sample. Perchlorate was detected at concentrations exceeding the RSL in all three surface water samples. No unacceptable risks to human health were identified as a result of constituents detected in surface water within Site UXO-08; however, potential ecological risks were identified, driven by detections of barium, cadmium, chromium, copper, lead, selenium, and zinc. Further evaluation of potential ecological risks in surface water is recommended. Because the ecological risks identified are not related to historical military munitions activities at Site UXO-08, further evaluation of risks will be addressed as part of the five year review for IR Site 78.

7.6 Sediment

VOCs, explosives residues, and perchlorate were not detected at concentrations exceeding screening levels in any sediment sample collected from the HPCA within Site UXO-08. One SVOC, benzo(a)pyrene, was detected at concentrations exceeding screening levels at MR08-SD01 and MR08-SD02. Three metals (antimony, arsenic, and chromium) were detected at concentrations exceeding screening levels in HPCA sediment samples. A complete HHRA was performed evaluating sediment exposure by future Base construction workers, industrial workers, and trespasser/visitor adults. No noncarcinogenic or carcinogenic risks above USEPA target levels were identified for the evaluated receptors.

No unacceptable risks to human health were identified as a result of constituents detected in sediment within Site UXO-08; however, potential ecological risks were identified, driven by detections of antimony, arsenic, barium, cadmium, copper, lead, selenium, and PAHs. Further evaluation of potential ecological risks in sediment is recommended. Because the ecological risks identified are not related to historical military munitions activities at Site UXO-08, further evaluation of risks will be addressed as part of the five year review for IR Site 78.

7.7 Post-Detonation Surface Soil

No SVOCs or explosives residues were detected at concentrations exceeding screening levels in post-detonation surface soil samples. Four metals (aluminum, arsenic, chromium, and iron) were detected at concentrations exceeding screening levels in the post-detonation surface soil samples; however, no unacceptable risks to human health were identified in the post-detonation soil samples within Site UXO-08.

7.8 No Further Action Recommendation

Based on the results from the PA/SI, no further action is recommended for Site UXO-08. No unacceptable human health or ecological risks from historical munitions activities were identified. Potential ecological risks identified in surface water and sediment resulted from historical industrial activities and will be addressed as part of the five year review for Site 78.

SECTION 8

References

AH Environmental Consultants (AHEC). 2002. *Wellhead Protection Plan, 2002 Update.* August.

Baker Environmental, Inc. (Baker). 1992a. *Final Interim Remedial Action Remedial Investigation/Feasibility Study for the Shallow Aquifer at the Hadnot Point Industrial Area Operable Unit*. May.

Baker. 1992b. *Interim Record of Decision for Operable Unit No. 1, Site 78, Marine Corps Base Camp Lejeune, North Carolina*.

Baker. 1994a. *Final Remedial Investigation Report Operable Unit No. 1 (Sites 21, 24 & 78) Marine Corps Base Camp Lejeune, North Carolina.* June.

Baker. 1994b. *Interim Remedial Action Proposed Remedial Action Plan for Site 78 Groundwater Marine Corps Base Camp Lejeune, North Carolina*. July.

Baker. 1994c. *Final Record of Decision for Operable Unit No. 1 (Sites 21, 24, and 78), Marine Corps Base Camp Lejeune, North Carolina.*

Baker. 2001. *Final Base Background Soil Study Report, Marine Corps Base Camp Lejeune, North Carolina.* April.

Baker. 2002. *Draft Base Background Groundwater Study, Marine Corps Base, Camp Lejeune, North Carolina*. August.

Baker. 2003. *Pilot Study Report for Site 78, Marine Corps Base, Camp Lejeune, North Carolina.*

Buchman, M. F. 2008. *NOAA Screening Quick Reference Tables.* NOAA OPR Report 08-1, Office of Response and Restoration Division, National Oceanic and Atmospheric Administration, Seattle, WA.

California Department of Toxic Substances Control (CDTSC). 2006. *Environmental Chemistry Laboratory (ECL) User's Manual Section No.: Appendix C Revision No. 14.* July.

Callahan, C. and M. Sprenger. 1998. *Perchlorate Ecological Risk Studies – A Report on Literature Reviews and Studies Conducted by the Ecological Impact /Transport and Transformation Subcommittee of the Interagency Perchlorate Steering Committee.* United States Air Force Institute for Environment, Safety, and Occupational Health Risk Analysis. IERA-RS-BR-TR-2001-0004.

Cardinell, A. P., S. A. Berg, and O. B. Lloyd, Jr., 1993. *Water Resources Investigations Report 93-4049: Hydrogeologic Framework of U.S. Marine Corps Base at Camp Lejeune, North Carolina.* United States Geological Survey.

CH2M HILL. 2002. *Natural Attenuation Evaluation, Site 78, Marine Corps Base Camp Lejeune, Jacksonville, North Carolina*.

CH2M HILL. 2006a. *Final Work Plan for Site Inspection at Site UXO-08 Bazooka Range and Gas Chambers, Marine Corps Base Camp Lejeune, North Carolina.* July.

CH2M HILL. 2006b. *Explosives Safety Submission for MEC Construction Support at Site UXO-08 MILCON Area, Marine Corps Base Camp Lejeune, North Carolina.* July.

CH2M HILL. 2008a. *MCB Camp Lejeune Munitions Response Program Master Project Plans, Marine Corps Base Camp Lejeune, North Carolina.* June.

CH2M HILL. 2008b. *Final Site-Specific Work Plan Addendum for the Preliminary Assessment/Inspection, Site UXO-08 – Former Lejeune Cantonment Bazooka Range, Base CS Chamber, and NBC Training Trail.* May.

CH2M HILL. 2008c. *Site-Specific Work Plan Addendum for Focused Preliminary Assessment/Site Inspection Hadnot Point Construction Area, Post Office Intersection Area, and Fitness Center, Marine Corps Base Camp Lejeune, North Carolina.* October.

CH2M HILL. 2008d. *Munitions and Explosives of Concern Intrusive Investigation Explosives Safety Submission Determination, Site UXO-08– Former Lejeune Cantonment Bazooka Range, Base CS Chamber, and NBC Training Trail, Marine Corps Base Camp Lejeune, Jacksonville, North Carolina.* January.

CH2M HILL. 2010a. *Final Site-Specific Work Plan Addendum for Intrusive Investigation at the 202K MILCON Areas at Site UXO-08, Former Cantonment Area Bazooka Range, Marine Corps, Camp Lejeune, Jacksonville, North Carolina*. April.

CH2M HILL. 2010b. *Base Waste Management Plan, Marine Corps Base Camp Lejeune, Jacksonville, North Carolina.* October.

CH2M HILL. 2010c. *Focused Preliminary Assessment/Site Inspection Report, Hadnot Point Construction Area, Post Office Intersection Area, and Fitness Center, Marine Corps Base Camp Lejeune, Jacksonville, North Carolina*. October.

CH2M HILL. 2010d. *Site Management Plan Fiscal Year 2011. Marine Corps Base Camp Lejeune, Jacksonville, North Carolina*. December.

Dean, K. E., R. M. Palachek, J. M. Noel, R. Warbritton, J. Aufderheide, and J. Wireman. 2004. *Development of Freshwater Water-Quality Criteria for Perchlorate.* Environmental Toxicology and Chemistry, 23 (6): 1141-1451.

Environmental Science and Engineering, Inc. (ESE). 1990. *Site Summary Report. Final, Marine Corps Base, Camp Lejeune, North Carolina. Prepared for the Department of the Navy, Naval Facilities Engineering Command, Atlantic Division, Norfolk, Virginia.*

ESE. 1992. *Final Remedial Investigation Report for Hadnot Point Industrial Area Operable Unit Shallow Soils and Castle Hayne Aquifer Characterization Study to Determine Existence and Possible Migration of Specific Chemicals In Situ*. Marine Corps Base Camp Lejeune, North Carolina.

Global Security. 2005. http://www.globalsecurity.org/military/facility/camp-lejeune.htm. Website accessed July 19, 2005.

Harned, D. et al. 1989. *Assessment of Hydrologic and Hydrogeologic Data at Camp Lejeune Marine Corps Base, North Carolina*. U.S. Geological Survey Water-Resources Investigation Report 89-4096, 64p.

Heath, R. 1989. *Basic Groundwater Hydrology*. U.S. Geological Survey WSP 2220.

Jordan, John. 2005. Camp Lejeune Real Estate Expert. Personal communication, December 8.

Landrum, M. J.E. Canas, G. Coimbatore, G.P. Cobb, W.A. Jackson, B. Zhang, and T.A. Anderson. 2006. Effects of perchlorate on earthworm (Eisenia fetida) survival and reproductive success. *Sci Tot Environ.* 363: 237-244.

Louis Berger Group. 2002. Under U.S. Army Corps of Engineers, Wilmington District Contract DACWS4-99-C-0004, *Semper Fidelis: A Brief History of Onslow County, North Carolina and MCB, Camp Lejeune, 2002, U.S.M.C.*, Lt. Col Lynn J. Kimball (USMC, Ret.), consulting historian.

Massachusetts Department of Environmental Protection (MADEP). 2002. *Implementation of the MADEP VPH/EPH Approach*. Policy# WSC-02-411. October.

MCB Camp Lejeune (MCB CamLej). 2005. *Tour of MCB Camp Lejeune, Stop 2: Parade Grounds.* Website version last updated July 7, 2008: http://www.lejeune.usmc.mil/mcb/poi2.asp

Mier, Maj William A. 1989. *Should Camp Lejeune Be Expanded.* http://www.globalsecurity.org/military/library/report/198/MWA.htm. USMCC.

National Research Council Canada (NRCC). 2006. *Development of Ecological and Human Health Preliminary Soil Quality Guidelines for Energetic Materials to Ensure Training Sustainability of Canadian Forces.*

Navy. 1942. *Appraisal Report, LA-Navy-Jacksonville, NC, Tract Nos. D-505, -526, -529, -530,-531, -536-538, -542, -545*. September.

Navy. 2000. *Overview of Screening, Risk Ratio, and Toxicological Evaluation*. Procedures for Northern Division Human Health Risk Assessments. May.North Carolina Department of Environment and Natural Resources (NCDENR). 2007. *'Redbook' Surface Waters and Wetlands Standards*. Division of Water Quality. May 1.

NCDENR. 2008. *Guidelines for Performing Screening Level Ecological Risk Assessment within North Carolina.*

NCDENR. 2010a. *Guidelines for Assessment and Cleanup.* Division of Waste Management, Superfund Section Inactive Hazardous Sites Branch. November.

NCDENR. 2010b. *Subchapter 2L, Classifications and Water Quality Standards Applicable to the Groundwaters of North Carolina. Title 15A, Department of Environment and Natural Resources, Division of Water Quality.* November.

NC OneMap. 2009. *Public Water Supply Water Sources* http://www.nconemap.com/Default.aspx?tabid=286

O'Brien and Gere Engineers, Inc. 1990. *Groundwater Study at the Hadnot Point Fuel Farm.*

OHM Remediation Services Corporation. 1996. *Closeout Report, Soil Remediation, Operable Unit 1, Sites 21 and 78, MCB Camp Lejeune, Jacksonville, North Carolina*. October.

Parsons. 2002. Sub-chronic toxicity and bioconcentration of perchlorate by the earthworm Eisenia fetida. Contract F41624-01-D-8009, Brooks Air Force Base, TX.

Richardson, Duane, Camp Lejeune Range Safety Officer. Personal Communication. May 9, 2007.

State of North Carolina. 2008. *Plant Nutrients.* http://www.agr.state.nc.us/cyber/kidswrld/plant/nutrient.htm

Suter, G. W., II, and C. L. Tsao. 1996. Toxicological Benchmarks for Screening of Potential Contaminants of Concern for Effects on Aquatic Biota on Oak Ridge Reservation: 1996 Revision. Oak Ridge National Laboratory, Oak Ridge, Tennessee. 104 pp, ES/ER/ TM-96/R2.

Thiboutot, S., Ampleman, G., and Hewitt, A. 2002. *Guide for Characterization of Sites Contaminated with Energetic Materials.* United States Army Corps of Engineers (USACE) Technical Report ERDC/CRREL TR-02-1.

United States Army Center for Health Promotion and Preventive Medicine (USA CHPPM). 2007. Wildlife toxicity assessment for perchlorate. Project Number 87-MA02T6-05D. Aberdeen Proving Ground, Maryland.

United States Navy (Navy). 1941. Appraisal Report, LA-Navy-Jacksonville, NC, Tract Nos. D-505, -526, -529, -530,-531, -536-538, -542, -545. November.

United States Army Corps of Engineers (USACE). 2001. *Final Range Identification and Preliminary Range Assessment, Marine Corps Base Camp Lejeune, Onslow, North Carolina.* St. Louis District. December.

United States Department of Agriculture (USDA). 2002. *National Cooperative Soil Survey: Onslow Series*. December.

United States Environmental Protection Agency (USEPA). 1986. *Guidelines for Health Risk Assessment of Chemical Mixtures*. Federal Register Vol. 51 34014-34041. September.

USEPA. 1989. *Risk Assessment Guidance for Superfund Volume I Human Health Evaluation Manual (Part A).* Office of Solid Waste and Emergency Response. EPA/540/1-89/002. December.

USEPA. 1991. *Risk Assessment Guidance for Superfund, Volume 1, Human Health Evaluation Manual, Part B: "Development of Risk-based Preliminary Remedial Goals."* Office of Solid Waste and Emergency Response. OSWER Directive 9285.7-01B. December 13.

USEPA. 1997. *Health Effects Assessment Summary Tables, FY-1997 Annual.* (HEAST). Office of Research and Development. July.

USEPA. 2000. *Supplemental Guidance to RAGS: Region 4 Bulletins, Human Health Risk Assessment Bulletins.* USEPA Region 4, originally published November 1995, Website version last updated May 2000 (currently under revision).

USEPA. 2001a. *Risk Assessment Guidance for Superfund, Volume 1, Human Health Evaluation Manual Part D, Standardized Planning, Reporting, and Review of Superfund Risk Assessments*. Office of Solid Waste and Emergency Response. EPA 540-R-97-033. OSWER 9285.7-01D. December.

USEPA. 2001b. *Region 4 Recommended Ecological Screening Values.* http://www.epa.gov/region04/waste/ots/ecolbul.htm

USEPA. 2003a. *Resource Conservation and Recovery Act Ecological Screening Levels.* Region 5. August.

USEPA. 2003b. *Human Health Toxicity Values in Superfund Risk Assessments.* OSWER Directive 9285.7-53. December.

USEPA. 2004. *Risk Assessment Guidance for Superfund Volume I: Human Health Evaluation Manual (Part E, Supplemental Guidance for Dermal Risk Assessment)*. OSWER 9285.7-02EP. July.

USEPA. 2008. *Ecological Soil Screening Levels.* http://www.epa.gov/ecotox/ecossl/

USEPA. 2009. *National Primary Drinking Water Regulations.* EPA 816-F-09-004. May.

USEPA. 2010a. *Regional Screening Levels for Chemicals at Superfund Sites*. November.

USEPA. 2010b. *ProUCL Version 4.00.05 User Guide.* Draft. EPA/600/R-07/038. May.

USEPA. 2010c. *Integrated Risk Information System (IRIS) Database.*

USEPA. 2010d. *National Recommended Water Quality Criteria.* Updated January 2010.http://epa.gov/waterscience/criteria/wqctable/

URS Corporation (URS). 2002. *Draft Marine Corps Base Camp Lejeune Range Inventory Report.* February.

Vincoli, J. W. 1997. *Risk Management of Hazardous Chemicals.* CRC Press. 3136 pp.

Water and Air Research. 1983. *Initial Assessment Study of Marine Corps Base, Camp Lejeune, North Carolina.*

Appendix A
MRSPP Site Summary Submittal to QA Panel

MRSPP SITE SUMMARY
SUBMITTAL TO QA PANEL

1. General: Provide the following general information:
   a. Site name: **UXO-08, Cantonment Bazooka Range, Base CS Chamber, and NBC Training Trail**
   b. Site location: **MCB Camp Lejeune, North Carolina**
   c. Cognizant FEC: **NAVFAC Mid-Atlantic**
   d. Site POC:

Charity Rychak
Environmental Engineer
EQB/EMD/I&E
MCB, Camp Lejeune, NC 28542
Ph: (910) 451-9386

2. Munitions Type Known or Suspected: This section should address all munitions known or suspected to be present at the site including any practice or dummy munitions. This section should specifically address:
   a. Munitions type(s) – Identify Mk, Mod, or other identification specifics. Address any bulk explosives or chemical warfare materials (CWM), including chemical agent containers or chemical agent identification sets (CAIS).

The Range Identification and Preliminary Assessment Report (USACE, 2001) identified the D-7 Gas Chamber as being located at Building 756. The gas chamber is estimated to have been used from 1953 to 1961 and thought to have primarily used tear gas. Base maps and the Range Identification and Preliminary Assessment Report indicate the operation of the alternate Base CS chamber and NBC Training trail from 1985 to 1987. The amount of chemical simulants used during the facilities operation is unknown. (CH2M HILL, 2008) War Gas Identification Sets and riot Control Hand Grenades may have been used in the area. CWMs were not used in the area. (USACE, 2001)

The 2002 Range Inventory Report (URS, 2002) indicated the presence of a suspected firing range, designated as the Lejeune Cantonment 2.36 Bazooka Range. A single Retired base Explosives Ordnance Disposal (EOD) technician reported the findings of bazooka rounds on several occasions at various locations within Parade Grounds during the 1970s and 1990s. The suspected range has not been identified in any other historic base documents reviewed during this research effort. (CH2M HILL, 2008)

General types of munitions used included the following (USACE, 2001)

- **Simulants Chemical Agent PEG 200**
- **Training Set, Chemical Agent M72A1/A2**
- **Blister Agent Simulant, Molasses Residuum**
- **Training Ammunitions (i.e. Tear Gas Grenades, etc.)**
- **Atomic Explosion Simulator, DVC 39-1**
- **Atomic Simulator, (locally fabricated IAW FM 30-101)**
- **Artillery Simulator, M110**

The Preliminary Assessment/Site Inspection Report for Site UXO-08 (CH2M HILL, 2011) indicated that the only munition (including MEC and munitions debris) found on

site to date was one MEC item on October 17, 2010, a Cartridge , 40mm White Star Parachute, M583A1, found at 2 inches below ground surface. The item was determined to be discarded military munitions (DMM).

b. Associated explosive fill or load – Identify for each of the munitions types
c. Associated fuzing – Indicate if the fuzing is considered sensitive or not for each of the identified munitions types

Table 1. Types of Munitions and Fuzing at UXO-08 (USACE, 2001)

Types of Munitions Employed	Fuzing
Chemical training ammunition.	Integral

d. Munitions determination – State if the munitions known or suspected to be present are UXO, damaged or undamaged DMM, or MC.

Munitions suspected to be present potentially include UXO. The results of PASI indicate that MC is not present.

3. Source of Hazard: This section addresses the source of munitions, including CWM, known or suspected to be present at the site. This section should specifically describe any:
   a. Former bombing, grenade, maneuver areas, small arms, research, development, testing and evaluation (RDT&E) or other types of ranges or firing points. Identify any ranges used only for a particular type of munitions (e.g., small arms range).

Suspected Bazooka Range has not been identified on any historical documents. (CH2M HILL, 2008). The results of the PASI indicate no signs of munitions use. Besides one DMM, no other MEC, MPPEH, or MDAS was identified.

   b. Former OB/OD or other munitions treatment sites.
   c. Former munitions burial sites.

Disposal of munitions and or burial of munitions is not reported or suspected on this site. (CH2M HILL, 2008)

   d. Former munitions-related industrial areas used for the maintenance, manufacturing or demilitarization of munitions.
   e. Former missile defense or air defense artillery emplacement not associated with a range.
   f. Former storage or transfer points.

4. Location of Munitions: this section addresses the location of the known or suspected munitions and their potential to be exposed to receptors.
   a. State if the presence of munitions is confirmed or suspected.

Presence of munitions is not suspected based on the results of the PASI. One DMM, a cartridge, 40mm White Star Parachute, M583A1 was found and disposed in October 2010 (CH2M HILL, 2011).

b. Address if the evidence of the munitions presence is physical, historical, anecdotal or a combination of these sources.

Evidence of DMM is physical (CH2M HILL, 2011). Evidence of MEC/MPPEH is anecdotal (CH2M HILL, 2008)

c. Indicate if confirmed munitions are located on the surface, subsurface or both.

The DMM found in October 2010 was subsurface.

d. For confirmed, subsurface munitions, state if geological conditions are active or stable.

Geologic conditions are stable.

e. Describe any barriers at the site that prevent direct access to any subsurface munitions (e.g., water depth in excess of 120 ft).

The majority of the site has been developed.

5. Ease of Access: This section addresses potential access to the MRS by considering barriers such as fencing or steep terrain that limit a receptor's ability to enter the site.
   a. State if there is a complete or partial barrier to the MRS.

Site UXO-08 is approximately 144 acres in size and is located in the Hadnot Point area of the base. Site UXO-08 is bounded by Holcomb Boulevard to the northwest, McHugh Boulevard to the southwest, Louis Road to the southeast, and Gum Street on the northeast. Within the boundary of Site UXO-08 there is a 15-acre military construction (MILCON) area. The existing Parade Grounds, officially designated as W.P.T. Hill Field, are located within Site UXO-08 along the southeastern side of Holcomb Boulevard. W.P.T. Hill Field frequently serves as a helicopter landing zone for both administrative and tactical helicopter lifts. The Parade Grounds are surrounded on all four sides by industrial and administrative areas of the base. The primary land use within Site UXO-08 consists of industrial and administrative areas. The eastern and northeastern portions of the site are primarily industrial and include the coal power plant and coal yard, while areas to the west and southwest are primarily administrative in nature. The topography of the site is flat and the majority of Site UXO-08 is cleared and/or developed. (CH2M HILL, 2008)

   b. Describe any surveillance activities at the MRS and if they provide continual monitoring of access.

Surveillance activities do not occur at the MRS, beyond surveillance that occurs at the entire base. It is located within the base property. The area is developed with access restricted to military personnel. The general public is precluded from entry to the area. (CH2M HILL, 2008)

6. Status of Property: This section addresses Navy control of the MRS.
   a. Indicate if the property was or is currently owned by, leased to, or otherwise possessed or used by the Navy. If the property has been transferred, indicate transferee and date of transfer.

The property is owned by the Marine Corps.

b. Identify any property that is currently under Navy control, but is scheduled to be transferred from Navy control within 3 years.

None

7. Population/Activities: This section addresses the presence of potential receptors near the MRS.
   a. Based on U.S. Census Bureau data indicate the density of the surrounding population in persons per square mile within a 2-mile radius of the MRS boundary.

196 persons per square mile within a 2-mile radius of the MRS boundary

   b. Identify the total number of inhabited structures that are located within the MRS or within a 2-mile radius of the MRS boundary.
   c. Describe the activities occurring in or near these structures.

8. Ecological/ Cultural Resources: This section addresses the presence of ecological or cultural resources near the MRS.
   a. Identify if ecological or cultural resources or both are present on the MRS.

No cultural resources on or near the MRS have been identified.

Ecological resources are as follows. A bald eagle's nest is documented on Camp Lejeune. The nest is located at the junction of Sneads Creek and the New River, 9 miles from Site UXO-08. No suitable habitat for any of the endangered or threatened species exists in the boundaries of UXO-08. No adverse impacts to listed species are expected to result from the proposed work at Site UXO-08. Project design features have been developed to prevent impacts to listed species. The following documents the threatened or endangered species of Onslow County, NC and those sighted on or near Camp Lejeune, NC. (CH2M HILL, 2008)

Table 2. Threatened or Endangered Species of Onslow County, NC (CH2M HILL, 2008)

Species	Federal Status	
American Alligator	T(S/A)	See Notes
Bald Eagle	BGPA	See Notes
Green Sea Turtle	T	Threatened
Leatherback Sea Turtle	E	Endangered
Loggerhead Sea Turtle	T	Threatened
Piping Plover	T	Threatened
Red-cockaded Woodpecker	E	Endangered
Shortnose Sturgeon	E	Endangered
West Indian Manatee	E	Endangered
Cooley's Meadowrue	E	Endangered
Golden Sedge	E	Endangered
Pondberry	E	Endangered

Rough-leaved Loosestrife	**E**	**Endangered**
Seabeach Amaranth	**T**	**Threatened**

Notes:
T(S/A) = threatened due to similarity of appearance
BGPA =Bald and Golden Eagle Protection Act

Many protected species have been sited near and on MCB Camp Lejeune. These include the American alligator, the green sea turtle, the loggerhead sea turtle, the piping plover, the red cockaded woodpecker, bald eagle, seabeach amaranth, and the rough-leaf loosestrife. (USMC, 2006).

9. Health Hazard Evaluation (This information should be captured within the NORM database): This section addresses the potential hazards to receptors from MC and any incidental non-munitions related contaminants in four specific media. Appendix B of the MRSPP Primer contains the list of comparison values for the contaminants to be evaluated.
   a. Identify and provide values for any contaminants present in background samples for the MRS.

Site 78, which houses the industrial area of MCB Camp Lejeune, is located between Sneads, Ferry Road, Holcomb Boulevard, Duncan Street, and Main Service Road. Site 78 covers an area of approximately 590 acres and encompasses UXO-08.

Soil sampling results from the Site 78 RI indicated semivolatile organic compounds (SVOCs), pesticides, and metals were the predominant contaminants impacting soils. The most frequently detected SVOCs were polycyclic aromatic hydrocarbons (PAHs), including phenanthrene, anthracene, fluoranthene, pyrene, benzo(b) fluoranthene, benzo(k)-fluoranthene, benzo(a)pyrene, and benzo(g,h,i)perylene. These compounds are found in petroleum fuels such as fuel oil No. 2, diesel, and kerosene which are used for heating purposes, for fueling emergency generators, or for refueling base vehicles. Storage of these fuels in aboveground tanks or USTs was common at a number of buildings throughout Site 78. SVOC impact was primarily attributed to surface spills or subsurface tank leaks.

Pesticide impact was attributed to routine spraying activities. Barium, lead, and zinc, were the three most common metals detected at an order of magnitude at or above base-specific background levels. The specific sources of these metals were not determined as there was no history of disposal related to these three contaminants. Analytical data indicated VOCs and polychlorinated biphenyls (PCBs) were not significantly impacting soils at the areas investigated within Site 78.
The RI investigations also revealed shallow groundwater at Site 78 had been impacted by organics and metals. The primary organic contaminants were VOCs, namely benzene, toluene, ethylbenzene, and total xylenes (BTEX); tetrachloroethene; trichloroethene (TCE); vinyl chloride; 1,1-dichloroethene (DCE); cis-1,2-DCE; trans-1,2-DCE; and 1,2-dichloro propane. The intermediate wells sampled at Site 78 during the RI exhibited low levels of VOCs and only a few metals which exceeded federal and/or state standards. Benzene, TCE, 1,2-DCE, vinyl chloride, and dichloromethane were the most prevalent VOCs detected. The highest VOC concentrations were found in the northeastern and southern portions of Site 78. Several SVOCs, including

naphthalene, acenaphthene, and carbazole, were detected in one well in the northern portion of Site 78. Beryllium, cadmium, lead, manganese, and nickel concentrations in the northeastern portion of the site exceeded the Federal and/or State groundwater standards.

The analytical data indicated VOCs were the predominant contaminants in the deep wells. The most prevalent VOCs (i.e., both halogenated and non-halogenated compounds) included benzene, cis-1,2-DCE, trans-1,2-DCE, and TCE. Wells located in the northeastern and southwestern portions of Site 78 exhibited the overall highest concentrations of VOCs. Further, one well located in the southwestern portion of the site exhibited elevated alpha chlordane (pesticide) levels above the state groundwater standards.

A review of groundwater data from the October 2004 sampling event at Site 78 indicated contaminant source areas upgradient (off-site and upgradient of the MILCON area). Specifically, well IR78-GW58 is impacted by BTEX (300 parts per billion [ppb] benzene; 4,900 ppb toluene; 5,800 ppb xylenes) and well IR78-GW52 is impacted by benzene and chlorinated solvents (1,300 ppb benzene; 4,300 ppb cis-1,2-DCE; 1,200 ppb vinyl chloride).MC were detected in six surface soil samples located within the boundary of Site UXO-08. (CH2M HILL, 2008)

b. Indicate the presence of any sole source drinking aquifer or use of groundwater as drinking source on or near the MRS. Discuss any water supply wells down gradient from the MRS. If possible, provide the EPA groundwater classification.

The surficial aquifer lies in a series of sediments, primarily sand and clay, which commonly extend to depths of 50 to 100 feet (ft). This aquifer is not used for water supply at MCB Camp Lejeune. The principal water supply aquifer for MCB Camp Lejeune lies in a series of sand and limestone beds located between 50 and 300 ft below ground surface (bgs). This series of sediments is generally known as the Castle Hayne Formation. The Castle Hayne Formation is approximately 150 to 350 ft thick in this vicinity and contains the most productive aquifer in North Carolina. Onslow County and MCB Camp Lejeune lie in an area where the Castle Hayne Formation contains freshwater, although the proximity of saltwater in deeper layers just below this aquifer formation and in the New River estuary is of concern in managing water withdrawals from the aquifer. During the RI investigation in 1994, groundwater was encountered at varying depths throughout OU 1. This variation in groundwater depth may be attributed to topographic changes. In general, groundwater was encountered between 4 and 14 ft bgs. A higher water table was typically encountered near the southwestern portion of the Site UXO-08 near Cogdels Creek (Baker, 1994)

c. List the uses for any surface water present on the MRS.

Site UXO-08 does not encompass, bound or border surface water sources. No water resources are expected to be impacted by the project. There is adequate vegetative buffer surrounding the sites to protect surface water from additional runoff.

d. Discuss any evidence of contaminate migration from the MRS by any of the four media.

None

10. Supporting documentation: Cite the sources for the information provided.

Baker Environmental (Baker). 1994. Final Remedial Investigation Report Operable Unit No. 1 (Sites 21,24 & 78) Marine Corps Base Camp Lejeune, North Carolina. June.

CH2M HILL, 2008. *Site Specific Work Plan Addendum for Preliminary Assessment/Site Inspection Site UXO-08 Cantonment Bazooka Range, Base CS Chamber, and NBC Training Trail.* May.

CH2M HILL, 2011. Preliminary Assessment/Site Inspection Report Site UXO-08, Former Lejeune Cantonment 2.36 inch Bazooka Range, Base CS Chamber, and NBC Training Trail (ASR #2.182, and D-7 Gas Chamber (ASR #2.80). March.

United States Army Corps of Engineers (USACE), St. Louis District. 2001. *Range Identification and Preliminary Range Assessment, Marine Corps Base Camp Lejeune, Onslow, North Carolina.* December.

United States Marine Corps (USMC). 2006. *Integrated Natural Resource Management Plan (INRMP) 2007-2011, Marine Corps Base Camp Lejeune, Onslow County, North Carolina.*
November.

URS Corporation (URS). 2002. *Draft Marine Corps Base Camp Lejeune Range Inventory Report.* February.

Appendix B
Archival Search Report for the Site Inspection

Draft

Archival Records Search Report
Site UXO-08, Former Lejeune Cantonment Bazooka Range, Base CS Chamber, and NBC Training Trail

Marine Corps Base Camp Lejeune
Jacksonville, North Carolina

Contract Task Order 0168

January 2009

Prepared for

Department of the Navy
Naval Facilities Engineering Command Atlantic

Under the

NAVFAC CLEAN III Program
Contract N62470-02-D-3052

Prepared by

CH2MHILL

Raleigh, North Carolina

Contents

Acronyms and Abbreviations ..... **v**

1 Introduction, Purpose, and Scope **1-1**

2 Background Information **2-1**

2.1 Ownership and Operational History 2-1

2.1.1 MCB Camp Lejeune Ownership History 2-1

2.1.2 Site UXO-08 (Former Lejeune Cantonment Bazooka Range, Base CS Chamber, and NBC Training Trail) 2-1

3 References **3-1**

Attachments

1 Resource Review Summary

Figures

A-1 Site UXO-08, Division Training Area, June 30, 1943
A-2 Site UXO-08, Division Training Area, June 30, 1946
A-3 Site UXO-08, Division Training Area, June 30, 1951
A-4 Site UXO-08, Historical Features, June 1954
A-5 Site UXO-08, Map of Hadnot Point, June 30, 1964
A-6 Site UXO-08, Hadnot Point Area, June 30, 1979

Acronyms and Abbreviations

CERCLA	Comprehensive Environmental Response, Compensation, and Liability Act
CTO	Contract Task Order
EOD	explosive ordnance disposal
HTW	hazardous and toxic wastes
LANTDIV	Naval Facilities Engineering Command, Atlantic Division
MCB	Marine Corps Base
MC	munitions constituents
MEC	munitions and explosives of concern
MILCON	military construction
MRP	Munitions Response Program
NARA	National Archives and Records Administration
NAVFAC	Naval Facilities Engineering Command
PA/SI	Preliminary Assessment/Site Inspection
UXO	unexploded ordnance
WWII	World War II

SECTION 1

Introduction, Purpose, and Scope

Marine Corps Base (MCB) Camp Lejeune is in the process of investigating closed ranges at the Base following the Comprehensive Environmental Response, Compensation, and Liability Act (CERCLA) investigation process. The work is being conducted under the Navy CLEAN III Contract N62470-02-D-3052, Contract Task Order (CTO) 168, for the Naval Facilities Engineering Command (NAVFAC), Atlantic Division (LANTDIV). Due to historic activities at Site Unexploded Ordnance (UXO)-08, Former Lejeune Cantonment Bazooka Range, Base CS Chamber, and NBC Training Trail, a munitions response program (MRP) Preliminary Assessment/ Site Inspection (PA/SI) is being conducted to accomplish the following objectives:

- Identify historical activities at Site UXO-08 that may have resulted in environmental contamination with munitions and explosives of concern (MEC) or munition constituents (MC) by researching archival records and interviewing current and previous installation personnel
- Identify the presence and nature of any hazardous and toxic waste (HTW) and MC contamination that may exist at Site UXO-08 by conducting an investigation of soil and groundwater
- Conduct ecological and human health risk screenings of Site UXO-08

The archival records search report is an investigative review of existing information about the site and its surrounding area, with an emphasis on obtaining information from personnel and historical resources that might indicate a potentially hazardous release to the environment, specifically MEC or HTW. The scope of this report includes:

- A review of existing information about the site (including MCB Camp Lejeune maps, drawings, reports, and interviews with MCB Camp Lejeune personnel)
- Collection of additional information about the Site

A complete listing of resources identified and investigated for this report is provided in Attachment 1. Also included in Attachment 1 are details concerning the reviews of the historical information from the Marine Corps Library at Quantico, National Archives and Records Administration (NARA) map and text files, and MCB Camp Lejeune base files.

SECTION 2

Background Information

2.1 Ownership and Operational History

2.1.1 MCB Camp Lejeune Ownership History

The history of the land currently occupied by MCB Camp Lejeune is documented primarily through land records and maps. Following the start of World War II (WWII), the War Department began purchasing tracts of land in 1941 from local residents to meet the need for an East Coast amphibious training facility. Prior to the Marines occupation, the land had been occupied by white and African-American communities and farms dating to the Colonial era. The land contained plantation houses, cabins, farm buildings, tobacco barns, stores, and various cemeteries (Global Security, 2007).

The initial land transferred to the government was acquired in 14 different transactions between April and October 1941 and totaled 173.8 square miles or 111,155 acres, of which there were 85,155 land acres and about 26,000 acres under water (Loftfield, 1981; Louis Berger Group, 2002). The individual tracts of land were grouped into various areas for consolidation.

2.1.2 Site UXO-08 (Former Lejeune Cantonment Bazooka Range, Base CS Chamber, and NBC Training Trail)

Site UXO-08 (Lejeune Cantonment Bazooka Range, Base CS Chamber, and NBC Training Trail) is located in the parade field and recreational area (cantonment area) of Hadnot Point at Camp Lejeune. The military construction (MILCON) area is located north of Louis Road, east of Gum Street, south of E Road.

Areas of interest within Site UXO-08 include the D-7 Gas Chamber, the alternate location of the Base CS Chamber, and the Base CS Chamber and NBC Training Trail. Site UXO-08 is located within one of the cantonment areas of Camp Lejeune. The cantonment area includes those sites used for housing and recreation as well as those used by the military and civilian work force for maintenance, medical care, welfare and administration (Mier, 1989) .

A 1943 map of the area shows the football field, baseball diamonds and eight other buildings, including the base heating plant (Figure A-1; MCB Camp Lejeune, 1943). To the north was the supply and industrial area, extending from Gum Street to Ash Street. Railroad tracks that brought coal to the heating plant ran through the length of the industrial area. Former “Gunnery Trainer Buildings” (Buildings 28 and 39) were located south of the football and track field. On the western side of Holcomb Boulevard, from Molly Pitcher Drive to Main Service Road (now named McHugh Boulevard) was the Women’s Reserve area, an administrative area that included the base headquarters. Regimental Areas 1 through 5 were located south of McHugh Boulevard.

A 1946 Camp Lejeune Existing Conditions map (Figure A-2; MCB Camp Lejeune, 1946), shows the former gas chamber in the Site UXO-08 area was located in former building 734, south of the football and track field. The buildings within the MILCON area included a communication warehouse (Building 1707), equipment storage buildings (Building 1703-1705 and 1709), a pump house and well number 8 (Building 608). The fuel pumping station (Building 1706) and 420,000 gallon fuel oil storage tank was located adjacent to Site UXO-08 on the north side.

Based on the 1951 Camp Lejeune Existing Conditions map (Figure A-3; MCB Camp Lejeune, 1951), the former gas chamber was moved to Building 756 and Building 734 was deconstructed. The gunnery locations remained the same. Equipment storage buildings (Building 1710 and 1711) and an office (Building 1721) were constructed south of the MILCON area since 1946. All other buildings depicted in the area of Site UXO-08 are the same as on the 1946 map.

A 1954 map of historical features shows the area largely unchanged except for some additional buildings (Figure A-4; MCB Camp Lejeune, 1954). Of note are the addition of the Field House (Building 751), used for recreational purposes and the Base CS Chamber and NBC Trail. The CS Chamber was located about 200 meters east of the Field House and was used to simulate chemical exposure scenarios. The NBC Trail shows the decontamination procedures soldiers were required to conduct before they could leave the facility. The Base CS Chamber and the NBC Trail were also documented in the Range Identification and Preliminary Assessment Report (USACE, 2001), which listed the following agents, chemical agent simulants, and munitions having reportedly been used at this location:

- CS (O-Chlorobenzylidenemalononitrile, a non-lethal riot control agent)
- Simulants Chemical Agent PEG 200 (polyethylene glycol)
- Training Set, Chemical Agent Identification, Simulants M72A1/A2
- Blister Agent Simulant, Molasses Residuum
- Training Ammunitions (e.g., tear gas grenades)
- Atomic Explosion Simulator DVC 39-1
- Atomic Simulator (fabricated locally in accordance with FM 30-101)
- Artillery Simulator, M110

No information is available to provide an estimated quantity of usage. The facility is estimated to have been in use from 1985 to 1987.

A 1964 map (Figure A-5; MCB Camp Lejeune, 1964) shows the recreational areas remained along with the parade ground. Additional industrial buildings on the northern end of the field and in the vicinity of the Base CS Chamber are also visible on the map.

The 1979 Camp Lejeune Existing Conditions map (Figure A-6; MCB Camp Lejeune, 1979) shows a grease rack (structure 1729) and wash rack (structure 1740) located north of Building 1711 and south of Michael Road, within the MILCON area. Building 756 (gas chamber) is no longer on the map. A paint storage building (Building 1738) and storage building (Building 1730) are located north of the approximate location of the Base CS Chamber and NBC Training Trail.

The Range Identification and Preliminary Assessment Report identified a second gas chamber in the site area: the D7 Gas Chamber located at Building 756. The gas chamber is

estimated to have been in use from 1953 to 1961 and only tear gas was reported to have been used (USACE, 2001). Historical maps present a discrepancy in the actual location of the D7 Gas Chamber and NBC Trail.

The 2002 Range Inventory Report (URS, 2002) reiterates previous findings of the presence of a tear-gas gas chamber and mentions the D-7 gas chamber, but does not verify the former location. In addition, the report indicates the presence of a suspected firing range, designated as the Lejeune Cantonment 2.36-in. Bazooka Range, in the main cantonment area, along with the D7 gas chamber.

Former Explosive Ordnance Disposal (EOD) personnel reported historical EOD responses to inert practice 2.36-inch bazooka rounds in the 1970s and 1990s in the vicinity of Parade Grounds. In June 2006, a site visit was conducted with a former Camp Lejeune EOD technician who confirmed that between 12 and 15 munitions items were found in the area between the bleachers and the steam plant in the area of the Parade Grounds while he was stationed at Camp Lejeune.

Personnel interviews have failed to confirm the former use of the project site as an established range. However, the Base Safety Range officer noted that a training device was used to simulate a bazooka. A small arm was shot from the device into a distant berm (Richardson, 2007). While ordnance is likely to be found in any given area of the base, the likelihood of W.P.T. Field having been used as a range is thought to be low due to its close proximity to the main administrative and industrial area of the base.

SECTION 3

References

Global Security. 2007. *Camp Lejeune*. http://www.globalsecurity.org/military/facility/camp-lejeune.htm. Accessed May 29.

Loftfield, Thomas C. 1981. *Archeological and Historical Survey of USMC Base, Camp Lejeune, Naval Facilities Engineering Command Norfolk, Coastal Zone Resource Corp, Vol II, Contract # N62470-79-C-4273*. August.

Louis Berger Group Inc. under USACE, Wilmington District Contract DACWS4-99-C-0004, *Semper Fidelis: A Brief History of Onslow County, North Carolina and MCB, Camp Lejeune, 2002, U.S.M.C.*, LtCol Lynn J. Kimball, USMC Retired, Consulting Historian.

MCB Camp Lejeune. 1943. *Division Training Area, Camp Lejeune, North Carolina, Showing Conditions on 30 June 1943*.

MCB Camp Lejeune. 1946. *Map of Division Training Area, Camp Lejeune, North Carolina, Showing Conditions on June 30, 1946*.

MCB Camp Lejeune. 1951. *Map of Division Training Area, Camp Lejeune, North Carolina, Showing Conditions on June 30, 1951.*

MCB Camp Lejeune. 1954. *Marine Corps Base Camp Lejeune Jacksonville, North Carolina, Onslow County Historical Features, June 1954*

MCB Camp Lejeune. 1964. *Map of Hadnot Point Area, Camp Lejeune, North Carolina, Showing Conditions on June 30, 1964.*

MCB Camp Lejeune. 1979. *Map of Hadnot Point Area, Camp Lejeune, North Carolina, Showing Conditions on June 30, 1979.*

MCB Camp Lejeune. 2002. *Environmental Assessment Construction of a Consolidated Academic Instruction Facility and Barracks, Camp Johnson, Marine Corps Base, Camp Lejeune, Onlow County, North Carolina*. July.

Mier, Maj William A. 1989. "Should Camp Lejeune Be Expanded." http://www.globalsecurity.org/military/library/report/1989/MWA.htm. USMC CSC.

Richardson, Duane, Camp Lejeune Range Safety Officer. Personal Communication. May 9, 2007.

United States Army Corps of Engineers (USACE). 2001. *Final Range Identification and Preliminary Range Assessment, Marine Corps Base Camp Lejeune, Onslow, North Carolina*. , St. Louis District. December.

URS Corp. 2002. *Draft Marine Corps Base Camp Lejeune Range Inventory Report*. February.

Figures

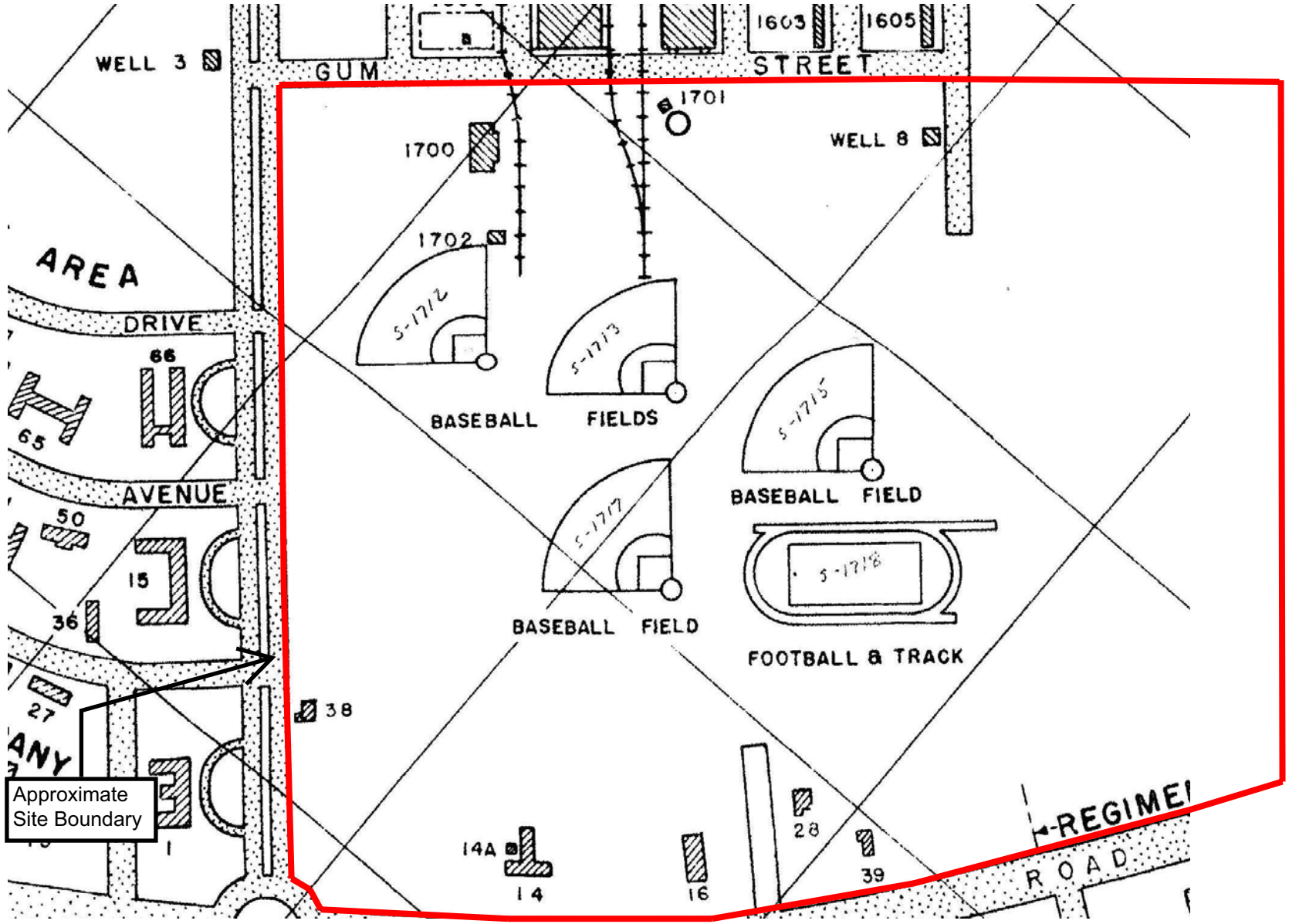

Figure A-1
New River, N.C., Division Training Area, Camp Lejeune, New River, N.C., Showing Conditions on 30 June 1943.

CH2MHILL

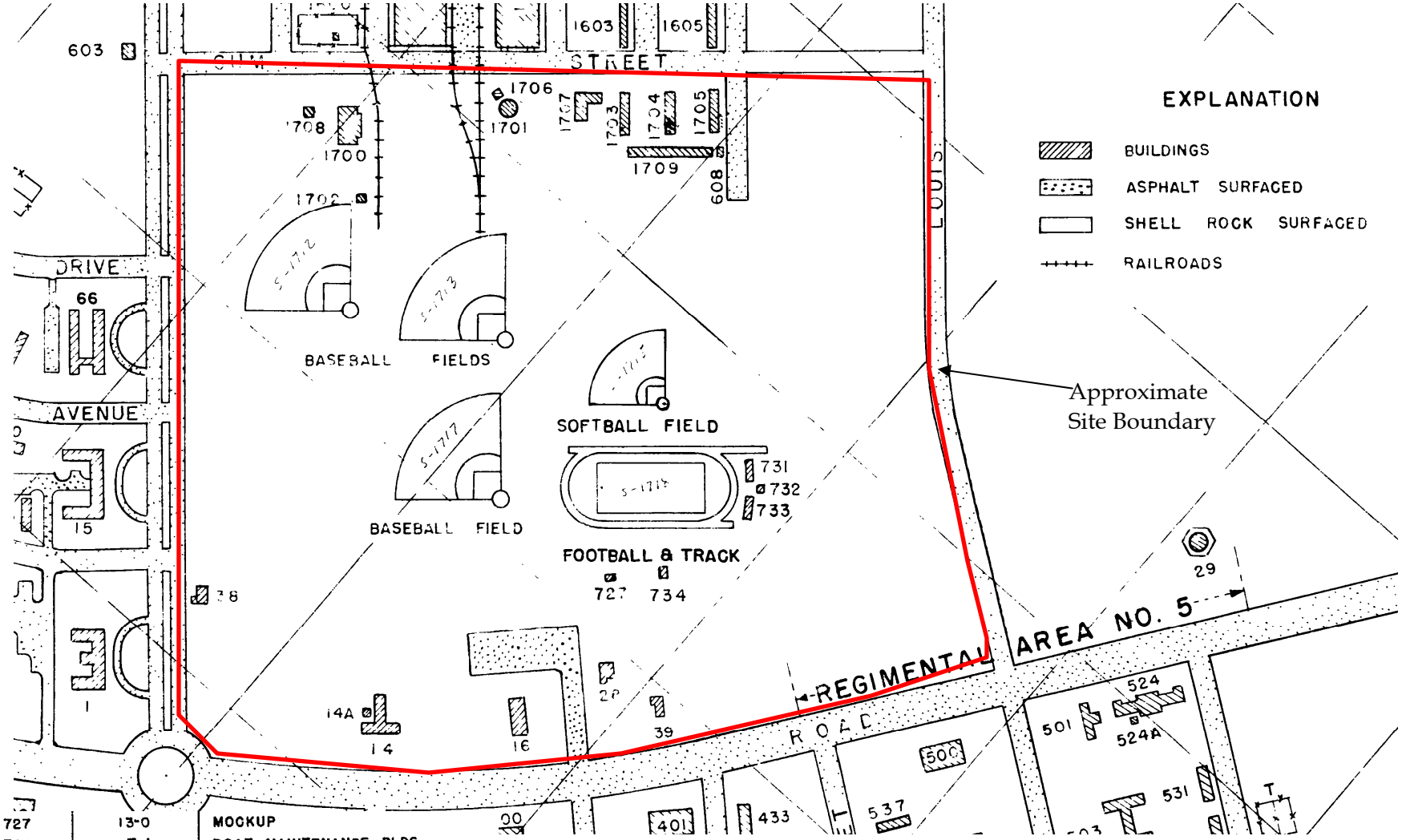

727	13-O	MOCKUP
728	7-J	BOAT MAINTENANCE BLDG.
729	7-J	PAINT STORAGE BLDG.
730	7-H	RECREATION PAVILION
731	13-O	UTILITY BUILDING
732	13-O	UTILITY BUILDING
733	13-O	UTILITY BUILDING
734	13-O	GAS CHAMBER
735	11-N	CLEAR WATER STORAGE BASIN
~~736~~	~~9-P~~	~~BAND STAND~~
737	13-S	COMMINUTORS
738	17-K	RAILROAD SHOP BUILDING

Figure A-2
Site UXO-08
Division Training Area
Camp Lejeune, NC
June 30, 1946

CH2MHILL

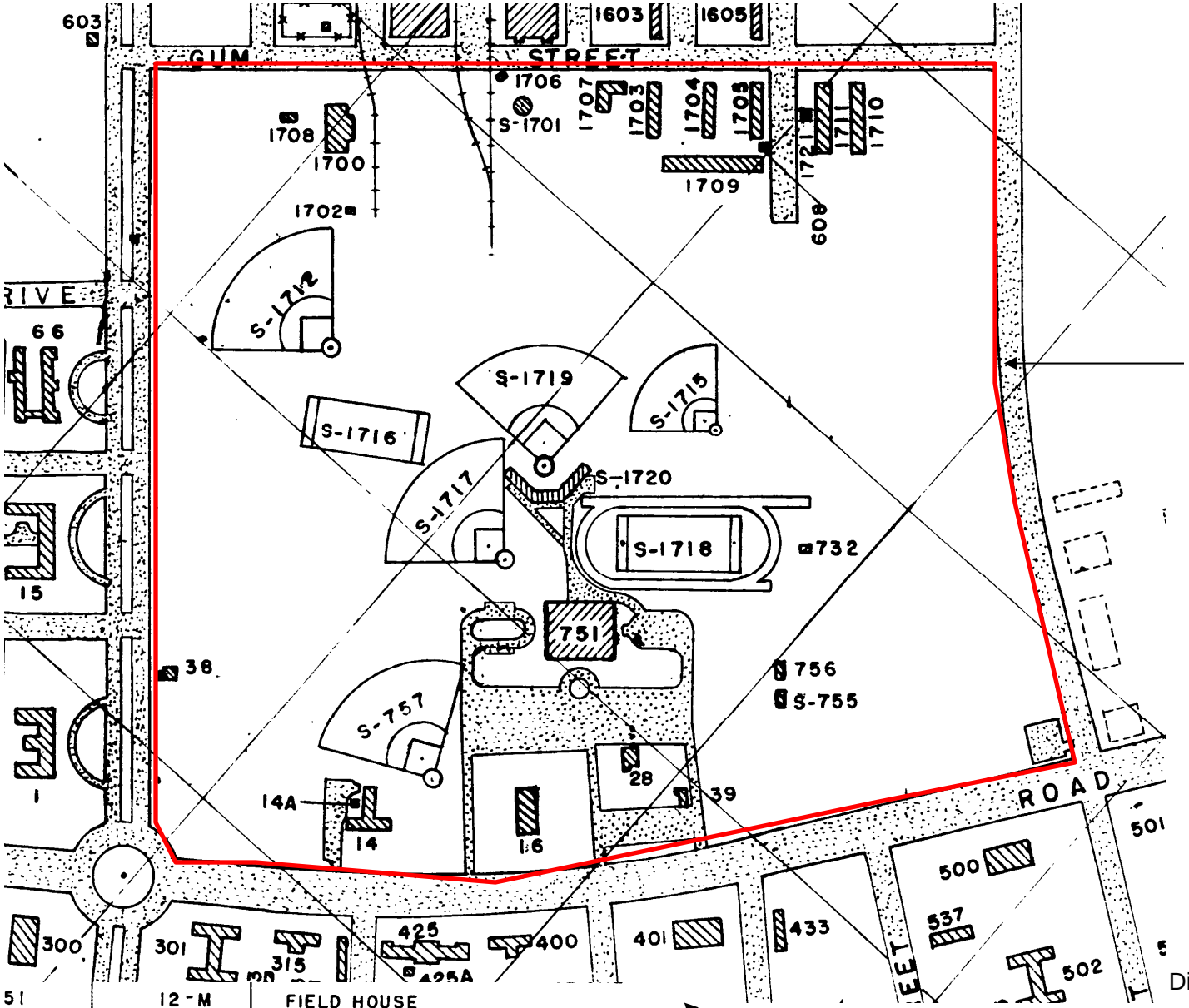

751	12-M	FIELD HOUSE
752	17-J	TARGET STORAGE BUILDING
S-755	12-N	MOCK-UP
756	12-N	GAS CHAMBER

Figure A-3
Site UXO-08
Division Training Area
Camp Lejeune, NC
June 30, 1951

CH2MHILL

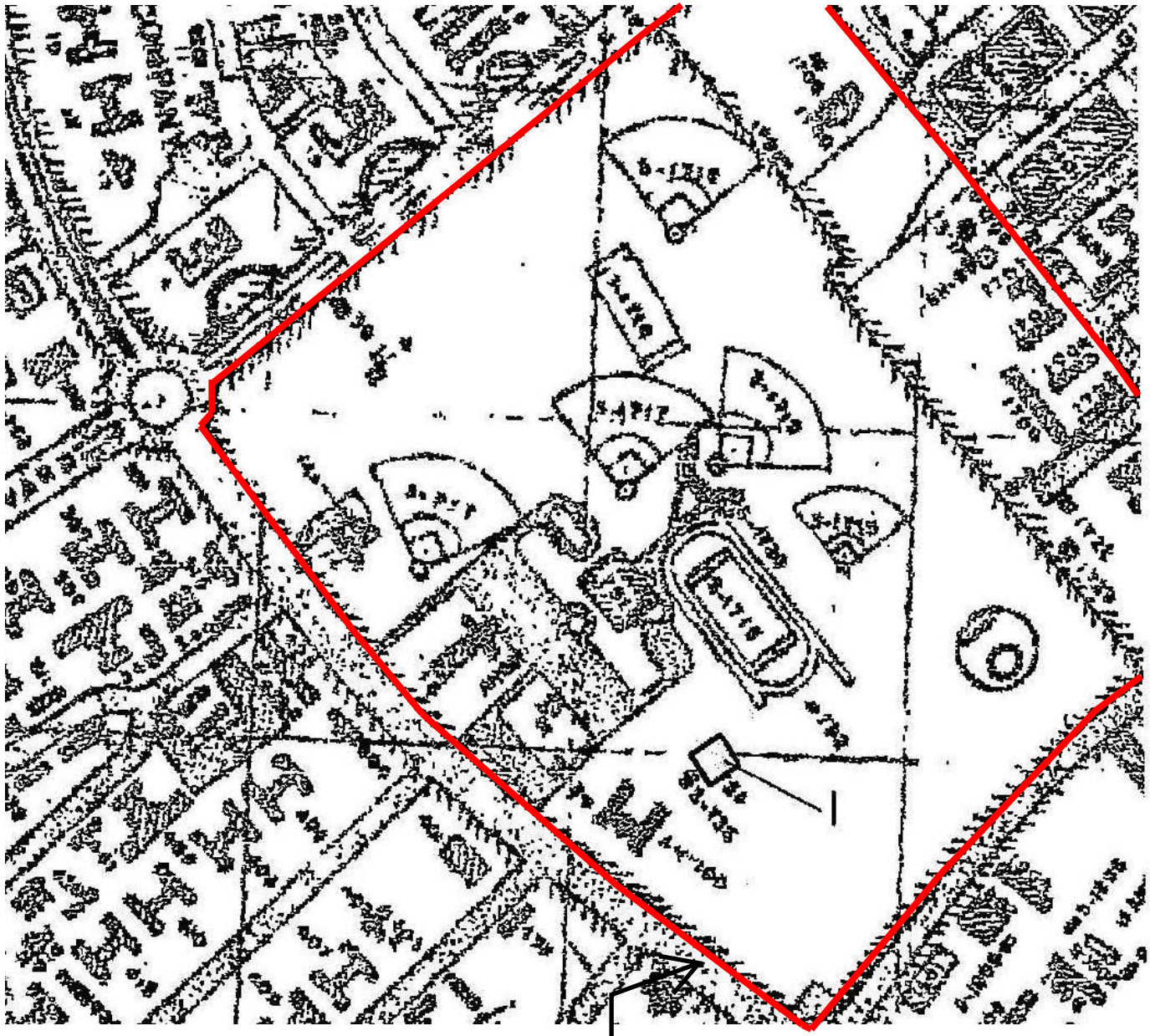

KEY TO FEATURES:

FEATURE NUMBER	FEATURE DESCRIPTION
1	BASE CS CHAMBER AND NBC TRAIL
2	RANGE D-6 - 50 FOOT SMALL BORE RANGE

(Feature 2 is not shown on this Figure)

***NOTE: HISTORICAL MAP SHEET DATA USED IN THIS REPORT WAS RECTIFIED TO A CURRENT MAP PROVIDED BY MCB CAMP LEJEUNE USING INTERGRAPH CORPORATION SOFTWARE. THE ACCURACY OF FEATURES RECTIFIED FROM THE HISTORICAL MAP SHEET DATA TO THE CURRENT MCB CAMP LEJEUNE MAP MAY VARY.

0 300 600

APPROXIMATE SCALE IN METERS

N

U.S. ARMY CORPS OF ENGINEERS
ST. LOUIS DISTRICT

MARINE CORPS BASE
(MCB) CAMP LEJEUNE
JACKSONVILLE, NORTH CAROLINA
ONSLOW COUNTY
HISTORICAL FEATURES-JUNE 1954

PLATE NO. 22

Figure A-4
Marine Corps Base Camp Lejeune
Jacksonville, North Carolina, Onslow County
Historical Features, June 1954.

CH2MHILL

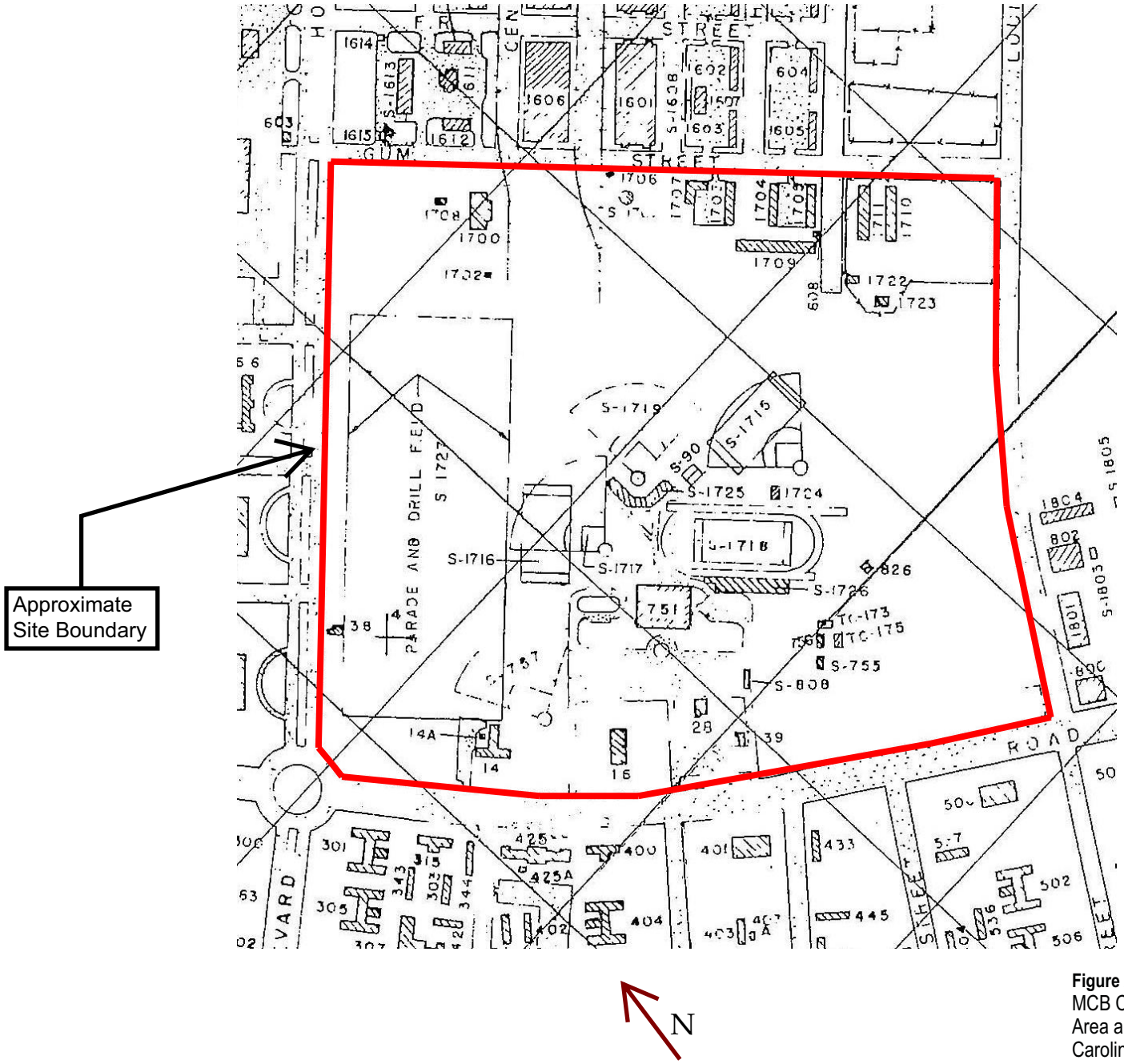

Figure A-5
MCB Camp Lejeune. Map of Hadnot Point Area and Vicinity, Camp Lejeune, North Carolina, Showing Conditions on June 30, 1964.

CH2MHILL

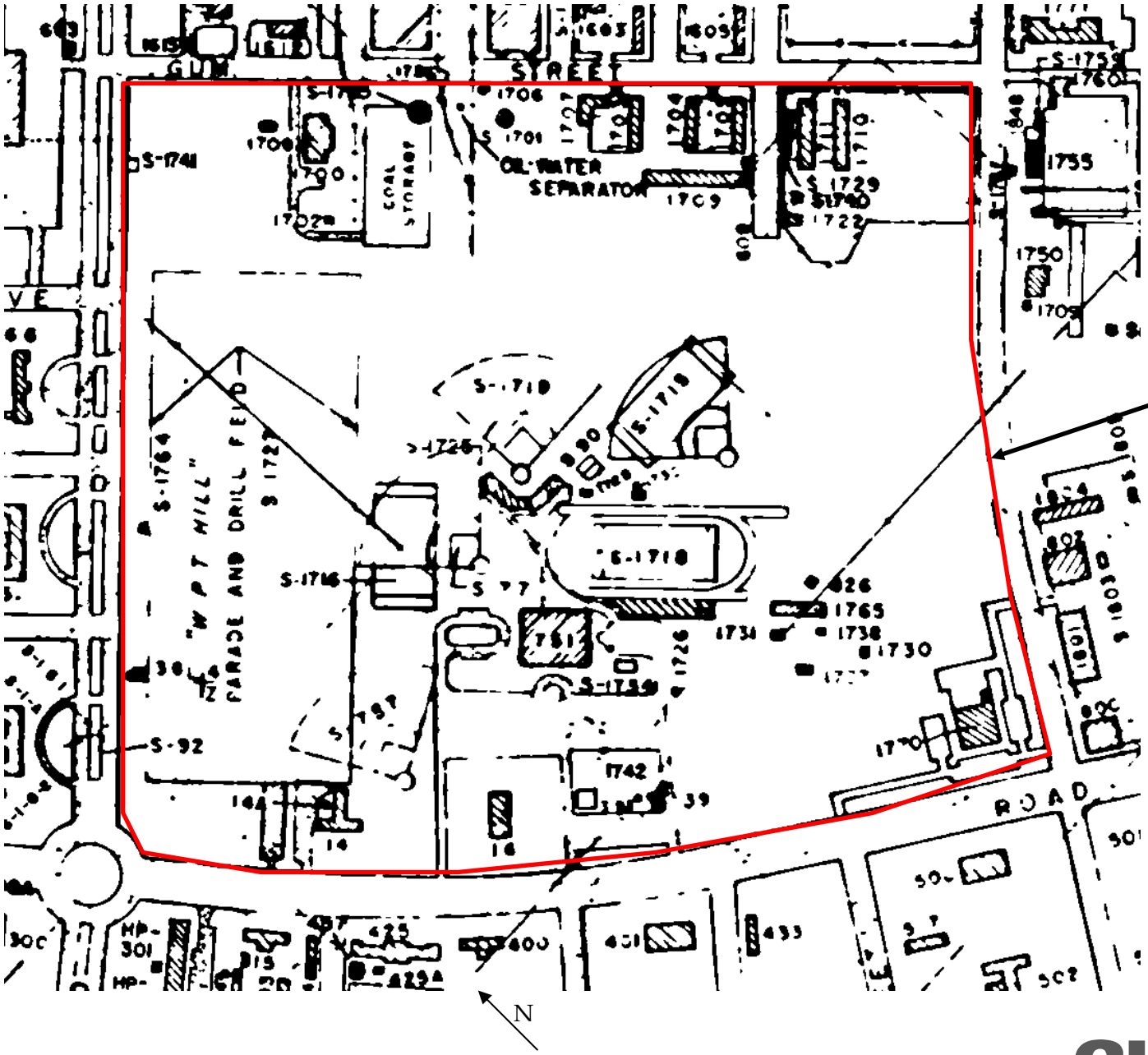

Figure A-6
Site UXO-08
Hadnot Point Area
Camp Lejeune, NC
June 30, 1979

CH2MHILL

Attachment 1
Resource Review Summary

Resource Review Summary

The following table provides a summary of the specific references identified for review, interview, or contact for the archival report.

Resource	Actions Completed
Quantico, Virginia, Marine Corps Library Gray Research Center (Alisa Johnson)	Reviewed all available file folders related to Camp Lejeune and copied relevant reports and figures/maps.
Quantico, Virginia, Marine Corp Base, Dunlap Hall, Audio Visual Repository	Reviewed all available file photos related to Camp Lejeune – No relevant photos to copy
US National Archives (NARA II) Historical Files	Reviewed text and drawing files from Text Division and Cartographic Division and Still Photographs Research Division.
Barry Zirby/National Archives Text File	See US National Archives Files Review
Camp Lejeune Library files	Reviewed and copied all relevant documents related to historical land use for each site.
Camp Lejeune Real Estate files	Reviewed and copied all relevant documents related to historical land use for each site.
Camp Lejeune Website	Reviewed and copied all relevant documents related to historical land use for each site.
Camp Lejeune Personnel	
Bob Lowder/Environmental	Contacted and interviewed
Linda Futrell/ Real Estate Expert	Contacted and interviewed
Glenn Pappas/MCB Camp Lejeune Military Historian	Contacted and interviewed
Michael Singhas/MCB Camp Lejeune Skeet Range Manager	Contacted and interviewed
Duane Richardson/ Base Range Safety Officer	Contacted and interviewed

Marine Corp Library Review

Text Division

Contact: Alisa Johnson

Site Visit: May 1, 2007

File review at Marine Corps Base, Quantico, Virginia, Gray Research Center, Marine Corps Archives and Special Collections.

Review files from Box #61, Camp Lejeune 1941-1984 (files copied)

- Live Minefield Site - Correspondence and map
- Regulations Governing Use of Firing Range 5, Field Training and Facilities and Maneuver Areas, BO P11102.1F, Apr 1966 - Relevant site information and maps of ranges
- Department of Navy Candidate Environmental Impact Statement (CEIS), Construction of FY 76-77 Family Housing, United States Marine Corp Base Camp Lejeune, NC, Feb 1975 - Figure, Existing Explosives text
- Combat Training Chart (topographic map) 1987
- Approaches to New River (topographic map) 1978

National Archives and Records Administration Review

Text Division

Contact: Mr. Barry Zirby, 301-713-7250 x285
Site visits on May 2 and 3, 2007

Reviewed 18 boxes of files associated with the Marine Corps, 1939-1950

- Record Group 127 (USMC), Office of the Commandant, General Correspondence, January 1939-June 1950, 1275/70-800 (10/45-1/47) to 1275/70-727 (1/44-12/47), Box 218.
- Record Group 127 (USMC), Office of the Commandant, General Correspondence, January 1939-June 1950, 1275/70-800 (10/44-1/45) to 1275/70-800 (7/45-9/45), Box 219.
- Record Group 127 (USMC), Office of the Commandant, General Correspondence, January 1939-June 1950, 2000-10 (1/48-12/48) to 2000-10 (5/24-12/36), Box 1201.
- Record Group 127 (USMC), Office of the Commandant, General Correspondence, January 1939-June 1950, 2000-10 (6/45-4/46) to 2000-10 (5/44), Box 1202.
- Record Group 127 (USMC), Office of the Commandant, General Correspondence, January 1939-June 1950, 2000-20 (1/49-10/49) to 2000-10 (1/45-6/45), Box 1203.
- Record Group 127 (USMC), Office of the Commandant, General Correspondence, January 1939-June 1950, 2000-20 (1/44-6/47) to 2000-20 (5/48-12/48), Box 1204.
- Record Group 127 (USMC), Office of the Commandant, General Correspondence, January 1939-June 1950, 2000-20-5 (6/46-12/47) to 2000-20 (6/43), Box 1205.
- Record Group 127 (USMC), Office of the Commandant, General Correspondence, January 1939-June 1950, 2000-20-10 (7/48-10/47) to 2000-20-5 (4/45-6/46), Box 1206.
- Record Group 127 (USMC), Office of the Commandant, General Correspondence, January 1939-June 1950, 2000-20-10 (7/41-11/42) to 2000-20-10 (1/45-6/45), Box 1207.

- Record Group 127 (USMC), Office of the Commandant, General Correspondence, January 1939-June 1950, 2000-20-10 (7/39-2/40) to 2000-20-10 (2/40-6/41), Box 1208.
- Record Group 127 (USMC), Office of the Commandant, General Correspondence, January 1939-June 1950, 2000-20-20 (1/48-12/48) to 2000-20-15 (1/49-6/50), Box 1209.
- Record Group 127 (USMC), Office of the Commandant, General Correspondence, January 1939-June 1950, 2000-20-20 (1/44-11/46) to 2000-20-20 (11/46-12/47), Box 1210.
- Record Group 127 (USMC), Office of the Commandant, General Correspondence, January 1939-June 1950, 2000-20-20 (2/33-8/36) to 2000-20-20 (6/42), Box 1211.
- Record Group 127 (USMC), Office of the Commandant, General Correspondence, January 1939-June 1950, 2015 (3/43) to 2000-80 (1/44-12/47), Box 1241.
- Record Group 127 (USMC), Office of the Commandant, General Correspondence, January 1939-June 1950, 2295-10 Brooklyn to 2285-10 Camp Lejuene, Box 1570.
- Record Group 127 (USMC), Office of the Commandant, General Correspondence, January 1939-June 1950, 2295-10 Camp Lejuene to 2285-10 Camp Lejuene, Box 1571.
- Record Group 127 (USMC), Office of the Commandant, General Correspondence, January 1939-June 1950, 2295-10 Camp Lejuene to 2285-10 Camp Lejuene, Box 1572.
- Record Group 127 (USMC), Office of the Commandant, General Correspondence, January 1939-June 1950, 2295-10 Camp Lejuene to 2285-10 Camp Lejuene, Box 1573.
- Record Group 127 (USMC), Office of the Commandant, General Correspondence, January 1939-June 1950, 2295-10 Camp Lejuene to 2285-10 Camp Lejuene, Box 1574.

The boxes contained information primarily related to weapons test results, weapons cost distribution, weapons training classes, weapon specifications, and cleaning and maintenance. The material was not specific to Camp Lejeune and included information for several MC bases.

Cartographic Division

The cartographic division did not contain any relevant information pertaining to historical ordnance use at any of the sites. Information for Camp Lejuene is located under Record Group (RG) 71-Bureau of Yards and Docks. The index for locating cartographic materials is then grouped by subject codes. The only available drawing for Camp Lejuene was for Subject Area 19- Water Systems. Subject Areas 44 is Rifle ranges, machine gun ranges, sighting ranges, bombing targets; however, no materials were located under this Subject Area.

List of Documents Obtained from National Archives

- "Aerial Photo of Football Field, 300 ft. 24 Sept 49" - aerial photograph of area north of Site UXO-08.
- Commandant Letter, dated October 21, 1947 – Subject – "Recommendation for annual allowance of blank ammunition".

- Letter of Instruction Number 1567, dated April 19, 1948 – Subject – "Handling, Storing, and Destruction of Ammunition and Explosives".
- Bureau of Ordnance Letter to Commanding Officer, Naval Ammunition Depot, Hawthorne, Nevada, dated October 23, 1947 – Subject – "Grenades, Rifle, M8, M9, A1C-S4NAA-6, Disposition of".
- Commandant Letter, dated February 26, 1945 – Subject – "Miniature Practice Bombs".
- Memorandum for the Director, Marine Corps Reserve, dated August 5, 1940, Subject – "List of property for Reserve Battalion".
- Commandant Letter, dated May 10, 1941, Subject – "Procurement of Ordnance Material".
- Bureau of Ordnance Letter – "Memorandum to Accompany Report of Deliveries of Marine Corps Ordnance Equipment for the Month of December 1942".
- "Camp General Order: Training Facilities, Regulations Governing Use of", dated December 9, 1946.
- Record Drawing - Public Works Department, Camp Lejeune, North Carolina, Fleet Marine Force, 2nd Marine Division, Shop Area, April 28, 1950.
- Map - US Marine Corps Topographic Map, Camp Lejeune North Carolina, 1947.
- Map – Camp Lejeune General Area Map, March 1947.

MCB Camp Lejeune Base Site Visit and Records Review

Base Contact: Mr. Bob Lowder, Environmental Management Division, 910-451-9607

File reviews of records in the base Real Estate office, base library, and EOD office were conducted during the site visit. Additionally, interviews were conducted with Bob Lowder/Environmental Manager, Glenn Pappas/Military Historian, Linda Futrell/Real Estate expert, Duane Richardson/EOD Base Range Safety Officer, and Michael Singhas/Camp Lejeune Skeet Range Manager.

List of Documents Obtained from Camp Lejeune

Base Real Estate Office

- "Combined Arms Training Ranges, Areas "D" & "G", 1950. Public Works Drawing 3456, Tube 20.
- "Combat Training Chart 15.042-50-01, Appendix D-1 to B.O. P11102.1F, April 9, 1969, Campwide." Public Works Drawing 12826.
- "Proposed Grenade Range, F-6 Range,"November 5, 1958. (2 drawings)
- "Replace F-6 Hand Grenade Range," July 16, 2003. (11 drawings)
- Master Shore Station Development Plan – May 1961

- 8th Communication Battalion Operations/Maintenance/Storage Facility – November 2000
- Hobby Shop Complex, Hadnot Point Phase II – June 1997
- Gottschalk Marina, Borings – August 1998
- Combat Vehicle Maintenance Shops – June 1984
  - Site Layout
  - Site Location/Vicinity
- Medical/Dental Clinic - Vicinity/Location Map – 1987
- Barracks Force Troops Complex – Location Plan & Details – 1967/1968
- Force Troops Complex Site Plan (Grading and Storm Drainage) – 1966
- Existing Conditions – 1984
  - Camp Geiger Trailer Park and New River Air Station Gate - 14599
  - New Hospital Area and Midway Park Housing Area - 14605
  - Camp Geiger Trailer Park Area - 14607
  - Paradise Point Housing Area – 14624
  - Hadnot Point Regimental Areas (100-200) – 14628
  - Hadnot Point Industrial Area – 14629
  - Hadnot Point Industrial Area and Lyman Road – 14630
- Parachute and Survival Equipment Shop – Force Troops Complex – December 1973
  - Text Boring Logs – 401374
  - Vicinity Plan - 1973 – 4013789
- Master Shore Station Development Plan – December 1960
  - Index Existing Training Facilities – 567027
  - Hadnot Point Area "A" – 567005
  - Enlargement Hadnot Point – 765508, 765509, 765510
  - Hadnot Point Area "B" – 765511
  - Geiger Area B – 567016
- Existing Conditions – 1964
  - Index Sheet
  - Midway Park Housing Area
  - Open Storage Area
  - Officers' Quarters, Paradise Point Area
  - Hadnot Point Area
  - Legend Sheet for Hadnot Point Area
  - Magazine Area
  - Geiger Area – MCAF, New River and Vicinity
  - Geiger Area Trailer Park

- Existing Conditions – 1946
  - Index Sheet
  - Midway Park Defense Housing Project
  - Officers' Quarters, Paradise Park Area
  - Division Training Area
  - Legend Sheet for Division Training Area
  - Magazine Area
- Existing Conditions – 1951
  - Index Sheet
  - Midway Park Defense Housing Project
  - Officers' Quarters Paradise Point Area
  - Division Training Area
  - Legend Sheet for Division Training Area
  - Magazine Area
  - Tent Camps No 1 & 2 and Vicinity
  - Open Storage Area
  - Enlargement of Trailer Park
- Exiting Conditions – 1979 (All areas)

Base Library

- Louis Berger Group, Inc. Under USCOE, Wilmington District Contract DACWS4-99-C-0004, *Semper Fidelis: A Brief History of Onslow County, North Carolina and MCB, Camp Lejeune, 2002, United States Marine Corps*, Lt. Col Lynn J. Kimball (USMC, Retired) Consulting Historian.
- Lotfield, Thomas, C. Principal Investigator. UNCW, August 1981. *Archeological and Historical Survey of USMC Base, Camp Lejeune; Naval Facilities Engineering Command Norfolk, Coastal Zone Resource Corp., Vol. II, Contract No. N62470-79-C-4273*.
- Camp Lejeune Marines, On Land, On Sea, In the Air. 1943 (Pamphlet)
- United States Marine Corps 1966, *The 191st Year of Faithful Service. US Government Printing Office*. 1967, O-260-782. (Pamphlet)
- "Unofficial Directory and Guide, The Coast of North Carolina Salutes Camp Lejeune". Boone Publications, Inc., 1967.
- Carraway, Gertrude S. *Camp Lejeune Leathernecks, United States Marine Corps Training Center, Camp Lejeune, North Carolina*. October 1946.
- Review/Copied existing conditions maps for 1964 and 1977.

EOD Office

- United States Marine Corps, Marine Corps Base, Camp Lejeune. Standard Operating Procedures for Range Control, Range and Training Regulation, BO P3570.1B. 17 October 2006.

Environmental Office

- EnSafe. RCRA Facility Assessment Report for Marine Corps Base, Camp Lejeune, North Carolina, Final Submittal. July 25, 1996.
- J.A. Jones Environmental Services. Site Characterization Summary, UST PT-5, Camp Lejeune Marine Corps Base, North Carolina.
- CH2M HILL, Inc. and Baker Environmental, Inc. Final SWMU 43 Corrective Measures Study, RCRA Program, Marine Corps Base, Camp Lejeune, North Carolina. November 2006.
- Catlin Engineers and Scientists. Leaking Underground Storage Tank (LUST) Soil Assessment Report and Request for "No Further Action" Status for Building PT-37, Marine Corps Base, Camp Lejeune, North Carolina. December 28, 2000.
- Baker Environmental, Inc. Revised Final, Phase I SWMU Confirmatory Sampling Report, Text – Volume I of II, MCB Camp Lejeune, North Carolina. Contract Task Order 0371. November 2001.

Appendix C
Geophysical Investigation Report

Appendix C-1

DRAFT

FINAL REPORT

Digital Geophysical Mapping – MRP Site UXO-08

MCB Camp Lejeune, North Carolina

Prepared for

CH2MHILL

Prepared by

USA Environmental, Inc.
720 Brooker Creek Boulevard, Suite 204
Oldsmar, FL 34677

21 February 2007

TABLE OF CONTENTS

1.0 INTRODUCTION 1

2.0 SITE DESCRIPTION/BACKGROUND 1

3.0 MOBILIZATION/DEMOBILIZATION 1

4.0 GEOPHYSICAL PROVE-OUT 2

5.0 EQUIPMENT DESCRIPTIONS 3

5.1 RTK GPS 3
5.2 Towed Array 3
5.3 Single Coil 4

6.0 TOWED ARRAY DATA PROCESSING AND ANALYSIS DESCRIPTION 4

7.0 SINGLE COIL DATA PROCESSING DESCRIPTION 5

8.0 DIGITAL GEOPHYSICAL MAPPING RESULTS 5

A.0 APPENDIX A - LOCATION MAPS AND PHOTOGRAPH FIGURES A-1

B.0 APPENDIX B - EXAMPLE DIG LIST RESULTS B-1

C.0 APPENDIX C - EXAMPLE FINAL MAP RESULTS C-1

D.0 APPENDIX D - EXAMPLE QUALITY CONTROL TEST RESULTS D-1

E.0 APPENDIX E – FINAL DATA DELIVERABLES E-1

LIST OF FIGURES

Figure A-1: Location Map A-2
Figure A-2: Site Map A-3
Figure A-3: USA's Initial Towed Array A-4
Figure A-4: ARM's Towed Array A-4
Figure A-5: USA's Single Coil System A-5
Figure C-1: MRP UXO-08 Composite Towed Array and Single Coil Data Map C-2
Figure C-2: GPO Single Coil Line/Station/Fiducial Map C-3
Figure C-3: Towed Array GPO Map C-4
Figure C-4: Example Single Coil Line/Station/Fiducial Map for Grid E4I9B4 ..... C-5
Figure C-5: Example Towed Array Map for Grid E4I0I9 ..... C-6
Figure D-1: Example of Corrected Single Coil 6-Line Test Results D-2
Figure D-2: Example of Corrected Towed Array 6-Line Test Results D-3
Figure D-3: Example of Single Coil Daily Corrected Latency Test Results D-4
Figure D-4: Example of Towed Array Daily Corrected Latency Test Results D-4
Figure D-5: Example of Single Coil Morning Static Background Test Results D-5
Figure D-6: Example of Single Coil Morning Static Spike Test Results D-5
Figure D-7: Example of Single Coil Daily Static Cable Shake Test Results D-6
Figure D-8: Example of Single Coil Daily Static Personnel Test Results D-6
Figure D-9: Example of Towed Array Static Background and Spike Test Results for Coil 1 ..... D-7
Figure D-10: Example of Single Coil Repeat Test at the GPO D-8
Figure D-11: Example of Towed Array Repeat Test Results D-9

LIST OF TABLES

Table B-1: GPO Dig List for Single Coil Positioned with Line/Station/Fiducials B-2

Table B-2: GPO Dig List for Towed Array B-3

Table B-3: Example Grid E4I9G4 Dig List for Single Coil Positioned with Line/Station/Fiducials B-6

Table B-4: Example Grid E4I0I1 Dig List for Towed Array B-10

LIST OF ACRONYMS

ARM	ARM Geophysics
CD	Compact Disk
cm	centimeter
DGM	Digital Geophysical Mapping
DOS	Disk Operating System
DQO	Data Quality Objective
EOD	Explosive Ordnance Disposal
Ft	Feet
FTP	File Transfer Protocol
GPO	Geophysical Prove-Out
GPS	Global Positioning System
MEC	Munitions and Explosives of Concern
MILCON	Military Construction
MRP	Munitions Response Program
MRSIMS	Munitions Response Site Information Management System
mV	Millivolt
NAD83	North American Datum 1983
PDF	Portable Document Format
QC	Quality Control
RRR	Risk Reduction Resources, Inc.
RTK	Real-Time Kinematic
USA	USA Environmental, Inc.
UTM	Universal Transverse Mercator

1.0 INTRODUCTION

USA Environmental, Inc. (USA) performed digital geophysical mapping (DGM) in support of a Site Inspection at Munitions Response Program (MRP) Site UXO-08, Suspected Lejeune Cantonment Area Bazooka Range and Gas Chambers, at Marine Corps Base (MCB) Camp Lejeune, North Carolina. USA performed this work in two mobilizations, from 30 November through 20 December 2006, and from 14 January through 27 January 2007. This report presents the final geophysical maps, supporting geophysical interpretations, and a narrative description of the field activities, which includes data collection methodology, processing, interpretation, and results. This report is provided in hard copy and in electronic format on Compact Disk (CD). Please note that the appendices for Dig List results, grid maps, and Quality Control (QC) results provide only examples of these results. All results are provided on the accompanying CD.

The specific tasks for this project included:

- Mobilization/demobilization
- Geophysical Prove-out (GPO)
- DGM of towed array and single coil areas
- Reporting

2.0 SITE DESCRIPTION/BACKGROUND

The 2002 Range Inventory Report indicates the presence of a suspected firing range, designated as the Lejeune Cantonment 2.36-inch Bazooka Range, in the area of the Camp Lejeune parade field. An archives search report describes historical Explosive Ordnance Disposal (EOD) responses to inert practice 2.36" Bazooka rounds in the 1970s and 1990s in this area. However, no documentation has been found that verifies a specific firing range location.

Site UXO-08 is situated in the east central portion of the base, bounded by Holcomb Boulevard to the northwest, McHugh Boulevard to the southwest, Louis Road to the southeast, and Gum Street to the northeast.

The existing Parade Grounds, officially designated as W. P. T. Hill Field, are located within Site UXO-08 along the southeastern side of Holcomb Boulevard. The Parade Grounds are an expansive lawn used for ceremonies, receptions, parades, and other formal assemblies. It also hosts community gatherings, open-air concerts, including those by Camp Lejeune's 2nd Marine Division Band, and athletic activities. W. P. T. Hill Field frequently serves as a helicopter-landing zone for both administrative and tactical helicopter lifts. The Parade Grounds are surrounded on all four sides by industrial and administrative areas of the base.

The primary land use within Site UXO-08 consists of industrial and administrative areas. The eastern and northeastern portions of the site, which are primarily industrial, include the coal power plant and coal yard, while areas to the west and southwest are primarily administrative in nature. The location and site maps for this project are shown as Figures A-1 and A-2, in Appendix A.

The topography of the site is flat and the majority of Site UXO-08 has been cleared of trees, though some forested areas remain in the eastern third of the property. The site is approximately 144 acres in size. A Military Construction (MILCON) project footprint, of approximately 15 acres, is not part of this project and is not included in this report.

3.0 MOBILIZATION/DEMOBILIZATION

On 30 January 2006, USA initially mobilized all necessary personnel and equipment to Camp Lejeune for use on the project. The team demobilized on 20 December for the holiday break. The team remobilized on 14 January and demobilized on 27 January 2007. During the second mobilization, USA subcontracted

the towed array task to ARM Geophysics (ARM). ARM mobilized all of their personnel and equipment 16-17 January and demobilized 27-28 January 2007.

4.0 GEOPHYSICAL PROVE-OUT

A geophysical prove-out (GPO) test plot (with dimensions of 50 ft x 200 ft), established by CH2M HILL, was used to evaluate the geophysical instruments and positioning techniques that USA and ARM used during the DGM tasks.

On 31 November 2006, during the initial mobilization, USA surveyed the GPO with the following three systems: a towed array EM61-MK2 system connected to a Real-Time Kinematic (RTK) Global Positioning System (GPS); a single coil EM61-MK2 system tested with RTK GPS; and a fiducial-based positioning technique. To ensure adequate sensor coverage, USA used a single coil lane spacing of every 2.5 ft.

On-site data processing demonstrated that the fiducial-based positioning technique was capable of meeting the CH2M HILL data quality objective (DQO) for positioning of 0.5-m accuracy in wooded or otherwise canopied areas where RTK GPS was not operable. All digital data positioning was accomplished through a direct link between the positioning system/technique and the geophysical data logging system.

USA provided raw data (converted into Geosoft compatible X, Y, V format) from each survey and its associated QC data sets to the CH2M HILL Project Geophysicist at the end of the GPO survey day for immediate initial evaluation. Processed data from each GPO survey and its associated QC data sets were subsequently provided to the CH2M HILL Project Geophysicist. After review by the CH2M HILL Project Geophysicist for compliance with the project DQOs, USA acquired an additional towed array survey to improve RTK GPS coverage and to ensure that the system(s) to be used for the site surveys complied with the DQOs.

All data collected during the GPO was post-processed and analyzed as appropriate for the specific instrument used.

During the second mobilization, ARM was subcontracted to perform the towed array task and successfully demonstrated their towed array at the GPO on 18 January 2007.

Based on the GPO results, an initial anomaly selection threshold of 5 millivolts (mV) on time gate 3 was established. This threshold successfully detected all seeded 2.36–inch rockets in the GPO.

Examples of the anomaly dig lists for the GPO are included in Appendix B. The remaining dig lists are included digitally on the accompanying CD. Examples of the final image maps are provided in Appendix C. The remaining grid maps are included digitally on the accompanying CD.

All QC tests were demonstrated at the GPO. These tests included the following:

- An initial 6-line test designed to demonstrate accurate sensor positioning at normal, slow, and fast survey speeds. On all subsequent survey days, the 6-line test was replaced with a Latency test to document accurate sensor positioning
- Daily static tests at the beginning and end of each survey day to demonstrate that proper and repeatable sensor background and spike (e.g., a known anomaly source) response data were being recorded; that there were no cable-related problems, and, for the single coil, that the operator was sufficiently metal-free
- Daily repeat line tests for each grid surveyed. This repeat data was processed and overlaid on each grid map to ensure proper positioning and that repeatable sensor responses were being recorded.

Examples of the QC tests are provided in Appendix D, including maps of the 6-line test, subsequent latency test results, static test results (e.g., background, spike, cable shake, and personnel test (for the

single coil), and a repeat test map. The complete set of QC maps is provided digitally on the accompanying CD.

5.0 EQUIPMENT DESCRIPTIONS

This section describes the types of GPS equipment used and its daily position check, the two types of towed array systems deployed and its survey procedures, and the single coil system and its survey procedures.

5.1 RTK GPS

USA used a Trimble RTK GPS, while ARM used a Leica RTK GPS. Each of these systems consisted of a GPS base station established at a known control point. A base station radio broadcast RTK GPS corrections to the rover GPS in real time. For the GPO, the location of Monitoring Well #2 was used as the GPS base station. For the UXO-08 site, control point PW27, located in the traffic rotary, was used as an initial GPS base station. This initial base station was used to measure and establish a convenient control point in the project area. Once set up, USA and ARM checked the accuracy of the RTK GPS each survey morning at a known point (e.g., an established grid corner) before being mounted over the sensor/array to ensure that the location accuracy DQO of ± 4 inches was being maintained or exceeded.

5.2 TOWED ARRAY

Initially, USA deployed a two-coil EM61-MK2 towed array (see Figure A-3 in Appendix A) with the GPS antenna mounted between the two coils (the array center). A data logging software problem rendered the initial towed array data unacceptable. The Disk Operating System (DOS) software gave priority to the RTK GPS input and ignored sensor data during the logging of position data. This software decision resulted in a gap in the sensor data every second. At typical survey speeds, this gap exceeded the allowable 98% sample separation DQO of every 0.2 meters and occasionally exceeded the maximum sample separation of 0.61 meters.

Consequently, USA subcontracted ARM to perform the towed array DGM task. ARM utilized a towed array with a single GPS unit and multiple sensors in order to complete DGM activities of approximately 45 acres at the Camp Lejeune site. ARM utilized a Polaris Ranger All-Terrain-Vehicle (ATV) to tow the array of a single rover Leica System 500 RTK GPS unit and four Geonics EM61 MK2 coils. All of the data was logged in real-time through the use of a ruggedized field laptop with Geometrics MAGLOG data logging software. ARM Geophysics successfully utilized a slightly modified wheeled-array system at the Camp Lejeune project site compared to the sled-array system at the Former Lowry Bombing & Gunnery Range USA and Nicolet Canada project sites, both of which supported CH2M HILL and their clients. The wheeled-array was operated in conjunction with one of our CH2M HILL MSA teaming partners, Risk Reduction Resources (RRR), Inc., with whom ARM has worked extensively on other project sites using the array system. A picture of the wheeled-array system is shown as Figure A-4 in Appendix A. ARM's towed array data was logged on a rugged laptop using a Windows-based program that gave equal priority to both sensor and RTK GPS positioning data. This system maintained a data sampling density along track that met the project DQO. To help ensure towed array lane spacing was maintained, the operator followed their tracks back, with appropriate sensor overlap to ensure the across-track sampling density DQO was met or exceeded. Wherever the tracks were not visible, marking paint was used to highlight each survey lane. A real time overlay of the project grid system and the current RTK GPS position on the data logging computer also facilitated array positioning.

In the open portions of the site, towed array data were collected along grid lines until groups of grids were completely covered. In tighter spaces (e.g., inside ball fields), the towed array covered the available area to the maximum extent possible. If the remaining areas were accessible, the single coil was used to complete any towed array partial grids. USA provided ARM with the Universal Transverse Mercator (UTM)-positioned single coil data to complete those partial grids. Any towed array missed areas were filled in using the missed area RTK GPS coordinates and the real-time location display on the data logging computer.

5.3 SINGLE COIL

USA deployed a single coil EM61-MK2 system to survey all accessible areas that were not accessible to the towed array. In limited open areas, the single coil location was provided by RTK GPS. In most areas, the sensor was positioned with fiducials placed no more than every 30 meters across each survey area (see Appendix A, Figure A-5). Knowing the survey line (X location) and the down-line position at the start, each fiducial, and end, allowed the sensor data to be positioned in a local grid coordinate system. Knowing the geodetic coordinates of two or more corners of each survey grid/area allowed USA to translate (warp) the local coordinate system into the project coordinate system North America Datum 1983 (NAD83), UTM, Zone 18 North (18N), with units in meters.

Wherever complete grids (50 meters x 50 meters) were available, a baseline and end line were established along two grid ends and marked every 2.5 ft (0.762 meters) for each survey line. Fiducial lines were marked every 30 meters down-line across the grid. Fiducial markers included line, tape measures, or marking paint. Grid corner locations, provided by a professional land surveyor, were used to translate the local grid coordinates into the project UTM coordinate system. The locations of large grid obstacles/features (e.g., trees/landscaping, utilities, buildings, signs, etc.) were noted for inclusion on each grid map.

In areas where there were only partial grids or no available grid corners, a convenient local baseline was established and marked every 2.5 ft for individual survey lanes. If a rectangular area was suitable, it was established using a combination of tape measures and a roving RTK GPS. If a rectangular area could not be established, the area was surveyed off the baseline. Fiducials were established every 10 meters down-line. These fiducials were marked with line, tape measures, or marking paint across the survey area. Individual survey line lengths were measured, either from the baseline or the nearest fiducial, and recorded. As in the full grid areas, the locations of obstacles were recorded. The coordinates of the baseline end points, and any rectangular corners, were measured with the rover RTK GPS, allowing these partial grids to be translated into the project coordinate system.

6.0 TOWED ARRAY DATA PROCESSING AND ANALYSIS DESCRIPTION

ARM uploaded the raw field data daily to CH2M HILL's file transfer protocol (FTP) site. Subsequently, ARM Geophysics' processing center staff downloaded the data for initial data processing / quality evaluation, advanced data processing / interpretation, and final deliverables preparation. All processing and quality evaluations were completed within Geosoft Oasis montaj software with the UX-Detect module extension.

Details of the processing parameters and quality control evaluations are annotated within the MRSIMS database management system provided by CH2M HILL. As an overview of the quality check results documented within MRSIMS, the most common value ranges (modes) for the major quality indicators are as follows: 2% - 5% static response test error, 4 – 5 fiducials lag correction, 0.10 – 0.11 meters down-line sample spacing, 0.2% samples beyond sample limits, and 100% coverage of work area excluding obstacles.

The interpretation methods included all anomalous responses above 5 millivolts (mV) on time gate 3 except for locations that were considered obvious utilities or other man-made features annotated within field data files. Utilities or noted man-made features were annotated with polygons on the delivered maps.

Additionally, of the sixteen grid-blocks of towed array data, five of the grid-blocks—E4J9A6, E4J9E7, E4J9E9, E4J9F4, and E4J9C4 contained single coil data collected by USA. The single coil deliverables were annotated with an "S" suffix to indicate single coil. Within the five grid-blocks, twenty-four grids contained singe coil data: E4J0E1, E4J0F1, E4J9A5, E4J9A6, E4J9B5, E4J9B6, E4J9C5, E4J9C6, E4J9E0, E4J9F4, E4J9F5, E4J9F9, E4J9F0, E4J9G4, E4J9G5, E4J9G7, E4J9G9, E4J9G0, E4J9H5, E4J9H6, E4J9H1, E4J9D3, E4J9E3, and E4J9F3. In areas of overlap between single coil and towed array data, the towed array data was masked to the single coil data. All USA target picks were plotted on the associated maps with no changes, excepting the addition of '500' to the target ID to differentiate the single coil picks from the array picks.

Finally, six grids contain single coil data only: E4J0F1, E4J9A5, E4J9B5, E4J9F0, E4J9G0, and E4J9G9. These were treated in the exact same manner as above.

7.0 SINGLE COIL DATA PROCESSING DESCRIPTION

Twice daily, USA transferred the single coil data from the field computer to the data processing and analysis computers. All raw data were backed up on an external hard disk drive and posted on the project FTP site. Geonics Dat61 software was used to position each single coil data file. GPS-positioned single coil data was positioned directly from Dat61 in a time stamped Geosoft compatible X, Y, V format [X equals the UTM X (easting) location of each sensor sample, Y = the UTM Y (northing) location of each sensor sample, V1 = time gate 1 value, V2 = time gate 2 value, V3 = time gate 3 value, V4 = time gate 4 value]. The fiducial positioned data were manually positioned in Dat61. Each survey line length was assigned and each fiducial (e.g., mark in the data) was positioned at the known down-track location. Dat61 then exported a Geosoft compatible X, Y, V format (X equals the across -rid survey sensor location, Y = the down-line sensor sample location, V1 = time gate 1 value, V2 = time gate 2 value, V3 = time gate 3 value, V4 = time gate 4 value).

Each X, Y, V file was imported into Geosoft's Oasis montaj data processing and analysis software. This software was used to analyze each QC file and export the required QC maps. Single coil survey data, positioned with line/station/fiducials was translated into the project UTM coordinate system and were corrected for latency and any unacceptable sensor drift (typically as a result of changes in sensor battery voltage over the course of each survey). USA typically applied drift correction only on longer RTK GPS -positioned data sets.

Once the data were corrected for latency and any necessary drift, the data were gridded using a 10-centimeter (cm) grid spacing. Gridding parameters were included in each file header. The gridded data formed the basis for data analysis and mapping of each survey area. The processed time gate 3 data was initially analyzed for anomalies that met or exceeded the threshold of 5 mV, established at the GPO using Geosoft's UX_Detect module. USA examined each selected anomaly to ensure the selection was noise free (i.e., the sensor signal was not the result of electrical interference, and time gate 1 was greater than time gate 2 was greater than time gate 3 was greater than time gate 4), and the anomaly size and shape were consistent with isolated MEC-like anomalies, as experienced at the GPO. Any selected anomaly that exceeded the anomaly size was identified as a potential cultural feature (e.g., part of an extended linear or utility, feature). Each line of data was reviewed for anomalies that met the threshold and size criteria, but were not automatically picked. These manually selected anomalies were added to each target database.

8.0 DIGITAL GEOPHYSICAL MAPPING RESULTS

USA and their subcontractor ARM provided personnel and all geophysical survey equipment to perform the EM61-MK2 towed array survey and the single coil surveys in relatively open areas. One hundred percent coverage was achieved. Small data gaps around obstructions (e.g., trees/telephone poles) were acceptable. Acceptable data gaps around trees are those areas that cannot be covered by the instrument as the towed array or single coil operator maneuvers around the obstacle.

The towed array surveyed a total of 103 of the 50 meter by 50 meter grids totaling 43.73 acres of data. The single coil system, using a combination of RTK GPS, but primarily fiducial-based sensor positioning, surveyed 102 of the 50 meter by 50 meter grids totaling 24.93 acres. A composite map of the combined processed data is provided as Figure C-1 in Appendix C.

Anomalies were selected according to agreed upon criteria established as a project team after the GPO. This included an initial anomaly selection on time gate 3 at a threshold of 5 mV or greater. Selected anomalies were reviewed for size, shape, and noise. Anomalies that failed to meet the isolated anomaly signatures identified in the GPO were flagged as potentially not munitions or explosives of concern (MEC). Most of these flagged anomalies were part of extended linear features (e.g., a utility line). Since the site has been developed, a majority of the anomalies reported for the single coil are associated with known and suspected utilities. Target databases were exported to the required Microsoft Excel format (see Appendix B for examples of anomaly selection results by grid) and Geosoft (X, Y, Z) format. All final

survey databases were exported in the required Geosoft (X, Y, Z) format. Final maps for each grid were provided in both Geosoft and PDF or JPG formats (see examples in Appendix C).

A.0 APPENDIX A - LOCATION MAPS AND PHOTOGRAPH FIGURES

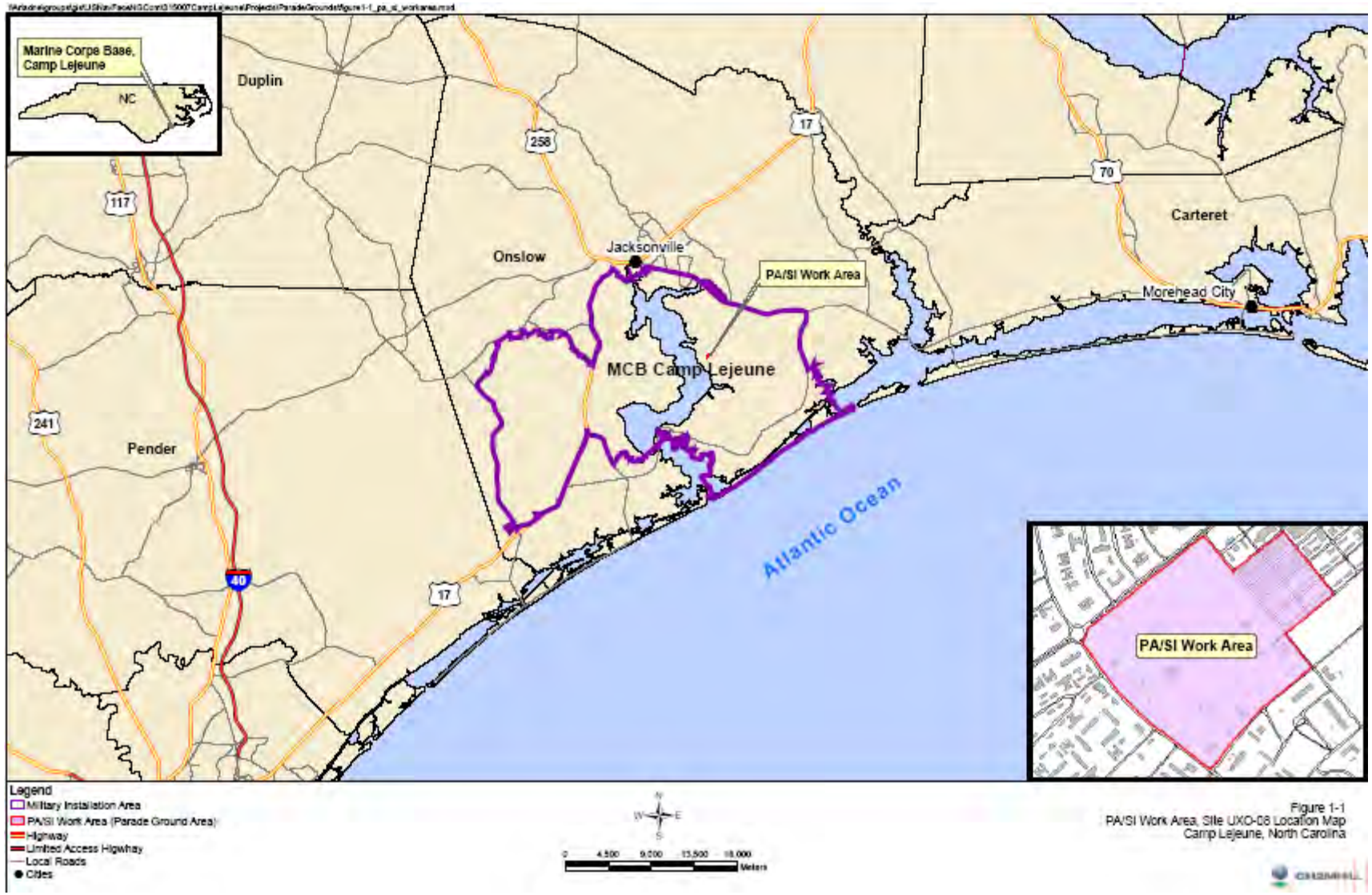

Figure A-1: Location Map

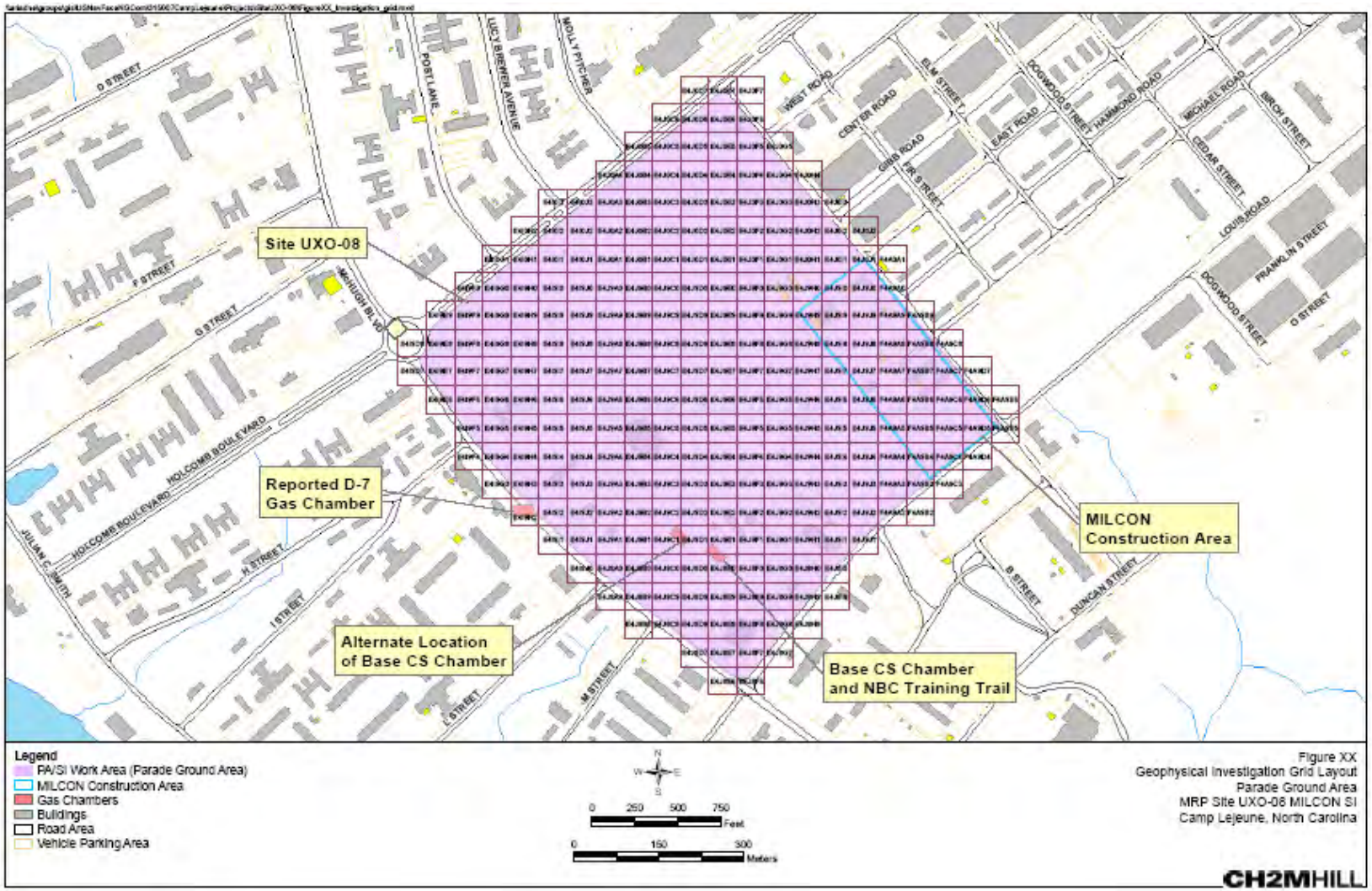

Figure A-2: Site Map

Figure A-3: USA's Initial Towed Array

Figure A-4: ARM's Towed Array

Figure A-5: USA's Single Coil System

B.0 APPENDIX B - EXAMPLE DIG LIST RESULTS

This appendix includes examples of Single Coil and Towed Array Dig List results. All Dig List results for the GPO and each grid are included on the accompanying CD.

Table B-1: GPO Dig List for Single Coil Positioned with Line/Station/Fiducials

ID	GRIDCELLID	X1	Y1	X2	Y2	X3	Y3	X4	Y4	TYPE	AMPLI-TUDE	UNITS
1	GPO	281120.7	3846120.3	0	0	0	0	0	0		6.2	mV
2	GPO	281120.5	3846125.3	0	0	0	0	0	0		9.8	mV
3	GPO	281120.9	3846115.6	0	0	0	0	0	0		19.2	mV
4	GPO	281120.9	3846134.7	0	0	0	0	0	0		123.9	mV
5	GPO	281121.3	3846106.2	0	0	0	0	0	0		28.2	mV
6	GPO	281121.6	3846110.5	0	0	0	0	0	0		10.3	mV
7	GPO	281121.6	3846152	0	0	0	0	0	0		7.2	mV
8	GPO	281121.7	3846131.2	0	0	0	0	0	0		9.8	mV
9	GPO	281122	3846123.1	0	0	0	0	0	0		64.4	mV
10	GPO	281122.5	3846155.6	0	0	0	0	0	0		24.4	mV
11	GPO	281123	3846138.3	0	0	0	0	0	0		11.8	mV
12	GPO	281123.5	3846113.5	0	0	0	0	0	0		27.2	mV
13	GPO	281123.3	3846116.5	0	0	0	0	0	0		7.2	mV
14	GPO	281123.6	3846122.4	0	0	0	0	0	0		19.3	mV
15	GPO	281123.6	3846144	0	0	0	0	0	0		8.6	mV
16	GPO	281124.4	3846137.3	0	0	0	0	0	0		8.7	mV
17	GPO	281124.55	3846119.9	0	0	0	0	0	0		11.9	mV
18	GPO	281124.3	3846141.5	0	0	0	0	0	0		139.0	mV
19	GPO	281124.5	3846125.5	0	0	0	0	0	0		6.0	mV
20	GPO	281124.6	3846130.8	0	0	0	0	0	0		9.9	mV
21	GPO	281124.9	3846138.1	0	0	0	0	0	0		12.8	mV
22	GPO	281124.9	3846152.7	0	0	0	0	0	0		24.5	mV
23	GPO	281125.1	3846142.3	0	0	0	0	0	0		145.0	mV
24	GPO	281125.6	3846107.5	0	0	0	0	0	0		11.9	mV
25	GPO	281125.9	3846105.2	0	0	0	0	0	0		66.3	mV
26	GPO	281126	3846128.6	0	0	0	0	0	0		5.8	mV
27	GPO	281126.3	3846154	0	0	0	0	0	0		23.1	mV
28	GPO	281126.4	3846117.7	0	0	0	0	0	0		27.7	mV
29	GPO	281126.5	3846139.2	0	0	0	0	0	0		10.3	mV
30	GPO	281127.4	3846105.4	0	0	0	0	0	0		6.3	mV
31	GPO	281128.15	3846152.4	0	0	0	0	0	0		92.2	mV
32	GPO	281128	3846156.1	0	0	0	0	0	0		16.2	mV
33	GPO	281128.2	3846123.7	0	0	0	0	0	0		12.2	mV
34	GPO	281128.2	3846143.5	0	0	0	0	0	0		7.2	mV

ID	GRIDCELLID	X1	Y1	X2	Y2	X3	Y3	X4	Y4	TYPE	AMPLI-TUDE	UNITS
35	GPO	281128.6	3846115.9	0	0	0	0	0	0		7.0	mV
36	GPO	281128.6	3846128.2	0	0	0	0	0	0		5.6	mV
37	GPO	281128.9	3846107.2	0	0	0	0	0	0		5.8	mV
38	GPO	281128.9	3846126.7	0	0	0	0	0	0		5.2	mV
39	GPO	281128.9	3846163.2	0	0	0	0	0	0		5.1	mV
40	GPO	281129	3846130.3	0	0	0	0	0	0		19.2	mV
41	GPO	281129.5	3846117.7	0	0	0	0	0	0		18.9	mV
42	GPO	281130.2	3846136.9	0	0	0	0	0	0		8.6	mV
43	GPO	281130.5	3846144.9	0	0	0	0	0	0		7.6	mV
44	GPO	281130.9	3846137.8	0	0	0	0	0	0		7.6	mV
45	GPO	281131.2	3846122.7	0	0	0	0	0	0		8.1	mV
46	GPO	281131.8	3846109.9	0	0	0	0	0	0		28.0	mV
47	GPO	281131.9	3846126.1	0	0	0	0	0	0		5.3	mV
48	GPO	281131.9	3846131.3	0	0	0	0	0	0		5.7	mV
49	GPO	281132.4	3846115.2	0	0	0	0	0	0		5.7	mV
50	GPO	281132.4	3846137	0	0	0	0	0	0		9.9	mV
51	GPO	281133.6	3846142.3	0	0	0	0	0	0		10.8	mV
52	GPO	281134.2	3846158.8	0	0	0	0	0	0		515.9	mV

Table B-2: GPO Dig List for Towed Array

ID	GRIDCELLID	X1	Y1	X2	Y2	X3	Y3	X4	Y4	TYPE	AMPLI-TUDE	UNITS
1	GPO	281120.3	3846115.2	0	0	0	0	0	0		32.8	mV
2	GPO	281120.7	3846134.5	0	0	0	0	0	0		90.5	mV
3	GPO	281121.7	3846105.1	0	0	0	0	0	0		37.5	mV
4	GPO	281121.7	3846122.3	0	0	0	0	0	0		158.6	mV
5	GPO	281122.5	3846154.5	0	0	0	0	0	0		73.2	mV
6	GPO	281123.3	3846112.9	0	0	0	0	0	0		56.7	mV
7	GPO	281123.7	3846121.8	0	0	0	0	0	0		36.7	mV
8	GPO	281124.6	3846141.6	0	0	0	0	0	0		145.8	mV
9	GPO	281124.7	3846106.5	0	0	0	0	0	0		48.3	mV
10	GPO	281125.2	3846137.2	0	0	0	0	0	0		29.9	mV
11	GPO	281125.3	3846152.4	0	0	0	0	0	0		47.3	mV
12	GPO	281126	3846104.2	0	0	0	0	0	0		45.2	mV
13	GPO	281126.6	3846117.4	0	0	0	0	0	0		46.7	mV
14	GPO	281126.8	3846091	0	0	0	0	0	0		159.5	mV

ID	GRIDCELLID	X1	Y1	X2	Y2	X3	Y3	X4	Y4	TYPE	AMPLI-TUDE	UNITS
15	GPO	281126.9	3846092.1	0	0	0	0	0	0		227.9	mV
16	GPO	281128.1	3846152.1	0	0	0	0	0	0		244.6	mV
17	GPO	281128.7	3846129.9	0	0	0	0	0	0		35.3	mV
18	GPO	281129.7	3846117.5	0	0	0	0	0	0		50.9	mV
19	GPO	281131.5	3846109.5	0	0	0	0	0	0		103.8	mV
20	GPO	281132.4	3846136.5	0	0	0	0	0	0		36.3	mV
21	GPO	281133.7	3846159.1	0	0	0	0	0	0		613.6	mV
22	GPO	281134.2	3846144.5	0	0	0	0	0	0		36.9	mV
23	GPO	281118.7	3846093.7	0	0	0	0	0	0		14	mV
24	GPO	281119.5	3846124.7	0	0	0	0	0	0		15	mV
25	GPO	281120.6	3846119.6	0	0	0	0	0	0		5.1	mV
26	GPO	281120.8	3846092.6	0	0	0	0	0	0		15	mV
27	GPO	281121.1	3846108.7	0	0	0	0	0	0		12.7	mV
28	GPO	281121.2	3846151.4	0	0	0	0	0	0		5.9	mV
29	GPO	281121.5	3846120.2	0	0	0	0	0	0		5.3	mV
30	GPO	281121.5	3846138.8	0	0	0	0	0	0		8.6	mV
31	GPO	281121.5	3846160.3	0	0	0	0	0	0		8.3	mV
32	GPO	281121.9	3846109.7	0	0	0	0	0	0		18.2	mV
33	GPO	281121.9	3846146.5	0	0	0	0	0	0		7.7	mV
34	GPO	281122.1	3846130.7	0	0	0	0	0	0		23.5	mV
35	GPO	281122.2	3846148.6	0	0	0	0	0	0		5.2	mV
36	GPO	281123.2	3846134.8	0	0	0	0	0	0		6	mV
37	GPO	281123.4	3846116.1	0	0	0	0	0	0		10.7	mV
38	GPO	281123.4	3846137.6	0	0	0	0	0	0		18.3	mV
39	GPO	281123.7	3846144	0	0	0	0	0	0		10.2	mV
40	GPO	281124	3846108.9	0	0	0	0	0	0		6.2	mV
41	GPO	281124.6	3846119.5	0	0	0	0	0	0		19.8	mV
42	GPO	281124.7	3846125.2	0	0	0	0	0	0		13.9	mV
43	GPO	281124.8	3846092.5	0	0	0	0	0	0		21.8	mV
44	GPO	281124.9	3846130.4	0	0	0	0	0	0		16.5	mV
45	GPO	281125	3846103.4	0	0	0	0	0	0		6.8	mV
46	GPO	281125.8	3846088	0	0	0	0	0	0		7.1	mV
47	GPO	281125.9	3846128	0	0	0	0	0	0		10.5	mV
48	GPO	281126.1	3846138.4	0	0	0	0	0	0		22.8	mV
49	GPO	281126.2	3846106.7	0	0	0	0	0	0		6.9	mV
50	GPO	281126.8	3846143.9	0	0	0	0	0	0		15.3	mV

ID	GRIDCELLID	X1	Y1	X2	Y2	X3	Y3	X4	Y4	TYPE	AMPLI-TUDE	UNITS
51	GPO	281127.2	3846095	0	0	0	0	0	0		13.6	mV
52	GPO	281127.6	3846142.6	0	0	0	0	0	0		8.7	mV
53	GPO	281127.8	3846126.1	0	0	0	0	0	0		8.3	mV
54	GPO	281128	3846134.2	0	0	0	0	0	0		7.2	mV
55	GPO	281128.1	3846155.7	0	0	0	0	0	0		15.2	mV
56	GPO	281128.6	3846115.7	0	0	0	0	0	0		10.6	mV
57	GPO	281128.6	3846123.2	0	0	0	0	0	0		14.9	mV
58	GPO	281128.7	3846106.3	0	0	0	0	0	0		13	mV
59	GPO	281129.2	3846141.8	0	0	0	0	0	0		21.4	mV
60	GPO	281129.3	3846140.4	0	0	0	0	0	0		15.6	mV
61	GPO	281129.3	3846098.9	0	0	0	0	0	0		5.7	mV
62	GPO	281129.4	3846110.7	0	0	0	0	0	0		9.9	mV
63	GPO	281129.4	3846163.3	0	0	0	0	0	0		8.8	mV
64	GPO	281129.7	3846128.2	0	0	0	0	0	0		7.9	mV
65	GPO	281130	3846136.3	0	0	0	0	0	0		14.6	mV
66	GPO	281130.3	3846144.9	0	0	0	0	0	0		7.7	mV
67	GPO	281130.4	3846105.5	0	0	0	0	0	0		9.1	mV
68	GPO	281130.6	3846101.3	0	0	0	0	0	0		5.2	mV
69	GPO	281130.7	3846122.4	0	0	0	0	0	0		12.8	mV
70	GPO	281130.8	3846098.7	0	0	0	0	0	0		16.1	mV
71	GPO	281131	3846136.9	0	0	0	0	0	0		15.7	mV
72	GPO	281131.3	3846158.2	0	0	0	0	0	0		14.4	mV
73	GPO	281131.6	3846159.2	0	0	0	0	0	0		9.1	mV
74	GPO	281131.7	3846101	0	0	0	0	0	0		6.1	mV
75	GPO	281131.9	3846125.1	0	0	0	0	0	0		6.5	mV
76	GPO	281131.9	3846154.5	0	0	0	0	0	0		7.5	mV
77	GPO	281132.1	3846130.5	0	0	0	0	0	0		13.1	mV
78	GPO	281132.4	3846114.7	0	0	0	0	0	0		11.5	mV
79	GPO	281132.4	3846147.1	0	0	0	0	0	0		12.3	mV
80	GPO	281132.9	3846111.1	0	0	0	0	0	0		7.4	mV
81	GPO	281133	3846131.6	0	0	0	0	0	0		11	mV
82	GPO	281133.3	3846150	0	0	0	0	0	0		8.8	mV
83	GPO	281133.4	3846154.4	0	0	0	0	0	0		5.4	mV
84	GPO	281133.6	3846117.2	0	0	0	0	0	0		9.1	mV
85	GPO	281134.1	3846141.8	0	0	0	0	0	0		19.2	mV
86	GPO	281134.3	3846150.9	0	0	0	0	0	0		5.2	mV

Table B-3: Example Grid E4I9G4 Dig List for Single Coil Positioned with Line/Station/Fiducials

ID	GRIDCELLID	X1	Y1	X2	Y2	X3	Y3	X4	Y4	TYPE	AMPLI-TUDE	UNITS
1	E4I9G4	285044.7	3838150.5	0	0	0	0	0	0		11.7	mV
2	E4I9G4	285040	3838151.1	0	0	0	0	0	0		5.7	mV
3	E4I9G4	285042.4	3838151.1	0	0	0	0	0	0		5.6	mV
4	E4I9G4	285029.3	3838151.5	0	0	0	0	0	0		71.1	mV
5	E4I9G4	285035.8	3838151.6	0	0	0	0	0	0		1365.0	mV
6	E4I9G4	285047.7	3838151.6	0	0	0	0	0	0		8.9	mV
7	E4I9G4	285047.8	3838151.9	0	0	0	0	0	0		8.5	mV
8	E4I9G4	285049.2	3838152	0	0	0	0	0	0		10.0	mV
9	E4I9G4	285047.7	3838153	0	0	0	0	0	0		18.2	mV
10	E4I9G4	285043.2	3838153.1	0	0	0	0	0	0		15.1	mV
11	E4I9G4	285030.9	3838153.2	0	0	0	0	0	0		83.8	mV
12	E4I9G4	285032.5	3838153.4	0	0	0	0	0	0		88.6	mV
13	E4I9G4	285048.3	3838153.6	0	0	0	0	0	0		15.5	mV
14	E4I9G4	285038	3838153.9	0	0	0	0	0	0		22.3	mV
15	E4I9G4	285027.1	3838154.3	0	0	0	0	0	0		68.3	mV
16	E4I9G4	285034.8	3838154.3	0	0	0	0	0	0		127.5	mV
17	E4I9G4	285040.1	3838154.4	0	0	0	0	0	0		7.2	mV
18	E4I9G4	285039.4	3838155.2	0	0	0	0	0	0		6.7	mV
19	E4I9G4	285042.5	3838155.4	0	0	0	0	0	0		6.4	mV
20	E4I9G4	285040.1	3838155.7	0	0	0	0	0	0		10.8	mV
21	E4I9G4	285037.8	3838155.8	0	0	0	0	0	0		7.6	mV
22	E4I9G4	285029.5	3838156.3	0	0	0	0	0	0		6.2	mV
23	E4I9G4	285037.9	3838156.3	0	0	0	0	0	0		7.6	mV
24	E4I9G4	285036.4	3838156.5	0	0	0	0	0	0		5.0	mV
25	E4I9G4	285030.9	3838156.7	0	0	0	0	0	0		5.4	mV
26	E4I9G4	285046.9	3838156.7	0	0	0	0	0	0		5.1	mV
27	E4I9G4	285037.1	3838156.9	0	0	0	0	0	0		7.1	mV
28	E4I9G4	285045.3	3838156.9	0	0	0	0	0	0		6.8	mV
29	E4I9G4	285024.7	3838157	0	0	0	0	0	0		61.2	mV
30	E4I9G4	285045.5	3838157.7	0	0	0	0	0	0		7.2	mV
31	E4I9G4	285030.2	3838157.8	0	0	0	0	0	0		15.2	mV
32	E4I9G4	285028.8	3838158	0	0	0	0	0	0		7.0	mV
33	E4I9G4	285034.1	3838158.4	0	0	0	0	0	0		6.7	mV

ID	GRIDCELLID	X1	Y1	X2	Y2	X3	Y3	X4	Y4	TYPE	AMPLI-TUDE	UNITS
34	E4I9G4	285042.4	3838158.5	0	0	0	0	0	0		5.7	mV
35	E4I9G4	285039.4	3838158.6	0	0	0	0	0	0		9.9	mV
36	E4I9G4	285033.2	3838159.5	0	0	0	0	0	0		9.2	mV
37	E4I9G4	285039.3	3838160	0	0	0	0	0	0		5.5	mV
38	E4I9G4	285034.1	3838160.2	0	0	0	0	0	0		9.9	mV
39	E4I9G4	285032.5	3838160.4	0	0	0	0	0	0		10.3	mV
40	E4I9G4	285043.2	3838160.5	0	0	0	0	0	0		19.4	mV
41	E4I9G4	285038.6	3838160.6	0	0	0	0	0	0		5.9	mV
42	E4I9G4	285046.1	3838160.9	0	0	0	0	0	0		5.4	mV
43	E4I9G4	285024.1	3838161.1	0	0	0	0	0	0		13.7	mV
44	E4I9G4	285045.4	3838162.6	0	0	0	0	0	0		6.2	mV
45	E4I9G4	285025.7	3838162.7	0	0	0	0	0	0		5.1	mV
46	E4I9G4	285026.4	3838162.8	0	0	0	0	0	0		6.7	mV
47	E4I9G4	285021.9	3838163.2	0	0	0	0	0	0		11.9	mV
48	E4I9G4	285044	3838163.3	0	0	0	0	0	0		6.8	mV
49	E4I9G4	285018.7	3838164	0	0	0	0	0	0		46.5	mV
50	E4I9G4	285048.5	3838164.7	0	0	0	0	0	0		10.5	mV
51	E4I9G4	285049.2	3838165.1	0	0	0	0	0	0		12.5	mV
52	E4I9G4	285020.3	3838165.4	0	0	0	0	0	0		10.0	mV
53	E4I9G4	285047.6	3838165.4	0	0	0	0	0	0		16.8	mV
54	E4I9G4	285040.1	3838165.8	0	0	0	0	0	0		14.4	mV
55	E4I9G4	285019.6	3838167.7	0	0	0	0	0	0		7.0	mV
56	E4I9G4	285018	3838168.1	0	0	0	0	0	0		10.1	mV
57	E4I9G4	285022.6	3838168.1	0	0	0	0	0	0		23.2	mV
58	E4I9G4	285048.5	3838168.3	0	0	0	0	0	0		27.5	mV
59	E4I9G4	285020.2	3838168.4	0	0	0	0	0	0		5.5	mV
60	E4I9G4	285014.9	3838168.6	0	0	0	0	0	0		43.8	mV
61	E4I9G4	285017.9	3838169.1	0	0	0	0	0	0		7.1	mV
62	E4I9G4	285030.2	3838169.4	0	0	0	0	0	0		20.2	mV
63	E4I9G4	285049.3	3838170.1	0	0	0	0	0	0		36.2	mV
64	E4I9G4	285013.4	3838170.6	0	0	0	0	0	0		52.1	mV
65	E4I9G4	285015.5	3838171	0	0	0	0	0	0		9.0	mV
66	E4I9G4	285012.6	3838171.6	0	0	0	0	0	0		48.6	mV
67	E4I9G4	285011.8	3838172.8	0	0	0	0	0	0		33.1	mV
68	E4I9G4	285019.8	3838172.8	0	0	0	0	0	0		25.3	mV
69	E4I9G4	285017.8	3838172.9	0	0	0	0	0	0		7.7	mV

ID	GRIDCELLID	X1	Y1	X2	Y2	X3	Y3	X4	Y4	TYPE	AMPLI-TUDE	UNITS
70	E4I9G4	285013.5	3838173.5	0	0	0	0	0	0		10.8	mV
71	E4I9G4	285011	3838173.8	0	0	0	0	0	0		49.8	mV
72	E4I9G4	285012.6	3838174.7	0	0	0	0	0	0		9.1	mV
73	E4I9G4	285008	3838177.4	0	0	0	0	0	0		57.3	mV
74	E4I9G4	285011.2	3838177.7	0	0	0	0	0	0		6.5	mV
75	E4I9G4	285014.9	3838178.8	0	0	0	0	0	0		5.5	mV
76	E4I9G4	285009.6	3838178.9	0	0	0	0	0	0		8.6	mV
77	E4I9G4	285024	3838179.6	0	0	0	0	0	0		9.1	mV
78	E4I9G4	285008.1	3838179.8	0	0	0	0	0	0		11.7	mV
79	E4I9G4	285005.7	3838179.9	0	0	0	0	0	0		43.7	mV
80	E4I9G4	285023.3	3838180.5	0	0	0	0	0	0		14.7	mV
81	E4I9G4	285008.1	3838180.6	0	0	0	0	0	0		7.5	mV
82	E4I9G4	285004.3	3838182.2	0	0	0	0	0	0		43.9	mV
83	E4I9G4	285030.2	3838182.7	0	0	0	0	0	0		821.5	mV
84	E4I9G4	285006.4	3838183.3	0	0	0	0	0	0		10.2	mV
85	E4I9G4	285005.2	3838183.4	0	0	0	0	0	0		8.6	mV
86	E4I9G4	285005.8	3838184.2	0	0	0	0	0	0		8.3	mV
87	E4I9G4	285005.1	3838185.2	0	0	0	0	0	0		9.1	mV
88	E4I9G4	285003.7	3838185.3	0	0	0	0	0	0		9.0	mV
89	E4I9G4	285023.4	3838185.4	0	0	0	0	0	0		5.2	mV
90	E4I9G4	285003.6	3838186.3	0	0	0	0	0	0		9.3	mV
91	E4I9G4	285005.8	3838186.4	0	0	0	0	0	0		5.4	mV
92	E4I9G4	285003.6	3838187	0	0	0	0	0	0		9.0	mV
93	E4I9G4	285014.2	3838187.2	0	0	0	0	0	0		5.1	mV
94	E4I9G4	285002	3838187.3	0	0	0	0	0	0		8.7	mV
95	E4I9G4	285003.6	3838188	0	0	0	0	0	0		7.1	mV
96	E4I9G4	285016.5	3838188.1	0	0	0	0	0	0		5.0	mV
97	E4I9G4	285002	3838189.1	0	0	0	0	0	0		14.3	mV
98	E4I9G4	285017.2	3838189.2	0	0	0	0	0	0		8.6	mV
99	E4I9G4	285037.9	3838190.5	0	0	0	0	0	0		38.9	mV
100	E4I9G4	285011.2	3838190.7	0	0	0	0	0	0		7.3	mV
101	E4I9G4	285034	3838191.6	0	0	0	0	0	0		34.2	mV
102	E4I9G4	285018	3838192.7	0	0	0	0	0	0		5.4	mV
103	E4I9G4	285014.2	3838193.5	0	0	0	0	0	0		184.7	mV
104	E4I9G4	285038.6	3838193.5	0	0	0	0	0	0		9.5	mV
105	E4I9G4	285013.1	3838194	0	0	0	0	0	0		7.8	mV

ID	GRIDCELLID	X1	Y1	X2	Y2	X3	Y3	X4	Y4	TYPE	AMPLI-TUDE	UNITS
106	E4I9G4	285034.9	3838194.1	0	0	0	0	0	0		18.4	mV
107	E4I9G4	285048.4	3838194.9	0	0	0	0	0	0		7.2	mV
108	E4I9G4	285002	3838195.8	0	0	0	0	0	0		8.2	mV
109	E4I9G4	285044.6	3838196.1	0	0	0	0	0	0		18.3	mV
110	E4I9G4	285044.2	3838196.3	0	0	0	0	0	0		16.2	mV
111	E4I9G4	285050	3838170.972	0	0	0	0	0	0		48.0	mV
112	E4I9G4	285050	3838161.511	0	0	0	0	0	0		18.9	mV
113	E4I9G4	285050	3838156.505	0	0	0	0	0	0		7.7	mV
114	E4I9G4	285049.2378	3838150.454	0	0	0	0	0	0		19.2	mV
115	E4I9G4	285047.7134	3838150.088	0	0	0	0	0	0		13.8	mV
116	E4I9G4	285046.9512	3838153.075	0	0	0	0	0	0		11.8	mV
117	E4I9G4	285044.6646	3838153.034	0	0	0	0	0	0		8.8	mV
118	E4I9G4	285044.6646	3838159.512	0	0	0	0	0	0		7.7	mV
119	E4I9G4	285042.378	3838160.848	0	0	0	0	0	0		11.1	mV
120	E4I9G4	285042.378	3838153.877	0	0	0	0	0	0		6.9	mV
121	E4I9G4	285040.8537	3838155.557	0	0	0	0	0	0		6.2	mV
122	E4I9G4	285040.8537	3838151.779	0	0	0	0	0	0		5.0	mV
123	E4I9G4	285039.3293	3838153.18	0	0	0	0	0	0		7.8	mV
124	E4I9G4	285038.5671	3838150.877	0	0	0	0	0	0		18.7	mV
125	E4I9G4	285037.8049	3838150.162	0	0	0	0	0	0		109.6	mV
126	E4I9G4	285037.0427	3838151.44	0	0	0	0	0	0		1037.8	mV
127	E4I9G4	285036.2805	3838159.365	0	0	0	0	0	0		5.7	mV
128	E4I9G4	285034.7561	3838160.475	0	0	0	0	0	0		8.5	mV
129	E4I9G4	285034.7561	3838151.215	0	0	0	0	0	0		1033.0	mV
130	E4I9G4	285033.9939	3838152.397	0	0	0	0	0	0		434.6	mV
131	E4I9G4	285032.4695	3838150.063	0	0	0	0	0	0		27.8	mV
132	E4I9G4	285032.4695	3838158.046	0	0	0	0	0	0		5.2	mV
133	E4I9G4	285031.7073	3838151.81	0	0	0	0	0	0		22.5	mV
134	E4I9G4	285030.9451	3838150.116	0	0	0	0	0	0		40.9	mV
135	E4I9G4	285030.1829	3838152.127	0	0	0	0	0	0		54.7	mV
136	E4I9G4	285028.6585	3838161.151	0	0	0	0	0	0		5.2	mV
137	E4I9G4	285027.8963	3838153.791	0	0	0	0	0	0		58.4	mV
138	E4I9G4	285025.6098	3838158.819	0	0	0	0	0	0		8.5	mV
139	E4I9G4	285025.6098	3838156.128	0	0	0	0	0	0		55.8	mV
140	E4I9G4	285023.3232	3838159.346	0	0	0	0	0	0		44.3	mV
141	E4I9G4	285021.7988	3838160.64	0	0	0	0	0	0		34.6	mV

ID	GRIDCELLID	X1	Y1	X2	Y2	X3	Y3	X4	Y4	TYPE	AMPLI-TUDE	UNITS
142	E4I9G4	285020.2744	3838162.774	0	0	0	0	0	0		51.0	mV
143	E4I9G4	285017.9878	3838165.363	0	0	0	0	0	0		48.3	mV
144	E4I9G4	285016.4634	3838166.89	0	0	0	0	0	0		47.0	mV
145	E4I9G4	285009.6037	3838175.515	0	0	0	0	0	0		50.1	mV
146	E4I9G4	285008.8415	3838176.582	0	0	0	0	0	0		36.1	mV
147	E4I9G4	285006.5549	3838179.174	0	0	0	0	0	0		46.4	mV
148	E4I9G4	285005.0305	3838181.402	0	0	0	0	0	0		36.3	mV
149	E4I9G4	285003.5061	3838183.537	0	0	0	0	0	0		28.4	mV
150	E4I9G4	285001.9817	3838185.366	0	0	0	0	0	0		43.5	mV
151	E4I9G4	285000.4573	3838187.345	0	0	0	0	0	0		37.2	mV
152	E4I9G4	284999.6951	3838189.499	0	0	0	0	0	0		42.3	mV

Table B-4: Example Grid E4I0I1 Dig List for Towed Array

ID	GRIDCELLID	X1	Y1	X2	Y2	X3	Y3	X4	Y4	TYPE	AMPLI-TUDE	UNITS
1	E4I0I1	285100.7	3838507	0	0	0	0	0	0		5.01	mV
2	E4I0I1	285101.15	3838505.85	0	0	0	0	0	0		7.05	mV
3	E4I0I1	285102.3	3838510.16	0	0	0	0	0	0		6.43	mV
4	E4I0I1	285103	3838507.5	0	0	0	0	0	0		7.03	mV
5	E4I0I1	285103.5	3838509.7	0	0	0	0	0	0		6.97	mV
6	E4I0I1	285104.3	3838508.9	0	0	0	0	0	0		6.08	mV
7	E4I0I1	285104.9	3838508	0	0	0	0	0	0		5.02	mV
8	E4I0I1	285107.56	3838506.06	0	0	0	0	0	0		8.28	mV
9	E4I0I1	285107.9	3838513.1	0	0	0	0	0	0		7.38	mV
10	E4I0I1	285108	3838506.9	0	0	0	0	0	0		28.92	mV
11	E4I0I1	285108	3838516.4	0	0	0	0	0	0		25.77	mV
12	E4I0I1	285108.5	3838503	0	0	0	0	0	0		9.39	mV
13	E4I0I1	285109.2	3838504	0	0	0	0	0	0		5.65	mV
14	E4I0I1	285109.55	3838506.25	0	0	0	0	0	0		17.67	mV
15	E4I0I1	285109.8	3838512.5	0	0	0	0	0	0		5.59	mV
16	E4I0I1	285110.1	3838502	0	0	0	0	0	0		5.03	mV
17	E4I0I1	285111.1	3838503.9	0	0	0	0	0	0		171.7	mV
18	E4I0I1	285111.5	3838518.6	0	0	0	0	0	0		6.11	mV
19	E4I0I1	285111.5	3838505.5	0	0	0	0	0	0		11.7	mV
20	E4I0I1	285111.5	3838516.8	0	0	0	0	0	0		5.37	mV
21	E4I0I1	285111.5	3838501.3	0	0	0	0	0	0		5.18	mV

ID	GRIDCELLID	X1	Y1	X2	Y2	X3	Y3	X4	Y4	TYPE	AMPLI-TUDE	UNITS
22	E4I0I1	285112.33	3838504.85	0	0	0	0	0	0		10.53	mV
23	E4I0I1	285112.35	3838517.85	0	0	0	0	0	0		6.1	mV
24	E4I0I1	285112.5	3838515.8	0	0	0	0	0	0		5.36	mV
25	E4I0I1	285112.8	3838520.1	0	0	0	0	0	0		5.05	mV
26	E4I0I1	285112.98	3838515.15	0	0	0	0	0	0		5.3	mV
27	E4I0I1	285113.6	3838503.1	0	0	0	0	0	0		12.56	mV
28	E4I0I1	285114	3838516.9	0	0	0	0	0	0		11.12	mV
29	E4I0I1	285114.75	3838521.75	0	0	0	0	0	0		18.4	mV
30	E4I0I1	285115.6	3838508.9	0	0	0	0	0	0		16.57	mV
31	E4I0I1	285115.7	3838520	0	0	0	0	0	0		32.36	mV
32	E4I0I1	285115.95	3838521.25	0	0	0	0	0	0		22.13	mV
33	E4I0I1	285117.3	3838513.6	0	0	0	0	0	0		7.29	mV
34	E4I0I1	285117.5	3838523.43	0	0	0	0	0	0		7.3	mV
35	E4I0I1	285117.63	3838514.69	0	0	0	0	0	0		84.1	mV
36	E4I0I1	285118.13	3838522.73	0	0	0	0	0	0		5	mV
37	E4I0I1	285118.8	3838513	0	0	0	0	0	0		6.95	mV
38	E4I0I1	285119.1	3838514.2	0	0	0	0	0	0		10.59	mV
39	E4I0I1	285119.2	3838510.9	0	0	0	0	0	0		16.41	mV
40	E4I0I1	285119.3	3838515.6	0	0	0	0	0	0		42.69	mV
41	E4I0I1	285120.4	3838525.9	0	0	0	0	0	0		5.34	mV
42	E4I0I1	285120.9	3838509	0	0	0	0	0	0		8.92	mV
43	E4I0I1	285121	3838516.4	0	0	0	0	0	0		5.85	mV
44	E4I0I1	285121.4	3838526.5	0	0	0	0	0	0		6.52	mV
45	E4I0I1	285122.3	3838510.1	0	0	0	0	0	0		25.76	mV
46	E4I0I1	285122.75	3838527.68	0	0	0	0	0	0		7.04	mV
47	E4I0I1	285123.7	3838508.3	0	0	0	0	0	0		16.6	mV
48	E4I0I1	285123.9	3838505.2	0	0	0	0	0	0		14.88	mV
49	E4I0I1	285125.5	3838505.3	0	0	0	0	0	0		6.66	mV
50	E4I0I1	285127.2	3838506.6	0	0	0	0	0	0		5.09	mV
51	E4I0I1	285127.5	3838531.5	0	0	0	0	0	0		5.21	mV
52	E4I0I1	285128	3838524.3	0	0	0	0	0	0		553.36	mV
53	E4I0I1	285128.6	3838532	0	0	0	0	0	0		6.5	mV
54	E4I0I1	285128.7	3838533.1	0	0	0	0	0	0		10.02	mV
55	E4I0I1	285128.8	3838502.4	0	0	0	0	0	0		56.26	mV
56	E4I0I1	285129.05	3838529.75	0	0	0	0	0	0		15.16	mV
57	E4I0I1	285129.1	3838504.4	0	0	0	0	0	0		37.05	mV

ID	GRIDCELLID	X1	Y1	X2	Y2	X3	Y3	X4	Y4	TYPE	AMPLI-TUDE	UNITS
58	E4I0I1	285129.1	3838513.6	0	0	0	0	0	0		7.06	mV
59	E4I0I1	285129.9	3838521.4	0	0	0	0	0	0		6.5	mV
60	E4I0I1	285132	3838504.5	0	0	0	0	0	0		7.49	mV
61	E4I0I1	285132.6	3838503.4	0	0	0	0	0	0		10.53	mV
62	E4I0I1	285133.7	3838504.4	0	0	0	0	0	0		10.55	mV
63	E4I0I1	285133.7	3838506.4	0	0	0	0	0	0		22.78	mV
64	E4I0I1	285133.9	3838528.7	0	0	0	0	0	0		13.63	mV
65	E4I0I1	285133.9	3838502.3	0	0	0	0	0	0		5.95	mV
66	E4I0I1	285134.7	3838505.3	0	0	0	0	0	0		7.13	mV
67	E4I0I1	285134.8	3838501.6	0	0	0	0	0	0		13.3	mV
68	E4I0I1	285135.31	3838536.82	0	0	0	0	0	0		12.2	mV
69	E4I0I1	285135.6	3838507.4	0	0	0	0	0	0		26.16	mV
70	E4I0I1	285136.04	3838536.26	0	0	0	0	0	0		8.01	mV
71	E4I0I1	285136.5	3838500.7	0	0	0	0	0	0		22.83	mV
72	E4I0I1	285136.6	3838509.1	0	0	0	0	0	0		21.29	mV
73	E4I0I1	285136.65	3838530.1	0	0	0	0	0	0		67.82	mV
74	E4I0I1	285137	3838502.4	0	0	0	0	0	0		7.11	mV
75	E4I0I1	285138.2	3838510.2	0	0	0	0	0	0		6.48	mV
76	E4I0I1	285138.2	3838540.6	0	0	0	0	0	0		5.51	mV
77	E4I0I1	285138.7	3838526.8	0	0	0	0	0	0		41.77	mV
78	E4I0I1	285139.6	3838511.1	0	0	0	0	0	0		9.69	mV
79	E4I0I1	285139.8	3838537.8	0	0	0	0	0	0		5.17	mV
80	E4I0I1	285140.1	3838539.8	0	0	0	0	0	0		8.46	mV
81	E4I0I1	285140.8	3838512.1	0	0	0	0	0	0		25.38	mV
82	E4I0I1	285141.7	3838536.4	0	0	0	0	0	0		551.86	mV
83	E4I0I1	285141.71	3838535.33	0	0	0	0	0	0		85.45	mV
84	E4I0I1	285141.9	3838528.8	0	0	0	0	0	0		14.92	mV
85	E4I0I1	285142.1	3838543.25	0	0	0	0	0	0		6.79	mV
86	E4I0I1	285142.8	3838513.3	0	0	0	0	0	0		31.53	mV
87	E4I0I1	285142.8	3838540.9	0	0	0	0	0	0		73.71	mV
88	E4I0I1	285143.85	3838537.22	0	0	0	0	0	0		29.08	mV
89	E4I0I1	285143.9	3838544.7	0	0	0	0	0	0		6.16	mV
90	E4I0I1	285143.9	3838536.2	0	0	0	0	0	0		225.91	mV
91	E4I0I1	285144.2	3838527.6	0	0	0	0	0	0		5.33	mV
92	E4I0I1	285144.4	3838500.85	0	0	0	0	0	0		8.29	mV
93	E4I0I1	285144.6	3838533.4	0	0	0	0	0	0		463.98	mV

ID	GRIDCELLID	X1	Y1	X2	Y2	X3	Y3	X4	Y4	TYPE	AMPLI-TUDE	UNITS
94	E4I0I1	285144.77	3838532.34	0	0	0	0	0	0		23.75	mV
95	E4I0I1	285144.8	3838521.3	0	0	0	0	0	0		31.06	mV
96	E4I0I1	285144.85	3838515.08	0	0	0	0	0	0		9.79	mV
97	E4I0I1	285145.36	3838542.2	0	0	0	0	0	0		5.1	mV
98	E4I0I1	285145.6	3838536.2	0	0	0	0	0	0		38.57	mV
99	E4I0I1	285145.7	3838500.3	0	0	0	0	0	0		10.13	mV
100	E4I0I1	285145.8	3838507.8	0	0	0	0	0	0		20	mV
101	E4I0I1	285145.9	3838516.2	0	0	0	0	0	0		426.79	mV
102	E4I0I1	285146.5	3838534.2	0	0	0	0	0	0		22.24	mV
103	E4I0I1	285146.5	3838538.3	0	0	0	0	0	0		72.32	mV
104	E4I0I1	285146.7	3838523.1	0	0	0	0	0	0		8.12	mV
105	E4I0I1	285146.7	3838535.3	0	0	0	0	0	0		20	mV
106	E4I0I1	285146.7	3838506.1	0	0	0	0	0	0		6.88	mV
107	E4I0I1	285147.3	3838537.6	0	0	0	0	0	0		43.81	mV
108	E4I0I1	285147.4	3838540.7	0	0	0	0	0	0		6.19	mV
109	E4I0I1	285147.8	3838525.9	0	0	0	0	0	0		9.84	mV
110	E4I0I1	285148.2	3838518.2	0	0	0	0	0	0		12.27	mV
111	E4I0I1	285148.43	3838538.4	0	0	0	0	0	0		29.37	mV
112	E4I0I1	285148.45	3838524.3	0	0	0	0	0	0		7.27	mV
113	E4I0I1	285148.5	3838535.6	0	0	0	0	0	0		107.67	mV
114	E4I0I1	285148.5	3838514.3	0	0	0	0	0	0		7.91	mV
115	E4I0I1	285148.6	3838539.6	0	0	0	0	0	0		276.62	mV
116	E4I0I1	285148.7	3838520.3	0	0	0	0	0	0		23.36	mV
117	E4I0I1	285148.9	3838541.6	0	0	0	0	0	0		286.05	mV
118	E4I0I1	285148.95	3838542.76	0	0	0	0	0	0		133.04	mV
119	E4I0I1	285149.3	3838504.1	0	0	0	0	0	0		8.59	mV
120	E4I0I1	285149.3	3838524.7	0	0	0	0	0	0		11.03	mV
121	E4I0I1	285149.4	3838522.9	0	0	0	0	0	0		22.48	mV
122	E4I0I1	285149.4	3838534	0	0	0	0	0	0		134.82	mV
123	E4I0I1	285149.5	3838515.1	0	0	0	0	0	0		11.46	mV
124	E4I0I1	285149.8	3838537.4	0	0	0	0	0	0		97.79	mV
125	E4I0I1	285150	3838513.55	0	0	0	0	0	0		19.98	mV
126	E4I0I1	285150.8	3838519.2	0	0	0	0	0	0		10.13	mV

C.0 APPENDIX C - EXAMPLE FINAL MAP RESULTS

This Appendix includes examples of the Single Coil Maps positioned with Line/Station/Fiducial and examples of the Towed Array maps. All GPO and site grid maps are included on the accompanying CD.

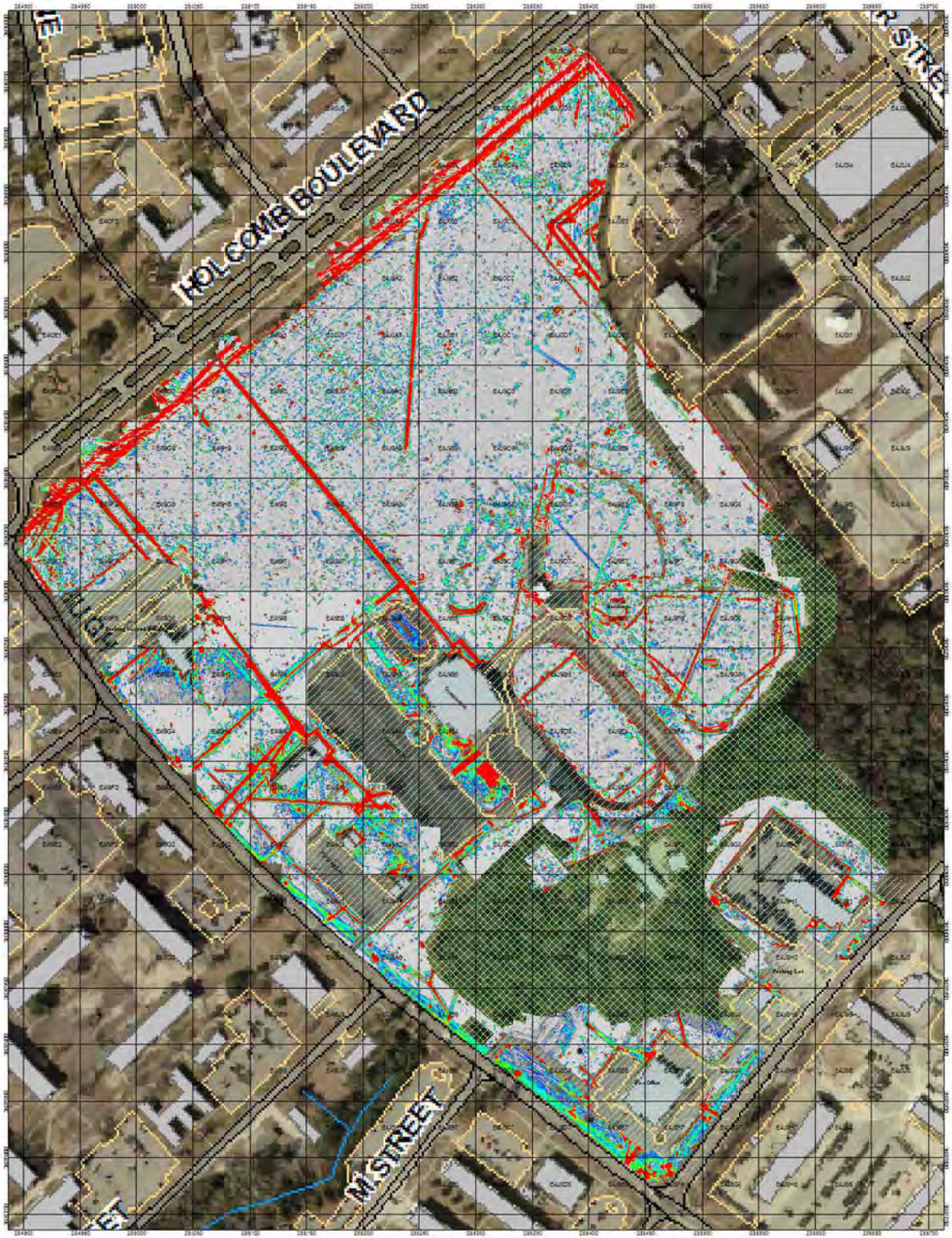

USA Environmental, Inc.

MRP UXO 08 Composite Towed Array and Single Coil Data Map

LEGEND

Cultural Feature

Wooded Area

0 2 4 6 8 10 14 18 22 26 30 34 38 42 46 50

Time Gate 3 (mV)

Scale 1:1355

50 0 50 100 150 200

metres

NAD83 / UTMzone 18N

Client: CH2M HILL

Figure C-1

Camp Lejeune, North Carolina
UXO 08

Date of Survey: 12/02/2006 - 01/27/07
Map Approver: A. Crandall

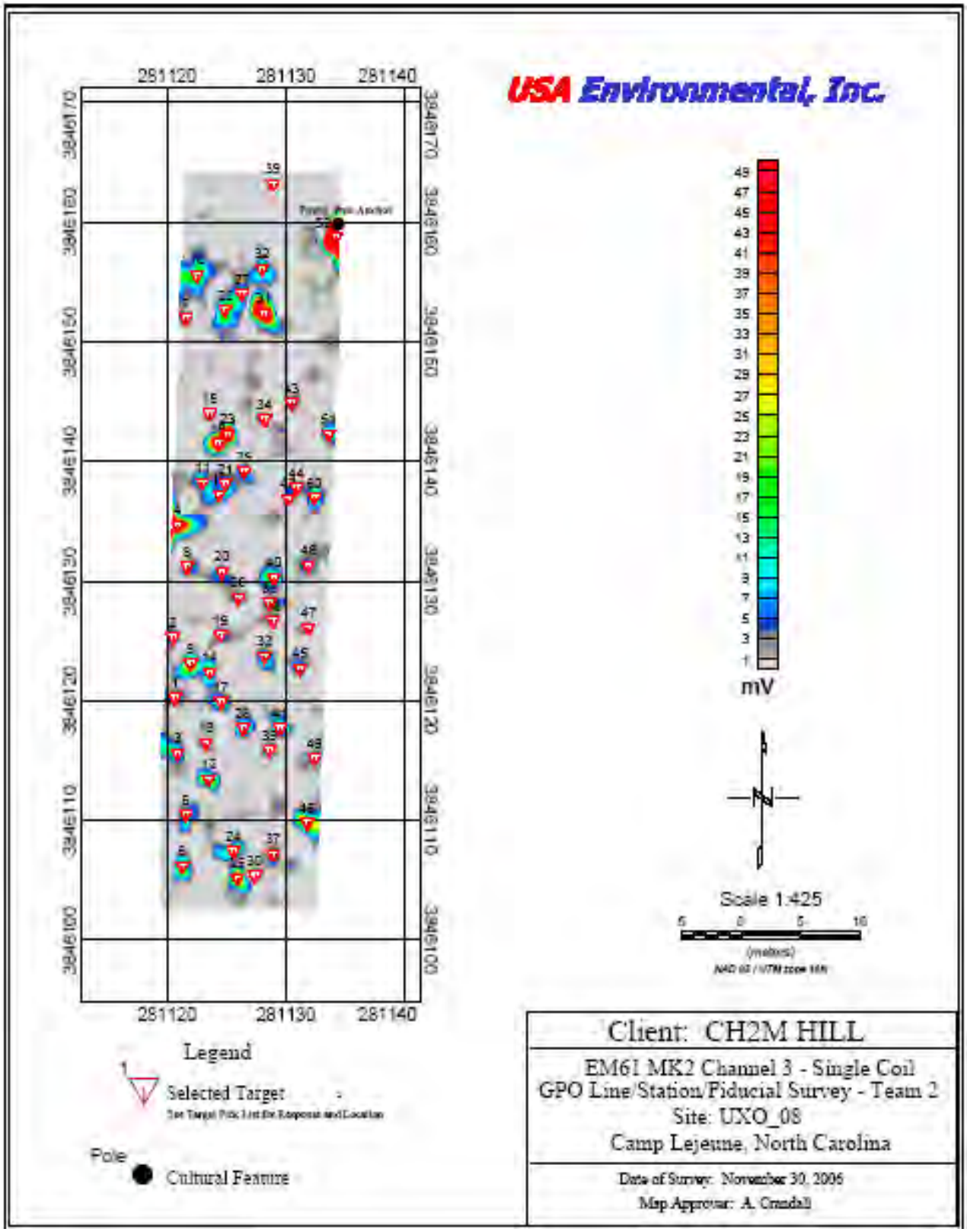

Figure C-2: GPO Single Coil Line/Station/Fiducial Map

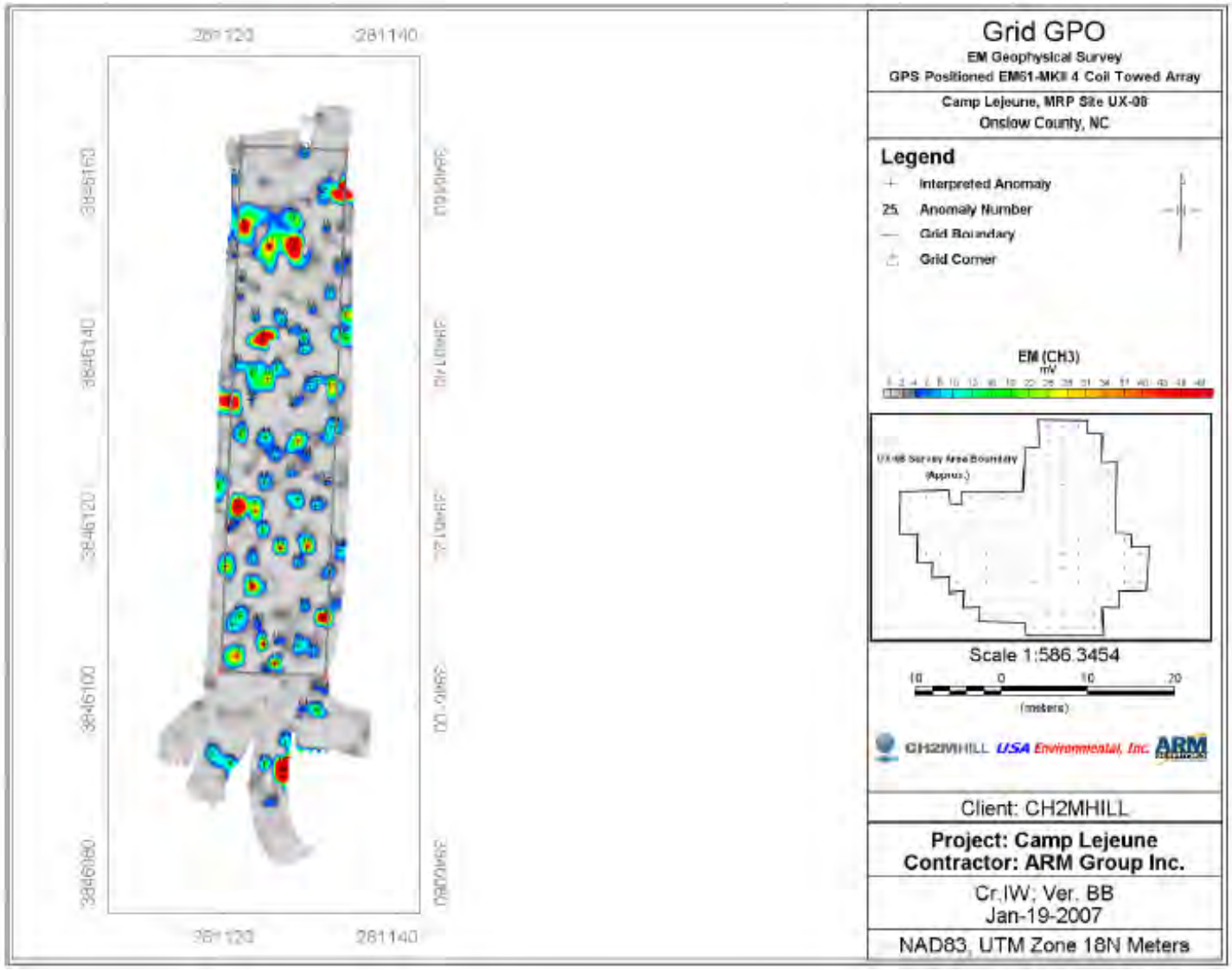

Figure C-3: Towed Array GPO Map

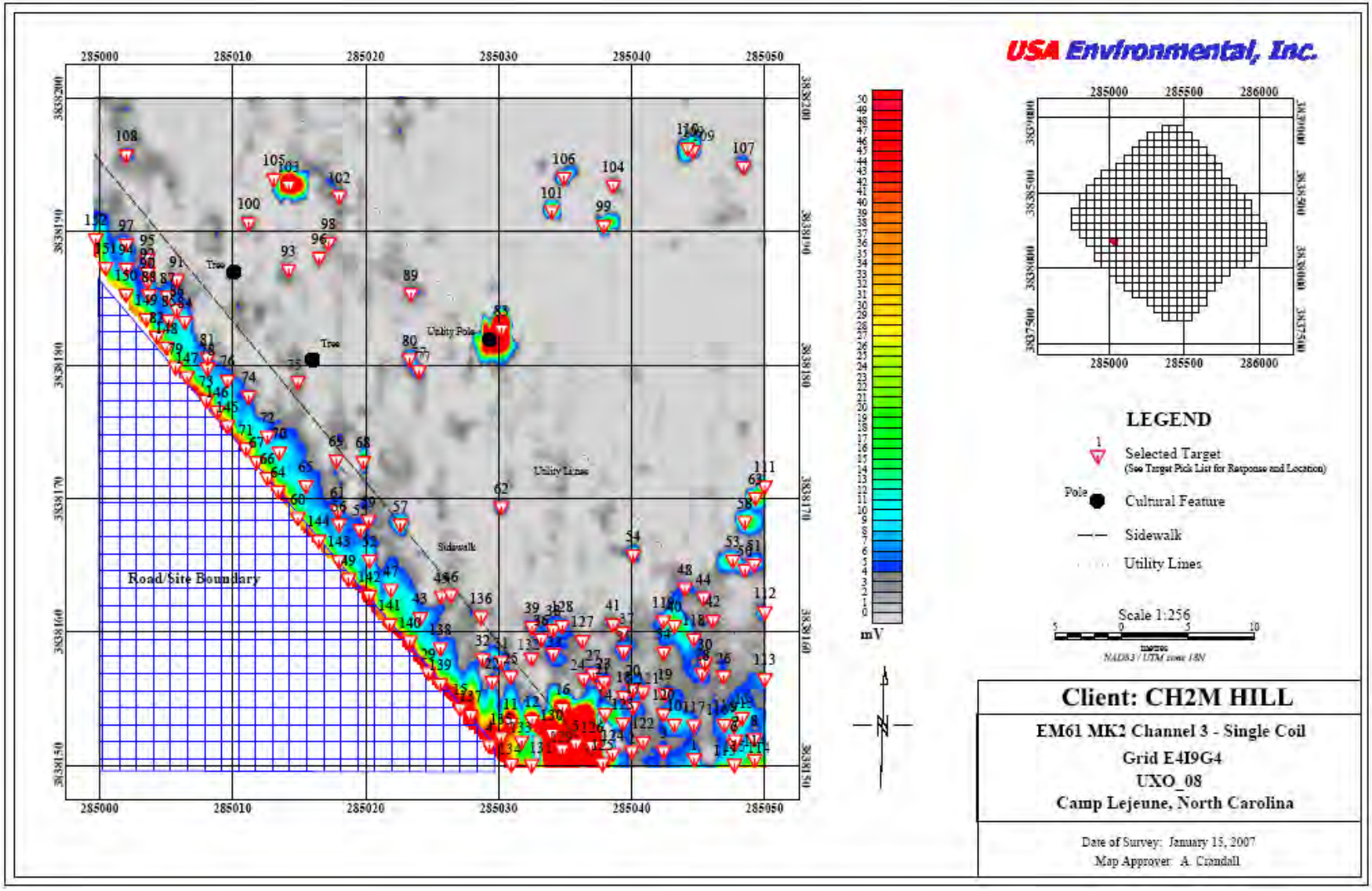

Figure C-4: Example Single Coil Line/Station/Fiducial Map for Grid E4I9B4

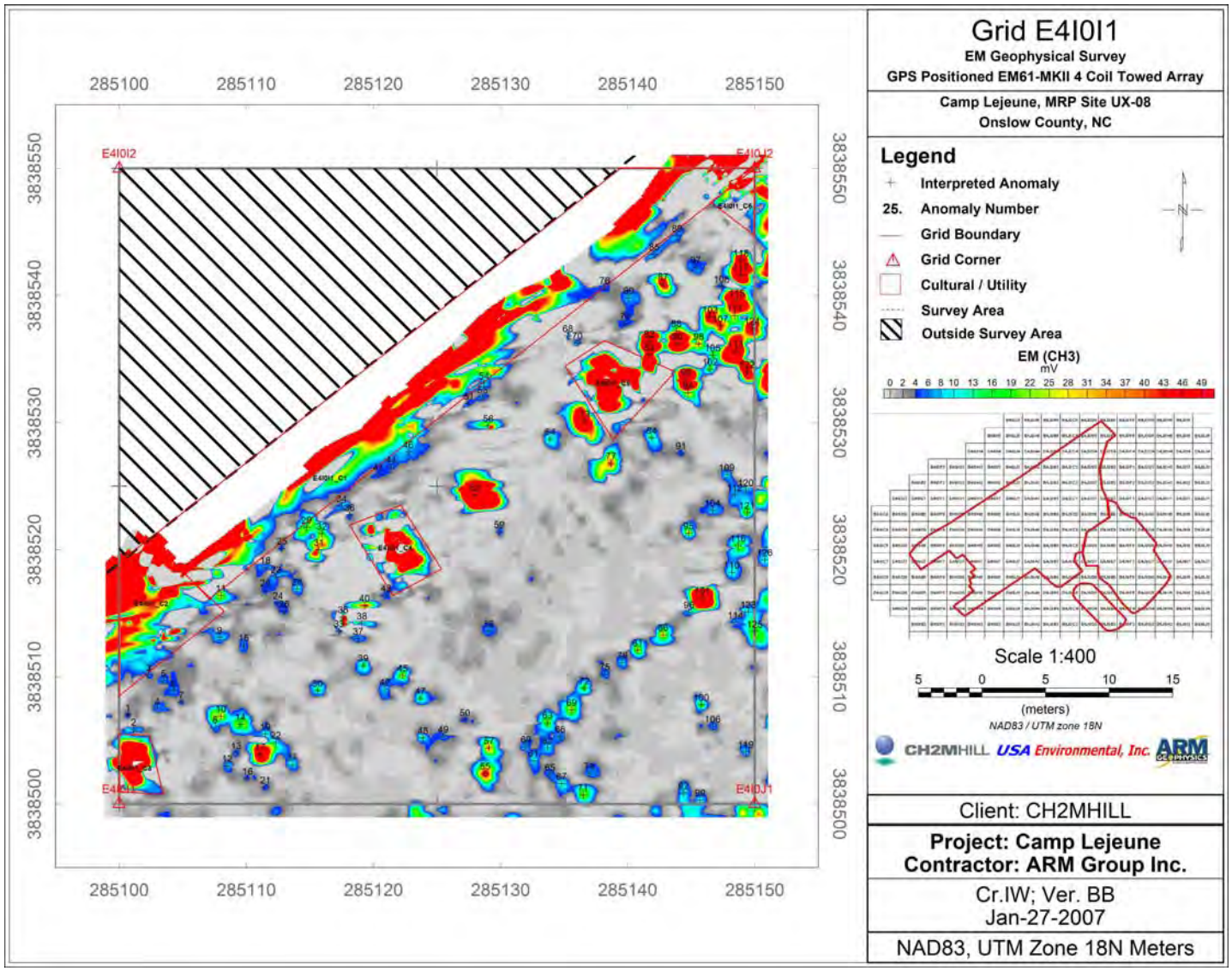

Figure C-5: Example Towed Array Map for Grid E4I0I9

D.0 APPENDIX D - EXAMPLE QUALITY CONTROL TEST RESULTS

This appendix includes examples of the Quality Control (QC) tests that were performed to ensure the DGM systems (equipment, personnel, and data processing) were performing correctly. All QC test results for the single coil and towed array are included on the accompanying CD. The 6-line test was performed the first day on-site (on 11/30/2006 for the Single Coil and on 1/18/2007 for the Towed Array). Static QC tests were performed at least twice daily, in the morning and afternoon of each survey day. On some days, a mid-day single coil static QC test was also acquired. The latency test was performed daily at the beginning of each survey day. Repeat tests were performed for each survey grid or partial grid.

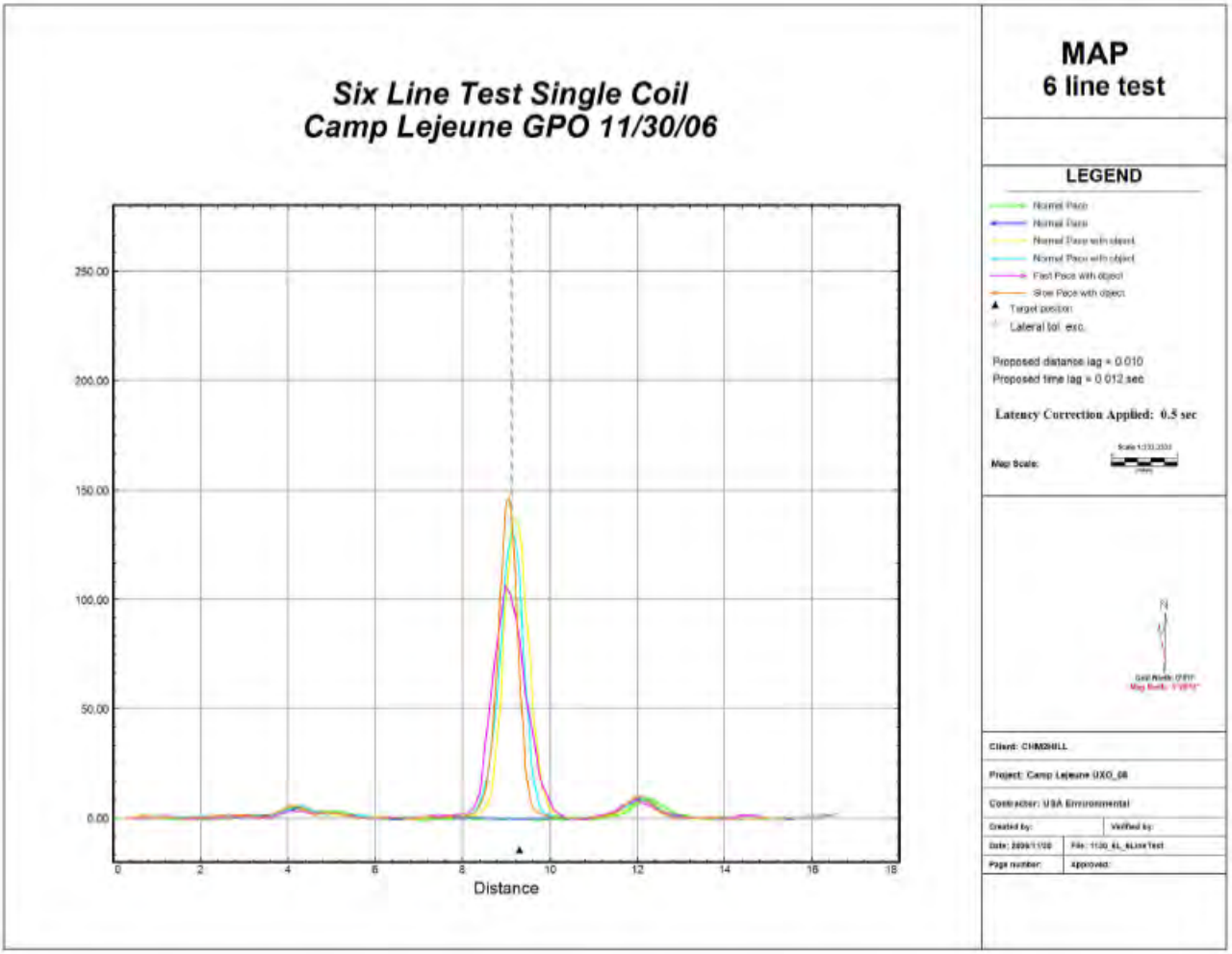

Figure D-1: Example of Corrected Single Coil 6-Line Test Results

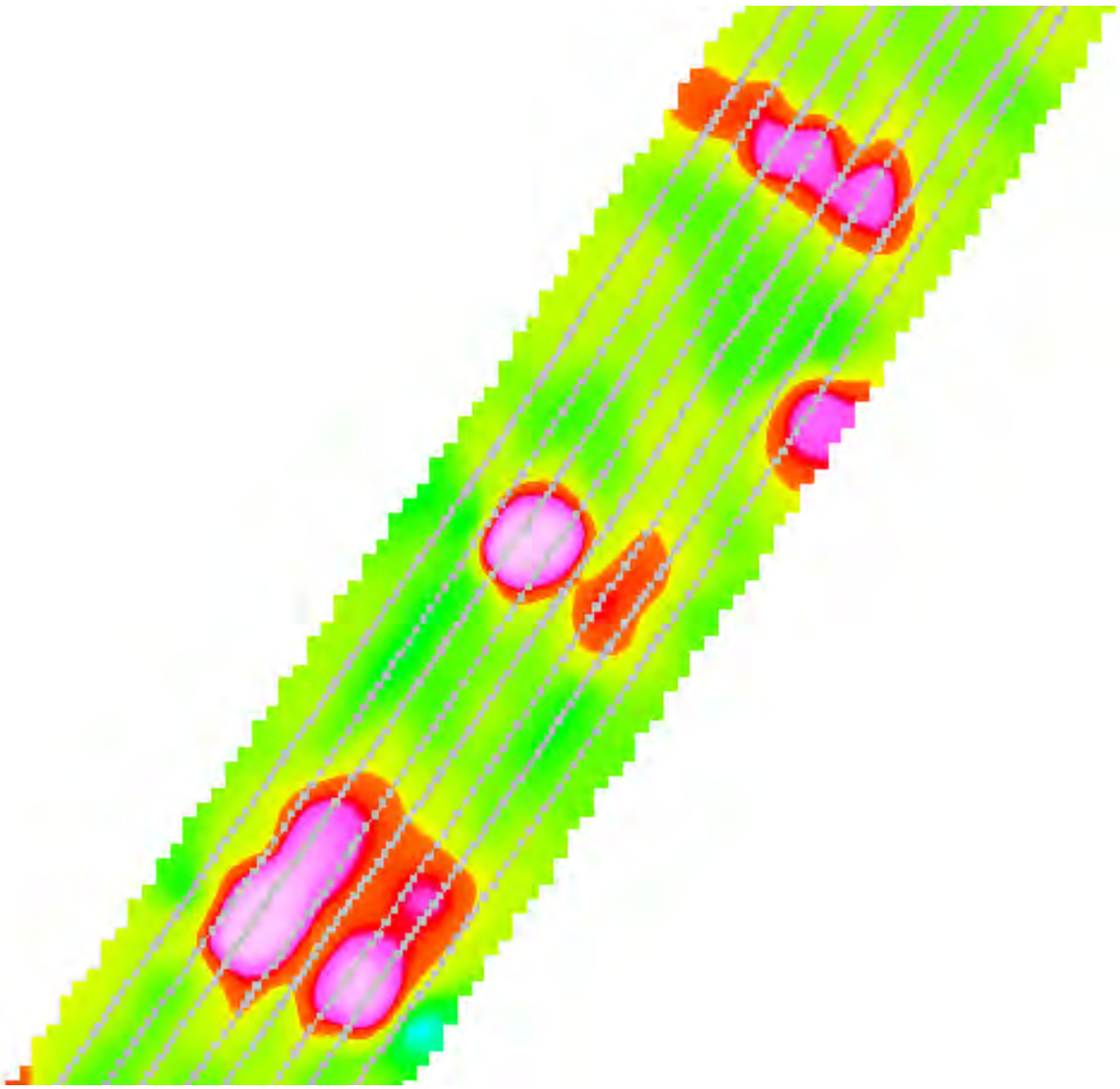

Figure D-2: Example of Corrected Towed Array 6-Line Test Results

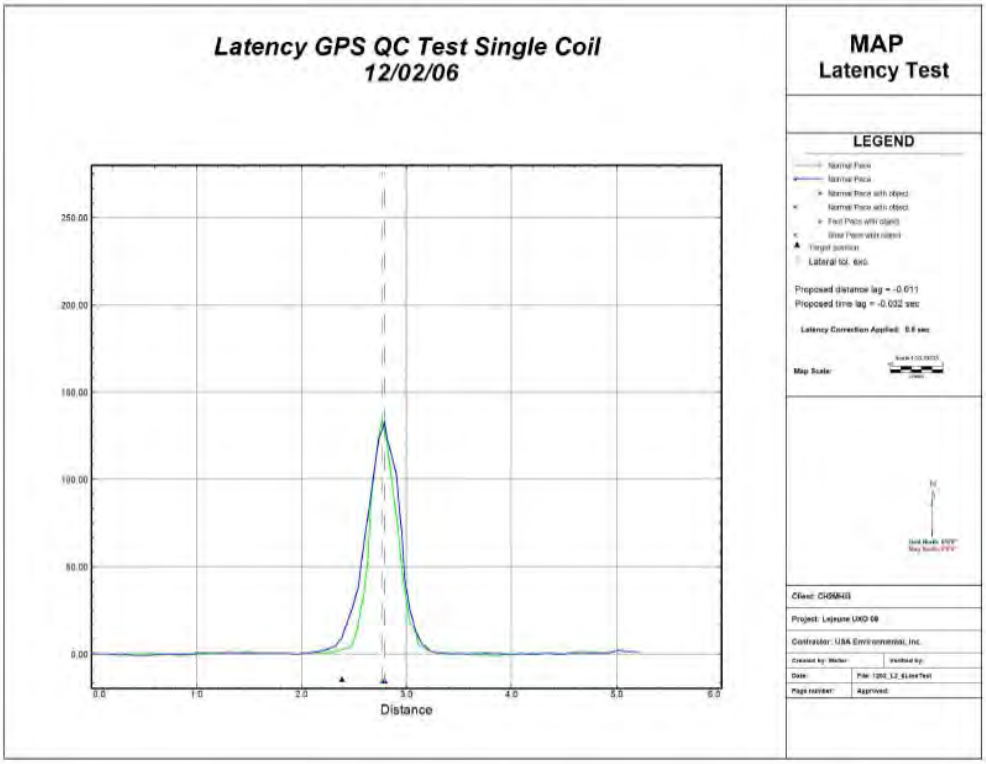

Figure D-3: Example of Single Coil Daily Corrected Latency Test Results

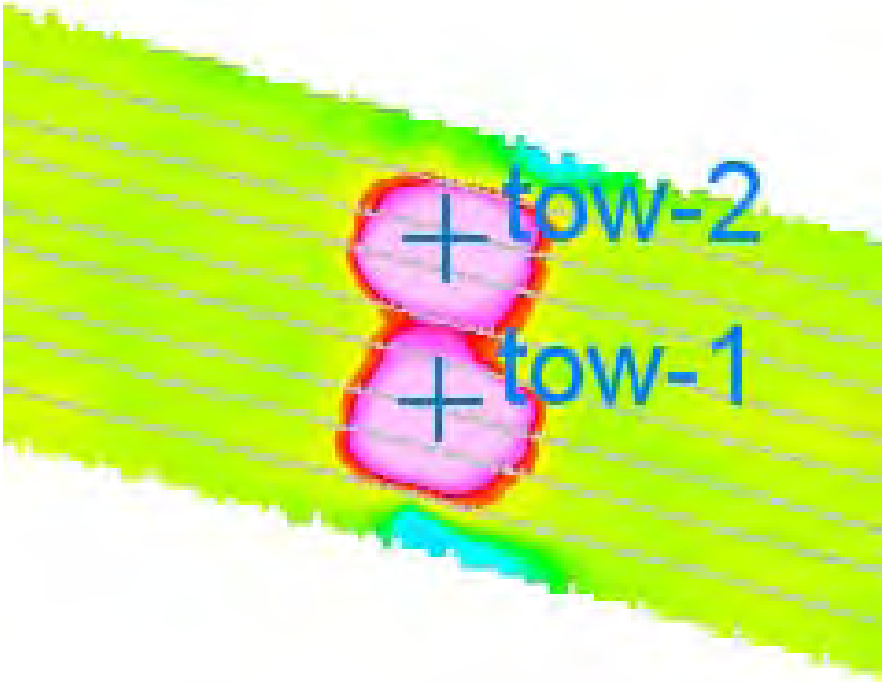

Figure D-4: Example of Towed Array Daily Corrected Latency Test Results

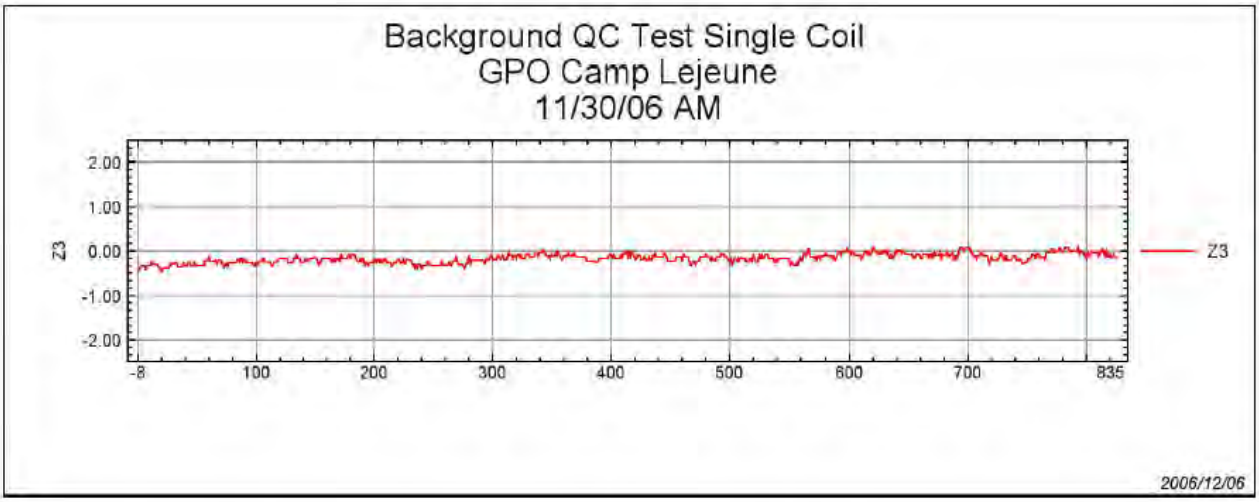

Figure D-5: Example of Single Coil Morning Static Background Test Results

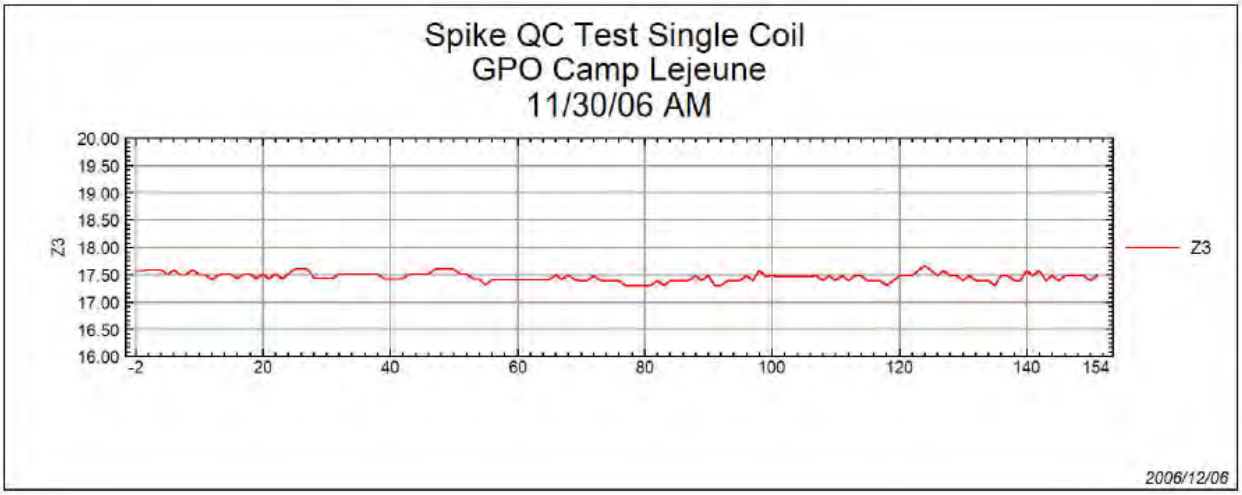

Figure D-6: Example of Single Coil Morning Static Spike Test Results

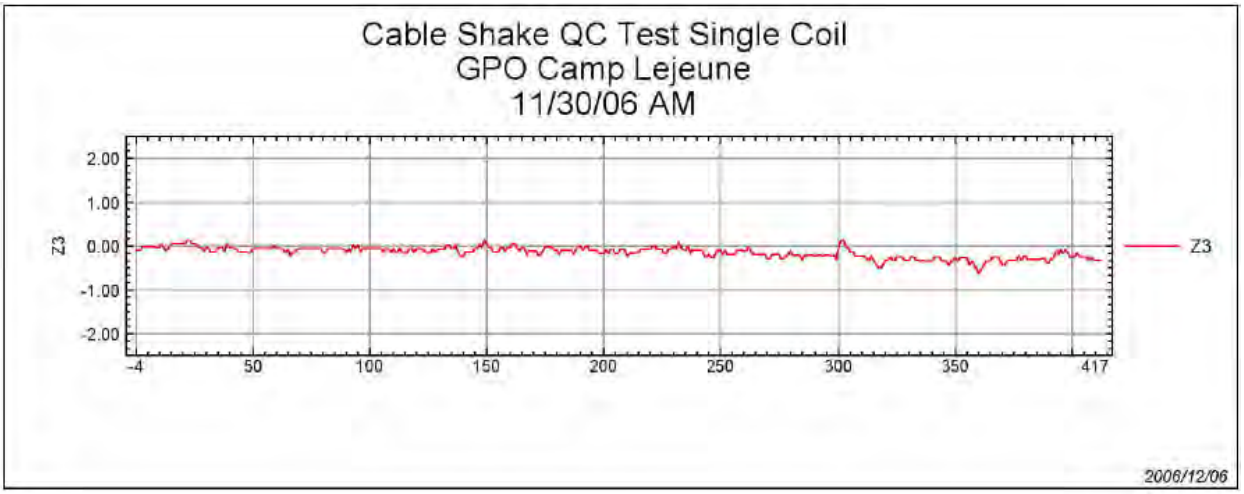

Figure D-7: Example of Single Coil Daily Static Cable Shake Test Results

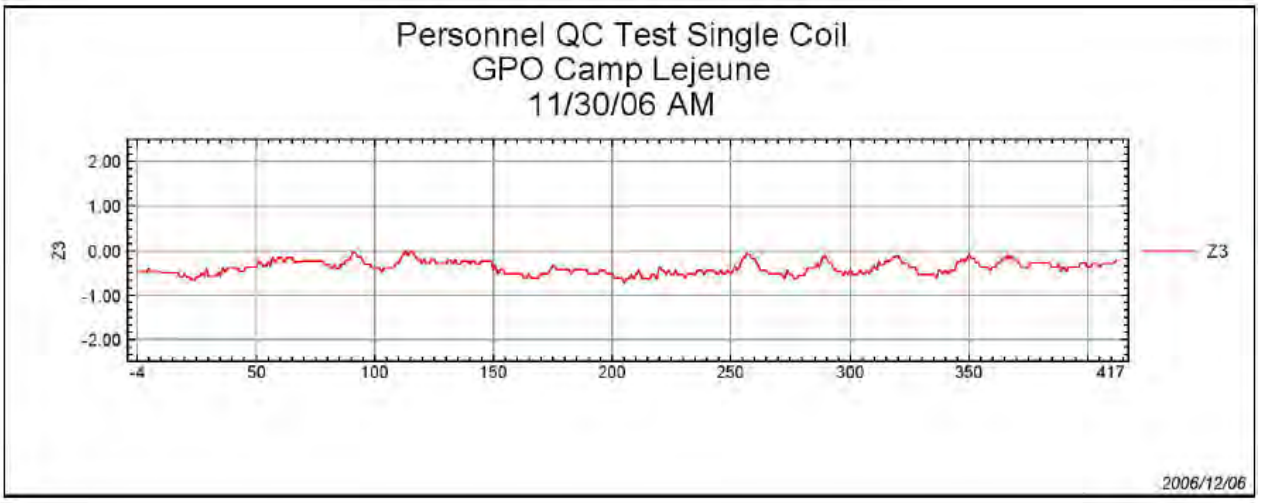

Figure D-8: Example of Single Coil Daily Static Personnel Test Results

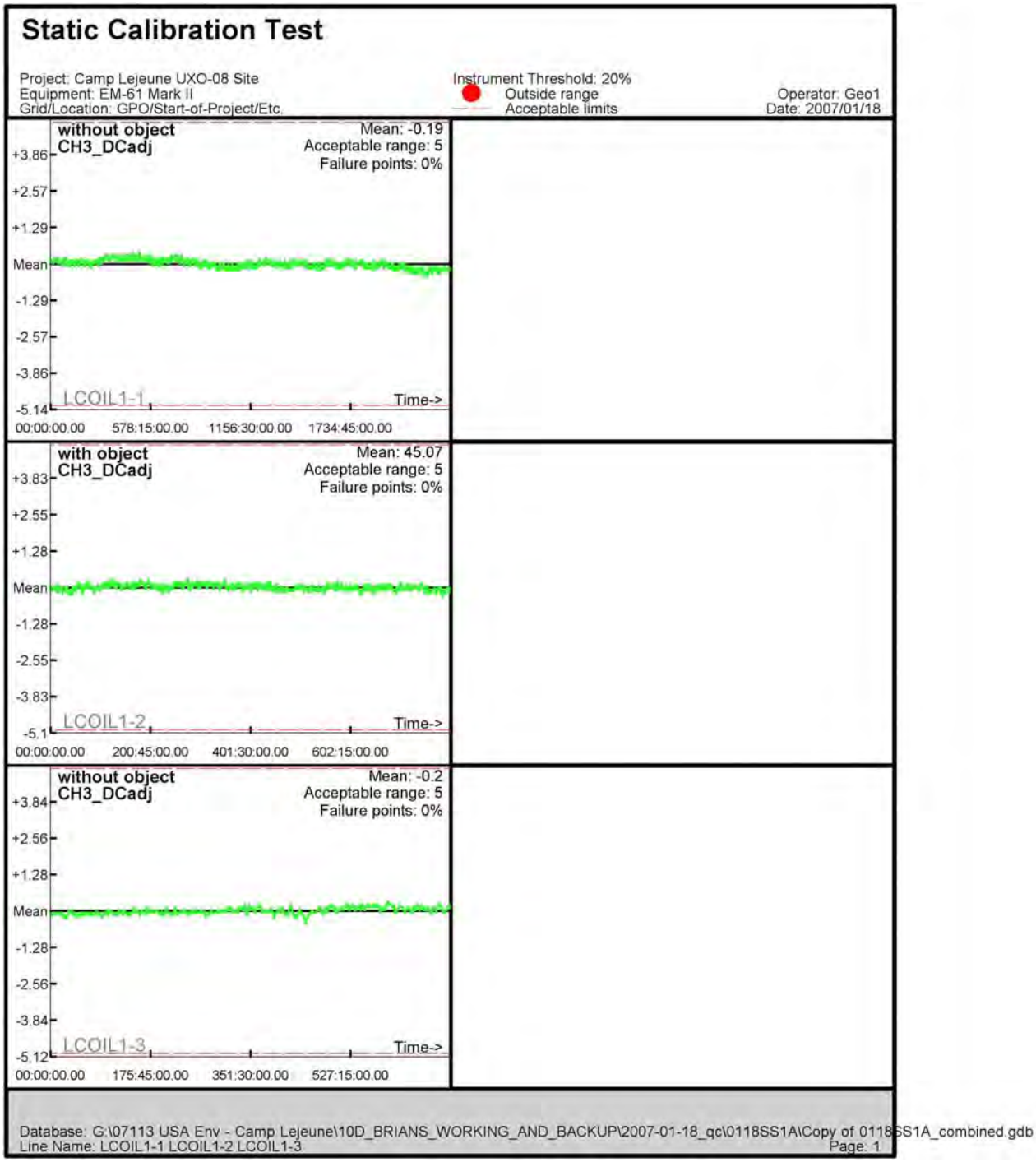

Figure D-9: Example of Towed Array Static Background and Spike Test Results for Coil 1

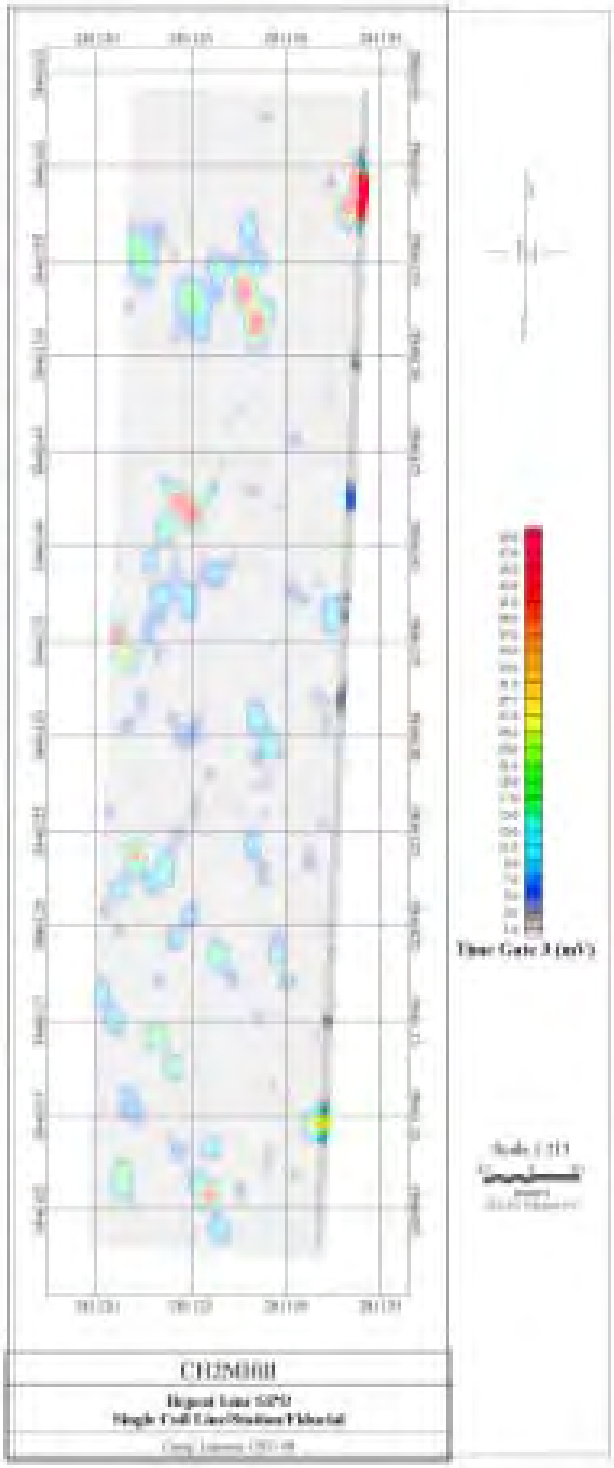

Figure D-10: Example of Single Coil Repeat Test at the GPO

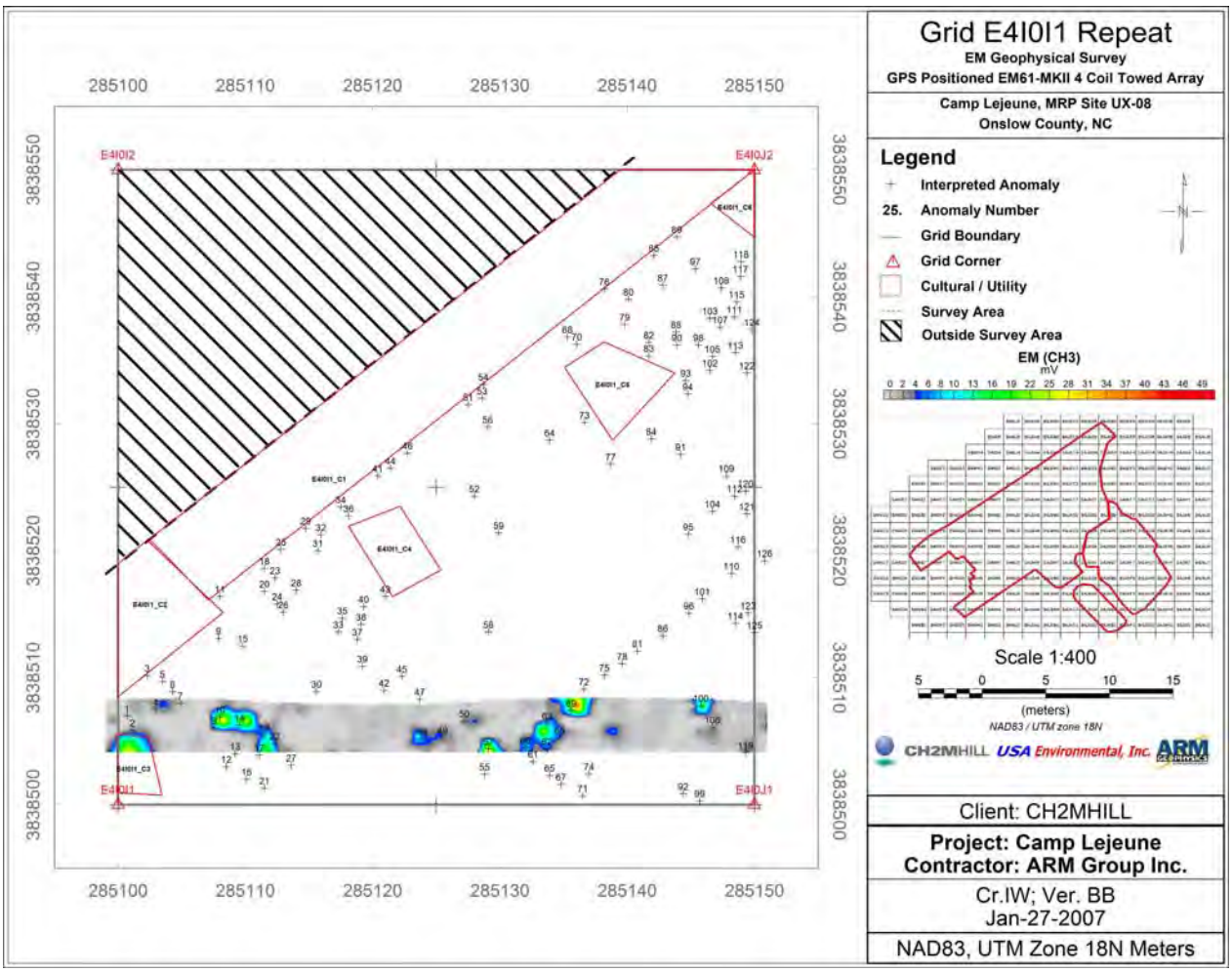

Figure D-11: Example of Towed Array Repeat Test Results

E.0 APPENDIX E – FINAL DATA DELIVERABLES

This appendix will include a DVD of the Final Data Deliverables with the Final Report.

Appendix C-2

GEOPHYSICAL INVESTIGATION REPORT HADNOT POINT CONSTRUCTION AREA, CAMP LEJEUNE

Jacksonville, North Carolina

Prepared for:

CH2MHILL

11301 Carmel Commons Blvd Suite 304
Charlotte, NC 28226

Prepared by:

ARM GEOPHYSICS
Surface & Borehole Services

1129 West Governor Road - P.O. Box 797

Hershey, PA 17033-0797

April 2009

ARM Project 08358

Reviewed by:

Jeff Leberfinger
Vice President of Geophysics

Respectfully submitted,

Jennifer Weller
Staff Geophysicist

April, 2009

Ms. Jessica Skeean
Project Manager
CH2M HILL
11301 Carmel Commons Blvd, Suite 304
Charlotte, NC 28226

Re: Geophysical Investigation Report
CH2M HILL
Hadnot Point Construction Area
Camp Lejeune, Jacksonville, NC
ARM Project 08358

Dear Ms.Skeean:

Following is a report detailing the investigation performed by ARM Geophysics at Hadnot Point Construction Area, Camp Lejeune, Jacksonville, North Carolina.

If you have any questions or need additional information, please do not hesitate to contact the undersigned at 717-533-8600.

Respectfully submitted,
ARM Geophysics

Jennifer N. Weller
Staff Geophysicist

Jeffrey Leberfinger
Vice President of Geophysics

TABLE OF CONTENTS

1.0 INTRODUCTION 6

1.1. PURPOSE OF INVESTIGATION AND SCOPE OF WORK 6
1.2. REPORT ORGANIZATION 6

2.0 SITE BACKGROUND INFORMATION 2

2.1. SITE LOCATION AND DESCRIPTION 2
2.1.1. Hadnot Point Construction Area 2

3.0 GEOPHYSICAL SURVEY METHODS 4

3.1. SENSOR 4
3.2. POSITIONING SYSTEM 4
3.3. GEODETIC LOCATION 4
3.4. SENSOR PLATFORM 5
3.5. MRSIMS 7
3.6. QUALITY CONTROL 7
3.6.1. Equipment / Electronics Warm-up 7
3.6.2. Personnel Test 7
3.6.3. Vibration (Cable Shake) Test 8
3.6.4. Static Background and Static Response (Spike) Test 8
3.6.5. Six Line Test (Start of Project) 10
3.6.6. Two Line Test (Latency Test) 11
3.6.7. Repeat Data 11
3.7. PROJECT DATA QUALITY OBJECTIVES 12

4.0 INSTRUMENT VERIFICATION PROVE-OUT (IVP) 13

4.1. IVP 13

5.0 DGM SURVEY 15

5.1. GENERAL FIELD ACTIVITIES 15
5.2. HADNOT POINT CONSTRUCTION AREA – CAMP LEJEUNE 15
5.2.1. Cultural Features 16

6.0 ANALYSIS OF GEOPHYSICAL DATA 18

6.1. PRE-PROCESSING 18
6.2. PROCESSING 18
6.2.1. Corrections 18
6.2.2. Gridding 18
6.2.3. Target Selection 19
6.2.4. Target Sheets 20
6.2.5. Data QC 22

7.0 SUMMARY OF GEOPHYSICAL SURVEY RESULTS 22

FIGURES

Figure 1 - Aerial Photo of HPCA DGM area: shows topography, vegetation coverage, and grid-system of the 8.5 acre DGM work area. 3
Figure 2 - Grid stake positions in map view. 5
Figure 3 - EM61 operated in wheel mode at HPCA: shows EM61 amplitude data collection in conjunction with wheel incremented fiducial positioning. 6
Figure 4 - Hadnot Point Construction Site: shows trees, debris, vines and cultural features. 6
Figure 5 - Example of static test data from 01/15/2009. Rows, top bottom: Background, Spike, Background data. Columns, left to right: Ch1, Ch2, Ch3 and Ch4. 9
Figure 6 - Example of static test data taken within HPCA DGM area demonstrating site noise. .. 9
Figure 7 - Graphical results from the HCPA six line test. 11
Figure 8- Example of QC Repeat Line: Grid E4J9J4 repeat line overlain on survey data. 12
Figure 9 - Channel 3 response for IVP survey. 14
Figure 10 – Example of marshy, vegetated area which limited collection of DGM data. 16
Figure 11 - Geophysical Coverage Map for Hadnot Point Construction Area. 17
Figure 12 - Target density. Note the presence of pipe lines crossing the survey area. Northern and western boundaries not surveyed due to marshy areas within site boundary – north eastern boundary bounded by chain-link fence. 21

TABLES

Table 1 - Grid stake coordinates (NAD83 UTM 18 North m). 5

Table 2 - Geophysical Instrument Standardization Tests and Acceptance Criteria 7

Table 3 – Channel 3: Static Background and Static Response Test Values. 10

Table 4 – Project Data Quality Objectives 13

Table 5 – Example Digsheet: Note targets 32 and 33 as examples of polygon and Class 2 anomalies respectively. 20

ATTACHMENT

A DVD with the Report, Raw Data, Preprocessed Data, Processed Data, EM61 Response Maps, and Target Lists. A Data Deliverable Map is also provided on the DVD.

ACRONYMS AND ABBREVIATIONS

ARM .....ARM Geophysics
CD .....Compact Disk
DGM .....Digital Geophysical Mapping
DGPS .....Digital Global Positioning System
DQO .....Data Quality Objectives
DVD .....Digital Versatile Disk
EM.....Electromagnetic
EM61.....Geonics EM61-MK2
FTP.....File Transfer Protocol
HCPA .....Hadnot Point Construction Area
IVP .....Instrument Verification Prove-out
.jpg .....JPEG file Format
MCB.....Marine Corps Base
MEC .....Munitions and Explosives of Concern
MPPEH .....Material Potentially Presenting an Explosive Hazard
MRP .....Munitions Response Program
mV.....MilliVolt
NAD .....North America Datum
PM.....Project Manager
QA.....Quality Assurance
QC .....Quality Control
RTK.....Robotic Total Station
SOW.....Scope of Work
TDEM .....Time Domain Electromagnetic System
US .....United States
UTM.....Universal Transverse Mercator
UXO .....Unexploded Ordnance
µs.....Microseconds
*.XYZ .....Geosoft Format Data File

1.0 INTRODUCTION

1.1. Purpose of Investigation and Scope of Work

ARM Geophysics (ARM) has prepared this report for CH2M HILL to present the results of a geophysical investigation performed at Hadnot Point Construction Area, Marine Corps Base (MCB) Camp Lejeune, Jacksonville, NC. The purpose of the investigation was to perform digital geophysical mapping (DGM) across specified grid areas using the Geonics EM61-MK2 electromagnetic instrument in support of Munitions Response Program (MRP) Site Inspections at the base. The scope of work included full (100%) DGM coverage of up to 8.5 acres at the Hadnot Point Construction Area work area, which is within MRP Site UXO-08.

1.2. Report Organization

The following sections of this report have been organized and separated to provide the following site background information (Chapter 2), survey methods (Chapter 3), Instrument Verification Prove-out (IVP) (Chapter 4), DGM survey (Chapter 5), and analysis of geophysical data (Chapter 6). A summary of the results and interpretations of the DGM survey is presented in Chapter 7. A DVD is provided with all raw, pre-processed, and post-processed data, plus any additional deliverables. Lastly, a data and deliverables map is provided in the root directory on the DVD.

2.0 SITE BACKGROUND INFORMATION

2.1. Site Location and Description

Hadnot Point Construction Area (HPCA), MCB Camp Lejeune is located 11 miles southeast of the city of Jacksonville, North Carolina, in Onslow County. The western and northwestern boundaries are approximately along U.S. Route 17 and North Carolina State Route 24, respectively. Specifically, the site is located within Hadnot Point, bound by Louis Road to the southeast, Ash Street to the northeast, East Road to the northwest and athletic fields to the southwest.

2.1.1. Hadnot Point Construction Area

The HPCA encompasses approximately 109 acres. Approximately 29 acres of the site overlap Site UXO-08, which was previously used as a firing location for 2.36-inch bazooka rockets and according to available records was not used as a target area. The specific area of interest for this investigation was the 8.5-acre wooded area located in the southern corner of the Site UXO-08, bordering Louis Road and the recreation fields. The DGM investigation area has a gently sloping terrain and portions are heavily vegetated with trees and thick undergrowth. An aerial photograph showing the boundary of the area of interest, grid-system and surrounding cultural features is provided in Figure 1 (CH2M HILL, 2007).

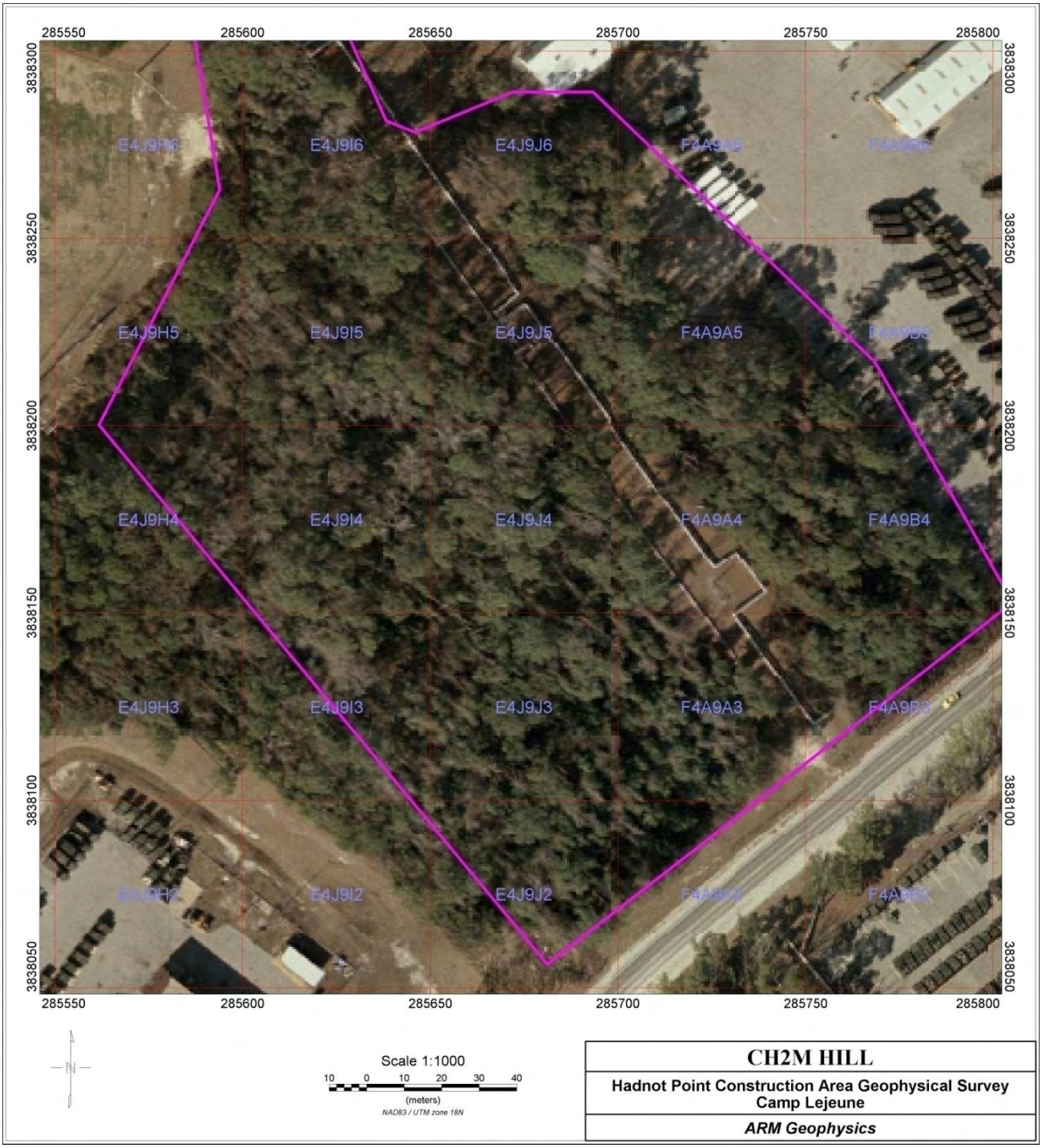

Figure 1 - Aerial Photo of HPCA DGM area: shows topography, vegetation coverage, and grid-system of the 8.5 acre DGM work area.

3.0 GEOPHYSICAL SURVEY METHODS

3.1. Sensor

Geophysical data were collected using a single Geonics EM61-MK2 Electromagnetic system (referred to hereafter as the EM61) set to collect data in '4 channel' mode. The EM61 is a Time Domain Electromagnetic (TDEM) system that generates 150 electromagnetic (EM) pulses per second and measures response during the off time between pulses. After each pulse, secondary EM fields are induced briefly in moderately conductive soils and for a longer time in metallic objects. Between each pulse, the EM61 waits until the response from the conductive earth dissipates and then measures the prolonged buried metal response. This response is recorded in millivolts (mV). By sensing only the buried metal response, the EM61 detects metallic targets that might otherwise be missed. The EM61 measures multiple time gates (216, 366, 660, and 1266 *u*s) to provide a more complete measurement of the response decay rate.

3.2. Positioning System

Due to the vegetated nature of the site the use of DGPS or RTS for positioning was precluded. Therefore, ARM utilized the wheel incremented fiducial positioning method which has an optimal sample interval of 10cm. Fiducial positioning is good for flat wooded terrain and typically provides an accuracy of 0.5m. The coordinate system, which was maintained across the life of the project, was NAD 83, UTM Zone 18 North, meters.

3.3. Geodetic Location

Prior to DGM activities, CH2M HILL's subcontractor reduced vegetation on some of the grids within the area of interest leaving stumps, shrubs, vegetation removal debris and trees larger than 6 inches in diameter that required walking over or around. Reference points were emplaced by a registered land surveyor (RLS) at the southwest corner of each of the grid twenty-five (25), 50m x 50m, grids to allow the field team to identify their location and the data processor to transform the local coordinates into the NAD 83, UTM Zone 18 North datum (Table 1, Figure 2). Coordinates for the grid corner stakes were supplied to ARM by CH2M HILL.

Table 1 - Grid stake coordinates (NAD83 UTM 18 North m).

Point ID	Northing	Easting	Point ID	Northing	Easting
1	3838100	285650	21	3838234.761	285750
2	3838100	285700	22	3838200	285778.269
3	3838150	285650	23	3838161.95	285800
4	3838150	285700	24	3838150	285801.575
5	3838150	285750	25	3838148.775	285800
6	3838150	285800	26	3838109.886	285750
7	3838200	285750	27	3838100	285737.289
8	3838200	285700	28	3838070.998	285700
9	3838200	285650	29	3838093.875	285650
10	3838200	285600	30	3838100	285644.918
11	3838250	285600	31	3838150	285603.428
12	3838250	285650	32	3838154.132	285600
13	3838250	285700	33	3838200	285561.939
14	3838300	285600	34	3838250	285587.221
15	3838300	285587.722	35	3838150	285600
16	3838308.411	285600	36	3838100	285750
17	3838300	285630.009	37	3838300	285650
18	3838279.995	285650	38	3838300	285700
19	3838282.711	285700	39	3838250	285750
20	3838250	285734.126	40	3838200	285800

REF: BENCHMARK REF NORTH CAROLINA GEODETIC NETWORK
JACKSONVILLE CORS
MOREHEAD CITY CORS
CASTLE HAYNE CORS
UTM ZONE 18 NORTH NAD 83 (NSRS 2007) METERS
12/4/2008

Figure 2 - Grid stake positions in map view.

3.4. Sensor Platform

All DGM surveys for the HPCA were collected with the EM61 in 'wheel' mode (Figure 3). Due to the amount of surface debris, cultural obstacles and grid set-up time (Figure 4), the use of a 3-4 person crew was required: one individual to operate the EM61, one individual to assist with navigating the EM61 around surface debris (stumps, roots, trees, cultural features, etc), an individual to record fiducial related data as well as obstacle locations in field notes and a fourth individual to assist with grid set-up. Standard EM61 wheels kept the EM61 coil at a height of 16 inches above the ground surface. The EM61 amplitude data readings were every 10cm along line using an Allegro CX data logger running Geonic's EM61-MKII software. Sample intervals were maintained in order to prevent under-sampling issues, commonly called aliasing, which may limit either the detection of metal items or the accurate co-location of movement around obstacles.

Figure 3 - EM61 operated in wheel mode at HPCA: shows EM61 amplitude data collection in conjunction with wheel incremented fiducial positioning.

Figure 4 - Hadnot Point Construction Site: shows trees, debris, vines and cultural features.

3.5. MRSIMS

All field notes, processing reports, dig sheets and other data reporting considerations were handled within the CH2M HILL Munitions Response Site Information Management System (MRSIMS).

3.6. Quality Control

Standard quality control (QC) procedures and tests were conducted at both the start of the project and daily by means of field testing and checking of the sensor in absence of and against a known test item to ensure correct operation of the equipment. These procedures and tests are listed in Table 2 and summarized below:

Table 2 - Geophysical Instrument Standardization Tests and Acceptance Criteria

Test #	Test Description	Acceptance Criteria	Frequency
01	Equipment Warm-up	Equipment Specific (typically 5 minutes)	beginning of day
02	Personnel Test	<2mv on Ch3, assessed in field	beginning of day
03	Cable Shake Test	<2mv on Ch3, assessed in field	beginning of day
04	Static Background & Spike	+/- 20% of standard item response after background correction	beginning and end of day
05	6 / 2 Line Test	Repeatability of response amplitude +/-20%, positional accuracy +/-20cm	start of project / beginning of day
06	Repeat Lines	Qualitative repeatability of response amplitude	2% of total area surveyed

3.6.1. Equipment / Electronics Warm-up

At the start of each day, or when a new battery was installed, the equipment was switched on and allowed to run for 5 or more minutes to acclimatize to local conditions in order to minimize sensor drift due to thermal stabilization.

3.6.2. Personnel Test

The personnel test was conducted to ensure lack of an EM response from personnel coming in close contact with the sensor platform during DGM operations. Personnel carrying metal items about their bodies could elicit an EM response that may potentially mask real anomalies in the field. The tests were (typically) logged as the 1st line in each

morning's Static Test and were reviewed in profile mode by the data processor in Geosoft Oasis Montaj.

3.6.3. Vibration (Cable Shake) Test

A cable shake test was conducted to identify and replace shorting cables or broken pin-outs on connectors prior to survey data being recorded; in the event that data spikes were observed, cables would have been immediately repaired or replaced. The tests were logged in each morning's Static Test and were reviewed in profile mode by the data processor in Geosoft Oasis Montaj.

3.6.4. Static Background and Static Response (Spike) Test

Static background and static response tests were conducted each day prior to and post DGM activities to quantify instrument background readings, electronic drift, locate potential interference, and determine response and repeatability of the instrument to a standard test item. Improper instrument function and the presence of local sources of ambient noise (such as thunderstorm activity) are potential causes of inconsistent, non-repeatable readings. A minimum of 1-minute static background data (after instrument warm-up) was collected, followed by 1-minute of standard (spike) data against a known object, followed by 1-minute of static background. The operators reviewed the readings to confirm their stability prior to continuing with the geophysical survey; this data was later verified by the data processor in Geosoft Oasis Montaj. Repeatability of the spike test was ensured through use of a jig built to make certain the test item was in the same position relative to the instrument for all tests (Figure 5).

Normally, static background and spike response tests are performed on site; however, due to an unknown background noise source that produced up to a 5 mV response on CH3 unique to the Hadnot Point area, daily static/spike tests were performed off site. Additionally, at the commencement of each mobilization, a static background and response test was performed on site to demonstrate/quantify site noise (Figure 6). Average static and spike values of each AM and PM test were tracked across the project to ensure consistency. To meet Project DQO's spike values for the AM/PM tests had to be within 20% of each other. With the exception of the January 22nd PM static response

test where a 30% increase in static response value was observed (due to incorrect field techniques), no day's spike data varied by more than 10%, with the average being in the order of 3.6% (Table 3).

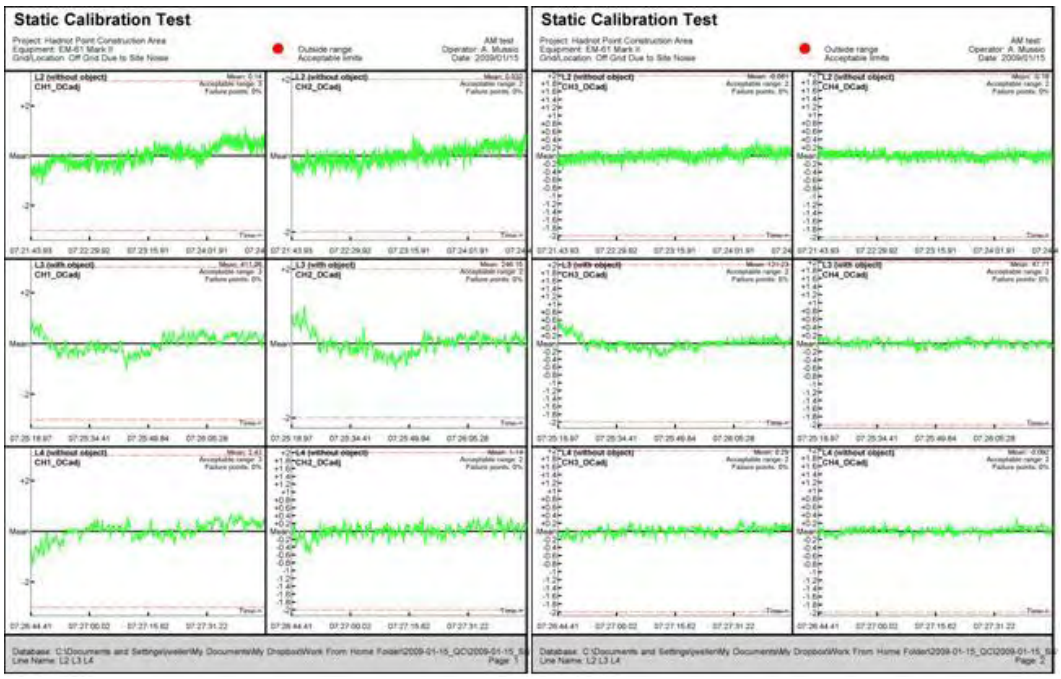

Figure 5 - Example of static test data from 01/15/2009. Rows, top bottom: Background, Spike, Background data. Columns, left to right: Ch1, Ch2, Ch3 and Ch4.

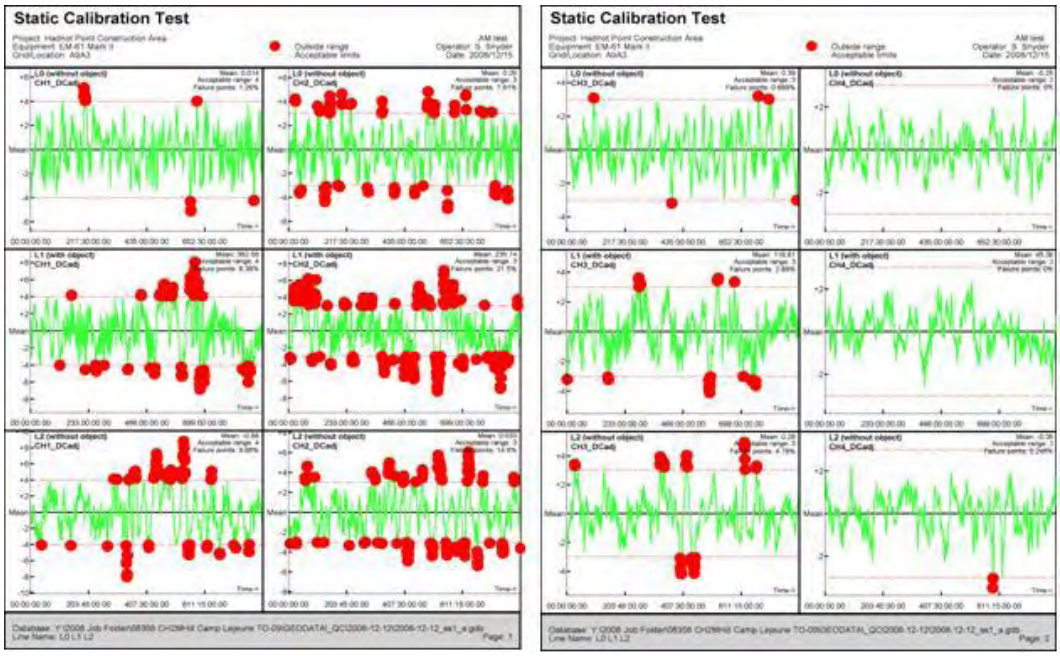

Figure 6 - Example of static test data taken within HPCA DGM area demonstrating site noise.

Table 3 – Channel 3: Static Background and Static Response Test Values.

Date	AM BG Value	AM Spike Value	AM BG Value	PM BG Value	PM Spike Value	PM BG Value	Percent Diff	Lat Corr
12/10/08	-0.0045	116.62	0.32	0.017	115.6	0.24	0.87%	3.25 fids
12/11/08	Stand-by due to inclement weather.							
12/12/08	0.067	117	0.21	0.067	115.84	0.17	0.99%	3 fids
12/13/08	No data collection - weekend.							
12/14/08	No data collection - weekend.							
12/15/08	0.07	117.11	-0.025	-0.09	115.8	0.11	1.12%	2 fids
12/16/08	-0.069	116.7	1.21	0.065	117.2	0.39	0.43%	2.5 fids
12/17/08	0.12	117.49	0.24	0.19	115.15	0.35	1.99%	1.5 fids
12/18/08	0.19	115.89	0.045	0.29	117.61	0.28	1.48%	2 fids
Demob								
01/14/09	0.15	118.12	-0.056	-0.13	118.19	-0.19	0.06%	5 fids
01/15/09	-0.061	121.23	0.29	-0.018	116.33	0.37	4.04%	8 fids
01/16/09	-0.24	123.03	0.15	0.13	124.7	0.36	1.36%	8 fids
01/17/09	No data collection - weekend.							
01/18/09	No data collection - weekend.							
01/19/09	-0.092	122.13	-0.15	-0.018	118.52	-0.075	2.96%	7.5 fids
01/20/09	0.19	121.94	0.89	0.21	123.26	0.45	1.08%	5 fids
01/21/09	0.39	123.67	0.9	0.22	124.25	0.45	0.47%	9 fids
01/22/09	-0.18	123.21	-0.46	0.032	160.19	0.46	30.01%	9 fids
*Note: AM spike values on 01/19 and 01/21 have single anomolous spike.								
						Average:	3.61%	5

3.6.5. Six Line Test (Start of Project)

A six line test was conducted prior to the commencement of DGM surveying in order to document lag / latency of the navigational system, repeatability of response amplitude to a standard test object, and positional accuracy (Figure 7). This test was performed in an area relatively clear of anomalous response. The test line (60 feet) was marked to facilitate data collection over the same trajectory for each section of the test:

Line 1 – Positive direction, normal survey pace, no test item

Line 2 – Negative direction, normal survey pace, no test item

Line 3 – Positive direction, normal survey pace, test item in place at 30 feet

Line 4 – Negative direction, normal survey pace, test item in place at 30 feet

Line 5 – Positive direction, faster than normal survey pace, test item in place at 30 feet

Line 6 – Negative direction, slower than normal survey pace, test item in place at 30 feet

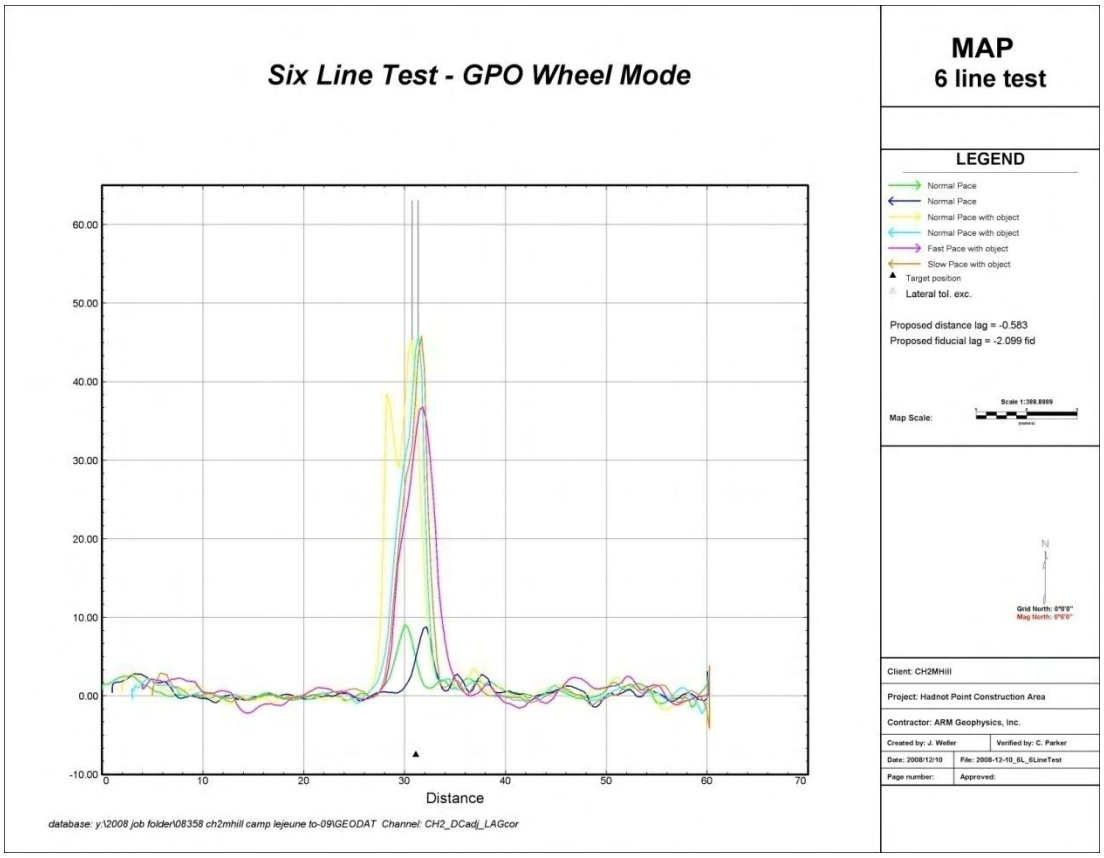

Figure 7 - Graphical results from the HCPA six line test.

3.6.6. Two Line Test (Latency Test)

An abbreviated form of the six line test (comprising lines 3 and 4 from section 3.6.5) was conducted each day to document lag/latency.

The average latency applied to the survey data was 5 fiducial readings (Table 3). This value was applied to each day's latency test data and adjusted if necessary to correct for the actual latency, with the resultant latency value being used to correct that day's data. The test was evaluated in Geosoft using the profile view.

3.6.7. Repeat Data

Approximately 2% of each grid was recollected as a QC repeat in order to document the ability of the system to respond consistently and to verify the positional accuracy of the data. Targets selected from the original and repeat data sets were overlain to qualitatively assess repeatability (Figure 8).

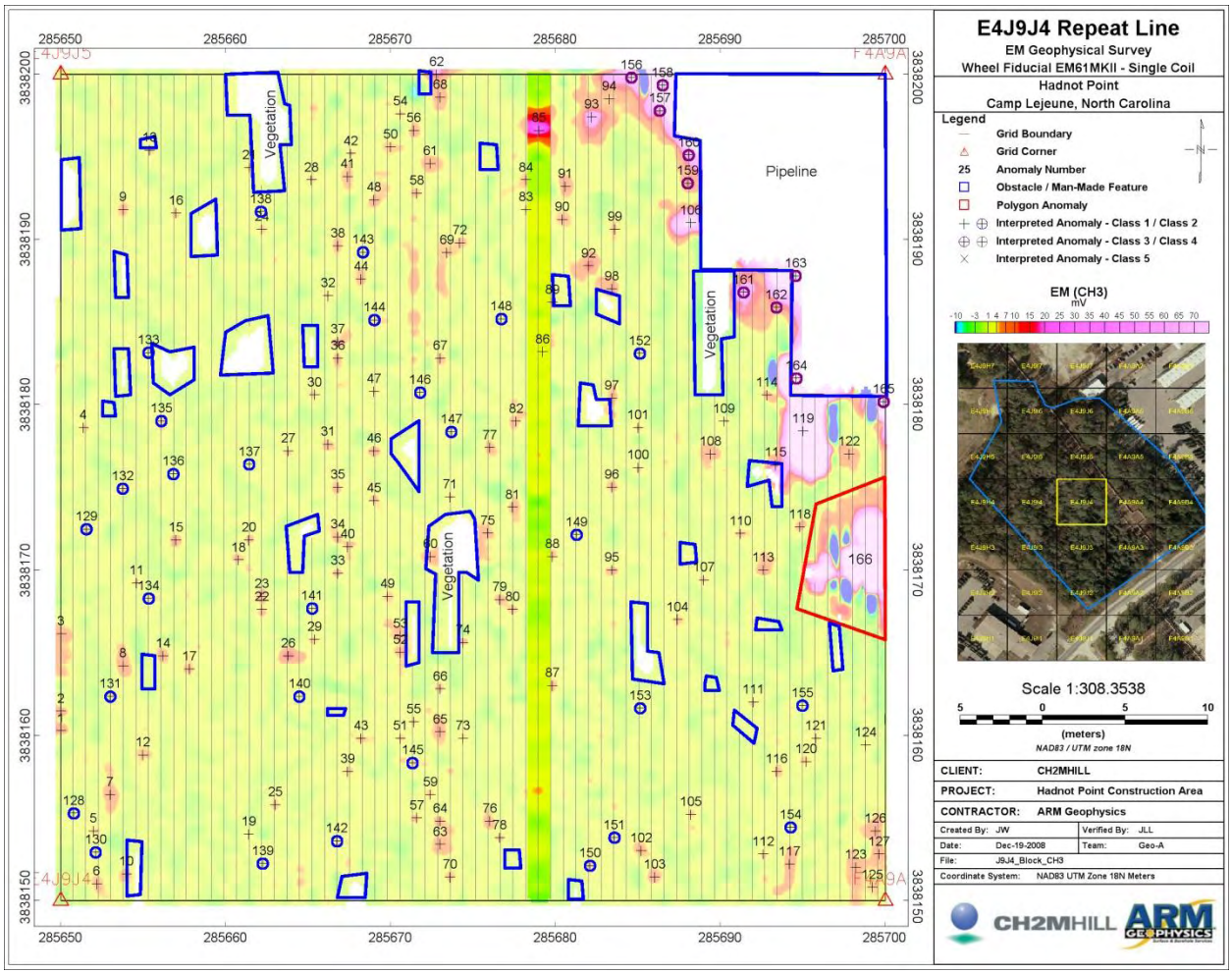

Figure 8- Example of QC Repeat Line: Grid E4J9J4 repeat line overlain on survey data.

All Quality Control raw data by date, preprocessed data by date and processed data by date are provided on the attached DVD.

3.7. Project Data Quality Objectives

The primary objective of the project was to identify metallic anomalies in the HPCA DGM area that may represent MEC or MPPEH. The specific Data Quality Objectives (DQO's), measurement performance criteria and test methods that were used during the project are summarized in Table 4, from the IVP Plan, all measureable DQO's outlined for the HPCA DGM area were met.

Table 4 – Project Data Quality Objectives

Data Quality Objective	Measurement Performance Criteria	Test Method During GPO and DGM
General System Functioning		
Repeatable data are being obtained from DGM system.	Response to standardized item will not vary more than ±20%.	Results of QC Tests will be evaluated to ensure compliance.
DGM Surveys		
DGM survey system can generally detect MEC to depths of 11*diameter. (Excluding smaller items such as 20mm projectiles.) (Depth is to top of the item.)	Sensor to identify MEC items of 20mm or larger diameter (or their surrogates in the GPO) at depths fitting within the detection depth equation.	Verify that: All of the seed items fitting within the detection depth equation have anomalies selected from the DGM surveys within 1m (3.3ft) of a point on the surface above the item.
Downline data density is sufficient to detect MEC items.	Over 98% of possible sensor readings are captured along a transect. In addition, any transect containing a data gap of 0.6m (2ft) or greater does not meet the DQO.	Results of DGM surveys will be evaluated to ensure compliance. Statistics were calculated in Geosoft and entered into the MRSIMS database system
Coverage over survey area is sufficient to detect MEC items.	Search transect spacing to vary no more than ±20% of spacing specified in sampling design.	Results of DGM surveys with various systems will be evaluated to ensure compliance.
Positioning of detected anomalies is accurate.	95% of all anomaly locations (as shown on the dig sheets) lie within a 1m (3.3ft) radius of a point on the ground surface directly above the source of the anomaly.	Anomalies selected will be compared with known seed item locations to ensure compliance.
Data Handling		
All data must be delivered in a timely manner and in a useable format.	Data packages are completed and delivered to the CH2M HILL Project Geophysicist within 1 working day of data collection (for the GPO) and 3 days for raw DGM data; 5 days for processed DGM data.	Evaluate based on actual delivery of data

4.0 Instrument Verification Prove-out (IVP)

4.1. IVP

ARM utilized the pre-existing IVP (dimensions of 50 ft x 200 ft) established by CH2M HILL in the Knox Park Area of Camp Lejeune for the purposes of testing the function of the geophysical

equipment and determining target pick thresholds for the site. Figure 9 below shows the EM61 response on channel 3.

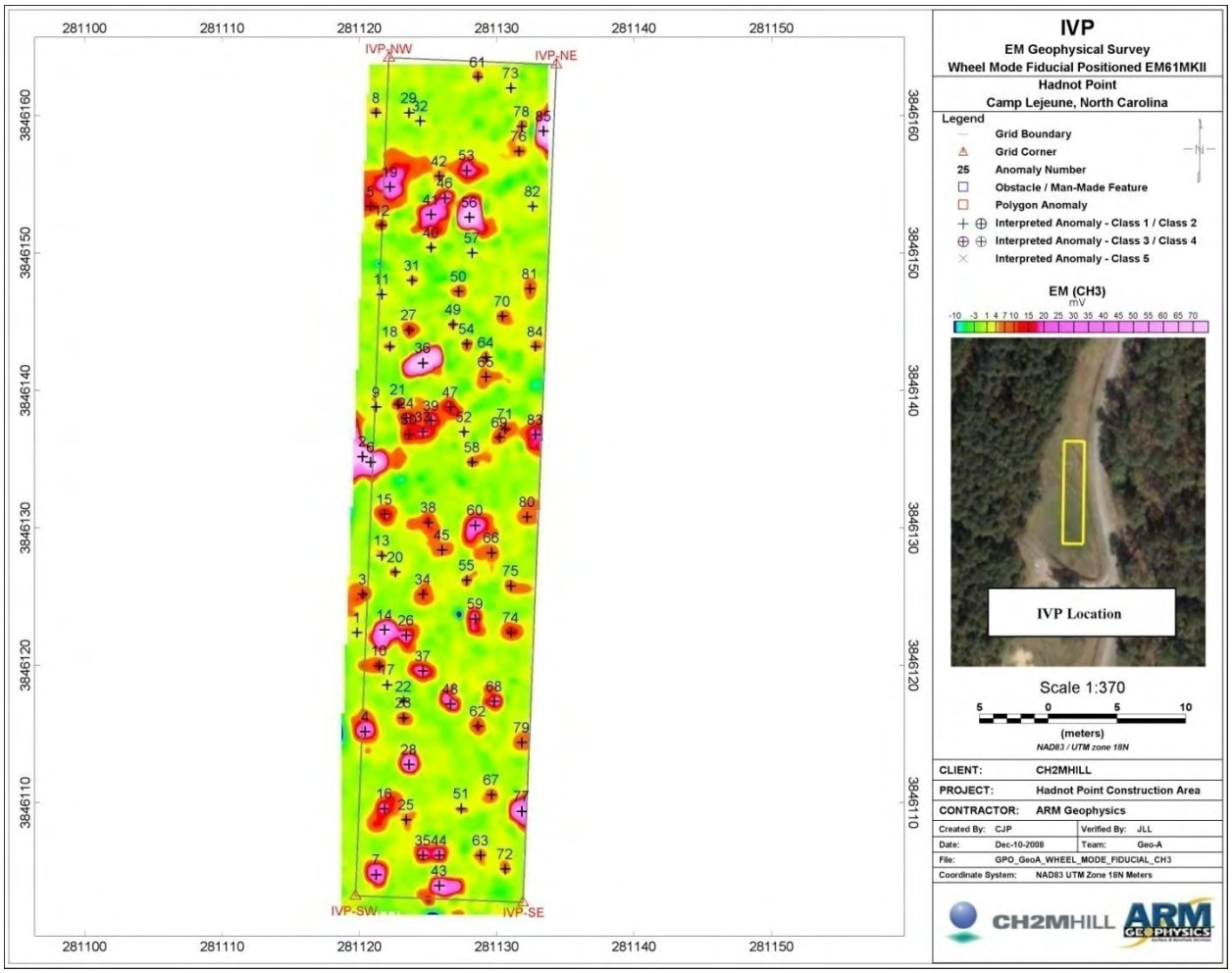

Figure 9 - Channel 3 response for IVP survey.

IVP data collection took place on December 10th and 11th. Verbal go-ahead was given to commence DGM by the onsite CH2M HILL representative following the IVP survey, pending analysis of the data. Processed data was submitted to CH2M HILL the following day, December 12th, and after discussion, the target threshold for picking anomalies on channel 3 (660µs time gate) was initially set at 3mV due to the low noise threshold at the IVP (i.e.; any anomaly in the gridded data of channel 3 with an amplitude of 3mV or higher would be picked and classified as an anomaly for intrusive investigation).

5.0 DGM SURVEY

5.1. General Field Activities

ARM initially mobilized two personnel to the HPCA site on December 8, 2008; a site geophysicist and a geophysical data collector. However, due to the complexity of the site and the demands of grid set-up and note taking as well as the fact that RTS was eliminated as a positioning option due to the vegetated nature of the site, ARM mobilized two additional geophysical data collectors to the HPCA on December 14, 2008. Data collection commenced following the GPO survey on the 12th of December and continued until the first demobilization on the 18th of December. At the time of the first demobilization parts of 7 individual grids had been collected and a total of 2.6 acres of DGM surveying had been completed.

On January 13, 2009 ARM re-mobilized four personnel to complete DGM surveying of the site. Data collection commenced on January 14th and continued until the completion of DGM surveying on January 22nd, 2009 at which time all ARM personnel demobilized from the site. Upon completion of DGM activities all accessible areas of 19 grids within the HPCA DGM area had been surveyed for a total of 6.2 acres of DGM coverage.

QC tests as described in Table 2 were completed and reviewed at the beginning and end of each day. The DQO's for down line sampling and coverage were also checked and recorded by the site's data processor. Field data sheets were filled out on the CH2M HILL MRSIMS GeoXT handheld devices and the data downloaded into the MRSIMS laptop interface. Raw EM61 data was uploaded to the CH2M HILL FTP site each evening.

5.2. Hadnot Point Construction Area – Camp Lejeune

The HPCA DGM area consists of twenty-five (25) 50 meter x 50 meter consecutive grids covering a total area of 8.5 acres. CH2M HILL had brush cut portions of the survey area to facilitate man-portable EM61 DGM. A number of factors, including the presence of cultural features, lack of complete vegetation removal, marshy areas within the survey area and complex

grid set-up resulted in an average collection rate of 0.52 acres per day. A map showing the coverage and response of the EM61 on CH3 is shown below in Figure 10.

In a number of grids, E4J9J6 and E4J9I3 for instance, the lack of vegetation removal and marshy features impacted the data collection such that parts of the grids in question were not collectable (Figure 10). However, the data collected and presented represents the sum total of surveyable area in the grids.

Figure 10 – Example of marshy, vegetated area which limited collection of DGM data.

5.2.1. Cultural Features

The presence of underground utilities at the HPCA DGM area was presumed to be likely at the start of the project and was verified by DGM surveys. Linear anomalies that most probably represented underground utilities were present in grids F4A9A5, F4A9A4 and A4A9A3 (Figure 10). Additionally, an area of very dense, high amplitude anomalies can be seen along the northeastern edge of the collection area (edge of area is coincident with a chain-link fence). The extent and density of the anomalies may indicate the presence of buried conductive fill or other such cultural feature. The density of these anomalies is such that saturation occurs – whereby individual anomalies cannot be separated out from one another. Above ground pipes (probably steam) run through the center of the site from approximately the southeast corner of grid F4A9A3 to the southwest corner of grid E4J9J6, the presence of which is clearly visible in the data (Figure 11).

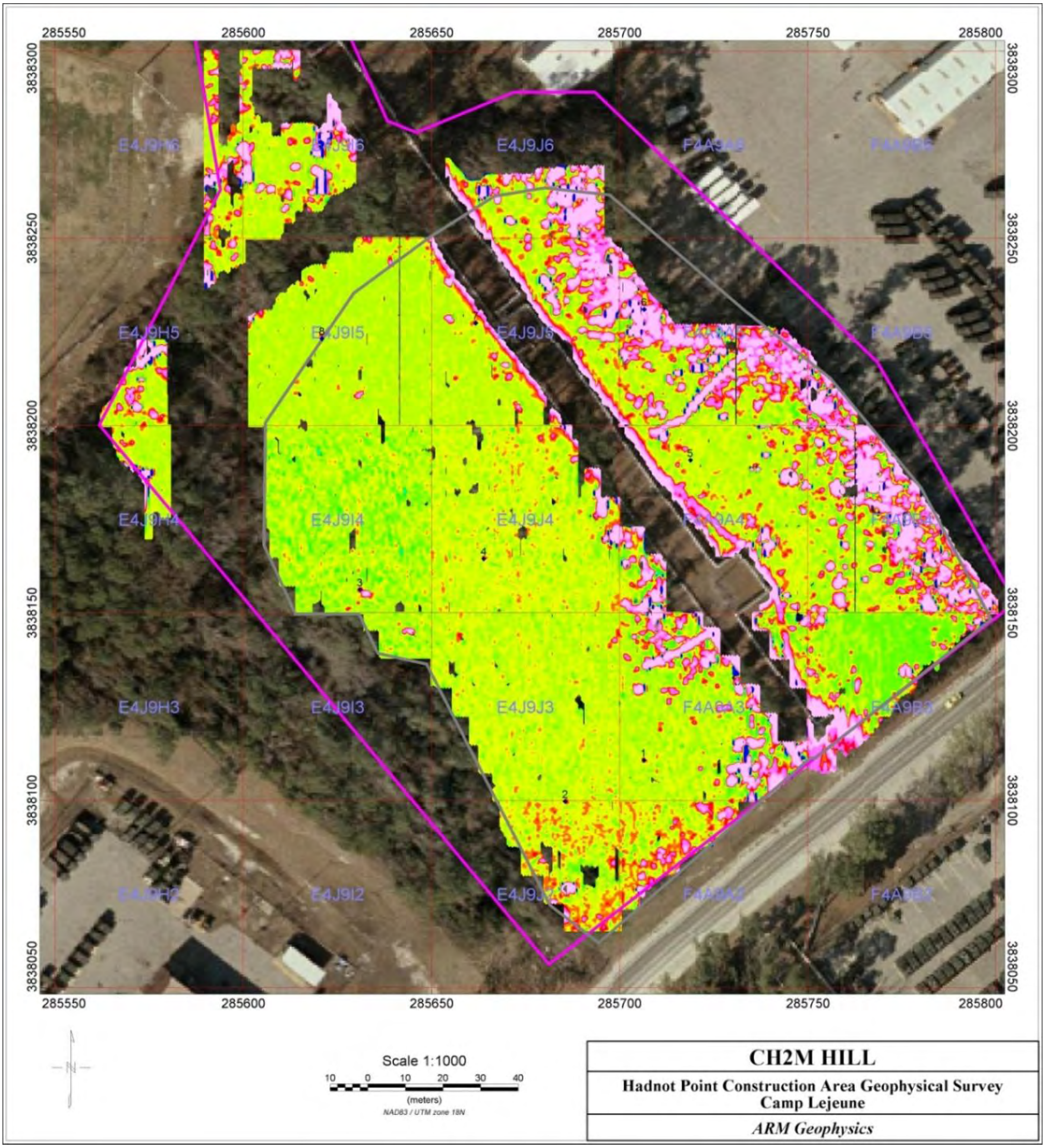

Figure 11 - Geophysical Coverage Map for Hadnot Point Construction Area.

6.0 ANALYSIS OF GEOPHYSICAL DATA

All data was directly transferred from the Allegro CX field computer to the Hershey office, either via e-mail or FTP, for pre-processing and processing at the end of each work day.

6.1. Pre-Processing

Pre-processing consisted of utilizing Geonics DAT61 MK2 software to convert the raw *.R61 files into *.M61 files, assign positions and export an XYZ data file. The XYZ data file contained the EM response values, time of collection and local coordinate information.

6.2. Processing

6.2.1. Corrections

Upon importing the data into Geosoft, corrections were made to account for instrument drift and sensor / positioning system latency. The data was viewed in profile (x = fid, y = EM response) and Geosoft's non-linear drift filter applied. The drift filter applied to the data varied depending on the noise level seen in the data (as discussed previously HPCA DGM data exhibited high levels of noise; up to 5 mV on channel 3). In addition to the UX-Detect drift filter, aggressive hand-filtering was applied to some of the data sets to minimize these noise effects. In some cases a long window length was applied and up to 70% of the highest values were rejected due to the high concentration of conductive material (i.e. steam pipes and underground utilities) across large areas of the site causing substantial artificial EM lows to appear, flanking real EM highs at other filter settings. Additional manual corrections were applied in areas of high anomaly density to the filtered data to ensure no target responses were degraded due to the effects of the filter.

Latency correction was applied as described in 3.6.6

6.2.2. Gridding

Channel 3 data was gridded in Geosoft using the Minimum Curvature method with a cell size of 0.2m and a blanking distance of 0.6m.

The gridded data was then masked to individual grids (with a buffer zone around each grid to avoid missed or double-picked anomalies between grids) and displayed in map format with line paths overlain to visually inspect for gaps. Gaps that were a result of trees, shrubs, cultural features, etc were designated on all maps as blue polygons.

6.2.3. Target Selection

Targets were selected using Geosoft's UX-Detect module. The targets were selected based upon the response and characteristics of the anomaly. Four discrete classes were established.

- Class One: All anomalies >5mV on CH3 with a metal like response.
- Class Two: All anomalies > 3mV but < 5mV on CH3 with a metal like response.
- Class Three: Anomalies associated with utilities.
- Class Four: Anomalies with a strong response (>5mV) on CH3 but with interference on other channels.

All anomalies on Ch3 above 5mV were automatically picked; the data was then visually inspected both in map view and in profile view. Anomalies in class two were added manually due to the large amount of noise at the site introducing anomalies between 3mV and 5mV on CH3. All selected targets were then overlain on the gridded data and extra targets added, moved or removed as necessary. Areas of high anomaly density, such that the response merged into clusters (such as in the case of pipe lines), had individual targets removed and their boundaries outlined within the context of each individual grid as 'target polygons'.

Overall there were 1,512 single anomaly picks and 43 polygon picks across the 6.2 acres of gridded data. An overview of relative target density can be seen in Figure 12. Of note, the area between the eastern boundary and the first set of pipelines is characterized by the cluttering of anomalous responses that were interpreted, and represented, as several large

polygons due to the fact that a large percentage of these grids were saturated with anomalies around the grid edges.

6.2.4. Target Sheets

Target sheets containing the attributes of each picked target in a given grid were generated in the CH2M HILL MRSIMS standard format (Table 5). Amplitude reflects the instrument response on CH3.

Table 5 – Example Target Sheet: Note targets 32 and 33 as examples of polygon and Class 2 anomalies respectively.

ID	GRIDCELLI	X1	Y1	X2	Y2	X3	Y3	X4	Y4	TYPE	AMPLITUD	UNITS
1	E4J9H6	285589.6	3838298	0	0	0	0	0	0	1	22.6	mV
2	E4J9H6	285590.2	3838251	0	0	0	0	0	0	1	59.1	mV
3	E4J9H6	285590.3	3838290	0	0	0	0	0	0	1	20.7	mV
4	E4J9H6	285590.4	3838252	0	0	0	0	0	0	1	52.2	mV
5	E4J9H6	285591	3838255	0	0	0	0	0	0	1	94.4	mV
6	E4J9H6	285591.2	3838291	0	0	0	0	0	0	1	40.6	mV
7	E4J9H6	285591.3	3838294	0	0	0	0	0	0	1	25.1	mV
8	E4J9H6	285591.4	3838286	0	0	0	0	0	0	1	34.4	mV
9	E4J9H6	285592	3838281	0	0	0	0	0	0	1	36.7	mV
10	E4J9H6	285592.2	3838251	0	0	0	0	0	0	1	8.8	mV
11	E4J9H6	285592.4	3838282	0	0	0	0	0	0	1	27.5	mV
12	E4J9H6	285592.7	3838300	0	0	0	0	0	0	1	22.4	mV
13	E4J9H6	285592.8	3838253	0	0	0	0	0	0	1	35	mV
14	E4J9H6	285592.8	3838288	0	0	0	0	0	0	1	27.7	mV
15	E4J9H6	285592.8	3838294	0	0	0	0	0	0	1	110.8	mV
16	E4J9H6	285592.8	3838298	0	0	0	0	0	0	1	19.3	mV
17	E4J9H6	285593	3838285	0	0	0	0	0	0	1	30.2	mV
18	E4J9H6	285593.4	3838256	0	0	0	0	0	0	1	6.5	mV
19	E4J9H6	285595	3838253	0	0	0	0	0	0	1	6.2	mV
20	E4J9H6	285595.8	3838255	0	0	0	0	0	0	1	17.9	mV
21	E4J9H6	285596.4	3838257	0	0	0	0	0	0	1	25.4	mV
22	E4J9H6	285596.4	3838277	0	0	0	0	0	0	1	10.1	mV
23	E4J9H6	285597	3838279	0	0	0	0	0	0	1	7	mV
24	E4J9H6	285597.2	3838278	0	0	0	0	0	0	1	19.9	mV
25	E4J9H6	285598	3838250	0	0	0	0	0	0	1	12.3	mV
26	E4J9H6	285598.2	3838257	0	0	0	0	0	0	1	34.5	mV
27	E4J9H6	285599.4	3838292	0	0	0	0	0	0	1	49.6	mV
28	E4J9H6	285599.5	3838285	0	0	0	0	0	0	1	52.9	mV
29	E4J9H6	285599.5	3838287	0	0	0	0	0	0	1	31.6	mV
30	E4J9H6	285599.5	3838278	0	0	0	0	0	0	1	6	mV
31	E4J9H6	285599.6	3838258	0	0	0	0	0	0	1	20.8	mV
32	E4J9H6	285595	3838256	0	0	0	0	0	0	2	4.6	mV
33	E4J9H6	285599.9	3838276	285592.8	3838269	285593.9	3838263	285599.9	3838260	1	999	mV

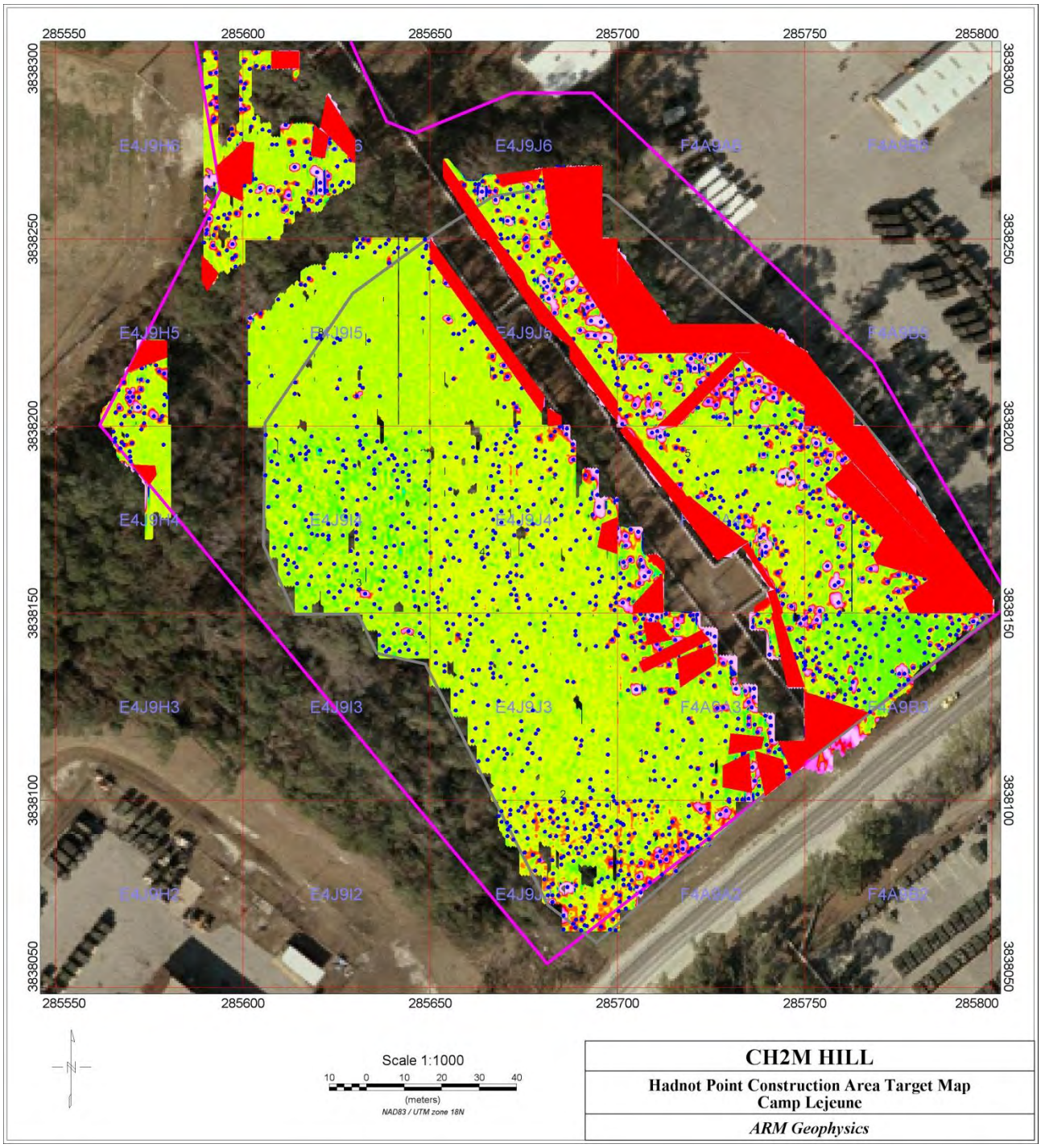

Figure 12 - Target density. Note the presence of pipe lines crossing the survey area. Northern and western boundaries not surveyed due to marshy areas within site boundary – north eastern boundary bounded by chain-link fence.

6.2.5. Data QC

In addition to viewing the data in profile mode for the purposes of visual QC, a number of standardized QC methods were applied to the data:

- Sample separation analysis to ensure majority of data points had a separation of <0.2m. This was done using the UX-Process QA/QC Sample Separation tool as well as analyzing individual data points plotted in map view.
- Time separation analysis to inspect for data skips and gaps etc

The EM responses of interpreted peak anomaly (target) locations were analyzed for:

- Tau (τ), with decay curve plotted as in-database profile
- Signal to Noise ratio (S/N) for targets that failed based on the decay curve

7.0 SUMMARY OF GEOPHYSICAL SURVEY RESULTS

ARM mobilized personnel to Hadnot Point Construction Area, Camp Lejeune on December 13th. Parts of 19 grids were surveyed using an EM61 MK2 in wheel mode for a total DGM coverage of 6.2 acres. The field team demobilized from site on January 22nd.

Data was processed at ARM's office in Hershey, PA where 1,512 single anomaly picks and 43 polygon anomalies were identified based upon a 5mV threshold on CH3. Data was uploaded to the CH2M HILL FTP site and targets imported into MRSIMS during the course of the project.

ROOT CAUSE ANALYSIS (RCA) & CORRECTIVE ACTION PLAN (CAP)

FOR

Field Data Collection and Office Data Processing Procedures pertaining to missed blind seed item

AT

Hadnot Point Construction Area Camp Lejeune, NC

1.0 BACKGROUND

ARM Geophysics (ARM) was informed by CH2MHill on Feb 13th, 2009 that blind seed item number five located in grid E4A9A4 had not been selected as a target.

ARM informed CH2M HILL via email that the preliminary investigation revealed that the error was not a result of processing but a result of possible errors in data collection, detailed below in the following Root Cause Analysis.

2.0 ROOT CAUSE ANALYSIS (RCA)

Upon receiving notification that the geophysical survey at the Hadnot Point Construction Area missed one seed item, ARM tabulated a list of possible factors to investigate in an attempt to determine the cause of the detection failure. Potential factors resulting in the QC failure include:

- EM61 did not pass over the item.
- Data processing filtering removed the anomaly from the data set.
- Fiducial data positioned incorrectly.
- Item seeded deeper than specified.
- Surveyed coordinates of seed item are incorrect.

ARM has reviewed the data set and specifically the lines associated with the seed item. From the data, ARM cannot comprehensively identify any reason that would cause the seed item to be missed. In the investigation, ARM reviewed:

- The positioning of the grid and the possibility that individual lines within the grid were reversed.
- The warping/translation of the grid from local coordinates to real world coordinates
- The filtering of the data and the possibility the filtering degraded the seed items response.
- Sample separations and down line sample density.

ARM performed further investigations to determine the standard response of the seed item. Part number 44615K466 was ordered from McMaster-Carr. ARM buried the seed item at a depth of 7 inches in an E/W orientation near the ARM office in Hershey, PA. A number of ten foot long lines were performed in a N/S direction over the item at various offsets. ARM has determined from these results that the seed item at stated depth should have been detected if the data was collected in accordance with the data quality objectives outlined in the work plan.

Below are examples of the data collected during the ARM trials:

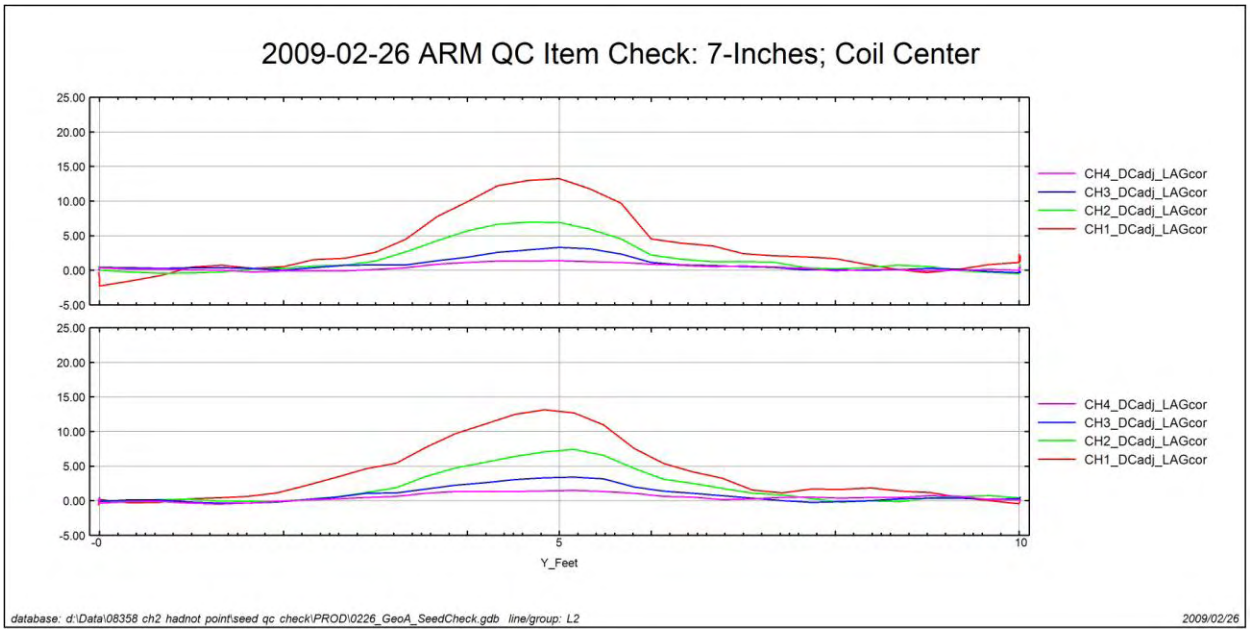

Figure 1 EM61 pass over seed item. Depth 7 inches, E/W orientation, Center of EM61 coil

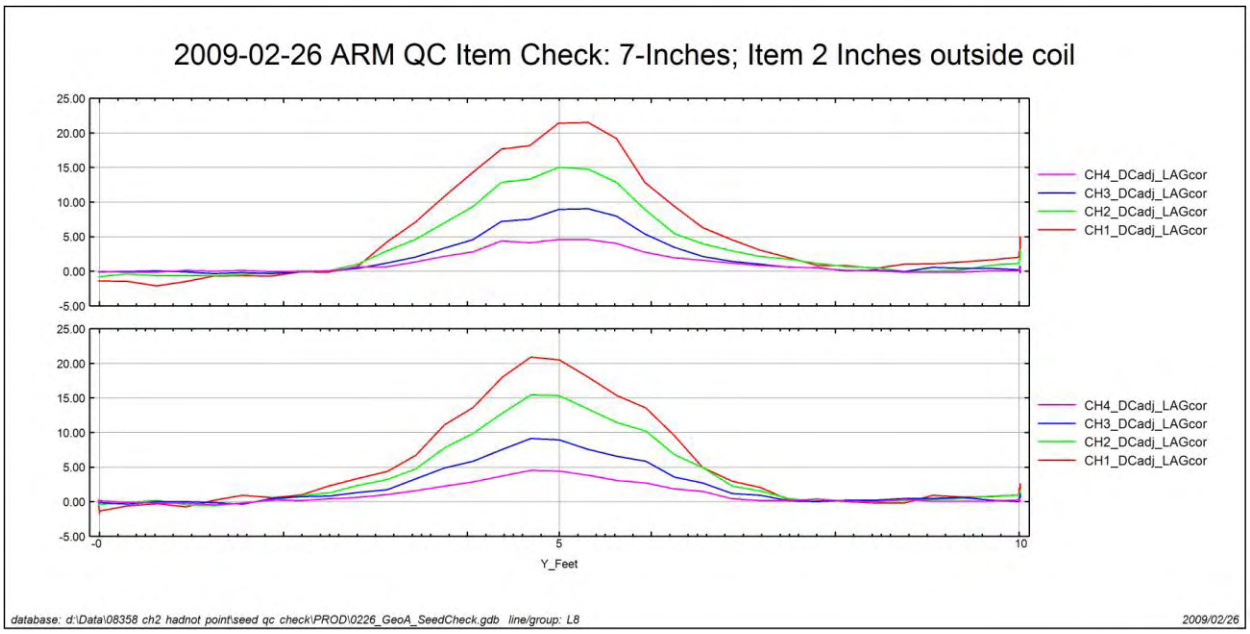

Figure 2 EM61 pass over seed item. Depth 7 inches, E/W orientation, 2 inches outside EM61 coil

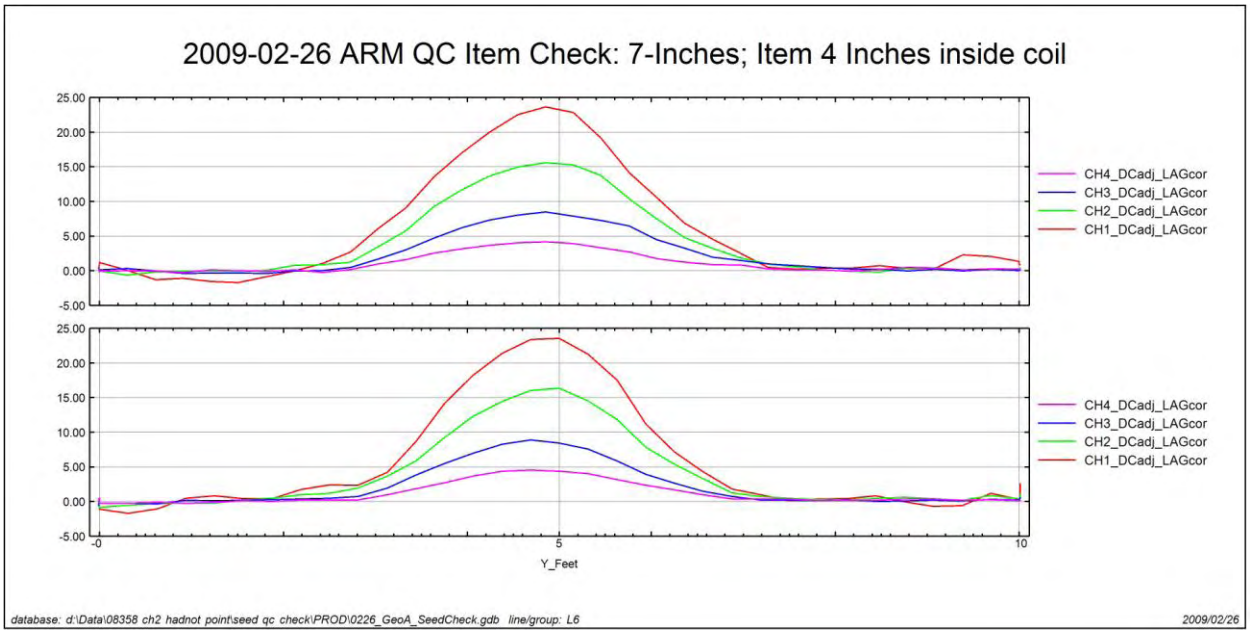

Figure 3 EM61 pass over seed item. Depth 7 inches, E/W orientation, 4 inches inside of coil

At this point, ARM cannot definitively state the exact cause of the failure. The corrective action plan (CAP) below identifies ARM's proposed plan to correct for the failure of detection of QC seed #5.

3.0 CORRECTIVE ACTION PLAN (CAP)

ARM proposes a three stage response to correct for the failed detection of QC seed #5.

Stage one will consist of ARM or a CH2M Hill approved contractor mobilizing to the Hadnot Point construction site and attempting to reacquire the seed item. The field team will reacquire the target using tape measures from the north-east and north-west corners of the grid. If the item responds to a detectable level (in excess of 3mV on CH3) on the EM-61, the field team will move on to stage two of the response plan.

Stage two will consist of the field team surveying approximately half of the Geophysical Prove-Out (GPO) in order to verify the equipment is functioning correctly. This data will be processed and submitted to CH2M Hill for approval.

Stage three will commence after ARM has reviewed the GPO data and is confident that it will be approved by CH2M Hill. The field team will commence a partial recollect of the grid E4A9A4. The field team will initially recollect 9 lines of data. This will range from 50ft-70ft from the S/W corner. ARM will process this data to confirm the seed item has been detected.

Assuming the seed item is detected and positioned within DQO requirements, the field team will be instructed to complete recollecting the grid. The full grid with then be fully processed and a new deliverable set generated and supplied to CH2M Hill.

4.0 SUMMARY

ARM Geophysics (ARM) has provided a background, Root Cause Analysis, and Corrective Action Plan relating to the missed seed item at the Hadnot Point construction site.

ARM will take measures based on the outcome of the Corrective Action Plan (CAP) to ensure no other seed items are missed in the future. ARM Standard Operating Procedures (SOP's) will be updated with new checks and/or procedures to ensure future fiducial data collected meets all required DQO's.

ROOT CAUSE ANALYSIS (RCA) & CORRECTIVE ACTION PLAN (CAP)

FOR

Field Data Collection and Office Data Processing Procedures pertaining to inappropriate field computer setting

AT

Hadnot Point Construction Area, Camp Lejeune

1.0 BACKGROUND

While reviewing data for Hadnot Point Construction Area (HPCA) on April 1st, 2009, ARM Geophysics (ARM) discovered that data collected on the final day of the project (January 22nd, 2009) had inadvertently been recorded using the „High Power" option in the „Logger Setup" menu of the data collection program, EM61MK2 on the Allegro CX field computer. At this time ARM immediately reviewed all *.R61 files across the life of the project and determined that only a single days worth of data was affected, January 22nd.

ARM subsequently informed CH2M HILL of this potential issue and of their preliminary findings via email on April 1st, 2009, detailed below in the following Root Cause Analysis.

2.0 ROOT CAUSE ANALYSIS (RCA)

In attempting to resolve a discrepancy noticed in the final Static Response Test collected on January 22nd, whereby the percent difference in the morning and afternoon spike value approached 50% , ARM discovered that the header of file 0122SS2.R61 was set to EM61HP2 as opposed to EM61MK2 (Table 1, Figure 1).

This finding prompted ARM to check all *.R61 across the life of the HCPA project and verify that the only date affected by the aberrant setting was January 22nd, 2009. Discussions with the field team and review of field notes from that date showed that a new Allegro CX field computer had been put into operation that day. Despite checking the standard Allegro settings before field operations began, the „High Power" option in the Logger Setup menu was overlooked. At the time, the field crew was unaware of the significance of this particular option in the „Logger Menu" and noting no issues in the morning QC tests commenced with data collection.

Data from January 22nd was delivered to ARM"s home office in Hershey, PA via file transfer protocol (FTP) on the evening of January 22nd and the field team demobilized the morning of the 23rd. The data was subsequently processed as normal, and with the exception of the single aberrant static spike result, appeared similar in nature to the rest of the data collected at HPCA.

Table 1: Channel 3 Static Background and Static Response Test Values

Date	AM BG Value	AM Spike Value	AM BG Value	PM BG Value	PM Spike Value	PM BG Value	Percent Diff	Lat Corr
12/10/08	-0.0045	116.62	0.32	0.017	115.6	0.24	0.87%	3.25 fids
12/11/08	Stand-by due to inclement weather.							
12/12/08	0.067	117	0.21	0.067	115.84	0.17	0.99%	3 fids
12/13/08	No data collection - weekend.							
12/14/08	No data collection - weekend.							
12/15/08	0.07	117.11	-0.025	-0.09	115.8	0.11	1.12%	2 fids
12/16/08	-0.069	116.7	1.21	0.065	117.2	0.39	0.43%	2.5 fids
12/17/08	0.12	117.49	0.24	0.19	115.15	0.35	1.99%	1.5 fids
12/18/08	0.19	115.89	0.045	0.29	117.61	0.28	1.48%	2 fids
Demob								
01/14/09	0.15	118.12	-0.056	-0.13	118.19	-0.19	0.06%	5 fids
01/15/09	-0.061	121.23	0.29	-0.018	116.33	0.37	4.04%	8 fids
01/16/09	-0.24	123.03	0.15	0.13	124.7	0.36	1.36%	8 fids
01/17/09	No data collection - weekend.							
01/18/09	No data collection - weekend.							
01/19/09	-0.092	122.13	-0.15	-0.018	118.52	-0.075	2.96%	7.5 fids
01/20/09	0.19	121.94	0.89	0.21	123.26	0.45	1.08%	5 fids
01/21/09	0.39	123.67	0.9	0.22	124.25	0.45	0.47%	9 fids
01/22/09	-0.18	123.21	-0.46	0.16	183.6	0.65	49.01%	9 fids
*Note: AM spike values on 01/19 and 01/21 have single anomolous spike.						Average:	5.07%	5

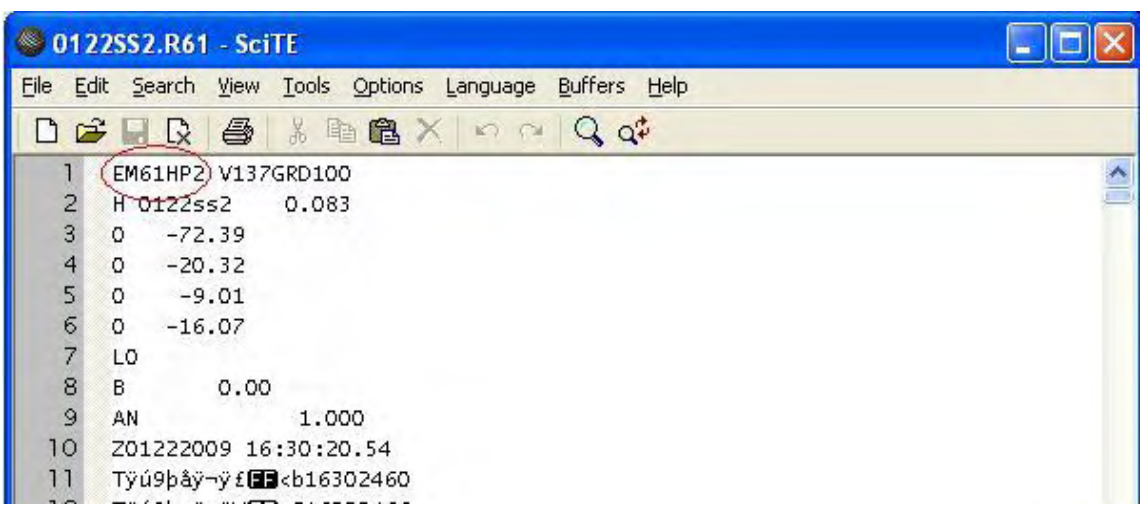

Figure 1: Static Response Test from January 22nd, 2009 showing High Power setting in 0122SS2.R61 file header.

As the Static Response Test values for the 22nd were not immediately compared with prior day"s results the anomalously large response went initially unnoticed. Later, when the anomalous Static Response Test was noted the data processor made an initial review of the data to ensure proper procedures had been followed for processing Static QC Tests. The raw .XYZ and related .M61 files were then reviewed; noting that the response showed up in the „raw" data, and being unaware of the potential issue involving the „High Power" vs. „Standard" logging options, the data processor assumed that that response was from an external source such as change in configuration of the spike item or introduction of an additional noise source by the EM61 operator. Additionally, gridded data for DGM surveys collected on the 22nd compared favorably with data collected on prior days (Figure 2). At the time of composing the final report, the issue involving the anomalous Static Response Test was again broached and at this time the *.R61 files were reviewed and the incorrect „High Power" heading noted for all files collected on January 22nd. These files included all QC tests performed on the 22nd, with the exception of the AM Static/Spike test, as well as DGM surveys for grids E4J9I6 and E4J9H6 in their entirety and the north-east portion of grid E4J9H5 (the balance of this grid had been collected the previous day, January 21st).

In retrospect a number of issues contributed to ARM not pin pointing the change in Allegro settings from „High Power" mode to „Standard" mode:

(1) The introduction of a new Allegro CX field computer on the final day of data collection in conjunction with the field team being unaware that the above setting needed to be reviewed prior to data collection.

(2) Site specific background conditions (noise) unique to HPCA had produced similar anomaly decay patterns where Ch1, Ch2 < Ch3 in previous days data collected in „Standard Mode", as well as the fact that gridded data collected with the „High Power" setting looked very similar qualitatively to all previous data collected at HPCA (Figure 2) . Due to the similarity of DGM data and target decay patterns collected on the 22nd with prior data, the data processor did not realize a problem existed and proceeded per normal assuming that any problems from field equipment would be reflected as a new source of noise and be readily apparent.

(3) The data processor being unaware of the potential for change in Allegro settings and thereby not realizing the *.R61 files should be checked both periodically throughout the project as well as when trying to ascertain the underlying issue with the anomalous Static Response Test.

(4) Finally, that the only indication of a potential problem occurred on the final QC test on the final day of the project thereby leading the data processor to believe that incorrect field techniques were the likely cause of the anomalous Static Response result.

The software developer has confirmed that the header in the raw *.R61 files can be manually changed from high power to standard format, and that the subsequent conversion in Dat61 to *.m61 format would yield the correct relative values for each channel. Given this path forward, all affected headers for data collected on January 22nd were corrected. Additionally, ARM noted that part of the reason survey data collected under „High Power" mode compared qualitatively

with survey data collected in „Standard" mode is that the „High Power" option appears to: (1) under-report the values of Ch1 and Ch2 with respect to those collected in „Standard" and (2) over-report the values of Ch3 and Ch4. As data from HPCA was gridded using Ch3, and due to a documented +/- 5mV noise source unique to this site, anomalies appeared to be well represented (in fact, some anomalies were over represented on Ch3 due to the incorrect setting) (Figure 3). The effect is also more apparent in higher amplitude anomalies.

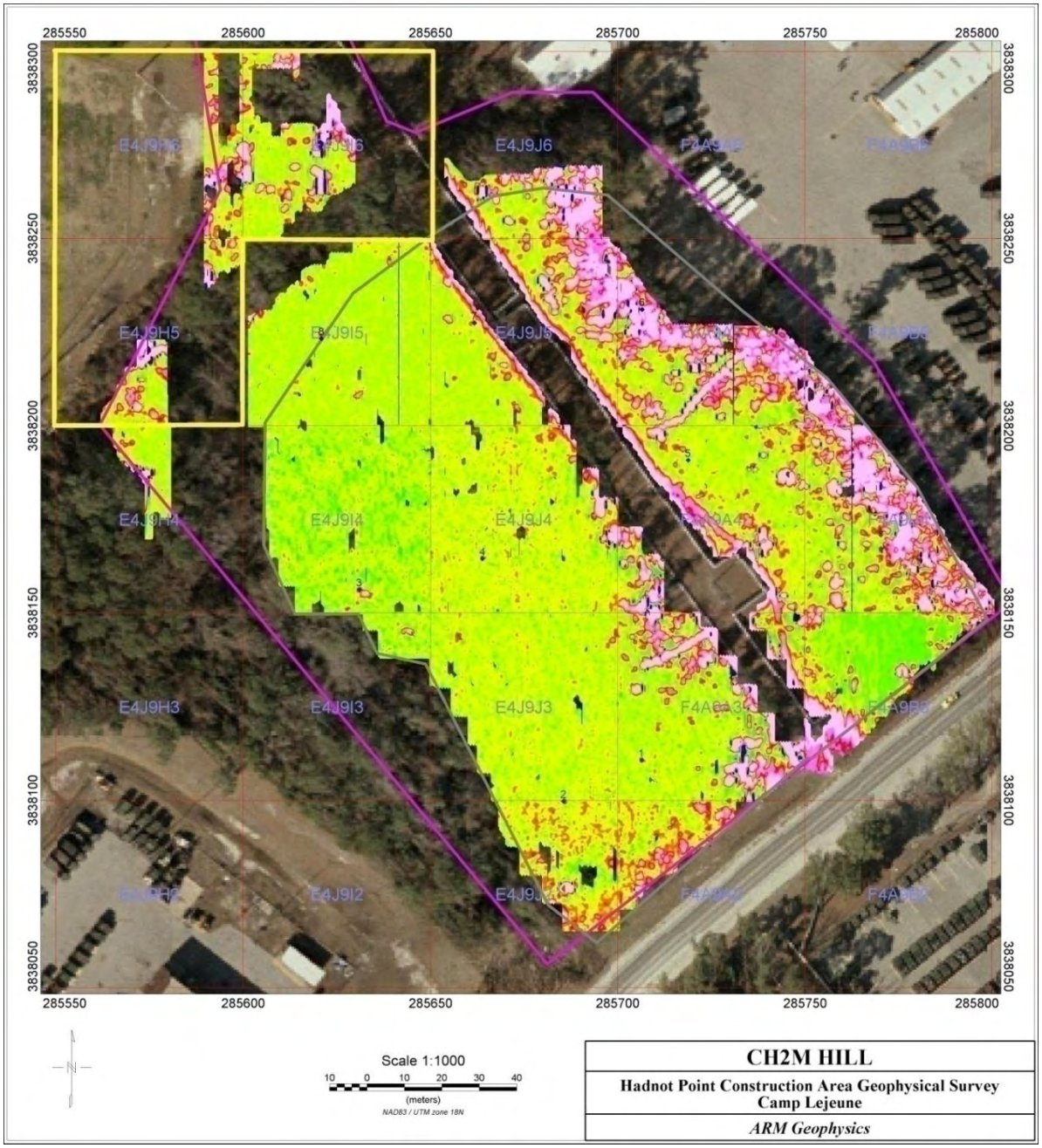

Figure 2 – Gridded Ch3 data for entire HPCA site. All grids to same scale and color scale. The area outlined in yellow was collected on January 22nd with High Power setting. Notice similarity to rest of site.

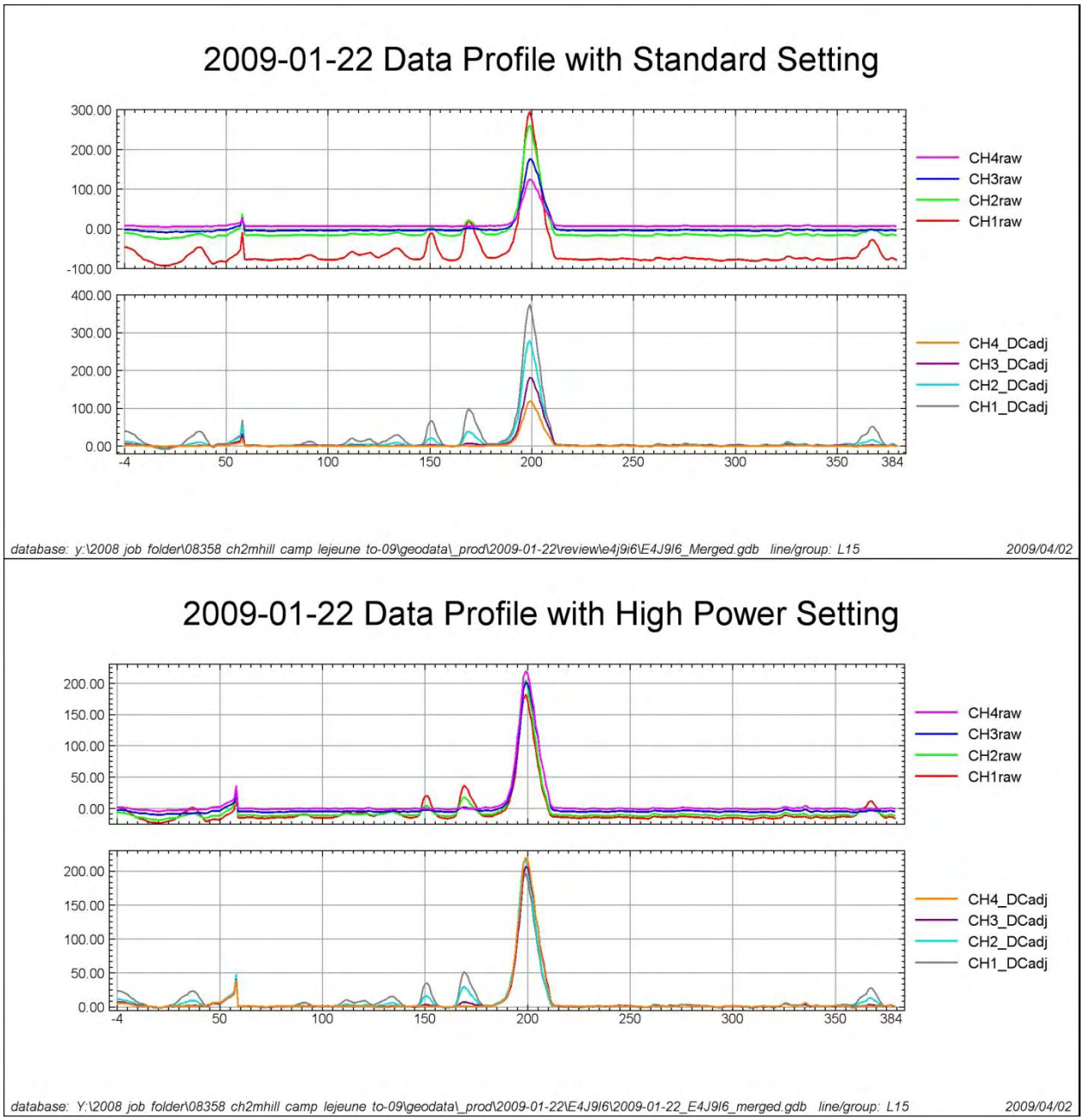

Figure 3: Line 15 from grid E4J9I6 showing response using 'High Power' mode vs. 'Standard Mode'. Note that the 'High Power' setting lowers values on channels 1 and 2 but increases response on channels 3 and 4. Effect is more apparent for higher amplitude anomalies.

On discovery of the problem, data for grid E4J9I6 (this grid being the largest single grid by area affected) was immediately re-processed to assess the extent of the issue and the corrected gridded data with target selections qualitatively compared to the original data processed using the incorrect „High Power" setting (Figure 4). The result of this

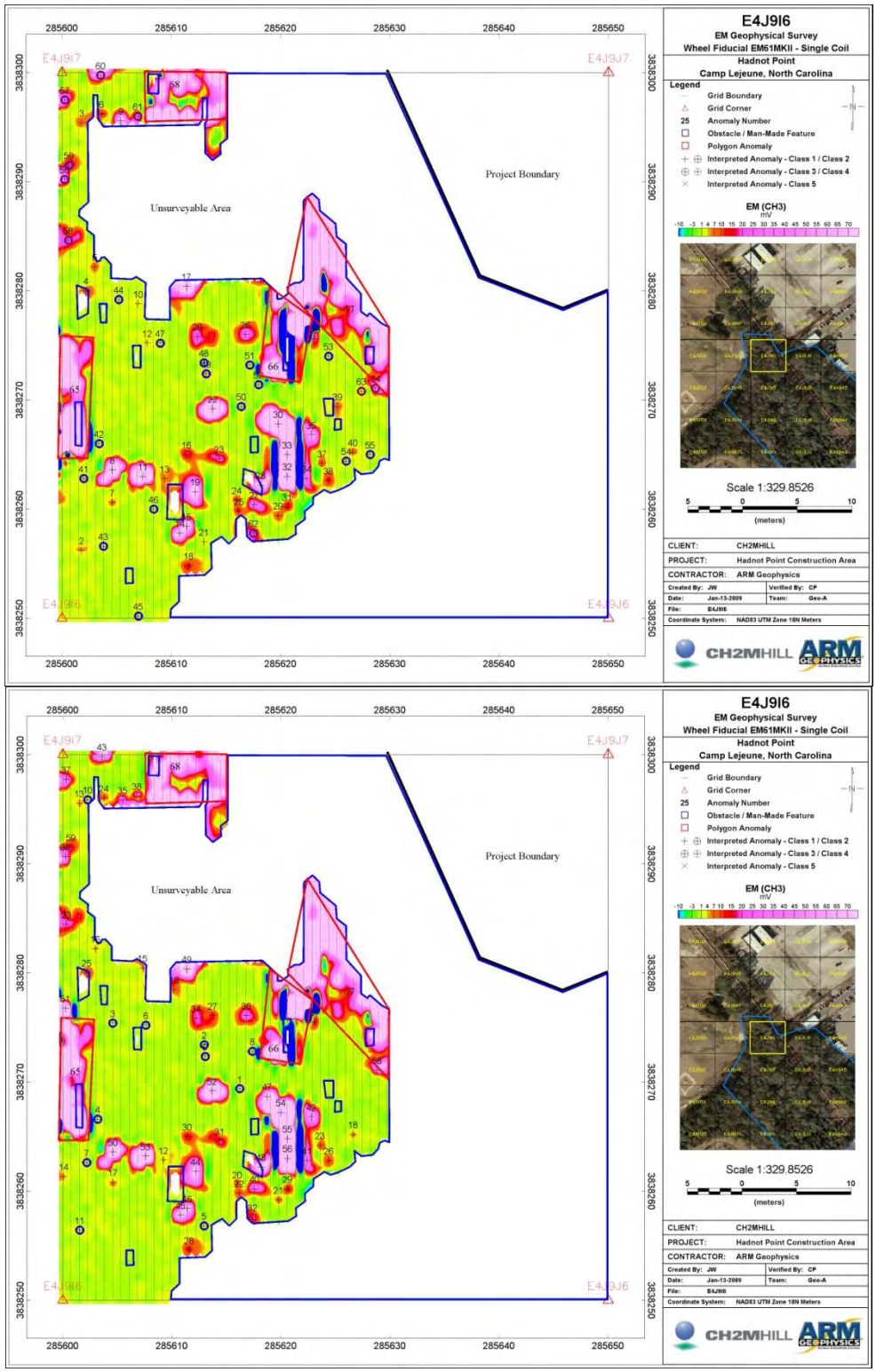

Figure 4: Grid E4J9I6, Ch3. Top image shows original data and target selections processed using 'High Power' setting. Bottom image shows reprocessed data and target selections using 'Standard' setting.

comparison shows that no major changes appear in the gridded survey data. Additionally, all anomalies selected as targets in the reprocessed data using „Standard" mode were initially selected in the original data processed using „High Power" mode. However, re-processing in „Standard" mode did result in: (1) five fewer anomalies being selected (due to the over representation of Ch3 in the original data) and (2) nine anomalies whose original classification was Level 4 (due to being well represented on Ch3 but not on Ch1 and Ch2 and therefore assumed by the data processor to be a result of site noise conditions) being changed to Level 1 priority. Table 2 shows the channel values of 3 of the larger anomalies (center of grid) along with 3 of the anomalies originally given the classification Level 4 (NW section of grid):

Table 2: Comparison of selected targets in grid E4J9I6 from data collected Jan 22nd in High Power mode (Original) and Standard mode (Reprocessed). Anomalies d, e and f represent targets that changed classification from Level 4 to Level 1.

Grid E4J9I6 Selected Anomalies						
Original						
ID		*Class*	*CH1*	*CH2*	*CH3*	*CH4*
8	a	1	178.5	195.7	200.2	210.0
22	b	1	420.6	429.1	365.7	269.8
11	c	1	343.9	371.2	340.8	271.6
58	d	4	28.0	27.8	25.3	23.5
57	e	4	41.7	48.3	42.0	28.9
56	f	4	54.8	63.7	57.4	51.7
Reprocessed						
ID		*Class*	*CH1*	*CH2*	*CH3*	*CH4*
50	a	1	363.0	270.5	179.0	116.4
52	b	1	770.6	533.8	300.7	138.6
53	c	1	692.5	517.2	326.7	154.7
33	d	1	65.5	38.5	21.8	11.6
37	e	1	65.7	50.1	31.6	13.4
39	f	1	73.6	54.3	37.7	19.6

Despite the fact that data collected on previous days showed high levels of noise, as well as anomalies whose peaks were out-of-phase with each other (Figure 5), the fact that so many of the anomalies selected for data collected in „High Power" mode had peaks where Ch1, Ch2 < Ch3 should have initiated an in depth look at all levels of the data, down to the .R61 files (Figure 6). The main element that the processing geophysicist had been looking for in target selection was that priority targets above the threshold of 5 mV had been picked (Class 1) and that any MEC-like anomalies between 3-5 mV where manually selected (Class 2), assuming that any issues

with field equipment would introduce a new level of noise into the data (not seen). As it appeared that all viable anomalies above 5 mV were being selected and given the existing noise source unique to HPCA, the data from the 22nd was submitted to CH2MHill for approval per usual.

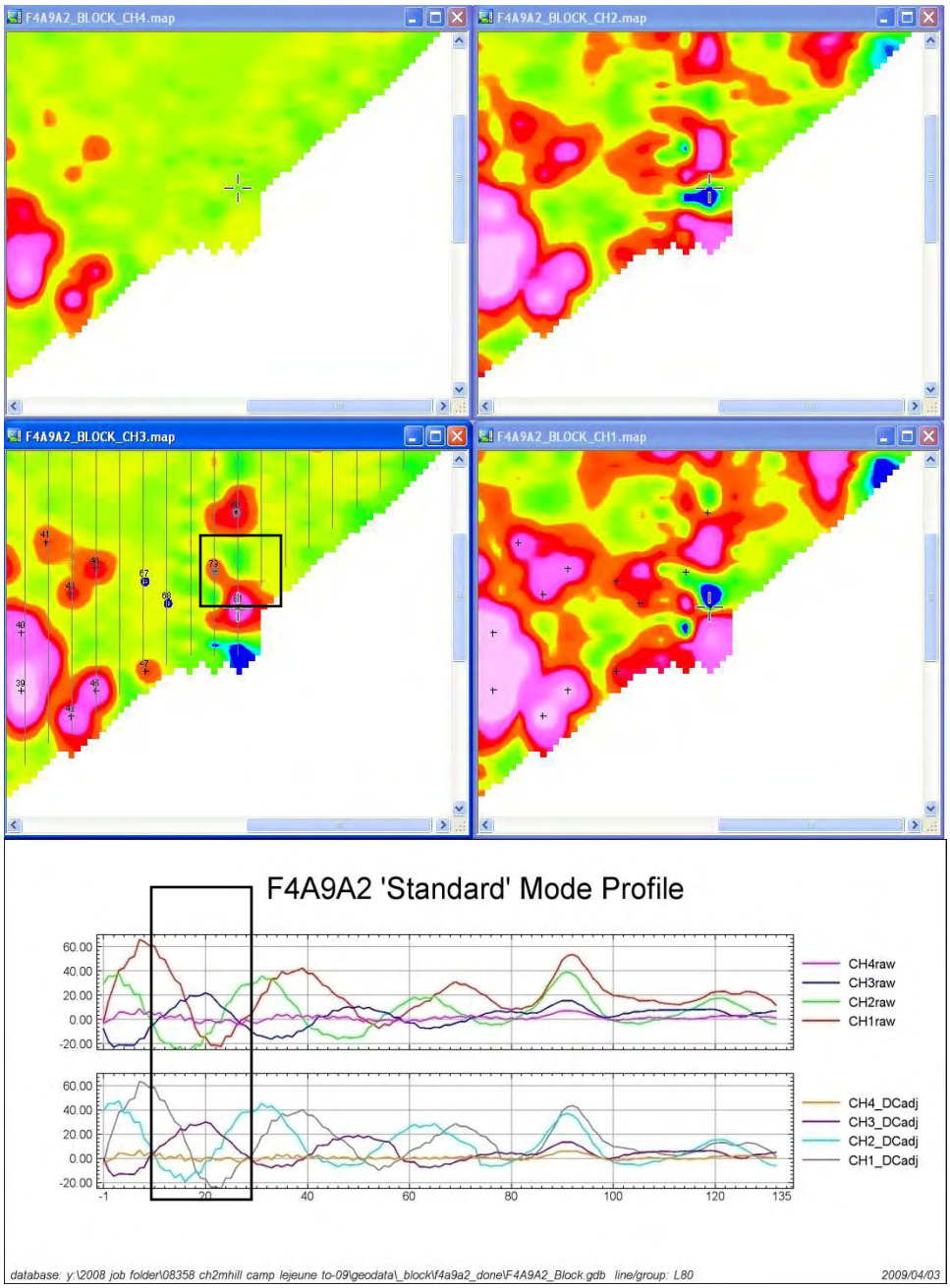

Figure 5: Example in map and profile view of unique HPCA site noise; grid F4A9A2 collected in 'Standard' mode. Notice specifically area of interest outlined by black box. In map view anomaly does not appear on Ch 1 and 2 while on Ch3 anomaly is clearly visible. In profile view (Line 80) Ch 1, 2 and 3 are clearly out-of-phase with each other.

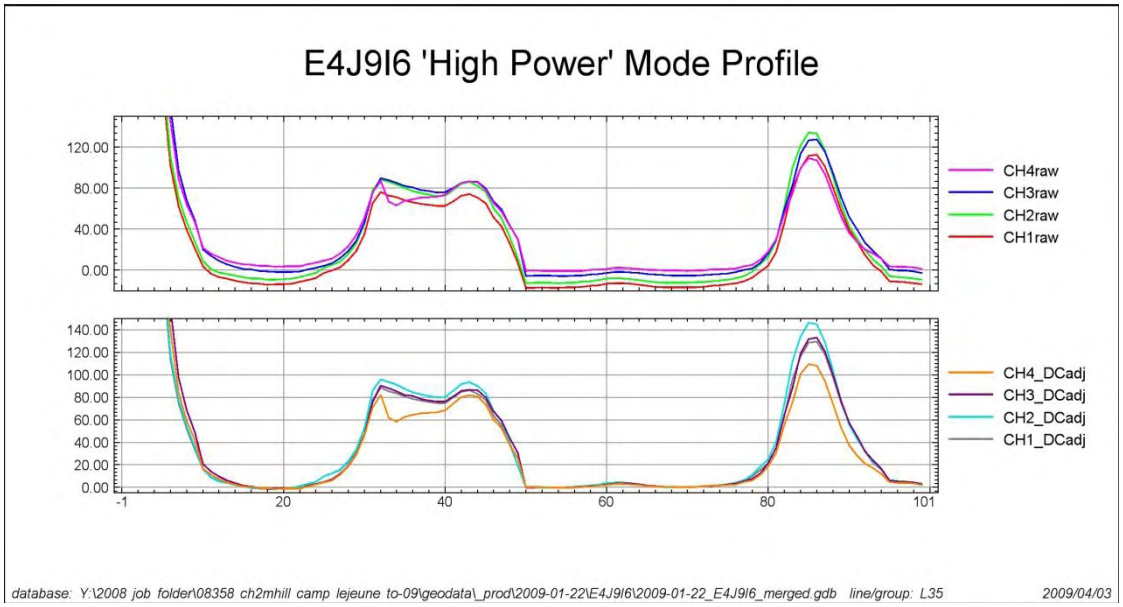

Figure 6: Example of an anomaly processed in 'High Power' mode, grid E4J9I6, Line 35. Notice anomaly decay does not show standard Ch1> Ch2 >Ch3>Ch4 trend at anomaly peaks.

Prior to mobilization to HPCA in Dec, 2008, ARM set up all field equipment to be used on site and performed qualitative QC testing to ensure that the EM system was correctly configured and operational as part of their standard operating procedure. Acceptable performance on the IVP and on subsequent data collection at HPCA led ARM to be confident that all equipment and processing procedures were being performed correctly. The introduction of a new Allegro CX on the final day of data collection, (as well as the presence of site specific noise which caused previous days data collected under the proper „Standard" setting to be out-of-phase) resulted in the underlying problem not being detected until a detailed investigation of the final day"s aberrant Static Spike result commenced.

3.0 CORRECTIVE ACTION PLAN (CAP)

To correct for the error in having the „High Power" option selected instead of the „Standard" option for data collected on January 22nd, 2009, all of the affected raw *.R61 files have had their headers amended to read "EM61MK2" as opposed to "EM61HP2". In addition, all of the corrected *.R61 files were subsequently converted to *.M61 in DAT61, positioned with respect to the wheel incremented fiducial data and imported into Geosoft *.GDB format, ready for re-processing. Over the next two business days the remaining affected data will be re-processed in the same manner as all prior data from HPCA. All changes in target selection and classification will be duly noted and included in a new deliverables package to CH2M HILL. ARM will then re-deliver all data from January 22nd (including raw data, pre-processed data and final data) to CH2MHILL in its entirety.

As DGM on this project has been completed, and it is believed from re-processing and examination that the data from Jan 22nd is of good quality, specific, project related corrective

actions will consist of the above-mentioned. However, going forward, the following have been and will be implemented:

1. Upon discovery of the above discussed issue, a detailed e-mail was immediately sent out to all geophysical personnel who work in ARM‟s UXO division regarding this concern, reminding them to double-check the settings, and specifically this setting, on the Allegro field computers at the start of every project, when a new Allegro is introduced on a project and periodically though out the course of a project.

2. All ARM processing geophysicists have now been made aware of this issue, its ramifications and the signs in the data (chiefly, the discrepancies between the relative amplitudes of channel‟s 1 & 2 and 3 & 4, resulting in an abnormal decay) that may indicate that the HP setting has inadvertently been selected.

3. On all future projects, but especially those with abnormally high background noise, ARM processing geophysicists will continue to monitor the internal consistency of the QC test values between tests and across days, ensuring that they are within the bounds dictated as an indicator of this problem. The raw *.R61 files will also be periodically examined, in a binary text editor or on import, for the incorrect header settings.

ARM believes that the field steps will aid in preventing this issue of the Allegro setting being accidently set to High Power mode during data collection and that the processing steps will enable any affected data to be corrected and field teams made aware of the issue in a timely manner.

4.0 SUMMARY

ARM Geophysics (ARM) has provided a background, Root Cause Analysis, and Corrective Action Plan for "Field Data Collection and Office Data Processing Procedures pertaining to inappropriate field computer setting" at Hadnot Point Construction Area, MMB Camp Lejeune, NC. ARM has discussed: (1.) the data failure and the reasons for said failure; (2.) the method by which the data failures will be corrected by means of re-processing operations; and (4.) the methods to prevent such failures in the future.

Appendix D
Geophysical Prove-out Report

Appendix D

Geophysical Prove-out Report
Site UXO-08, Former Lejeune Cantonment Bazooka Range, Base CS Chamber, and NBC Training Trail

Marine Corps Base Camp Lejeune
Jacksonville, North Carolina

Contract Task Order 0168

January 2009

Prepared for

Department of the Navy
Naval Facilities Engineering Command
Atlantic

Under the

NAVFAC CLEAN III Program
Contract N62470-02-D-3052

Prepared by

CH2MHILL

Raleigh, North Carolina

Contents

Acronyms and Abbreviations v

D.1 Introduction D-1
D.2 GPO Objective D-1
D.3 Equipment D-1
D.4 Procedures D-3
D.4.1 Existing GPO Plot D-3
D.4.2 GPO Seed Items D-3
D.4.3 DGM Surveys D-3
D.5 Data Processing and Interpretation D-4
D.5.1 Data Processing D-4
D.5.2 Interpretation/Anomaly Selection D-5
D.6 Results and Analysis D-5
D.6.1 DGM Surveys over Seeded Plot D-5
D.7 Quality Control D-6
D.8 Conclusions D-6

Tables

D-1 Summary of GPO Results with Respect to Project Data Quality Objectives

Figures

D-1 EM61-MK2 Systems Tested (Array and Single-coil)
D-2 GPO Plot Location
D-3 USAE Map of EM61-MK2 Single Coil Line/Station/Fiducial Survey Results- Seeded GPO Plot

Acronyms and Abbreviations

ARM	ARM Geophysics, Inc.
CD	compact disc
CERCLA	Comprehensive Environmental Response, Compensation, and Liability Act
CLEAN	Comprehensive Long-term Environmental Action—Navy
cm	centimeter
CS	chlorobenzylidenemalononitrile
CTO	contract task order
DGM	digital geophysical mapping
DGPS	Differential Global Positioning System
DQO	data quality objective
EM	electromagnetic
ESI	Expanded Site Inspection
ft	feet
FTP	file transfer protocol
GPO	Geophysical Prove-out
GPS	global positioning system
m	meter
MCB	Marine Corps Base
MEC	munitions and explosives of concern
mm	millimeter
MMRP	Military Munitions Response Program
MR	Munitions Response
MRP	Munitions Response Program
MRSIMS	Munitions Response Site Information Management System
mV	millivolts
NAVFAC	Naval Facilities Engineering Command
NBC	nuclear, biological, and chemical
PA/SI	Preliminary Assessment/Site Inspection
QC	quality control
RTK	real-time kinematic
TDEM	time domain electromagnetic
USAE	USA Environmental, Inc.
UTM	Universal Transverse Mercator

D.1 Introduction

This Geophysical Prove-out (GPO) Report documents the GPO activities performed by digital geophysical mapping (DGM) subcontractors USA Environmental, Inc. (USAE) on November 31, 2006 and ARM Geophysics, Inc. (ARM) on January 18, 2007 as part of the process for validating the DGM systems to be utilized during the DGM survey at Site Unexploded Ordnance (UXO)-08, Former Camp Lejeune Cantonment Bazooka Range, Base Chlorobenzylidenemalononitrile (CS) Chamber, and Nuclear, Biological, and Chemical (NBC) Training Trail.

Marine Corps Base (MCB) Camp Lejeune is in the process of investigating closed ranges at the Base following the Comprehensive Environmental Response, Compensation, and Liability Act (CERCLA) investigation process. Due to historical activities conducted at Military Munitions Response Program (MMRP) Site UXO-08, a Preliminary Assessment/ Site Inspection (PA/SI) was conducted. The PA/SI was conducted by CH2M HILL under the Naval Facilities Engineering Command (NAVFAC), Comprehensive Long-term Environmental Action—Navy (CLEAN) Contract N62470-02-D-3052, Contract Task Orders (CTOs) 109 and 168.

D.2 GPO Objective

The primary objective of the GPO was to demonstrate and document the site-specific capabilities of the selected DGM systems to operate as an integrated system capable of meeting project data quality objectives (DQOs). For the purposes of this work, a system is considered to include the survey platform, sensors, navigation equipment, data analysis and management, and associated equipment and personnel.

D.3 Equipment

The following three DGM systems were selected for performing the GPO:

- Towed array EM61-MK2 system connected to a real-time kinematic (RTK) global positioning system (GPS) (**Figure D-1**)
- Single coil EM61-MK2 system tested with RTK GPS
- Single coil EM61-MK2 system tested with fiducial-based positioning

Based on the results of the GPO conducted as part of the Site UXO-04, Knox Mobile Home Park, Expanded Site Inspection at MCB Camp Lejeune, electromagnetic (EM) technology generally, and the EM61-MK2 instrument specifically, has been demonstrated to be an effective technology to detect and locate metallic anomalies at MCB Camp Lejeune under conditions similar to Site UXO-04.

EM61-MK2

Time-domain electromagnetic (TDEM) metal detectors are designed to detect shallow ferrous and non-ferrous metallic objects with very good spatial resolution and with minimal interference from adjacent metallic features. An EM transmitter generates a pulsed primary

magnetic field in the earth, which induces eddy currents in nearby metallic objects. The eddy current decay produces a secondary magnetic field measured by the receiver coil of the instrument. By taking the measurement at a relatively long time after the start of the decay, the current induced in the ground has fully dissipated and only the current in the metal is still producing a secondary field.

The EM61-MK2 is a high-resolution time-domain electromagnetic instrument designed to detect, with high spatial resolution, shallow ferrous and non-ferrous metallic objects. The standard EM61-MK2 system consists of two air-cored, 1 meter (m) by 0.5 m coils, a digital data recorder, batteries, and processing electronics. The EM61-MK2's transmitter generates a pulsed primary magnetic field, which then induces eddy currents in nearby metallic objects. The EM61-MK2 offers the ability to measure the eddy currents at three distinct time intervals in a bottom transmit/receive coil and one in a top receiver coil, or four intervals if no top coil measurements are recorded (as in this project). Earlier time gates provide enhanced detection of smaller metallic objects. Secondary voltages induced in the coils are measured in millivolts (mV). Assuming accurate data positioning, target resolution of approximately 0.5 m can be expected.

FIGURE D-1
Testing of Towed Array EM61-MK2 System and Single Coil EM61-MK2 System

Global Positioning System

GPS satellites orbit the earth transmitting a signal which can be detected with a GPS receiver. The GPS receiver uses the known locations of the satellites and the time of signal transmittal to calculate its position. Differential GPS (DGPS) increases the accuracy of GPS readings through the use of two receivers: a stationary receiver that acts as a base station and collects data at a known location and a second roving receiver that makes the position measurements. The base stations can be configured to either transmit the correction data to the rover system or to save the data to be used to correct positional data during post-processing. RTK DGPS instruments are ideal for field-mapping applications when satellite visibility conditions are adequate as they provide the highest GPS accuracy possible (sub-centimeter accuracy). Typical accuracies of geophysical data positioning after adding errors induced by the DGM system operation are in the range of 20 to 50 centimeters (cm).

D.4 Procedures

This section presents a summary of the procedures followed during the GPO.

D.4.1 Existing GPO Plot

A GPO plot was built at Munitions Response Program (MRP) Site UXO-04, Knox Trailer Park, MCB Camp Lejeune in similar types of soil and conditions as the Site UXO-08 area; therefore, the GPO was performed at the existing plot. The location of the 40 feet (ft) by 200 ft GPO plot is shown on **Figure D-2**.

D.4.2 GPO Seed Items

Seed items were emplaced in the GPO plot by CH2M HILL field staff during the Site UXO-04 Expanded Site Inspection (ESI) and consisted of surrogate MK2 grenades (2-inch by 4-inch steel pipes) and surrogate 2.36 inch rocket items made from a pipe of approximate length and diameter. The seed information was used by the CH2M HILL Quality Control (QC) Geophysicist to analyze the data collected and processed by USAE and ARM. The Site UXO-04 GPO plot will be used on future munitions response (MR) investigation at MCB Camp Lejeune; therefore, an as built of the seed item locations and a table containing the seed items information (ordnance type, depth, orientation, direction, and easting/northing) will be submitted directly to the Navy separate of this report to withhold the ground "truth" of the GPO plot from future DGM contractors.

D.4.3 DGM Surveys

After seeding was completed, USAE and ARM performed a DGM survey over the GPO plot with each system using the same procedures as intended for the surveys of Site UXO-08. The data sets were processed, interpreted and anomaly selections made by USAE and ARM prior to transfer of the data to CH2M HILL's MR Geophysicist for review and further analysis. Raw and processed geophysical data and a target selection spreadsheet ("dig sheet") were delivered by to the CH2M HILL MR Geophysicist within 24 hours of data collection using the file formats specified in the SSWP.

D.5 Data Processing and Interpretation

D.5.1 Data Processing

Towed Array Data Processing

ARM uploaded the raw field data daily to CH2M HILL's file transfer protocol (FTP) site. Subsequently, ARM Geophysics' processing center staff downloaded the data for initial data processing/quality evaluation, advanced data processing/interpretation, and final deliverables preparation. All processing and quality evaluations were completed within Geosoft Oasis montaj software with the UX-detect module extension.

Details of the processing parameters and QC evaluations are annotated within the Munitions Response Site Information Management System (MRSIMS) database management system provided by CH2M HILL. As an overview of the quality check results documented within MRSIMS, the most common value ranges (modes) for the major quality indicators are as follows: 2 to 5 percent static response test error, 4 to 5 fiducials lag correction, 0.10 to 0.11 m downline sample spacing, 0.2 percent samples beyond sample limits, and 100 percent coverage of work area excluding obstacles.

Single Coil Data Processing

USAE transferred single coil data from the field computer to the data processing and analysis computers twice daily. All raw data were backed up on an external hard disk drive and posted on the project file transfer protocol (FTP) site. Geonics Dat61 software was used to position each single coil data file. GPS-positioned single coil data was positioned directly from Dat61 in a time stamped Geosoft compatible X, Y, V format (X equals the Universal Transverse Mercator [UTM] X [easting] location of each sensor sample, Y = the UTM Y [northing] location of each sensor sample, V1 = Time Gate 1 value, V2 = Time Gate 2 value, V3 = Time Gate 3 value, V4 = Time Gate 4 value). The fiducial positioned data were manually positioned in Dat61. Each survey line length was assigned and each fiducial (e.g., mark in the data) was positioned at the known down-track location. Dat61 then exported a Geosoft compatible X, Y, V format (X equals the across -rid survey sensor location, Y = the down-line sensor sample location, V1 = Time Gate 1 value, V2 = Time Gate 2 value, V3 = Time Gate 3 value, V4 = Time Gate 4 value).

Each X, Y, V file was imported into Geosoft's Oasis montaj data processing and analysis software. This software was used to analyze each QC file and export the required QC maps. Single coil survey data, positioned with line/station/fiducials was translated into the project UTM coordinate system and were corrected for latency and any unacceptable sensor drift (typically as a result of changes in sensor battery voltage over the course of each survey). USAE typically applied drift correction only on longer RTK GPS -positioned data sets.

Once the data were corrected for latency and any necessary drift, the data were gridded using a 10-cm grid spacing. Gridding parameters were included in each file header. The gridded data formed the basis for data analysis and mapping of each survey area.

D.5.2 Interpretation/Anomaly Selection

The processed Time Gate 3 data was initially analyzed for anomalies that met or exceeded the threshold of 5 mV, established at the GPO using Geosoft's UX_Detect module. USAE examined each selected anomaly to ensure the selection was noise free (i.e., the sensor signal was not the result of electrical interference, and Time Gate 1 was greater than Time Gate 2 was greater than Time Gate 3 was greater than Time Gate 4), and the anomaly size and shape were consistent with isolated MEC-like anomalies, as experienced at the GPO. Any selected anomaly that exceeded the anomaly size was identified as a potential cultural feature (e.g., part of an extended linear or utility, feature). Each line of data was reviewed for anomalies that met the threshold and size criteria, but were not automatically picked. These manually selected anomalies were added to each target database.

D.6 Results and Analysis

During the GPO data collection activities, the CH2M HILL MR Geophysicist observed the geophysical detection instruments operating in USAE/ARM configurations, using USAE/ARM personnel and methodologies. All data collection was consistent with documented procedures and met project DQOs. The complete set of QC maps, list of detected anomalies in the GPO, and final image maps are provided digitally on an accompanying compact disc (CD).

D.6.1 DGM Surveys over Seeded Plot

Figure D-3 presents the graphical results of the DGM survey over the seeded GPO plot. The CH2M HILL QC Geophysicist performed an analysis on the DGM data collected and a summary of the DQOs and results are presented in **Table D-1.** CH2M HILL's analysis indicates that all DQOs outlined in the SSWP were met during the GPO. It should also be noted that because of the site-wide level of metallic contamination and the presence of anomalies in a background survey of the GPO plot conducted during the Site UXO-04 ESI, the high number of anomalies selected in the plot with respect to the actual number of seed items planted is a result of existing anomalies and not equipment or process failure.

TABLE D-1
Summary of GPO Results with Respect to Project Data Quality Objectives

Data Quality Objective	Measurement Performance Criteria	Test Method During GPO
General System Functioning		
Accurate coordinates are being obtained from DGM positioning systems.	Positional error at known monuments will not exceed ±20 cm.	DQO was met
Repeatable data are being obtained from DGM system.	Response to standardized item will not vary more than ±20%.	DQO was met

TABLE D-1
Summary of GPO Results with Respect to Project Data Quality Objectives

Data Quality Objective	Measurement Performance Criteria	Test Method During GPO
DGM Surveys		
DGM survey system can detect MEC to the depths specified by the following equation: Estimated Detection Depth = 11×diameter (Depth is to top of the item.) Notes: This DQO will be modified for the production surveys based on the results of the GPO. Slight variations are considered acceptable for small MEC items (e.g. hand grenades, 20 millimeter [mm] projectiles) as these are typically more difficult to detect with available technologies.	Sensor to identify 100 percent of all MEC items (or their surrogates in the GPO) at depths fitting within the detection depth equation ±20%.	DQO was met
Downline data density is sufficient to detect MEC items.	Over 98% of possible sensor readings are captured along a transect. In addition, any transect containing a data gap of 2 ft or greater does not meet the DQO.	DQO was met
Coverage over survey area is sufficient to detect MEC items.	Search transect spacing to vary no more than ±20% of spacing specified in sampling design.	DQO was met
Positioning of detected anomalies is accurate.	95 percent of all anomaly locations (as shown on the dig sheets) lie within a 1 m radius of a point on the ground surface directly above the source of the anomaly.	DQO was met
Data Handling		
All data must be delivered in a timely manner and in a useable format.	Data packages (see Section 8) are completed and delivered to the CH2M HILL Project Geophysicist within 1 working day of data collection.	DQO was met

D.7 Quality Control

USAE and ARM was observed collecting data to comply with all of the GPO Plan QC requirements. All documented QC tests were checked for DQO compliance (as specified in the GPO Work Plan) and each test was within those requirements. Documentation for each test is provided in **Appendix C**.

D.8 Conclusions

An existing GPO plot at MCB Camp Lejeune was surveyed for use in the validation of DGM systems for performing DGM surveys at Site UXO-08. USAE and ARM personnel

performed a survey over the plot and the data were processed and interpreted. Based on the results of the GPO, it was agreed by the CH2M HILL QC Geophysicist that the system met project DQOs and the system was considered validated and appropriate for use at the site.

V:\USNavFacEngCom\CampLejeune\MapFiles\Site_UXO_08\PA_SI\Figure D-2 GPO Plot Location.mxd

Legend

- GPO Plot
- Highways
- Site UXO-08
- Installation Boundary

N

0 7,500 15,000 30,000 Feet

1 inch equals 15,000 feet

Figure D-2
GPO Plot Location
Site UXO-08
PA/SI Report
MCB Camp Lejeune
North Carolina

CH2MHILL

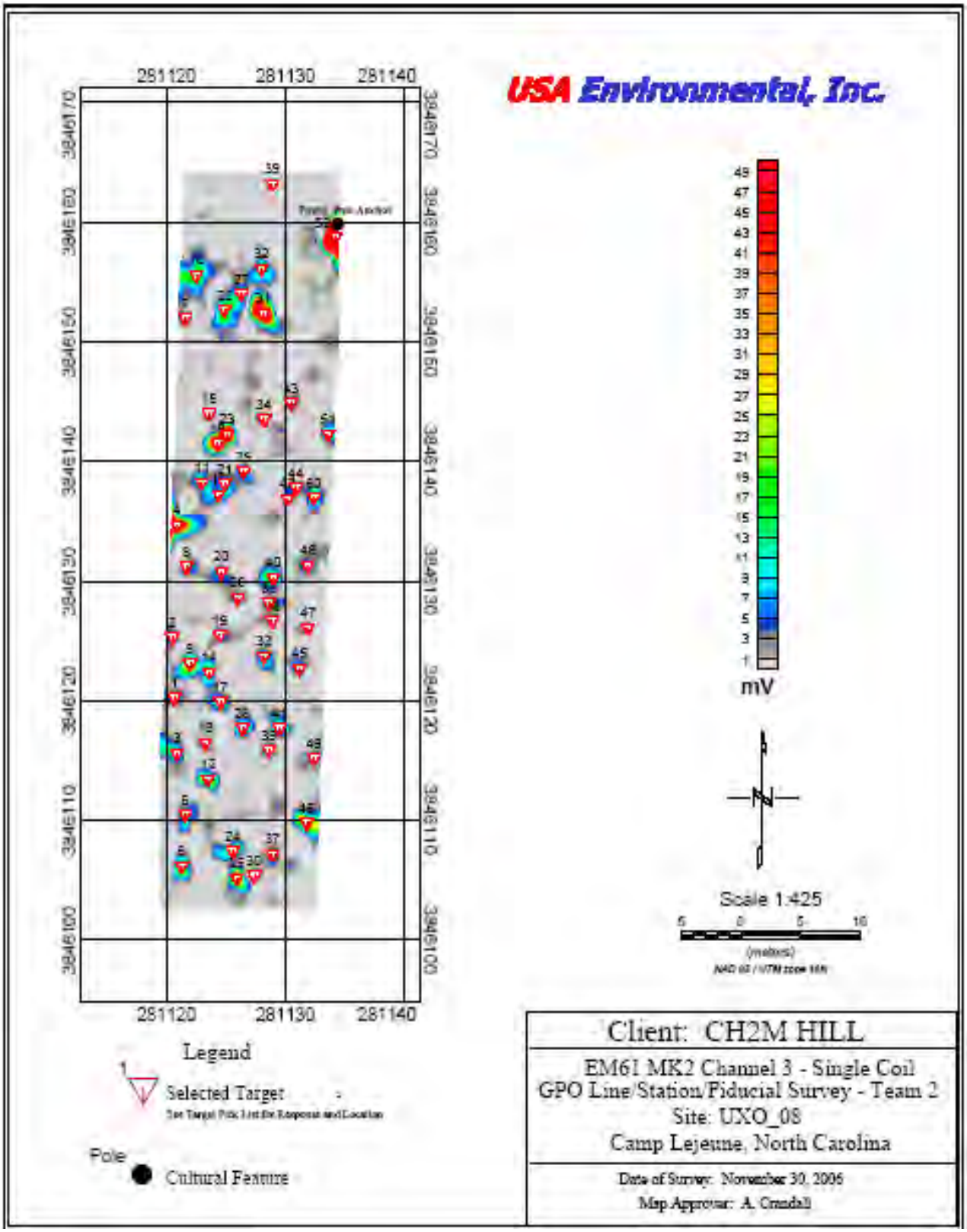

Figure D-3: GPO Single Coil Line/Station/Fiducial Map

Appendix D-2

GEOPHYSICAL INVESTIGATION REPORT HADNOT POINT CONSTRUCTION AREA, CAMP LEJEUNE

Jacksonville, North Carolina

Prepared for:

CH2MHILL

11301 Carmel Commons Blvd Suite 304
Charlotte, NC 28226

Prepared by:

ARM GEOPHYSICS
Surface & Borehole Services

1129 West Governor Road - P.O. Box 797

Hershey, PA 17033-0797

April 2009

ARM Project 08358

Reviewed by:

Jeff Leberfinger
Vice President of Geophysics

Respectfully submitted,

Jennifer Weller
Staff Geophysicist

April, 2009

Ms. Jessica Skeean
Project Manager
CH2M HILL
11301 Carmel Commons Blvd, Suite 304
Charlotte, NC 28226

Re: Geophysical Investigation Report
CH2M HILL
Hadnot Point Construction Area
Camp Lejeune, Jacksonville, NC
ARM Project 08358

Dear Ms.Skeean:

Following is a report detailing the investigation performed by ARM Geophysics at Hadnot Point Construction Area, Camp Lejeune, Jacksonville, North Carolina.

If you have any questions or need additional information, please do not hesitate to contact the undersigned at 717-533-8600.

Respectfully submitted,
ARM Geophysics

Jennifer N. Weller
Staff Geophysicist

Jeffrey Leberfinger
Vice President of Geophysics

TABLE OF CONTENTS

1.0 INTRODUCTION 6

1.1. PURPOSE OF INVESTIGATION AND SCOPE OF WORK 6
1.2. REPORT ORGANIZATION 6

2.0 SITE BACKGROUND INFORMATION 2

2.1. SITE LOCATION AND DESCRIPTION 2
2.1.1. Hadnot Point Construction Area 2

3.0 GEOPHYSICAL SURVEY METHODS 4

3.1. SENSOR 4
3.2. POSITIONING SYSTEM 4
3.3. GEODETIC LOCATION 4
3.4. SENSOR PLATFORM 5
3.5. MRSIMS 7
3.6. QUALITY CONTROL 7
3.6.1. Equipment / Electronics Warm-up 7
3.6.2. Personnel Test 7
3.6.3. Vibration (Cable Shake) Test 8
3.6.4. Static Background and Static Response (Spike) Test 8
3.6.5. Six Line Test (Start of Project) 10
3.6.6. Two Line Test (Latency Test) 11
3.6.7. Repeat Data 11
3.7. PROJECT DATA QUALITY OBJECTIVES 12

4.0 INSTRUMENT VERIFICATION PROVE-OUT (IVP) 13

4.1. IVP 13

5.0 DGM SURVEY 15

5.1. GENERAL FIELD ACTIVITIES 15
5.2. HADNOT POINT CONSTRUCTION AREA – CAMP LEJEUNE 15
5.2.1. Cultural Features 16

6.0 ANALYSIS OF GEOPHYSICAL DATA 18

6.1. PRE-PROCESSING 18
6.2. PROCESSING 18
6.2.1. Corrections 18
6.2.2. Gridding 18
6.2.3. Target Selection 19
6.2.4. Target Sheets 20
6.2.5. Data QC 22

7.0 SUMMARY OF GEOPHYSICAL SURVEY RESULTS 22

FIGURES

Figure 1 - Aerial Photo of HPCA DGM area: shows topography, vegetation coverage, and grid-system of the 8.5 acre DGM work area. 3
Figure 2 - Grid stake positions in map view. 5
Figure 3 - EM61 operated in wheel mode at HPCA: shows EM61 amplitude data collection in conjunction with wheel incremented fiducial positioning. 6
Figure 4 - Hadnot Point Construction Site: shows trees, debris, vines and cultural features. 6
Figure 5 - Example of static test data from 01/15/2009. Rows, top bottom: Background, Spike, Background data. Columns, left to right: Ch1, Ch2, Ch3 and Ch4. 9
Figure 6 - Example of static test data taken within HPCA DGM area demonstrating site noise. .. 9
Figure 7 - Graphical results from the HCPA six line test. 11
Figure 8- Example of QC Repeat Line: Grid E4J9J4 repeat line overlain on survey data. 12
Figure 9 - Channel 3 response for IVP survey. 14
Figure 10 – Example of marshy, vegetated area which limited collection of DGM data. 16
Figure 11 - Geophysical Coverage Map for Hadnot Point Construction Area. 17
Figure 12 - Target density. Note the presence of pipe lines crossing the survey area. Northern and western boundaries not surveyed due to marshy areas within site boundary – north eastern boundary bounded by chain-link fence. 21

TABLES

Table 1 - Grid stake coordinates (NAD83 UTM 18 North m). 5

Table 2 - Geophysical Instrument Standardization Tests and Acceptance Criteria 7

Table 3 – Channel 3: Static Background and Static Response Test Values. 10

Table 4 – Project Data Quality Objectives 13

Table 5 – Example Digsheet: Note targets 32 and 33 as examples of polygon and Class 2 anomalies respectively. 20

ATTACHMENT

A DVD with the Report, Raw Data, Preprocessed Data, Processed Data, EM61 Response Maps, and Target Lists. A Data Deliverable Map is also provided on the DVD.

ACRONYMS AND ABBREVIATIONS

ARM .....ARM Geophysics
CD .....Compact Disk
DGM .....Digital Geophysical Mapping
DGPS .....Digital Global Positioning System
DQO .....Data Quality Objectives
DVD .....Digital Versatile Disk
EM.....Electromagnetic
EM61.....Geonics EM61-MK2
FTP.....File Transfer Protocol
HCPA .....Hadnot Point Construction Area
IVP .....Instrument Verification Prove-out
.jpg .....JPEG file Format
MCB.....Marine Corps Base
MEC .....Munitions and Explosives of Concern
MPPEH .....Material Potentially Presenting an Explosive Hazard
MRP .....Munitions Response Program
mV.....MilliVolt
NAD .....North America Datum
PM.....Project Manager
QA.....Quality Assurance
QC .....Quality Control
RTK.....Robotic Total Station
SOW.....Scope of Work
TDEM .....Time Domain Electromagnetic System
US .....United States
UTM.....Universal Transverse Mercator
UXO .....Unexploded Ordnance
µs.....Microseconds
*.XYZ .....Geosoft Format Data File

1.0 INTRODUCTION

1.1. Purpose of Investigation and Scope of Work

ARM Geophysics (ARM) has prepared this report for CH2M HILL to present the results of a geophysical investigation performed at Hadnot Point Construction Area, Marine Corps Base (MCB) Camp Lejeune, Jacksonville, NC. The purpose of the investigation was to perform digital geophysical mapping (DGM) across specified grid areas using the Geonics EM61-MK2 electromagnetic instrument in support of Munitions Response Program (MRP) Site Inspections at the base. The scope of work included full (100%) DGM coverage of up to 8.5 acres at the Hadnot Point Construction Area work area, which is within MRP Site UXO-08.

1.2. Report Organization

The following sections of this report have been organized and separated to provide the following site background information (Chapter 2), survey methods (Chapter 3), Instrument Verification Prove-out (IVP) (Chapter 4), DGM survey (Chapter 5), and analysis of geophysical data (Chapter 6). A summary of the results and interpretations of the DGM survey is presented in Chapter 7. A DVD is provided with all raw, pre-processed, and post-processed data, plus any additional deliverables. Lastly, a data and deliverables map is provided in the root directory on the DVD.

2.0 SITE BACKGROUND INFORMATION

2.1. Site Location and Description

Hadnot Point Construction Area (HPCA), MCB Camp Lejeune is located 11 miles southeast of the city of Jacksonville, North Carolina, in Onslow County. The western and northwestern boundaries are approximately along U.S. Route 17 and North Carolina State Route 24, respectively. Specifically, the site is located within Hadnot Point, bound by Louis Road to the southeast, Ash Street to the northeast, East Road to the northwest and athletic fields to the southwest.

2.1.1. Hadnot Point Construction Area

The HPCA encompasses approximately 109 acres. Approximately 29 acres of the site overlap Site UXO-08, which was previously used as a firing location for 2.36-inch bazooka rockets and according to available records was not used as a target area. The specific area of interest for this investigation was the 8.5-acre wooded area located in the southern corner of the Site UXO-08, bordering Louis Road and the recreation fields. The DGM investigation area has a gently sloping terrain and portions are heavily vegetated with trees and thick undergrowth. An aerial photograph showing the boundary of the area of interest, grid-system and surrounding cultural features is provided in Figure 1 (CH2M HILL, 2007).

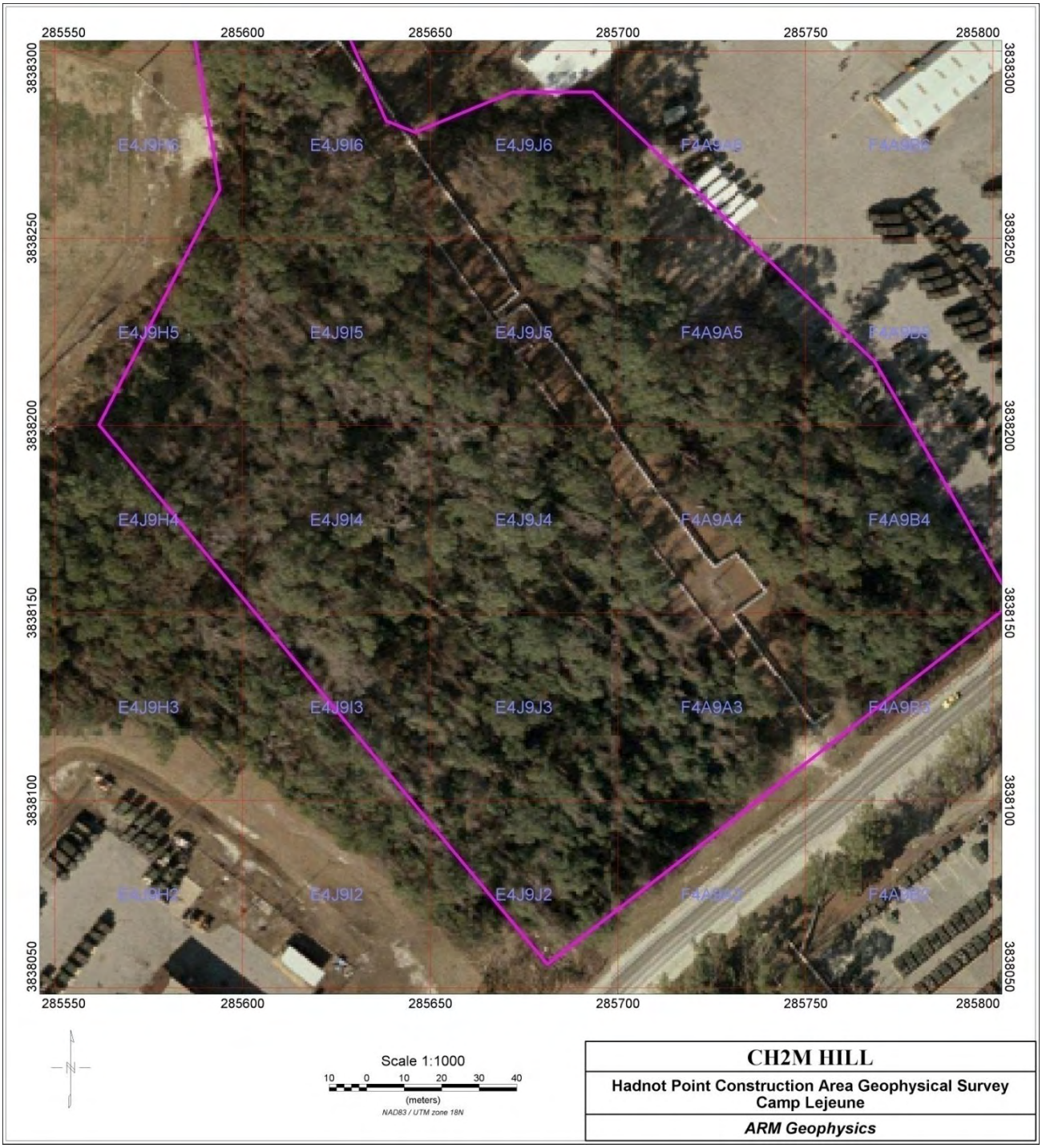

Figure 1 - Aerial Photo of HPCA DGM area: shows topography, vegetation coverage, and grid-system of the 8.5 acre DGM work area.

3.0 GEOPHYSICAL SURVEY METHODS

3.1. Sensor

Geophysical data were collected using a single Geonics EM61-MK2 Electromagnetic system (referred to hereafter as the EM61) set to collect data in '4 channel' mode. The EM61 is a Time Domain Electromagnetic (TDEM) system that generates 150 electromagnetic (EM) pulses per second and measures response during the off time between pulses. After each pulse, secondary EM fields are induced briefly in moderately conductive soils and for a longer time in metallic objects. Between each pulse, the EM61 waits until the response from the conductive earth dissipates and then measures the prolonged buried metal response. This response is recorded in millivolts (mV). By sensing only the buried metal response, the EM61 detects metallic targets that might otherwise be missed. The EM61 measures multiple time gates (216, 366, 660, and 1266 *u*s) to provide a more complete measurement of the response decay rate.

3.2. Positioning System

Due to the vegetated nature of the site the use of DGPS or RTS for positioning was precluded. Therefore, ARM utilized the wheel incremented fiducial positioning method which has an optimal sample interval of 10cm. Fiducial positioning is good for flat wooded terrain and typically provides an accuracy of 0.5m. The coordinate system, which was maintained across the life of the project, was NAD 83, UTM Zone 18 North, meters.

3.3. Geodetic Location

Prior to DGM activities, CH2M HILL's subcontractor reduced vegetation on some of the grids within the area of interest leaving stumps, shrubs, vegetation removal debris and trees larger than 6 inches in diameter that required walking over or around. Reference points were emplaced by a registered land surveyor (RLS) at the southwest corner of each of the grid twenty-five (25), 50m x 50m, grids to allow the field team to identify their location and the data processor to transform the local coordinates into the NAD 83, UTM Zone 18 North datum (Table 1, Figure 2). Coordinates for the grid corner stakes were supplied to ARM by CH2M HILL.

Table 1 - Grid stake coordinates (NAD83 UTM 18 North m).

Point ID	Northing	Easting	Point ID	Northing	Easting
1	3838100	285650	21	3838234.761	285750
2	3838100	285700	22	3838200	285778.269
3	3838150	285650	23	3838161.95	285800
4	3838150	285700	24	3838150	285801.575
5	3838150	285750	25	3838148.775	285800
6	3838150	285800	26	3838109.886	285750
7	3838200	285750	27	3838100	285737.289
8	3838200	285700	28	3838070.998	285700
9	3838200	285650	29	3838093.875	285650
10	3838200	285600	30	3838100	285644.918
11	3838250	285600	31	3838150	285603.428
12	3838250	285650	32	3838154.132	285600
13	3838250	285700	33	3838200	285561.939
14	3838300	285600	34	3838250	285587.221
15	3838300	285587.722	35	3838150	285600
16	3838308.411	285600	36	3838100	285750
17	3838300	285630.009	37	3838300	285650
18	3838279.995	285650	38	3838300	285700
19	3838282.711	285700	39	3838250	285750
20	3838250	285734.126	40	3838200	285800

REF: BENCHMARK REF NORTH CAROLINA GEODETIC NETWORK
JACKSONVILLE CORS
MOREHEAD CITY CORS
CASTLE HAYNE CORS
UTM ZONE 18 NORTH NAD 83 (NSRS 2007) METERS
12/4/2008

Figure 2 - Grid stake positions in map view.

3.4. Sensor Platform

All DGM surveys for the HPCA were collected with the EM61 in 'wheel' mode (Figure 3). Due to the amount of surface debris, cultural obstacles and grid set-up time (Figure 4), the use of a 3-4 person crew was required: one individual to operate the EM61, one individual to assist with navigating the EM61 around surface debris (stumps, roots, trees, cultural features, etc), an individual to record fiducial related data as well as obstacle locations in field notes and a fourth individual to assist with grid set-up. Standard EM61 wheels kept the EM61 coil at a height of 16 inches above the ground surface. The EM61 amplitude data readings were every 10cm along line using an Allegro CX data logger running Geonic's EM61-MKII software. Sample intervals were maintained in order to prevent under-sampling issues, commonly called aliasing, which may limit either the detection of metal items or the accurate co-location of movement around obstacles.

Figure 3 - EM61 operated in wheel mode at HPCA: shows EM61 amplitude data collection in conjunction with wheel incremented fiducial positioning.

Figure 4 - Hadnot Point Construction Site: shows trees, debris, vines and cultural features.

3.5. MRSIMS

All field notes, processing reports, dig sheets and other data reporting considerations were handled within the CH2M HILL Munitions Response Site Information Management System (MRSIMS).

3.6. Quality Control

Standard quality control (QC) procedures and tests were conducted at both the start of the project and daily by means of field testing and checking of the sensor in absence of and against a known test item to ensure correct operation of the equipment. These procedures and tests are listed in Table 2 and summarized below:

Table 2 - Geophysical Instrument Standardization Tests and Acceptance Criteria

Test #	Test Description	Acceptance Criteria	Frequency
01	Equipment Warm-up	Equipment Specific (typically 5 minutes)	beginning of day
02	Personnel Test	<2mv on Ch3, assessed in field	beginning of day
03	Cable Shake Test	<2mv on Ch3, assessed in field	beginning of day
04	Static Background & Spike	+/- 20% of standard item response after background correction	beginning and end of day
05	6 / 2 Line Test	Repeatability of response amplitude +/-20%, positional accuracy +/-20cm	start of project / beginning of day
06	Repeat Lines	Qualitative repeatability of response amplitude	2% of total area surveyed

3.6.1. Equipment / Electronics Warm-up

At the start of each day, or when a new battery was installed, the equipment was switched on and allowed to run for 5 or more minutes to acclimatize to local conditions in order to minimize sensor drift due to thermal stabilization.

3.6.2. Personnel Test

The personnel test was conducted to ensure lack of an EM response from personnel coming in close contact with the sensor platform during DGM operations. Personnel carrying metal items about their bodies could elicit an EM response that may potentially mask real anomalies in the field. The tests were (typically) logged as the 1st line in each

morning's Static Test and were reviewed in profile mode by the data processor in Geosoft Oasis Montaj.

3.6.3. Vibration (Cable Shake) Test

A cable shake test was conducted to identify and replace shorting cables or broken pin-outs on connectors prior to survey data being recorded; in the event that data spikes were observed, cables would have been immediately repaired or replaced. The tests were logged in each morning's Static Test and were reviewed in profile mode by the data processor in Geosoft Oasis Montaj.

3.6.4. Static Background and Static Response (Spike) Test

Static background and static response tests were conducted each day prior to and post DGM activities to quantify instrument background readings, electronic drift, locate potential interference, and determine response and repeatability of the instrument to a standard test item. Improper instrument function and the presence of local sources of ambient noise (such as thunderstorm activity) are potential causes of inconsistent, non-repeatable readings. A minimum of 1-minute static background data (after instrument warm-up) was collected, followed by 1-minute of standard (spike) data against a known object, followed by 1-minute of static background. The operators reviewed the readings to confirm their stability prior to continuing with the geophysical survey; this data was later verified by the data processor in Geosoft Oasis Montaj. Repeatability of the spike test was ensured through use of a jig built to make certain the test item was in the same position relative to the instrument for all tests (Figure 5).

Normally, static background and spike response tests are performed on site; however, due to an unknown background noise source that produced up to a 5 mV response on CH3 unique to the Hadnot Point area, daily static/spike tests were performed off site. Additionally, at the commencement of each mobilization, a static background and response test was performed on site to demonstrate/quantify site noise (Figure 6). Average static and spike values of each AM and PM test were tracked across the project to ensure consistency. To meet Project DQO's spike values for the AM/PM tests had to be within 20% of each other. With the exception of the January 22nd PM static response

test where a 30% increase in static response value was observed (due to incorrect field techniques), no day's spike data varied by more than 10%, with the average being in the order of 3.6% (Table 3).

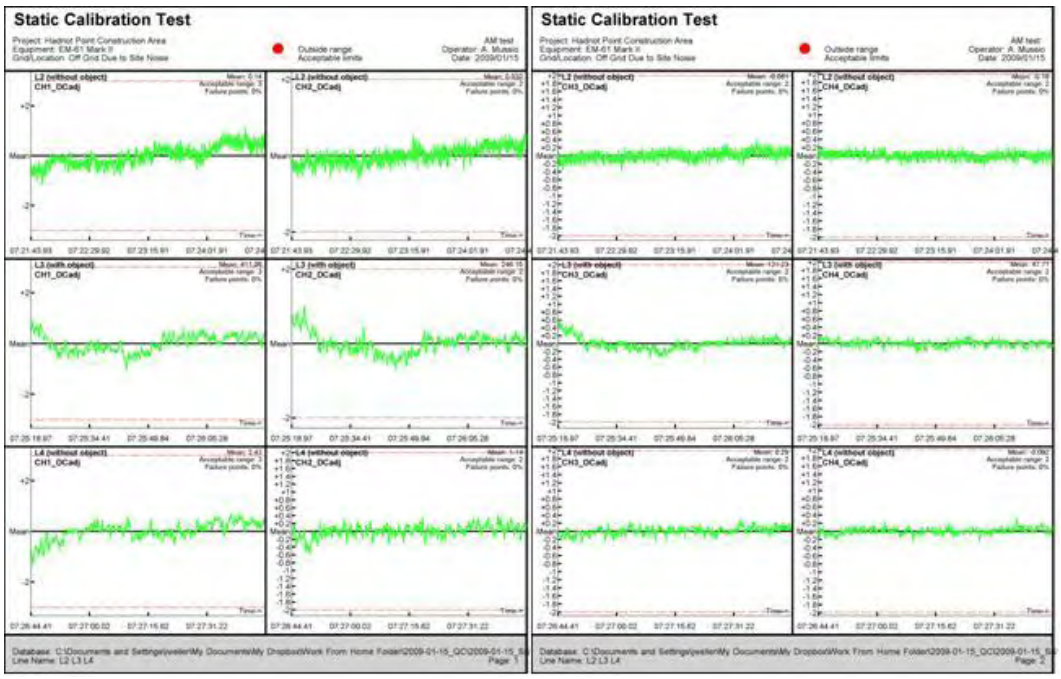

Figure 5 - Example of static test data from 01/15/2009. Rows, top bottom: Background, Spike, Background data. Columns, left to right: Ch1, Ch2, Ch3 and Ch4.

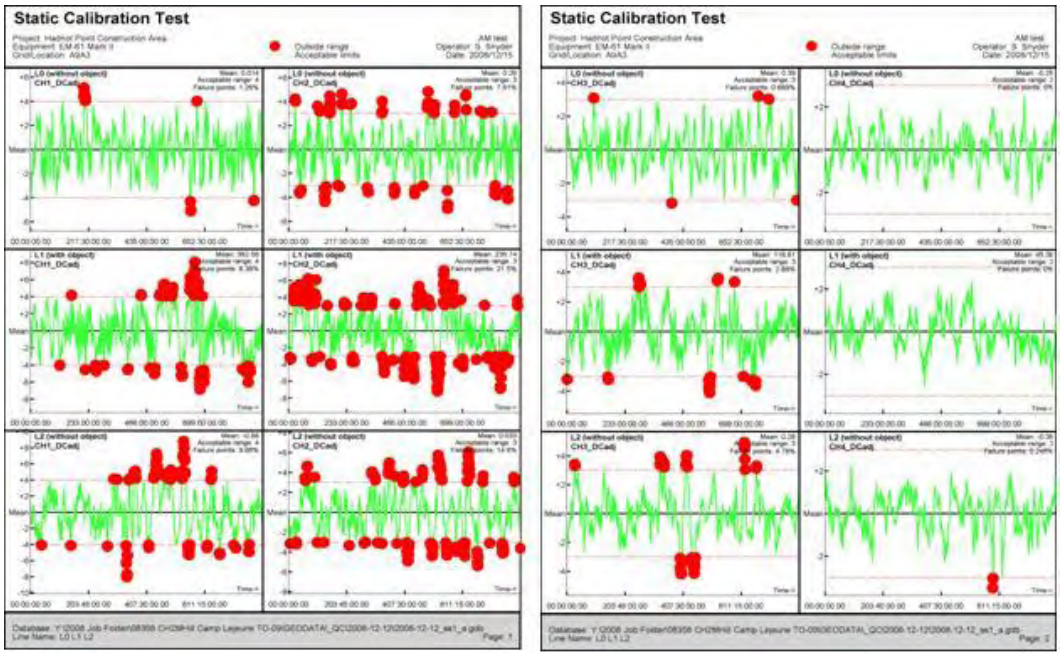

Figure 6 - Example of static test data taken within HPCA DGM area demonstrating site noise.

Table 3 – Channel 3: Static Background and Static Response Test Values.

Date	AM BG Value	AM Spike Value	AM BG Value	PM BG Value	PM Spike Value	PM BG Value	Percent Diff	Lat Corr
12/10/08	-0.0045	116.62	0.32	0.017	115.6	0.24	0.87%	3.25 fids
12/11/08	Stand-by due to inclement weather.							
12/12/08	0.067	117	0.21	0.067	115.84	0.17	0.99%	3 fids
12/13/08	No data collection - weekend.							
12/14/08	No data collection - weekend.							
12/15/08	0.07	117.11	-0.025	-0.09	115.8	0.11	1.12%	2 fids
12/16/08	-0.069	116.7	1.21	0.065	117.2	0.39	0.43%	2.5 fids
12/17/08	0.12	117.49	0.24	0.19	115.15	0.35	1.99%	1.5 fids
12/18/08	0.19	115.89	0.045	0.29	117.61	0.28	1.48%	2 fids
Demob								
01/14/09	0.15	118.12	-0.056	-0.13	118.19	-0.19	0.06%	5 fids
01/15/09	-0.061	121.23	0.29	-0.018	116.33	0.37	4.04%	8 fids
01/16/09	-0.24	123.03	0.15	0.13	124.7	0.36	1.36%	8 fids
01/17/09	No data collection - weekend.							
01/18/09	No data collection - weekend.							
01/19/09	-0.092	122.13	-0.15	-0.018	118.52	-0.075	2.96%	7.5 fids
01/20/09	0.19	121.94	0.89	0.21	123.26	0.45	1.08%	5 fids
01/21/09	0.39	123.67	0.9	0.22	124.25	0.45	0.47%	9 fids
01/22/09	-0.18	123.21	-0.46	0.032	160.19	0.46	30.01%	9 fids
*Note: AM spike values on 01/19 and 01/21 have single anomolous spike.								
						Average:	3.61%	5

3.6.5. Six Line Test (Start of Project)

A six line test was conducted prior to the commencement of DGM surveying in order to document lag / latency of the navigational system, repeatability of response amplitude to a standard test object, and positional accuracy (Figure 7). This test was performed in an area relatively clear of anomalous response. The test line (60 feet) was marked to facilitate data collection over the same trajectory for each section of the test:

Line 1 – Positive direction, normal survey pace, no test item

Line 2 – Negative direction, normal survey pace, no test item

Line 3 – Positive direction, normal survey pace, test item in place at 30 feet

Line 4 – Negative direction, normal survey pace, test item in place at 30 feet

Line 5 – Positive direction, faster than normal survey pace, test item in place at 30 feet

Line 6 – Negative direction, slower than normal survey pace, test item in place at 30 feet

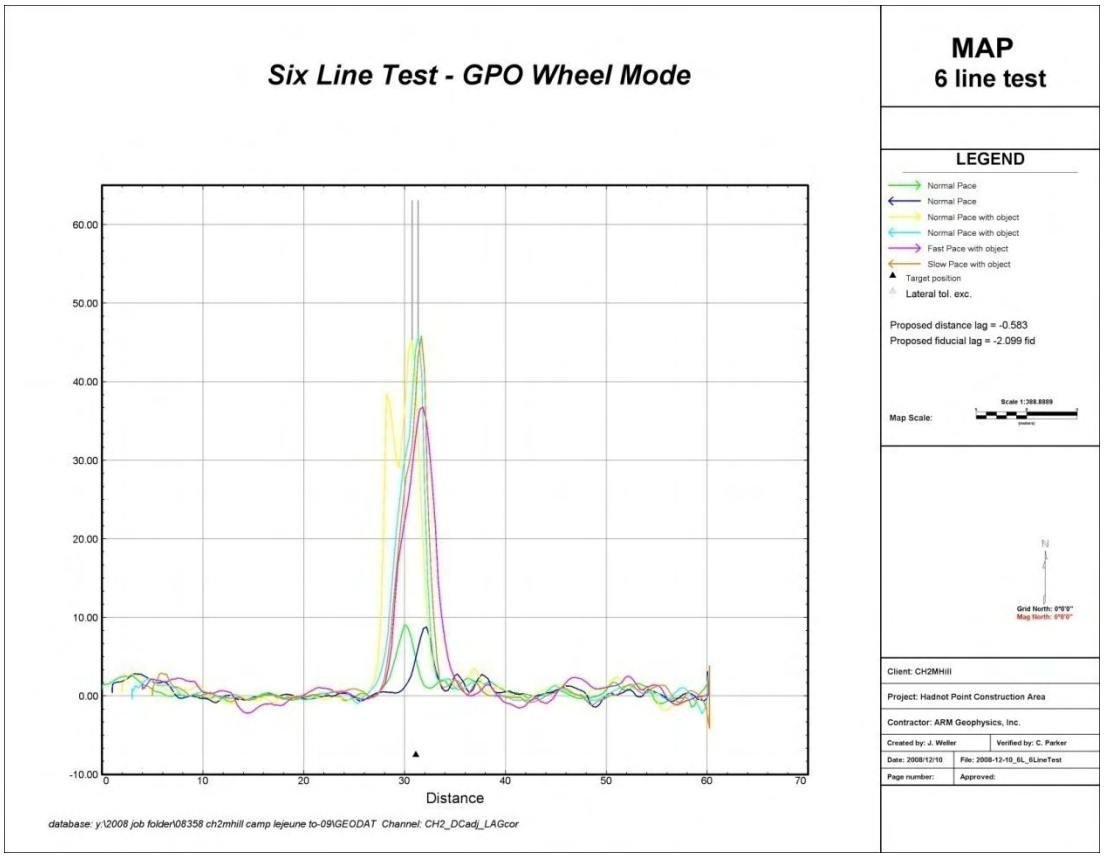

Figure 7 - Graphical results from the HCPA six line test.

3.6.6. Two Line Test (Latency Test)

An abbreviated form of the six line test (comprising lines 3 and 4 from section 3.6.5) was conducted each day to document lag/latency.

The average latency applied to the survey data was 5 fiducial readings (Table 3). This value was applied to each day's latency test data and adjusted if necessary to correct for the actual latency, with the resultant latency value being used to correct that day's data. The test was evaluated in Geosoft using the profile view.

3.6.7. Repeat Data

Approximately 2% of each grid was recollected as a QC repeat in order to document the ability of the system to respond consistently and to verify the positional accuracy of the data. Targets selected from the original and repeat data sets were overlain to qualitatively assess repeatability (Figure 8).

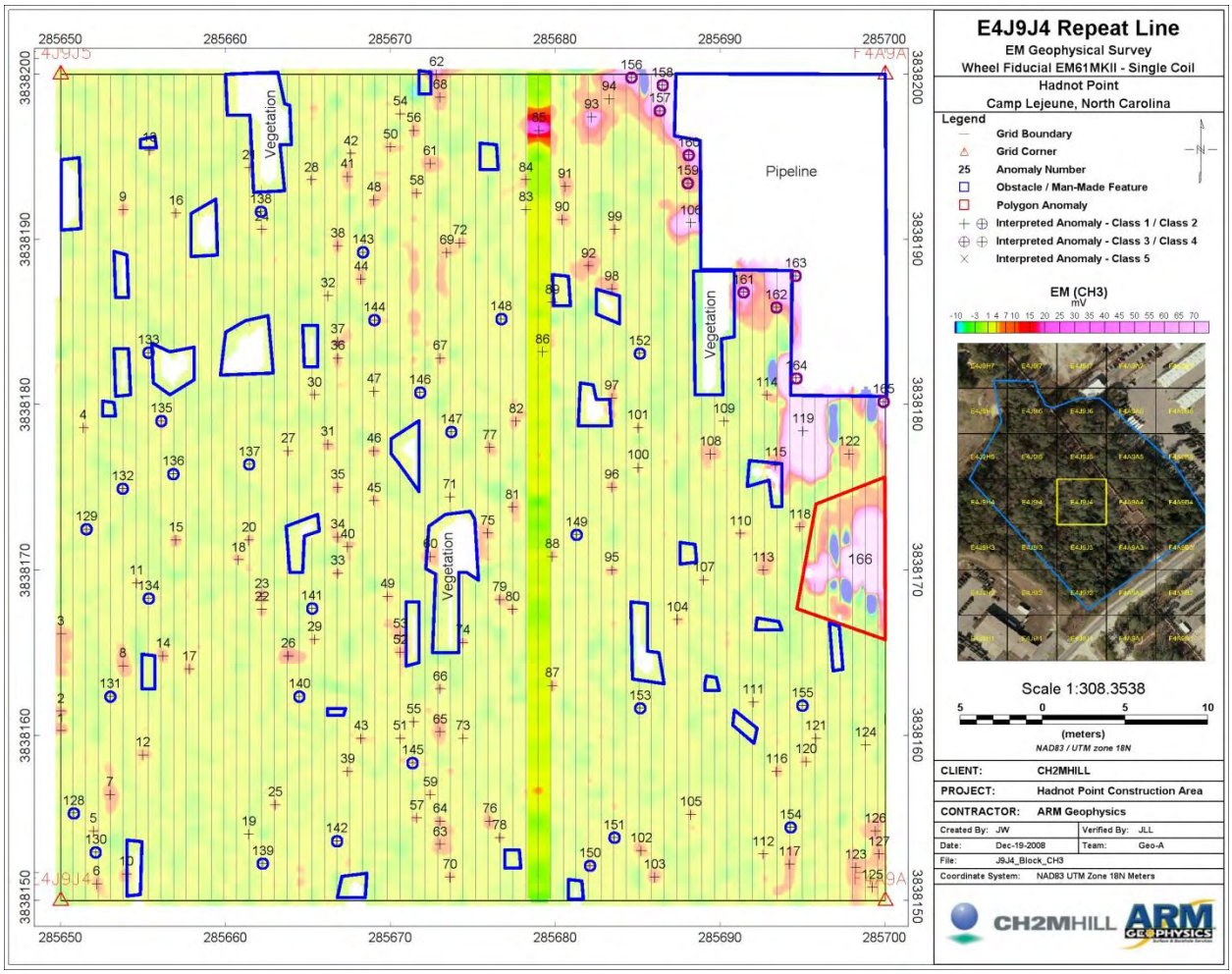

Figure 8- Example of QC Repeat Line: Grid E4J9J4 repeat line overlain on survey data.

All Quality Control raw data by date, preprocessed data by date and processed data by date are provided on the attached DVD.

3.7. Project Data Quality Objectives

The primary objective of the project was to identify metallic anomalies in the HPCA DGM area that may represent MEC or MPPEH. The specific Data Quality Objectives (DQO's), measurement performance criteria and test methods that were used during the project are summarized in Table 4, from the IVP Plan, all measureable DQO's outlined for the HPCA DGM area were met.

Table 4 – Project Data Quality Objectives

Data Quality Objective	Measurement Performance Criteria	Test Method During GPO and DGM
General System Functioning		
Repeatable data are being obtained from DGM system.	Response to standardized item will not vary more than ±20%.	Results of QC Tests will be evaluated to ensure compliance.
DGM Surveys		
DGM survey system can generally detect MEC to depths of 11*diameter. (Excluding smaller items such as 20mm projectiles.) (Depth is to top of the item.)	Sensor to identify MEC items of 20mm or larger diameter (or their surrogates in the GPO) at depths fitting within the detection depth equation.	Verify that: All of the seed items fitting within the detection depth equation have anomalies selected from the DGM surveys within 1m (3.3ft) of a point on the surface above the item.
Downline data density is sufficient to detect MEC items.	Over 98% of possible sensor readings are captured along a transect. In addition, any transect containing a data gap of 0.6m (2ft) or greater does not meet the DQO.	Results of DGM surveys will be evaluated to ensure compliance. Statistics were calculated in Geosoft and entered into the MRSIMS database system
Coverage over survey area is sufficient to detect MEC items.	Search transect spacing to vary no more than ±20% of spacing specified in sampling design.	Results of DGM surveys with various systems will be evaluated to ensure compliance.
Positioning of detected anomalies is accurate.	95% of all anomaly locations (as shown on the dig sheets) lie within a 1m (3.3ft) radius of a point on the ground surface directly above the source of the anomaly.	Anomalies selected will be compared with known seed item locations to ensure compliance.
Data Handling		
All data must be delivered in a timely manner and in a useable format.	Data packages are completed and delivered to the CH2M HILL Project Geophysicist within 1 working day of data collection (for the GPO) and 3 days for raw DGM data; 5 days for processed DGM data.	Evaluate based on actual delivery of data

4.0 Instrument Verification Prove-out (IVP)

4.1. IVP

ARM utilized the pre-existing IVP (dimensions of 50 ft x 200 ft) established by CH2M HILL in the Knox Park Area of Camp Lejeune for the purposes of testing the function of the geophysical

equipment and determining target pick thresholds for the site. Figure 9 below shows the EM61 response on channel 3.

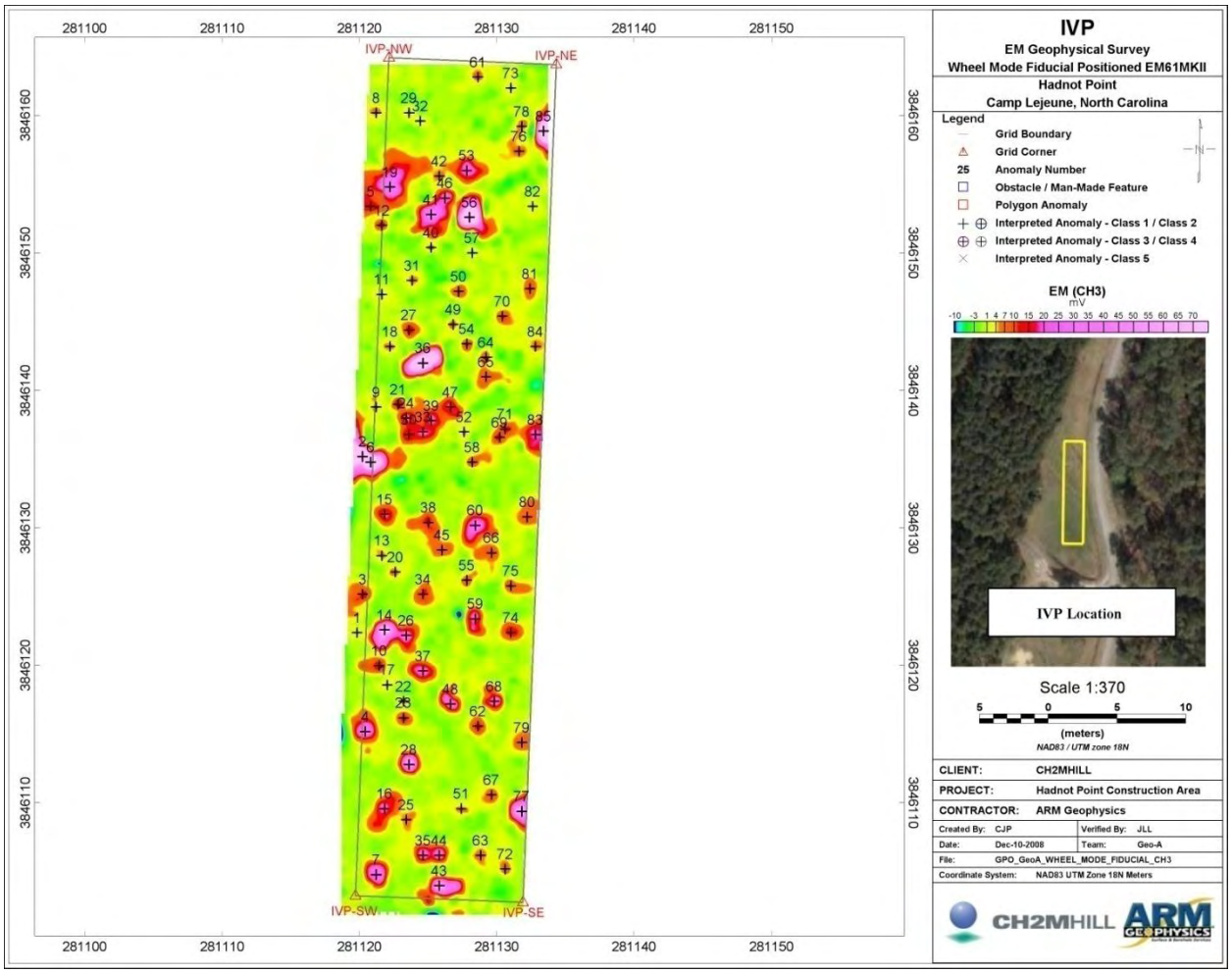

Figure 9 - Channel 3 response for IVP survey.

IVP data collection took place on December 10th and 11th. Verbal go-ahead was given to commence DGM by the onsite CH2M HILL representative following the IVP survey, pending analysis of the data. Processed data was submitted to CH2M HILL the following day, December 12th, and after discussion, the target threshold for picking anomalies on channel 3 (660µs time gate) was initially set at 3mV due to the low noise threshold at the IVP (i.e.; any anomaly in the gridded data of channel 3 with an amplitude of 3mV or higher would be picked and classified as an anomaly for intrusive investigation).

5.0 DGM SURVEY

5.1. General Field Activities

ARM initially mobilized two personnel to the HPCA site on December 8, 2008; a site geophysicist and a geophysical data collector. However, due to the complexity of the site and the demands of grid set-up and note taking as well as the fact that RTS was eliminated as a positioning option due to the vegetated nature of the site, ARM mobilized two additional geophysical data collectors to the HPCA on December 14, 2008. Data collection commenced following the GPO survey on the 12th of December and continued until the first demobilization on the 18th of December. At the time of the first demobilization parts of 7 individual grids had been collected and a total of 2.6 acres of DGM surveying had been completed.

On January 13, 2009 ARM re-mobilized four personnel to complete DGM surveying of the site. Data collection commenced on January 14th and continued until the completion of DGM surveying on January 22nd, 2009 at which time all ARM personnel demobilized from the site. Upon completion of DGM activities all accessible areas of 19 grids within the HPCA DGM area had been surveyed for a total of 6.2 acres of DGM coverage.

QC tests as described in Table 2 were completed and reviewed at the beginning and end of each day. The DQO's for down line sampling and coverage were also checked and recorded by the site's data processor. Field data sheets were filled out on the CH2M HILL MRSIMS GeoXT handheld devices and the data downloaded into the MRSIMS laptop interface. Raw EM61 data was uploaded to the CH2M HILL FTP site each evening.

5.2. Hadnot Point Construction Area – Camp Lejeune

The HPCA DGM area consists of twenty-five (25) 50 meter x 50 meter consecutive grids covering a total area of 8.5 acres. CH2M HILL had brush cut portions of the survey area to facilitate man-portable EM61 DGM. A number of factors, including the presence of cultural features, lack of complete vegetation removal, marshy areas within the survey area and complex

grid set-up resulted in an average collection rate of 0.52 acres per day. A map showing the coverage and response of the EM61 on CH3 is shown below in Figure 10.

In a number of grids, E4J9J6 and E4J9I3 for instance, the lack of vegetation removal and marshy features impacted the data collection such that parts of the grids in question were not collectable (Figure 10). However, the data collected and presented represents the sum total of surveyable area in the grids.

Figure 10 – Example of marshy, vegetated area which limited collection of DGM data.

5.2.1. Cultural Features

The presence of underground utilities at the HPCA DGM area was presumed to be likely at the start of the project and was verified by DGM surveys. Linear anomalies that most probably represented underground utilities were present in grids F4A9A5, F4A9A4 and A4A9A3 (Figure 10). Additionally, an area of very dense, high amplitude anomalies can be seen along the northeastern edge of the collection area (edge of area is coincident with a chain-link fence). The extent and density of the anomalies may indicate the presence of buried conductive fill or other such cultural feature. The density of these anomalies is such that saturation occurs – whereby individual anomalies cannot be separated out from one another. Above ground pipes (probably steam) run through the center of the site from approximately the southeast corner of grid F4A9A3 to the southwest corner of grid E4J9J6, the presence of which is clearly visible in the data (Figure 11).

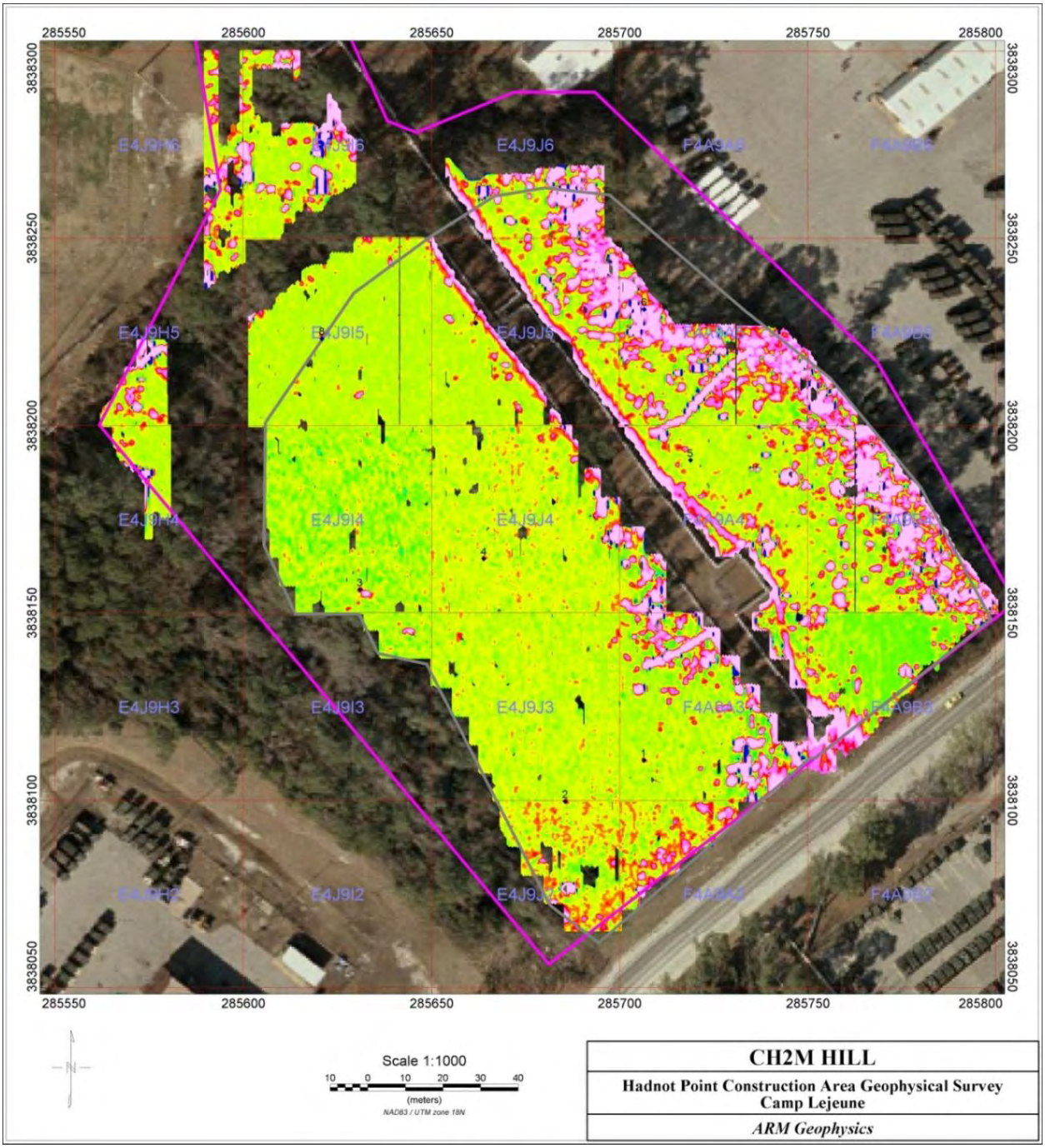

Figure 11 - Geophysical Coverage Map for Hadnot Point Construction Area.

6.0 ANALYSIS OF GEOPHYSICAL DATA

All data was directly transferred from the Allegro CX field computer to the Hershey office, either via e-mail or FTP, for pre-processing and processing at the end of each work day.

6.1. Pre-Processing

Pre-processing consisted of utilizing Geonics DAT61 MK2 software to convert the raw *.R61 files into *.M61 files, assign positions and export an XYZ data file. The XYZ data file contained the EM response values, time of collection and local coordinate information.

6.2. Processing

6.2.1. Corrections

Upon importing the data into Geosoft, corrections were made to account for instrument drift and sensor / positioning system latency. The data was viewed in profile (x = fid, y = EM response) and Geosoft's non-linear drift filter applied. The drift filter applied to the data varied depending on the noise level seen in the data (as discussed previously HPCA DGM data exhibited high levels of noise; up to 5 mV on channel 3). In addition to the UX-Detect drift filter, aggressive hand-filtering was applied to some of the data sets to minimize these noise effects. In some cases a long window length was applied and up to 70% of the highest values were rejected due to the high concentration of conductive material (i.e. steam pipes and underground utilities) across large areas of the site causing substantial artificial EM lows to appear, flanking real EM highs at other filter settings. Additional manual corrections were applied in areas of high anomaly density to the filtered data to ensure no target responses were degraded due to the effects of the filter.

Latency correction was applied as described in 3.6.6

6.2.2. Gridding

Channel 3 data was gridded in Geosoft using the Minimum Curvature method with a cell size of 0.2m and a blanking distance of 0.6m.

The gridded data was then masked to individual grids (with a buffer zone around each grid to avoid missed or double-picked anomalies between grids) and displayed in map format with line paths overlain to visually inspect for gaps. Gaps that were a result of trees, shrubs, cultural features, etc were designated on all maps as blue polygons.

6.2.3. Target Selection

Targets were selected using Geosoft's UX-Detect module. The targets were selected based upon the response and characteristics of the anomaly. Four discrete classes were established.

- Class One: All anomalies >5mV on CH3 with a metal like response.
- Class Two: All anomalies > 3mV but < 5mV on CH3 with a metal like response.
- Class Three: Anomalies associated with utilities.
- Class Four: Anomalies with a strong response (>5mV) on CH3 but with interference on other channels.

All anomalies on Ch3 above 5mV were automatically picked; the data was then visually inspected both in map view and in profile view. Anomalies in class two were added manually due to the large amount of noise at the site introducing anomalies between 3mV and 5mV on CH3. All selected targets were then overlain on the gridded data and extra targets added, moved or removed as necessary. Areas of high anomaly density, such that the response merged into clusters (such as in the case of pipe lines), had individual targets removed and their boundaries outlined within the context of each individual grid as 'target polygons'.

Overall there were 1,512 single anomaly picks and 43 polygon picks across the 6.2 acres of gridded data. An overview of relative target density can be seen in Figure 12. Of note, the area between the eastern boundary and the first set of pipelines is characterized by the cluttering of anomalous responses that were interpreted, and represented, as several large

polygons due to the fact that a large percentage of these grids were saturated with anomalies around the grid edges.

6.2.4. Target Sheets

Target sheets containing the attributes of each picked target in a given grid were generated in the CH2M HILL MRSIMS standard format (Table 5). Amplitude reflects the instrument response on CH3.

Table 5 – Example Target Sheet: Note targets 32 and 33 as examples of polygon and Class 2 anomalies respectively.

ID	GRIDCELLI	X1	Y1	X2	Y2	X3	Y3	X4	Y4	TYPE	AMPLITUD	UNITS
1	E4J9H6	285589.6	3838298	0	0	0	0	0	0	1	22.6	mV
2	E4J9H6	285590.2	3838251	0	0	0	0	0	0	1	59.1	mV
3	E4J9H6	285590.3	3838290	0	0	0	0	0	0	1	20.7	mV
4	E4J9H6	285590.4	3838252	0	0	0	0	0	0	1	52.2	mV
5	E4J9H6	285591	3838255	0	0	0	0	0	0	1	94.4	mV
6	E4J9H6	285591.2	3838291	0	0	0	0	0	0	1	40.6	mV
7	E4J9H6	285591.3	3838294	0	0	0	0	0	0	1	25.1	mV
8	E4J9H6	285591.4	3838286	0	0	0	0	0	0	1	34.4	mV
9	E4J9H6	285592	3838281	0	0	0	0	0	0	1	36.7	mV
10	E4J9H6	285592.2	3838251	0	0	0	0	0	0	1	8.8	mV
11	E4J9H6	285592.4	3838282	0	0	0	0	0	0	1	27.5	mV
12	E4J9H6	285592.7	3838300	0	0	0	0	0	0	1	22.4	mV
13	E4J9H6	285592.8	3838253	0	0	0	0	0	0	1	35	mV
14	E4J9H6	285592.8	3838288	0	0	0	0	0	0	1	27.7	mV
15	E4J9H6	285592.8	3838294	0	0	0	0	0	0	1	110.8	mV
16	E4J9H6	285592.8	3838298	0	0	0	0	0	0	1	19.3	mV
17	E4J9H6	285593	3838285	0	0	0	0	0	0	1	30.2	mV
18	E4J9H6	285593.4	3838256	0	0	0	0	0	0	1	6.5	mV
19	E4J9H6	285595	3838253	0	0	0	0	0	0	1	6.2	mV
20	E4J9H6	285595.8	3838255	0	0	0	0	0	0	1	17.9	mV
21	E4J9H6	285596.4	3838257	0	0	0	0	0	0	1	25.4	mV
22	E4J9H6	285596.4	3838277	0	0	0	0	0	0	1	10.1	mV
23	E4J9H6	285597	3838279	0	0	0	0	0	0	1	7	mV
24	E4J9H6	285597.2	3838278	0	0	0	0	0	0	1	19.9	mV
25	E4J9H6	285598	3838250	0	0	0	0	0	0	1	12.3	mV
26	E4J9H6	285598.2	3838257	0	0	0	0	0	0	1	34.5	mV
27	E4J9H6	285599.4	3838292	0	0	0	0	0	0	1	49.6	mV
28	E4J9H6	285599.5	3838285	0	0	0	0	0	0	1	52.9	mV
29	E4J9H6	285599.5	3838287	0	0	0	0	0	0	1	31.6	mV
30	E4J9H6	285599.5	3838278	0	0	0	0	0	0	1	6	mV
31	E4J9H6	285599.6	3838258	0	0	0	0	0	0	1	20.8	mV
32	E4J9H6	285595	3838256	0	0	0	0	0	0	2	4.6	mV
33	E4J9H6	285599.9	3838276	285592.8	3838269	285593.9	3838263	285599.9	3838260	1	999	mV

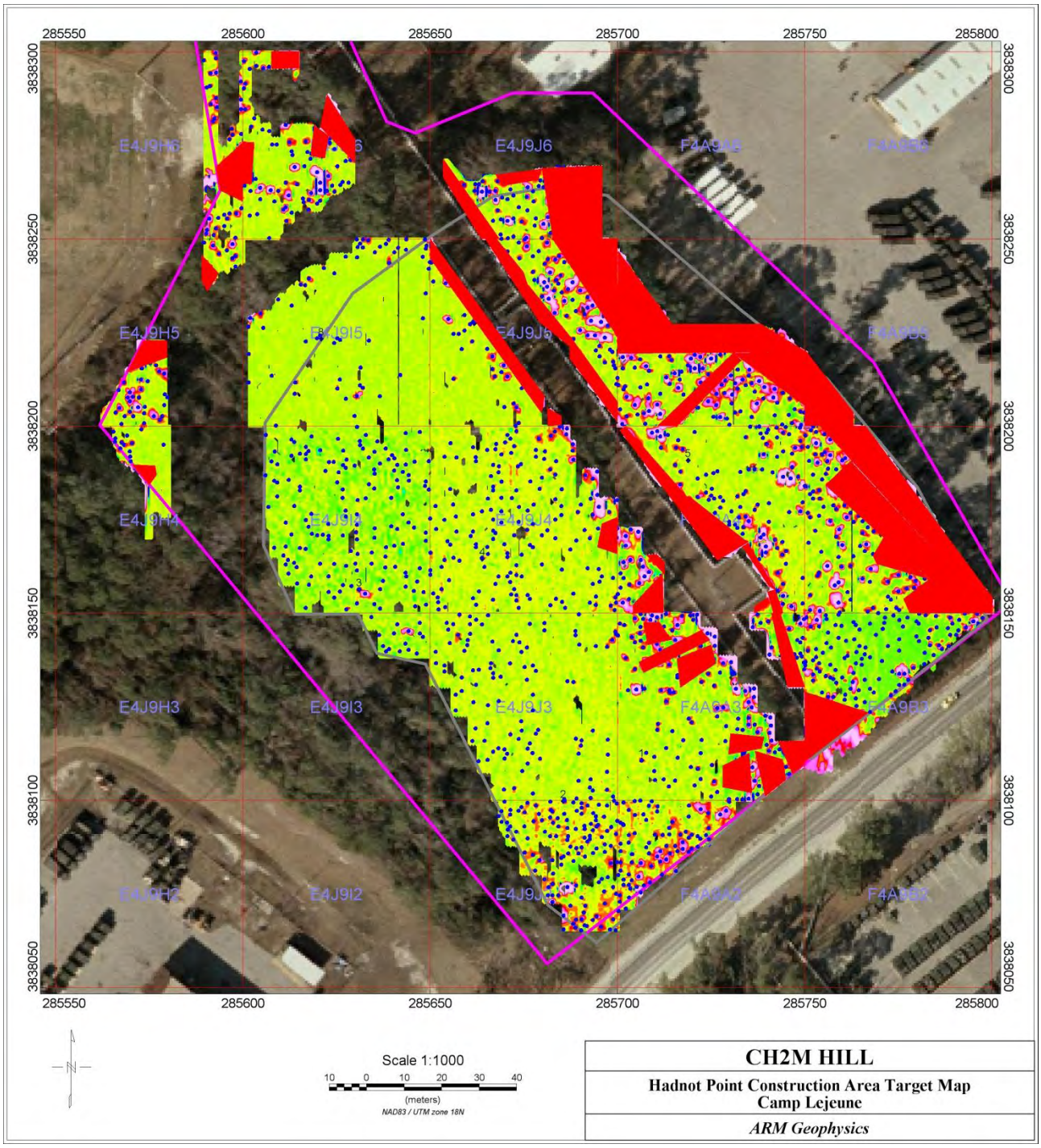

Figure 12 - Target density. Note the presence of pipe lines crossing the survey area. Northern and western boundaries not surveyed due to marshy areas within site boundary – north eastern boundary bounded by chain-link fence.

6.2.5. Data QC

In addition to viewing the data in profile mode for the purposes of visual QC, a number of standardized QC methods were applied to the data:

- Sample separation analysis to ensure majority of data points had a separation of <0.2m. This was done using the UX-Process QA/QC Sample Separation tool as well as analyzing individual data points plotted in map view.
- Time separation analysis to inspect for data skips and gaps etc

The EM responses of interpreted peak anomaly (target) locations were analyzed for:

- Tau (τ), with decay curve plotted as in-database profile
- Signal to Noise ratio (S/N) for targets that failed based on the decay curve

7.0 SUMMARY OF GEOPHYSICAL SURVEY RESULTS

ARM mobilized personnel to Hadnot Point Construction Area, Camp Lejeune on December 13th. Parts of 19 grids were surveyed using an EM61 MK2 in wheel mode for a total DGM coverage of 6.2 acres. The field team demobilized from site on January 22nd.

Data was processed at ARM's office in Hershey, PA where 1,512 single anomaly picks and 43 polygon anomalies were identified based upon a 5mV threshold on CH3. Data was uploaded to the CH2M HILL FTP site and targets imported into MRSIMS during the course of the project.

ROOT CAUSE ANALYSIS (RCA) & CORRECTIVE ACTION PLAN (CAP)

FOR

Field Data Collection and Office Data Processing Procedures pertaining to missed blind seed item

AT

Hadnot Point Construction Area Camp Lejeune, NC

1.0 BACKGROUND

ARM Geophysics (ARM) was informed by CH2MHill on Feb 13th, 2009 that blind seed item number five located in grid E4A9A4 had not been selected as a target.

ARM informed CH2M HILL via email that the preliminary investigation revealed that the error was not a result of processing but a result of possible errors in data collection, detailed below in the following Root Cause Analysis.

2.0 ROOT CAUSE ANALYSIS (RCA)

Upon receiving notification that the geophysical survey at the Hadnot Point Construction Area missed one seed item, ARM tabulated a list of possible factors to investigate in an attempt to determine the cause of the detection failure. Potential factors resulting in the QC failure include:

- EM61 did not pass over the item.
- Data processing filtering removed the anomaly from the data set.
- Fiducial data positioned incorrectly.
- Item seeded deeper than specified.
- Surveyed coordinates of seed item are incorrect.

ARM has reviewed the data set and specifically the lines associated with the seed item. From the data, ARM cannot comprehensively identify any reason that would cause the seed item to be missed. In the investigation, ARM reviewed:

- The positioning of the grid and the possibility that individual lines within the grid were reversed.
- The warping/translation of the grid from local coordinates to real world coordinates
- The filtering of the data and the possibility the filtering degraded the seed items response.
- Sample separations and down line sample density.

ARM performed further investigations to determine the standard response of the seed item. Part number 44615K466 was ordered from McMaster-Carr. ARM buried the seed item at a depth of 7 inches in an E/W orientation near the ARM office in Hershey, PA. A number of ten foot long lines were performed in a N/S direction over the item at various offsets. ARM has determined from these results that the seed item at stated depth should have been detected if the data was collected in accordance with the data quality objectives outlined in the work plan.

Below are examples of the data collected during the ARM trials:

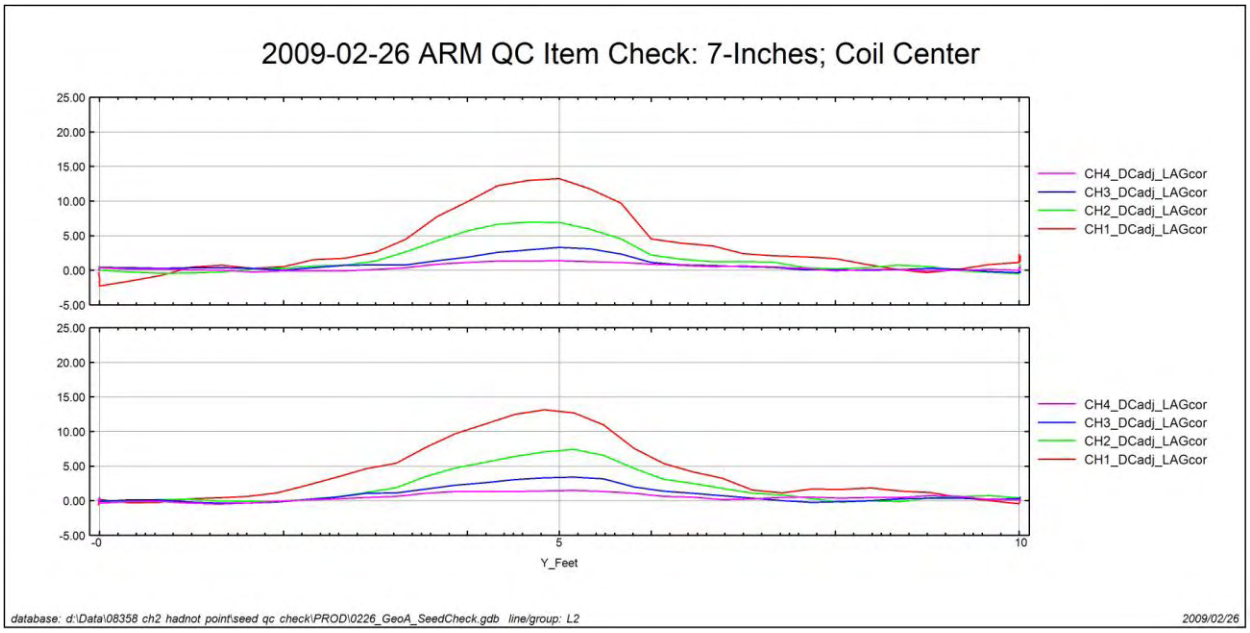

Figure 1 EM61 pass over seed item. Depth 7 inches, E/W orientation, Center of EM61 coil

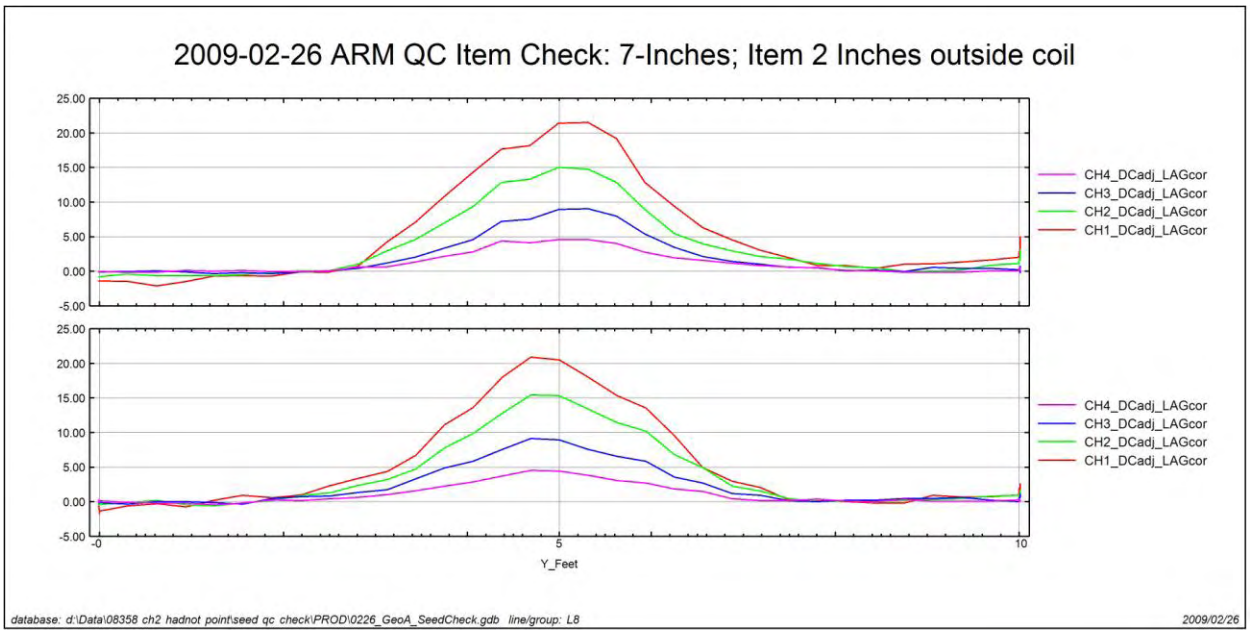

Figure 2 EM61 pass over seed item. Depth 7 inches, E/W orientation, 2 inches outside EM61 coil

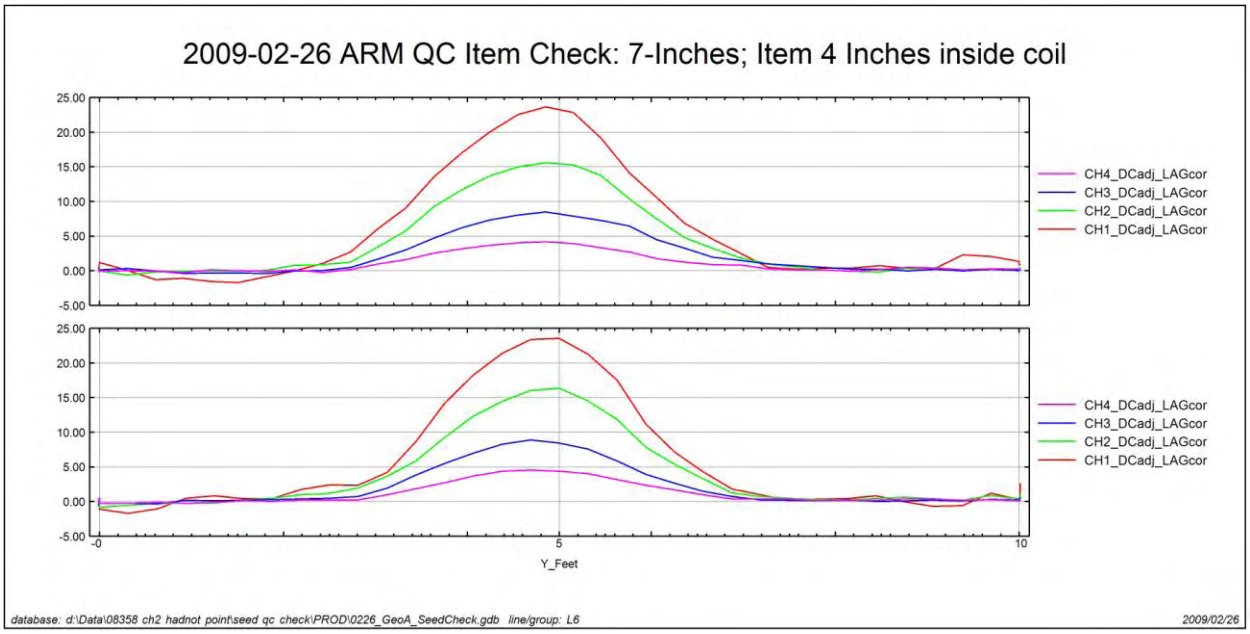

Figure 3 EM61 pass over seed item. Depth 7 inches, E/W orientation, 4 inches inside of coil

At this point, ARM cannot definitively state the exact cause of the failure. The corrective action plan (CAP) below identifies ARM's proposed plan to correct for the failure of detection of QC seed #5.

3.0 CORRECTIVE ACTION PLAN (CAP)

ARM proposes a three stage response to correct for the failed detection of QC seed #5.

Stage one will consist of ARM or a CH2M Hill approved contractor mobilizing to the Hadnot Point construction site and attempting to reacquire the seed item. The field team will reacquire the target using tape measures from the north-east and north-west corners of the grid. If the item responds to a detectable level (in excess of 3mV on CH3) on the EM-61, the field team will move on to stage two of the response plan.

Stage two will consist of the field team surveying approximately half of the Geophysical Prove-Out (GPO) in order to verify the equipment is functioning correctly. This data will be processed and submitted to CH2M Hill for approval.

Stage three will commence after ARM has reviewed the GPO data and is confident that it will be approved by CH2M Hill. The field team will commence a partial recollect of the grid E4A9A4. The field team will initially recollect 9 lines of data. This will range from 50ft-70ft from the S/W corner. ARM will process this data to confirm the seed item has been detected.

Assuming the seed item is detected and positioned within DQO requirements, the field team will be instructed to complete recollecting the grid. The full grid with then be fully processed and a new deliverable set generated and supplied to CH2M Hill.

4.0 SUMMARY

ARM Geophysics (ARM) has provided a background, Root Cause Analysis, and Corrective Action Plan relating to the missed seed item at the Hadnot Point construction site.

ARM will take measures based on the outcome of the Corrective Action Plan (CAP) to ensure no other seed items are missed in the future. ARM Standard Operating Procedures (SOP's) will be updated with new checks and/or procedures to ensure future fiducial data collected meets all required DQO's.

ROOT CAUSE ANALYSIS (RCA) & CORRECTIVE ACTION PLAN (CAP)

FOR

Field Data Collection and Office Data Processing Procedures pertaining to inappropriate field computer setting

AT

Hadnot Point Construction Area, Camp Lejeune

1.0 BACKGROUND

While reviewing data for Hadnot Point Construction Area (HPCA) on April 1st, 2009, ARM Geophysics (ARM) discovered that data collected on the final day of the project (January 22nd, 2009) had inadvertently been recorded using the „High Power" option in the „Logger Setup" menu of the data collection program, EM61MK2 on the Allegro CX field computer. At this time ARM immediately reviewed all *.R61 files across the life of the project and determined that only a single days worth of data was affected, January 22nd.

ARM subsequently informed CH2M HILL of this potential issue and of their preliminary findings via email on April 1st, 2009, detailed below in the following Root Cause Analysis.

2.0 ROOT CAUSE ANALYSIS (RCA)

In attempting to resolve a discrepancy noticed in the final Static Response Test collected on January 22nd, whereby the percent difference in the morning and afternoon spike value approached 50% , ARM discovered that the header of file 0122SS2.R61 was set to EM61HP2 as opposed to EM61MK2 (Table 1, Figure 1).

This finding prompted ARM to check all *.R61 across the life of the HCPA project and verify that the only date affected by the aberrant setting was January 22nd, 2009. Discussions with the field team and review of field notes from that date showed that a new Allegro CX field computer had been put into operation that day. Despite checking the standard Allegro settings before field operations began, the „High Power" option in the Logger Setup menu was overlooked. At the time, the field crew was unaware of the significance of this particular option in the „Logger Menu" and noting no issues in the morning QC tests commenced with data collection.

Data from January 22nd was delivered to ARM"s home office in Hershey, PA via file transfer protocol (FTP) on the evening of January 22nd and the field team demobilized the morning of the 23rd. The data was subsequently processed as normal, and with the exception of the single aberrant static spike result, appeared similar in nature to the rest of the data collected at HPCA.

Table 1: Channel 3 Static Background and Static Response Test Values

Date	AM BG Value	AM Spike Value	AM BG Value	PM BG Value	PM Spike Value	PM BG Value	Percent Diff	Lat Corr
12/10/08	-0.0045	116.62	0.32	0.017	115.6	0.24	0.87%	3.25 fids
12/11/08	Stand-by due to inclement weather.							
12/12/08	0.067	117	0.21	0.067	115.84	0.17	0.99%	3 fids
12/13/08	No data collection - weekend.							
12/14/08	No data collection - weekend.							
12/15/08	0.07	117.11	-0.025	-0.09	115.8	0.11	1.12%	2 fids
12/16/08	-0.069	116.7	1.21	0.065	117.2	0.39	0.43%	2.5 fids
12/17/08	0.12	117.49	0.24	0.19	115.15	0.35	1.99%	1.5 fids
12/18/08	0.19	115.89	0.045	0.29	117.61	0.28	1.48%	2 fids
Demob								
01/14/09	0.15	118.12	-0.056	-0.13	118.19	-0.19	0.06%	5 fids
01/15/09	-0.061	121.23	0.29	-0.018	116.33	0.37	4.04%	8 fids
01/16/09	-0.24	123.03	0.15	0.13	124.7	0.36	1.36%	8 fids
01/17/09	No data collection - weekend.							
01/18/09	No data collection - weekend.							
01/19/09	-0.092	122.13	-0.15	-0.018	118.52	-0.075	2.96%	7.5 fids
01/20/09	0.19	121.94	0.89	0.21	123.26	0.45	1.08%	5 fids
01/21/09	0.39	123.67	0.9	0.22	124.25	0.45	0.47%	9 fids
01/22/09	-0.18	123.21	-0.46	0.16	183.6	0.65	49.01%	9 fids
*Note: AM spike values on 01/19 and 01/21 have single anomolous spike.						Average:	5.07%	5

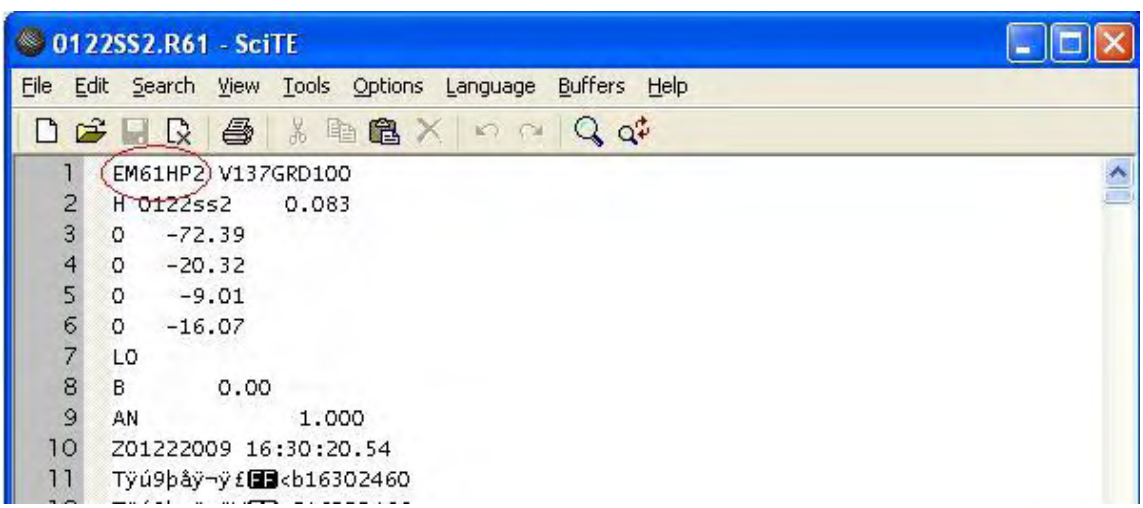

Figure 1: Static Response Test from January 22nd, 2009 showing High Power setting in 0122SS2.R61 file header.

As the Static Response Test values for the 22nd were not immediately compared with prior day"s results the anomalously large response went initially unnoticed. Later, when the anomalous Static Response Test was noted the data processor made an initial review of the data to ensure proper procedures had been followed for processing Static QC Tests. The raw .XYZ and related .M61 files were then reviewed; noting that the response showed up in the „raw" data, and being unaware of the potential issue involving the „High Power" vs. „Standard" logging options, the data processor assumed that that response was from an external source such as change in configuration of the spike item or introduction of an additional noise source by the EM61 operator. Additionally, gridded data for DGM surveys collected on the 22nd compared favorably with data collected on prior days (Figure 2). At the time of composing the final report, the issue involving the anomalous Static Response Test was again broached and at this time the *.R61 files were reviewed and the incorrect „High Power" heading noted for all files collected on January 22nd. These files included all QC tests performed on the 22nd, with the exception of the AM Static/Spike test, as well as DGM surveys for grids E4J9I6 and E4J9H6 in their entirety and the north-east portion of grid E4J9H5 (the balance of this grid had been collected the previous day, January 21st).

In retrospect a number of issues contributed to ARM not pin pointing the change in Allegro settings from „High Power" mode to „Standard" mode:

(1) The introduction of a new Allegro CX field computer on the final day of data collection in conjunction with the field team being unaware that the above setting needed to be reviewed prior to data collection.

(2) Site specific background conditions (noise) unique to HPCA had produced similar anomaly decay patterns where Ch1, Ch2 < Ch3 in previous days data collected in „Standard Mode", as well as the fact that gridded data collected with the „High Power" setting looked very similar qualitatively to all previous data collected at HPCA (Figure 2) . Due to the similarity of DGM data and target decay patterns collected on the 22nd with prior data, the data processor did not realize a problem existed and proceeded per normal assuming that any problems from field equipment would be reflected as a new source of noise and be readily apparent.

(3) The data processor being unaware of the potential for change in Allegro settings and thereby not realizing the *.R61 files should be checked both periodically throughout the project as well as when trying to ascertain the underlying issue with the anomalous Static Response Test.

(4) Finally, that the only indication of a potential problem occurred on the final QC test on the final day of the project thereby leading the data processor to believe that incorrect field techniques were the likely cause of the anomalous Static Response result.

The software developer has confirmed that the header in the raw *.R61 files can be manually changed from high power to standard format, and that the subsequent conversion in Dat61 to *.m61 format would yield the correct relative values for each channel. Given this path forward, all affected headers for data collected on January 22nd were corrected. Additionally, ARM noted that part of the reason survey data collected under „High Power" mode compared qualitatively

with survey data collected in „Standard" mode is that the „High Power" option appears to: (1) under-report the values of Ch1 and Ch2 with respect to those collected in „Standard" and (2) over-report the values of Ch3 and Ch4. As data from HPCA was gridded using Ch3, and due to a documented +/- 5mV noise source unique to this site, anomalies appeared to be well represented (in fact, some anomalies were over represented on Ch3 due to the incorrect setting) (Figure 3). The effect is also more apparent in higher amplitude anomalies.

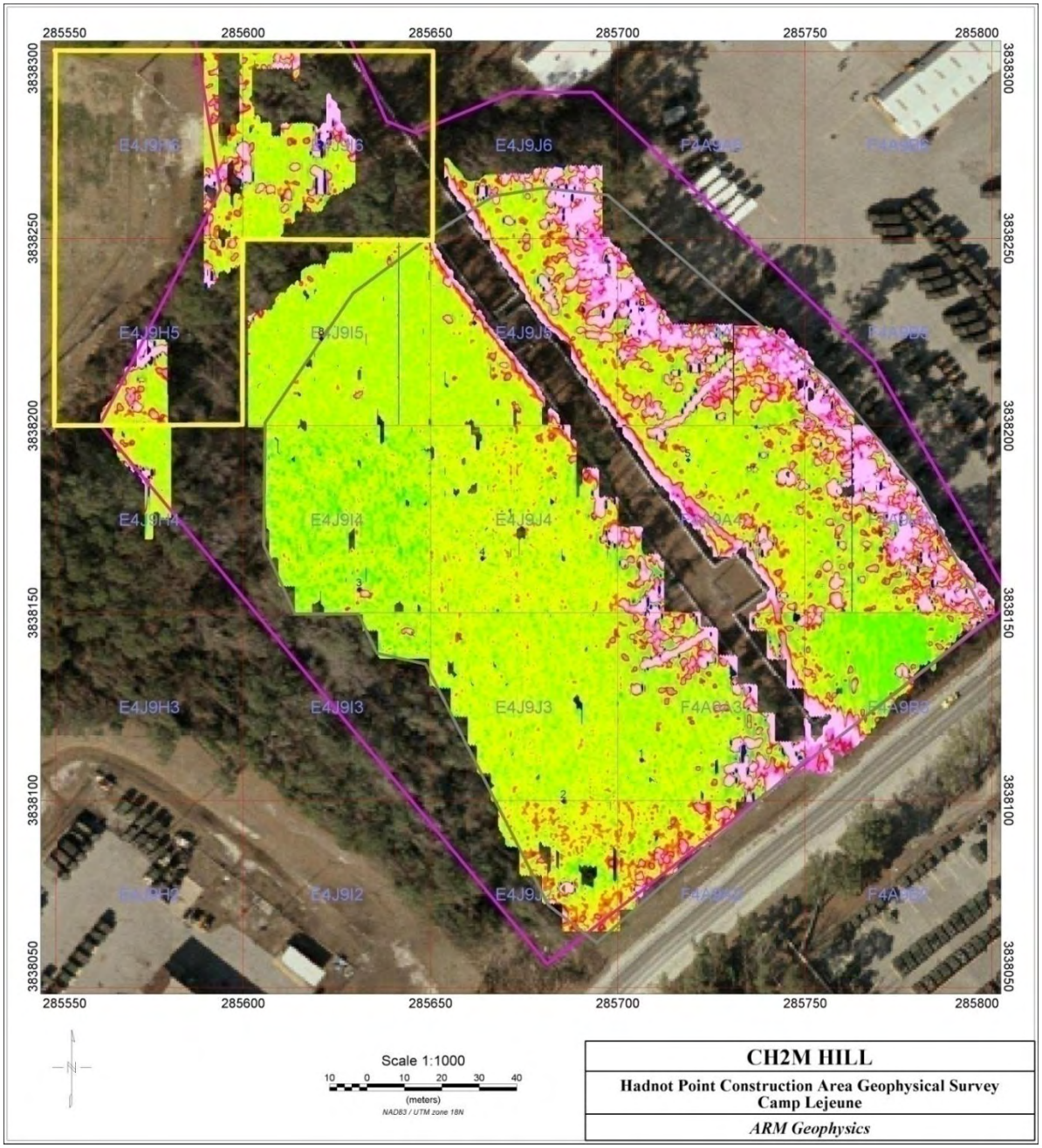

Figure 2 – Gridded Ch3 data for entire HPCA site. All grids to same scale and color scale. The area outlined in yellow was collected on January 22nd with High Power setting. Notice similarity to rest of site.

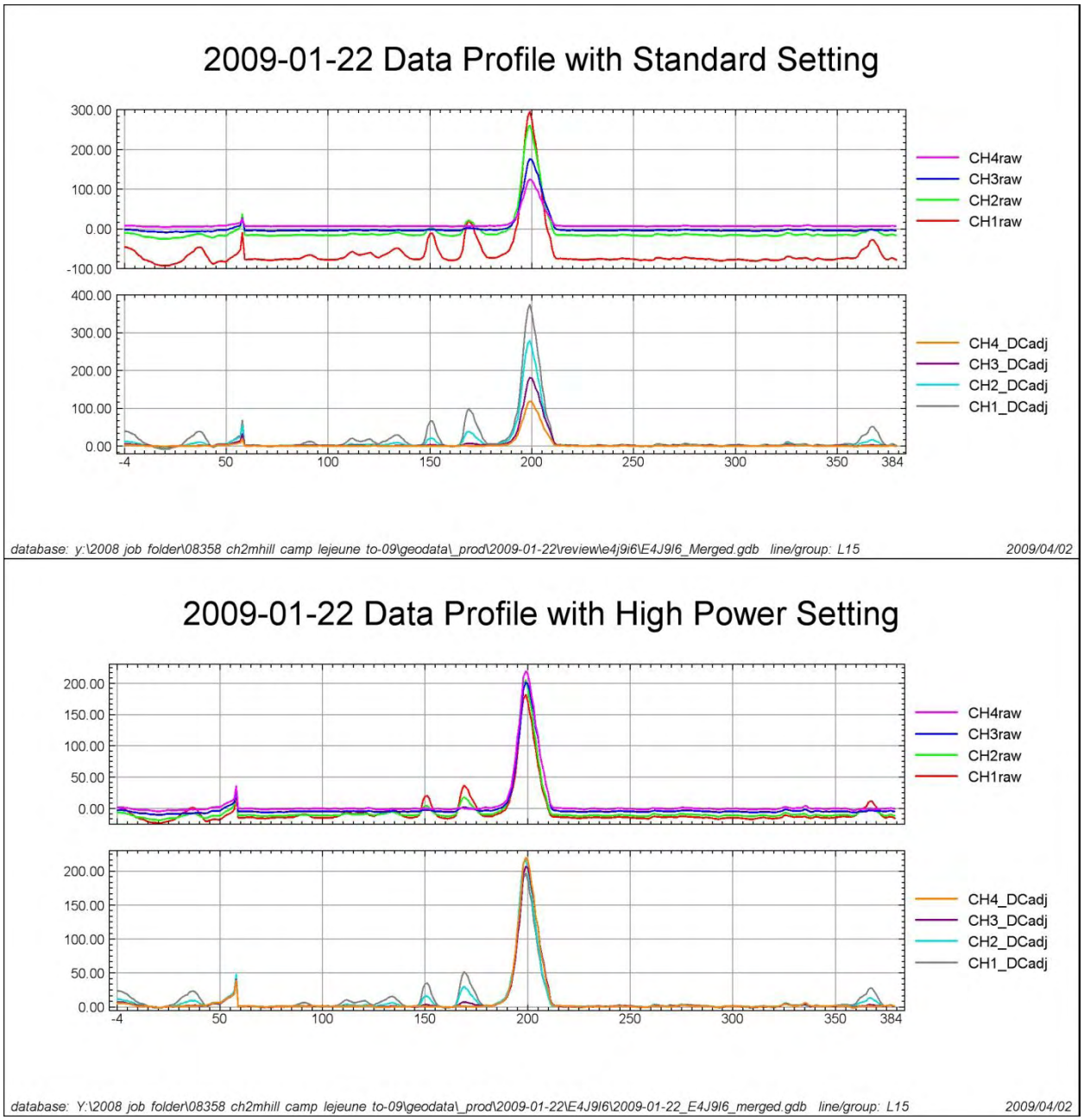

Figure 3: Line 15 from grid E4J9I6 showing response using 'High Power' mode vs. 'Standard Mode'. Note that the 'High Power' setting lowers values on channels 1 and 2 but increases response on channels 3 and 4. Effect is more apparent for higher amplitude anomalies.

On discovery of the problem, data for grid E4J9I6 (this grid being the largest single grid by area affected) was immediately re-processed to assess the extent of the issue and the corrected gridded data with target selections qualitatively compared to the original data processed using the incorrect „High Power" setting (Figure 4). The result of this

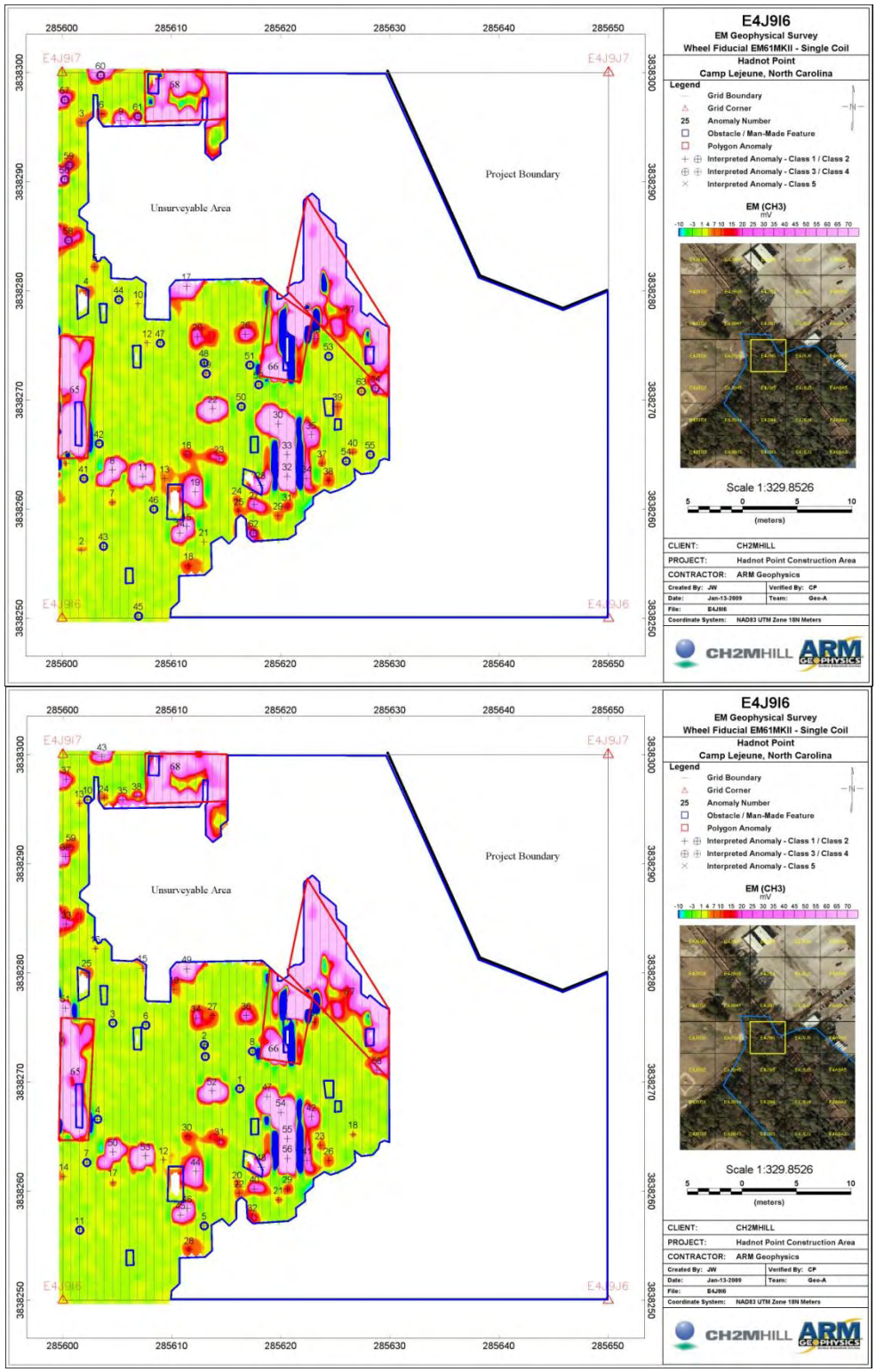

Figure 4: Grid E4J9I6, Ch3. Top image shows original data and target selections processed using 'High Power' setting. Bottom image shows reprocessed data and target selections using 'Standard' setting.

comparison shows that no major changes appear in the gridded survey data. Additionally, all anomalies selected as targets in the reprocessed data using „Standard" mode were initially selected in the original data processed using „High Power" mode. However, re-processing in „Standard" mode did result in: (1) five fewer anomalies being selected (due to the over representation of Ch3 in the original data) and (2) nine anomalies whose original classification was Level 4 (due to being well represented on Ch3 but not on Ch1 and Ch2 and therefore assumed by the data processor to be a result of site noise conditions) being changed to Level 1 priority. Table 2 shows the channel values of 3 of the larger anomalies (center of grid) along with 3 of the anomalies originally given the classification Level 4 (NW section of grid):

Table 2: Comparison of selected targets in grid E4J9I6 from data collected Jan 22nd in High Power mode (Original) and Standard mode (Reprocessed). Anomalies d, e and f represent targets that changed classification from Level 4 to Level 1.

Grid E4J9I6 Selected Anomalies						
Original						
ID		*Class*	*CH1*	*CH2*	*CH3*	*CH4*
8	a	1	178.5	195.7	200.2	210.0
22	b	1	420.6	429.1	365.7	269.8
11	c	1	343.9	371.2	340.8	271.6
58	d	4	28.0	27.8	25.3	23.5
57	e	4	41.7	48.3	42.0	28.9
56	f	4	54.8	63.7	57.4	51.7
Reprocessed						
ID		*Class*	*CH1*	*CH2*	*CH3*	*CH4*
50	a	1	363.0	270.5	179.0	116.4
52	b	1	770.6	533.8	300.7	138.6
53	c	1	692.5	517.2	326.7	154.7
33	d	1	65.5	38.5	21.8	11.6
37	e	1	65.7	50.1	31.6	13.4
39	f	1	73.6	54.3	37.7	19.6

Despite the fact that data collected on previous days showed high levels of noise, as well as anomalies whose peaks were out-of-phase with each other (Figure 5), the fact that so many of the anomalies selected for data collected in „High Power" mode had peaks where Ch1, Ch2 < Ch3 should have initiated an in depth look at all levels of the data, down to the .R61 files (Figure 6). The main element that the processing geophysicist had been looking for in target selection was that priority targets above the threshold of 5 mV had been picked (Class 1) and that any MEC-like anomalies between 3-5 mV where manually selected (Class 2), assuming that any issues

with field equipment would introduce a new level of noise into the data (not seen). As it appeared that all viable anomalies above 5 mV were being selected and given the existing noise source unique to HPCA, the data from the 22nd was submitted to CH2MHill for approval per usual.

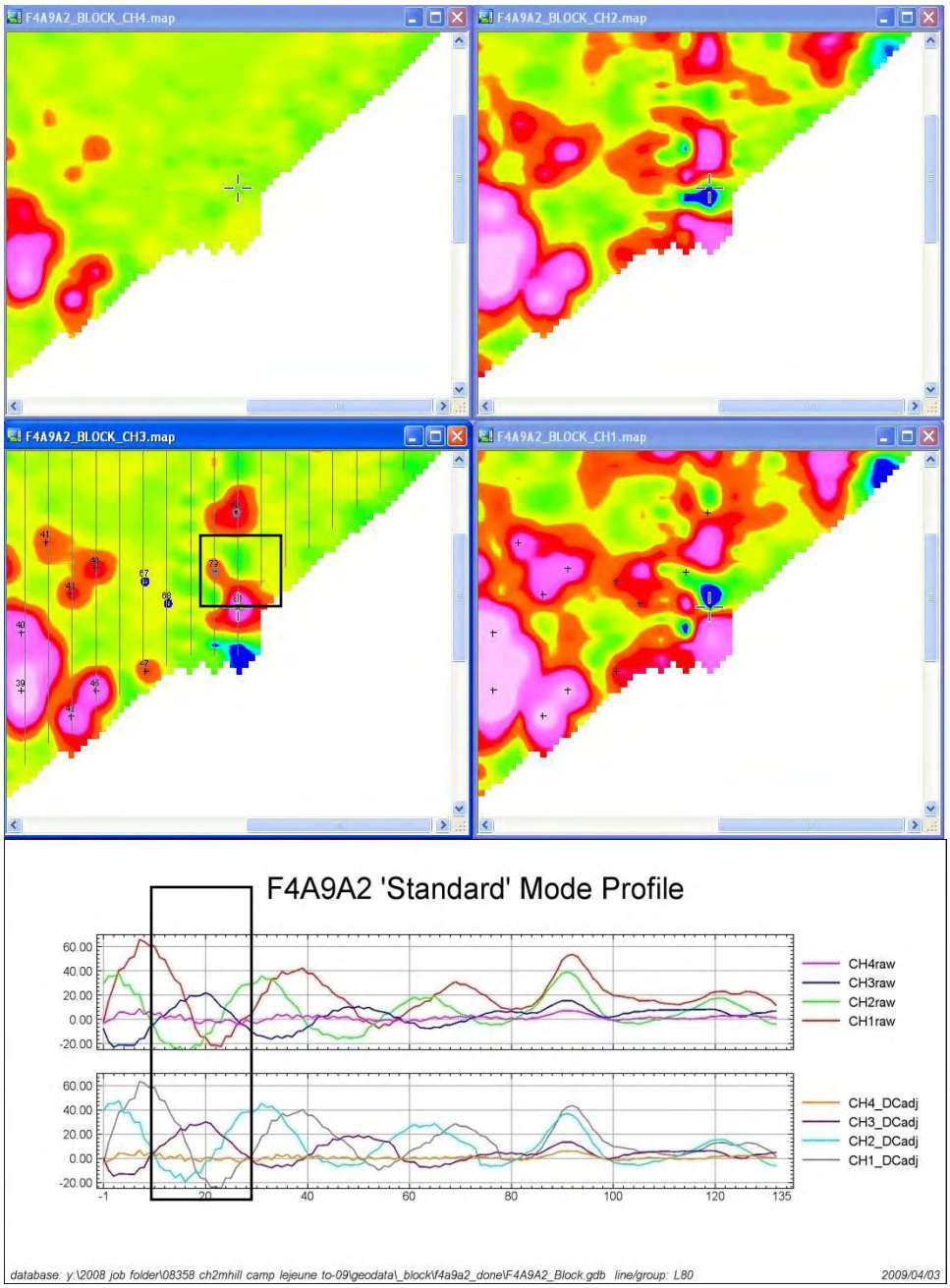

Figure 5: Example in map and profile view of unique HPCA site noise; grid F4A9A2 collected in 'Standard' mode. Notice specifically area of interest outlined by black box. In map view anomaly does not appear on Ch 1 and 2 while on Ch3 anomaly is clearly visible. In profile view (Line 80) Ch 1, 2 and 3 are clearly out-of-phase with each other.

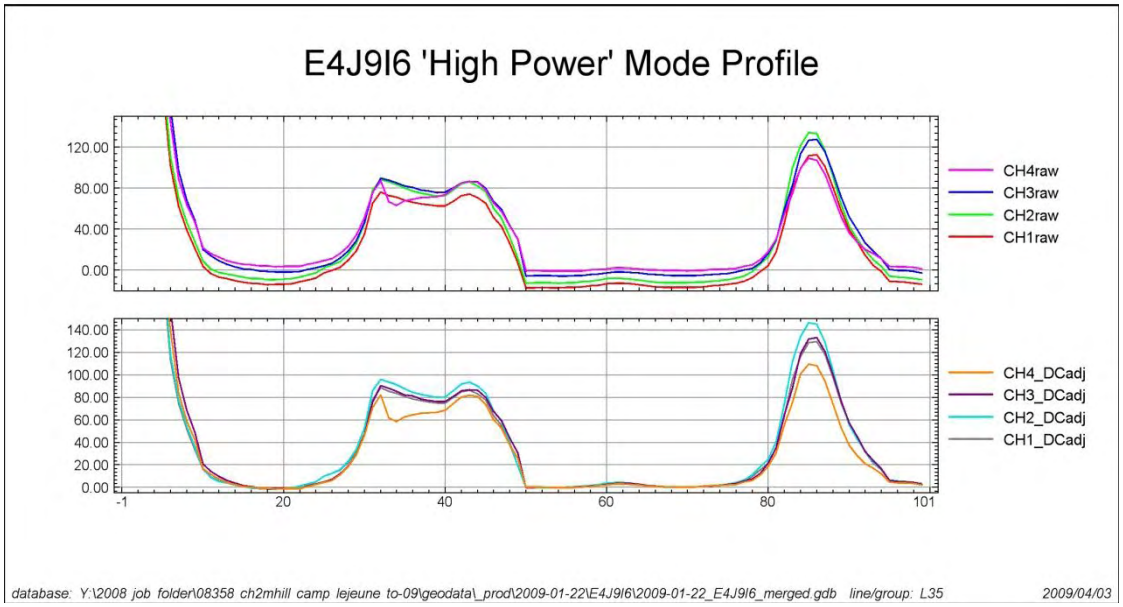

Figure 6: Example of an anomaly processed in 'High Power' mode, grid E4J9I6, Line 35. Notice anomaly decay does not show standard Ch1> Ch2 >Ch3>Ch4 trend at anomaly peaks.

Prior to mobilization to HPCA in Dec, 2008, ARM set up all field equipment to be used on site and performed qualitative QC testing to ensure that the EM system was correctly configured and operational as part of their standard operating procedure. Acceptable performance on the IVP and on subsequent data collection at HPCA led ARM to be confident that all equipment and processing procedures were being performed correctly. The introduction of a new Allegro CX on the final day of data collection, (as well as the presence of site specific noise which caused previous days data collected under the proper „Standard" setting to be out-of-phase) resulted in the underlying problem not being detected until a detailed investigation of the final day"s aberrant Static Spike result commenced.

3.0 CORRECTIVE ACTION PLAN (CAP)

To correct for the error in having the „High Power" option selected instead of the „Standard" option for data collected on January 22nd, 2009, all of the affected raw *.R61 files have had their headers amended to read "EM61MK2" as opposed to "EM61HP2". In addition, all of the corrected *.R61 files were subsequently converted to *.M61 in DAT61, positioned with respect to the wheel incremented fiducial data and imported into Geosoft *.GDB format, ready for re-processing. Over the next two business days the remaining affected data will be re-processed in the same manner as all prior data from HPCA. All changes in target selection and classification will be duly noted and included in a new deliverables package to CH2M HILL. ARM will then re-deliver all data from January 22nd (including raw data, pre-processed data and final data) to CH2MHILL in its entirety.

As DGM on this project has been completed, and it is believed from re-processing and examination that the data from Jan 22nd is of good quality, specific, project related corrective

actions will consist of the above-mentioned. However, going forward, the following have been and will be implemented:

1. Upon discovery of the above discussed issue, a detailed e-mail was immediately sent out to all geophysical personnel who work in ARM‟s UXO division regarding this concern, reminding them to double-check the settings, and specifically this setting, on the Allegro field computers at the start of every project, when a new Allegro is introduced on a project and periodically though out the course of a project.

2. All ARM processing geophysicists have now been made aware of this issue, its ramifications and the signs in the data (chiefly, the discrepancies between the relative amplitudes of channel‟s 1 & 2 and 3 & 4, resulting in an abnormal decay) that may indicate that the HP setting has inadvertently been selected.

3. On all future projects, but especially those with abnormally high background noise, ARM processing geophysicists will continue to monitor the internal consistency of the QC test values between tests and across days, ensuring that they are within the bounds dictated as an indicator of this problem. The raw *.R61 files will also be periodically examined, in a binary text editor or on import, for the incorrect header settings.

ARM believes that the field steps will aid in preventing this issue of the Allegro setting being accidently set to High Power mode during data collection and that the processing steps will enable any affected data to be corrected and field teams made aware of the issue in a timely manner.

4.0 SUMMARY

ARM Geophysics (ARM) has provided a background, Root Cause Analysis, and Corrective Action Plan for "Field Data Collection and Office Data Processing Procedures pertaining to inappropriate field computer setting" at Hadnot Point Construction Area, MMB Camp Lejeune, NC. ARM has discussed: (1.) the data failure and the reasons for said failure; (2.) the method by which the data failures will be corrected by means of re-processing operations; and (4.) the methods to prevent such failures in the future.

Appendix E
Data Validation Summary Reports

CH2M HILL
5700 Cleveland Street
Suite 101
Virginia Beach, VA 23462

March 12, 2007
SDG# LEJEUNE001 and 142307,
Empirical Laboratories and Sierra Foothill Laboratory, Inc.
MCB Camp Lejeune, Jacksonville, NC
Site UXO-08, CTO-0109

Dear Mr. Van Oosten,

The following Data Validation report is provided as requested for the parameters noted in the table below for SDG # LEJEUNE001 and 142307. The data validation was performed in accordance with the EPA CLP Statements of Work OLM04.3 for volatiles, semivolatiles and Pesticides/PCBs, and ILM05.3 for metals and cyanide, the SW-846 methods 8330 for explosives and 8015B for DRO and GRO, the Lloyd Kahn method for TOC and the DOD Perchlorate Handbook for perchlorate. Also used in the validation of these samples were National Functional Guidelines for Organic Data Review (October, 1999) and for Inorganic Data Review (October, 2004), as applicable. All areas of concern are discussed in the body of the report and a summary of data qualifications is provided.

Sample ID	Lab ID	Matrix	VOA	SV	P/PCB	EXP	Perch.	DRO	GRO	TM/CN	DM	TOC
MR08-GW42-07A	0701045-01	water	X	X	X	X	X	X	X	X	X	
MR08-GW01-07A	0701045-02	water	X	X	X	X	X	X	X	X	X	
MR08-GW01-07AMS	0701045-02MS	water	X	X	X	X		X	X	X	X	
MR08-GW01-07AMSD	0701045-02MSD	water	X	X	X	X		X	X	X	X	
MR08-GW04-1-07A	0701045-03	water	X	X	X	X	X	X	X	X	X	
MR08-GW04-1D-07A	0701045-04	water	X	X	X	X	X	X	X	X	X	
MR08-ER010807	0701045-05	water	X	X	X	X	X	X	X	X	X	
MR08-FB010907	0701045-06	water	X	X	X	X	X	X	X	X		
MR08-GW02-07A	0701045-07	water	X	X	X	X	X	X	X	X	X	
MR08-GW56-07A	0701045-08	water	X	X	X	X	X	X	X	X	X	
MR08-GW11-07A	0701045-09	water	X	X	X	X	X	X	X	X	X	
MR08-TB010907	0701045-10	water	X									
MR08-TB011007	0701052-01	water	X									
MR08-IS26-2-4-07A	0701052-02	soil	X	X	X	X		X	X	X		X
MR08-IS28-2-4-07A	0701052-03	soil	X	X	X	X		X	X	X		X
MR08-IS23-6-8-07A	0701052-04	soil	X	X	X	X		X	X	X		X
MR08-IS25-4-6-07A	0701052-05	soil	X	X	X	X		X	X	X		X
MR08-IS25-4-6-07AMS	0701052-05MS	soil	X	X	X	X		X	X	X		X
MR08-IS25-4-6-07AMSD	0701052-05MSD	soil	X	X	X	X		X	X	X		X
MR08-IS23D-6-8-07A	0701052-06	soil	X	X	X	X		X	X	X		X
MR08-IS24-2-4-07A	0701052-07	soil	X	X	X	X		X	X	X		X
MR08-IS21-9-11-07A	0701052-08	soil	X	X	X	X		X	X	X		X
MR08-IS22-5-7-07A	0701052-09	soil	X	X	X	X		X	X	X		X
MR08-IS29-2-4-07A	0701052-10	soil	X	X	X	X		X	X	X		X
MR08-FB011007	0701066-01	water	X	X	X	X		X	X	X		
MR08-EB011007	0701066-02	water	X	X	X	X		X	X	X		
MR08-TB011107	0701066-03	water	X									
SFL Filter Blank	615496-01	water					X					

The following quality control samples were provided with this SDG: sample MR08-GW04-1D-07A-field duplicate of MR08-GW04-1-07A; sample MR08-IS23D-6-8-07A-field duplicate of MR08-IS23-6-8-07A; samples MR08-TB010907, MR08-TB011007 and MR08-TB011107-trip blanks; samples MR08-FB010907 and MR08-FB011007-field blanks; sample MR08-ER010807-equipment rinse blank; and sample MR08-EB011007-equipment blank. The samples were evaluated based on the following criteria:

- Data Completeness
- Technical Holding Times *
- Initial/Continuing Calibrations
- CRI Standards *
- Interference Check Sample *
- Blanks
- Internal Standards
- Surrogates
- Laboratory Control Samples *
- Matrix Spike Recoveries
- Matrix Duplicate RPDs
- Post Digestion Spike Recoveries *
- Serial Dilutions *
- Field Duplicates *
- Identification/Quantitation
- Reporting Limits *
- Tentatively Identified Compounds

* - indicates that no qualifications were required based on this criteria

Overall Evaluation of Data/Potential Usability Issues

A summary of qualifications applied to the sample results are noted below for the fractions validated. Specific details regarding qualification of the data are addressed in the Specific Evaluation section of this narrative. If an issue is not addressed there were no actions required based on unmet quality criteria. When more than one qualifier is associated with a compound/analyte the validator has chosen the qualifier that best indicates possible bias in the results and flagged the data accordingly. However, information regarding all quality control issues is provided in the body of the report and on the qualification summary page.

VOA

The associated continuing calibrations exhibited a high %D which resulted in qualifying compounds as estimated.

Blank contamination was noted in the method, storage and field QC blanks associated with samples in this batch. Qualifications were added to the data.

Surrogate recoveries were high for one sample which resulted in the qualification of positive results as estimated.

One sample required a dilution to obtain results within the calibration range.

SVOA

The associated continuing calibrations exhibited high %Ds which resulted in the qualification of compounds as estimated.

One sample exhibited high internal standard recoveries that required the estimation of associated compound positive results.

Blank contamination was noted in the method and QC blanks associated with samples in this batch. Qualifications were added to the data.

Two sample dilutions were rejected due to unnecessary analysis.

Pesticides/PCBs

Several reported positive results exhibited column quantitation %Ds greater than 25%. These results were reported with P flags. All results that exhibited quantitation %Ds greater than 40% were qualified as estimated J.

Explosives

Several samples were re-extracted one to two days outside the holding times because the lab inadvertently neglected to spike the samples in the initial extraction. The surrogate compounds recovered acceptably in the re-extraction analyses. The re-extractions were reported with J/UJ flags due to holding time.

One of the equipment rinse blanks exhibited contamination for the target compound RDX. Qualification was required in one field sample.

Several reported positive results exhibited column quantitation %Ds greater than 25%. These results were reported with P flags. All results that exhibited quantitation %Ds greater than 40% were qualified as estimated J.

One sample, MR08-GW45-07A, exhibited a result for nitroglycerin that was significantly higher on one column that the other. The laboratory reported the result as non-detect at the lower concentration detected with an I flag to indicate interference on the column exhibiting the higher result. However, it is the professional judgment of the validator that

the result should be reported with an NJ flag to note that the compound is presumptively present at an estimated concentration.

Perchlorate

No qualifications to the data were required.

Gasoline Range Organics (GRO)

No qualifications to the data were required.

Diesel Range Organics (DRO)

No qualifications to the data were required.

Total & Dissolved Metals, Cyanide

Continuing calibration standards associated with the soil samples exhibited some non-compliant %recoveries. Some reported positive results were qualified as estimated J.

Blank contamination requiring qualification in the soil samples was noted in the soil preparation blank.

The matrix spike sample associated with the total and dissolved metals analysis of the water samples exhibited non-compliant recoveries below the QC limit for the analyte mercury. All reported mercury results in the water samples were qualified as estimated J/UJ. The matrix spike sample associated with the soil samples exhibited non-compliant recoveries for the analytes antimony and calcium. The analyte antimony was recovered below 30% so all non-detect antimony results in the soil samples were rejected R and positive results were qualified as J-. The analyte calcium was recovered above 30% but below 75% so all positive and non-detect results were qualified as J-/UJ in the soil samples. The matrix duplicate sample associated with the soil samples exhibited non-compliant %Ds for three analytes. All reported positive and non-detect results for the analytes chromium, iron and manganese in the soil samples were qualified as estimated J/UJ.

Total Organic Carbon (TOC)

Positive results in samples were qualified as estimated J due to non-compliant matrix duplicate %D greater than 20%.

Specific Evaluation of Data

Data Completeness

Resubmissions were required for the SVOA fraction due to incorrect Form Is. The laboratory was contacted to verify that the water samples had been cleaned through the GPC process as the Form Is stated. It was determined that the submitted Form Is were incorrect and the samples were not cleaned through this process; therefore, corrected Form Is were submitted and are found within this report. An updated case narrative was requested from the laboratory due to a software limitation that caused the initial calibration dates on the continuing calibration Form 7s to include historical calibration dates for the GC methods for Explosives, Pesticides/PCBs and GRO. A sample calculation was requested and received for the TOC fraction.

Technical Holding Times

According to chain of custody records, sampling was performed on 01/08-10/07 and samples were received at the laboratory 01/10-12/07. All sample preparation and analysis was performed within CLP and/or method holding time requirements with the following exception.

Explosives

Several samples were re-extracted one to two days outside the holding times because the lab inadvertently neglected to spike the samples in the initial extraction. The surrogate compounds recovered acceptably in the re-extraction analyses. The re-extractions of samples MR08-GW04-1-07A, MW08-GW04-1D-07A, MW08-ER010807, MW08-FB010907, MR08-GW02-07A, MR08-GW56-07A and MR08-GW11-07A were reported with J/UJ flags due to holding time with a qualifier code of HT. This qualifier code was superceded only for those positive results that exhibited column quantitation %Ds greater than 40%. The original analyses were rejected, R, with a qualifier code of RE.

Initial/Continuing Calibration

<u>VOA</u>

Calibration standards exhibited high %Ds that were non-compliant. A summary of these non-compliances and affected samples are noted in the following table. Sample results are qualified as indicated. Please note that the final qualifications for the sample were not based on non-compliant %D for calibration results but on surrogate results.

Standard ID	Compound(s)	RRF, %RSD, %D	Samples	Q Flag	Q Code
CC 01/12/07	acetone	32.8%	MR08-TB011007	J	CCH

SVOA

Calibration standards exhibited high %Ds that were non-compliant. A summary of these non-compliances and affected samples are noted in the following table. Sample results are qualified as indicated.

Standard ID	Compound(s)	RRF, %RSD, %D	Samples	Q Flag	Q Code
CC 01/23/07	2,4-dinitrophenol	53.2%	MR08-IS26-2-4-07A, MR08-IS28-2-4-07A, MR08-IS23-6-8-07A, MR08-IS25-4-6-07A, MR08-IS23D-6-8-07A, MR08-IS24-2-7-07A, MR08-IS21-9-11-07A, MR08-IS22-5-7-07A, MR08-IS29-2-4-07A	J/UJ	CCH

Total Metals

Calibration standards exhibited high %Rs that were non-compliant. A summary of action is noted in the following table. This qualifier code was superceded for calcium due to a non-compliant matrix spike recovery below the QC limit.

Standard ID	Analyte	%R	Samples	Q Flag	Q Code
CCV5/6	beryllium	111/116	MR08-IS25-4-6-07A, MR08-IS24-2-4-07A	J	CCH
	calcium	113	MR08-IS25-4-6-07A, MR08-IS24-2-4-07A, MR08-IS23D-6-8-07A, MR08-IS29-2-4-07A		
	sodium	114	MR08-IS24-2-4-07A		

Internal Standards

SVOA

Sample MR08-IS26-2-4-07A exhibited high results for standards chrysene-d12 and perylene-d12; therefore all associated compound positive results were qualified as estimated (J), qualifier code: ISH.

Blanks

VOA

The associated method, storage and field QC blanks exhibited contamination as noted in the following table. Compounds for which there was no action required, are not included in the following table. The method blanks associated with field QC blanks exhibited some contamination but the QC blanks were not qualified, per the request of the client.

Blank ID	Compound	Concentration	Reporting Limit	Action Level
W-STORAGEBLK1	acetone	5.4J ug/L	10 ug/L	54 ug/L
S-STORAGEBLK1	methylene chloride	8.2J ug/Kg	10 ug/Kg	82 ug/Kg
V1PBLK0111	methylene chloride	16 ug/Kg	10 ug/Kg	160 ug/Kg
V4BLK0117	methylene chloride	2.2J ug/L	10 ug/L	22 ug/L

Blank ID	Compound	Concentration	Reporting Limit	Action Level
V4BLK0117E	acetone	2.1J ug/L	10 ug/L	21 ug/L
	methylene chloride	2.4J ug/L	10 ug/L	24 ug/L
MR08-TB010907	acetone	9.1J ug/L	10 ug/L	91 ug/L
MR08-TB011007	acetone	3.9J ug/L	10 ug/L	39 ug/L
MR08-EB011007	acetone	3.0J ug/L	10 ug/L	30 ug/L
	carbon disulfide	1.6J ug/L	10 ug/L	8 ug/L
	methylene chloride	1.7J ug/L	10 ug/L	17 ug/L
MR08-FB011007	acetone	2.6J ug/L	10 ug/L	26 ug/L

Associated samples and required qualifications are noted in the following table.

Sample ID	Compound	Q Flag	Q Code
MR08-GW42-07A, MR08-GW02-07A, MR08-IS26-2-4-07A	acetone	CRQL	BL
MR08-GW01-07A, MR08-IS28-2-4-07A, MR08-IS23D-6-8-07A, MR08-IS25-4-6-07A, MR08-IS23D-6-8-07A, MR08-IS24-2-4-07A, MR08-IS21-9-11-07A, MR08-IS22-5-7-07A, MR08-IS29-2-4-07A	acetone	U	BL
MR08-GW42-07A	methylene chloride	CRQL	BL
MR08-IS26-2-4-07A, MR08-IS28-2-4-07A, MR08-IS23-6-8-07A, MR08-IS25-4-6-07A, MR08-IS23D-6-8-07A, MR08-IS24-2-4-07A, MR08-IS21-9-11-07A, MR08-IS22-5-7-07A, MR08-IS29-2-4-07A	methylene chloride	U	BL
MR08-IS24-2-4-07A	carbon disulfide	CRQL	BL

Due to method and/or field blank TIC contamination, some sample TICs were rejected (R), qualifier code BL.

SVOA

The associated method and field QC blanks exhibited contamination as noted in the following table. Compounds for which there was no action required, are not included in the following table. The method blanks associated with field QC blanks exhibited some contamination but the QC blanks were not qualified, per the request of the client.

Blank ID	Compound	Concentration	Reporting Limit	Action Level
SBLK0112BW2	bis(2-ethylhexyl)phthalate	2.1J ug/L	10 ug/L	21 ug/L
	di-n-butylphthalate	2.8J ug/L	10 ug/L	28 ug/L
MR08-ER010807	di-n-butylphthalate	2.9J ug/L	10 ug/L	29 ug/L
MR08-EB011007	bis(2-ethylhexyl)phthalate	2.6 J ug/L	10 ug/L	26 ug/L
	di-n-butylphthalate	2.6J ug/L	10 ug/L	26 ug/L
MR08-FB010907	di-n-butylphthalate	5.8J ug/L	10 ug/L	58 ug/L
MR08-FB011007	di-n-butylphthalate	3.9J ug/L	10 ug/L	39 ug/L

Associated samples and required qualifications are noted in the following table.

Sample ID	Compound	Q Flag	Q Code
MR08-GW01-07A, MR08-GW04-1-07A, MR08-GW11-07A	bis(2-ethylhexyl)phthalate	CRQL	BL
MR08-GW42-07A, MR08-GW01-07A, MR08-GW04-1-07A, MR08-GW04-1D-07A, MR08-GW02-07A, MR08-GW56-07A, MR08-GW11-07A	di-n-butylphthalate	CRQL	BL

Due to method and/or field blank TIC contamination, some sample TICs were rejected (R), qualifier code BL.

Explosives

One of the associated field QC blanks exhibited contamination as noted in the following table.

Blank ID	Compound	Concentration	Reporting Limit	Action Level
MR08-ER010807	RDX	0.10 ug/L	0.42 ug/L	0.50 ug/L

Associated samples and required qualifications are noted in the following table.

Sample ID	Compound	Q Flag	Q Code
MR08-GW42-07A	RDX	RL	BL

Total Metals

The preparation blank associated with the soil samples exhibited contamination as noted in the following table.

Blank ID	Analyte	Concentration	Action Level
PBS012607C	zinc	0.662J mg/Kg	RL

Associated samples and required qualifications are noted in the following table.

Sample ID	Analyte	Q Flag	Q Code
MR08-IS28-2-4-07A, MR08-IS23-6-8-07A, MR08-IS23D-6-8-07A, MR08-IS21-9-11-07A, MR08-IS29-2-4-07A	zinc	U at RL	BL

Surrogates

VOA

Sample MR08-TB011007 exhibited slightly high results for 1,2-dichloroethane at 117% (QC limit 76-114%); all positive results were qualified as estimated (J), qualifier code: SSH.

Matrix Spike Recoveries

Total and Dissolved Metals

The matrix spike analyses of the noted samples exhibited non-compliant %Rs. Specific action is noted in the following table.

MS ID	Analytes	Samples Affected	%R	Q Flag	Q Code
MR08-GW01-07A TM	mercury	all total water samples	71/61	J-/UJ	MSL
MR08-GW01-07A DM	mercury	all dissolved water samples	73/62		
MR08-IS25-4-6-07A	calcium	all soil samples	63	J-/UJ	MSL
MR08-IS25-4-6-07A	antimony	all soil samples	28	J-/R	MSL

Matrix Duplicates

Total Metals

The matrix duplicate analyses of the sample MR08-IS25-4-6-07A exhibited non-compliant %Ds for three analytes. Specific action is noted in the following table.

MD ID	Analytes	Samples Affected	%D	Q Flag	Q Code
MR08-IS25-4-6-07A	chromium	all soil samples	36	J/UJ	MDP
	iron		51		
	manganese		52		

TOC

The matrix duplicate analysis of the sample MR08-IS25-4-6-07A exhibited a non-compliant %D. Specific action is noted in the following table.

MD ID	Analytes	Samples Affected	%D	Q Flag	Q Code
MR08-IS25-4-6-07A	TOC	all soil samples	23.5	J/UJ	MDP

Identification/Quantitation

VOA

Sample MR08-GW42-07A required a dilution to obtain results within the calibration range. The E-flagged compound results were rejected in the initial analysis in favor of the corresponding D-flagged results in the dilution.

SVOA

Samples MR08-IS26-2-4-07A and MR08-IS25-4-6-07A were analyzed at a dilution that was not necessary; therefore, the dilution was rejected (R), qualifier code: RE.

Pesticides/PCBs

Several reported positive results exhibited column quantitation %Ds greater than 25%. These results were reported with P flags. All results that exhibited non-compliant column quantitation %Ds were qualified as estimated J, with a qualifier code of 2C.

Explosives

Several reported positive results exhibited column quantitation %Ds greater than 25%. These results were reported with P flags. All results that exhibited quantitation %Ds greater than 40% were qualified as estimated J, with a qualifier code of 2C.

One sample, MR08-GW45-07A, exhibited a result for nitroglycerin that was significantly higher on one column that the other. The laboratory reported the result as non-detect at the lower concentration detected with an I flag to indicate interference on the column exhibiting the higher result. However, it is the professional judgment of the validator that the result should be reported with an NJ flag to note that the compound is presumptively present at an estimated concentration. This flag was reported with a qualifier code of OT.

A summary of qualifications required is provided on the following page. Please do not hesitate to contact DataQual ES with any questions regarding this validation report.

Sincerely,

Jacqueline Cleveland
Vice President

Summary of Data Qualifications

VOA

Sample ID	Compound	Results	Q-Flag	Qualifier Code
MR08-GW42-07A, MR08-GW02-07A, MR08-IS26-2-4-07A	acetone	+	CRQL	BL
MR08-GW01-07A, MR08-IS28-2-4-07A, MR08-IS23D-6-8-07A, MR08-IS25-4-6-07A, MR08-IS23D-6-8-07A, MR08-IS24-2-4-07A, MR08-IS21-9-11-07A, MR08-IS22-5-7-07A, MR08-IS29-2-4-07A	acetone	+	U	BL
MR08-GW42-07A	methylene chloride	+	CRQL	BL
MR08-IS26-2-4-07A, MR08-IS28-2-4-07A, MR08-IS23-6-8-07A, MR08-IS25-4-6-07A, MR08-IS23D-6-8-07A, MR08-IS24-2-4-07A, MR08-IS21-9-11-07A, MR08-IS22-5-7-07A, MR08-IS29-2-4-07A	methylene chloride	+	U	BL
MR08-IS24-2-4-07A	carbon disulfide	+	CRQL	BL
all samples	B-flagged TICs	+	R	BL
MR08-TB011007	all results	+	J	SSH
MR08-GW42-07A	all E-flagged compounds	+	R	DL
MR08-GW42-07A DL	all results except D-flagged compounds	+/-	R	DL

SVOA

Sample ID	Compound	Results	Q-Flag	Qualifier Code
MR08-IS26-2-4-07A, MR08-IS28-2-4-07A, MR08-IS23-6-8-07A, MR08-IS25-4-6-07A, MR08-IS23D-6-8-07A, MR08-IS24-2-7-07A, MR08-IS21-9-11-07A, MR08-IS22-5-7-07A, MR08-IS29-2-4-07A	2,4-dinitrophenol	+/-	J/UJ	CCH
MR08-IS26-2-4-07A	all compounds associated with: chrysene-d12 perylene-d12	+	J	ISH
MR08-GW01-07A, MR08-GW04-1-07A, MR08-GW11-07A	bis(2-ethylhexyl)phthalate	+	CRQL	BL
MR08-GW42-07A, MR08-GW01-07A, MR08-GW04-1-07A, MR08-GW04-1D-07A, MR08-GW02-07A, MR08-GW56-07A, MR08-GW11-07A	di-n-butylphthalate	+	CRQL	BL
all samples	B-flagged TICs	+	R	BL
MR08-IS26-2-4-07ADL, MR08-IS25-4-6-07ADL	all results	+/-	R	RE

Summary of Data Qualifications

Pesticides/PCBs

Sample ID	Compound	Results	Q-Flag	Q Code
all samples	all P flagged compounds	+P	J	2C

Explosives

Sample ID	Compound	Results	Q-Flag	Q Code
MR08-GW04-1-07ARE, MW08-GW04-1D-07ARE, MW08-ER010807RE, MW08-FB010907RE, MR08-GW02-07ARE, MR08-GW56-07ARE, MR08-GW11-07ARE	all compounds	+/-	J/UJ	HT*
MR08-GW04-1-07A, MW08-GW04-1D-07A, MW08-ER010807, MW08-FB010907, MR08-GW02-07A, MR08-GW56-07A, MR08-GW11-07A	all compounds	+/-	R	RE
MR08-GW42-07A	RDX	+JP	U at RL	BL
all samples	all P flagged compounds	+P	J	2C
MR08-GW42-07A	nitroglycerin	2.7UI	2.7NJ	OT

* The holding time qualifier code was superceded by the column quantitation %D qualifier code for those positive results reported with a P flag.

Perchlorate

Sample ID	Compound	Results	Q-Flag	Q Code
No qualifications were required.				

DRO

Sample ID	Compound	Results	Q-Flag	Q Code
No qualifications were required.				

GRO

Sample ID	Compound	Results	Q-Flag	Q Code
No qualifications were required.				

Summary of Data Qualifications

Total Metals & Dissolved Metals

Sample ID	Analytes	Results	Q-Flag	Q Code
MR08-IS25-4-6-07A, MR08-IS24-2-4-07A	beryllium	+	J	CCH
MR08-IS25-4-6-07A, MR08-IS24-2-4-07A, MR08-IS23D-6-8-07A, MR08-IS29-2-4-07A	calcium *			
MR08-IS24-2-4-07A	sodium			
MR08-IS28-2-4-07A, MR08-IS23-6-8-07A, MR08-IS23D-6-8-07A, MR08-IS21-9-11-07A, MR08-IS29-2-4-07A	zinc	+	U at RL	BL
all total water samples	mercury	+/-	J-/UJ	MSL
all dissolved water samples	mercury	+/-	J-/UJ	MSL
all soil samples	calcium	+/-	J-/UJ	MSL
all soil samples	antimony	+/-	J-/R	MSL
all soil samples	chromium	+/-	J/UJ	MDP
	iron			
	manganese			

* The continuing calibration qualifier code was superceded by the non-compliant matrix spike recovery qualifier code for calcium in these samples.

TOC

Sample ID	Analyte	Results	Q-Flag	Q Code
all soil samples	TOC	+/-	J/UJ	MDP

Glossary of Qualification Flags and Abbreviations

Qualification Flags (Q-Flags)

U	not detected above the reported sample quantitation limit
J	estimated value
UJ	reported quantitation limit is qualified as estimated
R	result is rejected; the presence or absence of the analyte cannot be verified
D	result value is based on dilution analysis result
NJ	analyte has been tentatively identified, estimated value
L	analyte present, biased low
UL	not detected, quantitation limit is probably higher
K	analyte present, biased high

Method/Preparation Blank Qualification Flags (Q-Flags)

NA	The sample result for the blank contaminant is greater than the sample RL and is greater than 5X (10X for common laboratory contaminants) the blank value. The sample result for the blank contaminant is not qualified with any blank qualifiers.
U	The sample result for the blank contaminant is greater than the sample RL and is less than 5X (10X for common laboratory contaminants) the blank value.
RL	The sample result for the blank contaminant is less than the sample RL and is less than 5X (10X for common laboratory contaminants) the blank value.

General Abbreviations

RL	reporting limit
+	positive result
-	non-detect result

QUALIFIER CODE REFERENCE

Qualifier	Description
TN	Tune
BSL	Blank Spike/LCS - High Recovery
BSH	Blank Spike/LCS - Low Recovery
BD	Blank Spike/Blank Spike Duplicate (LCS/LCSD) Precision
BRL	Below Reporting Limit
ISL	Internal Standard - Low Recovery
ISH	Internal Standard - High Recovery
MSL	Matrix Spike and/or Matrix Spike Duplicate - Low Recovery
MSH	Matrix Spike and/or Matrix Spike Duplicate - High Recovery
MI	Matrix interference obscuring the raw data
MDP	Matrix Spike/Matrix Spike Duplicate Precision
2S	Second Source - Bad reproducibility between tandem detectors
SSL	Spiked Surrogate - Low Recovery
SSH	Spiked Surrogate - High Recovery
SD	Serial Dilution Reproducibility
ICL	Initial Calibration - Low Relative Response Factors (RRF)
ICH	Initial Calibration - High Relative Response Factors (RRF)
ICB	Initial Calibration - Bad Linearity or Curve Function
CCL	Continuing Calibration - Low Recovery or %Difference
CCH	Continuing Calibration - High Recovery or %Difference
LD	Lab Duplicate Reproducibility
HT	Holding Time
PD	Pesticide Degradation
2C	Second Column - Poor Dual Column Reproducibility
LR	Concentration Exceeds Linear Range
BL	Blank Contamination
RE	Redundant Result - due to Re-analysis or Re-extraction
DL	Redundant Result - due to Dilution
FD	Field Duplicate
OT	Other - explained in data validation report

CH2M HILL
5700 Cleveland Street
Suite 101
Virginia Beach, VA 23462

March 12, 2007
SDG# LEJEUNE002,
Empirical Laboratories
MCB Camp Lejeune, Jacksonville, NC
CTO-0109, Site UXO-08

Dear Mr. Van Oosten,

The following Data Validation report is provided as requested for the parameter noted in the table below for SDG # LEJEUNE002. The data validation was performed in accordance with the SW-846 method 8330 and the National Functional Guidelines for Organic Data Review (October, 1999), as applicable. All areas of concern are discussed in the body of the report and a summary of data qualifications is provided.

Sample ID	Lab ID	Matrix	EXP
MR08-SS22-0-1-07A	0701067-01	soil	X
MR08-SS15-0-1-07A	0701067-02	soil	X
MR08-SS16-0-1-07A	0701067-03	soil	X
MR08-SS21-0-1-07A	0701067-04	soil	X
MR08-SS21D-0-1-07A	0701067-05	soil	X
MR08-SS10-0-1-07A	0701067-06	soil	X
MR08-SS10-0-1-07AMS	0701067-06MS	soil	X
MR08-SS10-0-1-07AMSD	0701067-06MSD	soil	X
MR08-SS09-0-1-07A	0701067-07	soil	X
MR08-SS08-0-1-07A	0701067-08	soil	X
MR08-SS06-0-1-07A	0701067-09	soil	X
MR08-SS06D-0-1-07A	0701067-10	soil	X
MR08-SS07-0-1-07A	0701067-11	soil	X
MR08-SS14-0-1-07A	0701067-12	soil	X
MR08-SS18-0-1-07A	0701067-13	soil	X
MR08-SS18D-0-1-07A	0701067-14	soil	X
MR08-SS20-0-1-07A	0701067-15	soil	X
MR08-SS05-0-1-07A	0701067-16	soil	X
MR08-SS02-0-1-07A	0701067-17	soil	X
MR08-SS29-0-1-07A	0701067-18	soil	X
MR08-SS23-0-1-07A	0701067-19	soil	X
MR08-SS23-0-1-07AMS	0701067-19MS	soil	X
MR08-SS23-0-1-07AMSD	0701067-19MSD	soil	X
MR08-SS24-0-1-07A	0701067-20	soil	X
MR08-SS26-0-1-07A	0701067-21	soil	X
MR08-SS25-0-1-07A	0701067-22	soil	X
MR08-SS27-0-1-07A	0701067-23	soil	X

Sample ID	Lab ID	Matrix	EXP
MR08-SS28-0-1-07A	0701067-24	soil	X
MR08-SS11-0-1-07A	0701067-25	soil	X
MR08-SS03-0-1-07A	0701067-26	soil	X
MR08-SS01-0-1-07A	0701067-27	soil	X
MR08-SS04-0-1-07A	0701067-28	soil	X
MR08-SS13-0-1-07A	0701067-29	soil	X
MR08-SS12-0-1-07A	0701067-30	soil	X
MR08-SS17-0-1-07A	0701067-31	soil	X
MR08-SS19-0-1-07A	0701067-32	soil	X

The following quality control samples were provided with this SDG: sample MR08-SS21D-0-1-07A -field duplicate of MR08-SS21-0-1-07A; sample MR08-SS06D-0-1-07A-field duplicate of MR08-SS06-0-1-07A; and sample MR08-SS18D-0-1-07A-field duplicate of MR08-SS18-0-1-07A. The associated field QC blank samples MR08-FB011007 and MR08-EB011007 were analyzed in SDG Lejeune001.

The samples were evaluated based on the following criteria:

- Data Completeness *
- Technical Holding Times *
- Initial/Continuing Calibrations *
- Blanks *
- Surrogates *
- Laboratory Control Samples *
- Matrix Spike Recoveries *
- Field Duplicates *
- Identification/Quantitation
- Reporting Limits *

* - indicates that no qualifications were required based on this criteria

Overall Evaluation of Data/Potential Usability Issues

A summary of qualifications applied to the sample results are noted below for the fractions validated. Specific details regarding qualification of the data are addressed in the Specific Evaluation section of this narrative. If an issue is not addressed there were no actions required based on unmet quality criteria. When more than one qualifier is associated with a compound/analyte the validator has chosen the qualifier that best indicates possible bias in the results and flagged the data accordingly. However, information regarding all quality control issues is provided in the body of the report and on the qualification summary page.

Explosives

Several reported positive results exhibited column quantitation %Ds greater than 25%. These results were reported with P flags. All results that exhibited quantitation %Ds greater than 40% were qualified as estimated J.

Specific Evaluation of Data

Data Completeness

An updated case narrative was requested from the laboratory due to a software limitation that caused the initial calibration dates on the continuing calibration Form 7s to include historical calibration dates for the GC methods.

Technical Holding Times

According to chain of custody records, sampling was performed on 01/11/07 and samples were received at the laboratory 01/12/07. All sample preparation and analysis was performed within method holding time requirements.

Identification/Quantitation

Explosives

Several reported positive results exhibited column quantitation %Ds greater than 25%. These results were reported with P flags. All results that exhibited quantitation %Ds greater than 40% were qualified as estimated J, with a qualifier code of 2C.

A summary of qualifications required is provided on the following page. Please do not hesitate to contact DataQual ES with any questions regarding this validation report.

Sincerely,

Jacqueline Cleveland
Vice President

Summary of Data Qualifications

Explosives

Sample ID	Compound	Results	Q-Flag	Q Code
all samples	all P flagged compounds	+P	J	2C

Glossary of Qualification Flags and Abbreviations

Qualification Flags (Q-Flags)

U	not detected above the reported sample quantitation limit
J	estimated value
UJ	reported quantitation limit is qualified as estimated
R	result is rejected; the presence or absence of the analyte cannot be verified
D	result value is based on dilution analysis result
NJ	analyte has been tentatively identified, estimated value
L	analyte present, biased low
UL	not detected, quantitation limit is probably higher
K	analyte present, biased high

Method/Preparation Blank Qualification Flags (Q-Flags)

NA	The sample result for the blank contaminant is greater than the sample RL and is greater than 5X (10X for common laboratory contaminants) the blank value. The sample result for the blank contaminant is not qualified with any blank qualifiers.
U	The sample result for the blank contaminant is greater than the sample RL and is less than 5X (10X for common laboratory contaminants) the blank value.
RL	The sample result for the blank contaminant is less than the sample RL and is less than 5X (10X for common laboratory contaminants) the blank value.

General Abbreviations

RL	reporting limit
+	positive result
-	non-detect result

QUALIFIER CODE REFERENCE

Qualifier	Description
TN	Tune
BSL	Blank Spike/LCS - High Recovery
BSH	Blank Spike/LCS - Low Recovery
BD	Blank Spike/Blank Spike Duplicate (LCS/LCSD) Precision
BRL	Below Reporting Limit
ISL	Internal Standard - Low Recovery
ISH	Internal Standard - High Recovery
MSL	Matrix Spike and/or Matrix Spike Duplicate - Low Recovery
MSH	Matrix Spike and/or Matrix Spike Duplicate - High Recovery
MI	Matrix interference obscuring the raw data
MDP	Matrix Spike/Matrix Spike Duplicate Precision
2S	Second Source - Bad reproducibility between tandem detectors
SSL	Spiked Surrogate - Low Recovery
SSH	Spiked Surrogate - High Recovery
SD	Serial Dilution Reproducibility
ICL	Initial Calibration - Low Relative Response Factors (RRF)
ICH	Initial Calibration - High Relative Response Factors (RRF)
ICB	Initial Calibration - Bad Linearity or Curve Function
CCL	Continuing Calibration - Low Recovery or %Difference
CCH	Continuing Calibration - High Recovery or %Difference
LD	Lab Duplicate Reproducibility
HT	Holding Time
PD	Pesticide Degradation
2C	Second Column - Poor Dual Column Reproducibility
LR	Concentration Exceeds Linear Range
BL	Blank Contamination
RE	Redundant Result - due to Re-analysis or Re-extraction
DL	Redundant Result - due to Dilution
FD	Field Duplicate
OT	Other - explained in data validation report

ENVIRONMENTAL
Data Services, Inc.

EXPLOSIVES

USEPA Region IV - Level IV Review

Site: MCB Camp Lejeune, UXO-08, CTO-168 SDG #: 806163

Client: CH2M HILL, Inc., Virginia Beach, Virginia Date: September 30, 2008

Laboratory: GPL Laboratories, Frederick, Maryland Reviewer: Nancy Weaver

EDS ID	Client Sample ID	Laboratory Sample ID	Matrix
1	MR08-SS38-08B	806163-001	Soil
2	MR08-SS39-08B	806163-002	Soil
3	MR08-SS33-08B	806163-003	Soil
4	MR08-SS32-08B	806163-004	Soil
5	MR08-SS30-08B	806163-005	Soil
6	MR08-SS31-08B	806163-006	Soil
6MS	MR08-SS31-08BMS	806163-006MS	Soil
6MSD	MR08-SS31-08BMSD	806163-006MSD	Soil
7	MR08-SS40-08B	806163-007	Soil
8	MR08-SS34-08B	806163-008	Soil
9	MR08-SS41-08B	806163-009	Soil
10	MR08-SS41D-08B	806163-010	Soil
11	MR08-SS35-08B	806163-011	Soil
12	MR08-SS35D-08B	806163-012	Soil
13	MR08-FB062208	806163-013	Water
14	MR08-EB062208	806163-014	Water
15	MR08-SS37-08B	806163-015	Soil
16	MR08-SS36-08B	806163-016	Soil

The USEPA "Contract Laboratory Program National Functional Guidelines for Organic Data Review," October 1999, and professional judgement were used in evaluating the data in this summary report.

Holding Times - All samples were extracted within 7 days for water samples, 14 days for soil samples and analyzed within 40 days except the following.

Sample	Date Sampled	Date Extracted	# of Days	Qualifier
All samples	06/22/08	07/16/08	24	J/UJ

Initial Calibration - The initial calibrations exhibited acceptable %RSD and/or correlation coefficient values.

Calibration Verification - The continuing calibrations exhibited acceptable %D values.

Surrogates - All samples exhibited acceptable surrogate recoveries except the following.

Sample ID	Surrogate	%R	Qualifier
MR08-EB062208	4-Nitroaniline	154%	None - All ND

MS/MSD - The MS/MSD sample exhibited acceptable %R and RPD values.

Laboratory Control Sample - The LCS samples exhibited acceptable %R values.

Method Blank - The method blanks were free of contamination.

Field and Equipment Blank - Field QC results are summarized below.

Blank ID	Compound	Conc. ug/L	Action Level ug/L	Qualifier	Affected Samples
MR08-FB062208	None - ND	-	-	-	-
MR08-EB062208	None - ND	-	-	-	-

Field Duplicates - Field duplicate results are summarized below.

Compound	MR08-SS41-08B ug/kg	MR08-SS41D-08B ug/kg	RPD	Qualifier
None	ND	ND	-	-

Compound	MR08-SS35-08B ug/kg	MR08-SS35D-08B ug/kg	RPD	Qualifier
None	ND	ND	-	-

Compound Identification - Retention times were acceptable and no further action was taken.

Compound Quantitation - No discrepancies were identified.

GPL Laboratories

GPL
FORM 1
ANALYSIS DATA SHEET

SAMPLE NO
MR08-SS38-08B

Lab Name :	GPL Laboratories	Client. :	CH2M Hill Inc
Lab Code :	GPL	SAS NO. :	
Case No. :		SDG NO :	806163
Matrix : (Soil / Water)	SOIL	Lab Sample ID :	806163-001-027-1/1
Sample Volume :	2	Lab File ID :	LCD42337.D
% Moisture:		Date Received	06/24/2008
Extraction:	EXT_SW8330	Date Extracted:	07/16/2008
Extract Volume:	20 mL	Date Analyzed	07/22/2008
Injection Volume :	100 µ L	Dilution Factor :	1
GPC Clean up (Y/N):	pH:		

Concentration Units (ug/L or ug/kg dry weight) : mg/kg

CAS NO	COMPOUND		Q
99-35-4	1,3,5-Trinitrobenzene	0.10	U
99-65-0	1,3-Dinitrobenzene	0.10	U
118-96-7	2,4,6-Trinitrotoluene	0.10	U
121-14-2	2,4-Dinitrotoluene	0.10	U
606-20-2	2,6-Dinitrotoluene	0.10	U
35572-78-2	2-Amino-4,6-Dinitrotoluene	0.10	U
19406-51-0	4-Amino-2,6-Dinitrotoluene	0.10	U
2691-41-0	HMX	0.20	U
98-95-3	Nitrobenzene	0.10	U
121-82-4	RDX	0.20	U
479-45-8	Tetryl	0.20	U
99-08-1	m-Nitrotoluene	0.20	U
88-72-2	o-Nitrotoluene	0.20	U
99-99-0	p-Nitrotoluene	0.20	U

UJ HT

9/30/08

GPL Laboratories

GPL
FORM 1
ANALYSIS DATA SHEET

2

SAMPLE NO
MR08-SS39-08B

Lab Name :	GPL Laboratories	Client. :	CH2M Hill Inc
Lab Code :	GPL	SAS NO. :	
Case No. :		SDG NO :	806163
Matrix : (Soil / Water)	SOIL	Lab Sample ID :	806163-002-031-1/1
Sample Volume :	2	Lab File ID :	LCD42339.D
% Moisture:		Date Received	06/24/2008
Extraction:	EXT_SW8330	Date Extracted:	07/16/2008
Extract Volume:	20 mL	Date Analyzed	07/22/2008
Injection Volume :	100 µL	Dilution Factor :	1
GPC Clean up (Y/N):	pH:		

Concentration Units (ug/L or ug/kg dry weight) : mg/kg

CAS NO	COMPOUND		Q
99-35-4	1,3,5-Trinitrobenzene	0.10	U
99-65-0	1,3-Dinitrobenzene	0.10	U
118-96-7	2,4,6-Trinitrotoluene	0.10	U
121-14-2	2,4-Dinitrotoluene	0.10	U
606-20-2	2,6-Dinitrotoluene	0.10	U
35572-78-2	2-Amino-4,6-Dinitrotoluene	0.10	U
19406-51-0	4-Amino-2,6-Dinitrotoluene	0.10	U
2691-41-0	HMX	0.20	U
98-95-3	Nitrobenzene	0.10	U
121-82-4	RDX	0.20	U
479-45-8	Tetryl	0.20	U
99-08-1	m-Nitrotoluene	0.20	U
88-72-2	o-Nitrotoluene	0.20	U
99-99-0	p-Nitrotoluene	0.20	U

UJ HT

hw 9/30/08

GPL Laboratories

GPL
FORM 1
ANALYSIS DATA SHEET

3

SAMPLE NO
MR08-SS33-08B

Lab Name :	GPL Laboratories	Client. :	CH2M Hill Inc
Lab Code :	GPL	SAS NO. :	
Case No. :		SDG NO :	806163
Matrix : (Soil / Water)	SOIL	Lab Sample ID :	806163-003-035-1/1
Sample Volume :	2	Lab File ID :	LCD42340.D
% Moisture:		Date Received	06/24/2008
Extraction:	EXT_SW8330	Date Extracted:	07/16/2008
Extract Volume:	20 mL	Date Analyzed	07/22/2008
Injection Volume :	100 µL	Dilution Factor :	1
GPC Clean up (Y/N):	pH:		

Concentration Units (ug/L or ug/kg dry weight) : mg/kg

CAS NO	COMPOUND		Q
99-35-4	1,3,5-Trinitrobenzene	0.10	U
99-65-0	1,3-Dinitrobenzene	0.10	U
118-96-7	2,4,6-Trinitrotoluene	0.10	U
121-14-2	2,4-Dinitrotoluene	0.10	U
606-20-2	2,6-Dinitrotoluene	0.10	U
35572-78-2	2-Amino-4,6-Dinitrotoluene	0.10	U
19406-51-0	4-Amino-2,6-Dinitrotoluene	0.10	U
2691-41-0	HMX	0.20	U
98-95-3	Nitrobenzene	0.10	U
121-82-4	RDX	0.20	U
479-45-8	Tetryl	0.20	U
99-08-1	m-Nitrotoluene	0.20	U
88-72-2	o-Nitrotoluene	0.20	U
99-99-0	p-Nitrotoluene	0.20	U

UJ HT

GPL Laboratories

GPL
FORM I
ANALYSIS DATA SHEET

4

SAMPLE NO
MR08-SS32-08B

Lab Name :	GPL Laboratories	Client. :	CH2M Hill Inc
Lab Code :	GPL	SAS NO. :	
Case No. :		SDG NO :	806163
Matrix : (Soil / Water)	SOIL	Lab Sample ID :	806163-004-039-1/1
Sample Volume :	2	Lab File ID :	LCD42341.D
% Moisture:		Date Received	06/24/2008
Extraction:	EXT_SW8330	Date Extracted:	07/16/2008
Extract Volume:	20 mL	Date Analyzed	07/22/2008
Injection Volume :	100 µ L	Dilution Factor :	1
GPC Clean up (Y/N):	pH:		

Concentration Units (ug/L or ug/kg dry weight) : mg/kg

CAS NO	COMPOUND		Q
99-35-4	1,3,5-Trinitrobenzene	0.10	U
99-65-0	1,3-Dinitrobenzene	0.10	U
118-96-7	2,4,6-Trinitrotoluene	0.10	U
121-14-2	2,4-Dinitrotoluene	0.10	U
606-20-2	2,6-Dinitrotoluene	0.10	U
35572-78-2	2-Amino-4,6-Dinitrotoluene	0.10	U
19406-51-0	4-Amino-2,6-Dinitrotoluene	0.10	U
2691-41-0	HMX	0.20	U
98-95-3	Nitrobenzene	0.10	U
121-82-4	RDX	0.20	U
479-45-8	Tetryl	0.20	U
99-08-1	m-Nitrotoluene	0.20	U
88-72-2	o-Nitrotoluene	0.20	U
99-99-0	p-Nitrotoluene	0.20	U

UJ HT

MW 9/30/08

GPL Laboratories

GPL
FORM 1
ANALYSIS DATA SHEET

5

SAMPLE NO
MR08-SS30-08B

Lab Name :	GPL Laboratories	Client. :	CH2M Hill Inc
Lab Code :	GPL	SAS NO. :	
Case No. :		SDG NO :	806163
Matrix : (Soil / Water)	SOIL	Lab Sample ID :	806163-005-043-1/1
Sample Volume :	2	Lab File ID :	LCD42342.D
% Moisture:		Date Received	06/24/2008
Extraction:	EXT_SW8330	Date Extracted:	07/16/2008
Extract Volume:	20 mL	Date Analyzed	07/22/2008
Injection Volume :	100 µL	Dilution Factor :	1
GPC Clean up (Y/N):	pH:		

Concentration Units (ug/L or ug/kg dry weight) : mg/kg

CAS NO	COMPOUND		Q
99-35-4	1,3,5-Trinitrobenzene	0.10	U
99-65-0	1,3-Dinitrobenzene	0.10	U
118-96-7	2,4,6-Trinitrotoluene	0.10	U
121-14-2	2,4-Dinitrotoluene	0.10	U
606-20-2	2,6-Dinitrotoluene	0.10	U
35572-78-2	2-Amino-4,6-Dinitrotoluene	0.10	U
19406-51-0	4-Amino-2,6-Dinitrotoluene	0.10	U
2691-41-0	HMX	0.20	U
98-95-3	Nitrobenzene	0.10	U
121-82-4	RDX	0.20	U
479-45-8	Tetryl	0.20	U
99-08-1	m-Nitrotoluene	0.20	U
88-72-2	o-Nitrotoluene	0.20	U
99-99-0	p-Nitrotoluene	0.20	U

UJ HT

9/30/08

GPL Laboratories

GPL
FORM 1
ANALYSIS DATA SHEET

6

SAMPLE NO
MR08-SS31-08B

Lab Name :	GPL Laboratories	Client. :	CH2M Hill Inc
Lab Code :	GPL	SAS NO. :	
Case No. :		SDG NO :	806163
Matrix : (Soil / Water)	SOIL	Lab Sample ID :	806163-006-001-1/3
Sample Volume :	2	Lab File ID :	LCD42343.D
% Moisture:		Date Received	06/24/2008
Extraction:	EXT_SW8330	Date Extracted:	07/16/2008
Extract Volume:	20 mL	Date Analyzed	07/22/2008
Injection Volume :	100 µL	Dilution Factor :	1
GPC Clean up (Y/N):	pH:		

Concentration Units (ug/L or ug/kg dry weight) : mg/kg

CAS NO	COMPOUND		Q
99-35-4	1,3,5-Trinitrobenzene	0.10	U
99-65-0	1,3-Dinitrobenzene	0.10	U
118-96-7	2,4,6-Trinitrotoluene	0.10	U
121-14-2	2,4-Dinitrotoluene	0.10	U
606-20-2	2,6-Dinitrotoluene	0.10	U
35572-78-2	2-Amino-4,6-Dinitrotoluene	0.10	U
19406-51-0	4-Amino-2,6-Dinitrotoluene	0.10	U
2691-41-0	HMX	0.20	U
98-95-3	Nitrobenzene	0.10	U
121-82-4	RDX	0.20	U
479-45-8	Tetryl	0.20	U
99-08-1	m-Nitrotoluene	0.20	U
88-72-2	o-Nitrotoluene	0.20	U
99-99-0	p-Nitrotoluene	0.20	U

UJ HT

GPL Laboratories

GPL
FORM 1
ANALYSIS DATA SHEET

7

SAMPLE NO
MR08-SS40-08B

Lab Name :	GPL Laboratories	Client. :	CH2M Hill Inc
Lab Code :	GPL	SAS NO. :	
Case No. :		SDG NO :	806163
Matrix : (Soil / Water)	SOIL	Lab Sample ID :	806163-007-047-1/1
Sample Volume :	2	Lab File ID :	LCD42344.D
% Moisture:		Date Received	06/24/2008
Extraction:	EXT_SW8330	Date Extracted:	07/16/2008
Extract Volume:	20 mL	Date Analyzed	07/22/2008
Injection Volume :	100 µ L	Dilution Factor :	1
GPC Clean up (Y/N):	pH:		

Concentration Units (ug/L or ug/kg dry weight) : mg/kg

CAS NO	COMPOUND		Q
99-35-4	1,3,5-Trinitrobenzene	0.10	~~U~~ UJ HT
99-65-0	1,3-Dinitrobenzene	0.10	U
118-96-7	2,4,6-Trinitrotoluene	0.10	U
121-14-2	2,4-Dinitrotoluene	0.10	U
606-20-2	2,6-Dinitrotoluene	0.10	U
35572-78-2	2-Amino-4,6-Dinitrotoluene	0.10	U
19406-51-0	4-Amino-2,6-Dinitrotoluene	0.10	U
2691-41-0	HMX	0.20	U
98-95-3	Nitrobenzene	0.10	U
121-82-4	RDX	0.20	U
479-45-8	Tetryl	0.20	U
99-08-1	m-Nitrotoluene	0.20	U
88-72-2	o-Nitrotoluene	0.20	U
99-99-0	p-Nitrotoluene	0.20	U

GPL Laboratories

GPL
FORM 1
ANALYSIS DATA SHEET

8

SAMPLE NO
MR08-SS34-08B

Lab Name :	GPL Laboratories	Client. :	CH2M Hill Inc
Lab Code :	GPL	SAS NO. :	
Case No. :		SDG NO :	806163
Matrix : (Soil / Water)	SOIL	Lab Sample ID :	806163-008-051-1/1
Sample Volume :	2	Lab File ID :	LCD42345.D
% Moisture:		Date Received	06/24/2008
Extraction:	EXT_SW8330	Date Extracted:	07/16/2008
Extract Volume:	20 mL	Date Analyzed	07/22/2008
Injection Volume :	100 µ L	Dilution Factor :	1
GPC Clean up (Y/N):	pH:		

Concentration Units (ug/L or ug/kg dry weight) : mg/kg

CAS NO	COMPOUND		Q
99-35-4	1,3,5-Trinitrobenzene	0.10	U
99-65-0	1,3-Dinitrobenzene	0.10	U
118-96-7	2,4,6-Trinitrotoluene	0.10	U
121-14-2	2,4-Dinitrotoluene	0.10	U
606-20-2	2,6-Dinitrotoluene	0.10	U
35572-78-2	2-Amino-4,6-Dinitrotoluene	0.10	U
19406-51-0	4-Amino-2,6-Dinitrotoluene	0.10	U
2691-41-0	HMX	0.20	U
98-95-3	Nitrobenzene	0.10	U
121-82-4	RDX	0.20	U
479-45-8	Tetryl	0.20	U
99-08-1	m-Nitrotoluene	0.20	U
88-72-2	o-Nitrotoluene	0.20	U
99-99-0	p-Nitrotoluene	0.20	U

UJ HT

GPL Laboratories

GPL
FORM 1
ANALYSIS DATA SHEET

9

SAMPLE NO
MR08-SS41-08B

Lab Name :	GPL Laboratories	Client. :	CH2M Hill Inc
Lab Code :	GPL	SAS NO. :	
Case No. :		SDG NO :	806163
Matrix : (Soil / Water)	SOIL	Lab Sample ID :	806163-009-055-1/1
Sample Volume :	2	Lab File ID :	LCD42346.D
% Moisture:		Date Received	06/24/2008
Extraction:	EXT_SW8330	Date Extracted:	07/16/2008
Extract Volume:	20 mL	Date Analyzed	07/22/2008
Injection Volume :	100 µL	Dilution Factor :	1
GPC Clean up (Y/N):	pH:		

Concentration Units (ug/L or ug/kg dry weight) : mg/kg

CAS NO	COMPOUND		Q
99-35-4	1,3,5-Trinitrobenzene	0.10	U
99-65-0	1,3-Dinitrobenzene	0.10	U
118-96-7	2,4,6-Trinitrotoluene	0.10	U
121-14-2	2,4-Dinitrotoluene	0.10	U
606-20-2	2,6-Dinitrotoluene	0.10	U
35572-78-2	2-Amino-4,6-Dinitrotoluene	0.10	U
19406-51-0	4-Amino-2,6-Dinitrotoluene	0.10	U
2691-41-0	HMX	0.20	U
98-95-3	Nitrobenzene	0.10	U
121-82-4	RDX	0.20	U
479-45-8	Tetryl	0.20	U
99-08-1	m-Nitrotoluene	0.20	U
88-72-2	o-Nitrotoluene	0.20	U
99-99-0	p-Nitrotoluene	0.20	U

UJ HT

lw 9/30/08

GPL Laboratories

GPL
FORM 1
ANALYSIS DATA SHEET

10

SAMPLE NO
MR08-SS41D-08B

Lab Name :	GPL Laboratories	Client. :	CH2M Hill Inc
Lab Code :	GPL	SAS NO. :	
Case No. :		SDG NO :	806163
Matrix : (Soil / Water)	SOIL	Lab Sample ID :	806163-010-059-1/1
Sample Volume :	2	Lab File ID :	LCD42347.D
% Moisture:		Date Received	06/24/2008
Extraction:	EXT_SW8330	Date Extracted:	07/16/2008
Extract Volume:	20 mL	Date Analyzed	07/22/2008
Injection Volume :	100 µ L	Dilution Factor :	1
GPC Clean up (Y/N):	pH:		

Concentration Units (ug/L or ug/kg dry weight) : mg/kg

CAS NO	COMPOUND		Q
99-35-4	1,3,5-Trinitrobenzene	0.10	U
99-65-0	1,3-Dinitrobenzene	0.10	U
118-96-7	2,4,6-Trinitrotoluene	0.10	U
121-14-2	2,4-Dinitrotoluene	0.10	U
606-20-2	2,6-Dinitrotoluene	0.10	U
35572-78-2	2-Amino-4,6-Dinitrotoluene	0.10	U
19406-51-0	4-Amino-2,6-Dinitrotoluene	0.10	U
2691-41-0	HMX	0.20	U
98-95-3	Nitrobenzene	0.10	U
121-82-4	RDX	0.20	U
479-45-8	Tetryl	0.20	U
99-08-1	m-Nitrotoluene	0.20	U
88-72-2	o-Nitrotoluene	0.20	U
99-99-0	p-Nitrotoluene	0.20	U

UJ HT

GPL Laboratories

GPL
FORM 1
ANALYSIS DATA SHEET

11

SAMPLE NO
MR08-SS35-08B

Lab Name :	GPL Laboratories	Client. :	CH2M Hill Inc
Lab Code :	GPL	SAS NO. :	
Case No. :		SDG NO :	806163
Matrix : (Soil / Water)	SOIL	Lab Sample ID :	806163-011-063-1/1
Sample Volume :	2	Lab File ID :	LCD42348.D
% Moisture:		Date Received	06/24/2008
Extraction:	EXT_SW8330	Date Extracted:	07/16/2008
Extract Volume:	20 mL	Date Analyzed	07/22/2008
Injection Volume :	100 µ L	Dilution Factor :	1
GPC Clean up (Y/N):	pH:		

Concentration Units (ug/L or ug/kg dry weight) : mg/kg

CAS NO	COMPOUND		Q
99-35-4	1,3,5-Trinitrobenzene	0.10	U
99-65-0	1,3-Dinitrobenzene	0.10	U
118-96-7	2,4,6-Trinitrotoluene	0.10	U
121-14-2	2,4-Dinitrotoluene	0.10	U
606-20-2	2,6-Dinitrotoluene	0.10	U
35572-78-2	2-Amino-4,6-Dinitrotoluene	0.10	U
19406-51-0	4-Amino-2,6-Dinitrotoluene	0.10	U
2691-41-0	HMX	0.20	U
98-95-3	Nitrobenzene	0.10	U
121-82-4	RDX	0.20	U
479-45-8	Tetryl	0.20	U
99-08-1	m-Nitrotoluene	0.20	U
88-72-2	o-Nitrotoluene	0.20	U
99-99-0	p-Nitrotoluene	0.20	U

UJ HT

GPL Laboratories

GPL
FORM 1
ANALYSIS DATA SHEET

12

SAMPLE NO
MR08-SS35D-08B

Lab Name :	GPL Laboratories	Client. :	CH2M Hill Inc
Lab Code :	GPL	SAS NO. :	
Case No. :		SDG NO :	806163
Matrix : (Soil / Water)	SOIL	Lab Sample ID :	806163-012-067-1/1
Sample Volume :	2	Lab File ID :	LCD42350.D
% Moisture:		Date Received	06/24/2008
Extraction:	EXT_SW8330	Date Extracted:	07/16/2008
Extract Volume:	20 mL	Date Analyzed	07/22/2008
Injection Volume :	100 µ L	Dilution Factor :	1
GPC Clean up (Y/N):	pH:		

Concentration Units (ug/L or ug/kg dry weight) : mg/kg

CAS NO	COMPOUND		Q
99-35-4	1,3,5-Trinitrobenzene	0.10	U
99-65-0	1,3-Dinitrobenzene	0.10	U
118-96-7	2,4,6-Trinitrotoluene	0.10	U
121-14-2	2,4-Dinitrotoluene	0.10	U
606-20-2	2,6-Dinitrotoluene	0.10	U
35572-78-2	2-Amino-4,6-Dinitrotoluene	0.10	U
19406-51-0	4-Amino-2,6-Dinitrotoluene	0.10	U
2691-41-0	HMX	0.20	U
98-95-3	Nitrobenzene	0.10	U
121-82-4	RDX	0.20	U
479-45-8	Tetryl	0.20	U
99-08-1	m-Nitrotoluene	0.20	U
88-72-2	o-Nitrotoluene	0.20	U
99-99-0	p-Nitrotoluene	0.20	U

UJ HJ

LW 9/30/08

GPL Laboratories

GPL
FORM 1
ANALYSIS DATA SHEET

13

SAMPLE NO
MR08-FB062208

Lab Name :	GPL Laboratories	Client. :	CH2M Hill Inc
Lab Code :	GPL	SAS NO. :	
Case No. :		SDG NO :	806163
Matrix : (Soil / Water)	WATER	Lab Sample ID :	806163-013-013-1/1
Sample Volume :	770	Lab File ID :	LCD42260.D
% Moisture:		Date Received	06/24/2008
Extraction:	EXT_SW8330	Date Extracted:	07/16/2008
Extract Volume:	20 mL	Date Analyzed	07/19/2008
Injection Volume :	100 µL	Dilution Factor :	1
GPC Clean up (Y/N):	pH:		

Concentration Units (ug/L or ug/kg dry weight) : ug/L

CAS NO	COMPOUND		Q
99-35-4	1,3,5-Trinitrobenzene	0.26	U
99-65-0	1,3-Dinitrobenzene	0.26	U
118-96-7	2,4,6-Trinitrotoluene	0.26	U
121-14-2	2,4-Dinitrotoluene	0.26	U
606-20-2	2,6-Dinitrotoluene	0.26	U
35572-78-2	2-Amino-4,6-Dinitrotoluene	0.26	U
19406-51-0	4-Amino-2,6-Dinitrotoluene	0.26	U
2691-41-0	HMX	0.52	U
98-95-3	Nitrobenzene	0.26	U
121-82-4	RDX	0.52	U
479-45-8	Tetryl	0.52	U
99-08-1	m-Nitrotoluene	0.52	U
88-72-2	o-Nitrotoluene	0.52	U
99-99-0	p-Nitrotoluene	0.52	U

UJ HT

MW 9/30/08

GPL Laboratories

GPL
FORM 1
ANALYSIS DATA SHEET

14

SAMPLE NO
MR08-EB062208

Lab Name :	GPL Laboratories	Client. :	CH2M Hill Inc
Lab Code :	GPL	SAS NO. :	
Case No. :		SDG NO :	806163
Matrix : (Soil / Water)	WATER	Lab Sample ID :	806163-014-020-1/1
Sample Volume :	770	Lab File ID :	LCD42261.D
% Moisture:		Date Received	06/24/2008
Extraction:	EXT_SW8330	Date Extracted:	07/16/2008
Extract Volume:	20 mL	Date Analyzed	07/19/2008
Injection Volume :	100 µ L	Dilution Factor :	1
GPC Clean up (Y/N):	pH:		

Concentration Units (ug/L or ug/kg dry weight) : ug/L

CAS NO	COMPOUND		Q
99-35-4	1,3,5-Trinitrobenzene	0.26	U
99-65-0	1,3-Dinitrobenzene	0.26	U
118-96-7	2,4,6-Trinitrotoluene	0.26	U
121-14-2	2,4-Dinitrotoluene	0.26	U
606-20-2	2,6-Dinitrotoluene	0.26	U
35572-78-2	2-Amino-4,6-Dinitrotoluene	0.26	U
19406-51-0	4-Amino-2,6-Dinitrotoluene	0.26	U
2691-41-0	HMX	0.52	U
98-95-3	Nitrobenzene	0.26	U
121-82-4	RDX	0.52	U
479-45-8	Tetryl	0.52	U
99-08-1	m-Nitrotoluene	0.52	U
88-72-2	o-Nitrotoluene	0.52	U
99-99-0	p-Nitrotoluene	0.52	U

UJ HT

GPL Laboratories

GPL
FORM 1
ANALYSIS DATA SHEET

SAMPLE NO
MR08-SS37-08B

Lab Name :	GPL Laboratories	Client. :	CH2M Hill Inc
Lab Code :	GPL	SAS NO. :	
Case No. :		SDG NO :	806163
Matrix : (Soil / Water)	SOIL	Lab Sample ID :	806163-015-071-1/1
Sample Volume :	2	Lab File ID :	LCD42351.D
% Moisture:		Date Received	06/24/2008
Extraction:	EXT_SW8330	Date Extracted:	07/16/2008
Extract Volume:	20 mL	Date Analyzed	07/22/2008
Injection Volume :	100 µ L	Dilution Factor :	1
GPC Clean up (Y/N):	pH:		

Concentration Units (ug/L or ug/kg dry weight) : mg/kg

CAS NO	COMPOUND		Q
99-35-4	1,3,5-Trinitrobenzene	0.10	U
99-65-0	1,3-Dinitrobenzene	0.10	U
118-96-7	2,4,6-Trinitrotoluene	0.10	U
121-14-2	2,4-Dinitrotoluene	0.10	U
606-20-2	2,6-Dinitrotoluene	0.10	U
35572-78-2	2-Amino-4,6-Dinitrotoluene	0.10	U
19406-51-0	4-Amino-2,6-Dinitrotoluene	0.10	U
2691-41-0	HMX	0.20	U
98-95-3	Nitrobenzene	0.10	U
121-82-4	RDX	0.20	U
479-45-8	Tetryl	0.20	U
99-08-1	m-Nitrotoluene	0.20	U
88-72-2	o-Nitrotoluene	0.20	U
99-99-0	p-Nitrotoluene	0.20	U

UJ HT

lw 013008

GPL Laboratories

GPL
FORM 1
ANALYSIS DATA SHEET

16

SAMPLE NO
MR08-SS36-08B

Lab Name :	GPL Laboratories	Client. :	CH2M Hill Inc
Lab Code :	GPL	SAS NO. :	
Case No. :		SDG NO :	806163
Matrix : (Soil / Water)	SOIL	Lab Sample ID :	806163-016-075-1/1
Sample Volume :	2	Lab File ID :	LCD42352.D
% Moisture:		Date Received	06/24/2008
Extraction:	EXT_SW8330	Date Extracted:	07/16/2008
Extract Volume:	20 mL	Date Analyzed	07/22/2008
Injection Volume :	100 µ L	Dilution Factor :	1
GPC Clean up (Y/N):	pH:		

Concentration Units (ug/L or ug/kg dry weight) : mg/kg

CAS NO	COMPOUND		Q
99-35-4	1,3,5-Trinitrobenzene	0.10	U
99-65-0	1,3-Dinitrobenzene	0.10	U
118-96-7	2,4,6-Trinitrotoluene	0.10	U
121-14-2	2,4-Dinitrotoluene	0.10	U
606-20-2	2,6-Dinitrotoluene	0.10	U
35572-78-2	2-Amino-4,6-Dinitrotoluene	0.10	U
19406-51-0	4-Amino-2,6-Dinitrotoluene	0.10	U
2691-41-0	HMX	0.20	U
98-95-3	Nitrobenzene	0.10	U
121-82-4	RDX	0.20	U
479-45-8	Tetryl	0.20	U
99-08-1	m-Nitrotoluene	0.20	U
88-72-2	o-Nitrotoluene	0.20	U
99-99-0	p-Nitrotoluene	0.20	U

UJ HT

LW 9/30/08

ENVIRONMENTAL
Data Services, Inc.

METALS

USEPA Region IV - Level IV Review

Site: MCB Camp Lejeune, UXO-08, CTO-168 SDG #: 806163

Client: CH2M HILL, Inc., Virginia Beach, Virginia Date: September 30, 2008

Laboratory: GPL Laboratories, Frederick, Maryland Reviewer: Nancy Weaver

EDS ID	Client Sample ID	Laboratory Sample ID	Matrix
1	MR08-SS38-08B	806163-001	Soil
2	MR08-SS39-08B	806163-002	Soil
3	MR08-SS33-08B	806163-003	Soil
4	MR08-SS32-08B	806163-004	Soil
5	MR08-SS30-08B	806163-005	Soil
6	MR08-SS31-08B	806163-006	Soil
6MS	MR08-SS31-08BMS	806163-006MS	Soil
6MSD	MR08-SS31-08BMSD	806163-006MSD	Soil
7	MR08-SS40-08B	806163-007	Soil
8	MR08-SS34-08B	806163-008	Soil
9	MR08-SS41-08B	806163-009	Soil
10	MR08-SS41D-08B	806163-010	Soil
11	MR08-SS35-08B	806163-011	Soil
12	MR08-SS35D-08B	806163-012	Soil
13	MR08-FB062208	806163-013	Water
14	MR08-EB062208	806163-014	Water
15	MR08-SS37-08B	806163-015	Soil
16	MR08-SS36-08B	806163-016	Soil

The USEPA "Contract Laboratory Program National Functional Guidelines for Inorganic Data Review," October 2004, and professional judgement were used in evaluating the data in this summary report.

Holding Times - All samples were prepared and analyzed within 28 days for mercury and 180 days for all other metals.

Calibration - The ICV and CCV %R values were acceptable.

CRDL Standard - The CRDL standards exhibited acceptable %R values.

Method and Calibration Blanks - The method blanks and continuing calibration blanks exhibited contamination for several compounds, however, all sample results are non-detect or greater than 5X the blank concentration with the exception of the following:

Water

Compound	Conc. ug/L	Qualifier	Affected Samples
Arsenic	3.527	U	13, 14
Barium	1.433	U	13, 14
Iron	43.456	U	13, 14
Magnesium	77.473	U	13, 14
Manganese	0.884	U	13
Mercury	0.019	U	14
Potassium	65.413	U	13, 14
Sodium	526.683	U	13, 14

Soil

Compound	Conc. mg/kg	Qualifier	Affected Samples
Antimony	0.502	U	2-12, 15, 16
Barium	0.172	U	1-4, 6-7, 9, 10, 15, 16
Calcium	11.060	U	9, 10
Copper	0.310	U	2, 16
Magnesium	20.46	U	1, 3-6, 8-10, 15
Mercury	0.039	U	5-10, 12, 15, 16
Sodium	157.39	U	2-5, 7-12, 15, 16

Field and Equipment Blank - Field QC results are summarized below.

Blank ID	Compound	Conc. ug/L	Action Level ug/L	Qualifier	Affected Samples
MR08-FB062208	None - ND	-	-	-	-
MR08-EB062208	None - ND	-	-	-	-

ICP Interference Check Sample - All %R values were acceptable.

Matrix Spike - The matrix spike samples exhibited acceptable %R values except the following.

MS Sample ID	Compound	%R	Qualifier	Affected Samples
6	Antimony	70%	J/UJ	All soils
	Thallium	62%	J/UJ	All soils

Matrix Duplicate - The matrix duplicate samples exhibited acceptable RPD values.

LCS - The LCS samples exhibited acceptable %R values.

ICP Serial Dilution - The ICP serial dilution sample exhibited acceptable %D values.

ICP Sample ID	Compound	%D	Qualifier	Affected Samples
6	Zinc	141%	J	All soils - positive result

Field Duplicates - Field duplicate results are summarized below.

Compound	MR08-SS41-08B mg/kg	MR08-SS41D-08B mg/kg	RPD	Qualifier
Aluminum	4450	4950	11%	None
Arsenic	1.1	0.77	35%	None
Beryllium	0.12	0.12	0%	None
Cadmium	0.038	0.040	5%	None
Chromium	5.7	5.3	7%	None
Cobalt	0.28	0.32	13%	None
Copper	2.0	3.1	43%	None
Iron	3470	2180	46%	None
Lead	6.6	5.9	11%	None
Manganese	14.2	15.1	6%	None
Nickel	1.2	1.3	8%	None
Selenium	0.46	2.9 U	NC	None
Vanadium	8.0	7.6	5%	None
Zinc	7.8	11.0	34%	None

Compound	MR08-SS35-08B mg/kg	MR08-SS35D-08B mg/kg	RPD	Qualifier
Aluminum	5470	5680	4%	None
Arsenic	1.9	2.3	19%	None
Barium	18.2	19.1	5%	None
Beryllium	0.18	0.17	6%	None
Cadmium	0.13	0.10	26%	None
Calcium	2080	2120	2%	None
Chromium	7.8	7.9	1%	None
Cobalt	0.49	41.1 U	NC	None
Copper	7.0	5260	199%	None
Iron	2890	3090	7%	None
Lead	12.4	12.0	3%	None
Magnesium	872	947	8%	None
Manganese	21.0	17.4	19%	None
Nickel	2.1	2.3	9%	None
Selenium	0.42	2.9 U	NC	None
Vanadium	14.7	15.4	5%	None
Zinc	20.0	96.9	132%	None

Compound Quantitation - No discrepancies were not identified.

USEPA - CLP

1A - IN

INORGANIC ANALYSIS DATA SHEET

EPA SAMPLE NO.

MR08-SS38-08B

Lab Name: GPL LABORATORIES, LL Contract:

Lab Code: Case No.: NRAS No.: SDG No.: 806163S

Matrix: (soil/water) SOIL Lab Sample ID: S 806163-001-027-1/1

Level: (low/med) Date Recieved: 06/24/2008

% Solids: 88.6

Concentration Units (ug/L or mg/kg dry weight): MG/KG

CAS No.	Analyte	Concentration	C	Q	M	
7429-90-5	Aluminum	4330			P	
7440-36-0	Antimony	4.6	~~U~~	UJ ~~N~~	P	MSL
7440-38-2	Arsenic	1.0			P	
7440-39-3	Barium	15.3 ~~10.9~~	~~J~~	U	P	BL
7441-41-7	Beryllium	0.095	J		P	
7440-43-9	Cadmium	0.071	J		P	
7440-70-2	Calcium	1620			P	
7440-47-3	Chromium	5.7			P	
7440-48-4	Cobalt	0.27	J		P	
7440-47-3	Copper	5.1			P	
7439-89-6	Iron	2030			P	
7439-92-1	Lead	12.3			P	
7439-95-4	Magnesium	381 ~~254~~	~~J~~	U	P	BL
7439-96-5	Manganese	21.4			P	
7439-97-6	Mercury	0.035	U		AV	
7440-02-0	Nickel	1.3	J		P	
7440-09-7	Potassium	381	U		P	
7782-49-2	Selenium	2.7	U		P	
7440-22-4	Silver	0.76	U		P	
7440-23-5	Sodium	381	U		P	
7440-28-0	Thallium	1.9	~~U~~	UJ ~~N~~	P	MSL
7440-62-2	Vanadium	7.8			P	
7440-66-6	Zinc	18.2		J ~~E~~	P	SD

Color Before: GREY Clarity Before: NA Texture: MEDIUM

Color After: YELLOW Clarity After: CLEAR Artifacts: NA

Comments:

FORM IA - IN LW 9/30/08

ILMO5.3

2

USEPA - CLP

1A - IN

INORGANIC ANALYSIS DATA SHEET

EPA SAMPLE NO.

MR08-SS39-08B

Lab Name: GPL LABORATORIES, LL Contract:

Lab Code: Case No.: NRAS No.: SDG No.: 806163S

Matrix: (soil/water) SOIL Lab Sample ID: S 806163-002-031-1/1

Level: (low/med) Date Recieved: 06/24/2008

% Solids: 77.6

Concentration Units (ug/L or mg/kg dry weight): MG/KG

CAS No.	Analyte	Concentration	C	Q	M	
7429-90-5	Aluminum	1960			P	
7440-36-0	Antimony	5.3 ~~0.73~~	~~J~~	UJ ~~N~~	P	BL, MSL
7440-38-2	Arsenic	3.3	J	~~D~~	P	
7440-39-3	Barium	17.7 ~~10.2~~	~~J~~	U	P	BL
7441-41-7	Beryllium	0.20	J		P	
7440-43-9	Cadmium	0.52			P	
7440-70-2	Calcium	152000		~~D~~	P	
7440-47-3	Chromium	11.7			P	
7440-48-4	Cobalt	2.3	J		P	
7440-47-3	Copper	11 ~~5.4~~	~~J~~	U ~~D~~	P	BL
7439-89-6	Iron	3630			P	
7439-92-1	Lead	6.8		~~D~~	P	
7439-95-4	Magnesium	2250			P	
7439-96-5	Manganese	148			P	
7439-97-6	Mercury	0.039	U		AV	
7440-02-0	Nickel	11.4			P	
7440-09-7	Potassium	2210	U	~~D~~	P	
7782-49-2	Selenium	3.1	U		P	
7440-22-4	Silver	0.88	U		P	
7440-23-5	Sodium	441 ~~200~~	~~J~~	U	P	BL
7440-28-0	Thallium	1.1	~~J~~	J ~~ND~~	P	MSL
7440-62-2	Vanadium	10.0			P	
7440-66-6	Zinc	66.6		J ~~E~~	P	SD

Color Before: GREY Clarity Before: NA Texture: MEDIUM

Color After: YELLOW Clarity After: CLEAR Artifacts: NA

Comments:

FORM IA - IN

pw 9/30/08

ILMO5.3

3

USEPA - CLP

1A - IN

INORGANIC ANALYSIS DATA SHEET

EPA SAMPLE NO.

MR08-SS33-08B

Lab Name: GPL LABORATORIES, LL Contract:

Lab Code: Case No.: NRAS No.: SDG No.: 806163S

Matrix: (soil/water) SOIL Lab Sample ID: S 806163-003-035-1/1

Level: (low/med) Date Recieved: 06/24/2008

% Solids: 69.6

Concentration Units (ug/L or mg/kg dry weight): MG/KG

CAS No.	Analyte	Concentration	C	Q	M	
7429-90-5	Aluminum	5050			P	
7440-36-0	Antimony	5.9 ~~0.31~~	~~J~~	UJ ~~N~~	P	~~B~~L, MSL
7440-38-2	Arsenic	3.2			P	
7440-39-3	Barium	19.6 ~~13.4~~	~~J~~	U	P	BL
7441-41-7	Beryllium	0.13	J		P	
7440-43-9	Cadmium	0.25	J		P	
7440-70-2	Calcium	2380			P	
7440-47-3	Chromium	9.1			P	
7440-48-4	Cobalt	0.47	J		P	
7440-47-3	Copper	4.8			P	
7439-89-6	Iron	2800			P	
7439-92-1	Lead	33.8			P	
7439-95-4	Magnesium	489 ~~262~~	~~J~~	U	P	BL
7439-96-5	Manganese	14.5			P	
7439-97-6	Mercury	0.043	U		AV	
7440-02-0	Nickel	2.2	J		P	
7440-09-7	Potassium	489	U		P	
7782-49-2	Selenium	3.4	U		P	
7440-22-4	Silver	0.98	U		P	
7440-23-5	Sodium	489 ~~38.0~~	~~J~~	U	P	BL
7440-28-0	Thallium	2.4	~~U~~	UJ ~~N~~	P	MSL
7440-62-2	Vanadium	11.0			P	
7440-66-6	Zinc	34.9		J ~~E~~	P	SD

Color Before: GREY Clarity Before: NA Texture: MEDIUM

Color After: YELLOW Clarity After: CLEAR Artifacts: NA

Comments:

FORM IA - IN LW 9/30/08

ILMO5.3

4

USEPA - CLP

1A - IN

INORGANIC ANALYSIS DATA SHEET

EPA SAMPLE NO.

MR08-SS32-08B

Lab Name: GPL LABORATORIES, LL Contract:

Lab Code: Case No.: NRAS No.: SDG No.: 806163S

Matrix: (soil/water) SOIL Lab Sample ID: S 806163-004-039-1/1

Level: (low/med) Date Recieved: 06/24/2008

% Solids: 88.1

Concentration Units (ug/L or mg/kg dry weight): MG/KG

CAS No.	Analyte	Concentration	C	Q	M	
7429-90-5	Aluminum	3990			P	
7440-36-0	Antimony	4.9 ~~0.32~~	~~J~~	UJ ~~N~~	P	~~B~~L, MSL
7440-38-2	Arsenic	3.2			P	
7440-39-3	Barium	16.2 ~~11.9~~	~~J~~	U	P	BL
7441-41-7	Beryllium	0.096	J		P	
7440-43-9	Cadmium	0.070	J		P	
7440-70-2	Calcium	532			P	
7440-47-3	Chromium	4.8			P	
7440-48-4	Cobalt	0.22	J		P	
7440-47-3	Copper	2.4			P	
7439-89-6	Iron	2390			P	
7439-92-1	Lead	14.9			P	
7439-95-4	Magnesium	405 ~~203~~	~~J~~	U	P	BL
7439-96-5	Manganese	21.3			P	
7439-97-6	Mercury	0.034	U		AV	
7440-02-0	Nickel	1.0	J		P	
7440-09-7	Potassium	405	U		P	
7782-49-2	Selenium	0.41	J		P	
7440-22-4	Silver	0.81	U		P	
7440-23-5	Sodium	405 ~~12.7~~	~~J~~	U	P	BL
7440-28-0	Thallium	2.0	~~U~~	UJ ~~N~~	P	MSL
7440-62-2	Vanadium	7.8			P	
7440-66-6	Zinc	15.0		J ~~E~~	P	SD

Color Before: GREY Clarity Before: NA Texture: MEDIUM

Color After: YELLOW Clarity After: CLEAR Artifacts: NA

Comments:

5

USEPA - CLP

1A - IN

INORGANIC ANALYSIS DATA SHEET

EPA SAMPLE NO.

MR08-SS30-08B

Lab Name: GPL LABORATORIES, LL Contract:

Lab Code: Case No.: NRAS No.: SDG No.: 806163S

Matrix: (soil/water) SOIL Lab Sample ID: S 806163-005-043-1/1

Level: (low/med) Date Recieved: 06/24/2008

% Solids: 85.8

Concentration Units (ug/L or mg/kg dry weight): MG/KG

CAS No.	Analyte	Concentration	C	Q	M	
7429-90-5	Aluminum	4900			P	
7440-36-0	Antimony	4.9 ~~0.23~~	~~J~~	UJ ~~N~~	P	BL, MSL
7440-38-2	Arsenic	1.7			P	
7440-39-3	Barium	17.8			P	
7441-41-7	Beryllium	0.12	J		P	
7440-43-9	Cadmium	0.096	J		P	
7440-70-2	Calcium	1380			P	
7440-47-3	Chromium	6.1			P	
7440-48-4	Cobalt	0.28	J		P	
7440-47-3	Copper	4.6			P	
7439-89-6	Iron	2680			P	
7439-92-1	Lead	24.2			P	
7439-95-4	Magnesium	411 ~~260~~	~~J~~	U	P	BL
7439-96-5	Manganese	23.7			P	
7439-97-6	Mercury	0.036 ~~0.021~~	~~J~~	U	AV	BL
7440-02-0	Nickel	1.5	J		P	
7440-09-7	Potassium	411	U		P	
7782-49-2	Selenium	2.9	U		P	
7440-22-4	Silver	0.82	U		P	
7440-23-5	Sodium	411 ~~10.9~~	~~J~~	U	P	BL
7440-28-0	Thallium	2.1	~~J~~	UJ ~~N~~	P	MSL
7440-62-2	Vanadium	9.7			P	
7440-66-6	Zinc	26.1		J ~~E~~	P	SD

Color Before: GREY Clarity Before: NA Texture: MEDIUM

Color After: YELLOW Clarity After: CLEAR Artifacts: NA

Comments:

FORM IA - IN MW 9/30/08

ILMO5.3

6

USEPA - CLP

1A - IN

INORGANIC ANALYSIS DATA SHEET

EPA SAMPLE NO.

MR08-SS31-08B

Lab Name: GPL LABORATORIES, LL Contract:

Lab Code: Case No.: NRAS No.: SDG No.: 806163S

Matrix: (soil/water) SOIL Lab Sample ID: S 806163-006-001-1/3

Level: (low/med) Date Recieved: 06/24/2008

% Solids: 67.7

Concentration Units (ug/L or mg/kg dry weight): MG/KG

CAS No.	Analyte	Concentration	C	Q	M	
7429-90-5	Aluminum	4170			P	
7440-36-0	Antimony	6.4 ~~0.35~~	~~J~~	UJ ~~N~~	P	BL, MSL
7440-38-2	Arsenic	2.7			P	
7440-39-3	Barium	21.4 ~~15.1~~	~~J~~	U	P	BL
7441-41-7	Beryllium	0.15	J		P	
7440-43-9	Cadmium	0.13	J		P	
7440-70-2	Calcium	1520			P	
7440-47-3	Chromium	5.2			P	
7440-48-4	Cobalt	0.33	J		P	
7440-47-3	Copper	5.0			P	
7439-89-6	Iron	2150			P	
7439-92-1	Lead	40.3			P	
7439-95-4	Magnesium	535 ~~248~~	~~J~~	U	P	BL
7439-96-5	Manganese	16.2			P	
7439-97-6	Mercury	0.044 ~~0.019~~	~~J~~	U	AV	BL
7440-02-0	Nickel	1.9	J		P	
7440-09-7	Potassium	535	U		P	
7782-49-2	Selenium	3.7	U		P	
7440-22-4	Silver	1.1	U		P	
7440-23-5	Sodium	535	U		P	
7440-28-0	Thallium	2.7	~~U~~	UJ ~~N~~	P	MSL
7440-62-2	Vanadium	9.9			P	
7440-66-6	Zinc	27.1		J ~~E~~	P	SD

Color Before: GREY Clarity Before: NA Texture: MEDIUM

Color After: YELLOW Clarity After: CLEAR Artifacts: NA

Comments:

7

USEPA - CLP

1A - IN

INORGANIC ANALYSIS DATA SHEET

EPA SAMPLE NO.

MR08-SS40-08B

Lab Name: GPL LABORATORIES, LL Contract:

Lab Code: Case No.: NRAS No.: SDG No.: 806163S

Matrix: (soil/water) SOIL Lab Sample ID: S 806163-007-047-1/1

Level: (low/med) Date Recieved: 06/24/2008

% Solids: 75.3

Concentration Units (ug/L or mg/kg dry weight): MG/KG

CAS No.	Analyte	Concentration	C	Q	M	
7429-90-5	Aluminum	4270			P	
7440-36-0	Antimony	5.6 ~~0.22~~	~~J~~	UJ ~~N~~	P	BL, MSL
7440-38-2	Arsenic	4.1			P	
7440-39-3	Barium	18.7 ~~16.6~~	~~J~~	U	P	BL
7441-41-7	Beryllium	0.13	J		P	
7440-43-9	Cadmium	0.12	J		P	
7440-70-2	Calcium	2480			P	
7440-47-3	Chromium	5.6			P	
7440-48-4	Cobalt	0.32	J		P	
7440-47-3	Copper	4.8			P	
7439-89-6	Iron	1840			P	
7439-92-1	Lead	12.1			P	
7439-95-4	Magnesium	539			P	
7439-96-5	Manganese	13.9			P	
7439-97-6	Mercury	0.038 ~~0.018~~	~~J~~	U	AV	BL
7440-02-0	Nickel	1.6	J		P	
7440-09-7	Potassium	467	U		P	
7782-49-2	Selenium	3.3	U		P	
7440-22-4	Silver	0.10	J		P	
7440-23-5	Sodium	467 ~~13.8~~	~~J~~	U	P	BL
7440-28-0	Thallium	2.3	~~U~~	UJ ~~N~~	P	MSL
7440-62-2	Vanadium	8.4			P	
7440-66-6	Zinc	13.6		J ~~E~~	P	SD

Color Before: GREY Clarity Before: NA Texture: MEDIUM

Color After: YELLOW Clarity After: CLEAR Artifacts: NA

Comments:

FORM IA - IN 9/30/08

ILMO5.3

USEPA - CLP

1A - IN

INORGANIC ANALYSIS DATA SHEET

EPA SAMPLE NO.

MR08-SS34-08B

Lab Name: GPL LABORATORIES, LL Contract:

Lab Code: Case No.: NRAS No.: SDG No.: 806163S

Matrix: (soil/water) SOIL Lab Sample ID: S 806163-008-051-1/1

Level: (low/med) Date Recieved: 06/24/2008

% Solids: 75.9

Concentration Units (ug/L or mg/kg dry weight): MG/KG

CAS No.	Analyte	Concentration	C	Q	M	
7429-90-5	Aluminum	5530			P	
7440-36-0	Antimony	5.6 ~~0.30~~	~~J~~	UJ ~~N~~	P	~~BL~~, MSL
7440-38-2	Arsenic	1.7			P	
7440-39-3	Barium	22.8			P	
7441-41-7	Beryllium	0.14	J		P	
7440-43-9	Cadmium	0.13	J		P	
7440-70-2	Calcium	762			P	
7440-47-3	Chromium	5.8			P	
7440-48-4	Cobalt	0.31	J		P	
7440-47-3	Copper	7.4			P	
7439-89-6	Iron	3410			P	
7439-92-1	Lead	12.5			P	
7439-95-4	Magnesium	471 ~~245~~	~~J~~	U	P	BL
7439-96-5	Manganese	20.1			P	
7439-97-6	Mercury	0.04 ~~0.032~~	~~J~~	U	AV	BL
7440-02-0	Nickel	1.6	J		P	
7440-09-7	Potassium	471	U		P	
7782-49-2	Selenium	0.73	J		P	
7440-22-4	Silver	0.94	U		P	
7440-23-5	Sodium	471 ~~22.3~~	~~J~~	U	P	BL
7440-28-0	Thallium	2.4	~~U~~	UJ ~~N~~	P	MSL
7440-62-2	Vanadium	10.8			P	
7440-66-6	Zinc	18.9		J ~~E~~	P	SD

Color Before: GREY Clarity Before: NA Texture: MEDIUM

Color After: YELLOW Clarity After: CLEAR Artifacts: NA

Comments:

FORM IA - IN LW 9/30/08

ILMO5.3

USEPA - CLP

1A - IN

INORGANIC ANALYSIS DATA SHEET

EPA SAMPLE NO.

MR08-SS41-08B

Lab Name: GPL LABORATORIES, LL Contract:

Lab Code: Case No.: NRAS No.: SDG No.: 806163S

Matrix: (soil/water) SOIL Lab Sample ID: S 806163-009-055-1/1

Level: (low/med) Date Recieved: 06/24/2008

% Solids: 91.9

Concentration Units (ug/L or mg/kg dry weight): MG/KG

CAS No.	Analyte	Concentration	C	Q	M	
7429-90-5	Aluminum	4450			P	
7440-36-0	Antimony	4.7 ~~0.20~~	~~J~~	UJ ~~N~~	P	BL, MSL
7440-38-2	Arsenic	1.1			P	
7440-39-3	Barium	15.8 ~~9.2~~	~~J~~	U	P	BL
7441-41-7	Beryllium	0.12	J		P	
7440-43-9	Cadmium	0.038	J		P	
7440-70-2	Calcium	394 ~~332~~	~~J~~	U	P	BL
7440-47-3	Chromium	5.7			P	
7440-48-4	Cobalt	0.28	J		P	
7440-47-3	Copper	2.0			P	
7439-89-6	Iron	3470			P	
7439-92-1	Lead	6.6			P	
7439-95-4	Magnesium	394 ~~189~~	~~J~~	U	P	BL
7439-96-5	Manganese	14.2			P	
7439-97-6	Mercury	0.0330 ~~0.0096~~	~~J~~	U	AV	BL
7440-02-0	Nickel	1.2	J		P	
7440-09-7	Potassium	394	U		P	
7782-49-2	Selenium	0.46	J		P	
7440-22-4	Silver	0.79	U		P	
7440-23-5	Sodium	394 ~~8.7~~	~~J~~	U	P	BL
7440-28-0	Thallium	2.0	~~U~~	UJ ~~N~~	P	MSL
7440-62-2	Vanadium	8.0			P	
7440-66-6	Zinc	7.8		J ~~E~~	P	SD

Color Before: GREY Clarity Before: NA Texture: MEDIUM

Color After: YELLOW Clarity After: CLEAR Artifacts: NA

Comments:

USEPA - CLP

1A - IN

INORGANIC ANALYSIS DATA SHEET

EPA SAMPLE NO.

MR08-SS41D-08B

Lab Name: GPL LABORATORIES, LL Contract:

Lab Code: Case No.: NRAS No.: SDG No.: 806163S

Matrix: (soil/water) SOIL Lab Sample ID: S 806163-010-059-1/1

Level: (low/med) Date Recieved: 06/24/2008

% Solids: 84.6

Concentration Units (ug/L or mg/kg dry weight): MG/KG

CAS No.	Analyte	Concentration	C	Q	M	
7429-90-5	Aluminum	4950			P	
7440-36-0	Antimony	4.9 ~~0.12~~	~~J~~	UJ ~~N~~	P	~~BL~~, MSL
7440-38-2	Arsenic	0.77	J		P	
7440-39-3	Barium	16.3 ~~10.5~~	~~J~~	U	P	BL
7441-41-7	Beryllium	0.12	J		P	
7440-43-9	Cadmium	0.040	J		P	
7440-70-2	Calcium	408 ~~372~~	~~J~~	U	P	BL
7440-47-3	Chromium	5.3			P	
7440-48-4	Cobalt	0.32	J		P	
7440-47-3	Copper	2.1			P	
7439-89-6	Iron	2180			P	
7439-92-1	Lead	5.9			P	
7439-95-4	Magnesium	408 ~~210~~	~~J~~	U	P	BL
7439-96-5	Manganese	15.1			P	
7439-97-6	Mercury	0.037 ~~0.022~~	~~J~~	U	AV	BL
7440-02-0	Nickel	1.3	J		P	
7440-09-7	Potassium	408	U		P	
7782-49-2	Selenium	2.9	U		P	
7440-22-4	Silver	0.82	U		P	
7440-23-5	Sodium	408 ~~8.8~~	~~J~~	U	P	BL
7440-28-0	Thallium	2.0	~~J~~	UJ ~~N~~	P	MSL
7440-62-2	Vanadium	7.6			P	
7440-66-6	Zinc	11.0		J ~~E~~	P	SD

Color Before: GREY Clarity Before: NA Texture: MEDIUM

Color After: YELLOW Clarity After: CLEAR Artifacts: NA

Comments:

USEPA - CLP

1A - IN

INORGANIC ANALYSIS DATA SHEET

EPA SAMPLE NO.

MR08-SS35-08B

Lab Name: GPL LABORATORIES, LL Contract:

Lab Code: Case No.: NRAS No.: SDG No.: 806163S

Matrix: (soil/water) SOIL Lab Sample ID: S 806163-011-063-1/1

Level: (low/med) Date Recieved: 06/24/2008

% Solids: 85.2

Concentration Units (ug/L or mg/kg dry weight): MG/KG

CAS No.	Analyte	Concentration	C	Q	M	
7429-90-5	Aluminum	5470			P	
7440-36-0	Antimony	4.8 ~~0.40~~	~~J~~	UJ ~~N~~	P	BL, MSL
7440-38-2	Arsenic	1.9			P	
7440-39-3	Barium	18.2			P	
7441-41-7	Beryllium	0.18	J		P	
7440-43-9	Cadmium	0.13	J		P	
7440-70-2	Calcium	2080			P	
7440-47-3	Chromium	7.8			P	
7440-48-4	Cobalt	0.49	J		P	
7440-47-3	Copper	7.0			P	
7439-89-6	Iron	2890			P	
7439-92-1	Lead	12.4			P	
7439-95-4	Magnesium	872			P	
7439-96-5	Manganese	21.0			P	
7439-97-6	Mercury	0.034	U		AV	
7440-02-0	Nickel	2.1	J		P	
7440-09-7	Potassium	399	U		P	
7782-49-2	Selenium	0.42	J		P	
7440-22-4	Silver	0.80	U		P	
7440-23-5	Sodium	399 ~~22.6~~	~~J~~	U	P	BL
7440-28-0	Thallium	2.0	~~J~~	UJ ~~N~~	P	MSL
7440-62-2	Vanadium	14.7			P	
7440-66-6	Zinc	20.0		J ~~E~~	P	SD

Color Before: GREY Clarity Before: NA Texture: MEDIUM

Color After: YELLOW Clarity After: CLEAR Artifacts: NA

Comments:

12

USEPA - CLP

1A - IN

INORGANIC ANALYSIS DATA SHEET

EPA SAMPLE NO.

MR08-SS35D-08B

Lab Name: GPL LABORATORIES, LL Contract:

Lab Code: Case No.: NRAS No.: SDG No.: 806163S

Matrix: (soil/water) SOIL Lab Sample ID: S 806163-012-067-1/1

Level: (low/med) Date Recieved: 06/24/2008

% Solids: 83.9

Concentration Units (ug/L or mg/kg dry weight): MG/KG

CAS No.	Analyte	Concentration	C	Q	M	
7429-90-5	Aluminum	5680			P	
7440-36-0	Antimony	4.9 ~~0.37~~	~~J~~	UJ ~~N~~	P	BK, MSL
7440-38-2	Arsenic	2.3			P	
7440-39-3	Barium	19.1			P	
7441-41-7	Beryllium	0.17	J		P	
7440-43-9	Cadmium	0.10	J		P	
7440-70-2	Calcium	2120			P	
7440-47-3	Chromium	7.9			P	
7440-48-4	Cobalt	41.1	U	~~D~~	P	
7440-50-8	Copper	5260		~~D~~	P	
7439-89-6	Iron	3090			P	
7439-92-1	Lead	12.0		~~D~~	P	
7439-95-4	Magnesium	947			P	
7439-96-5	Manganese	17.4			P	
7439-97-6	Mercury	0.034 ~~0.013~~	~~J~~	U	AV	BL
7440-02-0	Nickel	2.3	J		P	
7440-09-7	Potassium	411	U		P	
7782-49-2	Selenium	2.9	U		P	
7440-22-4	Silver	0.12	J		P	
7440-23-5	Sodium	411 ~~19.3~~	~~J~~	U	P	BL
7440-28-0	Thallium	2.1	~~U~~	UJ ~~N~~	P	MSL
7440-62-2	Vanadium	15.4			P	
7440-66-6	Zinc	96.9		J ~~E~~	P	SD

Color Before: GREY Clarity Before: NA Texture: MEDIUM

Color After: YELLOW Clarity After: CLEAR Artifacts: NA

Comments:

FORM IA - IN

ILMO5.3

USEPA - CLP

1A - IN

INORGANIC ANALYSIS DATA SHEET

EPA SAMPLE NO.

MR08-FB062208

Lab Name: GPL LABORATORIES, LL Contract:

Lab Code: Case No.: NRAS No.: SDG No.: 806163W

Matrix: (soil/water) WATER Lab Sample ID: S 806163-013-014-1/1

Level: (low/med) Date Recieved: 06/24/2008

% Solids: 0.0

Concentration Units (ug/L or mg/kg dry weight): UG/L

CAS No.	Analyte	Concentration	C	Q	M	
7429-90-5	Aluminum	200	U		P	
7440-36-0	Antimony	60.0	U		P	
7440-38-2	Arsenic	10 ~~2.4~~	~~J~~	U	P	BL
7440-39-3	Barium	200 ~~1.2~~	~~J~~	U	P	BL
7441-41-7	Beryllium	5.0	U		P	
7440-43-9	Cadmium	5.0	U		P	
7440-70-2	Calcium	5000	U		P	
7440-47-3	Chromium	10.0	U		P	
7440-48-4	Cobalt	50.0	U		P	
7440-50-8	Copper	25.0	U		P	
7439-89-6	Iron	100 ~~28.6~~	~~J~~	U	P	BL
7439-92-1	Lead	10.0	U		P	
7439-95-4	Magnesium	5000 ~~39.6~~	~~J~~	U	P	BL
7439-96-5	Manganese	15 ~~0.71~~	~~J~~	U	P	BL
7439-97-6	Mercury	0.20	U		CV	
7440-02-0	Nickel	40.0	U		P	
7440-09-7	Potassium	5000 ~~73.8~~	~~J~~	U	P	BL
7782-49-2	Selenium	35.0	U		P	
7440-22-4	Silver	10.0	U		P	
7440-23-5	Sodium	5000 ~~574~~	~~J~~	U	P	BL
7440-28-0	Thallium	25.0	U		P	
7440-62-2	Vanadium	50.0	U		P	
7440-66-6	Zinc	60.0	U		P	

Color Before: ~~NA~~ Colorless Clarity Before: ~~NA~~ Clear Texture: NA

Color After: ~~NA~~ Colorless Clarity After: ~~NA~~ Clear Artifacts: NA

Comments:

FORM IA - IN MW 9/23/08 ILMO5.3

USEPA - CLP

1A - IN

INORGANIC ANALYSIS DATA SHEET

EPA SAMPLE NO.

MR08-EB062208

Lab Name: GPL LABORATORIES, LL Contract:

Lab Code: Case No.: NRAS No.: SDG No.: 806163W

Matrix: (soil/water) WATER Lab Sample ID: S 806163-014-021-1/1

Level: (low/med) Date Recieved: 06/24/2008

% Solids: 0.0

Concentration Units (ug/L or mg/kg dry weight): UG/L

CAS No.	Analyte	Concentration	C	Q	M	
7429-90-5	Aluminum	200	U		P	
7440-36-0	Antimony	60.0	U		P	
7440-38-2	Arsenic	10 ~~2.3~~	~~J~~	U	P	BL
7440-39-3	Barium	200 ~~0.88~~	~~J~~	U	P	BL
7441-41-7	Beryllium	5.0	U		P	
7440-43-9	Cadmium	5.0	U		P	
7440-70-2	Calcium	5000	U		P	
7440-47-3	Chromium	10.0	U		P	
7440-48-4	Cobalt	50.0	U		P	
7440-50-8	Copper	25.0	U		P	
7439-89-6	Iron	100 ~~15.0~~	~~J~~	U	P	BL
7439-92-1	Lead	10.0	U		P	
7439-95-4	Magnesium	5000 ~~30.0~~	~~J~~	U	P	BL
7439-96-5	Manganese	15.0	U		P	
7440-02-0	Nickel	40.0	U		P	
7439-97-6	Mercury	0.2 ~~0.060~~	~~J~~	U	CV	BL
7440-09-7	Potassium	5000 ~~62.9~~	~~J~~	U	P	BL
7782-49-2	Selenium	35.0	U		P	
7440-22-4	Silver	10.0	U		P	
7440-23-5	Sodium	5000 ~~336~~	~~J~~	U	P	BL
7440-28-0	Thallium	25.0	U		P	
7440-62-2	Vanadium	50.0	U		P	
7440-66-6	Zinc	60.0	U		P	

Color Before: ~~NA~~ Colorless Clarity Before: ~~NA~~ Clear Texture: NA

Color After: ~~NA~~ Colorless Clarity After: ~~NA~~ Clear Artifacts: NA

Comments:

FORM IA - IN MW 6/30/08 ILMO5.3

USEPA - CLP

1A - IN

INORGANIC ANALYSIS DATA SHEET

EPA SAMPLE NO.

MR08-SS37-08B

Lab Name: GPL LABORATORIES, LL Contract:

Lab Code: Case No.: NRAS No.: SDG No.: 806163S

Matrix: (soil/water) SOIL Lab Sample ID: S 806163-015-071-1/1

Level: (low/med) Date Recieved: 06/24/2008

% Solids: 92.7

Concentration Units (ug/L or mg/kg dry weight): MG/KG

CAS No.	Analyte	Concentration	C	Q	M	
7429-90-5	Aluminum	3670			P	
7440-36-0	Antimony	4.4 ~~1.0~~	~~J~~	UJ ~~N~~	P	BL, MSL
7440-38-2	Arsenic	0.83			P	
7440-39-3	Barium	14.8 ~~13.6~~	J	U	P	BL
7441-41-7	Beryllium	0.072	J		P	
7440-43-9	Cadmium	0.28	J		P	
7440-70-2	Calcium	5140			P	
7440-47-3	Chromium	9.1			P	
7440-48-4	Cobalt	0.26	J		P	
7440-47-3	Copper	3.9			P	
7439-89-6	Iron	1610			P	
7439-92-1	Lead	37.4			P	
7439-95-4	Magnesium	369 ~~212~~	~~J~~	U	P	BL
7439-96-5	Manganese	6.8			P	
7439-97-6	Mercury	0.0330 ~~0.011~~	~~J~~	U	AV	BL
7440-02-0	Nickel	0.96	J		P	
7440-09-7	Potassium	369	U		P	
7782-49-2	Selenium	2.6	U		P	
7440-22-4	Silver	0.74	U		P	
7440-23-5	Sodium	369 ~~25.6~~	~~J~~	U	P	BL
7440-28-0	Thallium	1.8	~~U~~	UJ ~~N~~	P	MSL
7440-62-2	Vanadium	5.6			P	
7440-66-6	Zinc	32.4		J ~~E~~	P	SD

Color Before: GREY Clarity Before: NA Texture: MEDIUM

Color After: YELLOW Clarity After: CLEAR Artifacts: NA

Comments:

USEPA - CLP

1A - IN

INORGANIC ANALYSIS DATA SHEET

EPA SAMPLE NO.

MR08-SS36-08B

Lab Name: GPL LABORATORIES, LL Contract:

Lab Code: Case No.: NRAS No.: SDG No.: 806163S

Matrix: (soil/water) SOIL Lab Sample ID: S 806163-016-075-1/1

Level: (low/med) Date Recieved: 06/24/2008

% Solids: 90.0

Concentration Units (ug/L or mg/kg dry weight): MG/KG

CAS No.	Analyte	Concentration	C	Q	M	
7429-90-5	Aluminum	2240			P	
7440-36-0	Antimony	4.7 ~~0.72~~	~~J~~	UJ ~~N~~	P	BL, MSL
7440-38-2	Arsenic	8.0	J	~~D~~	P	
7440-39-3	Barium	15.6 ~~0.2~~	~~J~~	U	P	BL
7441-41-7	Beryllium	0.25	J		P	
7440-43-9	Cadmium	0.96			P	
7440-70-2	Calcium	297000		~~D~~	P	
7440-47-3	Chromium	9.0			P	
7440-48-4	Cobalt	7.9			P	
7440-47-3	Copper	39.1 ~~7.9~~	~~J~~	U ~~D~~	P	BL
7439-89-6	Iron	5000			P	
7439-92-1	Lead	3.7	J	~~D~~	P	
7439-95-4	Magnesium	3790			P	
7439-96-5	Manganese	351			P	
7439-97-6	Mercury	0.038 ~~0.017~~	~~J~~	U	AV	BL
7440-02-0	Nickel	33.7			P	
7440-09-7	Potassium	7820	U	~~D~~	P	
7782-49-2	Selenium	2.7	U		P	
7440-22-4	Silver	0.78	U		P	
7440-23-5	Sodium	391 ~~159~~	~~J~~	U	P	BL
7440-28-0	Thallium	39.1	~~U~~	UJ ~~ND~~	P	MSL
7440-62-2	Vanadium	14.5			P	
7440-66-6	Zinc	41.4		J ~~E~~	P	SD

Color Before: GREY Clarity Before: NA Texture: MEDIUM

Color After: YELLOW Clarity After: CLEAR Artifacts: NA

Comments:

ENVIRONMENTAL
Data Services, Inc.

PERCHLORATE

USEPA Region IV - Level IV Review

Site: MCB Camp Lejeune, UXO-08, CTO-168 SDG #: 806163

Client: CH2M HILL, Inc., Virginia Beach, Virginia Date: September 30, 2008

Laboratory: DataChem Laboratories, Salt Lake City, Utah Reviewer: Nancy Weaver

EDS ID	Client Sample ID	Laboratory Sample ID	Matrix
1	MR08-SS38-08B	806163-001	Soil
2	MR08-SS39-08B	806163-002	Soil
3	MR08-SS33-08B	806163-003	Soil
4	MR08-SS32-08B	806163-004	Soil
5	MR08-SS30-08B	806163-005	Soil
6	MR08-SS31-08B	806163-006	Soil
6MS	MR08-SS31-08BMS	806163-006MS	Soil
6MSD	MR08-SS31-08BMSD	806163-006MSD	Soil
7	MR08-SS40-08B	806163-007	Soil
8	MR08-SS34-08B	806163-008	Soil
9	MR08-SS41-08B	806163-009	Soil
10	MR08-SS41D-08B	806163-010	Soil
11	MR08-SS35-08B	806163-011	Soil
12	MR08-SS35D-08B	806163-012	Soil
13	MR08-FB062208	806163-013	Water
14	MR08-EB062208	806163-014	Water
15	MR08-SS37-08B	806163-015	Soil
16	MR08-SS36-08B	806163-016	Soil

The USEPA "Contract Laboratory Program National Functional Guidelines for Inorganic Data Review," October 2004, and professional judgement were used in evaluating the data in this summary report.

Holding Times - All samples were prepared and analyzed within 28 days for perchlorate.

Calibration - The ICV and CCV %R values were acceptable.

Method and Calibration Blanks - The method blanks and continuing calibration blanks were free of contamination.

Field and Equipment Blank - Field QC results are summarized below.

Blank ID	Compound	Conc. ug/L	Action Level ug/L	Qualifier	Affected Samples
MR08-FB062208	None - ND	-	-	-	-
MR08-EB062208	None - ND	-	-	-	-

Matrix Spike/Duplicate - The matrix spike/duplicate sample exhibited acceptable %R and RPD values.

LCS - The LCS samples exhibited acceptable %R values.

Field Duplicates - Field duplicate results are summarized below.

Compound	MR08-SS41-08B ug/kg	MR08-SS41D-08B ug/kg	RPD	Qualifier
None	ND	ND	-	-

Compound	MR08-SS35-08B ug/kg	MR08-SS35D-08B ug/kg	RPD	Qualifier
None	ND	ND	-	-

Compound Quantitation - No discrepancies were identified.

DATA CHEM LABORATORIES
A Sorenson Company

FORM A (TYPE I)
SINGLE METHOD ANALYSES

SAMPLE ANALYSIS DATA SHEET

Form RLIMS63A-V1.4
07110812363023
Page 3

S085T02B

Date Printed.....: 11-JUL-08 12:36

Client Name.....: GPL Laboratories
Client Ref Number....: 806163
Sampling Site.....: CAMP LEJEUNE UXO-08
Release Number.....: 806163

Date Received.....: 26-JUN-08 00:00

DCL Preparation Group: Not Applicable
Date Prepared.....: 03-JUL-08 00:00
Preparation Method...: 6850
Aliquot Weight/Volume: 1.00g
Net Weight/Volume....: Not Required

Client Sample Name: MR08-SS38-08|B
DCL Sample Name...: 08E03261
DCL Report Group..: 08E-0510-01

Matrix.....: SOLID
Date Sampled.....: 22-JUN-08 08:30
Reporting Units...: ug/kg
Report Basis.....: ☐ As Received ☒ Dried
Percent Solids....: 88.58

DCL Analysis Group: G086001H
Analysis Method...: 6850
Instrument Type...: LC/MS
Instrument ID.....: LCMS02
Column Type.....: KP-RPPX250
☒ Primary
☐ Confirmation

Analytical Results

Analyte	Date Analyzed	MDL	Result	Comment	Qual.	Dilution	PQL
Perchlorate	04-JUL-08 01:19	0.748	ND		U	1	2.26

MW 9/30/08

DATA CHEM LABORATORIES
A Sorenson Company

FORM A (TYPE I)
SINGLE METHOD ANALYSES

SAMPLE ANALYSIS DATA SHEET

Form RLIMS63A-V1.4
07110812363023
Page 4

S085T02C

Date Printed.....: 11-JUL-08 12:36

Client Name.....: GPL Laboratories
Client Ref Number....: 806163
Sampling Site.....: CAMP LEJEUNE UXO-08
Release Number.....: 806163

Date Received.....: 26-JUN-08 00:00

DCL Preparation Group: Not Applicable
Date Prepared.....: 03-JUL-08 00:00
Preparation Method...: 6850
Aliquot Weight/Volume: 1.00g
Net Weight/Volume....: Not Required

Client Sample Name: MR08-SS39-08|B
DCL Sample Name...: 08E03262
DCL Report Group..: 08E-0510-01

Matrix.....: SOLID
Date Sampled.....: 22-JUN-08 09:20
Reporting Units...: ug/kg
Report Basis.....: ☐ As Received ☒ Dried
Percent Solids....: 77.58

DCL Analysis Group: G086001H
Analysis Method...: 6850
Instrument Type...: LC/MS
Instrument ID.....: LCMS02
Column Type.....: KP-RPPX250
☒ Primary
☐ Confirmation

Analytical Results

Analyte	Date Analyzed	MDL	Result	Comment	Qual.	Dilution	PQL
Perchlorate	04-JUL-08 02:23	0.855	ND		U	1	2.58

lw 9/30/08

DATA CHEM LABORATORIES
A Sorenson Company

FORM A (TYPE I)
SINGLE METHOD ANALYSES

SAMPLE ANALYSIS DATA SHEET

Form RLIMS63A-V1.4
07110812363023
Page 5

S085T02D

Date Printed.....: 11-JUL-08 12:36

Client Name.....: GPL Laboratories
Client Ref Number....: 806163
Sampling Site.....: CAMP LEJEUNE UXO-08
Release Number.....: 806163

Date Received.....: 26-JUN-08 00:00

DCL Preparation Group: Not Applicable
Date Prepared.....: 03-JUL-08 00:00
Preparation Method...: 6850
Aliquot Weight/Volume: 1.00g
Net Weight/Volume....: Not Required

Client Sample Name: MR08-SS33-08|B
DCL Sample Name...: 08E03263
DCL Report Group..: 08E-0510-01

Matrix.....: SOLID
Date Sampled.....: 22-JUN-08 08:20
Reporting Units...: ug/kg
Report Basis.....: ☐ As Received ☒ Dried
Percent Solids....: 69.58

DCL Analysis Group: G086001H
Analysis Method...: 6850
Instrument Type...: LC/MS
Instrument ID.....: LCMS02
Column Type.....: KP-RPPX250
☒ Primary
☐ Confirmation

Analytical Results

Analyte	Date Analyzed	MDL	Result	Comment	Qual.	Dilution	PQL
Perchlorate	04-JUL-08 02:45	0.953	6.33			1	2.87

LW 9/30/08

DATA CHEM LABORATORIES
A Sorenson Company

FORM A (TYPE I)
SINGLE METHOD ANALYSES

SAMPLE ANALYSIS DATA SHEET

Form RLIMS63A-V1.4
07110812363023
Page 6

S085T02F

Date Printed.....: 11-JUL-08 12:36

Client Name.....: GPL Laboratories
Client Ref Number....: 806163
Sampling Site.....: CAMP LEJEUNE UXO-08
Release Number.....: 806163

Date Received.....: 26-JUN-08 00:00

DCL Preparation Group: Not Applicable
Date Prepared.....: 03-JUL-08 00:00
Preparation Method...: 6850
Aliquot Weight/Volume: 1.00g
Net Weight/Volume....: Not Required

Client Sample Name: MR08-SS32-08|B
DCL Sample Name...: 08E03264
DCL Report Group..: 08E-0510-01

Matrix.....: SOLID
Date Sampled.....: 22-JUN-08 09:15
Reporting Units...: ug/kg
Report Basis.....: ☐ As Received ☒ Dried
Percent Solids....: 88.08

DCL Analysis Group: G086001H
Analysis Method...: 6850
Instrument Type...: LC/MS
Instrument ID.....: LCMS02
Column Type.....: KP-RPPX250
☒ Primary
☐ Confirmation

Analytical Results

Analyte	Date Analyzed	MDL	Result	Comment	Qual.	Dilution	PQL
Perchlorate	04-JUL-08 03:06	0.753	ND		U	1	2.27

LW
9/30/08

DATA CHEM LABORATORIES
A Sorenson Company

FORM A (TYPE I)
SINGLE METHOD ANALYSES

SAMPLE ANALYSIS DATA SHEET

Form RLIMS63A-V1.4
07110812363023
Page 7

S085T02G

Date Printed.....: 11-JUL-08 12:36

Client Name.....: GPL Laboratories
Client Ref Number....: 806163
Sampling Site.....: CAMP LEJEUNE UXO-08
Release Number.....: 806163

Date Received.....: 26-JUN-08 00:00

DCL Preparation Group: Not Applicable
Date Prepared.....: 03-JUL-08 00:00
Preparation Method...: 6850
Aliquot Weight/Volume: 1.00g
Net Weight/Volume....: Not Required

Client Sample Name: MR08-SS30-08|B
DCL Sample Name...: 08E03265
DCL Report Group..: 08E-0510-01

Matrix.....: SOLID
Date Sampled.....: 22-JUN-08 08:40
Reporting Units...: ug/kg
Report Basis.....: ☐ As Received ☒ Dried
Percent Solids....: 85.77

DCL Analysis Group: G086001H
Analysis Method...: 6850
Instrument Type...: LC/MS
Instrument ID.....: LCMS02
Column Type.....: KP-RPPX250
☒ Primary
☐ Confirmation

Analytical Results

Analyte	Date Analyzed	MDL	Result	Comment	Qual.	Dilution	PQL
Perchlorate	04-JUL-08 03:27	0.773	ND		U	1	2.33

lw
9/30/08

6

DATA CHEM LABORATORIES
A Sorenson Company

FORM A (TYPE I)
SINGLE METHOD ANALYSES

SAMPLE ANALYSIS DATA SHEET

Form RLIMS63A-V1.4
07110812363023
Page 8

S085T02H

Date Printed.....: 11-JUL-08 12:36

Client Name.....: GPL Laboratories
Client Ref Number....: 806163
Sampling Site.....: CAMP LEJEUNE UXO-08
Release Number.....: 806163

Date Received.....: 26-JUN-08 00:00

DCL Preparation Group: Not Applicable
Date Prepared.....: 03-JUL-08 00:00
Preparation Method...: 6850
Aliquot Weight/Volume: 1.00g
Net Weight/Volume....: Not Required

Client Sample Name: MR08-SS31-08|B
DCL Sample Name...: 08E03266
DCL Report Group..: 08E-0510-01

Matrix.....: SOLID
Date Sampled.....: 22-JUN-08 09:00
Reporting Units...: ug/kg
Report Basis.....: ☐ As Received ☒ Dried
Percent Solids....: 67.71

DCL Analysis Group: G086001H
Analysis Method...: 6850
Instrument Type...: LC/MS
Instrument ID.....: LCMS02
Column Type.....: KP-RPPX250
☒ Primary
☐ Confirmation

Analytical Results

Analyte	Date Analyzed	MDL	Result	Comment	Qual.	Dilution	PQL
Perchlorate	04-JUL-08 03:49	0.979	ND		U	1	2.95

LW
9/30/08

11

DATA CHEM LABORATORIES
A Sorenson Company

FORM A (TYPE I)
SINGLE METHOD ANALYSES

SAMPLE ANALYSIS DATA SHEET

Form RLIMS63A-V1.4
07110812363023
Page 9

S085T02L

Date Printed.....: 11-JUL-08 12:36

Client Name.....: GPL Laboratories
Client Ref Number....: 806163
Sampling Site.....: CAMP LEJEUNE UXO-08
Release Number.....: 806163

Date Received.....: 26-JUN-08 00:00

DCL Preparation Group: Not Applicable
Date Prepared.....: 03-JUL-08 00:00
Preparation Method...: 6850
Aliquot Weight/Volume: 1.00g
Net Weight/Volume....: Not Required

Client Sample Name: MR08-SS40-08|B
DCL Sample Name...: 08E03267
DCL Report Group..: 08E-0510-01

Matrix.....: SOLID
Date Sampled.....: 22-JUN-08 08:20
Reporting Units...: ug/kg
Report Basis.....: ☐ As Received ☒ Dried
Percent Solids....: 75.33

DCL Analysis Group: G086001H
Analysis Method...: 6850
Instrument Type...: LC/MS
Instrument ID.....: LCMS02
Column Type.....: KP-RPPX250
☒ Primary
☐ Confirmation

Analytical Results

Analyte	Date Analyzed	MDL	Result	Comment	Qual.	Dilution	PQL
Perchlorate	04-JUL-08 04:53	0.880	25.7			1	2.65

lw 9/30/08

DATA CHEM LABORATORIES
A Sorenson Company

FORM A (TYPE I)
SINGLE METHOD ANALYSES

SAMPLE ANALYSIS DATA SHEET

Form RLIMS63A-V1.4
07110812363023
Page 10

S085T02M

Date Printed.....: 11-JUL-08 12:36

Client Name.....: GPL Laboratories
Client Ref Number....: 806163
Sampling Site.....: CAMP LEJEUNE UXO-08
Release Number.....: 806163

Date Received.....: 26-JUN-08 00:00

DCL Preparation Group: Not Applicable
Date Prepared.....: 03-JUL-08 00:00
Preparation Method...: 6850
Aliquot Weight/Volume: 1.00g
Net Weight/Volume....: Not Required

Client Sample Name: MR08-SS34-08|B
DCL Sample Name...: 08E03268
DCL Report Group..: 08E-0510-01

Matrix.....: SOLID
Date Sampled.....: 22-JUN-08 08:40
Reporting Units...: ug/kg
Report Basis.....: ☐ As Received ☒ Dried
Percent Solids....: 75.90

DCL Analysis Group: G086001H
Analysis Method...: 6850
Instrument Type...: LC/MS
Instrument ID.....: LCMS02
Column Type.....: KP-RPPX250
☒ Primary
☐ Confirmation

Analytical Results

Analyte	Date Analyzed	MDL	Result	Comment	Qual.	Dilution	PQL
Perchlorate	04-JUL-08 05:14	0.874	2.69	-		1	2.64

lrc 9/30/08

DATA CHEM LABORATORIES
A Sorenson Company

FORM A (TYPE I)
SINGLE METHOD ANALYSES

SAMPLE ANALYSIS DATA SHEET

Form RLIMS63A-V1.4
07110812363023
Page 11

S085T02N

Date Printed.....: 11-JUL-08 12:36

Client Name.....: GPL Laboratories
Client Ref Number....: 806163
Sampling Site.....: CAMP LEJEUNE UXO-08
Release Number.....: 806163

Date Received.....: 26-JUN-08 00:00

DCL Preparation Group: Not Applicable
Date Prepared.....: 03-JUL-08 00:00
Preparation Method...: 6850
Aliquot Weight/Volume: 1.00g
Net Weight/Volume....: Not Required

Client Sample Name: MR08-SS41-08|B
DCL Sample Name...: 08E03269
DCL Report Group..: 08E-0510-01

Matrix.....: SOLID
Date Sampled.....: 22-JUN-08 09:10
Reporting Units...: ug/kg
Report Basis.....: ☐ As Received ☒ Dried
Percent Solids....: 91.88

DCL Analysis Group: G086001H
Analysis Method...: 6850
Instrument Type...: LC/MS
Instrument ID.....: LCMS02
Column Type.....: KP-RPPX250
☒ Primary
☐ Confirmation

Analytical Results

Analyte	Date Analyzed	MDL	Result	Comment	Qual.	Dilution	PQL
Perchlorate	04-JUL-08 05:35	0.722	ND		U	1	2.18

lw
9/30/08

DATA CHEM LABORATORIES
A Sorenson Company

FORM A (TYPE I)
SINGLE METHOD ANALYSES

SAMPLE ANALYSIS DATA SHEET

Form RLIMS63A-V1.4
07110812363023
Page 12

S085T02P

Date Printed.....: 11-JUL-08 12:36

Client Name.....: GPL Laboratories
Client Ref Number....: 806163
Sampling Site.....: CAMP LEJEUNE UXO-08
Release Number.....: 806163

Date Received.....: 26-JUN-08 00:00

DCL Preparation Group: Not Applicable
Date Prepared.....: 03-JUL-08 00:00
Preparation Method...: 6850
Aliquot Weight/Volume: 1.00g
Net Weight/Volume....: Not Required

Client Sample Name: MR08-SS41D-0|8B
DCL Sample Name...: 08E03270
DCL Report Group..: 08E-0510-01

Matrix.....: SOLID
Date Sampled.....: 22-JUN-08 09:20
Reporting Units...: ug/kg
Report Basis.....: ☐ As Received ☒ Dried
Percent Solids....: 84.61

DCL Analysis Group: G086001H
Analysis Method...: 6850
Instrument Type...: LC/MS
Instrument ID.....: LCMS02
Column Type.....: KP-RPPX250
☒ Primary
☐ Confirmation

Analytical Results

Analyte	Date Analyzed	MDL	Result	Comment	Qual.	Dilution	PQL
Perchlorate	04-JUL-08 06:39	0.784	ND		U	1	2.36

JW 9/30/08

DATA CHEM LABORATORIES
A Sorenson Company

FORM A (TYPE I)
SINGLE METHOD ANALYSES

SAMPLE ANALYSIS DATA SHEET

Form RLIMS63A-V1.4
07110812363023
Page 13

S085T02Q

Date Printed.....: 11-JUL-08 12:36

Client Name.....: GPL Laboratories
Client Ref Number....: 806163
Sampling Site.....: CAMP LEJEUNE UXO-08
Release Number.....: 806163

Date Received.....: 26-JUN-08 00:00

DCL Preparation Group: Not Applicable
Date Prepared.....: 03-JUL-08 00:00
Preparation Method...: 6850
Aliquot Weight/Volume: 1.00g
Net Weight/Volume....: Not Required

Client Sample Name: MR08-SS35-08|B
DCL Sample Name...: 08E03271
DCL Report Group..: 08E-0510-01

Matrix.....: SOLID
Date Sampled.....: 22-JUN-08 09:30
Reporting Units...: ug/kg
Report Basis.....: ☐ As Received ☒ Dried
Percent Solids....: 85.16

DCL Analysis Group: G086001H
Analysis Method...: 6850
Instrument Type...: LC/MS
Instrument ID.....: LCMS02
Column Type.....: KP-RPPX250
☒ Primary
☐ Confirmation

Analytical Results

Analyte	Date Analyzed	MDL	Result	Comment	Qual.	Dilution	PQL
Perchlorate	04-JUL-08 07:00	0.779	ND		U	1	2.35

CW
9/30/08

DATA CHEM LABORATORIES
A Sorenson Company

FORM A (TYPE I)
SINGLE METHOD ANALYSES

SAMPLE ANALYSIS DATA SHEET

Form RLIMS63A-V1.4
07110812363023
Page 14

S085T02R

Date Printed.....: 11-JUL-08 12:36

Client Name.....: GPL Laboratories
Client Ref Number....: 806163
Sampling Site.....: CAMP LEJEUNE UXO-08
Release Number.....: 806163

Date Received.....: 26-JUN-08 00:00

DCL Preparation Group: Not Applicable
Date Prepared.....: 03-JUL-08 00:00
Preparation Method...: 6850
Aliquot Weight/Volume: 1.00g
Net Weight/Volume....: Not Required

Client Sample Name: MR08-SS35D-0|8B
DCL Sample Name...: 08E03272
DCL Report Group..: 08E-0510-01

Matrix.....: SOLID
Date Sampled.....: 22-JUN-08 09:40
Reporting Units...: ug/kg
Report Basis.....: ☐ As Received ☒ Dried
Percent Solids....: 93.94

DCL Analysis Group: G086001H
Analysis Method...: 6850
Instrument Type...: LC/MS
Instrument ID.....: LCMS02
Column Type.....: KP-RPPX250
☒ Primary
☐ Confirmation

Analytical Results

Analyte	Date Analyzed	MDL	Result	Comment	Qual.	Dilution	PQL
Perchlorate	04-JUL-08 07:22	0.706	1.62		J	1	2.13

MW 9/30/08

DATA CHEM LABORATORIES
A Sorenson Company

FORM A (TYPE I)
SINGLE METHOD ANALYSES

SAMPLE ANALYSIS DATA SHEET

Form RLIMS63A-V1.4
07090813572347
Page 3

S085T03C

Date Printed.....: 09-JUL-08 13:57

Client Name.....: GPL Laboratories
Client Ref Number....: 806163
Sampling Site.....: CAMP LEJEUNE UXO-08
Release Number.....: 806163

Date Received.....: 26-JUN-08 00:00

Client Sample Name: MR08-FB06220|8
DCL Sample Name...: 08E03275
DCL Report Group..: 08E-0510-03

Matrix.....: WATER
Date Sampled.....: 22-JUN-08 08:30
Reporting Units...: ug/L
Report Basis.....: ☒ As Received ☐ Dried

DCL Preparation Group: Not Applicable
Date Prepared.....: 07-JUL-08 00:00
Preparation Method...: 6850
Aliquot Weight/Volume: Not Applicable
Net Weight/Volume....: Not Required

DCL Analysis Group: G086600K
Analysis Method...: 6850
Instrument Type...: LC/MS
Instrument ID.....: LCMS02
Column Type.....: KP-RPPX250
☒ Primary
☐ Confirmation

Analytical Results

Analyte	Date Analyzed	MDL	Result	Comment	Qual.	Dilution	PQL
Perchlorate	07-JUL-08 22:44	0.0663	ND		U	1	0.200

lw 9/30/08

960 West LeVoy Drive / Salt Lake City, Utah 84123-2547
Phone (801) 266-7700 Web Page: www.datachem.com

DATA CHEM LABORATORIES
A Sorenson Company

FORM A (TYPE I)
SINGLE METHOD ANALYSES

SAMPLE ANALYSIS DATA SHEET

Form RLIMS63A-V1.4
07090813572347
Page 4

S085T03D

Date Printed.....: 09-JUL-08 13:57

Client Name.....: GPL Laboratories
Client Ref Number....: 806163
Sampling Site.....: CAMP LEJEUNE UXO-08
Release Number.....: 806163

Date Received.....: 26-JUN-08 00:00

Client Sample Name: MR08-EB06220|8
DCL Sample Name...: 08E03276
DCL Report Group..: 08E-0510-03

Matrix.....: WATER
Date Sampled.....: 22-JUN-08 08:50
Reporting Units...: ug/L
Report Basis.....: ☒ As Received ☐ Dried

DCL Preparation Group: Not Applicable
Date Prepared.....: 07-JUL-08 00:00
Preparation Method...: 6850
Aliquot Weight/Volume: Not Applicable
Net Weight/Volume....: Not Required

DCL Analysis Group: G086600K
Analysis Method...: 6850
Instrument Type...: LC/MS
Instrument ID.....: LCMS02
Column Type.....: KP-RPPX250
☒ Primary
☐ Confirmation

Analytical Results

Analyte	Date Analyzed	MDL	Result	Comment	Qual.	Dilution	PQL
Perchlorate	07-JUL-08 23:05	0.0663	ND		U	1	0.200

LW 9/30/08

960 West LeVoy Drive / Salt Lake City, Utah 84123-2547
Phone (801) 266-7700 Web Page: www.datachem.com

DATA CHEM LABORATORIES
A Sorenson Company

FORM A (TYPE I)
SINGLE METHOD ANALYSES

SAMPLE ANALYSIS DATA SHEET

Form RLIMS63A-V1.4
07110812363023
Page 15

S085T02S

Date Printed.....: 11-JUL-08 12:36

Client Name.....: GPL Laboratories
Client Ref Number....: 806163
Sampling Site.....: CAMP LEJEUNE UXO-08
Release Number.....: 806163

Date Received.....: 26-JUN-08 00:00

DCL Preparation Group: Not Applicable
Date Prepared.....: 03-JUL-08 00:00
Preparation Method...: 6850
Aliquot Weight/Volume: 1.00g
Net Weight/Volume....: Not Required

Client Sample Name: MR08-SS37-08|B
DCL Sample Name...: 08E03273
DCL Report Group..: 08E-0510-01

Matrix.....: SOLID
Date Sampled.....: 22-JUN-08 11:00
Reporting Units...: ug/kg
Report Basis.....: ☐ As Received ☒ Dried
Percent Solids....: 92.74

DCL Analysis Group: G086001H
Analysis Method...: 6850
Instrument Type...: LC/MS
Instrument ID.....: LCMS02
Column Type.....: KP-RPPX250
☒ Primary
☐ Confirmation

Analytical Results

Analyte	Date Analyzed	MDL	Result	Comment	Qual.	Dilution	PQL
Perchlorate	04-JUL-08 07:43	0.715	ND		U	1	2.16

lw
9/30/08

DATA CHEM LABORATORIES
A Sorenson Company

FORM A (TYPE I)
SINGLE METHOD ANALYSES

SAMPLE ANALYSIS DATA SHEET

S085T02T

Date Printed.....: 11-JUL-08 12:36

Client Name.....: GPL Laboratories
Client Ref Number....: 806163
Sampling Site.....: CAMP LEJEUNE UXO-08
Release Number.....: 806163

Date Received.....: 26-JUN-08 00:00

DCL Preparation Group: Not Applicable
Date Prepared.....: 03-JUL-08 00:00
Preparation Method...: 6850
Aliquot Weight/Volume: 1.00g
Net Weight/Volume....: Not Required

Client Sample Name: MR08-SS36-08|B
DCL Sample Name...: 08E03274
DCL Report Group..: 08E-0510-01

Matrix.....: SOLID
Date Sampled.....: 22-JUN-08 10:40
Reporting Units...: ug/kg
Report Basis.....: ☐ As Received ☒ Dried
Percent Solids....: 90.04

DCL Analysis Group: G086001H
Analysis Method...: 6850
Instrument Type...: LC/MS
Instrument ID.....: LCMS02
Column Type.....: KP-RPPX250
☒ Primary
☐ Confirmation

Analytical Results

Analyte	Date Analyzed	MDL	Result	Comment	Qual.	Dilution	PQL
Perchlorate	04-JUL-08 08:04	0.736	ND		U	1	2.22

LW
9/30/08

ENVIRONMENTAL
Data Services, Inc.

PESTICIDES/PCBs
USEPA Region IV - Level IV Review

Site: MCB Camp Lejeune, UXO-08, CTO-168 SDG #: 806163

Client: CH2M HILL, Inc., Virginia Beach, Virginia Date: September 30, 2008

Laboratory: GPL Laboratories, Frederick, Maryland Reviewer: Nancy Weaver

EDS ID	Client Sample ID	Laboratory Sample ID	Matrix
1	MR08-SS38-08B	806163-001	Soil
2	MR08-SS39-08B	806163-002	Soil
3	MR08-SS33-08B	806163-003	Soil
4	MR08-SS32-08B	806163-004	Soil
5	MR08-SS30-08B	806163-005	Soil
6	MR08-SS31-08B	806163-006	Soil
6MS	MR08-SS31-08BMS	806163-006MS	Soil
6MSD	MR08-SS31-08BMSD	806163-006MSD	Soil
7	MR08-SS40-08B	806163-007	Soil
8	MR08-SS34-08B	806163-008	Soil
9	MR08-SS41-08B	806163-009	Soil
10	MR08-SS41D-08B	806163-010	Soil
11	MR08-SS35-08B	806163-011	Soil
12	MR08-SS35D-08B	806163-012	Soil
13	MR08-FB062208	806163-013	Water
14	MR08-EB062208	806163-014	Water
15	MR08-SS37-08B	806163-015	Soil
16	MR08-SS36-08B	806163-016	Soil

The USEPA "Contract Laboratory Program National Functional Guidelines for Organic Data Review," October 1999, and professional judgement were used in evaluating the data in this summary report.

Holding Times - All samples were extracted within 7 days for water samples, 14 days for soil samples and analyzed within 40 days except the following.

Sample	Date Sampled	Date Extracted	# of Days	Qualifier
All samples	06/22/08	07/16/08	24	J/UJ

Instrument performance - All 4,4'-DDT/endrin % breakdown, resolution check mixture and PEMs were within criteria.

Initial Calibration - The initial calibrations exhibited acceptable %RSD values.

Calibration Verification - The continuing calibrations exhibited acceptable %D values.

Surrogates - All samples exhibited acceptable surrogate recoveries except the following.

Sample ID	Surrogate	%R	Qualifier
2	TCX2	158%	None - All ND

MS/MSD - The MS/MSD sample exhibited acceptable %R and RPD values except the following.

MS/MSD Sample ID	Compound	MS/MSD %R/RPD	Qualifier
6	4,4'-DDT	Ok/211%/65	None - Already qualified due to HT

Laboratory Control Sample - The LCS samples exhibited acceptable %R values.

Method Blank - The method blanks were free of contamination.

Field and Equipment Blank - Field QC results are summarized below.

Blank ID	Compound	Conc. ug/L	Action Level ug/L	Qualifier	Affected Samples
MR08-FB062208	None - ND	-	-	-	-
MR08-EB062208	None - ND	-	-	-	-

Field Duplicates - Field duplicate results are summarized below.

Compound	MR08-SS41-08B ug/kg	MR08-SS41D-08B ug/kg	RPD	Qualifier
None	ND	ND	-	-

Compound	MR08-SS35-08B ug/kg	MR08-SS35D-08B ug/kg	RPD	Qualifier
None	ND	ND	-	-

Compound Identification - Retention times were acceptable and no further action was taken.

Compound Quantitation - Several samples exhibited results with high %D values between columns and have been flagged (P) by the laboratory and further qualified (J).

Pesticide Cleanup Checks - The % recoveries were within the QC limits of 80-120% for the florisil cartridge cleanup and 80-110% for GPC.

GPL Laboratories

GPL
FORM I
ANALYSIS DATA SHEET

SAMPLE NO
MR08-SS38-08B

Lab Name :	GPL Laboratories	Client. :	CH2M Hill Inc
Lab Code :	GPL	SAS NO. :	
Case No. :		SDG NO :	806163
Matrix : (Soil / Water)	SOIL	Lab Sample ID :	806163-001-029-1/1
Sample Volume :	30.01	Lab File ID :	W005670.D
% Moisture:	11.42	Date Received	06/24/2008
Extraction:	CLP_EXTRACTION	Date Extracted:	07/16/2008
Extract Volume:	5 mL	Date Analyzed	07/18/2008
Injection Volume :	µ L	Dilution Factor :	1
GPC Clean up (Y/N):	Y pH:		

Concentration Units (ug/L or ug/kg dry weight) : ug/kg

CAS NO	COMPOUND		Q	
72-54-8	4,4-DDD	3.8	~~U~~	UJ HT
72-55-9	4,4-DDE	0.70	~~J~~	J
50-29-3	4,4-DDT	0.50	~~J~~	J
309-00-2	Aldrin	1.9	U	UJ
319-84-6	Alpha-BHC	1.9	U	UJ
5103-71-9	Alpha-Chlordane	0.44	~~JP~~	J ~~2C~~, HT
319-85-7	Beta-BHC	1.9	U	UJ HT
319-86-8	Delta-BHC	1.9	U	UJ HT
60-57-1	Dieldrin	0.27	~~JP~~	J ~~2C~~, HT
959-98-8	Endosulfan I	1.9	U	UJ HT
33213-65-9	Endosulfan II	3.8	U	
1031-07-8	Endosulfan Sulfate	3.8	U	
72-20-8	Endrin	3.8	U	
7421-93-4	Endrin Aldehyde	0.57	~~J~~	J
53494-70-5	Endrin Ketone	3.8	U	UJ
58-89-9	Gamma-BHC (Lindane)	1.9	U	UJ
5103-74-2	Gamma-Chlordane	0.35	~~JP~~	J ~~2C~~, HT
76-44-8	Heptachlor	1.9	U	UJ HT
1024-57-3	Heptachlor Epoxide	1.9	U	
72-43-5	Methoxychlor	19	U	
12674-11-2	PCB-1016	38	U	
11104-28-2	PCB-1221	75	U	
11141-16-5	PCB-1232	38	U	
53469-21-9	PCB-1242	38	U	
12672-29-6	PCB-1248	38	U	
11097-69-1	PCB-1254	38	U	
11096-82-5	PCB-1260	38	U	
8001-35-2	Toxaphene	190	U	

lw
9/30/08

GPL Laboratories

GPL
FORM 1
ANALYSIS DATA SHEET

2

SAMPLE NO
MR08-SS39-08B

Lab Name :	GPL Laboratories	Client. :	CH2M Hill Inc
Lab Code :	GPL	SAS NO. :	
Case No. :		SDG NO :	806163
Matrix : (Soil / Water)	SOIL	Lab Sample ID :	806163-002-033-1/1
Sample Volume :	30.03	Lab File ID :	W005705.D
% Moisture:	22.42	Date Received	06/24/2008
Extraction:	CLP_EXTRACTION	Date Extracted:	07/16/2008
Extract Volume:	5 mL	Date Analyzed	07/21/2008
Injection Volume :	µL	Dilution Factor :	1
GPC Clean up (Y/N):	Y pH:		

Concentration Units (ug/L or ug/kg dry weight) : ug/kg

CAS NO	COMPOUND		Q
72-54-8	4,4-DDD	4.3	U
72-55-9	4,4-DDE	4.3	U
50-29-3	4,4-DDT	4.3	U
309-00-2	Aldrin	2.2	U
319-84-6	Alpha-BHC	2.2	U
5103-71-9	Alpha-Chlordane	2.2	U
319-85-7	Beta-BHC	2.2	U
319-86-8	Delta-BHC	2.2	U
60-57-1	Dieldrin	4.3	U
959-98-8	Endosulfan I	2.2	U
33213-65-9	Endosulfan II	4.3	U
1031-07-8	Endosulfan Sulfate	4.3	U
72-20-8	Endrin	4.3	U
7421-93-4	Endrin Aldehyde	4.3	U
53494-70-5	Endrin Ketone	4.3	U
58-89-9	Gamma-BHC (Lindane)	2.2	U
5103-74-2	Gamma-Chlordane	2.2	U
76-44-8	Heptachlor	2.2	U
1024-57-3	Heptachlor Epoxide	2.2	U
72-43-5	Methoxychlor	22	U
12674-11-2	PCB-1016	43	U
11104-28-2	PCB-1221	86	U
11141-16-5	PCB-1232	43	U
53469-21-9	PCB-1242	43	U
12672-29-6	PCB-1248	43	U
11097-69-1	PCB-1254	43	U
11096-82-5	PCB-1260	43	U
8001-35-2	Toxaphene	220	U

UJ HT

LW 9/30/08

GPL Laboratories

GPL
FORM 1
ANALYSIS DATA SHEET

3

SAMPLE NO
MR08-SS33-08B

Lab Name :	GPL Laboratories	Client. :	CH2M Hill Inc
Lab Code :	GPL	SAS NO. :	
Case No. :		SDG NO :	806163
Matrix : (Soil / Water)	SOIL	Lab Sample ID :	806163-003-037-1/1
Sample Volume :	30.01	Lab File ID :	W005672.D
% Moisture:	30.42	Date Received	06/24/2008
Extraction:	CLP_EXTRACTION	Date Extracted:	07/16/2008
Extract Volume:	5 mL	Date Analyzed	07/18/2008
Injection Volume :	µL	Dilution Factor :	1
GPC Clean up (Y/N):	Y pH:		

Concentration Units (ug/L or ug/kg dry weight) : ug/kg

CAS NO	COMPOUND		Q	
72-54-8	4,4-DDD	0.49	~~JP~~	J ~~2/C~~, HT
72-55-9	4,4-DDE	0.65	J	J HT
50-29-3	4,4-DDT	0.76	J	J
309-00-2	Aldrin	2.4	U	UJ
319-84-6	Alpha-BHC	2.4	U	UJ
5103-71-9	Alpha-Chlordane	0.71	~~JP~~	J ~~2/C~~, HT
319-85-7	Beta-BHC	2.4	U	UJ HT
319-86-8	Delta-BHC	2.4	U	
60-57-1	Dieldrin	4.8	U	
959-98-8	Endosulfan I	2.4	U	
33213-65-9	Endosulfan II	4.8	U	
1031-07-8	Endosulfan Sulfate	4.8	U	
72-20-8	Endrin	4.8	U	
7421-93-4	Endrin Aldehyde	4.8	U	
53494-70-5	Endrin Ketone	4.8	U	
58-89-9	Gamma-BHC (Lindane)	2.4	U	
5103-74-2	Gamma-Chlordane	0.62	~~JP~~	J ~~2/C~~, HT
76-44-8	Heptachlor	2.4	U	UJ HT
1024-57-3	Heptachlor Epoxide	2.4	U	
72-43-5	Methoxychlor	24	U	
12674-11-2	PCB-1016	48	U	
11104-28-2	PCB-1221	96	U	
11141-16-5	PCB-1232	48	U	
53469-21-9	PCB-1242	48	U	
12672-29-6	PCB-1248	48	U	
11097-69-1	PCB-1254	48	U	
11096-82-5	PCB-1260	48	U	
8001-35-2	Toxaphene	240	U	

LW 9/30/08

GPL Laboratories

GPL
FORM 1
ANALYSIS DATA SHEET

4

SAMPLE NO
MR08-SS32-08B

Lab Name :	GPL Laboratories	Client. :	CH2M Hill Inc
Lab Code :	GPL	SAS NO. :	
Case No. :		SDG NO :	806163
Matrix : (Soil / Water)	SOIL	Lab Sample ID :	806163-004-041-1/1
Sample Volume :	30.03	Lab File ID :	W005673.D
% Moisture:	11.92	Date Received	06/24/2008
Extraction:	CLP_EXTRACTION	Date Extracted:	07/16/2008
Extract Volume:	5 mL	Date Analyzed	07/18/2008
Injection Volume :	µL	Dilution Factor :	1
GPC Clean up (Y/N):	Y pH:		

Concentration Units (ug/L or ug/kg dry weight) : ug/kg

CAS NO	COMPOUND		Q	
72-54-8	4,4-DDD	3.8	U	UJ HT
72-55-9	4,4-DDE	0.74	J	J HT
50-29-3	4,4-DDT	0.61	~~JP~~	J ~~2C~~ HT
309-00-2	Aldrin	1.9	U	UJ HT
319-84-6	Alpha-BHC	1.9	U	UJ HT
5103-71-9	Alpha-Chlordane	0.24	~~JP~~	J ~~2C~~, HT
319-85-7	Beta-BHC	1.9	U	UJ HT
319-86-8	Delta-BHC	1.9	U	
60-57-1	Dieldrin	3.8	U	
959-98-8	Endosulfan I	1.9	U	
33213-65-9	Endosulfan II	3.8	U	
1031-07-8	Endosulfan Sulfate	3.8	U	
72-20-8	Endrin	3.8	U	
7421-93-4	Endrin Aldehyde	0.95	~~JP~~	J ~~2C~~, HT
53494-70-5	Endrin Ketone	3.8	U	UJ HT
58-89-9	Gamma-BHC (Lindane)	1.9	U	UJ
5103-74-2	Gamma-Chlordane	0.44	J	J
76-44-8	Heptachlor	1.9	U	UJ
1024-57-3	Heptachlor Epoxide	1.9	U	
72-43-5	Methoxychlor	19	U	
12674-11-2	PCB-1016	38	U	
11104-28-2	PCB-1221	76	U	
11141-16-5	PCB-1232	38	U	
53469-21-9	PCB-1242	38	U	
12672-29-6	PCB-1248	38	U	
11097-69-1	PCB-1254	38	U	
11096-82-5	PCB-1260	38	U	
8001-35-2	Toxaphene	190	U	

lw 9/30/08

GPL Laboratories

GPL
FORM 1
ANALYSIS DATA SHEET

5

SAMPLE NO
MR08-SS30-08B

Lab Name :	GPL Laboratories	Client. :	CH2M Hill Inc
Lab Code :	GPL	SAS NO. :	
Case No. :		SDG NO :	806163
Matrix : (Soil / Water)	SOIL	Lab Sample ID :	806163-005-045-1/1
Sample Volume :	30.04	Lab File ID :	W005674.D
% Moisture:	14.23	Date Received	06/24/2008
Extraction:	CLP_EXTRACTION	Date Extracted:	07/16/2008
Extract Volume:	5 mL	Date Analyzed	07/18/2008
Injection Volume :	µL	Dilution Factor :	1
GPC Clean up (Y/N):	Y pH:		

Concentration Units (ug/L or ug/kg dry weight) : ug/kg

CAS NO	COMPOUND		Q	
72-54-8	4,4-DDD	3.9	~~U~~	UJ HT
72-55-9	4,4-DDE	1.4	~~JP~~	J ~~2C~~, HT
50-29-3	4,4-DDT	1.7	~~JP~~	J ~~2C~~, HT
309-00-2	Aldrin	1.9	U	UJ HT
319-84-6	Alpha-BHC	1.9	U	UJ HT
5103-71-9	Alpha-Chlordane	0.57	~~JP~~	J ~~2C~~, HT
319-85-7	Beta-BHC	1.9	U	UJ HT
319-86-8	Delta-BHC	1.9	U	
60-57-1	Dieldrin	3.9	U	
959-98-8	Endosulfan I	1.9	U	
33213-65-9	Endosulfan II	2.0	~~JP~~	J ~~2C~~, HT
1031-07-8	Endosulfan Sulfate	3.9	U	UJ HT
72-20-8	Endrin	3.9	U	UJ HT
7421-93-4	Endrin Aldehyde	0.56	~~JP~~	J ~~2C~~, HT
53494-70-5	Endrin Ketone	3.9	U	UJ HT
58-89-9	Gamma-BHC (Lindane)	1.9	U	
5103-74-2	Gamma-Chlordane	1.9	U	
76-44-8	Heptachlor	1.9	U	
1024-57-3	Heptachlor Epoxide	1.9	U	
72-43-5	Methoxychlor	19	U	
12674-11-2	PCB-1016	39	U	
11104-28-2	PCB-1221	78	U	
11141-16-5	PCB-1232	39	U	
53469-21-9	PCB-1242	39	U	
12672-29-6	PCB-1248	39	U	
11097-69-1	PCB-1254	39	U	
11096-82-5	PCB-1260	39	U	
8001-35-2	Toxaphene	190	U	

lW 9/30/08

GPL Laboratories

GPL
FORM 1
ANALYSIS DATA SHEET

6

SAMPLE NO
MR08-SS31-08B

Lab Name :	GPL Laboratories	Client. :	CH2M Hill Inc
Lab Code :	GPL	SAS NO. :	
Case No. :		SDG NO :	806163
Matrix : (Soil / Water)	SOIL	Lab Sample ID :	806163-006-007-1/3
Sample Volume :	30.01	Lab File ID :	W005675.D
% Moisture:	32.29	Date Received	06/24/2008
Extraction:	CLP_EXTRACTION	Date Extracted:	07/16/2008
Extract Volume:	5 mL	Date Analyzed	07/18/2008
Injection Volume :	µ L	Dilution Factor :	1
GPC Clean up (Y/N):	Y pH:		

Concentration Units (ug/L or ug/kg dry weight) : ug/kg

CAS NO	COMPOUND		Q	
72-54-8	4,4-DDD	4.9	U	UJ HT
72-55-9	4,4-DDE	3.4	J	J
50-29-3	4,4-DDT	2.4	J	J
309-00-2	Aldrin	2.5	U	UJ
319-84-6	Alpha-BHC	2.5	U	
5103-71-9	Alpha-Chlordane	2.5	U	
319-85-7	Beta-BHC	2.5	U	
319-86-8	Delta-BHC	2.5	U	
60-57-1	Dieldrin	0.69	~~JP~~	J ~~2C~~, HT
959-98-8	Endosulfan I	2.5	U	UJ HT
33213-65-9	Endosulfan II	4.9	U	
1031-07-8	Endosulfan Sulfate	4.9	U	
72-20-8	Endrin	4.9	U	
7421-93-4	Endrin Aldehyde	4.9	U	
53494-70-5	Endrin Ketone	4.9	U	
58-89-9	Gamma-BHC (Lindane)	2.5	U	
5103-74-2	Gamma-Chlordane	2.5	U	
76-44-8	Heptachlor	2.5	U	
1024-57-3	Heptachlor Epoxide	2.5	U	
72-43-5	Methoxychlor	25	U	
12674-11-2	PCB-1016	49	U	
11104-28-2	PCB-1221	98	U	
11141-16-5	PCB-1232	49	U	
53469-21-9	PCB-1242	49	U	
12672-29-6	PCB-1248	49	U	
11097-69-1	PCB-1254	49	U	
11096-82-5	PCB-1260	49	U	
8001-35-2	Toxaphene	250	U	

LW 9/30/08

GPL Laboratories

GPL
FORM 1
ANALYSIS DATA SHEET

7

SAMPLE NO
MR08-SS40-08B

Lab Name :	GPL Laboratories	Client. :	CH2M Hill Inc
Lab Code :	GPL	SAS NO. :	
Case No. :		SDG NO :	806163
Matrix : (Soil / Water)	SOIL	Lab Sample ID :	806163-007-049-1/1
Sample Volume :	30	Lab File ID :	W005681.D
% Moisture:	24.67	Date Received	06/24/2008
Extraction:	CLP_EXTRACTION	Date Extracted:	07/16/2008
Extract Volume:	5 mL	Date Analyzed	07/18/2008
Injection Volume :	µL	Dilution Factor :	1
GPC Clean up (Y/N):	Y pH:		

Concentration Units (ug/L or ug/kg dry weight) : ug/kg

CAS NO	COMPOUND		Q	
72-54-8	4,4-DDD	4.4	~~U~~	UJ HT
72-55-9	4,4-DDE	1.8	~~JP~~	J 2/C, HT
50-29-3	4,4-DDT	0.44	~~JP~~	J 2/C, HT
309-00-2	Aldrin	2.2	U	UJ HT
319-84-6	Alpha-BHC	2.2	U	UJ HT
5103-71-9	Alpha-Chlordane	0.47	~~JP~~	J 2/C, HT
319-85-7	Beta-BHC	2.2	U	UJ HT
319-86-8	Delta-BHC	2.2	U	UJ
60-57-1	Dieldrin	2.0	U	J
959-98-8	Endosulfan I	2.2	U	UJ
33213-65-9	Endosulfan II	4.4	U	
1031-07-8	Endosulfan Sulfate	4.4	U	
72-20-8	Endrin	4.4	U	
7421-93-4	Endrin Aldehyde	4.4	U	
53494-70-5	Endrin Ketone	4.4	U	
58-89-9	Gamma-BHC (Lindane)	2.2	U	
5103-74-2	Gamma-Chlordane	2.2	U	
76-44-8	Heptachlor	2.2	U	
1024-57-3	Heptachlor Epoxide	2.2	U	
72-43-5	Methoxychlor	22	U	
12674-11-2	PCB-1016	44	U	
11104-28-2	PCB-1221	89	U	
11141-16-5	PCB-1232	44	U	
53469-21-9	PCB-1242	44	U	
12672-29-6	PCB-1248	44	U	
11097-69-1	PCB-1254	44	U	
11096-82-5	PCB-1260	44	U	
8001-35-2	Toxaphene	220	U	

lw
9/30/08

GPL Laboratories

GPL
FORM 1
ANALYSIS DATA SHEET

8

SAMPLE NO
MR08-SS34-08B

Lab Name :	GPL Laboratories	Client. :	CH2M Hill Inc
Lab Code :	GPL	SAS NO. :	
Case No. :		SDG NO :	806163
Matrix : (Soil / Water)	SOIL	Lab Sample ID :	806163-008-053-1/1
Sample Volume :	30	Lab File ID :	W005682.D
% Moisture:	24.1	Date Received	06/24/2008
Extraction:	CLP_EXTRACTION	Date Extracted:	07/16/2008
Extract Volume:	5 mL	Date Analyzed	07/18/2008
Injection Volume :	µL	Dilution Factor :	1
GPC Clean up (Y/N):	Y pH:		

Concentration Units (ug/L or ug/kg dry weight) : ug/kg

CAS NO	COMPOUND		Q	
72-54-8	4,4-DDD	4.4	U	UJ HT
72-55-9	4,4-DDE	1.3	~~JP~~	J ~~2C~~, HT
50-29-3	4,4-DDT	0.76	~~JP~~	J ~~2C~~, HT
309-00-2	Aldrin	2.2	U	UJ HT
319-84-6	Alpha-BHC	2.2	U	
5103-71-9	Alpha-Chlordane	2.2	U	
319-85-7	Beta-BHC	2.2	U	
319-86-8	Delta-BHC	2.2	U	
60-57-1	Dieldrin	1.1	~~JP~~	J ~~2C~~, HT
959-98-8	Endosulfan I	2.2	U	UJ HT
33213-65-9	Endosulfan II	4.4	U	
1031-07-8	Endosulfan Sulfate	4.4	U	
72-20-8	Endrin	4.4	U	
7421-93-4	Endrin Aldehyde	4.4	U	
53494-70-5	Endrin Ketone	4.4	U	
58-89-9	Gamma-BHC (Lindane)	2.2	U	
5103-74-2	Gamma-Chlordane	2.2	U	
76-44-8	Heptachlor	2.2	U	
1024-57-3	Heptachlor Epoxide	2.2	U	
72-43-5	Methoxychlor	22	U	
12674-11-2	PCB-1016	44	U	
11104-28-2	PCB-1221	88	U	
11141-16-5	PCB-1232	44	U	
53469-21-9	PCB-1242	44	U	
12672-29-6	PCB-1248	44	U	
11097-69-1	PCB-1254	44	U	
11096-82-5	PCB-1260	44	U	
8001-35-2	Toxaphene	220	U	

lw
9/30/08

GPL Laboratories

GPL
FORM 1
ANALYSIS DATA SHEET

9

SAMPLE NO
MR08-SS41-08B

Lab Name :	GPL Laboratories	Client. :	CH2M Hill Inc
Lab Code :	GPL	SAS NO. :	
Case No. :		SDG NO :	806163
Matrix : (Soil / Water)	SOIL	Lab Sample ID :	806163-009-057-1/1
Sample Volume :	30.05	Lab File ID :	W005683.D
% Moisture:	8.12	Date Received	06/24/2008
Extraction:	CLP_EXTRACTION	Date Extracted:	07/16/2008
Extract Volume:	5 mL	Date Analyzed	07/18/2008
Injection Volume :	µ L	Dilution Factor :	1
GPC Clean up (Y/N):	Y pH:		

Concentration Units (ug/L or ug/kg dry weight) : ug/kg

CAS NO	COMPOUND		Q	
72-54-8	4,4-DDD	3.6	~~U~~	UJ HT
72-55-9	4,4-DDE	0.36	~~U~~	J HT
50-29-3	4,4-DDT	3.6	U	UJ
309-00-2	Aldrin	1.8	U	
319-84-6	Alpha-BHC	1.8	U	
5103-71-9	Alpha-Chlordane	1.8	U	
319-85-7	Beta-BHC	1.8	U	
319-86-8	Delta-BHC	1.8	U	
60-57-1	Dieldrin	0.36	J	J
959-98-8	Endosulfan I	1.8	U	UJ
33213-65-9	Endosulfan II	3.6	U	
1031-07-8	Endosulfan Sulfate	3.6	U	
72-20-8	Endrin	3.6	U	
7421-93-4	Endrin Aldehyde	3.6	U	
53494-70-5	Endrin Ketone	3.6	U	
58-89-9	Gamma-BHC (Lindane)	1.8	U	
5103-74-2	Gamma-Chlordane	1.8	U	
76-44-8	Heptachlor	1.8	U	
1024-57-3	Heptachlor Epoxide	1.8	U	
72-43-5	Methoxychlor	18	U	
12674-11-2	PCB-1016	36	U	
11104-28-2	PCB-1221	72	U	
11141-16-5	PCB-1232	36	U	
53469-21-9	PCB-1242	36	U	
12672-29-6	PCB-1248	36	U	
11097-69-1	PCB-1254	36	U	
11096-82-5	PCB-1260	36	U	
8001-35-2	Toxaphene	180	U	

lw
9/30/08

10

GPL Laboratories

GPL
FORM 1
ANALYSIS DATA SHEET

SAMPLE NO
MR08-SS41D-08B

Lab Name :	GPL Laboratories	Client. :	CH2M Hill Inc
Lab Code :	GPL	SAS NO. :	
Case No. :		SDG NO :	806163
Matrix : (Soil / Water)	SOIL	Lab Sample ID :	806163-010-061-1/1
Sample Volume :	30.01	Lab File ID :	W005684.D
% Moisture:	15.39	Date Received	06/24/2008
Extraction:	CLP_EXTRACTION	Date Extracted:	07/16/2008
Extract Volume:	5 mL	Date Analyzed	07/18/2008
Injection Volume :	µL	Dilution Factor :	1
GPC Clean up (Y/N):	Y pH:		

Concentration Units (ug/L or ug/kg dry weight) : ug/kg

CAS NO	COMPOUND		Q	
72-54-8	4,4-DDD	3.9	U	UJ HT
72-55-9	4,4-DDE	0.81	J	J
50-29-3	4,4-DDT	3.9	U	UJ
309-00-2	Aldrin	2.0	U	
319-84-6	Alpha-BHC	2.0	U	
5103-71-9	Alpha-Chlordane	2.0	U	
319-85-7	Beta-BHC	2.0	U	
319-86-8	Delta-BHC	2.0	U	
60-57-1	Dieldrin	3.9	U	
959-98-8	Endosulfan I	2.0	U	
33213-65-9	Endosulfan II	3.9	U	
1031-07-8	Endosulfan Sulfate	3.9	U	
72-20-8	Endrin	3.9	U	
7421-93-4	Endrin Aldehyde	3.9	U	
53494-70-5	Endrin Ketone	3.9	U	
58-89-9	Gamma-BHC (Lindane)	2.0	U	
5103-74-2	Gamma-Chlordane	2.0	U	
76-44-8	Heptachlor	2.0	U	
1024-57-3	Heptachlor Epoxide	2.0	U	
72-43-5	Methoxychlor	20	U	
12674-11-2	PCB-1016	39	U	
11104-28-2	PCB-1221	79	U	
11141-16-5	PCB-1232	39	U	
53469-21-9	PCB-1242	39	U	
12672-29-6	PCB-1248	39	U	
11097-69-1	PCB-1254	39	U	
11096-82-5	PCB-1260	39	U	
8001-35-2	Toxaphene	200	U	

lw
9/30/08

GPL Laboratories

GPL
FORM I
ANALYSIS DATA SHEET

11

SAMPLE NO
MR08-SS35-08B

Lab Name :	GPL Laboratories	Client. :	CH2M Hill Inc
Lab Code :	GPL	SAS NO. :	
Case No. :		SDG NO :	806163
Matrix : (Soil / Water)	SOIL	Lab Sample ID :	806163-011-065-1/1
Sample Volume :	30.01	Lab File ID :	W005685.D
% Moisture:	14.84	Date Received	06/24/2008
Extraction:	CLP_EXTRACTION	Date Extracted:	07/16/2008
Extract Volume:	5 mL	Date Analyzed	07/18/2008
Injection Volume :	µL	Dilution Factor :	1
GPC Clean up (Y/N):	Y pH:		

Concentration Units (ug/L or ug/kg dry weight) : ug/kg

CAS NO	COMPOUND		Q	
72-54-8	4,4-DDD	0.49	~~JP~~	J 2/L, HT
72-55-9	4,4-DDE	4.9		J HT
50-29-3	4,4-DDT	1.3	~~JP~~	J 2/L, HT
309-00-2	Aldrin	2.0	U	UJ HT
319-84-6	Alpha-BHC	2.0	U	
5103-71-9	Alpha-Chlordane	2.0	U	
319-85-7	Beta-BHC	2.0	U	
319-86-8	Delta-BHC	2.0	U	
60-57-1	Dieldrin	49		J
959-98-8	Endosulfan I	2.0	U	UJ
33213-65-9	Endosulfan II	3.9	U	
1031-07-8	Endosulfan Sulfate	3.9	U	
72-20-8	Endrin	3.9	U	
7421-93-4	Endrin Aldehyde	3.9	U	
53494-70-5	Endrin Ketone	3.9	U	
58-89-9	Gamma-BHC (Lindane)	2.0	U	
5103-74-2	Gamma-Chlordane	2.0	U	
76-44-8	Heptachlor	2.0	U	
1024-57-3	Heptachlor Epoxide	2.0	U	
72-43-5	Methoxychlor	20	U	
12674-11-2	PCB-1016	39	U	
11104-28-2	PCB-1221	78	U	
11141-16-5	PCB-1232	39	U	
53469-21-9	PCB-1242	39	U	
12672-29-6	PCB-1248	39	U	
11097-69-1	PCB-1254	39	U	
11096-82-5	PCB-1260	39	U	
8001-35-2	Toxaphene	200	U	

JLW
9/30/08

GPL Laboratories

GPL
FORM 1
ANALYSIS DATA SHEET

SAMPLE NO
MR08-SS35D-08B

Lab Name :	GPL Laboratories	Client. :	CH2M Hill Inc
Lab Code :	GPL	SAS NO. :	
Case No. :		SDG NO :	806163
Matrix : (Soil / Water)	SOIL	Lab Sample ID :	806163-012-069-1/1
Sample Volume :	30	Lab File ID :	W005686.D
% Moisture:	16.06	Date Received	06/24/2008
Extraction:	CLP_EXTRACTION	Date Extracted:	07/16/2008
Extract Volume:	5 mL	Date Analyzed	07/19/2008
Injection Volume :	µL	Dilution Factor :	1
GPC Clean up (Y/N):	Y pH:		

Concentration Units (ug/L or ug/kg dry weight) : ug/kg

CAS NO	COMPOUND		Q	
72-54-8	4,4-DDD	4.0	~~U~~	UJ HT
72-55-9	4,4-DDE	3.8	~~JP~~	J ~~2C~~, HT
50-29-3	4,4-DDT	0.97	~~JP~~	J ~~2C~~, HT
309-00-2	Aldrin	2.0	U	UJ HT
319-84-6	Alpha-BHC	2.0	U	
5103-71-9	Alpha-Chlordane	2.0	U	
319-85-7	Beta-BHC	2.0	U	
319-86-8	Delta-BHC	2.0	U	
60-57-1	Dieldrin	49		J
959-98-8	Endosulfan I	2.0	U	UJ
33213-65-9	Endosulfan II	4.0	U	
1031-07-8	Endosulfan Sulfate	4.0	U	
72-20-8	Endrin	4.0	U	
7421-93-4	Endrin Aldehyde	4.0	U	
53494-70-5	Endrin Ketone	4.0	U	
58-89-9	Gamma-BHC (Lindane)	2.0	U	
5103-74-2	Gamma-Chlordane	2.0	U	
76-44-8	Heptachlor	2.0	U	
1024-57-3	Heptachlor Epoxide	2.0	U	
72-43-5	Methoxychlor	20	U	
12674-11-2	PCB-1016	40	U	
11104-28-2	PCB-1221	79	U	
11141-16-5	PCB-1232	40	U	
53469-21-9	PCB-1242	40	U	
12672-29-6	PCB-1248	40	U	
11097-69-1	PCB-1254	40	U	
11096-82-5	PCB-1260	40	U	
8001-35-2	Toxaphene	200	U	

lw
9/30/08

GPL Laboratories

GPL
FORM 1
ANALYSIS DATA SHEET

SAMPLE NO
MR08-FB062208

Lab Name :	GPL Laboratories	Client. :	CH2M Hill Inc
Lab Code :	GPL	SAS NO. :	
Case No. :		SDG NO :	806163
Matrix : (Soil / Water)	WATER	Lab Sample ID :	806163-013-018-1/2
Sample Volume :	1000	Lab File ID :	W005658.D
% Moisture:		Date Received	06/24/2008
Extraction:	CLP_EXTRACTION	Date Extracted:	07/15/2008
Extract Volume:	10 mL	Date Analyzed	07/17/2008
Injection Volume :	µL	Dilution Factor :	1
GPC Clean up (Y/N):	pH:		

Concentration Units (ug/L or ug/kg dry weight) : ug/L

CAS NO	COMPOUND		Q
72-54-8	4,4-DDD	0.10	U
72-55-9	4,4-DDE	0.10	U
50-29-3	4,4-DDT	0.10	U
309-00-2	Aldrin	0.050	U
319-84-6	Alpha-BHC	0.050	U
5103-71-9	Alpha-Chlordane	0.050	U
319-85-7	Beta-BHC	0.050	U
319-86-8	Delta-BHC	0.050	U
60-57-1	Dieldrin	0.10	U
959-98-8	Endosulfan I	0.050	U
33213-65-9	Endosulfan II	0.10	U
1031-07-8	Endosulfan Sulfate	0.10	U
72-20-8	Endrin	0.10	U
7421-93-4	Endrin Aldehyde	0.10	U
53494-70-5	Endrin Ketone	0.10	U
58-89-9	Gamma-BHC (Lindane)	0.050	U
5103-74-2	Gamma-Chlordane	0.050	U
76-44-8	Heptachlor	0.050	U
1024-57-3	Heptachlor Epoxide	0.050	U
72-43-5	Methoxychlor	0.50	U
12674-11-2	PCB-1016	1.0	U
11104-28-2	PCB-1221	2.0	U
11141-16-5	PCB-1232	1.0	U
53469-21-9	PCB-1242	1.0	U
12672-29-6	PCB-1248	1.0	U
11097-69-1	PCB-1254	1.0	U
11096-82-5	PCB-1260	1.0	U
8001-35-2	Toxaphene	5.0	U

UJ HT

MW 9/30/08

GPL Laboratories

GPL
FORM 1
ANALYSIS DATA SHEET

SAMPLE NO
MR08-EB062208

Lab Name :	GPL Laboratories	Client. :	CH2M Hill Inc
Lab Code :	GPL	SAS NO. :	
Case No. :		SDG NO :	806163
Matrix : (Soil / Water)	WATER	Lab Sample ID :	806163-014-024-1/1
Sample Volume :	1000	Lab File ID :	W005659.D
% Moisture:		Date Received	06/24/2008
Extraction:	CLP_EXTRACTION	Date Extracted:	07/15/2008
Extract Volume:	10 mL	Date Analyzed	07/17/2008
Injection Volume :	µL	Dilution Factor :	1
GPC Clean up (Y/N):	pH:		

Concentration Units (ug/L or ug/kg dry weight) : ug/L

CAS NO	COMPOUND		Q
72-54-8	4,4-DDD	0.10	U
72-55-9	4,4-DDE	0.10	U
50-29-3	4,4-DDT	0.10	U
309-00-2	Aldrin	0.050	U
319-84-6	Alpha-BHC	0.050	U
5103-71-9	Alpha-Chlordane	0.050	U
319-85-7	Beta-BHC	0.050	U
319-86-8	Delta-BHC	0.050	U
60-57-1	Dieldrin	0.10	U
959-98-8	Endosulfan I	0.050	U
33213-65-9	Endosulfan II	0.10	U
1031-07-8	Endosulfan Sulfate	0.10	U
72-20-8	Endrin	0.10	U
7421-93-4	Endrin Aldehyde	0.10	U
53494-70-5	Endrin Ketone	0.10	U
58-89-9	Gamma-BHC (Lindane)	0.050	U
5103-74-2	Gamma-Chlordane	0.050	U
76-44-8	Heptachlor	0.050	U
1024-57-3	Heptachlor Epoxide	0.050	U
72-43-5	Methoxychlor	0.50	U
12674-11-2	PCB-1016	1.0	U
11104-28-2	PCB-1221	2.0	U
11141-16-5	PCB-1232	1.0	U
53469-21-9	PCB-1242	1.0	U
12672-29-6	PCB-1248	1.0	U
11097-69-1	PCB-1254	1.0	U
11096-82-5	PCB-1260	1.0	U
8001-35-2	Toxaphene	5.0	U

UJ HT

9/30/08

GPL Laboratories

GPL
FORM 1
ANALYSIS DATA SHEET

SAMPLE NO
MR08-SS37-08B

Lab Name :	GPL Laboratories	Client. :	CH2M Hill Inc
Lab Code :	GPL	SAS NO. :	
Case No. :		SDG NO :	806163
Matrix : (Soil / Water)	SOIL	Lab Sample ID :	806163-015-073-1/1
Sample Volume :	30.1	Lab File ID :	W005687.D
% Moisture:	7.26	Date Received	06/24/2008
Extraction:	CLP_EXTRACTION	Date Extracted:	07/16/2008
Extract Volume:	5 mL	Date Analyzed	07/19/2008
Injection Volume :	µL	Dilution Factor :	1
GPC Clean up (Y/N):	Y pH:		

Concentration Units (ug/L or ug/kg dry weight) : ug/kg

CAS NO	COMPOUND		Q	
72-54-8	4,4-DDD	3.6	~~U~~	UJ HT
72-55-9	4,4-DDE	0.67	~~JP~~	J ~~2C~~, HT
50-29-3	4,4-DDT	0.51	J	J HT
309-00-2	Aldrin	1.8	U	UJ
319-84-6	Alpha-BHC	1.8	U	
5103-71-9	Alpha-Chlordane	1.8	U	
319-85-7	Beta-BHC	1.8	U	
319-86-8	Delta-BHC	1.8	U	
60-57-1	Dieldrin	0.050	~~JP~~	J ~~2C~~, HT
959-98-8	Endosulfan I	1.8	U	UJ HT
33213-65-9	Endosulfan II	3.6	U	
1031-07-8	Endosulfan Sulfate	3.6	U	
72-20-8	Endrin	3.6	U	
7421-93-4	Endrin Aldehyde	3.6	U	
53494-70-5	Endrin Ketone	3.6	U	
58-89-9	Gamma-BHC (Lindane)	1.8	U	
5103-74-2	Gamma-Chlordane	1.8	U	
76-44-8	Heptachlor	1.8	U	
1024-57-3	Heptachlor Epoxide	1.8	U	
72-43-5	Methoxychlor	18	U	
12674-11-2	PCB-1016	36	U	
11104-28-2	PCB-1221	72	U	
11141-16-5	PCB-1232	36	U	
53469-21-9	PCB-1242	36	U	
12672-29-6	PCB-1248	36	U	
11097-69-1	PCB-1254	36	U	
11096-82-5	PCB-1260	36	U	
8001-35-2	Toxaphene	180	U	

9/30/08

GPL Laboratories

GPL
FORM 1
ANALYSIS DATA SHEET

16

SAMPLE NO
MR08-SS36-08B

Lab Name :	GPL Laboratories	Client. :	CH2M Hill Inc
Lab Code :	GPL	SAS NO. :	
Case No. :		SDG NO :	806163
Matrix : (Soil / Water)	SOIL	Lab Sample ID :	806163-016-077-1/1
Sample Volume :	29.99	Lab File ID :	W005688.D
% Moisture:	9.96	Date Received	06/24/2008
Extraction:	CLP_EXTRACTION	Date Extracted:	07/16/2008
Extract Volume:	5 mL	Date Analyzed	07/19/2008
Injection Volume :	µL	Dilution Factor :	1
GPC Clean up (Y/N):	Y pH:		

Concentration Units (ug/L or ug/kg dry weight) : ug/kg

CAS NO	COMPOUND		Q	
72-54-8	4,4-DDD	0.87	~~J~~	J HT
72-55-9	4,4-DDE	1.5	~~JP~~	J ~~2~~ HT
50-29-3	4,4-DDT	2.2	J	J HT
309-00-2	Aldrin	1.9	U	UJ
319-84-6	Alpha-BHC	1.9	U	
5103-71-9	Alpha-Chlordane	1.9	U	
319-85-7	Beta-BHC	1.9	U	
319-86-8	Delta-BHC	1.9	U	
60-57-1	Dieldrin	3.7	U	
959-98-8	Endosulfan I	1.9	U	
33213-65-9	Endosulfan II	3.7	U	
1031-07-8	Endosulfan Sulfate	3.7	U	
72-20-8	Endrin	3.7	U	
7421-93-4	Endrin Aldehyde	3.7	U	
53494-70-5	Endrin Ketone	3.7	U	
58-89-9	Gamma-BHC (Lindane)	1.9	U	
5103-74-2	Gamma-Chlordane	1.9	U	
76-44-8	Heptachlor	1.9	U	
1024-57-3	Heptachlor Epoxide	1.9	U	
72-43-5	Methoxychlor	19	U	
12674-11-2	PCB-1016	37	U	
11104-28-2	PCB-1221	74	U	
11141-16-5	PCB-1232	37	U	
53469-21-9	PCB-1242	37	U	
12672-29-6	PCB-1248	37	U	
11097-69-1	PCB-1254	37	U	
11096-82-5	PCB-1260	37	U	
8001-35-2	Toxaphene	190	U	

lw 9/30/08

ENVIRONMENTAL
Data Services, Inc.

SEMIVOLATILE ORGANIC COMPOUNDS
USEPA Region IV - Level IV Review

Site: MCB Camp Lejeune, UXO-08, CTO-168 SDG #: 806163

Client: CH2M HILL, Inc., Virginia Beach, Virginia Date: September 30, 2008

Laboratory: GPL Laboratories, Frederick, Maryland Reviewer: Nancy Weaver

EDS ID	Client Sample ID	Laboratory Sample ID	Matrix
1	MR08-SS38-08B	806163-001	Soil
2	MR08-SS39-08B	806163-002	Soil
3	MR08-SS33-08B	806163-003	Soil
4	MR08-SS32-08B	806163-004	Soil
5	MR08-SS30-08B	806163-005	Soil
6	MR08-SS31-08B	806163-006	Soil
6MS	MR08-SS31-08BMS	806163-006MS	Soil
6MSD	MR08-SS31-08BMSD	806163-006MSD	Soil
7	MR08-SS40-08B	806163-007	Soil
8	MR08-SS34-08B	806163-008	Soil
9	MR08-SS41-08B	806163-009	Soil
10	MR08-SS41D-08B	806163-010	Soil
11	MR08-SS35-08B	806163-011	Soil
12	MR08-SS35D-08B	806163-012	Soil
13	MR08-FB062208	806163-013	Water
14	MR08-EB062208	806163-014	Water
14RE	MR08-EB062208RE	806163-014RE	Water
15	MR08-SS37-08B	806163-015	Soil
15RE	MR08-SS37-08BRE	806163-015RE	Soil
16	MR08-SS36-08B	806163-016	Soil

The USEPA "Contract Laboratory Program National Functional Guidelines for Organic Data Review," October 1999, and professional judgement were used in evaluating the data in this summary report.

Holding Times - All samples were extracted within 7 days for water samples, 14 days for soil samples and analyzed within 40 days for all samples except the following.

Sample	Date Sampled	Date Extracted	# of Days	Qualifier
All samples	06/24/08	07/16/08	22	J/UJ

GC/MS Tuning - All of the DFTPP tunes in the initial and continuing calibrations met the percent relative abundance criteria.

Initial Calibration - The initial calibrations exhibited acceptable %RSD and mean RRF values except the following.

ICAL Date	Compound	%RSD/RRF	Qualifier	Affected Samples
07/18/08	Benzaldehyde	52.0%	None	All ND
	Caprolactam	67.5%	None	All ND
	Atrazine	82.6%	None	All ND
07/30/08	2,4-Dinitrophenol	37.1%	None	All ND
08/12/08	Benzaldehyde	37.7%	None	All ND

Continuing Calibration - Many of the samples exhibited %D and RRF values which exceeded the acceptance limits, but were already qualified due to holding times so no qualifiers were required.

Surrogates - All samples exhibited acceptable surrogate recoveries except the following.

Sample ID	Surrogate	%R	Qualifier
14	Nitrobenzene-d5	33%	None - Already qualified due to HT
	2-Fluorobiphenyl	37%	None - Already qualified due to HT
14RE	Nitrobenzene-d5	34%	None - Already qualified due to HT
	2-Fluorobiphenyl	37%	None - Already qualified due to HT
15RE	1,2-Dichlorobenzene-d4	181%	None for 1 out
16	2,4,6-Tribromophenol	124%	None for 1 out

MS/MSD - The MS/MSD sample exhibited acceptable %R and RPD values except the following.

MS/MSD Sample ID	Compound	MS/MSD %R/RPD	Qualifier
6	2,4-Dinitrotoluene	148%/156%/Ok	None - Already qualified due to HT
	2-Chlorophenol	103%/Ok/Ok	None - Already qualified due to HT
	4-Nitrophenol	154%/178%/Ok	None - Already qualified due to HT
	4-Chloro-3-methylphenol	114%/Ok/Ok	None - Already qualified due to HT
	Pentachlorophenol	143%/146%/Ok	None - Already qualified due to HT
	Phenol	103%/97%/Ok	None - Already qualified due to HT

Laboratory Control Sample - The LCS samples exhibited acceptable %R values except the following.

LCS ID	Compound	%R	Qualifier	Affected Samples
BKS104638	2,4-Dinitrotoluene	138%	None	Already qualified due to HT
	2-Chlorophenol	92%	None	Already qualified due to HT

LCS ID	Compound	%R	Qualifier	Affected Samples
BKS104638	4-Chloro-3-methylphenol	100%	None	Already qualified due to HT
	Phenol	92%	None	Already qualified due to HT

Internal Standard (IS) Area Performance - All internal standards met response and retention time (RT) criteria except the following.

Sample ID	Internal Standard	Area Count	Qualifier
14RE	1,4-Dichlorobenzene-d4	High	None - Already qualified due to HT
15	IS1, IS2, IS3, IS4, IS5, IS6	High	None - Already qualified due to HT
15RE	IS1-Acenaphthene	Severely Low	J/R
	IS3-1,4-Dichlorobenzene-d4	Severely Low	J/R
	IS4-Naphthalene-d8	Severely Low	J/R

Method Blank - The method blanks were free of contamination.

Field, Equipment Blank - Field QC results are summarized below.

Blank ID	Compound	Conc. ug/L	Action Level ug/L	Qualifier	Affected Samples
MR08-FB062208	None - ND	-	-	-	-
MR08-EB062208	None - ND	-	-	-	-

Field Duplicates - Field duplicate results are summarized below.

Compound	MR08-SS41-08B ug/kg	MR08-SS41D-08B ug/kg	RPD	Qualifier
None	ND	ND	-	-

Compound	MR08-SS35-08B ug/kg	MR08-SS35D-08B ug/kg	RPD	Qualifier
None	ND	ND	-	-

Tentatively Identified Compounds (TICs) - All "unknown" TICs were qualified as estimated (J), all "known" TICs were qualified (JN) and all TICs affected by blank contamination were qualified (B).

Compound Quantitation - No discrepancies were identified.

GPL Laboratories

GPL
FORM 1
ANALYSIS DATA SHEET

SAMPLE NO
MR08-SS38-08B

Lab Name :	GPL Laboratories	Client. :	CH2M Hill Inc
Lab Code :	GPL	SAS NO. :	
Case No. :		SDG NO :	806163
Matrix : (Soil / Water)	SOIL	Lab Sample ID :	806163-001-030-1/1
Sample Volume :	30	Lab File ID :	D46994.D
% Moisture:	11.42	Date Received	06/24/2008
Extraction:	CLP_EXTRACTION	Date Extracted:	07/16/2008
Extract Volume:	.5 mL	Date Analyzed	07/19/2008
Injection Volume :	µL	Dilution Factor :	1
GPC Clean up (Y/N):	BLACK pH:		

Concentration Units (ug/L or ug/kg dry weight) : ug/kg

CAS NO	COMPOUND		Q
92-52-4	1,1- Biphenyl	380	U
108-60-1	2,2-Oxybis(1-chloropropane)	380	U
95-95-4	2,4,5-Trichlorophenol	940	U
88-06-2	2,4,6-Trichlorophenol	380	U
120-83-2	2,4-Dichlorophenol	380	U
105-67-9	2,4-Dimethylphenol	380	U
51-28-5	2,4-Dinitrophenol	940	U
121-14-2	2,4-Dinitrotoluene	380	U
606-20-2	2,6-Dinitrotoluene	380	U
91-58-7	2-Chloronaphthalene	380	U
95-57-8	2-Chlorophenol	380	U
91-57-6	2-Methylnaphthalene	380	U
88-74-4	2-Nitroaniline	940	U
88-75-5	2-Nitrophenol	380	U
95-48-7	2-methylphenol	380	U
91-94-1	3,3-Dichlorobenzidine	380	U
99-09-2	3-Nitroaniline	940	U
534-52-1	4,6-dinitro-2-methyl phenol	940	U
101-55-3	4-Bromophenyl-phenylether	380	U
106-47-8	4-Chloroaniline	380	U
7005-72-3	4-Chlorophenyl Phenyl Ether	380	U
100-01-6	4-Nitroaniline	940	U
100-02-7	4-Nitrophenol	940	U
59-50-7	4-chloro-3-methylphenol	380	U
106-44-5	4-methylphenol	380	U
83-32-9	Acenaphthene	380	U
208-96-8	Acenaphthylene	380	U
98-86-2	Acetophenone	380	U
120-12-7	Anthracene	53	J

UJ HT

MW 9/30/08

GPL Laboratories

GPL
FORM 1
ANALYSIS DATA SHEET

SAMPLE NO
MR08-SS38-08B

Lab Name :	GPL Laboratories	Client. :	CH2M Hill Inc
Lab Code :	GPL	SAS NO. :	
Case No. :		SDG NO :	806163
Matrix : (Soil / Water)	SOIL	Lab Sample ID :	806163-001-030-1/1
Sample Volume :	30	Lab File ID :	D46994.D
% Moisture:	11.42	Date Received	06/24/2008
Extraction:	CLP_EXTRACTION	Date Extracted:	07/16/2008
Extract Volume:	.5 mL	Date Analyzed	07/19/2008
Injection Volume :	µL	Dilution Factor :	1
GPC Clean up (Y/N):	BLACK pH:		

Concentration Units (ug/L or ug/kg dry weight) : ug/kg

CAS NO	COMPOUND		Q		
1912-24-9	Atrazine	380	U	UJ	HT
100-52-7	Benzaldehyde	380	U	UJ	
56-55-3	Benzo(a)anthracene	71	J	J	
50-32-8	Benzo(a)pyrene	110	J	J	
205-99-2	Benzo(b)fluoranthene	380	U	UJ	
191-24-2	Benzo(g,h,i)perylene	93	J	J	
207-08-9	Benzo(k)fluoranthene	380	U	UJ	
85-68-7	Benzyl Butyl Phthalate	380	U		
105-60-2	Caprolactam	380	U		
86-74-8	Carbazole	380	U		
218-01-9	Chrysene	120	J	J	
53-70-3	Dibenz(a,h)Anthracene	380	U	UJ	
132-64-9	Dibenzofuran	380	U		
84-66-2	Diethyl Phthalate	380	U		
131-11-3	Dimethyl Phthalate	380	U		
206-44-0	Fluoranthene	220	J	J	
86-73-7	Fluorene	380	U	UJ	
118-74-1	Hexachlorobenzene	380	U		
87-68-3	Hexachlorobutadiene	380	U		
77-47-4	Hexachlorocyclopentadiene	380	U		
67-72-1	Hexachloroethane	380	U		
193-39-5	Indeno(1,2,3-c,d)Pyrene	84	J	J	
78-59-1	Isophorone	380	U	UJ	
91-20-3	Naphthalene	380	U		
98-95-3	Nitrobenzene	380	U		
87-86-5	Pentachlorophenol	940	U		
85-01-8	Phenanthrene	53	J	J	
108-95-2	Phenol	380	U	UJ	
129-00-0	Pyrene	160	J	J	

LW 9/30/08

GPL Laboratories

GPL
FORM 1
ANALYSIS DATA SHEET

SAMPLE NO
MR08-SS38-08B

Lab Name :	GPL Laboratories	Client. :	CH2M Hill Inc
Lab Code :	GPL	SAS NO. :	
Case No. :		SDG NO :	806163
Matrix : (Soil / Water)	SOIL	Lab Sample ID :	806163-001-030-1/1
Sample Volume :	30	Lab File ID :	D46994.D
% Moisture:	11.42	Date Received	06/24/2008
Extraction:	CLP_EXTRACTION	Date Extracted:	07/16/2008
Extract Volume:	.5 mL	Date Analyzed	07/19/2008
Injection Volume :	µL	Dilution Factor :	1
GPC Clean up (Y/N):	BLACK pH:		

Concentration Units (ug/L or ug/kg dry weight) : ug/kg

CAS NO	COMPOUND		Q	
111-91-1	bis(2-chloroethoxy) methane	380	U	UJ HT
111-44-4	bis(2-chloroethyl) ether	380	U	UJ
117-81-7	bis(2-ethylhexyl) phthalate	100	U	J
84-74-2	di-n-Butyl Phthalate	380	U	UJ
117-84-0	di-n-Octyl Phthalate	380	U	
621-64-7	n-Nitrosodi-n-Propylamine	380	U	
86-30-6	n-Nitrosodiphenylamine	380	U	

1E
VOLATILE ORGANICS ANALYSIS DATA SHEET
TENTATIVELY IDENTIFIED COMPOUNDS

EPA SAMPLE NO.
MR08-SS38-08B

Lab Name: GPL Laboratories, LLLP
Contract: CH2M Hill Inc
Lab Code: GPL
Case No.: NA
SAS No.: NA
SDG No.: 806163
Matrix (soil/water): SOIL
Lab Sample ID: 806163-001-030-1/1
Sample wt/vol: 30 (g/ml) g
Lab File ID: D46994.D
Level (low/med): LOW
Date Recieved 06/24/2008
% Moisture: 11.42
Date Analyzed: 07/19/2008
GC Column: RTX VOA ID: 0.53 (mm)
Dilution Factor: 1
Soil Extract Volume: _____ (uL)
Soil Aliquot Volume: _____ (uL)

Number TICs Found: 15
Concentration Units (ug/L or ug/kg): ug/kg

#	CAS NUMBER	COMPOUND NAME	RT	EST. CONC	Q
1	000294-62-2	Cyclododecane	16.39	6.020	JN
2	000334-48-5	n-Decanoic acid	13.25	16	JN
3	074663-85-7	Cyclopropane, nonyl-	14.39	49	JN
4		unknown	13.3	6.48	J
5		unknown	18.09	18	J
6		unknown	18.2	9.18	J
7		unknown	18.83	55	J
8		unknown	19.91	9.43	J
9		unknown	21.02	3.35	J
10		unknown	22.06	12	J
11		unknown	22.47	10	J
12		unknown	26.9	25	J
13		unknown	27.8	5.82	J
14		unknown	28.22	19	J
15		unknown	28.52	12	J

JN
J

LW 9/30/08

GPL Laboratories

GPL
FORM 1
ANALYSIS DATA SHEET

2

SAMPLE NO
MR08-SS39-08B

Lab Name :	GPL Laboratories	Client. :	CH2M Hill Inc
Lab Code :	GPL	SAS NO. :	
Case No. :		SDG NO :	806163
Matrix : (Soil / Water)	SOIL	Lab Sample ID :	806163-002-034-1/1
Sample Volume :	29.99	Lab File ID :	D46995.D
% Moisture:	22.42	Date Received	06/24/2008
Extraction:	CLP_EXTRACTION	Date Extracted:	07/16/2008
Extract Volume:	.5 mL	Date Analyzed	07/19/2008
Injection Volume :	µL	Dilution Factor :	1
GPC Clean up (Y/N):	BLACK pH:		

Concentration Units (ug/L or ug/kg dry weight) : ug/kg

CAS NO	COMPOUND		Q
92-52-4	1,1- Biphenyl	430	U
108-60-1	2,2-Oxybis(1-chloropropane)	430	U
95-95-4	2,4,5-Trichlorophenol	1100	U
88-06-2	2,4,6-Trichlorophenol	430	U
120-83-2	2,4-Dichlorophenol	430	U
105-67-9	2,4-Dimethylphenol	430	U
51-28-5	2,4-Dinitrophenol	1100	U
121-14-2	2,4-Dinitrotoluene	430	U
606-20-2	2,6-Dinitrotoluene	430	U
91-58-7	2-Chloronaphthalene	430	U
95-57-8	2-Chlorophenol	430	U
91-57-6	2-Methylnaphthalene	430	U
88-74-4	2-Nitroaniline	1100	U
88-75-5	2-Nitrophenol	430	U
95-48-7	2-methylphenol	430	U
91-94-1	3,3-Dichlorobenzidine	430	U
99-09-2	3-Nitroaniline	1100	U
534-52-1	4,6-dinitro-2-methyl phenol	1100	U
101-55-3	4-Bromophenyl-phenylether	430	U
106-47-8	4-Chloroaniline	430	U
7005-72-3	4-Chlorophenyl Phenyl Ether	430	U
100-01-6	4-Nitroaniline	1100	U
100-02-7	4-Nitrophenol	1100	U
59-50-7	4-chloro-3-methylphenol	430	U
106-44-5	4-methylphenol	430	U
83-32-9	Acenaphthene	430	U
208-96-8	Acenaphthylene	430	U
98-86-2	Acetophenone	430	U
120-12-7	Anthracene	430	U

UJ HT

GPL Laboratories

GPL
FORM 1
ANALYSIS DATA SHEET

2

SAMPLE NO
MR08-SS39-08B

Lab Name :	GPL Laboratories	Client. :	CH2M Hill Inc
Lab Code :	GPL	SAS NO. :	
Case No. :		SDG NO :	806163
Matrix : (Soil / Water)	SOIL	Lab Sample ID :	806163-002-034-1/1
Sample Volume :	29.99	Lab File ID :	D46995.D
% Moisture:	22.42	Date Received	06/24/2008
Extraction:	CLP_EXTRACTION	Date Extracted:	07/16/2008
Extract Volume:	.5 mL	Date Analyzed	07/19/2008
Injection Volume :	µ L	Dilution Factor :	1
GPC Clean up (Y/N):	BLACK pH:		

Concentration Units (ug/L or ug/kg dry weight) : ug/kg

CAS NO	COMPOUND		Q	
1912-24-9	Atrazine	430	U	UJ HT
100-52-7	Benzaldehyde	430	U	
56-55-3	Benzo(a)anthracene	430	U	
50-32-8	Benzo(a)pyrene	430	U	
205-99-2	Benzo(b)fluoranthene	430	U	
191-24-2	Benzo(g,h,i)perylene	430	U	
207-08-9	Benzo(k)fluoranthene	49	J	J HT
85-68-7	Benzyl Butyl Phthalate	430	U	UJ
105-60-2	Caprolactam	430	U	
86-74-8	Carbazole	430	U	
218-01-9	Chrysene	430	U	
53-70-3	Dibenz(a,h)Anthracene	430	U	
132-64-9	Dibenzofuran	430	U	
84-66-2	Diethyl Phthalate	430	U	
131-11-3	Dimethyl Phthalate	430	U	
206-44-0	Fluoranthene	430	U	
86-73-7	Fluorene	430	U	
118-74-1	Hexachlorobenzene	430	U	
87-68-3	Hexachlorobutadiene	430	U	
77-47-4	Hexachlorocyclopentadiene	430	U	
67-72-1	Hexachloroethane	430	U	
193-39-5	Indeno(1,2,3-c,d)Pyrene	430	U	
78-59-1	Isophorone	430	U	
91-20-3	Naphthalene	430	U	
98-95-3	Nitrobenzene	430	U	
87-86-5	Pentachlorophenol	1100	U	
85-01-8	Phenanthrene	430	U	
108-95-2	Phenol	430	U	
129-00-0	Pyrene	430	U	

LW 9/30/08

GPL Laboratories

GPL
FORM 1
ANALYSIS DATA SHEET

2

SAMPLE NO
MR08-SS39-08B

Lab Name :	GPL Laboratories	Client. :	CH2M Hill Inc
Lab Code :	GPL	SAS NO. :	
Case No. :		SDG NO :	806163
Matrix : (Soil / Water)	SOIL	Lab Sample ID :	806163-002-034-1/1
Sample Volume :	29.99	Lab File ID :	D46995.D
% Moisture:	22.42	Date Received	06/24/2008
Extraction:	CLP_EXTRACTION	Date Extracted:	07/16/2008
Extract Volume:	.5 mL	Date Analyzed	07/19/2008
Injection Volume :	µ L	Dilution Factor :	1
GPC Clean up (Y/N):	BLACK pH:		

Concentration Units (ug/L or ug/kg dry weight) : ug/kg

CAS NO	COMPOUND		Q	
111-91-1	bis(2-chloroethoxy) methane	430	U	UJ HT
111-44-4	bis(2-chloroethyl) ether	430	U	UJ
117-81-7	bis(2-ethylhexyl) phthalate	46	J	J
84-74-2	di-n-Butyl Phthalate	430	U	UJ
117-84-0	di-n-Octyl Phthalate	430	U	
621-64-7	n-Nitrosodi-n-Propylamine	430	U	
86-30-6	n-Nitrosodiphenylamine	430	U	

hw 9/30/08

2

1E
VOLATILE ORGANICS ANALYSIS DATA SHEET
TENTATIVELY IDENTIFIED COMPOUNDS

EPA SAMPLE NO.
MR08-SS39-08B

Lab Name: GPL Laboratories, LLLP
Contract: CH2M Hill Inc
Lab Code: GPL
Case No.: NA
SAS No.: NA
SDG No.: 806163
Matrix (soil/water): SOIL
Lab Sample ID: 806163-002-034-1/1
Sample wt/vol: 29.99 (g/ml) g
Lab File ID: D46995.D
Level (low/med): LOW
Date Recieved 06/24/2008
% Moisture: 22.42
Date Analyzed: 07/19/2008
GC Column: RTX VOA
ID: 0.53 (mm)
Dilution Factor: 1
Soil Extract Volume: _____ (uL)
Soil Aliquot Volume: _____ (uL)

Number TICs Found: 6
Concentration Units (ug/L or ug/kg): ug/kg

#	CAS NUMBER	COMPOUND NAME	RT	EST. CONC	Q	
1	000294-62-2	Cyclododecane	16.4	6.78	~~JN~~	JN
2	074663-85-7	Cyclopropane, nonyl-	14.39	44	~~JN~~	JN
3		unknown	13.28	10	J	J
4		unknown	21.01	5.80	J	
5		unknown	23.45	42	J	
6		unknown	28.34	11	J	

GW 9/30/08

FORM I VOA-TIC

GPL Laboratories

GPL
FORM 1
ANALYSIS DATA SHEET

3

SAMPLE NO
MR08-SS33-08B

Lab Name :	GPL Laboratories	Client. :	CH2M Hill Inc
Lab Code :	GPL	SAS NO. :	
Case No. :		SDG NO :	806163
Matrix : (Soil / Water)	SOIL	Lab Sample ID :	806163-003-038-1/1
Sample Volume :	30	Lab File ID :	D46996.D
% Moisture:	30.42	Date Received	06/24/2008
Extraction:	CLP_EXTRACTION	Date Extracted:	07/16/2008
Extract Volume:	.5 mL	Date Analyzed	07/19/2008
Injection Volume :	µ L	Dilution Factor :	1
GPC Clean up (Y/N):	BLACK pH:		

Concentration Units (ug/L or ug/kg dry weight) : ug/kg

CAS NO	COMPOUND		Q	
92-52-4	1,1- Biphenyl	480	U	UJ HT
108-60-1	2,2-Oxybis(1-chloropropane)	480	U	
95-95-4	2,4,5-Trichlorophenol	1200	U	
88-06-2	2,4,6-Trichlorophenol	480	U	
120-83-2	2,4-Dichlorophenol	480	U	
105-67-9	2,4-Dimethylphenol	480	U	
51-28-5	2,4-Dinitrophenol	1200	U	
121-14-2	2,4-Dinitrotoluene	480	U	
606-20-2	2,6-Dinitrotoluene	480	U	
91-58-7	2-Chloronaphthalene	480	U	
95-57-8	2-Chlorophenol	480	U	
91-57-6	2-Methylnaphthalene	480	U	
88-74-4	2-Nitroaniline	1200	U	
88-75-5	2-Nitrophenol	480	U	
95-48-7	2-methylphenol	480	U	
91-94-1	3,3-Dichlorobenzidine	480	U	
99-09-2	3-Nitroaniline	1200	U	
534-52-1	4,6-dinitro-2-methyl phenol	1200	U	
101-55-3	4-Bromophenyl-phenylether	480	U	
106-47-8	4-Chloroaniline	480	U	
7005-72-3	4-Chlorophenyl Phenyl Ether	480	U	
100-01-6	4-Nitroaniline	1200	U	
100-02-7	4-Nitrophenol	1200	U	
59-50-7	4-chloro-3-methylphenol	480	U	
106-44-5	4-methylphenol	69	J	J
83-32-9	Acenaphthene	480	U	UJ
208-96-8	Acenaphthylene	480	U	
98-86-2	Acetophenone	480	U	
120-12-7	Anthracene	60	J	J

LW 9/20/08

GPL Laboratories

GPL
FORM 1
ANALYSIS DATA SHEET

3

SAMPLE NO
MR08-SS33-08B

Lab Name :	GPL Laboratories	Client. :	CH2M Hill Inc
Lab Code :	GPL	SAS NO. :	
Case No. :		SDG NO :	806163
Matrix : (Soil / Water)	SOIL	Lab Sample ID :	806163-003-038-1/1
Sample Volume :	30	Lab File ID :	D46996.D
% Moisture:	30.42	Date Received	06/24/2008
Extraction:	CLP_EXTRACTION	Date Extracted:	07/16/2008
Extract Volume:	.5 mL	Date Analyzed	07/19/2008
Injection Volume :	µL	Dilution Factor :	1
GPC Clean up (Y/N):	BLACK pH:		

Concentration Units (ug/L or ug/kg dry weight) : ug/kg

CAS NO	COMPOUND		Q	
1912-24-9	Atrazine	480	U	UJ
100-52-7	Benzaldehyde	480	U	UJ
56-55-3	Benzo(a)anthracene	150	J	J
50-32-8	Benzo(a)pyrene	140	J	J
205-99-2	Benzo(b)fluoranthene	480	U	UJ
191-24-2	Benzo(g,h,i)perylene	110	J	J
207-08-9	Benzo(k)fluoranthene	480	U	UJ
85-68-7	Benzyl Butyl Phthalate	480	U	
105-60-2	Caprolactam	480	U	
86-74-8	Carbazole	480	U	
218-01-9	Chrysene	180	J	J
53-70-3	Dibenz(a,h)Anthracene	480	U	UJ
132-64-9	Dibenzofuran	480	U	
84-66-2	Diethyl Phthalate	480	U	
131-11-3	Dimethyl Phthalate	480	U	
206-44-0	Fluoranthene	400	J	J
86-73-7	Fluorene	480	U	UJ
118-74-1	Hexachlorobenzene	480	U	
87-68-3	Hexachlorobutadiene	480	U	
77-47-4	Hexachlorocyclopentadiene	480	U	
67-72-1	Hexachloroethane	480	U	
193-39-5	Indeno(1,2,3-c,d)Pyrene	100	J	J
78-59-1	Isophorone	480	U	UJ
91-20-3	Naphthalene	480	U	
98-95-3	Nitrobenzene	480	U	
87-86-5	Pentachlorophenol	1200	U	
85-01-8	Phenanthrene	300	J	J
108-95-2	Phenol	480	U	UJ
129-00-0	Pyrene	320	J	J

HT

LW
a/20/08

GPL Laboratories

GPL
FORM 1
ANALYSIS DATA SHEET

3

SAMPLE NO
MR08-SS33-08B

Lab Name :	GPL Laboratories	Client. :	CH2M Hill Inc
Lab Code :	GPL	SAS NO. :	
Case No. :		SDG NO :	806163
Matrix : (Soil / Water)	SOIL	Lab Sample ID :	806163-003-038-1/1
Sample Volume :	30	Lab File ID :	D46996.D
% Moisture:	30.42	Date Received	06/24/2008
Extraction:	CLP_EXTRACTION	Date Extracted:	07/16/2008
Extract Volume:	.5 mL	Date Analyzed	07/19/2008
Injection Volume :	µL	Dilution Factor :	1
GPC Clean up (Y/N):	BLACK pH:		

Concentration Units (ug/L or ug/kg dry weight) : ug/kg

CAS NO	COMPOUND		Q	
111-91-1	bis(2-chloroethoxy) methane	480	U	UJ HT
111-44-4	bis(2-chloroethyl) ether	480	U	UJ
117-81-7	bis(2-ethylhexyl) phthalate	63	J	J
84-74-2	di-n-Butyl Phthalate	480	U	UJ
117-84-0	di-n-Octyl Phthalate	480	U	
621-64-7	n-Nitrosodi-n-Propylamine	480	U	
86-30-6	n-Nitrosodiphenylamine	480	U	

3

1E

VOLATILE ORGANICS ANALYSIS DATA SHEET
TENTATIVELY IDENTIFIED COMPOUNDS

EPA SAMPLE NO.
MR08-SS33-08B

Lab Name: GPL Laboratories, LLLP
Contract: CH2M Hill Inc
Lab Code: GPL
Case No.: NA
SAS No.: NA
SDG No.: 806163
Matrix (soil/water): SOIL
Lab Sample ID: 806163-003-038-1/1
Sample wt/vol: 30 (g/ml) g
Lab File ID: D46996.D
Level (low/med): LOW
Date Recieved 06/24/2008
% Moisture: 30.42
Date Analyzed: 07/19/2008
GC Column: RTX VOA
ID: 0.53 (mm)
Dilution Factor: 1
Soil Extract Volume: _____ (uL)
Soil Aliquot Volume: _____ (uL)

Number TICs Found: 5
Concentration Units (ug/L or ug/kg): ug/kg

#	CAS NUMBER	COMPOUND NAME	RT	EST. CONC	Q	
1	003076-04-8	2-Propenoic acid,	16.39	4.53	~~JN~~	JN
2		unknown	13.29	6.50	J	J
3		unknown	14.4	3.68	J	
4		unknown	21	6.96	J	
5		unknown	22.47	11	J	

LW 9/30/08

FORM I VOA-TIC

GPL Laboratories

GPL
FORM 1
ANALYSIS DATA SHEET

4

SAMPLE NO
MR08-SS32-08B

Lab Name :	GPL Laboratories	Client. :	CH2M Hill Inc
Lab Code :	GPL	SAS NO. :	
Case No. :		SDG NO :	806163
Matrix : (Soil / Water)	SOIL	Lab Sample ID :	806163-004-042-1/1
Sample Volume :	30	Lab File ID :	D46997.D
% Moisture:	11.92	Date Received	06/24/2008
Extraction:	CLP_EXTRACTION	Date Extracted:	07/16/2008
Extract Volume:	.5 mL	Date Analyzed	07/19/2008
Injection Volume :	µ L	Dilution Factor :	1
GPC Clean up (Y/N):	BLACK pH:		

Concentration Units (ug/L or ug/kg dry weight) : ug/kg

CAS NO	COMPOUND		Q
92-52-4	1,1- Biphenyl	380	U
108-60-1	2,2-Oxybis(1-chloropropane)	380	U
95-95-4	2,4,5-Trichlorophenol	950	U
88-06-2	2,4,6-Trichlorophenol	380	U
120-83-2	2,4-Dichlorophenol	380	U
105-67-9	2,4-Dimethylphenol	380	U
51-28-5	2,4-Dinitrophenol	950	U
121-14-2	2,4-Dinitrotoluene	380	U
606-20-2	2,6-Dinitrotoluene	380	U
91-58-7	2-Chloronaphthalene	380	U
95-57-8	2-Chlorophenol	380	U
91-57-6	2-Methylnaphthalene	380	U
88-74-4	2-Nitroaniline	950	U
88-75-5	2-Nitrophenol	380	U
95-48-7	2-methylphenol	380	U
91-94-1	3,3-Dichlorobenzidine	380	U
99-09-2	3-Nitroaniline	950	U
534-52-1	4,6-dinitro-2-methyl phenol	950	U
101-55-3	4-Bromophenyl-phenylether	380	U
106-47-8	4-Chloroaniline	380	U
7005-72-3	4-Chlorophenyl Phenyl Ether	380	U
100-01-6	4-Nitroaniline	950	U
100-02-7	4-Nitrophenol	950	U
59-50-7	4-chloro-3-methylphenol	380	U
106-44-5	4-methylphenol	380	U
83-32-9	Acenaphthene	380	U
208-96-8	Acenaphthylene	380	U
98-86-2	Acetophenone	380	U
120-12-7	Anthracene	380	U

UJ HT

GPL Laboratories

GPL
FORM 1
ANALYSIS DATA SHEET

4

SAMPLE NO
MR08-SS32-08B

Lab Name :	GPL Laboratories	Client. :	CH2M Hill Inc
Lab Code :	GPL	SAS NO. :	
Case No. :		SDG NO :	806163
Matrix : (Soil / Water)	SOIL	Lab Sample ID :	806163-004-042-1/1
Sample Volume :	30	Lab File ID :	D46997.D
% Moisture:	11.92	Date Received	06/24/2008
Extraction:	CLP_EXTRACTION	Date Extracted:	07/16/2008
Extract Volume:	.5 mL	Date Analyzed	07/19/2008
Injection Volume :	µL	Dilution Factor :	1
GPC Clean up (Y/N):	BLACK pH:		

Concentration Units (ug/L or ug/kg dry weight) : ug/kg

CAS NO	COMPOUND		Q
1912-24-9	Atrazine	380	U
100-52-7	Benzaldehyde	380	U
56-55-3	Benzo(a)anthracene	380	U
50-32-8	Benzo(a)pyrene	380	U
205-99-2	Benzo(b)fluoranthene	380	U
191-24-2	Benzo(g,h,i)perylene	380	U
207-08-9	Benzo(k)fluoranthene	380	U
85-68-7	Benzyl Butyl Phthalate	380	U
105-60-2	Caprolactam	380	U
86-74-8	Carbazole	380	U
218-01-9	Chrysene	380	U
53-70-3	Dibenz(a,h)Anthracene	380	U
132-64-9	Dibenzofuran	380	U
84-66-2	Diethyl Phthalate	380	U
131-11-3	Dimethyl Phthalate	380	U
206-44-0	Fluoranthene	380	U
86-73-7	Fluorene	380	U
118-74-1	Hexachlorobenzene	380	U
87-68-3	Hexachlorobutadiene	380	U
77-47-4	Hexachlorocyclopentadiene	380	U
67-72-1	Hexachloroethane	380	U
193-39-5	Indeno(1,2,3-c,d)Pyrene	380	U
78-59-1	Isophorone	380	U
91-20-3	Naphthalene	380	U
98-95-3	Nitrobenzene	380	U
87-86-5	Pentachlorophenol	950	U
85-01-8	Phenanthrene	380	U
108-95-2	Phenol	380	U
129-00-0	Pyrene	380	U

UJ HT

LW 9/30/08

GPL Laboratories

GPL
FORM 1
ANALYSIS DATA SHEET

4

SAMPLE NO
MR08-SS32-08B

Lab Name :	GPL Laboratories	Client. :	CH2M Hill Inc
Lab Code :	GPL	SAS NO. :	
Case No. :		SDG NO :	806163
Matrix : (Soil / Water)	SOIL	Lab Sample ID :	806163-004-042-1/1
Sample Volume :	30	Lab File ID :	D46997.D
% Moisture:	11.92	Date Received	06/24/2008
Extraction:	CLP_EXTRACTION	Date Extracted:	07/16/2008
Extract Volume:	.5 mL	Date Analyzed	07/19/2008
Injection Volume :	µ L	Dilution Factor :	1
GPC Clean up (Y/N):	BLACK pH:		

Concentration Units (ug/L or ug/kg dry weight) : ug/kg

CAS NO	COMPOUND		Q
111-91-1	bis(2-chloroethoxy) methane	380	U
111-44-4	bis(2-chloroethyl) ether	380	U
117-81-7	bis(2-ethylhexyl) phthalate	380	U
84-74-2	di-n-Butyl Phthalate	380	U
117-84-0	di-n-Octyl Phthalate	380	U
621-64-7	n-Nitrosodi-n-Propylamine	380	U
86-30-6	n-Nitrosodiphenylamine	380	U

UJ HT

LW 9/20/08

4

1E
VOLATILE ORGANICS ANALYSIS DATA SHEET
TENTATIVELY IDENTIFIED COMPOUNDS

EPA SAMPLE NO.
MR08-SS32-08B

Lab Name: GPL Laboratories, LLLP
Contract: CH2M Hill Inc
Lab Code: GPL
Case No.: NA
SAS No.: NA
SDG No.: 806163
Matrix (soil/water): SOIL
Lab Sample ID: 806163-004-042-1/1
Sample wt/vol: 30 (g/ml) g
Lab File ID: D46997.D
Level (low/med): LOW
Date Recieved 06/24/2008
% Moisture: 11.92
Date Analyzed: 07/19/2008
GC Column: RTX VOA ID: 0.53 (mm)
Dilution Factor: 1
Soil Extract Volume: _____ (uL)
Soil Aliquot Volume: _____ (uL)

Number TICs Found: 3
Concentration Units (ug/L or ug/kg): ug/kg

#	CAS NUMBER	COMPOUND NAME	RT	EST. CONC	Q
1		unknown	13.28	6.13	J
2		unknown	20.64	5.080	J
3		unknown	21.16	5.060	J

J

LW 9/30/08

FORM I VOA-TIC

GPL Laboratories

GPL
FORM 1
ANALYSIS DATA SHEET

SAMPLE NO
MR08-SS30-08B

Lab Name :	GPL Laboratories	Client. :	CH2M Hill Inc
Lab Code :	GPL	SAS NO. :	
Case No. :		SDG NO :	806163
Matrix : (Soil / Water)	SOIL	Lab Sample ID :	806163-005-046-1/1
Sample Volume :	29.99	Lab File ID :	D46998.D
% Moisture:	14.23	Date Received	06/24/2008
Extraction:	CLP_EXTRACTION	Date Extracted:	07/16/2008
Extract Volume:	.5 mL	Date Analyzed	07/19/2008
Injection Volume :	µ L	Dilution Factor :	1
GPC Clean up (Y/N):	BLACK pH:		

Concentration Units (ug/L or ug/kg dry weight) : ug/kg

CAS NO	COMPOUND		Q
92-52-4	1,1- Biphenyl	390	U
108-60-1	2,2-Oxybis(1-chloropropane)	390	U
95-95-4	2,4,5-Trichlorophenol	970	U
88-06-2	2,4,6-Trichlorophenol	390	U
120-83-2	2,4-Dichlorophenol	390	U
105-67-9	2,4-Dimethylphenol	390	U
51-28-5	2,4-Dinitrophenol	970	U
121-14-2	2,4-Dinitrotoluene	390	U
606-20-2	2,6-Dinitrotoluene	390	U
91-58-7	2-Chloronaphthalene	390	U
95-57-8	2-Chlorophenol	390	U
91-57-6	2-Methylnaphthalene	390	U
88-74-4	2-Nitroaniline	970	U
88-75-5	2-Nitrophenol	390	U
95-48-7	2-methylphenol	390	U
91-94-1	3,3-Dichlorobenzidine	390	U
99-09-2	3-Nitroaniline	970	U
534-52-1	4,6-dinitro-2-methyl phenol	970	U
101-55-3	4-Bromophenyl-phenylether	390	U
106-47-8	4-Chloroaniline	390	U
7005-72-3	4-Chlorophenyl Phenyl Ether	390	U
100-01-6	4-Nitroaniline	970	U
100-02-7	4-Nitrophenol	970	U
59-50-7	4-chloro-3-methylphenol	390	U
106-44-5	4-methylphenol	390	U
83-32-9	Acenaphthene	390	U
208-96-8	Acenaphthylene	390	U
98-86-2	Acetophenone	390	U
120-12-7	Anthracene	390	U

KJ HT

RW 9/30/08

GPL Laboratories

GPL
FORM 1
ANALYSIS DATA SHEET

5

SAMPLE NO
MR08-SS30-08B

Lab Name :	GPL Laboratories	Client. :	CH2M Hill Inc
Lab Code :	GPL	SAS NO. :	
Case No. :		SDG NO :	806163
Matrix : (Soil / Water)	SOIL	Lab Sample ID :	806163-005-046-1/1
Sample Volume :	29.99	Lab File ID :	D46998.D
% Moisture:	14.23	Date Received	06/24/2008
Extraction:	CLP_EXTRACTION	Date Extracted:	07/16/2008
Extract Volume:	.5 mL	Date Analyzed	07/19/2008
Injection Volume :	µL	Dilution Factor :	1
GPC Clean up (Y/N):	BLACK pH:		

Concentration Units (ug/L or ug/kg dry weight) : ug/kg

CAS NO	COMPOUND		Q	
1912-24-9	Atrazine	390	U	UJ HT
100-52-7	Benzaldehyde	390	U	↓
56-55-3	Benzo(a)anthracene	390	U	↓
50-32-8	Benzo(a)pyrene	50	J	J
205-99-2	Benzo(b)fluoranthene	390	U	UJ
191-24-2	Benzo(g,h,i)perylene	42	J	J
207-08-9	Benzo(k)fluoranthene	390	U	UJ
85-68-7	Benzyl Butyl Phthalate	390	U	UJ
105-60-2	Caprolactam	52	J	J
86-74-8	Carbazole	390	U	UJ
218-01-9	Chrysene	58	J	J
53-70-3	Dibenz(a,h)Anthracene	390	U	UJ
132-64-9	Dibenzofuran	390	U	↓
84-66-2	Diethyl Phthalate	390	U	↓
131-11-3	Dimethyl Phthalate	390	U	↓
206-44-0	Fluoranthene	100	J	J
86-73-7	Fluorene	390	U	UJ
118-74-1	Hexachlorobenzene	390	U	↓
87-68-3	Hexachlorobutadiene	390	U	↓
77-47-4	Hexachlorocyclopentadiene	390	U	↓
67-72-1	Hexachloroethane	390	U	↓
193-39-5	Indeno(1,2,3-c,d)Pyrene	390	U	↓
78-59-1	Isophorone	390	U	↓
91-20-3	Naphthalene	390	U	↓
98-95-3	Nitrobenzene	390	U	↓
87-86-5	Pentachlorophenol	970	U	↓
85-01-8	Phenanthrene	390	U	↓
108-95-2	Phenol	390	U	↓
129-00-0	Pyrene	76	J	J

LW 9/30/08

GPL Laboratories

GPL
FORM I
ANALYSIS DATA SHEET

SAMPLE NO
MR08-SS30-08B

Lab Name :	GPL Laboratories	Client. :	CH2M Hill Inc
Lab Code :	GPL	SAS NO. :	
Case No. :		SDG NO :	806163
Matrix : (Soil / Water)	SOIL	Lab Sample ID :	806163-005-046-1/1
Sample Volume :	29.99	Lab File ID :	D46998.D
% Moisture:	14.23	Date Received	06/24/2008
Extraction:	CLP_EXTRACTION	Date Extracted:	07/16/2008
Extract Volume:	.5 mL	Date Analyzed	07/19/2008
Injection Volume :	µL	Dilution Factor :	1
GPC Clean up (Y/N):	BLACK pH:		

Concentration Units (ug/L or ug/kg dry weight) : ug/kg

CAS NO	COMPOUND		Q	
111-91-1	bis(2-chloroethoxy) methane	390	U	UJ HT
111-44-4	bis(2-chloroethyl) ether	390	U	UJ
117-81-7	bis(2-ethylhexyl) phthalate	82	J	J
84-74-2	di-n-Butyl Phthalate	280	J	J
117-84-0	di-n-Octyl Phthalate	390	U	UJ
621-64-7	n-Nitrosodi-n-Propylamine	390	U	
86-30-6	n-Nitrosodiphenylamine	390	U	

5

1E
VOLATILE ORGANICS ANALYSIS DATA SHEET
TENTATIVELY IDENTIFIED COMPOUNDS

EPA SAMPLE NO.
MR08-SS30-08B

Lab Name: GPL Laboratories, LLLP
Contract: CH2M Hill Inc
Lab Code: GPL
Case No.: NA
SAS No.: NA
SDG No.: 806163
Matrix (soil/water): SOIL
Lab Sample ID: 806163-005-046-1/1
Sample wt/vol: 29.99 (g/ml) g
Lab File ID: D46998.D
Level (low/med): LOW
Date Recieved 06/24/2008
% Moisture: 14.23
Date Analyzed: 07/19/2008
GC Column: RTX VOA
ID: 0.53 (mm)
Dilution Factor: 1
Soil Extract Volume: (uL)
Soil Aliquot Volume: (uL)

Number TICs Found: 16
Concentration Units (ug/L or ug/kg): ug/kg

#	CAS NUMBER	COMPOUND NAME	RT	EST. CONC	Q
1	000207-08-9	Benzo[k]fluoranthene	22.48	5.57	JN
2	000295-65-8	Cyclohexadecane	21.02	4.29	JN
3	000559-74-0	Friedelan-3-one	28.52	43	JN
4	002156-97-0	Dodecyl acrylate	16.39	3.75	JN
5	074663-85-7	Cyclopropane, nonyl-	14.39	35	JN
6		unknown	13.28	4.78	J
7		unknown	17.98	5.36	J
8		unknown	20.06	10	J
9		unknown	20.25	3.26	J
10		unknown	24.95	6.22	J
11		unknown	26.32	7.61	J
12		unknown	26.52	13	J
13		unknown	26.92	86	J
14		unknown	27.19	4.52	J
15		unknown	27.8	8.58	J
16		unknown	28.21	66	J

JN HT
J

RW 9/30/08

GPL Laboratories

GPL
FORM 1
ANALYSIS DATA SHEET

SAMPLE NO
MR08-SS31-08B

Lab Name :	GPL Laboratories	Client. :	CH2M Hill Inc
Lab Code :	GPL	SAS NO. :	
Case No. :		SDG NO :	806163
Matrix : (Soil / Water)	SOIL	Lab Sample ID :	806163-006-010-1/3
Sample Volume :	30	Lab File ID :	D47222.D
% Moisture:	32.29	Date Received	06/24/2008
Extraction:	CLP_EXTRACTION	Date Extracted:	07/16/2008
Extract Volume:	.5 mL	Date Analyzed	08/04/2008
Injection Volume :	µ L	Dilution Factor :	1
GPC Clean up (Y/N):	BLACK pH:		

Concentration Units (ug/L or ug/kg dry weight) : ug/kg

CAS NO	COMPOUND		Q
92-52-4	1,1- Biphenyl	490	U
108-60-1	2,2-Oxybis(1-chloropropane)	490	U
95-95-4	2,4,5-Trichlorophenol	1200	U
88-06-2	2,4,6-Trichlorophenol	490	U
120-83-2	2,4-Dichlorophenol	490	U
105-67-9	2,4-Dimethylphenol	490	U
51-28-5	2,4-Dinitrophenol	1200	U
121-14-2	2,4-Dinitrotoluene	490	U
606-20-2	2,6-Dinitrotoluene	490	U
91-58-7	2-Chloronaphthalene	490	U
95-57-8	2-Chlorophenol	490	U
91-57-6	2-Methylnaphthalene	490	U
88-74-4	2-Nitroaniline	1200	U
88-75-5	2-Nitrophenol	490	U
95-48-7	2-methylphenol	490	U
91-94-1	3,3-Dichlorobenzidine	490	U
99-09-2	3-Nitroaniline	1200	U
534-52-1	4,6-dinitro-2-methyl phenol	1200	U
101-55-3	4-Bromophenyl-phenylether	490	U
106-47-8	4-Chloroaniline	490	U
7005-72-3	4-Chlorophenyl Phenyl Ether	490	U
100-01-6	4-Nitroaniline	1200	U
100-02-7	4-Nitrophenol	1200	U
59-50-7	4-chloro-3-methylphenol	490	U
106-44-5	4-methylphenol	490	U
83-32-9	Acenaphthene	490	U
208-96-8	Acenaphthylene	490	U
98-86-2	Acetophenone	490	U
120-12-7	Anthracene	490	U

UJ HT

LW 9/20/08

GPL Laboratories

GPL
FORM 1
ANALYSIS DATA SHEET

SAMPLE NO
MR08-SS31-08B

Lab Name :	GPL Laboratories	Client. :	CH2M Hill Inc
Lab Code :	GPL	SAS NO. :	
Case No. :		SDG NO :	806163
Matrix : (Soil / Water)	SOIL	Lab Sample ID :	806163-006-010-1/3
Sample Volume :	30	Lab File ID :	D47222.D
% Moisture:	32.29	Date Received	06/24/2008
Extraction:	CLP_EXTRACTION	Date Extracted:	07/16/2008
Extract Volume:	.5 mL	Date Analyzed	08/04/2008
Injection Volume :	µ L	Dilution Factor :	1
GPC Clean up (Y/N):	BLACK pH:		

Concentration Units (ug/L or ug/kg dry weight) : ug/kg

CAS NO	COMPOUND		Q	
1912-24-9	Atrazine	490	U	UJ
100-52-7	Benzaldehyde	490	U	UJ
56-55-3	Benzo(a)anthracene	97	J	J
50-32-8	Benzo(a)pyrene	140	J	
205-99-2	Benzo(b)fluoranthene	180	J	
191-24-2	Benzo(g,h,i)perylene	170	J	
207-08-9	Benzo(k)fluoranthene	160	J	
85-68-7	Benzyl Butyl Phthalate	490	U	UJ
105-60-2	Caprolactam	490	U	
86-74-8	Carbazole	490	U	
218-01-9	Chrysene	190	J	J
53-70-3	Dibenz(a,h)Anthracene	490	U	UJ
132-64-9	Dibenzofuran	490	U	
84-66-2	Diethyl Phthalate	490	U	
131-11-3	Dimethyl Phthalate	490	U	
206-44-0	Fluoranthene	300	J	J
86-73-7	Fluorene	490	U	UJ
118-74-1	Hexachlorobenzene	490	U	
87-68-3	Hexachlorobutadiene	490	U	
77-47-4	Hexachlorocyclopentadiene	490	U	
67-72-1	Hexachloroethane	490	U	
193-39-5	Indeno(1,2,3-c,d)Pyrene	140	J	J
78-59-1	Isophorone	490	U	UJ
91-20-3	Naphthalene	490	U	
98-95-3	Nitrobenzene	490	U	
87-86-5	Pentachlorophenol	1200	U	
85-01-8	Phenanthrene	60	J	J
108-95-2	Phenol	490	U	UJ
129-00-0	Pyrene	230	J	J

HT

LW 9/20/08

6

GPL Laboratories

GPL
FORM 1
ANALYSIS DATA SHEET

SAMPLE NO
MR08-SS31-08B

Lab Name :	GPL Laboratories	Client. :	CH2M Hill Inc
Lab Code :	GPL	SAS NO. :	
Case No. :		SDG NO :	806163
Matrix : (Soil / Water)	SOIL	Lab Sample ID :	806163-006-010-1/3
Sample Volume :	30	Lab File ID :	D47222.D
% Moisture:	32.29	Date Received	06/24/2008
Extraction:	CLP_EXTRACTION	Date Extracted:	07/16/2008
Extract Volume:	.5 mL	Date Analyzed	08/04/2008
Injection Volume :	µ L	Dilution Factor :	1
GPC Clean up (Y/N):	BLACK pH:		

Concentration Units (ug/L or ug/kg dry weight) : ug/kg

CAS NO	COMPOUND		Q	
111-91-1	bis(2-chloroethoxy) methane	490	U	UJ HT
111-44-4	bis(2-chloroethyl) ether	490	U	UJ
117-81-7	bis(2-ethylhexyl) phthalate	66	J	J
84-74-2	di-n-Butyl Phthalate	51	J	J
117-84-0	di-n-Octyl Phthalate	490	U	UJ
621-64-7	n-Nitrosodi-n-Propylamine	490	U	
86-30-6	n-Nitrosodiphenylamine	490	U	

9/30/08

6

1E
VOLATILE ORGANICS ANALYSIS DATA SHEET
TENTATIVELY IDENTIFIED COMPOUNDS

EPA SAMPLE NO.
MR08-SS31-08B

Lab Name: GPL Laboratories, LLLP
Contract: CH2M Hill Inc
Lab Code: GPL Case No.: NA
SAS No.: NA SDG No.: 806163
Matrix (soil/water): SOIL
Lab Sample ID: 806163-006-010-1/3
Sample wt/vol: 30 (g/ml) g
Lab File ID: D47222.D
Level (low/med): LOW
Date Recieved 06/24/2008
% Moisture: 32.29
Date Analyzed: 08/04/2008
GC Column: RTX VOA ID: 0.53 (mm)
Dilution Factor: 1
Soil Extract Volume: _____ (uL)
Soil Aliquot Volume: _____ (uL)

Number TICs Found: 17
Concentration Units (ug/L or ug/kg): ug/kg

#	CAS NUMBER	COMPOUND NAME	RT	EST. CONC	Q
1	000108-94-1	Cyclohexanone	10.2	6.040	JN
2	000123-28-4	Propanoic acid, 3,3'-	25.92	22	JN
3	000123-95-5	Octadecanoic acid,	22.65	17	JN
4	031158-91-5	Hexadecanoic acid, 1,1-	21.72	10	JN
5	074367-34-3	Propanoic acid, 2-	16.32	6.80	JN
6		unknown	11.1	3.060	J
7		unknown	16.19	4.23	J
8		unknown	19.07	4.73	J
9		unknown	21.99	3.57	J
10		unknown	23.37	11	J
11		unknown	24.24	11	J
12		unknown	25.31	11	J
13		unknown	26.65	13	J
14		unknown	29.46	9.21	J
15		unknown	30.45	7.50	J
16		unknown	32.62	5.14	J
17		unknown	9.14	6.55	J

JN

J

FORM I VOA-TIC

lw 9/20/08

7

GPL Laboratories

GPL
FORM 1
ANALYSIS DATA SHEET

SAMPLE NO
MR08-SS40-08B

Lab Name :	GPL Laboratories	Client. :	CH2M Hill Inc
Lab Code :	GPL	SAS NO. :	
Case No. :		SDG NO :	806163
Matrix : (Soil / Water)	SOIL	Lab Sample ID :	806163-007-050-1/1
Sample Volume :	29.99	Lab File ID :	D46999.D
% Moisture:	24.67	Date Received	06/24/2008
Extraction:	CLP_EXTRACTION	Date Extracted:	07/16/2008
Extract Volume:	.5 mL	Date Analyzed	07/19/2008
Injection Volume :	µ L	Dilution Factor :	1
GPC Clean up (Y/N):	BLACK pH:		

Concentration Units (ug/L or ug/kg dry weight) : ug/kg

CAS NO	COMPOUND		Q
92-52-4	1,1- Biphenyl	440	U
108-60-1	2,2-Oxybis(1-chloropropane)	440	U
95-95-4	2,4,5-Trichlorophenol	1100	U
88-06-2	2,4,6-Trichlorophenol	440	U
120-83-2	2,4-Dichlorophenol	440	U
105-67-9	2,4-Dimethylphenol	440	U
51-28-5	2,4-Dinitrophenol	1100	U
121-14-2	2,4-Dinitrotoluene	440	U
606-20-2	2,6-Dinitrotoluene	440	U
91-58-7	2-Chloronaphthalene	440	U
95-57-8	2-Chlorophenol	440	U
91-57-6	2-Methylnaphthalene	440	U
88-74-4	2-Nitroaniline	1100	U
88-75-5	2-Nitrophenol	440	U
95-48-7	2-methylphenol	440	U
91-94-1	3,3-Dichlorobenzidine	440	U
99-09-2	3-Nitroaniline	1100	U
534-52-1	4,6-dinitro-2-methyl phenol	1100	U
101-55-3	4-Bromophenyl-phenylether	440	U
106-47-8	4-Chloroaniline	440	U
7005-72-3	4-Chlorophenyl Phenyl Ether	440	U
100-01-6	4-Nitroaniline	1100	U
100-02-7	4-Nitrophenol	1100	U
59-50-7	4-chloro-3-methylphenol	440	U
106-44-5	4-methylphenol	440	U
83-32-9	Acenaphthene	440	U
208-96-8	Acenaphthylene	440	U
98-86-2	Acetophenone	440	U
120-12-7	Anthracene	440	U

UJ HT

LW 7/30/08

7

GPL Laboratories

GPL
FORM 1
ANALYSIS DATA SHEET

SAMPLE NO
MR08-SS40-08B

Lab Name :	GPL Laboratories	Client. :	CH2M Hill Inc
Lab Code :	GPL	SAS NO. :	
Case No. :		SDG NO :	806163
Matrix : (Soil / Water)	SOIL	Lab Sample ID :	806163-007-050-1/1
Sample Volume :	29.99	Lab File ID :	D46999.D
% Moisture:	24.67	Date Received	06/24/2008
Extraction:	CLP_EXTRACTION	Date Extracted:	07/16/2008
Extract Volume:	.5 mL	Date Analyzed	07/19/2008
Injection Volume :	µ L	Dilution Factor :	1
GPC Clean up (Y/N):	BLACK pH:		

Concentration Units (ug/L or ug/kg dry weight) : ug/kg

CAS NO	COMPOUND		Q	
1912-24-9	Atrazine	440	U	UJ HT
100-52-7	Benzaldehyde	440	U	
56-55-3	Benzo(a)anthracene	440	U	
50-32-8	Benzo(a)pyrene	440	U	
205-99-2	Benzo(b)fluoranthene	440	U	
191-24-2	Benzo(g,h,i)perylene	440	U	
207-08-9	Benzo(k)fluoranthene	440	U	
85-68-7	Benzyl Butyl Phthalate	440	U	
105-60-2	Caprolactam	440	U	
86-74-8	Carbazole	440	U	
218-01-9	Chrysene	440	U	
53-70-3	Dibenz(a,h)Anthracene	440	U	
132-64-9	Dibenzofuran	440	U	
84-66-2	Diethyl Phthalate	440	U	
131-11-3	Dimethyl Phthalate	440	U	
206-44-0	Fluoranthene	51	J	J
86-73-7	Fluorene	440	U	UJ
118-74-1	Hexachlorobenzene	440	U	
87-68-3	Hexachlorobutadiene	440	U	
77-47-4	Hexachlorocyclopentadiene	440	U	
67-72-1	Hexachloroethane	440	U	
193-39-5	Indeno(1,2,3-c,d)Pyrene	440	U	
78-59-1	Isophorone	440	U	
91-20-3	Naphthalene	440	U	
98-95-3	Nitrobenzene	440	U	
87-86-5	Pentachlorophenol	1100	U	
85-01-8	Phenanthrene	440	U	
108-95-2	Phenol	440	U	
129-00-0	Pyrene	440	U	

LW 9/30/08

GPL Laboratories

GPL
FORM 1
ANALYSIS DATA SHEET

7

SAMPLE NO
MR08-SS40-08B

Lab Name :	GPL Laboratories	Client. :	CH2M Hill Inc
Lab Code :	GPL	SAS NO. :	
Case No. :		SDG NO :	806163
Matrix : (Soil / Water)	SOIL	Lab Sample ID :	806163-007-050-1/1
Sample Volume :	29.99	Lab File ID :	D46999.D
% Moisture:	24.67	Date Received	06/24/2008
Extraction:	CLP_EXTRACTION	Date Extracted:	07/16/2008
Extract Volume:	.5 mL	Date Analyzed	07/19/2008
Injection Volume :	µ L	Dilution Factor :	1
GPC Clean up (Y/N):	BLACK pH:		

Concentration Units (ug/L or ug/kg dry weight) : ug/kg

CAS NO	COMPOUND		Q		
111-91-1	bis(2-chloroethoxy) methane	440	U	UJ	HT
111-44-4	bis(2-chloroethyl) ether	440	U	UJ	
117-81-7	bis(2-ethylhexyl) phthalate	520		J	
84-74-2	di-n-Butyl Phthalate	440	U	UJ	
117-84-0	di-n-Octyl Phthalate	440	U		
621-64-7	n-Nitrosodi-n-Propylamine	440	U		
86-30-6	n-Nitrosodiphenylamine	440	U		

7

1E
VOLATILE ORGANICS ANALYSIS DATA SHEET
TENTATIVELY IDENTIFIED COMPOUNDS

EPA SAMPLE NO.
MR08-SS40-08B

Lab Name: GPL Laboratories, LLLP
Contract: CH2M Hill Inc
Lab Code: GPL
Case No.: NA
SAS No.: NA
SDG No.: 806163
Matrix (soil/water): SOIL
Lab Sample ID: 806163-007-050-1/1
Sample wt/vol: 29.99 (g/ml) g
Lab File ID: D46999.D
Level (low/med): LOW
Date Recieved 06/24/2008
% Moisture: 24.67
Date Analyzed: 07/19/2008
GC Column: RTX VOA ID: 0.53 (mm)
Dilution Factor: 1
Soil Extract Volume: _____ (uL)
Soil Aliquot Volume: _____ (uL)

Number TICs Found: 2
Concentration Units (ug/L or ug/kg): ug/kg

#	CAS NUMBER	COMPOUND NAME	RT	EST. CONC	Q	
1	000295-65-8	Cyclohexadecane	21.02	4.090	~~JN~~	JN
2		unknown	13.29	6.42	✓	J

FORM I VOA-TIC

lw 9/30/08

8

GPL Laboratories

GPL
FORM 1
ANALYSIS DATA SHEET

SAMPLE NO
MR08-SS34-08B

Lab Name :	GPL Laboratories	Client. :	CH2M Hill Inc
Lab Code :	GPL	SAS NO. :	
Case No. :		SDG NO :	806163
Matrix : (Soil / Water)	SOIL	Lab Sample ID :	806163-008-054-1/1
Sample Volume :	30	Lab File ID :	D47000.D
% Moisture:	24.1	Date Received	06/24/2008
Extraction:	CLP_EXTRACTION	Date Extracted:	07/16/2008
Extract Volume:	.5 mL	Date Analyzed	07/19/2008
Injection Volume :	µL	Dilution Factor :	1
GPC Clean up (Y/N):	BLACK pH:		

Concentration Units (ug/L or ug/kg dry weight) : ug/kg

CAS NO	COMPOUND		Q
92-52-4	1,1- Biphenyl	440	U
108-60-1	2,2-Oxybis(1-chloropropane)	440	U
95-95-4	2,4,5-Trichlorophenol	1100	U
88-06-2	2,4,6-Trichlorophenol	440	U
120-83-2	2,4-Dichlorophenol	440	U
105-67-9	2,4-Dimethylphenol	440	U
51-28-5	2,4-Dinitrophenol	1100	U
121-14-2	2,4-Dinitrotoluene	440	U
606-20-2	2,6-Dinitrotoluene	440	U
91-58-7	2-Chloronaphthalene	440	U
95-57-8	2-Chlorophenol	440	U
91-57-6	2-Methylnaphthalene	440	U
88-74-4	2-Nitroaniline	1100	U
88-75-5	2-Nitrophenol	440	U
95-48-7	2-methylphenol	440	U
91-94-1	3,3-Dichlorobenzidine	440	U
99-09-2	3-Nitroaniline	1100	U
534-52-1	4,6-dinitro-2-methyl phenol	1100	U
101-55-3	4-Bromophenyl-phenylether	440	U
106-47-8	4-Chloroaniline	440	U
7005-72-3	4-Chlorophenyl Phenyl Ether	440	U
100-01-6	4-Nitroaniline	1100	U
100-02-7	4-Nitrophenol	1100	U
59-50-7	4-chloro-3-methylphenol	440	U
106-44-5	4-methylphenol	440	U
83-32-9	Acenaphthene	440	U
208-96-8	Acenaphthylene	440	U
98-86-2	Acetophenone	440	U
120-12-7	Anthracene	440	U

UJ HT

hw 9/30/08

GPL Laboratories

GPL
FORM I
ANALYSIS DATA SHEET

SAMPLE NO
MR08-SS34-08B

Lab Name :	GPL Laboratories	Client. :	CH2M Hill Inc
Lab Code :	GPL	SAS NO. :	
Case No. :		SDG NO :	806163
Matrix : (Soil / Water)	SOIL	Lab Sample ID :	806163-008-054-1/1
Sample Volume :	30	Lab File ID :	D47000.D
% Moisture:	24.1	Date Received	06/24/2008
Extraction:	CLP_EXTRACTION	Date Extracted:	07/16/2008
Extract Volume:	.5 mL	Date Analyzed	07/19/2008
Injection Volume :	µ L	Dilution Factor :	1
GPC Clean up (Y/N):	BLACK pH:		

Concentration Units (ug/L or ug/kg dry weight) : ug/kg

CAS NO	COMPOUND		Q
1912-24-9	Atrazine	440	U
100-52-7	Benzaldehyde	440	U
56-55-3	Benzo(a)anthracene	440	U
50-32-8	Benzo(a)pyrene	440	U
205-99-2	Benzo(b)fluoranthene	440	U
191-24-2	Benzo(g,h,i)perylene	440	U
207-08-9	Benzo(k)fluoranthene	440	U
85-68-7	Benzyl Butyl Phthalate	440	U
105-60-2	Caprolactam	440	U
86-74-8	Carbazole	440	U
218-01-9	Chrysene	440	U
53-70-3	Dibenz(a,h)Anthracene	440	U
132-64-9	Dibenzofuran	440	U
84-66-2	Diethyl Phthalate	440	U
131-11-3	Dimethyl Phthalate	440	U
206-44-0	Fluoranthene	440	U
86-73-7	Fluorene	440	U
118-74-1	Hexachlorobenzene	440	U
87-68-3	Hexachlorobutadiene	440	U
77-47-4	Hexachlorocyclopentadiene	440	U
67-72-1	Hexachloroethane	440	U
193-39-5	Indeno(1,2,3-c,d)Pyrene	440	U
78-59-1	Isophorone	440	U
91-20-3	Naphthalene	440	U
98-95-3	Nitrobenzene	440	U
87-86-5	Pentachlorophenol	1100	U
85-01-8	Phenanthrene	440	U
108-95-2	Phenol	440	U
129-00-0	Pyrene	440	U

UJ HT

8

GPL Laboratories

GPL
FORM 1
ANALYSIS DATA SHEET

SAMPLE NO
MR08-SS34-08B

Lab Name :	GPL Laboratories	Client. :	CH2M Hill Inc
Lab Code :	GPL	SAS NO. :	
Case No. :		SDG NO :	806163
Matrix : (Soil / Water)	SOIL	Lab Sample ID :	806163-008-054-1/1
Sample Volume :	30	Lab File ID :	D47000.D
% Moisture:	24.1	Date Received	06/24/2008
Extraction:	CLP_EXTRACTION	Date Extracted:	07/16/2008
Extract Volume:	.5 mL	Date Analyzed	07/19/2008
Injection Volume :	µL	Dilution Factor :	1
GPC Clean up (Y/N):	BLACK pH:		

Concentration Units (ug/L or ug/kg dry weight) : ug/kg

CAS NO	COMPOUND		Q	
111-91-1	bis(2-chloroethoxy) methane	440	U	UJ HT
111-44-4	bis(2-chloroethyl) ether	440	U	UJ
117-81-7	bis(2-ethylhexyl) phthalate	53	J	J
84-74-2	di-n-Butyl Phthalate	47	J	J
117-84-0	di-n-Octyl Phthalate	440	U	UJ
621-64-7	n-Nitrosodi-n-Propylamine	440	U	
86-30-6	n-Nitrosodiphenylamine	440	U	

1E
VOLATILE ORGANICS ANALYSIS DATA SHEET
TENTATIVELY IDENTIFIED COMPOUNDS

EPA SAMPLE NO.
MR08-SS34-08B

Lab Name: GPL Laboratories, LLLP
Contract: CH2M Hill Inc
Lab Code: GPL
Case No.: NA
SAS No.: NA
SDG No.: 806163
Matrix (soil/water): SOIL
Lab Sample ID: 806163-008-054-1/1
Sample wt/vol: 30 (g/ml) g
Lab File ID: D47000.D
Level (low/med): LOW
Date Recieved 06/24/2008
% Moisture: 24.1
Date Analyzed: 07/19/2008
GC Column: RTX VOA
ID: 0.53 (mm)
Dilution Factor: 1
Soil Extract Volume: _____ (uL)
Soil Aliquot Volume: _____ (uL)

Number TICs Found: 13
Concentration Units (ug/L or ug/kg): ug/kg

#	CAS NUMBER	COMPOUND NAME	RT	EST. CONC	Q
1	000294-62-2	Cyclododecane	16.39	6.96	JN
2	000872-05-9	1-Decene	14.39	43	JN
3	013481-95-3	10-Octadecenoic acid,	19.37	20	JN
4		unknown	13.3	5.91	J
5		unknown	20.64	6.83	J
6		unknown	21.03	7.030	J
7		unknown	21.38	22	J
8		unknown	22.06	5.96	J
9		unknown	24.96	6.64	J
10		unknown	25.77	13	J
11		unknown	27.33	36	J
12		unknown	27.82	35	J
13		unknown	28.33	12	J

JN HT
J

GPL Laboratories

GPL
FORM I
ANALYSIS DATA SHEET

9

SAMPLE NO
MR08-SS41-08B

Lab Name :	GPL Laboratories	Client. :	CH2M Hill Inc
Lab Code :	GPL	SAS NO. :	
Case No. :		SDG NO :	806163
Matrix : (Soil / Water)	SOIL	Lab Sample ID :	806163-009-058-1/1
Sample Volume :	30.01	Lab File ID :	D47133.D
% Moisture:	8.12	Date Received	06/24/2008
Extraction:	CLP_EXTRACTION	Date Extracted:	07/16/2008
Extract Volume:	.5 mL	Date Analyzed	07/31/2008
Injection Volume :	µ L	Dilution Factor :	1
GPC Clean up (Y/N):	BLACK pH:		

Concentration Units (ug/L or ug/kg dry weight) : ug/kg

CAS NO	COMPOUND		Q
92-52-4	1,1- Biphenyl	360	U
108-60-1	2,2-Oxybis(1-chloropropane)	360	U
95-95-4	2,4,5-Trichlorophenol	910	U
88-06-2	2,4,6-Trichlorophenol	360	U
120-83-2	2,4-Dichlorophenol	360	U
105-67-9	2,4-Dimethylphenol	360	U
51-28-5	2,4-Dinitrophenol	910	U
121-14-2	2,4-Dinitrotoluene	360	U
606-20-2	2,6-Dinitrotoluene	360	U
91-58-7	2-Chloronaphthalene	360	U
95-57-8	2-Chlorophenol	360	U
91-57-6	2-Methylnaphthalene	360	U
88-74-4	2-Nitroaniline	910	U
88-75-5	2-Nitrophenol	360	U
95-48-7	2-methylphenol	360	U
91-94-1	3,3-Dichlorobenzidine	360	U
99-09-2	3-Nitroaniline	910	U
534-52-1	4,6-dinitro-2-methyl phenol	910	U
101-55-3	4-Bromophenyl-phenylether	360	U
106-47-8	4-Chloroaniline	360	U
7005-72-3	4-Chlorophenyl Phenyl Ether	360	U
100-01-6	4-Nitroaniline	910	U
100-02-7	4-Nitrophenol	910	U
59-50-7	4-chloro-3-methylphenol	360	U
106-44-5	4-methylphenol	360	U
83-32-9	Acenaphthene	360	U
208-96-8	Acenaphthylene	360	U
98-86-2	Acetophenone	360	U
120-12-7	Anthracene	360	U

UJ HT

LW 9/30/08

9

GPL Laboratories

GPL
FORM 1
ANALYSIS DATA SHEET

SAMPLE NO
MR08-SS41-08B

Lab Name :	GPL Laboratories	Client. :	CH2M Hill Inc
Lab Code :	GPL	SAS NO. :	
Case No. :		SDG NO :	806163
Matrix : (Soil / Water)	SOIL	Lab Sample ID :	806163-009-058-1/1
Sample Volume :	30.01	Lab File ID :	D47133.D
% Moisture:	8.12	Date Received	06/24/2008
Extraction:	CLP_EXTRACTION	Date Extracted:	07/16/2008
Extract Volume:	.5 mL	Date Analyzed	07/31/2008
Injection Volume :	µ L	Dilution Factor :	1
GPC Clean up (Y/N):	BLACK pH:		

Concentration Units (ug/L or ug/kg dry weight) : ug/kg

CAS NO	COMPOUND		Q
1912-24-9	Atrazine	360	U
100-52-7	Benzaldehyde	360	U
56-55-3	Benzo(a)anthracene	360	U
50-32-8	Benzo(a)pyrene	360	U
205-99-2	Benzo(b)fluoranthene	360	U
191-24-2	Benzo(g,h,i)perylene	360	U
207-08-9	Benzo(k)fluoranthene	360	U
85-68-7	Benzyl Butyl Phthalate	360	U
105-60-2	Caprolactam	360	U
86-74-8	Carbazole	360	U
218-01-9	Chrysene	360	U
53-70-3	Dibenz(a,h)Anthracene	360	U
132-64-9	Dibenzofuran	360	U
84-66-2	Diethyl Phthalate	360	U
131-11-3	Dimethyl Phthalate	360	U
206-44-0	Fluoranthene	360	U
86-73-7	Fluorene	360	U
118-74-1	Hexachlorobenzene	360	U
87-68-3	Hexachlorobutadiene	360	U
77-47-4	Hexachlorocyclopentadiene	360	U
67-72-1	Hexachloroethane	360	U
193-39-5	Indeno(1,2,3-c,d)Pyrene	360	U
78-59-1	Isophorone	360	U
91-20-3	Naphthalene	360	U
98-95-3	Nitrobenzene	360	U
87-86-5	Pentachlorophenol	910	U
85-01-8	Phenanthrene	360	U
108-95-2	Phenol	360	U
129-00-0	Pyrene	360	U

UJ HT

LW 9/30/08

GPL Laboratories

GPL
FORM 1
ANALYSIS DATA SHEET

9

SAMPLE NO
MR08-SS41-08B

Lab Name :	GPL Laboratories	Client. :	CH2M Hill Inc
Lab Code :	GPL	SAS NO. :	
Case No. :		SDG NO :	806163
Matrix : (Soil / Water)	SOIL	Lab Sample ID :	806163-009-058-1/1
Sample Volume :	30.01	Lab File ID :	D47133.D
% Moisture:	8.12	Date Received	06/24/2008
Extraction:	CLP_EXTRACTION	Date Extracted:	07/16/2008
Extract Volume:	.5 mL	Date Analyzed	07/31/2008
Injection Volume :	µ L	Dilution Factor :	1
GPC Clean up (Y/N):	BLACK pH:		

Concentration Units (ug/L or ug/kg dry weight) : ug/kg

CAS NO	COMPOUND		Q		
111-91-1	bis(2-chloroethoxy) methane	360	U	UJ	HT
111-44-4	bis(2-chloroethyl) ether	360	U	UJ	
117-81-7	bis(2-ethylhexyl) phthalate	46	J	J	
84-74-2	di-n-Butyl Phthalate	360	U	UJ	
117-84-0	di-n-Octyl Phthalate	360	U		
621-64-7	n-Nitrosodi-n-Propylamine	360	U		
86-30-6	n-Nitrosodiphenylamine	360	U		

LW 9/30/08

9

1E
VOLATILE ORGANICS ANALYSIS DATA SHEET
TENTATIVELY IDENTIFIED COMPOUNDS

EPA SAMPLE NO.
MR08-SS41-08B

Lab Name: GPL Laboratories, LLLP
Contract: CH2M Hill Inc
Lab Code: GPL
Case No.: NA
SAS No.: NA
SDG No.: 806163
Matrix (soil/water): SOIL
Lab Sample ID: 806163-009-058-1/1
Sample wt/vol: 30.01 (g/ml) g
Lab File ID: D47133.D
Level (low/med): LOW
Date Recieved 06/24/2008
% Moisture: 8.12
Date Analyzed: 07/31/2008
GC Column: RTX VOA
ID: 0.53 (mm)
Dilution Factor: 1
Soil Extract Volume: _____ (uL)
Soil Aliquot Volume: _____ (uL)

Number TICs Found: 4
Concentration Units (ug/L or ug/kg): ug/kg

#	CAS NUMBER	COMPOUND NAME	RT	EST. CONC	Q	
1	074367-33-2	Propanoic acid, 2-	16.16	4.88	~~JN~~	JN
2		unknown	10.72	4.010	J	J
3		unknown	16.33	7.95	J	↓
4		unknown	9.16	5.44	J	

lw 9/30/08

FORM I VOA-TIC

10

GPL Laboratories

GPL
FORM 1
ANALYSIS DATA SHEET

SAMPLE NO
MR08-SS41D-08B

Lab Name :	GPL Laboratories	Client. :	CH2M Hill Inc
Lab Code :	GPL	SAS NO. :	
Case No. :		SDG NO :	806163
Matrix : (Soil / Water)	SOIL	Lab Sample ID :	806163-010-062-1/1
Sample Volume :	30	Lab File ID :	D47002.D
% Moisture:	15.39	Date Received	06/24/2008
Extraction:	CLP_EXTRACTION	Date Extracted:	07/16/2008
Extract Volume:	.5 mL	Date Analyzed	07/19/2008
Injection Volume :	µ L	Dilution Factor :	1
GPC Clean up (Y/N):	BLACK pH:		

Concentration Units (ug/L or ug/kg dry weight) : ug/kg

CAS NO	COMPOUND		Q
92-52-4	1,1- Biphenyl	390	U
108-60-1	2,2-Oxybis(1-chloropropane)	390	U
95-95-4	2,4,5-Trichlorophenol	990	U
88-06-2	2,4,6-Trichlorophenol	390	U
120-83-2	2,4-Dichlorophenol	390	U
105-67-9	2,4-Dimethylphenol	390	U
51-28-5	2,4-Dinitrophenol	990	U
121-14-2	2,4-Dinitrotoluene	390	U
606-20-2	2,6-Dinitrotoluene	390	U
91-58-7	2-Chloronaphthalene	390	U
95-57-8	2-Chlorophenol	390	U
91-57-6	2-Methylnaphthalene	390	U
88-74-4	2-Nitroaniline	990	U
88-75-5	2-Nitrophenol	390	U
95-48-7	2-methylphenol	390	U
91-94-1	3,3-Dichlorobenzidine	390	U
99-09-2	3-Nitroaniline	990	U
534-52-1	4,6-dinitro-2-methyl phenol	990	U
101-55-3	4-Bromophenyl-phenylether	390	U
106-47-8	4-Chloroaniline	390	U
7005-72-3	4-Chlorophenyl Phenyl Ether	390	U
100-01-6	4-Nitroaniline	990	U
100-02-7	4-Nitrophenol	990	U
59-50-7	4-chloro-3-methylphenol	390	U
106-44-5	4-methylphenol	390	U
83-32-9	Acenaphthene	390	U
208-96-8	Acenaphthylene	390	U
98-86-2	Acetophenone	390	U
120-12-7	Anthracene	390	U

UJ HT

LW 9/30/08

10

GPL Laboratories

GPL
FORM 1
ANALYSIS DATA SHEET

SAMPLE NO
MR08-SS41D-08B

Lab Name :	GPL Laboratories	Client. :	CH2M Hill Inc
Lab Code :	GPL	SAS NO. :	
Case No. :		SDG NO :	806163
Matrix : (Soil / Water)	SOIL	Lab Sample ID :	806163-010-062-1/1
Sample Volume :	30	Lab File ID :	D47002.D
% Moisture:	15.39	Date Received	06/24/2008
Extraction:	CLP_EXTRACTION	Date Extracted:	07/16/2008
Extract Volume:	.5 mL	Date Analyzed	07/19/2008
Injection Volume :	µL	Dilution Factor :	1
GPC Clean up (Y/N):	BLACK pH:		

Concentration Units (ug/L or ug/kg dry weight) : ug/kg

CAS NO	COMPOUND		Q
1912-24-9	Atrazine	390	U
100-52-7	Benzaldehyde	390	U
56-55-3	Benzo(a)anthracene	390	U
50-32-8	Benzo(a)pyrene	390	U
205-99-2	Benzo(b)fluoranthene	390	U
191-24-2	Benzo(g,h,i)perylene	390	U
207-08-9	Benzo(k)fluoranthene	390	U
85-68-7	Benzyl Butyl Phthalate	390	U
105-60-2	Caprolactam	390	U
86-74-8	Carbazole	390	U
218-01-9	Chrysene	390	U
53-70-3	Dibenz(a,h)Anthracene	390	U
132-64-9	Dibenzofuran	390	U
84-66-2	Diethyl Phthalate	390	U
131-11-3	Dimethyl Phthalate	390	U
206-44-0	Fluoranthene	390	U
86-73-7	Fluorene	390	U
118-74-1	Hexachlorobenzene	390	U
87-68-3	Hexachlorobutadiene	390	U
77-47-4	Hexachlorocyclopentadiene	390	U
67-72-1	Hexachloroethane	390	U
193-39-5	Indeno(1,2,3-c,d)Pyrene	390	U
78-59-1	Isophorone	390	U
91-20-3	Naphthalene	390	U
98-95-3	Nitrobenzene	390	U
87-86-5	Pentachlorophenol	990	U
85-01-8	Phenanthrene	390	U
108-95-2	Phenol	390	U
129-00-0	Pyrene	390	U

UJ HT

LW 9/30/08

10

GPL Laboratories

GPL
FORM 1
ANALYSIS DATA SHEET

SAMPLE NO
MR08-SS41D-08B

Lab Name :	GPL Laboratories	Client. :	CH2M Hill Inc
Lab Code :	GPL	SAS NO. :	
Case No. :		SDG NO :	806163
Matrix : (Soil / Water)	SOIL	Lab Sample ID :	806163-010-062-1/1
Sample Volume :	30	Lab File ID :	D47002.D
% Moisture:	15.39	Date Received	06/24/2008
Extraction:	CLP_EXTRACTION	Date Extracted:	07/16/2008
Extract Volume:	.5 mL	Date Analyzed	07/19/2008
Injection Volume :	µL	Dilution Factor :	1
GPC Clean up (Y/N):	BLACK pH:		

Concentration Units (ug/L or ug/kg dry weight) : ug/kg

CAS NO	COMPOUND		Q
111-91-1	bis(2-chloroethoxy) methane	390	U
111-44-4	bis(2-chloroethyl) ether	390	U
117-81-7	bis(2-ethylhexyl) phthalate	390	U
84-74-2	di-n-Butyl Phthalate	390	U
117-84-0	di-n-Octyl Phthalate	390	U
621-64-7	n-Nitrosodi-n-Propylamine	390	U
86-30-6	n-Nitrosodiphenylamine	390	U

UJ HT

ewl
9/30/08

1E
VOLATILE ORGANICS ANALYSIS DATA SHEET
TENTATIVELY IDENTIFIED COMPOUNDS

EPA SAMPLE NO.
MR08-SS41D-08B

Lab Name: GPL Laboratories, LLLP
Contract: CH2M Hill Inc
Lab Code: GPL
Case No.: NA
SAS No.: NA
SDG No.: 806163
Matrix (soil/water): SOIL
Lab Sample ID: 806163-010-062-1/1
Sample wt/vol: 30 (g/ml) g
Lab File ID: D47002.D
Level (low/med): LOW
Date Recieved 06/24/2008
% Moisture: 15.39
Date Analyzed: 07/19/2008
GC Column: RTX VOA
ID: 0.53 (mm)
Dilution Factor: 1
Soil Extract Volume: _____ (uL)
Soil Aliquot Volume: _____ (uL)

Number TICs Found: 1
Concentration Units (ug/L or ug/kg): ug/kg

#	CAS NUMBER	COMPOUND NAME	RT	EST. CONC	Q
1		unknown	13.28	5.10	~~J~~ J

hW
9/30/08

FORM I VOA-TIC

11

GPL Laboratories

GPL
FORM I
ANALYSIS DATA SHEET

SAMPLE NO
MR08-SS35-08B

Lab Name :	GPL Laboratories	Client. :	CH2M Hill Inc
Lab Code :	GPL	SAS NO. :	
Case No. :		SDG NO :	806163
Matrix : (Soil / Water)	SOIL	Lab Sample ID :	806163-011-066-1/1
Sample Volume :	30	Lab File ID :	D47003.D
% Moisture:	14.84	Date Received	06/24/2008
Extraction:	CLP_EXTRACTION	Date Extracted:	07/16/2008
Extract Volume:	.5 mL	Date Analyzed	07/19/2008
Injection Volume :	µL	Dilution Factor :	1
GPC Clean up (Y/N):	BLACK pH:		

Concentration Units (ug/L or ug/kg dry weight) : ug/kg

CAS NO	COMPOUND		Q
92-52-4	1,1- Biphenyl	390	U
108-60-1	2,2-Oxybis(1-chloropropane)	390	U
95-95-4	2,4,5-Trichlorophenol	980	U
88-06-2	2,4,6-Trichlorophenol	390	U
120-83-2	2,4-Dichlorophenol	390	U
105-67-9	2,4-Dimethylphenol	390	U
51-28-5	2,4-Dinitrophenol	980	U
121-14-2	2,4-Dinitrotoluene	390	U
606-20-2	2,6-Dinitrotoluene	390	U
91-58-7	2-Chloronaphthalene	390	U
95-57-8	2-Chlorophenol	390	U
91-57-6	2-Methylnaphthalene	390	U
88-74-4	2-Nitroaniline	980	U
88-75-5	2-Nitrophenol	390	U
95-48-7	2-methylphenol	390	U
91-94-1	3,3-Dichlorobenzidine	390	U
99-09-2	3-Nitroaniline	980	U
534-52-1	4,6-dinitro-2-methyl phenol	980	U
101-55-3	4-Bromophenyl-phenylether	390	U
106-47-8	4-Chloroaniline	390	U
7005-72-3	4-Chlorophenyl Phenyl Ether	390	U
100-01-6	4-Nitroaniline	980	U
100-02-7	4-Nitrophenol	980	U
59-50-7	4-chloro-3-methylphenol	390	U
106-44-5	4-methylphenol	390	U
83-32-9	Acenaphthene	390	U
208-96-8	Acenaphthylene	390	U
98-86-2	Acetophenone	390	U
120-12-7	Anthracene	390	U

UJ HT

LW
9/30/08

GPL Laboratories

GPL
FORM 1
ANALYSIS DATA SHEET

11

SAMPLE NO
MR08-SS35-08B

Lab Name :	GPL Laboratories	Client. :	CH2M Hill Inc
Lab Code :	GPL	SAS NO. :	
Case No. :		SDG NO :	806163
Matrix : (Soil / Water)	SOIL	Lab Sample ID :	806163-011-066-1/1
Sample Volume :	30	Lab File ID :	D47003.D
% Moisture:	14.84	Date Received	06/24/2008
Extraction:	CLP_EXTRACTION	Date Extracted:	07/16/2008
Extract Volume:	.5 mL	Date Analyzed	07/19/2008
Injection Volume :	µ L	Dilution Factor :	1
GPC Clean up (Y/N):	BLACK pH:		

Concentration Units (ug/L or ug/kg dry weight) : ug/kg

CAS NO	COMPOUND		Q
1912-24-9	Atrazine	390	U
100-52-7	Benzaldehyde	390	U
56-55-3	Benzo(a)anthracene	390	U
50-32-8	Benzo(a)pyrene	390	U
205-99-2	Benzo(b)fluoranthene	390	U
191-24-2	Benzo(g,h,i)perylene	390	U
207-08-9	Benzo(k)fluoranthene	390	U
85-68-7	Benzyl Butyl Phthalate	390	U
105-60-2	Caprolactam	390	U
86-74-8	Carbazole	390	U
218-01-9	Chrysene	390	U
53-70-3	Dibenz(a,h)Anthracene	390	U
132-64-9	Dibenzofuran	390	U
84-66-2	Diethyl Phthalate	390	U
131-11-3	Dimethyl Phthalate	390	U
206-44-0	Fluoranthene	390	U
86-73-7	Fluorene	390	U
118-74-1	Hexachlorobenzene	390	U
87-68-3	Hexachlorobutadiene	390	U
77-47-4	Hexachlorocyclopentadiene	390	U
67-72-1	Hexachloroethane	390	U
193-39-5	Indeno(1,2,3-c,d)Pyrene	390	U
78-59-1	Isophorone	390	U
91-20-3	Naphthalene	390	U
98-95-3	Nitrobenzene	390	U
87-86-5	Pentachlorophenol	980	U
85-01-8	Phenanthrene	390	U
108-95-2	Phenol	390	U
129-00-0	Pyrene	390	U

UJ HT

LW
9/30/08

GPL Laboratories

GPL
FORM 1
ANALYSIS DATA SHEET

11

SAMPLE NO
MR08-SS35-08B

Lab Name :	GPL Laboratories	Client. :	CH2M Hill Inc
Lab Code :	GPL	SAS NO. :	
Case No. :		SDG NO :	806163
Matrix : (Soil / Water)	SOIL	Lab Sample ID :	806163-011-066-1/1
Sample Volume :	30	Lab File ID :	D47003.D
% Moisture:	14.84	Date Received	06/24/2008
Extraction:	CLP_EXTRACTION	Date Extracted:	07/16/2008
Extract Volume:	.5 mL	Date Analyzed	07/19/2008
Injection Volume :	µ L	Dilution Factor :	1
GPC Clean up (Y/N):	BLACK pH:		

Concentration Units (ug/L or ug/kg dry weight) : ug/kg

CAS NO	COMPOUND		Q
111-91-1	bis(2-chloroethoxy) methane	390	U
111-44-4	bis(2-chloroethyl) ether	390	U
117-81-7	bis(2-ethylhexyl) phthalate	390	U
84-74-2	di-n-Butyl Phthalate	390	U
117-84-0	di-n-Octyl Phthalate	390	U
621-64-7	n-Nitrosodi-n-Propylamine	390	U
86-30-6	n-Nitrosodiphenylamine	390	U

UJ HT

11

1E
VOLATILE ORGANICS ANALYSIS DATA SHEET
TENTATIVELY IDENTIFIED COMPOUNDS

EPA SAMPLE NO.
MR08-SS35-08B

Lab Name: GPL Laboratories, LLLP
Contract: CH2M Hill Inc
Lab Code: GPL
Case No.: NA
SAS No.: NA
SDG No.: 806163
Matrix (soil/water): SOIL
Lab Sample ID: 806163-011-066-1/1
Sample wt/vol: 30 (g/ml) g
Lab File ID: D47003.D
Level (low/med): LOW
Date Recieved 06/24/2008
% Moisture: 14.84
Date Analyzed: 07/19/2008
GC Column: RTX VOA
ID: 0.53 (mm)
Dilution Factor: 1
Soil Extract Volume: (uL)
Soil Aliquot Volume: (uL)

Number TICs Found: 8
Concentration Units (ug/L or ug/kg): ug/kg

#	CAS NUMBER	COMPOUND NAME	RT	EST. CONC	Q
1	000112-62-9	9-Octadecenoic acid (Z)	19.38	5.00	~~JN~~
2		unknown	13.29	9.72	J
3		unknown	18.84	8.98	J
4		unknown	19.07	4.74	J
5		unknown	21.03	5.10	J
6		unknown	22.07	4.39	J
7		unknown	25.31	8.65	J
8		unknown	27.81	8.84	J

JN
J

LW
9/30/08

FORM I VOA-TIC

12

GPL Laboratories

GPL
FORM I
ANALYSIS DATA SHEET

SAMPLE NO
MR08-SS35D-08B

Lab Name :	GPL Laboratories	Client. :	CH2M Hill Inc
Lab Code :	GPL	SAS NO. :	
Case No. :		SDG NO :	806163
Matrix : (Soil / Water)	SOIL	Lab Sample ID :	806163-012-070-1/1
Sample Volume :	30.01	Lab File ID :	D47142.D
% Moisture:	16.06	Date Received	06/24/2008
Extraction:	CLP_EXTRACTION	Date Extracted:	07/16/2008
Extract Volume:	.5 mL	Date Analyzed	07/31/2008
Injection Volume :	µ L	Dilution Factor :	1
GPC Clean up (Y/N):	BLACK pH:		

Concentration Units (ug/L or ug/kg dry weight) : ug/kg

CAS NO	COMPOUND		Q
92-52-4	1,1- Biphenyl	400	U
108-60-1	2,2-Oxybis(1-chloropropane)	400	U
95-95-4	2,4,5-Trichlorophenol	990	U
88-06-2	2,4,6-Trichlorophenol	400	U
120-83-2	2,4-Dichlorophenol	400	U
105-67-9	2,4-Dimethylphenol	400	U
51-28-5	2,4-Dinitrophenol	990	U
121-14-2	2,4-Dinitrotoluene	400	U
606-20-2	2,6-Dinitrotoluene	400	U
91-58-7	2-Chloronaphthalene	400	U
95-57-8	2-Chlorophenol	400	U
91-57-6	2-Methylnaphthalene	400	U
88-74-4	2-Nitroaniline	990	U
88-75-5	2-Nitrophenol	400	U
95-48-7	2-methylphenol	400	U
91-94-1	3,3-Dichlorobenzidine	400	U
99-09-2	3-Nitroaniline	990	U
534-52-1	4,6-dinitro-2-methyl phenol	990	U
101-55-3	4-Bromophenyl-phenylether	400	U
106-47-8	4-Chloroaniline	400	U
7005-72-3	4-Chlorophenyl Phenyl Ether	400	U
100-01-6	4-Nitroaniline	990	U
100-02-7	4-Nitrophenol	990	U
59-50-7	4-chloro-3-methylphenol	400	U
106-44-5	4-methylphenol	400	U
83-32-9	Acenaphthene	400	U
208-96-8	Acenaphthylene	400	U
98-86-2	Acetophenone	400	U
120-12-7	Anthracene	400	U

UJ HT

GPL Laboratories

GPL
FORM 1
ANALYSIS DATA SHEET

12

SAMPLE NO
MR08-SS35D-08B

Lab Name :	GPL Laboratories	Client. :	CH2M Hill Inc
Lab Code :	GPL	SAS NO. :	
Case No. :		SDG NO :	806163
Matrix : (Soil / Water)	SOIL	Lab Sample ID :	806163-012-070-1/1
Sample Volume :	30.01	Lab File ID :	D47142.D
% Moisture:	16.06	Date Received	06/24/2008
Extraction:	CLP_EXTRACTION	Date Extracted:	07/16/2008
Extract Volume:	.5 mL	Date Analyzed	07/31/2008
Injection Volume :	µ L	Dilution Factor :	1
GPC Clean up (Y/N):	BLACK pH:		

Concentration Units (ug/L or ug/kg dry weight) : ug/kg

CAS NO	COMPOUND		Q
1912-24-9	Atrazine	400	U
100-52-7	Benzaldehyde	400	U
56-55-3	Benzo(a)anthracene	400	U
50-32-8	Benzo(a)pyrene	400	U
205-99-2	Benzo(b)fluoranthene	400	U
191-24-2	Benzo(g,h,i)perylene	400	U
207-08-9	Benzo(k)fluoranthene	400	U
85-68-7	Benzyl Butyl Phthalate	400	U
105-60-2	Caprolactam	400	U
86-74-8	Carbazole	400	U
218-01-9	Chrysene	400	U
53-70-3	Dibenz(a,h)Anthracene	400	U
132-64-9	Dibenzofuran	400	U
84-66-2	Diethyl Phthalate	400	U
131-11-3	Dimethyl Phthalate	400	U
206-44-0	Fluoranthene	400	U
86-73-7	Fluorene	400	U
118-74-1	Hexachlorobenzene	400	U
87-68-3	Hexachlorobutadiene	400	U
77-47-4	Hexachlorocyclopentadiene	400	U
67-72-1	Hexachloroethane	400	U
193-39-5	Indeno(1,2,3-c,d)Pyrene	400	U
78-59-1	Isophorone	400	U
91-20-3	Naphthalene	400	U
98-95-3	Nitrobenzene	400	U
87-86-5	Pentachlorophenol	990	U
85-01-8	Phenanthrene	400	U
108-95-2	Phenol	400	U
129-00-0	Pyrene	400	U

UJ HT

GPL Laboratories

GPL
FORM 1
ANALYSIS DATA SHEET

SAMPLE NO
MR08-SS35D-08B

Lab Name :	GPL Laboratories	Client. :	CH2M Hill Inc
Lab Code :	GPL	SAS NO. :	
Case No. :		SDG NO :	806163
Matrix : (Soil / Water)	SOIL	Lab Sample ID :	806163-012-070-1/1
Sample Volume :	30.01	Lab File ID :	D47142.D
% Moisture:	16.06	Date Received	06/24/2008
Extraction:	CLP_EXTRACTION	Date Extracted:	07/16/2008
Extract Volume:	.5 mL	Date Analyzed	07/31/2008
Injection Volume :	µ L	Dilution Factor :	1
GPC Clean up (Y/N):	BLACK pH:		

Concentration Units (ug/L or ug/kg dry weight) : ug/kg

CAS NO	COMPOUND		Q	
111-91-1	bis(2-chloroethoxy) methane	400	U	UJ HT
111-44-4	bis(2-chlorpethyl) ether	400	U	UJ
117-81-7	bis(2-ethylhexyl) phthalate	52	U	J
84-74-2	di-n-Butyl Phthalate	400	U	UJ
117-84-0	di-n-Octyl Phthalate	400	U	
621-64-7	n-Nitrosodi-n-Propylamine	400	U	
86-30-6	n-Nitrosodiphenylamine	400	U	

1E
VOLATILE ORGANICS ANALYSIS DATA SHEET
TENTATIVELY IDENTIFIED COMPOUNDS

EPA SAMPLE NO.
MR08-SS35D-08B

Lab Name: GPL Laboratories, LLLP
Contract: CH2M Hill Inc
Lab Code: GPL
Case No.: NA
SAS No.: NA
SDG No.: 806163
Matrix (soil/water): SOIL
Lab Sample ID: 806163-012-070-1/1
Sample wt/vol: 30.01 (g/ml) g
Lab File ID: D47142.D
Level (low/med): LOW
Date Recieved 06/24/2008
% Moisture: 16.06
Date Analyzed: 07/31/2008
GC Column: RTX VOA
ID: 0.53 (mm)
Dilution Factor: 1
Soil Extract Volume: (uL)
Soil Aliquot Volume: (uL)

Number TICs Found: 9
Concentration Units (ug/L or ug/kg): ug/kg

#	CAS NUMBER	COMPOUND NAME	RT	EST. CONC	Q
1	000057-10-3	n-Hexadecanoic acid	20.69	3.54	JN
2	000057-11-4	Octadecanoic acid	21.63	3.50	JN
3		unknown	10.74	4.52	J
4		unknown	16.17	5.31	J
5		unknown	16.33	8.17	J
6		unknown	20.93	4.36	J
7		unknown	21.18	7.020	J
8		unknown	21.58	3.27	J
9		unknown	9.17	7.050	J

JN
JN
J

MW
9/30/08

GPL Laboratories

GPL
FORM 1
ANALYSIS DATA SHEET

SAMPLE NO
MR08-FB062208

Lab Name :	GPL Laboratories	Client. :	CH2M Hill Inc
Lab Code :	GPL	SAS NO. :	
Case No. :		SDG NO :	806163
Matrix : (Soil / Water)	WATER	Lab Sample ID :	806163-013-017-1/1
Sample Volume :	1000	Lab File ID :	D47137.D
% Moisture:		Date Received	06/24/2008
Extraction:	CLP_EXTRACTION	Date Extracted:	07/16/2008
Extract Volume:	1 mL	Date Analyzed	07/31/2008
Injection Volume :	µ L	Dilution Factor :	1
GPC Clean up (Y/N):	BLACK pH:		

Concentration Units (ug/L or ug/kg dry weight) : ug/L

CAS NO	COMPOUND		Q
92-52-4	1,1- Biphenyl	10	U
108-60-1	2,2-Oxybis(1-chloropropane)	10	U
95-95-4	2,4,5-Trichlorophenol	25	U
88-06-2	2,4,6-Trichlorophenol	10	U
120-83-2	2,4-Dichlorophenol	10	U
105-67-9	2,4-Dimethylphenol	10	U
51-28-5	2,4-Dinitrophenol	25	U
121-14-2	2,4-Dinitrotoluene	10	U
606-20-2	2,6-Dinitrotoluene	10	U
91-58-7	2-Chloronaphthalene	10	U
95-57-8	2-Chlorophenol	10	U
91-57-6	2-Methylnaphthalene	10	U
88-74-4	2-Nitroaniline	25	U
88-75-5	2-Nitrophenol	10	U
95-48-7	2-methylphenol	10	U
91-94-1	3,3-Dichlorobenzidine	10	U
99-09-2	3-Nitroaniline	25	U
534-52-1	4,6-dinitro-2-methyl phenol	25	U
101-55-3	4-Bromophenyl-phenylether	10	U
106-47-8	4-Chloroaniline	10	U
7005-72-3	4-Chlorophenyl Phenyl Ether	10	U
100-01-6	4-Nitroaniline	25	U
100-02-7	4-Nitrophenol	25	U
59-50-7	4-chloro-3-methylphenol	10	U
106-44-5	4-methylphenol	10	U
83-32-9	Acenaphthene	10	U
208-96-8	Acenaphthylene	10	U
98-86-2	Acetophenone	10	U
120-12-7	Anthracene	10	U

UJ HT

lw 9/20/08

GPL Laboratories

GPL
FORM 1
ANALYSIS DATA SHEET

13

SAMPLE NO
MR08-FB062208

Lab Name :	GPL Laboratories	Client. :	CH2M Hill Inc
Lab Code :	GPL	SAS NO. :	
Case No. :		SDG NO :	806163
Matrix : (Soil / Water)	WATER	Lab Sample ID :	806163-013-017-1/1
Sample Volume :	1000	Lab File ID :	D47137.D
% Moisture:		Date Received	06/24/2008
Extraction:	CLP_EXTRACTION	Date Extracted:	07/16/2008
Extract Volume:	1 mL	Date Analyzed	07/31/2008
Injection Volume :	µ L	Dilution Factor :	1
GPC Clean up (Y/N):	BLACK pH:		

Concentration Units (ug/L or ug/kg dry weight) : ug/L

CAS NO	COMPOUND		Q
1912-24-9	Atrazine	10	U
100-52-7	Benzaldehyde	10	U
56-55-3	Benzo(a)anthracene	10	U
50-32-8	Benzo(a)pyrene	10	U
205-99-2	Benzo(b)fluoranthene	10	U
191-24-2	Benzo(g,h,i)perylene	10	U
207-08-9	Benzo(k)fluoranthene	10	U
85-68-7	Benzyl Butyl Phthalate	10	U
105-60-2	Caprolactam	10	U
86-74-8	Carbazole	10	U
218-01-9	Chrysene	10	U
53-70-3	Dibenz(a,h)Anthracene	10	U
132-64-9	Dibenzofuran	10	U
84-66-2	Diethyl Phthalate	10	U
131-11-3	Dimethyl Phthalate	10	U
206-44-0	Fluoranthene	10	U
86-73-7	Fluorene	10	U
118-74-1	Hexachlorobenzene	10	U
87-68-3	Hexachlorobutadiene	10	U
77-47-4	Hexachlorocyclopentadiene	10	U
67-72-1	Hexachloroethane	10	U
193-39-5	Indeno(1,2,3-c,d)Pyrene	10	U
78-59-1	Isophorone	10	U
91-20-3	Naphthalene	10	U
98-95-3	Nitrobenzene	10	U
87-86-5	Pentachlorophenol	25	U
85-01-8	Phenanthrene	10	U
108-95-2	Phenol	10	U
129-00-0	Pyrene	10	U

UJ HT

GPL Laboratories

GPL
FORM 1
ANALYSIS DATA SHEET

SAMPLE NO
MR08-FB062208

Lab Name :	GPL Laboratories	Client. :	CH2M Hill Inc
Lab Code :	GPL	SAS NO. :	
Case No. :		SDG NO :	806163
Matrix : (Soil / Water)	WATER	Lab Sample ID :	806163-013-017-1/1
Sample Volume :	1000	Lab File ID :	D47137.D
% Moisture:		Date Received	06/24/2008
Extraction:	CLP_EXTRACTION	Date Extracted:	07/16/2008
Extract Volume:	1 mL	Date Analyzed	07/31/2008
Injection Volume :	µ L	Dilution Factor :	1
GPC Clean up (Y/N):	BLACK pH:		

Concentration Units (ug/L or ug/kg dry weight) : ug/L

CAS NO	COMPOUND		Q
111-91-1	bis(2-chloroethoxy) methane	10	U
111-44-4	bis(2-chloroethyl) ether	10	U
117-81-7	bis(2-ethylhexyl) phthalate	10	U
84-74-2	di-n-Butyl Phthalate	10	U
117-84-0	di-n-Octyl Phthalate	10	U
621-64-7	n-Nitrosodi-n-Propylamine	10	U
86-30-6	n-Nitrosodiphenylamine	10	U

UJ HT

1E
VOLATILE ORGANICS ANALYSIS DATA SHEET
TENTATIVELY IDENTIFIED COMPOUNDS

EPA SAMPLE NO.
MR08-FB062208

Lab Name: GPL Laboratories, LLLP
Contract: CH2M Hill Inc
Lab Code: GPL
Case No.: NA
SAS No.: NA
SDG No.: 806163
Matrix (soil/water): WATER
Lab Sample ID: 806163-013-017-1/1
Sample wt/vol: 1000 (g/ml) ml
Lab File ID: D47137.D
Level (low/med): LOW
Date Recieved 06/24/2008
% Moisture:
Date Analyzed: 07/31/2008
GC Column: RTX VOA
ID: 0.53 (mm)
Dilution Factor: 1
Soil Extract Volume: (uL)
Soil Aliquot Volume: (uL)

Number TICs Found: 6
Concentration Units (ug/L or ug/kg): ug/L

#	CAS NUMBER	COMPOUND NAME	RT	EST. CONC	Q
1		unknown	10.73	2.62	J
2		unknown	12.75	3.78	J
3		unknown	16.17	6.99	J
4		unknown	16.33	11	J
5		unknown	8.62	4.24	J
6		unknown	9.17	5.20	J

J

GPL Laboratories

GPL
FORM 1
ANALYSIS DATA SHEET

SAMPLE NO
MR08-EB062208

Lab Name :	GPL Laboratories	Client. :	CH2M Hill Inc
Lab Code :	GPL	SAS NO. :	
Case No. :		SDG NO :	806163
Matrix : (Soil / Water)	WATER	Lab Sample ID :	806163-014-024-1/1
Sample Volume :	1000	Lab File ID :	D47138.D
% Moisture:		Date Received	06/24/2008
Extraction:	CLP_EXTRACTION	Date Extracted:	07/16/2008
Extract Volume:	1 mL	Date Analyzed	07/31/2008
Injection Volume :	µL	Dilution Factor :	1
GPC Clean up (Y/N):	BLACK pH:		

Concentration Units (ug/L or ug/kg dry weight) : ug/L

CAS NO	COMPOUND		Q
92-52-4	1,1- Biphenyl	10	U
108-60-1	2,2-Oxybis(1-chloropropane)	10	U
95-95-4	2,4,5-Trichlorophenol	25	U
88-06-2	2,4,6-Trichlorophenol	10	U
120-83-2	2,4-Dichlorophenol	10	U
105-67-9	2,4-Dimethylphenol	10	U
51-28-5	2,4-Dinitrophenol	25	U
121-14-2	2,4-Dinitrotoluene	10	U
606-20-2	2,6-Dinitrotoluene	10	U
91-58-7	2-Chloronaphthalene	10	U
95-57-8	2-Chlorophenol	10	U
91-57-6	2-Methylnaphthalene	10	U
88-74-4	2-Nitroaniline	25	U
88-75-5	2-Nitrophenol	10	U
95-48-7	2-methylphenol	10	U
91-94-1	3,3-Dichlorobenzidine	10	U
99-09-2	3-Nitroaniline	25	U
534-52-1	4,6-dinitro-2-methyl phenol	25	U
101-55-3	4-Bromophenyl-phenylether	10	U
106-47-8	4-Chloroaniline	10	U
7005-72-3	4-Chlorophenyl Phenyl Ether	10	U
100-01-6	4-Nitroaniline	25	U
100-02-7	4-Nitrophenol	25	U
59-50-7	4-chloro-3-methylphenol	10	U
106-44-5	4-methylphenol	10	U
83-32-9	Acenaphthene	10	U
208-96-8	Acenaphthylene	10	U
98-86-2	Acetophenone	10	U
120-12-7	Anthracene	10	U

UJ HT

fw 9/30/08

GPL Laboratories

GPL
FORM 1
ANALYSIS DATA SHEET

SAMPLE NO
MR08-EB062208

Lab Name :	GPL Laboratories	Client. :	CH2M Hill Inc
Lab Code :	GPL	SAS NO. :	
Case No. :		SDG NO :	806163
Matrix : (Soil / Water)	WATER	Lab Sample ID :	806163-014-024-1/1
Sample Volume :	1000	Lab File ID :	D47138.D
% Moisture:		Date Received	06/24/2008
Extraction:	CLP_EXTRACTION	Date Extracted:	07/16/2008
Extract Volume:	1 mL	Date Analyzed	07/31/2008
Injection Volume :	µ L	Dilution Factor :	1
GPC Clean up (Y/N):	BLACK pH:		

Concentration Units (ug/L or ug/kg dry weight) : ug/L

CAS NO	COMPOUND		Q
1912-24-9	Atrazine	10	U
100-52-7	Benzaldehyde	10	U
56-55-3	Benzo(a)anthracene	10	U
50-32-8	Benzo(a)pyrene	10	U
205-99-2	Benzo(b)fluoranthene	10	U
191-24-2	Benzo(g,h,i)perylene	10	U
207-08-9	Benzo(k)fluoranthene	10	U
85-68-7	Benzyl Butyl Phthalate	10	U
105-60-2	Caprolactam	10	U
86-74-8	Carbazole	10	U
218-01-9	Chrysene	10	U
53-70-3	Dibenz(a,h)Anthracene	10	U
132-64-9	Dibenzofuran	10	U
84-66-2	Diethyl Phthalate	10	U
131-11-3	Dimethyl Phthalate	10	U
206-44-0	Fluoranthene	10	U
86-73-7	Fluorene	10	U
118-74-1	Hexachlorobenzene	10	U
87-68-3	Hexachlorobutadiene	10	U
77-47-4	Hexachlorocyclopentadiene	10	U
67-72-1	Hexachloroethane	10	U
193-39-5	Indeno(1,2,3-c,d)Pyrene	10	U
78-59-1	Isophorone	10	U
91-20-3	Naphthalene	10	U
98-95-3	Nitrobenzene	10	U
87-86-5	Pentachlorophenol	25	U
85-01-8	Phenanthrene	10	U
108-95-2	Phenol	10	U
129-00-0	Pyrene	10	U

UJ HT

MW 9/26/08

GPL Laboratories

GPL
FORM 1
ANALYSIS DATA SHEET

SAMPLE NO
MR08-EB062208

Lab Name :	GPL Laboratories	Client. :	CH2M Hill Inc
Lab Code :	GPL	SAS NO. :	
Case No. :		SDG NO :	806163
Matrix : (Soil / Water)	WATER	Lab Sample ID :	806163-014-024-1/1
Sample Volume :	1000	Lab File ID :	D47138.D
% Moisture:		Date Received	06/24/2008
Extraction:	CLP_EXTRACTION	Date Extracted:	07/16/2008
Extract Volume:	1 mL	Date Analyzed	07/31/2008
Injection Volume :	µ L	Dilution Factor :	1
GPC Clean up (Y/N):	BLACK pH:		

Concentration Units (ug/L or ug/kg dry weight) : ug/L

CAS NO	COMPOUND		Q
111-91-1	bis(2-chloroethoxy) methane	10	U
111-44-4	bis(2-chloroethyl) ether	10	U
117-81-7	bis(2-ethylhexyl) phthalate	10	U
84-74-2	di-n-Butyl Phthalate	10	U
117-84-0	di-n-Octyl Phthalate	10	U
621-64-7	n-Nitrosodi-n-Propylamine	10	U
86-30-6	n-Nitrosodiphenylamine	10	U

UJ HT

MW 9/22/08

1E
VOLATILE ORGANICS ANALYSIS DATA SHEET
TENTATIVELY IDENTIFIED COMPOUNDS

EPA SAMPLE NO.
MR08-EB062208

Lab Name: GPL Laboratories, LLLP
Contract: CH2M Hill Inc
Lab Code: GPL
Case No.: NA
SAS No.: NA
SDG No.: 806163
Matrix (soil/water): WATER
Lab Sample ID: 806163-014-024-1/1
Sample wt/vol: 1000 (g/ml) ml
Lab File ID: D47138.D
Level (low/med): LOW
Date Recieved 06/24/2008
% Moisture:
Date Analyzed: 07/31/2008
GC Column: RTX VOA
ID: 0.53 (mm)
Dilution Factor: 1
Soil Extract Volume: (uL)
Soil Aliquot Volume: (uL)

Number TICs Found: 5
Concentration Units (ug/L or ug/kg): ug/L

#	CAS NUMBER	COMPOUND NAME	RT	EST. CONC	Q
1	000149-57-5	Hexanoic acid, 2-ethyl-	13.284	140	JN
2	000816-19-3	Hexanoic acid, 2-ethyl-,	14.764	7.14	JN
3	035007-52-4	.alpha.-D-	14.969	11	JN
4	056554-54-2	Butanoic acid, 2-ethyl-,	14.627	9.72	JN
5	067024-46-8	Isopropyl 2-	14.513	8.46	JN

JN

FORM I VOA-TIC

14RE

GPL Laboratories

GPL
FORM 1
ANALYSIS DATA SHEET

SAMPLE NO
MR08-EB062208RE

Lab Name :	GPL Laboratories	Client. :	CH2M Hill Inc
Lab Code :	GPL	SAS NO. :	
Case No. :		SDG NO :	806163
Matrix : (Soil / Water)	WATER	Lab Sample ID :	806163-014-024-1/1
Sample Volume :	1000	Lab File ID :	D47233.D
% Moisture:		Date Received	06/24/2008
Extraction:	CLP_EXTRACTION	Date Extracted:	07/16/2008
Extract Volume:	1 mL	Date Analyzed	08/05/2008
Injection Volume :	µ L	Dilution Factor :	1
GPC Clean up (Y/N):	BLACK pH:		

Use original

Concentration Units (ug/L or ug/kg dry weight) : ug/L

CAS NO	COMPOUND		Q
92-52-4	1,1- Biphenyl	10	U
108-60-1	2,2-Oxybis(1-chloropropane)	10	U
95-95-4	2,4,5-Trichlorophenol	25	U
88-06-2	2,4,6-Trichlorophenol	10	U
120-83-2	2,4-Dichlorophenol	10	U
105-67-9	2,4-Dimethylphenol	10	U
51-28-5	2,4-Dinitrophenol	25	U
121-14-2	2,4-Dinitrotoluene	10	U
606-20-2	2,6-Dinitrotoluene	10	U
91-58-7	2-Chloronaphthalene	10	U
95-57-8	2-Chlorophenol	10	U
91-57-6	2-Methylnaphthalene	10	U
88-74-4	2-Nitroaniline	25	U
88-75-5	2-Nitrophenol	10	U
95-48-7	2-methylphenol	10	U
91-94-1	3,3-Dichlorobenzidine	10	U
99-09-2	3-Nitroaniline	25	U
534-52-1	4,6-dinitro-2-methyl phenol	25	U
101-55-3	4-Bromophenyl-phenylether	10	U
106-47-8	4-Chloroaniline	10	U
7005-72-3	4-Chlorophenyl Phenyl Ether	10	U
100-01-6	4-Nitroaniline	25	U
100-02-7	4-Nitrophenol	25	U
59-50-7	4-chloro-3-methylphenol	10	U
106-44-5	4-methylphenol	10	U
83-32-9	Acenaphthene	10	U
208-96-8	Acenaphthylene	10	U
98-86-2	Acetophenone	10	U
120-12-7	Anthracene	10	U

UJ HT

LW 9/20/08

GPL Laboratories

GPL
FORM 1
ANALYSIS DATA SHEET

14RE

SAMPLE NO
MR08-EB062208RE

Lab Name :	GPL Laboratories	Client. :	CH2M Hill Inc
Lab Code :	GPL	SAS NO. :	
Case No. :		SDG NO :	806163
Matrix : (Soil / Water)	WATER	Lab Sample ID :	806163-014-024-1/1
Sample Volume :	1000	Lab File ID :	D47233.D
% Moisture:		Date Received	06/24/2008
Extraction:	CLP_EXTRACTION	Date Extracted:	07/16/2008
Extract Volume:	1 mL	Date Analyzed	08/05/2008
Injection Volume :	µ L	Dilution Factor :	1
GPC Clean up (Y/N):	BLACK pH:		

Use original

Concentration Units (ug/L or ug/kg dry weight) : ug/L

CAS NO	COMPOUND		Q
1912-24-9	Atrazine	10	U
100-52-7	Benzaldehyde	10	U
56-55-3	Benzo(a)anthracene	10	U
50-32-8	Benzo(a)pyrene	10	U
205-99-2	Benzo(b)fluoranthene	10	U
191-24-2	Benzo(g,h,i)perylene	10	U
207-08-9	Benzo(k)fluoranthene	10	U
85-68-7	Benzyl Butyl Phthalate	10	U
105-60-2	Caprolactam	10	U
86-74-8	Carbazole	10	U
218-01-9	Chrysene	10	U
53-70-3	Dibenz(a,h)Anthracene	10	U
132-64-9	Dibenzofuran	10	U
84-66-2	Diethyl Phthalate	10	U
131-11-3	Dimethyl Phthalate	10	U
206-44-0	Fluoranthene	10	U
86-73-7	Fluorene	10	U
118-74-1	Hexachlorobenzene	10	U
87-68-3	Hexachlorobutadiene	10	U
77-47-4	Hexachlorocyclopentadiene	10	U
67-72-1	Hexachloroethane	10	U
193-39-5	Indeno(1,2,3-c,d)Pyrene	10	U
78-59-1	Isophorone	10	U
91-20-3	Naphthalene	10	U
98-95-3	Nitrobenzene	10	U
87-86-5	Pentachlorophenol	25	U
85-01-8	Phenanthrene	10	U
108-95-2	Phenol	10	U
129-00-0	Pyrene	10	U

UJ HT

lw 9/22/08

GPL Laboratories

GPL
FORM 1
ANALYSIS DATA SHEET

14RE

SAMPLE NO
MR08-EB062208RE

Lab Name :	GPL Laboratories	Client. :	CH2M Hill Inc
Lab Code :	GPL	SAS NO. :	
Case No. :		SDG NO :	806163
Matrix : (Soil / Water)	WATER	Lab Sample ID :	806163-014-024-1/1
Sample Volume :	1000	Lab File ID :	D47233.D
% Moisture:		Date Received	06/24/2008
Extraction:	CLP_EXTRACTION	Date Extracted:	07/16/2008
Extract Volume:	1 mL	Date Analyzed	08/05/2008
Injection Volume :	µ L	Dilution Factor :	1
GPC Clean up (Y/N):	BLACK pH:		

Use original

Concentration Units (ug/L or ug/kg dry weight) : ug/L

CAS NO	COMPOUND		Q
111-91-1	bis(2-chloroethoxy) methane	10	U
111-44-4	bis(2-chloroethyl) ether	10	U
117-81-7	bis(2-ethylhexyl) phthalate	10	U
84-74-2	di-n-Butyl Phthalate	10	U
117-84-0	di-n-Octyl Phthalate	10	U
621-64-7	n-Nitrosodi-n-Propylamine	10	U
86-30-6	n-Nitrosodiphenylamine	10	U

UJ HT

14RE

1E
VOLATILE ORGANICS ANALYSIS DATA SHEET
TENTATIVELY IDENTIFIED COMPOUNDS

EPA SAMPLE NO.
MR08-EB062208RE

Lab Name: GPL Laboratories, LLLP
Contract: CH2M Hill Inc
Lab Code: GPL
Case No.: NA
SAS No.: NA
SDG No.: 806163
Matrix (soil/water): WATER
Lab Sample ID: 806163-014-024-1/1
Sample wt/vol: 1000 (g/ml) ml
Lab File ID: D47233.D
Level (low/med): LOW
Date Recieved 06/24/2008
% Moisture:
Date Analyzed: 08/05/2008
GC Column: RTX VOA
ID: 0.53 (mm)
Dilution Factor: 1
Soil Extract Volume: (uL)
Soil Aliquot Volume: (uL)

use orig. NR

Number TICs Found: 6
Concentration Units (ug/L or ug/kg): ug/L

#	CAS NUMBER	COMPOUND NAME	RT	EST. CONC	Q
1		unknown	13.28	160	J
2		unknown	14.51	8.52	J
3		unknown	14.62	9.94	J
4		unknown	14.76	7.35	J
5		unknown	14.96	11	J
6		unknown	15.05	7.48	J

J

FORM I VOA-TIC

fw 9/30/08

15

GPL Laboratories

GPL
FORM I
ANALYSIS DATA SHEET

SAMPLE NO
MR08-SS37-08B

Lab Name :	GPL Laboratories	Client. :	CH2M Hill Inc
Lab Code :	GPL	SAS NO. :	
Case No. :		SDG NO :	806163
Matrix : (Soil / Water)	SOIL	Lab Sample ID :	806163-015-074-1/1
Sample Volume :	29.99	Lab File ID :	D47215.D
% Moisture:	7.26	Date Received	06/24/2008
Extraction:	CLP_EXTRACTION	Date Extracted:	07/16/2008
Extract Volume:	.5 mL	Date Analyzed	08/04/2008
Injection Volume :	µL	Dilution Factor :	1
GPC Clean up (Y/N):	BLACK pH:		

Concentration Units (ug/L or ug/kg dry weight) : ug/kg

CAS NO	COMPOUND		Q
92-52-4	1,1- Biphenyl	360	U
108-60-1	2,2-Oxybis(1-chloropropane)	360	U
95-95-4	2,4,5-Trichlorophenol	900	U
88-06-2	2,4,6-Trichlorophenol	360	U
120-83-2	2,4-Dichlorophenol	360	U
105-67-9	2,4-Dimethylphenol	360	U
51-28-5	2,4-Dinitrophenol	900	U
121-14-2	2,4-Dinitrotoluene	360	U
606-20-2	2,6-Dinitrotoluene	360	U
91-58-7	2-Chloronaphthalene	360	U
95-57-8	2-Chlorophenol	360	U
91-57-6	2-Methylnaphthalene	360	U
88-74-4	2-Nitroaniline	900	U
88-75-5	2-Nitrophenol	360	U
95-48-7	2-methylphenol	360	U
91-94-1	3,3-Dichlorobenzidine	360	U
99-09-2	3-Nitroaniline	900	U
534-52-1	4,6-dinitro-2-methyl phenol	900	U
101-55-3	4-Bromophenyl-phenylether	360	U
106-47-8	4-Chloroaniline	360	U
7005-72-3	4-Chlorophenyl Phenyl Ether	360	U
100-01-6	4-Nitroaniline	900	U
100-02-7	4-Nitrophenol	900	U
59-50-7	4-chloro-3-methylphenol	360	U
106-44-5	4-methylphenol	360	U
83-32-9	Acenaphthene	360	U
208-96-8	Acenaphthylene	360	U
98-86-2	Acetophenone	360	U
120-12-7	Anthracene	360	U

UJ HT

lw 9/30/08

GPL Laboratories

GPL
FORM 1
ANALYSIS DATA SHEET

15

SAMPLE NO
MR08-SS37-08B

Lab Name :	GPL Laboratories	Client. :	CH2M Hill Inc
Lab Code :	GPL	SAS NO. :	
Case No. :		SDG NO :	806163
Matrix : (Soil / Water)	SOIL	Lab Sample ID :	806163-015-074-1/1
Sample Volume :	29.99	Lab File ID :	D47215.D
% Moisture:	7.26	Date Received	06/24/2008
Extraction:	CLP_EXTRACTION	Date Extracted:	07/16/2008
Extract Volume:	.5 mL	Date Analyzed	08/04/2008
Injection Volume :	µ L	Dilution Factor :	1
GPC Clean up (Y/N):	BLACK pH:		

Concentration Units (ug/L or ug/kg dry weight) : ug/kg

CAS NO	COMPOUND		Q
1912-24-9	Atrazine	360	U
100-52-7	Benzaldehyde	360	U
56-55-3	Benzo(a)anthracene	360	U
50-32-8	Benzo(a)pyrene	360	U
205-99-2	Benzo(b)fluoranthene	360	U
191-24-2	Benzo(g,h,i)perylene	360	U
207-08-9	Benzo(k)fluoranthene	360	U
85-68-7	Benzyl Butyl Phthalate	360	U
105-60-2	Caprolactam	360	U
86-74-8	Carbazole	360	U
218-01-9	Chrysene	360	U
53-70-3	Dibenz(a,h)Anthracene	360	U
132-64-9	Dibenzofuran	360	U
84-66-2	Diethyl Phthalate	360	U
131-11-3	Dimethyl Phthalate	360	U
206-44-0	Fluoranthene	360	U
86-73-7	Fluorene	360	U
118-74-1	Hexachlorobenzene	360	U
87-68-3	Hexachlorobutadiene	360	U
77-47-4	Hexachlorocyclopentadiene	360	U
67-72-1	Hexachloroethane	360	U
193-39-5	Indeno(1,2,3-c,d)Pyrene	360	U
78-59-1	Isophorone	360	U
91-20-3	Naphthalene	360	U
98-95-3	Nitrobenzene	360	U
87-86-5	Pentachlorophenol	900	U
85-01-8	Phenanthrene	360	U
108-95-2	Phenol	360	U
129-00-0	Pyrene	360	U

UJ HT

lw 9/30/08

GPL Laboratories

GPL
FORM 1
ANALYSIS DATA SHEET

15

SAMPLE NO
MR08-SS37-08B

Lab Name :	GPL Laboratories	Client. :	CH2M Hill Inc
Lab Code :	GPL	SAS NO. :	
Case No. :		SDG NO :	806163
Matrix : (Soil / Water)	SOIL	Lab Sample ID :	806163-015-074-1/1
Sample Volume :	29.99	Lab File ID :	D47215.D
% Moisture:	7.26	Date Received	06/24/2008
Extraction:	CLP_EXTRACTION	Date Extracted:	07/16/2008
Extract Volume:	.5 mL	Date Analyzed	08/04/2008
Injection Volume :	µ L	Dilution Factor :	1
GPC Clean up (Y/N):	BLACK pH:		

Concentration Units (ug/L or ug/kg dry weight) : ug/kg

CAS NO	COMPOUND		Q
111-91-1	bis(2-chloroethoxy) methane	360	U
111-44-4	bis(2-chloroethyl) ether	360	U
117-81-7	bis(2-ethylhexyl) phthalate	360	U
84-74-2	di-n-Butyl Phthalate	360	U
117-84-0	di-n-Octyl Phthalate	360	U
621-64-7	n-Nitrosodi-n-Propylamine	360	U
86-30-6	n-Nitrosodiphenylamine	360	U

UJ HT

1E

VOLATILE ORGANICS ANALYSIS DATA SHEET
TENTATIVELY IDENTIFIED COMPOUNDS

EPA SAMPLE NO.
MR08-SS37-08B

Lab Name: GPL Laboratories, LLLP
Contract: CH2M Hill Inc
Lab Code: GPL
Case No.: NA
SAS No.: NA
SDG No.: 806163
Matrix (soil/water): SOIL
Lab Sample ID: 806163-015-074-1/1
Sample wt/vol: 29.99 (g/ml) g
Lab File ID: D47215.D
Level (low/med): LOW
Date Recieved 06/24/2008
% Moisture: 7.26
Date Analyzed: 08/04/2008
GC Column: RTX VOA
ID: 0.53 (mm)
Dilution Factor: 1
Soil Extract Volume: _____ (uL)
Soil Aliquot Volume: _____ (uL)

Number TICs Found: 6
Concentration Units (ug/L or ug/kg): ug/kg

#	CAS NUMBER	COMPOUND NAME	RT	EST. CONC	Q
1		unknown	10.74	3.78	J
2		unknown	11.09	2.18	J
3		unknown	16.16	6.030	J
4		unknown	16.32	8.98	J
5		unknown	25.97	6.57	J
6		unknown	9.16	6.060	J

J

FORM I VOA-TIC

9/24/08

GPL Laboratories

GPL
FORM 1
ANALYSIS DATA SHEET

15RE

SAMPLE NO
MR08-SS37-08BRE

Lab Name :	GPL Laboratories	Client. :	CH2M Hill Inc
Lab Code :	GPL	SAS NO. :	
Case No. :		SDG NO :	806163
Matrix : (Soil / Water)	SOIL	Lab Sample ID :	806163-015-074-1/1
Sample Volume :	29.99	Lab File ID :	D47399.D
% Moisture:	7.26	Date Received	06/24/2008
Extraction:	CLP_EXTRACTION	Date Extracted:	07/16/2008
Extract Volume:	.5 mL	Date Analyzed	08/13/2008
Injection Volume :	µL	Dilution Factor :	1
GPC Clean up (Y/N):	BLACK pH:		

use original

Concentration Units (ug/L or ug/kg dry weight) : ug/kg

CAS NO	COMPOUND		Q	
92-52-4	1,1- Biphenyl	360	U	R ISL
108-60-1	2,2-Oxybis(1-chloropropane)	360	U	R ISL
95-95-4	2,4,5-Trichlorophenol	900	U	R ISL
88-06-2	2,4,6-Trichlorophenol	360	U	R ISL
120-83-2	2,4-Dichlorophenol	360	U	R ISL
105-67-9	2,4-Dimethylphenol	360	U	R ISL
51-28-5	2,4-Dinitrophenol	900	U	R ISL
121-14-2	2,4-Dinitrotoluene	360	U	R ISL
606-20-2	2,6-Dinitrotoluene	360	U	R ISL
91-58-7	2-Chloronaphthalene	360	U	R ISL
95-57-8	2-Chlorophenol	360	U	R ISL
91-57-6	2-Methylnaphthalene	360	U	R ISL
88-74-4	2-Nitroaniline	900	U	R ISL
88-75-5	2-Nitrophenol	360	U	R ISL
95-48-7	2-methylphenol	360	U	R ISL
91-94-1	3,3-Dichlorobenzidine	360	U	UJ HT
99-09-2	3-Nitroaniline	900	U	R ISL
534-52-1	4,6-dinitro-2-methyl phenol	900	U	UJ HT
101-55-3	4-Bromophenyl-phenylether	360	U	UJ HT
106-47-8	4-Chloroaniline	360	U	R ISL
7005-72-3	4-Chlorophenyl Phenyl Ether	360	U	R ISL
100-01-6	4-Nitroaniline	900	U	R ISL
100-02-7	4-Nitrophenol	900	U	R ISL
59-50-7	4-chloro-3-methylphenol	360	U	R ISL
106-44-5	4-methylphenol	360	U	R ISL
83-32-9	Acenaphthene	360	U	R ISL
208-96-8	Acenaphthylene	360	U	R ISL
98-86-2	Acetophenone	600		J ISL
120-12-7	Anthracene	360	U	UJ HT

lw 9/30/08

GPL Laboratories

GPL
FORM I
ANALYSIS DATA SHEET

15RE

SAMPLE NO
MR08-SS37-08BRE

Lab Name :	GPL Laboratories	Client. :	CH2M Hill Inc
Lab Code :	GPL	SAS NO. :	
Case No. :		SDG NO :	806163
Matrix : (Soil / Water)	SOIL	Lab Sample ID :	806163-015-074-1/1
Sample Volume :	29.99	Lab File ID :	D47399.D
% Moisture:	7.26	Date Received	06/24/2008
Extraction:	CLP_EXTRACTION	Date Extracted:	07/16/2008
Extract Volume:	.5 mL	Date Analyzed	08/13/2008
Injection Volume :	µ L	Dilution Factor :	1
GPC Clean up (Y/N):	BLACK pH:		

Use original

Concentration Units (ug/L or ug/kg dry weight) : ug/kg

CAS NO	COMPOUND		Q	
1912-24-9	Atrazine	360	U	UJ HT
100-52-7	Benzaldehyde	360	U	R ISL
56-55-3	Benzo(a)anthracene	360	U	UJ HT
50-32-8	Benzo(a)pyrene	360	U	
205-99-2	Benzo(b)fluoranthene	360	U	
191-24-2	Benzo(g,h,i)perylene	360	U	
207-08-9	Benzo(k)fluoranthene	360	U	
85-68-7	Benzyl Butyl Phthalate	360	U	
105-60-2	Caprolactam	360	U	R ISL
86-74-8	Carbazole	360	U	UJ HT
218-01-9	Chrysene	360	U	
53-70-3	Dibenz(a,h)Anthracene	360	U	
132-64-9	Dibenzofuran	360	U	R ISL
84-66-2	Diethyl Phthalate	41	J	J ISL
131-11-3	Dimethyl Phthalate	360	U	R ISL
206-44-0	Fluoranthene	360	U	UJ HT
86-73-7	Fluorene	360	U	R ISL
118-74-1	Hexachlorobenzene	360	U	UJ HT
87-68-3	Hexachlorobutadiene	360	U	R ISL
77-47-4	Hexachlorocyclopentadiene	360	U	R ISL
67-72-1	Hexachloroethane	360	U	R ISL
193-39-5	Indeno(1,2,3-c,d)Pyrene	360	U	UJ HT
78-59-1	Isophorone	360	U	R ISL
91-20-3	Naphthalene	360	U	R ISL
98-95-3	Nitrobenzene	360	U	R ISL
87-86-5	Pentachlorophenol	900	U	UJ HT
85-01-8	Phenanthrene	360	U	UJ HT
108-95-2	Phenol	360	U	R ISL
129-00-0	Pyrene	360	U	UJ HT

GPL Laboratories

GPL
FORM I
ANALYSIS DATA SHEET

15RE

SAMPLE NO
MR08-SS37-08BRE

Lab Name :	GPL Laboratories	Client. :	CH2M Hill Inc
Lab Code :	GPL	SAS NO. :	
Case No. :		SDG NO :	806163
Matrix : (Soil / Water)	SOIL	Lab Sample ID :	806163-015-074-1/1
Sample Volume :	29.99	Lab File ID :	D47399.D
% Moisture:	7.26	Date Received	06/24/2008
Extraction:	CLP_EXTRACTION	Date Extracted:	07/16/2008
Extract Volume:	.5 mL	Date Analyzed	08/13/2008
Injection Volume :	µ L	Dilution Factor :	1
GPC Clean up (Y/N):	BLACK pH:		

Use original

Concentration Units (ug/L or ug/kg dry weight) : ug/kg

CAS NO	COMPOUND		Q	
111-91-1	bis(2-chloroethoxy) methane	360	~~U~~	R ISL
111-44-4	bis(2-chloroethyl) ether	360	~~U~~	R ISL
117-81-7	bis(2-ethylhexyl) phthalate	360	U	UJ HT
84-74-2	di-n-Butyl Phthalate	360	U	↓ ↓
117-84-0	di-n-Octyl Phthalate	360	U	
621-64-7	n-Nitrosodi-n-Propylamine	360	~~U~~	R ISL
86-30-6	n-Nitrosodiphenylamine	360	U	UJ HT

15RE

1E

VOLATILE ORGANICS ANALYSIS DATA SHEET
TENTATIVELY IDENTIFIED COMPOUNDS

EPA SAMPLE NO.

MR08-SS37-08BRE

Lab Name: GPL Laboratories, LLLP Contract: CH2M Hill Inc

Lab Code: GPL Case No.: NA SAS No.: NA SDG No.: 806163

Matrix (soil/water): SOIL Lab Sample ID: 806163-015-074-1/1

Sample wt/vol: 29.99 (g/ml) g Lab File ID: D47399.D

Level (low/med): LOW Date Recieved 06/24/2008

% Moisture: 7.26 Date Analyzed: 08/13/2008

GC Column: RTX VOA ID: 0.53 (mm) Dilution Factor: 1 use original

Soil Extract Volume: _____ (uL) Soil Aliquot Volume: _____ (uL)

Number TICs Found: 4 Concentration Units (ug/L or ug/kg): ug/kg

#	CAS NUMBER	COMPOUND NAME	RT	EST. CONC	Q
1		unknown	15.32	22	J
2		unknown	23.78	2.28	J
3		unknown	33.47	3.10	J
4		unknown	9.68	22	J

J

FORM I VOA-TIC

GPL Laboratories

GPL
FORM 1
ANALYSIS DATA SHEET

14

SAMPLE NO
MR08-SS36-08B

Lab Name :	GPL Laboratories	Client. :	CH2M Hill Inc
Lab Code :	GPL	SAS NO. :	
Case No. :		SDG NO :	806163
Matrix : (Soil / Water)	SOIL	Lab Sample ID :	806163-016-078-1/1
Sample Volume :	30	Lab File ID :	D47234.D
% Moisture:	9.96	Date Received	06/24/2008
Extraction:	CLP_EXTRACTION	Date Extracted:	07/16/2008
Extract Volume:	.5 mL	Date Analyzed	08/05/2008
Injection Volume :	µ L	Dilution Factor :	1
GPC Clean up (Y/N):	BLACK pH:		

Concentration Units (ug/L or ug/kg dry weight) : ug/kg

CAS NO	COMPOUND		Q
92-52-4	1,1- Biphenyl	370	U
108-60-1	2,2-Oxybis(1-chloropropane)	370	U
95-95-4	2,4,5-Trichlorophenol	930	U
88-06-2	2,4,6-Trichlorophenol	370	U
120-83-2	2,4-Dichlorophenol	370	U
105-67-9	2,4-Dimethylphenol	370	U
51-28-5	2,4-Dinitrophenol	930	U
121-14-2	2,4-Dinitrotoluene	370	U
606-20-2	2,6-Dinitrotoluene	370	U
91-58-7	2-Chloronaphthalene	370	U
95-57-8	2-Chlorophenol	370	U
91-57-6	2-Methylnaphthalene	370	U
88-74-4	2-Nitroaniline	930	U
88-75-5	2-Nitrophenol	370	U
95-48-7	2-methylphenol	370	U
91-94-1	3,3-Dichlorobenzidine	370	U
99-09-2	3-Nitroaniline	930	U
534-52-1	4,6-dinitro-2-methyl phenol	930	U
101-55-3	4-Bromophenyl-phenylether	370	U
106-47-8	4-Chloroaniline	370	U
7005-72-3	4-Chlorophenyl Phenyl Ether	370	U
100-01-6	4-Nitroaniline	930	U
100-02-7	4-Nitrophenol	930	U
59-50-7	4-chloro-3-methylphenol	370	U
106-44-5	4-methylphenol	370	U
83-32-9	Acenaphthene	370	U
208-96-8	Acenaphthylene	370	U
98-86-2	Acetophenone	370	U
120-12-7	Anthracene	370	U

UJ HT

GPL Laboratories

GPL
FORM 1
ANALYSIS DATA SHEET

16

SAMPLE NO
MR08-SS36-08B

Lab Name :	GPL Laboratories	Client. :	CH2M Hill Inc
Lab Code :	GPL	SAS NO. :	
Case No. :		SDG NO :	806163
Matrix : (Soil / Water)	SOIL	Lab Sample ID :	806163-016-078-1/1
Sample Volume :	30	Lab File ID :	D47234.D
% Moisture:	9.96	Date Received	06/24/2008
Extraction:	CLP_EXTRACTION	Date Extracted:	07/16/2008
Extract Volume:	.5 mL	Date Analyzed	08/05/2008
Injection Volume :	µL	Dilution Factor :	1
GPC Clean up (Y/N):	BLACK pH:		

Concentration Units (ug/L or ug/kg dry weight) : ug/kg

CAS NO	COMPOUND		Q
1912-24-9	Atrazine	370	U
100-52-7	Benzaldehyde	370	U
56-55-3	Benzo(a)anthracene	370	U
50-32-8	Benzo(a)pyrene	370	U
205-99-2	Benzo(b)fluoranthene	370	U
191-24-2	Benzo(g,h,i)perylene	370	U
207-08-9	Benzo(k)fluoranthene	370	U
85-68-7	Benzyl Butyl Phthalate	370	U
105-60-2	Caprolactam	370	U
86-74-8	Carbazole	370	U
218-01-9	Chrysene	370	U
53-70-3	Dibenz(a,h)Anthracene	370	U
132-64-9	Dibenzofuran	370	U
84-66-2	Diethyl Phthalate	370	U
131-11-3	Dimethyl Phthalate	370	U
206-44-0	Fluoranthene	370	U
86-73-7	Fluorene	370	U
118-74-1	Hexachlorobenzene	370	U
87-68-3	Hexachlorobutadiene	370	U
77-47-4	Hexachlorocyclopentadiene	370	U
67-72-1	Hexachloroethane	370	U
193-39-5	Indeno(1,2,3-c,d)Pyrene	370	U
78-59-1	Isophorone	370	U
91-20-3	Naphthalene	370	U
98-95-3	Nitrobenzene	370	U
87-86-5	Pentachlorophenol	930	U
85-01-8	Phenanthrene	370	U
108-95-2	Phenol	370	U
129-00-0	Pyrene	370	U

UJ HT

GPL Laboratories

GPL
FORM 1
ANALYSIS DATA SHEET

16

SAMPLE NO
MR08-SS36-08B

Lab Name :	GPL Laboratories	Client. :	CH2M Hill Inc
Lab Code :	GPL	SAS NO. :	
Case No. :		SDG NO :	806163
Matrix : (Soil / Water)	SOIL	Lab Sample ID :	806163-016-078-1/1
Sample Volume :	30	Lab File ID :	D47234.D
% Moisture:	9.96	Date Received	06/24/2008
Extraction:	CLP_EXTRACTION	Date Extracted:	07/16/2008
Extract Volume:	.5 mL	Date Analyzed	08/05/2008
Injection Volume :	µL	Dilution Factor :	1
GPC Clean up (Y/N):	BLACK pH:		

Concentration Units (ug/L or ug/kg dry weight) : ug/kg

CAS NO	COMPOUND		Q		
111-91-1	bis(2-chloroethoxy) methane	370	U	UJ	HT
111-44-4	bis(2-chloroethyl) ether	370	U	UJ	
117-81-7	bis(2-ethylhexyl) phthalate	75	J	J	
84-74-2	di-n-Butyl Phthalate	370	U	UJ	
117-84-0	di-n-Octyl Phthalate	370	U		
621-64-7	n-Nitrosodi-n-Propylamine	370	U		
86-30-6	n-Nitrosodiphenylamine	370	U		

lw
9/3/08

1E
VOLATILE ORGANICS ANALYSIS DATA SHEET
TENTATIVELY IDENTIFIED COMPOUNDS

EPA SAMPLE NO.
MR08-SS36-08B

Lab Name: GPL Laboratories, LLLP
Contract: CH2M Hill Inc
Lab Code: GPL
Case No.: NA
SAS No.: NA
SDG No.: 806163
Matrix (soil/water): SOIL
Lab Sample ID: 806163-016-078-1/1
Sample wt/vol: 30 (g/ml) g
Lab File ID: D47234.D
Level (low/med): LOW
Date Recieved 06/24/2008
% Moisture: 9.96
Date Analyzed: 08/05/2008
GC Column: RTX VOA
ID: 0.53 (mm)
Dilution Factor: 1
Soil Extract Volume: _____ (uL)
Soil Aliquot Volume: _____ (uL)

Number TICs Found: 4
Concentration Units (ug/L or ug/kg): ug/kg

#	CAS NUMBER	COMPOUND NAME	RT	EST. CONC	Q
1		unknown	16.16	5.50	~~J~~ J
2		unknown	16.31	8.25	J
3		unknown	8.82	2.52	J
4		unknown	9.14	5.92	J

DW 9/30/08

ENVIRONMENTAL
Data Services, Inc.

EXPLOSIVES

USEPA Region IV - Level IV Review

Site: MCB Camp Lejeune, UXO-08, CTO-168 SDG #: 807036

Client: CH2M HILL, Inc., Virginia Beach, Virginia Date: September 30, 2008

Laboratory: GPL Laboratories, Frederick, Maryland Reviewer: Nancy Weaver

EDS ID	Client Sample ID	Laboratory Sample ID	Matrix
1	IR78-GW66-08C	807036-001	Water
2	IR78-GW65-08C	807036-003	Water
3	IR78-EB070708	807036-005	Water

The USEPA "Contract Laboratory Program National Functional Guidelines for Organic Data Review," October 1999, and professional judgement were used in evaluating the data in this summary report.

Holding Times - All samples were extracted within 7 days for water samples and analyzed within 40 days.

Initial Calibration - The initial calibrations exhibited acceptable %RSD and/or correlation coefficient values.

Calibration Verification - The continuing calibrations exhibited acceptable %D values.

Surrogates - All samples exhibited acceptable surrogate recoveries.

MS/MSD - A MS/MSD sample was not analyzed.

Laboratory Control Sample - The LCS samples exhibited acceptable %R values.

Method Blank - The method blanks were free of contamination.

Field and Equipment Blank - Field QC results are summarized below.

Blank ID	Compound	Conc. ug/L	Action Level ug/L	Qualifier	Affected Samples
IR78-FB070908	None - ND	-	-	-	-
IR78-EB070708	None - ND	-	-	-	-

Field Duplicates - Field duplicate samples were not included in this data package.

Compound Identification - Retention times were acceptable and no further action was taken.

Compound Quantitation - No discrepancies were identified.

GPL Laboratories

GPL
FORM 1
ANALYSIS DATA SHEET

SAMPLE NO
IR78-GW66-08C

Lab Name :	GPL Laboratories	Client. :	CH2M Hill Inc
Lab Code :	GPL	SAS NO. :	
Case No. :		SDG NO :	807036
Matrix : (Soil / Water)	WATER	Lab Sample ID :	807036-001-001-1/1
Sample Volume :	1000	Lab File ID :	LCD42366.D
% Moisture:		Date Received	07/08/2008
Extraction:	EXT_SW8330	Date Extracted:	07/09/2008
Extract Volume:	20 mL	Date Analyzed	07/23/2008
Injection Volume :	100 µ L	Dilution Factor :	1
GPC Clean up (Y/N):	N pH:		

Concentration Units (ug/L or ug/kg dry weight) : ug/L

CAS NO	COMPOUND		Q
99-35-4	1,3,5-Trinitrobenzene	0.20	U
99-65-0	1,3-Dinitrobenzene	0.20	U
118-96-7	2,4,6-Trinitrotoluene	0.20	U
121-14-2	2,4-Dinitrotoluene	0.20	U
606-20-2	2,6-Dinitrotoluene	0.20	U
35572-78-2	2-Amino-4,6-Dinitrotoluene	0.20	U
19406-51-0	4-Amino-2,6-Dinitrotoluene	0.20	U
2691-41-0	HMX	0.40	U
98-95-3	Nitrobenzene	0.20	U
121-82-4	RDX	0.40	U
479-45-8	Tetryl	0.40	U
99-08-1	m-Nitrotoluene	0.40	U
88-72-2	o-Nitrotoluene	0.40	U
99-99-0	p-Nitrotoluene	0.40	U

GPL Laboratories

GPL
FORM 1
ANALYSIS DATA SHEET

2

SAMPLE NO
IR78-GW65-08C

Lab Name :	GPL Laboratories	Client. :	CH2M Hill Inc
Lab Code :	GPL	SAS NO. :	
Case No. :		SDG NO :	807036
Matrix : (Soil / Water)	WATER	Lab Sample ID :	807036-003-006-1/1
Sample Volume :	1000	Lab File ID :	LCD42367.D
% Moisture:		Date Received	07/08/2008
Extraction:	EXT_SW8330	Date Extracted:	07/09/2008
Extract Volume:	20 mL	Date Analyzed	07/23/2008
Injection Volume :	100 µ L	Dilution Factor :	1
GPC Clean up (Y/N):	N pH:		

Concentration Units (ug/L or ug/kg dry weight) : ug/L

CAS NO	COMPOUND		Q
99-35-4	1,3,5-Trinitrobenzene	0.20	U
99-65-0	1,3-Dinitrobenzene	0.20	U
118-96-7	2,4,6-Trinitrotoluene	0.20	U
121-14-2	2,4-Dinitrotoluene	0.20	U
606-20-2	2,6-Dinitrotoluene	0.20	U
35572-78-2	2-Amino-4,6-Dinitrotoluene	0.20	U
19406-51-0	4-Amino-2,6-Dinitrotoluene	0.20	U
2691-41-0	HMX	0.40	U
98-95-3	Nitrobenzene	0.20	U
121-82-4	RDX	0.40	U
479-45-8	Tetryl	0.40	U
99-08-1	m-Nitrotoluene	0.40	U
88-72-2	o-Nitrotoluene	0.40	U
99-99-0	p-Nitrotoluene	0.40	U

GPL Laboratories

GPL
FORM 1
ANALYSIS DATA SHEET

3

SAMPLE NO
IR78-EB070708

Lab Name :	GPL Laboratories	Client. :	CH2M Hill Inc
Lab Code :	GPL	SAS NO. :	
Case No. :		SDG NO :	807036
Matrix : (Soil / Water)	WATER	Lab Sample ID :	807036-005-011-1/1
Sample Volume :	1000	Lab File ID :	LCD42368.D
% Moisture:		Date Received	07/08/2008
Extraction:	EXT_SW8330	Date Extracted:	07/09/2008
Extract Volume:	20 mL	Date Analyzed	07/23/2008
Injection Volume :	100 µ L	Dilution Factor :	1
GPC Clean up (Y/N):	N pH:		

Concentration Units (ug/L or ug/kg dry weight) : ug/L

CAS NO	COMPOUND		Q
99-35-4	1,3,5-Trinitrobenzene	0.20	U
99-65-0	1,3-Dinitrobenzene	0.20	U
118-96-7	2,4,6-Trinitrotoluene	0.20	U
121-14-2	2,4-Dinitrotoluene	0.20	U
606-20-2	2,6-Dinitrotoluene	0.20	U
35572-78-2	2-Amino-4,6-Dinitrotoluene	0.20	U
19406-51-0	4-Amino-2,6-Dinitrotoluene	0.20	U
2691-41-0	HMX	0.40	U
98-95-3	Nitrobenzene	0.20	U
121-82-4	RDX	0.40	U
479-45-8	Tetryl	0.40	U
99-08-1	m-Nitrotoluene	0.40	U
88-72-2	o-Nitrotoluene	0.40	U
99-99-0	p-Nitrotoluene	0.40	U

ENVIRONMENTAL
Data Services, Inc.

METALS

USEPA Region IV - Level IV Review

Site: MCB Camp Lejeune, UXO-08, CTO-168 SDG #: 807036

Client: CH2M HILL, Inc., Virginia Beach, Virginia Date: September 30, 2008

Laboratory: GPL Laboratories, Frederick, Maryland Reviewer: Nancy Weaver

EDS ID	Client Sample ID	Laboratory Sample ID	Matrix
1	IR78-GW66-08C	807036-001	Water
2	IR78-GW66-08C FIL	807036-002	Water
3	IR78-GW65-08C	807036-003	Water
4	IR78-GW65-08C FIL	807036-004	Water
5	IR78-EB070708	807036-005	Water
6	IR78-EB070708 FIL	807036-006	Water

The USEPA "Contract Laboratory Program National Functional Guidelines for Inorganic Data Review," October 2004, and professional judgement were used in evaluating the data in this summary report.

Holding Times - All samples were prepared and analyzed within 28 days for mercury and 180 days for all other metals.

Calibration - The ICV and CCV %R values were acceptable.

CRDL Standard - The CRDL standards exhibited acceptable %R values.

Method and Calibration Blanks - The method blanks and continuing calibration blanks exhibited contamination for several compounds, however, all sample results are non-detect or greater than 5X the blank concentration with the exception of the following:

Compound	Conc. ug/L	Qualifier	Affected Samples
Arsenic	2.498	U	1-4
Barium	2.679	U	All samples
Copper	1.870	U	All samples
Lead	2.189	U	1, 4
Magnesium	37.428	U	3-6

Compound	Conc. ug/L	Qualifier	Affected Samples
Mercury	0.930	U	All samples
Nickel	5.286	U	1-4
Zinc	2.790	U	All samples

Field and Equipment Blank - Field QC results are summarized below.

Blank ID	Compound	Conc. ug/L	Action Level ug/L	Qualifier	Affected Samples
IR78-FB070908	None - ND	-	-	-	-
IR78-FB070908 FIL	Arsenic	2.7	13.5	None	Already qualified due to MB
	Nickel	1.9	9.5	None	Already qualified due to MB
	Potassium	61.6	308	None	All >5X
	Sodium	406	2030	None	All >5X
IR78-EB070708	Calcium	140	700	None	All >5X
	Potassium	46.4	232	None	All >5X
IR78-EB070708 FIL	Calcium	68.8	344	None	All >5X
	Potassium	36.2	181	None	See FB

ICP Interference Check Sample - All %R values were acceptable.

Matrix Spike - The matrix spike samples exhibited acceptable %R values.

Matrix Duplicate - The matrix duplicate samples exhibited acceptable RPD values.

LCS - The LCS samples exhibited acceptable %R values.

ICP Serial Dilution - The ICP serial dilution sample exhibited acceptable %D values.

Field Duplicates - Field duplicate samples were not included in this data package.

Compound Quantitation - No discrepancies were identified.

USEPA - CLP

1A - IN

INORGANIC ANALYSIS DATA SHEET

EPA SAMPLE NO.

IR78-GW66-08C

Lab Name: GPL LABORATORIES, LL Contract:

Lab Code: Case No.: NRAS No.: SDG No.: 807036

Matrix: (soil/water) WATER Lab Sample ID: S 807036-001-002-1/1

Level: (low/med) Date Recieved: 07/08/2008

% Solids: 0.0

Concentration Units (ug/L or mg/kg dry weight): UG/L

CAS No.	Analyte	Concentration	C	Q	M	
7429-90-5	Aluminum	386			P	
7440-36-0	Antimony	60.0	U		P	
7440-38-2	Arsenic	10 ~~9.2~~	~~J~~	U	P	BL
7440-39-3	Barium	200 ~~88.0~~	~~J~~	U	P	BL
7441-41-7	Beryllium	5.0	U		P	
7440-43-9	Cadmium	5.0	U		P	
7440-70-2	Calcium	128000			P	
7440-47-3	Chromium	10.0	U		P	
7440-48-4	Cobalt	50.0	U		P	
7440-50-8	Copper	25 ~~3.3~~	~~J~~	U	P	BL
7439-89-6	Iron	1730			P	
7439-92-1	Lead	10 ~~2.6~~	~~J~~	U	P	BL
7439-95-4	Magnesium	5710			P	
7439-96-5	Manganese	246			P	
7440-02-0	Nickel	40 ~~2.9~~	~~J~~	U	P	BL
7439-97-6	Mercury	0.2 ~~0.033~~	~~J~~	U	CV	BL
7440-09-7	Potassium	2670	J		P	
7782-49-2	Selenium	35.0	U		P	
7440-22-4	Silver	10.0	U		P	
7440-23-5	Sodium	8110			P	
7440-28-0	Thallium	25.0	U		P	
7440-62-2	Vanadium	50.0	U		P	
7440-66-6	Zinc	60 ~~33.7~~	~~J~~	U	P	BL

Color Before: NA Clarity Before: NA Texture: NA

Color After: NA Clarity After: NA Artifacts: NA

Comments:

FORM IA - IN

LW 9/2/08

2

USEPA - CLP

1A - IN

INORGANIC ANALYSIS DATA SHEET

EPA SAMPLE NO.

IR78-GW66-08C FIL

Lab Name: GPL LABORATORIES, LL Contract:

Lab Code: Case No.: NRAS No.: SDG No.: 807036

Matrix: (soil/water) WATER Lab Sample ID: S 807036-002-005-1/1

Level: (low/med) Date Recieved: 07/08/2008

% Solids: 0.0

Concentration Units (ug/L or mg/kg dry weight): UG/L

CAS No.	Analyte	Concentration	C	Q	M	
7429-90-5	Aluminum	200	U		P	
7440-36-0	Antimony	3.5	J		P	
7440-38-2	Arsenic	10 ~~7.8~~	~~J~~	u	P	BL
7440-39-3	Barium	200 ~~79.6~~	~~J~~	u	P	BL
7441-41-7	Beryllium	5.0	U		P	
7440-43-9	Cadmium	5.0	U		P	
7440-70-2	Calcium	131000			P	
7440-47-3	Chromium	10.0	U		P	
7440-48-4	Cobalt	50.0	U		P	
7440-50-8	Copper	25 ~~2.1~~	~~J~~	u	P	BL
7439-89-6	Iron	899			P	
7439-92-1	Lead	10.0	U		P	
7439-95-4	Magnesium	5840			P	
7439-96-5	Manganese	244			P	
7440-02-0	Nickel	40 ~~1.5~~	~~J~~	u	P	BL
7439-97-6	Mercury	0.2 ~~0.083~~	~~J~~	u	CV	BL
7440-09-7	Potassium	2520	J		P	
7782-49-2	Selenium	35.0	U		P	
7440-22-4	Silver	10.0	U		P	
7440-23-5	Sodium	8300			P	
7440-28-0	Thallium	25.0	U		P	
7440-62-2	Vanadium	50.0	U		P	
7440-66-6	Zinc	60 ~~3.9~~	~~J~~	u	P	BL

Color Before: NA Clarity Before: NA Texture: NA

Color After: NA Clarity After: NA Artifacts: NA

Comments:

FORM IA - IN

LW 11/20/08

3

USEPA - CLP

1A - IN

INORGANIC ANALYSIS DATA SHEET

EPA SAMPLE NO.

IR78-GW65-08C

Lab Name: GPL LABORATORIES, LL Contract:

Lab Code: Case No.: NRAS No.: SDG No.: 807036

Matrix: (soil/water) WATER Lab Sample ID: S 807036-003-007-1/1

Level: (low/med) Date Recieved: 07/08/2008

% Solids: 0.0

Concentration Units (ug/L or mg/kg dry weight): UG/L

CAS No.	Analyte	Concentration	C	Q	M	
7429-90-5	Aluminum	200	U		P	
7440-36-0	Antimony	60.0	U		P	
7440-38-2	Arsenic	10 ~~5.8~~	~~J~~	U	P	BL
7440-39-3	Barium	200 ~~58.9~~	~~J~~	U	P	BL
7441-41-7	Beryllium	5.0	U		P	
7440-43-9	Cadmium	5.0	U		P	
7440-70-2	Calcium	138000			P	
7440-47-3	Chromium	10.0	U		P	
7440-48-4	Cobalt	50.0	U		P	
7440-50-8	Copper	25 ~~2.8~~	~~J~~	U	P	BL
7439-89-6	Iron	1250			P	
7439-92-1	Lead	10.0	U		P	
7439-95-4	Magnesium	5000 ~~4230~~	~~J~~	U	P	BL
7439-96-5	Manganese	292			P	
7440-02-0	Nickel	40 ~~3.0~~	~~J~~	U	P	BL
7439-97-6	Mercury	0.2 ~~0.054~~	~~J~~	U	CV	BL
7440-09-7	Potassium	1400	J		P	
7782-49-2	Selenium	35.0	U		P	
7440-22-4	Silver	10.0	U		P	
7440-23-5	Sodium	9560			P	
7440-28-0	Thallium	25.0	U		P	
7440-62-2	Vanadium	50.0	U		P	
7440-66-6	Zinc	60 ~~5.3~~	~~J~~	U	P	BL

Color Before: NA Clarity Before: NA Texture: NA

Color After: NA Clarity After: NA Artifacts: NA

Comments:

FORM IA - IN

4

USEPA - CLP

1A - IN

INORGANIC ANALYSIS DATA SHEET

EPA SAMPLE NO.

IR78-GW65-08C FIL

Lab Name: GPL LABORATORIES, LL Contract:

Lab Code: Case No.: NRAS No.: SDG No.: 807036

Matrix: (soil/water) WATER Lab Sample ID: S 807036-004-010-1/1

Level: (low/med) Date Recieved: 07/08/2008

% Solids: 0.0

Concentration Units (ug/L or mg/kg dry weight): UG/L

CAS No.	Analyte	Concentration	C	Q	M	
7429-90-5	Aluminum	200	U		P	
7440-36-0	Antimony	60.0	U		P	
7440-38-2	Arsenic	10 ~~6.6~~	~~J~~	U	P	BL
7440-39-3	Barium	200 ~~53.2~~	~~J~~	U	P	BL
7441-41-7	Beryllium	5.0	U		P	
7440-43-9	Cadmium	5.0	U		P	
7440-70-2	Calcium	134000			P	
7440-47-3	Chromium	10.0	U		P	
7440-48-4	Cobalt	50.0	U		P	
7440-50-8	Copper	25 ~~4.0~~	~~J~~	U	P	BL
7439-89-6	Iron	398			P	
7439-92-1	Lead	10 ~~3.9~~	~~J~~	U	P	BL
7439-95-4	Magnesium	5000 ~~4110~~	~~J~~	U	P	BL
7439-96-5	Manganese	302			P	
7440-02-0	Nickel	40 ~~3.4~~	~~J~~	U	P	BL
7439-97-6	Mercury	0.2 ~~0.033~~	~~J~~	U	CV	BL
7440-09-7	Potassium	1370	J		P	
7782-49-2	Selenium	35.0	U		P	
7440-22-4	Silver	10.0	U		P	
7440-23-5	Sodium	9430			P	
7440-28-0	Thallium	25.0	U		P	
7440-62-2	Vanadium	50.0	U		P	
7440-66-6	Zinc	60 ~~15.1~~	~~J~~	U	P	BL

Color Before: NA Clarity Before: NA Texture: NA

Color After: NA Clarity After: NA Artifacts: NA

Comments:

FORM IA - IN

LW 9/30/08

5

USEPA - CLP

1A - IN

INORGANIC ANALYSIS DATA SHEET

EPA SAMPLE NO.

IR78-EB070708

Lab Name: GPL LABORATORIES, LL Contract:

Lab Code: Case No.: NRAS No.: SDG No.: 807036

Matrix: (soil/water) WATER Lab Sample ID: S 807036-005-012-1/1

Level: (low/med) Date Recieved: 07/08/2008

% Solids: 0.0

Concentration Units (ug/L or mg/kg dry weight): UG/L

CAS No.	Analyte	Concentration	C	Q	M	
7429-90-5	Aluminum	200	U		P	
7440-36-0	Antimony	60.0	U		P	
7440-38-2	Arsenic	10.0	U		P	
7440-39-3	Barium	200 ~~0.41~~	~~J~~	U	P	BL
7441-41-7	Beryllium	5.0	U		P	
7440-43-9	Cadmium	5.0	U		P	
7440-70-2	Calcium	140	J		P	
7440-47-3	Chromium	10.0	U		P	
7440-48-4	Cobalt	50.0	U		P	
7440-50-8	Copper	25 ~~1.9~~	~~J~~	U	P	BL
7439-89-6	Iron	100	U		P	
7439-92-1	Lead	10.0	U		P	
7439-95-4	Magnesium	5000 ~~65.7~~	~~J~~	U	P	BL
7439-96-5	Manganese	15.0	U		P	
7439-97-6	Mercury	0.2 ~~0.062~~	~~J~~	U	CV	BL
7440-02-0	Nickel	40.0	U		P	
7440-09-7	Potassium	46.4	J		P	
7782-49-2	Selenium	35.0	U		P	
7440-22-4	Silver	10.0	U		P	
7440-23-5	Sodium	5000	U		P	
7440-28-0	Thallium	25.0	U		P	
7440-62-2	Vanadium	50.0	U		P	
7440-66-6	Zinc	60 ~~5.7~~	~~J~~	U	P	BL

Color Before: NA Clarity Before: NA Texture: NA

Color After: NA Clarity After: NA Artifacts: NA

Comments:

FORM IA - IN

LW 9/30/08

6

USEPA - CLP

1A - IN

INORGANIC ANALYSIS DATA SHEET

EPA SAMPLE NO.

IR78-EB070708 FIL

Lab Name: GPL LABORATORIES, LL Contract:

Lab Code: Case No.: NRAS No.: SDG No.: 807036

Matrix: (soil/water) WATER Lab Sample ID: S 807036-006-015-1/1

Level: (low/med) Date Recieved: 07/08/2008

% Solids: 0.0

Concentration Units (ug/L or mg/kg dry weight): UG/L

CAS No.	Analyte	Concentration	C	Q	M	
7429-90-5	Aluminum	200	U		P	
7440-36-0	Antimony	60.0	U		P	
7440-38-2	Arsenic	10.0	U		P	
7440-39-3	Barium	200 ~~0.48~~	~~J~~	U	P	BL
7441-41-7	Beryllium	5.0	U		P	
7440-43-9	Cadmium	5.0	U		P	
7440-70-2	Calcium	68.8	J		P	
7440-47-3	Chromium	10.0	U		P	
7440-48-4	Cobalt	50.0	U		P	
7440-50-8	Copper	25 ~~2.4~~	~~J~~	U	P	BL
7439-89-6	Iron	100	U		P	
7439-92-1	Lead	10.0	U		P	
7439-95-4	Magnesium	5000 ~~60.7~~	~~J~~	U	P	BL
7439-96-5	Manganese	15.0	U		P	
7439-97-6	Mercury	0.2 ~~0.037~~	~~J~~	U	CV	BL
7440-02-0	Nickel	40.0	U		P	
7440-09-7	Potassium	36.2	J		P	
7782-49-2	Selenium	35.0	U		P	
7440-22-4	Silver	10.0	U		P	
7440-23-5	Sodium	5000	U		P	
7440-28-0	Thallium	25.0	U		P	
7440-62-2	Vanadium	50.0	U		P	
7440-66-6	Zinc	60 ~~6.7~~	~~J~~	U	P	BL

Color Before: NA Clarity Before: NA Texture: NA

Color After: NA Clarity After: NA Artifacts: NA

Comments:

FORM IA - IN

ENVIRONMENTAL
Data Services, Inc.

PERCHLORATE

USEPA Region IV - Level IV Review

Site: MCB Camp Lejeune, UXO-08, CTO-168 SDG #: 807036

Client: CH2M HILL, Inc., Virginia Beach, Virginia Date: September 30, 2008

Laboratory: DataChem Laboratories, Salt Lake City, Utah Reviewer: Nancy Weaver

EDS ID	Client Sample ID	Laboratory Sample ID	Matrix
1	IR78-GW66-08C	807036-001	Water
2	IR78-GW65-08C	807036-003	Water
3	IR78-EB070708	807036-005	Water

The USEPA "Contract Laboratory Program National Functional Guidelines for Inorganic Data Review," October 2004, and professional judgement were used in evaluating the data in this summary report.

Holding Times - All samples were prepared and analyzed within 28 days for perchlorate.

Calibration - The ICV and CCV %R values were acceptable.

Method and Calibration Blanks - The method blanks and continuing calibration blanks were free of contamination.

Field and Equipment Blank - Field QC results are summarized below.

Blank ID	Compound	Conc. ug/L	Action Level ug/L	Qualifier	Affected Samples
IR78-FB070908	None - ND	-	-	-	-
IR78-EB070708	None - ND	-	-	-	-

Matrix Spike/Duplicate - The matrix spike/duplicate sample exhibited acceptable %R and RPD values.

LCS - The LCS samples exhibited acceptable %R values.

Field Duplicates - Field duplicate samples were not included in this data package.

Compound Quantitation - No discrepancies were identified.

DATA CHEM LABORATORIES
A Sorenson Company

FORM A (TYPE I)
SINGLE METHOD ANALYSES

SAMPLE ANALYSIS DATA SHEET

Form RLIMS63A-V1.4
07230816120286
Page 3

S0868029

Date Printed.....: 23-JUL-08 16:12

Client Name.....: GPL Laboratories
Client Ref Number....: 807036
Sampling Site.....: CAMP LEJEUNE UXO-08
Release Number.....: 807036

Date Received.....: 09-JUL-08 00:00

Client Sample Name: IR78-GW66-08|C
DCL Sample Name...: 08E03459
DCL Report Group..: 08E-0546-01

Matrix.....: WATER
Date Sampled.....: 07-JUL-08 15:25
Reporting Units...: ug/L
Report Basis.....: ☒ As Received ☐ Dried

DCL Preparation Group: Not Applicable
Date Prepared.....: 15-JUL-08 00:00
Preparation Method...: 6850
Aliquot Weight/Volume: Not Applicable
Net Weight/Volume....: Not Required

DCL Analysis Group: G086F00T
Analysis Method...: 6850
Instrument Type...: LC/MS
Instrument ID.....: LCMS02
Column Type.....: KP-RPPX250
☒ Primary
☐ Confirmation

Analytical Results

Analyte	Date Analyzed	MDL	Result	Comment	Qual.	Dilution	PQL
Perchlorate	17-JUL-08 18:15	0.0663	ND		U	1	0.200

NW 9/30/08

960 West LeVoy Drive / Salt Lake City, Utah 84123-2547
Phone (801) 266-7700 Web Page: www.datachem.com
FAX (801) 268-9992 E-mail: lab@datachem.com

06

2

DATA CHEM LABORATORIES
A Sorenson Company

FORM A (TYPE I)
SINGLE METHOD ANALYSES

SAMPLE ANALYSIS DATA SHEET

Form RLIMS63A-V1.4
07230816120286
Page 4

S086802B

Date Printed.....: 23-JUL-08 16:12

Client Name.....: GPL Laboratories
Client Ref Number....: 807036
Sampling Site.....: CAMP LEJEUNE UXO-08
Release Number.....: 807036

Date Received.....: 09-JUL-08 00:00

Client Sample Name: IR78-GW65-08|C
DCL Sample Name...: 08E03460
DCL Report Group..: 08E-0546-01

Matrix.....: WATER
Date Sampled.....: 07-JUL-08 15:45
Reporting Units...: ug/L
Report Basis.....: ☒ As Received ☐ Dried

DCL Preparation Group: Not Applicable
Date Prepared.....: 15-JUL-08 00:00
Preparation Method...: 6850
Aliquot Weight/Volume: Not Applicable
Net Weight/Volume....: Not Required

DCL Analysis Group: G086F00T
Analysis Method...: 6850
Instrument Type...: LC/MS
Instrument ID.....: LCMS02
Column Type.....: KP-RPPX250
☒ Primary
☐ Confirmation

Analytical Results

Analyte	Date Analyzed	MDL	Result	Comment	Qual.	Dilution	PQL
Perchlorate	17-JUL-08 18:36	0.0663	ND		U	1	0.200

UW 9/30/08

960 West LeVoy Drive / Salt Lake City, Utah 84123-2547
Phone (801) 266-7700 Web Page: www.datachem.com
FAX (801) 268-9992 E-mail: lab@datachem.com

07

DATA CHEM LABORATORIES
A Sorenson Company

FORM A (TYPE I)
SINGLE METHOD ANALYSES

SAMPLE ANALYSIS DATA SHEET

Form RLIMS63A-V1.4
07230816120286
Page 5

S086802C

Date Printed.....: 23-JUL-08 16:12

Client Name.....: GPL Laboratories
Client Ref Number....: 807036
Sampling Site.....: CAMP LEJEUNE UXO-08
Release Number.....: 807036

Date Received.....: 09-JUL-08 00:00

Client Sample Name: IR78-EB07070|8
DCL Sample Name...: 08E03461
DCL Report Group..: 08E-0546-01

Matrix.....: WATER
Date Sampled.....: 07-JUL-08 16:10
Reporting Units...: ug/L
Report Basis.....: ☒ As Received ☐ Dried

DCL Preparation Group: Not Applicable
Date Prepared.....: 15-JUL-08 00:00
Preparation Method...: 6850
Aliquot Weight/Volume: Not Applicable
Net Weight/Volume....: Not Required

DCL Analysis Group: G086F00T
Analysis Method...: 6850
Instrument Type...: LC/MS
Instrument ID.....: LCMS02
Column Type.....: KP-RPPX250
☒ Primary
☐ Confirmation

Analytical Results

Analyte	Date Analyzed	MDL	Result	Comment	Qual.	Dilution	PQL
Perchlorate	17-JUL-08 18:57	0.0663	ND		U	1	0.200

LW
9/30/08

960 West LeVoy Drive / Salt Lake City, Utah 84123-2547
Phone (801) 266-7700 Web Page: www.datachem.com
FAX (801) 268-9992 E-mail: lab@datachem.com

ENVIRONMENTAL
Data Services, Inc.

EXPLOSIVES

USEPA Region IV - Level IV Review

Site: MCB Camp Lejeune, UXO-08, CTO-168 SDG #: 807047

Client: CH2M HILL, Inc., Virginia Beach, Virginia Date: September 30, 2008

Laboratory: GPL Laboratories, Frederick, Maryland Reviewer: Nancy Weaver

EDS ID	Client Sample ID	Laboratory Sample ID	Matrix
1	IR78-GW63-08C	807047-001	Water
2	IR78-EB070808	807047-003	Water
3	IR78-GW63D-08C	807047-005	Water
4	IR78-GW62-08C	807047-007	Water
5	IR78-GW61-08C	807047-009	Water
6	IR78-GW50-08C	807047-011	Water
7	IR78-GW50D-08C	807047-013	Water
8	IR78-GW59-08C	807047-015	Water
9	IR78-GW55-08C	807047-017	Water
9MS	IR78-GW55-08CMS	807047-017MS	Water
9MSD	IR78-GW55-08CMSD	807047-017MSD	Water
10	IR78-GW68-08C	807047-019	Water
11	IR78-GW64-08C	807047-021	Water

The USEPA "Contract Laboratory Program National Functional Guidelines for Organic Data Review," October 1999, and professional judgement were used in evaluating the data in this summary report.

Holding Times - All samples were extracted within 7 days for water samples and analyzed within 40 days.

Initial Calibration - The initial calibrations exhibited acceptable %RSD and/or correlation coefficient values.

Calibration Verification - The continuing calibrations exhibited acceptable %D values.

Surrogates - All samples exhibited acceptable surrogate recoveries.

MS/MSD - The MS/MSD sample exhibited acceptable %R and RPD values.

Laboratory Control Sample - The LCS samples exhibited acceptable %R values.

Method Blank - The method blanks were free of contamination.

Field and Equipment Blank - Field QC results are summarized below.

Blank ID	Compound	Conc. ug/L	Action Level ug/L	Qualifier	Affected Samples
IR78-EB070808	None - ND	-	-	-	-
IR78-FB070908	None - ND	-	-	-	-

Field Duplicates - Field duplicate results are summarized below.

Compound	IR78-GW63-08C ug/L	IR78-GW63D-08C ug/L	RPD	Qualifier
None	ND	ND	-	-

Compound	IR78-GW50-08C ug/L	IR78-GW50D-08C ug/L	RPD	Qualifier
None	ND	ND	-	-

Compound Identification - Retention times were acceptable and no further action was taken.

Compound Quantitation - No discrepancies were identified

GPL Laboratories

GPL
FORM 1
ANALYSIS DATA SHEET

SAMPLE NO
IR78-GW63-08C

Lab Name :	GPL Laboratories	Client. :	CH2M Hill Inc
Lab Code :	GPL	SAS NO. :	
Case No. :		SDG NO :	807047
Matrix : (Soil / Water)	WATER	Lab Sample ID :	807047-001-001-1/1
Sample Volume :	1000	Lab File ID :	LCD42401.D
% Moisture:		Date Received	07/09/2008
Extraction:	EXT_SW8330	Date Extracted:	07/10/2008
Extract Volume:	20 mL	Date Analyzed	07/24/2008
Injection Volume :	100 µL	Dilution Factor :	1
GPC Clean up (Y/N):	N pH:		

Concentration Units (ug/L or ug/kg dry weight) : ug/L

CAS NO	COMPOUND		Q
99-35-4	1,3,5-Trinitrobenzene	0.20	U
99-65-0	1,3-Dinitrobenzene	0.20	U
118-96-7	2,4,6-Trinitrotoluene	0.20	U
121-14-2	2,4-Dinitrotoluene	0.20	U
606-20-2	2,6-Dinitrotoluene	0.20	U
35572-78-2	2-Amino-4,6-Dinitrotoluene	0.20	U
19406-51-0	4-Amino-2,6-Dinitrotoluene	0.20	U
2691-41-0	HMX	0.40	U
98-95-3	Nitrobenzene	0.20	U
121-82-4	RDX	0.40	U
479-45-8	Tetryl	0.40	U
99-08-1	m-Nitrotoluene	0.40	U
88-72-2	o-Nitrotoluene	0.40	U
99-99-0	p-Nitrotoluene	0.40	U

GPL Laboratories

GPL
FORM 1
ANALYSIS DATA SHEET

2

SAMPLE NO
IR78-EB070808

Lab Name :	GPL Laboratories	Client. :	CH2M Hill Inc
Lab Code :	GPL	SAS NO. :	
Case No. :		SDG NO :	807047
Matrix : (Soil / Water)	WATER	Lab Sample ID :	807047-003-002-1/1
Sample Volume :	1000	Lab File ID :	LCD42402.D
% Moisture:		Date Received	07/09/2008
Extraction:	EXT_SW8330	Date Extracted:	07/10/2008
Extract Volume:	20 mL	Date Analyzed	07/24/2008
Injection Volume :	100 µ L	Dilution Factor :	1
GPC Clean up (Y/N):	N pH:		

Concentration Units (ug/L or ug/kg dry weight) : ug/L

CAS NO	COMPOUND		Q
99-35-4	1,3,5-Trinitrobenzene	0.20	U
99-65-0	1,3-Dinitrobenzene	0.20	U
118-96-7	2,4,6-Trinitrotoluene	0.20	U
121-14-2	2,4-Dinitrotoluene	0.20	U
606-20-2	2,6-Dinitrotoluene	0.20	U
35572-78-2	2-Amino-4,6-Dinitrotoluene	0.20	U
19406-51-0	4-Amino-2,6-Dinitrotoluene	0.20	U
2691-41-0	HMX	0.40	U
98-95-3	Nitrobenzene	0.20	U
121-82-4	RDX	0.40	U
479-45-8	Tetryl	0.40	U
99-08-1	m-Nitrotoluene	0.40	U
88-72-2	o-Nitrotoluene	0.40	U
99-99-0	p-Nitrotoluene	0.40	U

3

GPL Laboratories

GPL
FORM 1
ANALYSIS DATA SHEET

SAMPLE NO
IR78-GW63D-08C

Lab Name :	GPL Laboratories	Client. :	CH2M Hill Inc
Lab Code :	GPL	SAS NO. :	
Case No. :		SDG NO :	807047
Matrix : (Soil / Water)	WATER	Lab Sample ID :	807047-005-003-1/1
Sample Volume :	1000	Lab File ID :	LCD42404.D
% Moisture:		Date Received	07/09/2008
Extraction:	EXT_SW8330	Date Extracted:	07/10/2008
Extract Volume:	20 mL	Date Analyzed	07/24/2008
Injection Volume :	100 µ L	Dilution Factor :	1
GPC Clean up (Y/N):	N pH:		

Concentration Units (ug/L or ug/kg dry weight) : ug/L

CAS NO	COMPOUND		Q
99-35-4	1,3,5-Trinitrobenzene	0.20	U
99-65-0	1,3-Dinitrobenzene	0.20	U
118-96-7	2,4,6-Trinitrotoluene	0.20	U
121-14-2	2,4-Dinitrotoluene	0.20	U
606-20-2	2,6-Dinitrotoluene	0.20	U
35572-78-2	2-Amino-4,6-Dinitrotoluene	0.20	U
19406-51-0	4-Amino-2,6-Dinitrotoluene	0.20	U
2691-41-0	HMX	0.40	U
98-95-3	Nitrobenzene	0.20	U
121-82-4	RDX	0.40	U
479-45-8	Tetryl	0.40	U
99-08-1	m-Nitrotoluene	0.40	U
88-72-2	o-Nitrotoluene	0.40	U
99-99-0	p-Nitrotoluene	0.40	U

LW 9/30/08

GPL Laboratories

GPL
FORM 1
ANALYSIS DATA SHEET

4

SAMPLE NO
IR78-GW62-08C

Lab Name :	GPL Laboratories	Client. :	CH2M Hill Inc
Lab Code :	GPL	SAS NO. :	
Case No. :		SDG NO :	807047
Matrix : (Soil / Water)	WATER	Lab Sample ID :	807047-007-004-1/1
Sample Volume :		Lab File ID :	LCD42405.D
% Moisture:		Date Received	07/09/2008
Extraction:		Date Extracted:	
Extract Volume:	mL	Date Analyzed	07/24/2008
Injection Volume :	100 µL	Dilution Factor :	1
GPC Clean up (Y/N):	pH:		

Concentration Units (ug/L or ug/kg dry weight) : ug/L

CAS NO	COMPOUND		Q
99-35-4	1,3,5-Trinitrobenzene	0.20	U
99-65-0	1,3-Dinitrobenzene	0.20	U
118-96-7	2,4,6-Trinitrotoluene	0.20	U
121-14-2	2,4-Dinitrotoluene	0.20	U
606-20-2	2,6-Dinitrotoluene	0.20	U
35572-78-2	2-Amino-4,6-Dinitrotoluene	0.20	U
19406-51-0	4-Amino-2,6-Dinitrotoluene	0.20	U
2691-41-0	HMX	0.40	U
98-95-3	Nitrobenzene	0.20	U
121-82-4	RDX	0.40	U
479-45-8	Tetryl	0.40	U
99-08-1	m-Nitrotoluene	0.40	U
88-72-2	o-Nitrotoluene	0.40	U
99-99-0	p-Nitrotoluene	0.40	U

GPL Laboratories

GPL
FORM 1
ANALYSIS DATA SHEET

SAMPLE NO
IR78-GW61-08C

Lab Name :	GPL Laboratories	Client. :	CH2M Hill Inc
Lab Code :	GPL	SAS NO. :	
Case No. :		SDG NO :	807047
Matrix : (Soil / Water)	WATER	Lab Sample ID :	807047-009-005-1/1
Sample Volume :	1000	Lab File ID :	LCD42406.D
% Moisture:		Date Received	07/09/2008
Extraction:	EXT_SW8330	Date Extracted:	07/10/2008
Extract Volume:	20 mL	Date Analyzed	07/24/2008
Injection Volume :	100 µ L	Dilution Factor :	1
GPC Clean up (Y/N):	N pH:		

Concentration Units (ug/L or ug/kg dry weight) : ug/L

CAS NO	COMPOUND		Q
99-35-4	1,3,5-Trinitrobenzene	0.20	U
99-65-0	1,3-Dinitrobenzene	0.20	U
118-96-7	2,4,6-Trinitrotoluene	0.20	U
121-14-2	2,4-Dinitrotoluene	0.20	U
606-20-2	2,6-Dinitrotoluene	0.20	U
35572-78-2	2-Amino-4,6-Dinitrotoluene	0.20	U
19406-51-0	4-Amino-2,6-Dinitrotoluene	0.20	U
2691-41-0	HMX	0.40	U
98-95-3	Nitrobenzene	0.20	U
121-82-4	RDX	0.40	U
479-45-8	Tetryl	0.40	U
99-08-1	m-Nitrotoluene	0.40	U
88-72-2	o-Nitrotoluene	0.40	U
99-99-0	p-Nitrotoluene	0.40	U

GPL Laboratories

GPL
FORM 1
ANALYSIS DATA SHEET

6

SAMPLE NO
IR78-GW50-08C

Lab Name :	GPL Laboratories	Client. :	CH2M Hill Inc
Lab Code :	GPL	SAS NO. :	
Case No. :		SDG NO :	807047
Matrix : (Soil / Water)	WATER	Lab Sample ID :	807047-011-006-1/1
Sample Volume :	1000	Lab File ID :	LCD42407.D
% Moisture:		Date Received	07/09/2008
Extraction:	EXT_SW8330	Date Extracted:	07/10/2008
Extract Volume:	20 mL	Date Analyzed	07/24/2008
Injection Volume :	100 µL	Dilution Factor :	1
GPC Clean up (Y/N):	N pH:		

Concentration Units (ug/L or ug/kg dry weight) : ug/L

CAS NO	COMPOUND		Q
99-35-4	1,3,5-Trinitrobenzene	0.20	U
99-65-0	1,3-Dinitrobenzene	0.20	U
118-96-7	2,4,6-Trinitrotoluene	0.20	U
121-14-2	2,4-Dinitrotoluene	0.20	U
606-20-2	2,6-Dinitrotoluene	0.20	U
35572-78-2	2-Amino-4,6-Dinitrotoluene	0.20	U
19406-51-0	4-Amino-2,6-Dinitrotoluene	0.20	U
2691-41-0	HMX	0.40	U
98-95-3	Nitrobenzene	0.20	U
121-82-4	RDX	0.40	U
479-45-8	Tetryl	0.40	U
99-08-1	m-Nitrotoluene	0.40	U
88-72-2	o-Nitrotoluene	0.40	U
99-99-0	p-Nitrotoluene	0.40	U

GPL Laboratories

GPL
FORM 1
ANALYSIS DATA SHEET

7

SAMPLE NO
IR78-GW50D-08C

Lab Name :	GPL Laboratories	Client. :	CH2M Hill Inc
Lab Code :	GPL	SAS NO. :	
Case No. :		SDG NO :	807047
Matrix : (Soil / Water)	WATER	Lab Sample ID :	807047-013-007-1/1
Sample Volume :	1000	Lab File ID :	LCD42408.D
% Moisture:		Date Received	07/09/2008
Extraction:	EXT_SW8330	Date Extracted:	07/10/2008
Extract Volume:	20 mL	Date Analyzed	07/24/2008
Injection Volume :	100 µL	Dilution Factor :	1
GPC Clean up (Y/N):	N pH:		

Concentration Units (ug/L or ug/kg dry weight) : ug/L

CAS NO	COMPOUND		Q
99-35-4	1,3,5-Trinitrobenzene	0.20	U
99-65-0	1,3-Dinitrobenzene	0.20	U
118-96-7	2,4,6-Trinitrotoluene	0.20	U
121-14-2	2,4-Dinitrotoluene	0.20	U
606-20-2	2,6-Dinitrotoluene	0.20	U
35572-78-2	2-Amino-4,6-Dinitrotoluene	0.20	U
19406-51-0	4-Amino-2,6-Dinitrotoluene	0.20	U
2691-41-0	HMX	0.40	U
98-95-3	Nitrobenzene	0.20	U
121-82-4	RDX	0.40	U
479-45-8	Tetryl	0.40	U
99-08-1	m-Nitrotoluene	0.40	U
88-72-2	o-Nitrotoluene	0.40	U
99-99-0	p-Nitrotoluene	0.40	U

lw 9/30/08

GPL Laboratories

GPL
FORM 1
ANALYSIS DATA SHEET

SAMPLE NO
IR78-GW59-08C

Lab Name :	GPL Laboratories	Client. :	CH2M Hill Inc
Lab Code :	GPL	SAS NO. :	
Case No. :		SDG NO :	807047
Matrix : (Soil / Water)	WATER	Lab Sample ID :	807047-015-008-1/1
Sample Volume :	1000	Lab File ID :	LCD42409.D
% Moisture:		Date Received	07/09/2008
Extraction:	EXT_SW8330	Date Extracted:	07/10/2008
Extract Volume:	20 mL	Date Analyzed	07/24/2008
Injection Volume :	100 µ L	Dilution Factor :	1
GPC Clean up (Y/N):	N pH:		

Concentration Units (ug/L or ug/kg dry weight) : ug/L

CAS NO	COMPOUND		Q
99-35-4	1,3,5-Trinitrobenzene	0.20	U
99-65-0	1,3-Dinitrobenzene	0.20	U
118-96-7	2,4,6-Trinitrotoluene	0.20	U
121-14-2	2,4-Dinitrotoluene	0.083	J
606-20-2	2,6-Dinitrotoluene	0.20	U
35572-78-2	2-Amino-4,6-Dinitrotoluene	0.20	U
19406-51-0	4-Amino-2,6-Dinitrotoluene	0.20	U
2691-41-0	HMX	0.40	U
98-95-3	Nitrobenzene	0.20	U
121-82-4	RDX	0.40	U
479-45-8	Tetryl	0.40	U
99-08-1	m-Nitrotoluene	0.40	U
88-72-2	o-Nitrotoluene	0.40	U
99-99-0	p-Nitrotoluene	0.40	U

GPL Laboratories

GPL
FORM 1
ANALYSIS DATA SHEET

9

SAMPLE NO
IR78-GW55-08C

Lab Name :	GPL Laboratories	Client. :	CH2M Hill Inc
Lab Code :	GPL	SAS NO. :	
Case No. :		SDG NO :	807047
Matrix : (Soil / Water)	WATER	Lab Sample ID :	807047-017-051-1/3
Sample Volume :	1000	Lab File ID :	LCD42410.D
% Moisture:		Date Received	07/09/2008
Extraction:	EXT_SW8330	Date Extracted:	07/10/2008
Extract Volume:	20 mL	Date Analyzed	07/24/2008
Injection Volume :	100 µ L	Dilution Factor :	1
GPC Clean up (Y/N):	N pH:		

Concentration Units (ug/L or ug/kg dry weight) : ug/L

CAS NO	COMPOUND		Q
99-35-4	1,3,5-Trinitrobenzene	0.20	U
99-65-0	1,3-Dinitrobenzene	0.20	U
118-96-7	2,4,6-Trinitrotoluene	0.20	U
121-14-2	2,4-Dinitrotoluene	0.20	U
606-20-2	2,6-Dinitrotoluene	0.20	U
35572-78-2	2-Amino-4,6-Dinitrotoluene	0.20	U
19406-51-0	4-Amino-2,6-Dinitrotoluene	0.20	U
2691-41-0	HMX	0.40	U
98-95-3	Nitrobenzene	0.20	U
121-82-4	RDX	0.40	U
479-45-8	Tetryl	0.40	U
99-08-1	m-Nitrotoluene	0.40	U
88-72-2	o-Nitrotoluene	0.40	U
99-99-0	p-Nitrotoluene	0.40	U

GPL Laboratories

GPL
FORM 1
ANALYSIS DATA SHEET

10

SAMPLE NO
IR78-GW68-08C

Lab Name :	GPL Laboratories	Client. :	CH2M Hill Inc
Lab Code :	GPL	SAS NO. :	
Case No. :		SDG NO :	807047
Matrix : (Soil / Water)	WATER	Lab Sample ID :	807047-019-009-1/1
Sample Volume :	1000	Lab File ID :	LCD42411.D
% Moisture:		Date Received	07/09/2008
Extraction:	EXT_SW8330	Date Extracted:	07/10/2008
Extract Volume:	20 mL	Date Analyzed	07/24/2008
Injection Volume :	100 µ L	Dilution Factor :	1
GPC Clean up (Y/N):	N pH:		

Concentration Units (ug/L or ug/kg dry weight) : ug/L

CAS NO	COMPOUND		Q
99-35-4	1,3,5-Trinitrobenzene	0.20	U
99-65-0	1,3-Dinitrobenzene	0.20	U
118-96-7	2,4,6-Trinitrotoluene	0.20	U
121-14-2	2,4-Dinitrotoluene	0.20	U
606-20-2	2,6-Dinitrotoluene	0.20	U
35572-78-2	2-Amino-4,6-Dinitrotoluene	0.20	U
19406-51-0	4-Amino-2,6-Dinitrotoluene	0.20	U
2691-41-0	HMX	0.40	U
98-95-3	Nitrobenzene	0.20	U
121-82-4	RDX	0.40	U
479-45-8	Tetryl	0.40	U
99-08-1	m-Nitrotoluene	0.40	U
88-72-2	o-Nitrotoluene	0.40	U
99-99-0	p-Nitrotoluene	0.11	J

GPL Laboratories

GPL
FORM 1
ANALYSIS DATA SHEET

SAMPLE NO
IR78-GW64-08C

Lab Name :	GPL Laboratories	Client. :	CH2M Hill Inc
Lab Code :	GPL	SAS NO. :	
Case No. :		SDG NO :	807047
Matrix : (Soil / Water)	WATER	Lab Sample ID :	807047-021-010-1/1
Sample Volume :	1000	Lab File ID :	LCD42412.D
% Moisture:		Date Received	07/09/2008
Extraction:	EXT_SW8330	Date Extracted:	07/10/2008
Extract Volume:	20 mL	Date Analyzed	07/24/2008
Injection Volume :	100 µL	Dilution Factor :	1
GPC Clean up (Y/N):	N pH:		

Concentration Units (ug/L or ug/kg dry weight) : ug/L

CAS NO	COMPOUND		Q
99-35-4	1,3,5-Trinitrobenzene	0.20	U
99-65-0	1,3-Dinitrobenzene	0.20	U
118-96-7	2,4,6-Trinitrotoluene	0.20	U
121-14-2	2,4-Dinitrotoluene	0.20	U
606-20-2	2,6-Dinitrotoluene	0.20	U
35572-78-2	2-Amino-4,6-Dinitrotoluene	0.20	U
19406-51-0	4-Amino-2,6-Dinitrotoluene	0.20	U
2691-41-0	HMX	0.40	U
98-95-3	Nitrobenzene	0.20	U
121-82-4	RDX	0.40	U
479-45-8	Tetryl	0.40	U
99-08-1	m-Nitrotoluene	0.40	U
88-72-2	o-Nitrotoluene	0.40	U
99-99-0	p-Nitrotoluene	0.40	U

ENVIRONMENTAL
Data Services, Inc.

METALS

USEPA Region IV - Level IV Review

Site: MCB Camp Lejeune, UXO-08, CTO-168 SDG #: 807047

Client: CH2M HILL, Inc., Virginia Beach, Virginia Date: September 30, 2008

Laboratory: GPL Laboratories, Frederick, Maryland Reviewer: Nancy Weaver

EDS ID	Client Sample ID	Laboratory Sample ID	Matrix
1	IR78-GW63-08C	807047-001	Water
2	IR78-GW63-08C FIL	807047-002	Water
3	IR78-EB070808	807047-003	Water
4	IR78-EB070808 FIL	807047-004	Water
5	IR78-GW63D-08C	807047-005	Water
6	IR78-GW63D-08C FIL	807047-006	Water
7	IR78-GW62-08C	807047-007	Water
8	IR78-GW62-08C FIL	807047-008	Water
9	IR78-GW61-08C	807047-009	Water
10	IR78-GW61-08C FIL	807047-010	Water
11	IR78-GW50-08C	807047-011	Water
12	IR78-GW50-08C FIL	807047-012	Water
13	IR78-GW50D-08C	807047-013	Water
14	IR78-GW50D-08C FIL	807047-014	Water
15	IR78-GW59-08C	807047-015	Water
16	IR78-GW59-08C FIL	807047-016	Water
17	IR78-GW55-08C	807047-017	Water
17MS	IR78-GW55-08CMS	807047-017MS	Water
17MSD	IR78-GW55-08CMSD	807047-017MSD	Water
18	IR78-GW55-08C FIL	807047-018	Water
18MS	IR78-GW55-08C FILMS	807047-018MS	Water
18MSD	IR78-GW55-08C FILMSD	807047-018MSD	Water
19	IR78-GW68-08C	807047-019	Water
20	IR78-GW68-08C FIL	807047-020	Water
20MS	IR78-GW68-08C FILMS	807047-020MS	Water
20MSD	IR78-GW68-08C FILMSD	807047-020MSD	Water
21	IR78-GW64-08C	807047-021	Water
21MS	IR78-GW64-08CMS	807047-021MS	Water
21MSD	IR78-GW64-08CMSD	807047-021MSD	Water
22	IR78-GW64-08C FIL	807047-022	Water

The USEPA "Contract Laboratory Program National Functional Guidelines for Inorganic Data Review," October 2004, and professional judgement were used in evaluating the data in this summary report.

Holding Times - All samples were prepared and analyzed within 28 days for mercury and 180 days for all other metals.

Calibration - The ICV and CCV %R values were acceptable.

CRDL Standard - The CRDL standards exhibited acceptable %R values.

Method and Calibration Blanks - The method blanks and continuing calibration blanks exhibited contamination for several compounds, however, all sample results are non-detect or greater than 5X the blank concentration with the exception of the following:

Compound	Conc. ug/L	Qualifier	Affected Samples
Aluminum	42.970	U	2, 4, 6
Aluminum	163.328	U	9-11, 13, 17-19, 21, 22
Arsenic	2.697	U	8, 11, 12, 14-20
Barium	1.078	U	1-7
Barium	0.554	U	8-22
Beryllium	0.076	U	8-14, 19, 20
Cadmium	0.793	U	8, 12, 14, 19
Cadmium	0.445	U	5, 7
Copper	2.379	U	8-22
Iron	54.052	U	8, 15, 16
Iron	22.088	U	4
Magnesium	36.930	U	3, 4
Magnesium	117.743	U	9, 10, 15, 16, 21, 22
Mercury	0.022	U	1, 2, 4-7
Nickel	1.438	U	8, 10, 14, 16-22
Potassium	23.769	U	1-7
Selenium	2.226	U	8, 11, 12, 14, 15, 17
Sodium	634.536	U	3, 4
Thallium	5.718	U	8
Zinc	3.221	U	1-4, 6, 7

Field and Equipment Blank - Field QC results are summarized below.

Blank ID	Compound	Conc. ug/L	Action Level ug/L	Qualifier	Affected Samples
IR78-EB070808	Calcium	195	975	None	All >5X, ND or already qualified
	Manganese	1.4	7.0	None	
IR78-EB070808 FIL	Calcium	134	670	None	All >5X
IR78-FB070908	None - ND	-	-	-	-
IR78-FB070908 FIL	Arsenic	2.7	13.5	U	2
	Nickel	1.9	8.5	None	All >5X, ND or already qualified

Blank ID	Compound	Conc. ug/L	Action Level ug/L	Qualifier	Affected Samples
IR78-FB070908 FIL	Potassium	61.6	208	None	All >5X, ND or already qualified
	Sodium	406	2030	None	

ICP Interference Check Sample - All %R values were acceptable.

Matrix Spike - The matrix spike samples exhibited acceptable %R values.

Matrix Duplicate - The matrix duplicate samples exhibited acceptable RPD values.

LCS - The LCS samples exhibited acceptable %R values.

ICP Serial Dilution - The ICP serial dilution sample exhibited acceptable %D values except the following.

ICP Sample ID	Compound	%D	Qualifier	Affected Samples
IR78-GW55-08C	Iron	13%	J	All positive results in samples 1-18
	Magnesium	13%	J	All positive results in samples 1-18
	Manganese	11%	J	All positive results in samples 1-18
IR78-GW55-08C FIL	Iron	15%	J	All positive results in samples 1-18
	Magnesium	13%	J	All positive results in samples 1-18
	Manganese	12%	J	All positive results in samples 1-18
	Potassium	11%	J	All positive results in samples 1-18
	Sodium	17%	J	All positive results in samples 1-18

Field Duplicates - Field duplicate results are summarized below.

Compound	IR78-GW63-08C ug/L	IR78-GW63D-08C ug/L	RPD	Qualifier
Aluminum	308	474	42%	None
Arsenic	7.8	9.0	14%	None
Beryllium	0.94	1.3	32%	None
Calcium	71600	73300	2%	None
Chromium	10.0 U	1.8	NC	None
Cobalt	15.5	16.4	6%	None
Copper	25.0 U	2.9	NC	None
Iron	3470	3870	11%	None
Magnesium	6890	7190	4%	None
Manganese	171	171	0%	None
Nickel	13.8	15.7	13%	None
Sodium	12900	13300	3%	None
Zinc	59.1 U	69.2	NC	None

Compound	IR78-GW63-08C FIL ug/L	IR78-GW63D-08C FIL ug/L	RPD	Qualifier
Arsenic	7.8	10.3	28%	None
Beryllium	0.71	0.72	1%	None
Calcium	73900	73600	0%	None
Cobalt	17.0	15.5	9%	None
Copper	2.3	1.9	19%	None
Iron	3430	3310	4%	None
Magnesium	7140	6990	2%	None
Manganese	183	179	2%	None
Nickel	16.1	15.2	6%	None
Sodium	13000	12700	2%	None

Compound	IR78-GW50-08C ug/L	IR78-GW50D-08C ug/L	RPD	Qualifier
Calcium	182000	172000	6%	None
Chromium	0.98	1.9	64%	None
Iron	29200	28200	3%	None
Magnesium	15200	14700	3%	None
Manganese	500	488	2%	None
Mercury	0.067	0.087	26%	None
Potassium	4580	4520	1%	None
Sodium	16100	16000	1%	None
Zinc	14.6	12.4	16%	None

Compound	IR78-GW50-08C FIL ug/L	IR78-GW50D-08C FIL ug/L	RPD	Qualifier
Calcium	185000	181000	2%	None
Chromium	1.2	1.1	9%	None
Iron	28900	28600	1%	None
Magnesium	14600	14600	0%	None
Manganese	477	474	1%	None
Mercury	0.11	0.072	42%	None
Potassium	4410	4390	0%	None
Sodium	15900	15400	3%	None
Zinc	7.0	5.0	33%	None

Compound Quantitation - No discrepancies were identified.

USEPA - CLP

1A - IN

INORGANIC ANALYSIS DATA SHEET

EPA SAMPLE NO.

IR78-GW63-08C

Lab Name: GPL LABORATORIES, LL Contract:

Lab Code: Case No.: NRAS No.: SDG No.: 807047

Matrix: (soil/water) WATER Lab Sample ID: S 807047-001-011-1/1

Level: (low/med) Date Recieved: 07/09/2008

% Solids: 0.0

Concentration Units (ug/L or mg/kg dry weight): UG/L

CAS No.	Analyte	Concentration	C	Q	M	
7429-90-5	Aluminum	308			P	
7440-36-0	Antimony	60.0	U		P	
7440-38-2	Arsenic	7.8	J		P	
7440-39-3	Barium	200 ~~17.8~~	~~J~~	U	P	BL
7441-41-7	Beryllium	0.94	J		P	
7440-43-9	Cadmium	5.0	U		P	
7440-70-2	Calcium	71600		~~E~~	P	
7440-47-3	Chromium	10.0	U		P	
7440-48-4	Cobalt	15.5	J		P	
7440-50-8	Copper	25.0	U		P	
7439-89-6	Iron	3470		J ~~E~~	P	SD
7439-92-1	Lead	10.0	U		P	
7439-95-4	Magnesium	6890		J ~~E~~	P	SD
7439-96-5	Manganese	171		J ~~E~~	P	SD
7439-97-6	Mercury	0.2 ~~0.038~~	~~J~~	U	CV	BL
7440-02-0	Nickel	13.8	J		P	
7440-09-7	Potassium	5000 ~~3850~~	~~J~~	U ~~E~~	P	BL
7782-49-2	Selenium	35.0	U		P	
7440-22-4	Silver	10.0	U		P	
7440-23-5	Sodium	12900		J ~~E~~	P	SD
7440-28-0	Thallium	25.0	U		P	
7440-62-2	Vanadium	50.0	U		P	
7440-66-6	Zinc	60 ~~59.1~~	~~J~~	U	P	BL

Color Before: Colorless Clarity Before: Clear Texture: NA

Color After: Colorless Clarity After: Clear Artifacts: NA

Comments:

FORM IA - IN LeW 9/30/08 CLPILMO5.3

2

USEPA - CLP

1A - IN

INORGANIC ANALYSIS DATA SHEET

EPA SAMPLE NO.

IR78-GW63-08C FIL

Lab Name: GPL LABORATORIES, LL Contract:

Lab Code: Case No.: NRAS No.: SDG No.: 807047

Matrix: (soil/water) WATER Lab Sample ID: S 807047-002-021-1/1

Level: (low/med) Date Recieved: 07/09/2008

% Solids: 0.0

Concentration Units (ug/L or mg/kg dry weight): UG/L

CAS No.	Analyte	Concentration	C	Q	M	
7429-90-5	Aluminum	200 ~~79.9~~	~~J~~	U	P	BL
7440-36-0	Antimony	60.0	U		P	
7440-38-2	Arsenic	10 ~~9.2~~	~~J~~	U	P	BL
7440-39-3	Barium	200 ~~17.1~~	~~J~~	U	P	BL
7441-41-7	Beryllium	0.71	J		P	
7440-43-9	Cadmium	5.0	U		P	
7440-70-2	Calcium	73900		~~E~~	P	
7440-47-3	Chromium	10.0	U		P	
7440-48-4	Cobalt	17.0	J		P	
7440-50-8	Copper	2.3	J		P	
7439-89-6	Iron	3430		J ~~E~~	P	SD
7439-92-1	Lead	10.0	U		P	
7439-95-4	Magnesium	7140		J ~~E~~	P	SD
7439-96-5	Manganese	183		J ~~E~~	P	SD
7440-02-0	Nickel	16.1	J		P	
7439-97-6	Mercury	0.2 ~~0.10~~	~~J~~	U	CV	BL
7440-09-7	Potassium	5000 ~~3900~~	~~J~~	U ~~E~~	P	BL
7782-49-2	Selenium	35.0	U		P	
7440-22-4	Silver	10.0	U		P	
7440-23-5	Sodium	13000		J ~~E~~	P	SD
7440-28-0	Thallium	25.0	U		P	
7440-62-2	Vanadium	50.0	U		P	
7440-66-6	Zinc	60 ~~41.1~~	~~J~~	U	P	BL

Color Before: Colorless Clarity Before: Clear Texture: NA

Color After: Colorless Clarity After: Clear Artifacts: NA

Comments:

FORM IA - IN LW 9/30/08 CLPILMO5.3

3

USEPA - CLP

1A - IN

INORGANIC ANALYSIS DATA SHEET

EPA SAMPLE NO.

IR78-EB070808

Lab Name: GPL LABORATORIES, LL Contract:

Lab Code: Case No.: NRAS No.: SDG No.: 807047

Matrix: (soil/water) WATER Lab Sample ID: S 807047-003-012-1/1

Level: (low/med) Date Recieved: 07/09/2008

% Solids: 0.0

Concentration Units (ug/L or mg/kg dry weight): UG/L

CAS No.	Analyte	Concentration	C	Q	M	
7429-90-5	Aluminum	200	U		P	
7440-36-0	Antimony	60.0	U		P	
7440-38-2	Arsenic	10.0	U		P	
7440-39-3	Barium	200 ~~1.1~~	~~J~~	U	P	BL
7441-41-7	Beryllium	5.0	U		P	
7440-43-9	Cadmium	5.0	U		P	
7440-70-2	Calcium	195	J	~~E~~	P	
7440-47-3	Chromium	10.0	U		P	
7440-48-4	Cobalt	50.0	U		P	
7440-50-8	Copper	25.0	U		P	
7439-89-6	Iron	100	U	~~E~~	P	
7439-92-1	Lead	10.0	U		P	
7439-95-4	Magnesium	5000 ~~112~~	~~J~~	U ~~E~~	P	BL
7439-96-5	Manganese	1.4	~~J~~	J ~~E~~	P	SD
7440-02-0	Nickel	40.0	U		P	
7439-97-6	Mercury	0.20	U		CV	
7440-09-7	Potassium	5000 ~~30.7~~	~~J~~	U ~~E~~	P	BL
7782-49-2	Selenium	35.0	U		P	
7440-22-4	Silver	10.0	U		P	
7440-23-5	Sodium	5000 ~~307~~	~~J~~	U ~~E~~	P	BL
7440-28-0	Thallium	25.0	U		P	
7440-62-2	Vanadium	50.0	U		P	
7440-66-6	Zinc	60 ~~5.6~~	~~J~~	U	P	BL

Color Before: Colorless Clarity Before: Clear Texture: NA

Color After: Colorless Clarity After: Clear Artifacts: NA

Comments:

FORM IA - IN LW 9/30/08

CLPILMO5.3

USEPA - CLP

1A - IN

INORGANIC ANALYSIS DATA SHEET

EPA SAMPLE NO.

IR78-EB070808 FIL

Lab Name: GPL LABORATORIES, LL Contract:

Lab Code: Case No.: NRAS No.: SDG No.: 807047

Matrix: (soil/water) WATER Lab Sample ID: S 807047-004-022-1/1

Level: (low/med) Date Recieved: 07/09/2008

% Solids: 0.0

Concentration Units (ug/L or mg/kg dry weight): UG/L

CAS No.	Analyte	Concentration	C	Q	M	
7429-90-5	Aluminum	200 ~~29.3~~	~~J~~	U	P	BL
7440-36-0	Antimony	60.0	U		P	
7440-38-2	Arsenic	10.0	U		P	
7440-39-3	Barium	200 ~~0.89~~	~~J~~	U	P	BL
7441-41-7	Beryllium	5.0	U		P	
7440-43-9	Cadmium	5.0	U		P	
7440-70-2	Calcium	134	J	~~E~~	P	
7440-47-3	Chromium	10.0	U		P	
7440-48-4	Cobalt	50.0	U		P	
7440-50-8	Copper	25.0	U		P	
7439-89-6	Iron	100 ~~14.8~~	~~J~~	U ~~E~~	P	BL
7439-92-1	Lead	10.0	U		P	
7439-95-4	Magnesium	5000 ~~102~~	~~J~~	U ~~E~~	P	BL
7439-96-5	Manganese	15.0	U	~~E~~	P	
7440-02-0	Nickel	40.0	U		P	
7439-97-6	Mercury	0.2 ~~0.021~~	~~J~~	U	CV	BL
7440-09-7	Potassium	5000 ~~32.6~~	~~J~~	U ~~E~~	P	BL
7782-49-2	Selenium	35.0	U		P	
7440-22-4	Silver	10.0	U		P	
7440-23-5	Sodium	5000 ~~628~~	~~J~~	U ~~E~~	P	BL
7440-28-0	Thallium	25.0	U		P	
7440-62-2	Vanadium	50.0	U		P	
7440-66-6	Zinc	60 ~~4.1~~	~~J~~	U	P	BL

Color Before: Colorless Clarity Before: Clear Texture: NA

Color After: Colorless Clarity After: Clear Artifacts: NA

Comments:

FORM IA - IN

9/30/08

CLPILMO5.3

USEPA - CLP

1A - IN

INORGANIC ANALYSIS DATA SHEET

EPA SAMPLE NO.

IR78-GW63D-08C

Lab Name: GPL LABORATORIES, LL Contract:

Lab Code: Case No.: NRAS No.: SDG No.: 807047

Matrix: (soil/water) WATER Lab Sample ID: S 807047-005-013-1/1

Level: (low/med) Date Recieved: 07/09/2008

% Solids: 0.0

Concentration Units (ug/L or mg/kg dry weight): UG/L

CAS No.	Analyte	Concentration	C	Q	M	
7429-90-5	Aluminum	474			P	
7440-36-0	Antimony	60.0	U		P	
7440-38-2	Arsenic	9.0	J		P	
7440-39-3	Barium	200 ~~19.7~~	~~J~~	U	P	BL
7441-41-7	Beryllium	1.3	J		P	
7440-43-9	Cadmium	5 ~~0.59~~	~~J~~	U	P	BL
7440-70-2	Calcium	73300		~~E~~	P	
7440-47-3	Chromium	1.8	J		P	
7440-48-4	Cobalt	16.4	J		P	
7440-50-8	Copper	2.9	J		P	
7439-89-6	Iron	3870		J ~~E~~	P	SD
7439-92-1	Lead	10.0	U		P	
7439-95-4	Magnesium	7190		J ~~E~~	P	SD
7439-96-5	Manganese	171		J ~~E~~	P	SD
7440-02-0	Nickel	15.7	J		P	
7439-97-6	Mercury	0.2 ~~0.035~~	~~J~~	U	CV	BL
7440-09-7	Potassium	5000 ~~3930~~	~~J~~	U ~~E~~	P	BL
7782-49-2	Selenium	35.0	U		P	
7440-22-4	Silver	10.0	U		P	
7440-23-5	Sodium	13300		J ~~E~~	P	SD
7440-28-0	Thallium	25.0	U		P	
7440-62-2	Vanadium	50.0	U		P	
7440-66-6	Zinc	69.2			P	

Color Before: Colorless Clarity Before: Clear Texture: NA

Color After: Colorless Clarity After: Clear Artifacts: NA

Comments:

6

USEPA - CLP

1A - IN

INORGANIC ANALYSIS DATA SHEET

EPA SAMPLE NO.

IR78-GW63D-08C FIL

Lab Name: GPL LABORATORIES, LL Contract:

Lab Code: Case No.: NRAS No.: SDG No.: 807047

Matrix: (soil/water) WATER Lab Sample ID: S 807047-006-023-1/1

Level: (low/med) Date Recieved: 07/09/2008

% Solids: 0.0

Concentration Units (ug/L or mg/kg dry weight): UG/L

CAS No.	Analyte	Concentration	C	Q	M	
7429-90-5	Aluminum	200 ~~46.5~~	~~J~~	U	P	BL
7440-36-0	Antimony	60.0	U		P	
7440-38-2	Arsenic	10.3			P	
7440-39-3	Barium	200 ~~17.3~~	~~J~~	U	P	BL
7441-41-7	Beryllium	0.72	J		P	
7440-43-9	Cadmium	5.0	U		P	
7440-70-2	Calcium	73600		~~E~~	P	
7440-47-3	Chromium	10.0	U		P	
7440-48-4	Cobalt	15.5	J		P	
7440-50-8	Copper	1.9	J		P	
7439-89-6	Iron	3310		J ~~E~~	P	SD
7439-92-1	Lead	10.0	U		P	
7439-95-4	Magnesium	6990		J ~~E~~	P	SD
7439-96-5	Manganese	179		J ~~E~~	P	SD
7439-97-6	Mercury	0.2 ~~0.12~~	~~J~~	U	CV	BL
7440-02-0	Nickel	15.2	J		P	
7440-09-7	Potassium	5000 ~~3850~~	~~J~~	U ~~E~~	P	BL
7782-49-2	Selenium	35.0	U		P	
7440-22-4	Silver	10.0	U		P	
7440-23-5	Sodium	12700		J ~~E~~	P	SD
7440-28-0	Thallium	25.0	U		P	
7440-62-2	Vanadium	50.0	U		P	
7440-66-6	Zinc	60 ~~43.5~~	~~J~~	U	P	BL

Color Before: Colorless Clarity Before: Clear Texture: NA

Color After: Colorless Clarity After: Clear Artifacts: NA

Comments:

7

USEPA - CLP

1A - IN

INORGANIC ANALYSIS DATA SHEET

EPA SAMPLE NO.

IR78-GW62-08C

Lab Name: GPL LABORATORIES, LL Contract:

Lab Code: Case No.: NRAS No.: SDG No.: 807047

Matrix: (soil/water) WATER Lab Sample ID: S 807047-007-014-1/1

Level: (low/med) Date Recieved: 07/09/2008

% Solids: 0.0

Concentration Units (ug/L or mg/kg dry weight): UG/L

CAS No.	Analyte	Concentration	C	Q	M	
7429-90-5	Aluminum	1940			P	
7440-36-0	Antimony	60.0	U		P	
7440-38-2	Arsenic	2.4	J		P	
7440-39-3	Barium	200 ~~51.8~~	~~J~~	U	P	BL
7441-41-7	Beryllium	0.55	J		P	
7440-43-9	Cadmium	5 ~~0.62~~	~~J~~	U	P	BL
7440-70-2	Calcium	9120		~~E~~	P	
7440-47-3	Chromium	1.5	J		P	
7440-48-4	Cobalt	7.0	J		P	
7440-50-8	Copper	6.0	J		P	
7439-89-6	Iron	208		J ~~E~~	P	SD
7439-92-1	Lead	10.0	U		P	
7439-95-4	Magnesium	6820		J ~~E~~	P	SD
7439-96-5	Manganese	102		J ~~E~~	P	SD
7440-02-0	Nickel	6.1	J		P	
7439-97-6	Mercury	0.2 ~~0.091~~	~~J~~	U	CV	BL
7440-09-7	Potassium	5000 ~~2870~~	~~J~~	U ~~E~~	P	BL
7782-49-2	Selenium	35.0	U		P	
7440-22-4	Silver	10.0	U		P	
7440-23-5	Sodium	10400		J ~~E~~	P	SD
7440-28-0	Thallium	4.8	J		P	
7440-62-2	Vanadium	50.0	U		P	
7440-66-6	Zinc	60 ~~29.6~~	~~J~~	U	P	BL

Color Before: Colorless Clarity Before: Clear Texture: NA

Color After: Colorless Clarity After: Clear Artifacts: NA

Comments:

8

USEPA - CLP

1A - IN

INORGANIC ANALYSIS DATA SHEET

EPA SAMPLE NO.

IR78-GW62-08C FIL

Lab Name: GPL LABORATORIES, LL Contract:

Lab Code: Case No.: NRAS No.: SDG No.: 807047

Matrix: (soil/water) WATER Lab Sample ID: S 807047-008-024-1/1

Level: (low/med) Date Recieved: 07/09/2008

% Solids: 0.0

Concentration Units (ug/L or mg/kg dry weight): UG/L

CAS No.	Analyte	Concentration	C	Q	M	
7429-90-5	Aluminum	1600			P	
7440-36-0	Antimony	60.0	U		P	
7440-38-2	Arsenic	10 ~~2.5~~	~~J~~	U	P	BL
7440-39-3	Barium	200 ~~49.3~~	~~J~~	U	P	BL
7441-41-7	Beryllium	5 ~~0.45~~	~~J~~	U	P	BL
7440-43-9	Cadmium	5 ~~0.53~~	~~J~~	U	P	BL
7440-70-2	Calcium	8820		~~E~~	P	
7440-47-3	Chromium	10.0	U		P	
7440-48-4	Cobalt	6.4	J		P	
7440-50-8	Copper	25 ~~3.3~~	~~J~~	U	P	BL
7439-89-6	Iron	100 ~~31.4~~	~~J~~	U ~~E~~	P	BL
7439-92-1	Lead	10.0	U		P	
7439-95-4	Magnesium	6710		J ~~E~~	P	SD
7439-96-5	Manganese	101		J ~~E~~	P	SD
7440-02-0	Nickel	40 ~~4.9~~	~~J~~	U	P	BL
7439-97-6	Mercury	0.047	J		CV	
7440-09-7	Potassium	2780	~~J~~	J ~~E~~	P	SD
7782-49-2	Selenium	35 ~~2.1~~	~~J~~	U	P	BL
7440-22-4	Silver	10.0	U		P	
7440-23-5	Sodium	9310		J ~~E~~	P	SD
7440-28-0	Thallium	25 ~~4.6~~	~~J~~	U	P	BL
7440-62-2	Vanadium	50.0	U		P	
7440-66-6	Zinc	14.6	J		P	

Color Before: Colorless Clarity Before: Clear Texture: NA

Color After: Colorless Clarity After: Clear Artifacts: NA

Comments:

USEPA - CLP

1A - IN

INORGANIC ANALYSIS DATA SHEET

EPA SAMPLE NO.

IR78-GW61-08C

Lab Name: GPL LABORATORIES, LL Contract:

Lab Code: Case No.: NRAS No.: SDG No.: 807047

Matrix: (soil/water) WATER Lab Sample ID: S 807047-009-015-1/1

Level: (low/med) Date Recieved: 07/09/2008

% Solids: 0.0

Concentration Units (ug/L or mg/kg dry weight): UG/L

CAS No.	Analyte	Concentration	C	Q	M	
7429-90-5	Aluminum	200 ~~87.5~~	~~J~~	U	P	BL
7440-36-0	Antimony	60.0	U		P	
7440-38-2	Arsenic	10.0	U		P	
7440-39-3	Barium	200 ~~84.6~~	~~J~~	U	P	BL
7441-41-7	Beryllium	5 ~~0.14~~	~~J~~	U	P	BL
7440-43-9	Cadmium	5.0	U		P	
7440-70-2	Calcium	5650		~~E~~	P	
7440-47-3	Chromium	10.0	U		P	
7440-48-4	Cobalt	50.0	U		P	
7440-50-8	Copper	25 ~~2.3~~	~~J~~	U	P	BL
7439-89-6	Iron	2630		J ~~E~~	P	SD
7439-92-1	Lead	10.0	U		P	
7439-95-4	Magnesium	5000 ~~4670~~	~~J~~	U ~~E~~	P	BL
7439-96-5	Manganese	79.6		J ~~E~~	P	SD
7439-97-6	Mercury	0.11	J		CV	
7440-02-0	Nickel	40.0	U		P	
7440-09-7	Potassium	1560	~~J~~	J ~~E~~	P	SD
7782-49-2	Selenium	35.0	U		P	
7440-22-4	Silver	10.0	U		P	SD
7440-23-5	Sodium	23700		J ~~E~~	P	
7440-28-0	Thallium	25.0	U		P	
7440-62-2	Vanadium	50.0	U		P	
7440-66-6	Zinc	16.1	J		P	

Color Before: Colorless Clarity Before: Clear Texture: NA

Color After: Colorless Clarity After: Clear Artifacts: NA

Comments:

USEPA - CLP

1A - IN

INORGANIC ANALYSIS DATA SHEET

EPA SAMPLE NO.

IR78-GW61-08C FIL

Lab Name: GPL LABORATORIES, LL Contract:

Lab Code: Case No.: NRAS No.: SDG No.: 807047

Matrix: (soil/water) WATER Lab Sample ID: S 807047-010-025-1/1

Level: (low/med) Date Recieved: 07/09/2008

% Solids: 0.0

Concentration Units (ug/L or mg/kg dry weight): UG/L

CAS No.	Analyte	Concentration	C	Q	M	
7429-90-5	Aluminum	200 ~~141~~	~~J~~	U	P	BL
7440-36-0	Antimony	60.0	U		P	
7440-38-2	Arsenic	10.0	U		P	
7440-39-3	Barium	200 ~~78.6~~	~~J~~	U	P	BL
7441-41-7	Beryllium	5 ~~0.12~~	~~J~~	U	P	BL
7440-43-9	Cadmium	5.0	U		P	
7440-70-2	Calcium	5450		~~E~~	P	
7440-47-3	Chromium	10.0	U		P	
7440-48-4	Cobalt	50.0	U		P	
7440-50-8	Copper	25 ~~2.0~~	~~J~~	U	P	BL
7439-89-6	Iron	2450		J ~~E~~	P	SD
7439-92-1	Lead	10.0	U		P	
7439-95-4	Magnesium	5000 ~~4590~~	~~J~~	U ~~E~~	P	BL
7439-96-5	Manganese	78.8		J ~~E~~	P	SD
7439-97-6	Mercury	0.065	J		CV	
7440-02-0	Nickel	40 ~~1.7~~	~~J~~	U	P	BL
7440-09-7	Potassium	1530	~~J~~	J ~~E~~	P	SD
7782-49-2	Selenium	35.0	U		P	
7440-22-4	Silver	10.0	U		P	
7440-23-5	Sodium	22500		J ~~E~~	P	SD
7440-28-0	Thallium	25.0	U		P	
7440-62-2	Vanadium	50.0	U		P	
7440-66-6	Zinc	11.1	J		P	

Color Before: Colorless Clarity Before: Clear Texture: NA

Color After: Colorless Clarity After: Clear Artifacts: NA

Comments:

FORM IA - IN lw 9/30/08 CLPILMO5.3

USEPA - CLP

1A - IN

INORGANIC ANALYSIS DATA SHEET

EPA SAMPLE NO.

IR78-GW50-08C

Lab Name: GPL LABORATORIES, LL Contract:

Lab Code: Case No.: NRAS No.: SDG No.: 807047

Matrix: (soil/water) WATER Lab Sample ID: S 807047-011-016-1/1

Level: (low/med) Date Recieved: 07/09/2008

% Solids: 0.0

Concentration Units (ug/L or mg/kg dry weight): UG/L

CAS No.	Analyte	Concentration	C	Q	M	
7429-90-5	Aluminum	200 ~~47.1~~	~~J~~	U	P	BL
7440-36-0	Antimony	60.0	U		P	
7440-38-2	Arsenic	10 ~~4.4~~	~~J~~	U	P	BL
7440-39-3	Barium	200 ~~60.0~~	~~J~~	U	P	BL
7441-41-7	Beryllium	5 ~~0.55~~	~~J~~	U	P	BL
7440-43-9	Cadmium	5.0	U		P	
7440-70-2	Calcium	182000		~~E~~	P	
7440-47-3	Chromium	0.98	J		P	
7440-48-4	Cobalt	50.0	U		P	
7440-50-8	Copper	25 ~~3.3~~	~~J~~	U	P	BL
7439-89-6	Iron	29200		J ~~E~~	P	SD
7439-92-1	Lead	10.0	U		P	
7439-95-4	Magnesium	15200		J ~~E~~	P	SD
7439-96-5	Manganese	500		J ~~E~~	P	SD
7439-97-6	Mercury	0.067	J		CV	
7440-02-0	Nickel	40.0	U		P	
7440-09-7	Potassium	4580	~~J~~	J ~~E~~	P	SD
7782-49-2	Selenium	35 ~~2.3~~	~~J~~	U	P	BL
7440-22-4	Silver	10.0	U		P	
7440-23-5	Sodium	16100		J ~~E~~	P	SD
7440-28-0	Thallium	25.0	U		P	
7440-62-2	Vanadium	50.0	U		P	
7440-66-6	Zinc	14.6	J		P	

Color Before: Colorless Clarity Before: Clear Texture: NA

Color After: Colorless Clarity After: Clear Artifacts: NA

Comments:

USEPA - CLP

1A - IN

INORGANIC ANALYSIS DATA SHEET

EPA SAMPLE NO.

IR78-GW50-08C FIL

Lab Name: GPL LABORATORIES, LL Contract:

Lab Code: Case No.: NRAS No.: SDG No.: 807047

Matrix: (soil/water) WATER Lab Sample ID: S 807047-012-026-1/1

Level: (low/med) Date Recieved: 07/09/2008

% Solids: 0.0

Concentration Units (ug/L or mg/kg dry weight): UG/L

CAS No.	Analyte	Concentration	C	Q	M	
7429-90-5	Aluminum	200	U		P	
7440-36-0	Antimony	60.0	U		P	
7440-38-2	Arsenic	10 ~~2.6~~	~~J~~	U	P	BL
7440-39-3	Barium	200 ~~59.2~~	~~J~~	U	P	BL
7441-41-7	Beryllium	5 ~~0.49~~	~~J~~	U	P	BL
7440-43-9	Cadmium	5 ~~0.38~~	~~J~~	U	P	BL
7440-70-2	Calcium	185000		~~E~~	P	
7440-47-3	Chromium	1.2	J		P	
7440-48-4	Cobalt	50.0	U		P	
7440-50-8	Copper	25 ~~1.9~~	~~J~~	U	P	BL
7439-89-6	Iron	28900		J ~~E~~	P	SD
7439-92-1	Lead	10.0	U		P	
7439-95-4	Magnesium	14600		J ~~E~~	P	SD
7439-96-5	Manganese	477		J ~~E~~	P	SD
7439-97-6	Mercury	0.11	J		CV	
7440-02-0	Nickel	40.0	U		P	
7440-09-7	Potassium	4410	~~J~~	J ~~E~~	P	SD
7782-49-2	Selenium	35 ~~2.7~~	~~J~~	U	P	BL
7440-22-4	Silver	10.0	U		P	
7440-23-5	Sodium	15900		J ~~E~~	P	SD
7440-28-0	Thallium	25.0	U		P	
7440-62-2	Vanadium	50.0	U		P	
7440-66-6	Zinc	7.0	J		P	

Color Before: Colorless Clarity Before: Clear Texture: NA

Color After: Colorless Clarity After: Clear Artifacts: NA

Comments:

USEPA - CLP

1A - IN

INORGANIC ANALYSIS DATA SHEET

EPA SAMPLE NO.

IR78-GW50D-08C

Lab Name: GPL LABORATORIES, LL Contract:

Lab Code: Case No.: NRAS No.: SDG No.: 807047

Matrix: (soil/water) WATER Lab Sample ID: S 807047-013-017-1/1

Level: (low/med) Date Recieved: 07/09/2008

% Solids: 0.0

Concentration Units (ug/L or mg/kg dry weight): UG/L

CAS No.	Analyte	Concentration	C	Q	M	
7429-90-5	Aluminum	200 ~~110~~	~~J~~	U	P	BL
7440-36-0	Antimony	60.0	U		P	
7440-38-2	Arsenic	10.0	U		P	
7440-39-3	Barium	200 ~~58.3~~	~~J~~	U	P	BL
7441-41-7	Beryllium	5 ~~0.56~~	~~J~~	U	P	BL
7440-43-9	Cadmium	5.0	U		P	
7440-70-2	Calcium	172000		~~E~~	P	
7440-47-3	Chromium	1.9	J		P	
7440-48-4	Cobalt	50.0	U		P	
7440-50-8	Copper	25 ~~2.0~~	~~J~~	U	P	BL
7439-89-6	Iron	28200		J ~~E~~	P	SD
7439-92-1	Lead	10.0	U		P	
7439-95-4	Magnesium	14700		J ~~E~~	P	SD
7439-96-5	Manganese	488		J ~~E~~	P	SD
7439-97-6	Mercury	0.087	J		CV	
7440-02-0	Nickel	40.0	U		P	
7440-09-7	Potassium	4520	~~J~~	J ~~E~~	P	SD
7782-49-2	Selenium	35.0	U		P	
7440-22-4	Silver	10.0	U		P	
7440-23-5	Sodium	16000		J ~~E~~	P	SD
7440-28-0	Thallium	25.0	U		P	
7440-62-2	Vanadium	50.0	U		P	
7440-66-6	Zinc	12.4	J		P	

Color Before: Colorless Clarity Before: Clear Texture: NA

Color After: Colorless Clarity After: Clear Artifacts: NA

Comments:

USEPA - CLP

1A - IN

INORGANIC ANALYSIS DATA SHEET

EPA SAMPLE NO.

IR78-GW50D-08C FIL

Lab Name: GPL LABORATORIES, LL Contract:

Lab Code: Case No.: NRAS No.: SDG No.: 807047

Matrix: (soil/water) WATER Lab Sample ID: S 807047-014-027-1/1

Level: (low/med) Date Recieved: 07/09/2008

% Solids: 0.0

Concentration Units (ug/L or mg/kg dry weight): UG/L

CAS No.	Analyte	Concentration	C	Q	M	
7429-90-5	Aluminum	200	U		P	
7440-36-0	Antimony	60.0	U		P	
7440-38-2	Arsenic	10 ~~4.1~~	~~J~~	U	P	BL
7440-39-3	Barium	200 ~~57.3~~	~~J~~	U	P	BL
7441-41-7	Beryllium	5 ~~0.52~~	~~J~~	U	P	BL
7440-43-9	Cadmium	5 ~~0.64~~	~~J~~	U	P	BL
7440-70-2	Calcium	181000		~~E~~	P	
7440-47-3	Chromium	1.1	J		P	
7440-48-4	Cobalt	50.0	U		P	
7440-50-8	Copper	25 ~~3.1~~	~~J~~	U	P	BL
7439-89-6	Iron	28600		J ~~E~~	P	SD
7439-92-1	Lead	10.0	U		P	
7439-95-4	Magnesium	14600		J ~~E~~	P	SD
7439-96-5	Manganese	474		J ~~E~~	P	SD
7439-97-6	Mercury	0.072	J		CV	
7440-02-0	Nickel	40 ~~1.9~~	~~J~~	U	P	BL
7440-09-7	Potassium	4390	J	J ~~E~~	P	SD
7782-49-2	Selenium	35 ~~2.1~~	~~J~~	U	P	BL
7440-22-4	Silver	10.0	U		P	
7440-23-5	Sodium	15400		J ~~E~~	P	SD
7440-28-0	Thallium	25.0	U		P	
7440-62-2	Vanadium	50.0	U		P	
7440-66-6	Zinc	5.0	J		P	

Color Before: Colorless Clarity Before: Clear Texture: NA

Color After: Colorless Clarity After: Clear Artifacts: NA

Comments:

FORM IA - IN RW 9/30/08

USEPA - CLP

1A - IN

INORGANIC ANALYSIS DATA SHEET

EPA SAMPLE NO.

IR78-GW59-08C

Lab Name: GPL LABORATORIES, LL Contract:

Lab Code: Case No.: NRAS No.: SDG No.: 807047

Matrix: (soil/water) WATER Lab Sample ID: S 807047-015-018-1/1

Level: (low/med) Date Recieved: 07/09/2008

% Solids: 0.0

Concentration Units (ug/L or mg/kg dry weight): UG/L

CAS No.	Analyte	Concentration	C	Q	M	
7429-90-5	Aluminum	200	U		P	
7440-36-0	Antimony	60.0	U		P	
7440-38-2	Arsenic	10 ~~2.4~~	~~J~~	U	P	BL
7440-39-3	Barium	200 ~~135~~	~~J~~	U	P	BL
7441-41-7	Beryllium	5.0	U		P	
7440-43-9	Cadmium	5.0	U		P	
7440-70-2	Calcium	117000		~~E~~	P	
7440-47-3	Chromium	10.0	U		P	
7440-48-4	Cobalt	50.0	U		P	
7440-50-8	Copper	25 ~~2.4~~	~~J~~	U	P	BL
7439-89-6	Iron	100 ~~81.9~~	~~J~~	U ~~E~~	P	BL
7439-92-1	Lead	10.0	U		P	
7439-95-4	Magnesium	5000 ~~4840~~	~~J~~	U ~~E~~	P	BL
7439-96-5	Manganese	1330		J ~~E~~	P	SD
7439-97-6	Mercury	0.12	J		CV	
7440-02-0	Nickel	40.0	U		P	
7440-09-7	Potassium	1270	~~J~~	J ~~E~~	P	SD
7782-49-2	Selenium	35 ~~2.3~~	~~J~~	U	P	BL
7440-22-4	Silver	10.0	U		P	
7440-23-5	Sodium	7840		J ~~E~~	P	SD
7440-28-0	Thallium	25.0	U		P	
7440-62-2	Vanadium	50.0	U		P	
7440-66-6	Zinc	7.7	J		P	

Color Before: Colorless Clarity Before: Clear Texture: NA

Color After: Colorless Clarity After: Clear Artifacts: NA

Comments:

USEPA - CLP

1A - IN

INORGANIC ANALYSIS DATA SHEET

EPA SAMPLE NO.

IR78-GW59-08C FIL

Lab Name: GPL LABORATORIES, LL Contract:

Lab Code: Case No.: NRAS No.: SDG No.: 807047

Matrix: (soil/water) WATER Lab Sample ID: S 807047-016-028-1/1

Level: (low/med) Date Recieved: 07/09/2008

% Solids: 0.0

Concentration Units (ug/L or mg/kg dry weight): UG/L

CAS No.	Analyte	Concentration	C	Q	M	
7429-90-5	Aluminum	200	U		P	
7440-36-0	Antimony	60.0	U		P	
7440-38-2	Arsenic	10 ~~4.8~~	~~J~~	U	P	BL
7440-39-3	Barium	200 ~~128~~	~~J~~	U	P	BL
7441-41-7	Beryllium	5.0	U		P	
7440-43-9	Cadmium	5.0	U		P	
7440-70-2	Calcium	113000		~~E~~	P	
7440-47-3	Chromium	10.0	U		P	
7440-48-4	Cobalt	50.0	U		P	
7440-50-8	Copper	25 ~~2.8~~	~~J~~	U	P	BL
7439-89-6	Iron	100 ~~89.1~~	~~J~~	U ~~E~~	P	BL
7439-92-1	Lead	10.0	U		P	
7439-95-4	Magnesium	5000 ~~4700~~	~~J~~	U ~~E~~	P	BL
7439-96-5	Manganese	1290		J ~~E~~	P	SD
7440-02-0	Nickel	40 ~~2.2~~	~~J~~	U	P	BL
7439-97-6	Mercury	0.039	J		CV	
7440-09-7	Potassium	1250	~~J~~	J ~~E~~	P	SD
7782-49-2	Selenium	35.0	U		P	
7440-22-4	Silver	10.0	U		P	
7440-23-5	Sodium	7780		J ~~E~~	P	SD
7440-28-0	Thallium	25.0	U		P	
7440-62-2	Vanadium	50.0	U		P	
7440-66-6	Zinc	5.1	J		P	

Color Before: Colorless Clarity Before: Clear Texture: NA

Color After: Colorless Clarity After: Clear Artifacts: NA

Comments:

17

USEPA - CLP

1A - IN

INORGANIC ANALYSIS DATA SHEET

EPA SAMPLE NO.

IR78-GW55-08C

Lab Name: GPL LABORATORIES, LL Contract:

Lab Code: Case No.: NRAS No.: SDG No.: 807047

Matrix: (soil/water) WATER Lab Sample ID: S 807047-017-054-1/3

Level: (low/med) Date Recieved: 07/09/2008

% Solids: 0.0

Concentration Units (ug/L or mg/kg dry weight): UG/L

CAS No.	Analyte	Concentration	C	Q	M	
7429-90-5	Aluminum	200 ~~181~~	~~J~~	U	P	BL
7440-36-0	Antimony	60.0	U		P	
7440-38-2	Arsenic	10 ~~6.0~~	~~J~~	U	P	BL
7440-39-3	Barium	200 ~~76.1~~	~~J~~	U	P	BL
7441-41-7	Beryllium	5.0	U		P	
7440-43-9	Cadmium	5.0	U		P	
7440-70-2	Calcium	179000		~~E~~	P	
7440-47-3	Chromium	10.0	U		P	
7440-48-4	Cobalt	50.0	U		P	
7440-50-8	Copper	25 ~~1.6~~	~~J~~	U	P	BL
7439-89-6	Iron	1760		J ~~E~~	P	SD
7439-92-1	Lead	10.0	U		P	
7439-95-4	Magnesium	11600		J ~~E~~	P	SD
7439-96-5	Manganese	267		J ~~E~~	P	SD
7439-97-6	Mercury	0.081	J		CV	
7440-02-0	Nickel	40 ~~2.7~~	~~J~~	U	P	BL
7440-09-7	Potassium	2440	J	J ~~E~~	P	SD
7782-49-2	Selenium	35 ~~3.0~~	~~J~~	U	P	BL
7440-22-4	Silver	10.0	U		P	
7440-23-5	Sodium	10200		J ~~E~~	P	SD
7440-28-0	Thallium	25.0	U		P	
7440-62-2	Vanadium	50.0	U		P	
7440-66-6	Zinc	26.5	J		P	

Color Before: Colorless Clarity Before: Clear Texture: NA

Color After: Colorless Clarity After: Clear Artifacts: NA

Comments:

FORM IA - IN 9/30/08 CLPILMO5.3

USEPA - CLP

1A - IN

INORGANIC ANALYSIS DATA SHEET

EPA SAMPLE NO.

IR78-GW55-08C FIL

Lab Name: GPL LABORATORIES, LL Contract:

Lab Code: Case No.: NRAS No.: SDG No.: 807047

Matrix: (soil/water) WATER Lab Sample ID: S 807047-018-061-1/3

Level: (low/med) Date Recieved: 07/09/2008

% Solids: 0.0

Concentration Units (ug/L or mg/kg dry weight): UG/L

CAS No.	Analyte	Concentration	C	Q	M	
7429-90-5	Aluminum	200 ~~47.3~~	~~J~~	U	P	BL
7440-36-0	Antimony	60.0	U		P	
7440-38-2	Arsenic	10 ~~6.3~~	~~J~~	U	P	BL
7440-39-3	Barium	200 ~~77.9~~	~~J~~	U	P	BL
7441-41-7	Beryllium	5.0	U		P	
7440-43-9	Cadmium	5.0	U		P	
7440-70-2	Calcium	177000		~~E~~	P	
7440-47-3	Chromium	10.0	U		P	
7440-48-4	Cobalt	50.0	U		P	
7440-50-8	Copper	25 ~~1.7~~	~~J~~	U	P	BL
7439-89-6	Iron	1390		J ~~E~~	P	SD
7439-92-1	Lead	10.0	U		P	
7439-95-4	Magnesium	11400		J ~~E~~	P	SD
7439-96-5	Manganese	255		J ~~E~~	P	SD
7440-02-0	Nickel	40 ~~2.5~~	~~J~~	U	P	BL
7439-97-6	Mercury	0.061	J		CV	
7440-09-7	Potassium	2460	~~J~~	J ~~E~~	P	SD
7782-49-2	Selenium	35.0	U		P	
7440-22-4	Silver	10.0	U		P	
7440-23-5	Sodium	11000		J ~~E~~	P	SD
7440-28-0	Thallium	25.0	U		P	
7440-62-2	Vanadium	50.0	U		P	
7440-66-6	Zinc	35.3	J		P	

Color Before: Colorless Clarity Before: Clear Texture: NA

Color After: Colorless Clarity After: Clear Artifacts: NA

Comments:

USEPA - CLP

1A - IN

INORGANIC ANALYSIS DATA SHEET

EPA SAMPLE NO.

IR78-GW68-08C

Lab Name: GPL LABORATORIES, LL Contract:

Lab Code: Case No.: NRAS No.: SDG No.: 807047

Matrix: (soil/water) WATER Lab Sample ID: S 807047-019-019-1/1

Level: (low/med) Date Recieved: 07/09/2008

% Solids: 0.0

Concentration Units (ug/L or mg/kg dry weight): UG/L

CAS No.	Analyte	Concentration	C	Q	M	
7429-90-5	Aluminum	200 ~~43.7~~	~~J~~	U	P	BL
7440-36-0	Antimony	60.0	U		P	
7440-38-2	Arsenic	10 ~~3.0~~	~~J~~	U	P	BL
7440-39-3	Barium	200 ~~78.1~~	~~J~~	U	P	BL
7441-41-7	Beryllium	5 ~~0.095~~	~~J~~	U	P	BL
7440-43-9	Cadmium	5 ~~0.35~~	~~J~~	U	P	BL
7440-70-2	Calcium	197000			P	
7440-47-3	Chromium	10.0	U		P	
7440-48-4	Cobalt	3.3	J		P	
7440-50-8	Copper	25 ~~3.9~~	~~J~~	U	P	BL
7439-89-6	Iron	271			P	
7439-92-1	Lead	10.0	U		P	
7439-95-4	Magnesium	8800			P	
7439-96-5	Manganese	51.2			P	
7440-02-0	Nickel	40 ~~38.5~~	~~J~~	U	P	BL
7439-97-6	Mercury	0.080	J		CV	
7440-09-7	Potassium	2530	J		P	
7782-49-2	Selenium	35.0	U		P	
7440-22-4	Silver	10.0	U		P	
7440-23-5	Sodium	25400			P	
7440-28-0	Thallium	25.0	U		P	
7440-62-2	Vanadium	50.0	U		P	
7440-66-6	Zinc	12.7	J		P	

Color Before: COLORLESS Clarity Before: CLER Texture: NA

Color After: COLORLESS Clarity After: CLER Artifacts: NA

Comments:

USEPA - CLP

1A - IN

INORGANIC ANALYSIS DATA SHEET

EPA SAMPLE NO.

IR78-GW68-08C FIL

Lab Name: GPL LABORATORIES, LL Contract:

Lab Code: Case No.: NRAS No.: SDG No.: 807047

Matrix: (soil/water) WATER Lab Sample ID: S 807047-020-029-1/1

Level: (low/med) Date Recieved: 07/09/2008

% Solids: 0.0

Concentration Units (ug/L or mg/kg dry weight): UG/L

CAS No.	Analyte	Concentration	C	Q	M	
7429-90-5	Aluminum	200	U		P	
7440-36-0	Antimony	60.0	U		P	
7440-38-2	Arsenic	10 ~~2.0~~	~~J~~	U	P	BL
7440-39-3	Barium	200 ~~77.0~~	~~J~~	U	P	BL
7441-41-7	Beryllium	5 ~~0.056~~	~~J~~	U	P	BL
7440-43-9	Cadmium	5.0	U		P	
7440-70-2	Calcium	193000			P	
7440-47-3	Chromium	10.0	U		P	
7440-48-4	Cobalt	2.9	J		P	
7440-50-8	Copper	25 ~~2.5~~	~~J~~	U	P	BL
7439-89-6	Iron	185			P	
7439-92-1	Lead	10.0	U		P	
7439-95-4	Magnesium	8810			P	
7439-96-5	Manganese	49.4			P	
7440-02-0	Nickel	40 ~~37.3~~	~~J~~	U	P	BL
7439-97-6	Mercury	0.095	J		CV	
7440-09-7	Potassium	2480	J		P	
7782-49-2	Selenium	35.0	U		P	
7440-22-4	Silver	10.0	U		P	
7440-23-5	Sodium	25100			P	
7440-28-0	Thallium	25.0	U		P	
7440-62-2	Vanadium	50.0	U		P	
7440-66-6	Zinc	8.1	J		P	

Color Before: COLORLESS Clarity Before: CLER Texture: NA

Color After: COLORLESS Clarity After: CLER Artifacts: NA

Comments:

21

USEPA - CLP

1A - IN

INORGANIC ANALYSIS DATA SHEET

EPA SAMPLE NO.

IR78-GW64-08C

Lab Name: GPL LABORATORIES, LL Contract:

Lab Code: Case No.: NRAS No.: SDG No.: 807047

Matrix: (soil/water) WATER Lab Sample ID: S 807047-021-020-1/1

Level: (low/med) Date Recieved: 07/09/2008

% Solids: 0.0

Concentration Units (ug/L or mg/kg dry weight): UG/L

CAS No.	Analyte	Concentration	C	Q	M	
7429-90-5	Aluminum	200 ~~49.6~~	~~J~~	U	P	BL
7440-36-0	Antimony	60.0	U		P	
7440-38-2	Arsenic	11.8			P	
7440-39-3	Barium	200 ~~42.9~~	~~J~~	U	P	BL
7441-41-7	Beryllium	5.0	U		P	
7440-43-9	Cadmium	5.0	U		P	
7440-70-2	Calcium	107000			P	
7440-47-3	Chromium	10.0	U		P	
7440-48-4	Cobalt	50.0	U		P	
7440-50-8	Copper	25 ~~1.9~~	~~J~~	U	P	BL
7439-89-6	Iron	6080			P	
7439-92-1	Lead	10.0	U		P	
7439-95-4	Magnesium	5000 ~~2140~~	~~J~~	U	P	BL
7439-96-5	Manganese	54.1			P	
7439-97-6	Mercury	0.10	J		CV	
7440-02-0	Nickel	40 ~~11.0~~	~~J~~	U	P	BL
7440-09-7	Potassium	1820	J		P	
7782-49-2	Selenium	35.0	U		P	
7440-22-4	Silver	10.0	U		P	
7440-23-5	Sodium	13100			P	
7440-28-0	Thallium	25.0	U		P	
7440-62-2	Vanadium	50.0	U		P	
7440-66-6	Zinc	19.4	J		P	

Color Before: COLORLESS Clarity Before: CLER Texture: NA

Color After: COLORLESS Clarity After: CLER Artifacts: NA

Comments:

USEPA - CLP

1A - IN

INORGANIC ANALYSIS DATA SHEET

EPA SAMPLE NO.

IR78-GW64-08C FIL

Lab Name: GPL LABORATORIES, LL Contract:

Lab Code: Case No.: NRAS No.: SDG No.: 807047

Matrix: (soil/water) WATER Lab Sample ID: S 807047-022-030-1/1

Level: (low/med) Date Recieved: 07/09/2008

% Solids: 0.0

Concentration Units (ug/L or mg/kg dry weight): UG/L

CAS No.	Analyte	Concentration	C	Q	M	
7429-90-5	Aluminum	200 ~~54.6~~	~~J~~	U	P	BL
7440-36-0	Antimony	60.0	U		P	
7440-38-2	Arsenic	11.2			P	
7440-39-3	Barium	200 ~~43.1~~	~~J~~	U	P	BL
7441-41-7	Beryllium	5.0	U		P	
7440-43-9	Cadmium	5.0	U		P	
7440-70-2	Calcium	103000			P	
7440-47-3	Chromium	10.0	U		P	
7440-48-4	Cobalt	50.0	U		P	
7440-50-8	Copper	25 ~~2.2~~	~~J~~	U	P	BL
7439-89-6	Iron	5680			P	
7439-92-1	Lead	10.0	U		P	
7439-95-4	Magnesium	5000 ~~2130~~	~~J~~	U	P	BL
7439-96-5	Manganese	76.1			P	
7440-02-0	Nickel	40 ~~8.5~~	~~J~~	U	P	BL
7439-97-6	Mercury	0.042	J		CV	
7440-09-7	Potassium	1760	J		P	
7782-49-2	Selenium	35.0	U		P	
7440-22-4	Silver	10.0	U		P	
7440-23-5	Sodium	12500			P	
7440-28-0	Thallium	25.0	U		P	
7440-62-2	Vanadium	50.0	U		P	
7440-66-6	Zinc	16.5	J		P	

Color Before: COLORLESS Clarity Before: CLER Texture: NA

Color After: COLORLESS Clarity After: CLER Artifacts: NA

Comments:

ENVIRONMENTAL
Data Services, Inc.

PERCHLORATE

USEPA Region IV - Level IV Review

Site: MCB Camp Lejeune, UXO-08, CTO-168 SDG #: 807047

Client: CH2M HILL, Inc., Virginia Beach, Virginia Date: September 30, 2008

Laboratory: DataChem Laboratories, Salt Lake City, Utah Reviewer: Nancy Weaver

EDS ID	Client Sample ID	Laboratory Sample ID	Matrix
1	IR78-GW63-08C	807047-001	Water
2	IR78-EB070808	807047-003	Water
3	IR78-GW63D-08C	807047-005	Water
4	IR78-GW62-08C	807047-007	Water
5	IR78-GW61-08C	807047-009	Water
6	IR78-GW50-08C	807047-011	Water
7	IR78-GW50D-08C	807047-013	Water
8	IR78-GW59-08C	807047-015	Water
9	IR78-GW55-08C	807047-017	Water
9MS	IR78-GW55-08CMS	807047-017MS	Water
9MSD	IR78-GW55-08CMSD	807047-017MSD	Water
10	IR78-GW68-08C	807047-019	Water
11	IR78-GW64-08C	807047-021	Water

The USEPA "Contract Laboratory Program National Functional Guidelines for Inorganic Data Review," October 2004, and professional judgement were used in evaluating the data in this summary report.

Holding Times - All samples were prepared and analyzed within 28 days for perchlorate.

Calibration - The ICV and CCV %R values were acceptable.

Method and Calibration Blanks - The method blanks and continuing calibration blanks were free of contamination.

Field and Equipment Blank - Field QC results are summarized below.

Blank ID	Compound	Conc. ug/L	Action Level ug/L	Qualifier	Affected Samples
IR78-EB070808	None - ND	-	-	-	-

Blank ID	Compound	Conc. ug/L	Action Level ug/L	Qualifier	Affected Samples
IR78-FB070908	None - ND	-	-	-	-

Matrix Spike/Duplicate - The matrix spike/duplicate sample exhibited acceptable %R and RPD values.

LCS - The LCS samples exhibited acceptable %R values.

Field Duplicates - Field duplicate results are summarized below.

Compound	IR78-GW63-08C ug/L	IR78-GW63D-08C ug/L	RPD	Qualifier
None	ND	ND	-	-

Compound	IR78-GW50-08C ug/L	IR78-GW50D-08C ug/L	RPD	Qualifier
None	ND	ND	-	-

Compound Quantitation - No discrepancies were identified.

DATA CHEM LABORATORIES
A Sorenson Company

FORM A (TYPE I)
SINGLE METHOD ANALYSES

SAMPLE ANALYSIS DATA SHEET

Form RLIMS63A-V1.4
07180818410142
Page 3

S086902M

Date Printed.....: 18-JUL-08 18:41

Client Name.....: GPL Laboratories
Client Ref Number....: 807047
Sampling Site.....: CAMP LEJEUNE UXO-08
Release Number.....: 807047

Date Received.....: 10-JUL-08 00:00

Client Sample Name: IR78-GW63-08|C
DCL Sample Name...: 08E03492
DCL Report Group..: 08E-0552-01

Matrix.....: WATER
Date Sampled.....: 08-JUL-08 11:55
Reporting Units...: ug/L
Report Basis.....: ☒ As Received ☐ Dried

DCL Preparation Group: Not Applicable
Date Prepared.....: 17-JUL-08 00:00
Preparation Method...: 6850
Aliquot Weight/Volume: Not Applicable
Net Weight/Volume....: Not Required

DCL Analysis Group: G086F00T
Analysis Method...: 6850
Instrument Type...: LC/MS
Instrument ID.....: LCMS02
Column Type.....: KP-RPPX250
☒ Primary
☐ Confirmation

Analytical Results

Analyte	Date Analyzed	MDL	Result	Comment	Qual.	Dilution	PQL
Perchlorate	17-JUL-08 19:19	0.0663	ND		U	1	0.200

kw 9/30/08

DATA CHEM LABORATORIES
A Sorenson Company

FORM A (TYPE I)
SINGLE METHOD ANALYSES

SAMPLE ANALYSIS DATA SHEET

Form RLIMS63A-V1.4
07180818410142
Page 4

S086902N

Date Printed.....: 18-JUL-08 18:41

Client Name.....: GPL Laboratories
Client Ref Number....: 807047
Sampling Site.....: CAMP LEJEUNE UXO-08
Release Number.....: 807047

Date Received.....: 10-JUL-08 00:00

Client Sample Name: IR78-EB07080|8
DCL Sample Name...: 08E03493
DCL Report Group..: 08E-0552-01

Matrix.....: WATER
Date Sampled.....: 08-JUL-08 10:00
Reporting Units...: ug/L
Report Basis.....: ☒ As Received ☐ Dried

DCL Preparation Group: Not Applicable
Date Prepared.....: 17-JUL-08 00:00
Preparation Method...: 6850
Aliquot Weight/Volume: Not Applicable
Net Weight/Volume....: Not Required

DCL Analysis Group: G086F00T
Analysis Method...: 6850
Instrument Type...: LC/MS
Instrument ID.....: LCMS02
Column Type.....: KP-RPPX250
☒ Primary
☐ Confirmation

Analytical Results

Analyte	Date Analyzed	MDL	Result	Comment	Qual.	Dilution	PQL
Perchlorate	17-JUL-08 19:40	0.0663	ND		U	1	0.200

UW 9/30/08

DATA CHEM LABORATORIES
A Sorenson Company

FORM A (TYPE I)
SINGLE METHOD ANALYSES

SAMPLE ANALYSIS DATA SHEET

Form RLIMS63A-V1.4
07180818410142
Page 5

S086902P

Date Printed.....: 18-JUL-08 18:41

Client Name.....: GPL Laboratories
Client Ref Number....: 807047
Sampling Site.....: CAMP LEJEUNE UXO-08
Release Number.....: 807047

Date Received.....: 10-JUL-08 00:00

Client Sample Name: IR7S-GW63D-0|C
DCL Sample Name...: 08E03494
DCL Report Group..: 08E-0552-01

Matrix.....: WATER
Date Sampled.....: 08-JUL-08 12:00
Reporting Units...: ug/L
Report Basis.....: ☒ As Received ☐ Dried

DCL Preparation Group: Not Applicable
Date Prepared.....: 17-JUL-08 00:00
Preparation Method...: 6850
Aliquot Weight/Volume: Not Applicable
Net Weight/Volume....: Not Required

DCL Analysis Group: G086F00T
Analysis Method...: 6850
Instrument Type...: LC/MS
Instrument ID.....: LCMS02
Column Type.....: KP-RPPX250
☒ Primary
☐ Confirmation

Analytical Results

Analyte	Date Analyzed	MDL	Result	Comment	Qual.	Dilution	PQL
Perchlorate	17-JUL-08 21:06	0.0663	ND		U	1	0.200

LW 9/30/08

DATA CHEM LABORATORIES
A Sorenson Company

FORM A (TYPE I)
SINGLE METHOD ANALYSES

SAMPLE ANALYSIS DATA SHEET

Form RLIMS63A-V1.4
07180818410142
Page 6

S086902Q

Date Printed.....: 18-JUL-08 18:41

Client Name.....: GPL Laboratories
Client Ref Number....: 807047
Sampling Site.....: CAMP LEJEUNE UXO-08
Release Number.....: 807047

Date Received.....: 10-JUL-08 00:00

Client Sample Name: IR78-GW62-08|C
DCL Sample Name...: 08E03495
DCL Report Group..: 08E-0552-01

Matrix.....: WATER
Date Sampled.....: 08-JUL-08 13:30
Reporting Units...: ug/L
Report Basis.....: ☒ As Received ☐ Dried

DCL Preparation Group: Not Applicable
Date Prepared.....: 17-JUL-08 00:00
Preparation Method...: 6850
Aliquot Weight/Volume: Not Applicable
Net Weight/Volume....: Not Required

DCL Analysis Group: G086F00T
Analysis Method...: 6850
Instrument Type...: LC/MS
Instrument ID.....: LCMS02
Column Type.....: KP-RPPX250
☒ Primary
☐ Confirmation

Analytical Results

Analyte	Date Analyzed	MDL	Result	Comment	Qual.	Dilution	PQL
Perchlorate	17-JUL-08 21:27	0.0663	ND		U	1	0.200

lw
9/30/08

DATA CHEM LABORATORIES
A Sorenson Company

FORM A (TYPE I)
SINGLE METHOD ANALYSES

SAMPLE ANALYSIS DATA SHEET

Form RLIMS63A-V1.4
07180818410142
Page 7

S086902R

Date Printed.....: 18-JUL-08 18:41

Client Name.....: GPL Laboratories
Client Ref Number....: 807047
Sampling Site.....: CAMP LEJEUNE UXO-08
Release Number.....: 807047

Date Received.....: 10-JUL-08 00:00

Client Sample Name: IR78-GW61-08|C
DCL Sample Name...: 08E03496
DCL Report Group..: 08E-0552-01

Matrix.....: WATER
Date Sampled.....: 08-JUL-08 14:35
Reporting Units...: ug/L
Report Basis.....: ☒ As Received ☐ Dried

DCL Preparation Group: Not Applicable
Date Prepared.....: 17-JUL-08 00:00
Preparation Method...: 6850
Aliquot Weight/Volume: Not Applicable
Net Weight/Volume....: Not Required

DCL Analysis Group: G086F00T
Analysis Method...: 6850
Instrument Type...: LC/MS
Instrument ID.....: LCMS02
Column Type.....: XP-RPPX250
☒ Primary
☐ Confirmation

Analytical Results

Analyte	Date Analyzed	MDL	Result	Comment	Qual.	Dilution	PQL
Perchlorate	17-JUL-08 22:31	0.0663	ND		U	1	0.200

lw
9/30/08

6

DATA CHEM LABORATORIES
A Sorenson Company

FORM A (TYPE I)
SINGLE METHOD ANALYSES

SAMPLE ANALYSIS DATA SHEET

Form RLIMS63A-V1.4
07180818410142
Page 8

S086902S

Date Printed.....: 18-JUL-08 18:41

Client Name.....: GPL Laboratories
Client Ref Number....: 807047
Sampling Site.....: CAMP LEJEUNE UXO-08
Release Number.....: 807047

Date Received.....: 10-JUL-08 00:00

Client Sample Name: IR78-GW50-08|C
DCL Sample Name...: 08E03497
DCL Report Group..: 08E-0552-01

Matrix.....: WATER
Date Sampled.....: 08-JUL-08 16:17
Reporting Units...: ug/L
Report Basis.....: ☒ As Received ☐ Dried

DCL Preparation Group: Not Applicable
Date Prepared.....: 17-JUL-08 00:00
Preparation Method...: 6850
Aliquot Weight/Volume: Not Applicable
Net Weight/Volume....: Not Required

DCL Analysis Group: G086F00T
Analysis Method...: 6850
Instrument Type...: LC/MS
Instrument ID.....: LCMS02
Column Type.....: RP-RPPX250
☒ Primary
☐ Confirmation

Analytical Results

Analyte	Date Analyzed	MDL	Result	Comment	Qual.	Dilution	PQL
Perchlorate	17-JUL-08 22:52	0.0663	ND		U	1	0.200

LW
9/30/08

11

DATA CHEM LABORATORIES
A Sorenson Company

FORM A (TYPE I)
SINGLE METHOD ANALYSES

SAMPLE ANALYSIS DATA SHEET

Form RLIMS63A-V1.4
07180818410142
Page 9

S086902T

Date Printed.....: 18-JUL-08 18:41

Client Name.....: GPL Laboratories
Client Ref Number....: 807047
Sampling Site.....: CAMP LEJEUNE UXO-08
Release Number.....: 807047

Date Received.....: 10-JUL-08 00:00

Client Sample Name: IR78-GW50D-0|C
DCL Sample Name...: 08E03498
DCL Report Group..: 08E-0552-01

Matrix.....: WATER
Date Sampled.....: 08-JUL-08 16:27
Reporting Units...: ug/L
Report Basis.....: ☒ As Received ☐ Dried

DCL Preparation Group: Not Applicable
Date Prepared.....: 17-JUL-08 00:00
Preparation Method...: 6850
Aliquot Weight/Volume: Not Applicable
Net Weight/Volume....: Not Required

DCL Analysis Group: G086F00T
Analysis Method...: 6850
Instrument Type...: LC/MS
Instrument ID.....: LCMS02
Column Type.....: KP-RPPX250
☒ Primary
☐ Confirmation

Analytical Results

Analyte	Date Analyzed	MDL	Result	Comment	Qual.	Dilution	PQL
Perchlorate	17-JUL-08 23:14	0.0663	ND		U	1	0.200

hw 9/30/08

DATA CHEM LABORATORIES
A Sorenson Company

FORM A (TYPE I)
SINGLE METHOD ANALYSES

SAMPLE ANALYSIS DATA SHEET

Form RLIMS63A-V1.4
07180818410142
Page 10

S086902V

Date Printed.....: 18-JUL-08 18:41

Client Name.....: GPL Laboratories
Client Ref Number....: 807047
Sampling Site.....: CAMP LEJEUNE UXO-08
Release Number.....: 807047

Date Received.....: 10-JUL-08 00:00

Client Sample Name: IR78-GW59-08|C
DCL Sample Name...: 08E03499
DCL Report Group..: 08E-0552-01

Matrix.....: WATER
Date Sampled.....: 08-JUL-08 12:30
Reporting Units...: ug/L
Report Basis.....: ☒ As Received ☐ Dried

DCL Preparation Group: Not Applicable
Date Prepared.....: 17-JUL-08 00:00
Preparation Method...: 6850
Aliquot Weight/Volume: Not Applicable
Net Weight/Volume....: Not Required

DCL Analysis Group: G086F00T
Analysis Method...: 6850
Instrument Type...: LC/MS
Instrument ID.....: LCMS02
Column Type.....: KP-RPPX250
☒ Primary
☐ Confirmation

Analytical Results

Analyte	Date Analyzed	MDL	Result	Comment	Qual.	Dilution	PQL
Perchlorate	17-JUL-08 23:35	0.0663	ND		U	1	0.200

MW
9/30/08

DATA CHEM LABORATORIES
A Sorenson Company

FORM A (TYPE I)
SINGLE METHOD ANALYSES

SAMPLE ANALYSIS DATA SHEET

Form RLIMS63A-V1.4
07180818410142
Page 11

S086902W

Date Printed.....: 18-JUL-08 18:41

Client Name.....: GPL Laboratories
Client Ref Number....: 807047
Sampling Site.....: CAMP LEJEUNE UXO-08
Release Number.....: 807047

Date Received.....: 10-JUL-08 00:00

Client Sample Name: IR78-GW55-08|C
DCL Sample Name...: 08E03500
DCL Report Group..: 08E-0552-01

Matrix.....: WATER
Date Sampled.....: 08-JUL-08 14:15
Reporting Units...: ug/L
Report Basis.....: ☒ As Received ☐ Dried

DCL Preparation Group: Not Applicable
Date Prepared.....: 17-JUL-08 00:00
Preparation Method...: 6850
Aliquot Weight/Volume: Not Applicable
Net Weight/Volume....: Not Required

DCL Analysis Group: G086F00T
Analysis Method...: 6850
Instrument Type...: LC/MS
Instrument ID.....: LCMS02
Column Type.....: KP-RPPX250
☒ Primary
☐ Confirmation

Analytical Results

Analyte	Date Analyzed	MDL	Result	Comment	Qual.	Dilution	PQL
Perchlorate	17-JUL-08 23:57	0.0663	ND		U	1	0.200

LW
9/30/08

DATA CHEM LABORATORIES
A Sorenson Company

FORM A (TYPE I)
SINGLE METHOD ANALYSES

SAMPLE ANALYSIS DATA SHEET

Form RLIMS63A-V1.4
07180818410142
Page 12

S086902Z

Date Printed.....: 18-JUL-08 18:41

Client Name.....: GPL Laboratories
Client Ref Number....: 807047
Sampling Site.....: CAMP LEJEUNE UXO-08
Release Number.....: 807047

Date Received.....: 10-JUL-08 00:00

Client Sample Name: IR78-GW6S-08|C
DCL Sample Name...: 08E03501
DCL Report Group..: 08E-0552-01

Matrix.....: WATER
Date Sampled.....: 08-JUL-08 16:15
Reporting Units...: ug/L
Report Basis.....: ☒ As Received ☐ Dried

DCL Preparation Group: Not Applicable
Date Prepared.....: 17-JUL-08 00:00
Preparation Method...: 6850
Aliquot Weight/Volume: Not Applicable
Net Weight/Volume....: Not Required

DCL Analysis Group: G086F00T
Analysis Method...: 6850
Instrument Type...: LC/MS
Instrument ID.....: LCMS02
Column Type.....: KP-RPPX250
☒ Primary
☐ Confirmation

Analytical Results

Analyte	Date Analyzed	MDL	Result	Comment	Qual.	Dilution	PQL
Perchlorate	18-JUL-08 01:01	0.0663	ND		U	1	0.200

LW 9/30/08

DATA CHEM LABORATORIES
A Sorenson Company

FORM A (TYPE I)
SINGLE METHOD ANALYSES

SAMPLE ANALYSIS DATA SHEET

Form RLIMS63A-V1.4
07180818410142
Page 13

S0869030

Date Printed.....: 18-JUL-08 18:41

Client Name.....: GPL Laboratories
Client Ref Number....: 807047
Sampling Site.....: CAMP LEJEUNE UXO-08
Release Number.....: 807047

Date Received.....: 10-JUL-08 00:00

Client Sample Name: IR78-GW64-08|C
DCL Sample Name...: 08E03502
DCL Report Group..: 08E-0552-01

Matrix.....: WATER
Date Sampled.....: 08-JUL-08 17:30
Reporting Units...: ug/L
Report Basis.....: ☒ As Received ☐ Dried

DCL Preparation Group: Not Applicable
Date Prepared.....: 17-JUL-08 00:00
Preparation Method...: 6850
Aliquot Weight/Volume: Not Applicable
Net Weight/Volume....: Not Required

DCL Analysis Group: G086F00T
Analysis Method...: 6850
Instrument Type...: LC/MS
Instrument ID.....: LCMS02
Column Type.....: KP-RPPX250
☒ Primary
☐ Confirmation

Analytical Results

Analyte	Date Analyzed	MDL	Result	Comment	Qual.	Dilution	PQL
Perchlorate --	18-JUL-08 01:22	0.0663	ND		U	1	0.200

MW
9/30/08

ENVIRONMENTAL
Data Services, Inc.

EXPLOSIVES

USEPA Region IV - Level IV Review

Site: MCB Camp Lejeune, UXO-08, CTO-168 SDG #: 807054

Client: CH2M HILL, Inc., Virginia Beach, Virginia Date: September 30, 2008

Laboratory: GPL Laboratories, Frederick, Maryland Reviewer: Nancy Weaver

EDS ID	Client Sample ID	Laboratory Sample ID	Matrix
1	IR78-GW56-08C	807054-001	Water
2	IR78-FB070908	807054-003	Water

The USEPA "Contract Laboratory Program National Functional Guidelines for Organic Data Review," October 1999, and professional judgement were used in evaluating the data in this summary report.

Holding Times - All samples were extracted within 7 days for water samples and analyzed within 40 days except the following.

Sample	Date Sampled	Date Extracted	# of Days	Qualifier
All samples	07/09/08	08/14/08	36	J/UJ

Initial Calibration - The initial calibrations exhibited acceptable %RSD and/or correlation coefficient values.

Calibration Verification - The continuing calibrations exhibited acceptable %D values.

Surrogates - All samples exhibited acceptable surrogate recoveries except the following.

Sample ID	Surrogate	%R	Qualifier
1	4-Nitroaniline	34%	None - Already qualified due to HT
2	4-Nitroaniline	33%	None - Already qualified due to HT

MS/MSD - A MS/MSD sample was not analyzed.

Laboratory Control Sample - The LCS samples exhibited acceptable %R values except the following.

LCS ID	Compound	%R	Qualifier	Affected Samples
BKSD104618	HMX	78%	None	Already qualified due to HT

Method Blank - The method blanks were free of contamination.

Field and Equipment Blank - Field QC results are summarized below.

Blank ID	Compound	Conc. ug/L	Action Level ug/L	Qualifier	Affected Samples
IR78-FB070908	None - ND	-	-	-	-
IR78-EB070808	None - ND	-	-	-	-

Field Duplicates - Field duplicate samples were not included in this data package.

Compound Identification - Retention times were acceptable and no further action was taken.

Compound Quantitation - No discrepancies were identified.

GPL Laboratories

GPL
FORM 1
ANALYSIS DATA SHEET

SAMPLE NO
IR78-GW56-08C

Lab Name :	GPL Laboratories	Client. :	CH2M Hill Inc
Lab Code :	GPL	SAS NO. :	
Case No. :		SDG NO :	807054
Matrix : (Soil / Water)	WATER	Lab Sample ID :	807054-001-001-1/1
Sample Volume :	1000	Lab File ID :	LCD42421.D
% Moisture:		Date Received	07/10/2008
Extraction:	EXT_SW8330	Date Extracted:	08/14/2008
Extract Volume:	20 mL	Date Analyzed	07/24/2008
Injection Volume :	100 µ L	Dilution Factor :	1
GPC Clean up (Y/N):	N pH:		

Concentration Units (ug/L or ug/kg dry weight) : ug/L

CAS NO	COMPOUND		Q
99-35-4	1,3,5-Trinitrobenzene	0.20	U
99-65-0	1,3-Dinitrobenzene	0.20	U
118-96-7	2,4,6-Trinitrotoluene	0.20	U
121-14-2	2,4-Dinitrotoluene	0.20	U
606-20-2	2,6-Dinitrotoluene	0.20	U
35572-78-2	2-Amino-4,6-Dinitrotoluene	0.20	U
19406-51-0	4-Amino-2,6-Dinitrotoluene	0.20	U
2691-41-0	HMX	0.40	U
98-95-3	Nitrobenzene	0.20	U
121-82-4	RDX	0.40	U
479-45-8	Tetryl	0.40	U
99-08-1	m-Nitrotoluene	0.40	U
88-72-2	o-Nitrotoluene	0.40	U
99-99-0	p-Nitrotoluene	0.40	U

UJ HT

lw 9/30/08

GPL Laboratories

GPL
FORM 1
ANALYSIS DATA SHEET

SAMPLE NO
IR78-FB070908

Lab Name :	GPL Laboratories	Client. :	CH2M Hill Inc
Lab Code :	GPL	SAS NO. :	
Case No. :		SDG NO :	807054
Matrix : (Soil / Water)	WATER	Lab Sample ID :	807054-003-002-1/1
Sample Volume :	1000	Lab File ID :	LCD42422.D
% Moisture:		Date Received	07/10/2008
Extraction:	EXT_SW8330	Date Extracted:	08/14/2008
Extract Volume:	20 mL	Date Analyzed	07/24/2008
Injection Volume :	100 µ L	Dilution Factor :	1
GPC Clean up (Y/N):	N pH:		

Concentration Units (ug/L or ug/kg dry weight) : ug/L

CAS NO	COMPOUND		Q
99-35-4	1,3,5-Trinitrobenzene	0.20	U
99-65-0	1,3-Dinitrobenzene	0.20	U
118-96-7	2,4,6-Trinitrotoluene	0.20	U
121-14-2	2,4-Dinitrotoluene	0.20	U
606-20-2	2,6-Dinitrotoluene	0.20	U
35572-78-2	2-Amino-4,6-Dinitrotoluene	0.20	U
19406-51-0	4-Amino-2,6-Dinitrotoluene	0.20	U
2691-41-0	HMX	0.40	U
98-95-3	Nitrobenzene	0.20	U
121-82-4	RDX	0.40	U
479-45-8	Tetryl	0.40	U
99-08-1	m-Nitrotoluene	0.40	U
88-72-2	o-Nitrotoluene	0.40	U
99-99-0	p-Nitrotoluene	0.40	U

UJ HT

MW 9/30/08

ENVIRONMENTAL
Data Services, Inc.

METALS

USEPA Region IV - Level IV Review

Site: MCB Camp Lejeune, UXO-08, CTO-168 SDG #: 807054

Client: CH2M HILL, Inc., Virginia Beach, Virginia Date: September 30, 2008

Laboratory: GPL Laboratories, Frederick, Maryland Reviewer: Nancy Weaver

EDS ID	Client Sample ID	Laboratory Sample ID	Matrix
1	IR78-GW56-08C	807054-001	Water
2	IR78-GW56-08C FIL	807054-002	Water
3	IR78-FB070908	807054-003	Water
4	IR78-FB070908 FIL	807054-004	Water

The USEPA "Contract Laboratory Program National Functional Guidelines for Inorganic Data Review," October 2004, and professional judgement were used in evaluating the data in this summary report.

Holding Times - All samples were prepared and analyzed within 28 days for mercury and 180 days for all other metals.

Calibration - The ICV and CCV %R values were acceptable.

CRDL Standard - The CRDL standards exhibited acceptable %R values.

Method and Calibration Blanks - The method blanks and continuing calibration blanks exhibited contamination for several compounds, however, all sample results are non-detect or greater than 5X the blank concentration with the exception of the following:

Compound	Conc. ug/L	Qualifier	Affected Samples
Barium	0.294	U	All samples
Calcium	136.743	U	3, 4
Copper	1.834	U	1, 3, 4
Lead	228.04	U	4
Magnesium	29.324	U	All samples
Manganese	1.964	U	2
Mercury	0.066	U	All samples

Compound	Conc. ug/L	Qualifier	Affected Samples
Zinc	5.320	U	All samples

Field and Equipment Blank - Field QC results are summarized below.

Blank ID	Compound	Conc. ug/L	Action Level ug/L	Qualifier	Affected Samples
IR78-FB070908	None - ND	-	-	-	-
IR78-FB070908 FIL	Arsenic	2.7	13.5	None	ND
	Nickel	1.7	8.5	U	2
	Potassium	61.6	308	None	All >5X
	Sodium	406	2030	None	All >5X
IR78-EB070808	Calcium	195	975	None	All >5X
	Manganese	1.4	7.0	None	All >5X
IR78-EB070808 FIL	Calcium	134	670	None	All >5X

ICP Interference Check Sample - All %R values were acceptable.

Matrix Spike - The matrix spike samples exhibited acceptable %R values.

Matrix Duplicate - The matrix duplicate samples exhibited acceptable RPD values.

LCS - The LCS samples exhibited acceptable %R values.

ICP Serial Dilution - The ICP serial dilution sample exhibited acceptable %D values.

Field Duplicates - Field duplicate samples were not included in this data package.

Compound Quantitation - No discrepancies were identified.

USEPA - CLP

1A - IN

INORGANIC ANALYSIS DATA SHEET

EPA SAMPLE NO.

IR78-GW56-08C

Lab Name: GPL LABORATORIES, LL Contract:

Lab Code: Case No.: NRAS No.: SDG No.: 807054

Matrix: (soil/water) WATER Lab Sample ID: S 807054-001-003-1/1

Level: (low/med) Date Recieved: 07/10/2008

% Solids: 0.0

Concentration Units (ug/L or mg/kg dry weight): UG/L

CAS No.	Analyte	Concentration	C	Q	M	
7429-90-5	Aluminum	200	U		P	
7440-36-0	Antimony	7.8	J		P	
7440-38-2	Arsenic	10.0	U		P	
7440-39-3	Barium	200 ~~34.9~~	~~J~~	u	P	BL
7441-41-7	Beryllium	5.0	U		P	
7440-43-9	Cadmium	5.0	U		P	
7440-70-2	Calcium	117000			P	
7440-47-3	Chromium	10.0	U		P	
7440-48-4	Cobalt	50.0	U		P	
7440-50-8	Copper	25 ~~1.5~~	~~J~~	u	P	BL
7439-89-6	Iron	155			P	
7439-92-1	Lead	10.0	U		P	
7439-95-4	Magnesium	50003080	~~J~~	u	P	BL
7439-96-5	Manganese	15.1			P	
7440-02-0	Nickel	40.0	U		P	
7439-97-6	Mercury	0.2 ~~0.12~~	~~J~~	u	CV	BL
7440-09-7	Potassium	1410	J		P	
7782-49-2	Selenium	35.0	U		P	
7440-22-4	Silver	10.0	U		P	
7440-23-5	Sodium	6120			P	
7440-28-0	Thallium	25.0	U		P	
7440-62-2	Vanadium	50.0	U		P	
7440-66-6	Zinc	60 ~~6.3~~	~~J~~	u	P	BL

Color Before: COLORLESS Clarity Before: CLEAR Texture: NA

Color After: COLORLESS Clarity After: CLEAR Artifacts: NA

Comments:

MW 9/30/08

2

USEPA - CLP

1A - IN

INORGANIC ANALYSIS DATA SHEET

EPA SAMPLE NO.

IR78-GW56-08C FIL

Lab Name: GPL LABORATORIES, LL Contract:

Lab Code: Case No.: NRAS No.: SDG No.: 807054

Matrix: (soil/water) WATER Lab Sample ID: S 807054-002-009-1/1

Level: (low/med) Date Recieved: 07/10/2008

% Solids: 0.0

Concentration Units (ug/L or mg/kg dry weight): UG/L

CAS No.	Analyte	Concentration	C	Q	M	
7429-90-5	Aluminum	200	U		P	
7440-36-0	Antimony	60.0	U		P	
7440-38-2	Arsenic	10.0	U		P	
7440-39-3	Barium	200 ~~33.7~~	~~J~~	U	P	BL
7441-41-7	Beryllium	5.0	U		P	
7440-43-9	Cadmium	5.0	U		P	
7440-70-2	Calcium	116000			P	
7440-47-3	Chromium	10.0	U		P	
7440-48-4	Cobalt	50.0	U		P	
7440-50-8	Copper	25.0	U		P	
7439-89-6	Iron	100	U		P	
7439-92-1	Lead	10.0	U		P	
7439-95-4	Magnesium	5000 ~~3040~~	~~J~~	U	P	BL
7439-96-5	Manganese	15 ~~9.3~~	~~J~~	U	P	BL
7439-97-6	Mercury	0.2 ~~0.14~~	~~J~~	U	CV	BL
7440-02-0	Nickel	40 ~~1.5~~	~~J~~	U	P	BL
7440-09-7	Potassium	1430	J		P	
7782-49-2	Selenium	35.0	U		P	
7440-22-4	Silver	10.0	U		P	
7440-23-5	Sodium	6620			P	
7440-28-0	Thallium	25.0	U		P	
7440-62-2	Vanadium	50.0	U		P	
7440-66-6	Zinc	60 ~~8.7~~	~~J~~	U	P	BL

Color Before: COLORLESS Clarity Before: CLEAR Texture: NA

Color After: COLORLESS Clarity After: CLEAR Artifacts: NA

Comments:

LW 9/30/08

3

USEPA - CLP

1A - IN

INORGANIC ANALYSIS DATA SHEET

EPA SAMPLE NO.

IR78-FB070908

Lab Name: GPL LABORATORIES, LL Contract:

Lab Code: Case No.: NRAS No.: SDG No.: 807054

Matrix: (soil/water) WATER Lab Sample ID: S 807054-003-004-1/1

Level: (low/med) Date Recieved: 07/10/2008

% Solids: 0.0

Concentration Units (ug/L or mg/kg dry weight): UG/L

CAS No.	Analyte	Concentration	C	Q	M	
7429-90-5	Aluminum	200	U		P	
7440-36-0	Antimony	60.0	U		P	
7440-38-2	Arsenic	10.0	U		P	
7440-39-3	Barium	200 ~~0.51~~	~~J~~	U	P	BL
7441-41-7	Beryllium	5.0	U		P	
7440-43-9	Cadmium	5.0	U		P	
7440-70-2	Calcium	5000 ~~151~~	~~J~~	U	P	BL
7440-47-3	Chromium	10.0	U		P	
7440-48-4	Cobalt	50.0	U		P	
7440-50-8	Copper	25 ~~2.5~~	~~J~~	U	P	BL
7439-89-6	Iron	100	U		P	
7439-92-1	Lead	10.0	U		P	
7439-95-4	Magnesium	5000 ~~76.5~~	~~J~~	U	P	BL
7439-96-5	Manganese	15.0	U		P	
7439-97-6	Mercury	0.24		U	CV	BL
7440-02-0	Nickel	40.0	U		P	
7440-09-7	Potassium	5000	U		P	
7782-49-2	Selenium	35.0	U		P	
7440-22-4	Silver	10.0	U		P	
7440-23-5	Sodium	5000	U		P	
7440-28-0	Thallium	25.0	U		P	
7440-62-2	Vanadium	50.0	U		P	
7440-66-6	Zinc	60 ~~3.9~~	~~J~~	U	P	BL

Color Before: COLORLESS Clarity Before: CLEAR Texture: NA

Color After: COLORLESS Clarity After: CLEAR Artifacts: NA

Comments:

UW
06-16-08

USEPA - CLP

1A - IN

INORGANIC ANALYSIS DATA SHEET

EPA SAMPLE NO.

IR78-FB070908 FIL

Lab Name: GPL LABORATORIES, LL Contract:

Lab Code: Case No.: NRAS No.: SDG No.: 807054

Matrix: (soil/water) WATER Lab Sample ID: S 807054-004-010-1/1

Level: (low/med) Date Recieved: 07/10/2008

% Solids: 0.0

Concentration Units (ug/L or mg/kg dry weight): UG/L

CAS No.	Analyte	Concentration	C	Q	M	
7429-90-5	Aluminum	200	U		P	
7440-36-0	Antimony	60.0	U		P	
7440-38-2	Arsenic	2.7	J		P	
7440-39-3	Barium	200 ~~0.69~~	~~J~~	U	P	BL
7441-41-7	Beryllium	5.0	U		P	
7440-43-9	Cadmium	5.0	U		P	
7440-70-2	Calcium	5000 ~~225~~	~~J~~	U	P	BL
7440-47-3	Chromium	10.0	U		P	
7440-48-4	Cobalt	50.0	U		P	
7440-50-8	Copper	25 ~~2.1~~	~~J~~	U	P	BL
7439-89-6	Iron	100	U		P	
7439-92-1	Lead	10 ~~2.7~~	~~J~~	U	P	BL
7439-95-4	Magnesium	5000 ~~73.6~~	~~J~~	U	P	BL
7439-96-5	Manganese	15.0	U		P	
7440-02-0	Nickel	1.9	J		P	
7439-97-6	Mercury	0.2 ~~0.043~~	~~J~~	U	CV	BL
7440-09-7	Potassium	61.6	J		P	
7782-49-2	Selenium	35.0	U		P	
7440-22-4	Silver	10.0	U		P	
7440-23-5	Sodium	406	J		P	
7440-28-0	Thallium	25.0	U		P	
7440-62-2	Vanadium	50.0	U		P	
7440-66-6	Zinc	60 ~~12.6~~	~~J~~	U	P	BL

Color Before: COLORLESS Clarity Before: CLEAR Texture: NA

Color After: COLORLESS Clarity After: CLEAR Artifacts: NA

Comments:

ENVIRONMENTAL
Data Services, Inc.

PERCHLORATE

USEPA Region IV - Level IV Review

Site: MCB Camp Lejeune, UXO-08, CTO-168 SDG #: 807054

Client: CH2M HILL, Inc., Virginia Beach, Virginia Date: September 30, 2008

Laboratory: DataChem Laboratories, Salt Lake City, Utah Reviewer: Nancy Weaver

EDS ID	Client Sample ID	Laboratory Sample ID	Matrix
1	IR78-GW56-08C	807054-001	Water
2	IR78-FB070908	807054-003	Water

The USEPA "Contract Laboratory Program National Functional Guidelines for Inorganic Data Review," October 2004, and professional judgement were used in evaluating the data in this summary report.

Holding Times - All samples were prepared and analyzed within 28 days for perchlorate.

Calibration - The ICV and CCV %R values were acceptable.

Method and Calibration Blanks - The method blanks and continuing calibration blanks were free of contamination.

Field and Equipment Blank - Field QC results are summarized below.

Blank ID	Compound	Conc. ug/L	Action Level ug/L	Qualifier	Affected Samples
IR78-FB070908	None - ND	-	-	-	-
IR78-EB070808	None - ND	-	-	-	-

Matrix Spike/Duplicate - The matrix spike/duplicate sample exhibited acceptable %R and RPD values.

LCS - The LCS samples exhibited acceptable %R values.

Field Duplicates - Field duplicate samples were not included in this data package.

Compound Quantitation - No discrepancies were identified.

DATA CHEM LABORATORIES
A Sorenson Company

FORM A (TYPE I)
SINGLE METHOD ANALYSES

SAMPLE ANALYSIS DATA SHEET

S086F00Q

Date Printed.....: 23-JUL-08 16:41

Client Name.....: GPL Laboratories
Client Ref Number....: 807054
Sampling Site.....: CAMP LEJEUNE UXO-08
Release Number.....: 807054

Date Received.....: 12-JUL-08 00:00

Client Sample Name: IR78-GW56-08|C
DCL Sample Name...: 08E03587
DCL Report Group..: 08E-0565-01

Matrix.....: WATER
Date Sampled.....: 09-JUL-08 10:27
Reporting Units...: ug/L
Report Basis.....: ☒ As Received ☐ Dried

DCL Preparation Group: Not Applicable
Date Prepared.....: 17-JUL-08 00:00
Preparation Method...: 6850
Aliquot Weight/Volume: Not Applicable
Net Weight/Volume....: Not Required

DCL Analysis Group: G086F00T
Analysis Method...: 6850
Instrument Type...: LC/MS
Instrument ID.....: LCMS02
Column Type.....: KP-RPPX250
☒ Primary
☐ Confirmation

Analytical Results

Analyte	Date Analyzed	MDL	Result	Comment	Qual.	Dilution	PQL
Perchlorate	18-JUL-08 04:56	0.0663	ND		U	1	0.200

lw 9/30/08

960 West LeVoy Drive / Salt Lake City, Utah 84123-2547
Phone (801) 266-7700 Web Page: www.datachem.com
FAX (801) 268-9992 E-mail: lab@datachem.com

06

2

DATA CHEM LABORATORIES
A Sorenson Company

FORM A (TYPE I)
SINGLE METHOD ANALYSES

SAMPLE ANALYSIS DATA SHEET

Form RLIMS63A-V1.4
07230816410873
Page 4

S086F00R

Date Printed.....: 23-JUL-08 16:41

Client Name.....: GPL Laboratories
Client Ref Number....: 807054
Sampling Site.....: CAMP LEJEUNE UXO-08
Release Number.....: 807054

Date Received.....: 12-JUL-08 00:00

Client Sample Name: IR78-FB07090|8
DCL Sample Name...: 08E03588
DCL Report Group..: 08E-0565-01

Matrix.....: WATER
Date Sampled.....: 09-JUL-08 08:45
Reporting Units...: ug/L
Report Basis.....: ☒ As Received ☐ Dried

DCL Preparation Group: Not Applicable
Date Prepared.....: 17-JUL-08 00:00
Preparation Method...: 6850
Aliquot Weight/Volume: Not Applicable
Net Weight/Volume....: Not Required

DCL Analysis Group: G086F00T
Analysis Method...: 6850
Instrument Type...: LC/MS
Instrument ID.....: LCMS02
Column Type.....: KP-RPPX250
☒ Primary
☐ Confirmation

Analytical Results

Analyte	Date Analyzed	MDL	Result	Comment	Qual.	Dilution	PQL
Perchlorate	18-JUL-08 05:17	0.0663	ND		U	1	0.200

RW 9/30/08

960 West LeVoy Drive / Salt Lake City, Utah 84123-2547
Phone (801) 266-7700 Web Page: www.datachem.com
FAX (801) 268-9992 E-mail: lab@datachem.com

ENVIRONMENTAL
Data Services, Inc.

EXPLOSIVES

USEPA Region IV - Level IV Review

Site: MCB Camp Lejeune, UXO-08, CTO-168 SDG #: 807198

Client: CH2M HILL, Inc., Virginia Beach, Virginia Date: October 6, 2008

Laboratory: GPL Laboratories, Frederick, Maryland Reviewer: Nancy Weaver

EDS ID	Client Sample ID	Laboratory Sample ID	Matrix
1	MR08-IS39-5-6-O8C	807198-001	Soil
1MS	MR08-IS39-5-6-O8CMS	807198-001MS	Soil
1MSD	MR08-IS39-5-6-O8CMSD	807198-001MSD	Soil
2	MR08-FB072808	807198-002	Water
3	MR08-IS43-5-6-O8C	807198-004	Soil
4	MR08-IS42-5-6-O8C	807198-005	Soil
5	MR08-IS42D-5-6-O8C	807198-006	Soil
6	MR08-IS40-5-6-O8C	807198-007	Soil
7	MR08-IS41-5-6-O8C	807198-008	Soil
8	MR08-EB072908	807198-009	Water
9	MR08-IS38-5-6-O8C	807198-011	Soil

The USEPA "Contract Laboratory Program National Functional Guidelines for Organic Data Review," October 1999, and professional judgement were used in evaluating the data in this summary report.

Holding Times - All samples were extracted within 7 days for water samples, 14 days for soil samples and analyzed within 40 days for all samples.

Initial Calibration - The initial calibrations exhibited acceptable %RSD and/or correlation coefficient values.

Calibration Verification - The continuing calibrations exhibited acceptable %D values.

Surrogates - All samples exhibited acceptable surrogate recoveries.

MS/MSD - The MS/MSD sample exhibited acceptable %R and RPD values except the following.

MS/MSD Sample ID	Compound	MS/MSD %R/RPD	Qualifier
1	HMX	136%/Ok/39	None - Sample ND

Laboratory Control Sample - The LCS samples exhibited acceptable %R values.

Method Blank - The method blanks were free of contamination.

Field and Equipment Blank - Field QC results are summarized below.

Blank ID	Compound	Conc. ug/L	Action Level ug/L	Qualifier	Affected Samples
MR08-FB072808	2,4-Dinitotoluene	0.064	0.320	None	All ND
MR08-EB072908	None - ND	-	-	-	-

Field Duplicates - Field duplicate results are summarized below.

Compound	MR08-IS42-5-6-O8C mg/kg	MR08-IS42D-5-6-O8C mg/kg	RPD	Qualifier
None	ND	ND	-	-

Compound Identification - Retention times were acceptable and no further action was taken.

Compound Quantitation - No discrepancies were identified.

GPL Laboratories

GPL
FORM 1
ANALYSIS DATA SHEET

SAMPLE NO
MR08-IS39-5-6-08C

Lab Name :	GPL Laboratories	Client. :	CH2M Hill Inc
Lab Code :	GPL	SAS NO. :	
Case No. :		SDG NO :	807198
Matrix : (Soil / Water)	SOIL	Lab Sample ID :	807198-001-001-1/3
Sample Volume :	2	Lab File ID :	LCD42997.D
% Moisture:		Date Received	07/30/2008
Extraction:	EXT_SW8330	Date Extracted:	08/04/2008
Extract Volume:	20 mL	Date Analyzed	08/13/2008
Injection Volume :	100 µ L	Dilution Factor :	1
GPC Clean up (Y/N):	N pH:		

Concentration Units (ug/L or ug/kg dry weight) : mg/kg

CAS NO	COMPOUND		Q
99-35-4	1,3,5-Trinitrobenzene	0.10	U
99-65-0	1,3-Dinitrobenzene	0.10	U
118-96-7	2,4,6-Trinitrotoluene	0.10	U
121-14-2	2,4-Dinitrotoluene	0.10	U
606-20-2	2,6-Dinitrotoluene	0.10	U
35572-78-2	2-Amino-4,6-Dinitrotoluene	0.10	U
19406-51-0	4-Amino-2,6-Dinitrotoluene	0.10	U
2691-41-0	HMX	0.20	U
98-95-3	Nitrobenzene	0.10	U
121-82-4	RDX	0.20	U
479-45-8	Tetryl	0.20	U
99-08-1	m-Nitrotoluene	0.20	U
88-72-2	o-Nitrotoluene	0.20	U
99-99-0	p-Nitrotoluene	0.20	U

AW 10/6/08

GPL Laboratories

GPL
FORM 1
ANALYSIS DATA SHEET

2

SAMPLE NO
MR08FB072808

Lab Name :	GPL Laboratories	Client. :	CH2M Hill Inc
Lab Code :	GPL	SAS NO. :	
Case No. :		SDG NO :	807198
Matrix : (Soil / Water)	WATER	Lab Sample ID :	807198-002-010-1/1
Sample Volume :	1000	Lab File ID :	LCD43033.D
% Moisture:		Date Received	07/30/2008
Extraction:	EXT_SW8330	Date Extracted:	08/04/2008
Extract Volume:	20 mL	Date Analyzed	08/15/2008
Injection Volume :	100 µ L	Dilution Factor :	1
GPC Clean up (Y/N):	N pH:		

Concentration Units (ug/L or ug/kg dry weight) : ug/L

CAS NO	COMPOUND		Q
99-35-4	1,3,5-Trinitrobenzene	0.20	U
99-65-0	1,3-Dinitrobenzene	0.20	U
118-96-7	2,4,6-Trinitrotoluene	0.20	U
121-14-2	2,4-Dinitrotoluene	0.064	J
606-20-2	2,6-Dinitrotoluene	0.20	U
35572-78-2	2-Amino-4,6-Dinitrotoluene	0.20	U
19406-51-0	4-Amino-2,6-Dinitrotoluene	0.20	U
2691-41-0	HMX	0.40	U
98-95-3	Nitrobenzene	0.20	U
121-82-4	RDX	0.40	U
479-45-8	Tetryl	0.40	U
99-08-1	m-Nitrotoluene	0.40	U
88-72-2	o-Nitrotoluene	0.40	U
99-99-0	p-Nitrotoluene	0.40	U

GPL Laboratories

GPL
FORM 1
ANALYSIS DATA SHEET

3

SAMPLE NO
MR08-IS43-5-6-08C

Lab Name :	GPL Laboratories	Client. :	CH2M Hill Inc
Lab Code :	GPL	SAS NO. :	
Case No. :		SDG NO :	807198
Matrix : (Soil / Water)	SOIL	Lab Sample ID :	807198-004-016-1/1
Sample Volume :	2	Lab File ID :	LCD42998.D
% Moisture:		Date Received	07/30/2008
Extraction:	EXT_SW8330	Date Extracted:	08/04/2008
Extract Volume:	20 mL	Date Analyzed	08/13/2008
Injection Volume :	100 µ L	Dilution Factor :	1
GPC Clean up (Y/N):	N pH:		

Concentration Units (ug/L or ug/kg dry weight) : mg/kg

CAS NO	COMPOUND		Q
99-35-4	1,3,5-Trinitrobenzene	0.10	U
99-65-0	1,3-Dinitrobenzene	0.10	U
118-96-7	2,4,6-Trinitrotoluene	0.10	U
121-14-2	2,4-Dinitrotoluene	0.10	U
606-20-2	2,6-Dinitrotoluene	0.10	U
35572-78-2	2-Amino-4,6-Dinitrotoluene	0.10	U
19406-51-0	4-Amino-2,6-Dinitrotoluene	0.10	U
2691-41-0	HMX	0.20	U
98-95-3	Nitrobenzene	0.10	U
121-82-4	RDX	0.20	U
479-45-8	Tetryl	0.20	U
99-08-1	m-Nitrotoluene	0.20	U
88-72-2	o-Nitrotoluene	0.20	U
99-99-0	p-Nitrotoluene	0.20	U

lw 10/6/08

GPL Laboratories

GPL
FORM 1
ANALYSIS DATA SHEET

4

SAMPLE NO
MR08-IS42-5-6-08C

Lab Name :	GPL Laboratories	Client. :	CH2M Hill Inc
Lab Code :	GPL	SAS NO. :	
Case No. :		SDG NO :	807198
Matrix : (Soil / Water)	SOIL	Lab Sample ID :	807198-005-017-1/1
Sample Volume :	2	Lab File ID :	LCD42999.D
% Moisture:		Date Received	07/30/2008
Extraction:	EXT_SW8330	Date Extracted:	08/04/2008
Extract Volume:	20 mL	Date Analyzed	08/13/2008
Injection Volume :	100 µ L	Dilution Factor :	1
GPC Clean up (Y/N):	N pH:		

Concentration Units (ug/L or ug/kg dry weight) : mg/kg

CAS NO	COMPOUND		Q
99-35-4	1,3,5-Trinitrobenzene	0.10	U
99-65-0	1,3-Dinitrobenzene	0.10	U
118-96-7	2,4,6-Trinitrotoluene	0.10	U
121-14-2	2,4-Dinitrotoluene	0.10	U
606-20-2	2,6-Dinitrotoluene	0.10	U
35572-78-2	2-Amino-4,6-Dinitrotoluene	0.10	U
19406-51-0	4-Amino-2,6-Dinitrotoluene	0.10	U
2691-41-0	HMX	0.20	U
98-95-3	Nitrobenzene	0.10	U
121-82-4	RDX	0.20	U
479-45-8	Tetryl	0.20	U
99-08-1	m-Nitrotoluene	0.20	U
88-72-2	o-Nitrotoluene	0.20	U
99-99-0	p-Nitrotoluene	0.20	U

RLW 10/6/08

GPL Laboratories

GPL
FORM 1
ANALYSIS DATA SHEET

5

SAMPLE NO
MR08-IS42D5-6-08C

Lab Name :	GPL Laboratories	Client. :	CH2M Hill Inc
Lab Code :	GPL	SAS NO. :	
Case No. :		SDG NO :	807198
Matrix : (Soil / Water)	SOIL	Lab Sample ID :	807198-006-018-1/1
Sample Volume :	2	Lab File ID :	LCD43000.D
% Moisture:		Date Received	07/30/2008
Extraction:	EXT_SW8330	Date Extracted:	08/04/2008
Extract Volume:	20 mL	Date Analyzed	08/13/2008
Injection Volume :	100 µL	Dilution Factor :	1
GPC Clean up (Y/N):	N pH:		

Concentration Units (ug/L or ug/kg dry weight) : mg/kg

CAS NO	COMPOUND		Q
99-35-4	1,3,5-Trinitrobenzene	0.10	U
99-65-0	1,3-Dinitrobenzene	0.10	U
118-96-7	2,4,6-Trinitrotoluene	0.10	U
121-14-2	2,4-Dinitrotoluene	0.10	U
606-20-2	2,6-Dinitrotoluene	0.10	U
35572-78-2	2-Amino-4,6-Dinitrotoluene	0.10	U
19406-51-0	4-Amino-2,6-Dinitrotoluene	0.10	U
2691-41-0	HMX	0.20	U
98-95-3	Nitrobenzene	0.10	U
121-82-4	RDX	0.20	U
479-45-8	Tetryl	0.20	U
99-08-1	m-Nitrotoluene	0.20	U
88-72-2	o-Nitrotoluene	0.20	U
99-99-0	p-Nitrotoluene	0.20	U

lw 10/6/08

GPL Laboratories

GPL
FORM 1
ANALYSIS DATA SHEET

6

SAMPLE NO
MR08-IS40-5-6-08C

Lab Name :	GPL Laboratories	Client. :	CH2M Hill Inc
Lab Code :	GPL	SAS NO. :	
Case No. :		SDG NO :	807198
Matrix : (Soil / Water)	SOIL	Lab Sample ID :	807198-007-019-1/1
Sample Volume :	2	Lab File ID :	LCD43001.D
% Moisture:		Date Received	07/30/2008
Extraction:	EXT_SW8330	Date Extracted:	08/04/2008
Extract Volume:	20 mL	Date Analyzed	08/13/2008
Injection Volume :	100 µ L	Dilution Factor :	1
GPC Clean up (Y/N):	N pH:		

Concentration Units (ug/L or ug/kg dry weight) : mg/kg

CAS NO	COMPOUND		Q
99-35-4	1,3,5-Trinitrobenzene	0.10	U
99-65-0	1,3-Dinitrobenzene	0.10	U
118-96-7	2,4,6-Trinitrotoluene	0.10	U
121-14-2	2,4-Dinitrotoluene	0.10	U
606-20-2	2,6-Dinitrotoluene	0.10	U
35572-78-2	2-Amino-4,6-Dinitrotoluene	0.10	U
19406-51-0	4-Amino-2,6-Dinitrotoluene	0.10	U
2691-41-0	HMX	0.20	U
98-95-3	Nitrobenzene	0.10	U
121-82-4	RDX	0.20	U
479-45-8	Tetryl	0.20	U
99-08-1	m-Nitrotoluene	0.20	U
88-72-2	o-Nitrotoluene	0.20	U
99-99-0	p-Nitrotoluene	0.20	U

GPL Laboratories

GPL
FORM 1
ANALYSIS DATA SHEET

7

SAMPLE NO
MR08-IS41-5-6-08C

Lab Name :	GPL Laboratories	Client. :	CH2M Hill Inc
Lab Code :	GPL	SAS NO. :	
Case No. :		SDG NO :	807198
Matrix : (Soil / Water)	SOIL	Lab Sample ID :	807198-008-020-1/1
Sample Volume :	2	Lab File ID :	LCD43003.D
% Moisture:		Date Received	07/30/2008
Extraction:	EXT_SW8330	Date Extracted:	08/04/2008
Extract Volume:	20 mL	Date Analyzed	08/13/2008
Injection Volume :	100 µL	Dilution Factor :	1
GPC Clean up (Y/N):	N pH:		

Concentration Units (ug/L or ug/kg dry weight) : mg/kg

CAS NO	COMPOUND		Q
99-35-4	1,3,5-Trinitrobenzene	0.10	U
99-65-0	1,3-Dinitrobenzene	0.10	U
118-96-7	2,4,6-Trinitrotoluene	0.10	U
121-14-2	2,4-Dinitrotoluene	0.10	U
606-20-2	2,6-Dinitrotoluene	0.10	U
35572-78-2	2-Amino-4,6-Dinitrotoluene	0.10	U
19406-51-0	4-Amino-2,6-Dinitrotoluene	0.10	U
2691-41-0	HMX	0.20	U
98-95-3	Nitrobenzene	0.10	U
121-82-4	RDX	0.20	U
479-45-8	Tetryl	0.20	U
99-08-1	m-Nitrotoluene	0.20	U
88-72-2	o-Nitrotoluene	0.20	U
99-99-0	p-Nitrotoluene	0.20	U

GPL Laboratories

GPL
FORM 1
ANALYSIS DATA SHEET

8

SAMPLE NO
MR08-EB072908

Lab Name :	GPL Laboratories	Client. :	CH2M Hill Inc
Lab Code :	GPL	SAS NO. :	
Case No. :		SDG NO :	807198
Matrix : (Soil / Water)	WATER	Lab Sample ID :	807198-009-034-1/1
Sample Volume :	1000	Lab File ID :	LCD43035.D
% Moisture:		Date Received	07/30/2008
Extraction:	EXT_SW8330	Date Extracted:	08/04/2008
Extract Volume:	20 mL	Date Analyzed	08/15/2008
Injection Volume :	100 µ L	Dilution Factor :	1
GPC Clean up (Y/N):	N pH:		

Concentration Units (ug/L or ug/kg dry weight) : ug/L

CAS NO	COMPOUND		Q
99-35-4	1,3,5-Trinitrobenzene	0.20	U
99-65-0	1,3-Dinitrobenzene	0.20	U
118-96-7	2,4,6-Trinitrotoluene	0.20	U
121-14-2	2,4-Dinitrotoluene	0.20	U
606-20-2	2,6-Dinitrotoluene	0.20	U
35572-78-2	2-Amino-4,6-Dinitrotoluene	0.20	U
19406-51-0	4-Amino-2,6-Dinitrotoluene	0.20	U
2691-41-0	HMX	0.40	U
98-95-3	Nitrobenzene	0.20	U
121-82-4	RDX	0.40	U
479-45-8	Tetryl	0.40	U
99-08-1	m-Nitrotoluene	0.40	U
88-72-2	o-Nitrotoluene	0.40	U
99-99-0	p-Nitrotoluene	0.40	U

lw 10/6/08

GPL Laboratories

GPL
FORM 1
ANALYSIS DATA SHEET

9

SAMPLE NO
MR08-IS38-5-6-08C

Lab Name :	GPL Laboratories	Client. :	CH2M Hill Inc
Lab Code :	GPL	SAS NO. :	
Case No. :		SDG NO :	807198
Matrix : (Soil / Water)	SOIL	Lab Sample ID :	807198-011-021-1/1
Sample Volume :	2	Lab File ID :	LCD43004.D
% Moisture:		Date Received	07/30/2008
Extraction:	EXT_SW8330	Date Extracted:	08/04/2008
Extract Volume:	20 mL	Date Analyzed	08/13/2008
Injection Volume :	100 µL	Dilution Factor :	1
GPC Clean up (Y/N):	N pH:		

Concentration Units (ug/L or ug/kg dry weight) : mg/kg

CAS NO	COMPOUND		Q
99-35-4	1,3,5-Trinitrobenzene	0.10	U
99-65-0	1,3-Dinitrobenzene	0.10	U
118-96-7	2,4,6-Trinitrotoluene	0.10	U
121-14-2	2,4-Dinitrotoluene	0.10	U
606-20-2	2,6-Dinitrotoluene	0.10	U
35572-78-2	2-Amino-4,6-Dinitrotoluene	0.10	U
19406-51-0	4-Amino-2,6-Dinitrotoluene	0.10	U
2691-41-0	HMX	0.20	U
98-95-3	Nitrobenzene	0.10	U
121-82-4	RDX	0.20	U
479-45-8	Tetryl	0.20	U
99-08-1	m-Nitrotoluene	0.20	U
88-72-2	o-Nitrotoluene	0.20	U
99-99-0	p-Nitrotoluene	0.20	U

KW
10/6/08

ENVIRONMENTAL
Data Services, Inc.

METALS

USEPA Region IV - Level IV Review

Site: MCB Camp Lejeune, UXO-08, CTO-168 SDG #: 807198

Client: CH2M HILL, Inc., Virginia Beach, Virginia Date: October 6, 2008

Laboratory: GPL Laboratories, Frederick, Maryland Reviewer: Nancy Weaver

EDS ID	Client Sample ID	Laboratory Sample ID	Matrix
1	MR08-IS39-5-6-O8C	807198-001	Soil
1MS	MR08-IS39-5-6-O8CMS	807198-001MS	Soil
1MSD	MR08-IS39-5-6-O8CMSD	807198-001MSD	Soil
2	MR08-FB072808	807198-002	Water
3	MR08-IS43-5-6-O8C	807198-004	Soil
4	MR08-IS42-5-6-O8C	807198-005	Soil
5	MR08-IS42D-5-6-O8C	807198-006	Soil
6	MR08-IS40-5-6-O8C	807198-007	Soil
7	MR08-IS41-5-6-O8C	807198-008	Soil
8	MR08-EB072908	807198-009	Water
9	MR08-IS38-5-6-O8C	807198-011	Soil

The USEPA "Contract Laboratory Program National Functional Guidelines for Inorganic Data Review," October 2004, and professional judgement were used in evaluating the data in this summary report.

Holding Times - All samples were prepared and analyzed within 28 days for mercury and 180 days for all other metals.

Calibration - The ICV and CCV %R values were acceptable.

CRDL Standard - The CRDL standards exhibited acceptable %R values.

Method and Calibration Blanks - The method blanks and continuing calibration blanks exhibited contamination for several compounds, however, all sample results are non-detect or greater than 5X the blank concentration with the exception of the following:

Water

Compound	Conc. ug/L	Qualifier	Affected Samples
Aluminum	38.385	U	8
Chromium	1.278	U	8
Copper	1.849	U	2, 8
Iron	28.465	U	2, 8
Magnesium	41.177	U	2, 8
Potassium	33.416	U	2, 8
Sodium	421.613	U	2, 8

Soil

Compound	Conc. mg/kg	Qualifier	Affected Samples
Barium	0.075	U	All soil samples
Cadmium	0.033	U	All soil samples
Copper	1.11	U	All soil samples
Magnesium	4.729	U	All soil samples
Mercury	0.019	U	1, 4, 7, 9
Potassium	2.680	U	All soil samples
Sodium	86.692	U	All soil samples

Field and Equipment Blank - Field QC results are summarized below.

Blank ID	Compound	Conc. ug/L	Action Level mg/kg	Qualifier	Affected Samples
MR08-FB072808	Barium	1.9	6.8	None	See EB
	Zinc	4.9	17.5	None	See EB
MR08-EB072908	Barium	3.6	12.9	None	See MB
	Calcium	136	486	U	All soil samples
	Manganese	1.2	4.3	U	1, 5, 7
	Selenium	2.5	8.9	None	All ND
	Zinc	5.1	18.2	U	All soil samples

ICP Interference Check Sample - All %R values were acceptable.

Matrix Spike - The matrix spike samples exhibited acceptable %R values except the following.

MS Sample ID	Compound	%R	Qualifier	Affected Samples
1	Antimony	70%	J/UJ	All soil samples
	Lead	131%	J	All soil samples

Matrix Duplicate - The matrix duplicate samples exhibited acceptable RPD values.

LCS - The LCS samples exhibited acceptable %R values.

ICP Serial Dilution - The ICP serial dilution sample exhibited acceptable %D values except the following.

ICP Sample ID	Compound	%D	Qualifier	Affected Samples
REFERENCE (water)	Magnesium	17%	None	Already qualified U
	Potassium	11%	None	
1	Magnesium	11%	None	Already qualified U

Field Duplicates - Field duplicate results are summarized below.

Compound	MR08-IS42-5-6-O8C mg/kg	MR08-IS42D-5-6-O8C mg/kg	RPD	Qualifier
Aluminum	7510	5270	35%	None
Arsenic	0.65	0.82 U	NC	None
Beryllium	0.073	0.048	41%	None
Chromium	11.4	7.3	44%	None
Cobalt	0.11	0.11	0%	None
Iron	3130	1190	90%	None
Lead	5.3	3.9	30%	None
Manganese	5.0	1.2 U	NC	None
Mercury	0.041	0.039 U	NC	None
Nickel	1.4	0.80	55%	None
Vanadium	10.6	9.0	16%	None

Compound Quantitation - No discrepancies were not identified.

USEPA - CLP

1A - IN

INORGANIC ANALYSIS DATA SHEET

EPA SAMPLE NO.

MR08-IS39-5-6-08C

Lab Name: GPL LABORATORIES, LL Contract:

Lab Code: Case No.: NRAS No.: SDG No.: 807198S

Matrix: (soil/water) SOIL Lab Sample ID: S 807198-001-001-1/3

Level: (low/med) Date Recieved: 07/30/2008

% Solids: 79.7

Concentration Units (ug/L or mg/kg dry weight): MG/KG

CAS No.	Analyte	Concentration	C	Q	M	
7429-90-5	Aluminum	4760			P	
7440-36-0	Antimony	5.4	~~U~~	UJ ~~N~~	P	MSL
7440-38-2	Arsenic	0.90	U		P	
7440-39-3	Barium	17.9 ~~4.7~~	~~J~~	U	P	BL
7441-41-7	Beryllium	0.044	J		P	
7440-43-9	Cadmium	0.45 ~~0.029~~	~~J~~	U	P	BL
7440-70-2	Calcium	448 ~~342~~	~~J~~	U	P	BL
7440-47-3	Chromium	5.7			P	
7440-48-4	Cobalt	0.080	J		P	
7440-50-8	Copper	2.2 ~~0.57~~	~~J~~	U	P	BL
7439-89-6	Iron	897			P	
7439-92-1	Lead	3.3		J ~~N~~	P	MSH
7439-95-4	Magnesium	448 ~~166~~	~~J~~	U ~~E~~	P	BL
7439-96-5	Manganese	3.3		U	P	BL
7439-97-6	Mercury	0.04 ~~0.017~~	~~J~~	U	AV	BL
7440-02-0	Nickel	0.68	J		P	
7440-09-7	Potassium	448 ~~227~~	~~J~~	U	P	BL
7782-49-2	Selenium	3.1	U		P	
7440-22-4	Silver	0.90	U		P	
7440-23-5	Sodium	448 ~~105~~	~~J~~	U	P	BL
7440-28-0	Thallium	2.2	U		P	
7440-62-2	Vanadium	5.8			P	
7440-66-6	Zinc	5.4 ~~1.9~~	~~J~~	U	P	BL

Color Before: GREY Clarity Before: MEDIUM Texture: NA

Color After: YELLOW Clarity After: CLEAR Artifacts: NA

Comments:

2

USEPA - CLP

1A - IN

INORGANIC ANALYSIS DATA SHEET

EPA SAMPLE NO.

MR08FB072808

Lab Name: GPL LABORATORIES, LL Contract:

Lab Code: Case No.: NRAS No.: SDG No.: 807198

Matrix: (soil/water) WATER Lab Sample ID: S 807198-002-011-1/1

Level: (low/med) Date Recieved: 07/30/2008

% Solids: 0.0

Concentration Units (ug/L or mg/kg dry weight): UG/L

CAS No.	Analyte	Concentration	C	Q	M	
7429-90-5	Aluminum	200	U		P	
7440-36-0	Antimony	60.0	U		P	
7440-38-2	Arsenic	10.0	U		P	
7440-39-3	Barium	1.9	J		P	
7441-41-7	Beryllium	5.0	U		P	
7440-43-9	Cadmium	5.0	U		P	
7440-70-2	Calcium	5000	U		P	
7440-47-3	Chromium	10.0	U		P	
7440-48-4	Cobalt	50.0	U		P	
7440-50-8	Copper	25 ~~3.9~~	~~J~~	u	P	BL
7439-89-6	Iron	100 ~~32.1~~	~~J~~	u	P	BL
7439-92-1	Lead	10.0	U		P	
7439-95-4	Magnesium	5000 ~~67.8~~	~~J~~	u ~~E~~	P	BL
7439-96-5	Manganese	15.0	U		P	
7440-02-0	Nickel	40.0	U		P	
7439-97-6	Mercury	0.20	U		CV	
7440-09-7	Potassium	5000 ~~57.4~~	~~J~~	u ~~E~~	P	BL
7782-49-2	Selenium	35.0	U		P	
7440-22-4	Silver	10.0	U		P	
7440-23-5	Sodium	5000 ~~1180~~	~~J~~	u	P	BL
7440-28-0	Thallium	25.0	U		P	
7440-62-2	Vanadium	50.0	U		P	
7440-66-6	Zinc	4.9	J		P	

Color Before: COLORLESS Clarity Before: CLEAR Texture: NA

Color After: COLORLESS Clarity After: CLEAR Artifacts: NA

Comments:

FORM IA - IN ILMO5.3

MW 10/6/08

USEPA - CLP

1A - IN

INORGANIC ANALYSIS DATA SHEET

EPA SAMPLE NO.

MR08-IS43-5-6-08C

Lab Name: GPL LABORATORIES, LL Contract:

Lab Code: Case No.: NRAS No.: SDG No.: 807198S

Matrix: (soil/water) SOIL Lab Sample ID: S 807198-004-016-1/1

Level: (low/med) Date Recieved: 07/30/2008

% Solids: 76.8

Concentration Units (ug/L or mg/kg dry weight): MG/KG

CAS No.	Analyte	Concentration	C	Q	M	
7429-90-5	Aluminum	12400			P	
7440-36-0	Antimony	5.3	~~U~~	UJ ~~N~~	P	MSL
7440-38-2	Arsenic	3.2			P	
7440-39-3	Barium	17.7 ~~10.8~~	~~J~~	U	P	BL
7441-41-7	Beryllium	0.075	J		P	
7440-43-9	Cadmium	0.44 ~~0.050~~	~~J~~	U	P	BL
7440-70-2	Calcium	443 ~~138~~	~~J~~	U	P	BL
7440-47-3	Chromium	13.5			P	
7440-48-4	Cobalt	0.28	J		P	
7440-50-8	Copper	2.2 ~~0.58~~	~~J~~	U	P	BL
7439-89-6	Iron	9190			P	
7439-92-1	Lead	6.2		J ~~N~~	P	MSH
7439-95-4	Magnesium	443 ~~398~~	~~J~~	U ~~E~~	P	BL
7439-96-5	Manganese	5.0			P	
7439-97-6	Mercury	0.054			AV	
7440-02-0	Nickel	1.3	J		P	
7440-09-7	Potassium	443 ~~274~~	~~J~~	U	P	BL
7782-49-2	Selenium	3.1	U		P	
7440-22-4	Silver	0.89	U		P	
7440-23-5	Sodium	443 ~~115~~	~~J~~	U	P	BL
7440-28-0	Thallium	2.2	U		P	
7440-62-2	Vanadium	18.0			P	
7440-66-6	Zinc	5.3 ~~4.0~~	~~J~~	U	P	BL

Color Before: GREY Clarity Before: MEDIUM Texture: NA

Color After: YELLOW Clarity After: CLEAR Artifacts: NA

Comments:

4

USEPA - CLP

1A - IN

INORGANIC ANALYSIS DATA SHEET

EPA SAMPLE NO.

MR08-IS42-5-6-08C

Lab Name: GPL LABORATORIES, LL Contract:

Lab Code: Case No.: NRAS No.: SDG No.: 807198S

Matrix: (soil/water) SOIL Lab Sample ID: S 807198-005-017-1/1

Level: (low/med) Date Recieved: 07/30/2008

% Solids: 77.3

Concentration Units (ug/L or mg/kg dry weight): MG/KG

CAS No.	Analyte	Concentration	C	Q	M	
7429-90-5	Aluminum	7510			P	
7440-36-0	Antimony	5.6	~~J~~	UJ ~~N~~	P	MSL
7440-38-2	Arsenic	0.65	J		P	
7440-39-3	Barium	18.8 ~~7.7~~	~~J~~	U	P	BL
7441-41-7	Beryllium	0.073	J		P	
7440-43-9	Cadmium	0.47 ~~0.069~~	~~J~~	U	P	BL
7440-70-2	Calcium	469 ~~33.1~~	~~J~~	U	P	BL
7440-47-3	Chromium	11.4			P	
7440-48-4	Cobalt	0.11	J		P	
7440-50-8	Copper	2.3 ~~0.79~~	~~J~~	U	P	BL
7439-89-6	Iron	3130			P	
7439-92-1	Lead	5.3		J ~~N~~	P	MSH
7439-95-4	Magnesium	469 ~~255~~	~~J~~	U ~~E~~	P	BL
7439-96-5	Manganese	5.0			P	
~~7439-97-6~~	~~Mercury~~	~~0.041~~			~~AV~~	
7439-97-6	Mercury	0.0380 ~~0.033~~	~~J~~	V	AV	BL
7440-02-0	Nickel	1.4	J		P	
7440-09-7	Potassium	469 ~~271~~	~~J~~	U	P	BL
7782-49-2	Selenium	3.3	U		P	
7440-22-4	Silver	0.94	U		P	
7440-23-5	Sodium	469 ~~64.7~~	~~J~~	U	P	BL
7440-28-0	Thallium	2.3	U		P	
7440-62-2	Vanadium	10.6			P	
7440-66-6	Zinc	5.6 ~~4.4~~	~~J~~	U	P	BL

Color Before: GREY Clarity Before: MEDIUM Texture: NA

Color After: YELLOW Clarity After: CLEAR Artifacts: NA

Comments:

10/6/08

5

USEPA - CLP

1A - IN

INORGANIC ANALYSIS DATA SHEET

EPA SAMPLE NO.

MR08-IS42D5-6-08C

Lab Name: GPL LABORATORIES, LL Contract:

Lab Code: Case No.: NRAS No.: SDG No.: 807198S

Matrix: (soil/water) SOIL Lab Sample ID: S 807198-006-018-1/1

Level: (low/med) Date Recieved: 07/30/2008

% Solids: 82.1

Concentration Units (ug/L or mg/kg dry weight): MG/KG

CAS No.	Analyte	Concentration	C	Q	M	
7429-90-5	Aluminum	5270			P	
7440-36-0	Antimony	4.9	~~U~~	UJ ~~N~~	P	MSL
7440-38-2	Arsenic	0.82	U		P	
7440-39-3	Barium	16.5 ~~5.8~~	~~J~~	U	P	BL
7441-41-7	Beryllium	0.048	J		P	
7440-43-9	Cadmium	0.41 ~~0.039~~	~~J~~	U	P	BL
7440-70-2	Calcium	411 ~~21.4~~	J	U	P	BL
7440-47-3	Chromium	7.3			P	
7440-48-4	Cobalt	0.11	J		P	
7440-50-8	Copper	2.1 ~~0.87~~	~~J~~	U	P	BL
7439-89-6	Iron	1190			P	
7439-92-1	Lead	3.9		J ~~N~~	P	MSH
7439-95-4	Magnesium	411 ~~186~~	~~J~~	U ~~E~~	P	BL
7439-96-5	Manganese	4.0 ~~4.0~~		U	P	BL
7439-97-6	Mercury	0.039	U		AV	
7440-02-0	Nickel	0.80	J		P	
7440-09-7	Potassium	411 ~~197~~	~~J~~	U	P	BL
7782-49-2	Selenium	2.9	U		P	
7440-22-4	Silver	0.82	U		P	
7440-23-5	Sodium	411 ~~95.8~~	~~J~~	U	P	BL
7440-28-0	Thallium	2.1	U		P	
7440-62-2	Vanadium	9.0			P	
7440-66-6	Zinc	4.9 ~~2.4~~	J	U	P	BL

Color Before: GREY Clarity Before: MEDIUM Texture: NA

Color After: YELLOW Clarity After: CLEAR Artifacts: NA

Comments:

USEPA - CLP

1A - IN

INORGANIC ANALYSIS DATA SHEET

EPA SAMPLE NO.

MR08-IS40-5-6-08C

Lab Name: GPL LABORATORIES, LL Contract:

Lab Code: Case No.: NRAS No.: SDG No.: 807198S

Matrix: (soil/water) SOIL Lab Sample ID: S 807198-007-019-1/1

Level: (low/med) Date Recieved: 07/30/2008

% Solids: 77.0

Concentration Units (ug/L or mg/kg dry weight): MG/KG

CAS No.	Analyte	Concentration	C	Q	M	
7429-90-5	Aluminum	8490			P	
7440-36-0	Antimony	5.6	~~U~~	UJ ~~N~~	P	MSL
7440-38-2	Arsenic	0.50	J		P	
7440-39-3	Barium	18.6 ~~10.1~~	~~J~~	U	P	BL
7441-41-7	Beryllium	0.12	J		P	
7440-43-9	Cadmium	0.46 ~~0.022~~	~~J~~	U	P	BL
7440-70-2	Calcium	464 ~~357~~	~~J~~	U	P	BL
7440-47-3	Chromium	10.2			P	
7440-48-4	Cobalt	0.20	J		P	
7440-50-8	Copper	2.3 ~~0.66~~	~~J~~	U	P	BL
7439-89-6	Iron	1540			P	
7439-92-1	Lead	6.2		J ~~N~~	P	MSH
7439-95-4	Magnesium	464 ~~270~~	~~J~~	U E	P	BL
7439-96-5	Manganese	5.8			P	
7439-97-6	Mercury	0.040	U		AV	
7440-02-0	Nickel	1.1	J		P	
7440-09-7	Potassium	464 ~~280~~	~~J~~	U	P	BL
7782-49-2	Selenium	3.2	U		P	
7440-22-4	Silver	0.93	U		P	
7440-23-5	Sodium	464 ~~96.9~~	~~J~~	U	P	BL
7440-28-0	Thallium	2.3	U		P	
7440-62-2	Vanadium	9.0			P	
7440-66-6	Zinc	5.6 ~~3.3~~	~~J~~	U	P	BL

Color Before: GREY Clarity Before: MEDIUM Texture: NA

Color After: YELLOW Clarity After: CLEAR Artifacts: NA

Comments:

USEPA - CLP

1A - IN

INORGANIC ANALYSIS DATA SHEET

EPA SAMPLE NO.

MR08-IS41-5-6-08C

Lab Name: GPL LABORATORIES, LL Contract:

Lab Code: Case No.: NRAS No.: SDG No.: 807198S

Matrix: (soil/water) SOIL Lab Sample ID: S 807198-008-020-1/1

Level: (low/med) Date Recieved: 07/30/2008

% Solids: 75.5

Concentration Units (ug/L or mg/kg dry weight): MG/KG

CAS No.	Analyte	Concentration	C	Q	M	
7429-90-5	Aluminum	2820			P	
7440-36-0	Antimony	0.25	~~J~~	J ~~N~~	P	MSL
7440-38-2	Arsenic	0.95	U		P	
7440-39-3	Barium	19.1 ~~3.6~~	~~J~~	U	P	BL
7441-41-7	Beryllium	0.036	J		P	
7440-43-9	Cadmium	0.48 ~~0.023~~	~~J~~	U	P	BL
7440-70-2	Calcium	477 ~~25.5~~	~~J~~	U	P	BL
7440-47-3	Chromium	4.7			P	
7440-48-4	Cobalt	4.8	U		P	
7440-50-8	Copper	2.4 ~~0.56~~	~~J~~	U	P	BL
7439-89-6	Iron	880			P	
7439-92-1	Lead	2.9		J ~~N~~	P	MSH
7439-95-4	Magnesium	477 ~~112~~	~~J~~	U ~~E~~	P	BL
7439-96-5	Manganese	3.4		U	P	BL
7439-97-6	Mercury	0.04 ~~0.036~~	~~J~~	U	AV	BL
7440-02-0	Nickel	0.24	J		P	
7440-09-7	Potassium	477 ~~140~~	~~J~~	U	P	BL
7782-49-2	Selenium	3.3	U		P	
7440-22-4	Silver	0.055	J		P	
7440-23-5	Sodium	477 ~~128~~	~~J~~	U	P	BL
7440-28-0	Thallium	2.4	U		P	
7440-62-2	Vanadium	4.6	J		P	
7440-66-6	Zinc	5.7 ~~18~~	~~J~~	U	P	BL

Color Before: GREY Clarity Before: MEDIUM Texture: NA

Color After: YELLOW Clarity After: CLEAR Artifacts: NA

Comments:

8

USEPA - CLP

1A - IN

INORGANIC ANALYSIS DATA SHEET

EPA SAMPLE NO.

MR08-EB072908

Lab Name: GPL LABORATORIES, LL Contract:

Lab Code: Case No.: NRAS No.: SDG No.: 807198

Matrix: (soil/water) WATER Lab Sample ID: S 807198-009-035-1/1

Level: (low/med) Date Recieved: 07/30/2008

% Solids: 0.0

Concentration Units (ug/L or mg/kg dry weight): UG/L

CAS No.	Analyte	Concentration	C	Q	M	
7429-90-5	Aluminum	200 ~~97.9~~	~~J~~	U	P	BL
7440-36-0	Antimony	5.7	J		P	
7440-38-2	Arsenic	10.0	U		P	
7440-39-3	Barium	3.6	J		P	
7441-41-7	Beryllium	5.0	U		P	
7440-43-9	Cadmium	5.0	U		P	
7440-70-2	Calcium	136	J		P	
7440-47-3	Chromium	10 ~~1.5~~	~~J~~	U	P	BL
7440-48-4	Cobalt	50.0	U		P	
7440-50-8	Copper	25 ~~3.2~~	~~J~~	U	P	BL
7439-89-6	Iron	100		U	P	BL
7439-92-1	Lead	10.0	U		P	
7439-95-4	Magnesium	5000 ~~79.1~~	~~J~~	U ~~E~~	P	BL
7439-96-5	Manganese	1.2	J		P	
7440-02-0	Nickel	40.0	U		P	
7439-97-6	Mercury	0.20	U		CV	
7440-09-7	Potassium	5000 ~~34.5~~	~~J~~	U ~~E~~	P	BL
7782-49-2	Selenium	2.5	J		P	
7440-22-4	Silver	10.0	U		P	
7440-23-5	Sodium	5000 ~~921~~	~~J~~	U	P	BL
7440-28-0	Thallium	25.0	U		P	
7440-62-2	Vanadium	50.0	U		P	
7440-66-6	Zinc	5.1	J		P	

Color Before: COLORLESS Clarity Before: CLEAR Texture: NA

Color After: COLORLESS Clarity After: CLEAR Artifacts: NA

Comments:

 10/6/08

USEPA - CLP

1A - IN

INORGANIC ANALYSIS DATA SHEET

EPA SAMPLE NO.

MR08-IS38-5-6-08C

Lab Name: GPL LABORATORIES, LL Contract:

Lab Code: Case No.: NRAS No.: SDG No.: 807198S

Matrix: (soil/water) SOIL Lab Sample ID: S 807198-011-021-1/1

Level: (low/med) Date Recieved: 07/30/2008

% Solids: 81.3

Concentration Units (ug/L or mg/kg dry weight): MG/KG

CAS No.	Analyte	Concentration	C	Q	M	
7429-90-5	Aluminum	11000			P	
7440-36-0	Antimony	5.3	~~U~~	UJ ~~N~~	P	MSL
7440-38-2	Arsenic	0.39	J		P	
7440-39-3	Barium	17.7 ~~13.4~~	~~J~~	U	P	BL
7441-41-7	Beryllium	0.092	J		P	
7440-43-9	Cadmium	0.44 ~~0.090~~	~~J~~	U	P	BL
7440-70-2	Calcium	442 ~~279~~	~~J~~	U	P	BL
7440-47-3	Chromium	16.9			P	
7440-48-4	Cobalt	0.30	J		P	
7440-50-8	Copper	2.2 ~~1.6~~	~~J~~	U	P	BL
7439-89-6	Iron	3280			P	
7439-92-1	Lead	6.1		J ~~N~~	P	MSH
7439-95-4	Magnesium	442 ~~387~~	~~J~~	U ~~E~~	P	BL
7439-96-5	Manganese	7.4			P	
7439-97-6	Mercury	0.038 ~~0.032~~	~~J~~	U	AV	BL
7440-02-0	Nickel	2.1	J		P	
7440-09-7	Potassium	442 ~~392~~	~~J~~	U	P	BL
7782-49-2	Selenium	3.1	U		P	
7440-22-4	Silver	0.88	U		P	
7440-23-5	Sodium	442 ~~86.6~~	~~J~~	U	P	BL
7440-28-0	Thallium	2.2	U		P	
7440-62-2	Vanadium	15.5			P	
7440-66-6	Zinc	5.3 ~~4.5~~	~~J~~	U	P	BL

Color Before: GREY Clarity Before: MEDIUM Texture: NA

Color After: YELLOW Clarity After: CLEAR Artifacts: NA

Comments:

ENVIRONMENTAL
Data Services, Inc.

PERCHLORATE

USEPA Region IV - Level IV Review

Site: MCB Camp Lejeune, UXO-08, CTO-168 SDG #: 807198

Client: CH2M HILL, Inc., Virginia Beach, Virginia Date: October 6, 2008

Laboratory: DataChem Laboratories, Salt Lake City, Utah Reviewer: Nancy Weaver

EDS ID	Client Sample ID	Laboratory Sample ID	Matrix
1	MR08-IS39-5-6-O8C	807198-001	Soil
1MS	MR08-IS39-5-6-O8CMS	807198-001MS	Soil
1MSD	MR08-IS39-5-6-O8CMSD	807198-001MSD	Soil
2	MR08-IS43-5-6-O8C	807198-004	Soil
3	MR08-IS42-5-6-O8C	807198-005	Soil
4	MR08-IS42D-5-6-O8C	807198-006	Soil
5	MR08-IS40-5-6-O8C	807198-007	Soil
6	MR08-IS41-5-6-O8C	807198-008	Soil
7	MR08-IS38-5-6-O8C	807198-011	Soil
8	MR08-FB072808	807198-002	Water
9	MR08-EB072908	807198-009	Water

The USEPA "Contract Laboratory Program National Functional Guidelines for Inorganic Data Review," October 2004, and professional judgement were used in evaluating the data in this summary report.

Holding Times - All samples were prepared and analyzed within 28 days for perchlorate.

Calibration - The ICV and CCV %R values were acceptable.

Method and Calibration Blanks - The method blanks and continuing calibration blanks were free of contamination.

Field and Equipment Blank - Field QC results are summarized below.

Blank ID	Compound	Conc. ug/L	Action Level ug/L	Qualifier	Affected Samples
MR08-FB072808	None - ND	-	-	-	-
MR08-EB072908	None - ND	-	-	-	-

Matrix Spike/Duplicate - The matrix spike/duplicate sample exhibited acceptable %R and RPD values.

LCS - The LCS samples exhibited acceptable %R values.

Field Duplicates - Field duplicate results are summarized below.

Compound	MR08-IS42-5-6-O8C ug/kg	MR08-IS42D-5-6-O8C ug/kg	RPD	Qualifier
None	ND	ND	-	-

Compound Quantitation - No discrepancies were identified.

DATA CHEM LABORATORIES
A Sorenson Company

FORM A (TYPE I)
SINGLE METHOD ANALYSES

SAMPLE ANALYSIS DATA SHEET

S087301V

Date Printed.....: 27-AUG-08 14:19

Client Name.....: GPL Laboratories
Client Ref Number....: 807198
Sampling Site.....: CAMP LEJEUNE UXO-08
Release Number.....: 807198

Date Received.....: 02-AUG-08 00:00

DCL Preparation Group: Not Applicable
Date Prepared.....: 26-AUG-08 00:00
Preparation Method...: 6850
Aliquot Weight/Volume: 1.00g
Net Weight/Volume....: Not Required

Client Sample Name: MR08-IS39-5-|6-08C
DCL Sample Name...: 08E04079
DCL Report Group..: 08E-0647-01

Matrix.....: SOLID
Date Sampled.....: 28-JUL-08 13:30
Reporting Units...: ug/kg
Report Basis.....: ☐ As Received ☒ Dried
Percent Solids....: 79.71

DCL Analysis Group: G087S00H
Analysis Method...: 6850
Instrument Type...: LC/MS
Instrument ID.....: LCMS02
Column Type.....: KP-RPPX250
☒ Primary
☐ Confirmation

Analytical Results

Analyte	Date Analyzed	MDL	Result	Comment	Qual.	Dilution	PQL
Perchlorate	26-AUG-08 14:06	0.839	ND		U	1	2.51

lw 10/6/08

DATA CHEM LABORATORIES
A Sorenson Company

FORM A (TYPE I)
SINGLE METHOD ANALYSES

SAMPLE ANALYSIS DATA SHEET

S087301Y

Date Printed.....: 27-AUG-08 14:19

Client Name.....: GPL Laboratories
Client Ref Number....: 807198
Sampling Site.....: CAMP LEJEUNE UXO-08
Release Number.....: 807198

Date Received.....: 02-AUG-08 00:00

DCL Preparation Group: Not Applicable
Date Prepared.....: 26-AUG-08 00:00
Preparation Method...: 6850
Aliquot Weight/Volume: 1.00g
Net Weight/Volume....: Not Required

Client Sample Name: MR08-IS43-5-|6-08C
DCL Sample Name...: 08E04080
DCL Report Group..: 08E-0647-01

Matrix.....: SOLID
Date Sampled.....: 28-JUL-08 14:30
Reporting Units...: ug/kg
Report Basis.....: ☐ As Received ☒ Dried
Percent Solids....: 76.84

DCL Analysis Group: G087S00H
Analysis Method...: 6850
Instrument Type...: LC/MS
Instrument ID.....: LCMS02
Column Type.....: KP-RPPX250
☒ Primary
☐ Confirmation

Analytical Results

Analyte	Date Analyzed	MDL	Result	Comment	Qual.	Dilution	PQL
Perchlorate	26-AUG-08 15:10	0.871	ND		U	1	2.60

LW
10/6/08

DATA CHEM LABORATORIES
A Sorenson Company

FORM A (TYPE I)
SINGLE METHOD ANALYSES

SAMPLE ANALYSIS DATA SHEET

S087301Z

Date Printed.....: 27-AUG-08 14:19

Client Name.....: GPL Laboratories
Client Ref Number....: 807198
Sampling Site.....: CAMP LEJEUNE UXO-08
Release Number.....: 807198

Date Received.....: 02-AUG-08 00:00

DCL Preparation Group: Not Applicable
Date Prepared.....: 26-AUG-08 00:00
Preparation Method...: 6850
Aliquot Weight/Volume: 1.00g
Net Weight/Volume....: Not Required

Client Sample Name: MR08-IS42-5-|6-08C
DCL Sample Name...: 08E04081
DCL Report Group..: 08E-0647-01

Matrix.....: SOLID
Date Sampled.....: 28-JUL-08 08:30
Reporting Units...: ug/kg
Report Basis.....: ☐ As Received ☒ Dried
Percent Solids....: 77.29

DCL Analysis Group: G087S00H
Analysis Method...: 6850
Instrument Type...: LC/MS
Instrument ID.....: LCMS02
Column Type.....: KP-RPPX250
☒ Primary
☐ Confirmation

Analytical Results

Analyte	Date Analyzed	MDL	Result	Comment	Qual.	Dilution	PQL
Perchlorate	26-AUG-08 15:31	0.866	ND		U	1	2.59

lw 10/6/08

DATA CHEM LABORATORIES
A Sorenson Company

FORM A (TYPE I)
SINGLE METHOD ANALYSES

SAMPLE ANALYSIS DATA SHEET

Form RLIMS63A-V1.4
08270814191639
Page 6

S0873020

Date Printed.....: 27-AUG-08 14:19

Client Name.....: GPL Laboratories
Client Ref Number....: 807198
Sampling Site.....: CAMP LEJEUNE UXO-08
Release Number.....: 807198

Date Received.....: 02-AUG-08 00:00

DCL Preparation Group: Not Applicable
Date Prepared.....: 26-AUG-08 00:00
Preparation Method...: 6850
Aliquot Weight/Volume: 1.00g
Net Weight/Volume....: Not Required

Client Sample Name: MR08-IS42D-5|-6-08C
DCL Sample Name...: 08E04082
DCL Report Group..: 08E-0647-01

Matrix.....: SOLID
Date Sampled.....: 28-JUL-08 08:45
Reporting Units...: ug/kg
Report Basis.....: ☐ As Received ☒ Dried
Percent Solids....: 82.11

DCL Analysis Group: G087S00H
Analysis Method...: 6850
Instrument Type...: LC/MS
Instrument ID.....: LCMS02
Column Type.....: KP-RPPX250
☒ Primary
☐ Confirmation

Analytical Results

Analyte	Date Analyzed	MDL	Result	Comment	Qual.	Dilution	PQL
Perchlorate	26-AUG-08 15:53	0.815	ND		U	1	2.44

LW
10/6/08

DATA CHEM LABORATORIES
A Sorenson Company

FORM A (TYPE I)
SINGLE METHOD ANALYSES

SAMPLE ANALYSIS DATA SHEET

S0873021

Date Printed.....: 27-AUG-08 14:19

Client Name.....: GPL Laboratories
Client Ref Number....: 807198
Sampling Site.....: CAMP LEJEUNE UXO-08
Release Number.....: 807198

Date Received.....: 02-AUG-08 00:00

DCL Preparation Group: Not Applicable
Date Prepared.....: 26-AUG-08 00:00
Preparation Method...: 6850
Aliquot Weight/Volume: 1.00g
Net Weight/Volume....: Not Required

Client Sample Name: MR08-IS40-5-|6-08C
DCL Sample Name...: 08E04083
DCL Report Group..: 08E-0647-01

Matrix.....: SOLID
Date Sampled.....: 28-JUL-08 09:25
Reporting Units...: ug/kg
Report Basis.....: ☐ As Received ☒ Dried
Percent Solids....: 77.00

DCL Analysis Group: G087S00H
Analysis Method...: 6850
Instrument Type...: LC/MS
Instrument ID.....: LCMS02
Column Type.....: KP-RPPX250
☒ Primary
☐ Confirmation

Analytical Results

Analyte	Date Analyzed	MDL	Result	Comment	Qual.	Dilution	PQL
Perchlorate	26-AUG-08 16:14	0.869	ND		U	1	2.60

lw
10/6/08

6

DATA CHEM LABORATORIES
A Sorenson Company

FORM A (TYPE I)
SINGLE METHOD ANALYSES

SAMPLE ANALYSIS DATA SHEET

Form RLIMS63A-V1.4
08270814191639
Page 8

S0873022

Date Printed.....: 27-AUG-08 14:19

Client Name.....: GPL Laboratories
Client Ref Number....: 807198
Sampling Site.....: CAMP LEJEUNE UXO-08
Release Number.....: 807198

Date Received.....: 02-AUG-08 00:00

DCL Preparation Group: Not Applicable
Date Prepared.....: 26-AUG-08 00:00
Preparation Method...: 6850
Aliquot Weight/Volume: 1.00g
Net Weight/Volume....: Not Required

Client Sample Name: MR08-IS41-5-|6-08C
DCL Sample Name...: 08E04084
DCL Report Group..: 08E-0647-01

Matrix.....: SOLID
Date Sampled.....: 28-JUL-08 10:20
Reporting Units...: ug/kg
Report Basis.....: ☐ As Received ☒ Dried
Percent Solids....: 75.47

DCL Analysis Group: G087S00H
Analysis Method...: 6850
Instrument Type...: LC/MS
Instrument ID.....: LCMS02
Column Type.....: KP-RPPX250
☒ Primary
☐ Confirmation

Analytical Results

Analyte	Date Analyzed	MDL	Result	Comment	Qual.	Dilution	PQL
Perchlorate	26-AUG-08 16:36	0.886	ND		U	1	2.65

fw
10/6/08

DATA CHEM LABORATORIES
A Sorenson Company

FORM A (TYPE I)
SINGLE METHOD ANALYSES

SAMPLE ANALYSIS DATA SHEET

S0873023

Date Printed.....: 27-AUG-08 14:19

Client Name.....: GPL Laboratories
Client Ref Number....: 807198
Sampling Site.....: CAMP LEJEUNE UXO-08
Release Number.....: 807198

Date Received.....: 02-AUG-08 00:00

DCL Preparation Group: Not Applicable
Date Prepared.....: 26-AUG-08 00:00
Preparation Method...: 6850
Aliquot Weight/Volume: 1.00g
Net Weight/Volume....: Not Required

Client Sample Name: MR08-IS38-5-|6-08C
DCL Sample Name...: 08E04085
DCL Report Group..: 08E-0647-01

Matrix.....: SOLID
Date Sampled.....: 28-JUL-08 16:00
Reporting Units...: ug/kg
Report Basis.....: ☐ As Received ☒ Dried
Percent Solids....: 81.33

DCL Analysis Group: G087S00H
Analysis Method...: 6850
Instrument Type...: LC/MS
Instrument ID.....: LCMS02
Column Type.....: KP-RPPX250
☒ Primary
☐ Confirmation

Analytical Results

Analyte	Date Analyzed	MDL	Result	Comment	Qual.	Dilution	PQL
Perchlorate	26-AUG-08 16:57	0.823	ND		U	1	2.46

lw
10/6/08

DATA CHEM LABORATORIES
A Sorenson Company

FORM A (TYPE I)
SINGLE METHOD ANALYSES

SAMPLE ANALYSIS DATA SHEET

Form RLIMS63A-V1.4
08110818505654
Page 3

S087302F

Date Printed.....: 11-AUG-08 18:50

Client Name.....: GPL Laboratories
Client Ref Number....: 807198
Sampling Site.....: CAMP LEJEUNE UXO-08
Release Number.....: 807198

Date Received.....: 02-AUG-08 00:00

Client Sample Name: MR08FB072808
DCL Sample Name...: 08E04086
DCL Report Group..: 08E-0647-03

Matrix.....: WATER
Date Sampled.....: 28-JUL-08 13:45
Reporting Units...: ug/L
Report Basis.....: ☒ As Received ☐ Dried

DCL Preparation Group: Not Applicable
Date Prepared.....: 06-AUG-08 00:00
Preparation Method...: 6850
Aliquot Weight/Volume: Not Applicable
Net Weight/Volume....: Not Required

DCL Analysis Group: G087B01M
Analysis Method...: 6850
Instrument Type...: LC/MS
Instrument ID.....: LCMS02
Column Type.....: KP-RPPX250
☒ Primary
☐ Confirmation

Analytical Results

Analyte	Date Analyzed	MDL	Result	Comment	Qual.	Dilution	PQL
Perchlorate	06-AUG-08 21:56	0.0663	ND		U	1	0.200

LW
10/6/08

DATA CHEM LABORATORIES
A Sorenson Company

FORM A (TYPE I)
SINGLE METHOD ANALYSES

SAMPLE ANALYSIS DATA SHEET

Form RLIMS63A-V1.4
08110818505654
Page 4

S087302G

Date Printed.....: 11-AUG-08 18:50

Client Name.....: GPL Laboratories
Client Ref Number....: 807198
Sampling Site.....: CAMP LEJEUNE UXO-08
Release Number.....: 807198

Date Received.....: 02-AUG-08 00:00

Client Sample Name: MR08-EB072908
DCL Sample Name...: 08E04087
DCL Report Group..: 08E-0647-03

Matrix.....: WATER
Date Sampled.....: 29-JUL-08 11:30
Reporting Units...: ug/L
Report Basis.....: [X] As Received [ ] Dried

DCL Preparation Group: Not Applicable
Date Prepared.....: 06-AUG-08 00:00
Preparation Method...: 6850
Aliquot Weight/Volume: Not Applicable
Net Weight/Volume....: Not Required

DCL Analysis Group: G087B01M
Analysis Method...: 6850
Instrument Type...: LC/MS
Instrument ID.....: LCMS02
Column Type.....: KP-RPPX250
[X] Primary
[ ] Confirmation

Analytical Results

Analyte	Date Analyzed	MDL	Result	Comment	Qual.	Dilution	PQL
Perchlorate	06-AUG-08 22:17	0.0663	ND		U	1	0.200

lw
10/6/08

ENVIRONMENTAL
Data Services, Inc.

PESTICIDES/PCBs
USEPA Region IV - Level IV Review

Site: MCB Camp Lejeune, UXO-08, CTO-168 SDG #: 807198

Client: CH2M HILL, Inc., Virginia Beach, Virginia Date: October 6, 2008

Laboratory: GPL Laboratories, Frederick, Maryland Reviewer: Nancy Weaver

EDS ID	Client Sample ID	Laboratory Sample ID	Matrix
1	MR08-IS39-5-6-O8C	807198-001	Soil
1MS	MR08-IS39-5-6-O8CMS	807198-001MS	Soil
1MSD	MR08-IS39-5-6-O8CMSD	807198-001MSD	Soil
2	MR08-FB072808	807198-002	Water
3	MR08-IS43-5-6-O8C	807198-004	Soil
4	MR08-IS42-5-6-O8C	807198-005	Soil
5	MR08-IS42D-5-6-O8C	807198-006	Soil
6	MR08-IS40-5-6-O8C	807198-007	Soil
7	MR08-IS41-5-6-O8C	807198-008	Soil
8	MR08-EB072908	807198-009	Water
9	MR08-IS38-5-6-O8C	807198-011	Soil

The USEPA "Contract Laboratory Program National Functional Guidelines for Organic Data Review," October 1999, and professional judgement were used in evaluating the data in this summary report.

Holding Times - All samples were extracted within 7 days for water samples, 14 days for soil samples and analyzed within 40 days for all samples.

Instrument performance - All 4,4'-DDT/endrin % breakdown, resolution check mixture and PEMs were within criteria.

Initial Calibration - The initial calibrations exhibited acceptable %RSD values.

Calibration Verification - The continuing calibrations exhibited acceptable %D values.

Surrogates - All samples exhibited acceptable surrogate recoveries.

MS/MSD - The MS/MSD sample exhibited acceptable %R and RPD values.

Laboratory Control Sample - The LCS samples exhibited acceptable %R values.

Method Blank - The method blanks were free of contamination.

Field and Equipment Blank - Field QC results are summarized below.

Blank ID	Compound	Conc. ug/L	Action Level ug/L	Qualifier	Affected Samples
MR08-FB072808	None - ND	-	-	-	-
MR08-EB072908	None - ND	-	-	-	-

Field Duplicates - Field duplicate results are summarized below.

Compound	MR08-IS42-5-6-O8C ug/kg	MR08-IS42D-5-6-O8C ug/kg	RPD	Qualifier
None	ND	ND	-	-

Compound Identification - Retention times were acceptable and no further action was taken.

Compound Quantitation - Several samples exhibited results with high %D values between columns and have been flagged (P) by the laboratory and further qualified (J).

Pesticide Cleanup Checks - The % recoveries were within the QC limits of 80-120% for the florisil cartridge cleanup and 80-110% for GPC.

GPL Laboratories

GPL
FORM 1
ANALYSIS DATA SHEET

SAMPLE NO
MR08-IS39-5-6-08C

Lab Name :	GPL Laboratories	Client. :	CH2M Hill Inc
Lab Code :	GPL	SAS NO. :	
Case No. :		SDG NO :	807198
Matrix : (Soil / Water)	SOIL	Lab Sample ID :	807198-001-004-1/3
Sample Volume :	30	Lab File ID :	W005949.D
% Moisture:	20.29	Date Received	07/30/2008
Extraction:	CLP_EXTRACTION	Date Extracted:	08/04/2008
Extract Volume:	5 mL	Date Analyzed	08/07/2008
Injection Volume :	µ L	Dilution Factor :	1
GPC Clean up (Y/N):	Y pH:		

Concentration Units (ug/L or ug/kg dry weight) : ug/kg

CAS NO	COMPOUND		Q
72-54-8	4,4-DDD	0.50	~~JP~~ J 2C
72-55-9	4,4-DDE	4.2	U
50-29-3	4,4-DDT	4.2	U
309-00-2	Aldrin	2.1	U
319-84-6	Alpha-BHC	2.1	U
5103-71-9	Alpha-Chlordane	2.1	U
319-85-7	Beta-BHC	2.1	U
319-86-8	Delta-BHC	2.1	U
60-57-1	Dieldrin	4.1	J
959-98-8	Endosulfan I	2.1	U
33213-65-9	Endosulfan II	4.2	U
1031-07-8	Endosulfan Sulfate	4.2	U
72-20-8	Endrin	4.2	U
7421-93-4	Endrin Aldehyde	4.2	U
53494-70-5	Endrin Ketone	4.2	U
58-89-9	Gamma-BHC (Lindane)	2.1	U
5103-74-2	Gamma-Chlordane	2.1	U
76-44-8	Heptachlor	2.1	U
1024-57-3	Heptachlor Epoxide	2.1	U
72-43-5	Methoxychlor	21	U
12674-11-2	PCB-1016	42	U
11104-28-2	PCB-1221	84	U
11141-16-5	PCB-1232	42	U
53469-21-9	PCB-1242	42	U
12672-29-6	PCB-1248	42	U
11097-69-1	PCB-1254	42	U
11096-82-5	PCB-1260	42	U
8001-35-2	Toxaphene	210	U

MW 10/6/08

GPL Laboratories

GPL
FORM 1
ANALYSIS DATA SHEET

2

SAMPLE NO
MR08FB072808

Lab Name :	GPL Laboratories	Client. :	CH2M Hill Inc
Lab Code :	GPL	SAS NO. :	
Case No. :		SDG NO :	807198
Matrix : (Soil / Water)	WATER	Lab Sample ID :	807198-002-014-1/1
Sample Volume :	1000	Lab File ID :	W005928.D
% Moisture:		Date Received	07/30/2008
Extraction:	CLP_EXTRACTION	Date Extracted:	08/03/2008
Extract Volume:	10 mL	Date Analyzed	08/05/2008
Injection Volume :	µ L	Dilution Factor :	1
GPC Clean up (Y/N):	pH:		

Concentration Units (ug/L or ug/kg dry weight) : ug/L

CAS NO	COMPOUND		Q
72-54-8	4,4-DDD	0.10	U
72-55-9	4,4-DDE	0.10	U
50-29-3	4,4-DDT	0.10	U
309-00-2	Aldrin	0.050	U
319-84-6	Alpha-BHC	0.050	U
5103-71-9	Alpha-Chlordane	0.050	U
319-85-7	Beta-BHC	0.050	U
319-86-8	Delta-BHC	0.050	U
60-57-1	Dieldrin	0.10	U
959-98-8	Endosulfan I	0.050	U
33213-65-9	Endosulfan II	0.10	U
1031-07-8	Endosulfan Sulfate	0.10	U
72-20-8	Endrin	0.10	U
7421-93-4	Endrin Aldehyde	0.10	U
53494-70-5	Endrin Ketone	0.10	U
58-89-9	Gamma-BHC (Lindane)	0.050	U
5103-74-2	Gamma-Chlordane	0.050	U
76-44-8	Heptachlor	0.050	U
1024-57-3	Heptachlor Epoxide	0.050	U
72-43-5	Methoxychlor	0.50	U
12674-11-2	PCB-1016	1.0	U
11104-28-2	PCB-1221	2.0	U
11141-16-5	PCB-1232	1.0	U
53469-21-9	PCB-1242	1.0	U
12672-29-6	PCB-1248	1.0	U
11097-69-1	PCB-1254	1.0	U
11096-82-5	PCB-1260	1.0	U
8001-35-2	Toxaphene	5.0	U

lw 10/6/08

GPL Laboratories

GPL
FORM 1
ANALYSIS DATA SHEET

3

SAMPLE NO
MR08-IS43-5-6-08C

Lab Name :	GPL Laboratories	Client. :	CH2M Hill Inc
Lab Code :	GPL	SAS NO. :	
Case No. :		SDG NO :	807198
Matrix : (Soil / Water)	SOIL	Lab Sample ID :	807198-004-022-1/1
Sample Volume :	30.02	Lab File ID :	W005952.D
% Moisture:	23.16	Date Received	07/30/2008
Extraction:	CLP_EXTRACTION	Date Extracted:	08/04/2008
Extract Volume:	5 mL	Date Analyzed	08/07/2008
Injection Volume :	µ L	Dilution Factor :	1
GPC Clean up (Y/N):	Y pH:		

Concentration Units (ug/L or ug/kg dry weight) : ug/kg

CAS NO	COMPOUND		Q
72-54-8	4,4-DDD	4.3	U
72-55-9	4,4-DDE	4.3	U
50-29-3	4,4-DDT	4.3	U
309-00-2	Aldrin	2.2	U
319-84-6	Alpha-BHC	2.2	U
5103-71-9	Alpha-Chlordane	2.2	U
319-85-7	Beta-BHC	2.2	U
319-86-8	Delta-BHC	2.2	U
60-57-1	Dieldrin	4.3	U
959-98-8	Endosulfan I	2.2	U
33213-65-9	Endosulfan II	4.3	U
1031-07-8	Endosulfan Sulfate	4.3	U
72-20-8	Endrin	4.3	U
7421-93-4	Endrin Aldehyde	4.3	U
53494-70-5	Endrin Ketone	4.3	U
58-89-9	Gamma-BHC (Lindane)	2.2	U
5103-74-2	Gamma-Chlordane	2.2	U
76-44-8	Heptachlor	2.2	U
1024-57-3	Heptachlor Epoxide	2.2	U
72-43-5	Methoxychlor	22	U
12674-11-2	PCB-1016	43	U
11104-28-2	PCB-1221	87	U
11141-16-5	PCB-1232	43	U
53469-21-9	PCB-1242	43	U
12672-29-6	PCB-1248	43	U
11097-69-1	PCB-1254	43	U
11096-82-5	PCB-1260	43	U
8001-35-2	Toxaphene	220	U

GPL Laboratories

GPL
FORM 1
ANALYSIS DATA SHEET

4

SAMPLE NO
MR08-IS42-5-6-08C

Lab Name :	GPL Laboratories	Client. :	CH2M Hill Inc
Lab Code :	GPL	SAS NO. :	
Case No. :		SDG NO :	807198
Matrix : (Soil / Water)	SOIL	Lab Sample ID :	807198-005-023-1/1
Sample Volume :	30	Lab File ID :	W005953.D
% Moisture:	22.71	Date Received	07/30/2008
Extraction:	CLP_EXTRACTION	Date Extracted:	08/04/2008
Extract Volume:	5 mL	Date Analyzed	08/07/2008
Injection Volume :	µ L	Dilution Factor :	1
GPC Clean up (Y/N):	Y pH:		

Concentration Units (ug/L or ug/kg dry weight) : ug/kg

CAS NO	COMPOUND		Q
72-54-8	4,4-DDD	4.3	U
72-55-9	4,4-DDE	4.3	U
50-29-3	4,4-DDT	4.3	U
309-00-2	Aldrin	2.2	U
319-84-6	Alpha-BHC	2.2	U
5103-71-9	Alpha-Chlordane	2.2	U
319-85-7	Beta-BHC	2.2	U
319-86-8	Delta-BHC	2.2	U
60-57-1	Dieldrin	4.3	U
959-98-8	Endosulfan I	2.2	U
33213-65-9	Endosulfan II	4.3	U
1031-07-8	Endosulfan Sulfate	4.3	U
72-20-8	Endrin	4.3	U
7421-93-4	Endrin Aldehyde	4.3	U
53494-70-5	Endrin Ketone	4.3	U
58-89-9	Gamma-BHC (Lindane)	2.2	U
5103-74-2	Gamma-Chlordane	2.2	U
76-44-8	Heptachlor	2.2	U
1024-57-3	Heptachlor Epoxide	2.2	U
72-43-5	Methoxychlor	22	U
12674-11-2	PCB-1016	43	U
11104-28-2	PCB-1221	86	U
11141-16-5	PCB-1232	43	U
53469-21-9	PCB-1242	43	U
12672-29-6	PCB-1248	43	U
11097-69-1	PCB-1254	43	U
11096-82-5	PCB-1260	43	U
8001-35-2	Toxaphene	220	U

GPL Laboratories

GPL
FORM 1
ANALYSIS DATA SHEET

SAMPLE NO
MR08-IS42D5-6-08C

Lab Name :	GPL Laboratories	Client. :	CH2M Hill Inc
Lab Code :	GPL	SAS NO. :	
Case No. :		SDG NO :	807198
Matrix : (Soil / Water)	SOIL	Lab Sample ID :	807198-006-024-1/1
Sample Volume :	30	Lab File ID :	W005954.D
% Moisture:	17.89	Date Received	07/30/2008
Extraction:	CLP_EXTRACTION	Date Extracted:	08/04/2008
Extract Volume:	5 mL	Date Analyzed	08/07/2008
Injection Volume :	µ L	Dilution Factor :	1
GPC Clean up (Y/N):	Y pH:		

Concentration Units (ug/L or ug/kg dry weight) : ug/kg

CAS NO	COMPOUND		Q
72-54-8	4,4-DDD	4.1	U
72-55-9	4,4-DDE	4.1	U
50-29-3	4,4-DDT	4.1	U
309-00-2	Aldrin	2.0	U
319-84-6	Alpha-BHC	2.0	U
5103-71-9	Alpha-Chlordane	2.0	U
319-85-7	Beta-BHC	2.0	U
319-86-8	Delta-BHC	2.0	U
60-57-1	Dieldrin	4.1	U
959-98-8	Endosulfan I	2.0	U
33213-65-9	Endosulfan II	4.1	U
1031-07-8	Endosulfan Sulfate	4.1	U
72-20-8	Endrin	4.1	U
7421-93-4	Endrin Aldehyde	4.1	U
53494-70-5	Endrin Ketone	4.1	U
58-89-9	Gamma-BHC (Lindane)	2.0	U
5103-74-2	Gamma-Chlordane	2.0	U
76-44-8	Heptachlor	2.0	U
1024-57-3	Heptachlor Epoxide	2.0	U
72-43-5	Methoxychlor	20	U
12674-11-2	PCB-1016	41	U
11104-28-2	PCB-1221	81	U
11141-16-5	PCB-1232	41	U
53469-21-9	PCB-1242	41	U
12672-29-6	PCB-1248	41	U
11097-69-1	PCB-1254	41	U
11096-82-5	PCB-1260	41	U
8001-35-2	Toxaphene	200	U

10/6/08

GPL Laboratories

GPL
FORM 1
ANALYSIS DATA SHEET

6

SAMPLE NO
MR08-IS40-5-6-08C

Lab Name :	GPL Laboratories	Client. :	CH2M Hill Inc
Lab Code :	GPL	SAS NO. :	
Case No. :		SDG NO :	807198
Matrix : (Soil / Water)	SOIL	Lab Sample ID :	807198-007-025-1/1
Sample Volume :	30	Lab File ID :	W005966.D
% Moisture:	23	Date Received	07/30/2008
Extraction:	CLP_EXTRACTION	Date Extracted:	08/04/2008
Extract Volume:	5 mL	Date Analyzed	08/08/2008
Injection Volume :	µ L	Dilution Factor :	1
GPC Clean up (Y/N):	Y pH:		

Concentration Units (ug/L or ug/kg dry weight) : ug/kg

CAS NO	COMPOUND		Q	
72-54-8	4,4-DDD	2.6	J	
72-55-9	4,4-DDE	0.71	~~JP~~	J 2C
50-29-3	4,4-DDT	1.7	J	
309-00-2	Aldrin	2.2	U	
319-84-6	Alpha-BHC	2.2	U	
5103-71-9	Alpha-Chlordane	3.8		
319-85-7	Beta-BHC	2.2	U	
319-86-8	Delta-BHC	2.2	U	
60-57-1	Dieldrin	1.1	~~JP~~	J 2C
959-98-8	Endosulfan I	2.2	U	
33213-65-9	Endosulfan II	4.3	U	
1031-07-8	Endosulfan Sulfate	4.3	U	
72-20-8	Endrin	4.3	U	
7421-93-4	Endrin Aldehyde	4.3	U	
53494-70-5	Endrin Ketone	4.3	U	
58-89-9	Gamma-BHC (Lindane)	2.2	U	
5103-74-2	Gamma-Chlordane	3.6		
76-44-8	Heptachlor	2.2	U	
1024-57-3	Heptachlor Epoxide	2.2	U	
72-43-5	Methoxychlor	22	U	
12674-11-2	PCB-1016	43	U	
11104-28-2	PCB-1221	87	U	
11141-16-5	PCB-1232	43	U	
53469-21-9	PCB-1242	43	U	
12672-29-6	PCB-1248	43	U	
11097-69-1	PCB-1254	43	U	
11096-82-5	PCB-1260	43	U	
8001-35-2	Toxaphene	220	U	

GPL Laboratories

GPL
FORM 1
ANALYSIS DATA SHEET

7

SAMPLE NO
MR08-IS41-5-6-08C

Lab Name :	GPL Laboratories	Client. :	CH2M Hill Inc
Lab Code :	GPL	SAS NO. :	
Case No. :		SDG NO :	807198
Matrix : (Soil / Water)	SOIL	Lab Sample ID :	807198-008-026-1/1
Sample Volume :	30.01	Lab File ID :	W005967.D
% Moisture:	24.53	Date Received	07/30/2008
Extraction:	CLP_EXTRACTION	Date Extracted:	08/04/2008
Extract Volume:	5 mL	Date Analyzed	08/08/2008
Injection Volume :	µL	Dilution Factor :	1
GPC Clean up (Y/N):	Y pH:		

Concentration Units (ug/L or ug/kg dry weight) : ug/kg

CAS NO	COMPOUND		Q
72-54-8	4,4-DDD	4.4	U
72-55-9	4,4-DDE	4.4	U
50-29-3	4,4-DDT	4.4	U
309-00-2	Aldrin	2.2	U
319-84-6	Alpha-BHC	2.2	U
5103-71-9	Alpha-Chlordane	2.2	U
319-85-7	Beta-BHC	2.2	U
319-86-8	Delta-BHC	2.2	U
60-57-1	Dieldrin	0.26	J
959-98-8	Endosulfan I	2.2	U
33213-65-9	Endosulfan II	4.4	U
1031-07-8	Endosulfan Sulfate	4.4	U
72-20-8	Endrin	4.4	U
7421-93-4	Endrin Aldehyde	4.4	U
53494-70-5	Endrin Ketone	4.4	U
58-89-9	Gamma-BHC (Lindane)	2.2	U
5103-74-2	Gamma-Chlordane	2.2	U
76-44-8	Heptachlor	2.2	U
1024-57-3	Heptachlor Epoxide	0.57	~~JP~~ J 2C
72-43-5	Methoxychlor	22	U
12674-11-2	PCB-1016	44	U
11104-28-2	PCB-1221	88	U
11141-16-5	PCB-1232	44	U
53469-21-9	PCB-1242	44	U
12672-29-6	PCB-1248	44	U
11097-69-1	PCB-1254	44	U
11096-82-5	PCB-1260	44	U
8001-35-2	Toxaphene	220	U

MW 11/6/08

GPL Laboratories

GPL
FORM 1
ANALYSIS DATA SHEET

8

SAMPLE NO
MR08-EB072908

Lab Name :	GPL Laboratories	Client. :	CH2M Hill Inc
Lab Code :	GPL	SAS NO. :	
Case No. :		SDG NO :	807198
Matrix : (Soil / Water)	WATER	Lab Sample ID :	807198-009-038-1/1
Sample Volume :	950	Lab File ID :	W005929.D
% Moisture:		Date Received	07/30/2008
Extraction:	CLP_EXTRACTION	Date Extracted:	08/03/2008
Extract Volume:	10 mL	Date Analyzed	08/05/2008
Injection Volume :	µ L	Dilution Factor :	1
GPC Clean up (Y/N):	pH:		

Concentration Units (ug/L or ug/kg dry weight) : ug/L

CAS NO	COMPOUND		Q
72-54-8	4,4-DDD	0.11	U
72-55-9	4,4-DDE	0.11	U
50-29-3	4,4-DDT	0.11	U
309-00-2	Aldrin	0.050	U
319-84-6	Alpha-BHC	0.050	U
5103-71-9	Alpha-Chlordane	0.050	U
319-85-7	Beta-BHC	0.050	U
319-86-8	Delta-BHC	0.050	U
60-57-1	Dieldrin	0.11	U
959-98-8	Endosulfan I	0.050	U
33213-65-9	Endosulfan II	0.11	U
1031-07-8	Endosulfan Sulfate	0.11	U
72-20-8	Endrin	0.11	U
7421-93-4	Endrin Aldehyde	0.11	U
53494-70-5	Endrin Ketone	0.11	U
58-89-9	Gamma-BHC (Lindane)	0.050	U
5103-74-2	Gamma-Chlordane	0.050	U
76-44-8	Heptachlor	0.050	U
1024-57-3	Heptachlor Epoxide	0.050	U
72-43-5	Methoxychlor	0.53	U
12674-11-2	PCB-1016	1.1	U
11104-28-2	PCB-1221	2.1	U
11141-16-5	PCB-1232	1.1	U
53469-21-9	PCB-1242	1.1	U
12672-29-6	PCB-1248	1.1	U
11097-69-1	PCB-1254	1.1	U
11096-82-5	PCB-1260	1.1	U
8001-35-2	Toxaphene	5.3	U

RW
10/6/08

GPL Laboratories

GPL
FORM 1
ANALYSIS DATA SHEET

9

SAMPLE NO
MR08-IS38-5-6-08C

Lab Name :	GPL Laboratories	Client. :	CH2M Hill Inc
Lab Code :	GPL	SAS NO. :	
Case No. :		SDG NO :	807198
Matrix : (Soil / Water)	SOIL	Lab Sample ID :	807198-011-027-1/1
Sample Volume :	30.01	Lab File ID :	W005968.D
% Moisture:	18.67	Date Received	07/30/2008
Extraction:	CLP_EXTRACTION	Date Extracted:	08/04/2008
Extract Volume:	5 mL	Date Analyzed	08/08/2008
Injection Volume :	µ L	Dilution Factor :	1
GPC Clean up (Y/N):	Y pH:		

Concentration Units (ug/L or ug/kg dry weight) : ug/kg

CAS NO	COMPOUND		Q
72-54-8	4,4-DDD	4.1	U
72-55-9	4,4-DDE	4.1	U
50-29-3	4,4-DDT	4.1	U
309-00-2	Aldrin	2.1	U
319-84-6	Alpha-BHC	2.1	U
5103-71-9	Alpha-Chlordane	2.1	U
319-85-7	Beta-BHC	2.1	U
319-86-8	Delta-BHC	2.1	U
60-57-1	Dieldrin	4.1	U
959-98-8	Endosulfan I	2.1	U
33213-65-9	Endosulfan II	4.1	U
1031-07-8	Endosulfan Sulfate	4.1	U
72-20-8	Endrin	4.1	U
7421-93-4	Endrin Aldehyde	4.1	U
53494-70-5	Endrin Ketone	4.1	U
58-89-9	Gamma-BHC (Lindane)	2.1	U
5103-74-2	Gamma-Chlordane	2.1	U
76-44-8	Heptachlor	2.1	U
1024-57-3	Heptachlor Epoxide	2.1	U
72-43-5	Methoxychlor	21	U
12674-11-2	PCB-1016	41	U
11104-28-2	PCB-1221	82	U
11141-16-5	PCB-1232	41	U
53469-21-9	PCB-1242	41	U
12672-29-6	PCB-1248	41	U
11097-69-1	PCB-1254	41	U
11096-82-5	PCB-1260	41	U
8001-35-2	Toxaphene	210	U

CW 10/6/08

ENVIRONMENTAL
Data Services, Inc.

SEMIVOLATILE ORGANIC COMPOUNDS
USEPA Region IV - Level IV Review

Site: MCB Camp Lejeune, UXO-08, CTO-168 SDG #: 807198

Client: CH2M HILL, Inc., Virginia Beach, Virginia Date: October 6, 2008

Laboratory: GPL Laboratories, Frederick, Maryland Reviewer: Nancy Weaver

EDS ID	Client Sample ID	Laboratory Sample ID	Matrix
1	MR08-IS39-5-6-08C	807198-001	Soil
1MS	MR08-IS39-5-6-08CMS	807198-001MS	Soil
1MSD	MR08-IS39-5-6-08CMSD	807198-001MSD	Soil
2	MR08-IS43-5-6-08C	807198-004	Soil
3	MR08-IS42-5-6-08C	807198-005	Soil
4	MR08-IS42D-5-6-08C	807198-006	Soil
5	MR08-IS40-5-6-08C	807198-007	Soil
6	MR08-IS41-5-6-08C	807198-008	Soil
7	MR08-IS38-5-6-08C	807198-011	Soil

The USEPA "Contract Laboratory Program National Functional Guidelines for Organic Data Review," October 1999, and professional judgement were used in evaluating the data in this summary report.

Holding Times - All samples were extracted within 14 days for soil samples and analyzed within 40 days for all samples.

GC/MS Tuning - All of the DFTPP tunes in the initial and continuing calibrations met the percent relative abundance criteria.

Initial Calibration - The initial calibrations exhibited acceptable %RSD and mean RRF values except the following.

ICAL Date	Compound	%RSD/RRF	Qualifier	Affected Samples
08/12/08	Benzaldehyde	37.7%	None	All ND

Continuing Calibration - The continuing calibrations exhibited acceptable %D and RRF values except the following.

CCAL Date	Compound	%D/RRF	Qualifier	Affected Samples
08/22/08	Benzaldehyde	53.2%	J/UJ	All Samples
	Di-n-octylphthalate	46.1%	J/UJ	All Samples

Surrogates - All samples exhibited acceptable surrogate recoveries except the following.

Sample ID	Surrogate	%R	Qualifier
5	2,4,6-Tribromophenol	142%	None for 1 out per fraction
	2-Fluorobiphenyl	118%	
2	2,4,6-Tribromophenol	127%	None for 1 out

MS/MSD - The MS/MSD sample exhibited acceptable %R and RPD values except the following.

MS/MSD Sample ID	Compound	MS/MSD %R/RPD	Qualifier
1	2,4-Dinitrotoluene	133%/114%/Ok	None – Sample ND
	2-Chlorophenol	106%/106%/Ok	
	4-Nitrophenol	139%/Ok/Ok	
	4-Chloro-3-methylphenol	110%/110%/Ok	
	Pentachlorophenol	129%/123%/Ok	
	Phenol	110%/116%/Ok	
	n-Nitrosodi-n-propylamine	Ok/148%/Ok	

Laboratory Control Sample - The LCS samples exhibited acceptable %R values.

Internal Standard (IS) Area Performance - All internal standards met response and retention time (RT) criteria.

Method Blank - The method blanks were free of contamination.

Field, Equipment Blank - Field QC samples were not analyzed.

Field Duplicates - Field duplicate results are summarized below.

Compound	MR08-IS42-5-6-O8C ug/kg	MR08-IS42D-5-6-O8C ug/kg	RPD	Qualifier
None	ND	ND	-	-

Tentatively Identified Compounds (TICs) - All "unknown" TICs were qualified as estimated (J), all "known" TICs were qualified (JN) and all TICs affected by blank contamination were qualified (B).

Compound Quantitation - No discrepancies were identified.

GPL Laboratories

GPL
FORM 1
ANALYSIS DATA SHEET

SAMPLE NO
MR08-IS39-5-6-08C

Lab Name :	GPL Laboratories	Client. :	CH2M Hill Inc
Lab Code :	GPL	SAS NO. :	
Case No. :		SDG NO :	807198
Matrix : (Soil / Water)	SOIL	Lab Sample ID :	807198-001-004-1/3
Sample Volume :	30	Lab File ID :	D47653.D
% Moisture:	20.29	Date Received	07/30/2008
Extraction:	CLP_EXTRACTION	Date Extracted:	08/01/2008
Extract Volume:	.5 mL	Date Analyzed	08/22/2008
Injection Volume :	µ L	Dilution Factor :	1
GPC Clean up (Y/N):	pH:		

Concentration Units (ug/L or ug/kg dry weight) : ug/kg

CAS NO	COMPOUND		Q
92-52-4	1,1- Biphenyl	420	U
108-60-1	2,2-Oxybis(1-chloropropane)	420	U
95-95-4	2,4,5-Trichlorophenol	1100	U
88-06-2	2,4,6-Trichlorophenol	420	U
120-83-2	2,4-Dichlorophenol	420	U
105-67-9	2,4-Dimethylphenol	420	U
51-28-5	2,4-Dinitrophenol	1100	U
121-14-2	2,4-Dinitrotoluene	420	U
606-20-2	2,6-Dinitrotoluene	420	U
91-58-7	2-Chloronaphthalene	420	U
95-57-8	2-Chlorophenol	420	U
91-57-6	2-Methylnaphthalene	420	U
88-74-4	2-Nitroaniline	1100	U
88-75-5	2-Nitrophenol	420	U
95-48-7	2-methylphenol	420	U
91-94-1	3,3-Dichlorobenzidine	420	U
99-09-2	3-Nitroaniline	1100	U
534-52-1	4,6-dinitro-2-methyl phenol	1100	U
101-55-3	4-Bromophenyl-phenylether	420	U
106-47-8	4-Chloroaniline	420	U
7005-72-3	4-Chlorophenyl Phenyl Ether	420	U
100-01-6	4-Nitroaniline	1100	U
100-02-7	4-Nitrophenol	1100	U
59-50-7	4-chloro-3-methylphenol	420	U
106-44-5	4-methylphenol	420	U
83-32-9	Acenaphthene	420	U
208-96-8	Acenaphthylene	420	U
98-86-2	Acetophenone	420	U
120-12-7	Anthracene	420	U

GPL Laboratories

GPL
FORM 1
ANALYSIS DATA SHEET

SAMPLE NO
MR08-IS39-5-6-08C

Lab Name :	GPL Laboratories	Client. :	CH2M Hill Inc
Lab Code :	GPL	SAS NO. :	
Case No. :		SDG NO :	807198
Matrix : (Soil / Water)	SOIL	Lab Sample ID :	807198-001-004-1/3
Sample Volume :	30	Lab File ID :	D47653.D
% Moisture:	20.29	Date Received	07/30/2008
Extraction:	CLP_EXTRACTION	Date Extracted:	08/01/2008
Extract Volume:	.5 mL	Date Analyzed	08/22/2008
Injection Volume :	µ L	Dilution Factor :	1
GPC Clean up (Y/N):	pH:		

Concentration Units (ug/L or ug/kg dry weight) : ug/kg

CAS NO	COMPOUND		Q
1912-24-9	Atrazine	420	U
100-52-7	Benzaldehyde	420	~~U~~ UJ CCH
56-55-3	Benzo(a)anthracene	420	U
50-32-8	Benzo(a)pyrene	420	U
205-99-2	Benzo(b)fluoranthene	420	U
191-24-2	Benzo(g,h,i)perylene	420	U
207-08-9	Benzo(k)fluoranthene	420	U
85-68-7	Benzyl Butyl Phthalate	420	U
105-60-2	Caprolactam	420	U
86-74-8	Carbazole	420	U
218-01-9	Chrysene	420	U
53-70-3	Dibenz(a,h)Anthracene	420	U
132-64-9	Dibenzofuran	420	U
84-66-2	Diethyl Phthalate	420	U
131-11-3	Dimethyl Phthalate	420	U
206-44-0	Fluoranthene	420	U
86-73-7	Fluorene	420	U
118-74-1	Hexachlorobenzene	420	U
87-68-3	Hexachlorobutadiene	420	U
77-47-4	Hexachlorocyclopentadiene	420	U
67-72-1	Hexachloroethane	420	U
193-39-5	Indeno(1,2,3-c,d)Pyrene	420	U
78-59-1	Isophorone	420	U
91-20-3	Naphthalene	420	U
98-95-3	Nitrobenzene	420	U
87-86-5	Pentachlorophenol	1100	U
85-01-8	Phenanthrene	420	U
108-95-2	Phenol	420	U
129-00-0	Pyrene	420	U

GPL Laboratories

GPL
FORM I
ANALYSIS DATA SHEET

SAMPLE NO
MR08-IS39-5-6-08C

Lab Name :	GPL Laboratories	Client. :	CH2M Hill Inc
Lab Code :	GPL	SAS NO. :	
Case No. :		SDG NO :	807198
Matrix : (Soil / Water)	SOIL	Lab Sample ID :	807198-001-004-1/3
Sample Volume :	30	Lab File ID :	D47653.D
% Moisture:	20.29	Date Received	07/30/2008
Extraction:	CLP_EXTRACTION	Date Extracted:	08/01/2008
Extract Volume:	.5 mL	Date Analyzed	08/22/2008
Injection Volume :	µL	Dilution Factor :	1
GPC Clean up (Y/N):	pH:		

Concentration Units (ug/L or ug/kg dry weight) : ug/kg

CAS NO	COMPOUND		Q
111-91-1	bis(2-chloroethoxy) methane	420	U
111-44-4	bis(2-chloroethyl) ether	420	U
117-81-7	bis(2-ethylhexyl) phthalate	46	J
84-74-2	di-n-Butyl Phthalate	420	U
117-84-0	di-n-Octyl Phthalate	420	~~U~~ UJCH
621-64-7	n-Nitrosodi-n-Propylamine	420	U
86-30-6	n-Nitrosodiphenylamine	420	U

LW 10/6/08

1E

VOLATILE ORGANICS ANALYSIS DATA SHEET
TENTATIVELY IDENTIFIED COMPOUNDS

EPA SAMPLE NO.

MR08-IS39-5-6-08C

Lab Name: GPL Laboratories, LLLP Contract: CH2M Hill Inc

Lab Code: GPL Case No.: NA SAS No.: NA SDG No.: 807198

Matrix (soil/water): SOIL Lab Sample ID: 807198-001-004-1/3

Sample wt/vol: 30 (g/ml) g Lab File ID: D47653.D

Level (low/med): LOW Date Recieved 07/30/2008

% Moisture: 20.29 Date Analyzed: 08/22/2008

GC Column: RTX VOA ID: 0.53 (mm) Dilution Factor: 1

Soil Extract Volume: _____ (uL) Soil Aliquot Volume: _____ (uL)

Number TICs Found: 2 Concentration Units (ug/L or ug/kg): ug/kg

#	CAS NUMBER	COMPOUND NAME	RT	EST. CONC	Q
1	000119-47-1	Phenol, 2,2'-	22.76	15	~~JN~~ JN
2		unknown	8.71	17	~~J~~ J

FORM I VOA-TIC

10/6/08

GPL Laboratories

GPL
FORM I
ANALYSIS DATA SHEET

2

SAMPLE NO
MR08-IS43-5-6-08C

Lab Name :	GPL Laboratories	Client. :	CH2M Hill Inc
Lab Code :	GPL	SAS NO. :	
Case No. :		SDG NO :	807198
Matrix : (Soil / Water)	SOIL	Lab Sample ID :	807198-004-022-1/1
Sample Volume :	30	Lab File ID :	D47656.D
% Moisture:	23.16	Date Received	07/30/2008
Extraction:	CLP_EXTRACTION	Date Extracted:	08/01/2008
Extract Volume:	.5 mL	Date Analyzed	08/22/2008
Injection Volume :	µ L	Dilution Factor :	1
GPC Clean up (Y/N):	pH:		

Concentration Units (ug/L or ug/kg dry weight) : ug/kg

CAS NO	COMPOUND		Q
92-52-4	1,1- Biphenyl	430	U
108-60-1	2,2-Oxybis(1-chloropropane)	430	U
95-95-4	2,4,5-Trichlorophenol	1100	U
88-06-2	2,4,6-Trichlorophenol	430	U
120-83-2	2,4-Dichlorophenol	430	U
105-67-9	2,4-Dimethylphenol	430	U
51-28-5	2,4-Dinitrophenol	1100	U
121-14-2	2,4-Dinitrotoluene	430	U
606-20-2	2,6-Dinitrotoluene	430	U
91-58-7	2-Chloronaphthalene	430	U
95-57-8	2-Chlorophenol	430	U
91-57-6	2-Methylnaphthalene	430	U
88-74-4	2-Nitroaniline	1100	U
88-75-5	2-Nitrophenol	430	U
95-48-7	2-methylphenol	430	U
91-94-1	3,3-Dichlorobenzidine	430	U
99-09-2	3-Nitroaniline	1100	U
534-52-1	4,6-dinitro-2-methyl phenol	1100	U
101-55-3	4-Bromophenyl-phenylether	430	U
106-47-8	4-Chloroaniline	430	U
7005-72-3	4-Chlorophenyl Phenyl Ether	430	U
100-01-6	4-Nitroaniline	1100	U
100-02-7	4-Nitrophenol	1100	U
59-50-7	4-chloro-3-methylphenol	430	U
106-44-5	4-methylphenol	430	U
83-32-9	Acenaphthene	430	U
208-96-8	Acenaphthylene	430	U
98-86-2	Acetophenone	430	U
120-12-7	Anthracene	430	U

GPL Laboratories

GPL
FORM 1
ANALYSIS DATA SHEET

2

SAMPLE NO
MR08-IS43-5-6-08C

Lab Name :	GPL Laboratories	Client. :	CH2M Hill Inc
Lab Code :	GPL	SAS NO. :	
Case No. :		SDG NO :	807198
Matrix : (Soil / Water)	SOIL	Lab Sample ID :	807198-004-022-1/1
Sample Volume :	30	Lab File ID :	D47656.D
% Moisture:	23.16	Date Received	07/30/2008
Extraction:	CLP_EXTRACTION	Date Extracted:	08/01/2008
Extract Volume:	.5 mL	Date Analyzed	08/22/2008
Injection Volume :	µL	Dilution Factor :	1
GPC Clean up (Y/N):	pH:		

Concentration Units (ug/L or ug/kg dry weight) : ug/kg

CAS NO	COMPOUND		Q
1912-24-9	Atrazine	430	U
100-52-7	Benzaldehyde	430	~~U~~ UJ CCH
56-55-3	Benzo(a)anthracene	430	U
50-32-8	Benzo(a)pyrene	430	U
205-99-2	Benzo(b)fluoranthene	430	U
191-24-2	Benzo(g,h,i)perylene	430	U
207-08-9	Benzo(k)fluoranthene	430	U
85-68-7	Benzyl Butyl Phthalate	430	U
105-60-2	Caprolactam	430	U
86-74-8	Carbazole	430	U
218-01-9	Chrysene	430	U
53-70-3	Dibenz(a,h)Anthracene	430	U
132-64-9	Dibenzofuran	430	U
84-66-2	Diethyl Phthalate	430	U
131-11-3	Dimethyl Phthalate	430	U
206-44-0	Fluoranthene	430	U
86-73-7	Fluorene	430	U
118-74-1	Hexachlorobenzene	430	U
87-68-3	Hexachlorobutadiene	430	U
77-47-4	Hexachlorocyclopentadiene	430	U
67-72-1	Hexachloroethane	430	U
193-39-5	Indeno(1,2,3-c,d)Pyrene	430	U
78-59-1	Isophorone	430	U
91-20-3	Naphthalene	430	U
98-95-3	Nitrobenzene	430	U
87-86-5	Pentachlorophenol	1100	U
85-01-8	Phenanthrene	430	U
108-95-2	Phenol	430	U
129-00-0	Pyrene	430	U

LW 10/6/08

GPL Laboratories

GPL
FORM 1
ANALYSIS DATA SHEET

2

SAMPLE NO
MR08-IS43-5-6-08C

Lab Name :	GPL Laboratories	Client. :	CH2M Hill Inc
Lab Code :	GPL	SAS NO. :	
Case No. :		SDG NO :	807198
Matrix : (Soil / Water)	SOIL	Lab Sample ID :	807198-004-022-1/1
Sample Volume :	30	Lab File ID :	D47656.D
% Moisture:	23.16	Date Received	07/30/2008
Extraction:	CLP_EXTRACTION	Date Extracted:	08/01/2008
Extract Volume:	.5 mL	Date Analyzed	08/22/2008
Injection Volume :	µL	Dilution Factor :	1
GPC Clean up (Y/N):	pH:		

Concentration Units (ug/L or ug/kg dry weight) : ug/kg

CAS NO	COMPOUND		Q
111-91-1	bis(2-chloroethoxy) methane	430	U
111-44-4	bis(2-chloroethyl) ether	430	U
117-81-7	bis(2-ethylhexyl) phthalate	430	U
84-74-2	di-n-Butyl Phthalate	430	U
117-84-0	di-n-Octyl Phthalate	430	~~U~~ UJ CCH
621-64-7	n-Nitrosodi-n-Propylamine	430	U
86-30-6	n-Nitrosodiphenylamine	430	U

2

1E
VOLATILE ORGANICS ANALYSIS DATA SHEET
TENTATIVELY IDENTIFIED COMPOUNDS

EPA SAMPLE NO.
MR08-IS43-5-6-08C

Lab Name: GPL Laboratories, LLLP
Contract: CH2M Hill Inc
Lab Code: GPL
Case No.: NA
SAS No.: NA
SDG No.: 807198
Matrix (soil/water): SOIL
Lab Sample ID: 807198-004-022-1/1
Sample wt/vol: 30 (g/ml) g
Lab File ID: D47656.D
Level (low/med): LOW
Date Recieved 07/30/2008
% Moisture: 23.16
Date Analyzed: 08/22/2008
GC Column: RTX VOA
ID: 0.53 (mm)
Dilution Factor: 1
Soil Extract Volume: _____ (uL)
Soil Aliquot Volume: _____ (uL)

Number TICs Found: 5
Concentration Units (ug/L or ug/kg): ug/kg

#	CAS NUMBER	COMPOUND NAME	RT	EST. CONC	Q
1	000119-47-1	Phenol, 2,2'-	22.75	19	~~JN~~ JN
2		unknown	15.76	3.87	J J
3		unknown	15.92	4.71	J
4		unknown	22.89	7.030	J
5		unknown	8.72	25	J

FORM I VOA-TIC

10/6/08

GPL Laboratories

GPL
FORM 1
ANALYSIS DATA SHEET

SAMPLE NO
MR08-IS42-5-6-08C

Lab Name :	GPL Laboratories	Client. :	CH2M Hill Inc
Lab Code :	GPL	SAS NO. :	
Case No. :		SDG NO :	807198
Matrix : (Soil / Water)	SOIL	Lab Sample ID :	807198-005-023-1/1
Sample Volume :	30	Lab File ID :	D47657.D
% Moisture:	22.71	Date Received	07/30/2008
Extraction:	CLP_EXTRACTION	Date Extracted:	08/01/2008
Extract Volume:	.5 mL	Date Analyzed	08/22/2008
Injection Volume :	µ L	Dilution Factor :	1
GPC Clean up (Y/N):	pH:		

Concentration Units (ug/L or ug/kg dry weight) : ug/kg

CAS NO	COMPOUND		Q
92-52-4	1,1- Biphenyl	430	U
108-60-1	2,2-Oxybis(1-chloropropane)	430	U
95-95-4	2,4,5-Trichlorophenol	1100	U
88-06-2	2,4,6-Trichlorophenol	430	U
120-83-2	2,4-Dichlorophenol	430	U
105-67-9	2,4-Dimethylphenol	430	U
51-28-5	2,4-Dinitrophenol	1100	U
121-14-2	2,4-Dinitrotoluene	430	U
606-20-2	2,6-Dinitrotoluene	430	U
91-58-7	2-Chloronaphthalene	430	U
95-57-8	2-Chlorophenol	430	U
91-57-6	2-Methylnaphthalene	430	U
88-74-4	2-Nitroaniline	1100	U
88-75-5	2-Nitrophenol	430	U
95-48-7	2-methylphenol	430	U
91-94-1	3,3-Dichlorobenzidine	430	U
99-09-2	3-Nitroaniline	1100	U
534-52-1	4,6-dinitro-2-methyl phenol	1100	U
101-55-3	4-Bromophenyl-phenylether	430	U
106-47-8	4-Chloroaniline	430	U
7005-72-3	4-Chlorophenyl Phenyl Ether	430	U
100-01-6	4-Nitroaniline	1100	U
100-02-7	4-Nitrophenol	1100	U
59-50-7	4-chloro-3-methylphenol	430	U
106-44-5	4-methylphenol	430	U
83-32-9	Acenaphthene	430	U
208-96-8	Acenaphthylene	430	U
98-86-2	Acetophenone	430	U
120-12-7	Anthracene	430	U

MP 10/6/08

3

GPL Laboratories

GPL
FORM 1
ANALYSIS DATA SHEET

SAMPLE NO
MR08-IS42-5-6-08C

Lab Name :	GPL Laboratories	Client. :	CH2M Hill Inc
Lab Code :	GPL	SAS NO. :	
Case No. :		SDG NO :	807198
Matrix : (Soil / Water)	SOIL	Lab Sample ID :	807198-005-023-1/1
Sample Volume :	30	Lab File ID :	D47657.D
% Moisture:	22.71	Date Received	07/30/2008
Extraction:	CLP_EXTRACTION	Date Extracted:	08/01/2008
Extract Volume:	.5 mL	Date Analyzed	08/22/2008
Injection Volume :	µ L	Dilution Factor :	1
GPC Clean up (Y/N):	pH:		

Concentration Units (ug/L or ug/kg dry weight) : ug/kg

CAS NO	COMPOUND		Q
1912-24-9	Atrazine	430	U
100-52-7	Benzaldehyde	430	U UJ CCH
56-55-3	Benzo(a)anthracene	430	U
50-32-8	Benzo(a)pyrene	430	U
205-99-2	Benzo(b)fluoranthene	430	U
191-24-2	Benzo(g,h,i)perylene	430	U
207-08-9	Benzo(k)fluoranthene	430	U
85-68-7	Benzyl Butyl Phthalate	430	U
105-60-2	Caprolactam	430	U
86-74-8	Carbazole	430	U
218-01-9	Chrysene	430	U
53-70-3	Dibenz(a,h)Anthracene	430	U
132-64-9	Dibenzofuran	430	U
84-66-2	Diethyl Phthalate	430	U
131-11-3	Dimethyl Phthalate	430	U
206-44-0	Fluoranthene	430	U
86-73-7	Fluorene	430	U
118-74-1	Hexachlorobenzene	430	U
87-68-3	Hexachlorobutadiene	430	U
77-47-4	Hexachlorocyclopentadiene	430	U
67-72-1	Hexachloroethane	430	U
193-39-5	Indeno(1,2,3-c,d)Pyrene	430	U
78-59-1	Isophorone	430	U
91-20-3	Naphthalene	430	U
98-95-3	Nitrobenzene	430	U
87-86-5	Pentachlorophenol	1100	U
85-01-8	Phenanthrene	430	U
108-95-2	Phenol	430	U
129-00-0	Pyrene	430	U

LW 10/6/08

GPL Laboratories

GPL
FORM I
ANALYSIS DATA SHEET

3

SAMPLE NO
MR08-IS42-5-6-08C

Lab Name :	GPL Laboratories	Client. :	CH2M Hill Inc
Lab Code :	GPL	SAS NO. :	
Case No. :		SDG NO :	807198
Matrix : (Soil / Water)	SOIL	Lab Sample ID :	807198-005-023-1/1
Sample Volume :	30	Lab File ID :	D47657.D
% Moisture:	22.71	Date Received	07/30/2008
Extraction:	CLP_EXTRACTION	Date Extracted:	08/01/2008
Extract Volume:	.5 mL	Date Analyzed	08/22/2008
Injection Volume :	µ L	Dilution Factor :	1
GPC Clean up (Y/N):	pH:		

Concentration Units (ug/L or ug/kg dry weight) : ug/kg

CAS NO	COMPOUND		Q
111-91-1	bis(2-chloroethoxy) methane	430	U
111-44-4	bis(2-chloroethyl) ether	430	U
117-81-7	bis(2-ethylhexyl) phthalate	430	U
84-74-2	di-n-Butyl Phthalate	430	U
117-84-0	di-n-Octyl Phthalate	430	~~U~~ UJ CCH
621-64-7	n-Nitrosodi-n-Propylamine	430	U
86-30-6	n-Nitrosodiphenylamine	430	U

3

1E
VOLATILE ORGANICS ANALYSIS DATA SHEET
TENTATIVELY IDENTIFIED COMPOUNDS

EPA SAMPLE NO.
MR08-IS42-5-6-08C

Lab Name: GPL Laboratories, LLLP
Contract: CH2M Hill Inc
Lab Code: GPL
Case No.: NA
SAS No.: NA
SDG No.: 807198
Matrix (soil/water): SOIL
Lab Sample ID: 807198-005-023-1/1
Sample wt/vol: 30 (g/ml) g
Lab File ID: D47657.D
Level (low/med): LOW
Date Recieved 07/30/2008
% Moisture: 22.71
Date Analyzed: 08/22/2008
GC Column: RTX VOA
ID: 0.53 (mm)
Dilution Factor: 1
Soil Extract Volume: _____ (uL)
Soil Aliquot Volume: _____ (uL)

Number TICs Found: 5
Concentration Units (ug/L or ug/kg): ug/kg

#	CAS NUMBER	COMPOUND NAME	RT	EST. CONC	Q	
1	000119-47-1	Phenol, 2,2'-	22.75	16	~~JN~~	JN
2		unknown	16.17	64	~~J~~	J
3		unknown	17.79	15	~~J~~	
4		unknown	22.89	7.95	~~J~~	
5		unknown	8.71	28	~~J~~	

FORM I VOA-TIC

RW 10/6/08

GPL Laboratories

GPL
FORM 1
ANALYSIS DATA SHEET

4

SAMPLE NO
MR08-IS42D5-6-08C

Lab Name :	GPL Laboratories	Client. :	CH2M Hill Inc
Lab Code :	GPL	SAS NO. :	
Case No. :		SDG NO :	807198
Matrix : (Soil / Water)	SOIL	Lab Sample ID :	807198-006-024-1/1
Sample Volume :	30	Lab File ID :	D47658.D
% Moisture:	17.89	Date Received	07/30/2008
Extraction:	CLP_EXTRACTION	Date Extracted:	08/01/2008
Extract Volume:	.5 mL	Date Analyzed	08/22/2008
Injection Volume :	µ L	Dilution Factor :	1
GPC Clean up (Y/N):	pH:		

Concentration Units (ug/L or ug/kg dry weight) : ug/kg

CAS NO	COMPOUND		Q
92-52-4	1,1- Biphenyl	410	U
108-60-1	2,2-Oxybis(1-chloropropane)	410	U
95-95-4	2,4,5-Trichlorophenol	1000	U
88-06-2	2,4,6-Trichlorophenol	410	U
120-83-2	2,4-Dichlorophenol	410	U
105-67-9	2,4-Dimethylphenol	410	U
51-28-5	2,4-Dinitrophenol	1000	U
121-14-2	2,4-Dinitrotoluene	410	U
606-20-2	2,6-Dinitrotoluene	410	U
91-58-7	2-Chloronaphthalene	410	U
95-57-8	2-Chlorophenol	410	U
91-57-6	2-Methylnaphthalene	410	U
88-74-4	2-Nitroaniline	1000	U
88-75-5	2-Nitrophenol	410	U
95-48-7	2-methylphenol	410	U
91-94-1	3,3-Dichlorobenzidine	410	U
99-09-2	3-Nitroaniline	1000	U
534-52-1	4,6-dinitro-2-methyl phenol	1000	U
101-55-3	4-Bromophenyl-phenylether	410	U
106-47-8	4-Chloroaniline	410	U
7005-72-3	4-Chlorophenyl Phenyl Ether	410	U
100-01-6	4-Nitroaniline	1000	U
100-02-7	4-Nitrophenol	1000	U
59-50-7	4-chloro-3-methylphenol	410	U
106-44-5	4-methylphenol	410	U
83-32-9	Acenaphthene	410	U
208-96-8	Acenaphthylene	410	U
98-86-2	Acetophenone	410	U
120-12-7	Anthracene	410	U

GPL Laboratories

GPL
FORM 1
ANALYSIS DATA SHEET

4

SAMPLE NO
MR08-IS42D5-6-08C

Lab Name :	GPL Laboratories	Client. :	CH2M Hill Inc
Lab Code :	GPL	SAS NO. :	
Case No. :		SDG NO :	807198
Matrix : (Soil / Water)	SOIL	Lab Sample ID :	807198-006-024-1/1
Sample Volume :	30	Lab File ID :	D47658.D
% Moisture:	17.89	Date Received	07/30/2008
Extraction:	CLP_EXTRACTION	Date Extracted:	08/01/2008
Extract Volume:	.5 mL	Date Analyzed	08/22/2008
Injection Volume :	µ L	Dilution Factor :	1
GPC Clean up (Y/N):	pH:		

Concentration Units (ug/L or ug/kg dry weight) : ug/kg

CAS NO	COMPOUND		Q
1912-24-9	Atrazine	410	U
100-52-7	Benzaldehyde	410	~~U~~ UJ CCH
56-55-3	Benzo(a)anthracene	410	U
50-32-8	Benzo(a)pyrene	410	U
205-99-2	Benzo(b)fluoranthene	410	U
191-24-2	Benzo(g,h,i)perylene	410	U
207-08-9	Benzo(k)fluoranthene	410	U
85-68-7	Benzyl Butyl Phthalate	410	U
105-60-2	Caprolactam	410	U
86-74-8	Carbazole	410	U
218-01-9	Chrysene	410	U
53-70-3	Dibenz(a,h)Anthracene	410	U
132-64-9	Dibenzofuran	410	U
84-66-2	Diethyl Phthalate	410	U
131-11-3	Dimethyl Phthalate	410	U
206-44-0	Fluoranthene	410	U
86-73-7	Fluorene	410	U
118-74-1	Hexachlorobenzene	410	U
87-68-3	Hexachlorobutadiene	410	U
77-47-4	Hexachlorocyclopentadiene	410	U
67-72-1	Hexachloroethane	410	U
193-39-5	Indeno(1,2,3-c,d)Pyrene	410	U
78-59-1	Isophorone	410	U
91-20-3	Naphthalene	410	U
98-95-3	Nitrobenzene	410	U
87-86-5	Pentachlorophenol	1000	U
85-01-8	Phenanthrene	410	U
108-95-2	Phenol	410	U
129-00-0	Pyrene	410	U

GPL Laboratories

GPL
FORM 1
ANALYSIS DATA SHEET

4

SAMPLE NO
MR08-IS42D5-6-08C

Lab Name :	GPL Laboratories	Client. :	CH2M Hill Inc
Lab Code :	GPL	SAS NO. :	
Case No. :		SDG NO :	807198
Matrix : (Soil / Water)	SOIL	Lab Sample ID :	807198-006-024-1/1
Sample Volume :	30	Lab File ID :	D47658.D
% Moisture:	17.89	Date Received	07/30/2008
Extraction:	CLP_EXTRACTION	Date Extracted:	08/01/2008
Extract Volume:	.5 mL	Date Analyzed	08/22/2008
Injection Volume :	µ L	Dilution Factor :	1
GPC Clean up (Y/N):	pH:		

Concentration Units (ug/L or ug/kg dry weight) : ug/kg

CAS NO	COMPOUND		Q
111-91-1	bis(2-chloroethoxy) methane	410	U
111-44-4	bis(2-chloroethyl) ether	410	U
117-81-7	bis(2-ethylhexyl) phthalate	410	U
84-74-2	di-n-Butyl Phthalate	410	U
117-84-0	di-n-Octyl Phthalate	410	~~U~~ UJ CCH
621-64-7	n-Nitrosodi-n-Propylamine	410	U
86-30-6	n-Nitrosodiphenylamine	410	U

4

1E
VOLATILE ORGANICS ANALYSIS DATA SHEET
TENTATIVELY IDENTIFIED COMPOUNDS

EPA SAMPLE NO.
MR08-IS42D5-6-08C

Lab Name: GPL Laboratories, LLLP
Contract: CH2M Hill Inc
Lab Code: GPL
Case No.: NA
SAS No.: NA
SDG No.: 807198
Matrix (soil/water): SOIL
Lab Sample ID: 807198-006-024-1/1
Sample wt/vol: 30 (g/ml) g
Lab File ID: D47658.D
Level (low/med): LOW
Date Recieved 07/30/2008
% Moisture: 17.89
Date Analyzed: 08/22/2008
GC Column: RTX VOA
ID: 0.53 (mm)
Dilution Factor: 1
Soil Extract Volume: _____ (uL)
Soil Aliquot Volume: _____ (uL)

Number TICs Found: 3
Concentration Units (ug/L or ug/kg): ug/kg

#	CAS NUMBER	COMPOUND NAME	RT	EST. CONC	Q	
1	000119-47-1	Phenol, 2,2'-	22.76	7.35	~~JN~~	JN
2		unknown	22.88	4.55	~~J~~	J
3		unknown	8.71	23	~~J~~	J

FORM I VOA-TIC

JW 10/6/08

GPL Laboratories

GPL
FORM I
ANALYSIS DATA SHEET

SAMPLE NO
MR08-IS40-5-6-08C

Lab Name :	GPL Laboratories	Client. :	CH2M Hill Inc
Lab Code :	GPL	SAS NO. :	
Case No. :		SDG NO :	807198
Matrix : (Soil / Water)	SOIL	Lab Sample ID :	807198-007-025-1/1
Sample Volume :	30	Lab File ID :	D47659.D
% Moisture:	23	Date Received	07/30/2008
Extraction:	CLP_EXTRACTION	Date Extracted:	08/01/2008
Extract Volume:	.5 mL	Date Analyzed	08/22/2008
Injection Volume :	µL	Dilution Factor :	1
GPC Clean up (Y/N):	pH:		

Concentration Units (ug/L or ug/kg dry weight) : ug/kg

CAS NO	COMPOUND		Q
92-52-4	1,1- Biphenyl	430	U
108-60-1	2,2-Oxybis(1-chloropropane)	430	U
95-95-4	2,4,5-Trichlorophenol	1100	U
88-06-2	2,4,6-Trichlorophenol	430	U
120-83-2	2,4-Dichlorophenol	430	U
105-67-9	2,4-Dimethylphenol	430	U
51-28-5	2,4-Dinitrophenol	1100	U
121-14-2	2,4-Dinitrotoluene	430	U
606-20-2	2,6-Dinitrotoluene	430	U
91-58-7	2-Chloronaphthalene	430	U
95-57-8	2-Chlorophenol	430	U
91-57-6	2-Methylnaphthalene	430	U
88-74-4	2-Nitroaniline	1100	U
88-75-5	2-Nitrophenol	430	U
95-48-7	2-methylphenol	430	U
91-94-1	3,3-Dichlorobenzidine	430	U
99-09-2	3-Nitroaniline	1100	U
534-52-1	4,6-dinitro-2-methyl phenol	1100	U
101-55-3	4-Bromophenyl-phenylether	430	U
106-47-8	4-Chloroaniline	430	U
7005-72-3	4-Chlorophenyl Phenyl Ether	430	U
100-01-6	4-Nitroaniline	1100	U
100-02-7	4-Nitrophenol	1100	U
59-50-7	4-chloro-3-methylphenol	430	U
106-44-5	4-methylphenol	430	U
83-32-9	Acenaphthene	430	U
208-96-8	Acenaphthylene	430	U
98-86-2	Acetophenone	430	U
120-12-7	Anthracene	430	U

GPL Laboratories

GPL
FORM I
ANALYSIS DATA SHEET

5

SAMPLE NO
MR08-IS40-5-6-08C

Lab Name :	GPL Laboratories	Client. :	CH2M Hill Inc
Lab Code :	GPL	SAS NO. :	
Case No. :		SDG NO :	807198
Matrix : (Soil / Water)	SOIL	Lab Sample ID :	807198-007-025-1/1
Sample Volume :	30	Lab File ID :	D47659.D
% Moisture:	23	Date Received	07/30/2008
Extraction:	CLP_EXTRACTION	Date Extracted:	08/01/2008
Extract Volume:	.5 mL	Date Analyzed	08/22/2008
Injection Volume :	µ L	Dilution Factor :	1
GPC Clean up (Y/N):	pH:		

Concentration Units (ug/L or ug/kg dry weight) : ug/kg

CAS NO	COMPOUND		Q
1912-24-9	Atrazine	430	U
100-52-7	Benzaldehyde	430	~~U~~ UJ CH
56-55-3	Benzo(a)anthracene	430	U
50-32-8	Benzo(a)pyrene	430	U
205-99-2	Benzo(b)fluoranthene	430	U
191-24-2	Benzo(g,h,i)perylene	430	U
207-08-9	Benzo(k)fluoranthene	430	U
85-68-7	Benzyl Butyl Phthalate	430	U
105-60-2	Caprolactam	430	U
86-74-8	Carbazole	430	U
218-01-9	Chrysene	430	U
53-70-3	Dibenz(a,h)Anthracene	430	U
132-64-9	Dibenzofuran	430	U
84-66-2	Diethyl Phthalate	79	J
131-11-3	Dimethyl Phthalate	430	U
206-44-0	Fluoranthene	430	U
86-73-7	Fluorene	430	U
118-74-1	Hexachlorobenzene	430	U
87-68-3	Hexachlorobutadiene	430	U
77-47-4	Hexachlorocyclopentadiene	430	U
67-72-1	Hexachloroethane	430	U
193-39-5	Indeno(1,2,3-c,d)Pyrene	430	U
78-59-1	Isophorone	430	U
91-20-3	Naphthalene	430	U
98-95-3	Nitrobenzene	430	U
87-86-5	Pentachlorophenol	1100	U
85-01-8	Phenanthrene	430	U
108-95-2	Phenol	430	U
129-00-0	Pyrene	430	U

GPL Laboratories

GPL
FORM 1
ANALYSIS DATA SHEET

SAMPLE NO
MR08-IS40-5-6-08C

Lab Name :	GPL Laboratories	Client. :	CH2M Hill Inc
Lab Code :	GPL	SAS NO. :	
Case No. :		SDG NO :	807198
Matrix : (Soil / Water)	SOIL	Lab Sample ID :	807198-007-025-1/1
Sample Volume :	30	Lab File ID :	D47659.D
% Moisture:	23	Date Received	07/30/2008
Extraction:	CLP_EXTRACTION	Date Extracted:	08/01/2008
Extract Volume:	.5 mL	Date Analyzed	08/22/2008
Injection Volume :	µL	Dilution Factor :	1
GPC Clean up (Y/N):	pH:		

Concentration Units (ug/L or ug/kg dry weight) : ug/kg

CAS NO	COMPOUND		Q
111-91-1	bis(2-chloroethoxy) methane	430	U
111-44-4	bis(2-chloroethyl) ether	430	U
117-81-7	bis(2-ethylhexyl) phthalate	430	U
84-74-2	di-n-Butyl Phthalate	430	U
117-84-0	di-n-Octyl Phthalate	430	~~U~~ UJ CH
621-64-7	n-Nitrosodi-n-Propylamine	430	U
86-30-6	n-Nitrosodiphenylamine	430	U

1E
VOLATILE ORGANICS ANALYSIS DATA SHEET
TENTATIVELY IDENTIFIED COMPOUNDS

EPA SAMPLE NO.
MR08-IS40-5-6-08C

Lab Name: GPL Laboratories, LLLP
Contract: CH2M Hill Inc
Lab Code: GPL
Case No.: NA
SAS No.: NA
SDG No.: 807198
Matrix (soil/water): SOIL
Lab Sample ID: 807198-007-025-1/1
Sample wt/vol: 30 (g/ml) g
Lab File ID: D47659.D
Level (low/med): LOW
Date Recieved 07/30/2008
% Moisture: 23
Date Analyzed: 08/22/2008
GC Column: RTX VOA
ID: 0.53 (mm)
Dilution Factor: 1
Soil Extract Volume: _____ (uL)
Soil Aliquot Volume: _____ (uL)

Number TICs Found: 8
Concentration Units (ug/L or ug/kg): ug/kg

#	CAS NUMBER	COMPOUND NAME	RT	EST. CONC	Q	
1	000057-10-3	n-Hexadecanoic acid	20.41	11	~~JN~~	JN
2	000066-22-8	Uracil	17.69	8.99	~~JN~~	↓
3		unknown	16.16	16	~~J~~	J
4		unknown	16.41	8.61	~~J~~	
5		unknown	17.85	14	~~J~~	
6		unknown	17.93	8.42	~~J~~	
7		unknown	22.89	11	~~J~~	
8		unknown	8.71	35	~~J~~	

lW 10/6/08

GPL Laboratories

GPL
FORM I
ANALYSIS DATA SHEET

6

SAMPLE NO
MR08-IS41-5-6-08C

Lab Name :	GPL Laboratories	Client. :	CH2M Hill Inc
Lab Code :	GPL	SAS NO. :	
Case No. :		SDG NO :	807198
Matrix : (Soil / Water)	SOIL	Lab Sample ID :	807198-008-026-1/1
Sample Volume :	30	Lab File ID :	D47660.D
% Moisture:	24.53	Date Received	07/30/2008
Extraction:	CLP_EXTRACTION	Date Extracted:	08/01/2008
Extract Volume:	.5 mL	Date Analyzed	08/22/2008
Injection Volume :	µ L	Dilution Factor :	1
GPC Clean up (Y/N):	pH:		

Concentration Units (ug/L or ug/kg dry weight) : ug/kg

CAS NO	COMPOUND		Q
92-52-4	1,1- Biphenyl	440	U
108-60-1	2,2-Oxybis(1-chloropropane)	440	U
95-95-4	2,4,5-Trichlorophenol	1100	U
88-06-2	2,4,6-Trichlorophenol	440	U
120-83-2	2,4-Dichlorophenol	440	U
105-67-9	2,4-Dimethylphenol	440	U
51-28-5	2,4-Dinitrophenol	1100	U
121-14-2	2,4-Dinitrotoluene	440	U
606-20-2	2,6-Dinitrotoluene	440	U
91-58-7	2-Chloronaphthalene	440	U
95-57-8	2-Chlorophenol	440	U
91-57-6	2-Methylnaphthalene	440	U
88-74-4	2-Nitroaniline	1100	U
88-75-5	2-Nitrophenol	440	U
95-48-7	2-methylphenol	440	U
91-94-1	3,3-Dichlorobenzidine	440	U
99-09-2	3-Nitroaniline	1100	U
534-52-1	4,6-dinitro-2-methyl phenol	1100	U
101-55-3	4-Bromophenyl-phenylether	440	U
106-47-8	4-Chloroaniline	440	U
7005-72-3	4-Chlorophenyl Phenyl Ether	440	U
100-01-6	4-Nitroaniline	1100	U
100-02-7	4-Nitrophenol	1100	U
59-50-7	4-chloro-3-methylphenol	440	U
106-44-5	4-methylphenol	440	U
83-32-9	Acenaphthene	440	U
208-96-8	Acenaphthylene	440	U
98-86-2	Acetophenone	440	U
120-12-7	Anthracene	440	U

GPL Laboratories

GPL
FORM I
ANALYSIS DATA SHEET

6

SAMPLE NO
MR08-IS41-5-6-08C

Lab Name :	GPL Laboratories	Client. :	CH2M Hill Inc
Lab Code :	GPL	SAS NO. :	
Case No. :		SDG NO :	807198
Matrix : (Soil / Water)	SOIL	Lab Sample ID :	807198-008-026-1/1
Sample Volume :	30	Lab File ID :	D47660.D
% Moisture:	24.53	Date Received	07/30/2008
Extraction:	CLP_EXTRACTION	Date Extracted:	08/01/2008
Extract Volume:	.5 mL	Date Analyzed	08/22/2008
Injection Volume :	µ L	Dilution Factor :	1
GPC Clean up (Y/N):	pH:		

Concentration Units (ug/L or ug/kg dry weight) : ug/kg

CAS NO	COMPOUND		Q
1912-24-9	Atrazine	440	U
100-52-7	Benzaldehyde	440	U
56-55-3	Benzo(a)anthracene	440	U
50-32-8	Benzo(a)pyrene	440	U
205-99-2	Benzo(b)fluoranthene	440	U
191-24-2	Benzo(g,h,i)perylene	440	U
207-08-9	Benzo(k)fluoranthene	440	U
85-68-7	Benzyl Butyl Phthalate	440	U
105-60-2	Caprolactam	440	U
86-74-8	Carbazole	440	U
218-01-9	Chrysene	440	U
53-70-3	Dibenz(a,h)Anthracene	440	U
132-64-9	Dibenzofuran	440	U
84-66-2	Diethyl Phthalate	440	U
131-11-3	Dimethyl Phthalate	440	U
206-44-0	Fluoranthene	440	U
86-73-7	Fluorene	440	U
118-74-1	Hexachlorobenzene	440	U
87-68-3	Hexachlorobutadiene	440	U
77-47-4	Hexachlorocyclopentadiene	440	U
67-72-1	Hexachloroethane	440	U
193-39-5	Indeno(1,2,3-c,d)Pyrene	440	U
78-59-1	Isophorone	440	U
91-20-3	Naphthalene	440	U
98-95-3	Nitrobenzene	440	U
87-86-5	Pentachlorophenol	1100	U
85-01-8	Phenanthrene	440	U
108-95-2	Phenol	440	U
129-00-0	Pyrene	440	U

u J CH

lw 10/6/08

GPL Laboratories

GPL
FORM 1
ANALYSIS DATA SHEET

6

SAMPLE NO
MR08-IS41-5-6-08C

Lab Name :	GPL Laboratories	Client. :	CH2M Hill Inc
Lab Code :	GPL	SAS NO. :	
Case No. :		SDG NO :	807198
Matrix : (Soil / Water)	SOIL	Lab Sample ID :	807198-008-026-1/1
Sample Volume :	30	Lab File ID :	D47660.D
% Moisture:	24.53	Date Received	07/30/2008
Extraction:	CLP_EXTRACTION	Date Extracted:	08/01/2008
Extract Volume:	.5 mL	Date Analyzed	08/22/2008
Injection Volume :	µ L	Dilution Factor :	1
GPC Clean up (Y/N):	pH:		

Concentration Units (ug/L or ug/kg dry weight) : ug/kg

CAS NO	COMPOUND		Q
111-91-1	bis(2-chloroethoxy) methane	440	U
111-44-4	bis(2-chloroethyl) ether	440	U
117-81-7	bis(2-ethylhexyl) phthalate	440	U
84-74-2	di-n-Butyl Phthalate	440	U
117-84-0	di-n-Octyl Phthalate	440	~~U~~ UJ CCH
621-64-7	n-Nitrosodi-n-Propylamine	440	U
86-30-6	n-Nitrosodiphenylamine	440	U

6

1E
VOLATILE ORGANICS ANALYSIS DATA SHEET
TENTATIVELY IDENTIFIED COMPOUNDS

EPA SAMPLE NO.
MR08-IS41-5-6-08C

Lab Name: GPL Laboratories, LLLP
Contract: CH2M Hill Inc
Lab Code: GPL
Case No.: NA
SAS No.: NA
SDG No.: 807198
Matrix (soil/water): SOIL
Lab Sample ID: 807198-008-026-1/1
Sample wt/vol: 30 (g/ml) g
Lab File ID: D47660.D
Level (low/med): LOW
Date Recieved 07/30/2008
% Moisture: 24.53
Date Analyzed: 08/22/2008
GC Column: RTX VOA
ID: 0.53 (mm)
Dilution Factor: 1
Soil Extract Volume: _____ (uL)
Soil Aliquot Volume: _____ (uL)

Number TICs Found: 9
Concentration Units (ug/L or ug/kg): ug/kg

#	CAS NUMBER	COMPOUND NAME	RT	EST. CONC	Q
1	000066-22-8	Uracil	17.64	4.64	JN
2	000098-92-0	Niacinamide	16.17	5.75	JN
3	000119-47-1	Phenol, 2,2'-	22.76	15	JN
4		unknown	10.71	3.87	J
5		unknown	10.77	6.020	J
6		unknown	16.43	4.67	J
7		unknown	16.85	4.030	J
8		unknown	22.88	5.17	J
9		unknown	8.72	67	J

JN
J

lw 10/6/08

FORM I VOA-TIC

GPL Laboratories

GPL
FORM I
ANALYSIS DATA SHEET

7

SAMPLE NO
MR08-IS38-5-6-08C

Lab Name :	GPL Laboratories	Client. :	CH2M Hill Inc
Lab Code :	GPL	SAS NO. :	
Case No. :		SDG NO :	807198
Matrix : (Soil / Water)	SOIL	Lab Sample ID :	807198-011-027-1/1
Sample Volume :	30	Lab File ID :	D47661.D
% Moisture:	18.67	Date Received	07/30/2008
Extraction:	CLP_EXTRACTION	Date Extracted:	08/01/2008
Extract Volume:	.5 mL	Date Analyzed	08/22/2008
Injection Volume :	µL	Dilution Factor :	1
GPC Clean up (Y/N):	pH:		

Concentration Units (ug/L or ug/kg dry weight) : ug/kg

CAS NO	COMPOUND		Q
92-52-4	1,1- Biphenyl	410	U
108-60-1	2,2-Oxybis(1-chloropropane)	410	U
95-95-4	2,4,5-Trichlorophenol	1000	U
88-06-2	2,4,6-Trichlorophenol	410	U
120-83-2	2,4-Dichlorophenol	410	U
105-67-9	2,4-Dimethylphenol	410	U
51-28-5	2,4-Dinitrophenol	1000	U
121-14-2	2,4-Dinitrotoluene	410	U
606-20-2	2,6-Dinitrotoluene	410	U
91-58-7	2-Chloronaphthalene	410	U
95-57-8	2-Chlorophenol	410	U
91-57-6	2-Methylnaphthalene	410	U
88-74-4	2-Nitroaniline	1000	U
88-75-5	2-Nitrophenol	410	U
95-48-7	2-methylphenol	410	U
91-94-1	3,3-Dichlorobenzidine	410	U
99-09-2	3-Nitroaniline	1000	U
534-52-1	4,6-dinitro-2-methyl phenol	1000	U
101-55-3	4-Bromophenyl-phenylether	410	U
106-47-8	4-Chloroaniline	410	U
7005-72-3	4-Chlorophenyl Phenyl Ether	410	U
100-01-6	4-Nitroaniline	1000	U
100-02-7	4-Nitrophenol	1000	U
59-50-7	4-chloro-3-methylphenol	410	U
106-44-5	4-methylphenol	410	U
83-32-9	Acenaphthene	410	U
208-96-8	Acenaphthylene	410	U
98-86-2	Acetophenone	410	U
120-12-7	Anthracene	410	U

GPL Laboratories

GPL
FORM 1
ANALYSIS DATA SHEET

7

SAMPLE NO
MR08-IS38-5-6-08C

Lab Name :	GPL Laboratories	Client. :	CH2M Hill Inc
Lab Code :	GPL	SAS NO. :	
Case No. :		SDG NO :	807198
Matrix : (Soil / Water)	SOIL	Lab Sample ID :	807198-011-027-1/1
Sample Volume :	30	Lab File ID :	D47661.D
% Moisture:	18.67	Date Received	07/30/2008
Extraction:	CLP_EXTRACTION	Date Extracted:	08/01/2008
Extract Volume:	.5 mL	Date Analyzed	08/22/2008
Injection Volume :	µ L	Dilution Factor :	1
GPC Clean up (Y/N):	pH:		

Concentration Units (ug/L or ug/kg dry weight) : ug/kg

CAS NO	COMPOUND		Q
1912-24-9	Atrazine	410	U
100-52-7	Benzaldehyde	410	~~U~~ UJ CCH
56-55-3	Benzo(a)anthracene	410	U
50-32-8	Benzo(a)pyrene	410	U
205-99-2	Benzo(b)fluoranthene	410	U
191-24-2	Benzo(g,h,i)perylene	410	U
207-08-9	Benzo(k)fluoranthene	410	U
85-68-7	Benzyl Butyl Phthalate	410	U
105-60-2	Caprolactam	410	U
86-74-8	Carbazole	410	U
218-01-9	Chrysene	410	U
53-70-3	Dibenz(a,h)Anthracene	410	U
132-64-9	Dibenzofuran	410	U
84-66-2	Diethyl Phthalate	410	U
131-11-3	Dimethyl Phthalate	410	U
206-44-0	Fluoranthene	410	U
86-73-7	Fluorene	410	U
118-74-1	Hexachlorobenzene	410	U
87-68-3	Hexachlorobutadiene	410	U
77-47-4	Hexachlorocyclopentadiene	410	U
67-72-1	Hexachloroethane	410	U
193-39-5	Indeno(1,2,3-c,d)Pyrene	410	U
78-59-1	Isophorone	410	U
91-20-3	Naphthalene	410	U
98-95-3	Nitrobenzene	410	U
87-86-5	Pentachlorophenol	1000	U
85-01-8	Phenanthrene	410	U
108-95-2	Phenol	410	U
129-00-0	Pyrene	410	U

GPL Laboratories

GPL
FORM I
ANALYSIS DATA SHEET

7

SAMPLE NO
MR08-IS38-5-6-08C

Lab Name :	GPL Laboratories	Client. :	CH2M Hill Inc
Lab Code :	GPL	SAS NO. :	
Case No. :		SDG NO :	807198
Matrix : (Soil / Water)	SOIL	Lab Sample ID :	807198-011-027-1/1
Sample Volume :	30	Lab File ID :	D47661.D
% Moisture:	18.67	Date Received	07/30/2008
Extraction:	CLP_EXTRACTION	Date Extracted:	08/01/2008
Extract Volume:	.5 mL	Date Analyzed	08/22/2008
Injection Volume :	µL	Dilution Factor :	1
GPC Clean up (Y/N):	pH:		

Concentration Units (ug/L or ug/kg dry weight) : ug/kg

CAS NO	COMPOUND		Q
111-91-1	bis(2-chloroethoxy) methane	410	U
111-44-4	bis(2-chloroethyl) ether	410	U
117-81-7	bis(2-ethylhexyl) phthalate	68	J
84-74-2	di-n-Butyl Phthalate	410	U
117-84-0	di-n-Octyl Phthalate	410	~~U~~ UJ CCH
621-64-7	n-Nitrosodi-n-Propylamine	410	U
86-30-6	n-Nitrosodiphenylamine	410	U

7

1E
VOLATILE ORGANICS ANALYSIS DATA SHEET
TENTATIVELY IDENTIFIED COMPOUNDS

EPA SAMPLE NO.
MR08-IS38-5-6-08C

Lab Name: GPL Laboratories, LLLP
Contract: CH2M Hill Inc
Lab Code: GPL
Case No.: NA
SAS No.: NA
SDG No.: 807198
Matrix (soil/water): SOIL
Lab Sample ID: 807198-011-027-1/1
Sample wt/vol: 30 (g/ml) g
Lab File ID: D47661.D
Level (low/med): LOW
Date Recieved 07/30/2008
% Moisture: 18.67
Date Analyzed: 08/22/2008
GC Column: RTX VOA
ID: 0.53 (mm)
Dilution Factor: 1
Soil Extract Volume: _____ (uL)
Soil Aliquot Volume: _____ (uL)

Number TICs Found: 4
Concentration Units (ug/L or ug/kg): ug/kg

#	CAS NUMBER	COMPOUND NAME	RT	EST. CONC	Q
1		unknown	10.33	3.88	J
2		unknown	22.89	4.79	J
3		unknown	8.71	42	J
4		unknown	8.78	3.62	J

J

AW 10/6/08

ENVIRONMENTAL
Data Services, Inc.

EXPLOSIVES

USEPA Region IV - Level IV Review

Site: MCB Camp Lejeune, UXO-08, CTO-168 SDG #: 808177

Client: CH2M HILL, Inc., Virginia Beach, Virginia Date: October 6, 2008

Laboratory: GPL Laboratories, Frederick, Maryland Reviewer: Nancy Weaver

EDS ID	Client Sample ID	Laboratory Sample ID	Matrix
1	IR78-GW54-08C	808177-001	Water
1MS	IR78-GW54-08CMS	808177-001MS	Water
1MSD	IR78-GW54-08CMSD	808177-001MSD	Water
2	IR78-EB082208	808177-003	Water
3	IR78-FB082208	808177-005	Water
4	IR78-GW04-08C	808177-007	Water
5	IR78-GW04D-08C	808177-009	Water

The USEPA "Contract Laboratory Program National Functional Guidelines for Organic Data Review," October 1999, and professional judgement were used in evaluating the data in this summary report.

Holding Times - All samples were extracted within 7 days for water samples and analyzed within 40 days.

Initial Calibration - The initial calibrations exhibited acceptable %RSD and/or correlation coefficient values.

Calibration Verification - The continuing calibrations exhibited acceptable %D values.

Surrogates - All samples exhibited acceptable surrogate recoveries except the following.

Sample ID	Surrogate	%R	Qualifier
1	4-Nitroaniline	157%	None - Sample ND

MS/MSD - The MS/MSD sample exhibited acceptable %R and RPD values except the following.

Sample ID	Compound	MS/MSD %R/RPD	Qualifier
1	HMX	148%/130%/Ok	None - Sample ND
	p-Nitrotoluene	Ok/136%/Ok	

Laboratory Control Sample - The LCS samples exhibited acceptable %R values.

Method Blank - The method blanks were free of contamination.

Field and Equipment Blank - Field QC results are summarized below.

Blank ID	Compound	Conc. ug/L	Action Level ug/L	Qualifier	Affected Samples
IR78-FB082208	None - ND	-	-	-	-
IR78-EB082208	None - ND	-	-	-	-

Field Duplicates - Field duplicate results are summarized below.

Compound	IR78-GW04-08C ug/L	IR78-GW04D-08C ug/L	RPD	Qualifier
2,4-Dinitrotoluene	0.34	ND	NC	None
4-Amino-2,6-Dinitrotoluene	0.71	0.65	9%	None

Compound Identification - Retention times were acceptable and no further action was taken.

Compound Quantitation - No discrepancies were identified.

GPL Laboratories

GPL
FORM 1
ANALYSIS DATA SHEET

SAMPLE NO
IR78-GW54-08C

Lab Name :	GPL Laboratories	Client. :	CH2M Hill Inc
Lab Code :	GPL	SAS NO. :	
Case No. :		SDG NO :	808177
Matrix : (Soil / Water)	WATER	Lab Sample ID :	808177-001-001-1/3
Sample Volume :	1000	Lab File ID :	LCA26588.D
% Moisture:		Date Received	08/26/2008
Extraction:	EXT_SW8330	Date Extracted:	08/27/2008
Extract Volume:	20 mL	Date Analyzed	09/06/2008
Injection Volume :	100 µ L	Dilution Factor :	1
GPC Clean up (Y/N):	N pH:		

Concentration Units (ug/L or ug/kg dry weight) : ug/L

CAS NO	COMPOUND		Q
99-35-4	1,3,5-Trinitrobenzene	0.20	U
99-65-0	1,3-Dinitrobenzene	0.20	U
118-96-7	2,4,6-Trinitrotoluene	0.20	U
121-14-2	2,4-Dinitrotoluene	0.20	U
606-20-2	2,6-Dinitrotoluene	0.20	U
35572-78-2	2-Amino-4,6-Dinitrotoluene	0.20	U
19406-51-0	4-Amino-2,6-Dinitrotoluene	0.20	U
2691-41-0	HMX	0.40	U
98-95-3	Nitrobenzene	0.20	U
121-82-4	RDX	0.40	U
479-45-8	Tetryl	0.40	U
99-08-1	m-Nitrotoluene	0.40	U
88-72-2	o-Nitrotoluene	0.40	U
99-99-0	p-Nitrotoluene	0.40	U

GW
10/6/08

GPL Laboratories

GPL
FORM 1
ANALYSIS DATA SHEET

2

SAMPLE NO
IR78-EB082208

Lab Name :	GPL Laboratories	Client. :	CH2M Hill Inc
Lab Code :	GPL	SAS NO. :	
Case No. :		SDG NO :	808177
Matrix : (Soil / Water)	WATER	Lab Sample ID :	808177-003-016-1/1
Sample Volume :	1000	Lab File ID :	LCA26590.D
% Moisture:		Date Received	08/26/2008
Extraction:	EXT_SW8330	Date Extracted:	08/27/2008
Extract Volume:	20 mL	Date Analyzed	09/06/2008
Injection Volume :	100 µ L	Dilution Factor :	1
GPC Clean up (Y/N):	N pH:		

Concentration Units (ug/L or ug/kg dry weight) : ug/L

CAS NO	COMPOUND		Q
99-35-4	1,3,5-Trinitrobenzene	0.20	U
99-65-0	1,3-Dinitrobenzene	0.20	U
118-96-7	2,4,6-Trinitrotoluene	0.20	U
121-14-2	2,4-Dinitrotoluene	0.20	U
606-20-2	2,6-Dinitrotoluene	0.20	U
35572-78-2	2-Amino-4,6-Dinitrotoluene	0.20	U
19406-51-0	4-Amino-2,6-Dinitrotoluene	0.20	U
2691-41-0	HMX	0.40	U
98-95-3	Nitrobenzene	0.20	U
121-82-4	RDX	0.40	U
479-45-8	Tetryl	0.40	U
99-08-1	m-Nitrotoluene	0.40	U
88-72-2	o-Nitrotoluene	0.40	U
99-99-0	p-Nitrotoluene	0.40	U

LW 10/6/08

GPL Laboratories

GPL
FORM 1
ANALYSIS DATA SHEET

3

SAMPLE NO
IR78-FB082208

Lab Name :	GPL Laboratories	Client. :	CH2M Hill Inc
Lab Code :	GPL	SAS NO. :	
Case No. :		SDG NO :	808177
Matrix : (Soil / Water)	WATER	Lab Sample ID :	808177-005-017-1/1
Sample Volume :	1000	Lab File ID :	LCA26591.D
% Moisture:		Date Received	08/26/2008
Extraction:	EXT_SW8330	Date Extracted:	08/27/2008
Extract Volume:	20 mL	Date Analyzed	09/06/2008
Injection Volume :	100 µ L	Dilution Factor :	1
GPC Clean up (Y/N):	N pH:		

Concentration Units (ug/L or ug/kg dry weight) : ug/L

CAS NO	COMPOUND		Q
99-35-4	1,3,5-Trinitrobenzene	0.20	U
99-65-0	1,3-Dinitrobenzene	0.20	U
118-96-7	2,4,6-Trinitrotoluene	0.20	U
121-14-2	2,4-Dinitrotoluene	0.20	U
606-20-2	2,6-Dinitrotoluene	0.20	U
35572-78-2	2-Amino-4,6-Dinitrotoluene	0.20	U
19406-51-0	4-Amino-2,6-Dinitrotoluene	0.20	U
2691-41-0	HMX	0.40	U
98-95-3	Nitrobenzene	0.20	U
121-82-4	RDX	0.40	U
479-45-8	Tetryl	0.40	U
99-08-1	m-Nitrotoluene	0.40	U
88-72-2	o-Nitrotoluene	0.40	U
99-99-0	p-Nitrotoluene	0.40	U

GPL Laboratories

GPL
FORM 1
ANALYSIS DATA SHEET

4

SAMPLE NO
IR78-GW04-08C

Lab Name :	GPL Laboratories	Client. :	CH2M Hill Inc
Lab Code :	GPL	SAS NO. :	
Case No. :		SDG NO :	808177
Matrix : (Soil / Water)	WATER	Lab Sample ID :	808177-007-018-1/1
Sample Volume :	1000	Lab File ID :	LCA26592.D
% Moisture:		Date Received	08/26/2008
Extraction:	EXT_SW8330	Date Extracted:	08/27/2008
Extract Volume:	20 mL	Date Analyzed	09/06/2008
Injection Volume :	100 µ L	Dilution Factor :	1
GPC Clean up (Y/N):	N pH:		

Concentration Units (ug/L or ug/kg dry weight) : ug/L

CAS NO	COMPOUND		Q
99-35-4	1,3,5-Trinitrobenzene	0.20	U
99-65-0	1,3-Dinitrobenzene	0.20	U
118-96-7	2,4,6-Trinitrotoluene	0.20	U
121-14-2	2,4-Dinitrotoluene	0.34	
606-20-2	2,6-Dinitrotoluene	0.20	U
35572-78-2	2-Amino-4,6-Dinitrotoluene	0.20	U
19406-51-0	4-Amino-2,6-Dinitrotoluene	0.71	
2691-41-0	HMX	0.40	U
98-95-3	Nitrobenzene	0.20	U
121-82-4	RDX	0.40	U
479-45-8	Tetryl	0.40	U
99-08-1	m-Nitrotoluene	0.40	U
88-72-2	o-Nitrotoluene	0.40	U
99-99-0	p-Nitrotoluene	0.40	U

GPL Laboratories

GPL
FORM I
ANALYSIS DATA SHEET

5

SAMPLE NO
IR78-GW04D-08C

Lab Name :	GPL Laboratories	Client. :	CH2M Hill Inc
Lab Code :	GPL	SAS NO. :	
Case No. :		SDG NO :	808177
Matrix : (Soil / Water)	WATER	Lab Sample ID :	808177-009-019-1/1
Sample Volume :	1000	Lab File ID :	LCA26593.D
% Moisture:		Date Received	08/26/2008
Extraction:	EXT_SW8330	Date Extracted:	08/27/2008
Extract Volume:	20 mL	Date Analyzed	09/06/2008
Injection Volume :	100 µL	Dilution Factor :	1
GPC Clean up (Y/N):	N pH:		

Concentration Units (ug/L or ug/kg dry weight) : ug/L

CAS NO	COMPOUND		Q
99-35-4	1,3,5-Trinitrobenzene	0.20	U
99-65-0	1,3-Dinitrobenzene	0.20	U
118-96-7	2,4,6-Trinitrotoluene	0.20	U
121-14-2	2,4-Dinitrotoluene	0.20	U
606-20-2	2,6-Dinitrotoluene	0.20	U
35572-78-2	2-Amino-4,6-Dinitrotoluene	0.20	U
19406-51-0	4-Amino-2,6-Dinitrotoluene	0.65	
2691-41-0	HMX	0.40	U
98-95-3	Nitrobenzene	0.20	U
121-82-4	RDX	0.40	U
479-45-8	Tetryl	0.40	U
99-08-1	m-Nitrotoluene	0.40	U
88-72-2	o-Nitrotoluene	0.40	U
99-99-0	p-Nitrotoluene	0.40	U

lw 10/6/08

ENVIRONMENTAL
Data Services, Inc.

METALS

USEPA Region IV - Level IV Review

Site: MCB Camp Lejeune, UXO-08, CTO-168 SDG #: 808177

Client: CH2M HILL, Inc., Virginia Beach, Virginia Date: October 6, 2008

Laboratory: GPL Laboratories, Frederick, Maryland Reviewer: Nancy Weaver

EDS ID	Client Sample ID	Laboratory Sample ID	Matrix
1	IR78-GW54-08C	808177-001	Water
1MS	IR78-GW54-08CMS	808177-001MS	Water
1MSD	IR78-GW54-08CMSD	808177-001MSD	Water
2	IR78-GW54-08C FIL	808177-002	Water
2MS	IR78-GW54-08C FILMS	808177-002MS	Water
2MSD	IR78-GW54-08C FILMSD	808177-002MSD	Water
3	IR78-EB082208	808177-003	Water
4	IR78-EB082208 FIL	808177-004	Water
5	IR78-FB082208	808177-005	Water
6	IR78-FB082208 FIL	808177-006	Water
7	IR78-GW04-08C	808177-007	Water
8	IR78-GW04-08C FIL	808177-008	Water
9	IR78-GW04D-08C	808177-009	Water
10	IR78-GW04D-08C FIL	808177-010	Water

The USEPA "Contract Laboratory Program National Functional Guidelines for Inorganic Data Review," October 2004, and professional judgement were used in evaluating the data in this summary report.

Holding Times - All samples were prepared and analyzed within 28 days for mercury and 180 days for all other metals.

Calibration - The ICV and CCV %R values were acceptable.

CRDL Standard - The CRDL standards exhibited acceptable %R values.

Method and Calibration Blanks - The method blanks and continuing calibration blanks exhibited contamination for several compounds, however, all sample results are non-detect or greater than 5X the blank concentration with the exception of the following:

Compound	Conc. ug/L	Qualifier	Affected Samples
Aluminum	30.691	U	1, 3
Calcium	58.321	U	3, 4, 5, 6
Copper	1.467	U	1, 2, 3, 9
Magnesium	65.665	U	3-10
Potassium	81.691	U	3-10
Sodium	222.082	U	3-6

Field and Equipment Blank - Field QC results are summarized below.

Blank ID	Compound	Conc. ug/L	Action Level ug/L	Qualifier	Affected Samples
IR78-EB082208	Barium	0.61	3.05	None	See FB
	Zinc	3.4	17.0	U	7, 9
IR78-EB082208 FIL	None - ND	-	-	-	-
IR78-FB082208	Barium	0.67	3.35	None	All >5X
	Iron	14.2	71.0	None	All >5X
IR78-FB082208 FIL	Arsenic	2.5	12.5	U	2, 8, 10
	Zinc	2.5	12.5	None	All >5X or ND

ICP Interference Check Sample - All %R values were acceptable.

Matrix Spike - The matrix spike samples exhibited acceptable %R values.

Matrix Duplicate - The matrix duplicate samples exhibited acceptable RPD values.

LCS - The LCS samples exhibited acceptable %R values.

ICP Serial Dilution - The ICP serial dilution sample exhibited acceptable %D values.

Field Duplicates - Field duplicate results are summarized below.

Compound	IR78-GW04-08C ug/L	IR78-GW04D-08C ug/L	RPD	Qualifier
Aluminum	1320	1610	20%	None
Arsenic	4.8	5.6	15%	None
Barium	82.0	87.3	6%	None
Beryllium	0.33	0.43	26%	None
Calcium	35900	36200	1%	None
Chromium	1.6	2.1	27%	None
Iron	8910	9250	4%	None

Compound	IR78-GW04-08C ug/L	IR78-GW04D-08C ug/L	RPD	Qualifier
Manganese	112	113	1%	None
Mercury	0.024	0.20 U	NC	None
Nickel	1.5	1.4	7%	None
Sodium	8280	8680	5%	None
Vanadium	4.5	5.5	20%	None

Compound	IR78-GW04-08C FIL ug/L	IR78-GW04D-08C FIL ug/L	RPD	Qualifier
Barium	88.5	85.3	4%	None
Beryllium	0.23	0.24	4%	None
Calcium	42500	38900	9%	None
Iron	9620	8970	7%	None
Manganese	129	119	8%	None
Sodium	8750	8310	5%	None

Compound Quantitation - No discrepancies were identified.

USEPA - CLP

1A - IN

INORGANIC ANALYSIS DATA SHEET

EPA SAMPLE NO.

IR78-GW54-08C

Lab Name: GPL LABORATORIES, LL Contract:

Lab Code: Case No.: NRAS No.: SDG No.: 808177

Matrix: (soil/water) WATER Lab Sample ID: S 808177-001-010-1/3

Level: (low/med) Date Recieved: 08/26/2008

% Solids: 0.0

Concentration Units (ug/L or mg/kg dry weight): UG/L

CAS No.	Analyte	Concentration	C	Q	M	
7429-90-5	Aluminum	200 ~~150~~	~~J~~	U	P	BL
7440-36-0	Antimony	60.0	U		P	
7440-38-2	Arsenic	10.0	U		P	
7440-39-3	Barium	119	J		P	
7441-41-7	Beryllium	5.0	U		P	
7440-43-9	Cadmium	5.0	U		P	
7440-70-2	Calcium	151000			P	
7440-47-3	Chromium	10.0	U		P	
7440-48-4	Cobalt	2.7	J		P	
7440-50-8	Copper	25 ~~3.2~~	~~J~~	U	P	BL
7439-89-6	Iron	4670			P	
7439-92-1	Lead	10.0	U		P	
7439-95-4	Magnesium	7240			P	
7439-96-5	Manganese	286			P	
7439-97-6	Mercury	0.20	U		CV	
7440-02-0	Nickel	5.5	J		P	
7440-09-7	Potassium	6780			P	
7782-49-2	Selenium	35.0	U		P	
7440-22-4	Silver	10.0	U		P	
7440-23-5	Sodium	11600			P	
7440-28-0	Thallium	25.0	U		P	
7440-62-2	Vanadium	50.0	U		P	
7440-66-6	Zinc	194			P	

Color Before: BLACK Clarity Before: NA Texture: FINE

Color After: YELLOW Clarity After: CLEAR Artifacts: NA

Comments:

MW 10/6/08

2

USEPA - CLP

1A - IN

INORGANIC ANALYSIS DATA SHEET

EPA SAMPLE NO.

IR78-GW54-08C FIL

Lab Name: GPL LABORATORIES, LL Contract:

Lab Code: Case No.: NRAS No.: SDG No.: 808177

Matrix: (soil/water) WATER Lab Sample ID: S 808177-002-013-1/3

Level: (low/med) Date Recieved: 08/26/2008

% Solids: 0.0

Concentration Units (ug/L or mg/kg dry weight): UG/L

CAS No.	Analyte	Concentration	C	Q	M	
7429-90-5	Aluminum	200	U		P	
7440-36-0	Antimony	60.0	U		P	
7440-38-2	Arsenic	10 ~~3.0~~	~~J~~	U	P	BL
7440-39-3	Barium	118	J		P	
7441-41-7	Beryllium	5.0	U		P	
7440-43-9	Cadmium	5.0	U		P	
7440-70-2	Calcium	156000			P	
7440-47-3	Chromium	10.0	U		P	
7440-48-4	Cobalt	3.3	J		P	
7440-50-8	Copper	25 ~~1.8~~	~~J~~	U	P	BL
7439-89-6	Iron	7540			P	
7439-92-1	Lead	10.0	U		P	
7439-95-4	Magnesium	7390			P	
7439-96-5	Manganese	414			P	
7440-02-0	Nickel	6.8	J		P	
7439-97-6	Mercury	0.20	U		CV	
7440-09-7	Potassium	5760			P	
7782-49-2	Selenium	35.0	U		P	
7440-22-4	Silver	10.0	U		P	
7440-23-5	Sodium	11900			P	
7440-28-0	Thallium	25.0	U		P	
7440-62-2	Vanadium	50.0	U		P	
7440-66-6	Zinc	216			P	

Color Before: BLACK Clarity Before: NA Texture: FINE

Color After: YELLOW Clarity After: CLEAR Artifacts: NA

Comments:

CW 11/08

3

USEPA - CLP

1A - IN

INORGANIC ANALYSIS DATA SHEET

EPA SAMPLE NO.

IR78-EB082208

Lab Name: GPL LABORATORIES, LL Contract:

Lab Code: Case No.: NRAS No.: SDG No.: 808177

Matrix: (soil/water) WATER Lab Sample ID: S 808177-003-028-1/1

Level: (low/med) Date Recieved: 08/26/2008

% Solids: 0.0

Concentration Units (ug/L or mg/kg dry weight): UG/L

CAS No.	Analyte	Concentration	C	Q	M	
7429-90-5	Aluminum	200 ~~30.7~~	~~J~~	U	P	BL
7440-36-0	Antimony	60.0	U		P	
7440-38-2	Arsenic	10.0	U		P	
7440-39-3	Barium	0.61	J		P	
7441-41-7	Beryllium	5.0	U		P	
7440-43-9	Cadmium	5.0	U		P	
7440-70-2	Calcium	5000 ~~216~~	~~J~~	U	P	BL
7440-47-3	Chromium	10.0	U		P	
7440-48-4	Cobalt	50.0	U		P	
7440-50-8	Copper	25 ~~1.6~~	~~J~~	U	P	BL
7439-89-6	Iron	100	U		P	
7439-92-1	Lead	10.0	U		P	
7439-95-4	Magnesium	5000 ~~110~~	~~J~~	U	P	BL
7439-96-5	Manganese	15.0	U		P	
7440-02-0	Nickel	40.0	U		P	
7439-97-6	Mercury	0.20	U		CV	
7440-09-7	Potassium	5000 ~~36.5~~	~~J~~	U	P	BL
7782-49-2	Selenium	35.0	U		P	
7440-22-4	Silver	10.0	U		P	
7440-23-5	Sodium	5000 ~~389~~	~~J~~	U	P	BL
7440-28-0	Thallium	25.0	U		P	
7440-62-2	Vanadium	50.0	U		P	
7440-66-6	Zinc	3.4	J		P	

Color Before: NA Clarity Before: NA Texture: NA

Color After: NA Clarity After: NA Artifacts: NA

Comments:

4

USEPA - CLP

1A - IN

INORGANIC ANALYSIS DATA SHEET

EPA SAMPLE NO.

IR78-EB082208 FIL

Lab Name: GPL LABORATORIES, LL Contract:

Lab Code: Case No.: NRAS No.: SDG No.: 808177

Matrix: (soil/water) WATER Lab Sample ID: S 808177-004-032-1/1

Level: (low/med) Date Recieved: 08/26/2008

% Solids: 0.0

Concentration Units (ug/L or mg/kg dry weight): UG/L

CAS No.	Analyte	Concentration	C	Q	M	
7429-90-5	Aluminum	200	U		P	
7440-36-0	Antimony	60.0	U		P	
7440-38-2	Arsenic	10.0	U		P	
7440-39-3	Barium	200	U		P	
7441-41-7	Beryllium	5.0	U		P	
7440-43-9	Cadmium	5.0	U		P	
7440-70-2	Calcium	5000 ~~56.6~~	~~J~~	U	P	BL
7440-47-3	Chromium	10.0	U		P	
7440-48-4	Cobalt	50.0	U		P	
7440-50-8	Copper	25.0	U		P	
7439-89-6	Iron	100	U		P	
7439-92-1	Lead	10.0	U		P	
7439-95-4	Magnesium	5000 ~~71.7~~	~~J~~	U	P	BL
7439-96-5	Manganese	15.0	U		P	
7439-97-6	Mercury	0.20	U		CV	
7440-02-0	Nickel	40.0	U		P	
7440-09-7	Potassium	5000 ~~27.7~~	~~J~~	U	P	BL
7782-49-2	Selenium	35.0	U		P	
7440-22-4	Silver	10.0	U		P	
7440-23-5	Sodium	5000 ~~254~~	~~J~~	U	P	BL
7440-28-0	Thallium	25.0	U		P	
7440-62-2	Vanadium	50.0	U		P	
7440-66-6	Zinc	60.0	U		P	

Color Before: NA Clarity Before: NA Texture: NA

Color After: NA Clarity After: NA Artifacts: NA

Comments:

FORM IA - IN

ILMO5.3

USEPA - CLP

1A - IN

INORGANIC ANALYSIS DATA SHEET

EPA SAMPLE NO.

IR78-FB082208

Lab Name: GPL LABORATORIES, LL Contract:

Lab Code: Case No.: NRAS No.: SDG No.: 808177

Matrix: (soil/water) WATER Lab Sample ID: S 808177-005-029-1/1

Level: (low/med) Date Recieved: 08/26/2008

% Solids: 0.0

Concentration Units (ug/L or mg/kg dry weight): UG/L

CAS No.	Analyte	Concentration	C	Q	M	
7429-90-5	Aluminum	200	U		P	
7440-36-0	Antimony	60.0	U		P	
7440-38-2	Arsenic	10.0	U		P	
7440-39-3	Barium	0.67	J		P	
7441-41-7	Beryllium	5.0	U		P	
7440-43-9	Cadmium	5.0	U		P	
7440-70-2	Calcium	5000 ~~153~~	~~J~~	U	P	BL
7440-47-3	Chromium	10.0	U		P	
7440-48-4	Cobalt	50.0	U		P	
7440-50-8	Copper	25.0	U		P	
7439-89-6	Iron	14.2	J		P	
7439-92-1	Lead	10.0	U		P	
7439-95-4	Magnesium	5000 ~~111~~	~~J~~	U	P	BL
7439-96-5	Manganese	15.0	U		P	
7440-02-0	Nickel	40.0	U		P	
7439-97-6	Mercury	0.20	U		CV	
7440-09-7	Potassium	5000 ~~26.2~~	~~J~~	U	P	BL
7782-49-2	Selenium	35.0	U		P	
7440-22-4	Silver	10.0	U		P	
7440-23-5	Sodium	5000 ~~352~~	~~J~~	U	P	BL
7440-28-0	Thallium	25.0	U		P	
7440-62-2	Vanadium	50.0	U		P	
7440-66-6	Zinc	60.0	U		P	

Color Before: NA Clarity Before: NA Texture: NA

Color After: NA Clarity After: NA Artifacts: NA

Comments:

6

USEPA - CLP

1A - IN

INORGANIC ANALYSIS DATA SHEET

EPA SAMPLE NO.

IR78-FB082208 FIL

Lab Name: GPL LABORATORIES, LL Contract:

Lab Code: Case No.: NRAS No.: SDG No.: 808177

Matrix: (soil/water) WATER Lab Sample ID: S 808177-006-033-1/1

Level: (low/med) Date Recieved: 08/26/2008

% Solids: 0.0

Concentration Units (ug/L or mg/kg dry weight): UG/L

CAS No.	Analyte	Concentration	C	Q	M	
7429-90-5	Aluminum	200	U		P	
7440-36-0	Antimony	60.0	U		P	
7440-38-2	Arsenic	2.5	J		P	
7440-39-3	Barium	200	U		P	
7441-41-7	Beryllium	5.0	U		P	
7440-43-9	Cadmium	5.0	U		P	
7440-70-2	Calcium	5800 ~~65.7~~	~~J~~	U	P	BL
7440-47-3	Chromium	10.0	U		P	
7440-48-4	Cobalt	50.0	U		P	
7440-50-8	Copper	25.0	U		P	
7439-89-6	Iron	100	U		P	
7439-92-1	Lead	10.0	U		P	
7439-95-4	Magnesium	5000 ~~73.8~~	~~J~~	U	P	BL
7439-96-5	Manganese	15.0	U		P	
7440-02-0	Nickel	40.0	U		P	
7439-97-6	Mercury	0.20	U		CV	
7440-09-7	Potassium	5000 ~~38.1~~	~~J~~	U	P	BL
7782-49-2	Selenium	35.0	U		P	
7440-22-4	Silver	10.0	U		P	
7440-23-5	Sodium	5000 ~~245~~	~~J~~	U	P	BL
7440-28-0	Thallium	25.0	U		P	
7440-62-2	Vanadium	50.0	U		P	
7440-66-6	Zinc	2.5	J		P	

Color Before: NA Clarity Before: NA Texture: NA

Color After: NA Clarity After: NA Artifacts: NA

Comments:

AW 10/6/08

USEPA - CLP

1A - IN

INORGANIC ANALYSIS DATA SHEET

EPA SAMPLE NO.

IR78-GW04-08C

Lab Name: GPL LABORATORIES, LL Contract:

Lab Code: Case No.: NRAS No.: SDG No.: 808177

Matrix: (soil/water) WATER Lab Sample ID: S 808177-007-030-1/1

Level: (low/med) Date Recieved: 08/26/2008

% Solids: 0.0

Concentration Units (ug/L or mg/kg dry weight): UG/L

CAS No.	Analyte	Concentration	C	Q	M	
7429-90-5	Aluminum	1320			P	
7440-36-0	Antimony	60.0	U		P	
7440-38-2	Arsenic	4.8	J		P	
7440-39-3	Barium	82.0	J		P	
7441-41-7	Beryllium	0.33	J		P	
7440-43-9	Cadmium	5.0	U		P	
7440-70-2	Calcium	35900			P	
7440-47-3	Chromium	1.6	J		P	
7440-48-4	Cobalt	50.0	U		P	
7440-50-8	Copper	25.0	U		P	
7439-89-6	Iron	8910			P	
7439-92-1	Lead	10.0	U		P	
7439-95-4	Magnesium	5000 ~~3570~~	~~J~~	U	P	BL
7439-96-5	Manganese	112			P	
7439-97-6	Mercury	0.024	J		CV	
7440-02-0	Nickel	1.5	J		P	
7440-09-7	Potassium	5000 ~~4530~~	~~J~~	U	P	BL
7782-49-2	Selenium	35.0	U		P	
7440-22-4	Silver	10.0	U		P	
7440-23-5	Sodium	8280			P	
7440-28-0	Thallium	25.0	U		P	
7440-62-2	Vanadium	4.5	J		P	
7440-66-6	Zinc	60 ~~5.3~~	~~J~~	U	P	BL

Color Before: NA Clarity Before: NA Texture: NA

Color After: NA Clarity After: NA Artifacts: NA

Comments:

MW 1/1/09

8

USEPA - CLP

1A - IN

INORGANIC ANALYSIS DATA SHEET

EPA SAMPLE NO.

IR78-GW04-08C FIL

Lab Name: GPL LABORATORIES, LL Contract:

Lab Code: Case No.: NRAS No.: SDG No.: 808177

Matrix: (soil/water) WATER Lab Sample ID: S 808177-008-034-1/1

Level: (low/med) Date Recieved: 08/26/2008

% Solids: 0.0

Concentration Units (ug/L or mg/kg dry weight): UG/L

CAS No.	Analyte	Concentration	C	Q	M	
7429-90-5	Aluminum	200	U		P	
7440-36-0	Antimony	60.0	U		P	
7440-38-2	Arsenic	10 ~~5.8~~	~~J~~	U	P	BL
7440-39-3	Barium	88.5	J		P	
7441-41-7	Beryllium	0.23	J		P	
7440-43-9	Cadmium	5.0	U		P	
7440-70-2	Calcium	42500			P	
7440-47-3	Chromium	10.0	U		P	
7440-48-4	Cobalt	50.0	U		P	
7440-50-8	Copper	25.0	U		P	
7439-89-6	Iron	9620			P	
7439-92-1	Lead	10.0	U		P	
7439-95-4	Magnesium	5000 ~~3980~~	~~J~~	U	P	BL
7439-96-5	Manganese	129			P	
7439-97-6	Mercury	0.20	U		CV	
7440-02-0	Nickel	40.0	U		P	
7440-09-7	Potassium	5000 ~~4680~~	~~J~~	U	P	BL
7782-49-2	Selenium	35.0	U		P	
7440-22-4	Silver	10.0	U		P	
7440-23-5	Sodium	8750			P	
7440-28-0	Thallium	25.0	U		P	
7440-62-2	Vanadium	50.0	U		P	
7440-66-6	Zinc	60.0	U		P	

Color Before: NA Clarity Before: NA Texture: NA

Color After: NA Clarity After: NA Artifacts: NA

Comments:

9

USEPA - CLP

1A - IN

INORGANIC ANALYSIS DATA SHEET

EPA SAMPLE NO.

IR78-GW04D-08C

Lab Name: GPL LABORATORIES, LL Contract:

Lab Code: Case No.: NRAS No.: SDG No.: 808177

Matrix: (soil/water) WATER Lab Sample ID: S 808177-009-031-1/1

Level: (low/med) Date Recieved: 08/26/2008

% Solids: 0.0

Concentration Units (ug/L or mg/kg dry weight): UG/L

CAS No.	Analyte	Concentration	C	Q	M	
7429-90-5	Aluminum	1610			P	
7440-36-0	Antimony	60.0	U		P	
7440-38-2	Arsenic	5.6	J		P	
7440-39-3	Barium	87.3	J		P	
7441-41-7	Beryllium	0.43	J		P	
7440-43-9	Cadmium	5.0	U		P	
7440-70-2	Calcium	36200			P	
7440-47-3	Chromium	2.1	J		P	
7440-48-4	Cobalt	50.0	U		P	
7440-50-8	Copper	25 ~~1.6~~	~~J~~	U	P	BL
7439-89-6	Iron	9250			P	
7439-92-1	Lead	10.0	U		P	
7439-95-4	Magnesium	5000 ~~3630~~	~~J~~	U	P	BL
7439-96-5	Manganese	113			P	
7440-02-0	Nickel	1.4	J		P	
7439-97-6	Mercury	0.20	U		CV	
7440-09-7	Potassium	5000 ~~4750~~	~~J~~	U	P	BL
7782-49-2	Selenium	35.0	U		P	
7440-22-4	Silver	10.0	U		P	
7440-23-5	Sodium	8680			P	
7440-28-0	Thallium	25.0	U		P	
7440-62-2	Vanadium	5.5	J		P	
7440-66-6	Zinc	60 ~~6.8~~	~~J~~	U	P	BL

Color Before: NA Clarity Before: NA Texture: NA

Color After: NA Clarity After: NA Artifacts: NA

Comments:

10

USEPA - CLP

1A - IN

INORGANIC ANALYSIS DATA SHEET

EPA SAMPLE NO.

IR78-GW04D-08C FIL

Lab Name: GPL LABORATORIES, LL Contract:

Lab Code: Case No.: NRAS No.: SDG No.: 808177

Matrix: (soil/water) WATER Lab Sample ID: S 808177-010-035-1/1

Level: (low/med) Date Recieved: 08/26/2008

% Solids: 0.0

Concentration Units (ug/L or mg/kg dry weight): UG/L

CAS No.	Analyte	Concentration	C	Q	M	
7429-90-5	Aluminum	200	U		P	
7440-36-0	Antimony	60.0	U		P	
7440-38-2	Arsenic	10 ~~5.2~~	~~J~~	U	P	BL
7440-39-3	Barium	85.3	J		P	
7441-41-7	Beryllium	0.24	J		P	
7440-43-9	Cadmium	5.0	U		P	
7440-70-2	Calcium	38900			P	
7440-47-3	Chromium	10.0	U		P	
7440-48-4	Cobalt	50.0	U		P	
7440-50-8	Copper	25.0	U		P	
7439-89-6	Iron	8970			P	
7439-92-1	Lead	10.0	U		P	
7439-95-4	Magnesium	5000 ~~3650~~	~~J~~	U	P	BL
7439-96-5	Manganese	119			P	
7439-97-6	Mercury	0.20	U		CV	
7440-02-0	Nickel	40.0	U		P	
7440-09-7	Potassium	5000 ~~4510~~	~~J~~	U	P	BL
7782-49-2	Selenium	35.0	U		P	
7440-22-4	Silver	10.0	U		P	
7440-23-5	Sodium	8310			P	
7440-28-0	Thallium	25.0	U		P	
7440-62-2	Vanadium	50.0	U		P	
7440-66-6	Zinc	60.0	U		P	

Color Before: NA Clarity Before: NA Texture: NA

Color After: NA Clarity After: NA Artifacts: NA

Comments:

MW 10/6/08

ENVIRONMENTAL
Data Services, Inc.

PERCHLORATE

USEPA Region IV - Level IV Review

Site: MCB Camp Lejeune, UXO-08, CTO-168 SDG #: 808177

Client: CH2M HILL, Inc., Virginia Beach, Virginia Date: October 6, 2008

Laboratory: DataChem Laboratories, Salt Lake City, Utah Reviewer: Nancy Weaver

EDS ID	Client Sample ID	Laboratory Sample ID	Matrix
1	IR78-GW54-08C	808177-001	Water
1MS	IR78-GW54-08CMS	808177-001MS	Water
1MSD	IR78-GW54-08CMSD	808177-001MSD	Water
2	IR78-EB082208	808177-003	Water
3	IR78-FB082208	808177-005	Water
4	IR78-GW04-08C	808177-007	Water
5	IR78-GW04D-08C	808177-009	Water

The USEPA "Contract Laboratory Program National Functional Guidelines for Inorganic Data Review," October 2004, and professional judgement were used in evaluating the data in this summary report.

Holding Times - All samples were prepared and analyzed within 28 days for perchlorate.

Calibration - The ICV and CCV %R values were acceptable.

Method and Calibration Blanks - The method blanks and continuing calibration blanks were free of contamination.

Field and Equipment Blank - Field QC results are summarized below.

Blank ID	Compound	Conc. ug/L	Action Level ug/L	Qualifier	Affected Samples
IR78-EB082208	None - ND	-	-	-	-
IR78-FB082208	None - ND	-	-	-	-

Matrix Spike/Duplicate - The matrix spike/duplicate sample exhibited acceptable %R and RPD values.

LCS - The LCS samples exhibited acceptable %R values.

Field Duplicates - Field duplicate results are summarized below.

Compound	IR78-GW04-08C ug/L	IR78-GW04D-08C ug/L	RPD	Qualifier
None	ND	ND	-	-

Compound Quantitation - No discrepancies were identified.

DATA CHEM LABORATORIES
A Sorenson Company

FORM A (TYPE I)
SINGLE METHOD ANALYSES

SAMPLE ANALYSIS DATA SHEET

Form RLIMS63A-V1.4
08290815230699
Page 3

S087V03B

Date Printed.....: 29-AUG-08 15:23

Client Name.....: GPL Laboratories
Client Ref Number....: 808177/CTO-168
Sampling Site.....: CAMP LEJEUNE UXO-08
Release Number.....: 808177

Date Received.....: 27-AUG-08 00:00

Client Sample Name: 808177001004|IR78GW540BC
DCL Sample Name...: 08E04539
DCL Report Group..: 08E-0723-01

Matrix.....: WATER
Date Sampled.....: 22-AUG-08 16:30
Reporting Units...: ug/L
Report Basis.....: ☒ As Received ☐ Dried

DCL Preparation Group: Not Applicable
Date Prepared.....: 28-AUG-08 00:00
Preparation Method...: 6850
Aliquot Weight/Volume: Not Applicable
Net Weight/Volume....: Not Required

DCL Analysis Group: G087W01B
Analysis Method...: 6850
Instrument Type...: LC/MS
Instrument ID.....: LCMS02
Column Type.....: KP-RPPX250
☒ Primary
☐ Confirmation

Analytical Results

Analyte	Date Analyzed	MDL	Result	Comment	Qual.	Dilution	PQL
Perchlorate	28-AUG-08 20:11	0.0663	0.915			1	0.200

LW 10/5/08

DATA CHEM LABORATORIES
A Sorenson Company

FORM A (TYPE I)
SINGLE METHOD ANALYSES

SAMPLE ANALYSIS DATA SHEET

Form RLIMS63A-V1.4
08290815230699

S087V03F

Date Printed.....: 29-AUG-08 15:23

Client Name.....: GPL Laboratories
Client Ref Number....: 808177/CTO-168
Sampling Site.....: CAMP LEJEUNE UXO-08
Release Number.....: 808177

Date Received.....: 27-AUG-08 00:00

Client Sample Name: 808177003020|IR78EB082208
DCL Sample Name...: 08E04540
DCL Report Group..: 08E-0723-01

Matrix.....: WATER
Date Sampled.....: 22-AUG-08 16:35
Reporting Units...: ug/L
Report Basis.....: ☒ As Received ☐ Dried

DCL Preparation Group: Not Applicable
Date Prepared.....: 28-AUG-08 00:00
Preparation Method...: 6850
Aliquot Weight/Volume: Not Applicable
Net Weight/Volume....: Not Required

DCL Analysis Group: G087W01B
Analysis Method...: 6850
Instrument Type...: LC/MS
Instrument ID.....: LCMS02
Column Type.....: KP-RPPX250
☒ Primary
☐ Confirmation

Analytical Results

Analyte	Date Analyzed	MDL	Result	Comment	Qual.	Dilution	PQL
Perchlorate	28-AUG-08 21:15	0.0663	ND		U	1	0.200

Ew 10/5/08

960 West LeVoy Drive / Salt Lake City, Utah 84123-2547
Phone (801) 266-7700 Web Page: www.datachem.com

DATA CHEM LABORATORIES
A Sorenson Company

FORM A (TYPE I)
SINGLE METHOD ANALYSES

SAMPLE ANALYSIS DATA SHEET

Form RLIMS63A-V1.4
08290815230699
Page 5

S087V03G

Date Printed.....: 29-AUG-08 15:23

Client Name.....: GPL Laboratories
Client Ref Number....: 808177/CTO-168
Sampling Site.....: CAMP LEJEUNE UXO-08
Release Number.....: 808177

Date Received.....: 27-AUG-08 00:00

Client Sample Name: 808177005022|IR78FB082208
DCL Sample Name...: 08E04541
DCL Report Group..: 08E-0723-01

Matrix.....: WATER
Date Sampled.....: 22-AUG-08 16:10
Reporting Units...: ug/L
Report Basis.....: ☒ As Received ☐ Dried

DCL Preparation Group: Not Applicable
Date Prepared.....: 28-AUG-08 00:00
Preparation Method...: 6850
Aliquot Weight/Volume: Not Applicable
Net Weight/Volume....: Not Required

DCL Analysis Group: G087W01B
Analysis Method...: 6850
Instrument Type...: LC/MS
Instrument ID.....: LCMS02
Column Type.....: KP-RPPX250
☒ Primary
☐ Confirmation

Analytical Results

Analyte	Date Analyzed	MDL	Result	Comment	Qual.	Dilution	PQL
Perchlorate	28-AUG-08 21:36	0.0663	ND		U	1	0.200

lw 10/5/08

DATA CHEM LABORATORIES
A Sorenson Company

FORM A (TYPE I)
SINGLE METHOD ANALYSES

SAMPLE ANALYSIS DATA SHEET

4

Form RLIMS63A-V1.4
08290815230699
Page 6

S087V03H

Date Printed.....: 29-AUG-08 15:23

Client Name.....: GPL Laboratories
Client Ref Number....: 808177/CTO-168
Sampling Site.....: CAMP LEJEUNE UXO-08
Release Number.....: 808177

Date Received.....: 27-AUG-08 00:00

Client Sample Name: 808177007024|IR78GW0408C
DCL Sample Name...: 08E04542
DCL Report Group..: 08E-0723-01

Matrix.....: WATER
Date Sampled.....: 25-AUG-08 11:30
Reporting Units...: ug/L
Report Basis.....: ☒ As Received ☐ Dried

DCL Preparation Group: Not Applicable
Date Prepared.....: 28-AUG-08 00:00
Preparation Method...: 6850
Aliquot Weight/Volume: Not Applicable
Net Weight/Volume....: Not Required

DCL Analysis Group: G087W01B
Analysis Method...: 6850
Instrument Type...: LC/MS
Instrument ID.....: LCMS02
Column Type.....: KP-RPPX250
☒ Primary
☐ Confirmation

Analytical Results

Analyte	Date Analyzed	MDL	Result	Comment	Qual.	Dilution	PQL
Perchlorate	28-AUG-08 21:58	0.0663	ND		U	1	0.200

dw 10/5/08

DATA CHEM LABORATORIES
A Sorenson Company

FORM A (TYPE I)
SINGLE METHOD ANALYSES

SAMPLE ANALYSIS DATA SHEET

S087V03J

Date Printed.....: 29-AUG-08 15:23

Client Name.....: GPL Laboratories
Client Ref Number....: 808177/CTO-168
Sampling Site.....: CAMP LEJEUNE UXO-08
Release Number.....: 808177

Date Received.....: 27-AUG-08 00:00

Client Sample Name: 808177009026|IR78GW04D08C
DCL Sample Name...: 08E04543
DCL Report Group..: 08E-0723-01

Matrix.....: WATER
Date Sampled.....: 25-AUG-08 11:35
Reporting Units...: ug/L
Report Basis.....: ☒ As Received ☐ Dried

DCL Preparation Group: Not Applicable
Date Prepared.....: 28-AUG-08 00:00
Preparation Method...: 6850
Aliquot Weight/Volume: Not Applicable
Net Weight/Volume....: Not Required

DCL Analysis Group: G087W01B
Analysis Method...: 6850
Instrument Type...: LC/MS
Instrument ID.....: LCMS02
Column Type.....: KP-RPPX250
☒ Primary
☐ Confirmation

Analytical Results

Analyte	Date Analyzed	MDL	Result	Comment	Qual.	Dilution	PQL
Perchlorate	28-AUG-08 22:19	0.0663	ND		U	1	0.200

RW 10/5/08

ENVIRONMENTAL
Data Services, Inc.

EXPLOSIVES, PETN, NITROGLYCERIN

USEPA Region IV - Level IV Review

Site: MCB Camp Lejeune, TO-09 SDG #: L08110361

Client: CH2M HILL, Inc., Virginia Beach, Virginia Date: February 4, 2009

Laboratory: Microbac Laboratories, Inc., Marietta, Ohio Reviewer: Nancy Weaver

EDS ID	Client Sample ID	Laboratory Sample ID	Matrix
1	MR08-FB111108	L08110361-04	Water
2	MR08-EB111108-1	L08110361-07	Water
3	MR08-SD01-08D	L08110361-08	Soil
4	MR08-SD01D-08D	L08110361-09	Soil
5	MR08-SW01-08D	L08110361-10	Water
6	MR08-SD03-08D	L08110361-11	Soil
7	MR08-SW03-08D	L08110361-12	Water
8	MR08-SD02-08D	L08110361-13	Soil
9MS	MR08-SD02-08DMS	L08110361-14MS	Soil
10MSD	MR08-SD02-08DMSD	L08110361-15MSD	Soil
11	MR08-SW02-08D	L08110361-16	Water
12	MR08-SW02D-08D	L08110361-17	Water
13	IR78-GW61-08D	L08110361-18	Water
14	IR78-GW03-08D	L08110361-19	Water
15	MR08-EB111008	L08110361-20	Water
16	IR78-GW02-08D	L08110361-21	Water
17	IR78-GW02D-08D	L08110361-22	Water
18	IR78-GW42-08D	L08110361-23	Water

The USEPA "Contract Laboratory Program National Functional Guidelines for Organic Data Review," October 1999, and professional judgement were used in evaluating the data in this summary report.

Holding Times - All samples were extracted within 7 days for water samples, 14 days for soil samples and analyzed within 40 days.

Initial Calibration - The initial calibrations exhibited acceptable %RSD and/or correlation coefficient values.

Calibration Verification - The continuing calibrations exhibited acceptable %D values.

Surrogates - All samples exhibited acceptable surrogate recoveries.

MS/MSD - The MS/MSD sample exhibited acceptable %R and RPD values except the following.

MS/MSD Sample ID	Compound	MS/MSD %R/RPD	Qualifier
8	1,3,5-Trinitrobenzene	58.8%/45.7%/Ok	J/UJ
	1,3-Dinitrobenzene	55.7%/51.7%/Ok	J/UJ
	2,4,6-Trinitrotoluene	53.8%/47.1%/Ok	J/UJ
	2,4-Dinitrotoluene	70.9%/58.6%/Ok	J/UJ
	2,6-Dinitrotoluene	53.9%/41%/Ok	J/UJ
	2-Amino-4,6-dinitrotoluene	53.6%/41.9%/Ok	J/UJ
	2-Nitrotoluene	74.8%/63.6%/Ok	J/UJ
	3-Nitrotoluene	Ok/72.8%/Ok	J/UJ
	4-Nitrotoluene	Ok/65%/Ok	J/UJ
	4-Amino-2,6-dinitrotoluene	41%/43.7%/Ok	J/UJ
	HMX	60.6%/48.2%/Ok	J/UJ
	RDX	Ok/55.8%/31.0	J/UJ
	Nitroglycerin	44.4%/57%/Ok	J/UJ

Laboratory Control Sample - The LCS samples exhibited acceptable %R values except the following.

LCS ID	Compound	%R	Qualifier	Affected Samples
WG288286-04	2-Amino-4,6-dinitrotoluene	78%	J/UJ	3, 4, 6

Method Blank - The method blanks were free of contamination.

Field and Equipment Blank - Field QC results are summarized below.

Blank ID	Compound	Conc. ug/L	Action Level ug/L	Qualifier	Affected Samples
MR08-EB111008	None - ND	-	-	-	-
MR08-EB111108-1	None - ND	-	-	-	-
MR08-FB111108	None - ND	-	-	-	-

Field Duplicates - Field duplicate results are summarized below.

Compound	MR08-SD01-08D mg/kg	MR08-SD01D-08D mg/kg	RPD	Qualifier
None	ND	ND	-	-

Compound	MR08-SW02-08D ug/L	MR08-SW02D-08D ug/L	RPD	Qualifier
None	ND	ND	-	-

Compound	IR78-GW02-08D ug/L	IR78-GW02D-08D ug/L	RPD	Qualifier
None	ND	ND	-	-

Compound Identification - Retention times were acceptable and no further action was taken.

Compound Quantitation - No discrepancies were identified.

Report Number: L08110361

Report Date : December 8, 2008

Sample Number: L08110361-04
Client ID: MR08-FB111108
Matrix: Water
Workgroup Number: WG288280
Collect Date: 11/11/2008 08:10
Sample Tag: 02

PrePrep Method: NONE
Prep Method: 3535
Analytical Method: 8330MOD
Analyst: ECL
Dilution: 1
Units: ug/L

Instrument: HPLC5
Prep Date: 11/17/2008 07:00
Cal Date: 08/12/2008 15:23
Run Date: 11/24/2008 15:09
File ID: 5L002886.F

Analyte	CAS. Number	Result	Qual	RL	MDL
PETN	78-11-5		U	1.04	0.260

U Undetected; the analyte was analyzed for, but not detected.

Microbac

15 LW 2/4/09

Sample Number: L08110361-04
Client ID: MR08-FB111108
Matrix: Water
Workgroup Number: WG288280
Collect Date: 11/11/2008 08:10
Sample Tag: 01

PrePrep Method: NONE
Prep Method: 3535
Analytical Method: 8330MOD
Analyst: JWR
Dilution: 1
Units: ug/L

Instrument: HPLC5
Prep Date: 11/17/2008 07:00
Cal Date: 08/12/2008 15:23
Run Date: 11/19/2008 16:03
File ID: 5L002813.F

Analyte	CAS. Number	Result	Qual	RL	MDL
1,3,5-Trinitrobenzene	99-35-4		U	1.04	0.260
1,3-Dinitrobenzene	99-65-0		U	1.04	0.260
2,4,6-Trinitrotoluene	118-96-7		U	1.04	0.260
2,4-Dinitrotoluene	121-14-2		U	1.04	0.260
2,6-Dinitrotoluene	606-20-2		U	1.04	0.260
2-Amino-4,6-dinitrotoluene	35572-78-2		U	1.04	0.260
2-Nitrotoluene	88-72-2		U	1.04	0.260
3-Nitrotoluene	99-08-1		U	1.04	0.260
4-Nitrotoluene	99-99-0		U	1.04	0.260
4-Amino-2,6-dinitrotoluene	19406-51-0		U	1.04	0.260
HMX	2691-41-0		U	1.04	0.260
Nitrobenzene	98-95-3		U	1.04	0.260
RDX	121-82-4		U	1.04	0.260
Tetryl	479-45-8		U	1.04	0.260
Nitroglycerin	55-63-0		U	1.04	0.260

Surrogate	% Recovery	Lower	Upper	Qual
1,2-Dinitrobenzene	114	50	150	

U Undetected; the analyte was analyzed for, but not detected.

Microbac

16 lw 2/4/09

2

Sample Number: L08110361-07
Client ID: MR08-EB111108-1
Matrix: Water
Workgroup Number: WG288280
Collect Date: 11/11/2008 12:00
Sample Tag: 02

PrePrep Method: NONE
Prep Method: 3535
Analytical Method: 8330MOD
Analyst: ECL
Dilution: 1
Units: ug/L

Instrument: HPLC5
Prep Date: 11/17/2008 07:00
Cal Date: 08/12/2008 15:23
Run Date: 11/24/2008 15:23
File ID: 5L002887.F

Analyte	CAS. Number	Result	Qual	RL	MDL
PETN	78-11-5		U	1.04	0.260

U Undetected; the analyte was analyzed for, but not detected.

Microbac

17

lw
2/4/09

2

Sample Number: L08110361-07
Client ID: MR08-EB111108-1
Matrix: Water
Workgroup Number: WG288280
Collect Date: 11/11/2008 12:00
Sample Tag: 01

PrePrep Method: NONE
Prep Method: 3535
Analytical Method: 8330MOD
Analyst: JWR
Dilution: 1
Units: ug/L

Instrument: HPLC5
Prep Date: 11/17/2008 07:00
Cal Date: 08/12/2008 15:23
Run Date: 11/19/2008 16:41
File ID: 5L002814.F

Analyte	CAS. Number	Result	Qual	RL	MDL
1,3,5-Trinitrobenzene	99-35-4		U	1.04	0.260
1,3-Dinitrobenzene	99-65-0		U	1.04	0.260
2,4,6-Trinitrotoluene	118-96-7		U	1.04	0.260
2,4-Dinitrotoluene	121-14-2		U	1.04	0.260
2,6-Dinitrotoluene	606-20-2		U	1.04	0.260
2-Amino-4,6-dinitrotoluene	35572-78-2		U	1.04	0.260
2-Nitrotoluene	88-72-2		U	1.04	0.260
3-Nitrotoluene	99-08-1		U	1.04	0.260
4-Nitrotoluene	99-99-0		U	1.04	0.260
4-Amino-2,6-dinitrotoluene	19406-51-0		U	1.04	0.260
HMX	2691-41-0		U	1.04	0.260
Nitrobenzene	98-95-3		U	1.04	0.260
RDX	121-82-4		U	1.04	0.260
Tetryl	479-45-8		U	1.04	0.260
Nitroglycerin	55-63-0		U	1.04	0.260

Surrogate	% Recovery	Lower	Upper	Qual
1,2-Dinitrobenzene	116	50	150	

U Undetected; the analyte was analyzed for, but not detected.

Microbac

18 lw 2/4/09

3

Sample Number: L08110361-08
Client ID: MR08-SD01-08D
Matrix: Soil
Workgroup Number: WG288388
Collect Date: 11/11/2008 11:50
Sample Tag: 02

PrePrep Method: NONE
Prep Method: METHOD
Analytical Method: 8330MOD
Analyst: ECL
Dilution: 1
Units: mg/kg

Instrument: HPLC5
Prep Date: 11/18/2008 10:30
Cal Date: 08/12/2008 15:23
Run Date: 11/26/2008 12:05
File ID: 5L002933.F

Analyte	CAS. Number	Result	Qual	RL	MDL
PETN	78-11-5		U	0.299	0.0995

U Undetected; the analyte was analyzed for, but not detected.

Microbac

19 RWS 2/4/09

3

Sample Number: L08110361-08
Client ID: MR08-SD01-08D
Matrix: Soil
Workgroup Number: WG288388
Collect Date: 11/11/2008 11:50
Sample Tag: 01

PrePrep Method: NONE
Prep Method: METHOD
Analytical Method: 8330MOD
Analyst: ECL
Dilution: 1
Units: mg/kg

Instrument: HPLC5
Prep Date: 11/18/2008 10:30
Cal Date: 08/12/2008 15:23
Run Date: 11/21/2008 18:53
File ID: 5L002858.F

Analyte	CAS. Number	Result	Qual	RL	MDL
1,3,5-Trinitrobenzene	99-35-4		U	0.299	0.0995
1,3-Dinitrobenzene	99-65-0		U	0.299	0.0995
2,4,6-Trinitrotoluene	118-96-7		U	0.299	0.0995
2,4-Dinitrotoluene	121-14-2		U	0.299	0.0995
2,6-Dinitrotoluene	606-20-2		U	0.299	0.0995
2-Amino-4,6-dinitrotoluene	35572-78-2		~~U~~ UJ	0.299	0.0995
2-Nitrotoluene	88-72-2		U	0.299	0.0995
3-Nitrotoluene	99-08-1		U	0.299	0.0995
4-Nitrotoluene	99-99-0		U	0.299	0.0995
4-Amino-2,6-dinitrotoluene	19406-51-0		U	0.299	0.0995
HMX	2691-41-0		U	0.299	0.0995
Nitrobenzene	98-95-3		U	0.299	0.0995
RDX	121-82-4		U	0.299	0.0995
Tetryl	479-45-8		U	0.299	0.0995
Nitroglycerin	55-63-0		U	0.299	0.0995

BSL

Surrogate	% Recovery	Lower	Upper	Qual
1,2-Dinitrobenzene	73.2	50	150	

U Undetected; the analyte was analyzed for, but not detected.

Microbac

20 lw 2/4/09

4

Sample Number: L08110361-09
Client ID: MR08-SD01D-08D
Matrix: Soil
Workgroup Number: WG288388
Collect Date: 11/11/2008 11:55
Sample Tag: 02

PrePrep Method: NONE
Prep Method: METHOD
Analytical Method: 8330MOD
Analyst: ECL
Dilution: 1
Units: mg/kg

Instrument: HPLC5
Prep Date: 11/18/2008 10:30
Cal Date: 08/12/2008 15:23
Run Date: 11/26/2008 12:18
File ID: 5L002934.F

Analyte	CAS. Number	Result	Qual	RL	MDL
PETN	78-11-5		U	0.295	0.0982

U Undetected; the analyte was analyzed for, but not detected.

Microbac

22 lw 2/4/09

4

Sample Number: L08110361-09
Client ID: MR08-SD01D-08D
Matrix: Soil
Workgroup Number: WG288388
Collect Date: 11/11/2008 11:55
Sample Tag: 01

PrePrep Method: NONE
Prep Method: METHOD
Analytical Method: 8330MOD
Analyst: ECL
Dilution: 1
Units: mg/kg

Instrument: HPLC5
Prep Date: 11/18/2008 10:30
Cal Date: 08/12/2008 15:23
Run Date: 11/21/2008 19:31
File ID: 5L002859.F

Analyte	CAS. Number	Result	Qual	RL	MDL
1,3,5-Trinitrobenzene	99-35-4		U	0.295	0.0982
1,3-Dinitrobenzene	99-65-0		U	0.295	0.0982
2,4,6-Trinitrotoluene	118-96-7		U	0.295	0.0982
2,4-Dinitrotoluene	121-14-2		U	0.295	0.0982
2,6-Dinitrotoluene	606-20-2		U	0.295	0.0982
2-Amino-4,6-dinitrotoluene	35572-78-2		UJ ~~U~~	0.295	0.0982
2-Nitrotoluene	88-72-2		U	0.295	0.0982
3-Nitrotoluene	99-08-1		U	0.295	0.0982
4-Nitrotoluene	99-99-0		U	0.295	0.0982
4-Amino-2,6-dinitrotoluene	19406-51-0		U	0.295	0.0982
HMX	2691-41-0		U	0.295	0.0982
Nitrobenzene	98-95-3		U	0.295	0.0982
RDX	121-82-4		U	0.295	0.0982
Tetryl	479-45-8		U	0.295	0.0982
Nitroglycerin	55-63-0		U	0.295	0.0982

BSC

Surrogate	% Recovery	Lower	Upper	Qual
1,2-Dinitrobenzene	69.7	50	150	

U Undetected; the analyte was analyzed for, but not detected.

Microbac

21 MW 2/4/09

5

Sample Number: L08110361-10
Client ID: MR08-SW01-08D
Matrix: Water
Workgroup Number: WG288280
Collect Date: 11/11/2008 08:20
Sample Tag: 02

PrePrep Method: NONE
Prep Method: 3535
Analytical Method: 8330MOD
Analyst: ECL
Dilution: 1
Units: ug/L

Instrument: HPLC5
Prep Date: 11/17/2008 07:00
Cal Date: 08/12/2008 15:23
Run Date: 11/24/2008 15:36
File ID: 5L002888.F

Analyte	CAS. Number	Result	Qual	RL	MDL
PETN	78-11-5		U	1.04	0.260

U Undetected; the analyte was analyzed for, but not detected.

Microbac

24 LW 2/4/09

5

Sample Number: L08110361-10
Client ID: MR08-SW01-08D
Matrix: Water
Workgroup Number: WG288280
Collect Date: 11/11/2008 08:20
Sample Tag: 01

PrePrep Method: NONE
Prep Method: 3535
Analytical Method: 8330MOD
Analyst: JWR
Dilution: 1
Units: ug/L

Instrument: HPLC5
Prep Date: 11/17/2008 07:00
Cal Date: 08/12/2008 15:23
Run Date: 11/19/2008 17:19
File ID: 5L002815.F

Analyte	CAS. Number	Result	Qual	RL	MDL
1,3,5-Trinitrobenzene	99-35-4		U	1.04	0.260
1,3-Dinitrobenzene	99-65-0		U	1.04	0.260
2,4,6-Trinitrotoluene	118-96-7		U	1.04	0.260
2,4-Dinitrotoluene	121-14-2		U	1.04	0.260
2,6-Dinitrotoluene	606-20-2		U	1.04	0.260
2-Amino-4,6-dinitrotoluene	35572-78-2		U	1.04	0.260
2-Nitrotoluene	88-72-2		U	1.04	0.260
3-Nitrotoluene	99-08-1		U	1.04	0.260
4-Nitrotoluene	99-99-0		U	1.04	0.260
4-Amino-2,6-dinitrotoluene	19406-51-0		U	1.04	0.260
HMX	2691-41-0		U	1.04	0.260
Nitrobenzene	98-95-3		U	1.04	0.260
RDX	121-82-4		U	1.04	0.260
Tetryl	479-45-8		U	1.04	0.260
Nitroglycerin	55-63-0		U	1.04	0.260

Surrogate	% Recovery	Lower	Upper	Qual
1,2-Dinitrobenzene	114	50	150	

U Undetected; the analyte was analyzed for, but not detected.

Microbac

23 RW 2/4/09

6

Sample Number: L08110361-11
Client ID: MR08-SD03-08D
Matrix: Soil
Workgroup Number: WG288388
Collect Date: 11/11/2008 10:25
Sample Tag: 02

PrePrep Method: NONE
Prep Method: METHOD
Analytical Method: 8330MOD
Analyst: ECL
Dilution: 1
Units: mg/kg

Instrument: HPLC5
Prep Date: 11/18/2008 10:30
Cal Date: 08/12/2008 15:23
Run Date: 11/26/2008 12:31
File ID: 5L002935.F

Analyte	CAS. Number	Result	Qual	RL	MDL
PETN	78-11-5		U	0.299	0.0996

U Undetected; the analyte was analyzed for, but not detected.

Microbac

25 lw 2/4/09

6

Sample Number: L08110361-11
Client ID: MR08-SD03-08D
Matrix: Soil
Workgroup Number: WG288388
Collect Date: 11/11/2008 10:25
Sample Tag: 01

PrePrep Method: NONE
Prep Method: METHOD
Analytical Method: 8330MOD
Analyst: ECL
Dilution: 1
Units: mg/kg

Instrument: HPLC5
Prep Date: 11/18/2008 10:30
Cal Date: 08/12/2008 15:23
Run Date: 11/21/2008 20:09
File ID: 5L002860.F

Analyte	CAS. Number	Result	Qual	RL	MDL
1,3,5-Trinitrobenzene	99-35-4		U	0.299	0.0996
1,3-Dinitrobenzene	99-65-0		U	0.299	0.0996
2,4,6-Trinitrotoluene	118-96-7		U	0.299	0.0996
2,4-Dinitrotoluene	121-14-2		U	0.299	0.0996
2,6-Dinitrotoluene	606-20-2		U	0.299	0.0996
2-Amino-4,6-dinitrotoluene	35572-78-2		UJ ~~U~~	0.299	0.0996 BSL
2-Nitrotoluene	88-72-2		U	0.299	0.0996
3-Nitrotoluene	99-08-1		U	0.299	0.0996
4-Nitrotoluene	99-99-0		U	0.299	0.0996
4-Amino-2,6-dinitrotoluene	19406-51-0		U	0.299	0.0996
HMX	2691-41-0		U	0.299	0.0996
Nitrobenzene	98-95-3		U	0.299	0.0996
RDX	121-82-4		U	0.299	0.0996
Tetryl	479-45-8		U	0.299	0.0996
Nitroglycerin	55-63-0		U	0.299	0.0996

Surrogate	% Recovery	Lower	Upper	Qual
1,2-Dinitrobenzene	109	50	150	

U Undetected; the analyte was analyzed for, but not detected.

Microbac

26 LW 2/4/09

7

Sample Number: L08110361-12
Client ID: MR08-SW03-08D
Matrix: Water
Workgroup Number: WG288280
Collect Date: 11/11/2008 10:05
Sample Tag: 02

PrePrep Method: NONE
Prep Method: 3535
Analytical Method: 8330MOD
Analyst: ECL
Dilution: 1
Units: ug/L

Instrument: HPLC5
Prep Date: 11/17/2008 07:00
Cal Date: 08/12/2008 15:23
Run Date: 11/24/2008 15:49
File ID: 5L002889.F

Analyte	CAS. Number	Result	Qual	RL	MDL
PETN	78-11-5		U	1.06	0.266

U Undetected; the analyte was analyzed for, but not detected.

Microbac

28 MW 2/4/09

7

Sample Number: L08110361-12
Client ID: MR08-SW03-08D
Matrix: Water
Workgroup Number: WG288280
Collect Date: 11/11/2008 10:05
Sample Tag: 01

PrePrep Method: NONE
Prep Method: 3535
Analytical Method: 8330MOD
Analyst: JWR
Dilution: 1
Units: ug/L

Instrument: HPLC5
Prep Date: 11/17/2008 07:00
Cal Date: 08/12/2008 15:23
Run Date: 11/19/2008 17:57
File ID: 5L002816.F

Analyte	CAS. Number	Result	Qual	RL	MDL
1,3,5-Trinitrobenzene	99-35-4		U	1.06	0.266
1,3-Dinitrobenzene	99-65-0		U	1.06	0.266
2,4,6-Trinitrotoluene	118-96-7		U	1.06	0.266
2,4-Dinitrotoluene	121-14-2		U	1.06	0.266
2,6-Dinitrotoluene	606-20-2		U	1.06	0.266
2-Amino-4,6-dinitrotoluene	35572-78-2		U	1.06	0.266
2-Nitrotoluene	88-72-2		U	1.06	0.266
3-Nitrotoluene	99-08-1		U	1.06	0.266
4-Nitrotoluene	99-99-0		U	1.06	0.266
4-Amino-2,6-dinitrotoluene	19406-51-0		U	1.06	0.266
HMX	2691-41-0		U	1.06	0.266
Nitrobenzene	98-95-3		U	1.06	0.266
RDX	121-82-4		U	1.06	0.266
Tetryl	479-45-8		U	1.06	0.266
Nitroglycerin	55-63-0		U	1.06	0.266

Surrogate	% Recovery	Lower	Upper	Qual
1,2-Dinitrobenzene	103	50	150	

U Undetected; the analyte was analyzed for, but not detected.

Microbac

27 lw 2/4/09

8

Sample Number: L08110361-13
Client ID: MR08-SD02-08D
Matrix: Soil
Workgroup Number: WG288388
Collect Date: 11/11/2008 09:25
Sample Tag: 02

PrePrep Method: NONE
Prep Method: METHOD
Analytical Method: 8330MOD
Analyst: ECL
Dilution: 1
Units: mg/kg

Instrument: HPLC5
Prep Date: 11/18/2008 10:30
Cal Date: 08/12/2008 15:23
Run Date: 11/26/2008 12:44
File ID: 5L002936.F

Analyte	CAS. Number	Result	Qual	RL	MDL
PETN	78-11-5		U	0.298	0.0992

U Undetected; the analyte was analyzed for, but not detected.

Microbac

30 DWS 2/4/09

Report Number: L08110361
Report Date : December 8, 2008

8

Sample Number: L08110361-13
Client ID: MR08-SD02-08D
Matrix: Soil
Workgroup Number: WG288388
Collect Date: 11/11/2008 09:25
Sample Tag: 01

PrePrep Method: NONE
Prep Method: METHOD
Analytical Method: 8330MOD
Analyst: ECL
Dilution: 1
Units: mg/kg

Instrument: HPLC5
Prep Date: 11/18/2008 10:30
Cal Date: 08/12/2008 15:23
Run Date: 11/21/2008 20:47
File ID: 5L002861.F

Analyte	CAS. Number	Result	Qual	RL	MDL	
1,3,5-Trinitrobenzene	99-35-4	UJ	~~U~~	0.298	0.0992	MSL
1,3-Dinitrobenzene	99-65-0		~~U~~	0.298	0.0992	
2,4,6-Trinitrotoluene	118-96-7		~~U~~	0.298	0.0992	
2,4-Dinitrotoluene	121-14-2		~~U~~	0.298	0.0992	
2,6-Dinitrotoluene	606-20-2		~~U~~	0.298	0.0992	
2-Amino-4,6-dinitrotoluene	35572-78-2		~~U~~	0.298	0.0992	
2-Nitrotoluene	88-72-2		~~U~~	0.298	0.0992	
3-Nitrotoluene	99-08-1		~~U~~	0.298	0.0992	
4-Nitrotoluene	99-99-0		~~U~~	0.298	0.0992	
4-Amino-2,6-dinitrotoluene	19406-51-0		~~U~~	0.298	0.0992	
HMX	2691-41-0		~~U~~	0.298	0.0992	
Nitrobenzene	98-95-3		U	0.298	0.0992	
RDX	121-82-4	UJ	~~U~~	0.298	0.0992	MSL
Tetryl	479-45-8		U	0.298	0.0992	
Nitroglycerin	55-63-0	UJ	~~U~~	0.298	0.0992	MSL

Surrogate	% Recovery	Lower	Upper	Qual
1,2-Dinitrobenzene	89.2	50	150	

U Undetected; the analyte was analyzed for, but not detected.

Microbac

MW
2/4/09

11

Sample Number: L08110361-16
Client ID: MR08-SW02-08D
Matrix: Water
Workgroup Number: WG288280
Collect Date: 11/11/2008 09:10
Sample Tag: 02

PrePrep Method: NONE
Prep Method: 3535
Analytical Method: 8330MOD
Analyst: ECL
Dilution: 1
Units: ug/L

Instrument: HPLC5
Prep Date: 11/17/2008 07:00
Cal Date: 08/12/2008 15:23
Run Date: 11/24/2008 16:02
File ID: 5L002890.F

Analyte	CAS. Number	Result	Qual	RL	MDL
PETN	78-11-5		U	1.02	0.255

U Undetected; the analyte was analyzed for, but not detected.

Microbac

34 2/4/09

11

Sample Number: L08110361-16
Client ID: MR08-SW02-08D
Matrix: Water
Workgroup Number: WG288280
Collect Date: 11/11/2008 09:10
Sample Tag: 01

PrePrep Method: NONE
Prep Method: 3535
Analytical Method: 8330MOD
Analyst: JWR
Dilution: 1
Units: ug/L

Instrument: HPLC5
Prep Date: 11/17/2008 07:00
Cal Date: 08/12/2008 15:23
Run Date: 11/19/2008 18:36
File ID: 5L002817.F

Analyte	CAS. Number	Result	Qual	RL	MDL
1,3,5-Trinitrobenzene	99-35-4		U	1.02	0.255
1,3-Dinitrobenzene	99-65-0		U	1.02	0.255
2,4,6-Trinitrotoluene	118-96-7		U	1.02	0.255
2,4-Dinitrotoluene	121-14-2		U	1.02	0.255
2,6-Dinitrotoluene	606-20-2		U	1.02	0.255
2-Amino-4,6-dinitrotoluene	35572-78-2		U	1.02	0.255
2-Nitrotoluene	88-72-2		U	1.02	0.255
3-Nitrotoluene	99-08-1		U	1.02	0.255
4-Nitrotoluene	99-99-0		U	1.02	0.255
4-Amino-2,6-dinitrotoluene	19406-51-0		U	1.02	0.255
HMX	2691-41-0		U	1.02	0.255
Nitrobenzene	98-95-3		U	1.02	0.255
RDX	121-82-4		U	1.02	0.255
Tetryl	479-45-8		U	1.02	0.255
Nitroglycerin	55-63-0		U	1.02	0.255

Surrogate	% Recovery	Lower	Upper	Qual
1,2-Dinitrobenzene	104	50	150	

U Undetected; the analyte was analyzed for, but not detected.

Microbac

33 lw 2/4/09

12

Sample Number: L08110361-17
Client ID: MR08-SW02D-08D
Matrix: Water
Workgroup Number: WG288280
Collect Date: 11/11/2008 09:15
Sample Tag: 02

PrePrep Method: NONE
Prep Method: 3535
Analytical Method: 8330MOD
Analyst: ECL
Dilution: 1
Units: ug/L

Instrument: HPLC5
Prep Date: 11/17/2008 07:00
Cal Date: 08/12/2008 15:23
Run Date: 11/24/2008 16:15
File ID: 5L002891.F

Analyte	CAS. Number	Result	Qual	RL	MDL
PETN	78-11-5		U	1.03	0.258

U Undetected; the analyte was analyzed for, but not detected.

Microbac

LW 2/4/09

12

Sample Number: L08110361-17
Client ID: MR08-SW02D-08D
Matrix: Water
Workgroup Number: WG288280
Collect Date: 11/11/2008 09:15
Sample Tag: 01

PrePrep Method: NONE
Prep Method: 3535
Analytical Method: 8330MOD
Analyst: JWR
Dilution: 1
Units: ug/L

Instrument: HPLC5
Prep Date: 11/17/2008 07:00
Cal Date: 08/12/2008 15:23
Run Date: 11/19/2008 19:14
File ID: 5L002818.F

Analyte	CAS. Number	Result	Qual	RL	MDL
1,3,5-Trinitrobenzene	99-35-4		U	1.03	0.258
1,3-Dinitrobenzene	99-65-0		U	1.03	0.258
2,4,6-Trinitrotoluene	118-96-7		U	1.03	0.258
2,4-Dinitrotoluene	121-14-2		U	1.03	0.258
2,6-Dinitrotoluene	606-20-2		U	1.03	0.258
2-Amino-4,6-dinitrotoluene	35572-78-2		U	1.03	0.258
2-Nitrotoluene	88-72-2		U	1.03	0.258
3-Nitrotoluene	99-08-1		U	1.03	0.258
4-Nitrotoluene	99-99-0		U	1.03	0.258
4-Amino-2,6-dinitrotoluene	19406-51-0		U	1.03	0.258
HMX	2691-41-0		U	1.03	0.258
Nitrobenzene	98-95-3		U	1.03	0.258
RDX	121-82-4		U	1.03	0.258
Tetryl	479-45-8		U	1.03	0.258
Nitroglycerin	55-63-0		U	1.03	0.258

Surrogate	% Recovery	Lower	Upper	Qual
1,2-Dinitrobenzene	107	50	150	

U Undetected; the analyte was analyzed for, but not detected.

Microbac

36 MW 2/4/09

13

Sample Number: L08110361-18
Client ID: IR78-GW61-08D
Matrix: Water
Workgroup Number: WG288280
Collect Date: 11/10/2008 12:05
Sample Tag: 02

PrePrep Method: NONE
Prep Method: 3535
Analytical Method: 8330MOD
Analyst: ECL
Dilution: 1
Units: ug/L

Instrument: HPLC5
Prep Date: 11/17/2008 07:00
Cal Date: 08/12/2008 15:23
Run Date: 11/24/2008 16:29
File ID: 5L002892.F

Analyte	CAS. Number	Result	Qual	RL	MDL
PETN	78-11-5		U	1.00	0.250

U Undetected; the analyte was analyzed for, but not detected.

Microbac

38 lus 2/4/09

13

Report Number: L08110361
Report Date : December 8, 2008

Sample Number: L08110361-18
Client ID: IR78-GW61-08D
Matrix: Water
Workgroup Number: WG288280
Collect Date: 11/10/2008 12:05
Sample Tag: 01

PrePrep Method: NONE
Prep Method: 3535
Analytical Method: 8330MOD
Analyst: JWR
Dilution: 1
Units: ug/L

Instrument: HPLC5
Prep Date: 11/17/2008 07:00
Cal Date: 08/12/2008 15:23
Run Date: 11/19/2008 19:52
File ID: 5L002819.F

Analyte	CAS. Number	Result	Qual	RL	MDL
1,3,5-Trinitrobenzene	99-35-4		U	1.00	0.250
1,3-Dinitrobenzene	99-65-0		U	1.00	0.250
2,4,6-Trinitrotoluene	118-96-7		U	1.00	0.250
2,4-Dinitrotoluene	121-14-2		U	1.00	0.250
2,6-Dinitrotoluene	606-20-2		U	1.00	0.250
2-Amino-4,6-dinitrotoluene	35572-78-2		U	1.00	0.250
2-Nitrotoluene	88-72-2		U	1.00	0.250
3-Nitrotoluene	99-08-1		U	1.00	0.250
4-Nitrotoluene	99-99-0		U	1.00	0.250
4-Amino-2,6-dinitrotoluene	19406-51-0		U	1.00	0.250
HMX	2691-41-0		U	1.00	0.250
Nitrobenzene	98-95-3		U	1.00	0.250
RDX	121-82-4		U	1.00	0.250
Tetryl	479-45-8		U	1.00	0.250
Nitroglycerin	55-63-0		U	1.00	0.250

Surrogate	% Recovery	Lower	Upper	Qual
1,2-Dinitrobenzene	113	50	150	

U Undetected; the analyte was analyzed for, but not detected.

Microbac

MW
7/14/09

14

Sample Number: L08110361-19
Client ID: IR78-GW03-08D
Matrix: Water
Workgroup Number: WG288280
Collect Date: 11/10/2008 15:45
Sample Tag: 02

PrePrep Method: NONE
Prep Method: 3535
Analytical Method: 8330MOD
Analyst: ECL
Dilution: 1
Units: ug/L

Instrument: HPLC5
Prep Date: 11/17/2008 07:00
Cal Date: 08/12/2008 15:23
Run Date: 11/24/2008 16:42
File ID: 5L002893.F

Analyte	CAS. Number	Result	Qual	RL	MDL
PETN	78-11-5		U	1.00	0.250

U Undetected; the analyte was analyzed for, but not detected.

Microbac

40 MW 2/4/09

14

Sample Number: L08110361-19
Client ID: IR78-GW03-08D
Matrix: Water
Workgroup Number: WG288280
Collect Date: 11/10/2008 15:45
Sample Tag: 01

PrePrep Method: NONE
Prep Method: 3535
Analytical Method: 8330MOD
Analyst: JWR
Dilution: 1
Units: ug/L

Instrument: HPLC5
Prep Date: 11/17/2008 07:00
Cal Date: 08/12/2008 15:23
Run Date: 11/19/2008 22:05
File ID: 5L002823.F

Analyte	CAS. Number	Result	Qual	RL	MDL
1,3,5-Trinitrobenzene	99-35-4		U	1.00	0.250
1,3-Dinitrobenzene	99-65-0		U	1.00	0.250
2,4,6-Trinitrotoluene	118-96-7		U	1.00	0.250
2,4-Dinitrotoluene	121-14-2		U	1.00	0.250
2,6-Dinitrotoluene	606-20-2		U	1.00	0.250
2-Amino-4,6-dinitrotoluene	35572-78-2		U	1.00	0.250
2-Nitrotoluene	88-72-2		U	1.00	0.250
3-Nitrotoluene	99-08-1		U	1.00	0.250
4-Nitrotoluene	99-99-0		U	1.00	0.250
4-Amino-2,6-dinitrotoluene	19406-51-0		U	1.00	0.250
HMX	2691-41-0		U	1.00	0.250
Nitrobenzene	98-95-3		U	1.00	0.250
RDX	121-82-4		U	1.00	0.250
Tetryl	479-45-8		U	1.00	0.250
Nitroglycerin	55-63-0		U	1.00	0.250

Surrogate	% Recovery	Lower	Upper	Qual
1,2-Dinitrobenzene	95.4	50	150	

U Undetected; the analyte was analyzed for, but not detected.

Microbac

39 MS 2/4/09

15

Sample Number: L08110361-20
Client ID: MR08-EB111008
Matrix: Water
Workgroup Number: WG288280
Collect Date: 11/10/2008 16:45
Sample Tag: 02

PrePrep Method: NONE
Prep Method: 3535
Analytical Method: 8330MOD
Analyst: ECL
Dilution: 1
Units: ug/L

Instrument: HPLC5
Prep Date: 11/17/2008 07:00
Cal Date: 08/12/2008 15:23
Run Date: 11/24/2008 17:34
File ID: 5L002897.F

Analyte	CAS. Number	Result	Qual	RL	MDL
PETN	78-11-5		U	1.03	0.258

U Undetected; the analyte was analyzed for, but not detected.

Microbac

41 lw 2/4/09

15

Sample Number: L08110361-20
Client ID: MR08-EB111008
Matrix: Water
Workgroup Number: WG288280
Collect Date: 11/10/2008 16:45
Sample Tag: 01

PrePrep Method: NONE
Prep Method: 3535
Analytical Method: 8330MOD
Analyst: JWR
Dilution: 1
Units: ug/L

Instrument: HPLC5
Prep Date: 11/17/2008 07:00
Cal Date: 08/12/2008 15:23
Run Date: 11/19/2008 22:43
File ID: 5L002824.F

Analyte	CAS. Number	Result	Qual	RL	MDL
1,3,5-Trinitrobenzene	99-35-4		U	1.03	0.258
1,3-Dinitrobenzene	99-65-0		U	1.03	0.258
2,4,6-Trinitrotoluene	118-96-7		U	1.03	0.258
2,4-Dinitrotoluene	121-14-2		U	1.03	0.258
2,6-Dinitrotoluene	606-20-2		U	1.03	0.258
2-Amino-4,6-dinitrotoluene	35572-78-2		U	1.03	0.258
2-Nitrotoluene	88-72-2		U	1.03	0.258
3-Nitrotoluene	99-08-1		U	1.03	0.258
4-Nitrotoluene	99-99-0		U	1.03	0.258
4-Amino-2,6-dinitrotoluene	19406-51-0		U	1.03	0.258
HMX	2691-41-0		U	1.03	0.258
Nitrobenzene	98-95-3		U	1.03	0.258
RDX	121-82-4		U	1.03	0.258
Tetryl	479-45-8		U	1.03	0.258
Nitroglycerin	55-63-0		U	1.03	0.258

Surrogate	% Recovery	Lower	Upper	Qual
1,2-Dinitrobenzene	139	50	150	

U Undetected; the analyte was analyzed for, but not detected.

Microbac

42 RW 2/4/09

16

Sample Number: L08110361-21
Client ID: IR78-GW02-08D
Matrix: Water
Workgroup Number: WG288280
Collect Date: 11/11/2008 09:10
Sample Tag: 02

PrePrep Method: NONE
Prep Method: 3535
Analytical Method: 8330MOD
Analyst: ECL
Dilution: 1
Units: ug/L

Instrument: HPLC5
Prep Date: 11/17/2008 07:00
Cal Date: 08/12/2008 15:23
Run Date: 11/24/2008 17:47
File ID: 5L002898.F

Analyte	CAS. Number	Result	Qual	RL	MDL
PETN	78-11-5		U	1.00	0.250

U Undetected; the analyte was analyzed for, but not detected.

Microbac

44 LW 2/4/09

16

Sample Number: L08110361-21
Client ID: IR78-GW02-08D
Matrix: Water
Workgroup Number: WG288280
Collect Date: 11/11/2008 09:10
Sample Tag: 01

PrePrep Method: NONE
Prep Method: 3535
Analytical Method: 8330MOD
Analyst: JWR
Dilution: 1
Units: ug/L

Instrument: HPLC5
Prep Date: 11/17/2008 07:00
Cal Date: 08/12/2008 15:23
Run Date: 11/19/2008 23:21
File ID: 5L002825.F

Analyte	CAS. Number	Result	Qual	RL	MDL
1,3,5-Trinitrobenzene	99-35-4		U	1.00	0.250
1,3-Dinitrobenzene	99-65-0		U	1.00	0.250
2,4,6-Trinitrotoluene	118-96-7		U	1.00	0.250
2,4-Dinitrotoluene	121-14-2		U	1.00	0.250
2,6-Dinitrotoluene	606-20-2		U	1.00	0.250
2-Amino-4,6-dinitrotoluene	35572-78-2		U	1.00	0.250
2-Nitrotoluene	88-72-2		U	1.00	0.250
3-Nitrotoluene	99-08-1		U	1.00	0.250
4-Nitrotoluene	99-99-0		U	1.00	0.250
4-Amino-2,6-dinitrotoluene	19406-51-0		U	1.00	0.250
HMX	2691-41-0		U	1.00	0.250
Nitrobenzene	98-95-3		U	1.00	0.250
RDX	121-82-4		U	1.00	0.250
Tetryl	479-45-8		U	1.00	0.250
Nitroglycerin	55-63-0		U	1.00	0.250

Surrogate	% Recovery	Lower	Upper	Qual
1,2-Dinitrobenzene	114	50	150	

U Undetected; the analyte was analyzed for, but not detected.

Microbac

43 LW 2/4/09

17

Sample Number: L08110361-22
Client ID: IR78-GW02D-08D
Matrix: Water
Workgroup Number: WG288280
Collect Date: 11/11/2008 09:10
Sample Tag: 02

PrePrep Method: NONE
Prep Method: 3535
Analytical Method: 8330MOD
Analyst: ECL
Dilution: 1
Units: ug/L

Instrument: HPLC5
Prep Date: 11/17/2008 07:00
Cal Date: 08/12/2008 15:23
Run Date: 11/24/2008 18:00
File ID: 5L002899.F

Analyte	CAS. Number	Result	Qual	RL	MDL
PETN	78-11-5		U	1.00	0.250

U Undetected; the analyte was analyzed for, but not detected.

Microbac

45 lw 2/4/09

17

Sample Number: L08110361-22
Client ID: IR78-GW02D-08D
Matrix: Water
Workgroup Number: WG288280
Collect Date: 11/11/2008 09:10
Sample Tag: 01

PrePrep Method: NONE
Prep Method: 3535
Analytical Method: 8330MOD
Analyst: JWR
Dilution: 1
Units: ug/L

Instrument: HPLC5
Prep Date: 11/17/2008 07:00
Cal Date: 08/12/2008 15:23
Run Date: 11/19/2008 23:59
File ID: 5L002826.F

Analyte	CAS. Number	Result	Qual	RL	MDL
1,3,5-Trinitrobenzene	99-35-4		U	1.00	0.250
1,3-Dinitrobenzene	99-65-0		U	1.00	0.250
2,4,6-Trinitrotoluene	118-96-7		U	1.00	0.250
2,4-Dinitrotoluene	121-14-2		U	1.00	0.250
2,6-Dinitrotoluene	606-20-2		U	1.00	0.250
2-Amino-4,6-dinitrotoluene	35572-78-2		U	1.00	0.250
2-Nitrotoluene	88-72-2		U	1.00	0.250
3-Nitrotoluene	99-08-1		U	1.00	0.250
4-Nitrotoluene	99-99-0		U	1.00	0.250
4-Amino-2,6-dinitrotoluene	19406-51-0		U	1.00	0.250
HMX	2691-41-0		U	1.00	0.250
Nitrobenzene	98-95-3		U	1.00	0.250
RDX	121-82-4		U	1.00	0.250
Tetryl	479-45-8		U	1.00	0.250
Nitroglycerin	55-63-0		U	1.00	0.250

Surrogate	% Recovery	Lower	Upper	Qual
1,2-Dinitrobenzene	111	50	150	

U Undetected; the analyte was analyzed for, but not detected.

Microbac

46 RW 2/4/09

18

Sample Number: L08110361-23
Client ID: IR78-GW42-08D
Matrix: Water
Workgroup Number: WG288280
Collect Date: 11/11/2008 11:40
Sample Tag: 02

PrePrep Method: NONE
Prep Method: 3535
Analytical Method: 8330MOD
Analyst: ECL
Dilution: 1
Units: ug/L

Instrument: HPLC5
Prep Date: 11/17/2008 07:00
Cal Date: 08/12/2008 15:23
Run Date: 11/24/2008 18:14
File ID: 5L002900.F

Analyte	CAS. Number	Result	Qual	RL	MDL
PETN	78-11-5		U	1.00	0.250

U Undetected; the analyte was analyzed for, but not detected.

Microbac

47 lrw 2/4/09

18

Sample Number: L08110361-23
Client ID: IR78-GW42-08D
Matrix: Water
Workgroup Number: WG288280
Collect Date: 11/11/2008 11:40
Sample Tag: 01

PrePrep Method: NONE
Prep Method: 3535
Analytical Method: 8330MOD
Analyst: JWR
Dilution: 1
Units: ug/L

Instrument: HPLC5
Prep Date: 11/17/2008 07:00
Cal Date: 08/12/2008 15:23
Run Date: 11/20/2008 00:37
File ID: 5L002827.F

Analyte	CAS. Number	Result	Qual	RL	MDL
1,3,5-Trinitrobenzene	99-35-4		U	1.00	0.250
1,3-Dinitrobenzene	99-65-0		U	1.00	0.250
2,4,6-Trinitrotoluene	118-96-7		U	1.00	0.250
2,4-Dinitrotoluene	121-14-2		U	1.00	0.250
2,6-Dinitrotoluene	606-20-2		U	1.00	0.250
2-Amino-4,6-dinitrotoluene	35572-78-2		U	1.00	0.250
2-Nitrotoluene	88-72-2		U	1.00	0.250
3-Nitrotoluene	99-08-1		U	1.00	0.250
4-Nitrotoluene	99-99-0		U	1.00	0.250
4-Amino-2,6-dinitrotoluene	19406-51-0		U	1.00	0.250
HMX	2691-41-0		U	1.00	0.250
Nitrobenzene	98-95-3		U	1.00	0.250
RDX	121-82-4		U	1.00	0.250
Tetryl	479-45-8		U	1.00	0.250
Nitroglycerin	55-63-0		U	1.00	0.250

Surrogate	% Recovery	Lower	Upper	Qual
1,2-Dinitrobenzene	112	50	150	

U Undetected; the analyte was analyzed for, but not detected.

Microbac

48 LW 2/4/09

ENVIRONMENTAL
Data Services, Inc.

METALS

USEPA Region IV - Level IV Review

Site: MCB Camp Lejeune, TO-09 SDG #: L08110361

Client: CH2M HILL, Inc., Virginia Beach, Virginia Date: February 1, 2009

Laboratory: Microbac Laboratories, Inc., Marietta, Ohio Reviewer: Nancy Weaver

EDS ID	Client Sample ID	Laboratory Sample ID	Matrix
1	MR08-SS378-08D	L08110361-01	Soil
2	MR08-IS378-08D	L08110361-02	Soil
3	MR08-SS380-08D	L08110361-03	Soil
4	MR08-FB111108	L08110361-04	Water
5	MR08-IS380-08D	L08110361-05	Soil
6	MR08-SS381-08D	L08110361-06	Soil
7	MR08-EB111108-1	L08110361-07	Water
8	MR08-SD01-08D	L08110361-08	Soil
9	MR08-SD01D-08D	L08110361-09	Soil
10	MR08-SW01-08D	L08110361-10	Water
11	MR08-SD03-08D	L08110361-11	Soil
12	MR08-SW03-08D	L08110361-12	Water
13	MR08-SD02-08D	L08110361-13	Soil
14MS	MR08-SD02-08DMS	L08110361-14	Soil
15MSD	MR08-SD02-08DMSD	L08110361-15	Soil
16	MR08-SW02-08D	L08110361-16	Water
17	MR08-SW02D-08D	L08110361-17	Water
18	IR78-GW61-08D	L08110361-18	Water
19	IR78-GW03-08D	L08110361-19	Water
20	MR08-EB111008	L08110361-20	Water
21	IR78-GW02-08D	L08110361-21	Water
22	IR78-GW02D-08D	L08110361-22	Water
23	IR78-GW42-08D	L08110361-23	Water
24	MR08-SS379-08D	L08110361-24	Soil

The USEPA "Contract Laboratory Program National Functional Guidelines for Inorganic Data Review," October 2004, and professional judgement were used in evaluating the data in this summary report.

Holding Times - All samples were prepared and analyzed within 28 days for mercury and 180 days for all other metals.

Calibration - The ICV and CCV %R values were acceptable.

Method and Calibration Blanks - All criteria were met.

Field and Equipment Blank - Field QC results are summarized below.

Blank ID	Compound	Conc. ug/L	Action Level ug/L	Qualifier	Affected Samples
MR08-FB111108	None - ND	-	-	-	-
MR08-EB111008	Zinc	7.05	35.25	U	18, 19, 21-23
MR08-EB111108-1	None - ND	-	-	-	-

ICP Interference Check Sample - All %R values were acceptable.

MS/MSD - The MS/MSD sample exhibited acceptable %R and RPD values except the following.

MS/MSD Sample ID	Compound	MS/MSD %R/RPD	Qualifier	Affected Samples
13	Cadmium	68.6%/58.6%/Ok	J/UJ	8, 9, 11, 13
	Chromium	42.3%/36.8%/Ok	J/UJ	8, 9, 11, 13
	Copper	43.4%/36.3%/Ok	J/UJ	8, 9, 11, 13
	Zinc	38.4%/54.4%/Ok	J/UJ	8, 9, 11, 13
	Lead	68.2%/72.4%/Ok	J/UJ	8, 9, 11, 13
	Selenium	58.4%/Ok/20.1	J/UJ	8, 9, 11, 13

LCS - The LCS samples exhibited acceptable %R values.

ICP Serial Dilution - The ICP serial dilution sample exhibited acceptable %D values except the following.

ICP Sample ID	Compound	%D	Qualifier	Affected Samples
11	Arsenic	11.10%	J	8, 9, 11, 13

Field Duplicates - Field duplicate results are summarized below.

Compound	MR08-SD01-08D mg/kg	MR08-SD01D-08D mg/kg	RPD	Qualifier
Antimony	7.17	9.56	29%	None
Arsenic	161	230	35%	None
Barium	308	283	8%	None
Cadmium	2.30	2.77	19%	None
Chromium	31.8	46.5	38%	None

Compound	MR08-SD01-08D mg/kg	MR08-SD01D-08D mg/kg	RPD	Qualifier
Copper	99.0	136	31%	None
Lead	45.3	61.7	31%	None
Mercury	0.214	0.147	37%	None
Selenium	12.3	16.6	30%	None
Silver	0.432	2.28 U	NC	None
Zinc	206	255	21%	None

Compound	MR08-SW02-08D ug/L	MR08-SW02D-08D ug/L	RPD	Qualifier
Arsenic	1.90	1.73	9%	None
Barium	32.0	31.0	3%	None
Cadmium	1.71	1.61	6%	None
Chromium	17.2	16.5	4%	None
Copper	162	157	3%	None
Lead	1.63	1.61	1%	None
Selenium	6.50	5.87	10%	None
Zinc	631	610	3%	None

Compound	IR78-GW02-08D ug/L	IR78-GW02D-08D ug/L	RPD	Qualifier
Antimony	1.34	1.52	13%	None
Arsenic	0.908	1.02	12%	None
Barium	28.7	28.2	2%	None
Mercury	0.400 U	0.114	NC	None
Selenium	1.46	1.54	5%	None

Compound Quantitation - Several samples were analyzed at a dilution for various compounds due to high concentrations of target analytes. No action was required by the reviewer.

Report Number: L08110361

Report Date : December 8, 2008

Sample Number: L08110361-01
Client ID: MR08-SS378-08D
Matrix: Soil
Workgroup Number: WG288096
Collect Date: 11/10/2008 14:00
Sample Tag: DL02

PrePrep Method: NONE
Prep Method: 3051
Analytical Method: 6010B
Analyst: KHR
Dilution: 5
Units: mg/kg

Instrument: IRIS-ICP
Prep Date: 11/14/2008 14:39
Cal Date: 11/17/2008 09:54
Run Date: 11/17/2008 12:33
File ID: IR.111708.123300
Percent Solid: 79.2

Analyte	CAS. Number	Result	Qual	RL	MDL
Barium, Total	7440-39-3	78.3		2.22	0.444

Microbac

311 LW 21109

Report Number: L08110361

Report Date : December 8, 2008

Sample Number: L08110361-01
Client ID: MR08-SS378-08D
Matrix: Soil
Workgroup Number: WG288183
Collect Date: 11/10/2008 14:00
Sample Tag: 01

PrePrep Method: NONE
Prep Method: 3051
Analytical Method: 6020
Analyst: JYH
Dilution: 1
Units: mg/kg

Instrument: ELAN-ICP
Prep Date: 11/17/2008 07:43
Cal Date: 11/21/2008 10:09
Run Date: 11/21/2008 11:11
File ID: EL.112108.111149
Percent Solid: 79.2

Analyte	CAS. Number	Result	Qual	RL	MDL
Arsenic, Total	7440-38-2	0.725		0.365	0.0912
Lead, Total	7439-92-1	27.9		0.486	0.122
Selenium, Total	7782-49-2		U	0.486	0.122

U Undetected; the analyte was analyzed for, but not detected.

Microbac

1031 AW 21/09

Report Number: L08110361

Report Date : December 8, 2008

Sample Number: L08110361-01
Client ID: MR08-SS378-08D
Matrix: Soil
Workgroup Number: WG288234
Collect Date: 11/10/2008 14:00
Sample Tag: 01

PrePrep Method: NONE
Prep Method: 7471A
Analytical Method: 7471A
Analyst: ADC
Dilution: 1
Units: mg/kg

Instrument: HYDRA
Prep Date: 11/17/2008 08:35
Cal Date: 11/18/2008 13:33
Run Date: 11/18/2008 13:52
File ID: HY.111808.135209
Percent Solid: 79.2

Analyte	CAS. Number	Result	Qual	RL	MDL
Mercury, Total	7439-97-6	0.0351	J	0.121	0.0241

J Estimated ; the analyte concentration was less than the low standard (LOQ)

Microbac

2318 liW 2/1/09

Sample Number: L08110361-01
Client ID: MR08-SS378-08D
Matrix: Soil
Workgroup Number: WG288096
Collect Date: 11/10/2008 14:00
Sample Tag: 01

PrePrep Method: NONE
Prep Method: 3051
Analytical Method: 6010B
Analyst: KHR
Dilution: 1
Units: mg/kg

Instrument: IRIS-ICP
Prep Date: 11/14/2008 14:39
Cal Date: 11/17/2008 09:54
Run Date: 11/17/2008 12:21
File ID: IR.111708.122100
Percent Solid: 79.2

Analyte	CAS. Number	Result	Qual	RL	MDL
Silver, Total	7440-22-4		U	0.887	0.222
Cadmium, Total	7440-43-9	0.439		0.177	0.0444
Chromium, Total	7440-47-3	11.7		0.887	0.106

U Undetected; the analyte was analyzed for, but not detected.

Microbac

312 LW
2/1/09

2

Sample Number: L08110361-02
Client ID: MR08-IS378-08D
Matrix: Soil
Workgroup Number: WG288096
Collect Date: 11/10/2008 15:00
Sample Tag: 01

PrePrep Method: NONE
Prep Method: 3051
Analytical Method: 6010B
Analyst: KHR
Dilution: 1
Units: mg/kg

Instrument: IRIS-ICP
Prep Date: 11/14/2008 14:39
Cal Date: 11/17/2008 09:54
Run Date: 11/17/2008 12:45
File ID: IR.111708.124500
Percent Solid: 87.9

Analyte	CAS. Number	Result	Qual	RL	MDL
Silver, Total	7440-22-4		U	0.848	0.212
Barium, Total	7440-39-3	7.57		0.424	0.0848
Cadmium, Total	7440-43-9		U	0.170	0.0424
Chromium, Total	7440-47-3	16.6		0.848	0.102

U Undetected; the analyte was analyzed for, but not detected.

Microbac

313 lw 2/1/09

2

Sample Number: L08110361-02
Client ID: MR08-IS378-08D
Matrix: Soil
Workgroup Number: WG288183
Collect Date: 11/10/2008 15:00
Sample Tag: 01

PrePrep Method: NONE
Prep Method: 3051
Analytical Method: 6020
Analyst: JYH
Dilution: 1
Units: mg/kg

Instrument: ELAN-ICP
Prep Date: 11/17/2008 07:43
Cal Date: 11/21/2008 10:09
Run Date: 11/21/2008 11:17
File ID: EL.112108.111710
Percent Solid: 87.9

Analyte	CAS. Number	Result	Qual	RL	MDL
Arsenic, Total	7440-38-2	0.152	J	0.340	0.0850
Lead, Total	7439-92-1	1.53		0.453	0.113
Selenium, Total	7782-49-2		U	0.453	0.113

U Undetected; the analyte was analyzed for, but not detected.
J Estimated ; the analyte concentration was less than the low standard (LOQ)

Microbac

1032 ℓℓW 21,109

2

Sample Number: L08110361-02
Client ID: MR08-IS378-08D
Matrix: Soil
Workgroup Number: WG288234
Collect Date: 11/10/2008 15:00
Sample Tag: 01

PrePrep Method: NONE
Prep Method: 7471A
Analytical Method: 7471A
Analyst: ADC
Dilution: 1
Units: mg/kg

Instrument: HYDRA
Prep Date: 11/17/2008 08:35
Cal Date: 11/18/2008 13:33
Run Date: 11/18/2008 13:55
File ID: HY.111808.135550
Percent Solid: 87.9

Analyte	CAS. Number	Result	Qual	RL	MDL
Mercury, Total	7439-97-6		U	0.111	0.0222

U Undetected; the analyte was analyzed for, but not detected.

Microbac

2319 fw 2/1/09

3

Sample Number: L08110361-03
Client ID: MR08-SS380-08D
Matrix: Soil
Workgroup Number: WG288096
Collect Date: 11/10/2008 16:10
Sample Tag: 01

PrePrep Method: NONE
Prep Method: 3051
Analytical Method: 6010B
Analyst: KHR
Dilution: 1
Units: mg/kg

Instrument: IRIS-ICP
Prep Date: 11/14/2008 14:40
Cal Date: 11/17/2008 09:54
Run Date: 11/17/2008 13:04
File ID: IR.111708.130400
Percent Solid: 86.3

Analyte	CAS. Number	Result	Qual	RL	MDL
Silver, Total	7440-22-4		U	0.881	0.220
Barium, Total	7440-39-3	8.75		0.440	0.0881
Cadmium, Total	7440-43-9	0.182		0.176	0.0440
Chromium, Total	7440-47-3	5.41		0.881	0.106

U Undetected; the analyte was analyzed for, but not detected.

Microbac

314 QW
2/1/09

3

Sample Number: L08110361-03
Client ID: MR08-SS380-08D
Matrix: Soil
Workgroup Number: WG288183
Collect Date: 11/10/2008 16:10
Sample Tag: DL01

PrePrep Method: NONE
Prep Method: 3051
Analytical Method: 6020
Analyst: JYH
Dilution: 5
Units: mg/kg

Instrument: ELAN-ICP
Prep Date: 11/17/2008 07:43
Cal Date: 11/21/2008 10:09
Run Date: 11/21/2008 14:27
File ID: EL.112108.142704
Percent Solid: 86.3

Analyte	CAS. Number	Result	Qual	RL	MDL
Lead, Total	7439-92-1	26.4		2.31	0.578

Microbac

1033 lw 21/09

3

Sample Number: L08110361-03
Client ID: MR08-SS380-08D
Matrix: Soil
Workgroup Number: WG288234
Collect Date: 11/10/2008 16:10
Sample Tag: 01

PrePrep Method: NONE
Prep Method: 7471A
Analytical Method: 7471A
Analyst: ADC
Dilution: 1
Units: mg/kg

Instrument: HYDRA
Prep Date: 11/17/2008 08:35
Cal Date: 11/18/2008 13:33
Run Date: 11/18/2008 13:57
File ID: HY.111808.135748
Percent Solid: 86.3

Analyte	CAS. Number	Result	Qual	RL	MDL
Mercury, Total	7439-97-6		U	0.115	0.0229

U Undetected; the analyte was analyzed for, but not detected.

Microbac

2320 RW 2/1/09

3

Sample Number: L08110361-03
Client ID: MR08-SS380-08D
Matrix: Soil
Workgroup Number: WG288183
Collect Date: 11/10/2008 16:10
Sample Tag: 01

PrePrep Method: NONE
Prep Method: 3051
Analytical Method: 6020
Analyst: JYH
Dilution: 1
Units: mg/kg

Instrument: ELAN-ICP
Prep Date: 11/17/2008 07:43
Cal Date: 11/21/2008 10:09
Run Date: 11/21/2008 11:33
File ID: EL.112108.113314
Percent Solid: 86.3

Analyte	CAS. Number	Result	Qual	RL	MDL
Arsenic, Total	7440-38-2	0.408		0.347	0.0867
Selenium, Total	7782-49-2		U	0.463	0.116

U Undetected; the analyte was analyzed for, but not detected.

Microbac

1034 lew 21,109

4

Sample Number: L08110361-04
Client ID: MR08-FB111108
Matrix: Water
Workgroup Number: WG288297
Collect Date: 11/11/2008 08:10
Sample Tag: 01

PrePrep Method: NONE
Prep Method: 3005A
Analytical Method: 6010B
Analyst: ED
Dilution: 1
Units: ug/L

Instrument: PE-ICP2
Prep Date: 11/18/2008 08:03
Cal Date: 11/19/2008 09:45
Run Date: 11/19/2008 10:37
File ID: P2.111908.103748

Analyte	CAS. Number	Result	Qual	RL	MDL
Barium, Total	7440-39-3		U	10.0	2.50
Cadmium, Total	7440-43-9		U	1.00	0.250
Chromium, Total	7440-47-3		U	10.0	2.50
Copper, Total	7440-50-8		U	20.0	5.00
Silver, Total	7440-22-4		U	6.00	2.00
Zinc, Total	7440-66-6		U	20.0	5.00

U Undetected; the analyte was analyzed for, but not detected.

Microbac

 lw 2/1/09

4

Sample Number: L08110361-04
Client ID: MR08-FB111108
Matrix: Water
Workgroup Number: WG288181
Collect Date: 11/11/2008 08:10
Sample Tag: 01

PrePrep Method: NONE
Prep Method: 3015
Analytical Method: 6020
Analyst: JYH
Dilution: 1
Units: ug/L

Instrument: ELAN-ICP
Prep Date: 11/17/2008 07:03
Cal Date: 11/17/2008 10:56
Run Date: 11/17/2008 20:40
File ID: EL.111708.204044

Analyte	CAS. Number	Result	Qual	RL	MDL
Arsenic, Total	7440-38-2		U	1.00	0.250
Lead, Total	7439-92-1		U	1.00	0.250
Antimony, Total	7440-36-0		U	1.00	0.250
Selenium, Total	7782-49-2		U	2.00	0.500

U Undetected; the analyte was analyzed for, but not detected.

Microbac

1035 lw 2/1/09

4

Sample Number: L08110361-04
Client ID: MR08-FB111108
Matrix: Water
Workgroup Number: WG288411
Collect Date: 11/11/2008 08:10
Sample Tag: 01

PrePrep Method: NONE
Prep Method: 7470A
Analytical Method: 7470A
Analyst: ADC
Dilution: 1
Units: ug/L

Instrument: HYDRA
Prep Date: 11/18/2008 08:43
Cal Date: 11/19/2008 11:40
Run Date: 11/19/2008 11:56
File ID: HY.111908.115630

Analyte	CAS. Number	Result	Qual	RL	MDL
Mercury	7439-97-6		U	0.400	0.100

U Undetected; the analyte was analyzed for, but not detected.

Microbac

2321 fw 2/1/09

5

Sample Number: L08110361-05
Client ID: MR08-IS380-08D
Matrix: Soil
Workgroup Number: WG288096
Collect Date: 11/11/2008 10:30
Sample Tag: 01

PrePrep Method: NONE
Prep Method: 3051
Analytical Method: 6010B
Analyst: KHR
Dilution: 1
Units: mg/kg

Instrument: IRIS-ICP
Prep Date: 11/14/2008 14:41
Cal Date: 11/17/2008 09:54
Run Date: 11/17/2008 13:10
File ID: IR.111708.131000
Percent Solid: 85.2

Analyte	CAS. Number	Result	Qual	RL	MDL
Silver, Total	7440-22-4		U	0.791	0.198
Barium, Total	7440-39-3	2.39		0.395	0.0791
Cadmium, Total	7440-43-9		U	0.158	0.0395
Chromium, Total	7440-47-3	1.97		0.791	0.0949

U Undetected; the analyte was analyzed for, but not detected.

Microbac

316 LW 2/1/09

5

Sample Number: L08110361-05
Client ID: MR08-IS380-08D
Matrix: Soil
Workgroup Number: WG288183
Collect Date: 11/11/2008 10:30
Sample Tag: 01

PrePrep Method: NONE
Prep Method: 3051
Analytical Method: 6020
Analyst: JYH
Dilution: 1
Units: mg/kg

Instrument: ELAN-ICP
Prep Date: 11/17/2008 07:43
Cal Date: 11/21/2008 10:09
Run Date: 11/21/2008 12:00
File ID: EL.112108.120044
Percent Solid: 85.2

Analyte	CAS. Number	Result	Qual	RL	MDL
Arsenic, Total	7440-38-2		U	0.350	0.0875
Lead, Total	7439-92-1	2.00		0.467	0.117
Selenium, Total	7782-49-2		U	0.467	0.117

U Undetected; the analyte was analyzed for, but not detected.

Microbac

 lw 2/1/09

5

Sample Number: L08110361-05
Client ID: MR08-IS380-08D
Matrix: Soil
Workgroup Number: WG288234
Collect Date: 11/11/2008 10:30
Sample Tag: 01

PrePrep Method: NONE
Prep Method: 7471A
Analytical Method: 7471A
Analyst: ADC
Dilution: 1
Units: mg/kg

Instrument: HYDRA
Prep Date: 11/17/2008 08:35
Cal Date: 11/18/2008 13:33
Run Date: 11/18/2008 13:59
File ID: HY.111808.135943
Percent Solid: 85.2

Analyte	CAS. Number	Result	Qual	RL	MDL
Mercury, Total	7439-97-6		U	0.115	0.0230

U Undetected; the analyte was analyzed for, but not detected.

Microbac

2322 lw 2/1/09

6

Sample Number: L08110361-06
Client ID: MR08-SS381-08D
Matrix: Soil
Workgroup Number: WG288096
Collect Date: 11/11/2008 11:30
Sample Tag: 01

PrePrep Method: NONE
Prep Method: 3051
Analytical Method: 6010B
Analyst: KHR
Dilution: 1
Units: mg/kg

Instrument: IRIS-ICP
Prep Date: 11/14/2008 14:41
Cal Date: 11/17/2008 09:54
Run Date: 11/17/2008 13:16
File ID: IR.111708.131600
Percent Solid: 90.5

Analyte	CAS. Number	Result	Qual	RL	MDL
Silver, Total	7440-22-4		U	0.787	0.197
Barium, Total	7440-39-3	14.6		0.394	0.0787
Cadmium, Total	7440-43-9	0.326		0.157	0.0394
Chromium, Total	7440-47-3	8.00		0.787	0.0945

U Undetected; the analyte was analyzed for, but not detected.

Microbac

317 LW
21109

6

Sample Number: L08110361-06
Client ID: MR08-SS381-08D
Matrix: Soil
Workgroup Number: WG288183
Collect Date: 11/11/2008 11:30
Sample Tag: 01

PrePrep Method: NONE
Prep Method: 3051
Analytical Method: 6020
Analyst: JYH
Dilution: 1
Units: mg/kg

Instrument: ELAN-ICP
Prep Date: 11/17/2008 07:43
Cal Date: 11/21/2008 10:09
Run Date: 11/21/2008 12:06
File ID: EL.112108.120607
Percent Solid: 90.5

Analyte	CAS. Number	Result	Qual	RL	MDL
Arsenic, Total	7440-38-2	1.12		0.323	0.0807
Lead, Total	7439-92-1	24.6		0.431	0.108
Selenium, Total	7782-49-2	0.182	J	0.431	0.108

J Estimated ; the analyte concentration was less than the low standard (LOQ)

Microbac

 JW 2/1/09

6

Sample Number: L08110361-06
Client ID: MR08-SS381-08D
Matrix: Soil
Workgroup Number: WG288234
Collect Date: 11/11/2008 11:30
Sample Tag: 01

PrePrep Method: NONE
Prep Method: 7471A
Analytical Method: 7471A
Analyst: ADC
Dilution: 1
Units: mg/kg

Instrument: HYDRA
Prep Date: 11/17/2008 08:35
Cal Date: 11/18/2008 13:33
Run Date: 11/18/2008 14:01
File ID: HY.111808.140137
Percent Solid: 90.5

Analyte	CAS. Number	Result	Qual	RL	MDL
Mercury, Total	7439-97-6		U	0.110	0.0221

U Undetected; the analyte was analyzed for, but not detected.

Microbac

2323 2/1/09

7

Sample Number: L08110361-07
Client ID: MR08-EB111108-1
Matrix: Water
Workgroup Number: WG288297
Collect Date: 11/11/2008 12:00
Sample Tag: 01

PrePrep Method: NONE
Prep Method: 3005A
Analytical Method: 6010B
Analyst: ED
Dilution: 1
Units: ug/L

Instrument: PE-ICP2
Prep Date: 11/18/2008 08:03
Cal Date: 11/19/2008 09:45
Run Date: 11/19/2008 10:44
File ID: P2.111908.104406

Analyte	CAS. Number	Result	Qual	RL	MDL
Barium, Total	7440-39-3		U	10.0	2.50
Cadmium, Total	7440-43-9		U	1.00	0.250
Chromium, Total	7440-47-3		U	10.0	2.50
Copper, Total	7440-50-8		U	20.0	5.00
Silver, Total	7440-22-4		U	6.00	2.00
Zinc, Total	7440-66-6		U	20.0	5.00

U Undetected; the analyte was analyzed for, but not detected.

Microbac

318 LW
2/1/09

7

Sample Number: L08110361-07
Client ID: MR08-EB111108-1
Matrix: Water
Workgroup Number: WG288181
Collect Date: 11/11/2008 12:00
Sample Tag: 01

PrePrep Method: NONE
Prep Method: 3015
Analytical Method: 6020
Analyst: JYH
Dilution: 1
Units: ug/L

Instrument: ELAN-ICP
Prep Date: 11/17/2008 07:03
Cal Date: 11/17/2008 10:56
Run Date: 11/17/2008 20:46
File ID: EL.111708.204606

Analyte	CAS. Number	Result	Qual	RL	MDL
Arsenic, Total	7440-38-2		U	1.00	0.250
Lead, Total	7439-92-1		U	1.00	0.250
Antimony, Total	7440-36-0		U	1.00	0.250
Selenium, Total	7782-49-2		U	2.00	0.500

U Undetected; the analyte was analyzed for, but not detected.

Microbac

 lw 21/109

7

Sample Number: L08110361-07
Client ID: MR08-EB111108-1
Matrix: Water
Workgroup Number: WG288411
Collect Date: 11/11/2008 12:00
Sample Tag: 01

PrePrep Method: NONE
Prep Method: 7470A
Analytical Method: 7470A
Analyst: ADC
Dilution: 1
Units: ug/L

Instrument: HYDRA
Prep Date: 11/18/2008 08:43
Cal Date: 11/19/2008 11:40
Run Date: 11/19/2008 11:58
File ID: HY.111908.115817

Analyte	CAS. Number	Result	Qual	RL	MDL
Mercury	7439-97-6		U	0.400	0.100

U Undetected; the analyte was analyzed for, but not detected.

Microbac

2324 MW 2/1/09

8

Sample Number: L08110361-08
Client ID: MR08-SD01-08D
Matrix: Soil
Workgroup Number: WG288096
Collect Date: 11/11/2008 11:50
Sample Tag: DL01

PrePrep Method: NONE
Prep Method: 3051
Analytical Method: 6010B
Analyst: KHR
Dilution: 10
Units: mg/kg

Instrument: IRIS-ICP
Prep Date: 11/14/2008 14:42
Cal Date: 11/20/2008 10:15
Run Date: 11/20/2008 10:58
File ID: IR.112008.105800
Percent Solid: 49.9

Analyte	CAS. Number	Result	Qual	RL	MDL	
Barium, Total	7440-39-3	308		7.26	1.45	
Copper, Total	7440-50-8	99.0 J		29.0	7.26	MSL
Zinc, Total	7440-66-6	206 J		29.0	7.26	MSL

Microbac

319 lw
21,109

8

Sample Number: L08110361-08
Client ID: MR08-SD01-08D
Matrix: Soil
Workgroup Number: WG288096
Collect Date: 11/11/2008 11:50
Sample Tag: 01

PrePrep Method: NONE
Prep Method: 3051
Analytical Method: 6010B
Analyst: KHR
Dilution: 1
Units: mg/kg

Instrument: IRIS-ICP
Prep Date: 11/14/2008 14:42
Cal Date: 11/17/2008 09:54
Run Date: 11/17/2008 13:22
File ID: IR.111708.132200
Percent Solid: 49.9

Analyte	CAS. Number	Result	Qual	RL	MDL	
Silver, Total	7440-22-4	0.432	J	1.45	0.363	
Cadmium, Total	7440-43-9	2.30 J		0.290	0.0726	MSL
Chromium, Total	7440-47-3	31.8 J		1.45	0.174	MSL
Antimony, Total	7440-36-0	7.17		2.90	0.726	

J Estimated ; the analyte concentration was less than the low standard (LOQ)

Microbac

320 lw
2/1/09

8

Sample Number: L08110361-08
Client ID: MR08-SD01-08D
Matrix: Soil
Workgroup Number: WG289481
Collect Date: 11/11/2008 11:50
Sample Tag: DL01

PrePrep Method: NONE
Prep Method: 3051
Analytical Method: 6020
Analyst: JYH
Dilution: 10
Units: mg/kg

Instrument: ELAN-ICP
Prep Date: 12/03/2008 07:09
Cal Date: 12/03/2008 12:07
Run Date: 12/03/2008 13:32
File ID: EL.120308.133237
Percent Solid: 49.9

Analyte	CAS. Number	Result	Qual	RL	MDL	
Arsenic, Total	7440-38-2	161 J		5.98	1.50	SD
Lead, Total	7439-92-1	45.3 J		7.97	1.99	MSL
Selenium, Total	7782-49-2	12.3 J		7.97	1.99	MSL

Microbac

1039 LW 2/1/09

8

Sample Number: L08110361-08
Client ID: MR08-SD01-08D
Matrix: Soil
Workgroup Number: WG288462
Collect Date: 11/11/2008 11:50
Sample Tag: 01

PrePrep Method: NONE
Prep Method: 7471A
Analytical Method: 7471A
Analyst: ADC
Dilution: 1
Units: mg/kg

Instrument: HYDRA
Prep Date: 11/18/2008 09:09
Cal Date: 11/19/2008 15:27
Run Date: 11/19/2008 15:40
File ID: HY.111908.154042
Percent Solid: 49.9

Analyte	CAS. Number	Result	Qual	RL	MDL
Mercury, Total	7439-97-6	0.214		0.189	0.0378

Microbac

2325 lw 2/1/09

9

Sample Number: L08110361-09
Client ID: MR08-SD01D-08D
Matrix: Soil
Workgroup Number: WG288096
Collect Date: 11/11/2008 11:55
Sample Tag: 01

PrePrep Method: NONE
Prep Method: 3051
Analytical Method: 6010B
Analyst: KHR
Dilution: 1
Units: mg/kg

Instrument: IRIS-ICP
Prep Date: 11/14/2008 14:43
Cal Date: 11/17/2008 09:54
Run Date: 11/17/2008 13:28
File ID: IR.111708.132800
Percent Solid: 32.2

Analyte	CAS. Number	Result	Qual	RL	MDL	
Silver, Total	7440-22-4		U	2.28	0.570	
Cadmium, Total	7440-43-9	2.77 J		0.456	0.114	MSL
Chromium, Total	7440-47-3	46.5 J		2.28	0.274	MSL
Antimony, Total	7440-36-0	9.56		4.56	1.14	

U Undetected; the analyte was analyzed for, but not detected.

Microbac

321 ew 2/1/09

9

Sample Number: L08110361-09
Client ID: MR08-SD01D-08D
Matrix: Soil
Workgroup Number: WG288096
Collect Date: 11/11/2008 11:55
Sample Tag: DL01

PrePrep Method: NONE
Prep Method: 3051
Analytical Method: 6010B
Analyst: KHR
Dilution: 10
Units: mg/kg

Instrument: IRIS-ICP
Prep Date: 11/14/2008 14:43
Cal Date: 11/20/2008 10:15
Run Date: 11/20/2008 11:04
File ID: IR.112008.110400
Percent Solid: 32.2

Analyte	CAS. Number	Result	Qual	RL	MDL	
Barium, Total	7440-39-3	283		11.4	2.28	
Copper, Total	7440-50-8	136 J		45.6	11.4	MSL
Zinc, Total	7440-66-6	255 J		45.6	11.4	MSL

Microbac

322 LW 2/1/09

9

Sample Number: L08110361-09
Client ID: MR08-SD01D-08D
Matrix: Soil
Workgroup Number: WG289481
Collect Date: 11/11/2008 11:55
Sample Tag: DL01

PrePrep Method: NONE
Prep Method: 3051
Analytical Method: 6020
Analyst: JYH
Dilution: 10
Units: mg/kg

Instrument: ELAN-ICP
Prep Date: 12/03/2008 07:09
Cal Date: 12/03/2008 12:07
Run Date: 12/03/2008 13:38
File ID: EL.120308.133800
Percent Solid: 32.2

Analyte	CAS. Number	Result	Qual	RL	MDL	
Arsenic, Total	7440-38-2	230 J		9.09	2.27	SD
Lead, Total	7439-92-1	61.7 J		12.1	3.03	MSL
Selenium, Total	7782-49-2	16.6 J		12.1	3.03	MSL

Microbac

104a LW 2/1/09

9

Sample Number:	L08110361-09	PrePrep Method:	NONE	Instrument:	HYDRA
Client ID:	MR08-SD01D-08D	Prep Method:	7471A	Prep Date:	11/18/2008 09:10
Matrix:	Soil	Analytical Method:	7471A	Cal Date:	11/19/2008 15:27
Workgroup Number:	WG288462	Analyst:	ADC	Run Date:	11/19/2008 15:42
Collect Date:	11/11/2008 11:55	Dilution:	1	File ID:	HY.111908.154228
Sample Tag:	01	Units:	mg/kg	Percent Solid:	32.2

Analyte	CAS. Number	Result	Qual	RL	MDL
Mercury, Total	7439-97-6	0.147	J	0.307	0.0614

J Estimated ; the analyte concentration was less than the low standard (LOQ)

Microbac

2326 lw 2/1/09

10

Report Number: L08110361
Report Date : December 8, 2008

Sample Number: L08110361-10
Client ID: MR08-SW01-08D
Matrix: Water
Workgroup Number: WG288297
Collect Date: 11/11/2008 08:20
Sample Tag: 01

PrePrep Method: NONE
Prep Method: 3005A
Analytical Method: 6010B
Analyst: ED
Dilution: 1
Units: ug/L

Instrument: PE-ICP2
Prep Date: 11/18/2008 08:03
Cal Date: 11/19/2008 09:45
Run Date: 11/19/2008 10:50
File ID: P2.111908.105019

Analyte	CAS. Number	Result	Qual	RL	MDL
Barium, Total	7440-39-3	24.4		10.0	2.50
Cadmium, Total	7440-43-9	1.41		1.00	0.250
Chromium, Total	7440-47-3	9.73	J	10.0	2.50
Copper, Total	7440-50-8	118		20.0	5.00
Silver, Total	7440-22-4		U	6.00	2.00
Zinc, Total	7440-66-6	552		20.0	5.00

U Undetected; the analyte was analyzed for, but not detected.
J Estimated ; the analyte concentration was less than the low standard (LOQ)

Microbac

LW
2/1/09

10

Sample Number: L08110361-10
Client ID: MR08-SW01-08D
Matrix: Water
Workgroup Number: WG288181
Collect Date: 11/11/2008 08:20
Sample Tag: 01

PrePrep Method: NONE
Prep Method: 3015
Analytical Method: 6020
Analyst: JYH
Dilution: 1
Units: ug/L

Instrument: ELAN-ICP
Prep Date: 11/17/2008 07:03
Cal Date: 11/17/2008 10:56
Run Date: 11/17/2008 20:51
File ID: EL.111708.205129

Analyte	CAS. Number	Result	Qual	RL	MDL
Arsenic, Total	7440-38-2	0.807	J	1.00	0.250
Lead, Total	7439-92-1	2.69		1.00	0.250
Antimony, Total	7440-36-0		U	1.00	0.250
Selenium, Total	7782-49-2	3.93		2.00	0.500

U Undetected; the analyte was analyzed for, but not detected.
J Estimated ; the analyte concentration was less than the low standard (LOQ)

Microbac

1041 LW 21/09

10

Sample Number: L08110361-10
Client ID: MR08-SW01-08D
Matrix: Water
Workgroup Number: WG288411
Collect Date: 11/11/2008 08:20
Sample Tag: 01

PrePrep Method: NONE
Prep Method: 7470A
Analytical Method: 7470A
Analyst: ADC
Dilution: 1
Units: ug/L

Instrument: HYDRA
Prep Date: 11/18/2008 08:43
Cal Date: 11/19/2008 11:40
Run Date: 11/19/2008 11:59
File ID: HY.111908.115958

Analyte	CAS. Number	Result	Qual	RL	MDL
Mercury	7439-97-6		U	0.400	0.100

U Undetected; the analyte was analyzed for, but not detected.

Microbac

2327 lw 2/1/09

11

Sample Number: L08110361-11
Client ID: MR08-SD03-08D
Matrix: Soil
Workgroup Number: WG288096
Collect Date: 11/11/2008 10:25
Sample Tag: 01

PrePrep Method: NONE
Prep Method: 3051
Analytical Method: 6010B
Analyst: KHR
Dilution: 1
Units: mg/kg

Instrument: IRIS-ICP
Prep Date: 11/14/2008 14:58
Cal Date: 11/17/2008 09:54
Run Date: 11/17/2008 13:34
File ID: IR.111708.133400
Percent Solid: 79.7

Analyte	CAS. Number	Result	Qual	RL	MDL	
Silver, Total	7440-22-4		U	0.962	0.241	
Barium, Total	7440-39-3	3.06		0.481	0.0962	
Cadmium, Total	7440-43-9	0.399 J		0.192	0.0481	MSL
Chromium, Total	7440-47-3	2.33 J		0.962	0.115	↓
Copper, Total	7440-50-8	12.3 J		1.92	0.481	
Antimony, Total	7440-36-0	0.650	J	1.92	0.481	
Zinc, Total	7440-66-6	58.4 J		1.92	0.481	MSL

U Undetected; the analyte was analyzed for, but not detected.
J Estimated ; the analyte concentration was less than the low standard (LOQ)

Microbac

 RW 2/1/09

11

Sample Number: L08110361-11
Client ID: MR08-SD03-08D
Matrix: Soil
Workgroup Number: WG289481
Collect Date: 11/11/2008 10:25
Sample Tag: 01

PrePrep Method: NONE
Prep Method: 3051
Analytical Method: 6020
Analyst: JYH
Dilution: 1
Units: mg/kg

Instrument: ELAN-ICP
Prep Date: 12/03/2008 07:09
Cal Date: 12/03/2008 12:07
Run Date: 12/03/2008 13:43
File ID: EL.120308.134322
Percent Solid: 79.7

Analyte	CAS. Number	Result	Qual	RL	MDL	
Arsenic, Total	7440-38-2	9.82 J		0.373	0.0932	SD
Lead, Total	7439-92-1	17.8 J		0.497	0.124	MSL
Selenium, Total	7782-49-2	0.391 J	J	0.497	0.124	MSL

J Estimated ; the analyte concentration was less than the low standard (LOQ)

Microbac

1042 JW 2/1/09

11

Sample Number: L08110361-11
Client ID: MR08-SD03-08D
Matrix: Soil
Workgroup Number: WG288462
Collect Date: 11/11/2008 10:25
Sample Tag: 01

PrePrep Method: NONE
Prep Method: 7471A
Analytical Method: 7471A
Analyst: ADC
Dilution: 1
Units: mg/kg

Instrument: HYDRA
Prep Date: 11/18/2008 09:11
Cal Date: 11/19/2008 15:27
Run Date: 11/19/2008 15:45
File ID: HY.111908.154526
Percent Solid: 79.7

Analyte	CAS. Number	Result	Qual	RL	MDL
Mercury, Total	7439-97-6		U	0.124	0.0248

U Undetected; the analyte was analyzed for, but not detected.

Microbac

2328 lw 2/1/09

12

Sample Number: L08110361-12
Client ID: MR08-SW03-08D
Matrix: Water
Workgroup Number: WG288297
Collect Date: 11/11/2008 10:05
Sample Tag: 01

PrePrep Method: NONE
Prep Method: 3005A
Analytical Method: 6010B
Analyst: ED
Dilution: 1
Units: ug/L

Instrument: PE-ICP2
Prep Date: 11/18/2008 08:03
Cal Date: 11/19/2008 09:45
Run Date: 11/19/2008 10:55
File ID: P2.111908.105544

Analyte	CAS. Number	Result	Qual	RL	MDL
Barium, Total	7440-39-3	39.1		10.0	2.50
Cadmium, Total	7440-43-9	1.99		1.00	0.250
Chromium, Total	7440-47-3	15.0		10.0	2.50
Copper, Total	7440-50-8	147		20.0	5.00
Silver, Total	7440-22-4		U	6.00	2.00
Zinc, Total	7440-66-6	604		20.0	5.00

U Undetected; the analyte was analyzed for, but not detected.

Microbac

 LW 2/1/09

12

Sample Number: L08110361-12
Client ID: MR08-SW03-08D
Matrix: Water
Workgroup Number: WG288181
Collect Date: 11/11/2008 10:05
Sample Tag: 01

PrePrep Method: NONE
Prep Method: 3015
Analytical Method: 6020
Analyst: JYH
Dilution: 1
Units: ug/L

Instrument: ELAN-ICP
Prep Date: 11/17/2008 07:03
Cal Date: 11/17/2008 10:56
Run Date: 11/17/2008 20:56
File ID: EL.111708.205653

Analyte	CAS. Number	Result	Qual	RL	MDL
Arsenic, Total	7440-38-2	3.28		1.00	0.250
Lead, Total	7439-92-1	3.60		1.00	0.250
Antimony, Total	7440-36-0		U	1.00	0.250
Selenium, Total	7782-49-2	6.12		2.00	0.500

U Undetected; the analyte was analyzed for, but not detected.

Microbac

1043 LW 2/1/09

12

Sample Number: L08110361-12
Client ID: MR08-SW03-08D
Matrix: Water
Workgroup Number: WG288411
Collect Date: 11/11/2008 10:05
Sample Tag: 01

PrePrep Method: NONE
Prep Method: 7470A
Analytical Method: 7470A
Analyst: ADC
Dilution: 1
Units: ug/L

Instrument: HYDRA
Prep Date: 11/18/2008 08:43
Cal Date: 11/19/2008 11:40
Run Date: 11/19/2008 12:08
File ID: HY.111908.120802

Analyte	CAS. Number	Result	Qual	RL	MDL
Mercury	7439-97-6		U	0.400	0.100

U Undetected; the analyte was analyzed for, but not detected.

Microbac

AW 2/1/09

13

Sample Number: L08110361-13
Client ID: MR08-SD02-08D
Matrix: Soil
Workgroup Number: WG288096
Collect Date: 11/11/2008 09:25
Sample Tag: DL01

PrePrep Method: NONE
Prep Method: 3051
Analytical Method: 6010B
Analyst: KHR
Dilution: 10
Units: mg/kg

Instrument: IRIS-ICP
Prep Date: 11/14/2008 14:44
Cal Date: 11/20/2008 10:15
Run Date: 11/20/2008 11:10
File ID: IR.112008.111000
Percent Solid: 76.0

Analyte	CAS. Number	Result	Qual	RL	MDL
Barium, Total	7440-39-3	143		4.42	0.883

Microbac

 LW 2/1/09

13

Sample Number: L08110361-13
Client ID: MR08-SD02-08D
Matrix: Soil
Workgroup Number: WG288096
Collect Date: 11/11/2008 09:25
Sample Tag: 01

PrePrep Method: NONE
Prep Method: 3051
Analytical Method: 6010B
Analyst: KHR
Dilution: 1
Units: mg/kg

Instrument: IRIS-ICP
Prep Date: 11/14/2008 14:44
Cal Date: 11/17/2008 09:54
Run Date: 11/17/2008 13:40
File ID: IR.111708.134000
Percent Solid: 76.0

Analyte	CAS. Number	Result	Qual	RL	MDL	
Silver, Total	7440-22-4	0.245	J	0.883	0.221	
Cadmium, Total	7440-43-9	0.793 J		0.177	0.0442	MSL
Chromium, Total	7440-47-3	14.9 J		0.883	0.106	MSL
Copper, Total	7440-50-8	37.7 J		1.77	0.442	MSL
Antimony, Total	7440-36-0	2.85		1.77	0.442	
Zinc, Total	7440-66-6	55.0 J		1.77	0.442	MSL

J Estimated ; the analyte concentration was less than the low standard (LOQ)

Microbac

 LW 2/1/09

13

Sample Number: L08110361-13
Client ID: MR08-SD02-08D
Matrix: Soil
Workgroup Number: WG289481
Collect Date: 11/11/2008 09:25
Sample Tag: DL01

PrePrep Method: NONE
Prep Method: 3051
Analytical Method: 6020
Analyst: JYH
Dilution: 10
Units: mg/kg

Instrument: ELAN-ICP
Prep Date: 12/03/2008 07:09
Cal Date: 12/03/2008 12:07
Run Date: 12/03/2008 13:16
File ID: EL.120308.131632
Percent Solid: 76.0

Analyte	CAS. Number	Result	Qual	RL	MDL	
Arsenic, Total	7440-38-2	52.4 J		3.93	0.982	SD
Lead, Total	7439-92-1	16.3 J		5.24	1.31	MSL
Selenium, Total	7782-49-2	6.84 J		5.24	1.31	MSL

Microbac

1044 lw 2/1/09

13

Sample Number: L08110361-13
Client ID: MR08-SD02-08D
Matrix: Soil
Workgroup Number: WG288462
Collect Date: 11/11/2008 09:25
Sample Tag: 01

PrePrep Method: NONE
Prep Method: 7471A
Analytical Method: 7471A
Analyst: ADC
Dilution: 1
Units: mg/kg

Instrument: HYDRA
Prep Date: 11/18/2008 09:12
Cal Date: 11/19/2008 15:27
Run Date: 11/19/2008 15:47
File ID: HY.111908.154741
Percent Solid: 76.0

Analyte	CAS. Number	Result	Qual	RL	MDL
Mercury, Total	7439-97-6	0.0541	J	0.127	0.0254

J Estimated ; the analyte concentration was less than the low standard (LOQ)

Microbac

2330 lw 2/1/09

14

Sample Number: L08110361-16
Client ID: MR08-SW02-08D
Matrix: Water
Workgroup Number: WG288297
Collect Date: 11/11/2008 09:10
Sample Tag: 01

PrePrep Method: NONE
Prep Method: 3005A
Analytical Method: 6010B
Analyst: ED
Dilution: 1
Units: ug/L

Instrument: PE-ICP2
Prep Date: 11/18/2008 08:03
Cal Date: 11/19/2008 09:45
Run Date: 11/19/2008 11:01
File ID: P2.111908.110105

Analyte	CAS. Number	Result	Qual	RL	MDL
Barium, Total	7440-39-3	32.0		10.0	2.50
Cadmium, Total	7440-43-9	1.71		1.00	0.250
Chromium, Total	7440-47-3	17.2		10.0	2.50
Copper, Total	7440-50-8	162		20.0	5.00
Silver, Total	7440-22-4		U	6.00	2.00
Zinc, Total	7440-66-6	631		20.0	5.00

U Undetected; the analyte was analyzed for, but not detected.

Microbac

332 CW 2/1/09

16

Sample Number: L08110361-16
Client ID: MR08-SW02-08D
Matrix: Water
Workgroup Number: WG288181
Collect Date: 11/11/2008 09:10
Sample Tag: 01

PrePrep Method: NONE
Prep Method: 3015
Analytical Method: 6020
Analyst: JYH
Dilution: 1
Units: ug/L

Instrument: ELAN-ICP
Prep Date: 11/17/2008 07:03
Cal Date: 11/17/2008 10:56
Run Date: 11/17/2008 21:02
File ID: EL.111708.210216

Analyte	CAS. Number	Result	Qual	RL	MDL
Arsenic, Total	7440-38-2	1.90		1.00	0.250
Lead, Total	7439-92-1	1.63		1.00	0.250
Antimony, Total	7440-36-0		U	1.00	0.250
Selenium, Total	7782-49-2	6.50		2.00	0.500

U Undetected; the analyte was analyzed for, but not detected.

Microbac

1047 lees 2/1/09

16

Sample Number: L08110361-16
Client ID: MR08-SW02-08D
Matrix: Water
Workgroup Number: WG288411
Collect Date: 11/11/2008 09:10
Sample Tag: 01

PrePrep Method: NONE
Prep Method: 7470A
Analytical Method: 7470A
Analyst: ADC
Dilution: 1
Units: ug/L

Instrument: HYDRA
Prep Date: 11/18/2008 08:43
Cal Date: 11/19/2008 11:40
Run Date: 11/19/2008 12:13
File ID: HY.111908.121339

Analyte	CAS. Number	Result	Qual	RL	MDL
Mercury	7439-97-6		U	0.400	0.100

U Undetected; the analyte was analyzed for, but not detected.

Microbac

2333 MW 2/1/09

17

Sample Number: L08110361-17
Client ID: MR08-SW02D-08D
Matrix: Water
Workgroup Number: WG288297
Collect Date: 11/11/2008 09:15
Sample Tag: 01

PrePrep Method: NONE
Prep Method: 3005A
Analytical Method: 6010B
Analyst: ED
Dilution: 1
Units: ug/L

Instrument: PE-ICP2
Prep Date: 11/18/2008 08:03
Cal Date: 11/19/2008 09:45
Run Date: 11/19/2008 11:06
File ID: P2.111908.110622

Analyte	CAS. Number	Result	Qual	RL	MDL
Barium, Total	7440-39-3	31.0		10.0	2.50
Cadmium, Total	7440-43-9	1.61		1.00	0.250
Chromium, Total	7440-47-3	16.5		10.0	2.50
Copper, Total	7440-50-8	157		20.0	5.00
Silver, Total	7440-22-4		U	6.00	2.00
Zinc, Total	7440-66-6	610		20.0	5.00

U Undetected; the analyte was analyzed for, but not detected.

Microbac

333 LW 2/1/09

17

Sample Number: L08110361-17
Client ID: MR08-SW02D-08D
Matrix: Water
Workgroup Number: WG288181
Collect Date: 11/11/2008 09:15
Sample Tag: 01

PrePrep Method: NONE
Prep Method: 3015
Analytical Method: 6020
Analyst: JYH
Dilution: 1
Units: ug/L

Instrument: ELAN-ICP
Prep Date: 11/17/2008 07:03
Cal Date: 11/17/2008 10:56
Run Date: 11/17/2008 21:07
File ID: EL.111708.210740

Analyte	CAS. Number	Result	Qual	RL	MDL
Arsenic, Total	7440-38-2	1.73		1.00	0.250
Lead, Total	7439-92-1	1.61		1.00	0.250
Antimony, Total	7440-36-0		U	1.00	0.250
Selenium, Total	7782-49-2	5.87		2.00	0.500

U Undetected; the analyte was analyzed for, but not detected.

Microbac

1048 lw 2/1/09

17

Sample Number: L08110361-17
Client ID: MR08-SW02D-08D
Matrix: Water
Workgroup Number: WG288411
Collect Date: 11/11/2008 09:15
Sample Tag: 01

PrePrep Method: NONE
Prep Method: 7470A
Analytical Method: 7470A
Analyst: ADC
Dilution: 1
Units: ug/L

Instrument: HYDRA
Prep Date: 11/18/2008 08:43
Cal Date: 11/19/2008 11:40
Run Date: 11/19/2008 12:15
File ID: HY.111908.121521

Analyte	CAS. Number	Result	Qual	RL	MDL
Mercury	7439-97-6		U	0.400	0.100

U Undetected; the analyte was analyzed for, but not detected.

Microbac

2334 lw 2/1/09

18

Sample Number: L08110361-18
Client ID: IR78-GW61-08D
Matrix: Water
Workgroup Number: WG288297
Collect Date: 11/10/2008 12:05
Sample Tag: 01

PrePrep Method: NONE
Prep Method: 3005A
Analytical Method: 6010B
Analyst: ED
Dilution: 1
Units: ug/L

Instrument: PE-ICP2
Prep Date: 11/18/2008 08:03
Cal Date: 11/19/2008 09:45
Run Date: 11/19/2008 11:11
File ID: P2.111908.111146

Analyte	CAS. Number	Result	Qual	RL	MDL
Barium, Total	7440-39-3	79.5		10.0	2.50
Cadmium, Total	7440-43-9		U	1.00	0.250
Chromium, Total	7440-47-3		U	10.0	2.50
Copper, Total	7440-50-8		U	20.0	5.00
Silver, Total	7440-22-4		U	6.00	2.00
Zinc, Total	7440-66-6	20U ~~5.60~~	~~J~~	20.0	5.00

BL

U Undetected; the analyte was analyzed for, but not detected.
J Estimated ; the analyte concentration was less than the low standard (LOQ)

Microbac

334 lw
21/09

18

Sample Number: L08110361-18
Client ID: IR78-GW61-08D
Matrix: Water
Workgroup Number: WG288181
Collect Date: 11/10/2008 12:05
Sample Tag: 01

PrePrep Method: NONE
Prep Method: 3015
Analytical Method: 6020
Analyst: JYH
Dilution: 1
Units: ug/L

Instrument: ELAN-ICP
Prep Date: 11/17/2008 07:03
Cal Date: 11/17/2008 10:56
Run Date: 11/17/2008 21:13
File ID: EL.111708.211305

Analyte	CAS. Number	Result	Qual	RL	MDL
Arsenic, Total	7440-38-2	0.923	J	1.00	0.250
Lead, Total	7439-92-1		U	1.00	0.250
Antimony, Total	7440-36-0		U	1.00	0.250
Selenium, Total	7782-49-2	1.16	J	2.00	0.500

U Undetected; the analyte was analyzed for, but not detected.
J Estimated ; the analyte concentration was less than the low standard (LOQ)

Microbac

1049 lw 2/1/09

18

Sample Number: L08110361-18
Client ID: IR78-GW61-08D
Matrix: Water
Workgroup Number: WG288600
Collect Date: 11/10/2008 12:05
Sample Tag: 01

PrePrep Method: NONE
Prep Method: 7470A
Analytical Method: 7470A
Analyst: ADC
Dilution: 1
Units: ug/L

Instrument: HYDRA
Prep Date: 11/17/2008 08:16
Cal Date: 11/20/2008 16:36
Run Date: 11/20/2008 17:22
File ID: HY.112008.172242

Analyte	CAS. Number	Result	Qual	RL	MDL
Mercury	7439-97-6		U	0.400	0.100

U Undetected; the analyte was analyzed for, but not detected.

Microbac

DW 2/1/09

19

Sample Number: L08110361-19
Client ID: IR78-GW03-08D
Matrix: Water
Workgroup Number: WG288297
Collect Date: 11/10/2008 15:45
Sample Tag: 01

PrePrep Method: NONE
Prep Method: 3005A
Analytical Method: 6010B
Analyst: ED
Dilution: 1
Units: ug/L

Instrument: PE-ICP2
Prep Date: 11/18/2008 08:03
Cal Date: 11/19/2008 09:45
Run Date: 11/19/2008 11:18
File ID: P2.111908.111807

Analyte	CAS. Number	Result	Qual	RL	MDL
Barium, Total	7440-39-3	26.1		10.0	2.50
Cadmium, Total	7440-43-9		U	1.00	0.250
Chromium, Total	7440-47-3		U	10.0	2.50
Copper, Total	7440-50-8		U	20.0	5.00
Silver, Total	7440-22-4		U	6.00	2.00
Zinc, Total	7440-66-6	20U ~~5.59~~	~~J~~	20.0	5.00

BL

U Undetected; the analyte was analyzed for, but not detected.
J Estimated ; the analyte concentration was less than the low standard (LOQ)

Microbac

 2/1/09

19

Sample Number: L08110361-19
Client ID: IR78-GW03-08D
Matrix: Water
Workgroup Number: WG288181
Collect Date: 11/10/2008 15:45
Sample Tag: 01

PrePrep Method: NONE
Prep Method: 3015
Analytical Method: 6020
Analyst: JYH
Dilution: 1
Units: ug/L

Instrument: ELAN-ICP
Prep Date: 11/17/2008 07:03
Cal Date: 11/17/2008 10:56
Run Date: 11/17/2008 21:18
File ID: EL.111708.211829

Analyte	CAS. Number	Result	Qual	RL	MDL
Arsenic, Total	7440-38-2	1.53		1.00	0.250
Lead, Total	7439-92-1		U	1.00	0.250
Antimony, Total	7440-36-0	7.67		1.00	0.250
Selenium, Total	7782-49-2	3.66		2.00	0.500

U Undetected; the analyte was analyzed for, but not detected.

Microbac

1050 lw 211109

19

Sample Number: L08110361-19
Client ID: IR78-GW03-08D
Matrix: Water
Workgroup Number: WG288600
Collect Date: 11/10/2008 15:45
Sample Tag: 01

PrePrep Method: NONE
Prep Method: 7470A
Analytical Method: 7470A
Analyst: ADC
Dilution: 1
Units: ug/L

Instrument: HYDRA
Prep Date: 11/17/2008 08:16
Cal Date: 11/20/2008 16:36
Run Date: 11/20/2008 17:26
File ID: HY.112008.172636

Analyte	CAS. Number	Result	Qual	RL	MDL
Mercury	7439-97-6		U	0.400	0.100

U Undetected; the analyte was analyzed for, but not detected.

Microbac

MW 2/1/09

20

Sample Number: L08110361-20
Client ID: MR08-EB111008
Matrix: Water
Workgroup Number: WG288297
Collect Date: 11/10/2008 16:45
Sample Tag: 01

PrePrep Method: NONE
Prep Method: 3005A
Analytical Method: 6010B
Analyst: ED
Dilution: 1
Units: ug/L

Instrument: PE-ICP2
Prep Date: 11/18/2008 08:03
Cal Date: 11/19/2008 09:45
Run Date: 11/19/2008 11:36
File ID: P2.111908.113657

Analyte	CAS. Number	Result	Qual	RL	MDL
Barium, Total	7440-39-3		U	10.0	2.50
Cadmium, Total	7440-43-9		U	1.00	0.250
Chromium, Total	7440-47-3		U	10.0	2.50
Copper, Total	7440-50-8		U	20.0	5.00
Silver, Total	7440-22-4		U	6.00	2.00
Zinc, Total	7440-66-6	7.05	J	20.0	5.00

U Undetected; the analyte was analyzed for, but not detected.
J Estimated ; the analyte concentration was less than the low standard (LOQ)

Microbac

 RW 2/1/09

20

Sample Number: L08110361-20
Client ID: MR08-EB111008
Matrix: Water
Workgroup Number: WG288181
Collect Date: 11/10/2008 16:45
Sample Tag: 01

PrePrep Method: NONE
Prep Method: 3015
Analytical Method: 6020
Analyst: JYH
Dilution: 1
Units: ug/L

Instrument: ELAN-ICP
Prep Date: 11/17/2008 07:03
Cal Date: 11/17/2008 10:56
Run Date: 11/17/2008 21:23
File ID: EL.111708.212354

Analyte	CAS. Number	Result	Qual	RL	MDL
Arsenic, Total	7440-38-2		U	1.00	0.250
Lead, Total	7439-92-1		U	1.00	0.250
Antimony, Total	7440-36-0		U	1.00	0.250
Selenium, Total	7782-49-2		U	2.00	0.500

U Undetected; the analyte was analyzed for, but not detected.

Microbac

 lw 2/1/09

20

Sample Number: L08110361-20
Client ID: MR08-EB111008
Matrix: Water
Workgroup Number: WG288600
Collect Date: 11/10/2008 16:45
Sample Tag: 01

PrePrep Method: NONE
Prep Method: 7470A
Analytical Method: 7470A
Analyst: ADC
Dilution: 1
Units: ug/L

Instrument: HYDRA
Prep Date: 11/17/2008 08:16
Cal Date: 11/20/2008 16:36
Run Date: 11/20/2008 17:33
File ID: HY.112008.173330

Analyte	CAS. Number	Result	Qual	RL	MDL
Mercury	7439-97-6		U	0.400	0.100

U Undetected; the analyte was analyzed for, but not detected.

Microbac

lw 2/1/09

21

Sample Number: L08110361-21
Client ID: IR78-GW02-08D
Matrix: Water
Workgroup Number: WG288297
Collect Date: 11/11/2008 09:10
Sample Tag: 01

PrePrep Method: NONE
Prep Method: 3005A
Analytical Method: 6010B
Analyst: ED
Dilution: 1
Units: ug/L

Instrument: PE-ICP2
Prep Date: 11/18/2008 08:03
Cal Date: 11/19/2008 09:45
Run Date: 11/19/2008 11:43
File ID: P2.111908.114311

Analyte	CAS. Number	Result	Qual	RL	MDL
Barium, Total	7440-39-3	28.7		10.0	2.50
Cadmium, Total	7440-43-9		U	1.00	0.250
Chromium, Total	7440-47-3		U	10.0	2.50
Copper, Total	7440-50-8		U	20.0	5.00
Silver, Total	7440-22-4		U	6.00	2.00
Zinc, Total	7440-66-6	5.80	~~J~~	20.0	5.00

BL

U Undetected; the analyte was analyzed for, but not detected.
J Estimated ; the analyte concentration was less than the low standard (LOQ)

Microbac

 lw 21.109

21

Sample Number: L08110361-21
Client ID: IR78-GW02-08D
Matrix: Water
Workgroup Number: WG288181
Collect Date: 11/11/2008 09:10
Sample Tag: 01

PrePrep Method: NONE
Prep Method: 3015
Analytical Method: 6020
Analyst: JYH
Dilution: 1
Units: ug/L

Instrument: ELAN-ICP
Prep Date: 11/17/2008 07:03
Cal Date: 11/17/2008 10:56
Run Date: 11/17/2008 21:29
File ID: EL.111708.212919

Analyte	CAS. Number	Result	Qual	RL	MDL
Arsenic, Total	7440-38-2	0.908	J	1.00	0.250
Lead, Total	7439-92-1		U	1.00	0.250
Antimony, Total	7440-36-0	1.34		1.00	0.250
Selenium, Total	7782-49-2	1.46	J	2.00	0.500

U Undetected; the analyte was analyzed for, but not detected.
J Estimated ; the analyte concentration was less than the low standard (LOQ)

Microbac

Jul 21/09

21

Sample Number: L08110361-21
Client ID: IR78-GW02-08D
Matrix: Water
Workgroup Number: WG288600
Collect Date: 11/11/2008 09:10
Sample Tag: 01

PrePrep Method: NONE
Prep Method: 7470A
Analytical Method: 7470A
Analyst: ADC
Dilution: 1
Units: ug/L

Instrument: HYDRA
Prep Date: 11/17/2008 08:16
Cal Date: 11/20/2008 16:36
Run Date: 11/20/2008 17:35
File ID: HY.112008.173518

Analyte	CAS. Number	Result	Qual	RL	MDL
Mercury	7439-97-6		U	0.400	0.100

U Undetected; the analyte was analyzed for, but not detected.

Microbac

2338 MW 2/1/09

22

Sample Number: L08110361-22
Client ID: IR78-GW02D-08D
Matrix: Water
Workgroup Number: WG288297
Collect Date: 11/11/2008 09:10
Sample Tag: 01

PrePrep Method: NONE
Prep Method: 3005A
Analytical Method: 6010B
Analyst: ED
Dilution: 1
Units: ug/L

Instrument: PE-ICP2
Prep Date: 11/18/2008 08:03
Cal Date: 11/19/2008 09:45
Run Date: 11/19/2008 11:49
File ID: P2.111908.114929

Analyte	CAS. Number	Result	Qual	RL	MDL
Barium, Total	7440-39-3	28.2		10.0	2.50
Cadmium, Total	7440-43-9		U	1.00	0.250
Chromium, Total	7440-47-3		U	10.0	2.50
Copper, Total	7440-50-8		U	20.0	5.00
Silver, Total	7440-22-4		U	6.00	2.00
Zinc, Total	7440-66-6	20U ~~5.70~~	~~J~~	20.0	5.00

BL

U Undetected; the analyte was analyzed for, but not detected.
J Estimated ; the analyte concentration was less than the low standard (LOQ)

Microbac

338 LW 2/1/09

22

Sample Number: L08110361-22
Client ID: IR78-GW02D-08D
Matrix: Water
Workgroup Number: WG288181
Collect Date: 11/11/2008 09:10
Sample Tag: 01

PrePrep Method: NONE
Prep Method: 3015
Analytical Method: 6020
Analyst: JYH
Dilution: 1
Units: ug/L

Instrument: ELAN-ICP
Prep Date: 11/17/2008 07:03
Cal Date: 11/17/2008 10:56
Run Date: 11/17/2008 21:46
File ID: EL.111708.214608

Analyte	CAS. Number	Result	Qual	RL	MDL
Arsenic, Total	7440-38-2	1.02		1.00	0.250
Lead, Total	7439-92-1		U	1.00	0.250
Antimony, Total	7440-36-0	1.52		1.00	0.250
Selenium, Total	7782-49-2	1.54	J	2.00	0.500

U Undetected; the analyte was analyzed for, but not detected.
J Estimated ; the analyte concentration was less than the low standard (LOQ)

Microbac

1053 hw 2/1/09

22

Sample Number: L08110361-22
Client ID: IR78-GW02D-08D
Matrix: Water
Workgroup Number: WG288600
Collect Date: 11/11/2008 09:10
Sample Tag: 01

PrePrep Method: NONE
Prep Method: 7470A
Analytical Method: 7470A
Analyst: ADC
Dilution: 1
Units: ug/L

Instrument: HYDRA
Prep Date: 11/17/2008 08:16
Cal Date: 11/20/2008 16:36
Run Date: 11/20/2008 17:37
File ID: HY.112008.173701

Analyte	CAS. Number	Result	Qual	RL	MDL
Mercury	7439-97-6	0.114	J	0.400	0.100

J Estimated ; the analyte concentration was less than the low standard (LOQ)

Microbac

2339 2/1/09

23

Sample Number: L08110361-23
Client ID: IR78-GW42-08D
Matrix: Water
Workgroup Number: WG288297
Collect Date: 11/11/2008 11:40
Sample Tag: 01

PrePrep Method: NONE
Prep Method: 3005A
Analytical Method: 6010B
Analyst: ED
Dilution: 1
Units: ug/L

Instrument: PE-ICP2
Prep Date: 11/18/2008 08:03
Cal Date: 11/19/2008 09:45
Run Date: 11/19/2008 11:55
File ID: P2.111908.115550

Analyte	CAS. Number	Result	Qual	RL	MDL
Barium, Total	7440-39-3	62.6		10.0	2.50
Cadmium, Total	7440-43-9		U	1.00	0.250
Chromium, Total	7440-47-3		U	10.0	2.50
Copper, Total	7440-50-8		U	20.0	5.00
Silver, Total	7440-22-4		U	6.00	2.00
Zinc, Total	7440-66-6	20U ~~5.26~~	~~J~~	20.0	5.00

BL

U Undetected; the analyte was analyzed for, but not detected.
J Estimated ; the analyte concentration was less than the low standard (LOQ)

Microbac

 21/09

23

Sample Number: L08110361-23
Client ID: IR78-GW42-08D
Matrix: Water
Workgroup Number: WG288181
Collect Date: 11/11/2008 11:40
Sample Tag: 01

PrePrep Method: NONE
Prep Method: 3015
Analytical Method: 6020
Analyst: JYH
Dilution: 1
Units: ug/L

Instrument: ELAN-ICP
Prep Date: 11/17/2008 07:03
Cal Date: 11/17/2008 10:56
Run Date: 11/17/2008 21:51
File ID: EL.111708.215134

Analyte	CAS. Number	Result	Qual	RL	MDL
Arsenic, Total	7440-38-2	0.547	J	1.00	0.250
Lead, Total	7439-92-1		U	1.00	0.250
Antimony, Total	7440-36-0		U	1.00	0.250
Selenium, Total	7782-49-2	1.14	J	2.00	0.500

U Undetected; the analyte was analyzed for, but not detected.
J Estimated ; the analyte concentration was less than the low standard (LOQ)

Microbac

 LW 2/1/09

23

Sample Number: L08110361-23
Client ID: IR78-GW42-08D
Matrix: Water
Workgroup Number: WG288600
Collect Date: 11/11/2008 11:40
Sample Tag: 01

PrePrep Method: NONE
Prep Method: 7470A
Analytical Method: 7470A
Analyst: ADC
Dilution: 1
Units: ug/L

Instrument: HYDRA
Prep Date: 11/17/2008 08:16
Cal Date: 11/20/2008 16:36
Run Date: 11/20/2008 17:39
File ID: HY.112008.173902

Analyte	CAS. Number	Result	Qual	RL	MDL
Mercury	7439-97-6		U	0.400	0.100

U Undetected; the analyte was analyzed for, but not detected.

Microbac

2340 lw 2/1/09

24

Sample Number: L08110361-24
Client ID: MR08-SS379-08D
Matrix: Soil
Workgroup Number: WG288096
Collect Date: 11/11/2008 13:00
Sample Tag: 01

PrePrep Method: NONE
Prep Method: 3051
Analytical Method: 6010B
Analyst: KHR
Dilution: 1
Units: mg/kg

Instrument: IRIS-ICP
Prep Date: 11/14/2008 14:48
Cal Date: 11/17/2008 09:54
Run Date: 11/17/2008 13:58
File ID: IR.111708.135800
Percent Solid: 100

Analyte	CAS. Number	Result	Qual	RL	MDL
Silver, Total	7440-22-4	0.253	J	0.727	0.182
Barium, Total	7440-39-3	18.3		0.364	0.0727
Cadmium, Total	7440-43-9	0.122	J	0.145	0.0364
Chromium, Total	7440-47-3	10.9		0.727	0.0873

J Estimated ; the analyte concentration was less than the low standard (LOQ)

Microbac

340 µw
2/1/09

24

Sample Number: L08110361-24
Client ID: MR08-SS379-08D
Matrix: Soil
Workgroup Number: WG288183
Collect Date: 11/11/2008 13:00
Sample Tag: 01

PrePrep Method: NONE
Prep Method: 3051
Analytical Method: 6020
Analyst: JYH
Dilution: 1
Units: mg/kg

Instrument: ELAN-ICP
Prep Date: 11/17/2008 07:43
Cal Date: 11/21/2008 10:09
Run Date: 11/21/2008 12:11
File ID: EL.112108.121131
Percent Solid: 100

Analyte	CAS. Number	Result	Qual	RL	MDL
Arsenic, Total	7440-38-2	1.26		0.295	0.0737
Lead, Total	7439-92-1	23.1		0.393	0.0982
Selenium, Total	7782-49-2	0.244	J	0.393	0.0982

J Estimated ; the analyte concentration was less than the low standard (LOQ)

Microbac

1055 lew 21.109

24

Sample Number: L08110361-24
Client ID: MR08-SS379-08D
Matrix: Soil
Workgroup Number: WG288234
Collect Date: 11/11/2008 13:00
Sample Tag: 01

PrePrep Method: NONE
Prep Method: 7471A
Analytical Method: 7471A
Analyst: ADC
Dilution: 1
Units: mg/kg

Instrument: HYDRA
Prep Date: 11/17/2008 08:35
Cal Date: 11/18/2008 13:33
Run Date: 11/18/2008 14:07
File ID: HY.111808.140731
Percent Solid: 100

Analyte	CAS. Number	Result	Qual	RL	MDL
Mercury, Total	7439-97-6	0.0420	J	0.0974	0.0195

J Estimated ; the analyte concentration was less than the low standard (LOQ)

Microbac

2341 2/1/09

EXPLOSIVES, PETN, NITROGLYCERIN
USEPA Region IV - Level IV Review

Site: MCB Camp Lejeune, TO-09 SDG #: L08110433

Client: CH2M HILL, Inc., Virginia Beach, Virginia Date: February 4, 2009

Laboratory: Microbac Laboratories, Inc., Marietta, Ohio Reviewer: Nancy Weaver

EDS ID	Client Sample ID	Laboratory Sample ID	Matrix
1	IR78-GW56-08D	L07110433-01	Water
2MS	IR78-GW56-08DMS	L07110433-02	Water
3MSD	IR78-GW56-08DMSD	L07110433-03	Water
4	IR78-GW57-08D	L07110433-18	Water
5	IR78-GW57D-08D	L07110433-19	Water
6	IR78-GW01-08D	L07110433-20	Water
7	IR78-GW59-08D	L07110433-21	Water
8	IR78-GW59D-08D	L07110433-22	Water
9	IR78-GW04-08D	L07110433-24	Water
10	MR08-SS377-08D	L07110433-25	Soil
11	MR08-SS377D-08D	L07110433-26	Soil
12	MR08-SS376-08D	L07110433-27	Soil
13	MR08-SS375-08D	L07110433-28	Soil
14MS	MR08-SS375-08DMS	L07110433-29MS	Soil
15MSD	MR08-SS375-08DMSD	L07110433-30MSD	Soil
16	MR08-SS374-08D	L07110433-31	Soil
17	MR08-SS374D-08D	L07110433-32	Soil
18	MR08-EB111208-1	L07110433-33	Water

The USEPA "Contract Laboratory Program National Functional Guidelines for Organic Data Review," October 1999, and professional judgement were used in evaluating the data in this summary report.

Holding Times - All samples were extracted within 7 days for water samples, 14 days for soil samples and analyzed within 40 days.

Initial Calibration - The initial calibrations exhibited acceptable %RSD and/or correlation coefficient values.

Calibration Verification - The continuing calibrations exhibited acceptable %D values.

Surrogates - All samples exhibited acceptable surrogate recoveries.

MS/MSD - The MS/MSD sample exhibited acceptable %R and RPD values except the following.

MS/MSD Sample ID	Compound	MS/MSD %R/RPD	Qualifier
1	HMX	76.4%/Ok/Ok	J/UJ
13	1,3,5-Trinitrobenzene	67%/54.4%/Ok	J/UJ
	1,3-Dinitrobenzene	70.3%/63.3%/Ok	J/UJ
	2,4,6-Trinitrotoluene	56.8%/48.1%/Ok	J/UJ
	2,4-Dinitrotoluene	79.5%/70.5/Ok	J/UJ
	2,6-Dinitrotoluene	54.2%/43.6%/Ok	J/UJ
	2-Amino-4,6-dinitrotoluene	58.6%/51.4%/Ok	J/UJ
	2-Nitrotoluene	76.7%/72.5% /Ok	J/UJ
	3-Nitrotoluene	Ok/69.9%/Ok	J/UJ
	4-Nitrotoluene	Ok/74.2%/Ok	J/UJ
	4-Amino-2,6,-dinitrotoluene	64.9%/57.4%/Ok	J/UJ
	HMX	62.7%/52.9%/Ok	J/UJ
	RDX	Ok/62.9%/Ok	J/UJ
	Tetryl	38.2%/24.3%/45	J/UJ

Laboratory Control Sample - The LCS samples exhibited acceptable %R values except the following.

LCS ID	Compound	%R	Qualifier	Affected Samples
WG288220-03	HMX	79.1%	J/UJ	2, 4-9, 18
WG288286-04	2-Amino-4,6-dinitrotoluene	78.3%	J/UJ	10-12, 16, 17

Method Blank - The method blanks were free of contamination.

Field and Equipment Blank - Field QC results are summarized below.

Blank ID	Compound	Conc. ug/L	Action Level ug/L	Qualifier	Affected Samples
MR08-EB111208	None - ND	-	-	-	-
MR08-EB111208-1	None - ND	-	-	-	-
MR08-EB111208-2	None - ND	-	-	-	-
MR08-EB111108-1	None - ND	-	-	-	-
MR08-FB111108	None - ND	-	-	-	-

Field Duplicates - Field duplicate results are summarized below.

Compound	IR78-GW57-08D ug/L	IR78-GW57D-08D ug/L	RPD	Qualifier
None	ND	ND	-	-

Compound	IR78-GW59-08D ug/L	IR78-GW59D-08D ug/L	RPD	Qualifier
None	ND	ND	-	-

Compound	MR08-SS377-08D mg/kg	MR08-SS377D-08D mg/kg	RPD	Qualifier
None	ND	ND	-	-

Compound	MR08-SS374-08D mg/kg	MR08-SS374D-08D mg/kg	RPD	Qualifier
None	ND	ND	-	-

Compound Identification - Retention times were acceptable and no further action was taken.

Compound Quantitation - No discrepancies were identified.

ENVIRONMENTAL
Data Services, Inc.

EXPLOSIVES, PETN, NITROGLYCERIN

USEPA Region IV - Level IV Review

Site: MCB Camp Lejeune, TO-09 SDG #: L08110433

Client: CH2M HILL, Inc., Virginia Beach, Virginia Date: February 4, 2009

Laboratory: Microbac Laboratories, Inc., Marietta, Ohio Reviewer: Nancy Weaver

EDS ID	Client Sample ID	Laboratory Sample ID	Matrix
1	IR78-GW56-08D	L07110433-01	Water
2MS	IR78-GW56-08DMS	L07110433-02	Water
3MSD	IR78-GW56-08DMSD	L07110433-03	Water
4	IR78-GW57-08D	L07110433-18	Water
5	IR78-GW57D-08D	L07110433-19	Water
6	IR78-GW01-08D	L07110433-20	Water
7	IR78-GW59-08D	L07110433-21	Water
8	IR78-GW59D-08D	L07110433-22	Water
9	IR78-GW04-08D	L07110433-24	Water
10	MR08-SS377-08D	L07110433-25	Soil
11	MR08-SS377D-08D	L07110433-26	Soil
12	MR08-SS376-08D	L07110433-27	Soil
13	MR08-SS375-08D	L07110433-28	Soil
14MS	MR08-SS375-08DMS	L07110433-29MS	Soil
15MSD	MR08-SS375-08DMSD	L07110433-30MSD	Soil
16	MR08-SS374-08D	L07110433-31	Soil
17	MR08-SS374D-08D	L07110433-32	Soil
18	MR08-EB111208-1	L07110433-33	Water

The USEPA "Contract Laboratory Program National Functional Guidelines for Organic Data Review," October 1999, and professional judgement were used in evaluating the data in this summary report.

Holding Times - All samples were extracted within 7 days for water samples, 14 days for soil samples and analyzed within 40 days.

Initial Calibration - The initial calibrations exhibited acceptable %RSD and/or correlation coefficient values.

Calibration Verification - The continuing calibrations exhibited acceptable %D values.

Surrogates - All samples exhibited acceptable surrogate recoveries.

MS/MSD - The MS/MSD sample exhibited acceptable %R and RPD values except the following.

MS/MSD Sample ID	Compound	MS/MSD %R/RPD	Qualifier
1	HMX	76.4%/Ok/Ok	J/UJ
13	1,3,5-Trinitrobenzene	67%/54.4%/Ok	J/UJ
	1,3-Dinitrobenzene	70.3%/63.3%/Ok	J/UJ
	2,4,6-Trinitrotoluene	56.8%/48.1%/Ok	J/UJ
	2,4-Dinitrotoluene	79.5%/70.5/Ok	J/UJ
	2,6-Dinitrotoluene	54.2%/43.6%/Ok	J/UJ
	2-Amino-4,6-dinitrotoluene	58.6%/51.4%/Ok	J/UJ
	2-Nitrotoluene	76.7%/72.5% /Ok	J/UJ
	3-Nitrotoluene	Ok/69.9%/Ok	J/UJ
	4-Nitrotoluene	Ok/74.2%/Ok	J/UJ
	4-Amino-2,6,-dinitrotoluene	64.9%/57.4%/Ok	J/UJ
	HMX	62.7%/52.9%/Ok	J/UJ
	RDX	Ok/62.9%/Ok	J/UJ
	Tetryl	38.2%/24.3%/45	J/UJ

Laboratory Control Sample - The LCS samples exhibited acceptable %R values except the following.

LCS ID	Compound	%R	Qualifier	Affected Samples
WG288220-03	HMX	79.1%	J/UJ	2, 4-9, 18
WG288286-04	2-Amino-4,6-dinitrotoluene	78.3%	J/UJ	10-12, 16, 17

Method Blank - The method blanks were free of contamination.

Field and Equipment Blank - Field QC results are summarized below.

Blank ID	Compound	Conc. ug/L	Action Level ug/L	Qualifier	Affected Samples
MR08-EB111208	None - ND	-	-	-	-
MR08-EB111208-1	None - ND	-	-	-	-
MR08-EB111208-2	None - ND	-	-	-	-
MR08-EB111108-1	None - ND	-	-	-	-
MR08-FB111108	None - ND	-	-	-	-

Field Duplicates - Field duplicate results are summarized below.

Compound	IR78-GW57-08D ug/L	IR78-GW57D-08D ug/L	RPD	Qualifier
None	ND	ND	-	-

Compound	IR78-GW59-08D ug/L	IR78-GW59D-08D ug/L	RPD	Qualifier
None	ND	ND	-	-

Compound	MR08-SS377-08D mg/kg	MR08-SS377D-08D mg/kg	RPD	Qualifier
None	ND	ND	-	-

Compound	MR08-SS374-08D mg/kg	MR08-SS374D-08D mg/kg	RPD	Qualifier
None	ND	ND	-	-

Compound Identification - Retention times were acceptable and no further action was taken.

Compound Quantitation - No discrepancies were identified.

Report Number: L08110433

Report Date : **December 3, 2008**

Sample Number:	L08110433-01	PrePrep Method:	NONE	Instrument:	HPLC5
Client ID:	IR78-GW56-08D	Prep Method:	3535	Prep Date:	11/18/2008 07:30
Matrix:	Water	Analytical Method:	8330MOD	Cal Date:	08/12/2008 15:23
Workgroup Number:	WG288315	Analyst:	ECL	Run Date:	11/24/2008 18:53
Collect Date:	11/13/2008 10:00	Dilution:	1	File ID:	5L002903.F
Sample Tag:	02	Units:	ug/L		

Analyte	CAS. Number	Result	Qual	RL	MDL
PETN	78-11-5		U	1.02	0.255

U Undetected; the analyte was analyzed for, but not detected.

Microbac

17 lw 2/4/09

Report Number: L08110433
Report Date : December 3, 2008

1

Sample Number: L08110433-01
Client ID: IR78-GW56-08D
Matrix: Water
Workgroup Number: WG288315
Collect Date: 11/13/2008 10:00
Sample Tag: 01

PrePrep Method: NONE
Prep Method: 3535
Analytical Method: 8330MOD
Analyst: JWR
Dilution: 1
Units: ug/L

Instrument: HPLC5
Prep Date: 11/18/2008 07:30
Cal Date: 08/12/2008 15:23
Run Date: 11/20/2008 02:32
File ID: 5L002830.F

Analyte	CAS. Number	Result	Qual	RL	MDL
1,3,5-Trinitrobenzene	99-35-4		U	1.02	0.255
1,3-Dinitrobenzene	99-65-0		U	1.02	0.255
2,4,6-Trinitrotoluene	118-96-7		U	1.02	0.255
2,4-Dinitrotoluene	121-14-2		U	1.02	0.255
2,6-Dinitrotoluene	606-20-2		U	1.02	0.255
2-Amino-4,6-dinitrotoluene	35572-78-2		U	1.02	0.255
2-Nitrotoluene	88-72-2		U	1.02	0.255
3-Nitrotoluene	99-08-1		U	1.02	0.255
4-Nitrotoluene	99-99-0		U	1.02	0.255
4-Amino-2,6-dinitrotoluene	19406-51-0		U	1.02	0.255
HMX	2691-41-0		WJ ~~U~~	1.02	0.255 MSL
Nitrobenzene	98-95-3		U	1.02	0.255
RDX	121-82-4		U	1.02	0.255
Tetryl	479-45-8		U	1.02	0.255
Nitroglycerin	55-63-0		U	1.02	0.255

Surrogate	% Recovery	Lower	Upper	Qual
1,2-Dinitrobenzene	116	50	150	

U Undetected; the analyte was analyzed for, but not detected.

Microbac

16 MW 2/4/09

4

Sample Number: L08110433-18
Client ID: IR78-GW57-08D
Matrix: Water
Workgroup Number: WG288315
Collect Date: 11/12/2008 09:45
Sample Tag: 02

PrePrep Method: NONE
Prep Method: 3535
Analytical Method: 8330MOD
Analyst: ECL
Dilution: 1
Units: ug/L

Instrument: HPLC5
Prep Date: 11/18/2008 07:30
Cal Date: 08/12/2008 15:23
Run Date: 11/24/2008 19:06
File ID: 5L002904.F

Analyte	CAS. Number	Result	Qual	RL	MDL
PETN	78-11-5		U	1.00	0.250

U Undetected; the analyte was analyzed for, but not detected.

Microbac®

20 MW
2/4/09

4

Sample Number: L08110433-18
Client ID: IR78-GW57-08D
Matrix: Water
Workgroup Number: WG288315
Collect Date: 11/12/2008 09:45
Sample Tag: 01

PrePrep Method: NONE
Prep Method: 3535
Analytical Method: 8330MOD
Analyst: JWR
Dilution: 1
Units: ug/L

Instrument: HPLC5
Prep Date: 11/18/2008 07:30
Cal Date: 08/12/2008 15:23
Run Date: 11/20/2008 06:01
File ID: 5L002836.F

Analyte	CAS. Number	Result	Qual	RL	MDL
1,3,5-Trinitrobenzene	99-35-4		U	1.00	0.250
1,3-Dinitrobenzene	99-65-0		U	1.00	0.250
2,4,6-Trinitrotoluene	118-96-7		U	1.00	0.250
2,4-Dinitrotoluene	121-14-2		U	1.00	0.250
2,6-Dinitrotoluene	606-20-2		U	1.00	0.250
2-Amino-4,6-dinitrotoluene	35572-78-2		U	1.00	0.250
2-Nitrotoluene	88-72-2		U	1.00	0.250
3-Nitrotoluene	99-08-1		U	1.00	0.250
4-Nitrotoluene	99-99-0		U	1.00	0.250
4-Amino-2,6-dinitrotoluene	19406-51-0		U	1.00	0.250
HMX	2691-41-0		UJ ~~U~~	1.00	0.250
Nitrobenzene	98-95-3		U	1.00	0.250
RDX	121-82-4		U	1.00	0.250
Tetryl	479-45-8		U	1.00	0.250
Nitroglycerin	55-63-0		U	1.00	0.250

BSL

Surrogate	% Recovery	Lower	Upper	Qual
1,2-Dinitrobenzene	113	50	150	

U Undetected; the analyte was analyzed for, but not detected.

Microbac

21 LW 2/4/09

5

Sample Number: L08110433-19
Client ID: IR78-GW57D-08D
Matrix: Water
Workgroup Number: WG288315
Collect Date: 11/12/2008 09:50
Sample Tag: 02

PrePrep Method: NONE
Prep Method: 3535
Analytical Method: 8330MOD
Analyst: ECL
Dilution: 1
Units: ug/L

Instrument: HPLC5
Prep Date: 11/18/2008 07:30
Cal Date: 08/12/2008 15:23
Run Date: 11/24/2008 19:20
File ID: 5L002905.F

Analyte	CAS. Number	Result	Qual	RL	MDL
PETN	78-11-5		U	1.00	0.250

U Undetected; the analyte was analyzed for, but not detected.

Microbac

23 LW 2/4/09

5

Sample Number: L08110433-19
Client ID: IR78-GW57D-08D
Matrix: Water
Workgroup Number: WG288315
Collect Date: 11/12/2008 09:50
Sample Tag: 01

PrePrep Method: NONE
Prep Method: 3535
Analytical Method: 8330MOD
Analyst: JWR
Dilution: 1
Units: ug/L

Instrument: HPLC5
Prep Date: 11/18/2008 07:30
Cal Date: 08/12/2008 15:23
Run Date: 11/20/2008 06:39
File ID: 5L002837.F

Analyte	CAS. Number	Result	Qual	RL	MDL
1,3,5-Trinitrobenzene	99-35-4		U	1.00	0.250
1,3-Dinitrobenzene	99-65-0		U	1.00	0.250
2,4,6-Trinitrotoluene	118-96-7		U	1.00	0.250
2,4-Dinitrotoluene	121-14-2		U	1.00	0.250
2,6-Dinitrotoluene	606-20-2		U	1.00	0.250
2-Amino-4,6-dinitrotoluene	35572-78-2		U	1.00	0.250
2-Nitrotoluene	88-72-2		U	1.00	0.250
3-Nitrotoluene	99-08-1		U	1.00	0.250
4-Nitrotoluene	99-99-0		U	1.00	0.250
4-Amino-2,6-dinitrotoluene	19406-51-0		U	1.00	0.250
HMX	2691-41-0		UJ ~~U~~	1.00	0.250 BSL
Nitrobenzene	98-95-3		U	1.00	0.250
RDX	121-82-4		U	1.00	0.250
Tetryl	479-45-8		U	1.00	0.250
Nitroglycerin	55-63-0		U	1.00	0.250

Surrogate	% Recovery	Lower	Upper	Qual
1,2-Dinitrobenzene	119	50	150	

U Undetected; the analyte was analyzed for, but not detected.

Microbac

22 MW 2/4/09

4

Sample Number: L08110433-20
Client ID: IR78-GW01-08D
Matrix: Water
Workgroup Number: WG288315
Collect Date: 11/12/2008 12:10
Sample Tag: 02

PrePrep Method: NONE
Prep Method: 3535
Analytical Method: 8330MOD
Analyst: ECL
Dilution: 1
Units: ug/L

Instrument: HPLC5
Prep Date: 11/18/2008 07:30
Cal Date: 08/12/2008 15:23
Run Date: 11/24/2008 19:33
File ID: 5L002906.F

Analyte	CAS. Number	Result	Qual	RL	MDL
PETN	78-11-5		U	1.00	0.250

U Undetected; the analyte was analyzed for, but not detected.

Microbac

24 LW 2/4/09

6

Sample Number: L08110433-20
Client ID: IR78-GW01-08D
Matrix: Water
Workgroup Number: WG288315
Collect Date: 11/12/2008 12:10
Sample Tag: 01

PrePrep Method: NONE
Prep Method: 3535
Analytical Method: 8330MOD
Analyst: JWR
Dilution: 1
Units: ug/L

Instrument: HPLC5
Prep Date: 11/18/2008 07:30
Cal Date: 08/12/2008 15:23
Run Date: 11/20/2008 07:17
File ID: 5L002838.F

Analyte	CAS. Number	Result	Qual	RL	MDL
1,3,5-Trinitrobenzene	99-35-4		U	1.00	0.250
1,3-Dinitrobenzene	99-65-0		U	1.00	0.250
2,4,6-Trinitrotoluene	118-96-7		U	1.00	0.250
2,4-Dinitrotoluene	121-14-2		U	1.00	0.250
2,6-Dinitrotoluene	606-20-2		U	1.00	0.250
2-Amino-4,6-dinitrotoluene	35572-78-2		U	1.00	0.250
2-Nitrotoluene	88-72-2		U	1.00	0.250
3-Nitrotoluene	99-08-1		U	1.00	0.250
4-Nitrotoluene	99-99-0		U	1.00	0.250
4-Amino-2,6-dinitrotoluene	19406-51-0		U	1.00	0.250
HMX	2691-41-0		U ~~J~~	1.00	0.250 BSL
Nitrobenzene	98-95-3		U	1.00	0.250
RDX	121-82-4		U	1.00	0.250
Tetryl	479-45-8		U	1.00	0.250
Nitroglycerin	55-63-0		U	1.00	0.250

Surrogate	% Recovery	Lower	Upper	Qual
1,2-Dinitrobenzene	114	50	150	

U Undetected; the analyte was analyzed for, but not detected.

Microbac

25 MW 2/4/09

7

Sample Number: L08110433-21
Client ID: IR78-GW59-08D
Matrix: Water
Workgroup Number: WG288315
Collect Date: 11/12/2008 14:05
Sample Tag: 02

PrePrep Method: NONE
Prep Method: 3535
Analytical Method: 8330MOD
Analyst: ECL
Dilution: 1
Units: ug/L

Instrument: HPLC5
Prep Date: 11/18/2008 07:30
Cal Date: 08/12/2008 15:23
Run Date: 11/24/2008 20:25
File ID: 5L002910.F

Analyte	CAS. Number	Result	Qual	RL	MDL
PETN	78-11-5		U	1.00	0.250

U Undetected; the analyte was analyzed for, but not detected.

Microbac

 lw 2/4/09

7

Sample Number: L08110433-21
Client ID: IR78-GW59-08D
Matrix: Water
Workgroup Number: WG288315
Collect Date: 11/12/2008 14:05
Sample Tag: 01

PrePrep Method: NONE
Prep Method: 3535
Analytical Method: 8330MOD
Analyst: JWR
Dilution: 1
Units: ug/L

Instrument: HPLC5
Prep Date: 11/18/2008 07:30
Cal Date: 08/12/2008 15:23
Run Date: 11/20/2008 07:55
File ID: 5L002839.F

Analyte	CAS. Number	Result	Qual	RL	MDL
1,3,5-Trinitrobenzene	99-35-4		U	1.00	0.250
1,3-Dinitrobenzene	99-65-0		U	1.00	0.250
2,4,6-Trinitrotoluene	118-96-7		U	1.00	0.250
2,4-Dinitrotoluene	121-14-2		U	1.00	0.250
2,6-Dinitrotoluene	606-20-2		U	1.00	0.250
2-Amino-4,6-dinitrotoluene	35572-78-2		U	1.00	0.250
2-Nitrotoluene	88-72-2		U	1.00	0.250
3-Nitrotoluene	99-08-1		U	1.00	0.250
4-Nitrotoluene	99-99-0		U	1.00	0.250
4-Amino-2,6-dinitrotoluene	19406-51-0		U	1.00	0.250
HMX	2691-41-0		UJ ~~U~~	1.00	0.250 BSL
Nitrobenzene	98-95-3		U	1.00	0.250
RDX	121-82-4		U	1.00	0.250
Tetryl	479-45-8		U	1.00	0.250
Nitroglycerin	55-63-0		U	1.00	0.250

Surrogate	% Recovery	Lower	Upper	Qual
1,2-Dinitrobenzene	122	50	150	

U Undetected; the analyte was analyzed for, but not detected.

Microbac

27 LW 2/4/09

8

Sample Number: L08110433-22
Client ID: IR78-GW59D-08D
Matrix: Water
Workgroup Number: WG288315
Collect Date: 11/12/2008 14:10
Sample Tag: 02

PrePrep Method: NONE
Prep Method: 3535
Analytical Method: 8330MOD
Analyst: ECL
Dilution: 1
Units: ug/L

Instrument: HPLC5
Prep Date: 11/18/2008 07:30
Cal Date: 08/12/2008 15:23
Run Date: 11/24/2008 20:38
File ID: 5L002911.F

Analyte	CAS. Number	Result	Qual	RL	MDL
PETN	78-11-5		U	1.00	0.250

U Undetected; the analyte was analyzed for, but not detected.

Microbac

29 luw 2/4/09

8

Sample Number: L08110433-22
Client ID: IR78-GW59D-08D
Matrix: Water
Workgroup Number: WG288315
Collect Date: 11/12/2008 14:10
Sample Tag: 01

PrePrep Method: NONE
Prep Method: 3535
Analytical Method: 8330MOD
Analyst: JWR
Dilution: 1
Units: ug/L

Instrument: HPLC5
Prep Date: 11/18/2008 07:30
Cal Date: 08/12/2008 15:23
Run Date: 11/20/2008 08:33
File ID: 5L002840.F

Analyte	CAS. Number	Result	Qual	RL	MDL
1,3,5-Trinitrobenzene	99-35-4		U	1.00	0.250
1,3-Dinitrobenzene	99-65-0		U	1.00	0.250
2,4,6-Trinitrotoluene	118-96-7		U	1.00	0.250
2,4-Dinitrotoluene	121-14-2		U	1.00	0.250
2,6-Dinitrotoluene	606-20-2		U	1.00	0.250
2-Amino-4,6-dinitrotoluene	35572-78-2		U	1.00	0.250
2-Nitrotoluene	88-72-2		U	1.00	0.250
3-Nitrotoluene	99-08-1		U	1.00	0.250
4-Nitrotoluene	99-99-0		U	1.00	0.250
4-Amino-2,6-dinitrotoluene	19406-51-0		U	1.00	0.250
HMX	2691-41-0		UJ ~~U~~	1.00	0.250
Nitrobenzene	98-95-3		U	1.00	0.250
RDX	121-82-4		U	1.00	0.250
Tetryl	479-45-8		U	1.00	0.250
Nitroglycerin	55-63-0		U	1.00	0.250

BSL

Surrogate	% Recovery	Lower	Upper	Qual
1,2-Dinitrobenzene	115	50	150	

U Undetected; the analyte was analyzed for, but not detected.

Microbac

28 hw 2/4/09

9

Sample Number: L08110433-24
Client ID: IR78-GW04-08D
Matrix: Water
Workgroup Number: WG288315
Collect Date: 11/11/2008 16:05
Sample Tag: 02

PrePrep Method: NONE
Prep Method: 3535
Analytical Method: 8330MOD
Analyst: ECL
Dilution: 1
Units: ug/L

Instrument: HPLC5
Prep Date: 11/18/2008 07:30
Cal Date: 08/12/2008 15:23
Run Date: 11/24/2008 20:52
File ID: 5L002912.F

Analyte	CAS. Number	Result	Qual	RL	MDL
PETN	78-11-5		U	1.00	0.250

U Undetected; the analyte was analyzed for, but not detected.

Microbac

30 lw 2/4/09

9

Sample Number: L08110433-24
Client ID: IR78-GW04-08D
Matrix: Water
Workgroup Number: WG288315
Collect Date: 11/11/2008 16:05
Sample Tag: 01

PrePrep Method: NONE
Prep Method: 3535
Analytical Method: 8330MOD
Analyst: JWR
Dilution: 1
Units: ug/L

Instrument: HPLC5
Prep Date: 11/18/2008 07:30
Cal Date: 08/12/2008 15:23
Run Date: 11/20/2008 09:11
File ID: 5L002841.F

Analyte	CAS. Number	Result	Qual	RL	MDL
1,3,5-Trinitrobenzene	99-35-4		U	1.00	0.250
1,3-Dinitrobenzene	99-65-0		U	1.00	0.250
2,4,6-Trinitrotoluene	118-96-7		U	1.00	0.250
2,4-Dinitrotoluene	121-14-2		U	1.00	0.250
2,6-Dinitrotoluene	606-20-2		U	1.00	0.250
2-Amino-4,6-dinitrotoluene	35572-78-2		U	1.00	0.250
2-Nitrotoluene	88-72-2		U	1.00	0.250
3-Nitrotoluene	99-08-1		U	1.00	0.250
4-Nitrotoluene	99-99-0		U	1.00	0.250
4-Amino-2,6-dinitrotoluene	19406-51-0		U	1.00	0.250
HMX	2691-41-0	UJ	~~U~~	1.00	0.250
Nitrobenzene	98-95-3		U	1.00	0.250
RDX	121-82-4		U	1.00	0.250
Tetryl	479-45-8		U	1.00	0.250
Nitroglycerin	55-63-0		U	1.00	0.250

BSL

Surrogate	% Recovery	Lower	Upper	Qual
1,2-Dinitrobenzene	122	50	150	

U Undetected; the analyte was analyzed for, but not detected.

Microbac

31 fuw 2/4/09

10

Sample Number: L08110433-25
Client ID: MR08-SS377-08D
Matrix: Soil
Workgroup Number: WG288388
Collect Date: 11/11/2008 13:30
Sample Tag: 02

PrePrep Method: NONE
Prep Method: METHOD
Analytical Method: 8330MOD
Analyst: ECL
Dilution: 1
Units: mg/kg

Instrument: HPLC5
Prep Date: 11/18/2008 10:30
Cal Date: 08/12/2008 15:23
Run Date: 11/26/2008 12:57
File ID: 5L002937.F

Analyte	CAS. Number	Result	Qual	RL	MDL
PETN	78-11-5		U	0.299	0.0998

U Undetected; the analyte was analyzed for, but not detected.

Microbac

32 lw 2/4/09

10

Sample Number: L08110433-25
Client ID: MR08-SS377-08D
Matrix: Soil
Workgroup Number: WG288388
Collect Date: 11/11/2008 13:30
Sample Tag: 01

PrePrep Method: NONE
Prep Method: METHOD
Analytical Method: 8330MOD
Analyst: ECL
Dilution: 1
Units: mg/kg

Instrument: HPLC5
Prep Date: 11/18/2008 10:30
Cal Date: 08/12/2008 15:23
Run Date: 11/22/2008 00:16
File ID: 5L002867.F

Analyte	CAS. Number	Result	Qual	RL	MDL
1,3,5-Trinitrobenzene	99-35-4		U	0.299	0.0998
1,3-Dinitrobenzene	99-65-0		U	0.299	0.0998
2,4,6-Trinitrotoluene	118-96-7		U	0.299	0.0998
2,4-Dinitrotoluene	121-14-2		U	0.299	0.0998
2,6-Dinitrotoluene	606-20-2		U	0.299	0.0998
2-Amino-4,6-dinitrotoluene	35572-78-2		UJ ~~U~~	0.299	0.0998 BSL
2-Nitrotoluene	88-72-2		U	0.299	0.0998
3-Nitrotoluene	99-08-1		U	0.299	0.0998
4-Nitrotoluene	99-99-0		U	0.299	0.0998
4-Amino-2,6-dinitrotoluene	19406-51-0		U	0.299	0.0998
HMX	2691-41-0		U	0.299	0.0998
Nitrobenzene	98-95-3		U	0.299	0.0998
RDX	121-82-4		U	0.299	0.0998
Tetryl	479-45-8		U	0.299	0.0998
Nitroglycerin	55-63-0		U	0.299	0.0998

Surrogate	% Recovery	Lower	Upper	Qual
1,2-Dinitrobenzene	105	50	150	

U Undetected; the analyte was analyzed for, but not detected.

Microbac

33 MW 2/4/09

11

Sample Number: L08110433-26
Client ID: MR08-SS377D-08D
Matrix: Soil
Workgroup Number: WG288388
Collect Date: 11/11/2008 13:35
Sample Tag: 02

PrePrep Method: NONE
Prep Method: METHOD
Analytical Method: 8330MOD
Analyst: ECL
Dilution: 1
Units: mg/kg

Instrument: HPLC5
Prep Date: 11/18/2008 10:30
Cal Date: 08/12/2008 15:23
Run Date: 11/26/2008 13:11
File ID: 5L002938.F

Analyte	CAS. Number	Result	Qual	RL	MDL
PETN	78-11-5		U	0.296	0.0988

U Undetected; the analyte was analyzed for, but not detected.

Microbac

35 LW 2/4/09

11

Sample Number: L08110433-26
Client ID: MR08-SS377D-08D
Matrix: Soil
Workgroup Number: WG288388
Collect Date: 11/11/2008 13:35
Sample Tag: 01

PrePrep Method: NONE
Prep Method: METHOD
Analytical Method: 8330MOD
Analyst: ECL
Dilution: 1
Units: mg/kg

Instrument: HPLC5
Prep Date: 11/18/2008 10:30
Cal Date: 08/12/2008 15:23
Run Date: 11/22/2008 00:55
File ID: 5L002868.F

Analyte	CAS. Number	Result	Qual	RL	MDL
1,3,5-Trinitrobenzene	99-35-4		U	0.296	0.0988
1,3-Dinitrobenzene	99-65-0		U	0.296	0.0988
2,4,6-Trinitrotoluene	118-96-7		U	0.296	0.0988
2,4-Dinitrotoluene	121-14-2		U	0.296	0.0988
2,6-Dinitrotoluene	606-20-2		U	0.296	0.0988
2-Amino-4,6-dinitrotoluene	35572-78-2		UJ ~~J~~	0.296	0.0988 BSL
2-Nitrotoluene	88-72-2		U	0.296	0.0988
3-Nitrotoluene	99-08-1		U	0.296	0.0988
4-Nitrotoluene	99-99-0		U	0.296	0.0988
4-Amino-2,6-dinitrotoluene	19406-51-0		U	0.296	0.0988
HMX	2691-41-0		U	0.296	0.0988
Nitrobenzene	98-95-3		U	0.296	0.0988
RDX	121-82-4		U	0.296	0.0988
Tetryl	479-45-8		U	0.296	0.0988
Nitroglycerin	55-63-0		U	0.296	0.0988

Surrogate	% Recovery	Lower	Upper	Qual
1,2-Dinitrobenzene	116	50	150	

U Undetected; the analyte was analyzed for, but not detected.

Microbac

34 MW 2/4/09

12

Sample Number: L08110433-27
Client ID: MR08-SS376-08D
Matrix: Soil
Workgroup Number: WG288388
Collect Date: 11/11/2008 14:25
Sample Tag: 02

PrePrep Method: NONE
Prep Method: METHOD
Analytical Method: 8330MOD
Analyst: ECL
Dilution: 1
Units: mg/kg

Instrument: HPLC5
Prep Date: 11/18/2008 10:30
Cal Date: 08/12/2008 15:23
Run Date: 11/26/2008 13:24
File ID: 5L002939.F

Analyte	CAS. Number	Result	Qual	RL	MDL
PETN	78-11-5		U	0.293	0.0977

U Undetected; the analyte was analyzed for, but not detected.

Microbac

36 MW 2/4/09

12

Sample Number: L08110433-27
Client ID: MR08-SS376-08D
Matrix: Soil
Workgroup Number: WG288388
Collect Date: 11/11/2008 14:25
Sample Tag: 01

PrePrep Method: NONE
Prep Method: METHOD
Analytical Method: 8330MOD
Analyst: ECL
Dilution: 1
Units: mg/kg

Instrument: HPLC5
Prep Date: 11/18/2008 10:30
Cal Date: 08/12/2008 15:23
Run Date: 11/22/2008 01:33
File ID: 5L002869.F

Analyte	CAS. Number	Result	Qual	RL	MDL
1,3,5-Trinitrobenzene	99-35-4		U	0.293	0.0977
1,3-Dinitrobenzene	99-65-0		U	0.293	0.0977
2,4,6-Trinitrotoluene	118-96-7		U	0.293	0.0977
2,4-Dinitrotoluene	121-14-2		U	0.293	0.0977
2,6-Dinitrotoluene	606-20-2		U	0.293	0.0977
2-Amino-4,6-dinitrotoluene	35572-78-2		UJ ~~F~~	0.293	0.0977
2-Nitrotoluene	88-72-2		U	0.293	0.0977
3-Nitrotoluene	99-08-1		U	0.293	0.0977
4-Nitrotoluene	99-99-0		U	0.293	0.0977
4-Amino-2,6-dinitrotoluene	19406-51-0		U	0.293	0.0977
HMX	2691-41-0		U	0.293	0.0977
Nitrobenzene	98-95-3		U	0.293	0.0977
RDX	121-82-4		U	0.293	0.0977
Tetryl	479-45-8		U	0.293	0.0977
Nitroglycerin	55-63-0		U	0.293	0.0977

BSL

Surrogate	% Recovery	Lower	Upper	Qual
1,2-Dinitrobenzene	93.0	50	150	

U Undetected; the analyte was analyzed for, but not detected.

Microbac

37 MW 2/4/09

13

Sample Number: L08110433-28
Client ID: MR08-SS375-08D
Matrix: Soil
Workgroup Number: WG288388
Collect Date: 11/11/2008 14:45
Sample Tag: 02

PrePrep Method: NONE
Prep Method: METHOD
Analytical Method: 8330MOD
Analyst: ECL
Dilution: 1
Units: mg/kg

Instrument: HPLC5
Prep Date: 11/18/2008 10:30
Cal Date: 08/12/2008 15:23
Run Date: 11/26/2008 13:37
File ID: 5L002940.F

Analyte	CAS. Number	Result	Qual	RL	MDL
PETN	78-11-5		U	0.296	0.0988

U Undetected; the analyte was analyzed for, but not detected.

Microbac

 DW 2/4/09

13

Sample Number: L08110433-28
Client ID: MR08-SS375-08D
Matrix: Soil
Workgroup Number: WG288388
Collect Date: 11/11/2008 14:45
Sample Tag: 01

PrePrep Method: NONE
Prep Method: METHOD
Analytical Method: 8330MOD
Analyst: ECL
Dilution: 1
Units: mg/kg

Instrument: HPLC5
Prep Date: 11/18/2008 10:30
Cal Date: 08/12/2008 15:23
Run Date: 11/22/2008 02:11
File ID: 5L002870.F

Analyte	CAS. Number	Result	Qual	RL	MDL	
1,3,5-Trinitrobenzene	99-35-4	UJ	U	0.296	0.0988	MSL
1,3-Dinitrobenzene	99-65-0		U	0.296	0.0988	
2,4,6-Trinitrotoluene	118-96-7		U	0.296	0.0988	
2,4-Dinitrotoluene	121-14-2		U	0.296	0.0988	
2,6-Dinitrotoluene	606-20-2		U	0.296	0.0988	
2-Amino-4,6-dinitrotoluene	35572-78-2		U	0.296	0.0988	
2-Nitrotoluene	88-72-2		U	0.296	0.0988	
3-Nitrotoluene	99-08-1		U	0.296	0.0988	
4-Nitrotoluene	99-99-0		U	0.296	0.0988	
4-Amino-2,6-dinitrotoluene	19406-51-0		U	0.296	0.0988	
HMX	2691-41-0		U	0.296	0.0988	
Nitrobenzene	98-95-3		U	0.296	0.0988	
RDX	121-82-4	UJ	U	0.296	0.0988	MSL
Tetryl	479-45-8	UJ	U	0.296	0.0988	MSL
Nitroglycerin	55-63-0		U	0.296	0.0988	

Surrogate	% Recovery	Lower	Upper	Qual
1,2-Dinitrobenzene	82.6	50	150	

U Undetected; the analyte was analyzed for, but not detected.

Microbac

38 LW 2/4/09

16

Sample Number: L08110433-31
Client ID: MR08-SS374-08D
Matrix: Soil
Workgroup Number: WG288388
Collect Date: 11/11/2008 15:10
Sample Tag: 02

PrePrep Method: NONE
Prep Method: METHOD
Analytical Method: 8330MOD
Analyst: ECL
Dilution: 1
Units: mg/kg

Instrument: HPLC5
Prep Date: 11/18/2008 10:30
Cal Date: 08/12/2008 15:23
Run Date: 11/26/2008 14:29
File ID: 5L002944.F

Analyte	CAS. Number	Result	Qual	RL	MDL
PETN	78-11-5		U	0.300	0.0999

U Undetected; the analyte was analyzed for, but not detected.

Microbac

42 MW 2/4/09

16

Sample Number: L08110433-31
Client ID: MR08-SS374-08D
Matrix: Soil
Workgroup Number: WG288388
Collect Date: 11/11/2008 15:10
Sample Tag: 01

PrePrep Method: NONE
Prep Method: METHOD
Analytical Method: 8330MOD
Analyst: ECL
Dilution: 1
Units: mg/kg

Instrument: HPLC5
Prep Date: 11/18/2008 10:30
Cal Date: 08/12/2008 15:23
Run Date: 11/22/2008 04:05
File ID: 5L002873.F

Analyte	CAS. Number	Result	Qual	RL	MDL
1,3,5-Trinitrobenzene	99-35-4		U	0.300	0.0999
1,3-Dinitrobenzene	99-65-0		U	0.300	0.0999
2,4,6-Trinitrotoluene	118-96-7		U	0.300	0.0999
2,4-Dinitrotoluene	121-14-2		U	0.300	0.0999
2,6-Dinitrotoluene	606-20-2		U	0.300	0.0999
2-Amino-4,6-dinitrotoluene	35572-78-2		UJ ~~U~~	0.300	0.0999
2-Nitrotoluene	88-72-2		U	0.300	0.0999
3-Nitrotoluene	99-08-1		U	0.300	0.0999
4-Nitrotoluene	99-99-0		U	0.300	0.0999
4-Amino-2,6-dinitrotoluene	19406-51-0		U	0.300	0.0999
HMX	2691-41-0		U	0.300	0.0999
Nitrobenzene	98-95-3		U	0.300	0.0999
RDX	121-82-4		U	0.300	0.0999
Tetryl	479-45-8		U	0.300	0.0999
Nitroglycerin	55-63-0		U	0.300	0.0999

BSL

Surrogate	% Recovery	Lower	Upper	Qual
1,2-Dinitrobenzene	75.1	50	150	

U Undetected; the analyte was analyzed for, but not detected.

Microbac

43 MW 2/4/09

17

Sample Number: L08110433-32
Client ID: MR08-SS374D-08D
Matrix: Soil
Workgroup Number: WG288388
Collect Date: 11/11/2008 15:15
Sample Tag: 02

PrePrep Method: NONE
Prep Method: METHOD
Analytical Method: 8330MOD
Analyst: ECL
Dilution: 1
Units: mg/kg

Instrument: HPLC5
Prep Date: 11/18/2008 10:30
Cal Date: 08/12/2008 15:23
Run Date: 11/26/2008 14:42
File ID: 5L002945.F

Analyte	CAS. Number	Result	Qual	RL	MDL
PETN	78-11-5		U	0.299	0.0998

U Undetected; the analyte was analyzed for, but not detected.

Microbac

44 lw 2/4/09

17

Sample Number: L08110433-32
Client ID: MR08-SS374D-08D
Matrix: Soil
Workgroup Number: WG288388
Collect Date: 11/11/2008 15:15
Sample Tag: 01

PrePrep Method: NONE
Prep Method: METHOD
Analytical Method: 8330MOD
Analyst: ECL
Dilution: 1
Units: mg/kg

Instrument: HPLC5
Prep Date: 11/18/2008 10:30
Cal Date: 08/12/2008 15:23
Run Date: 11/22/2008 04:43
File ID: 5L002874.F

Analyte	CAS. Number	Result	Qual	RL	MDL
1,3,5-Trinitrobenzene	99-35-4		U	0.299	0.0998
1,3-Dinitrobenzene	99-65-0		U	0.299	0.0998
2,4,6-Trinitrotoluene	118-96-7		U	0.299	0.0998
2,4-Dinitrotoluene	121-14-2		U	0.299	0.0998
2,6-Dinitrotoluene	606-20-2		U	0.299	0.0998
2-Amino-4,6-dinitrotoluene	35572-78-2	UJ	~~U~~	0.299	0.0998
2-Nitrotoluene	88-72-2		U	0.299	0.0998
3-Nitrotoluene	99-08-1		U	0.299	0.0998
4-Nitrotoluene	99-99-0		U	0.299	0.0998
4-Amino-2,6-dinitrotoluene	19406-51-0		U	0.299	0.0998
HMX	2691-41-0		U	0.299	0.0998
Nitrobenzene	98-95-3		U	0.299	0.0998
RDX	121-82-4		U	0.299	0.0998
Tetryl	479-45-8		U	0.299	0.0998
Nitroglycerin	55-63-0		U	0.299	0.0998

BSL

Surrogate	% Recovery	Lower	Upper	Qual
1,2-Dinitrobenzene	76.0	50	150	

U Undetected; the analyte was analyzed for, but not detected.

Microbac

45 LW 2/4/09

18

Sample Number: L08110433-33
Client ID: MR08-EB111208-1
Matrix: Water
Workgroup Number: WG288315
Collect Date: 11/12/2008 08:30
Sample Tag: 02

PrePrep Method: NONE
Prep Method: 3535
Analytical Method: 8330MOD
Analyst: ECL
Dilution: 1
Units: ug/L

Instrument: HPLC5
Prep Date: 11/18/2008 07:30
Cal Date: 08/12/2008 15:23
Run Date: 11/24/2008 21:05
File ID: 5L002913.F

Analyte	CAS. Number	Result	Qual	RL	MDL
PETN	78-11-5		U	1.00	0.250

U Undetected; the analyte was analyzed for, but not detected.

Microbac

47 MW 2/4/09

18

Sample Number: L08110433-33
Client ID: MR08-EB111208-1
Matrix: Water
Workgroup Number: WG288315
Collect Date: 11/12/2008 08:30
Sample Tag: 01

PrePrep Method: NONE
Prep Method: 3535
Analytical Method: 8330MOD
Analyst: JWR
Dilution: 1
Units: ug/L

Instrument: HPLC5
Prep Date: 11/18/2008 07:30
Cal Date: 08/12/2008 15:23
Run Date: 11/20/2008 09:50
File ID: 5L002842.F

Analyte	CAS. Number	Result	Qual	RL	MDL
1,3,5-Trinitrobenzene	99-35-4		U	1.00	0.250
1,3-Dinitrobenzene	99-65-0		U	1.00	0.250
2,4,6-Trinitrotoluene	118-96-7		U	1.00	0.250
2,4-Dinitrotoluene	121-14-2		U	1.00	0.250
2,6-Dinitrotoluene	606-20-2		U	1.00	0.250
2-Amino-4,6-dinitrotoluene	35572-78-2		U	1.00	0.250
2-Nitrotoluene	88-72-2		U	1.00	0.250
3-Nitrotoluene	99-08-1		U	1.00	0.250
4-Nitrotoluene	99-99-0		U	1.00	0.250
4-Amino-2,6-dinitrotoluene	19406-51-0		U	1.00	0.250
HMX	2691-41-0	UJ	U	1.00	0.250
Nitrobenzene	98-95-3		U	1.00	0.250
RDX	121-82-4		U	1.00	0.250
Tetryl	479-45-8		U	1.00	0.250
Nitroglycerin	55-63-0		U	1.00	0.250

BSL

Surrogate	% Recovery	Lower	Upper	Qual
1,2-Dinitrobenzene	111	50	150	

U Undetected; the analyte was analyzed for, but not detected.

Microbac

 MW 2/4/09

ENVIRONMENTAL
Data Services, Inc.

METALS

USEPA Region IV - Level IV Review

Site: MCB Camp Lejeune, TO-09 SDG #: L08110433

Client: CH2M HILL, Inc., Virginia Beach, Virginia Date: February 1, 2009

Laboratory: Microbac Laboratories, Inc., Marietta, Ohio Reviewer: Nancy Weaver

EDS ID	Client Sample ID	Laboratory Sample ID	Matrix
1	IR78-GW56-08D	L07110433-01	Water
2MS	IR78-GW56-08DMS	L07110433-02	Water
3MSD	IR78-GW56-08DMSD	L07110433-03	Water
4	MR08-SS382-08D	L07110433-04	Soil
5	MR08-SS383-08D	L07110433-05	Soil
6	MR08-SS384-08D	L07110433-06	Soil
7	MR08-SS385-08D	L07110433-07	Soil
8	MR08-SS386-08D	L07110433-08	Soil
9	MR08-SS387-08D	L07110433-09	Soil
10	MR08-IS381-08D	L07110433-10	Soil
11	MR08-EB111208-02	L07110433-11	Water
12	MR08-IS379-08D	L07110433-12	Soil
13	USTHPFF-MW15-08D	L07110433-13	Water
14	USTHPFF-MW09-08D	L07110433-14	Water
15	IR78-GW16-08D	L07110433-15	Water
16	MR08-EB111208	L07110433-16	Water
17	IR78-GW36-08D	L07110433-17	Water
18	IR78-GW57-08D	L07110433-18	Water
19	IR78-GW57D-08D	L07110433-19	Water
20	IR78-GW01-08D	L07110433-20	Water
21	IR78-GW59-08D	L07110433-21	Water
22	IR78-GW59D-08D	L07110433-22	Water
23	IR78-GW53-08D	L07110433-23	Water
24	IR78-GW04-08D	L07110433-24	Water
25	MR08-SS377-08D	L07110433-25	Soil
26	MR08-SS377D-08D	L07110433-26	Soil
27	MR08-SS376-08D	L07110433-27	Soil
28	MR08-SS375-08D	L07110433-28	Soil
29MS	MR08-SS375-08DMS	L07110433-29	Soil
30MSD	MR08-SS375-08DMSD	L07110433-30	Soil
31	MR08-SS374-08D	L07110433-31	Soil
32	MR08-SS374D-08D	L07110433-32	Soil
33	MR08-EB111208-1	L07110433-33	Water

The USEPA "Contract Laboratory Program National Functional Guidelines for Inorganic Data Review," October 2004, and professional judgement were used in evaluating the data in this summary report.

Holding Times - All samples were prepared and analyzed within 28 days for mercury and 180 days for all other metals.

Calibration - The ICV and CCV %R values were acceptable.

Method and Calibration Blanks - All criteria were met.

Field and Equipment Blank - Field QC results are summarized below.

Blank ID	Compound	Conc. ug/L	Action Level ug/L	Qualifier	Affected Samples
MR08-FB111108	None - ND	-	-	-	-
MR08-EB111208	None - ND	-	-	-	-
MR08-EB111208-1	None - ND	-	-	-	-
MR08-EB111208-2	None - ND	-	-	-	-

ICP Interference Check Sample - All %R values were acceptable.

MS/MSD - The MS/MSD sample exhibited acceptable %R and RPD values except the following.

MS/MSD Sample ID	Compound	MS/MSD %R/RPD	Qualifier	Affected Samples
28	Chromium	Ok/123%/Ok	J	4-10, 12, 25-28, 31, 32
	Selenium	72.2%/74.9%/Ok	J/UJ	4-10, 12, 25-28, 31, 32

LCS - The LCS samples exhibited acceptable %R values.

ICP Serial Dilution - The ICP serial dilution sample exhibited acceptable %D values.

Field Duplicates - Field duplicate results are summarized below.

Compound	IR78-GW57-08D ug/L	IR78-GW57D-08D ug/L	RPD	Qualifier
Arsenic	15.0	15.1	1%	None
Barium	66.7	63.1	6%	None

Compound	IR78-GW57-08D ug/L	IR78-GW57D-08D ug/L	RPD	Qualifier
Zinc	22.3	5.91	116%	None

Compound	IR78-GW59-08D ug/L	IR78-GW59D-08D ug/L	RPD	Qualifier
Arsenic	0.982	1.02	4%	None
Barium	124	123	1%	None
Zinc	20.0 U	5.49	NC	None

Compound	MR08-SS377-08D mg/kg	MR08-SS377D-08D mg/kg	RPD	Qualifier
Arsenic	0.655	0.567	14%	None
Barium	19.0	16.9	12%	None
Cadmium	0.0989	0.107	8%	None
Chromium	6.51	5.98	8%	None
Copper	0.779	0.637	20%	None
Lead	6.33	4.72	29%	None
Mercury	0.110U	0.0270	NC	None
Selenium	0.536	0.525	2%	None
Zinc	3.02	2.38	24%	None

Compound	MR08-SS374-08D mg/kg	MR08-SS374D-08D mg/kg	RPD	Qualifier
Antimony	1.05	1.86 U	NC	None
Arsenic	3.30	3.60	9%	None
Barium	16.3	12.6	26%	None
Cadmium	0.140	0.179	24%	None
Chromium	10.3	6.19	50%	None
Copper	2.52	2.51	0%	None
Lead	49.2	56.0	13%	None
Mercury	0.0261	0.0256	2%	None
Selenium	0.294	0.283	4%	None
Zinc	17.9	19.7	10%	None

Compound Quantitation - No discrepancies were identified.

Sample Number: L08110433-01
Client ID: IR78-GW56-08D
Matrix: Water
Workgroup Number: WG288437
Collect Date: 11/13/2008 10:00
Sample Tag: 01

PrePrep Method: NONE
Prep Method: 3005A
Analytical Method: 6010B
Analyst: ED
Dilution: 1
Units: ug/L

Instrument: PE-ICP2
Prep Date: 11/19/2008 09:01
Cal Date: 11/29/2008 17:13
Run Date: 11/29/2008 22:21
File ID: P2.112908.222133

Analyte	CAS. Number	Result	Qual	RL	MDL
Barium, Total	7440-39-3	32.9		10.0	2.50
Cadmium, Total	7440-43-9		U	1.00	0.250
Chromium, Total	7440-47-3		U	10.0	2.50
Copper, Total	7440-50-8		U	20.0	5.00
Silver, Total	7440-22-4		U	6.00	2.00
Zinc, Total	7440-66-6	5.95	J	20.0	5.00

U Undetected; the analyte was analyzed for, but not detected.
J Estimated ; the analyte concentration was less than the low standard (LOQ)

Microbac

306 RW 2/1/09

Report Number: L08110433

Report Date : December 3, 2008

Sample Number: L08110433-01
Client ID: IR78-GW56-08D
Matrix: Water
Workgroup Number: WG288603
Collect Date: 11/13/2008 10:00
Sample Tag: 01

PrePrep Method: NONE
Prep Method: 3015
Analytical Method: 6020
Analyst: JYH
Dilution: 1
Units: ug/L

Instrument: ELAN-ICP
Prep Date: 11/18/2008 11:46
Cal Date: 11/20/2008 11:05
Run Date: 11/20/2008 20:49
File ID: EL.112008.204952

Analyte	CAS. Number	Result	Qual	RL	MDL
Arsenic, Total	7440-38-2	0.723	J	1.00	0.250
Lead, Total	7439-92-1		U	1.00	0.250
Antimony, Total	7440-36-0		U	1.00	0.250
Selenium, Total	7782-49-2	0.509	J	2.00	0.500

U Undetected; the analyte was analyzed for, but not detected.
J Estimated ; the analyte concentration was less than the low standard (LOQ)

Microbac

676 lw 2/1/09

Report Number: L08110433

Report Date : **December 3, 2008**

Sample Number:	L08110433-01	PrePrep Method:	NONE	Instrument:	HYDRA
Client ID:	IR78-GW56-08D	Prep Method:	7470A	Prep Date:	11/19/2008 09:09
Matrix:	Water	Analytical Method:	7470A	Cal Date:	11/20/2008 14:44
Workgroup Number:	WG288572	Analyst:	ADC	Run Date:	11/20/2008 15:04
Collect Date:	11/13/2008 10:00	Dilution:	1	File ID:	HY.112008.150459
Sample Tag:	01	Units:	ug/L		

Analyte	CAS. Number	Result	Qual	RL	MDL
Mercury	7439-97-6		U	0.400	0.100

U Undetected; the analyte was analyzed for, but not detected.

Microbac®

1612 lw 21/09

4

Sample Number: L08110433-04
Client ID: MR08-SS382-08D
Matrix: Soil
Workgroup Number: WG288316
Collect Date: 11/12/2008 08:45
Sample Tag: 01

PrePrep Method: NONE
Prep Method: 3051
Analytical Method: 6010B
Analyst: KHR
Dilution: 1
Units: mg/kg

Instrument: IRIS-ICP
Prep Date: 11/18/2008 09:14
Cal Date: 11/18/2008 15:30
Run Date: 11/18/2008 17:02
File ID: IR.111808.170200
Percent Solid: 86.7

Analyte	CAS. Number	Result	Qual	RL	MDL
Silver, Total	7440-22-4		U	0.833	0.208
Barium, Total	7440-39-3	16.9		0.417	0.0833
Cadmium, Total	7440-43-9	0.183		0.167	0.0417
Chromium, Total	7440-47-3	6.01 J		0.833	0.100

MSH

U Undetected; the analyte was analyzed for, but not detected.

Microbac

309 MW 2/1/09

4

Sample Number: L08110433-04
Client ID: MR08-SS382-08D
Matrix: Soil
Workgroup Number: WG288653
Collect Date: 11/12/2008 08:45
Sample Tag: 01

PrePrep Method: NONE
Prep Method: 3051
Analytical Method: 6020
Analyst: JYH
Dilution: 1
Units: mg/kg

Instrument: ELAN-ICP
Prep Date: 11/18/2008 06:40
Cal Date: 11/21/2008 10:09
Run Date: 11/21/2008 13:16
File ID: EL.112108.131635
Percent Solid: 86.7

Analyte	CAS. Number	Result	Qual	RL	MDL
Arsenic, Total	7440-38-2	1.80		0.345	0.0863
Selenium, Total	7782-49-2	0.206 J	~~J~~	0.460	0.115

MSL

J Estimated ; the analyte concentration was less than the low standard (LOQ)

Microbac

679 lw 2/1/09

4

Sample Number: L08110433-04
Client ID: MR08-SS382-08D
Matrix: Soil
Workgroup Number: WG288653
Collect Date: 11/12/2008 08:45
Sample Tag: DL01

PrePrep Method: NONE
Prep Method: 3051
Analytical Method: 6020
Analyst: JYH
Dilution: 10
Units: mg/kg

Instrument: ELAN-ICP
Prep Date: 11/18/2008 06:40
Cal Date: 11/21/2008 10:09
Run Date: 11/21/2008 14:43
File ID: EL.112108.144313
Percent Solid: 86.7

Analyte	CAS. Number	Result	Qual	RL	MDL
Lead, Total	7439-92-1	47.4		4.60	1.15

Microbac

lw 2/1/09

4

Sample Number: L08110433-04
Client ID: MR08-SS382-08D
Matrix: Soil
Workgroup Number: WG288470
Collect Date: 11/12/2008 08:45
Sample Tag: 01

PrePrep Method: NONE
Prep Method: 7471A
Analytical Method: 7471A
Analyst: ADC
Dilution: 1
Units: mg/kg

Instrument: HYDRA
Prep Date: 11/18/2008 11:59
Cal Date: 11/20/2008 08:59
Run Date: 11/20/2008 09:12
File ID: HY.112008.091255
Percent Solid: 86.7

Analyte	CAS. Number	Result	Qual	RL	MDL
Mercury, Total	7439-97-6	0.0251	J	0.112	0.0224

J Estimated ; the analyte concentration was less than the low standard (LOQ)

Microbac

1615 lw 2/1/09

5

Sample Number: L08110433-05
Client ID: MR08-SS383-08D
Matrix: Soil
Workgroup Number: WG288316
Collect Date: 11/12/2008 09:10
Sample Tag: 01

PrePrep Method: NONE
Prep Method: 3051
Analytical Method: 6010B
Analyst: KHR
Dilution: 1
Units: mg/kg

Instrument: IRIS-ICP
Prep Date: 11/18/2008 09:14
Cal Date: 11/18/2008 15:30
Run Date: 11/18/2008 18:15
File ID: IR.111808.181500
Percent Solid: 90.7

Analyte	CAS. Number	Result	Qual	RL	MDL
Silver, Total	7440-22-4		U	0.744	0.186
Barium, Total	7440-39-3	13.8		0.372	0.0744
Cadmium, Total	7440-43-9	0.115	J	0.149	0.0372
Chromium, Total	7440-47-3	8.74 J		0.744	0.0893

MSH

U Undetected; the analyte was analyzed for, but not detected.
J Estimated ; the analyte concentration was less than the low standard (LOQ)

Microbac

310 hw 2/1/09

5

Sample Number: L08110433-05
Client ID: MR08-SS383-08D
Matrix: Soil
Workgroup Number: WG288653
Collect Date: 11/12/2008 09:10
Sample Tag: 01

PrePrep Method: NONE
Prep Method: 3051
Analytical Method: 6020
Analyst: JYH
Dilution: 1
Units: mg/kg

Instrument: ELAN-ICP
Prep Date: 11/18/2008 06:40
Cal Date: 11/21/2008 10:09
Run Date: 11/21/2008 13:21
File ID: EL.112108.132158
Percent Solid: 90.7

Analyte	CAS. Number	Result	Qual	RL	MDL
Arsenic, Total	7440-38-2	1.33		0.327	0.0817
Lead, Total	7439-92-1	23.2		0.436	0.109
Selenium, Total	7782-49-2	0.204 J	~~J~~	0.436	0.109

MSL

J Estimated ; the analyte concentration was less than the low standard (LOQ)

Microbac

681 LW 2/1/09

5

Sample Number: L08110433-05
Client ID: MR08-SS383-08D
Matrix: Soil
Workgroup Number: WG288470
Collect Date: 11/12/2008 09:10
Sample Tag: 01

PrePrep Method: NONE
Prep Method: 7471A
Analytical Method: 7471A
Analyst: ADC
Dilution: 1
Units: mg/kg

Instrument: HYDRA
Prep Date: 11/18/2008 11:59
Cal Date: 11/20/2008 08:59
Run Date: 11/20/2008 09:16
File ID: HY.112008.091642
Percent Solid: 90.7

Analyte	CAS. Number	Result	Qual	RL	MDL
Mercury, Total	7439-97-6		U	0.108	0.0217

U Undetected; the analyte was analyzed for, but not detected.

Microbac

1616 lw 2/1/09

6

Sample Number: L08110433-06
Client ID: MR08-SS384-08D
Matrix: Soil
Workgroup Number: WG288316
Collect Date: 11/12/2008 09:45
Sample Tag: 01

PrePrep Method: NONE
Prep Method: 3051
Analytical Method: 6010B
Analyst: KHR
Dilution: 1
Units: mg/kg

Instrument: IRIS-ICP
Prep Date: 11/18/2008 09:14
Cal Date: 11/18/2008 15:30
Run Date: 11/18/2008 18:21
File ID: IR.111808.182100
Percent Solid: 90.4

Analyte	CAS. Number	Result	Qual	RL	MDL
Silver, Total	7440-22-4		U	0.807	0.202
Barium, Total	7440-39-3	12.4		0.404	0.0807
Cadmium, Total	7440-43-9	0.0545	J	0.161	0.0404
Chromium, Total	7440-47-3	8.15 J		0.807	0.0968

MSH

U Undetected; the analyte was analyzed for, but not detected.
J Estimated ; the analyte concentration was less than the low standard (LOQ)

Microbac

311 MW 2/1/09

6

Sample Number: L08110433-06
Client ID: MR08-SS384-08D
Matrix: Soil
Workgroup Number: WG288653
Collect Date: 11/12/2008 09:45
Sample Tag: 01

PrePrep Method: NONE
Prep Method: 3051
Analytical Method: 6020
Analyst: JYH
Dilution: 1
Units: mg/kg

Instrument: ELAN-ICP
Prep Date: 11/18/2008 06:40
Cal Date: 11/21/2008 10:09
Run Date: 11/21/2008 13:27
File ID: EL.112108.132723
Percent Solid: 90.4

Analyte	CAS. Number	Result	Qual	RL	MDL
Arsenic, Total	7440-38-2	0.723		0.318	0.0795
Lead, Total	7439-92-1	13.3		0.424	0.106
Selenium, Total	7782-49-2	0.132 J	~~J~~	0.424	0.106

MSL

J Estimated ; the analyte concentration was less than the low standard (LOQ)

Microbac®

 lw 2/1/09

6

Sample Number: L08110433-06
Client ID: MR08-SS384-08D
Matrix: Soil
Workgroup Number: WG288470
Collect Date: 11/12/2008 09:45
Sample Tag: 01

PrePrep Method: NONE
Prep Method: 7471A
Analytical Method: 7471A
Analyst: ADC
Dilution: 1
Units: mg/kg

Instrument: HYDRA
Prep Date: 11/18/2008 12:00
Cal Date: 11/20/2008 08:59
Run Date: 11/20/2008 09:18
File ID: HY.112008.091838
Percent Solid: 90.4

Analyte	CAS. Number	Result	Qual	RL	MDL
Mercury, Total	7439-97-6		U	0.107	0.0214

U Undetected; the analyte was analyzed for, but not detected.

Microbac

 MW 2/1/09

7

Sample Number: L08110433-07
Client ID: MR08-SS385-08D
Matrix: Soil
Workgroup Number: WG288316
Collect Date: 11/12/2008 11:15
Sample Tag: 01

PrePrep Method: NONE
Prep Method: 3051
Analytical Method: 6010B
Analyst: KHR
Dilution: 1
Units: mg/kg

Instrument: IRIS-ICP
Prep Date: 11/18/2008 09:14
Cal Date: 11/18/2008 15:30
Run Date: 11/18/2008 18:39
File ID: IR.111808.183900
Percent Solid: 93.7

Analyte	CAS. Number	Result	Qual	RL	MDL
Silver, Total	7440-22-4		U	0.766	0.192
Barium, Total	7440-39-3	15.6		0.383	0.0766
Cadmium, Total	7440-43-9	0.228		0.153	0.0383
Chromium, Total	7440-47-3	5.97 J		0.766	0.0920

MSH

U Undetected; the analyte was analyzed for, but not detected.

Microbac

312 LW 2/1/09

7

Sample Number: L08110433-07
Client ID: MR08-SS385-08D
Matrix: Soil
Workgroup Number: WG288653
Collect Date: 11/12/2008 11:15
Sample Tag: 01

PrePrep Method: NONE
Prep Method: 3051
Analytical Method: 6020
Analyst: JYH
Dilution: 1
Units: mg/kg

Instrument: ELAN-ICP
Prep Date: 11/18/2008 06:40
Cal Date: 11/21/2008 10:09
Run Date: 11/21/2008 13:32
File ID: EL.112108.133245
Percent Solid: 93.7

Analyte	CAS. Number	Result	Qual	RL	MDL
Arsenic, Total	7440-38-2	2.03		0.315	0.0788
Lead, Total	7439-92-1	31.5		0.420	0.105
Selenium, Total	7782-49-2	0.199 J	~~J~~	0.420	0.105

MSL

J Estimated ; the analyte concentration was less than the low standard (LOQ)

Microbac

683 lw 2/1/09

7

Sample Number: L08110433-07
Client ID: MR08-SS385-08D
Matrix: Soil
Workgroup Number: WG288470
Collect Date: 11/12/2008 11:15
Sample Tag: 01

PrePrep Method: NONE
Prep Method: 7471A
Analytical Method: 7471A
Analyst: ADC
Dilution: 1
Units: mg/kg

Instrument: HYDRA
Prep Date: 11/18/2008 12:01
Cal Date: 11/20/2008 08:59
Run Date: 11/20/2008 09:20
File ID: HY.112008.092030
Percent Solid: 93.7

Analyte	CAS. Number	Result	Qual	RL	MDL
Mercury, Total	7439-97-6	0.0227	J	0.104	0.0208

J Estimated ; the analyte concentration was less than the low standard (LOQ)

Microbac

1618 dw 2/1/09

8

Sample Number: L08110433-08
Client ID: MR08-SS386-08D
Matrix: Soil
Workgroup Number: WG288316
Collect Date: 11/12/2008 11:00
Sample Tag: 01

PrePrep Method: NONE
Prep Method: 3051
Analytical Method: 6010B
Analyst: KHR
Dilution: 1
Units: mg/kg

Instrument: IRIS-ICP
Prep Date: 11/18/2008 09:14
Cal Date: 11/18/2008 15:30
Run Date: 11/18/2008 18:45
File ID: IR.111808.184500
Percent Solid: 86.9

Analyte	CAS. Number	Result	Qual	RL	MDL
Silver, Total	7440-22-4		U	0.828	0.207
Barium, Total	7440-39-3	21.9		0.414	0.0828
Cadmium, Total	7440-43-9	0.269		0.166	0.0414
Chromium, Total	7440-47-3	9.04 J		0.828	0.0994

MSH

U Undetected; the analyte was analyzed for, but not detected.

Microbac

313 fw 2/1/09

8

Sample Number: L08110433-08
Client ID: MR08-SS386-08D
Matrix: Soil
Workgroup Number: WG288653
Collect Date: 11/12/2008 11:00
Sample Tag: DL01

PrePrep Method: NONE
Prep Method: 3051
Analytical Method: 6020
Analyst: JYH
Dilution: 10
Units: mg/kg

Instrument: ELAN-ICP
Prep Date: 11/18/2008 06:40
Cal Date: 11/21/2008 10:09
Run Date: 11/21/2008 14:49
File ID: EL.112108.144938
Percent Solid: 86.9

Analyte	CAS. Number	Result	Qual	RL	MDL
Lead, Total	7439-92-1	67.2		4.56	1.14

Microbac

684 lw 2/1/09

8

Sample Number: L08110433-08
Client ID: MR08-SS386-08D
Matrix: Soil
Workgroup Number: WG288653
Collect Date: 11/12/2008 11:00
Sample Tag: 01

PrePrep Method: NONE
Prep Method: 3051
Analytical Method: 6020
Analyst: JYH
Dilution: 1
Units: mg/kg

Instrument: ELAN-ICP
Prep Date: 11/18/2008 06:40
Cal Date: 11/21/2008 10:09
Run Date: 11/21/2008 13:38
File ID: EL.112108.133806
Percent Solid: 86.9

Analyte	CAS. Number	Result	Qual	RL	MDL
Arsenic, Total	7440-38-2	5.51		0.342	0.0855
Selenium, Total	7782-49-2	0.229 J	J	0.456	0.114

MSL

J Estimated ; the analyte concentration was less than the low standard (LOQ)

Microbac

685 LW 21/09

8

Sample Number: L08110433-08
Client ID: MR08-SS386-08D
Matrix: Soil
Workgroup Number: WG288470
Collect Date: 11/12/2008 11:00
Sample Tag: 01

PrePrep Method: NONE
Prep Method: 7471A
Analytical Method: 7471A
Analyst: ADC
Dilution: 1
Units: mg/kg

Instrument: HYDRA
Prep Date: 11/18/2008 12:01
Cal Date: 11/20/2008 08:59
Run Date: 11/20/2008 09:22
File ID: HY.112008.092212
Percent Solid: 86.9

Analyte	CAS. Number	Result	Qual	RL	MDL
Mercury, Total	7439-97-6		U	0.109	0.0219

U Undetected; the analyte was analyzed for, but not detected.

Microbac

1619 dw 2/1/09

9

Sample Number: L08110433-09
Client ID: MR08-SS387-08D
Matrix: Soil
Workgroup Number: WG288316
Collect Date: 11/12/2008 10:40
Sample Tag: 01

PrePrep Method: NONE
Prep Method: 3051
Analytical Method: 6010B
Analyst: KHR
Dilution: 1
Units: mg/kg

Instrument: IRIS-ICP
Prep Date: 11/18/2008 09:14
Cal Date: 11/18/2008 15:30
Run Date: 11/18/2008 18:51
File ID: IR.111808.185100
Percent Solid: 84.6

Analyte	CAS. Number	Result	Qual	RL	MDL
Silver, Total	7440-22-4		U	0.905	0.226
Barium, Total	7440-39-3	13.9		0.452	0.0905
Cadmium, Total	7440-43-9	0.163	J	0.181	0.0452
Chromium, Total	7440-47-3	5.72 J		0.905	0.109

MSH

U Undetected; the analyte was analyzed for, but not detected.
J Estimated ; the analyte concentration was less than the low standard (LOQ)

Microbac

314 lw 2/1/09

9

Sample Number: L08110433-09
Client ID: MR08-SS387-08D
Matrix: Soil
Workgroup Number: WG288653
Collect Date: 11/12/2008 10:40
Sample Tag: 01

PrePrep Method: NONE
Prep Method: 3051
Analytical Method: 6020
Analyst: JYH
Dilution: 1
Units: mg/kg

Instrument: ELAN-ICP
Prep Date: 11/18/2008 06:40
Cal Date: 11/21/2008 10:09
Run Date: 11/21/2008 13:43
File ID: EL.112108.134327
Percent Solid: 84.6

Analyte	CAS. Number	Result	Qual	RL	MDL
Arsenic, Total	7440-38-2	2.02		0.349	0.0872
Lead, Total	7439-92-1	42.9		0.465	0.116
Selenium, Total	7782-49-2	0.173 J		0.465	0.116

MSL

J Estimated ; the analyte concentration was less than the low standard (LOQ)

Microbac

686 lw 21109

9

Sample Number: L08110433-09
Client ID: MR08-SS387-08D
Matrix: Soil
Workgroup Number: WG288470
Collect Date: 11/12/2008 10:40
Sample Tag: 01

PrePrep Method: NONE
Prep Method: 7471A
Analytical Method: 7471A
Analyst: ADC
Dilution: 1
Units: mg/kg

Instrument: HYDRA
Prep Date: 11/18/2008 12:02
Cal Date: 11/20/2008 08:59
Run Date: 11/20/2008 09:23
File ID: HY.112008.092357
Percent Solid: 84.6

Analyte	CAS. Number	Result	Qual	RL	MDL
Mercury, Total	7439-97-6		U	0.115	0.0231

U Undetected; the analyte was analyzed for, but not detected.

Microbac

1620 JW 2/1/09

10

Sample Number: L08110433-10
Client ID: MR08-IS381-08D
Matrix: Soil
Workgroup Number: WG288316
Collect Date: 11/12/2008 13:30
Sample Tag: 01

PrePrep Method: NONE
Prep Method: 3051
Analytical Method: 6010B
Analyst: KHR
Dilution: 1
Units: mg/kg

Instrument: IRIS-ICP
Prep Date: 11/18/2008 09:14
Cal Date: 11/18/2008 15:30
Run Date: 11/18/2008 18:58
File ID: IR.111808.185800
Percent Solid: 91.8

Analyte	CAS. Number	Result	Qual	RL	MDL
Silver, Total	7440-22-4		U	0.755	0.189
Barium, Total	7440-39-3	6.66		0.378	0.0755
Cadmium, Total	7440-43-9		U	0.151	0.0378
Chromium, Total	7440-47-3	4.62 J		0.755	0.0906

MSH

U Undetected; the analyte was analyzed for, but not detected.

Microbac

315 LW 2/1/09

10

Sample Number: L08110433-10
Client ID: MR08-IS381-08D
Matrix: Soil
Workgroup Number: WG288653
Collect Date: 11/12/2008 13:30
Sample Tag: 01

PrePrep Method: NONE
Prep Method: 3051
Analytical Method: 6020
Analyst: JYH
Dilution: 1
Units: mg/kg

Instrument: ELAN-ICP
Prep Date: 11/18/2008 06:40
Cal Date: 11/21/2008 10:09
Run Date: 11/21/2008 13:48
File ID: EL.112108.134849
Percent Solid: 91.8

Analyte	CAS. Number	Result	Qual	RL	MDL
Arsenic, Total	7440-38-2	0.229	J	0.324	0.0810
Lead, Total	7439-92-1	3.07		0.432	0.108
Selenium, Total	7782-49-2		UJ ~~J~~	0.432	0.108

MSL

U Undetected; the analyte was analyzed for, but not detected.
J Estimated ; the analyte concentration was less than the low standard (LOQ)

Microbac

 LW 2/1/09

10

Sample Number: L08110433-10
Client ID: MR08-IS381-08D
Matrix: Soil
Workgroup Number: WG288470
Collect Date: 11/12/2008 13:30
Sample Tag: 01

PrePrep Method: NONE
Prep Method: 7471A
Analytical Method: 7471A
Analyst: ADC
Dilution: 1
Units: mg/kg

Instrument: HYDRA
Prep Date: 11/18/2008 12:03
Cal Date: 11/20/2008 08:59
Run Date: 11/20/2008 09:25
File ID: HY.112008.092540
Percent Solid: 91.8

Analyte	CAS. Number	Result	Qual	RL	MDL
Mercury, Total	7439-97-6		U	0.107	0.0215

U Undetected; the analyte was analyzed for, but not detected.

Microbac

1621 lew 2/1/09

11

Sample Number: L08110433-11
Client ID: MR08-EB111208-02
Matrix: Water
Workgroup Number: WG288437
Collect Date: 11/12/2008 13:45
Sample Tag: 01

PrePrep Method: NONE
Prep Method: 3005A
Analytical Method: 6010B
Analyst: ED
Dilution: 1
Units: ug/L

Instrument: PE-ICP2
Prep Date: 11/19/2008 09:01
Cal Date: 11/29/2008 17:13
Run Date: 11/29/2008 22:40
File ID: P2.112908.224034

Analyte	CAS. Number	Result	Qual	RL	MDL
Barium, Total	7440-39-3		U	10.0	2.50
Cadmium, Total	7440-43-9		U	1.00	0.250
Chromium, Total	7440-47-3		U	10.0	2.50
Silver, Total	7440-22-4		U	6.00	2.00

U Undetected; the analyte was analyzed for, but not detected.

Microbac

 lw 2/1/09

11

Sample Number: L08110433-11
Client ID: MR08-EB111208-02
Matrix: Water
Workgroup Number: WG288603
Collect Date: 11/12/2008 13:45
Sample Tag: 01

PrePrep Method: NONE
Prep Method: 3015
Analytical Method: 6020
Analyst: JYH
Dilution: 1
Units: ug/L

Instrument: ELAN-ICP
Prep Date: 11/18/2008 11:46
Cal Date: 11/20/2008 11:05
Run Date: 11/20/2008 21:06
File ID: EL.112008.210601

Analyte	CAS. Number	Result	Qual	RL	MDL
Arsenic, Total	7440-38-2		U	1.00	0.250
Lead, Total	7439-92-1		U	1.00	0.250
Selenium, Total	7782-49-2		U	2.00	0.500

U Undetected; the analyte was analyzed for, but not detected.

Microbac

688 2/1/09

11

Sample Number: L08110433-11
Client ID: MR08-EB111208-02
Matrix: Water
Workgroup Number: WG288572
Collect Date: 11/12/2008 13:45
Sample Tag: 01

PrePrep Method: NONE
Prep Method: 7470A
Analytical Method: 7470A
Analyst: ADC
Dilution: 1
Units: ug/L

Instrument: HYDRA
Prep Date: 11/19/2008 09:09
Cal Date: 11/20/2008 14:48
Run Date: 11/20/2008 15:12
File ID: HY.112008.151259

Analyte	CAS. Number	Result	Qual	RL	MDL
Mercury	7439-97-6		U	0.400	0.100

U Undetected; the analyte was analyzed for, but not detected.

Microbac

1622 lw 2/1/09

12

Sample Number: L08110433-12
Client ID: MR08-IS379-08D
Matrix: Soil
Workgroup Number: WG288316
Collect Date: 11/12/2008 15:25
Sample Tag: 01

PrePrep Method: NONE
Prep Method: 3051
Analytical Method: 6010B
Analyst: KHR
Dilution: 1
Units: mg/kg

Instrument: IRIS-ICP
Prep Date: 11/18/2008 09:14
Cal Date: 11/18/2008 15:30
Run Date: 11/18/2008 19:04
File ID: IR.111808.190400
Percent Solid: 94.3

Analyte	CAS. Number	Result	Qual	RL	MDL
Silver, Total	7440-22-4		U	0.804	0.201
Barium, Total	7440-39-3	5.38		0.402	0.0804
Cadmium, Total	7440-43-9		U	0.161	0.0402
Chromium, Total	7440-47-3	4.04 J		0.804	0.0964 MSH

U Undetected; the analyte was analyzed for, but not detected.

Microbac

317 LW 2/1/09

12

Sample Number: L08110433-12
Client ID: MR08-IS379-08D
Matrix: Soil
Workgroup Number: WG288653
Collect Date: 11/12/2008 15:25
Sample Tag: 01

PrePrep Method: NONE
Prep Method: 3051
Analytical Method: 6020
Analyst: JYH
Dilution: 1
Units: mg/kg

Instrument: ELAN-ICP
Prep Date: 11/18/2008 06:40
Cal Date: 11/21/2008 10:09
Run Date: 11/21/2008 13:54
File ID: EL.112108.135411
Percent Solid: 94.3

Analyte	CAS. Number	Result	Qual	RL	MDL
Arsenic, Total	7440-38-2	0.134	J	0.305	0.0761
Lead, Total	7439-92-1	2.70		0.406	0.102
Selenium, Total	7782-49-2	U-J		0.406	0.102

MSL

U Undetected; the analyte was analyzed for, but not detected.
J Estimated ; the analyte concentration was less than the low standard (LOQ)

Microbac

689 MW 2/1/09

12

Sample Number: L08110433-12
Client ID: MR08-IS379-08D
Matrix: Soil
Workgroup Number: WG288470
Collect Date: 11/12/2008 15:25
Sample Tag: 01

PrePrep Method: NONE
Prep Method: 7471A
Analytical Method: 7471A
Analyst: ADC
Dilution: 1
Units: mg/kg

Instrument: HYDRA
Prep Date: 11/18/2008 12:03
Cal Date: 11/20/2008 08:59
Run Date: 11/20/2008 09:32
File ID: HY.112008.093211
Percent Solid: 94.3

Analyte	CAS. Number	Result	Qual	RL	MDL
Mercury, Total	7439-97-6		U	0.105	0.0210

U Undetected; the analyte was analyzed for, but not detected.

Microbac

1623

LW 2/11/09

13

Sample Number: L08110433-13
Client ID: USTHPFF-MW15-08D
Matrix: Water
Workgroup Number: WG288437
Collect Date: 11/12/2008 11:00
Sample Tag: 01

PrePrep Method: NONE
Prep Method: 3005A
Analytical Method: 6010B
Analyst: ED
Dilution: 1
Units: ug/L

Instrument: PE-ICP2
Prep Date: 11/19/2008 09:01
Cal Date: 11/29/2008 17:13
Run Date: 11/29/2008 23:13
File ID: P2.112908.231321

Analyte	CAS. Number	Result	Qual	RL	MDL
Barium, Total	7440-39-3	61.3		10.0	2.50
Cadmium, Total	7440-43-9		U	1.00	0.250
Chromium, Total	7440-47-3		U	10.0	2.50
Silver, Total	7440-22-4		U	6.00	2.00

U Undetected; the analyte was analyzed for, but not detected.

Microbac

318 MW 2/1/09

13

Sample Number: L08110433-13
Client ID: USTHPFF-MW15-08D
Matrix: Water
Workgroup Number: WG288603
Collect Date: 11/12/2008 11:00
Sample Tag: 01

PrePrep Method: NONE
Prep Method: 3015
Analytical Method: 6020
Analyst: JYH
Dilution: 1
Units: ug/L

Instrument: ELAN-ICP
Prep Date: 11/18/2008 11:46
Cal Date: 11/20/2008 11:05
Run Date: 11/20/2008 21:33
File ID: EL.112008.213336

Analyte	CAS. Number	Result	Qual	RL	MDL
Arsenic, Total	7440-38-2	31.6		1.00	0.250
Lead, Total	7439-92-1	21.7		1.00	0.250
Selenium, Total	7782-49-2	0.878	J	2.00	0.500

J Estimated ; the analyte concentration was less than the low standard (LOQ)

Microbac

690 LW 2/1/09

13

Sample Number: L08110433-13
Client ID: USTHPFF-MW15-08D
Matrix: Water
Workgroup Number: WG288572
Collect Date: 11/12/2008 11:00
Sample Tag: 01

PrePrep Method: NONE
Prep Method: 7470A
Analytical Method: 7470A
Analyst: ADC
Dilution: 1
Units: ug/L

Instrument: HYDRA
Prep Date: 11/19/2008 09:09
Cal Date: 11/20/2008 14:48
Run Date: 11/20/2008 15:14
File ID: HY.112008.151442

Analyte	CAS. Number	Result	Qual	RL	MDL
Mercury	7439-97-6		U	0.400	0.100

U Undetected; the analyte was analyzed for, but not detected.

Microbac

1624 MW 2/1/09

14

Sample Number: L08110433-14
Client ID: USTHPFF-MW09-08D
Matrix: Water
Workgroup Number: WG288437
Collect Date: 11/12/2008 14:30
Sample Tag: 01

PrePrep Method: NONE
Prep Method: 3005A
Analytical Method: 6010B
Analyst: ED
Dilution: 1
Units: ug/L

Instrument: PE-ICP2
Prep Date: 11/19/2008 09:01
Cal Date: 11/29/2008 17:13
Run Date: 11/29/2008 23:19
File ID: P2.112908.231944

Analyte	CAS. Number	Result	Qual	RL	MDL
Barium, Total	7440-39-3	39.0		10.0	2.50
Cadmium, Total	7440-43-9		U	1.00	0.250
Chromium, Total	7440-47-3		U	10.0	2.50
Silver, Total	7440-22-4		U	6.00	2.00

U Undetected; the analyte was analyzed for, but not detected.

Microbac

319 lw 2/1/09

14

Sample Number: L08110433-14
Client ID: USTHPFF-MW09-08D
Matrix: Water
Workgroup Number: WG288603
Collect Date: 11/12/2008 14:30
Sample Tag: 01

PrePrep Method: NONE
Prep Method: 3015
Analytical Method: 6020
Analyst: JYH
Dilution: 1
Units: ug/L

Instrument: ELAN-ICP
Prep Date: 11/18/2008 11:46
Cal Date: 11/20/2008 11:05
Run Date: 11/20/2008 21:39
File ID: EL.112008.213900

Analyte	CAS. Number	Result	Qual	RL	MDL
Arsenic, Total	7440-38-2	0.727	J	1.00	0.250
Lead, Total	7439-92-1	0.349	J	1.00	0.250
Selenium, Total	7782-49-2	0.994	J	2.00	0.500

J Estimated ; the analyte concentration was less than the low standard (LOQ)

Microbac

 lw 2/1/09

14

Sample Number: L08110433-14
Client ID: USTHPFF-MW09-08D
Matrix: Water
Workgroup Number: WG288572
Collect Date: 11/12/2008 14:30
Sample Tag: 01

PrePrep Method: NONE
Prep Method: 7470A
Analytical Method: 7470A
Analyst: ADC
Dilution: 1
Units: ug/L

Instrument: HYDRA
Prep Date: 11/19/2008 09:09
Cal Date: 11/20/2008 14:48
Run Date: 11/20/2008 15:20
File ID: HY.112008.152011

Analyte	CAS. Number	Result	Qual	RL	MDL
Mercury	7439-97-6		U	0.400	0.100

U Undetected; the analyte was analyzed for, but not detected.

Microbac

1625 RW 2/1/09

15

Sample Number: L08110433-15
Client ID: IR78-GW16-08D
Matrix: Water
Workgroup Number: WG288437
Collect Date: 11/12/2008 16:15
Sample Tag: 01

PrePrep Method: NONE
Prep Method: 3005A
Analytical Method: 6010B
Analyst: ED
Dilution: 1
Units: ug/L

Instrument: PE-ICP2
Prep Date: 11/19/2008 09:01
Cal Date: 11/29/2008 17:13
Run Date: 11/29/2008 23:26
File ID: P2.112908.232605

Analyte	CAS. Number	Result	Qual	RL	MDL
Barium, Total	7440-39-3	15.0		10.0	2.50
Cadmium, Total	7440-43-9		U	1.00	0.250
Chromium, Total	7440-47-3		U	10.0	2.50
Silver, Total	7440-22-4		U	6.00	2.00

U Undetected; the analyte was analyzed for, but not detected.

Microbac

320 MW 2/1/09

15

Sample Number: L08110433-15
Client ID: IR78-GW16-08D
Matrix: Water
Workgroup Number: WG288603
Collect Date: 11/12/2008 16:15
Sample Tag: 01

PrePrep Method: NONE
Prep Method: 3015
Analytical Method: 6020
Analyst: JYH
Dilution: 1
Units: ug/L

Instrument: ELAN-ICP
Prep Date: 11/18/2008 11:46
Cal Date: 11/20/2008 11:05
Run Date: 11/20/2008 21:44
File ID: EL.112008.214424

Analyte	CAS. Number	Result	Qual	RL	MDL
Arsenic, Total	7440-38-2		U	1.00	0.250
Lead, Total	7439-92-1		U	1.00	0.250
Selenium, Total	7782-49-2	4.13		2.00	0.500

U Undetected; the analyte was analyzed for, but not detected.

Microbac

692 lw 21/09

15

Sample Number: L08110433-15
Client ID: IR78-GW16-08D
Matrix: Water
Workgroup Number: WG288572
Collect Date: 11/12/2008 16:15
Sample Tag: 01

PrePrep Method: NONE
Prep Method: 7470A
Analytical Method: 7470A
Analyst: ADC
Dilution: 1
Units: ug/L

Instrument: HYDRA
Prep Date: 11/19/2008 09:09
Cal Date: 11/20/2008 14:48
Run Date: 11/20/2008 15:21
File ID: HY.112008.152155

Analyte	CAS. Number	Result	Qual	RL	MDL
Mercury	7439-97-6		U	0.400	0.100

U Undetected; the analyte was analyzed for, but not detected.

Microbac

1626 LW 2/1/09

16

Sample Number: L08110433-16
Client ID: MR08-EB111208
Matrix: Water
Workgroup Number: WG288437
Collect Date: 11/12/2008 17:00
Sample Tag: 01

PrePrep Method: NONE
Prep Method: 3005A
Analytical Method: 6010B
Analyst: ED
Dilution: 1
Units: ug/L

Instrument: PE-ICP2
Prep Date: 11/19/2008 09:01
Cal Date: 11/29/2008 17:13
Run Date: 11/29/2008 23:32
File ID: P2.112908.233218

Analyte	CAS. Number	Result	Qual	RL	MDL
Barium, Total	7440-39-3		U	10.0	2.50
Cadmium, Total	7440-43-9		U	1.00	0.250
Chromium, Total	7440-47-3		U	10.0	2.50
Silver, Total	7440-22-4		U	6.00	2.00

U Undetected; the analyte was analyzed for, but not detected.

Microbac

 RW 2/1/09

16

Sample Number: L08110433-16
Client ID: MR08-EB111208
Matrix: Water
Workgroup Number: WG288603
Collect Date: 11/12/2008 17:00
Sample Tag: 01

PrePrep Method: NONE
Prep Method: 3015
Analytical Method: 6020
Analyst: JYH
Dilution: 1
Units: ug/L

Instrument: ELAN-ICP
Prep Date: 11/18/2008 11:46
Cal Date: 11/20/2008 11:05
Run Date: 11/20/2008 21:49
File ID: EL.112008.214949

Analyte	CAS. Number	Result	Qual	RL	MDL
Arsenic, Total	7440-38-2		U	1.00	0.250
Lead, Total	7439-92-1		U	1.00	0.250
Selenium, Total	7782-49-2		U	2.00	0.500

U Undetected; the analyte was analyzed for, but not detected.

Microbac

693 lw 21/09

16

Sample Number: L08110433-16
Client ID: MR08-EB111208
Matrix: Water
Workgroup Number: WG288572
Collect Date: 11/12/2008 17:00
Sample Tag: 01

PrePrep Method: NONE
Prep Method: 7470A
Analytical Method: 7470A
Analyst: ADC
Dilution: 1
Units: ug/L

Instrument: HYDRA
Prep Date: 11/19/2008 09:09
Cal Date: 11/20/2008 14:48
Run Date: 11/20/2008 15:23
File ID: HY.112008.152342

Analyte	CAS. Number	Result	Qual	RL	MDL
Mercury	7439-97-6		U	0.400	0.100

U Undetected; the analyte was analyzed for, but not detected.

Microbac

 RW 2/1/09

17

Sample Number: L08110433-17
Client ID: IR78-GW36-08D
Matrix: Water
Workgroup Number: WG288437
Collect Date: 11/13/2008 09:45
Sample Tag: 01

PrePrep Method: NONE
Prep Method: 3005A
Analytical Method: 6010B
Analyst: ED
Dilution: 1
Units: ug/L

Instrument: PE-ICP2
Prep Date: 11/19/2008 09:01
Cal Date: 11/29/2008 17:13
Run Date: 11/29/2008 23:38
File ID: P2.112908.233838

Analyte	CAS. Number	Result	Qual	RL	MDL
Barium, Total	7440-39-3	2.76	J	10.0	2.50
Cadmium, Total	7440-43-9		U	1.00	0.250
Chromium, Total	7440-47-3		U	10.0	2.50
Silver, Total	7440-22-4		U	6.00	2.00

U Undetected; the analyte was analyzed for, but not detected.
J Estimated ; the analyte concentration was less than the low standard (LOQ)

Microbac

322 LW 2/1/09

17

Sample Number: L08110433-17
Client ID: IR78-GW36-08D
Matrix: Water
Workgroup Number: WG288603
Collect Date: 11/13/2008 09:45
Sample Tag: 01

PrePrep Method: NONE
Prep Method: 3015
Analytical Method: 6020
Analyst: JYH
Dilution: 1
Units: ug/L

Instrument: ELAN-ICP
Prep Date: 11/18/2008 11:46
Cal Date: 11/20/2008 11:05
Run Date: 11/20/2008 21:55
File ID: EL.112008.215515

Analyte	CAS. Number	Result	Qual	RL	MDL
Arsenic, Total	7440-38-2	0.258	J	1.00	0.250
Lead, Total	7439-92-1		U	1.00	0.250
Selenium, Total	7782-49-2		U	2.00	0.500

U Undetected; the analyte was analyzed for, but not detected.
J Estimated ; the analyte concentration was less than the low standard (LOQ)

Microbac

 2/1/09

17

Sample Number: L08110433-17
Client ID: IR78-GW36-08D
Matrix: Water
Workgroup Number: WG288572
Collect Date: 11/13/2008 09:45
Sample Tag: 01

PrePrep Method: NONE
Prep Method: 7470A
Analytical Method: 7470A
Analyst: ADC
Dilution: 1
Units: ug/L

Instrument: HYDRA
Prep Date: 11/19/2008 09:09
Cal Date: 11/20/2008 14:48
Run Date: 11/20/2008 15:25
File ID: HY.112008.152557

Analyte	CAS. Number	Result	Qual	RL	MDL
Mercury	7439-97-6		U	0.400	0.100

U Undetected; the analyte was analyzed for, but not detected.

Microbac

1628 MW 2/1/09

18

Sample Number: L08110433-18
Client ID: IR78-GW57-08D
Matrix: Water
Workgroup Number: WG288437
Collect Date: 11/12/2008 09:45
Sample Tag: 01

PrePrep Method: NONE
Prep Method: 3005A
Analytical Method: 6010B
Analyst: ED
Dilution: 1
Units: ug/L

Instrument: PE-ICP2
Prep Date: 11/19/2008 09:01
Cal Date: 11/29/2008 17:13
Run Date: 11/29/2008 23:44
File ID: P2.112908.234452

Analyte	CAS. Number	Result	Qual	RL	MDL
Barium, Total	7440-39-3	66.7		10.0	2.50
Cadmium, Total	7440-43-9		U	1.00	0.250
Chromium, Total	7440-47-3		U	10.0	2.50
Copper, Total	7440-50-8		U	20.0	5.00
Silver, Total	7440-22-4		U	6.00	2.00
Zinc, Total	7440-66-6	22.3		20.0	5.00

U Undetected; the analyte was analyzed for, but not detected.

Microbac

323 MW 2/1/09

18

Sample Number: L08110433-18
Client ID: IR78-GW57-08D
Matrix: Water
Workgroup Number: WG288603
Collect Date: 11/12/2008 09:45
Sample Tag: 01

PrePrep Method: NONE
Prep Method: 3015
Analytical Method: 6020
Analyst: JYH
Dilution: 1
Units: ug/L

Instrument: ELAN-ICP
Prep Date: 11/18/2008 11:46
Cal Date: 11/20/2008 11:05
Run Date: 11/20/2008 22:00
File ID: EL.112008.220040

Analyte	CAS. Number	Result	Qual	RL	MDL
Arsenic, Total	7440-38-2	15.0		1.00	0.250
Lead, Total	7439-92-1		U	1.00	0.250
Antimony, Total	7440-36-0		U	1.00	0.250
Selenium, Total	7782-49-2		U	2.00	0.500

U Undetected; the analyte was analyzed for, but not detected.

Microbac

JW 2/1/09

18

Sample Number: L08110433-18
Client ID: IR78-GW57-08D
Matrix: Water
Workgroup Number: WG288572
Collect Date: 11/12/2008 09:45
Sample Tag: 01

PrePrep Method: NONE
Prep Method: 7470A
Analytical Method: 7470A
Analyst: ADC
Dilution: 1
Units: ug/L

Instrument: HYDRA
Prep Date: 11/19/2008 09:09
Cal Date: 11/20/2008 14:48
Run Date: 11/20/2008 15:29
File ID: HY.112008.152915

Analyte	CAS. Number	Result	Qual	RL	MDL
Mercury	7439-97-6		U	0.400	0.100

U Undetected; the analyte was analyzed for, but not detected.

Microbac

 lw 2/1/09

19

Sample Number: L08110433-19
Client ID: IR78-GW57D-08D
Matrix: Water
Workgroup Number: WG288437
Collect Date: 11/12/2008 09:50
Sample Tag: 01

PrePrep Method: NONE
Prep Method: 3005A
Analytical Method: 6010B
Analyst: ED
Dilution: 1
Units: ug/L

Instrument: PE-ICP2
Prep Date: 11/19/2008 09:01
Cal Date: 11/29/2008 17:13
Run Date: 11/29/2008 23:51
File ID: P2.112908.235113

Analyte	CAS. Number	Result	Qual	RL	MDL
Barium, Total	7440-39-3	63.1		10.0	2.50
Cadmium, Total	7440-43-9		U	1.00	0.250
Chromium, Total	7440-47-3		U	10.0	2.50
Copper, Total	7440-50-8		U	20.0	5.00
Silver, Total	7440-22-4		U	6.00	2.00
Zinc, Total	7440-66-6	5.91	J	20.0	5.00

U Undetected; the analyte was analyzed for, but not detected.
J Estimated ; the analyte concentration was less than the low standard (LOQ)

Microbac

 lw 2/1/09

19

Sample Number: L08110433-19
Client ID: IR78-GW57D-08D
Matrix: Water
Workgroup Number: WG288603
Collect Date: 11/12/2008 09:50
Sample Tag: 01

PrePrep Method: NONE
Prep Method: 3015
Analytical Method: 6020
Analyst: JYH
Dilution: 1
Units: ug/L

Instrument: ELAN-ICP
Prep Date: 11/18/2008 11:46
Cal Date: 11/20/2008 11:05
Run Date: 11/20/2008 22:06
File ID: EL.112008.220606

Analyte	CAS. Number	Result	Qual	RL	MDL
Arsenic, Total	7440-38-2	15.1		1.00	0.250
Lead, Total	7439-92-1		U	1.00	0.250
Antimony, Total	7440-36-0		U	1.00	0.250
Selenium, Total	7782-49-2		U	2.00	0.500

U Undetected; the analyte was analyzed for, but not detected.

Microbac

696 LW 21.109

19

Sample Number: L08110433-19
Client ID: IR78-GW57D-08D
Matrix: Water
Workgroup Number: WG288572
Collect Date: 11/12/2008 09:50
Sample Tag: 01

PrePrep Method: NONE
Prep Method: 7470A
Analytical Method: 7470A
Analyst: ADC
Dilution: 1
Units: ug/L

Instrument: HYDRA
Prep Date: 11/19/2008 09:09
Cal Date: 11/20/2008 14:48
Run Date: 11/20/2008 15:30
File ID: HY.112008.153057

Analyte	CAS. Number	Result	Qual	RL	MDL
Mercury	7439-97-6		U	0.400	0.100

U Undetected; the analyte was analyzed for, but not detected.

Microbac

1630 MW 2/1/09

20

Sample Number: L08110433-20
Client ID: IR78-GW01-08D
Matrix: Water
Workgroup Number: WG288437
Collect Date: 11/12/2008 12:10
Sample Tag: 01

PrePrep Method: NONE
Prep Method: 3005A
Analytical Method: 6010B
Analyst: ED
Dilution: 1
Units: ug/L

Instrument: PE-ICP2
Prep Date: 11/19/2008 09:01
Cal Date: 11/29/2008 17:13
Run Date: 11/29/2008 23:57
File ID: P2.112908.235728

Analyte	CAS. Number	Result	Qual	RL	MDL
Barium, Total	7440-39-3	35.0		10.0	2.50
Cadmium, Total	7440-43-9		U	1.00	0.250
Chromium, Total	7440-47-3		U	10.0	2.50
Copper, Total	7440-50-8		U	20.0	5.00
Silver, Total	7440-22-4		U	6.00	2.00
Zinc, Total	7440-66-6	7.11	J	20.0	5.00

U Undetected; the analyte was analyzed for, but not detected.
J Estimated ; the analyte concentration was less than the low standard (LOQ)

Microbac

325 MW 2/1/09

20

Sample Number: L08110433-20
Client ID: IR78-GW01-08D
Matrix: Water
Workgroup Number: WG288603
Collect Date: 11/12/2008 12:10
Sample Tag: 01

PrePrep Method: NONE
Prep Method: 3015
Analytical Method: 6020
Analyst: JYH
Dilution: 1
Units: ug/L

Instrument: ELAN-ICP
Prep Date: 11/18/2008 11:46
Cal Date: 11/20/2008 11:05
Run Date: 11/20/2008 22:11
File ID: EL.112008.221131

Analyte	CAS. Number	Result	Qual	RL	MDL
Arsenic, Total	7440-38-2	1.76		1.00	0.250
Lead, Total	7439-92-1		U	1.00	0.250
Antimony, Total	7440-36-0		U	1.00	0.250
Selenium, Total	7782-49-2	1.65	J	2.00	0.500

U Undetected; the analyte was analyzed for, but not detected.
J Estimated ; the analyte concentration was less than the low standard (LOQ)

Microbac

lus 2/1/09

20

Sample Number: L08110433-20
Client ID: IR78-GW01-08D
Matrix: Water
Workgroup Number: WG288572
Collect Date: 11/12/2008 12:10
Sample Tag: 01

PrePrep Method: NONE
Prep Method: 7470A
Analytical Method: 7470A
Analyst: ADC
Dilution: 1
Units: ug/L

Instrument: HYDRA
Prep Date: 11/19/2008 09:09
Cal Date: 11/20/2008 14:48
Run Date: 11/20/2008 15:32
File ID: HY.112008.153248

Analyte	CAS. Number	Result	Qual	RL	MDL
Mercury	7439-97-6		U	0.400	0.100

U Undetected; the analyte was analyzed for, but not detected.

Microbac

1631 MW 2/1/09

21

Sample Number: L08110433-21
Client ID: IR78-GW59-08D
Matrix: Water
Workgroup Number: WG288437
Collect Date: 11/12/2008 14:05
Sample Tag: 01

PrePrep Method: NONE
Prep Method: 3005A
Analytical Method: 6010B
Analyst: ED
Dilution: 1
Units: ug/L

Instrument: PE-ICP2
Prep Date: 11/19/2008 09:01
Cal Date: 11/29/2008 17:13
Run Date: 11/30/2008 00:16
File ID: P2.113008.001606

Analyte	CAS. Number	Result	Qual	RL	MDL
Barium, Total	7440-39-3	124		10.0	2.50
Cadmium, Total	7440-43-9		U	1.00	0.250
Chromium, Total	7440-47-3		U	10.0	2.50
Copper, Total	7440-50-8		U	20.0	5.00
Silver, Total	7440-22-4		U	6.00	2.00
Zinc, Total	7440-66-6		U	20.0	5.00

U Undetected; the analyte was analyzed for, but not detected.

Microbac

 JW 2/1/09

21

Sample Number: L08110433-21
Client ID: IR78-GW59-08D
Matrix: Water
Workgroup Number: WG288603
Collect Date: 11/12/2008 14:05
Sample Tag: 01

PrePrep Method: NONE
Prep Method: 3015
Analytical Method: 6020
Analyst: JYH
Dilution: 1
Units: ug/L

Instrument: ELAN-ICP
Prep Date: 11/18/2008 11:46
Cal Date: 11/20/2008 11:05
Run Date: 11/20/2008 22:16
File ID: EL.112008.221654

Analyte	CAS. Number	Result	Qual	RL	MDL
Arsenic, Total	7440-38-2	0.982	J	1.00	0.250
Lead, Total	7439-92-1		U	1.00	0.250
Antimony, Total	7440-36-0		U	1.00	0.250
Selenium, Total	7782-49-2		U	2.00	0.500

U Undetected; the analyte was analyzed for, but not detected.
J Estimated ; the analyte concentration was less than the low standard (LOQ)

Microbac

lw 2/1/09

21

Sample Number: L08110433-21
Client ID: IR78-GW59-08D
Matrix: Water
Workgroup Number: WG288572
Collect Date: 11/12/2008 14:05
Sample Tag: 01

PrePrep Method: NONE
Prep Method: 7470A
Analytical Method: 7470A
Analyst: ADC
Dilution: 1
Units: ug/L

Instrument: HYDRA
Prep Date: 11/19/2008 09:09
Cal Date: 11/20/2008 14:48
Run Date: 11/20/2008 15:34
File ID: HY.112008.153440

Analyte	CAS. Number	Result	Qual	RL	MDL
Mercury	7439-97-6		U	0.400	0.100

U Undetected; the analyte was analyzed for, but not detected.

Microbac

1632 LW 2/1/09

22

Sample Number: L08110433-22
Client ID: IR78-GW59D-08D
Matrix: Water
Workgroup Number: WG288437
Collect Date: 11/12/2008 14:10
Sample Tag: 01

PrePrep Method: NONE
Prep Method: 3005A
Analytical Method: 6010B
Analyst: ED
Dilution: 1
Units: ug/L

Instrument: PE-ICP2
Prep Date: 11/19/2008 09:01
Cal Date: 11/29/2008 17:13
Run Date: 11/30/2008 00:22
File ID: P2.113008.002226

Analyte	CAS. Number	Result	Qual	RL	MDL
Barium, Total	7440-39-3	123		10.0	2.50
Cadmium, Total	7440-43-9		U	1.00	0.250
Chromium, Total	7440-47-3		U	10.0	2.50
Copper, Total	7440-50-8		U	20.0	5.00
Silver, Total	7440-22-4		U	6.00	2.00
Zinc, Total	7440-66-6	5.49	J	20.0	5.00

U Undetected; the analyte was analyzed for, but not detected.
J Estimated ; the analyte concentration was less than the low standard (LOQ)

Microbac

327 lw 2/1/09

22

Sample Number: L08110433-22
Client ID: IR78-GW59D-08D
Matrix: Water
Workgroup Number: WG288603
Collect Date: 11/12/2008 14:10
Sample Tag: 01

PrePrep Method: NONE
Prep Method: 3015
Analytical Method: 6020
Analyst: JYH
Dilution: 1
Units: ug/L

Instrument: ELAN-ICP
Prep Date: 11/18/2008 11:46
Cal Date: 11/20/2008 11:05
Run Date: 11/20/2008 22:33
File ID: EL.112008.223340

Analyte	CAS. Number	Result	Qual	RL	MDL
Arsenic, Total	7440-38-2	1.02		1.00	0.250
Lead, Total	7439-92-1		U	1.00	0.250
Antimony, Total	7440-36-0		U	1.00	0.250
Selenium, Total	7782-49-2		U	2.00	0.500

U Undetected; the analyte was analyzed for, but not detected.

Microbac

lw 2/1/09

22

Sample Number: L08110433-22
Client ID: IR78-GW59D-08D
Matrix: Water
Workgroup Number: WG288572
Collect Date: 11/12/2008 14:10
Sample Tag: 01

PrePrep Method: NONE
Prep Method: 7470A
Analytical Method: 7470A
Analyst: ADC
Dilution: 1
Units: ug/L

Instrument: HYDRA
Prep Date: 11/19/2008 09:09
Cal Date: 11/20/2008 14:48
Run Date: 11/20/2008 15:36
File ID: HY.112008.153644

Analyte	CAS. Number	Result	Qual	RL	MDL
Mercury	7439-97-6		U	0.400	0.100

U Undetected; the analyte was analyzed for, but not detected.

Microbac

2/1/09

23

Sample Number: L08110433-23
Client ID: IR78-GW53-08D
Matrix: Water
Workgroup Number: WG288437
Collect Date: 11/11/2008 15:45
Sample Tag: 01

PrePrep Method: NONE
Prep Method: 3005A
Analytical Method: 6010B
Analyst: ED
Dilution: 1
Units: ug/L

Instrument: PE-ICP2
Prep Date: 11/19/2008 09:01
Cal Date: 11/29/2008 17:13
Run Date: 11/30/2008 00:28
File ID: P2.113008.002844

Analyte	CAS. Number	Result	Qual	RL	MDL
Barium, Total	7440-39-3	42.5		10.0	2.50
Cadmium, Total	7440-43-9		U	1.00	0.250
Chromium, Total	7440-47-3		U	10.0	2.50
Silver, Total	7440-22-4		U	6.00	2.00

U Undetected; the analyte was analyzed for, but not detected.

Microbac

 MW 2/1/09

23

Sample Number: L08110433-23
Client ID: IR78-GW53-08D
Matrix: Water
Workgroup Number: WG288603
Collect Date: 11/11/2008 15:45
Sample Tag: 01

PrePrep Method: NONE
Prep Method: 3015
Analytical Method: 6020
Analyst: JYH
Dilution: 1
Units: ug/L

Instrument: ELAN-ICP
Prep Date: 11/18/2008 11:46
Cal Date: 11/20/2008 11:05
Run Date: 11/20/2008 22:39
File ID: EL.112008.223904

Analyte	CAS. Number	Result	Qual	RL	MDL
Arsenic, Total	7440-38-2	0.402	J	1.00	0.250
Lead, Total	7439-92-1		U	1.00	0.250
Selenium, Total	7782-49-2	0.664	J	2.00	0.500

U Undetected; the analyte was analyzed for, but not detected.
J Estimated ; the analyte concentration was less than the low standard (LOQ)

Microbac

700 lus 2/1/09

23

Sample Number: L08110433-23
Client ID: IR78-GW53-08D
Matrix: Water
Workgroup Number: WG288572
Collect Date: 11/11/2008 15:45
Sample Tag: 01

PrePrep Method: NONE
Prep Method: 7470A
Analytical Method: 7470A
Analyst: ADC
Dilution: 1
Units: ug/L

Instrument: HYDRA
Prep Date: 11/19/2008 09:09
Cal Date: 11/20/2008 14:48
Run Date: 11/20/2008 15:39
File ID: HY.112008.153911

Analyte	CAS. Number	Result	Qual	RL	MDL
Mercury	7439-97-6		U	0.400	0.100

U Undetected; the analyte was analyzed for, but not detected.

Microbac

1634 LW 2/1/09

24

Sample Number: L08110433-24
Client ID: IR78-GW04-08D
Matrix: Water
Workgroup Number: WG288437
Collect Date: 11/11/2008 16:05
Sample Tag: 01

PrePrep Method: NONE
Prep Method: 3005A
Analytical Method: 6010B
Analyst: ED
Dilution: 1
Units: ug/L

Instrument: PE-ICP2
Prep Date: 11/19/2008 09:01
Cal Date: 11/29/2008 17:13
Run Date: 11/30/2008 00:34
File ID: P2.113008.003458

Analyte	CAS. Number	Result	Qual	RL	MDL
Barium, Total	7440-39-3	80.5		10.0	2.50
Cadmium, Total	7440-43-9		U	1.00	0.250
Chromium, Total	7440-47-3		U	10.0	2.50
Copper, Total	7440-50-8		U	20.0	5.00
Silver, Total	7440-22-4		U	6.00	2.00
Zinc, Total	7440-66-6		U	20.0	5.00

U Undetected; the analyte was analyzed for, but not detected.

Microbac

 2/1/09

24

Sample Number: L08110433-24
Client ID: IR78-GW04-08D
Matrix: Water
Workgroup Number: WG288603
Collect Date: 11/11/2008 16:05
Sample Tag: 01

PrePrep Method: NONE
Prep Method: 3015
Analytical Method: 6020
Analyst: JYH
Dilution: 1
Units: ug/L

Instrument: ELAN-ICP
Prep Date: 11/18/2008 11:46
Cal Date: 11/20/2008 11:05
Run Date: 11/20/2008 22:44
File ID: EL.112008.224428

Analyte	CAS. Number	Result	Qual	RL	MDL
Arsenic, Total	7440-38-2	0.400	J	1.00	0.250
Lead, Total	7439-92-1		U	1.00	0.250
Antimony, Total	7440-36-0		U	1.00	0.250
Selenium, Total	7782-49-2		U	2.00	0.500

U Undetected; the analyte was analyzed for, but not detected.
J Estimated ; the analyte concentration was less than the low standard (LOQ)

Microbac

701 MW 2/1/09

24

Sample Number: L08110433-24
Client ID: IR78-GW04-08D
Matrix: Water
Workgroup Number: WG288572
Collect Date: 11/11/2008 16:05
Sample Tag: 01

PrePrep Method: NONE
Prep Method: 7470A
Analytical Method: 7470A
Analyst: ADC
Dilution: 1
Units: ug/L

Instrument: HYDRA
Prep Date: 11/19/2008 09:09
Cal Date: 11/20/2008 14:48
Run Date: 11/20/2008 15:44
File ID: HY.112008.154457

Analyte	CAS. Number	Result	Qual	RL	MDL
Mercury	7439-97-6		U	0.400	0.100

U Undetected; the analyte was analyzed for, but not detected.

Microbac

1635 DW 2/1/09

25

Sample Number: L08110433-25
Client ID: MR08-SS377-08D
Matrix: Soil
Workgroup Number: WG288316
Collect Date: 11/11/2008 13:30
Sample Tag: 01

PrePrep Method: NONE
Prep Method: 3051
Analytical Method: 6010B
Analyst: KHR
Dilution: 1
Units: mg/kg

Instrument: IRIS-ICP
Prep Date: 11/18/2008 09:14
Cal Date: 11/18/2008 15:30
Run Date: 11/18/2008 19:10
File ID: IR.111808.191000
Percent Solid: 88.9

Analyte	CAS. Number	Result	Qual	RL	MDL
Silver, Total	7440-22-4		U	0.864	0.216
Barium, Total	7440-39-3	19.0		0.432	0.0864
Cadmium, Total	7440-43-9	0.0989	J	0.173	0.0432
Chromium, Total	7440-47-3	6.51 J		0.864	0.104
Copper, Total	7440-50-8	0.779	J	1.73	0.432
Antimony, Total	7440-36-0		U	1.73	0.432
Zinc, Total	7440-66-6	3.02		1.73	0.432

MSH

U Undetected; the analyte was analyzed for, but not detected.
J Estimated ; the analyte concentration was less than the low standard (LOQ)

Microbac

330 LW 2/1/09

25

Sample Number: L08110433-25
Client ID: MR08-SS377-08D
Matrix: Soil
Workgroup Number: WG288653
Collect Date: 11/11/2008 13:30
Sample Tag: 01

PrePrep Method: NONE
Prep Method: 3051
Analytical Method: 6020
Analyst: JYH
Dilution: 1
Units: mg/kg

Instrument: ELAN-ICP
Prep Date: 11/18/2008 06:40
Cal Date: 11/21/2008 10:09
Run Date: 11/21/2008 14:10
File ID: EL.112108.141056
Percent Solid: 88.9

Analyte	CAS. Number	Result	Qual	RL	MDL
Arsenic, Total	7440-38-2	0.655		0.327	0.0817
Lead, Total	7439-92-1	6.33		0.436	0.109
Selenium, Total	7782-49-2	0.536 J		0.436	0.109

MSL

Microbac

702 lw 21109

25

Sample Number: L08110433-25
Client ID: MR08-SS377-08D
Matrix: Soil
Workgroup Number: WG288470
Collect Date: 11/11/2008 13:30
Sample Tag: 01

PrePrep Method: NONE
Prep Method: 7471A
Analytical Method: 7471A
Analyst: ADC
Dilution: 1
Units: mg/kg

Instrument: HYDRA
Prep Date: 11/18/2008 12:04
Cal Date: 11/20/2008 08:59
Run Date: 11/20/2008 09:33
File ID: HY.112008.093354
Percent Solid: 88.9

Analyte	CAS. Number	Result	Qual	RL	MDL
Mercury, Total	7439-97-6		U	0.110	0.0220

U Undetected; the analyte was analyzed for, but not detected.

Microbac

1636 LW 2/1/09

26

Sample Number: L08110433-26
Client ID: MR08-SS377D-08D
Matrix: Soil
Workgroup Number: WG288316
Collect Date: 11/11/2008 13:35
Sample Tag: 01

PrePrep Method: NONE
Prep Method: 3051
Analytical Method: 6010B
Analyst: KHR
Dilution: 1
Units: mg/kg

Instrument: IRIS-ICP
Prep Date: 11/18/2008 09:14
Cal Date: 11/18/2008 15:30
Run Date: 11/18/2008 19:16
File ID: IR.111808.191600
Percent Solid: 86.9

Analyte	CAS. Number	Result	Qual	RL	MDL
Silver, Total	7440-22-4		U	0.814	0.203
Barium, Total	7440-39-3	16.9		0.407	0.0814
Cadmium, Total	7440-43-9	0.107	J	0.163	0.0407
Chromium, Total	7440-47-3	5.98 J		0.814	0.0976
Copper, Total	7440-50-8	0.637	J	1.63	0.407
Antimony, Total	7440-36-0		U	1.63	0.407
Zinc, Total	7440-66-6	2.38		1.63	0.407

MSH

U Undetected; the analyte was analyzed for, but not detected.
J Estimated ; the analyte concentration was less than the low standard (LOQ)

Microbac

331 MW 2/1/09

26

Sample Number: L08110433-26
Client ID: MR08-SS377D-08D
Matrix: Soil
Workgroup Number: WG288653
Collect Date: 11/11/2008 13:35
Sample Tag: 01

PrePrep Method: NONE
Prep Method: 3051
Analytical Method: 6020
Analyst: JYH
Dilution: 1
Units: mg/kg

Instrument: ELAN-ICP
Prep Date: 11/18/2008 06:40
Cal Date: 11/21/2008 10:09
Run Date: 11/21/2008 14:16
File ID: EL.112108.141619
Percent Solid: 86.9

Analyte	CAS. Number	Result	Qual	RL	MDL
Arsenic, Total	7440-38-2	0.567		0.335	0.0838
Lead, Total	7439-92-1	4.72		0.447	0.112
Selenium, Total	7782-49-2	0.525 J		0.447	0.112

MSL

Microbac

703 lw 2/1/09

26

Sample Number: L08110433-26
Client ID: MR08-SS377D-08D
Matrix: Soil
Workgroup Number: WG288470
Collect Date: 11/11/2008 13:35
Sample Tag: 01

PrePrep Method: NONE
Prep Method: 7471A
Analytical Method: 7471A
Analyst: ADC
Dilution: 1
Units: mg/kg

Instrument: HYDRA
Prep Date: 11/18/2008 12:04
Cal Date: 11/20/2008 08:59
Run Date: 11/20/2008 09:36
File ID: HY.112008.093609
Percent Solid: 86.9

Analyte	CAS. Number	Result	Qual	RL	MDL
Mercury, Total	7439-97-6	0.0270	J	0.107	0.0214

J Estimated ; the analyte concentration was less than the low standard (LOQ)

Microbac

MW 2/1/09

27

Sample Number: L08110433-27
Client ID: MR08-SS376-08D
Matrix: Soil
Workgroup Number: WG288316
Collect Date: 11/11/2008 14:25
Sample Tag: 01

PrePrep Method: NONE
Prep Method: 3051
Analytical Method: 6010B
Analyst: KHR
Dilution: 1
Units: mg/kg

Instrument: IRIS-ICP
Prep Date: 11/18/2008 09:14
Cal Date: 11/18/2008 15:30
Run Date: 11/18/2008 19:22
File ID: IR.111808.192200
Percent Solid: 94.1

Analyte	CAS. Number	Result	Qual	RL	MDL
Silver, Total	7440-22-4		U	0.799	0.200
Barium, Total	7440-39-3	11.3		0.399	0.0799
Cadmium, Total	7440-43-9	0.344		0.160	0.0399
Chromium, Total	7440-47-3	8.36 J		0.799	0.0958
Copper, Total	7440-50-8	2.53		1.60	0.399
Antimony, Total	7440-36-0	0.662	J	1.60	0.399
Zinc, Total	7440-66-6	36.8		1.60	0.399

MSH

U Undetected; the analyte was analyzed for, but not detected.
J Estimated ; the analyte concentration was less than the low standard (LOQ)

Microbac

332 MW 2/1/09

27

Sample Number: L08110433-27
Client ID: MR08-SS376-08D
Matrix: Soil
Workgroup Number: WG288653
Collect Date: 11/11/2008 14:25
Sample Tag: 01

PrePrep Method: NONE
Prep Method: 3051
Analytical Method: 6020
Analyst: JYH
Dilution: 1
Units: mg/kg

Instrument: ELAN-ICP
Prep Date: 11/18/2008 06:40
Cal Date: 11/21/2008 10:09
Run Date: 11/21/2008 14:21
File ID: EL.112108.142142
Percent Solid: 94.1

Analyte	CAS. Number	Result	Qual	RL	MDL
Arsenic, Total	7440-38-2	3.66		0.306	0.0764
Lead, Total	7439-92-1	22.6		0.408	0.102
Selenium, Total	7782-49-2	0.403 J	~~J~~	0.408	0.102

MSL

J Estimated ; the analyte concentration was less than the low standard (LOQ)

Microbac

704 MW 2/1/09

27

Sample Number: L08110433-27
Client ID: MR08-SS376-08D
Matrix: Soil
Workgroup Number: WG288470
Collect Date: 11/11/2008 14:25
Sample Tag: 01

PrePrep Method: NONE
Prep Method: 7471A
Analytical Method: 7471A
Analyst: ADC
Dilution: 1
Units: mg/kg

Instrument: HYDRA
Prep Date: 11/18/2008 12:05
Cal Date: 11/20/2008 08:59
Run Date: 11/20/2008 09:37
File ID: HY.112008.093755
Percent Solid: 94.1

Analyte	CAS. Number	Result	Qual	RL	MDL
Mercury, Total	7439-97-6		U	0.101	0.0203

U Undetected; the analyte was analyzed for, but not detected.

Microbac

1638 LW 2/1/09

28

Sample Number: L08110433-28
Client ID: MR08-SS375-08D
Matrix: Soil
Workgroup Number: WG288316
Collect Date: 11/11/2008 14:45
Sample Tag: 01

PrePrep Method: NONE
Prep Method: 3051
Analytical Method: 6010B
Analyst: KHR
Dilution: 1
Units: mg/kg

Instrument: IRIS-ICP
Prep Date: 11/18/2008 09:14
Cal Date: 11/18/2008 15:30
Run Date: 11/18/2008 17:39
File ID: IR.111808.173900
Percent Solid: 90.1

Analyte	CAS. Number	Result	Qual	RL	MDL
Silver, Total	7440-22-4		U	0.748	0.187
Barium, Total	7440-39-3	13.1		0.374	0.0748
Cadmium, Total	7440-43-9	0.0572	J	0.150	0.0374
Chromium, Total	7440-47-3	10.1 J		0.748	0.0897
Copper, Total	7440-50-8	1.24	J	1.50	0.374
Antimony, Total	7440-36-0		U	1.50	0.374
Zinc, Total	7440-66-6	6.92		1.50	0.374

MSM

U Undetected; the analyte was analyzed for, but not detected.
J Estimated ; the analyte concentration was less than the low standard (LOQ)

Microbac

333 MW 2/1/09

28

Sample Number: L08110433-28
Client ID: MR08-SS375-08D
Matrix: Soil
Workgroup Number: WG288653
Collect Date: 11/11/2008 14:45
Sample Tag: 01

PrePrep Method: NONE
Prep Method: 3051
Analytical Method: 6020
Analyst: JYH
Dilution: 1
Units: mg/kg

Instrument: ELAN-ICP
Prep Date: 11/18/2008 06:40
Cal Date: 11/21/2008 10:09
Run Date: 11/21/2008 12:27
File ID: EL.112108.122735
Percent Solid: 90.1

Analyte	CAS. Number	Result	Qual	RL	MDL
Arsenic, Total	7440-38-2	1.13		0.331	0.0828
Lead, Total	7439-92-1	9.04		0.441	0.110
Selenium, Total	7782-49-2	0.163	J	0.441	0.110

MSL

J Estimated ; the analyte concentration was less than the low standard (LOQ)

Microbac

705 21/09

28

Sample Number: L08110433-28
Client ID: MR08-SS375-08D
Matrix: Soil
Workgroup Number: WG288470
Collect Date: 11/11/2008 14:45
Sample Tag: 01

PrePrep Method: NONE
Prep Method: 7471A
Analytical Method: 7471A
Analyst: ADC
Dilution: 1
Units: mg/kg

Instrument: HYDRA
Prep Date: 11/18/2008 12:05
Cal Date: 11/20/2008 08:59
Run Date: 11/20/2008 09:39
File ID: HY.112008.093936
Percent Solid: 90.1

Analyte	CAS. Number	Result	Qual	RL	MDL
Mercury, Total	7439-97-6		U	0.111	0.0222

U Undetected; the analyte was analyzed for, but not detected.

Microbac

1639 hw 2/1/09

31

Sample Number: L08110433-31
Client ID: MR08-SS374-08D
Matrix: Soil
Workgroup Number: WG288316
Collect Date: 11/11/2008 15:10
Sample Tag: 01

PrePrep Method: NONE
Prep Method: 3051
Analytical Method: 6010B
Analyst: KHR
Dilution: 1
Units: mg/kg

Instrument: IRIS-ICP
Prep Date: 11/18/2008 09:14
Cal Date: 11/18/2008 15:30
Run Date: 11/18/2008 19:28
File ID: IR.111808.192800
Percent Solid: 89.0

Analyte	CAS. Number	Result	Qual	RL	MDL
Silver, Total	7440-22-4		U	0.840	0.210
Barium, Total	7440-39-3	16.3		0.420	0.0840
Cadmium, Total	7440-43-9	0.140	J	0.168	0.0420
Chromium, Total	7440-47-3	10.3 J		0.840	0.101
Copper, Total	7440-50-8	2.52		1.68	0.420
Antimony, Total	7440-36-0	1.05	J	1.68	0.420
Zinc, Total	7440-66-6	17.9		1.68	0.420

MSH

U Undetected; the analyte was analyzed for, but not detected.
J Estimated ; the analyte concentration was less than the low standard (LOQ)

Microbac

 KW 2/1/09

31

Sample Number: L08110433-31
Client ID: MR08-SS374-08D
Matrix: Soil
Workgroup Number: WG288653
Collect Date: 11/11/2008 15:10
Sample Tag: DL01

PrePrep Method: NONE
Prep Method: 3051
Analytical Method: 6020
Analyst: JYH
Dilution: 10
Units: mg/kg

Instrument: ELAN-ICP
Prep Date: 11/18/2008 06:40
Cal Date: 11/21/2008 10:09
Run Date: 11/21/2008 14:55
File ID: EL.112108.145502
Percent Solid: 89.0

Analyte	CAS. Number	Result	Qual	RL	MDL
Lead, Total	7439-92-1	49.2		4.26	1.07

Microbac

708 MW 2/1/09

31

Sample Number: L08110433-31
Client ID: MR08-SS374-08D
Matrix: Soil
Workgroup Number: WG288653
Collect Date: 11/11/2008 15:10
Sample Tag: 01

PrePrep Method: NONE
Prep Method: 3051
Analytical Method: 6020
Analyst: JYH
Dilution: 1
Units: mg/kg

Instrument: ELAN-ICP
Prep Date: 11/18/2008 06:40
Cal Date: 11/21/2008 10:09
Run Date: 11/21/2008 12:43
File ID: EL.112108.124341
Percent Solid: 89.0

Analyte	CAS. Number	Result	Qual	RL	MDL
Arsenic, Total	7440-38-2	3.30		0.320	0.0799
Selenium, Total	7782-49-2	0.294 J	J	0.426	0.107

MSL

J Estimated ; the analyte concentration was less than the low standard (LOQ)

Microbac

709 lw 21.109

31

Sample Number: L08110433-31
Client ID: MR08-SS374-08D
Matrix: Soil
Workgroup Number: WG288470
Collect Date: 11/11/2008 15:10
Sample Tag: 01

PrePrep Method: NONE
Prep Method: 7471A
Analytical Method: 7471A
Analyst: ADC
Dilution: 1
Units: mg/kg

Instrument: HYDRA
Prep Date: 11/18/2008 12:07
Cal Date: 11/20/2008 08:59
Run Date: 11/20/2008 09:45
File ID: HY.112008.094513
Percent Solid: 89.0

Analyte	CAS. Number	Result	Qual	RL	MDL
Mercury, Total	7439-97-6	0.0261	J	0.109	0.0218

J Estimated ; the analyte concentration was less than the low standard (LOQ)

Microbac

1642 MW 2/1/09

32

Sample Number: L08110433-32
Client ID: MR08-SS374D-08D
Matrix: Soil
Workgroup Number: WG288316
Collect Date: 11/11/2008 15:15
Sample Tag: 01

PrePrep Method: NONE
Prep Method: 3051
Analytical Method: 6010B
Analyst: KHR
Dilution: 1
Units: mg/kg

Instrument: IRIS-ICP
Prep Date: 11/18/2008 09:14
Cal Date: 11/18/2008 15:30
Run Date: 11/18/2008 19:34
File ID: IR.111808.193400
Percent Solid: 75.1

Analyte	CAS. Number	Result	Qual	RL	MDL
Silver, Total	7440-22-4		U	0.930	0.232
Barium, Total	7440-39-3	12.6		0.465	0.0930
Cadmium, Total	7440-43-9	0.179	J	0.186	0.0465
Chromium, Total	7440-47-3	6.19 J		0.930	0.112
Copper, Total	7440-50-8	2.51		1.86	0.465
Antimony, Total	7440-36-0		U	1.86	0.465
Zinc, Total	7440-66-6	19.7		1.86	0.465

MS H

U Undetected; the analyte was analyzed for, but not detected.
J Estimated ; the analyte concentration was less than the low standard (LOQ)

Microbac

 LW 2/1/09

32

Sample Number: L08110433-32
Client ID: MR08-SS374D-08D
Matrix: Soil
Workgroup Number: WG288653
Collect Date: 11/11/2008 15:15
Sample Tag: 01

PrePrep Method: NONE
Prep Method: 3051
Analytical Method: 6020
Analyst: JYH
Dilution: 1
Units: mg/kg

Instrument: ELAN-ICP
Prep Date: 11/18/2008 06:40
Cal Date: 11/21/2008 10:09
Run Date: 11/21/2008 12:49
File ID: EL.112108.124903
Percent Solid: 75.1

Analyte	CAS. Number	Result	Qual	RL	MDL
Arsenic, Total	7440-38-2	3.60		0.369	0.0923
Selenium, Total	7782-49-2	0.283 J	J	0.492	0.123

MSL

J Estimated ; the analyte concentration was less than the low standard (LOQ)

Microbac

710 lew 2/1/09

32

Sample Number: L08110433-32
Client ID: MR08-SS374D-08D
Matrix: Soil
Workgroup Number: WG288653
Collect Date: 11/11/2008 15:15
Sample Tag: DL01

PrePrep Method: NONE
Prep Method: 3051
Analytical Method: 6020
Analyst: JYH
Dilution: 10
Units: mg/kg

Instrument: ELAN-ICP
Prep Date: 11/18/2008 06:40
Cal Date: 11/21/2008 10:09
Run Date: 11/21/2008 15:00
File ID: EL.112108.150026
Percent Solid: 75.1

Analyte	CAS. Number	Result	Qual	RL	MDL
Lead, Total	7439-92-1	56.0		4.92	1.23

Microbac

711 lw 2/1/09

32

Sample Number: L08110433-32
Client ID: MR08-SS374D-08D
Matrix: Soil
Workgroup Number: WG288470
Collect Date: 11/11/2008 15:15
Sample Tag: 01

PrePrep Method: NONE
Prep Method: 7471A
Analytical Method: 7471A
Analyst: ADC
Dilution: 1
Units: mg/kg

Instrument: HYDRA
Prep Date: 11/18/2008 12:08
Cal Date: 11/20/2008 08:59
Run Date: 11/20/2008 09:46
File ID: HY.112008.094659
Percent Solid: 75.1

Analyte	CAS. Number	Result	Qual	RL	MDL
Mercury, Total	7439-97-6	0.0256	J	0.124	0.0247

J Estimated ; the analyte concentration was less than the low standard (LOQ)

Microbac

1643 RW 2/1/09

33

Sample Number: L08110433-33
Client ID: MR08-EB111208-1
Matrix: Water
Workgroup Number: WG288437
Collect Date: 11/12/2008 08:30
Sample Tag: 01

PrePrep Method: NONE
Prep Method: 3005A
Analytical Method: 6010B
Analyst: ED
Dilution: 1
Units: ug/L

Instrument: PE-ICP2
Prep Date: 11/19/2008 09:01
Cal Date: 11/29/2008 17:13
Run Date: 11/30/2008 00:41
File ID: P2.113008.004115

Analyte	CAS. Number	Result	Qual	RL	MDL
Barium, Total	7440-39-3		U	10.0	2.50
Cadmium, Total	7440-43-9		U	1.00	0.250
Chromium, Total	7440-47-3		U	10.0	2.50
Copper, Total	7440-50-8		U	20.0	5.00
Silver, Total	7440-22-4		U	6.00	2.00
Zinc, Total	7440-66-6		U	20.0	5.00

U Undetected; the analyte was analyzed for, but not detected.

Microbac

 2/1/09

33

Sample Number: L08110433-33
Client ID: MR08-EB111208-1
Matrix: Water
Workgroup Number: WG288603
Collect Date: 11/12/2008 08:30
Sample Tag: 01

PrePrep Method: NONE
Prep Method: 3015
Analytical Method: 6020
Analyst: JYH
Dilution: 1
Units: ug/L

Instrument: ELAN-ICP
Prep Date: 11/18/2008 11:46
Cal Date: 11/20/2008 11:05
Run Date: 11/20/2008 22:49
File ID: EL.112008.224952

Analyte	CAS. Number	Result	Qual	RL	MDL
Arsenic, Total	7440-38-2		U	1.00	0.250
Lead, Total	7439-92-1		U	1.00	0.250
Antimony, Total	7440-36-0		U	1.00	0.250
Selenium, Total	7782-49-2		U	2.00	0.500

U Undetected; the analyte was analyzed for, but not detected.

Microbac

712 lw 2/1/09

33

Sample Number: L08110433-33
Client ID: MR08-EB111208-1
Matrix: Water
Workgroup Number: WG288572
Collect Date: 11/12/2008 08:30
Sample Tag: 01

PrePrep Method: NONE
Prep Method: 7470A
Analytical Method: 7470A
Analyst: ADC
Dilution: 1
Units: ug/L

Instrument: HYDRA
Prep Date: 11/19/2008 09:09
Cal Date: 11/20/2008 14:48
Run Date: 11/20/2008 15:46
File ID: HY.112008.154641

Analyte	CAS. Number	Result	Qual	RL	MDL
Mercury	7439-97-6		U	0.400	0.100

U Undetected; the analyte was analyzed for, but not detected.

Microbac

1644 lkw 2/1/09

ENVIRONMENTAL
Data Services, Inc.

EXPLOSIVES, PETN, NITROGLYCERIN

USEPA Region IV - Level IV Review

Site: MCB Camp Lejeune, TO-09 SDG #: L08110471

Client: CH2M HILL, Inc., Virginia Beach, Virginia Date: February 4, 2009

Laboratory: Microbac Laboratories, Inc., Marietta, Ohio Reviewer: Nancy Weaver

EDS ID	Client Sample ID	Laboratory Sample ID	Matrix
1	MR08-IS374-08D	L08110471-06	Soil
2	MR08-IS374D-08D	L08110471-07	Soil
3	MR08-IS375-08D	L08110471-08	Soil
4	MR08-IS376-08D	L08110471-09	Soil
5MS	MR08-IS376-08DMS	L08110471-10MS	Soil
6MSD	MR08-IS376-08DMSD	L08110471-11MSD	Soil
7	MR08-SS399-08D	L08110471-13	Soil
8	MR08-SS398-08D	L08110471-14	Soil
9	MR08-SS397-08D	L08110471-15	Soil
10	MR08-SS396-08D	L08110471-16	Soil
11	MR08-EB111608-1	L08110471-17	Water
12	MR08-EB111708-1	L08110471-18	Water

The USEPA "Contract Laboratory Program National Functional Guidelines for Organic Data Review," October 1999, and professional judgement were used in evaluating the data in this summary report.

Holding Times - All samples were extracted within 7 days for water samples, 14 days for soil samples and analyzed within 40 days.

Initial Calibration - The initial calibrations exhibited acceptable %RSD and/or correlation coefficient values.

Calibration Verification - The continuing calibrations exhibited acceptable %D values except the following.

CCAL Date	Compound	%D	Qualifier	Affected Samples
11/21/08	Tetryl	52.8%	J/UJ	11, 12

Surrogates - All samples exhibited acceptable surrogate recoveries.

MS/MSD - The MS/MSD sample exhibited acceptable %R and RPD values except the following.

MS/MSD Sample ID	Compound	MS/MSD %R/RPD	Qualifier
4	2,4-Dinitrotoluene	74.1%/76.5%/Ok	J/UJ
	Nitrobenzene	71.2%/Ok/Ok	J/UJ

Laboratory Control Sample - The LCS samples exhibited acceptable %R values except the following.

LCS ID	Compound	%R	Qualifier	Affected Samples
WG288618-03	HMX	77.1%	J/UJ	11, 12

Method Blank - The method blanks were free of contamination.

Field and Equipment Blank - Field QC results are summarized below.

Blank ID	Compound	Conc. ug/L	Action Level ug/L	Qualifier	Affected Samples
MR08-EB111608-1	None - ND	-	-	-	-
MR08-EB111708-1	None - ND	-	-	-	-
MR08-FB111108	None - ND	-	-	-	-

Field Duplicates - Field duplicate results are summarized below.

Compound	MR08-IS374-08D mg/kg	MR08-IS374D-08D mg/kg	RPD	Qualifier
None	ND	ND	-	-

Compound Identification - Retention times were acceptable and no further action was taken.

Compound Quantitation - No discrepancies were identified.

Report Number: L08110471

Report Date : December 9, 2008

Sample Number: L08110471-06
Client ID: MR08-IS374-08D
Matrix: Soil
Workgroup Number: WG288635
Collect Date: 11/16/2008 09:05
Sample Tag: 02

PrePrep Method: NONE
Prep Method: METHOD
Analytical Method: 8330MOD
Analyst: ECL
Dilution: 1
Units: mg/kg

Instrument: HPLC5
Prep Date: 11/20/2008 09:00
Cal Date: 12/01/2008 20:11
Run Date: 12/04/2008 14:51
File ID: 5L003066.F

Analyte	CAS. Number	Result	Qual	RL	MDL
PETN	78-11-5		U	0.297	0.0991

U Undetected; the analyte was analyzed for, but not detected.

Microbac

15 LW 2/4/09

1

Sample Number: L08110471-06
Client ID: MR08-IS374-08D
Matrix: Soil
Workgroup Number: WG288635
Collect Date: 11/16/2008 09:05
Sample Tag: 01

PrePrep Method: NONE
Prep Method: METHOD
Analytical Method: 8330MOD
Analyst: ECL
Dilution: 1
Units: mg/kg

Instrument: HPLC5
Prep Date: 11/20/2008 09:00
Cal Date: 12/01/2008 20:11
Run Date: 12/02/2008 10:10
File ID: 5L003010.F

Analyte	CAS. Number	Result	Qual	RL	MDL
1,3,5-Trinitrobenzene	99-35-4		U	0.297	0.0991
1,3-Dinitrobenzene	99-65-0		U	0.297	0.0991
2,4,6-Trinitrotoluene	118-96-7		U	0.297	0.0991
2,4-Dinitrotoluene	121-14-2		U	0.297	0.0991
2,6-Dinitrotoluene	606-20-2		U	0.297	0.0991
2-Amino-4,6-dinitrotoluene	35572-78-2		U	0.297	0.0991
2-Nitrotoluene	88-72-2		U	0.297	0.0991
3-Nitrotoluene	99-08-1		U	0.297	0.0991
4-Nitrotoluene	99-99-0		U	0.297	0.0991
4-Amino-2,6-dinitrotoluene	19406-51-0		U	0.297	0.0991
HMX	2691-41-0		U	0.297	0.0991
Nitrobenzene	98-95-3		U	0.297	0.0991
RDX	121-82-4		U	0.297	0.0991
Tetryl	479-45-8		U	0.297	0.0991
Nitroglycerin	55-63-0		U	0.297	0.0991

Surrogate	% Recovery	Lower	Upper	Qual
1,2-Dinitrobenzene	62.6	50	150	

U Undetected; the analyte was analyzed for, but not detected.

Microbac

14 lw 2/4/09

2

Sample Number: L08110471-07
Client ID: MR08-IS374D-08D
Matrix: Soil
Workgroup Number: WG288635
Collect Date: 11/16/2008 09:05
Sample Tag: 02

PrePrep Method: NONE
Prep Method: METHOD
Analytical Method: 8330MOD
Analyst: ECL
Dilution: 1
Units: mg/kg

Instrument: HPLC5
Prep Date: 11/20/2008 09:00
Cal Date: 12/01/2008 20:11
Run Date: 12/04/2008 15:04
File ID: 5L003067.F

Analyte	CAS. Number	Result	Qual	RL	MDL
PETN	78-11-5		U	0.299	0.0995

U Undetected; the analyte was analyzed for, but not detected.

Microbac

16 LW 2/4/09

2

Sample Number: L08110471-07
Client ID: MR08-IS374D-08D
Matrix: Soil
Workgroup Number: WG288635
Collect Date: 11/16/2008 09:05
Sample Tag: 01

PrePrep Method: NONE
Prep Method: METHOD
Analytical Method: 8330MOD
Analyst: ECL
Dilution: 1
Units: mg/kg

Instrument: HPLC5
Prep Date: 11/20/2008 09:00
Cal Date: 12/01/2008 20:11
Run Date: 12/02/2008 10:48
File ID: 5L003011.F

Analyte	CAS. Number	Result	Qual	RL	MDL
1,3,5-Trinitrobenzene	99-35-4		U	0.299	0.0995
1,3-Dinitrobenzene	99-65-0		U	0.299	0.0995
2,4,6-Trinitrotoluene	118-96-7		U	0.299	0.0995
2,4-Dinitrotoluene	121-14-2		U	0.299	0.0995
2,6-Dinitrotoluene	606-20-2		U	0.299	0.0995
2-Amino-4,6-dinitrotoluene	35572-78-2		U	0.299	0.0995
2-Nitrotoluene	88-72-2		U	0.299	0.0995
3-Nitrotoluene	99-08-1		U	0.299	0.0995
4-Nitrotoluene	99-99-0		U	0.299	0.0995
4-Amino-2,6-dinitrotoluene	19406-51-0		U	0.299	0.0995
HMX	2691-41-0		U	0.299	0.0995
Nitrobenzene	98-95-3		U	0.299	0.0995
RDX	121-82-4		U	0.299	0.0995
Tetryl	479-45-8		U	0.299	0.0995
Nitroglycerin	55-63-0		U	0.299	0.0995

Surrogate	% Recovery	Lower	Upper	Qual
1,2-Dinitrobenzene	59.6	50	150	

U Undetected; the analyte was analyzed for, but not detected.

Microbac

17 lw 214109

3

Sample Number: L08110471-08
Client ID: MR08-IS375-08D
Matrix: Soil
Workgroup Number: WG288635
Collect Date: 11/16/2008 10:30
Sample Tag: 02

PrePrep Method: NONE
Prep Method: METHOD
Analytical Method: 8330MOD
Analyst: ECL
Dilution: 1
Units: mg/kg

Instrument: HPLC5
Prep Date: 11/20/2008 09:00
Cal Date: 12/01/2008 20:11
Run Date: 12/04/2008 15:17
File ID: 5L003068.F

Analyte	CAS. Number	Result	Qual	RL	MDL
PETN	78-11-5		U	0.295	0.0982

U Undetected; the analyte was analyzed for, but not detected.

Microbac

RW 2/4/09

3

Sample Number: L08110471-08
Client ID: MR08-IS375-08D
Matrix: Soil
Workgroup Number: WG288635
Collect Date: 11/16/2008 10:30
Sample Tag: 01

PrePrep Method: NONE
Prep Method: METHOD
Analytical Method: 8330MOD
Analyst: ECL
Dilution: 1
Units: mg/kg

Instrument: HPLC5
Prep Date: 11/20/2008 09:00
Cal Date: 12/01/2008 20:11
Run Date: 12/02/2008 11:26
File ID: 5L003012.F

Analyte	CAS. Number	Result	Qual	RL	MDL
1,3,5-Trinitrobenzene	99-35-4		U	0.295	0.0982
1,3-Dinitrobenzene	99-65-0		U	0.295	0.0982
2,4,6-Trinitrotoluene	118-96-7		U	0.295	0.0982
2,4-Dinitrotoluene	121-14-2		U	0.295	0.0982
2,6-Dinitrotoluene	606-20-2		U	0.295	0.0982
2-Amino-4,6-dinitrotoluene	35572-78-2		U	0.295	0.0982
2-Nitrotoluene	88-72-2		U	0.295	0.0982
3-Nitrotoluene	99-08-1		U	0.295	0.0982
4-Nitrotoluene	99-99-0		U	0.295	0.0982
4-Amino-2,6-dinitrotoluene	19406-51-0		U	0.295	0.0982
HMX	2691-41-0		U	0.295	0.0982
Nitrobenzene	98-95-3		U	0.295	0.0982
RDX	121-82-4		U	0.295	0.0982
Tetryl	479-45-8		U	0.295	0.0982
Nitroglycerin	55-63-0		U	0.295	0.0982

Surrogate	% Recovery	Lower	Upper	Qual
1,2-Dinitrobenzene	63.2	50	150	

U Undetected; the analyte was analyzed for, but not detected.

Microbac

18 lw 2/4/09

4

Sample Number: L08110471-09
Client ID: MR08-IS376-08D
Matrix: Soil
Workgroup Number: WG288635
Collect Date: 11/16/2008 11:05
Sample Tag: 02

PrePrep Method: NONE
Prep Method: METHOD
Analytical Method: 8330MOD
Analyst: ECL
Dilution: 1
Units: mg/kg

Instrument: HPLC5
Prep Date: 11/20/2008 09:00
Cal Date: 12/01/2008 20:11
Run Date: 12/04/2008 15:30
File ID: 5L003069.F

Analyte	CAS. Number	Result	Qual	RL	MDL
PETN	78-11-5		U	0.297	0.0990

U Undetected; the analyte was analyzed for, but not detected.

Microbac

DW 2/4/09

4

Sample Number: L08110471-09
Client ID: MR08-IS376-08D
Matrix: Soil
Workgroup Number: WG288635
Collect Date: 11/16/2008 11:05
Sample Tag: 01

PrePrep Method: NONE
Prep Method: METHOD
Analytical Method: 8330MOD
Analyst: ECL
Dilution: 1
Units: mg/kg

Instrument: HPLC5
Prep Date: 11/20/2008 09:00
Cal Date: 12/01/2008 20:11
Run Date: 12/02/2008 13:21
File ID: 5L003015.F

Analyte	CAS. Number	Result	Qual	RL	MDL	
1,3,5-Trinitrobenzene	99-35-4		U	0.297	0.0990	
1,3-Dinitrobenzene	99-65-0		U	0.297	0.0990	
2,4,6-Trinitrotoluene	118-96-7		U	0.297	0.0990	
2,4-Dinitrotoluene	121-14-2		UJ ~~U~~	0.297	0.0990	MSL
2,6-Dinitrotoluene	606-20-2		U	0.297	0.0990	
2-Amino-4,6-dinitrotoluene	35572-78-2		U	0.297	0.0990	
2-Nitrotoluene	88-72-2		U	0.297	0.0990	
3-Nitrotoluene	99-08-1		U	0.297	0.0990	
4-Nitrotoluene	99-99-0		U	0.297	0.0990	
4-Amino-2,6-dinitrotoluene	19406-51-0		U	0.297	0.0990	
HMX	2691-41-0		U	0.297	0.0990	
Nitrobenzene	98-95-3		UJ ~~U~~	0.297	0.0990	MSL
RDX	121-82-4		U	0.297	0.0990	
Tetryl	479-45-8		U	0.297	0.0990	
Nitroglycerin	55-63-0		U	0.297	0.0990	

Surrogate	% Recovery	Lower	Upper	Qual
1,2-Dinitrobenzene	60.6	50	150	

U Undetected; the analyte was analyzed for, but not detected.

Microbac

20 MW 2/4/09

7

Sample Number: L08110471-13
Client ID: MR08-SS399-08D
Matrix: Soil
Workgroup Number: WG288635
Collect Date: 11/16/2008 12:40
Sample Tag: 02

PrePrep Method: NONE
Prep Method: METHOD
Analytical Method: 8330MOD
Analyst: ECL
Dilution: 1
Units: mg/kg

Instrument: HPLC5
Prep Date: 11/20/2008 09:00
Cal Date: 12/01/2008 20:11
Run Date: 12/04/2008 15:44
File ID: 5L003070.F

Analyte	CAS. Number	Result	Qual	RL	MDL
PETN	78-11-5		U	0.294	0.0978

U Undetected; the analyte was analyzed for, but not detected.

Microbac

25 DW 2/4/09

7

Sample Number: L08110471-13
Client ID: MR08-SS399-08D
Matrix: Soil
Workgroup Number: WG288635
Collect Date: 11/16/2008 12:40
Sample Tag: 01

PrePrep Method: NONE
Prep Method: METHOD
Analytical Method: 8330MOD
Analyst: ECL
Dilution: 1
Units: mg/kg

Instrument: HPLC5
Prep Date: 11/20/2008 09:00
Cal Date: 12/01/2008 20:11
Run Date: 12/02/2008 15:16
File ID: 5L003018.F

Analyte	CAS. Number	Result	Qual	RL	MDL
1,3,5-Trinitrobenzene	99-35-4		U	0.294	0.0978
1,3-Dinitrobenzene	99-65-0		U	0.294	0.0978
2,4,6-Trinitrotoluene	118-96-7		U	0.294	0.0978
2,4-Dinitrotoluene	121-14-2		U	0.294	0.0978
2,6-Dinitrotoluene	606-20-2		U	0.294	0.0978
2-Amino-4,6-dinitrotoluene	35572-78-2		U	0.294	0.0978
2-Nitrotoluene	88-72-2		U	0.294	0.0978
3-Nitrotoluene	99-08-1		U	0.294	0.0978
4-Nitrotoluene	99-99-0		U	0.294	0.0978
4-Amino-2,6-dinitrotoluene	19406-51-0		U	0.294	0.0978
HMX	2691-41-0		U	0.294	0.0978
Nitrobenzene	98-95-3		U	0.294	0.0978
RDX	121-82-4		U	0.294	0.0978
Tetryl	479-45-8		U	0.294	0.0978
Nitroglycerin	55-63-0		U	0.294	0.0978

Surrogate	% Recovery	Lower	Upper	Qual
1,2-Dinitrobenzene	54.6	50	150	

U Undetected; the analyte was analyzed for, but not detected.

Microbac

24 MW 2/4/09

8

Sample Number: L08110471-14
Client ID: MR08-SS398-08D
Matrix: Soil
Workgroup Number: WG288635
Collect Date: 11/16/2008 13:00
Sample Tag: 02

PrePrep Method: NONE
Prep Method: METHOD
Analytical Method: 8330MOD
Analyst: ECL
Dilution: 1
Units: mg/kg

Instrument: HPLC5
Prep Date: 11/20/2008 09:00
Cal Date: 12/01/2008 20:11
Run Date: 12/04/2008 16:36
File ID: 5L003074.F

Analyte	CAS. Number	Result	Qual	RL	MDL
PETN	78-11-5		U	0.296	0.0988

U Undetected; the analyte was analyzed for, but not detected.

Microbac

 lw 2/4/09

8

Sample Number: L08110471-14
Client ID: MR08-SS398-08D
Matrix: Soil
Workgroup Number: WG288635
Collect Date: 11/16/2008 13:00
Sample Tag: 01

PrePrep Method: NONE
Prep Method: METHOD
Analytical Method: 8330MOD
Analyst: ECL
Dilution: 1
Units: mg/kg

Instrument: HPLC5
Prep Date: 11/20/2008 09:00
Cal Date: 12/01/2008 20:11
Run Date: 12/02/2008 15:54
File ID: 5L003019.F

Analyte	CAS. Number	Result	Qual	RL	MDL
1,3,5-Trinitrobenzene	99-35-4		U	0.296	0.0988
1,3-Dinitrobenzene	99-65-0		U	0.296	0.0988
2,4,6-Trinitrotoluene	118-96-7		U	0.296	0.0988
2,4-Dinitrotoluene	121-14-2		U	0.296	0.0988
2,6-Dinitrotoluene	606-20-2		U	0.296	0.0988
2-Amino-4,6-dinitrotoluene	35572-78-2		U	0.296	0.0988
2-Nitrotoluene	88-72-2		U	0.296	0.0988
3-Nitrotoluene	99-08-1		U	0.296	0.0988
4-Nitrotoluene	99-99-0		U	0.296	0.0988
4-Amino-2,6-dinitrotoluene	19406-51-0		U	0.296	0.0988
HMX	2691-41-0		U	0.296	0.0988
Nitrobenzene	98-95-3		U	0.296	0.0988
RDX	121-82-4		U	0.296	0.0988
Tetryl	479-45-8		U	0.296	0.0988
Nitroglycerin	55-63-0		U	0.296	0.0988

Surrogate	% Recovery	Lower	Upper	Qual
1,2-Dinitrobenzene	57.0	50	150	

U Undetected; the analyte was analyzed for, but not detected.

Microbac

27 lw 2/4/09

9

Sample Number: L08110471-15
Client ID: MR08-SS397-08D
Matrix: Soil
Workgroup Number: WG288635
Collect Date: 11/16/2008 13:20
Sample Tag: 02

PrePrep Method: NONE
Prep Method: METHOD
Analytical Method: 8330MOD
Analyst: ECL
Dilution: 1
Units: mg/kg

Instrument: HPLC5
Prep Date: 11/20/2008 09:00
Cal Date: 12/01/2008 20:11
Run Date: 12/04/2008 16:49
File ID: 5L003075.F

Analyte	CAS. Number	Result	Qual	RL	MDL
PETN	78-11-5		U	0.297	0.0991

U Undetected; the analyte was analyzed for, but not detected.

Microbac

MW 2/4/09

9

Sample Number: L08110471-15
Client ID: MR08-SS397-08D
Matrix: Soil
Workgroup Number: WG288635
Collect Date: 11/16/2008 13:20
Sample Tag: 01

PrePrep Method: NONE
Prep Method: METHOD
Analytical Method: 8330MOD
Analyst: ECL
Dilution: 1
Units: mg/kg

Instrument: HPLC5
Prep Date: 11/20/2008 09:00
Cal Date: 12/01/2008 20:11
Run Date: 12/02/2008 16:32
File ID: 5L003020.F

Analyte	CAS. Number	Result	Qual	RL	MDL
1,3,5-Trinitrobenzene	99-35-4		U	0.297	0.0991
1,3-Dinitrobenzene	99-65-0		U	0.297	0.0991
2,4,6-Trinitrotoluene	118-96-7		U	0.297	0.0991
2,4-Dinitrotoluene	121-14-2		U	0.297	0.0991
2,6-Dinitrotoluene	606-20-2		U	0.297	0.0991
2-Amino-4,6-dinitrotoluene	35572-78-2		U	0.297	0.0991
2-Nitrotoluene	88-72-2		U	0.297	0.0991
3-Nitrotoluene	99-08-1		U	0.297	0.0991
4-Nitrotoluene	99-99-0		U	0.297	0.0991
4-Amino-2,6-dinitrotoluene	19406-51-0		U	0.297	0.0991
HMX	2691-41-0		U	0.297	0.0991
Nitrobenzene	98-95-3		U	0.297	0.0991
RDX	121-82-4		U	0.297	0.0991
Tetryl	479-45-8		U	0.297	0.0991
Nitroglycerin	55-63-0		U	0.297	0.0991

Surrogate	% Recovery	Lower	Upper	Qual
1,2-Dinitrobenzene	53.3	50	150	

U Undetected; the analyte was analyzed for, but not detected.

Microbac

 lw 2/4/09

10

Sample Number: L08110471-16
Client ID: MR08-SS396-08D
Matrix: Soil
Workgroup Number: WG288635
Collect Date: 11/16/2008 13:45
Sample Tag: 02

PrePrep Method: NONE
Prep Method: METHOD
Analytical Method: 8330MOD
Analyst: ECL
Dilution: 1
Units: mg/kg

Instrument: HPLC5
Prep Date: 11/20/2008 09:00
Cal Date: 12/01/2008 20:11
Run Date: 12/04/2008 17:03
File ID: 5L003076.F

Analyte	CAS. Number	Result	Qual	RL	MDL
PETN	78-11-5		U	0.293	0.0976

U Undetected; the analyte was analyzed for, but not detected.

Microbac

31 MW 2/4/09

10

Sample Number: L08110471-16
Client ID: MR08-SS396-08D
Matrix: Soil
Workgroup Number: WG288635
Collect Date: 11/16/2008 13:45
Sample Tag: 01

PrePrep Method: NONE
Prep Method: METHOD
Analytical Method: 8330MOD
Analyst: ECL
Dilution: 1
Units: mg/kg

Instrument: HPLC5
Prep Date: 11/20/2008 09:00
Cal Date: 12/01/2008 20:11
Run Date: 12/02/2008 17:10
File ID: 5L003021.F

Analyte	CAS. Number	Result	Qual	RL	MDL
1,3,5-Trinitrobenzene	99-35-4		U	0.293	0.0976
1,3-Dinitrobenzene	99-65-0		U	0.293	0.0976
2,4,6-Trinitrotoluene	118-96-7		U	0.293	0.0976
2,4-Dinitrotoluene	121-14-2		U	0.293	0.0976
2,6-Dinitrotoluene	606-20-2		U	0.293	0.0976
2-Amino-4,6-dinitrotoluene	35572-78-2		U	0.293	0.0976
2-Nitrotoluene	88-72-2		U	0.293	0.0976
3-Nitrotoluene	99-08-1		U	0.293	0.0976
4-Nitrotoluene	99-99-0		U	0.293	0.0976
4-Amino-2,6-dinitrotoluene	19406-51-0		U	0.293	0.0976
HMX	2691-41-0		U	0.293	0.0976
Nitrobenzene	98-95-3		U	0.293	0.0976
RDX	121-82-4		U	0.293	0.0976
Tetryl	479-45-8		U	0.293	0.0976
Nitroglycerin	55-63-0		U	0.293	0.0976

Surrogate	% Recovery	Lower	Upper	Qual
1,2-Dinitrobenzene	57.9	50	150	

U Undetected; the analyte was analyzed for, but not detected.

Microbac

30 MW 2/4/09

11

Sample Number: L08110471-17
Client ID: MR08-EB111608-1
Matrix: Water
Workgroup Number: WG288717
Collect Date: 11/16/2008 14:45
Sample Tag: 02

PrePrep Method: NONE
Prep Method: 3535
Analytical Method: 8330MOD
Analyst: ECL
Dilution: 1
Units: ug/L

Instrument: HPLC5
Prep Date: 11/21/2008 07:00
Cal Date: 08/12/2008 15:23
Run Date: 11/24/2008 21:44
File ID: 5L002916.F

Analyte	CAS. Number	Result	Qual	RL	MDL
PETN	78-11-5		U	1.04	0.260

U Undetected; the analyte was analyzed for, but not detected.

Microbac

lw 2/4/09

11

Sample Number: L08110471-17
Client ID: MR08-EB111608-1
Matrix: Water
Workgroup Number: WG288717
Collect Date: 11/16/2008 14:45
Sample Tag: 01

PrePrep Method: NONE
Prep Method: 3535
Analytical Method: 8330MOD
Analyst: ECL
Dilution: 1
Units: ug/L

Instrument: HPLC4
Prep Date: 11/21/2008 07:00
Cal Date: 10/30/2008 18:13
Run Date: 11/21/2008 17:37
File ID: 4L014543.F

Analyte	CAS. Number	Result	Qual	RL	MDL	
1,3,5-Trinitrobenzene	99-35-4		U	1.04	0.260	
1,3-Dinitrobenzene	99-65-0		U	1.04	0.260	
2,4,6-Trinitrotoluene	118-96-7		U	1.04	0.260	
2,4-Dinitrotoluene	121-14-2		U	1.04	0.260	
2,6-Dinitrotoluene	606-20-2		U	1.04	0.260	
2-Amino-4,6-dinitrotoluene	35572-78-2		U	1.04	0.260	
2-Nitrotoluene	88-72-2		U	1.04	0.260	
3-Nitrotoluene	99-08-1		U	1.04	0.260	
4-Nitrotoluene	99-99-0		U	1.04	0.260	
4-Amino-2,6-dinitrotoluene	19406-51-0		U	1.04	0.260	
HMX	2691-41-0	UJ	~~U~~	1.04	0.260	BSL
Nitrobenzene	98-95-3		U	1.04	0.260	
RDX	121-82-4		U	1.04	0.260	
Tetryl	479-45-8	UJ	~~U~~	1.04	0.260	CCH
Nitroglycerin	55-63-0		U	1.04	0.260	

Surrogate	% Recovery	Lower	Upper	Qual
1,2-Dinitrobenzene	69.8	50	150	

U Undetected; the analyte was analyzed for, but not detected.

Microbac

32 LW 2/4/09

12

Sample Number: L08110471-18
Client ID: MR08-EB111708-1
Matrix: Water
Workgroup Number: WG288717
Collect Date: 11/17/2008 08:10
Sample Tag: 02

PrePrep Method: NONE
Prep Method: 3535
Analytical Method: 8330MOD
Analyst: ECL
Dilution: 1
Units: ug/L

Instrument: HPLC5
Prep Date: 11/21/2008 07:00
Cal Date: 08/12/2008 15:23
Run Date: 11/24/2008 21:57
File ID: 5L002917.F

Analyte	CAS. Number	Result	Qual	RL	MDL
PETN	78-11-5		U	1.03	0.258

U Undetected; the analyte was analyzed for, but not detected.

Microbac

 lw 2/4/09

12

Sample Number: L08110471-18
Client ID: MR08-EB111708-1
Matrix: Water
Workgroup Number: WG288717
Collect Date: 11/17/2008 08:10
Sample Tag: 01

PrePrep Method: NONE
Prep Method: 3535
Analytical Method: 8330MOD
Analyst: ECL
Dilution: 1
Units: ug/L

Instrument: HPLC4
Prep Date: 11/21/2008 07:00
Cal Date: 10/30/2008 18:13
Run Date: 11/21/2008 18:15
File ID: 4L014544.F

Analyte	CAS. Number	Result	Qual	RL	MDL	
1,3,5-Trinitrobenzene	99-35-4		U	1.03	0.258	
1,3-Dinitrobenzene	99-65-0		U	1.03	0.258	
2,4,6-Trinitrotoluene	118-96-7		U	1.03	0.258	
2,4-Dinitrotoluene	121-14-2		U	1.03	0.258	
2,6-Dinitrotoluene	606-20-2		U	1.03	0.258	
2-Amino-4,6-dinitrotoluene	35572-78-2		U	1.03	0.258	
2-Nitrotoluene	88-72-2		U	1.03	0.258	
3-Nitrotoluene	99-08-1		U	1.03	0.258	
4-Nitrotoluene	99-99-0		U	1.03	0.258	
4-Amino-2,6-dinitrotoluene	19406-51-0		U	1.03	0.258	
HMX	2691-41-0		UJ ~~U~~	1.03	0.258	BSL
Nitrobenzene	98-95-3		U	1.03	0.258	
RDX	121-82-4		U	1.03	0.258	
Tetryl	479-45-8		UJ ~~U~~	1.03	0.258	CCH
Nitroglycerin	55-63-0		U	1.03	0.258	

Surrogate	% Recovery	Lower	Upper	Qual
1,2-Dinitrobenzene	63.2	50	150	

U Undetected; the analyte was analyzed for, but not detected.

Microbac

MW 2/4/09

ENVIRONMENTAL
Data Services, Inc.

METALS

USEPA Region IV - Level IV Review

Site: MCB Camp Lejeune, TO-09 SDG #: L08110471

Client: CH2M HILL, Inc., Virginia Beach, Virginia Date: February 2, 2009

Laboratory: Microbac Laboratories, Inc., Marietta, Ohio Reviewer: Nancy Weaver

EDS ID	Client Sample ID	Laboratory Sample ID	Matrix
1	IR78-GW12-08D	L08110471-01	Water
2	MR08-IS386-08D	L08110471-02	Soil
3	MR08-IS387-08D	L08110471-03	Soil
4	MR08-IS384-08D	L08110471-04	Soil
5	MR08-IS383-08D	L08110471-05	Soil
6	MR08-IS374-08D	L08110471-06	Soil
7	MR08-IS374D-08D	L08110471-07	Soil
8	MR08-IS375-08D	L08110471-08	Soil
9	MR08-IS376-08D	L08110471-09	Soil
10MS	MR08-IS376-08DMS	L08110471-10MS	Soil
11MSD	MR08-IS376-08DMSD	L08110471-11MSD	Soil
12	MR08-IS382-08D	L08110471-12	Soil
13	MR08-SS399-08D	L08110471-13	Soil
14	MR08-SS398-08D	L08110471-14	Soil
15	MR08-SS397-08D	L08110471-15	Soil
16	MR08-SS396-08D	L08110471-16	Soil
17	MR08-EB111608-1	L08110471-17	Water
18	MR08-EB111707-1	L08110471-18	Water
19	MR08-TW07-08D	L08110471-19	Water
20	MR08-TW08-08D	L08110471-20	Water

The USEPA "Contract Laboratory Program National Functional Guidelines for Inorganic Data Review," October 2004, and professional judgement were used in evaluating the data in this summary report.

Holding Times - All samples were prepared and analyzed within 28 days for mercury and 180 days for all other metals.

Calibration - The ICV and CCV %R values were acceptable.

Method and Calibration Blanks - The method blank contaminations are summarized below:

Sample ID	Compound	Conc.	Action Level	Qualifier	Affected Samples
WG288359-02	Copper	0.604	3.02	U	6-8, 12, 13, 15
WG288637-02	Arsenic	0.0844	0.422	U	2, 3, 5-9, 12

Field and Equipment Blank - Field QC results are summarized below.

Blank ID	Compound	Conc. ug/L	Action Level ug/L	Qualifier	Affected Samples
MR08-EB111608-1	None - ND	-	-	-	-
MR08-EB111708-1	None - ND	-	-	-	-
MR08-EB111008	Zinc	7.05	35.25	None	All associated ND
MR08-FB111108	None - ND	-	-	-	-
MR08-FB112008	None - ND	-	-	-	-

ICP Interference Check Sample - All %R values were acceptable.

MS/MSD - The MS/MSD sample exhibited acceptable %R and RPD values.

LCS - The LCS samples exhibited acceptable %R values.

ICP Serial Dilution - The ICP serial dilution sample exhibited acceptable %D values.

Field Duplicates - Field duplicate results are summarized below.

Compound	MR08-IS374-08D mg/kg	MR08-IS374D-08D mg/kg	RPD	Qualifier
Barium	5.54	5.39	3%	None
Chromium	5.95	6.40	7%	None
Lead	2.45	2.35	4%	None
Zinc	1.68	1.80	7%	None

Compound Quantitation - EDS sample ID #14 was analyzed at a 10X dilution for copper. No action was taken by the reviewer.

Report Number: L08110471

Report Date : December 9, 2008

Sample Number: L08110471-01
Client ID: IR78-GW12-08D
Matrix: Water
Workgroup Number: WG288437
Collect Date: 11/14/2008 15:35
Sample Tag: 01

PrePrep Method: NONE
Prep Method: 3005A
Analytical Method: 6010B
Analyst: ED
Dilution: 1
Units: ug/L

Instrument: PE-ICP2
Prep Date: 11/19/2008 09:01
Cal Date: 11/29/2008 17:13
Run Date: 11/30/2008 00:47
File ID: P2.113008.004729

Analyte	CAS. Number	Result	Qual	RL	MDL
Barium, Total	7440-39-3	10.8		10.0	2.50
Cadmium, Total	7440-43-9		U	1.00	0.250
Chromium, Total	7440-47-3		U	10.0	2.50
Silver, Total	7440-22-4		U	6.00	2.00

U Undetected; the analyte was analyzed for, but not detected.

Microbac

276 LW 2/2/09

Report Number: L08110471

Report Date : December 9, 2008

Sample Number:	L08110471-01	PrePrep Method:	NONE	Instrument:	ELAN-ICP
Client ID:	IR78-GW12-08D	Prep Method:	3015	Prep Date:	11/19/2008 07:12
Matrix:	Water	Analytical Method:	6020	Cal Date:	11/20/2008 11:05
Workgroup Number:	WG288510	Analyst:	JYH	Run Date:	11/20/2008 13:39
Collect Date:	11/14/2008 15:35	Dilution:	1	File ID:	EL.112008.133917
Sample Tag:	01	Units:	ug/L		

Analyte	CAS. Number	Result	Qual	RL	MDL
Arsenic, Total	7440-38-2		U	1.00	0.250
Lead, Total	7439-92-1		U	1.00	0.250
Selenium, Total	7782-49-2	2.67		2.00	0.500

U Undetected; the analyte was analyzed for, but not detected.

Microbac

950 LW 2/2/09

Report Number: L08110471
Report Date : December 9, 2008

Sample Number: L08110471-01
Client ID: IR78-GW12-08D
Matrix: Water
Workgroup Number: WG289021
Collect Date: 11/14/2008 15:35
Sample Tag: 01

PrePrep Method: NONE
Prep Method: 7470A
Analytical Method: 7470A
Analyst: ADC
Dilution: 1
Units: ug/L

Instrument: HYDRA
Prep Date: 11/19/2008 09:13
Cal Date: 11/26/2008 09:56
Run Date: 11/26/2008 10:53
File ID: HY.112608.105304

Analyte	CAS. Number	Result	Qual	RL	MDL
Mercury	7439-97-6		U	0.400	0.100

U Undetected; the analyte was analyzed for, but not detected.

Microbac

2265 MW 2/2/09

2

Sample Number: L08110471-02
Client ID: MR08-IS386-08D
Matrix: Soil
Workgroup Number: WG288584
Collect Date: 11/14/2008 15:45
Sample Tag: 01

PrePrep Method: NONE
Prep Method: 3051
Analytical Method: 6010B
Analyst: KHR
Dilution: 1
Units: mg/kg

Instrument: IRIS-ICP
Prep Date: 11/19/2008 07:31
Cal Date: 11/20/2008 10:15
Run Date: 11/20/2008 17:45
File ID: IR.112008.174500
Percent Solid: 80.4

Analyte	CAS. Number	Result	Qual	RL	MDL
Silver, Total	7440-22-4		U	0.921	0.230
Barium, Total	7440-39-3	2.99		0.460	0.0921
Cadmium, Total	7440-43-9		U	0.184	0.0460
Chromium, Total	7440-47-3	2.63		0.921	0.110

U Undetected; the analyte was analyzed for, but not detected.

Microbac

 RW 2/2/09

2

Sample Number:	L08110471-02	PrePrep Method:	NONE	Instrument:	ELAN-ICP
Client ID:	MR08-IS386-08D	Prep Method:	3051	Prep Date:	11/19/2008 08:24
Matrix:	Soil	Analytical Method:	6020	Cal Date:	12/02/2008 11:32
Workgroup Number:	WG288659	Analyst:	JYH	Run Date:	12/02/2008 13:50
Collect Date:	11/14/2008 15:45	Dilution:	1	File ID:	EL.120208.135037
Sample Tag:	02	Units:	mg/kg	Percent Solid:	80.4

Analyte	CAS. Number	Result	Qual	RL	MDL
Selenium, Total	7782-49-2		U	0.490	0.122

U Undetected; the analyte was analyzed for, but not detected.

Microbac

951 lw 2/2/09

2

Sample Number: L08110471-02
Client ID: MR08-IS386-08D
Matrix: Soil
Workgroup Number: WG288659
Collect Date: 11/14/2008 15:45
Sample Tag: 01

PrePrep Method: NONE
Prep Method: 3051
Analytical Method: 6020
Analyst: JYH
Dilution: 1
Units: mg/kg

Instrument: ELAN-ICP
Prep Date: 11/19/2008 08:24
Cal Date: 11/21/2008 10:09
Run Date: 11/21/2008 19:09
File ID: EL.112108.190956
Percent Solid: 80.4

Analyte	CAS. Number	Result	Qual	RL	MDL
Arsenic, Total	7440-38-2	0.367 ~~0.254~~	~~J~~ U	0.367	0.0918
Lead, Total	7439-92-1	1.70		0.490	0.122

BL

J Estimated ; the analyte concentration was less than the low standard (LOQ)

Microbac

 lw 2/2/09

2

Sample Number: L08110471-02
Client ID: MR08-IS386-08D
Matrix: Soil
Workgroup Number: WG289130
Collect Date: 11/14/2008 15:45
Sample Tag: 01

PrePrep Method: NONE
Prep Method: 7471A
Analytical Method: 7471A
Analyst: ADC
Dilution: 1
Units: mg/kg

Instrument: HYDRA
Prep Date: 11/19/2008 09:02
Cal Date: 11/26/2008 11:31
Run Date: 11/26/2008 11:48
File ID: HY.112608.114802
Percent Solid: 80.4

Analyte	CAS. Number	Result	Qual	RL	MDL
Mercury, Total	7439-97-6		U	0.124	0.0248

U Undetected; the analyte was analyzed for, but not detected.

Microbac

2266 fW 2/2/09

3

Sample Number: L08110471-03
Client ID: MR08-IS387-08D
Matrix: Soil
Workgroup Number: WG288584
Collect Date: 11/15/2008 14:30
Sample Tag: 01

PrePrep Method: NONE
Prep Method: 3051
Analytical Method: 6010B
Analyst: KHR
Dilution: 1
Units: mg/kg

Instrument: IRIS-ICP
Prep Date: 11/19/2008 07:31
Cal Date: 11/20/2008 10:15
Run Date: 11/20/2008 18:10
File ID: IR.112008.181000
Percent Solid: 83.0

Analyte	CAS. Number	Result	Qual	RL	MDL
Silver, Total	7440-22-4		U	0.855	0.214
Barium, Total	7440-39-3	2.33		0.428	0.0855
Cadmium, Total	7440-43-9		U	0.171	0.0428
Chromium, Total	7440-47-3	1.70		0.855	0.103

U Undetected; the analyte was analyzed for, but not detected.

Microbac

 2/2/09

3

Sample Number: L08110471-03
Client ID: MR08-IS387-08D
Matrix: Soil
Workgroup Number: WG288659
Collect Date: 11/15/2008 14:30
Sample Tag: 02

PrePrep Method: NONE
Prep Method: 3051
Analytical Method: 6020
Analyst: JYH
Dilution: 1
Units: mg/kg

Instrument: ELAN-ICP
Prep Date: 11/19/2008 08:25
Cal Date: 12/02/2008 11:32
Run Date: 12/02/2008 13:56
File ID: EL.120208.135602
Percent Solid: 83.0

Analyte	CAS. Number	Result	Qual	RL	MDL
Selenium, Total	7782-49-2		U	0.476	0.119

U Undetected; the analyte was analyzed for, but not detected.

Microbac®

 lw 2/2/09

3

Sample Number: L08110471-03
Client ID: MR08-IS387-08D
Matrix: Soil
Workgroup Number: WG288659
Collect Date: 11/15/2008 14:30
Sample Tag: 01

PrePrep Method: NONE
Prep Method: 3051
Analytical Method: 6020
Analyst: JYH
Dilution: 1
Units: mg/kg

Instrument: ELAN-ICP
Prep Date: 11/19/2008 08:25
Cal Date: 11/21/2008 10:09
Run Date: 11/21/2008 19:15
File ID: EL.112108.191522
Percent Solid: 83.0

Analyte	CAS. Number	Result	Qual	RL	MDL
Arsenic, Total	7440-38-2	0.357 ~~0.135~~	~~J~~ U	0.357	0.0893
Lead, Total	7439-92-1	2.39		0.476	0.119

BL

J Estimated ; the analyte concentration was less than the low standard (LOQ)

Microbac

LW 2/2/09

3

Sample Number: L08110471-03
Client ID: MR08-IS387-08D
Matrix: Soil
Workgroup Number: WG289130
Collect Date: 11/15/2008 14:30
Sample Tag: 01

PrePrep Method: NONE
Prep Method: 7471A
Analytical Method: 7471A
Analyst: ADC
Dilution: 1
Units: mg/kg

Instrument: HYDRA
Prep Date: 11/19/2008 09:04
Cal Date: 11/26/2008 11:31
Run Date: 11/26/2008 11:51
File ID: HY.112608.115129
Percent Solid: 83.0

Analyte	CAS. Number	Result	Qual	RL	MDL
Mercury, Total	7439-97-6		U	0.120	0.0241

U Undetected; the analyte was analyzed for, but not detected.

Microbac

2267 lw
2/2/09

4

Sample Number: L08110471-04
Client ID: MR08-IS384-08D
Matrix: Soil
Workgroup Number: WG288584
Collect Date: 11/15/2008 15:50
Sample Tag: 01

PrePrep Method: NONE
Prep Method: 3051
Analytical Method: 6010B
Analyst: KHR
Dilution: 1
Units: mg/kg

Instrument: IRIS-ICP
Prep Date: 11/19/2008 07:31
Cal Date: 11/20/2008 10:15
Run Date: 11/20/2008 18:16
File ID: IR.112008.181600
Percent Solid: 91.3

Analyte	CAS. Number	Result	Qual	RL	MDL
Silver, Total	7440-22-4		U	0.814	0.203
Barium, Total	7440-39-3	6.74		0.407	0.0814
Cadmium, Total	7440-43-9		U	0.163	0.0407
Chromium, Total	7440-47-3	2.94		0.814	0.0977

U Undetected; the analyte was analyzed for, but not detected.

Microbac

 MW 2/2/09

4

Sample Number: L08110471-04
Client ID: MR08-IS384-08D
Matrix: Soil
Workgroup Number: WG288659
Collect Date: 11/15/2008 15:50
Sample Tag: 01

PrePrep Method: NONE
Prep Method: 3051
Analytical Method: 6020
Analyst: JYH
Dilution: 1
Units: mg/kg

Instrument: ELAN-ICP
Prep Date: 11/19/2008 08:26
Cal Date: 11/21/2008 10:09
Run Date: 11/21/2008 19:20
File ID: EL.112108.192047
Percent Solid: 91.3

Analyte	CAS. Number	Result	Qual	RL	MDL
Arsenic, Total	7440-38-2	0.543		0.328	0.0820
Lead, Total	7439-92-1	1.85		0.437	0.109

Microbac

955 lw 2/2/09

4

Sample Number: L08110471-04
Client ID: MR08-IS384-08D
Matrix: Soil
Workgroup Number: WG288659
Collect Date: 11/15/2008 15:50
Sample Tag: 02

PrePrep Method: NONE
Prep Method: 3051
Analytical Method: 6020
Analyst: JYH
Dilution: 1
Units: mg/kg

Instrument: ELAN-ICP
Prep Date: 11/19/2008 08:26
Cal Date: 12/02/2008 11:32
Run Date: 12/02/2008 14:01
File ID: EL.120208.140128
Percent Solid: 91.3

Analyte	CAS. Number	Result	Qual	RL	MDL
Selenium, Total	7782-49-2		U	0.437	0.109

U Undetected; the analyte was analyzed for, but not detected.

Microbac

956 MW 2/2/09

4

Sample Number:	L08110471-04	PrePrep Method:	NONE	Instrument:	HYDRA
Client ID:	MR08-IS384-08D	Prep Method:	7471A	Prep Date:	11/19/2008 09:04
Matrix:	Soil	Analytical Method:	7471A	Cal Date:	11/26/2008 11:33
Workgroup Number:	WG289130	Analyst:	ADC	Run Date:	11/26/2008 11:54
Collect Date:	11/15/2008 15:50	Dilution:	1	File ID:	HY.112608.115412
Sample Tag:	01	Units:	mg/kg	Percent Solid:	91.3

Analyte	CAS. Number	Result	Qual	RL	MDL
Mercury, Total	7439-97-6		U	0.104	0.0209

U Undetected; the analyte was analyzed for, but not detected.

Microbac

 MW 2/2/09

5

Sample Number: L08110471-05
Client ID: MR08-IS383-08D
Matrix: Soil
Workgroup Number: WG288584
Collect Date: 11/15/2008 16:45
Sample Tag: 01

PrePrep Method: NONE
Prep Method: 3051
Analytical Method: 6010B
Analyst: KHR
Dilution: 1
Units: mg/kg

Instrument: IRIS-ICP
Prep Date: 11/19/2008 07:31
Cal Date: 11/20/2008 10:15
Run Date: 11/20/2008 18:22
File ID: IR.112008.182200
Percent Solid: 76.4

Analyte	CAS. Number	Result	Qual	RL	MDL
Silver, Total	7440-22-4		U	0.930	0.233
Barium, Total	7440-39-3	4.62		0.465	0.0930
Cadmium, Total	7440-43-9		U	0.186	0.0465
Chromium, Total	7440-47-3	1.69		0.930	0.112

U Undetected; the analyte was analyzed for, but not detected.

Microbac

 LW 2/2/09

5

Sample Number: L08110471-05
Client ID: MR08-IS383-08D
Matrix: Soil
Workgroup Number: WG288659
Collect Date: 11/15/2008 16:45
Sample Tag: 01

PrePrep Method: NONE
Prep Method: 3051
Analytical Method: 6020
Analyst: JYH
Dilution: 1
Units: mg/kg

Instrument: ELAN-ICP
Prep Date: 11/19/2008 08:30
Cal Date: 11/21/2008 10:09
Run Date: 11/21/2008 19:26
File ID: EL.112108.192613
Percent Solid: 76.4

Analyte	CAS. Number	Result	Qual	RL	MDL
Arsenic, Total	7440-38-2 0.390	~~0.244~~	U ~~J~~	0.390	0.0976
Lead, Total	7439-92-1	1.32		0.520	0.130

BL

J Estimated ; the analyte concentration was less than the low standard (LOQ)

Microbac

 12/2/09

5

Sample Number: L08110471-05
Client ID: MR08-IS383-08D
Matrix: Soil
Workgroup Number: WG288659
Collect Date: 11/15/2008 16:45
Sample Tag: 02

PrePrep Method: NONE
Prep Method: 3051
Analytical Method: 6020
Analyst: JYH
Dilution: 1
Units: mg/kg

Instrument: ELAN-ICP
Prep Date: 11/19/2008 08:30
Cal Date: 12/02/2008 11:32
Run Date: 12/02/2008 14:18
File ID: EL.120208.141816
Percent Solid: 76.4

Analyte	CAS. Number	Result	Qual	RL	MDL
Selenium, Total	7782-49-2		U	0.520	0.130

U Undetected; the analyte was analyzed for, but not detected.

Microbac

958 MW 2/2/09

5

Sample Number: L08110471-05
Client ID: MR08-IS383-08D
Matrix: Soil
Workgroup Number: WG289130
Collect Date: 11/15/2008 16:45
Sample Tag: 01

PrePrep Method: NONE
Prep Method: 7471A
Analytical Method: 7471A
Analyst: ADC
Dilution: 1
Units: mg/kg

Instrument: HYDRA
Prep Date: 11/19/2008 09:05
Cal Date: 11/26/2008 11:33
Run Date: 11/26/2008 11:55
File ID: HY.112608.115555
Percent Solid: 76.4

Analyte	CAS. Number	Result	Qual	RL	MDL
Mercury, Total	7439-97-6		U	0.130	0.0260

U Undetected; the analyte was analyzed for, but not detected.

Microbac

lew
2/2/09

6

Sample Number: L08110471-06
Client ID: MR08-IS374-08D
Matrix: Soil
Workgroup Number: WG288584
Collect Date: 11/16/2008 09:05
Sample Tag: 01

PrePrep Method: NONE
Prep Method: 3051
Analytical Method: 6010B
Analyst: KHR
Dilution: 1
Units: mg/kg

Instrument: IRIS-ICP
Prep Date: 11/19/2008 07:31
Cal Date: 11/20/2008 10:15
Run Date: 11/20/2008 18:28
File ID: IR.112008.182800
Percent Solid: 87.9

Analyte	CAS. Number	Result	Qual	RL	MDL
Silver, Total	7440-22-4		U	0.767	0.192
Barium, Total	7440-39-3	5.54		0.384	0.0767
Cadmium, Total	7440-43-9		U	0.153	0.0384
Chromium, Total	7440-47-3	5.95		0.767	0.0921
Copper, Total	7440-50-8	1.53 ~~0.046~~	U ~~J~~	1.53	0.384
Antimony, Total	7440-36-0		U	1.53	0.384
Zinc, Total	7440-66-6	1.68		1.53	0.384

BL

U Undetected; the analyte was analyzed for, but not detected.
J Estimated ; the analyte concentration was less than the low standard (LOQ)

Microbac

281 LW 2/2/09

6

Sample Number:	L08110471-06	PrePrep Method:	NONE	Instrument:	ELAN-ICP
Client ID:	MR08-IS374-08D	Prep Method:	3051	Prep Date:	11/19/2008 08:32
Matrix:	Soil	Analytical Method:	6020	Cal Date:	12/02/2008 11:32
Workgroup Number:	WG288659	Analyst:	JYH	Run Date:	12/02/2008 14:23
Collect Date:	11/16/2008 09:05	Dilution:	1	File ID:	EL.120208.142340
Sample Tag:	02	Units:	mg/kg	Percent Solid:	87.9

Analyte	CAS. Number	Result	Qual	RL	MDL
Selenium, Total	7782-49-2		U	0.450	0.112

U Undetected; the analyte was analyzed for, but not detected.

Microbac

GW 2/2/09

6

Sample Number: L08110471-06
Client ID: MR08-IS374-08D
Matrix: Soil
Workgroup Number: WG288659
Collect Date: 11/16/2008 09:05
Sample Tag: 01

PrePrep Method: NONE
Prep Method: 3051
Analytical Method: 6020
Analyst: JYH
Dilution: 1
Units: mg/kg

Instrument: ELAN-ICP
Prep Date: 11/19/2008 08:32
Cal Date: 11/21/2008 10:09
Run Date: 11/21/2008 19:31
File ID: EL.112108.193138
Percent Solid: 87.9

Analyte	CAS. Number	Result	Qual	RL	MDL
Arsenic, Total	7440-38-2	0.337 ~~0.0954~~	U J	0.337	0.0843
Lead, Total	7439-92-1	2.45		0.450	0.112

BL

J Estimated ; the analyte concentration was less than the low standard (LOQ)

Microbac

JW 2/2/09

6

Sample Number:	L08110471-06	PrePrep Method:	NONE	Instrument:	HYDRA
Client ID:	MR08-IS374-08D	Prep Method:	7471A	Prep Date:	11/19/2008 09:06
Matrix:	Soil	Analytical Method:	7471A	Cal Date:	11/26/2008 11:31
Workgroup Number:	WG289130	Analyst:	ADC	Run Date:	11/26/2008 11:59
Collect Date:	11/16/2008 09:05	Dilution:	1	File ID:	HY.112608.115932
Sample Tag:	01	Units:	mg/kg	Percent Solid:	87.9

Analyte	CAS. Number	Result	Qual	RL	MDL
Mercury, Total	7439-97-6		U	0.110	0.0220

U Undetected; the analyte was analyzed for, but not detected.

Microbac

2270 LW 2/2/09

7

Sample Number: L08110471-07
Client ID: MR08-IS374D-08D
Matrix: Soil
Workgroup Number: WG288584
Collect Date: 11/16/2008 09:05
Sample Tag: 01

PrePrep Method: NONE
Prep Method: 3051
Analytical Method: 6010B
Analyst: KHR
Dilution: 1
Units: mg/kg

Instrument: IRIS-ICP
Prep Date: 11/19/2008 07:31
Cal Date: 11/20/2008 10:15
Run Date: 11/20/2008 18:46
File ID: IR.112008.184600
Percent Solid: 87.1

Analyte	CAS. Number	Result	Qual	RL	MDL
Silver, Total	7440-22-4		U	0.771	0.193
Barium, Total	7440-39-3	5.39		0.385	0.0771
Cadmium, Total	7440-43-9		U	0.154	0.0385
Chromium, Total	7440-47-3	6.40		0.771	0.0925
Copper, Total	7440-50-8	1.54 ~~0.608~~	U ~~J~~	1.54	0.385
Antimony, Total	7440-36-0		U	1.54	0.385
Zinc, Total	7440-66-6	1.80		1.54	0.385

BL

U Undetected; the analyte was analyzed for, but not detected.
J Estimated ; the analyte concentration was less than the low standard (LOQ)

Microbac

RW 2/2/09

7

Sample Number: L08110471-07
Client ID: MR08-IS374D-08D
Matrix: Soil
Workgroup Number: WG288659
Collect Date: 11/16/2008 09:05
Sample Tag: 02

PrePrep Method: NONE
Prep Method: 3051
Analytical Method: 6020
Analyst: JYH
Dilution: 1
Units: mg/kg

Instrument: ELAN-ICP
Prep Date: 11/19/2008 08:35
Cal Date: 12/02/2008 11:32
Run Date: 12/02/2008 14:29
File ID: EL.120208.142902
Percent Solid: 87.1

Analyte	CAS. Number	Result	Qual	RL	MDL
Selenium, Total	7782-49-2		U	0.455	0.114

U Undetected; the analyte was analyzed for, but not detected.

Microbac

961 MW 2/2/09

7

Sample Number:	L08110471-07	PrePrep Method:	NONE	Instrument:	ELAN-ICP
Client ID:	MR08-IS374D-08D	Prep Method:	3051	Prep Date:	11/19/2008 08:35
Matrix:	Soil	Analytical Method:	6020	Cal Date:	11/21/2008 10:09
Workgroup Number:	WG288659	Analyst:	JYH	Run Date:	11/21/2008 19:48
Collect Date:	11/16/2008 09:05	Dilution:	1	File ID:	EL.112108.194824
Sample Tag:	01	Units:	mg/kg	Percent Solid:	87.1

Analyte	CAS. Number	Result	Qual	RL	MDL
Arsenic, Total	7440-38-2	0.341 ~~0.131~~	~~J~~	0.341	0.0853
Lead, Total	7439-92-1	2.35		0.455	0.114

BL

J Estimated ; the analyte concentration was less than the low standard (LOQ)

Microbac

LW 2/2/09

7

Sample Number: L08110471-07
Client ID: MR08-IS374D-08D
Matrix: Soil
Workgroup Number: WG289130
Collect Date: 11/16/2008 09:05
Sample Tag: 01

PrePrep Method: NONE
Prep Method: 7471A
Analytical Method: 7471A
Analyst: ADC
Dilution: 1
Units: mg/kg

Instrument: HYDRA
Prep Date: 11/19/2008 09:08
Cal Date: 11/26/2008 11:31
Run Date: 11/26/2008 12:01
File ID: HY.112608.120117
Percent Solid: 87.1

Analyte	CAS. Number	Result	Qual	RL	MDL
Mercury, Total	7439-97-6		U	0.114	0.0228

U Undetected; the analyte was analyzed for, but not detected.

Microbac

2271 MW 2/2/09

8

Sample Number: L08110471-08
Client ID: MR08-IS375-08D
Matrix: Soil
Workgroup Number: WG288584
Collect Date: 11/16/2008 10:30
Sample Tag: 01

PrePrep Method: NONE
Prep Method: 3051
Analytical Method: 6010B
Analyst: KHR
Dilution: 1
Units: mg/kg

Instrument: IRIS-ICP
Prep Date: 11/19/2008 07:31
Cal Date: 11/20/2008 10:15
Run Date: 11/20/2008 18:52
File ID: IR.112008.185200
Percent Solid: 91.6

Analyte	CAS. Number	Result	Qual	RL	MDL
Silver, Total	7440-22-4		U	0.772	0.193
Barium, Total	7440-39-3	6.04		0.386	0.0772
Cadmium, Total	7440-43-9		U	0.154	0.0386
Chromium, Total	7440-47-3	4.51		0.772	0.0927
Copper, Total	7440-50-8	1.54 ~~0.487~~	U ~~J~~	1.54	0.386
Antimony, Total	7440-36-0		U	1.54	0.386
Zinc, Total	7440-66-6	1.61		1.54	0.386

BL

U Undetected; the analyte was analyzed for, but not detected.
J Estimated ; the analyte concentration was less than the low standard (LOQ)

Microbac

283 MW 2/2/09

8

Sample Number:	L08110471-08	PrePrep Method:	NONE	Instrument:	ELAN-ICP
Client ID:	MR08-IS375-08D	Prep Method:	3051	Prep Date:	11/19/2008 08:38
Matrix:	Soil	Analytical Method:	6020	Cal Date:	12/02/2008 11:32
Workgroup Number:	WG288659	Analyst:	JYH	Run Date:	12/02/2008 14:34
Collect Date:	11/16/2008 10:30	Dilution:	1	File ID:	EL.120208.143425
Sample Tag:	02	Units:	mg/kg	Percent Solid:	91.6

Analyte	CAS. Number	Result	Qual	RL	MDL
Selenium, Total	7782-49-2		U	0.437	0.109

U Undetected; the analyte was analyzed for, but not detected.

Microbac

963 lw 2/2/09

8

Sample Number:	L08110471-08	PrePrep Method:	NONE	Instrument:	ELAN-ICP
Client ID:	MR08-IS375-08D	Prep Method:	3051	Prep Date:	11/19/2008 08:38
Matrix:	Soil	Analytical Method:	6020	Cal Date:	11/21/2008 10:09
Workgroup Number:	WG288659	Analyst:	JYH	Run Date:	11/21/2008 19:53
Collect Date:	11/16/2008 10:30	Dilution:	1	File ID:	EL.112108.195347
Sample Tag:	01	Units:	mg/kg	Percent Solid:	91.6

Analyte	CAS. Number	Result	Qual	RL	MDL
Arsenic, Total	7440-38-2	0.327 ~~0.132~~	U ~~J~~	0.327	0.0819
Lead, Total	7439-92-1	2.65		0.437	0.109

BL

J Estimated ; the analyte concentration was less than the low standard (LOQ)

Microbac

lw 2/2/09

8

Sample Number:	L08110471-08	PrePrep Method:	NONE	Instrument:	HYDRA
Client ID:	MR08-IS375-08D	Prep Method:	7471A	Prep Date:	11/19/2008 09:08
Matrix:	Soil	Analytical Method:	7471A	Cal Date:	11/26/2008 11:33
Workgroup Number:	WG289130	Analyst:	ADC	Run Date:	11/26/2008 12:03
Collect Date:	11/16/2008 10:30	Dilution:	1	File ID:	HY.112608.120312
Sample Tag:	01	Units:	mg/kg	Percent Solid:	91.6

Analyte	CAS. Number	Result	Qual	RL	MDL
Mercury, Total	7439-97-6		U	0.105	0.0210

U Undetected; the analyte was analyzed for, but not detected.

Microbac

2272 MW 2/2/09

9

Sample Number: L08110471-09
Client ID: MR08-IS376-08D
Matrix: Soil
Workgroup Number: WG288584
Collect Date: 11/16/2008 11:05
Sample Tag: 01

PrePrep Method: NONE
Prep Method: 3051
Analytical Method: 6010B
Analyst: KHR
Dilution: 1
Units: mg/kg

Instrument: IRIS-ICP
Prep Date: 11/19/2008 07:31
Cal Date: 11/20/2008 10:15
Run Date: 11/20/2008 18:58
File ID: IR.112008.185800
Percent Solid: 91.2

Analyte	CAS. Number	Result	Qual	RL	MDL
Silver, Total	7440-22-4		U	0.802	0.201
Barium, Total	7440-39-3	3.98		0.401	0.0802
Cadmium, Total	7440-43-9		U	0.160	0.0401
Chromium, Total	7440-47-3	3.57		0.802	0.0963
Copper, Total	7440-50-8		U	1.60	0.401
Antimony, Total	7440-36-0		U	1.60	0.401
Zinc, Total	7440-66-6	1.23	J	1.60	0.401

U Undetected; the analyte was analyzed for, but not detected.
J Estimated ; the analyte concentration was less than the low standard (LOQ)

Microbac

 lw 2/2/09

9

Sample Number: L08110471-09
Client ID: MR08-IS376-08D
Matrix: Soil
Workgroup Number: WG288659
Collect Date: 11/16/2008 11:05
Sample Tag: 01

PrePrep Method: NONE
Prep Method: 3051
Analytical Method: 6020
Analyst: JYH
Dilution: 1
Units: mg/kg

Instrument: ELAN-ICP
Prep Date: 11/19/2008 08:39
Cal Date: 11/21/2008 10:09
Run Date: 11/21/2008 17:48
File ID: EL.112108.174820
Percent Solid: 91.2

Analyte	CAS. Number	Result	Qual	RL	MDL
Arsenic, Total	7440-38-2	0.327 ~~0.197~~	U ~~J~~	0.327	0.0818
Lead, Total	7439-92-1	1.99		0.436	0.109

BL

J Estimated ; the analyte concentration was less than the low standard (LOQ)

Microbac

LW 2/2/09

9

Sample Number:	L08110471-09	PrePrep Method:	NONE	Instrument:	ELAN-ICP
Client ID:	MR08-IS376-08D	Prep Method:	3051	Prep Date:	11/19/2008 08:39
Matrix:	Soil	Analytical Method:	6020	Cal Date:	12/02/2008 11:32
Workgroup Number:	WG288659	Analyst:	JYH	Run Date:	12/02/2008 12:34
Collect Date:	11/16/2008 11:05	Dilution:	1	File ID:	EL.120208.123431
Sample Tag:	02	Units:	mg/kg	Percent Solid:	91.2

Analyte	CAS. Number	Result	Qual	RL	MDL
Selenium, Total	7782-49-2		U	0.436	0.109

U Undetected; the analyte was analyzed for, but not detected.

Microbac

966 MW 2/2/09

9

Sample Number: L08110471-09
Client ID: MR08-IS376-08D
Matrix: Soil
Workgroup Number: WG289130
Collect Date: 11/16/2008 11:05
Sample Tag: 01

PrePrep Method: NONE
Prep Method: 7471A
Analytical Method: 7471A
Analyst: ADC
Dilution: 1
Units: mg/kg

Instrument: HYDRA
Prep Date: 11/19/2008 09:09
Cal Date: 11/26/2008 11:33
Run Date: 11/26/2008 12:08
File ID: HY.112608.120831
Percent Solid: 91.2

Analyte	CAS. Number	Result	Qual	RL	MDL
Mercury, Total	7439-97-6		U	0.107	0.0214

U Undetected; the analyte was analyzed for, but not detected.

Microbac

2273 LW 2/2/09

12

Sample Number: L08110471-12
Client ID: MR08-IS382-08D
Matrix: Soil
Workgroup Number: WG288584
Collect Date: 11/16/2008 08:10
Sample Tag: 01

PrePrep Method: NONE
Prep Method: 3051
Analytical Method: 6010B
Analyst: KHR
Dilution: 1
Units: mg/kg

Instrument: IRIS-ICP
Prep Date: 11/19/2008 07:31
Cal Date: 11/20/2008 10:15
Run Date: 11/20/2008 19:17
File ID: IR.112008.191700
Percent Solid: 75.9

Analyte	CAS. Number	Result	Qual	RL	MDL
Silver, Total	7440-22-4		U	0.981	0.245
Barium, Total	7440-39-3	9.15		0.491	0.0981
Cadmium, Total	7440-43-9		U	0.196	0.0491
Chromium, Total	7440-47-3	4.25		0.981	0.118
Copper, Total	7440-50-8	1.96 ~~0.635~~	U ~~J~~	1.96	0.491
Antimony, Total	7440-36-0		U	1.96	0.491
Zinc, Total	7440-66-6	1.71	J	1.96	0.491

BL

U Undetected; the analyte was analyzed for, but not detected.
J Estimated ; the analyte concentration was less than the low standard (LOQ)

Microbac

 lw 2/2/09

12

Sample Number:	L08110471-12	PrePrep Method:	NONE	Instrument:	ELAN-ICP
Client ID:	MR08-IS382-08D	Prep Method:	3051	Prep Date:	11/19/2008 08:46
Matrix:	Soil	Analytical Method:	6020	Cal Date:	12/02/2008 11:32
Workgroup Number:	WG288659	Analyst:	JYH	Run Date:	12/02/2008 13:01
Collect Date:	11/16/2008 08:10	Dilution:	1	File ID:	EL.120208.130131
Sample Tag:	02	Units:	mg/kg	Percent Solid:	75.9

Analyte	CAS. Number	Result	Qual	RL	MDL
Selenium, Total	7782-49-2		U	0.525	0.131

U Undetected; the analyte was analyzed for, but not detected.

Microbac

 lwd 12/2/09

12

Sample Number: L08110471-12
Client ID: MR08-IS382-08D
Matrix: Soil
Workgroup Number: WG288659
Collect Date: 11/16/2008 08:10
Sample Tag: 01

PrePrep Method: NONE
Prep Method: 3051
Analytical Method: 6020
Analyst: JYH
Dilution: 1
Units: mg/kg

Instrument: ELAN-ICP
Prep Date: 11/19/2008 08:46
Cal Date: 11/21/2008 10:09
Run Date: 11/21/2008 18:04
File ID: EL.112108.180434
Percent Solid: 75.9

Analyte	CAS. Number	Result	Qual	RL	MDL
Arsenic, Total	7440-38-2	0.394 ~~0.265~~	U ~~J~~	0.394	0.0984
Lead, Total	7439-92-1	3.86		0.525	0.131

BC

J Estimated ; the analyte concentration was less than the low standard (LOQ)

Microbac

 lw 2/2/09

12

Sample Number:	L08110471-12	PrePrep Method:	NONE	Instrument:	HYDRA
Client ID:	MR08-IS382-08D	Prep Method:	7471A	Prep Date:	11/19/2008 09:12
Matrix:	Soil	Analytical Method:	7471A	Cal Date:	11/26/2008 11:33
Workgroup Number:	WG289130	Analyst:	ADC	Run Date:	11/26/2008 12:13
Collect Date:	11/16/2008 08:10	Dilution:	1	File ID:	HY.112608.121349
Sample Tag:	01	Units:	mg/kg	Percent Solid:	75.9

Analyte	CAS. Number	Result	Qual	RL	MDL
Mercury, Total	7439-97-6		U	0.123	0.0246

U Undetected; the analyte was analyzed for, but not detected.

Microbac

2276 lw 2/2/09

13

Sample Number: L08110471-13
Client ID: MR08-SS399-08D
Matrix: Soil
Workgroup Number: WG288584
Collect Date: 11/16/2008 12:40
Sample Tag: 01

PrePrep Method: NONE
Prep Method: 3051
Analytical Method: 6010B
Analyst: KHR
Dilution: 1
Units: mg/kg

Instrument: IRIS-ICP
Prep Date: 11/19/2008 07:31
Cal Date: 11/20/2008 10:15
Run Date: 11/20/2008 19:23
File ID: IR.112008.192300
Percent Solid: 83.2

Analyte	CAS. Number	Result	Qual	RL	MDL
Silver, Total	7440-22-4		U	0.871	0.218
Barium, Total	7440-39-3	9.27		0.436	0.0871
Cadmium, Total	7440-43-9	0.0523	J	0.174	0.0436
Chromium, Total	7440-47-3	3.28		0.871	0.105
Copper, Total	7440-50-8	1.93 U		1.74	0.436 BL
Antimony, Total	7440-36-0	0.483	J	1.74	0.436
Zinc, Total	7440-66-6	8.69		1.74	0.436

U Undetected; the analyte was analyzed for, but not detected.
J Estimated ; the analyte concentration was less than the low standard (LOQ)

Microbac

288 LW 2/2/09

13

Sample Number:	L08110471-13	PrePrep Method:	NONE	Instrument:	ELAN-ICP
Client ID:	MR08-SS399-08D	Prep Method:	3051	Prep Date:	11/19/2008 08:48
Matrix:	Soil	Analytical Method:	6020	Cal Date:	12/02/2008 11:32
Workgroup Number:	WG288659	Analyst:	JYH	Run Date:	12/02/2008 13:29
Collect Date:	11/16/2008 12:40	Dilution:	1	File ID:	EL.120208.132904
Sample Tag:	02	Units:	mg/kg	Percent Solid:	83.2

Analyte	CAS. Number	Result	Qual	RL	MDL
Selenium, Total	7782-49-2	0.256	J	0.477	0.119

J Estimated ; the analyte concentration was less than the low standard (LOQ)

Microbac

973 MW 2/2/09

13

Sample Number: L08110471-13
Client ID: MR08-SS399-08D
Matrix: Soil
Workgroup Number: WG288659
Collect Date: 11/16/2008 12:40
Sample Tag: 01

PrePrep Method: NONE
Prep Method: 3051
Analytical Method: 6020
Analyst: JYH
Dilution: 1
Units: mg/kg

Instrument: ELAN-ICP
Prep Date: 11/19/2008 08:48
Cal Date: 11/21/2008 10:09
Run Date: 11/21/2008 18:20
File ID: EL.112108.182045
Percent Solid: 83.2

Analyte	CAS. Number	Result	Qual	RL	MDL
Arsenic, Total	7440-38-2	0.627		0.358	0.0894
Lead, Total	7439-92-1	21.5		0.477	0.119

Microbac

974 lw 2/2/09

13

Sample Number: L08110471-13
Client ID: MR08-SS399-08D
Matrix: Soil
Workgroup Number: WG289130
Collect Date: 11/16/2008 12:40
Sample Tag: 01

PrePrep Method: NONE
Prep Method: 7471A
Analytical Method: 7471A
Analyst: ADC
Dilution: 1
Units: mg/kg

Instrument: HYDRA
Prep Date: 11/19/2008 09:12
Cal Date: 11/26/2008 11:33
Run Date: 11/26/2008 12:16
File ID: HY.112608.121612
Percent Solid: 83.2

Analyte	CAS. Number	Result	Qual	RL	MDL
Mercury, Total	7439-97-6		U	0.118	0.0237

U Undetected; the analyte was analyzed for, but not detected.

Microbac

2277 lw 2/2/09

14

Sample Number:	L08110471-14	PrePrep Method:	NONE	Instrument:	IRIS-ICP
Client ID:	MR08-SS398-08D	Prep Method:	3051	Prep Date:	11/19/2008 07:31
Matrix:	Soil	Analytical Method:	6010B	Cal Date:	11/21/2008 10:12
Workgroup Number:	WG288584	Analyst:	KHR	Run Date:	11/21/2008 10:56
Collect Date:	11/16/2008 13:00	Dilution:	10	File ID:	IR.112108.105600
Sample Tag:	DL01	Units:	mg/kg	Percent Solid:	84.9

Analyte	CAS. Number	Result	Qual	RL	MDL
Copper, Total	7440-50-8	61.1		16.3	4.07

Microbac

 DW 2/2/09

1H

Sample Number: L08110471-14
Client ID: MR08-SS398-08D
Matrix: Soil
Workgroup Number: WG288584
Collect Date: 11/16/2008 13:00
Sample Tag: 01

PrePrep Method: NONE
Prep Method: 3051
Analytical Method: 6010B
Analyst: KHR
Dilution: 1
Units: mg/kg

Instrument: IRIS-ICP
Prep Date: 11/19/2008 07:31
Cal Date: 11/20/2008 10:15
Run Date: 11/20/2008 19:29
File ID: IR.112008.192900
Percent Solid: 84.9

Analyte	CAS. Number	Result	Qual	RL	MDL
Silver, Total	7440-22-4		U	0.814	0.204
Barium, Total	7440-39-3	10.3		0.407	0.0814
Cadmium, Total	7440-43-9	0.131	J	0.163	0.0407
Chromium, Total	7440-47-3	6.45		0.814	0.0977
Antimony, Total	7440-36-0		U	1.63	0.407
Zinc, Total	7440-66-6	28.1		1.63	0.407

U Undetected; the analyte was analyzed for, but not detected.
J Estimated ; the analyte concentration was less than the low standard (LOQ)

Microbac

JW 2/2/09

14

Sample Number: L08110471-14
Client ID: MR08-SS398-08D
Matrix: Soil
Workgroup Number: WG288659
Collect Date: 11/16/2008 13:00
Sample Tag: 01

PrePrep Method: NONE
Prep Method: 3051
Analytical Method: 6020
Analyst: JYH
Dilution: 1
Units: mg/kg

Instrument: ELAN-ICP
Prep Date: 11/19/2008 08:52
Cal Date: 11/21/2008 10:09
Run Date: 11/21/2008 18:26
File ID: EL.112108.182608
Percent Solid: 84.9

Analyte	CAS. Number	Result	Qual	RL	MDL
Arsenic, Total	7440-38-2	1.19		0.350	0.0876
Lead, Total	7439-92-1	17.2		0.467	0.117

Microbac

MW
975 2/2/09

14

Sample Number: L08110471-14
Client ID: MR08-SS398-08D
Matrix: Soil
Workgroup Number: WG288659
Collect Date: 11/16/2008 13:00
Sample Tag: 02

PrePrep Method: NONE
Prep Method: 3051
Analytical Method: 6020
Analyst: JYH
Dilution: 1
Units: mg/kg

Instrument: ELAN-ICP
Prep Date: 11/19/2008 08:52
Cal Date: 12/02/2008 11:32
Run Date: 12/02/2008 13:34
File ID: EL.120208.133427
Percent Solid: 84.9

Analyte	CAS. Number	Result	Qual	RL	MDL
Selenium, Total	7782-49-2	0.210	J	0.467	0.117

J Estimated ; the analyte concentration was less than the low standard (LOQ)

Microbac

976 lw 12/12/09

14

Sample Number: L08110471-14
Client ID: MR08-SS398-08D
Matrix: Soil
Workgroup Number: WG289130
Collect Date: 11/16/2008 13:00
Sample Tag: 01

PrePrep Method: NONE
Prep Method: 7471A
Analytical Method: 7471A
Analyst: ADC
Dilution: 1
Units: mg/kg

Instrument: HYDRA
Prep Date: 11/19/2008 09:13
Cal Date: 11/26/2008 11:33
Run Date: 11/26/2008 12:18
File ID: HY.112608.121805
Percent Solid: 84.9

Analyte	CAS. Number	Result	Qual	RL	MDL
Mercury, Total	7439-97-6		U	0.116	0.0232

U Undetected; the analyte was analyzed for, but not detected.

Microbac

2278 lw 2/2/09

15

Sample Number: L08110471-15
Client ID: MR08-SS397-08D
Matrix: Soil
Workgroup Number: WG288584
Collect Date: 11/16/2008 13:20
Sample Tag: 01

PrePrep Method: NONE
Prep Method: 3051
Analytical Method: 6010B
Analyst: KHR
Dilution: 1
Units: mg/kg

Instrument: IRIS-ICP
Prep Date: 11/19/2008 07:31
Cal Date: 11/20/2008 10:15
Run Date: 11/20/2008 19:35
File ID: IR.112008.193500
Percent Solid: 88.4

Analyte	CAS. Number	Result	Qual	RL	MDL
Silver, Total	7440-22-4		U	0.861	0.215
Barium, Total	7440-39-3	8.96		0.431	0.0861
Cadmium, Total	7440-43-9		U	0.172	0.0431
Chromium, Total	7440-47-3	5.92		0.861	0.103
Copper, Total	7440-50-8	1.72 ~~1.13~~	U ~~J~~	1.72	0.431 BL
Antimony, Total	7440-36-0		U	1.72	0.431
Zinc, Total	7440-66-6	5.27		1.72	0.431

U Undetected; the analyte was analyzed for, but not detected.
J Estimated ; the analyte concentration was less than the low standard (LOQ)

Microbac

 MW 2/2/09

15

Sample Number: L08110471-15
Client ID: MR08-SS397-08D
Matrix: Soil
Workgroup Number: WG288659
Collect Date: 11/16/2008 13:20
Sample Tag: 01

PrePrep Method: NONE
Prep Method: 3051
Analytical Method: 6020
Analyst: JYH
Dilution: 1
Units: mg/kg

Instrument: ELAN-ICP
Prep Date: 11/19/2008 08:52
Cal Date: 11/21/2008 10:09
Run Date: 11/21/2008 18:42
File ID: EL.112108.184255
Percent Solid: 88.4

Analyte	CAS. Number	Result	Qual	RL	MDL
Arsenic, Total	7440-38-2	0.558		0.334	0.0835
Lead, Total	7439-92-1	7.09		0.445	0.111

Microbac

977 LW 2/2/09

15

Sample Number: L08110471-15
Client ID: MR08-SS397-08D
Matrix: Soil
Workgroup Number: WG288659
Collect Date: 11/16/2008 13:20
Sample Tag: 02

PrePrep Method: NONE
Prep Method: 3051
Analytical Method: 6020
Analyst: JYH
Dilution: 1
Units: mg/kg

Instrument: ELAN-ICP
Prep Date: 11/19/2008 08:52
Cal Date: 12/02/2008 11:32
Run Date: 12/02/2008 13:39
File ID: EL.120208.133950
Percent Solid: 88.4

Analyte	CAS. Number	Result	Qual	RL	MDL
Selenium, Total	7782-49-2		U	0.445	0.111

U Undetected; the analyte was analyzed for, but not detected.

Microbac

978 MW 2/2/09

15

Sample Number:	L08110471-15	PrePrep Method:	NONE	Instrument:	HYDRA
Client ID:	MR08-SS397-08D	Prep Method:	7471A	Prep Date:	11/19/2008 09:14
Matrix:	Soil	Analytical Method:	7471A	Cal Date:	11/26/2008 11:33
Workgroup Number:	WG289130	Analyst:	ADC	Run Date:	11/26/2008 12:19
Collect Date:	11/16/2008 13:20	Dilution:	1	File ID:	HY.112608.121957
Sample Tag:	01	Units:	mg/kg	Percent Solid:	88.4

Analyte	CAS. Number	Result	Qual	RL	MDL
Mercury, Total	7439-97-6		U	0.111	0.0222

U Undetected; the analyte was analyzed for, but not detected.

Microbac

MW
2/2/09

16

Sample Number: L08110471-16
Client ID: MR08-SS396-08D
Matrix: Soil
Workgroup Number: WG288584
Collect Date: 11/16/2008 13:45
Sample Tag: 01

PrePrep Method: NONE
Prep Method: 3051
Analytical Method: 6010B
Analyst: KHR
Dilution: 1
Units: mg/kg

Instrument: IRIS-ICP
Prep Date: 11/19/2008 07:31
Cal Date: 11/20/2008 10:15
Run Date: 11/20/2008 19:41
File ID: IR.112008.194100
Percent Solid: 86.1

Analyte	CAS. Number	Result	Qual	RL	MDL
Silver, Total	7440-22-4		U	0.846	0.212
Barium, Total	7440-39-3	11.3		0.423	0.0846
Cadmium, Total	7440-43-9	0.0597	J	0.169	0.0423
Chromium, Total	7440-47-3	6.20		0.846	0.102
Copper, Total	7440-50-8	6.80		1.69	0.423
Antimony, Total	7440-36-0		U	1.69	0.423
Zinc, Total	7440-66-6	20.2		1.69	0.423

U Undetected; the analyte was analyzed for, but not detected.
J Estimated ; the analyte concentration was less than the low standard (LOQ)

Microbac

 JW 2/12/09

16

Sample Number:	L08110471-16	PrePrep Method:	NONE	Instrument:	ELAN-ICP
Client ID:	MR08-SS396-08D	Prep Method:	3051	Prep Date:	11/19/2008 08:52
Matrix:	Soil	Analytical Method:	6020	Cal Date:	12/02/2008 11:32
Workgroup Number:	WG288659	Analyst:	JYH	Run Date:	12/02/2008 13:45
Collect Date:	11/16/2008 13:45	Dilution:	1	File ID:	EL.120208.134513
Sample Tag:	02	Units:	mg/kg	Percent Solid:	86.1

Analyte	CAS. Number	Result	Qual	RL	MDL
Selenium, Total	7782-49-2	0.175	J	0.460	0.115

J Estimated ; the analyte concentration was less than the low standard (LOQ)

Microbac

979 LW 2/2/09

16

Sample Number: L08110471-16
Client ID: MR08-SS396-08D
Matrix: Soil
Workgroup Number: WG288659
Collect Date: 11/16/2008 13:45
Sample Tag: 01

PrePrep Method: NONE
Prep Method: 3051
Analytical Method: 6020
Analyst: JYH
Dilution: 1
Units: mg/kg

Instrument: ELAN-ICP
Prep Date: 11/19/2008 08:52
Cal Date: 11/21/2008 10:09
Run Date: 11/21/2008 18:48
File ID: EL.112108.184818
Percent Solid: 86.1

Analyte	CAS. Number	Result	Qual	RL	MDL
Arsenic, Total	7440-38-2	1.47		0.345	0.0862
Lead, Total	7439-92-1	22.0		0.460	0.115

Microbac

980 MW 12/2/09

16

Sample Number:	L08110471-16	PrePrep Method:	NONE	Instrument:	HYDRA
Client ID:	MR08-SS396-08D	Prep Method:	7471A	Prep Date:	11/19/2008 09:15
Matrix:	Soil	Analytical Method:	7471A	Cal Date:	11/26/2008 11:33
Workgroup Number:	WG289130	Analyst:	ADC	Run Date:	11/26/2008 12:21
Collect Date:	11/16/2008 13:45	Dilution:	1	File ID:	HY.112608.122159
Sample Tag:	01	Units:	mg/kg	Percent Solid:	86.1

Analyte	CAS. Number	Result	Qual	RL	MDL
Mercury, Total	7439-97-6		U	0.115	0.0230

U Undetected; the analyte was analyzed for, but not detected.

Microbac

2280 hw 2/2/09

17

Sample Number: L08110471-17
Client ID: MR08-EB111608-1
Matrix: Water
Workgroup Number: WG288437
Collect Date: 11/16/2008 14:45
Sample Tag: 01

PrePrep Method: NONE
Prep Method: 3005A
Analytical Method: 6010B
Analyst: ED
Dilution: 1
Units: ug/L

Instrument: PE-ICP2
Prep Date: 11/19/2008 09:01
Cal Date: 11/29/2008 17:13
Run Date: 11/30/2008 00:53
File ID: P2.113008.005344

Analyte	CAS. Number	Result	Qual	RL	MDL
Barium, Total	7440-39-3		U	10.0	2.50
Cadmium, Total	7440-43-9		U	1.00	0.250
Chromium, Total	7440-47-3		U	10.0	2.50
Copper, Total	7440-50-8		U	20.0	5.00
Silver, Total	7440-22-4		U	6.00	2.00
Zinc, Total	7440-66-6		U	20.0	5.00

U Undetected; the analyte was analyzed for, but not detected.

Microbac

 lw 2/2/09

17

Sample Number: L08110471-17
Client ID: MR08-EB111608-1
Matrix: Water
Workgroup Number: WG288510
Collect Date: 11/16/2008 14:45
Sample Tag: 01

PrePrep Method: NONE
Prep Method: 3015
Analytical Method: 6020
Analyst: JYH
Dilution: 1
Units: ug/L

Instrument: ELAN-ICP
Prep Date: 11/19/2008 07:12
Cal Date: 11/20/2008 11:05
Run Date: 11/20/2008 13:56
File ID: EL.112008.135602

Analyte	CAS. Number	Result	Qual	RL	MDL
Arsenic, Total	7440-38-2		U	1.00	0.250
Lead, Total	7439-92-1		U	1.00	0.250
Antimony, Total	7440-36-0		U	1.00	0.250
Selenium, Total	7782-49-2		U	2.00	0.500

U Undetected; the analyte was analyzed for, but not detected.

Microbac

981 lw 2/2/09

17

Sample Number: L08110471-17
Client ID: MR08-EB111608-1
Matrix: Water
Workgroup Number: WG289021
Collect Date: 11/16/2008 14:45
Sample Tag: 01

PrePrep Method: NONE
Prep Method: 7470A
Analytical Method: 7470A
Analyst: ADC
Dilution: 1
Units: ug/L

Instrument: HYDRA
Prep Date: 11/19/2008 09:13
Cal Date: 11/26/2008 09:56
Run Date: 11/26/2008 10:54
File ID: HY.112608.105457

Analyte	CAS. Number	Result	Qual	RL	MDL
Mercury	7439-97-6		U	0.400	0.100

U Undetected; the analyte was analyzed for, but not detected.

Microbac

2281 MW 2/2/09

18

Sample Number: L08110471-18
Client ID: MR08-EB111708-1
Matrix: Water
Workgroup Number: WG288437
Collect Date: 11/17/2008 08:10
Sample Tag: 01

PrePrep Method: NONE
Prep Method: 3005A
Analytical Method: 6010B
Analyst: ED
Dilution: 1
Units: ug/L

Instrument: PE-ICP2
Prep Date: 11/19/2008 09:01
Cal Date: 11/29/2008 17:13
Run Date: 11/30/2008 00:59
File ID: P2.113008.005959

Analyte	CAS. Number	Result	Qual	RL	MDL
Barium, Total	7440-39-3		U	10.0	2.50
Cadmium, Total	7440-43-9		U	1.00	0.250
Chromium, Total	7440-47-3		U	10.0	2.50
Copper, Total	7440-50-8		U	20.0	5.00
Silver, Total	7440-22-4		U	6.00	2.00
Zinc, Total	7440-66-6		U	20.0	5.00

U Undetected; the analyte was analyzed for, but not detected.

Microbac

 MW 2/2/09

18

Sample Number: L08110471-18
Client ID: MR08-EB111708-1
Matrix: Water
Workgroup Number: WG288510
Collect Date: 11/17/2008 08:10
Sample Tag: 01

PrePrep Method: NONE
Prep Method: 3015
Analytical Method: 6020
Analyst: JYH
Dilution: 1
Units: ug/L

Instrument: ELAN-ICP
Prep Date: 11/19/2008 07:12
Cal Date: 11/20/2008 11:05
Run Date: 11/20/2008 14:01
File ID: EL.112008.140125

Analyte	CAS. Number	Result	Qual	RL	MDL
Arsenic, Total	7440-38-2		U	1.00	0.250
Lead, Total	7439-92-1		U	1.00	0.250
Antimony, Total	7440-36-0		U	1.00	0.250
Selenium, Total	7782-49-2		U	2.00	0.500

U Undetected; the analyte was analyzed for, but not detected.

Microbac

RW
2/2/09

18

Sample Number: L08110471-18
Client ID: MR08-EB111708-1
Matrix: Water
Workgroup Number: WG289021
Collect Date: 11/17/2008 08:10
Sample Tag: 01

PrePrep Method: NONE
Prep Method: 7470A
Analytical Method: 7470A
Analyst: ADC
Dilution: 1
Units: ug/L

Instrument: HYDRA
Prep Date: 11/19/2008 09:13
Cal Date: 11/26/2008 09:56
Run Date: 11/26/2008 10:57
File ID: HY.112608.105711

Analyte	CAS. Number	Result	Qual	RL	MDL
Mercury	7439-97-6		U	0.400	0.100

U Undetected; the analyte was analyzed for, but not detected.

Microbac

MW 2/2/09

19

Sample Number: L08110471-19
Client ID: MR08-TW07-08D
Matrix: Water
Workgroup Number: WG288437
Collect Date: 11/15/2008 14:40
Sample Tag: 01

PrePrep Method: NONE
Prep Method: 3005A
Analytical Method: 6010B
Analyst: ED
Dilution: 1
Units: ug/L

Instrument: PE-ICP2
Prep Date: 11/19/2008 09:01
Cal Date: 11/29/2008 17:13
Run Date: 11/30/2008 01:06
File ID: P2.113008.010613

Analyte	CAS. Number	Result	Qual	RL	MDL
Barium, Total	7440-39-3	55.7		10.0	2.50
Cadmium, Total	7440-43-9		U	1.00	0.250
Chromium, Total	7440-47-3	5.54	J	10.0	2.50
Silver, Total	7440-22-4		U	6.00	2.00

U Undetected; the analyte was analyzed for, but not detected.
J Estimated ; the analyte concentration was less than the low standard (LOQ)

Microbac

 2/W 2/2/09

19

Sample Number: L08110471-19
Client ID: MR08-TW07-08D
Matrix: Water
Workgroup Number: WG288510
Collect Date: 11/15/2008 14:40
Sample Tag: 01

PrePrep Method: NONE
Prep Method: 3015
Analytical Method: 6020
Analyst: JYH
Dilution: 1
Units: ug/L

Instrument: ELAN-ICP
Prep Date: 11/19/2008 07:12
Cal Date: 11/20/2008 11:05
Run Date: 11/20/2008 14:06
File ID: EL.112008.140648

Analyte	CAS. Number	Result	Qual	RL	MDL
Arsenic, Total	7440-38-2	45.1		1.00	0.250
Lead, Total	7439-92-1	9.24		1.00	0.250
Selenium, Total	7782-49-2	3.94		2.00	0.500

Microbac

983 MW 2/2/09

19

Sample Number: L08110471-19
Client ID: MR08-TW07-08D
Matrix: Water
Workgroup Number: WG289021
Collect Date: 11/15/2008 14:40
Sample Tag: 01

PrePrep Method: NONE
Prep Method: 7470A
Analytical Method: 7470A
Analyst: ADC
Dilution: 1
Units: ug/L

Instrument: HYDRA
Prep Date: 11/19/2008 09:13
Cal Date: 11/26/2008 09:56
Run Date: 11/26/2008 10:58
File ID: HY.112608.105858

Analyte	CAS. Number	Result	Qual	RL	MDL
Mercury	7439-97-6		U	0.400	0.100

U Undetected; the analyte was analyzed for, but not detected.

Microbac

 MW 2/2/09

20

Sample Number: L08110471-20
Client ID: MR08-TW08-08D
Matrix: Water
Workgroup Number: WG288437
Collect Date: 11/15/2008 12:05
Sample Tag: 01

PrePrep Method: NONE
Prep Method: 3005A
Analytical Method: 6010B
Analyst: ED
Dilution: 1
Units: ug/L

Instrument: PE-ICP2
Prep Date: 11/19/2008 09:01
Cal Date: 11/29/2008 17:13
Run Date: 11/30/2008 01:11
File ID: P2.113008.011130

Analyte	CAS. Number	Result	Qual	RL	MDL
Barium, Total	7440-39-3	137		10.0	2.50
Cadmium, Total	7440-43-9		U	1.00	0.250
Chromium, Total	7440-47-3	3.22	J	10.0	2.50
Silver, Total	7440-22-4		U	6.00	2.00

U Undetected; the analyte was analyzed for, but not detected.
J Estimated ; the analyte concentration was less than the low standard (LOQ)

Microbac

 lw 2/2/09

20

Sample Number: L08110471-20
Client ID: MR08-TW08-08D
Matrix: Water
Workgroup Number: WG288510
Collect Date: 11/15/2008 12:05
Sample Tag: 01

PrePrep Method: NONE
Prep Method: 3015
Analytical Method: 6020
Analyst: JYH
Dilution: 1
Units: ug/L

Instrument: ELAN-ICP
Prep Date: 11/19/2008 07:12
Cal Date: 11/20/2008 11:05
Run Date: 11/20/2008 14:12
File ID: EL.112008.141211

Analyte	CAS. Number	Result	Qual	RL	MDL
Arsenic, Total	7440-38-2	0.564	J	1.00	0.250
Lead, Total	7439-92-1	0.391	J	1.00	0.250
Selenium, Total	7782-49-2	2.44		2.00	0.500

J Estimated ; the analyte concentration was less than the low standard (LOQ)

Microbac

kw 2/2/09

20

Sample Number: L08110471-20
Client ID: MR08-TW08-08D
Matrix: Water
Workgroup Number: WG289021
Collect Date: 11/15/2008 12:05
Sample Tag: 01

PrePrep Method: NONE
Prep Method: 7470A
Analytical Method: 7470A
Analyst: ADC
Dilution: 1
Units: ug/L

Instrument: HYDRA
Prep Date: 11/19/2008 09:13
Cal Date: 11/26/2008 09:56
Run Date: 11/26/2008 11:00
File ID: HY.112608.110052

Analyte	CAS. Number	Result	Qual	RL	MDL
Mercury	7439-97-6		U	0.400	0.100

U Undetected; the analyte was analyzed for, but not detected.

Microbac

2284 lw 2/2/09

ENVIRONMENTAL
Data Services, Inc.

EXPLOSIVES, PETN, NITROGLYCERIN

USEPA Region IV - Level IV Review

Site: MCB Camp Lejeune, TO-09 SDG #: L08110527

Client: CH2M HILL, Inc., Virginia Beach, Virginia Date: February 4, 2009

Laboratory: Microbac Laboratories, Inc., Marietta, Ohio Reviewer: Nancy Weaver

EDS ID	Client Sample ID	Laboratory Sample ID	Matrix
1	MR08-TW01-08D	L08110527-08	Water
2MS	MR08-TW01-08DMS	L08110527-09MS	Water
3MSD	MR08-TW01-08DMSD	L08110527-10MSD	Water

The USEPA "Contract Laboratory Program National Functional Guidelines for Organic Data Review," October 1999, and professional judgement were used in evaluating the data in this summary report.

Holding Times - All samples were extracted within 7 days for water samples and analyzed within 40 days.

Initial Calibration - The initial calibrations exhibited acceptable %RSD and/or correlation coefficient values.

Calibration Verification - The continuing calibrations exhibited acceptable %D values except the following.

CCAL Date	Compound	%D	Qualifier	Affected Samples
11/21/08	Tetryl	52.8%	J/UJ	1

Surrogates - All samples exhibited acceptable surrogate recoveries.

MS/MSD - The MS/MSD sample exhibited acceptable %R and RPD values.

Laboratory Control Sample - The LCS samples exhibited acceptable %R values except the following.

LCS ID	Compound	%R	Qualifier	Affected Samples
WG288618-03	HMX	77.1%	J/UJ	1

Method Blank - The method blanks were free of contamination.

Field and Equipment Blank - Field QC results are summarized below.

Blank ID	Compound	Conc. ug/L	Action Level ug/L	Qualifier	Affected Samples
MR08-EB111708-1	None - ND	-	-	-	-
MR08-FB112008	None - ND	-	-	-	-

Field Duplicates - Field duplicate samples were not included in this data package.

Compound Identification - Retention times were acceptable and no further action was taken.

Compound Quantitation - No discrepancies were identified.

Report Number: L08110527

Report Date : December 9, 2008

Sample Number: L08110527-08
Client ID: MR08-TW01-08D
Matrix: Water
Workgroup Number: WG288717
Collect Date: 11/17/2008 16:10
Sample Tag: 02

PrePrep Method: NONE
Prep Method: 3535
Analytical Method: 8330MOD
Analyst: ECL
Dilution: 1
Units: ug/L

Instrument: HPLC5
Prep Date: 11/21/2008 07:00
Cal Date: 08/12/2008 15:23
Run Date: 11/24/2008 22:11
File ID: 5L002918.F

Analyte	CAS. Number	Result	Qual	RL	MDL
PETN	78-11-5		U	1.03	0.258

U Undetected; the analyte was analyzed for, but not detected.

Microbac®

14 lcw
2/4/09

1

Sample Number: L08110527-08
Client ID: MR08-TW01-08D
Matrix: Water
Workgroup Number: WG288717
Collect Date: 11/17/2008 16:10
Sample Tag: 01

PrePrep Method: NONE
Prep Method: 3535
Analytical Method: 8330MOD
Analyst: ECL
Dilution: 1
Units: ug/L

Instrument: HPLC4
Prep Date: 11/21/2008 07:00
Cal Date: 10/30/2008 18:13
Run Date: 11/21/2008 18:53
File ID: 4L014545.F

Analyte	CAS. Number	Result	Qual	RL	MDL
1,3,5-Trinitrobenzene	99-35-4		U	1.03	0.258
1,3-Dinitrobenzene	99-65-0		U	1.03	0.258
2,4,6-Trinitrotoluene	118-96-7		U	1.03	0.258
2,4-Dinitrotoluene	121-14-2		U	1.03	0.258
2,6-Dinitrotoluene	606-20-2		U	1.03	0.258
2-Amino-4,6-dinitrotoluene	35572-78-2		U	1.03	0.258
2-Nitrotoluene	88-72-2		U	1.03	0.258
3-Nitrotoluene	99-08-1		U	1.03	0.258
4-Nitrotoluene	99-99-0		U	1.03	0.258
4-Amino-2,6-dinitrotoluene	19406-51-0		U	1.03	0.258
HMX	2691-41-0		UJ ~~U~~	1.03	0.258
Nitrobenzene	98-95-3		U	1.03	0.258
RDX	121-82-4		U	1.03	0.258
Tetryl	479-45-8		UJ ~~U~~	1.03	0.258
Nitroglycerin	55-63-0		U	1.03	0.258

BSL
CCH

Surrogate	% Recovery	Lower	Upper	Qual
1,2-Dinitrobenzene	63.2	50	150	

U Undetected; the analyte was analyzed for, but not detected.

Microbac

 MW 2/4/09

ENVIRONMENTAL
Data Services, Inc.

METALS

USEPA Region IV - Level IV Review

Site: MCB Camp Lejeune, TO-09 SDG #: L08110527

Client: CH2M HILL, Inc., Virginia Beach, Virginia Date: February 1, 2009

Laboratory: Microbac Laboratories, Inc., Marietta, Ohio Reviewer: Nancy Weaver

EDS ID	Client Sample ID	Laboratory Sample ID	Matrix
1	MR08-TW05-08D	L08110527-01	Water
2	MR08-TW06-08D	L08110527-02	Water
3	MR08-TW14-08D	L08110527-03	Water
4	MR08-TW13-08D	L08110527-04	Water
5	MR08-TW11-08D	L08110527-05	Water
6	MR08-TW10-08D	L08110527-06	Water
7	MR08-TW09-08D	L08110527-07	Water
8	MR08-TW01-08D	L08110527-08	Water
9MS	MR08-TW01-08DMS	L08110527-09MS	Water
10MSD	MR08-TW01-08DMSD	L08110527-10MSD	Water

The USEPA "Contract Laboratory Program National Functional Guidelines for Inorganic Data Review," October 2004, and professional judgement were used in evaluating the data in this summary report.

Holding Times - All samples were prepared and analyzed within 28 days for mercury and 180 days for all other metals.

Calibration - The ICV and CCV %R values were acceptable.

Method and Calibration Blanks - All criteria were met.

Field and Equipment Blank - Field QC results are summarized below.

Blank ID	Compound	Conc. ug/L	Action Level ug/L	Qualifier	Affected Samples
MR08-EB111708-1	None - ND	-	-	-	-
MR08-FB112008	None - ND	-	-	-	-

ICP Interference Check Sample - All %R values were acceptable.

MS/MSD - The MS/MSD sample exhibited acceptable %R and RPD values.

LCS - The LCS samples exhibited acceptable %R values.

ICP Serial Dilution - The ICP serial dilution sample exhibited acceptable %D values.

Field Duplicates - Field duplicate samples were not included in this data package.

Compound Quantitation - No discrepancies were identified.

Report Number: L08110527

Report Date : December 9, 2008

Sample Number: L08110527-01
Client ID: MR08-TW05-08D
Matrix: Water
Workgroup Number: WG288724
Collect Date: 11/17/2008 08:55
Sample Tag: 01

PrePrep Method: NONE
Prep Method: 3005A
Analytical Method: 6010B
Analyst: SLP
Dilution: 1
Units: ug/L

Instrument: PE-ICP2
Prep Date: 11/21/2008 11:02
Cal Date: 12/04/2008 15:53
Run Date: 12/04/2008 20:40
File ID: P2.120408.204053

Analyte	CAS. Number	Result	Qual	RL	MDL
Barium, Total	7440-39-3	55.3		10.0	2.50
Cadmium, Total	7440-43-9		U	1.00	0.250
Chromium, Total	7440-47-3		U	10.0	2.50
Silver, Total	7440-22-4		U	6.00	2.00

U Undetected; the analyte was analyzed for, but not detected.

Microbac

135 hw 2/2/09

Report Number: L08110527

Report Date : December 9, 2008

Sample Number:	L08110527-01	PrePrep Method:	NONE	Instrument:	ELAN-ICP
Client ID:	MR08-TW05-08D	Prep Method:	3015	Prep Date:	11/21/2008 07:39
Matrix:	Water	Analytical Method:	6020	Cal Date:	12/02/2008 11:32
Workgroup Number:	WG288705	Analyst:	JYH	Run Date:	12/02/2008 20:11
Collect Date:	11/17/2008 08:55	Dilution:	1	File ID:	EL.120208.201153
Sample Tag:	01	Units:	ug/L		

Analyte	CAS. Number	Result	Qual	RL	MDL
Arsenic, Total	7440-38-2	0.330	J	1.00	0.250
Lead, Total	7439-92-1		U	1.00	0.250
Selenium, Total	7782-49-2	4.29		2.00	0.500

U Undetected; the analyte was analyzed for, but not detected.
J Estimated ; the analyte concentration was less than the low standard (LOQ)

Microbac

278 lw 2/2/09

Report Number: L08110527

Report Date : December 9, 2008

Sample Number: L08110527-01
Client ID: MR08-TW05-08D
Matrix: Water
Workgroup Number: WG289027
Collect Date: 11/17/2008 08:55
Sample Tag: 01

PrePrep Method: NONE
Prep Method: 7470A
Analytical Method: 7470A
Analyst: ADC
Dilution: 1
Units: ug/L

Instrument: HYDRA
Prep Date: 11/21/2008 10:50
Cal Date: 11/25/2008 12:08
Run Date: 11/25/2008 13:27
File ID: HY.112508.132739

Analyte	CAS. Number	Result	Qual	RL	MDL
Mercury	7439-97-6		U	0.400	0.100

U Undetected; the analyte was analyzed for, but not detected.

Microbac

683 AW 2/2/09

2

Sample Number: L08110527-02
Client ID: MR08-TW06-08D
Matrix: Water
Workgroup Number: WG288724
Collect Date: 11/17/2008 09:00
Sample Tag: 01

PrePrep Method: NONE
Prep Method: 3005A
Analytical Method: 6010B
Analyst: SLP
Dilution: 1
Units: ug/L

Instrument: PE-ICP2
Prep Date: 11/21/2008 08:39
Cal Date: 12/04/2008 15:53
Run Date: 12/04/2008 21:12
File ID: P2.120408.211232

Analyte	CAS. Number	Result	Qual	RL	MDL
Barium, Total	7440-39-3	55.6		10.0	2.50
Cadmium, Total	7440-43-9		U	1.00	0.250
Chromium, Total	7440-47-3		U	10.0	2.50
Silver, Total	7440-22-4		U	6.00	2.00

U Undetected; the analyte was analyzed for, but not detected.

Microbac

136 MW 2/2/09

2

Sample Number: L08110527-02
Client ID: MR08-TW06-08D
Matrix: Water
Workgroup Number: WG288705
Collect Date: 11/17/2008 09:00
Sample Tag: 01

PrePrep Method: NONE
Prep Method: 3015
Analytical Method: 6020
Analyst: JYH
Dilution: 1
Units: ug/L

Instrument: ELAN-ICP
Prep Date: 11/21/2008 07:39
Cal Date: 12/02/2008 11:32
Run Date: 12/02/2008 20:39
File ID: EL.120208.203930

Analyte	CAS. Number	Result	Qual	RL	MDL
Arsenic, Total	7440-38-2	0.377	J	1.00	0.250
Lead, Total	7439-92-1		U	1.00	0.250
Selenium, Total	7782-49-2	3.57		2.00	0.500

U Undetected; the analyte was analyzed for, but not detected.
J Estimated ; the analyte concentration was less than the low standard (LOQ)

Microbac

 fcw 2/2/09

2

Sample Number: L08110527-02
Client ID: MR08-TW06-08D
Matrix: Water
Workgroup Number: WG289027
Collect Date: 11/17/2008 09:00
Sample Tag: 01

PrePrep Method: NONE
Prep Method: 7470A
Analytical Method: 7470A
Analyst: ADC
Dilution: 1
Units: ug/L

Instrument: HYDRA
Prep Date: 11/21/2008 08:57
Cal Date: 11/25/2008 12:08
Run Date: 11/25/2008 13:29
File ID: HY.112508.132934

Analyte	CAS. Number	Result	Qual	RL	MDL
Mercury	7439-97-6		U	0.400	0.100

U Undetected; the analyte was analyzed for, but not detected.

Microbac

684 lew 2/2/09

3

Sample Number: L08110527-03
Client ID: MR08-TW14-08D
Matrix: Water
Workgroup Number: WG288724
Collect Date: 11/17/2008 10:25
Sample Tag: 01

PrePrep Method: NONE
Prep Method: 3005A
Analytical Method: 6010B
Analyst: SLP
Dilution: 1
Units: ug/L

Instrument: PE-ICP2
Prep Date: 11/21/2008 08:39
Cal Date: 12/04/2008 15:53
Run Date: 12/04/2008 21:18
File ID: P2.120408.211846

Analyte	CAS. Number	Result	Qual	RL	MDL
Barium, Total	7440-39-3	117		10.0	2.50
Cadmium, Total	7440-43-9		U	1.00	0.250
Chromium, Total	7440-47-3		U	10.0	2.50
Silver, Total	7440-22-4		U	6.00	2.00

U Undetected; the analyte was analyzed for, but not detected.

Microbac

137 lw 2/2/09

3

Sample Number: L08110527-03
Client ID: MR08-TW14-08D
Matrix: Water
Workgroup Number: WG288705
Collect Date: 11/17/2008 10:25
Sample Tag: 01

PrePrep Method: NONE
Prep Method: 3015
Analytical Method: 6020
Analyst: JYH
Dilution: 1
Units: ug/L

Instrument: ELAN-ICP
Prep Date: 11/21/2008 07:39
Cal Date: 12/02/2008 11:32
Run Date: 12/02/2008 20:44
File ID: EL.120208.204454

Analyte	CAS. Number	Result	Qual	RL	MDL
Arsenic, Total	7440-38-2		U	1.00	0.250
Lead, Total	7439-92-1		U	1.00	0.250
Selenium, Total	7782-49-2	1.81	J	2.00	0.500

U Undetected; the analyte was analyzed for, but not detected.
J Estimated ; the analyte concentration was less than the low standard (LOQ)

Microbac

 JEW 2/2/09

3

Sample Number:	L08110527-03	PrePrep Method:	NONE	Instrument:	HYDRA
Client ID:	MR08-TW14-08D	Prep Method:	7470A	Prep Date:	11/21/2008 08:57
Matrix:	Water	Analytical Method:	7470A	Cal Date:	11/25/2008 12:08
Workgroup Number:	WG289027	Analyst:	ADC	Run Date:	11/25/2008 13:32
Collect Date:	11/17/2008 10:25	Dilution:	1	File ID:	HY.112508.133207
Sample Tag:	01	Units:	ug/L		

Analyte	CAS. Number	Result	Qual	RL	MDL
Mercury	7439-97-6		U	0.400	0.100

U Undetected; the analyte was analyzed for, but not detected.

Microbac

lw 2/2/09

4

Sample Number: L08110527-04
Client ID: MR08-TW13-08D
Matrix: Water
Workgroup Number: WG288724
Collect Date: 11/17/2008 11:05
Sample Tag: 01

PrePrep Method: NONE
Prep Method: 3005A
Analytical Method: 6010B
Analyst: SLP
Dilution: 1
Units: ug/L

Instrument: PE-ICP2
Prep Date: 11/21/2008 08:39
Cal Date: 12/04/2008 15:53
Run Date: 12/04/2008 21:25
File ID: P2.120408.212504

Analyte	CAS. Number	Result	Qual	RL	MDL
Barium, Total	7440-39-3	129		10.0	2.50
Cadmium, Total	7440-43-9		U	1.00	0.250
Chromium, Total	7440-47-3		U	10.0	2.50
Silver, Total	7440-22-4		U	6.00	2.00

U Undetected; the analyte was analyzed for, but not detected.

Microbac

 LW 2/2/09

4

Sample Number: L08110527-04
Client ID: MR08-TW13-08D
Matrix: Water
Workgroup Number: WG288705
Collect Date: 11/17/2008 11:05
Sample Tag: 01

PrePrep Method: NONE
Prep Method: 3015
Analytical Method: 6020
Analyst: JYH
Dilution: 1
Units: ug/L

Instrument: ELAN-ICP
Prep Date: 11/21/2008 07:39
Cal Date: 12/02/2008 11:32
Run Date: 12/02/2008 20:50
File ID: EL.120208.205016

Analyte	CAS. Number	Result	Qual	RL	MDL
Arsenic, Total	7440-38-2	0.329	J	1.00	0.250
Lead, Total	7439-92-1	0.316	J	1.00	0.250
Selenium, Total	7782-49-2	3.47		2.00	0.500

J Estimated ; the analyte concentration was less than the low standard (LOQ)

Microbac

281 RW 2/2/09

4

Sample Number: L08110527-04
Client ID: MR08-TW13-08D
Matrix: Water
Workgroup Number: WG289027
Collect Date: 11/17/2008 11:05
Sample Tag: 01

PrePrep Method: NONE
Prep Method: 7470A
Analytical Method: 7470A
Analyst: ADC
Dilution: 1
Units: ug/L

Instrument: HYDRA
Prep Date: 11/21/2008 08:57
Cal Date: 11/25/2008 12:08
Run Date: 11/25/2008 13:33
File ID: HY.112508.133350

Analyte	CAS. Number	Result	Qual	RL	MDL
Mercury	7439-97-6		U	0.400	0.100

U Undetected; the analyte was analyzed for, but not detected.

Microbac

lew
2/2/09

5

Sample Number: L08110527-05
Client ID: MR08-TW11-08D
Matrix: Water
Workgroup Number: WG288724
Collect Date: 11/17/2008 13:25
Sample Tag: 01

PrePrep Method: NONE
Prep Method: 3005A
Analytical Method: 6010B
Analyst: SLP
Dilution: 1
Units: ug/L

Instrument: PE-ICP2
Prep Date: 11/21/2008 08:39
Cal Date: 12/04/2008 15:53
Run Date: 12/04/2008 21:31
File ID: P2.120408.213125

Analyte	CAS. Number	Result	Qual	RL	MDL
Barium, Total	7440-39-3	74.0		10.0	2.50
Cadmium, Total	7440-43-9		U	1.00	0.250
Chromium, Total	7440-47-3		U	10.0	2.50
Silver, Total	7440-22-4		U	6.00	2.00

U Undetected; the analyte was analyzed for, but not detected.

Microbac

 DW 2/2/09

5

Sample Number: L08110527-05
Client ID: MR08-TW11-08D
Matrix: Water
Workgroup Number: WG288705
Collect Date: 11/17/2008 13:25
Sample Tag: 01

PrePrep Method: NONE
Prep Method: 3015
Analytical Method: 6020
Analyst: JYH
Dilution: 1
Units: ug/L

Instrument: ELAN-ICP
Prep Date: 11/21/2008 07:39
Cal Date: 12/02/2008 11:32
Run Date: 12/02/2008 20:55
File ID: EL.120208.205538

Analyte	CAS. Number	Result	Qual	RL	MDL
Arsenic, Total	7440-38-2	0.297	J	1.00	0.250
Lead, Total	7439-92-1		U	1.00	0.250
Selenium, Total	7782-49-2	4.65		2.00	0.500

U Undetected; the analyte was analyzed for, but not detected.
J Estimated ; the analyte concentration was less than the low standard (LOQ)

Microbac

lw 2/2/09

5

Sample Number: L08110527-05
Client ID: MR08-TW11-08D
Matrix: Water
Workgroup Number: WG289027
Collect Date: 11/17/2008 13:25
Sample Tag: 01

PrePrep Method: NONE
Prep Method: 7470A
Analytical Method: 7470A
Analyst: ADC
Dilution: 1
Units: ug/L

Instrument: HYDRA
Prep Date: 11/21/2008 08:57
Cal Date: 11/25/2008 12:08
Run Date: 11/25/2008 13:35
File ID: HY.112508.133547

Analyte	CAS. Number	Result	Qual	RL	MDL
Mercury	7439-97-6		U	0.400	0.100

U Undetected; the analyte was analyzed for, but not detected.

Microbac

687 dlw 2/2/09

6

Sample Number: L08110527-06
Client ID: MR08-TW10-08D
Matrix: Water
Workgroup Number: WG288724
Collect Date: 11/17/2008 13:50
Sample Tag: 01

PrePrep Method: NONE
Prep Method: 3005A
Analytical Method: 6010B
Analyst: SLP
Dilution: 1
Units: ug/L

Instrument: PE-ICP2
Prep Date: 11/21/2008 08:39
Cal Date: 12/04/2008 15:53
Run Date: 12/04/2008 21:37
File ID: P2.120408.213738

Analyte	CAS. Number	Result	Qual	RL	MDL
Barium, Total	7440-39-3	51.7		10.0	2.50
Cadmium, Total	7440-43-9		U	1.00	0.250
Chromium, Total	7440-47-3		U	10.0	2.50
Silver, Total	7440-22-4		U	6.00	2.00

U Undetected; the analyte was analyzed for, but not detected.

Microbac

140 lw 2/2/09

6

Sample Number: L08110527-06
Client ID: MR08-TW10-08D
Matrix: Water
Workgroup Number: WG288705
Collect Date: 11/17/2008 13:50
Sample Tag: 01

PrePrep Method: NONE
Prep Method: 3015
Analytical Method: 6020
Analyst: JYH
Dilution: 1
Units: ug/L

Instrument: ELAN-ICP
Prep Date: 11/21/2008 07:39
Cal Date: 12/02/2008 11:32
Run Date: 12/02/2008 21:01
File ID: EL.120208.210101

Analyte	CAS. Number	Result	Qual	RL	MDL
Arsenic, Total	7440-38-2	0.255	J	1.00	0.250
Lead, Total	7439-92-1		U	1.00	0.250
Selenium, Total	7782-49-2	2.41		2.00	0.500

U Undetected; the analyte was analyzed for, but not detected.
J Estimated ; the analyte concentration was less than the low standard (LOQ)

Microbac

 fw 2/2/09

6

Sample Number: L08110527-06
Client ID: MR08-TW10-08D
Matrix: Water
Workgroup Number: WG289027
Collect Date: 11/17/2008 13:50
Sample Tag: 01

PrePrep Method: NONE
Prep Method: 7470A
Analytical Method: 7470A
Analyst: ADC
Dilution: 1
Units: ug/L

Instrument: HYDRA
Prep Date: 11/21/2008 08:57
Cal Date: 11/25/2008 12:08
Run Date: 11/25/2008 13:37
File ID: HY.112508.133744

Analyte	CAS. Number	Result	Qual	RL	MDL
Mercury	7439-97-6		U	0.400	0.100

U Undetected; the analyte was analyzed for, but not detected.

Microbac

688 lw 2/2/09

7

Sample Number: L08110527-07
Client ID: MR08-TW09-08D
Matrix: Water
Workgroup Number: WG288724
Collect Date: 11/17/2008 15:20
Sample Tag: 01

PrePrep Method: NONE
Prep Method: 3005A
Analytical Method: 6010B
Analyst: SLP
Dilution: 1
Units: ug/L

Instrument: PE-ICP2
Prep Date: 11/21/2008 08:39
Cal Date: 12/04/2008 15:53
Run Date: 12/04/2008 21:43
File ID: P2.120408.214358

Analyte	CAS. Number	Result	Qual	RL	MDL
Barium, Total	7440-39-3	54.8		10.0	2.50
Cadmium, Total	7440-43-9		U	1.00	0.250
Chromium, Total	7440-47-3		U	10.0	2.50
Silver, Total	7440-22-4	2.29	J	6.00	2.00

U Undetected; the analyte was analyzed for, but not detected.
J Estimated ; the analyte concentration was less than the low standard (LOQ)

Microbac

 2/2/09

7

Sample Number: L08110527-07
Client ID: MR08-TW09-08D
Matrix: Water
Workgroup Number: WG288705
Collect Date: 11/17/2008 15:20
Sample Tag: 01

PrePrep Method: NONE
Prep Method: 3015
Analytical Method: 6020
Analyst: JYH
Dilution: 1
Units: ug/L

Instrument: ELAN-ICP
Prep Date: 11/21/2008 07:39
Cal Date: 12/02/2008 11:32
Run Date: 12/02/2008 21:06
File ID: EL.120208.210624

Analyte	CAS. Number	Result	Qual	RL	MDL
Arsenic, Total	7440-38-2		U	1.00	0.250
Lead, Total	7439-92-1		U	1.00	0.250
Selenium, Total	7782-49-2	1.43	J	2.00	0.500

U Undetected; the analyte was analyzed for, but not detected.
J Estimated ; the analyte concentration was less than the low standard (LOQ)

Microbac

 MW 2/2/09

7

Sample Number: L08110527-07
Client ID: MR08-TW09-08D
Matrix: Water
Workgroup Number: WG289027
Collect Date: 11/17/2008 15:20
Sample Tag: 01

PrePrep Method: NONE
Prep Method: 7470A
Analytical Method: 7470A
Analyst: ADC
Dilution: 1
Units: ug/L

Instrument: HYDRA
Prep Date: 11/21/2008 08:57
Cal Date: 11/25/2008 12:08
Run Date: 11/25/2008 13:39
File ID: HY.112508.133930

Analyte	CAS. Number	Result	Qual	RL	MDL
Mercury	7439-97-6	0.103	J	0.400	0.100

J Estimated ; the analyte concentration was less than the low standard (LOQ)

Microbac

689 lw 2/2/09

8

Sample Number: L08110527-08
Client ID: MR08-TW01-08D
Matrix: Water
Workgroup Number: WG288724
Collect Date: 11/17/2008 16:10
Sample Tag: 01

PrePrep Method: NONE
Prep Method: 3005A
Analytical Method: 6010B
Analyst: SLP
Dilution: 1
Units: ug/L

Instrument: PE-ICP2
Prep Date: 11/21/2008 08:39
Cal Date: 12/04/2008 15:53
Run Date: 12/04/2008 21:50
File ID: P2.120408.215018

Analyte	CAS. Number	Result	Qual	RL	MDL
Barium, Total	7440-39-3	96.0		10.0	2.50
Cadmium, Total	7440-43-9		U	1.00	0.250
Chromium, Total	7440-47-3		U	10.0	2.50
Copper, Total	7440-50-8		U	20.0	5.00
Silver, Total	7440-22-4		U	6.00	2.00
Zinc, Total	7440-66-6		U	20.0	5.00

U Undetected; the analyte was analyzed for, but not detected.

Microbac

 lw 2/2/09

8

Sample Number: L08110527-08
Client ID: MR08-TW01-08D
Matrix: Water
Workgroup Number: WG288705
Collect Date: 11/17/2008 16:10
Sample Tag: 01

PrePrep Method: NONE
Prep Method: 3015
Analytical Method: 6020
Analyst: JYH
Dilution: 1
Units: ug/L

Instrument: ELAN-ICP
Prep Date: 11/21/2008 07:39
Cal Date: 12/02/2008 11:32
Run Date: 12/02/2008 19:55
File ID: EL.120208.195542

Analyte	CAS. Number	Result	Qual	RL	MDL
Arsenic, Total	7440-38-2		U	1.00	0.250
Lead, Total	7439-92-1		U	1.00	0.250
Antimony, Total	7440-36-0		U	1.00	0.250
Selenium, Total	7782-49-2	2.05		2.00	0.500

U Undetected; the analyte was analyzed for, but not detected.

Microbac

285 lw 2/2/09

8

Sample Number: L08110527-08
Client ID: MR08-TW01-08D
Matrix: Water
Workgroup Number: WG289027
Collect Date: 11/17/2008 16:10
Sample Tag: 01

PrePrep Method: NONE
Prep Method: 7470A
Analytical Method: 7470A
Analyst: ADC
Dilution: 1
Units: ug/L

Instrument: HYDRA
Prep Date: 11/21/2008 08:57
Cal Date: 11/25/2008 12:08
Run Date: 11/25/2008 13:45
File ID: HY.112508.134520

Analyte	CAS. Number	Result	Qual	RL	MDL
Mercury	7439-97-6		U	0.400	0.100

U Undetected; the analyte was analyzed for, but not detected.

Microbac

690 lw 2/2/09

ENVIRONMENTAL
Data Services, Inc.

EXPLOSIVES, PETN, NITROGLYCERIN

USEPA Region IV - Level IV Review

Site: MCB Camp Lejeune, TO-09 SDG #: L08110540

Client: CH2M HILL, Inc., Virginia Beach, Virginia Date: February 5, 2009

Laboratory: Microbac Laboratories, Inc., Marietta, Ohio Reviewer: Nancy Weaver

EDS ID	Client Sample ID	Laboratory Sample ID	Matrix
1	MR08-TW02-08D	L08110540-01	Water
2	MR08-TW02D-08D	L08110540-02	Water
3	MR08-TW03-08D	L08110540-03	Water
4	MR08-TW03D-08D	L08110540-04	Water

The USEPA "Contract Laboratory Program National Functional Guidelines for Organic Data Review," October 1999, and professional judgement were used in evaluating the data in this summary report.

Holding Times - All samples were extracted within 7 days for water samples and analyzed within 40 days.

Initial Calibration - The initial calibrations exhibited acceptable %RSD and/or correlation coefficient values.

Calibration Verification - The continuing calibrations exhibited acceptable %D values except the following.

CCAL Date	Compound	%D	Qualifier	Affected Samples
11/22/08	Tetryl	49.2%	J/UJ	All samples

Surrogates - All samples exhibited acceptable surrogate recoveries.

MS/MSD - A MS/MSD sample was not analyzed.

Laboratory Control Sample - The LCS samples exhibited acceptable %R values except the following.

LCS ID	Compound	%R	Qualifier	Affected Samples
WG288618-03	HMX	77.1%	J/UJ	All samples

Method Blank - The method blanks were free of contamination.

Field and Equipment Blank - Field QC results are summarized below.

Blank ID	Compound	Conc. ug/L	Action Level ug/L	Qualifier	Affected Samples
MR08-EB111708-1	None - ND	-	-	-	-
MR08-FB112008	None - ND	-	-	-	-

Field Duplicates - Field duplicate results are summarized below.

Compound	MR08-TW02-08D ug/L	MR08-TW02D-08D ug/L	RPD	Qualifier
None	ND	ND	-	-

Compound	MR08-TW03-08D ug/L	MR08-TW03D-08D ug/L	RPD	Qualifier
None	ND	ND	-	-

Compound Identification - Retention times were acceptable and no further action was taken.

Compound Quantitation - No discrepancies were identified.

Report Number: L08110540

Report Date : December 4, 2008

Sample Number: L08110540-01
Client ID: MR08-TW02-08D
Matrix: Water
Workgroup Number: WG288717
Collect Date: 11/18/2008 09:30
Sample Tag: 02

PrePrep Method: NONE
Prep Method: 3535
Analytical Method: 8330MOD
Analyst: ECL
Dilution: 1
Units: ug/L

Instrument: HPLC5
Prep Date: 11/21/2008 07:00
Cal Date: 08/12/2008 15:23
Run Date: 11/26/2008 14:56
File ID: 5L002946.F

Analyte	CAS. Number	Result	Qual	RL	MDL
PETN	78-11-5		U	1.02	0.255

U Undetected; the analyte was analyzed for, but not detected.

Microbac

13 LW 2/5/09

Report Number: L08110540

Report Date : December 4, 2008

1

Sample Number: L08110540-01
Client ID: MR08-TW02-08D
Matrix: Water
Workgroup Number: WG288717
Collect Date: 11/18/2008 09:30
Sample Tag: 01

PrePrep Method: NONE
Prep Method: 3535
Analytical Method: 8330MOD
Analyst: ECL
Dilution: 1
Units: ug/L

Instrument: HPLC4
Prep Date: 11/21/2008 07:00
Cal Date: 10/30/2008 18:13
Run Date: 11/21/2008 20:48
File ID: 4L014548.F

Analyte	CAS. Number	Result	Qual	RL	MDL	
1,3,5-Trinitrobenzene	99-35-4		U	1.02	0.255	
1,3-Dinitrobenzene	99-65-0		U	1.02	0.255	
2,4,6-Trinitrotoluene	118-96-7		U	1.02	0.255	
2,4-Dinitrotoluene	121-14-2		U	1.02	0.255	
2,6-Dinitrotoluene	606-20-2		U	1.02	0.255	
2-Amino-4,6-dinitrotoluene	35572-78-2		U	1.02	0.255	
2-Nitrotoluene	88-72-2		U	1.02	0.255	
3-Nitrotoluene	99-08-1		U	1.02	0.255	
4-Nitrotoluene	99-99-0		U	1.02	0.255	
4-Amino-2,6-dinitrotoluene	19406-51-0		U	1.02	0.255	
HMX	2691-41-0	UJ	~~U~~	1.02	0.255	BSL
Nitrobenzene	98-95-3		U	1.02	0.255	
RDX	121-82-4		U	1.02	0.255	
Tetryl	479-45-8	UJ	~~U~~	1.02	0.255	CCH
Nitroglycerin	55-63-0		U	1.02	0.255	

Surrogate	% Recovery	Lower	Upper	Qual
1,2-Dinitrobenzene	63.6	50	150	

U Undetected; the analyte was analyzed for, but not detected.

Microbac

14 MW 2/5/09

2

Sample Number: L08110540-02
Client ID: MR08-TW02D-08D
Matrix: Water
Workgroup Number: WG288717
Collect Date: 11/18/2008 09:35
Sample Tag: 02

PrePrep Method: NONE
Prep Method: 3535
Analytical Method: 8330MOD
Analyst: ECL
Dilution: 1
Units: ug/L

Instrument: HPLC5
Prep Date: 11/21/2008 07:00
Cal Date: 08/12/2008 15:23
Run Date: 11/26/2008 15:09
File ID: 5L002947.F

Analyte	CAS. Number	Result	Qual	RL	MDL
PETN	78-11-5		U	1.00	0.250

U Undetected; the analyte was analyzed for, but not detected.

Microbac

15 LW
2/5/09

2

Sample Number: L08110540-02
Client ID: MR08-TW02D-08D
Matrix: Water
Workgroup Number: WG288717
Collect Date: 11/18/2008 09:35
Sample Tag: 01

PrePrep Method: NONE
Prep Method: 3535
Analytical Method: 8330MOD
Analyst: ECL
Dilution: 1
Units: ug/L

Instrument: HPLC4
Prep Date: 11/21/2008 07:00
Cal Date: 10/30/2008 18:13
Run Date: 11/21/2008 21:26
File ID: 4L014549.F

Analyte	CAS. Number	Result	Qual	RL	MDL
1,3,5-Trinitrobenzene	99-35-4		U	1.00	0.250
1,3-Dinitrobenzene	99-65-0		U	1.00	0.250
2,4,6-Trinitrotoluene	118-96-7		U	1.00	0.250
2,4-Dinitrotoluene	121-14-2		U	1.00	0.250
2,6-Dinitrotoluene	606-20-2		U	1.00	0.250
2-Amino-4,6-dinitrotoluene	35572-78-2		U	1.00	0.250
2-Nitrotoluene	88-72-2		U	1.00	0.250
3-Nitrotoluene	99-08-1		U	1.00	0.250
4-Nitrotoluene	99-99-0		U	1.00	0.250
4-Amino-2,6-dinitrotoluene	19406-51-0		U	1.00	0.250
HMX	2691-41-0	UJ	~~U~~	1.00	0.250 BSL
Nitrobenzene	98-95-3		U	1.00	0.250
RDX	121-82-4		U	1.00	0.250
Tetryl	479-45-8	UJ	~~U~~	1.00	0.250 CCV
Nitroglycerin	55-63-0		U	1.00	0.250

Surrogate	% Recovery	Lower	Upper	Qual
1,2-Dinitrobenzene	75.1	50	150	

U Undetected; the analyte was analyzed for, but not detected.

Microbac

16 MW 2/5/09

3

Sample Number: L08110540-03
Client ID: MR08-TW03-08D
Matrix: Water
Workgroup Number: WG288717
Collect Date: 11/19/2008 09:50
Sample Tag: 02

PrePrep Method: NONE
Prep Method: 3535
Analytical Method: 8330MOD
Analyst: ECL
Dilution: 1
Units: ug/L

Instrument: HPLC5
Prep Date: 11/21/2008 07:00
Cal Date: 08/12/2008 15:23
Run Date: 11/26/2008 15:22
File ID: 5L002948.F

Analyte	CAS. Number	Result	Qual	RL	MDL
PETN	78-11-5		U	1.05	0.263

U Undetected; the analyte was analyzed for, but not detected.

Microbac

17 hw 2/5/09

3

Sample Number: L08110540-03
Client ID: MR08-TW03-08D
Matrix: Water
Workgroup Number: WG288717
Collect Date: 11/19/2008 09:50
Sample Tag: 01

PrePrep Method: NONE
Prep Method: 3535
Analytical Method: 8330MOD
Analyst: ECL
Dilution: 1
Units: ug/L

Instrument: HPLC4
Prep Date: 11/21/2008 07:00
Cal Date: 10/30/2008 18:13
Run Date: 11/21/2008 22:04
File ID: 4L014550.F

Analyte	CAS. Number	Result	Qual	RL	MDL
1,3,5-Trinitrobenzene	99-35-4		U	1.05	0.263
1,3-Dinitrobenzene	99-65-0		U	1.05	0.263
2,4,6-Trinitrotoluene	118-96-7		U	1.05	0.263
2,4-Dinitrotoluene	121-14-2		U	1.05	0.263
2,6-Dinitrotoluene	606-20-2		U	1.05	0.263
2-Amino-4,6-dinitrotoluene	35572-78-2		U	1.05	0.263
2-Nitrotoluene	88-72-2		U	1.05	0.263
3-Nitrotoluene	99-08-1		U	1.05	0.263
4-Nitrotoluene	99-99-0		U	1.05	0.263
4-Amino-2,6-dinitrotoluene	19406-51-0		U	1.05	0.263
HMX	2691-41-0		UJ ~~U~~	1.05	0.263
Nitrobenzene	98-95-3		U	1.05	0.263
RDX	121-82-4		U	1.05	0.263
Tetryl	479-45-8		UJ ~~U~~	1.05	0.263
Nitroglycerin	55-63-0		U	1.05	0.263

BSL
CH

Surrogate	% Recovery	Lower	Upper	Qual
1,2-Dinitrobenzene	72.6	50	150	

U Undetected; the analyte was analyzed for, but not detected.

Microbac

18 LMD 2/5/09

4

Sample Number: L08110540-04
Client ID: MR08-TW03D-08D
Matrix: Water
Workgroup Number: WG288717
Collect Date: 11/19/2008 09:55
Sample Tag: 02

PrePrep Method: NONE
Prep Method: 3535
Analytical Method: 8330MOD
Analyst: ECL
Dilution: 1
Units: ug/L

Instrument: HPLC5
Prep Date: 11/21/2008 07:00
Cal Date: 08/12/2008 15:23
Run Date: 11/26/2008 15:35
File ID: 5L002949.F

Analyte	CAS. Number	Result	Qual	RL	MDL
PETN	78-11-5		U	1.05	0.263

U Undetected; the analyte was analyzed for, but not detected.

Microbac

20 lew 2/5/09

4

Sample Number: L08110540-04
Client ID: MR08-TW03D-08D
Matrix: Water
Workgroup Number: WG288717
Collect Date: 11/19/2008 09:55
Sample Tag: 01

PrePrep Method: NONE
Prep Method: 3535
Analytical Method: 8330MOD
Analyst: ECL
Dilution: 1
Units: ug/L

Instrument: HPLC4
Prep Date: 11/21/2008 07:00
Cal Date: 10/30/2008 18:13
Run Date: 11/22/2008 00:37
File ID: 4L014554.F

Analyte	CAS. Number	Result	Qual	RL	MDL	
1,3,5-Trinitrobenzene	99-35-4		U	1.05	0.263	
1,3-Dinitrobenzene	99-65-0		U	1.05	0.263	
2,4,6-Trinitrotoluene	118-96-7		U	1.05	0.263	
2,4-Dinitrotoluene	121-14-2		U	1.05	0.263	
2,6-Dinitrotoluene	606-20-2		U	1.05	0.263	
2-Amino-4,6-dinitrotoluene	35572-78-2		U	1.05	0.263	
2-Nitrotoluene	88-72-2		U	1.05	0.263	
3-Nitrotoluene	99-08-1		U	1.05	0.263	
4-Nitrotoluene	99-99-0		U	1.05	0.263	
4-Amino-2,6-dinitrotoluene	19406-51-0		U	1.05	0.263	
HMX	2691-41-0		UJ ~~U~~	1.05	0.263	BSL
Nitrobenzene	98-95-3		U	1.05	0.263	
RDX	121-82-4		U	1.05	0.263	
Tetryl	479-45-8		UJ ~~U~~	1.05	0.263	CCH
Nitroglycerin	55-63-0		U	1.05	0.263	

Surrogate	% Recovery	Lower	Upper	Qual
1,2-Dinitrobenzene	68.7	50	150	

U Undetected; the analyte was analyzed for, but not detected.

Microbac

MW 2/5/09

ENVIRONMENTAL
Data Services, Inc.

METALS

USEPA Region IV - Level IV Review

Site: MCB Camp Lejeune, TO-09 SDG #: L08110540

Client: CH2M HILL, Inc., Virginia Beach, Virginia Date: February 2, 2009

Laboratory: Microbac Laboratories, Inc., Marietta, Ohio Reviewer: Nancy Weaver

EDS ID	Client Sample ID	Laboratory Sample ID	Matrix
1	MR08-TW02-08D	L08110540-01	Water
2	MR08-TW02D-08D	L08110540-02	Water
3	MR08-TW03-08D	L08110540-03	Water
4	MR08-TW03D-08D	L08110540-04	Water

The USEPA "Contract Laboratory Program National Functional Guidelines for Inorganic Data Review," October 2004, and professional judgement were used in evaluating the data in this summary report.

Holding Times - All samples were prepared and analyzed within 28 days for mercury and 180 days for all other metals.

Calibration - The ICV and CCV %R values were acceptable.

Method and Calibration Blanks - All criteria were met.

Field and Equipment Blank - Field QC results are summarized below.

Blank ID	Compound	Conc. ug/L	Action Level ug/L	Qualifier	Affected Samples
MR08-EB111708-1	None - ND	-	-	-	-
MR08-FB112008	None - ND	-	-	-	-

ICP Interference Check Sample - All %R values were acceptable.

MS/MSD - The MS/MSD sample exhibited acceptable %R and RPD values.

LCS - The LCS samples exhibited acceptable %R values.

ICP Serial Dilution - The ICP serial dilution sample exhibited acceptable %D values.

Field Duplicates - Field duplicate results are summarized below.

Compound	MR08-TW02-08D ug/L	MR08-TW02D-08D ug/L	RPD	Qualifier
Barium	12.4	13.3	7%	None
Selenium	1.66	1.47	12%	None

Compound	MR08-TW03-08D ug/L	MR08-TW03D-08D ug/L	RPD	Qualifier
Arsenic	1.00	0.282	NC	None
Barium	19.3	18.8	3%	None
Selenium	5.03	4.82	4%	None

Compound Quantitation - No discrepancies were identified.

Report Number: L08110540

Report Date : December 4, 2008

Sample Number: L08110540-01
Client ID: MR08-TW02-08D
Matrix: Water
Workgroup Number: WG288740
Collect Date: 11/18/2008 09:30
Sample Tag: 01

PrePrep Method: NONE
Prep Method: 3005A
Analytical Method: 6010B
Analyst: ED
Dilution: 1
Units: ug/L

Instrument: PE-ICP2
Prep Date: 11/21/2008 08:34
Cal Date: 11/25/2008 12:36
Run Date: 11/25/2008 18:40
File ID: P2.112508.184028

Analyte	CAS. Number	Result	Qual	RL	MDL
Barium, Total	7440-39-3	12.4		10.0	2.50
Cadmium, Total	7440-43-9		U	1.00	0.250
Chromium, Total	7440-47-3		U	10.0	2.50
Copper, Total	7440-50-8		U	20.0	5.00
Silver, Total	7440-22-4		U	6.00	2.00
Zinc, Total	7440-66-6		U	20.0	5.00

U Undetected; the analyte was analyzed for, but not detected.

Microbac

165 MW 2/2/09

Report Number: L08110540

Report Date : December 4, 2008

Sample Number:	L08110540-01	PrePrep Method:	NONE	Instrument:	ELAN-ICP
Client ID:	MR08-TW02-08D	Prep Method:	3015	Prep Date:	11/21/2008 07:39
Matrix:	Water	Analytical Method:	6020	Cal Date:	12/02/2008 11:32
Workgroup Number:	WG288705	Analyst:	JYH	Run Date:	12/02/2008 21:11
Collect Date:	11/18/2008 09:30	Dilution:	1	File ID:	EL.120208.211147
Sample Tag:	01	Units:	ug/L		

Analyte	CAS. Number	Result	Qual	RL	MDL
Arsenic, Total	7440-38-2		U	1.00	0.250
Lead, Total	7439-92-1		U	1.00	0.250
Antimony, Total	7440-36-0		U	1.00	0.250
Selenium, Total	7782-49-2	1.66	J	2.00	0.500

U Undetected; the analyte was analyzed for, but not detected.
J Estimated ; the analyte concentration was less than the low standard (LOQ)

Microbac

305 DW 2/2/09

Report Number: L08110540

Report Date : December 4, 2008

Sample Number:	L08110540-01	PrePrep Method:	NONE	Instrument:	HYDRA
Client ID:	MR08-TW02-08D	Prep Method:	7470A	Prep Date:	11/21/2008 08:57
Matrix:	Water	Analytical Method:	7470A	Cal Date:	11/25/2008 12:08
Workgroup Number:	WG289027	Analyst:	ADC	Run Date:	11/25/2008 13:52
Collect Date:	11/18/2008 09:30	Dilution:	1	File ID:	HY.112508.135233
Sample Tag:	01	Units:	ug/L		

Analyte	CAS. Number	Result	Qual	RL	MDL
Mercury	7439-97-6		U	0.400	0.100

U Undetected; the analyte was analyzed for, but not detected.

Microbac

704 LW 2/2/09

2

Sample Number: L08110540-02
Client ID: MR08-TW02D-08D
Matrix: Water
Workgroup Number: WG288740
Collect Date: 11/18/2008 09:35
Sample Tag: 01

PrePrep Method: NONE
Prep Method: 3005A
Analytical Method: 6010B
Analyst: ED
Dilution: 1
Units: ug/L

Instrument: PE-ICP2
Prep Date: 11/21/2008 08:34
Cal Date: 11/25/2008 12:36
Run Date: 11/25/2008 18:46
File ID: P2.112508.184649

Analyte	CAS. Number	Result	Qual	RL	MDL
Barium, Total	7440-39-3	13.3		10.0	2.50
Cadmium, Total	7440-43-9		U	1.00	0.250
Chromium, Total	7440-47-3		U	10.0	2.50
Copper, Total	7440-50-8		U	20.0	5.00
Silver, Total	7440-22-4		U	6.00	2.00
Zinc, Total	7440-66-6		U	20.0	5.00

U Undetected; the analyte was analyzed for, but not detected.

Microbac

 fw 2/2/09

2

Sample Number: L08110540-02
Client ID: MR08-TW02D-08D
Matrix: Water
Workgroup Number: WG288705
Collect Date: 11/18/2008 09:35
Sample Tag: 01

PrePrep Method: NONE
Prep Method: 3015
Analytical Method: 6020
Analyst: JYH
Dilution: 1
Units: ug/L

Instrument: ELAN-ICP
Prep Date: 11/21/2008 07:39
Cal Date: 12/02/2008 11:32
Run Date: 12/02/2008 21:17
File ID: EL.120208.211711

Analyte	CAS. Number	Result	Qual	RL	MDL
Arsenic, Total	7440-38-2		U	1.00	0.250
Lead, Total	7439-92-1		U	1.00	0.250
Antimony, Total	7440-36-0		U	1.00	0.250
Selenium, Total	7782-49-2	1.47	J	2.00	0.500

U Undetected; the analyte was analyzed for, but not detected.
J Estimated ; the analyte concentration was less than the low standard (LOQ)

Microbac

306 MW 2/2/09

2

Sample Number: L08110540-02
Client ID: MR08-TW02D-08D
Matrix: Water
Workgroup Number: WG289027
Collect Date: 11/18/2008 09:35
Sample Tag: 01

PrePrep Method: NONE
Prep Method: 7470A
Analytical Method: 7470A
Analyst: ADC
Dilution: 1
Units: ug/L

Instrument: HYDRA
Prep Date: 11/21/2008 08:57
Cal Date: 11/25/2008 12:08
Run Date: 11/25/2008 13:54
File ID: HY.112508.135418

Analyte	CAS. Number	Result	Qual	RL	MDL
Mercury	7439-97-6		U	0.400	0.100

U Undetected; the analyte was analyzed for, but not detected.

Microbac

705 lw 2/2/09

3

Sample Number: L08110540-03
Client ID: MR08-TW03-08D
Matrix: Water
Workgroup Number: WG288740
Collect Date: 11/19/2008 09:50
Sample Tag: 01

PrePrep Method: NONE
Prep Method: 3005A
Analytical Method: 6010B
Analyst: ED
Dilution: 1
Units: ug/L

Instrument: PE-ICP2
Prep Date: 11/21/2008 08:34
Cal Date: 11/25/2008 12:36
Run Date: 11/25/2008 18:53
File ID: P2.112508.185309

Analyte	CAS. Number	Result	Qual	RL	MDL
Barium, Total	7440-39-3	19.3		10.0	2.50
Cadmium, Total	7440-43-9		U	1.00	0.250
Chromium, Total	7440-47-3		U	10.0	2.50
Copper, Total	7440-50-8		U	20.0	5.00
Silver, Total	7440-22-4		U	6.00	2.00
Zinc, Total	7440-66-6		U	20.0	5.00

U Undetected; the analyte was analyzed for, but not detected.

Microbac

167 MW 2/2/09

3

Sample Number: L08110540-03
Client ID: MR08-TW03-08D
Matrix: Water
Workgroup Number: WG288705
Collect Date: 11/19/2008 09:50
Sample Tag: 01

PrePrep Method: NONE
Prep Method: 3015
Analytical Method: 6020
Analyst: JYH
Dilution: 1
Units: ug/L

Instrument: ELAN-ICP
Prep Date: 11/21/2008 07:39
Cal Date: 12/02/2008 11:32
Run Date: 12/02/2008 21:22
File ID: EL.120208.212235

Analyte	CAS. Number	Result	Qual	RL	MDL
Arsenic, Total	7440-38-2		U	1.00	0.250
Lead, Total	7439-92-1		U	1.00	0.250
Antimony, Total	7440-36-0		U	1.00	0.250
Selenium, Total	7782-49-2	5.03		2.00	0.500

U Undetected; the analyte was analyzed for, but not detected.

Microbac

307 MW 212/09

3

Sample Number: L08110540-03
Client ID: MR08-TW03-08D
Matrix: Water
Workgroup Number: WG289027
Collect Date: 11/19/2008 09:50
Sample Tag: 01

PrePrep Method: NONE
Prep Method: 7470A
Analytical Method: 7470A
Analyst: ADC
Dilution: 1
Units: ug/L

Instrument: HYDRA
Prep Date: 11/21/2008 08:57
Cal Date: 11/25/2008 12:08
Run Date: 11/25/2008 13:56
File ID: HY.112508.135604

Analyte	CAS. Number	Result	Qual	RL	MDL
Mercury	7439-97-6		U	0.400	0.100

U Undetected; the analyte was analyzed for, but not detected.

Microbac

706 lw 2/2/09

4

Sample Number: L08110540-04
Client ID: MR08-TW03D-08D
Matrix: Water
Workgroup Number: WG288740
Collect Date: 11/19/2008 09:55
Sample Tag: 01

PrePrep Method: NONE
Prep Method: 3005A
Analytical Method: 6010B
Analyst: ED
Dilution: 1
Units: ug/L

Instrument: PE-ICP2
Prep Date: 11/21/2008 08:34
Cal Date: 11/25/2008 12:36
Run Date: 11/25/2008 18:59
File ID: P2.112508.185923

Analyte	CAS. Number	Result	Qual	RL	MDL
Barium, Total	7440-39-3	18.8		10.0	2.50
Cadmium, Total	7440-43-9		U	1.00	0.250
Chromium, Total	7440-47-3		U	10.0	2.50
Copper, Total	7440-50-8		U	20.0	5.00
Silver, Total	7440-22-4		U	6.00	2.00
Zinc, Total	7440-66-6		U	20.0	5.00

U Undetected; the analyte was analyzed for, but not detected.

Microbac®

 lw 2/2/09

4

Sample Number: L08110540-04
Client ID: MR08-TW03D-08D
Matrix: Water
Workgroup Number: WG288705
Collect Date: 11/19/2008 09:55
Sample Tag: 01

PrePrep Method: NONE
Prep Method: 3015
Analytical Method: 6020
Analyst: JYH
Dilution: 1
Units: ug/L

Instrument: ELAN-ICP
Prep Date: 11/21/2008 07:39
Cal Date: 12/02/2008 11:32
Run Date: 12/02/2008 21:28
File ID: EL.120208.212800

Analyte	CAS. Number	Result	Qual	RL	MDL
Arsenic, Total	7440-38-2	0.282	J	1.00	0.250
Lead, Total	7439-92-1		U	1.00	0.250
Antimony, Total	7440-36-0		U	1.00	0.250
Selenium, Total	7782-49-2	4.82		2.00	0.500

U Undetected; the analyte was analyzed for, but not detected.
J Estimated ; the analyte concentration was less than the low standard (LOQ)

Microbac

308 DW 2/2/09

4

Sample Number: L08110540-04
Client ID: MR08-TW03D-08D
Matrix: Water
Workgroup Number: WG289027
Collect Date: 11/19/2008 09:55
Sample Tag: 01

PrePrep Method: NONE
Prep Method: 7470A
Analytical Method: 7470A
Analyst: ADC
Dilution: 1
Units: ug/L

Instrument: HYDRA
Prep Date: 11/21/2008 08:57
Cal Date: 11/25/2008 12:08
Run Date: 11/25/2008 13:58
File ID: HY.112508.135811

Analyte	CAS. Number	Result	Qual	RL	MDL
Mercury	7439-97-6		U	0.400	0.100

U Undetected; the analyte was analyzed for, but not detected.

Microbac

707 RW 2/2/09

ENVIRONMENTAL
Data Services, Inc.

EXPLOSIVES, PETN, NITROGLYCERIN

USEPA Region IV - Level IV Review

Site: MCB Camp Lejeune, TO-09 SDG #: L08110541

Client: CH2M HILL, Inc., Virginia Beach, Virginia Date: February 5, 2008

Laboratory: Microbac Laboratories, Inc., Marietta, Ohio Reviewer: Nancy Weaver

EDS ID	Client Sample ID	Laboratory Sample ID	Matrix
1	MR08-IS377-08D	L08110541-01	Soil
2	MR08-IS377D-08D	L08110541-02	Soil
3	MR08-IS397-08D	L08110541-03	Soil
4	MR08-IS398-08D	L08110541-04	Soil
5	MR08-IS398D-08D	L08110541-05	Soil
6	MR08-IS399-08D	L08110541-06	Soil
7	MR08-IS392-08D	L08110541-07	Soil
8	MR08-IS391-08D	L08110541-08	Soil
9	MR08-IS390-08D	L08110541-09	Soil
10	MR08-IS393-08D	L08110541-10	Soil
11	MR08-IS395-08D	L08110541-11	Soil
12	MR08-EB111808	L08110541-12	Water

The USEPA "Contract Laboratory Program National Functional Guidelines for Organic Data Review," October 1999, and professional judgement were used in evaluating the data in this summary report.

Holding Times - All samples were extracted within 7 days for water samples, 14 days for soil samples and analyzed within 40 days.

Initial Calibration - The initial calibrations exhibited acceptable %RSD and/or correlation coefficient values.

Calibration Verification - The continuing calibrations exhibited acceptable %D values except the following.

CCAL Date	Compound	%D	Qualifier	Affected Samples
11/21/08	Tetryl	52.8%	J/UJ	12

Surrogates - All samples exhibited acceptable surrogate recoveries.

MS/MSD - A MS/MSD sample was not analyzed due to insufficient volume.

Laboratory Control Sample - The LCS samples exhibited acceptable %R values except the following.

LCS ID	Compound	%R	Qualifier	Affected Samples
WG288618-03	HMX	77.1%	J/UJ	12

Method Blank - The method blanks were free of contamination.

Field and Equipment Blank - Field QC results are summarized below.

Blank ID	Compound	Conc. ug/L	Action Level ug/L	Qualifier	Affected Samples
MR08-EB111608-1	None - ND	-	-	-	-
MR08-EB111808	None - ND	-	-	-	-
MR08-FB112008	None - ND	-	-	-	-

Field Duplicates - Field duplicate results are summarized below.

Compound	MR08-IS377-08D mg/kg	MR08-IS377D-08D mg/kg	RPD	Qualifier
None	ND	ND	-	-

Compound	MR08-IS398-08D mg/kg	MR08-IS398D-08D mg/kg	RPD	Qualifier
None	ND	ND	-	-

Compound Identification - Retention times were acceptable and no further action was taken.

Compound Quantitation - No discrepancies were identified.

Sample Number: L08110541-01
Client ID: MR08-IS377-08D
Matrix: Soil
Workgroup Number: WG289009
Collect Date: 11/17/2008 11:25
Sample Tag: 02

PrePrep Method: NONE
Prep Method: METHOD
Analytical Method: 8330MOD
Analyst: ECL
Dilution: 1
Units: mg/kg

Instrument: HPLC5
Prep Date: 11/24/2008 08:00
Cal Date: 12/01/2008 20:11
Run Date: 12/04/2008 17:42
File ID: 5L003079.F

Analyte	CAS. Number	Result	Qual	RL	MDL
PETN	78-11-5		U	0.296	0.0986

U Undetected; the analyte was analyzed for, but not detected.

Microbac

 DW 2/5/09

Report Number: L08110541

Report Date : December 9, 2008

Sample Number: L08110541-01
Client ID: MR08-IS377-08D
Matrix: Soil
Workgroup Number: WG289009
Collect Date: 11/17/2008 11:25
Sample Tag: 01

PrePrep Method: NONE
Prep Method: METHOD
Analytical Method: 8330MOD
Analyst: ECL
Dilution: 1
Units: mg/kg

Instrument: HPLC5
Prep Date: 11/24/2008 08:00
Cal Date: 12/01/2008 20:11
Run Date: 12/02/2008 00:00
File ID: 5L002994.F

Analyte	CAS. Number	Result	Qual	RL	MDL
1,3,5-Trinitrobenzene	99-35-4		U	0.296	0.0986
1,3-Dinitrobenzene	99-65-0		U	0.296	0.0986
2,4,6-Trinitrotoluene	118-96-7		U	0.296	0.0986
2,4-Dinitrotoluene	121-14-2		U	0.296	0.0986
2,6-Dinitrotoluene	606-20-2		U	0.296	0.0986
2-Amino-4,6-dinitrotoluene	35572-78-2		U	0.296	0.0986
2-Nitrotoluene	88-72-2		U	0.296	0.0986
3-Nitrotoluene	99-08-1		U	0.296	0.0986
4-Nitrotoluene	99-99-0		U	0.296	0.0986
4-Amino-2,6-dinitrotoluene	19406-51-0		U	0.296	0.0986
HMX	2691-41-0		U	0.296	0.0986
Nitrobenzene	98-95-3		U	0.296	0.0986
RDX	121-82-4		U	0.296	0.0986
Tetryl	479-45-8		U	0.296	0.0986
Nitroglycerin	55-63-0		U	0.296	0.0986

Surrogate	% Recovery	Lower	Upper	Qual
1,2-Dinitrobenzene	68.9	50	150	

U Undetected; the analyte was analyzed for, but not detected.

Microbac

14 LW
2/5/09

2

Sample Number: L08110541-02
Client ID: MR08-IS377D-08D
Matrix: Soil
Workgroup Number: WG289009
Collect Date: 11/17/2008 11:30
Sample Tag: 02

PrePrep Method: NONE
Prep Method: METHOD
Analytical Method: 8330MOD
Analyst: ECL
Dilution: 1
Units: mg/kg

Instrument: HPLC5
Prep Date: 11/24/2008 08:00
Cal Date: 12/01/2008 20:11
Run Date: 12/04/2008 17:55
File ID: 5L003080.F

Analyte	CAS. Number	Result	Qual	RL	MDL
PETN	78-11-5		U	0.299	0.0995

U Undetected; the analyte was analyzed for, but not detected.

Microbac

16 LW 2/5/09

2

Sample Number: L08110541-02
Client ID: MR08-IS377D-08D
Matrix: Soil
Workgroup Number: WG289009
Collect Date: 11/17/2008 11:30
Sample Tag: 01

PrePrep Method: NONE
Prep Method: METHOD
Analytical Method: 8330MOD
Analyst: ECL
Dilution: 1
Units: mg/kg

Instrument: HPLC5
Prep Date: 11/24/2008 08:00
Cal Date: 12/01/2008 20:11
Run Date: 12/02/2008 00:38
File ID: 5L002995.F

Analyte	CAS. Number	Result	Qual	RL	MDL
1,3,5-Trinitrobenzene	99-35-4		U	0.299	0.0995
1,3-Dinitrobenzene	99-65-0		U	0.299	0.0995
2,4,6-Trinitrotoluene	118-96-7		U	0.299	0.0995
2,4-Dinitrotoluene	121-14-2		U	0.299	0.0995
2,6-Dinitrotoluene	606-20-2		U	0.299	0.0995
2-Amino-4,6-dinitrotoluene	35572-78-2		U	0.299	0.0995
2-Nitrotoluene	88-72-2		U	0.299	0.0995
3-Nitrotoluene	99-08-1		U	0.299	0.0995
4-Nitrotoluene	99-99-0		U	0.299	0.0995
4-Amino-2,6-dinitrotoluene	19406-51-0		U	0.299	0.0995
HMX	2691-41-0		U	0.299	0.0995
Nitrobenzene	98-95-3		U	0.299	0.0995
RDX	121-82-4		U	0.299	0.0995
Tetryl	479-45-8		U	0.299	0.0995
Nitroglycerin	55-63-0		U	0.299	0.0995

Surrogate	% Recovery	Lower	Upper	Qual
1,2-Dinitrobenzene	54.4	50	150	

U Undetected; the analyte was analyzed for, but not detected.

Microbac

17 LW 2/5/09

3

Sample Number: L08110541-03
Client ID: MR08-IS397-08D
Matrix: Soil
Workgroup Number: WG289009
Collect Date: 11/17/2008 16:00
Sample Tag: 02

PrePrep Method: NONE
Prep Method: METHOD
Analytical Method: 8330MOD
Analyst: ECL
Dilution: 1
Units: mg/kg

Instrument: HPLC5
Prep Date: 11/24/2008 08:00
Cal Date: 12/01/2008 20:11
Run Date: 12/04/2008 18:08
File ID: 5L003081.F

Analyte	CAS. Number	Result	Qual	RL	MDL
PETN	78-11-5		U	0.299	0.0996

U Undetected; the analyte was analyzed for, but not detected.

Microbac

19 QW 2/5/09

3

Sample Number: L08110541-03
Client ID: MR08-IS397-08D
Matrix: Soil
Workgroup Number: WG289009
Collect Date: 11/17/2008 16:00
Sample Tag: 01

PrePrep Method: NONE
Prep Method: METHOD
Analytical Method: 8330MOD
Analyst: ECL
Dilution: 1
Units: mg/kg

Instrument: HPLC5
Prep Date: 11/24/2008 08:00
Cal Date: 12/01/2008 20:11
Run Date: 12/02/2008 01:16
File ID: 5L002996.F

Analyte	CAS. Number	Result	Qual	RL	MDL
1,3,5-Trinitrobenzene	99-35-4		U	0.299	0.0996
1,3-Dinitrobenzene	99-65-0		U	0.299	0.0996
2,4,6-Trinitrotoluene	118-96-7		U	0.299	0.0996
2,4-Dinitrotoluene	121-14-2		U	0.299	0.0996
2,6-Dinitrotoluene	606-20-2		U	0.299	0.0996
2-Amino-4,6-dinitrotoluene	35572-78-2		U	0.299	0.0996
2-Nitrotoluene	88-72-2		U	0.299	0.0996
3-Nitrotoluene	99-08-1		U	0.299	0.0996
4-Nitrotoluene	99-99-0		U	0.299	0.0996
4-Amino-2,6-dinitrotoluene	19406-51-0		U	0.299	0.0996
HMX	2691-41-0		U	0.299	0.0996
Nitrobenzene	98-95-3		U	0.299	0.0996
RDX	121-82-4		U	0.299	0.0996
Tetryl	479-45-8		U	0.299	0.0996
Nitroglycerin	55-63-0		U	0.299	0.0996

Surrogate	% Recovery	Lower	Upper	Qual
1,2-Dinitrobenzene	60.8	50	150	

U Undetected; the analyte was analyzed for, but not detected.

Microbac

18 LW 2/5/09

4

Sample Number: L08110541-04
Client ID: MR08-IS398-08D
Matrix: Soil
Workgroup Number: WG289009
Collect Date: 11/18/2008 08:35
Sample Tag: 02

PrePrep Method: NONE
Prep Method: METHOD
Analytical Method: 8330MOD
Analyst: ECL
Dilution: 1
Units: mg/kg

Instrument: HPLC5
Prep Date: 11/24/2008 08:00
Cal Date: 12/01/2008 20:11
Run Date: 12/04/2008 18:22
File ID: 5L003082.F

Analyte	CAS. Number	Result	Qual	RL	MDL
PETN	78-11-5		U	0.296	0.0988

U Undetected; the analyte was analyzed for, but not detected.

Microbac

21 lW
2/5/09

4

Sample Number: L08110541-04
Client ID: MR08-IS398-08D
Matrix: Soil
Workgroup Number: WG289009
Collect Date: 11/18/2008 08:35
Sample Tag: 01

PrePrep Method: NONE
Prep Method: METHOD
Analytical Method: 8330MOD
Analyst: ECL
Dilution: 1
Units: mg/kg

Instrument: HPLC5
Prep Date: 11/24/2008 08:00
Cal Date: 12/01/2008 20:11
Run Date: 12/02/2008 01:54
File ID: 5L002997.F

Analyte	CAS. Number	Result	Qual	RL	MDL
1,3,5-Trinitrobenzene	99-35-4		U	0.296	0.0988
1,3-Dinitrobenzene	99-65-0		U	0.296	0.0988
2,4,6-Trinitrotoluene	118-96-7		U	0.296	0.0988
2,4-Dinitrotoluene	121-14-2		U	0.296	0.0988
2,6-Dinitrotoluene	606-20-2		U	0.296	0.0988
2-Amino-4,6-dinitrotoluene	35572-78-2		U	0.296	0.0988
2-Nitrotoluene	88-72-2		U	0.296	0.0988
3-Nitrotoluene	99-08-1		U	0.296	0.0988
4-Nitrotoluene	99-99-0		U	0.296	0.0988
4-Amino-2,6-dinitrotoluene	19406-51-0		U	0.296	0.0988
HMX	2691-41-0		U	0.296	0.0988
Nitrobenzene	98-95-3		U	0.296	0.0988
RDX	121-82-4		U	0.296	0.0988
Tetryl	479-45-8		U	0.296	0.0988
Nitroglycerin	55-63-0		U	0.296	0.0988

Surrogate	% Recovery	Lower	Upper	Qual
1,2-Dinitrobenzene	60.9	50	150	

U Undetected; the analyte was analyzed for, but not detected.

Microbac

20 RW
2/5/09

5

Sample Number: L08110541-05
Client ID: MR08-IS398D-08D
Matrix: Soil
Workgroup Number: WG289009
Collect Date: 11/18/2008 08:40
Sample Tag: 02

PrePrep Method: NONE
Prep Method: METHOD
Analytical Method: 8330MOD
Analyst: ECL
Dilution: 1
Units: mg/kg

Instrument: HPLC5
Prep Date: 11/24/2008 08:00
Cal Date: 12/01/2008 20:11
Run Date: 12/04/2008 18:35
File ID: 5L003083.F

Analyte	CAS. Number	Result	Qual	RL	MDL
PETN	78-11-5		U	0.300	0.0999

U Undetected; the analyte was analyzed for, but not detected.

Microbac

22 lw 2/5/09

5

Sample Number: L08110541-05
Client ID: MR08-IS398D-08D
Matrix: Soil
Workgroup Number: WG289009
Collect Date: 11/18/2008 08:40
Sample Tag: 01

PrePrep Method: NONE
Prep Method: METHOD
Analytical Method: 8330MOD
Analyst: ECL
Dilution: 1
Units: mg/kg

Instrument: HPLC5
Prep Date: 11/24/2008 08:00
Cal Date: 12/01/2008 20:11
Run Date: 12/02/2008 02:32
File ID: 5L002998.F

Analyte	CAS. Number	Result	Qual	RL	MDL
1,3,5-Trinitrobenzene	99-35-4		U	0.300	0.0999
1,3-Dinitrobenzene	99-65-0		U	0.300	0.0999
2,4,6-Trinitrotoluene	118-96-7		U	0.300	0.0999
2,4-Dinitrotoluene	121-14-2		U	0.300	0.0999
2,6-Dinitrotoluene	606-20-2		U	0.300	0.0999
2-Amino-4,6-dinitrotoluene	35572-78-2		U	0.300	0.0999
2-Nitrotoluene	88-72-2		U	0.300	0.0999
3-Nitrotoluene	99-08-1		U	0.300	0.0999
4-Nitrotoluene	99-99-0		U	0.300	0.0999
4-Amino-2,6-dinitrotoluene	19406-51-0		U	0.300	0.0999
HMX	2691-41-0		U	0.300	0.0999
Nitrobenzene	98-95-3		U	0.300	0.0999
RDX	121-82-4		U	0.300	0.0999
Tetryl	479-45-8		U	0.300	0.0999
Nitroglycerin	55-63-0		U	0.300	0.0999

Surrogate	% Recovery	Lower	Upper	Qual
1,2-Dinitrobenzene	62.7	50	150	

U Undetected; the analyte was analyzed for, but not detected.

Microbac

23 MW 215109

6

Sample Number: L08110541-06
Client ID: MR08-IS399-08D
Matrix: Soil
Workgroup Number: WG289009
Collect Date: 11/18/2008 09:20
Sample Tag: 02

PrePrep Method: NONE
Prep Method: METHOD
Analytical Method: 8330MOD
Analyst: ECL
Dilution: 1
Units: mg/kg

Instrument: HPLC5
Prep Date: 11/24/2008 08:00
Cal Date: 12/01/2008 20:11
Run Date: 12/04/2008 19:14
File ID: 5L003086.F

Analyte	CAS. Number	Result	Qual	RL	MDL
PETN	78-11-5		U	0.292	0.0975

U Undetected; the analyte was analyzed for, but not detected.

Microbac

25 lw 2/5/09

6

Sample Number: L08110541-06
Client ID: MR08-IS399-08D
Matrix: Soil
Workgroup Number: WG289009
Collect Date: 11/18/2008 09:20
Sample Tag: 01

PrePrep Method: NONE
Prep Method: METHOD
Analytical Method: 8330MOD
Analyst: ECL
Dilution: 1
Units: mg/kg

Instrument: HPLC5
Prep Date: 11/24/2008 08:00
Cal Date: 12/01/2008 20:11
Run Date: 12/02/2008 03:10
File ID: 5L002999.F

Analyte	CAS. Number	Result	Qual	RL	MDL
1,3,5-Trinitrobenzene	99-35-4		U	0.292	0.0975
1,3-Dinitrobenzene	99-65-0		U	0.292	0.0975
2,4,6-Trinitrotoluene	118-96-7		U	0.292	0.0975
2,4-Dinitrotoluene	121-14-2		U	0.292	0.0975
2,6-Dinitrotoluene	606-20-2		U	0.292	0.0975
2-Amino-4,6-dinitrotoluene	35572-78-2		U	0.292	0.0975
2-Nitrotoluene	88-72-2		U	0.292	0.0975
3-Nitrotoluene	99-08-1		U	0.292	0.0975
4-Nitrotoluene	99-99-0		U	0.292	0.0975
4-Amino-2,6-dinitrotoluene	19406-51-0		U	0.292	0.0975
HMX	2691-41-0		U	0.292	0.0975
Nitrobenzene	98-95-3		U	0.292	0.0975
RDX	121-82-4		U	0.292	0.0975
Tetryl	479-45-8		U	0.292	0.0975
Nitroglycerin	55-63-0		U	0.292	0.0975

Surrogate	% Recovery	Lower	Upper	Qual
1,2-Dinitrobenzene	60.3	50	150	

U Undetected; the analyte was analyzed for, but not detected.

Microbac

24 lw 2/5/09

7

Sample Number: L08110541-07
Client ID: MR08-IS392-08D
Matrix: Soil
Workgroup Number: WG289009
Collect Date: 11/18/2008 10:40
Sample Tag: 02

PrePrep Method: NONE
Prep Method: METHOD
Analytical Method: 8330MOD
Analyst: ECL
Dilution: 1
Units: mg/kg

Instrument: HPLC5
Prep Date: 11/24/2008 08:00
Cal Date: 12/01/2008 20:11
Run Date: 12/04/2008 19:27
File ID: 5L003087.F

Analyte	CAS. Number	Result	Qual	RL	MDL
PETN	78-11-5		U	0.298	0.0994

U Undetected; the analyte was analyzed for, but not detected.

Microbac

26 LW 2/5/09

7

Sample Number: L08110541-07
Client ID: MR08-IS392-08D
Matrix: Soil
Workgroup Number: WG289009
Collect Date: 11/18/2008 10:40
Sample Tag: 01

PrePrep Method: NONE
Prep Method: METHOD
Analytical Method: 8330MOD
Analyst: ECL
Dilution: 1
Units: mg/kg

Instrument: HPLC5
Prep Date: 11/24/2008 08:00
Cal Date: 12/01/2008 20:11
Run Date: 12/02/2008 05:43
File ID: 5L003003.F

Analyte	CAS. Number	Result	Qual	RL	MDL
1,3,5-Trinitrobenzene	99-35-4		U	0.298	0.0994
1,3-Dinitrobenzene	99-65-0		U	0.298	0.0994
2,4,6-Trinitrotoluene	118-96-7		U	0.298	0.0994
2,4-Dinitrotoluene	121-14-2		U	0.298	0.0994
2,6-Dinitrotoluene	606-20-2		U	0.298	0.0994
2-Amino-4,6-dinitrotoluene	35572-78-2		U	0.298	0.0994
2-Nitrotoluene	88-72-2		U	0.298	0.0994
3-Nitrotoluene	99-08-1		U	0.298	0.0994
4-Nitrotoluene	99-99-0		U	0.298	0.0994
4-Amino-2,6-dinitrotoluene	19406-51-0		U	0.298	0.0994
HMX	2691-41-0		U	0.298	0.0994
Nitrobenzene	98-95-3		U	0.298	0.0994
RDX	121-82-4		U	0.298	0.0994
Tetryl	479-45-8		U	0.298	0.0994
Nitroglycerin	55-63-0		U	0.298	0.0994

Surrogate	% Recovery	Lower	Upper	Qual
1,2-Dinitrobenzene	62.7	50	150	

U Undetected; the analyte was analyzed for, but not detected.

Microbac

27 RW 2/5/09

8

Sample Number: L08110541-08
Client ID: MR08-IS391-08D
Matrix: Soil
Workgroup Number: WG289009
Collect Date: 11/18/2008 12:15
Sample Tag: 02

PrePrep Method: NONE
Prep Method: METHOD
Analytical Method: 8330MOD
Analyst: ECL
Dilution: 1
Units: mg/kg

Instrument: HPLC5
Prep Date: 11/24/2008 08:00
Cal Date: 12/01/2008 20:11
Run Date: 12/04/2008 19:40
File ID: 5L003088.F

Analyte	CAS. Number	Result	Qual	RL	MDL
PETN	78-11-5		U	0.300	0.0999

U Undetected; the analyte was analyzed for, but not detected.

Microbac

29 LW 2/5/09

8

Sample Number: L08110541-08
Client ID: MR08-IS391-08D
Matrix: Soil
Workgroup Number: WG289009
Collect Date: 11/18/2008 12:15
Sample Tag: 01

PrePrep Method: NONE
Prep Method: METHOD
Analytical Method: 8330MOD
Analyst: ECL
Dilution: 1
Units: mg/kg

Instrument: HPLC5
Prep Date: 11/24/2008 08:00
Cal Date: 12/01/2008 20:11
Run Date: 12/02/2008 06:21
File ID: 5L003004.F

Analyte	CAS. Number	Result	Qual	RL	MDL
1,3,5-Trinitrobenzene	99-35-4		U	0.300	0.0999
1,3-Dinitrobenzene	99-65-0		U	0.300	0.0999
2,4,6-Trinitrotoluene	118-96-7		U	0.300	0.0999
2,4-Dinitrotoluene	121-14-2		U	0.300	0.0999
2,6-Dinitrotoluene	606-20-2		U	0.300	0.0999
2-Amino-4,6-dinitrotoluene	35572-78-2		U	0.300	0.0999
2-Nitrotoluene	88-72-2		U	0.300	0.0999
3-Nitrotoluene	99-08-1		U	0.300	0.0999
4-Nitrotoluene	99-99-0		U	0.300	0.0999
4-Amino-2,6-dinitrotoluene	19406-51-0		U	0.300	0.0999
HMX	2691-41-0		U	0.300	0.0999
Nitrobenzene	98-95-3		U	0.300	0.0999
RDX	121-82-4		U	0.300	0.0999
Tetryl	479-45-8		U	0.300	0.0999
Nitroglycerin	55-63-0		U	0.300	0.0999

Surrogate	% Recovery	Lower	Upper	Qual
1,2-Dinitrobenzene	56.1	50	150	

U Undetected; the analyte was analyzed for, but not detected.

Microbac®

28 lw 2/5/09

9

Sample Number: L08110541-09
Client ID: MR08-IS390-08D
Matrix: Soil
Workgroup Number: WG289009
Collect Date: 11/18/2008 14:00
Sample Tag: 02

PrePrep Method: NONE
Prep Method: METHOD
Analytical Method: 8330MOD
Analyst: ECL
Dilution: 1
Units: mg/kg

Instrument: HPLC5
Prep Date: 11/24/2008 08:00
Cal Date: 12/01/2008 20:11
Run Date: 12/04/2008 19:53
File ID: 5L003089.F

Analyte	CAS. Number	Result	Qual	RL	MDL
PETN	78-11-5		U	0.300	0.100

U Undetected; the analyte was analyzed for, but not detected.

Microbac

31 lew 2/5/09

9

Sample Number: L08110541-09
Client ID: MR08-IS390-08D
Matrix: Soil
Workgroup Number: WG289009
Collect Date: 11/18/2008 14:00
Sample Tag: 01

PrePrep Method: NONE
Prep Method: METHOD
Analytical Method: 8330MOD
Analyst: ECL
Dilution: 1
Units: mg/kg

Instrument: HPLC5
Prep Date: 11/24/2008 08:00
Cal Date: 12/01/2008 20:11
Run Date: 12/02/2008 06:59
File ID: 5L003005.F

Analyte	CAS. Number	Result	Qual	RL	MDL
1,3,5-Trinitrobenzene	99-35-4		U	0.300	0.100
1,3-Dinitrobenzene	99-65-0		U	0.300	0.100
2,4,6-Trinitrotoluene	118-96-7		U	0.300	0.100
2,4-Dinitrotoluene	121-14-2		U	0.300	0.100
2,6-Dinitrotoluene	606-20-2		U	0.300	0.100
2-Amino-4,6-dinitrotoluene	35572-78-2		U	0.300	0.100
2-Nitrotoluene	88-72-2		U	0.300	0.100
3-Nitrotoluene	99-08-1		U	0.300	0.100
4-Nitrotoluene	99-99-0		U	0.300	0.100
4-Amino-2,6-dinitrotoluene	19406-51-0		U	0.300	0.100
HMX	2691-41-0		U	0.300	0.100
Nitrobenzene	98-95-3		U	0.300	0.100
RDX	121-82-4		U	0.300	0.100
Tetryl	479-45-8		U	0.300	0.100
Nitroglycerin	55-63-0		U	0.300	0.100

Surrogate	% Recovery	Lower	Upper	Qual
1,2-Dinitrobenzene	60.8	50	150	

U Undetected; the analyte was analyzed for, but not detected.

Microbac

30 LW
2/5/09

10

Sample Number: L08110541-10
Client ID: MR08-IS393-08D
Matrix: Soil
Workgroup Number: WG289009
Collect Date: 11/18/2008 14:55
Sample Tag: 02

PrePrep Method: NONE
Prep Method: METHOD
Analytical Method: 8330MOD
Analyst: ECL
Dilution: 1
Units: mg/kg

Instrument: HPLC5
Prep Date: 11/24/2008 08:00
Cal Date: 12/01/2008 20:11
Run Date: 12/04/2008 20:07
File ID: 5L003090.F

Analyte	CAS. Number	Result	Qual	RL	MDL
PETN	78-11-5		U	0.294	0.0980

U Undetected; the analyte was analyzed for, but not detected.

Microbac

33 MW 2/5/09

10

Sample Number: L08110541-10
Client ID: MR08-IS393-08D
Matrix: Soil
Workgroup Number: WG289009
Collect Date: 11/18/2008 14:55
Sample Tag: 01

PrePrep Method: NONE
Prep Method: METHOD
Analytical Method: 8330MOD
Analyst: ECL
Dilution: 1
Units: mg/kg

Instrument: HPLC5
Prep Date: 11/24/2008 08:00
Cal Date: 12/01/2008 20:11
Run Date: 12/02/2008 07:38
File ID: 5L003006.F

Analyte	CAS. Number	Result	Qual	RL	MDL
1,3,5-Trinitrobenzene	99-35-4		U	0.294	0.0980
1,3-Dinitrobenzene	99-65-0		U	0.294	0.0980
2,4,6-Trinitrotoluene	118-96-7		U	0.294	0.0980
2,4-Dinitrotoluene	121-14-2		U	0.294	0.0980
2,6-Dinitrotoluene	606-20-2		U	0.294	0.0980
2-Amino-4,6-dinitrotoluene	35572-78-2		U	0.294	0.0980
2-Nitrotoluene	88-72-2		U	0.294	0.0980
3-Nitrotoluene	99-08-1		U	0.294	0.0980
4-Nitrotoluene	99-99-0		U	0.294	0.0980
4-Amino-2,6-dinitrotoluene	19406-51-0		U	0.294	0.0980
HMX	2691-41-0		U	0.294	0.0980
Nitrobenzene	98-95-3		U	0.294	0.0980
RDX	121-82-4		U	0.294	0.0980
Tetryl	479-45-8		U	0.294	0.0980
Nitroglycerin	55-63-0		U	0.294	0.0980

Surrogate	% Recovery	Lower	Upper	Qual
1,2-Dinitrobenzene	57.4	50	150	

U Undetected; the analyte was analyzed for, but not detected.

Microbac®

32 LW 2/5/09

11

Sample Number: L08110541-11
Client ID: MR08-IS395-08D
Matrix: Soil
Workgroup Number: WG289009
Collect Date: 11/18/2008 16:00
Sample Tag: 02

PrePrep Method: NONE
Prep Method: METHOD
Analytical Method: 8330MOD
Analyst: ECL
Dilution: 1
Units: mg/kg

Instrument: HPLC5
Prep Date: 11/24/2008 08:00
Cal Date: 12/01/2008 20:11
Run Date: 12/04/2008 20:20
File ID: 5L003091.F

Analyte	CAS. Number	Result	Qual	RL	MDL
PETN	78-11-5		U	0.295	0.0982

U Undetected; the analyte was analyzed for, but not detected.

Microbac

35 MW 2/5/09

11

Sample Number: L08110541-11
Client ID: MR08-IS395-08D
Matrix: Soil
Workgroup Number: WG289009
Collect Date: 11/18/2008 16:00
Sample Tag: 01

PrePrep Method: NONE
Prep Method: METHOD
Analytical Method: 8330MOD
Analyst: ECL
Dilution: 1
Units: mg/kg

Instrument: HPLC5
Prep Date: 11/24/2008 08:00
Cal Date: 12/01/2008 20:11
Run Date: 12/02/2008 08:16
File ID: 5L003007.F

Analyte	CAS. Number	Result	Qual	RL	MDL
1,3,5-Trinitrobenzene	99-35-4		U	0.295	0.0982
1,3-Dinitrobenzene	99-65-0		U	0.295	0.0982
2,4,6-Trinitrotoluene	118-96-7		U	0.295	0.0982
2,4-Dinitrotoluene	121-14-2		U	0.295	0.0982
2,6-Dinitrotoluene	606-20-2		U	0.295	0.0982
2-Amino-4,6-dinitrotoluene	35572-78-2		U	0.295	0.0982
2-Nitrotoluene	88-72-2		U	0.295	0.0982
3-Nitrotoluene	99-08-1		U	0.295	0.0982
4-Nitrotoluene	99-99-0		U	0.295	0.0982
4-Amino-2,6-dinitrotoluene	19406-51-0		U	0.295	0.0982
HMX	2691-41-0		U	0.295	0.0982
Nitrobenzene	98-95-3		U	0.295	0.0982
RDX	121-82-4		U	0.295	0.0982
Tetryl	479-45-8		U	0.295	0.0982
Nitroglycerin	55-63-0		U	0.295	0.0982

Surrogate	% Recovery	Lower	Upper	Qual
1,2-Dinitrobenzene	58.7	50	150	

U Undetected; the analyte was analyzed for, but not detected.

Microbac

34 lew 2/5/09

12

Sample Number: L08110541-12
Client ID: MR08-EB111808
Matrix: Water
Workgroup Number: WG288717
Collect Date: 11/18/2008 17:30
Sample Tag: 02

PrePrep Method: NONE
Prep Method: 3535
Analytical Method: 8330MOD
Analyst: ECL
Dilution: 1
Units: ug/L

Instrument: HPLC5
Prep Date: 11/21/2008 07:00
Cal Date: 08/12/2008 15:23
Run Date: 11/24/2008 22:24
File ID: 5L002919.F

Analyte	CAS. Number	Result	Qual	RL	MDL
PETN	78-11-5		U	1.00	0.250

U Undetected; the analyte was analyzed for, but not detected.

Microbac

37 MW 2/5/09

12

Sample Number: L08110541-12
Client ID: MR08-EB111808
Matrix: Water
Workgroup Number: WG288717
Collect Date: 11/18/2008 17:30
Sample Tag: 01

PrePrep Method: NONE
Prep Method: 3535
Analytical Method: 8330MOD
Analyst: ECL
Dilution: 1
Units: ug/L

Instrument: HPLC4
Prep Date: 11/21/2008 07:00
Cal Date: 10/30/2008 18:13
Run Date: 11/22/2008 01:15
File ID: 4L014555.F

Analyte	CAS. Number	Result	Qual	RL	MDL	
1,3,5-Trinitrobenzene	99-35-4		U	1.00	0.250	
1,3-Dinitrobenzene	99-65-0		U	1.00	0.250	
2,4,6-Trinitrotoluene	118-96-7		U	1.00	0.250	
2,4-Dinitrotoluene	121-14-2		U	1.00	0.250	
2,6-Dinitrotoluene	606-20-2		U	1.00	0.250	
2-Amino-4,6-dinitrotoluene	35572-78-2		U	1.00	0.250	
2-Nitrotoluene	88-72-2		U	1.00	0.250	
3-Nitrotoluene	99-08-1		U	1.00	0.250	
4-Nitrotoluene	99-99-0		U	1.00	0.250	
4-Amino-2,6-dinitrotoluene	19406-51-0		U	1.00	0.250	
HMX	2691-41-0		UJ ~~J~~	1.00	0.250	BSL
Nitrobenzene	98-95-3		U	1.00	0.250	
RDX	121-82-4		U	1.00	0.250	
Tetryl	479-45-8		UJ ~~J~~	1.00	0.250	CCH
Nitroglycerin	55-63-0		U	1.00	0.250	

Surrogate	% Recovery	Lower	Upper	Qual
1,2-Dinitrobenzene	75.5	50	150	

U Undetected; the analyte was analyzed for, but not detected.

Microbac

lew 2/5/09

ENVIRONMENTAL
Data Services, Inc.

METALS

USEPA Region IV - Level IV Review

Site: MCB Camp Lejeune, TO-09 SDG #: L08110541

Client: CH2M HILL, Inc., Virginia Beach, Virginia Date: February 3, 2008

Laboratory: Microbac Laboratories, Inc., Marietta, Ohio Reviewer: Nancy Weaver

EDS ID	Client Sample ID	Laboratory Sample ID	Matrix
1	MR08-IS377-08D	L08110541-01	Soil
2	MR08-IS377D-08D	L08110541-02	Soil
3	MR08-IS397-08D	L08110541-03	Soil
4	MR08-IS398-08D	L08110541-04	Soil
5	MR08-IS398D-08D	L08110541-05	Soil
6	MR08-IS399-08D	L08110541-06	Soil
7	MR08-IS392-08D	L08110541-07	Soil
8	MR08-IS391-08D	L08110541-08	Soil
9	MR08-IS390-08D	L08110541-09	Soil
10	MR08-IS393-08D	L08110541-10	Soil
11	MR08-IS395-08D	L08110541-11	Soil
12	MR08-EB111808	L08110541-12	Water

The USEPA "Contract Laboratory Program National Functional Guidelines for Inorganic Data Review," October 2004, and professional judgement were used in evaluating the data in this summary report.

Holding Times - All samples were prepared and analyzed within 28 days for mercury and 180 days for all other metals.

Calibration - The ICV and CCV %R values were acceptable.

Method and Calibration Blanks - All criteria were met.

Field and Equipment Blank - Field QC results are summarized below.

Blank ID	Compound	Conc. ug/L	Action Level mg/kg	Qualifier	Affected Samples
MR08-EB111608-1	None - ND	-	-	-	-
MR08-EB111808	Zinc	46.8	93.60	U	4-11
MR08-FB112008	None - ND	-	-	-	-

ICP Interference Check Sample - All %R values were acceptable.

MS/MSD - The MS/MSD sample exhibited acceptable %R and RPD values.

LCS - The LCS samples exhibited acceptable %R values.

ICP Serial Dilution - The ICP serial dilution sample exhibited acceptable %D values.

Field Duplicates - Field duplicate results are summarized below.

Compound	MR08-IS377-08D mg/kg	MR08-IS377D-08D mg/kg	RPD	Qualifier
Arsenic	0.0886	0.152	53%	None
Barium	3.97	4.27	7%	None
Chromium	4.46	4.83	8%	None
Copper	0.535	0.675	23%	None
Lead	1.87	1.82	3%	None
Zinc	0.875	0.883	1%	None

Compound	MR08-IS398-08D mg/kg	MR08-IS398D-08D mg/kg	RPD	Qualifier
Arsenic	0.173	0.210	19%	None
Barium	14.3	15.4	7%	None
Chromium	6.64	6.31	5%	None
Copper	1.27	0.814	44%	None
Lead	4.04	4.26	5%	None
Selenium	0.120	0.453 U	NC	None

Compound Quantitation - No discrepancies were identified.

Report Number: L08110541
Report Date : December 9, 2008

Sample Number: L08110541-01
Client ID: MR08-IS377-08D
Matrix: Soil
Workgroup Number: WG289261
Collect Date: 11/17/2008 11:25
Sample Tag: 01

PrePrep Method: NONE
Prep Method: 3051
Analytical Method: 6010B
Analyst: KHR
Dilution: 1
Units: mg/kg

Instrument: IRIS-ICP
Prep Date: 11/26/2008 09:15
Cal Date: 12/02/2008 10:30
Run Date: 12/02/2008 11:25
File ID: IR.120208.112500
Percent Solid: 95.0

Analyte	CAS. Number	Result	Qual	RL	MDL
Silver, Total	7440-22-4		U	0.769	0.192
Barium, Total	7440-39-3	3.97		0.384	0.0769
Cadmium, Total	7440-43-9		U	0.154	0.0384
Chromium, Total	7440-47-3	4.46		0.769	0.0922
Copper, Total	7440-50-8	0.535	J	1.54	0.384
Antimony, Total	7440-36-0		U	1.54	0.384
Zinc, Total	7440-66-6	0.875	J	1.54	0.384

U Undetected; the analyte was analyzed for, but not detected.
J Estimated ; the analyte concentration was less than the low standard (LOQ)

Microbac

lw 12/09

Report Number: L08110541

Report Date : December 9, 2008

Sample Number:	L08110541-01	PrePrep Method:	NONE	Instrument:	ELAN-ICP
Client ID:	MR08-IS377-08D	Prep Method:	3051	Prep Date:	11/21/2008 09:45
Matrix:	Soil	Analytical Method:	6020	Cal Date:	11/21/2008 10:09
Workgroup Number:	WG288749	Analyst:	JYH	Run Date:	11/21/2008 20:26
Collect Date:	11/17/2008 11:25	Dilution:	1	File ID:	EL.112108.202614
Sample Tag:	01	Units:	mg/kg	Percent Solid:	95.0

Analyte	CAS. Number	Result	Qual	RL	MDL
Arsenic, Total	7440-38-2	0.0886	J	0.307	0.0768
Lead, Total	7439-92-1	1.87		0.410	0.102
Selenium, Total	7782-49-2		U	0.410	0.102

U Undetected; the analyte was analyzed for, but not detected.
J Estimated ; the analyte concentration was less than the low standard (LOQ)

Microbac

796 QW 2/2/09

Report Number: L08110541

Report Date : December 9, 2008

Sample Number:	L08110541-01	PrePrep Method:	NONE	Instrument:	HYDRA
Client ID:	MR08-IS377-08D	Prep Method:	7471A	Prep Date:	11/26/2008 08:33
Matrix:	Soil	Analytical Method:	7471A	Cal Date:	12/02/2008 08:31
Workgroup Number:	WG289347	Analyst:	ADC	Run Date:	12/02/2008 08:44
Collect Date:	11/17/2008 11:25	Dilution:	1	File ID:	HY.120208.084444
Sample Tag:	01	Units:	mg/kg	Percent Solid:	95.0

Analyte	CAS. Number	Result	Qual	RL	MDL
Mercury, Total	7439-97-6		U	0.0984	0.0197

U Undetected; the analyte was analyzed for, but not detected.

Microbac

1647 MW 2/2/09

2

Sample Number: L08110541-02
Client ID: MR08-IS377D-08D
Matrix: Soil
Workgroup Number: WG289261
Collect Date: 11/17/2008 11:30
Sample Tag: 01

PrePrep Method: NONE
Prep Method: 3051
Analytical Method: 6010B
Analyst: KHR
Dilution: 1
Units: mg/kg

Instrument: IRIS-ICP
Prep Date: 11/26/2008 09:15
Cal Date: 12/02/2008 10:30
Run Date: 12/02/2008 11:32
File ID: IR.120208.113200
Percent Solid: 95.9

Analyte	CAS. Number	Result	Qual	RL	MDL
Silver, Total	7440-22-4		U	0.787	0.197
Barium, Total	7440-39-3	4.27		0.394	0.0787
Cadmium, Total	7440-43-9		U	0.157	0.0394
Chromium, Total	7440-47-3	4.83		0.787	0.0945
Copper, Total	7440-50-8	0.675	J	1.57	0.394
Antimony, Total	7440-36-0		U	1.57	0.394
Zinc, Total	7440-66-6	0.883	J	1.57	0.394

U Undetected; the analyte was analyzed for, but not detected.
J Estimated ; the analyte concentration was less than the low standard (LOQ)

Microbac

DW 2/2/09

2

Sample Number:	L08110541-02	PrePrep Method:	NONE	Instrument:	ELAN-ICP
Client ID:	MR08-IS377D-08D	Prep Method:	3051	Prep Date:	11/21/2008 09:45
Matrix:	Soil	Analytical Method:	6020	Cal Date:	11/21/2008 10:09
Workgroup Number:	WG288749	Analyst:	JYH	Run Date:	11/21/2008 20:53
Collect Date:	11/17/2008 11:30	Dilution:	1	File ID:	EL.112108.205355
Sample Tag:	01	Units:	mg/kg	Percent Solid:	95.9

Analyte	CAS. Number	Result	Qual	RL	MDL
Arsenic, Total	7440-38-2	0.152	J	0.307	0.0767
Lead, Total	7439-92-1	1.82		0.409	0.102
Selenium, Total	7782-49-2		U	0.409	0.102

U Undetected; the analyte was analyzed for, but not detected.
J Estimated ; the analyte concentration was less than the low standard (LOQ)

Microbac

797 RW 2/2/09

2

Sample Number:	L08110541-02	PrePrep Method:	NONE	Instrument:	HYDRA
Client ID:	MR08-IS377D-08D	Prep Method:	7471A	Prep Date:	11/26/2008 08:35
Matrix:	Soil	Analytical Method:	7471A	Cal Date:	12/02/2008 08:31
Workgroup Number:	WG289347	Analyst:	ADC	Run Date:	12/02/2008 08:52
Collect Date:	11/17/2008 11:30	Dilution:	1	File ID:	HY.120208.085209
Sample Tag:	01	Units:	mg/kg	Percent Solid:	95.9

Analyte	CAS. Number	Result	Qual	RL	MDL
Mercury, Total	7439-97-6		U	0.0986	0.0197

U Undetected; the analyte was analyzed for, but not detected.

Microbac

1648 MW 2/2/09

3

Sample Number: L08110541-03
Client ID: MR08-IS397-08D
Matrix: Soil
Workgroup Number: WG289261
Collect Date: 11/17/2008 16:00
Sample Tag: 01

PrePrep Method: NONE
Prep Method: 3051
Analytical Method: 6010B
Analyst: KHR
Dilution: 1
Units: mg/kg

Instrument: IRIS-ICP
Prep Date: 11/26/2008 09:15
Cal Date: 12/02/2008 10:30
Run Date: 12/02/2008 11:56
File ID: IR.120208.115600
Percent Solid: 86.9

Analyte	CAS. Number	Result	Qual	RL	MDL
Silver, Total	7440-22-4		U	0.871	0.218
Barium, Total	7440-39-3	8.75		0.436	0.0871
Cadmium, Total	7440-43-9		U	0.174	0.0436
Chromium, Total	7440-47-3	11.6		0.871	0.105
Copper, Total	7440-50-8	3.17		1.74	0.436
Antimony, Total	7440-36-0	0.518	J	1.74	0.436
Zinc, Total	7440-66-6	2.50		1.74	0.436

U Undetected; the analyte was analyzed for, but not detected.
J Estimated ; the analyte concentration was less than the low standard (LOQ)

Microbac

AW
296 2/2/09

3

Sample Number: L08110541-03
Client ID: MR08-IS397-08D
Matrix: Soil
Workgroup Number: WG288749
Collect Date: 11/17/2008 16:00
Sample Tag: 01

PrePrep Method: NONE
Prep Method: 3051
Analytical Method: 6020
Analyst: JYH
Dilution: 1
Units: mg/kg

Instrument: ELAN-ICP
Prep Date: 11/21/2008 09:45
Cal Date: 11/21/2008 10:09
Run Date: 11/21/2008 20:59
File ID: EL.112108.205920
Percent Solid: 86.9

Analyte	CAS. Number	Result	Qual	RL	MDL
Arsenic, Total	7440-38-2	1.51		0.338	0.0844
Lead, Total	7439-92-1	3.20		0.450	0.113
Selenium, Total	7782-49-2	0.341	J	0.450	0.113

J Estimated ; the analyte concentration was less than the low standard (LOQ)

Microbac

kw
2/2/09

3

Sample Number: L08110541-03
Client ID: MR08-IS397-08D
Matrix: Soil
Workgroup Number: WG289347
Collect Date: 11/17/2008 16:00
Sample Tag: 01

PrePrep Method: NONE
Prep Method: 7471A
Analytical Method: 7471A
Analyst: ADC
Dilution: 1
Units: mg/kg

Instrument: HYDRA
Prep Date: 11/26/2008 08:36
Cal Date: 12/02/2008 08:31
Run Date: 12/02/2008 08:55
File ID: HY.120208.085534
Percent Solid: 86.9

Analyte	CAS. Number	Result	Qual	RL	MDL
Mercury, Total	7439-97-6		U	0.115	0.0230

U Undetected; the analyte was analyzed for, but not detected.

Microbac

1649 LW 2/2/09

4

Sample Number: L08110541-04
Client ID: MR08-IS398-08D
Matrix: Soil
Workgroup Number: WG289261
Collect Date: 11/18/2008 08:35
Sample Tag: 01

PrePrep Method: NONE
Prep Method: 3051
Analytical Method: 6010B
Analyst: KHR
Dilution: 1
Units: mg/kg

Instrument: IRIS-ICP
Prep Date: 11/26/2008 09:15
Cal Date: 12/02/2008 10:30
Run Date: 12/02/2008 12:02
File ID: IR.120208.120200
Percent Solid: 85.4

Analyte	CAS. Number	Result	Qual	RL	MDL
Silver, Total	7440-22-4		U	0.876	0.219
Barium, Total	7440-39-3	14.3		0.438	0.0876
Cadmium, Total	7440-43-9		U	0.175	0.0438
Chromium, Total	7440-47-3	6.64		0.876	0.105
Copper, Total	7440-50-8	1.27	J	1.75	0.438
Antimony, Total	7440-36-0		U	1.75	0.438
Zinc, Total	7440-66-6	4.36 u		1.75	0.438

BL

U Undetected; the analyte was analyzed for, but not detected.
J Estimated ; the analyte concentration was less than the low standard (LOQ)

Microbac

JW 2/2/09

4

Sample Number: L08110541-04
Client ID: MR08-IS398-08D
Matrix: Soil
Workgroup Number: WG288749
Collect Date: 11/18/2008 08:35
Sample Tag: 01

PrePrep Method: NONE
Prep Method: 3051
Analytical Method: 6020
Analyst: JYH
Dilution: 1
Units: mg/kg

Instrument: ELAN-ICP
Prep Date: 11/21/2008 09:45
Cal Date: 11/21/2008 10:09
Run Date: 11/21/2008 21:15
File ID: EL.112108.211530
Percent Solid: 85.4

Analyte	CAS. Number	Result	Qual	RL	MDL
Arsenic, Total	7440-38-2	0.173	J	0.347	0.0868
Lead, Total	7439-92-1	4.04		0.463	0.116
Selenium, Total	7782-49-2	0.120	J	0.463	0.116

J Estimated ; the analyte concentration was less than the low standard (LOQ)

Microbac

QW 2/2/09

4

Sample Number: L08110541-04
Client ID: MR08-IS398-08D
Matrix: Soil
Workgroup Number: WG289347
Collect Date: 11/18/2008 08:35
Sample Tag: 01

PrePrep Method: NONE
Prep Method: 7471A
Analytical Method: 7471A
Analyst: ADC
Dilution: 1
Units: mg/kg

Instrument: HYDRA
Prep Date: 11/26/2008 08:37
Cal Date: 12/02/2008 08:31
Run Date: 12/02/2008 08:57
File ID: HY.120208.085757
Percent Solid: 85.4

Analyte	CAS. Number	Result	Qual	RL	MDL
Mercury, Total	7439-97-6		U	0.112	0.0225

U Undetected; the analyte was analyzed for, but not detected.

Microbac

1650 MW
2/2/09

5

Sample Number: L08110541-05
Client ID: MR08-IS398D-08D
Matrix: Soil
Workgroup Number: WG289261
Collect Date: 11/18/2008 08:40
Sample Tag: 01

PrePrep Method: NONE
Prep Method: 3051
Analytical Method: 6010B
Analyst: KHR
Dilution: 1
Units: mg/kg

Instrument: IRIS-ICP
Prep Date: 11/26/2008 09:15
Cal Date: 12/02/2008 10:30
Run Date: 12/02/2008 12:08
File ID: IR.120208.120800
Percent Solid: 84.4

Analyte	CAS. Number	Result	Qual	RL	MDL
Silver, Total	7440-22-4		U	0.893	0.223
Barium, Total	7440-39-3	15.4		0.447	0.0893
Cadmium, Total	7440-43-9		U	0.179	0.0447
Chromium, Total	7440-47-3	6.31		0.893	0.107
Copper, Total	7440-50-8	0.814	J	1.79	0.447
Antimony, Total	7440-36-0		U	1.79	0.447
Zinc, Total	7440-66-6	2.39 U		1.79	0.447

B

U Undetected; the analyte was analyzed for, but not detected.
J Estimated ; the analyte concentration was less than the low standard (LOQ)

Microbac

lw 2/2/09

5

Sample Number: L08110541-05
Client ID: MR08-IS398D-08D
Matrix: Soil
Workgroup Number: WG288749
Collect Date: 11/18/2008 08:40
Sample Tag: 01

PrePrep Method: NONE
Prep Method: 3051
Analytical Method: 6020
Analyst: JYH
Dilution: 1
Units: mg/kg

Instrument: ELAN-ICP
Prep Date: 11/21/2008 09:45
Cal Date: 11/21/2008 10:09
Run Date: 11/21/2008 21:20
File ID: EL.112108.212055
Percent Solid: 84.4

Analyte	CAS. Number	Result	Qual	RL	MDL
Arsenic, Total	7440-38-2	0.210	J	0.340	0.0849
Lead, Total	7439-92-1	4.26		0.453	0.113
Selenium, Total	7782-49-2		U	0.453	0.113

U Undetected; the analyte was analyzed for, but not detected.
J Estimated ; the analyte concentration was less than the low standard (LOQ)

Microbac

800 DW 2/2/09

5

Sample Number: L08110541-05
Client ID: MR08-IS398D-08D
Matrix: Soil
Workgroup Number: WG289347
Collect Date: 11/18/2008 08:40
Sample Tag: 01

PrePrep Method: NONE
Prep Method: 7471A
Analytical Method: 7471A
Analyst: ADC
Dilution: 1
Units: mg/kg

Instrument: HYDRA
Prep Date: 11/26/2008 08:37
Cal Date: 12/02/2008 08:31
Run Date: 12/02/2008 09:00
File ID: HY.120208.090019
Percent Solid: 84.4

Analyte	CAS. Number	Result	Qual	RL	MDL
Mercury, Total	7439-97-6		U	0.117	0.0235

U Undetected; the analyte was analyzed for, but not detected.

Microbac

 MW 2/2/09

6

Sample Number: L08110541-06
Client ID: MR08-IS399-08D
Matrix: Soil
Workgroup Number: WG289261
Collect Date: 11/18/2008 09:20
Sample Tag: 01

PrePrep Method: NONE
Prep Method: 3051
Analytical Method: 6010B
Analyst: KHR
Dilution: 1
Units: mg/kg

Instrument: IRIS-ICP
Prep Date: 11/26/2008 09:15
Cal Date: 12/02/2008 10:30
Run Date: 12/02/2008 12:26
File ID: IR.120208.122600
Percent Solid: 94.9

Analyte	CAS. Number	Result	Qual	RL	MDL
Silver, Total	7440-22-4		U	0.787	0.197
Barium, Total	7440-39-3	3.47		0.394	0.0787
Cadmium, Total	7440-43-9		U	0.157	0.0394
Chromium, Total	7440-47-3	6.11		0.787	0.0945
Copper, Total	7440-50-8	1.10	J	1.57	0.394
Antimony, Total	7440-36-0		U	1.57	0.394
Zinc, Total	7440-66-6	1.57 ~~1.13~~	U ~~J~~	1.57	0.394

BL

U Undetected; the analyte was analyzed for, but not detected.
J Estimated ; the analyte concentration was less than the low standard (LOQ)

Microbac

MW 2/2/09

6

Sample Number: L08110541-06
Client ID: MR08-IS399-08D
Matrix: Soil
Workgroup Number: WG288749
Collect Date: 11/18/2008 09:20
Sample Tag: 01

PrePrep Method: NONE
Prep Method: 3051
Analytical Method: 6020
Analyst: JYH
Dilution: 1
Units: mg/kg

Instrument: ELAN-ICP
Prep Date: 11/21/2008 09:45
Cal Date: 11/21/2008 10:09
Run Date: 11/21/2008 21:26
File ID: EL.112108.212619
Percent Solid: 94.9

Analyte	CAS. Number	Result	Qual	RL	MDL
Arsenic, Total	7440-38-2	0.386		0.312	0.0780
Lead, Total	7439-92-1	1.72		0.416	0.104
Selenium, Total	7782-49-2	0.145	J	0.416	0.104

J Estimated ; the analyte concentration was less than the low standard (LOQ)

Microbac

801 KW 2/2/09

4

Sample Number: L08110541-06
Client ID: MR08-IS399-08D
Matrix: Soil
Workgroup Number: WG289347
Collect Date: 11/18/2008 09:20
Sample Tag: 01

PrePrep Method: NONE
Prep Method: 7471A
Analytical Method: 7471A
Analyst: ADC
Dilution: 1
Units: mg/kg

Instrument: HYDRA
Prep Date: 11/26/2008 08:38
Cal Date: 12/02/2008 08:31
Run Date: 12/02/2008 09:05
File ID: HY.120208.090549
Percent Solid: 94.9

Analyte	CAS. Number	Result	Qual	RL	MDL
Mercury, Total	7439-97-6		U	0.105	0.0209

U Undetected; the analyte was analyzed for, but not detected.

Microbac

1652 2/2/09

7

Sample Number: L08110541-07
Client ID: MR08-IS392-08D
Matrix: Soil
Workgroup Number: WG289261
Collect Date: 11/18/2008 10:40
Sample Tag: 01

PrePrep Method: NONE
Prep Method: 3051
Analytical Method: 6010B
Analyst: KHR
Dilution: 1
Units: mg/kg

Instrument: IRIS-ICP
Prep Date: 11/26/2008 09:15
Cal Date: 12/02/2008 10:30
Run Date: 12/02/2008 12:32
File ID: IR.120208.123200
Percent Solid: 90.3

Analyte	CAS. Number	Result	Qual	RL	MDL
Silver, Total	7440-22-4		U	0.776	0.194
Barium, Total	7440-39-3	6.05		0.388	0.0776
Cadmium, Total	7440-43-9	0.0400	J	0.155	0.0388
Chromium, Total	7440-47-3	12.6		0.776	0.0931
Copper, Total	7440-50-8	1.62		1.55	0.388
Antimony, Total	7440-36-0		U	1.55	0.388
Zinc, Total	7440-66-6	2.35 u		1.55	0.388

BC

U Undetected; the analyte was analyzed for, but not detected.
J Estimated ; the analyte concentration was less than the low standard (LOQ)

Microbac

300 JW 2/2/09

7

Sample Number: L08110541-07
Client ID: MR08-IS392-08D
Matrix: Soil
Workgroup Number: WG288749
Collect Date: 11/18/2008 10:40
Sample Tag: 01

PrePrep Method: NONE
Prep Method: 3051
Analytical Method: 6020
Analyst: JYH
Dilution: 1
Units: mg/kg

Instrument: ELAN-ICP
Prep Date: 11/21/2008 09:45
Cal Date: 11/21/2008 10:09
Run Date: 11/21/2008 21:31
File ID: EL.112108.213144
Percent Solid: 90.3

Analyte	CAS. Number	Result	Qual	RL	MDL
Arsenic, Total	7440-38-2	5.91		0.331	0.0827
Lead, Total	7439-92-1	2.54		0.441	0.110
Selenium, Total	7782-49-2	0.248	J	0.441	0.110

J Estimated ; the analyte concentration was less than the low standard (LOQ)

Microbac®

 LW 2/2/09

7

Sample Number: L08110541-07
Client ID: MR08-IS392-08D
Matrix: Soil
Workgroup Number: WG289347
Collect Date: 11/18/2008 10:40
Sample Tag: 01

PrePrep Method: NONE
Prep Method: 7471A
Analytical Method: 7471A
Analyst: ADC
Dilution: 1
Units: mg/kg

Instrument: HYDRA
Prep Date: 11/26/2008 08:39
Cal Date: 12/02/2008 08:31
Run Date: 12/02/2008 09:07
File ID: HY.120208.090732
Percent Solid: 90.3

Analyte	CAS. Number	Result	Qual	RL	MDL
Mercury, Total	7439-97-6		U	0.107	0.0215

U Undetected; the analyte was analyzed for, but not detected.

Microbac

1653 lew 2/2/09

8

Sample Number: L08110541-08
Client ID: MR08-IS391-08D
Matrix: Soil
Workgroup Number: WG289261
Collect Date: 11/18/2008 12:15
Sample Tag: 01

PrePrep Method: NONE
Prep Method: 3051
Analytical Method: 6010B
Analyst: KHR
Dilution: 1
Units: mg/kg

Instrument: IRIS-ICP
Prep Date: 11/26/2008 09:15
Cal Date: 12/02/2008 10:30
Run Date: 12/02/2008 12:38
File ID: IR.120208.123800
Percent Solid: 94.3

Analyte	CAS. Number	Result	Qual	RL	MDL
Silver, Total	7440-22-4		U	0.741	0.185
Barium, Total	7440-39-3	3.96		0.371	0.0741
Cadmium, Total	7440-43-9		U	0.148	0.0371
Chromium, Total	7440-47-3	10.5		0.741	0.0890
Copper, Total	7440-50-8	1.20	J	1.48	0.371
Antimony, Total	7440-36-0		U	1.48	0.371
Zinc, Total	7440-66-6	1.48 ~~1.32~~	U ~~J~~	1.48	0.371

BL

U Undetected; the analyte was analyzed for, but not detected.
J Estimated ; the analyte concentration was less than the low standard (LOQ)

Microbac

301 LW 2/2/09

8

Sample Number: L08110541-08
Client ID: MR08-IS391-08D
Matrix: Soil
Workgroup Number: WG288749
Collect Date: 11/18/2008 12:15
Sample Tag: 01

PrePrep Method: NONE
Prep Method: 3051
Analytical Method: 6020
Analyst: JYH
Dilution: 1
Units: mg/kg

Instrument: ELAN-ICP
Prep Date: 11/21/2008 09:45
Cal Date: 11/21/2008 10:09
Run Date: 11/21/2008 21:37
File ID: EL.112108.213709
Percent Solid: 94.3

Analyte	CAS. Number	Result	Qual	RL	MDL
Arsenic, Total	7440-38-2	0.212	J	0.306	0.0765
Lead, Total	7439-92-1	2.05		0.408	0.102
Selenium, Total	7782-49-2		U	0.408	0.102

U Undetected; the analyte was analyzed for, but not detected.
J Estimated ; the analyte concentration was less than the low standard (LOQ)

Microbac

803 dw 2/2/09

8

Sample Number:	L08110541-08	PrePrep Method:	NONE	Instrument:	HYDRA
Client ID:	MR08-IS391-08D	Prep Method:	7471A	Prep Date:	11/26/2008 08:39
Matrix:	Soil	Analytical Method:	7471A	Cal Date:	12/02/2008 08:31
Workgroup Number:	WG289347	Analyst:	ADC	Run Date:	12/02/2008 09:09
Collect Date:	11/18/2008 12:15	Dilution:	1	File ID:	HY.120208.090914
Sample Tag:	01	Units:	mg/kg	Percent Solid:	94.3

Analyte	CAS. Number	Result	Qual	RL	MDL
Mercury, Total	7439-97-6		U	0.104	0.0207

U Undetected; the analyte was analyzed for, but not detected.

Microbac

1654 MW 2/2/09

9

Sample Number: L08110541-09
Client ID: MR08-IS390-08D
Matrix: Soil
Workgroup Number: WG289261
Collect Date: 11/18/2008 14:00
Sample Tag: 01

PrePrep Method: NONE
Prep Method: 3051
Analytical Method: 6010B
Analyst: KHR
Dilution: 1
Units: mg/kg

Instrument: IRIS-ICP
Prep Date: 11/26/2008 09:15
Cal Date: 12/02/2008 10:30
Run Date: 12/02/2008 12:44
File ID: IR.120208.124400
Percent Solid: 87.2

Analyte	CAS. Number	Result	Qual	RL	MDL
Silver, Total	7440-22-4		U	0.866	0.216
Barium, Total	7440-39-3	1.87		0.433	0.0866
Cadmium, Total	7440-43-9		U	0.173	0.0433
Chromium, Total	7440-47-3	3.58		0.866	0.104
Copper, Total	7440-50-8		U	1.73	0.433
Antimony, Total	7440-36-0		U	1.73	0.433
Zinc, Total	7440-66-6	1.73 ~~0.567~~	U ~~J~~	1.73	0.433

BL

U Undetected; the analyte was analyzed for, but not detected.
J Estimated ; the analyte concentration was less than the low standard (LOQ)

Microbac

302 lw 2/2/09

9

Sample Number: L08110541-09
Client ID: MR08-IS390-08D
Matrix: Soil
Workgroup Number: WG288749
Collect Date: 11/18/2008 14:00
Sample Tag: 01

PrePrep Method: NONE
Prep Method: 3051
Analytical Method: 6020
Analyst: JYH
Dilution: 1
Units: mg/kg

Instrument: ELAN-ICP
Prep Date: 11/21/2008 09:45
Cal Date: 11/21/2008 10:09
Run Date: 11/21/2008 21:42
File ID: EL.112108.214235
Percent Solid: 87.2

Analyte	CAS. Number	Result	Qual	RL	MDL
Arsenic, Total	7440-38-2	1.15		0.343	0.0858
Lead, Total	7439-92-1	1.49		0.458	0.114
Selenium, Total	7782-49-2	0.453	J	0.458	0.114

J Estimated ; the analyte concentration was less than the low standard (LOQ)

Microbac

 lw 2/2/09

9

Sample Number: L08110541-09
Client ID: MR08-IS390-08D
Matrix: Soil
Workgroup Number: WG289347
Collect Date: 11/18/2008 14:00
Sample Tag: 01

PrePrep Method: NONE
Prep Method: 7471A
Analytical Method: 7471A
Analyst: ADC
Dilution: 1
Units: mg/kg

Instrument: HYDRA
Prep Date: 11/26/2008 08:40
Cal Date: 12/02/2008 08:31
Run Date: 12/02/2008 09:11
File ID: HY.120208.091108
Percent Solid: 87.2

Analyte	CAS. Number	Result	Qual	RL	MDL
Mercury, Total	7439-97-6		U	0.109	0.0219

U Undetected; the analyte was analyzed for, but not detected.

Microbac

1655 MW 2/2/09

10

Sample Number: L08110541-10
Client ID: MR08-IS393-08D
Matrix: Soil
Workgroup Number: WG289261
Collect Date: 11/18/2008 14:55
Sample Tag: 01

PrePrep Method: NONE
Prep Method: 3051
Analytical Method: 6010B
Analyst: KHR
Dilution: 1
Units: mg/kg

Instrument: IRIS-ICP
Prep Date: 11/26/2008 09:15
Cal Date: 12/02/2008 10:30
Run Date: 12/02/2008 12:50
File ID: IR.120208.125000
Percent Solid: 94.7

Analyte	CAS. Number	Result	Qual	RL	MDL
Silver, Total	7440-22-4	0.253	J	0.804	0.201
Barium, Total	7440-39-3	2.98		0.402	0.0804
Cadmium, Total	7440-43-9		U	0.161	0.0402
Chromium, Total	7440-47-3	7.85		0.804	0.0965
Copper, Total	7440-50-8	0.951	J	1.61	0.402
Antimony, Total	7440-36-0		U	1.61	0.402
Zinc, Total	7440-66-6	1.61 ~~0.658~~	U ~~J~~	1.61	0.402

BL

U Undetected; the analyte was analyzed for, but not detected.
J Estimated ; the analyte concentration was less than the low standard (LOQ)

Microbac

303 LW 2/2/09

10

Sample Number: L08110541-10
Client ID: MR08-IS393-08D
Matrix: Soil
Workgroup Number: WG288749
Collect Date: 11/18/2008 14:55
Sample Tag: 01

PrePrep Method: NONE
Prep Method: 3051
Analytical Method: 6020
Analyst: JYH
Dilution: 1
Units: mg/kg

Instrument: ELAN-ICP
Prep Date: 11/21/2008 09:45
Cal Date: 11/21/2008 10:09
Run Date: 11/21/2008 21:59
File ID: EL.112108.215924
Percent Solid: 94.7

Analyte	CAS. Number	Result	Qual	RL	MDL
Arsenic, Total	7440-38-2	0.262	J	0.303	0.0759
Lead, Total	7439-92-1	3.06		0.405	0.101
Selenium, Total	7782-49-2		U	0.405	0.101

U Undetected; the analyte was analyzed for, but not detected.
J Estimated ; the analyte concentration was less than the low standard (LOQ)

Microbac

805 lw 2/2/09

10

Sample Number: L08110541-10
Client ID: MR08-IS393-08D
Matrix: Soil
Workgroup Number: WG289347
Collect Date: 11/18/2008 14:55
Sample Tag: 01

PrePrep Method: NONE
Prep Method: 7471A
Analytical Method: 7471A
Analyst: ADC
Dilution: 1
Units: mg/kg

Instrument: HYDRA
Prep Date: 11/26/2008 08:41
Cal Date: 12/02/2008 08:31
Run Date: 12/02/2008 09:13
File ID: HY.120208.091320
Percent Solid: 94.7

Analyte	CAS. Number	Result	Qual	RL	MDL
Mercury, Total	7439-97-6		U	0.0985	0.0197

U Undetected; the analyte was analyzed for, but not detected.

Microbac

1656 lw 2/2/09

11

Sample Number: L08110541-11
Client ID: MR08-IS395-08D
Matrix: Soil
Workgroup Number: WG289261
Collect Date: 11/18/2008 16:00
Sample Tag: 01

PrePrep Method: NONE
Prep Method: 3051
Analytical Method: 6010B
Analyst: KHR
Dilution: 1
Units: mg/kg

Instrument: IRIS-ICP
Prep Date: 11/26/2008 09:15
Cal Date: 12/02/2008 10:30
Run Date: 12/02/2008 12:56
File ID: IR.120208.125600
Percent Solid: 93.9

Analyte	CAS. Number	Result	Qual	RL	MDL
Silver, Total	7440-22-4		U	0.798	0.199
Barium, Total	7440-39-3	4.18		0.399	0.0798
Cadmium, Total	7440-43-9		U	0.160	0.0399
Chromium, Total	7440-47-3	11.2		0.798	0.0958
Copper, Total	7440-50-8	1.33	J	1.60	0.399
Antimony, Total	7440-36-0		U	1.60	0.399
Zinc, Total	7440-66-6	1.60 ~~1.30~~	U ~~J~~	1.60	0.399

BL

U Undetected; the analyte was analyzed for, but not detected.
J Estimated ; the analyte concentration was less than the low standard (LOQ)

Microbac

304 MW 2/2/09

11

Sample Number: L08110541-11
Client ID: MR08-IS395-08D
Matrix: Soil
Workgroup Number: WG288749
Collect Date: 11/18/2008 16:00
Sample Tag: 01

PrePrep Method: NONE
Prep Method: 3051
Analytical Method: 6020
Analyst: JYH
Dilution: 1
Units: mg/kg

Instrument: ELAN-ICP
Prep Date: 11/21/2008 09:45
Cal Date: 11/21/2008 10:09
Run Date: 11/21/2008 22:04
File ID: EL.112108.220450
Percent Solid: 93.9

Analyte	CAS. Number	Result	Qual	RL	MDL
Arsenic, Total	7440-38-2	0.302	J	0.318	0.0796
Lead, Total	7439-92-1	2.65		0.424	0.106
Selenium, Total	7782-49-2		U	0.424	0.106

U Undetected; the analyte was analyzed for, but not detected.
J Estimated ; the analyte concentration was less than the low standard (LOQ)

Microbac

 RW 2/2/09

11

Sample Number: L08110541-11
Client ID: MR08-IS395-08D
Matrix: Soil
Workgroup Number: WG289347
Collect Date: 11/18/2008 16:00
Sample Tag: 01

PrePrep Method: NONE
Prep Method: 7471A
Analytical Method: 7471A
Analyst: ADC
Dilution: 1
Units: mg/kg

Instrument: HYDRA
Prep Date: 11/26/2008 08:41
Cal Date: 12/02/2008 08:31
Run Date: 12/02/2008 09:15
File ID: HY.120208.091501
Percent Solid: 93.9

Analyte	CAS. Number	Result	Qual	RL	MDL
Mercury, Total	7439-97-6		U	0.100	0.0200

U Undetected; the analyte was analyzed for, but not detected.

Microbac

1657 MW 2/2/09

12

Sample Number: L08110541-12
Client ID: MR08-EB111808
Matrix: Water
Workgroup Number: WG288740
Collect Date: 11/18/2008 17:30
Sample Tag: 01

PrePrep Method: NONE
Prep Method: 3005A
Analytical Method: 6010B
Analyst: ED
Dilution: 1
Units: ug/L

Instrument: PE-ICP2
Prep Date: 11/21/2008 08:34
Cal Date: 11/25/2008 12:36
Run Date: 11/25/2008 19:05
File ID: P2.112508.190544

Analyte	CAS. Number	Result	Qual	RL	MDL
Barium, Total	7440-39-3		U	10.0	2.50
Cadmium, Total	7440-43-9		U	1.00	0.250
Chromium, Total	7440-47-3		U	10.0	2.50
Copper, Total	7440-50-8		U	20.0	5.00
Silver, Total	7440-22-4		U	6.00	2.00
Zinc, Total	7440-66-6	46.8		20.0	5.00

U Undetected; the analyte was analyzed for, but not detected.

Microbac

 AW 2/2/09

12

Sample Number: L08110541-12
Client ID: MR08-EB111808
Matrix: Water
Workgroup Number: WG288705
Collect Date: 11/18/2008 17:30
Sample Tag: 01

PrePrep Method: NONE
Prep Method: 3015
Analytical Method: 6020
Analyst: JYH
Dilution: 1
Units: ug/L

Instrument: ELAN-ICP
Prep Date: 11/21/2008 07:39
Cal Date: 12/02/2008 11:32
Run Date: 12/02/2008 21:44
File ID: EL.120208.214447

Analyte	CAS. Number	Result	Qual	RL	MDL
Arsenic, Total	7440-38-2		U	1.00	0.250
Lead, Total	7439-92-1		U	1.00	0.250
Antimony, Total	7440-36-0		U	1.00	0.250
Selenium, Total	7782-49-2		U	2.00	0.500

U Undetected; the analyte was analyzed for, but not detected.

Microbac

 lw 2/2/09

12

Sample Number: L08110541-12
Client ID: MR08-EB111808
Matrix: Water
Workgroup Number: WG289027
Collect Date: 11/18/2008 17:30
Sample Tag: 01

PrePrep Method: NONE
Prep Method: 7470A
Analytical Method: 7470A
Analyst: ADC
Dilution: 1
Units: ug/L

Instrument: HYDRA
Prep Date: 11/21/2008 08:57
Cal Date: 11/25/2008 12:08
Run Date: 11/25/2008 13:59
File ID: HY.112508.135957

Analyte	CAS. Number	Result	Qual	RL	MDL
Mercury	7439-97-6		U	0.400	0.100

U Undetected; the analyte was analyzed for, but not detected.

Microbac

1658 LW 21209

ENVIRONMENTAL
Data Services, Inc.

EXPLOSIVES, PETN, NITROGLYCERIN

USEPA Region IV - Level IV Review

Site: MCB Camp Lejeune, TO-09 SDG #: L08110624

Client: CH2M HILL, Inc., Virginia Beach, Virginia Date: February 5, 2009

Laboratory: Microbac Laboratories, Inc., Marietta, Ohio Reviewer: Nancy Weaver

EDS ID	Client Sample ID	Laboratory Sample ID	Matrix
1	MR08-TW26-08D	L08110624-01	Water
2MS	MR08-TW26-08DMS	L08110624-02MS	Water
3MSD	MR08-TW26-08DMSD	L08110624-03MSD	Water
4	MR08-FB112008	L08110624-04	Water
5	MR08-TW04-08D	L08110624-05	Water
6	MR08-TW19-08D	L08110624-06	Water
7	MR08-TW20-08D	L08110624-07	Water
8	MR08-TW25-08D	L08110624-08	Water
9	MR08-TW18-08D	L08110624-09	Water

The USEPA "Contract Laboratory Program National Functional Guidelines for Organic Data Review," October 1999, and professional judgement were used in evaluating the data in this summary report.

Holding Times - All samples were extracted within 7 days for water samples and analyzed within 40 days.

Initial Calibration - The initial calibrations exhibited acceptable %RSD and/or correlation coefficient values.

Calibration Verification - The continuing calibrations exhibited acceptable %D values.

Surrogates - All samples exhibited acceptable surrogate recoveries.

MS/MSD - The MS/MSD sample exhibited acceptable %R and RPD values.

Laboratory Control Sample - The LCS samples exhibited acceptable %R values.

Method Blank - The method blanks were free of contamination.

Field and Equipment Blank - Field QC results are summarized below.

Blank ID	Compound	Conc. ug/L	Action Level ug/L	Qualifier	Affected Samples
MR08-EB111708-1	None -ND	-	-	-	-
MR08-FB112008	None -ND	-	-	-	-

Field Duplicates - Field duplicate samples were not included in this data package.

Compound Identification - Retention times were acceptable and no further action was taken.

Compound Quantitation - No discrepancies were identified.

Report Number: L08110624
Report Date : December 12, 2008

Sample Number: L08110624-01
Client ID: MR08-TW26-08D
Matrix: Water
Workgroup Number: WG289008
Collect Date: 11/20/2008 09:40
Sample Tag: 02

PrePrep Method: NONE
Prep Method: 3535
Analytical Method: 8330MOD
Analyst: ECL
Dilution: 1
Units: ug/L

Instrument: HPLC5
Prep Date: 11/24/2008 09:30
Cal Date: 08/12/2008 15:23
Run Date: 11/26/2008 16:15
File ID: 5L002952.F

Analyte	CAS. Number	Result	Qual	RL	MDL
PETN	78-11-5		U	1.05	0.263

U Undetected; the analyte was analyzed for, but not detected.

Microbac

14 LW 2/5/09

Sample Number: L08110624-01
Client ID: MR08-TW26-08D
Matrix: Water
Workgroup Number: WG289008
Collect Date: 11/20/2008 09:40
Sample Tag: 01

PrePrep Method: NONE
Prep Method: 3535
Analytical Method: 8330MOD
Analyst: ECL
Dilution: 1
Units: ug/L

Instrument: HPLC4
Prep Date: 11/24/2008 09:30
Cal Date: 10/30/2008 18:13
Run Date: 11/25/2008 17:16
File ID: 4L014570.F

Analyte	CAS. Number	Result	Qual	RL	MDL
1,3,5-Trinitrobenzene	99-35-4		U	1.05	0.263
1,3-Dinitrobenzene	99-65-0		U	1.05	0.263
2,4,6-Trinitrotoluene	118-96-7		U	1.05	0.263
2,4-Dinitrotoluene	121-14-2		U	1.05	0.263
2,6-Dinitrotoluene	606-20-2		U	1.05	0.263
2-Amino-4,6-dinitrotoluene	35572-78-2		U	1.05	0.263
2-Nitrotoluene	88-72-2		U	1.05	0.263
3-Nitrotoluene	99-08-1		U	1.05	0.263
4-Nitrotoluene	99-99-0		U	1.05	0.263
4-Amino-2,6-dinitrotoluene	19406-51-0		U	1.05	0.263
HMX	2691-41-0		U	1.05	0.263
Nitrobenzene	98-95-3		U	1.05	0.263
RDX	121-82-4		U	1.05	0.263
Tetryl	479-45-8		U	1.05	0.263
Nitroglycerin	55-63-0		U	1.05	0.263

Surrogate	% Recovery	Lower	Upper	Qual
1,2-Dinitrobenzene	81.9	50	150	

U Undetected; the analyte was analyzed for, but not detected.

Microbac

15 lew 2/5/09

4

Sample Number: L08110624-04
Client ID: MR08-FB112008
Matrix: Water
Workgroup Number: WG289008
Collect Date: 11/20/2008 09:45
Sample Tag: 02

PrePrep Method: NONE
Prep Method: 3535
Analytical Method: 8330MOD
Analyst: ECL
Dilution: 1
Units: ug/L

Instrument: HPLC5
Prep Date: 11/24/2008 09:30
Cal Date: 08/12/2008 15:23
Run Date: 11/26/2008 16:28
File ID: 5L002953.F

Analyte	CAS. Number	Result	Qual	RL	MDL
PETN	78-11-5		U	1.00	0.250

U Undetected; the analyte was analyzed for, but not detected.

Microbac

18 LW
2/5/09

4

Sample Number: L08110624-04
Client ID: MR08-FB112008
Matrix: Water
Workgroup Number: WG289008
Collect Date: 11/20/2008 09:45
Sample Tag: 01

PrePrep Method: NONE
Prep Method: 3535
Analytical Method: 8330MOD
Analyst: ECL
Dilution: 1
Units: ug/L

Instrument: HPLC4
Prep Date: 11/24/2008 09:30
Cal Date: 10/30/2008 18:13
Run Date: 11/25/2008 19:11
File ID: 4L014573.F

Analyte	CAS. Number	Result	Qual	RL	MDL
1,3,5-Trinitrobenzene	99-35-4		U	1.00	0.250
1,3-Dinitrobenzene	99-65-0		U	1.00	0.250
2,4,6-Trinitrotoluene	118-96-7		U	1.00	0.250
2,4-Dinitrotoluene	121-14-2		U	1.00	0.250
2,6-Dinitrotoluene	606-20-2		U	1.00	0.250
2-Amino-4,6-dinitrotoluene	35572-78-2		U	1.00	0.250
2-Nitrotoluene	88-72-2		U	1.00	0.250
3-Nitrotoluene	99-08-1		U	1.00	0.250
4-Nitrotoluene	99-99-0		U	1.00	0.250
4-Amino-2,6-dinitrotoluene	19406-51-0		U	1.00	0.250
HMX	2691-41-0		U	1.00	0.250
Nitrobenzene	98-95-3		U	1.00	0.250
RDX	121-82-4		U	1.00	0.250
Tetryl	479-45-8		U	1.00	0.250
Nitroglycerin	55-63-0		U	1.00	0.250

Surrogate	% Recovery	Lower	Upper	Qual
1,2-Dinitrobenzene	85.3	50	150	

U Undetected; the analyte was analyzed for, but not detected.

Microbac

19 LW 2/5/09

5

Sample Number: L08110624-05
Client ID: MR08-TW04-08D
Matrix: Water
Workgroup Number: WG289008
Collect Date: 11/20/2008 09:25
Sample Tag: 02

PrePrep Method: NONE
Prep Method: 3535
Analytical Method: 8330MOD
Analyst: ECL
Dilution: 1
Units: ug/L

Instrument: HPLC5
Prep Date: 11/24/2008 09:30
Cal Date: 08/12/2008 15:23
Run Date: 11/26/2008 17:20
File ID: 5L002957.F

Analyte	CAS. Number	Result	Qual	RL	MDL
PETN	78-11-5		U	1.02	0.255

U Undetected; the analyte was analyzed for, but not detected.

Microbac

20 lw
2/5/09

5

Sample Number: L08110624-05
Client ID: MR08-TW04-08D
Matrix: Water
Workgroup Number: WG289008
Collect Date: 11/20/2008 09:25
Sample Tag: 01

PrePrep Method: NONE
Prep Method: 3535
Analytical Method: 8330MOD
Analyst: ECL
Dilution: 1
Units: ug/L

Instrument: HPLC4
Prep Date: 11/24/2008 09:30
Cal Date: 10/30/2008 18:13
Run Date: 11/25/2008 19:49
File ID: 4L014574.F

Analyte	CAS. Number	Result	Qual	RL	MDL
1,3,5-Trinitrobenzene	99-35-4		U	1.02	0.255
1,3-Dinitrobenzene	99-65-0		U	1.02	0.255
2,4,6-Trinitrotoluene	118-96-7		U	1.02	0.255
2,4-Dinitrotoluene	121-14-2		U	1.02	0.255
2,6-Dinitrotoluene	606-20-2		U	1.02	0.255
2-Amino-4,6-dinitrotoluene	35572-78-2		U	1.02	0.255
2-Nitrotoluene	88-72-2		U	1.02	0.255
3-Nitrotoluene	99-08-1		U	1.02	0.255
4-Nitrotoluene	99-99-0		U	1.02	0.255
4-Amino-2,6-dinitrotoluene	19406-51-0		U	1.02	0.255
HMX	2691-41-0		U	1.02	0.255
Nitrobenzene	98-95-3		U	1.02	0.255
RDX	121-82-4		U	1.02	0.255
Tetryl	479-45-8		U	1.02	0.255
Nitroglycerin	55-63-0		U	1.02	0.255

Surrogate	% Recovery	Lower	Upper	Qual
1,2-Dinitrobenzene	80.6	50	150	

U Undetected; the analyte was analyzed for, but not detected.

Microbac

21 lcw 2/5/09

6

Sample Number: L08110624-06
Client ID: MR08-TW19-08D
Matrix: Water
Workgroup Number: WG289008
Collect Date: 11/20/2008 13:05
Sample Tag: 02

PrePrep Method: NONE
Prep Method: 3535
Analytical Method: 8330MOD
Analyst: ECL
Dilution: 1
Units: ug/L

Instrument: HPLC5
Prep Date: 11/24/2008 09:30
Cal Date: 08/12/2008 15:23
Run Date: 11/26/2008 17:33
File ID: 5L002958.F

Analyte	CAS. Number	Result	Qual	RL	MDL
PETN	78-11-5		U	1.03	0.258

U Undetected; the analyte was analyzed for, but not detected.

Microbac

23 QW 2/5/09

6

Sample Number: L08110624-06
Client ID: MR08-TW19-08D
Matrix: Water
Workgroup Number: WG289008
Collect Date: 11/20/2008 13:05
Sample Tag: 01

PrePrep Method: NONE
Prep Method: 3535
Analytical Method: 8330MOD
Analyst: ECL
Dilution: 1
Units: ug/L

Instrument: HPLC4
Prep Date: 11/24/2008 09:30
Cal Date: 10/30/2008 18:13
Run Date: 11/25/2008 20:27
File ID: 4L014575.F

Analyte	CAS. Number	Result	Qual	RL	MDL
1,3,5-Trinitrobenzene	99-35-4		U	1.03	0.258
1,3-Dinitrobenzene	99-65-0		U	1.03	0.258
2,4,6-Trinitrotoluene	118-96-7		U	1.03	0.258
2,4-Dinitrotoluene	121-14-2		U	1.03	0.258
2,6-Dinitrotoluene	606-20-2		U	1.03	0.258
2-Amino-4,6-dinitrotoluene	35572-78-2		U	1.03	0.258
2-Nitrotoluene	88-72-2		U	1.03	0.258
3-Nitrotoluene	99-08-1		U	1.03	0.258
4-Nitrotoluene	99-99-0		U	1.03	0.258
4-Amino-2,6-dinitrotoluene	19406-51-0		U	1.03	0.258
HMX	2691-41-0		U	1.03	0.258
Nitrobenzene	98-95-3		U	1.03	0.258
RDX	121-82-4		U	1.03	0.258
Tetryl	479-45-8		U	1.03	0.258
Nitroglycerin	55-63-0		U	1.03	0.258

Surrogate	% Recovery	Lower	Upper	Qual
1,2-Dinitrobenzene	55.1	50	150	

U Undetected; the analyte was analyzed for, but not detected.

Microbac

22 LW 2/5/09

7

Sample Number: L08110624-07
Client ID: MR08-TW20-08D
Matrix: Water
Workgroup Number: WG289008
Collect Date: 11/20/2008 13:15
Sample Tag: 02

PrePrep Method: NONE
Prep Method: 3535
Analytical Method: 8330MOD
Analyst: ECL
Dilution: 1
Units: ug/L

Instrument: HPLC5
Prep Date: 11/24/2008 09:30
Cal Date: 08/12/2008 15:23
Run Date: 11/26/2008 17:47
File ID: 5L002959.F

Analyte	CAS. Number	Result	Qual	RL	MDL
PETN	78-11-5		U	1.05	0.263

U Undetected; the analyte was analyzed for, but not detected.

Microbac

 LW 2/5/09

7

Sample Number: L08110624-07
Client ID: MR08-TW20-08D
Matrix: Water
Workgroup Number: WG289008
Collect Date: 11/20/2008 13:15
Sample Tag: 01

PrePrep Method: NONE
Prep Method: 3535
Analytical Method: 8330MOD
Analyst: ECL
Dilution: 1
Units: ug/L

Instrument: HPLC4
Prep Date: 11/24/2008 09:30
Cal Date: 10/30/2008 18:13
Run Date: 11/25/2008 22:59
File ID: 4L014579.F

Analyte	CAS. Number	Result	Qual	RL	MDL
1,3,5-Trinitrobenzene	99-35-4		U	1.05	0.263
1,3-Dinitrobenzene	99-65-0		U	1.05	0.263
2,4,6-Trinitrotoluene	118-96-7		U	1.05	0.263
2,4-Dinitrotoluene	121-14-2		U	1.05	0.263
2,6-Dinitrotoluene	606-20-2		U	1.05	0.263
2-Amino-4,6-dinitrotoluene	35572-78-2		U	1.05	0.263
2-Nitrotoluene	88-72-2		U	1.05	0.263
3-Nitrotoluene	99-08-1		U	1.05	0.263
4-Nitrotoluene	99-99-0		U	1.05	0.263
4-Amino-2,6-dinitrotoluene	19406-51-0		U	1.05	0.263
HMX	2691-41-0		U	1.05	0.263
Nitrobenzene	98-95-3		U	1.05	0.263
RDX	121-82-4		U	1.05	0.263
Tetryl	479-45-8		U	1.05	0.263
Nitroglycerin	55-63-0		U	1.05	0.263

Surrogate	% Recovery	Lower	Upper	Qual
1,2-Dinitrobenzene	82.1	50	150	

U Undetected; the analyte was analyzed for, but not detected.

Microbac

25 lw 2/5/09

8

Sample Number: L08110624-08
Client ID: MR08-TW25-08D
Matrix: Water
Workgroup Number: WG289008
Collect Date: 11/20/2008 14:15
Sample Tag: 02

PrePrep Method: NONE
Prep Method: 3535
Analytical Method: 8330MOD
Analyst: ECL
Dilution: 1
Units: ug/L

Instrument: HPLC5
Prep Date: 11/24/2008 09:30
Cal Date: 08/12/2008 15:23
Run Date: 11/26/2008 18:00
File ID: 5L002960.F

Analyte	CAS. Number	Result	Qual	RL	MDL
PETN	78-11-5		U	1.03	0.258

U Undetected; the analyte was analyzed for, but not detected.

Microbac

26 MW 2/5/09

8

Sample Number: L08110624-08
Client ID: MR08-TW25-08D
Matrix: Water
Workgroup Number: WG289008
Collect Date: 11/20/2008 14:15
Sample Tag: 01

PrePrep Method: NONE
Prep Method: 3535
Analytical Method: 8330MOD
Analyst: ECL
Dilution: 1
Units: ug/L

Instrument: HPLC4
Prep Date: 11/24/2008 09:30
Cal Date: 10/30/2008 18:13
Run Date: 11/25/2008 23:37
File ID: 4L014580.F

Analyte	CAS. Number	Result	Qual	RL	MDL
1,3,5-Trinitrobenzene	99-35-4		U	1.03	0.258
1,3-Dinitrobenzene	99-65-0		U	1.03	0.258
2,4,6-Trinitrotoluene	118-96-7		U	1.03	0.258
2,4-Dinitrotoluene	121-14-2		U	1.03	0.258
2,6-Dinitrotoluene	606-20-2		U	1.03	0.258
2-Amino-4,6-dinitrotoluene	35572-78-2		U	1.03	0.258
2-Nitrotoluene	88-72-2		U	1.03	0.258
3-Nitrotoluene	99-08-1		U	1.03	0.258
4-Nitrotoluene	99-99-0		U	1.03	0.258
4-Amino-2,6-dinitrotoluene	19406-51-0		U	1.03	0.258
HMX	2691-41-0		U	1.03	0.258
Nitrobenzene	98-95-3		U	1.03	0.258
RDX	121-82-4		U	1.03	0.258
Tetryl	479-45-8		U	1.03	0.258
Nitroglycerin	55-63-0		U	1.03	0.258

Surrogate	% Recovery	Lower	Upper	Qual
1,2-Dinitrobenzene	78.0	50	150	

U Undetected; the analyte was analyzed for, but not detected.

Microbac

27 [illegible] 2/3/09

9

Sample Number: L08110624-09
Client ID: MR08-TW18-08D
Matrix: Water
Workgroup Number: WG289008
Collect Date: 11/20/2008 14:50
Sample Tag: 02

PrePrep Method: NONE
Prep Method: 3535
Analytical Method: 8330MOD
Analyst: ECL
Dilution: 1
Units: ug/L

Instrument: HPLC5
Prep Date: 11/24/2008 09:30
Cal Date: 08/12/2008 15:23
Run Date: 11/26/2008 18:13
File ID: 5L002961.F

Analyte	CAS. Number	Result	Qual	RL	MDL
PETN	78-11-5		U	1.05	0.263

U Undetected; the analyte was analyzed for, but not detected.

Microbac

 lw 2/5/09

9

Sample Number: L08110624-09
Client ID: MR08-TW18-08D
Matrix: Water
Workgroup Number: WG289008
Collect Date: 11/20/2008 14:50
Sample Tag: 01

PrePrep Method: NONE
Prep Method: 3535
Analytical Method: 8330MOD
Analyst: ECL
Dilution: 1
Units: ug/L

Instrument: HPLC4
Prep Date: 11/24/2008 09:30
Cal Date: 10/30/2008 18:13
Run Date: 11/26/2008 00:16
File ID: 4L014581.F

Analyte	CAS. Number	Result	Qual	RL	MDL
1,3,5-Trinitrobenzene	99-35-4		U	1.05	0.263
1,3-Dinitrobenzene	99-65-0		U	1.05	0.263
2,4,6-Trinitrotoluene	118-96-7		U	1.05	0.263
2,4-Dinitrotoluene	121-14-2		U	1.05	0.263
2,6-Dinitrotoluene	606-20-2		U	1.05	0.263
2-Amino-4,6-dinitrotoluene	35572-78-2		U	1.05	0.263
2-Nitrotoluene	88-72-2		U	1.05	0.263
3-Nitrotoluene	99-08-1		U	1.05	0.263
4-Nitrotoluene	99-99-0		U	1.05	0.263
4-Amino-2,6-dinitrotoluene	19406-51-0		U	1.05	0.263
HMX	2691-41-0		U	1.05	0.263
Nitrobenzene	98-95-3		U	1.05	0.263
RDX	121-82-4		U	1.05	0.263
Tetryl	479-45-8		U	1.05	0.263
Nitroglycerin	55-63-0		U	1.05	0.263

Surrogate	% Recovery	Lower	Upper	Qual
1,2-Dinitrobenzene	61.4	50	150	

U Undetected; the analyte was analyzed for, but not detected.

Microbac

 MW 2/5/09

ENVIRONMENTAL
Data Services, Inc.

METALS

USEPA Region IV - Level IV Review

Site: MCB Camp Lejeune, TO-09 SDG #: L08110624

Client: CH2M HILL, Inc., Virginia Beach, Virginia Date: February 2, 2009

Laboratory: Microbac Laboratories, Inc., Marietta, Ohio Reviewer: Nancy Weaver

EDS ID	Client Sample ID	Laboratory Sample ID	Matrix
1	MR08-TW26-08D	L08110624-01	Water
2MS	MR08-TW26-08DMS	L08110624-02MS	Water
3MSD	MR08-TW26-08DMSD	L08110624-03MSD	Water
4	MR08-FB112008	L08110624-04	Water
5	MR08-TW04-08D	L08110624-05	Water
6	MR08-TW19-08D	L08110624-06	Water
7	MR08-TW20-08D	L08110624-07	Water
8	MR08-TW25-08D	L08110624-08	Water
9	MR08-TW18-08D	L08110624-09	Water

The USEPA "Contract Laboratory Program National Functional Guidelines for Inorganic Data Review," October 2004, and professional judgement were used in evaluating the data in this summary report.

Holding Times - All samples were prepared and analyzed within 28 days for mercury and 180 days for all other metals.

Calibration - The ICV and CCV %R values were acceptable.

Method and Calibration Blanks - All criteria were met.

Field and Equipment Blank - Field QC results are summarized below.

Blank ID	Compound	Conc. ug/L	Action Level ug/L	Qualifier	Affected Samples
MR08-EB111708-1	None - ND	-	-	-	-
MR08-FB112008	None - ND	-	-	-	-

ICP Interference Check Sample - All %R values were acceptable.

MS/MSD - The MS/MSD sample exhibited acceptable %R and RPD values.

LCS - The LCS samples exhibited acceptable %R values.

ICP Serial Dilution - The ICP serial dilution sample exhibited acceptable %D values.

Field Duplicates - Field duplicate samples were not included in this data package.

Compound Quantitation - No discrepancies were identified.

Report Number: L08110624

Report Date : December 12, 2008

Sample Number:	L08110624-01	PrePrep Method:	NONE	Instrument:	PE-ICP2
Client ID:	MR08-TW26-08D	Prep Method:	3005A	Prep Date:	12/01/2008 09:33
Matrix:	Water	Analytical Method:	6010B	Cal Date:	12/02/2008 11:16
Workgroup Number:	WG289427	Analyst:	SLP	Run Date:	12/02/2008 22:41
Collect Date:	11/20/2008 09:40	Dilution:	1	File ID:	P2.120208.224126
Sample Tag:	01	Units:	ug/L		

Analyte	CAS. Number	Result	Qual	RL	MDL
Barium, Total	7440-39-3	30.3		10.0	2.50
Cadmium, Total	7440-43-9		U	1.00	0.250
Chromium, Total	7440-47-3	3.73	J	10.0	2.50
Copper, Total	7440-50-8		U	20.0	5.00
Silver, Total	7440-22-4		U	6.00	2.00
Zinc, Total	7440-66-6	9.18	J	20.0	5.00

U Undetected; the analyte was analyzed for, but not detected.
J Estimated ; the analyte concentration was less than the low standard (LOQ)

Microbac

183 lw 2/2/09

Report Number: L08110624

Report Date : December 12, 2008

Sample Number: L08110624-01
Client ID: MR08-TW26-08D
Matrix: Water
Workgroup Number: WG289544
Collect Date: 11/20/2008 09:40
Sample Tag: 01

PrePrep Method: NONE
Prep Method: 3015
Analytical Method: 6020
Analyst: JYH
Dilution: 1
Units: ug/L

Instrument: ELAN-ICP
Prep Date: 11/24/2008 15:05
Cal Date: 12/04/2008 11:09
Run Date: 12/04/2008 13:26
File ID: EL.120408.132627

Analyte	CAS. Number	Result	Qual	RL	MDL
Arsenic, Total	7440-38-2	0.406	J	1.00	0.250
Lead, Total	7439-92-1	1.16		1.00	0.250
Antimony, Total	7440-36-0		U	1.00	0.250
Selenium, Total	7782-49-2	1.78	J	2.00	0.500

U Undetected; the analyte was analyzed for, but not detected.
J Estimated ; the analyte concentration was less than the low standard (LOQ)

Microbac

391 lw 2/2/09

Report Number: L08110624
Report Date : December 12, 2008

Sample Number: L08110624-01
Client ID: MR08-TW26-08D
Matrix: Water
Workgroup Number: WG289153
Collect Date: 11/20/2008 09:40
Sample Tag: 01

PrePrep Method: NONE
Prep Method: 7470A
Analytical Method: 7470A
Analyst: ADC
Dilution: 1
Units: ug/L

Instrument: HYDRA
Prep Date: 11/25/2008 14:42
Cal Date: 11/26/2008 14:52
Run Date: 11/26/2008 16:07
File ID: HY.112608.160728

Analyte	CAS. Number	Result	Qual	RL	MDL
Mercury	7439-97-6		U	0.400	0.100

U Undetected; the analyte was analyzed for, but not detected.

Microbac

808 RW 2/2/09

4

Sample Number: L08110624-04
Client ID: MR08-FB112008
Matrix: Water
Workgroup Number: WG289427
Collect Date: 11/20/2008 09:45
Sample Tag: 01

PrePrep Method: NONE
Prep Method: 3005A
Analytical Method: 6010B
Analyst: SLP
Dilution: 1
Units: ug/L

Instrument: PE-ICP2
Prep Date: 12/01/2008 09:33
Cal Date: 12/02/2008 11:16
Run Date: 12/02/2008 23:00
File ID: P2.120208.230020

Analyte	CAS. Number	Result	Qual	RL	MDL
Barium, Total	7440-39-3		U	10.0	2.50
Cadmium, Total	7440-43-9		U	1.00	0.250
Chromium, Total	7440-47-3		U	10.0	2.50
Copper, Total	7440-50-8		U	20.0	5.00
Silver, Total	7440-22-4		U	6.00	2.00
Zinc, Total	7440-66-6		U	20.0	5.00

U Undetected; the analyte was analyzed for, but not detected.

Microbac

186 2/2/09

4

Sample Number: L08110624-04
Client ID: MR08-FB112008
Matrix: Water
Workgroup Number: WG289544
Collect Date: 11/20/2008 09:45
Sample Tag: 01

PrePrep Method: NONE
Prep Method: 3015
Analytical Method: 6020
Analyst: JYH
Dilution: 1
Units: ug/L

Instrument: ELAN-ICP
Prep Date: 11/24/2008 15:05
Cal Date: 12/04/2008 11:09
Run Date: 12/04/2008 12:32
File ID: EL.120408.123235

Analyte	CAS. Number	Result	Qual	RL	MDL
Arsenic, Total	7440-38-2		U	1.00	0.250
Lead, Total	7439-92-1		U	1.00	0.250
Antimony, Total	7440-36-0		U	1.00	0.250
Selenium, Total	7782-49-2		U	2.00	0.500

U Undetected; the analyte was analyzed for, but not detected.

Microbac

394 RW 2/2/09

4

Sample Number: L08110624-04
Client ID: MR08-FB112008
Matrix: Water
Workgroup Number: WG289153
Collect Date: 11/20/2008 09:45
Sample Tag: 01

PrePrep Method: NONE
Prep Method: 7470A
Analytical Method: 7470A
Analyst: ADC
Dilution: 1
Units: ug/L

Instrument: HYDRA
Prep Date: 11/25/2008 14:42
Cal Date: 11/26/2008 14:52
Run Date: 11/26/2008 16:14
File ID: HY.112608.161440

Analyte	CAS. Number	Result	Qual	RL	MDL
Mercury	7439-97-6		U	0.400	0.100

U Undetected; the analyte was analyzed for, but not detected.

Microbac

811 LW 2/2/09

5

Sample Number: L08110624-05
Client ID: MR08-TW04-08D
Matrix: Water
Workgroup Number: WG289427
Collect Date: 11/20/2008 09:25
Sample Tag: 01

PrePrep Method: NONE
Prep Method: 3005A
Analytical Method: 6010B
Analyst: SLP
Dilution: 1
Units: ug/L

Instrument: PE-ICP2
Prep Date: 12/01/2008 09:33
Cal Date: 12/02/2008 11:16
Run Date: 12/02/2008 23:19
File ID: P2.120208.231909

Analyte	CAS. Number	Result	Qual	RL	MDL
Barium, Total	7440-39-3	44.5		10.0	2.50
Cadmium, Total	7440-43-9		U	1.00	0.250
Chromium, Total	7440-47-3		U	10.0	2.50
Copper, Total	7440-50-8		U	20.0	5.00
Silver, Total	7440-22-4		U	6.00	2.00
Zinc, Total	7440-66-6		U	20.0	5.00

U Undetected; the analyte was analyzed for, but not detected.

Microbac

 JW 2/12/09

5

Sample Number: L08110624-05
Client ID: MR08-TW04-08D
Matrix: Water
Workgroup Number: WG289544
Collect Date: 11/20/2008 09:25
Sample Tag: 01

PrePrep Method: NONE
Prep Method: 3015
Analytical Method: 6020
Analyst: JYH
Dilution: 1
Units: ug/L

Instrument: ELAN-ICP
Prep Date: 11/24/2008 15:05
Cal Date: 12/04/2008 11:09
Run Date: 12/04/2008 13:44
File ID: EL.120408.134416

Analyte	CAS. Number	Result	Qual	RL	MDL
Arsenic, Total	7440-38-2	0.279	J	1.00	0.250
Lead, Total	7439-92-1	0.276	J	1.00	0.250
Antimony, Total	7440-36-0		U	1.00	0.250
Selenium, Total	7782-49-2	3.34		2.00	0.500

U Undetected; the analyte was analyzed for, but not detected.
J Estimated ; the analyte concentration was less than the low standard (LOQ)

Microbac

395 lw 2/2/09

5

Sample Number: L08110624-05
Client ID: MR08-TW04-08D
Matrix: Water
Workgroup Number: WG289153
Collect Date: 11/20/2008 09:25
Sample Tag: 01

PrePrep Method: NONE
Prep Method: 7470A
Analytical Method: 7470A
Analyst: ADC
Dilution: 1
Units: ug/L

Instrument: HYDRA
Prep Date: 11/25/2008 14:42
Cal Date: 11/26/2008 14:52
Run Date: 11/26/2008 16:16
File ID: HY.112608.161633

Analyte	CAS. Number	Result	Qual	RL	MDL
Mercury	7439-97-6		U	0.400	0.100

U Undetected; the analyte was analyzed for, but not detected.

Microbac

812 MW 2/2/09

4

Sample Number: L08110624-06
Client ID: MR08-TW19-08D
Matrix: Water
Workgroup Number: WG289427
Collect Date: 11/20/2008 13:05
Sample Tag: 01

PrePrep Method: NONE
Prep Method: 3005A
Analytical Method: 6010B
Analyst: SLP
Dilution: 1
Units: ug/L

Instrument: PE-ICP2
Prep Date: 12/01/2008 09:33
Cal Date: 12/02/2008 11:16
Run Date: 12/02/2008 23:25
File ID: P2.120208.232521

Analyte	CAS. Number	Result	Qual	RL	MDL
Barium, Total	7440-39-3	133		10.0	2.50
Cadmium, Total	7440-43-9		U	1.00	0.250
Chromium, Total	7440-47-3		U	10.0	2.50
Copper, Total	7440-50-8		U	20.0	5.00
Silver, Total	7440-22-4		U	6.00	2.00
Zinc, Total	7440-66-6	8.53	J	20.0	5.00

U Undetected; the analyte was analyzed for, but not detected.
J Estimated ; the analyte concentration was less than the low standard (LOQ)

Microbac

188 QLW 2/2/09

6

Sample Number: L08110624-06
Client ID: MR08-TW19-08D
Matrix: Water
Workgroup Number: WG289544
Collect Date: 11/20/2008 13:05
Sample Tag: 01

PrePrep Method: NONE
Prep Method: 3015
Analytical Method: 6020
Analyst: JYH
Dilution: 1
Units: ug/L

Instrument: ELAN-ICP
Prep Date: 11/24/2008 15:05
Cal Date: 12/04/2008 11:09
Run Date: 12/04/2008 13:49
File ID: EL.120408.134936

Analyte	CAS. Number	Result	Qual	RL	MDL
Arsenic, Total	7440-38-2	0.468	J	1.00	0.250
Lead, Total	7439-92-1	0.527	J	1.00	0.250
Antimony, Total	7440-36-0		U	1.00	0.250
Selenium, Total	7782-49-2	1.52	J	2.00	0.500

U Undetected; the analyte was analyzed for, but not detected.
J Estimated ; the analyte concentration was less than the low standard (LOQ)

Microbac

 LW 2/2/09

6

Sample Number: L08110624-06
Client ID: MR08-TW19-08D
Matrix: Water
Workgroup Number: WG289153
Collect Date: 11/20/2008 13:05
Sample Tag: 01

PrePrep Method: NONE
Prep Method: 7470A
Analytical Method: 7470A
Analyst: ADC
Dilution: 1
Units: ug/L

Instrument: HYDRA
Prep Date: 11/25/2008 14:42
Cal Date: 11/26/2008 14:52
Run Date: 11/26/2008 16:18
File ID: HY.112608.161829

Analyte	CAS. Number	Result	Qual	RL	MDL
Mercury	7439-97-6		U	0.400	0.100

U Undetected; the analyte was analyzed for, but not detected.

Microbac

813 LW 2/2/09

7

Sample Number: L08110624-07
Client ID: MR08-TW20-08D
Matrix: Water
Workgroup Number: WG289427
Collect Date: 11/20/2008 13:15
Sample Tag: 01

PrePrep Method: NONE
Prep Method: 3005A
Analytical Method: 6010B
Analyst: SLP
Dilution: 1
Units: ug/L

Instrument: PE-ICP2
Prep Date: 12/01/2008 09:33
Cal Date: 12/02/2008 11:16
Run Date: 12/02/2008 23:31
File ID: P2.120208.233139

Analyte	CAS. Number	Result	Qual	RL	MDL
Barium, Total	7440-39-3	151		10.0	2.50
Cadmium, Total	7440-43-9		U	1.00	0.250
Chromium, Total	7440-47-3	3.36	J	10.0	2.50
Copper, Total	7440-50-8		U	20.0	5.00
Silver, Total	7440-22-4		U	6.00	2.00
Zinc, Total	7440-66-6		U	20.0	5.00

U Undetected; the analyte was analyzed for, but not detected.
J Estimated ; the analyte concentration was less than the low standard (LOQ)

Microbac

 fcw 2/2/09

7

Sample Number: L08110624-07
Client ID: MR08-TW20-08D
Matrix: Water
Workgroup Number: WG289544
Collect Date: 11/20/2008 13:15
Sample Tag: 01

PrePrep Method: NONE
Prep Method: 3015
Analytical Method: 6020
Analyst: JYH
Dilution: 1
Units: ug/L

Instrument: ELAN-ICP
Prep Date: 11/24/2008 15:05
Cal Date: 12/04/2008 11:09
Run Date: 12/04/2008 13:54
File ID: EL.120408.135457

Analyte	CAS. Number	Result	Qual	RL	MDL
Arsenic, Total	7440-38-2	1.21		1.00	0.250
Lead, Total	7439-92-1	0.465	J	1.00	0.250
Antimony, Total	7440-36-0		U	1.00	0.250
Selenium, Total	7782-49-2	2.01		2.00	0.500

U Undetected; the analyte was analyzed for, but not detected.
J Estimated ; the analyte concentration was less than the low standard (LOQ)

Microbac

397 lw 2/2/09

7

Sample Number: L08110624-07
Client ID: MR08-TW20-08D
Matrix: Water
Workgroup Number: WG289153
Collect Date: 11/20/2008 13:15
Sample Tag: 01

PrePrep Method: NONE
Prep Method: 7470A
Analytical Method: 7470A
Analyst: ADC
Dilution: 1
Units: ug/L

Instrument: HYDRA
Prep Date: 11/25/2008 14:42
Cal Date: 11/26/2008 14:52
Run Date: 11/26/2008 16:20
File ID: HY.112608.162055

Analyte	CAS. Number	Result	Qual	RL	MDL
Mercury	7439-97-6		U	0.400	0.100

U Undetected; the analyte was analyzed for, but not detected.

Microbac

814 MW 2/2/09

8

Sample Number: L08110624-08
Client ID: MR08-TW25-08D
Matrix: Water
Workgroup Number: WG289427
Collect Date: 11/20/2008 14:15
Sample Tag: 01

PrePrep Method: NONE
Prep Method: 3005A
Analytical Method: 6010B
Analyst: SLP
Dilution: 1
Units: ug/L

Instrument: PE-ICP2
Prep Date: 12/01/2008 09:33
Cal Date: 12/02/2008 11:16
Run Date: 12/02/2008 23:37
File ID: P2.120208.233754

Analyte	CAS. Number	Result	Qual	RL	MDL
Barium, Total	7440-39-3	50.8		10.0	2.50
Cadmium, Total	7440-43-9		U	1.00	0.250
Chromium, Total	7440-47-3		U	10.0	2.50
Copper, Total	7440-50-8		U	20.0	5.00
Silver, Total	7440-22-4		U	6.00	2.00
Zinc, Total	7440-66-6		U	20.0	5.00

U Undetected; the analyte was analyzed for, but not detected.

Microbac

 RW 2/2/09

8

Sample Number: L08110624-08
Client ID: MR08-TW25-08D
Matrix: Water
Workgroup Number: WG289544
Collect Date: 11/20/2008 14:15
Sample Tag: 01

PrePrep Method: NONE
Prep Method: 3015
Analytical Method: 6020
Analyst: JYH
Dilution: 1
Units: ug/L

Instrument: ELAN-ICP
Prep Date: 11/24/2008 15:05
Cal Date: 12/04/2008 11:09
Run Date: 12/04/2008 14:00
File ID: EL.120408.140019

Analyte	CAS. Number	Result	Qual	RL	MDL
Arsenic, Total	7440-38-2	1.23		1.00	0.250
Lead, Total	7439-92-1	0.256	J	1.00	0.250
Antimony, Total	7440-36-0		U	1.00	0.250
Selenium, Total	7782-49-2	1.13	J	2.00	0.500

U Undetected; the analyte was analyzed for, but not detected.
J Estimated ; the analyte concentration was less than the low standard (LOQ)

Microbac

398 MW 2/2/09

8

Sample Number: L08110624-08
Client ID: MR08-TW25-08D
Matrix: Water
Workgroup Number: WG289153
Collect Date: 11/20/2008 14:15
Sample Tag: 01

PrePrep Method: NONE
Prep Method: 7470A
Analytical Method: 7470A
Analyst: ADC
Dilution: 1
Units: ug/L

Instrument: HYDRA
Prep Date: 11/25/2008 14:42
Cal Date: 11/26/2008 14:52
Run Date: 11/26/2008 16:26
File ID: HY.112608.162628

Analyte	CAS. Number	Result	Qual	RL	MDL
Mercury	7439-97-6		U	0.400	0.100

U Undetected; the analyte was analyzed for, but not detected.

Microbac

815 RW 2/2/09

9

Sample Number: L08110624-09
Client ID: MR08-TW18-08D
Matrix: Water
Workgroup Number: WG289427
Collect Date: 11/20/2008 14:50
Sample Tag: 01

PrePrep Method: NONE
Prep Method: 3005A
Analytical Method: 6010B
Analyst: SLP
Dilution: 1
Units: ug/L

Instrument: PE-ICP2
Prep Date: 12/01/2008 09:33
Cal Date: 12/02/2008 11:16
Run Date: 12/02/2008 23:56
File ID: P2.120208.235633

Analyte	CAS. Number	Result	Qual	RL	MDL
Barium, Total	7440-39-3	33.4		10.0	2.50
Cadmium, Total	7440-43-9		U	1.00	0.250
Chromium, Total	7440-47-3		U	10.0	2.50
Copper, Total	7440-50-8		U	20.0	5.00
Silver, Total	7440-22-4		U	6.00	2.00
Zinc, Total	7440-66-6	5.92	J	20.0	5.00

U Undetected; the analyte was analyzed for, but not detected.
J Estimated ; the analyte concentration was less than the low standard (LOQ)

Microbac

 lw 2/2/09

9

Sample Number: L08110624-09
Client ID: MR08-TW18-08D
Matrix: Water
Workgroup Number: WG289544
Collect Date: 11/20/2008 14:50
Sample Tag: 01

PrePrep Method: NONE
Prep Method: 3015
Analytical Method: 6020
Analyst: JYH
Dilution: 1
Units: ug/L

Instrument: ELAN-ICP
Prep Date: 11/24/2008 15:05
Cal Date: 12/04/2008 11:09
Run Date: 12/04/2008 14:05
File ID: EL.120408.140540

Analyte	CAS. Number	Result	Qual	RL	MDL
Arsenic, Total	7440-38-2	0.467	J	1.00	0.250
Lead, Total	7439-92-1	0.478	J	1.00	0.250
Antimony, Total	7440-36-0		U	1.00	0.250
Selenium, Total	7782-49-2	1.20	J	2.00	0.500

U Undetected; the analyte was analyzed for, but not detected.
J Estimated ; the analyte concentration was less than the low standard (LOQ)

Microbac

 RW 2/2/09

9

Sample Number: L08110624-09
Client ID: MR08-TW18-08D
Matrix: Water
Workgroup Number: WG289153
Collect Date: 11/20/2008 14:50
Sample Tag: 01

PrePrep Method: NONE
Prep Method: 7470A
Analytical Method: 7470A
Analyst: ADC
Dilution: 1
Units: ug/L

Instrument: HYDRA
Prep Date: 11/25/2008 14:42
Cal Date: 11/26/2008 14:52
Run Date: 11/26/2008 16:28
File ID: HY.112608.162811

Analyte	CAS. Number	Result	Qual	RL	MDL
Mercury	7439-97-6		U	0.400	0.100

U Undetected; the analyte was analyzed for, but not detected.

Microbac

816 lw 2/2/09

ENVIRONMENTAL
Data Services, Inc.

EXPLOSIVES, PETN, NITROGLYCERIN

USEPA Region IV - Level IV Review

Site: MCB Camp Lejeune, TO-09 SDG #: L08110631

Client: CH2M HILL, Inc., Virginia Beach, Virginia Date: February 5, 2009

Laboratory: Microbac Laboratories, Inc., Marietta, Ohio Reviewer: Nancy Weaver

EDS ID	Client Sample ID	Laboratory Sample ID	Matrix
1	MR08-SS388-08D	L08110631-01	Soil
2	MR08-IS388-08D	L08110631-02	Soil
3	MR08-SS389-08D	L08110631-03	Soil
4MS	MR08-SS389-08DMS	L08110631-04MS	Soil
5MSD	MR08-SS389-08DMSD	L08110631-05MSD	Soil
6	MR08-IS389-08D	L08110631-06	Soil
7	MR08-IS389D-08D	L08110631-07	Soil
8	MR08-SS394-08D	L08110631-08	Soil
9	MR08-IS394-08D	L08110631-09	Soil
10MS	MR08-IS394-08DMS	L08110631-10MS	Soil
11MSD	MR08-IS394-08DMSD	L08110631-11MSD	Soil
12	MR08-IS396-08D	L08110631-12	Soil
13	MR08-SS395-08D	L08110631-13	Soil
14	MR08-SS395D-08D	L08110631-14	Soil
15	MR08-SS393-08D	L08110631-15	Soil
16	MR08-SS392-08D	L08110631-16	Soil
17	MR08-SS391-08D	L08110631-17	Soil
18	MR08-SS391D-08D	L08110631-18	Soil
19	MR08-SS390-08D	L08110631-19	Soil
20	MR08-EB111908	L08110631-20	Water

The USEPA "Contract Laboratory Program National Functional Guidelines for Organic Data Review," October 1999, and professional judgement were used in evaluating the data in this summary report.

Holding Times - All samples were extracted within 7 days for water samples, 14 days for soil samples and analyzed within 40 days.

Initial Calibration - The initial calibrations exhibited acceptable %RSD and/or correlation coefficient values.

Calibration Verification - The continuing calibrations exhibited acceptable %D values.

Surrogates - All samples exhibited acceptable surrogate recoveries.

MS/MSD - The MS/MSD sample exhibited acceptable %R and RPD values except the following.

MS/MSD Sample ID	Compound	MS/MSD %R/RPD	Qualifier
3	2,4-Dinitrotoluene	71.9%/79.4%/Ok	J/UJ
9	2,4-Dinitrotoluene	77.8%/79.2%/Ok	J/UJ
	Nitrobenzene	72%/74.9%/Ok	J/UJ
	Nitroglycerin	Ok/Ok/60.4%	None for RPD alone

Laboratory Control Sample - The LCS samples exhibited acceptable %R values except the following.

LCS ID	Compound	%R	Qualifier	Affected Samples
WG289341-04	2,4-Dinitrotoluene	74.2%	J/UJ	1, 2, 6-8, 12-19

Method Blank - The method blanks were free of contamination.

Field and Equipment Blank - Field QC results are summarized below.

Blank ID	Compound	Conc. ug/L	Action Level ug/L	Qualifier	Affected Samples
MR08-EB111908	None - ND	-	-	-	-
MR08-FB112008	None - ND	-	-	-	-

Field Duplicates - Field duplicate results are summarized below.

Compound	MR08-IS389-08D mg/kg	MR08-IS389D-08D mg/kg	RPD	Qualifier
None	ND	ND	-	-

Compound	MR08-SS395-08D mg/kg	MR08-SS395D-08D mg/kg	RPD	Qualifier
None	ND	ND	-	-

Compound	MR08-SS391-08D mg/kg	MR08-SS391D-08D mg/kg	RPD	Qualifier
None	ND	ND	-	-

Compound Identification - Retention times were acceptable and no further action was taken.

Compound Quantitation - No discrepancies were identified.

Report Number: L08110631
Report Date : December 9, 2008

Sample Number: L08110631-01
Client ID: MR08-SS388-08D
Matrix: Soil
Workgroup Number: WG289514
Collect Date: 11/19/2008 07:30
Sample Tag: 02

PrePrep Method: NONE
Prep Method: METHOD
Analytical Method: 8330MOD
Analyst: ECL
Dilution: 1
Units: mg/kg

Instrument: HPLC5
Prep Date: 12/02/2008 08:00
Cal Date: 12/01/2008 20:11
Run Date: 12/04/2008 20:59
File ID: 5L003094.F

Analyte	CAS. Number	Result	Qual	RL	MDL
PETN	78-11-5		U	0.297	0.0991

U Undetected; the analyte was analyzed for, but not detected.

Microbac

dw
15 2/5/09

Sample Number: L08110631-01
Client ID: MR08-SS388-08D
Matrix: Soil
Workgroup Number: WG289514
Collect Date: 11/19/2008 07:30
Sample Tag: 01

PrePrep Method: NONE
Prep Method: METHOD
Analytical Method: 8330MOD
Analyst: ECL
Dilution: 1
Units: mg/kg

Instrument: HPLC5
Prep Date: 12/02/2008 08:00
Cal Date: 12/01/2008 20:11
Run Date: 12/03/2008 17:10
File ID: 5L003032.F

Analyte	CAS. Number	Result	Qual	RL	MDL
1,3,5-Trinitrobenzene	99-35-4		U	0.297	0.0991
1,3-Dinitrobenzene	99-65-0		U	0.297	0.0991
2,4,6-Trinitrotoluene	118-96-7		U	0.297	0.0991
2,4-Dinitrotoluene	121-14-2		UJ ~~U~~	0.297	0.0991 BSL
2,6-Dinitrotoluene	606-20-2		U	0.297	0.0991
2-Amino-4,6-dinitrotoluene	35572-78-2		U	0.297	0.0991
2-Nitrotoluene	88-72-2		U	0.297	0.0991
3-Nitrotoluene	99-08-1		U	0.297	0.0991
4-Nitrotoluene	99-99-0		U	0.297	0.0991
4-Amino-2,6-dinitrotoluene	19406-51-0		U	0.297	0.0991
HMX	2691-41-0		U	0.297	0.0991
Nitrobenzene	98-95-3		U	0.297	0.0991
RDX	121-82-4		U	0.297	0.0991
Tetryl	479-45-8		U	0.297	0.0991
Nitroglycerin	55-63-0		U	0.297	0.0991

Surrogate	% Recovery	Lower	Upper	Qual
1,2-Dinitrobenzene	55.8	50	150	

U Undetected; the analyte was analyzed for, but not detected.

Microbac

16 LW 2/5/09

2

Sample Number:	L08110631-02	PrePrep Method:	NONE	Instrument:	HPLC5
Client ID:	MR08-IS388-08D	Prep Method:	METHOD	Prep Date:	12/02/2008 08:00
Matrix:	Soil	Analytical Method:	8330MOD	Cal Date:	12/01/2008 20:11
Workgroup Number:	WG289514	Analyst:	ECL	Run Date:	12/04/2008 21:13
Collect Date:	11/19/2008 08:45	Dilution:	1	File ID:	5L003095.F
Sample Tag:	02	Units:	mg/kg		

Analyte	CAS. Number	Result	Qual	RL	MDL
PETN	78-11-5		U	0.298	0.0992

U Undetected; the analyte was analyzed for, but not detected.

Microbac

17 MW 2/5/09

2

Sample Number: L08110631-02
Client ID: MR08-IS388-08D
Matrix: Soil
Workgroup Number: WG289514
Collect Date: 11/19/2008 08:45
Sample Tag: 01

PrePrep Method: NONE
Prep Method: METHOD
Analytical Method: 8330MOD
Analyst: ECL
Dilution: 1
Units: mg/kg

Instrument: HPLC5
Prep Date: 12/02/2008 08:00
Cal Date: 12/01/2008 20:11
Run Date: 12/03/2008 17:48
File ID: 5L003033.F

Analyte	CAS. Number	Result	Qual	RL	MDL
1,3,5-Trinitrobenzene	99-35-4		U	0.298	0.0992
1,3-Dinitrobenzene	99-65-0		U	0.298	0.0992
2,4,6-Trinitrotoluene	118-96-7		U	0.298	0.0992
2,4-Dinitrotoluene	121-14-2	UJ	~~U~~	0.298	0.0992
2,6-Dinitrotoluene	606-20-2		U	0.298	0.0992
2-Amino-4,6-dinitrotoluene	35572-78-2		U	0.298	0.0992
2-Nitrotoluene	88-72-2		U	0.298	0.0992
3-Nitrotoluene	99-08-1		U	0.298	0.0992
4-Nitrotoluene	99-99-0		U	0.298	0.0992
4-Amino-2,6-dinitrotoluene	19406-51-0		U	0.298	0.0992
HMX	2691-41-0		U	0.298	0.0992
Nitrobenzene	98-95-3		U	0.298	0.0992
RDX	121-82-4		U	0.298	0.0992
Tetryl	479-45-8		U	0.298	0.0992
Nitroglycerin	55-63-0		U	0.298	0.0992

BSL

Surrogate	% Recovery	Lower	Upper	Qual
1,2-Dinitrobenzene	57.7	50	150	

U Undetected; the analyte was analyzed for, but not detected.

Microbac

18 LW 2/5/09

3

Sample Number: L08110631-03
Client ID: MR08-SS389-08D
Matrix: Soil
Workgroup Number: WG289514
Collect Date: 11/19/2008 09:30
Sample Tag: 02

PrePrep Method: NONE
Prep Method: METHOD
Analytical Method: 8330MOD
Analyst: ECL
Dilution: 1
Units: mg/kg

Instrument: HPLC5
Prep Date: 12/02/2008 08:00
Cal Date: 12/01/2008 20:11
Run Date: 12/04/2008 21:52
File ID: 5L003098.F

Analyte	CAS. Number	Result	Qual	RL	MDL
PETN	78-11-5		U	0.296	0.0988

U Undetected; the analyte was analyzed for, but not detected.

Microbac

20 lw 2/5/09

3

Sample Number: L08110631-03
Client ID: MR08-SS389-08D
Matrix: Soil
Workgroup Number: WG289514
Collect Date: 11/19/2008 09:30
Sample Tag: 01

PrePrep Method: NONE
Prep Method: METHOD
Analytical Method: 8330MOD
Analyst: ECL
Dilution: 1
Units: mg/kg

Instrument: HPLC5
Prep Date: 12/02/2008 08:00
Cal Date: 12/01/2008 20:11
Run Date: 12/03/2008 18:26
File ID: 5L003034.F

Analyte	CAS. Number	Result	Qual	RL	MDL
1,3,5-Trinitrobenzene	99-35-4		U	0.296	0.0988
1,3-Dinitrobenzene	99-65-0		U	0.296	0.0988
2,4,6-Trinitrotoluene	118-96-7		U	0.296	0.0988
2,4-Dinitrotoluene	121-14-2		UJ ~~U~~	0.296	0.0988
2,6-Dinitrotoluene	606-20-2		U	0.296	0.0988
2-Amino-4,6-dinitrotoluene	35572-78-2		U	0.296	0.0988
2-Nitrotoluene	88-72-2		U	0.296	0.0988
3-Nitrotoluene	99-08-1		U	0.296	0.0988
4-Nitrotoluene	99-99-0		U	0.296	0.0988
4-Amino-2,6-dinitrotoluene	19406-51-0		U	0.296	0.0988
HMX	2691-41-0		U	0.296	0.0988
Nitrobenzene	98-95-3		U	0.296	0.0988
RDX	121-82-4		U	0.296	0.0988
Tetryl	479-45-8		U	0.296	0.0988
Nitroglycerin	55-63-0		U	0.296	0.0988

MSL

Surrogate	% Recovery	Lower	Upper	Qual
1,2-Dinitrobenzene	59.6	50	150	

U Undetected; the analyte was analyzed for, but not detected.

Microbac

19 DW 2/5/09

Report Number: L08110631
Report Date : December 9, 2008

6

Sample Number:	L08110631-06	PrePrep Method:	NONE	Instrument:	HPLC5
Client ID:	MR08-IS389-08P	Prep Method:	METHOD	Prep Date:	12/02/2008 08:00
Matrix:	Soil	Analytical Method:	8330MOD	Cal Date:	12/01/2008 20:11
Workgroup Number:	WG289514	Analyst:	ECL	Run Date:	12/04/2008 22:05
Collect Date:	11/19/2008 10:10	Dilution:	1	File ID:	5L003099.F
Sample Tag:	02	Units:	mg/kg		

Analyte	CAS. Number	Result	Qual	RL	MDL
PETN	78-11-5		U	0.300	0.0999

U Undetected; the analyte was analyzed for, but not detected.

Microbac

23 lw 2/5/09

6

Sample Number: L08110631-06
Client ID: MR08-IS389-08
Matrix: Soil
Workgroup Number: WG289514
Collect Date: 11/19/2008 10:10
Sample Tag: 01

PrePrep Method: NONE
Prep Method: METHOD
Analytical Method: 8330MOD
Analyst: ECL
Dilution: 1
Units: mg/kg

Instrument: HPLC5
Prep Date: 12/02/2008 08:00
Cal Date: 12/01/2008 20:11
Run Date: 12/03/2008 20:21
File ID: 5L003037.F

Analyte	CAS. Number	Result	Qual	RL	MDL
1,3,5-Trinitrobenzene	99-35-4		U	0.300	0.0999
1,3-Dinitrobenzene	99-65-0		U	0.300	0.0999
2,4,6-Trinitrotoluene	118-96-7		U	0.300	0.0999
2,4-Dinitrotoluene	121-14-2		UJ ~~U~~	0.300	0.0999
2,6-Dinitrotoluene	606-20-2		U	0.300	0.0999
2-Amino-4,6-dinitrotoluene	35572-78-2		U	0.300	0.0999
2-Nitrotoluene	88-72-2		U	0.300	0.0999
3-Nitrotoluene	99-08-1		U	0.300	0.0999
4-Nitrotoluene	99-99-0		U	0.300	0.0999
4-Amino-2,6-dinitrotoluene	19406-51-0		U	0.300	0.0999
HMX	2691-41-0		U	0.300	0.0999
Nitrobenzene	98-95-3		U	0.300	0.0999
RDX	121-82-4		U	0.300	0.0999
Tetryl	479-45-8		U	0.300	0.0999
Nitroglycerin	55-63-0		U	0.300	0.0999

BSL

Surrogate	% Recovery	Lower	Upper	Qual
1,2-Dinitrobenzene	61.6	50	150	

U Undetected; the analyte was analyzed for, but not detected.

Microbac

24 MW 2/5/09

7

Sample Number: L08110631-07
Client ID: MR08-IS389D-08D
Matrix: Soil
Workgroup Number: WG289514
Collect Date: 11/19/2008 10:15
Sample Tag: 02

PrePrep Method: NONE
Prep Method: METHOD
Analytical Method: 8330MOD
Analyst: ECL
Dilution: 1
Units: mg/kg

Instrument: HPLC5
Prep Date: 12/02/2008 08:00
Cal Date: 12/01/2008 20:11
Run Date: 12/04/2008 22:18
File ID: 5L003100.F

Analyte	CAS. Number	Result	Qual	RL	MDL
PETN	78-11-5		U	0.298	0.0993

U Undetected; the analyte was analyzed for, but not detected.

Microbac

25 MW 2/5/09

7

Sample Number: L08110631-07
Client ID: MR08-IS389D-08D
Matrix: Soil
Workgroup Number: WG289514
Collect Date: 11/19/2008 10:15
Sample Tag: 01

PrePrep Method: NONE
Prep Method: METHOD
Analytical Method: 8330MOD
Analyst: ECL
Dilution: 1
Units: mg/kg

Instrument: HPLC5
Prep Date: 12/02/2008 08:00
Cal Date: 12/01/2008 20:11
Run Date: 12/03/2008 22:53
File ID: 5L003041.F

Analyte	CAS. Number	Result	Qual	RL	MDL
1,3,5-Trinitrobenzene	99-35-4		U	0.298	0.0993
1,3-Dinitrobenzene	99-65-0		U	0.298	0.0993
2,4,6-Trinitrotoluene	118-96-7		U	0.298	0.0993
2,4-Dinitrotoluene	121-14-2		UJ ~~U~~	0.298	0.0993
2,6-Dinitrotoluene	606-20-2		U	0.298	0.0993
2-Amino-4,6-dinitrotoluene	35572-78-2		U	0.298	0.0993
2-Nitrotoluene	88-72-2		U	0.298	0.0993
3-Nitrotoluene	99-08-1		U	0.298	0.0993
4-Nitrotoluene	99-99-0		U	0.298	0.0993
4-Amino-2,6-dinitrotoluene	19406-51-0		U	0.298	0.0993
HMX	2691-41-0		U	0.298	0.0993
Nitrobenzene	98-95-3		U	0.298	0.0993
RDX	121-82-4		U	0.298	0.0993
Tetryl	479-45-8		U	0.298	0.0993
Nitroglycerin	55-63-0		U	0.298	0.0993

BSL

Surrogate	% Recovery	Lower	Upper	Qual
1,2-Dinitrobenzene	62.2	50	150	

U Undetected; the analyte was analyzed for, but not detected.

Microbac

26 LW 2/5/09

8

Sample Number: L08110631-08
Client ID: MR08-SS394-08D
Matrix: Soil
Workgroup Number: WG289514
Collect Date: 11/19/2008 10:45
Sample Tag: 02

PrePrep Method: NONE
Prep Method: METHOD
Analytical Method: 8330MOD
Analyst: ECL
Dilution: 1
Units: mg/kg

Instrument: HPLC5
Prep Date: 12/02/2008 08:00
Cal Date: 12/01/2008 20:11
Run Date: 12/04/2008 22:32
File ID: 5L003101.F

Analyte	CAS. Number	Result	Qual	RL	MDL
PETN	78-11-5		U	0.291	0.0971

U Undetected; the analyte was analyzed for, but not detected.

Microbac

27 LW 2/5/09

8

Sample Number: L08110631-08
Client ID: MR08-SS394-08D
Matrix: Soil
Workgroup Number: WG289514
Collect Date: 11/19/2008 10:45
Sample Tag: 01

PrePrep Method: NONE
Prep Method: METHOD
Analytical Method: 8330MOD
Analyst: ECL
Dilution: 1
Units: mg/kg

Instrument: HPLC5
Prep Date: 12/02/2008 08:00
Cal Date: 12/01/2008 20:11
Run Date: 12/03/2008 23:32
File ID: 5L003042.F

Analyte	CAS. Number	Result	Qual	RL	MDL
1,3,5-Trinitrobenzene	99-35-4		U	0.291	0.0971
1,3-Dinitrobenzene	99-65-0		U	0.291	0.0971
2,4,6-Trinitrotoluene	118-96-7		U	0.291	0.0971
2,4-Dinitrotoluene	121-14-2		UJ ~~U~~	0.291	0.0971
2,6-Dinitrotoluene	606-20-2		U	0.291	0.0971
2-Amino-4,6-dinitrotoluene	35572-78-2		U	0.291	0.0971
2-Nitrotoluene	88-72-2		U	0.291	0.0971
3-Nitrotoluene	99-08-1		U	0.291	0.0971
4-Nitrotoluene	99-99-0		U	0.291	0.0971
4-Amino-2,6-dinitrotoluene	19406-51-0		U	0.291	0.0971
HMX	2691-41-0		U	0.291	0.0971
Nitrobenzene	98-95-3		U	0.291	0.0971
RDX	121-82-4		U	0.291	0.0971
Tetryl	479-45-8		U	0.291	0.0971
Nitroglycerin	55-63-0		U	0.291	0.0971

BSL

Surrogate	% Recovery	Lower	Upper	Qual
1,2-Dinitrobenzene	61.9	50	150	

U Undetected; the analyte was analyzed for, but not detected.

Microbac

28 MW 2/5/09

9

Sample Number:	L08110631-09	PrePrep Method:	NONE	Instrument:	HPLC5
Client ID:	MR08-IS394-08D	Prep Method:	METHOD	Prep Date:	12/02/2008 08:00
Matrix:	Soil	Analytical Method:	8330MOD	Cal Date:	12/01/2008 20:11
Workgroup Number:	WG289514	Analyst:	ECL	Run Date:	12/04/2008 22:45
Collect Date:	11/19/2008 11:35	Dilution:	1	File ID:	5L003102.F
Sample Tag:	02	Units:	mg/kg		

Analyte	CAS. Number	Result	Qual	RL	MDL
PETN	78-11-5		U	0.293	0.0976

U Undetected; the analyte was analyzed for, but not detected.

Microbac

 lw 2/5/09

9

Sample Number: L08110631-09
Client ID: MR08-IS394-08D
Matrix: Soil
Workgroup Number: WG289514
Collect Date: 11/19/2008 11:35
Sample Tag: 01

PrePrep Method: NONE
Prep Method: METHOD
Analytical Method: 8330MOD
Analyst: ECL
Dilution: 1
Units: mg/kg

Instrument: HPLC5
Prep Date: 12/02/2008 08:00
Cal Date: 12/01/2008 20:11
Run Date: 12/04/2008 00:10
File ID: 5L003043.F

Analyte	CAS. Number	Result	Qual	RL	MDL	
1,3,5-Trinitrobenzene	99-35-4		U	0.293	0.0976	
1,3-Dinitrobenzene	99-65-0		U	0.293	0.0976	
2,4,6-Trinitrotoluene	118-96-7		U	0.293	0.0976	
2,4-Dinitrotoluene	121-14-2		UJ ~~U~~	0.293	0.0976	MSL
2,6-Dinitrotoluene	606-20-2		U	0.293	0.0976	
2-Amino-4,6-dinitrotoluene	35572-78-2		U	0.293	0.0976	
2-Nitrotoluene	88-72-2		U	0.293	0.0976	
3-Nitrotoluene	99-08-1		U	0.293	0.0976	
4-Nitrotoluene	99-99-0		U	0.293	0.0976	
4-Amino-2,6-dinitrotoluene	19406-51-0		U	0.293	0.0976	
HMX	2691-41-0		U	0.293	0.0976	
Nitrobenzene	98-95-3		UJ ~~U~~	0.293	0.0976	MSL
RDX	121-82-4		U	0.293	0.0976	
Tetryl	479-45-8		U	0.293	0.0976	
Nitroglycerin	55-63-0		U	0.293	0.0976	

Surrogate	% Recovery	Lower	Upper	Qual
1,2-Dinitrobenzene	56.9	50	150	

U Undetected; the analyte was analyzed for, but not detected.

Microbac

29 MW 2/5/09

12

Sample Number: L08110631-12
Client ID: MR08-IS396-08D
Matrix: Soil
Workgroup Number: WG289514
Collect Date: 11/19/2008 13:00
Sample Tag: 02

PrePrep Method: NONE
Prep Method: METHOD
Analytical Method: 8330MOD
Analyst: ECL
Dilution: 1
Units: mg/kg

Instrument: HPLC5
Prep Date: 12/02/2008 08:00
Cal Date: 12/01/2008 20:11
Run Date: 12/04/2008 22:58
File ID: 5L003103.F

Analyte	CAS. Number	Result	Qual	RL	MDL
PETN	78-11-5		U	0.298	0.0994

U Undetected; the analyte was analyzed for, but not detected.

Microbac

33 lw 2/5/09

12

Sample Number: L08110631-12
Client ID: MR08-IS396-08D
Matrix: Soil
Workgroup Number: WG289514
Collect Date: 11/19/2008 13:00
Sample Tag: 01

PrePrep Method: NONE
Prep Method: METHOD
Analytical Method: 8330MOD
Analyst: ECL
Dilution: 1
Units: mg/kg

Instrument: HPLC5
Prep Date: 12/02/2008 08:00
Cal Date: 12/01/2008 20:11
Run Date: 12/04/2008 02:04
File ID: 5L003046.F

Analyte	CAS. Number	Result	Qual	RL	MDL
1,3,5-Trinitrobenzene	99-35-4		U	0.298	0.0994
1,3-Dinitrobenzene	99-65-0		U	0.298	0.0994
2,4,6-Trinitrotoluene	118-96-7		U	0.298	0.0994
2,4-Dinitrotoluene	121-14-2		UJ ~~U~~	0.298	0.0994 BSL
2,6-Dinitrotoluene	606-20-2		U	0.298	0.0994
2-Amino-4,6-dinitrotoluene	35572-78-2		U	0.298	0.0994
2-Nitrotoluene	88-72-2		U	0.298	0.0994
3-Nitrotoluene	99-08-1		U	0.298	0.0994
4-Nitrotoluene	99-99-0		U	0.298	0.0994
4-Amino-2,6-dinitrotoluene	19406-51-0		U	0.298	0.0994
HMX	2691-41-0		U	0.298	0.0994
Nitrobenzene	98-95-3		U	0.298	0.0994
RDX	121-82-4		U	0.298	0.0994
Tetryl	479-45-8		U	0.298	0.0994
Nitroglycerin	55-63-0		U	0.298	0.0994

Surrogate	% Recovery	Lower	Upper	Qual
1,2-Dinitrobenzene	59.0	50	150	

U Undetected; the analyte was analyzed for, but not detected.

Microbac

34 lw 2/5/09

13

Sample Number: L08110631-13
Client ID: MR08-SS395-08D
Matrix: Soil
Workgroup Number: WG289514
Collect Date: 11/19/2008 14:55
Sample Tag: 02

PrePrep Method: NONE
Prep Method: METHOD
Analytical Method: 8330MOD
Analyst: ECL
Dilution: 1
Units: mg/kg

Instrument: HPLC5
Prep Date: 12/02/2008 08:00
Cal Date: 12/01/2008 20:11
Run Date: 12/04/2008 23:11
File ID: 5L003104.F

Analyte	CAS. Number	Result	Qual	RL	MDL
PETN	78-11-5		U	0.289	0.0963

U Undetected; the analyte was analyzed for, but not detected.

Microbac

 lw 2/5/09

13

Sample Number: L08110631-13
Client ID: MR08-SS395-08D
Matrix: Soil
Workgroup Number: WG289514
Collect Date: 11/19/2008 14:55
Sample Tag: 01

PrePrep Method: NONE
Prep Method: METHOD
Analytical Method: 8330MOD
Analyst: ECL
Dilution: 1
Units: mg/kg

Instrument: HPLC5
Prep Date: 12/02/2008 08:00
Cal Date: 12/01/2008 20:11
Run Date: 12/04/2008 02:42
File ID: 5L003047.F

Analyte	CAS. Number	Result	Qual	RL	MDL
1,3,5-Trinitrobenzene	99-35-4		U	0.289	0.0963
1,3-Dinitrobenzene	99-65-0		U	0.289	0.0963
2,4,6-Trinitrotoluene	118-96-7		U	0.289	0.0963
2,4-Dinitrotoluene	121-14-2		UJ ~~U~~	0.289	0.0963 BSL
2,6-Dinitrotoluene	606-20-2		U	0.289	0.0963
2-Amino-4,6-dinitrotoluene	35572-78-2		U	0.289	0.0963
2-Nitrotoluene	88-72-2		U	0.289	0.0963
3-Nitrotoluene	99-08-1		U	0.289	0.0963
4-Nitrotoluene	99-99-0		U	0.289	0.0963
4-Amino-2,6-dinitrotoluene	19406-51-0		U	0.289	0.0963
HMX	2691-41-0		U	0.289	0.0963
Nitrobenzene	98-95-3		U	0.289	0.0963
RDX	121-82-4		U	0.289	0.0963
Tetryl	479-45-8		U	0.289	0.0963
Nitroglycerin	55-63-0		U	0.289	0.0963

Surrogate	% Recovery	Lower	Upper	Qual
1,2-Dinitrobenzene	66.5	50	150	

U Undetected; the analyte was analyzed for, but not detected.

Microbac

35 lw 2/5/09

14

Sample Number: L08110631-14
Client ID: MR08-SS395D-08D
Matrix: Soil
Workgroup Number: WG289514
Collect Date: 11/19/2008 15:00
Sample Tag: 02

PrePrep Method: NONE
Prep Method: METHOD
Analytical Method: 8330MOD
Analyst: ECL
Dilution: 1
Units: mg/kg

Instrument: HPLC5
Prep Date: 12/02/2008 08:00
Cal Date: 12/01/2008 20:11
Run Date: 12/04/2008 23:24
File ID: 5L003105.F

Analyte	CAS. Number	Result	Qual	RL	MDL
PETN	78-11-5		U	0.297	0.0989

U Undetected; the analyte was analyzed for, but not detected.

Microbac

lw
2/5/09

14

Sample Number: L08110631-14
Client ID: MR08-SS395D-08D
Matrix: Soil
Workgroup Number: WG289514
Collect Date: 11/19/2008 15:00
Sample Tag: 01

PrePrep Method: NONE
Prep Method: METHOD
Analytical Method: 8330MOD
Analyst: ECL
Dilution: 1
Units: mg/kg

Instrument: HPLC5
Prep Date: 12/02/2008 08:00
Cal Date: 12/01/2008 20:11
Run Date: 12/04/2008 03:21
File ID: 5L003048.F

Analyte	CAS. Number	Result	Qual	RL	MDL
1,3,5-Trinitrobenzene	99-35-4		U	0.297	0.0989
1,3-Dinitrobenzene	99-65-0		U	0.297	0.0989
2,4,6-Trinitrotoluene	118-96-7		U	0.297	0.0989
2,4-Dinitrotoluene	121-14-2		UJ ~~U~~	0.297	0.0989
2,6-Dinitrotoluene	606-20-2		U	0.297	0.0989
2-Amino-4,6-dinitrotoluene	35572-78-2		U	0.297	0.0989
2-Nitrotoluene	88-72-2		U	0.297	0.0989
3-Nitrotoluene	99-08-1		U	0.297	0.0989
4-Nitrotoluene	99-99-0		U	0.297	0.0989
4-Amino-2,6-dinitrotoluene	19406-51-0		U	0.297	0.0989
HMX	2691-41-0		U	0.297	0.0989
Nitrobenzene	98-95-3		U	0.297	0.0989
RDX	121-82-4		U	0.297	0.0989
Tetryl	479-45-8		U	0.297	0.0989
Nitroglycerin	55-63-0		U	0.297	0.0989

BSL

Surrogate	% Recovery	Lower	Upper	Qual
1,2-Dinitrobenzene	58.6	50	150	

U Undetected; the analyte was analyzed for, but not detected.

Microbac

38 MW 2/5/09

15

Sample Number: L08110631-15
Client ID: MR08-SS393-08D
Matrix: Soil
Workgroup Number: WG289514
Collect Date: 11/19/2008 15:45
Sample Tag: 02

PrePrep Method: NONE
Prep Method: METHOD
Analytical Method: 8330MOD
Analyst: ECL
Dilution: 1
Units: mg/kg

Instrument: HPLC5
Prep Date: 12/02/2008 08:00
Cal Date: 12/01/2008 20:11
Run Date: 12/04/2008 23:37
File ID: 5L003106.F

Analyte	CAS. Number	Result	Qual	RL	MDL
PETN	78-11-5		U	0.290	0.0966

U Undetected; the analyte was analyzed for, but not detected.

Microbac

40 MW 2/5/09

15

Sample Number: L08110631-15
Client ID: MR08-SS393-08D
Matrix: Soil
Workgroup Number: WG289514
Collect Date: 11/19/2008 15:45
Sample Tag: 01

PrePrep Method: NONE
Prep Method: METHOD
Analytical Method: 8330MOD
Analyst: ECL
Dilution: 1
Units: mg/kg

Instrument: HPLC5
Prep Date: 12/02/2008 08:00
Cal Date: 12/01/2008 20:11
Run Date: 12/04/2008 03:59
File ID: 5L003049.F

Analyte	CAS. Number	Result	Qual	RL	MDL
1,3,5-Trinitrobenzene	99-35-4		U	0.290	0.0966
1,3-Dinitrobenzene	99-65-0		U	0.290	0.0966
2,4,6-Trinitrotoluene	118-96-7		U	0.290	0.0966
2,4-Dinitrotoluene	121-14-2		UJ ~~U~~	0.290	0.0966
2,6-Dinitrotoluene	606-20-2		U	0.290	0.0966
2-Amino-4,6-dinitrotoluene	35572-78-2		U	0.290	0.0966
2-Nitrotoluene	88-72-2		U	0.290	0.0966
3-Nitrotoluene	99-08-1		U	0.290	0.0966
4-Nitrotoluene	99-99-0		U	0.290	0.0966
4-Amino-2,6-dinitrotoluene	19406-51-0		U	0.290	0.0966
HMX	2691-41-0		U	0.290	0.0966
Nitrobenzene	98-95-3		U	0.290	0.0966
RDX	121-82-4		U	0.290	0.0966
Tetryl	479-45-8		U	0.290	0.0966
Nitroglycerin	55-63-0		U	0.290	0.0966

BSL

Surrogate	% Recovery	Lower	Upper	Qual
1,2-Dinitrobenzene	52.2	50	150	

U Undetected; the analyte was analyzed for, but not detected.

Microbac

lw
2/5/09

16

Sample Number: L08110631-16
Client ID: MR08-SS392-08D
Matrix: Soil
Workgroup Number: WG289514
Collect Date: 11/19/2008 16:00
Sample Tag: 02

PrePrep Method: NONE
Prep Method: METHOD
Analytical Method: 8330MOD
Analyst: ECL
Dilution: 1
Units: mg/kg

Instrument: HPLC5
Prep Date: 12/02/2008 08:00
Cal Date: 12/01/2008 20:11
Run Date: 12/04/2008 23:51
File ID: 5L003107.F

Analyte	CAS. Number	Result	Qual	RL	MDL
PETN	78-11-5		U	0.297	0.0989

U Undetected; the analyte was analyzed for, but not detected.

Microbac

41 lw 2/5/09

16

Sample Number: L08110631-16
Client ID: MR08-SS392-08D
Matrix: Soil
Workgroup Number: WG289514
Collect Date: 11/19/2008 16:00
Sample Tag: 01

PrePrep Method: NONE
Prep Method: METHOD
Analytical Method: 8330MOD
Analyst: ECL
Dilution: 1
Units: mg/kg

Instrument: HPLC5
Prep Date: 12/02/2008 08:00
Cal Date: 12/01/2008 20:11
Run Date: 12/04/2008 04:37
File ID: 5L003050.F

Analyte	CAS. Number	Result	Qual	RL	MDL
1,3,5-Trinitrobenzene	99-35-4		U	0.297	0.0989
1,3-Dinitrobenzene	99-65-0		U	0.297	0.0989
2,4,6-Trinitrotoluene	118-96-7		U	0.297	0.0989
2,4-Dinitrotoluene	121-14-2		~~U~~ UJ	0.297	0.0989 BSL
2,6-Dinitrotoluene	606-20-2		U	0.297	0.0989
2-Amino-4,6-dinitrotoluene	35572-78-2		U	0.297	0.0989
2-Nitrotoluene	88-72-2		U	0.297	0.0989
3-Nitrotoluene	99-08-1		U	0.297	0.0989
4-Nitrotoluene	99-99-0		U	0.297	0.0989
4-Amino-2,6-dinitrotoluene	19406-51-0		U	0.297	0.0989
HMX	2691-41-0		U	0.297	0.0989
Nitrobenzene	98-95-3		U	0.297	0.0989
RDX	121-82-4		U	0.297	0.0989
Tetryl	479-45-8		U	0.297	0.0989
Nitroglycerin	55-63-0		U	0.297	0.0989

Surrogate	% Recovery	Lower	Upper	Qual
1,2-Dinitrobenzene	56.0	50	150	

U Undetected; the analyte was analyzed for, but not detected.

Microbac

42 MW 2/5/09

17

Sample Number: L08110631-17
Client ID: MR08-SS391-08D
Matrix: Soil
Workgroup Number: WG289514
Collect Date: 11/19/2008 16:30
Sample Tag: 02

PrePrep Method: NONE
Prep Method: METHOD
Analytical Method: 8330MOD
Analyst: ECL
Dilution: 1
Units: mg/kg

Instrument: HPLC5
Prep Date: 12/02/2008 08:00
Cal Date: 12/01/2008 20:11
Run Date: 12/05/2008 00:30
File ID: 5L003110.F

Analyte	CAS. Number	Result	Qual	RL	MDL
PETN	78-11-5		U	0.300	0.100

U Undetected; the analyte was analyzed for, but not detected.

Microbac

44 MW
2/5/09

17

Sample Number: L08110631-17
Client ID: MR08-SS391-08D
Matrix: Soil
Workgroup Number: WG289514
Collect Date: 11/19/2008 16:30
Sample Tag: 01

PrePrep Method: NONE
Prep Method: METHOD
Analytical Method: 8330MOD
Analyst: ECL
Dilution: 1
Units: mg/kg

Instrument: HPLC5
Prep Date: 12/02/2008 08:00
Cal Date: 12/01/2008 20:11
Run Date: 12/04/2008 06:31
File ID: 5L003053.F

Analyte	CAS. Number	Result	Qual	RL	MDL
1,3,5-Trinitrobenzene	99-35-4		U	0.300	0.100
1,3-Dinitrobenzene	99-65-0		U	0.300	0.100
2,4,6-Trinitrotoluene	118-96-7		U	0.300	0.100
2,4-Dinitrotoluene	121-14-2		UJ ~~U~~	0.300	0.100 BSL
2,6-Dinitrotoluene	606-20-2		U	0.300	0.100
2-Amino-4,6-dinitrotoluene	35572-78-2		U	0.300	0.100
2-Nitrotoluene	88-72-2		U	0.300	0.100
3-Nitrotoluene	99-08-1		U	0.300	0.100
4-Nitrotoluene	99-99-0		U	0.300	0.100
4-Amino-2,6-dinitrotoluene	19406-51-0		U	0.300	0.100
HMX	2691-41-0		U	0.300	0.100
Nitrobenzene	98-95-3		U	0.300	0.100
RDX	121-82-4		U	0.300	0.100
Tetryl	479-45-8		U	0.300	0.100
Nitroglycerin	55-63-0		U	0.300	0.100

Surrogate	% Recovery	Lower	Upper	Qual
1,2-Dinitrobenzene	59.0	50	150	

U Undetected; the analyte was analyzed for, but not detected.

Microbac

43 LW 2/5/09

18

Sample Number: L08110631-18
Client ID: MR08-SS391D-08D
Matrix: Soil
Workgroup Number: WG289514
Collect Date: 11/19/2008 16:35
Sample Tag: 02

PrePrep Method: NONE
Prep Method: METHOD
Analytical Method: 8330MOD
Analyst: ECL
Dilution: 1
Units: mg/kg

Instrument: HPLC5
Prep Date: 12/02/2008 08:00
Cal Date: 12/01/2008 20:11
Run Date: 12/05/2008 00:43
File ID: 5L003111.F

Analyte	CAS. Number	Result	Qual	RL	MDL
PETN	78-11-5		U	0.300	0.0999

U Undetected; the analyte was analyzed for, but not detected.

Microbac

45 lw 2/5/09

18

Sample Number: L08110631-18
Client ID: MR08-SS391D-08D
Matrix: Soil
Workgroup Number: WG289514
Collect Date: 11/19/2008 16:35
Sample Tag: 01

PrePrep Method: NONE
Prep Method: METHOD
Analytical Method: 8330MOD
Analyst: ECL
Dilution: 1
Units: mg/kg

Instrument: HPLC5
Prep Date: 12/02/2008 08:00
Cal Date: 12/01/2008 20:11
Run Date: 12/04/2008 07:09
File ID: 5L003054.F

Analyte	CAS. Number	Result	Qual	RL	MDL
1,3,5-Trinitrobenzene	99-35-4		U	0.300	0.0999
1,3-Dinitrobenzene	99-65-0		U	0.300	0.0999
2,4,6-Trinitrotoluene	118-96-7		U	0.300	0.0999
2,4-Dinitrotoluene	121-14-2		UJ ~~U~~	0.300	0.0999
2,6-Dinitrotoluene	606-20-2		U	0.300	0.0999
2-Amino-4,6-dinitrotoluene	35572-78-2		U	0.300	0.0999
2-Nitrotoluene	88-72-2		U	0.300	0.0999
3-Nitrotoluene	99-08-1		U	0.300	0.0999
4-Nitrotoluene	99-99-0		U	0.300	0.0999
4-Amino-2,6-dinitrotoluene	19406-51-0		U	0.300	0.0999
HMX	2691-41-0		U	0.300	0.0999
Nitrobenzene	98-95-3		U	0.300	0.0999
RDX	121-82-4		U	0.300	0.0999
Tetryl	479-45-8		U	0.300	0.0999
Nitroglycerin	55-63-0		U	0.300	0.0999

BSL

Surrogate	% Recovery	Lower	Upper	Qual
1,2-Dinitrobenzene	60.0	50	150	

U Undetected; the analyte was analyzed for, but not detected.

Microbac

46 LW 2/5/09

19

Sample Number: L08110631-19
Client ID: MR08-SS390-08D
Matrix: Soil
Workgroup Number: WG289514
Collect Date: 11/19/2008 17:00
Sample Tag: 02

PrePrep Method: NONE
Prep Method: METHOD
Analytical Method: 8330MOD
Analyst: ECL
Dilution: 1
Units: mg/kg

Instrument: HPLC5
Prep Date: 12/02/2008 08:00
Cal Date: 12/01/2008 20:11
Run Date: 12/05/2008 00:56
File ID: 5L003112.F

Analyte	CAS. Number	Result	Qual	RL	MDL
PETN	78-11-5		U	0.296	0.0988

U Undetected; the analyte was analyzed for, but not detected.

Microbac

MW 2/5/09

19

Sample Number: L08110631-19
Client ID: MR08-SS390-08D
Matrix: Soil
Workgroup Number: WG289514
Collect Date: 11/19/2008 17:00
Sample Tag: 01

PrePrep Method: NONE
Prep Method: METHOD
Analytical Method: 8330MOD
Analyst: ECL
Dilution: 1
Units: mg/kg

Instrument: HPLC5
Prep Date: 12/02/2008 08:00
Cal Date: 12/01/2008 20:11
Run Date: 12/04/2008 07:48
File ID: 5L003055.F

Analyte	CAS. Number	Result	Qual	RL	MDL
1,3,5-Trinitrobenzene	99-35-4		U	0.296	0.0988
1,3-Dinitrobenzene	99-65-0		U	0.296	0.0988
2,4,6-Trinitrotoluene	118-96-7		U	0.296	0.0988
2,4-Dinitrotoluene	121-14-2		UJ ~~U~~	0.296	0.0988
2,6-Dinitrotoluene	606-20-2		U	0.296	0.0988
2-Amino-4,6-dinitrotoluene	35572-78-2		U	0.296	0.0988
2-Nitrotoluene	88-72-2		U	0.296	0.0988
3-Nitrotoluene	99-08-1		U	0.296	0.0988
4-Nitrotoluene	99-99-0		U	0.296	0.0988
4-Amino-2,6-dinitrotoluene	19406-51-0		U	0.296	0.0988
HMX	2691-41-0		U	0.296	0.0988
Nitrobenzene	98-95-3		U	0.296	0.0988
RDX	121-82-4		U	0.296	0.0988
Tetryl	479-45-8		U	0.296	0.0988
Nitroglycerin	55-63-0		U	0.296	0.0988

OSL

Surrogate	% Recovery	Lower	Upper	Qual
1,2-Dinitrobenzene	59.0	50	150	

U Undetected; the analyte was analyzed for, but not detected.

Microbac

47 lw 2/5/09

20

Sample Number: L08110631-20
Client ID: MR08-EB111908
Matrix: Water
Workgroup Number: WG289008
Collect Date: 11/19/2008 18:00
Sample Tag: 02

PrePrep Method: NONE
Prep Method: 3535
Analytical Method: 8330MOD
Analyst: ECL
Dilution: 1
Units: ug/L

Instrument: HPLC5
Prep Date: 11/24/2008 09:30
Cal Date: 08/12/2008 15:23
Run Date: 11/26/2008 18:26
File ID: 5L002962.F

Analyte	CAS. Number	Result	Qual	RL	MDL
PETN	78-11-5		U	1.04	0.260

U Undetected; the analyte was analyzed for, but not detected.

Microbac

RW
2/5/09

20

Sample Number: L08110631-20
Client ID: MR08-EB111908
Matrix: Water
Workgroup Number: WG289008
Collect Date: 11/19/2008 18:00
Sample Tag: 01

PrePrep Method: NONE
Prep Method: 3535
Analytical Method: 8330MOD
Analyst: ECL
Dilution: 1
Units: ug/L

Instrument: HPLC4
Prep Date: 11/24/2008 09:30
Cal Date: 10/30/2008 18:13
Run Date: 11/26/2008 00:54
File ID: 4L014582.F

Analyte	CAS. Number	Result	Qual	RL	MDL
1,3,5-Trinitrobenzene	99-35-4		U	1.04	0.260
1,3-Dinitrobenzene	99-65-0		U	1.04	0.260
2,4,6-Trinitrotoluene	118-96-7		U	1.04	0.260
2,4-Dinitrotoluene	121-14-2		U	1.04	0.260
2,6-Dinitrotoluene	606-20-2		U	1.04	0.260
2-Amino-4,6-dinitrotoluene	35572-78-2		U	1.04	0.260
2-Nitrotoluene	88-72-2		U	1.04	0.260
3-Nitrotoluene	99-08-1		U	1.04	0.260
4-Nitrotoluene	99-99-0		U	1.04	0.260
4-Amino-2,6-dinitrotoluene	19406-51-0		U	1.04	0.260
HMX	2691-41-0		U	1.04	0.260
Nitrobenzene	98-95-3		U	1.04	0.260
RDX	121-82-4		U	1.04	0.260
Tetryl	479-45-8		U	1.04	0.260
Nitroglycerin	55-63-0		U	1.04	0.260

Surrogate	% Recovery	Lower	Upper	Qual
1,2-Dinitrobenzene	81.1	50	150	

U Undetected; the analyte was analyzed for, but not detected.

Microbac

50 MW 2/5/09

ENVIRONMENTAL
Data Services, Inc.

METALS

USEPA Region IV - Level IV Review

Site: MCB Camp Lejeune, TO-09 SDG #: L08110631

Client: CH2M HILL, Inc., Virginia Beach, Virginia Date: February 3, 2009

Laboratory: Microbac Laboratories, Inc., Marietta, Ohio Reviewer: Nancy Weaver

EDS ID	Client Sample ID	Laboratory Sample ID	Matrix
1	MR08-SS388-08D	L08110631-01	Soil
2	MR08-IS388-08D	L08110631-02	Soil
3	MR08-SS389-08D	L08110631-03	Soil
4MS	MR08-SS389-08DMS	L08110631-04MS	Soil
5MSD	MR08-SS389-08DMSD	L08110631-05MSD	Soil
6	MR08-IS389-08D	L08110631-06	Soil
7	MR08-IS389D-08D	L08110631-07	Soil
8	MR08-SS394-08D	L08110631-08	Soil
9	MR08-IS394-08D	L08110631-09	Soil
10MS	MR08-IS394-08DMS	L08110631-10MS	Soil
11MSD	MR08-IS394-08DMSD	L08110631-11MSD	Soil
12	MR08-IS396-08D	L08110631-12	Soil
13	MR08-SS395-08D	L08110631-13	Soil
14	MR08-SS395D-08D	L08110631-14	Soil
15	MR08-SS393-08D	L08110631-15	Soil
16	MR08-SS392-08D	L08110631-16	Soil
17	MR08-SS391-08D	L08110631-17	Soil
18	MR08-SS391D-08D	L08110631-18	Soil
19	MR08-SS390-08D	L08110631-19	Soil
20	MR08-EB111908	L08110631-20	Water

The USEPA "Contract Laboratory Program National Functional Guidelines for Inorganic Data Review," October 2004, and professional judgement were used in evaluating the data in this summary report.

Holding Times - All samples were prepared and analyzed within 28 days for mercury and 180 days for all other metals.

Calibration - The ICV and CCV %R values were acceptable.

Method and Calibration Blanks - All criteria were met.

Field and Equipment Blank - Field QC results are summarized below.

Blank ID	Compound	Conc. ug/L	Action Level ug/L	Qualifier	Affected Samples
MR08-EB111908	None - ND	-	-	-	-
MR08-FB112008	None - ND	-	-	-	-

ICP Interference Check Sample - All %R values were acceptable.

MS/MSD - A MS/MSD sample was not analyzed.

LCS - The LCS samples exhibited acceptable %R values.

ICP Serial Dilution - The ICP serial dilution sample exhibited acceptable %D values.

Field Duplicates - Field duplicate results are summarized below.

Compound	MR08-IS389-08D mg/kg	MR08-IS389D-08D mg/kg	RPD	Qualifier
Arsenic	0.0984	0.170	53%	None
Barium	2.27	3.62	46%	None
Chromium	5.36	7.63	35%	None
Copper	0.705	0.963	31%	None
Lead	1.45	1.51	4%	None
Silver	0.231	0.832 U	NC	None
Zinc	0.531	0.839	45%	None

Compound	MR08-SS395-08D mg/kg	MR08-SS395D-08D mg/kg	RPD	Qualifier
Antimony	0.471	1.59 U	NC	None
Arsenic	5.43	6.10	12%	None
Barium	8.43	8.65	3%	None
Cadmium	0.0560	0.0706	23%	None
Chromium	3.57	3.26	9%	None
Copper	3.52	3.75	6%	None
Lead	16.2	21.2	27%	None
Selenium	0.135	0.141	4%	None
Silver	0.262	0.265	1%	None
Zinc	24.4	26.1	7%	None

Compound	MR08-SS391-08D mg/kg	MR08-SS391D-08D mg/kg	RPD	Qualifier
Antimony	0.451	1.71 U	NC	None
Arsenic	1.66	1.59	4%	None
Barium	12.7	12.1	5%	None
Cadmium	0.147	0.149	1%	None
Chromium	5.55	5.47	1%	None
Copper	4.91	4.58	7%	None
Lead	39.8	36.3	9%	None
Selenium	0.297	0.269	10%	None
Silver	0.317	0.853 U	NC	None
Zinc	38.2	40.6	6%	None

Compound Quantitation - EDS sample #s 1 and 16 exhibited high concentrations of lead. The laboratory diluted and reanalyzed these samples.

Report Number: L08110631
Report Date : December 9, 2008

Sample Number: L08110631-01
Client ID: MR08-SS388-08D
Matrix: Soil
Workgroup Number: WG289241
Collect Date: 11/19/2008 07:30
Sample Tag: 01

PrePrep Method: NONE
Prep Method: 3051
Analytical Method: 6010B
Analyst: KHR
Dilution: 1
Units: mg/kg

Instrument: IRIS-ICP
Prep Date: 11/26/2008 12:00
Cal Date: 12/02/2008 10:30
Run Date: 12/02/2008 13:39
File ID: IR.120208.133900
Percent Solid: 84.3

Analyte	CAS. Number	Result	Qual	RL	MDL
Silver, Total	7440-22-4	0.394	J	0.874	0.219
Barium, Total	7440-39-3	11.8		0.437	0.0874
Cadmium, Total	7440-43-9	0.185		0.175	0.0437
Chromium, Total	7440-47-3	4.22		0.874	0.105
Copper, Total	7440-50-8	5.55		1.75	0.437
Antimony, Total	7440-36-0	0.548	J	1.75	0.437
Zinc, Total	7440-66-6	23.6		1.75	0.437

J Estimated ; the analyte concentration was less than the low standard (LOQ)

Microbac

352 fw 2/3/09

Report Number: L08110631
Report Date : December 9, 2008

1

Sample Number:	L08110631-01	PrePrep Method:	NONE	Instrument:	ELAN-ICP
Client ID:	MR08-SS388-08D	Prep Method:	3051	Prep Date:	11/25/2008 13:46
Matrix:	Soil	Analytical Method:	6020	Cal Date:	12/03/2008 12:07
Workgroup Number:	WG289513	Analyst:	JYH	Run Date:	12/03/2008 21:01
Collect Date:	11/19/2008 07:30	Dilution:	1	File ID:	EL.120308.210128
Sample Tag:	01	Units:	mg/kg	Percent Solid:	84.3

Analyte	CAS. Number	Result	Qual	RL	MDL
Arsenic, Total	7440-38-2	2.06		0.355	0.0888
Selenium, Total	7782-49-2	0.184	J	0.474	0.118

J Estimated ; the analyte concentration was less than the low standard (LOQ)

Microbac

932 MW 2/3/09

1

Sample Number: L08110631-01
Client ID: MR08-SS388-08D
Matrix: Soil
Workgroup Number: WG289513
Collect Date: 11/19/2008 07:30
Sample Tag: DL01

PrePrep Method: NONE
Prep Method: 3051
Analytical Method: 6020
Analyst: JYH
Dilution: 10
Units: mg/kg

Instrument: ELAN-ICP
Prep Date: 11/25/2008 13:46
Cal Date: 12/04/2008 11:09
Run Date: 12/04/2008 14:48
File ID: EL.120408.144822
Percent Solid: 84.3

Analyte	CAS. Number	Result	Qual	RL	MDL
Lead, Total	7439-92-1	59.1		4.74	1.18

Microbac

CW 2/3/09

Report Number: L08110631

Report Date : December 9, 2008

1

Sample Number:	L08110631-01	PrePrep Method:	NONE	Instrument:	HYDRA
Client ID:	MR08-SS388-08D	Prep Method:	7471A	Prep Date:	11/25/2008 13:44
Matrix:	Soil	Analytical Method:	7471A	Cal Date:	12/03/2008 13:52
Workgroup Number:	WG289406	Analyst:	ADC	Run Date:	12/03/2008 14:05
Collect Date:	11/19/2008 07:30	Dilution:	1	File ID:	HY.120308.140553
Sample Tag:	02	Units:	mg/kg	Percent Solid:	84.3

Analyte	CAS. Number	Result	Qual	RL	MDL
Mercury, Total	7439-97-6	0.0234	J	0.114	0.0228

J Estimated ; the analyte concentration was less than the low standard (LOQ)

Microbac

1794 lw 2/3/09

2

Sample Number: L08110631-02
Client ID: MR08-IS388-08D
Matrix: Soil
Workgroup Number: WG289241
Collect Date: 11/19/2008 08:45
Sample Tag: 01

PrePrep Method: NONE
Prep Method: 3051
Analytical Method: 6010B
Analyst: KHR
Dilution: 1
Units: mg/kg

Instrument: IRIS-ICP
Prep Date: 11/26/2008 12:00
Cal Date: 12/02/2008 10:30
Run Date: 12/02/2008 13:45
File ID: IR.120208.134500
Percent Solid: 92.7

Analyte	CAS. Number	Result	Qual	RL	MDL
Silver, Total	7440-22-4	0.264	J	0.804	0.201
Barium, Total	7440-39-3	3.51		0.402	0.0804
Cadmium, Total	7440-43-9		U	0.161	0.0402
Chromium, Total	7440-47-3	11.9		0.804	0.0965
Copper, Total	7440-50-8	1.72		1.61	0.402
Antimony, Total	7440-36-0		U	1.61	0.402
Zinc, Total	7440-66-6	0.937	J	1.61	0.402

U Undetected; the analyte was analyzed for, but not detected.
J Estimated ; the analyte concentration was less than the low standard (LOQ)

Microbac

 DW 2/3/09

2

Sample Number: L08110631-02
Client ID: MR08-IS388-08D
Matrix: Soil
Workgroup Number: WG289513
Collect Date: 11/19/2008 08:45
Sample Tag: 01

PrePrep Method: NONE
Prep Method: 3051
Analytical Method: 6020
Analyst: JYH
Dilution: 1
Units: mg/kg

Instrument: ELAN-ICP
Prep Date: 11/25/2008 13:46
Cal Date: 12/03/2008 12:07
Run Date: 12/03/2008 21:06
File ID: EL.120308.210653
Percent Solid: 92.7

Analyte	CAS. Number	Result	Qual	RL	MDL
Arsenic, Total	7440-38-2	0.769		0.312	0.0781
Lead, Total	7439-92-1	1.59		0.416	0.104
Selenium, Total	7782-49-2		U	0.416	0.104

U Undetected; the analyte was analyzed for, but not detected.

Microbac

lw
2/3/09

2

Sample Number:	L08110631-02	PrePrep Method:	NONE	Instrument:	HYDRA
Client ID:	MR08-IS388-08D	Prep Method:	7471A	Prep Date:	11/25/2008 13:45
Matrix:	Soil	Analytical Method:	7471A	Cal Date:	12/03/2008 13:52
Workgroup Number:	WG289406	Analyst:	ADC	Run Date:	12/03/2008 14:07
Collect Date:	11/19/2008 08:45	Dilution:	1	File ID:	HY.120308.140747
Sample Tag:	02	Units:	mg/kg	Percent Solid:	92.7

Analyte	CAS. Number	Result	Qual	RL	MDL
Mercury, Total	7439-97-6		U	0.106	0.0213

U Undetected; the analyte was analyzed for, but not detected.

Microbac

1795 LW 2/3/09

3

Sample Number: L08110631-03
Client ID: MR08-SS389-08D
Matrix: Soil
Workgroup Number: WG289241
Collect Date: 11/19/2008 09:30
Sample Tag: 01

PrePrep Method: NONE
Prep Method: 3051
Analytical Method: 6010B
Analyst: KHR
Dilution: 1
Units: mg/kg

Instrument: IRIS-ICP
Prep Date: 11/26/2008 12:00
Cal Date: 12/02/2008 10:30
Run Date: 12/02/2008 14:09
File ID: IR.120208.140900
Percent Solid: 91.7

Analyte	CAS. Number	Result	Qual	RL	MDL
Silver, Total	7440-22-4	0.444	J	0.759	0.190
Barium, Total	7440-39-3	12.0		0.380	0.0759
Cadmium, Total	7440-43-9	0.146	J	0.152	0.0380
Chromium, Total	7440-47-3	5.67		0.759	0.0911
Copper, Total	7440-50-8	0.922	J	1.52	0.380
Antimony, Total	7440-36-0		U	1.52	0.380
Zinc, Total	7440-66-6	4.39		1.52	0.380

U Undetected; the analyte was analyzed for, but not detected.
J Estimated ; the analyte concentration was less than the low standard (LOQ)

Microbac

 lw 2/3/09

3

Sample Number: L08110631-03
Client ID: MR08-SS389-08D
Matrix: Soil
Workgroup Number: WG289513
Collect Date: 11/19/2008 09:30
Sample Tag: 01

PrePrep Method: NONE
Prep Method: 3051
Analytical Method: 6020
Analyst: JYH
Dilution: 1
Units: mg/kg

Instrument: ELAN-ICP
Prep Date: 11/25/2008 13:46
Cal Date: 12/03/2008 12:07
Run Date: 12/03/2008 20:45
File ID: EL.120308.204515
Percent Solid: 91.7

Analyte	CAS. Number	Result	Qual	RL	MDL
Arsenic, Total	7440-38-2	0.638		0.326	0.0815
Lead, Total	7439-92-1	3.10		0.435	0.109
Selenium, Total	7782-49-2	0.333	J	0.435	0.109

J Estimated ; the analyte concentration was less than the low standard (LOQ)

Microbac

 DW 2/3/09

3

Sample Number: L08110631-03
Client ID: MR08-SS389-08D
Matrix: Soil
Workgroup Number: WG289406
Collect Date: 11/19/2008 09:30
Sample Tag: 02

PrePrep Method: NONE
Prep Method: 7471A
Analytical Method: 7471A
Analyst: ADC
Dilution: 1
Units: mg/kg

Instrument: HYDRA
Prep Date: 11/25/2008 13:45
Cal Date: 12/03/2008 13:52
Run Date: 12/03/2008 14:09
File ID: HY.120308.140931
Percent Solid: 91.7

Analyte	CAS. Number	Result	Qual	RL	MDL
Mercury, Total	7439-97-6		U	0.108	0.0216

U Undetected; the analyte was analyzed for, but not detected.

Microbac

1796 LW 2/3/09

6

Sample Number: L08110631-06
Client ID: MR08-IS389-08C
Matrix: Soil
Workgroup Number: WG289241
Collect Date: 11/19/2008 10:10
Sample Tag: 01

PrePrep Method: NONE
Prep Method: 3051
Analytical Method: 6010B
Analyst: KHR
Dilution: 1
Units: mg/kg

Instrument: IRIS-ICP
Prep Date: 11/26/2008 12:00
Cal Date: 12/02/2008 10:30
Run Date: 12/02/2008 14:28
File ID: IR.120208.142800
Percent Solid: 92.0

Analyte	CAS. Number	Result	Qual	RL	MDL
Silver, Total	7440-22-4	0.231	J	0.836	0.209
Barium, Total	7440-39-3	2.27		0.418	0.0836
Cadmium, Total	7440-43-9		U	0.167	0.0418
Chromium, Total	7440-47-3	5.36		0.836	0.100
Copper, Total	7440-50-8	0.705	J	1.67	0.418
Antimony, Total	7440-36-0		U	1.67	0.418
Zinc, Total	7440-66-6	0.531	J	1.67	0.418

U Undetected; the analyte was analyzed for, but not detected.
J Estimated ; the analyte concentration was less than the low standard (LOQ)

Microbac

 kw 2/3/09

6

Sample Number: L08110631-06
Client ID: MR08-IS389-08C
Matrix: Soil
Workgroup Number: WG289513
Collect Date: 11/19/2008 10:10
Sample Tag: 01

PrePrep Method: NONE
Prep Method: 3051
Analytical Method: 6020
Analyst: JYH
Dilution: 1
Units: mg/kg

Instrument: ELAN-ICP
Prep Date: 11/25/2008 13:46
Cal Date: 12/03/2008 12:07
Run Date: 12/03/2008 21:34
File ID: EL.120308.213422
Percent Solid: 92.0

Analyte	CAS. Number	Result	Qual	RL	MDL
Arsenic, Total	7440-38-2	0.0984	J	0.324	0.0809
Lead, Total	7439-92-1	1.45		0.431	0.108
Selenium, Total	7782-49-2		U	0.431	0.108

U Undetected; the analyte was analyzed for, but not detected.
J Estimated ; the analyte concentration was less than the low standard (LOQ)

Microbac

938 MW 2/3/09

6

Sample Number: L08110631-06
Client ID: MR08-IS389-08C
Matrix: Soil
Workgroup Number: WG289406
Collect Date: 11/19/2008 10:10
Sample Tag: 02

PrePrep Method: NONE
Prep Method: 7471A
Analytical Method: 7471A
Analyst: ADC
Dilution: 1
Units: mg/kg

Instrument: HYDRA
Prep Date: 11/25/2008 13:45
Cal Date: 12/03/2008 13:52
Run Date: 12/03/2008 14:16
File ID: HY.120308.141611
Percent Solid: 92.0

Analyte	CAS. Number	Result	Qual	RL	MDL
Mercury, Total	7439-97-6		U	0.105	0.0210

U Undetected; the analyte was analyzed for, but not detected.

Microbac

1799 lw 2/3/09

7

Sample Number: L08110631-07
Client ID: MR08-IS389D-08D
Matrix: Soil
Workgroup Number: WG289241
Collect Date: 11/19/2008 10:15
Sample Tag: 01

PrePrep Method: NONE
Prep Method: 3051
Analytical Method: 6010B
Analyst: KHR
Dilution: 1
Units: mg/kg

Instrument: IRIS-ICP
Prep Date: 11/26/2008 12:00
Cal Date: 12/02/2008 10:30
Run Date: 12/02/2008 14:34
File ID: IR.120208.143400
Percent Solid: 90.5

Analyte	CAS. Number	Result	Qual	RL	MDL
Silver, Total	7440-22-4		U	0.832	0.208
Barium, Total	7440-39-3	3.62		0.416	0.0832
Cadmium, Total	7440-43-9		U	0.166	0.0416
Chromium, Total	7440-47-3	7.63		0.832	0.0999
Copper, Total	7440-50-8	0.963	J	1.66	0.416
Antimony, Total	7440-36-0		U	1.66	0.416
Zinc, Total	7440-66-6	0.839	J	1.66	0.416

U Undetected; the analyte was analyzed for, but not detected.
J Estimated ; the analyte concentration was less than the low standard (LOQ)

Microbac

358 MW 2/3/09

7

Sample Number: L08110631-07
Client ID: MR08-IS389D-08D
Matrix: Soil
Workgroup Number: WG289513
Collect Date: 11/19/2008 10:15
Sample Tag: 01

PrePrep Method: NONE
Prep Method: 3051
Analytical Method: 6020
Analyst: JYH
Dilution: 1
Units: mg/kg

Instrument: ELAN-ICP
Prep Date: 11/25/2008 13:46
Cal Date: 12/03/2008 12:07
Run Date: 12/03/2008 21:39
File ID: EL.120308.213944
Percent Solid: 90.5

Analyte	CAS. Number	Result	Qual	RL	MDL
Arsenic, Total	7440-38-2	0.170	J	0.324	0.0811
Lead, Total	7439-92-1	1.51		0.432	0.108
Selenium, Total	7782-49-2		U	0.432	0.108

U Undetected; the analyte was analyzed for, but not detected.
J Estimated ; the analyte concentration was less than the low standard (LOQ)

Microbac

939 LW 2/3/09

7

Sample Number: L08110631-07
Client ID: MR08-IS389D-08D
Matrix: Soil
Workgroup Number: WG289406
Collect Date: 11/19/2008 10:15
Sample Tag: 02

PrePrep Method: NONE
Prep Method: 7471A
Analytical Method: 7471A
Analyst: ADC
Dilution: 1
Units: mg/kg

Instrument: HYDRA
Prep Date: 11/25/2008 13:45
Cal Date: 12/03/2008 13:52
Run Date: 12/03/2008 14:19
File ID: HY.120308.141951
Percent Solid: 90.5

Analyte	CAS. Number	Result	Qual	RL	MDL
Mercury, Total	7439-97-6		U	0.110	0.0220

U Undetected; the analyte was analyzed for, but not detected.

Microbac

1800 kw 2/3/09

8

Sample Number: L08110631-08
Client ID: MR08-SS394-08D
Matrix: Soil
Workgroup Number: WG289241
Collect Date: 11/19/2008 10:45
Sample Tag: 01

PrePrep Method: NONE
Prep Method: 3051
Analytical Method: 6010B
Analyst: KHR
Dilution: 1
Units: mg/kg

Instrument: IRIS-ICP
Prep Date: 11/26/2008 12:00
Cal Date: 12/02/2008 10:30
Run Date: 12/02/2008 14:52
File ID: IR.120208.145200
Percent Solid: 90.9

Analyte	CAS. Number	Result	Qual	RL	MDL
Silver, Total	7440-22-4	0.532	J	0.836	0.209
Barium, Total	7440-39-3	9.22		0.418	0.0836
Cadmium, Total	7440-43-9	0.256		0.167	0.0418
Chromium, Total	7440-47-3	5.72		0.836	0.100
Copper, Total	7440-50-8	1.05	J	1.67	0.418
Antimony, Total	7440-36-0		U	1.67	0.418
Zinc, Total	7440-66-6	5.38		1.67	0.418

U Undetected; the analyte was analyzed for, but not detected.
J Estimated ; the analyte concentration was less than the low standard (LOQ)

Microbac

 fw 2/3/09

8

Sample Number: L08110631-08
Client ID: MR08-SS394-08D
Matrix: Soil
Workgroup Number: WG289513
Collect Date: 11/19/2008 10:45
Sample Tag: 01

PrePrep Method: NONE
Prep Method: 3051
Analytical Method: 6020
Analyst: JYH
Dilution: 1
Units: mg/kg

Instrument: ELAN-ICP
Prep Date: 11/25/2008 13:46
Cal Date: 12/03/2008 12:07
Run Date: 12/03/2008 21:45
File ID: EL.120308.214507
Percent Solid: 90.9

Analyte	CAS. Number	Result	Qual	RL	MDL
Arsenic, Total	7440-38-2	0.790		0.330	0.0825
Lead, Total	7439-92-1	4.48		0.440	0.110
Selenium, Total	7782-49-2	0.328	J	0.440	0.110

J Estimated ; the analyte concentration was less than the low standard (LOQ)

Microbac

940 lw 2/3/09

8

Sample Number: L08110631-08
Client ID: MR08-SS394-08D
Matrix: Soil
Workgroup Number: WG289406
Collect Date: 11/19/2008 10:45
Sample Tag: 02

PrePrep Method: NONE
Prep Method: 7471A
Analytical Method: 7471A
Analyst: ADC
Dilution: 1
Units: mg/kg

Instrument: HYDRA
Prep Date: 11/25/2008 13:45
Cal Date: 12/03/2008 13:52
Run Date: 12/03/2008 14:25
File ID: HY.120308.142524
Percent Solid: 90.9

Analyte	CAS. Number	Result	Qual	RL	MDL
Mercury, Total	7439-97-6		U	0.103	0.0206

U Undetected; the analyte was analyzed for, but not detected.

Microbac

1801 lew 2/3/09

9

Sample Number: L08110631-09
Client ID: MR08-IS394-08D
Matrix: Soil
Workgroup Number: WG289241
Collect Date: 11/19/2008 11:35
Sample Tag: 01

PrePrep Method: NONE
Prep Method: 3051
Analytical Method: 6010B
Analyst: KHR
Dilution: 1
Units: mg/kg

Instrument: IRIS-ICP
Prep Date: 11/26/2008 12:00
Cal Date: 12/02/2008 10:30
Run Date: 12/02/2008 14:58
File ID: IR.120208.145800
Percent Solid: 86.4

Analyte	CAS. Number	Result	Qual	RL	MDL
Silver, Total	7440-22-4	0.290	J	0.830	0.207
Barium, Total	7440-39-3	3.63		0.415	0.0830
Cadmium, Total	7440-43-9		U	0.166	0.0415
Chromium, Total	7440-47-3	6.76		0.830	0.0996
Copper, Total	7440-50-8	0.727	J	1.66	0.415
Antimony, Total	7440-36-0		U	1.66	0.415
Zinc, Total	7440-66-6	1.27	J	1.66	0.415

U Undetected; the analyte was analyzed for, but not detected.
J Estimated ; the analyte concentration was less than the low standard (LOQ)

Microbac

 lw 2/3/09

9

Sample Number: L08110631-09
Client ID: MR08-IS394-08D
Matrix: Soil
Workgroup Number: WG289513
Collect Date: 11/19/2008 11:35
Sample Tag: 01

PrePrep Method: NONE
Prep Method: 3051
Analytical Method: 6020
Analyst: JYH
Dilution: 1
Units: mg/kg

Instrument: ELAN-ICP
Prep Date: 11/25/2008 13:46
Cal Date: 12/03/2008 12:07
Run Date: 12/03/2008 21:50
File ID: EL.120308.215030
Percent Solid: 86.4

Analyte	CAS. Number	Result	Qual	RL	MDL
Arsenic, Total	7440-38-2	0.883		0.347	0.0868
Lead, Total	7439-92-1	2.71		0.463	0.116
Selenium, Total	7782-49-2		U	0.463	0.116

U Undetected; the analyte was analyzed for, but not detected.

Microbac

941 MW 2/3/09

9

Sample Number: L08110631-09
Client ID: MR08-IS394-08D
Matrix: Soil
Workgroup Number: WG289406
Collect Date: 11/19/2008 11:35
Sample Tag: 02

PrePrep Method: NONE
Prep Method: 7471A
Analytical Method: 7471A
Analyst: ADC
Dilution: 1
Units: mg/kg

Instrument: HYDRA
Prep Date: 11/25/2008 13:45
Cal Date: 12/03/2008 13:52
Run Date: 12/03/2008 14:27
File ID: HY.120308.142720
Percent Solid: 86.4

Analyte	CAS. Number	Result	Qual	RL	MDL
Mercury, Total	7439-97-6		U	0.108	0.0216

U Undetected; the analyte was analyzed for, but not detected.

Microbac

1802 LW 2/3/09

12

Sample Number: L08110631-12
Client ID: MR08-IS396-08D
Matrix: Soil
Workgroup Number: WG289241
Collect Date: 11/19/2008 13:00
Sample Tag: 01

PrePrep Method: NONE
Prep Method: 3051
Analytical Method: 6010B
Analyst: KHR
Dilution: 1
Units: mg/kg

Instrument: IRIS-ICP
Prep Date: 11/26/2008 12:00
Cal Date: 12/02/2008 10:30
Run Date: 12/02/2008 15:16
File ID: IR.120208.151600
Percent Solid: 90.5

Analyte	CAS. Number	Result	Qual	RL	MDL
Silver, Total	7440-22-4	0.227	J	0.829	0.207
Barium, Total	7440-39-3	4.24		0.415	0.0829
Cadmium, Total	7440-43-9		U	0.166	0.0415
Chromium, Total	7440-47-3	3.00		0.829	0.0995
Copper, Total	7440-50-8	0.634	J	1.66	0.415
Antimony, Total	7440-36-0		U	1.66	0.415
Zinc, Total	7440-66-6	0.893	J	1.66	0.415

U Undetected; the analyte was analyzed for, but not detected.
J Estimated ; the analyte concentration was less than the low standard (LOQ)

Microbac

363 2/3/09

12

Sample Number: L08110631-12
Client ID: MR08-IS396-08D
Matrix: Soil
Workgroup Number: WG289513
Collect Date: 11/19/2008 13:00
Sample Tag: 01

PrePrep Method: NONE
Prep Method: 3051
Analytical Method: 6020
Analyst: JYH
Dilution: 1
Units: mg/kg

Instrument: ELAN-ICP
Prep Date: 11/25/2008 13:46
Cal Date: 12/03/2008 12:07
Run Date: 12/03/2008 22:06
File ID: EL.120308.220641
Percent Solid: 90.5

Analyte	CAS. Number	Result	Qual	RL	MDL
Arsenic, Total	7440-38-2	0.216	J	0.321	0.0802
Lead, Total	7439-92-1	0.867		0.428	0.107
Selenium, Total	7782-49-2		U	0.428	0.107

U Undetected; the analyte was analyzed for, but not detected.
J Estimated ; the analyte concentration was less than the low standard (LOQ)

Microbac

QW 2/3/09

12

Sample Number: L08110631-12
Client ID: MR08-IS396-08D
Matrix: Soil
Workgroup Number: WG289406
Collect Date: 11/19/2008 13:00
Sample Tag: 02

PrePrep Method: NONE
Prep Method: 7471A
Analytical Method: 7471A
Analyst: ADC
Dilution: 1
Units: mg/kg

Instrument: HYDRA
Prep Date: 11/25/2008 13:45
Cal Date: 12/03/2008 13:52
Run Date: 12/03/2008 14:34
File ID: HY.120308.143441
Percent Solid: 90.5

Analyte	CAS. Number	Result	Qual	RL	MDL
Mercury, Total	7439-97-6		U	0.108	0.0215

U Undetected; the analyte was analyzed for, but not detected.

Microbac

1805 lw 2/3/09

13

Sample Number: L08110631-13
Client ID: MR08-SS395-08D
Matrix: Soil
Workgroup Number: WG289241
Collect Date: 11/19/2008 14:55
Sample Tag: 01

PrePrep Method: NONE
Prep Method: 3051
Analytical Method: 6010B
Analyst: KHR
Dilution: 1
Units: mg/kg

Instrument: IRIS-ICP
Prep Date: 11/26/2008 12:00
Cal Date: 12/02/2008 10:30
Run Date: 12/02/2008 15:22
File ID: IR.120208.152200
Percent Solid: 87.0

Analyte	CAS. Number	Result	Qual	RL	MDL
Silver, Total	7440-22-4	0.262	J	0.835	0.209
Barium, Total	7440-39-3	8.43		0.418	0.0835
Cadmium, Total	7440-43-9	0.0560	J	0.167	0.0418
Chromium, Total	7440-47-3	3.57		0.835	0.100
Copper, Total	7440-50-8	3.52		1.67	0.418
Antimony, Total	7440-36-0	0.471	J	1.67	0.418
Zinc, Total	7440-66-6	24.4		1.67	0.418

J Estimated ; the analyte concentration was less than the low standard (LOQ)

Microbac

364 fw 2/3/09

13

Sample Number: L08110631-13
Client ID: MR08-SS395-08D
Matrix: Soil
Workgroup Number: WG289513
Collect Date: 11/19/2008 14:55
Sample Tag: 01

PrePrep Method: NONE
Prep Method: 3051
Analytical Method: 6020
Analyst: JYH
Dilution: 1
Units: mg/kg

Instrument: ELAN-ICP
Prep Date: 11/25/2008 13:46
Cal Date: 12/03/2008 12:07
Run Date: 12/03/2008 22:12
File ID: EL.120308.221206
Percent Solid: 87.0

Analyte	CAS. Number	Result	Qual	RL	MDL
Arsenic, Total	7440-38-2	5.43		0.345	0.0862
Lead, Total	7439-92-1	16.2		0.460	0.115
Selenium, Total	7782-49-2	0.135	J	0.460	0.115

J Estimated ; the analyte concentration was less than the low standard (LOQ)

Microbac

945 LW 2/3/09

13

Sample Number:	L08110631-13	PrePrep Method:	NONE	Instrument:	HYDRA
Client ID:	MR08-SS395-08D	Prep Method:	7471A	Prep Date:	11/25/2008 13:45
Matrix:	Soil	Analytical Method:	7471A	Cal Date:	12/03/2008 13:52
Workgroup Number:	WG289406	Analyst:	ADC	Run Date:	12/03/2008 14:36
Collect Date:	11/19/2008 14:55	Dilution:	1	File ID:	HY.120308.143622
Sample Tag:	02	Units:	mg/kg	Percent Solid:	87.0

Analyte	CAS. Number	Result	Qual	RL	MDL
Mercury, Total	7439-97-6		U	0.106	0.0212

U Undetected; the analyte was analyzed for, but not detected.

Microbac

1806 LW 2/3/09

14

Sample Number: L08110631-14
Client ID: MR08-SS395D-08D
Matrix: Soil
Workgroup Number: WG289241
Collect Date: 11/19/2008 15:00
Sample Tag: 01

PrePrep Method: NONE
Prep Method: 3051
Analytical Method: 6010B
Analyst: KHR
Dilution: 1
Units: mg/kg

Instrument: IRIS-ICP
Prep Date: 11/26/2008 12:00
Cal Date: 12/02/2008 10:30
Run Date: 12/02/2008 15:28
File ID: IR.120208.152800
Percent Solid: 85.7

Analyte	CAS. Number	Result	Qual	RL	MDL
Silver, Total	7440-22-4	0.265	J	0.794	0.198
Barium, Total	7440-39-3	8.65		0.397	0.0794
Cadmium, Total	7440-43-9	0.0706	J	0.159	0.0397
Chromium, Total	7440-47-3	3.26		0.794	0.0952
Copper, Total	7440-50-8	3.75		1.59	0.397
Antimony, Total	7440-36-0		U	1.59	0.397
Zinc, Total	7440-66-6	26.1		1.59	0.397

U Undetected; the analyte was analyzed for, but not detected.
J Estimated ; the analyte concentration was less than the low standard (LOQ)

Microbac

 RW 2/3/09

14

Sample Number: L08110631-14
Client ID: MR08-SS395D-08D
Matrix: Soil
Workgroup Number: WG289513
Collect Date: 11/19/2008 15:00
Sample Tag: 01

PrePrep Method: NONE
Prep Method: 3051
Analytical Method: 6020
Analyst: JYH
Dilution: 1
Units: mg/kg

Instrument: ELAN-ICP
Prep Date: 11/25/2008 13:46
Cal Date: 12/03/2008 12:07
Run Date: 12/03/2008 22:17
File ID: EL.120308.221731
Percent Solid: 85.7

Analyte	CAS. Number	Result	Qual	RL	MDL
Arsenic, Total	7440-38-2	6.10		0.339	0.0848
Lead, Total	7439-92-1	21.2		0.452	0.113
Selenium, Total	7782-49-2	0.141	J	0.452	0.113

J Estimated ; the analyte concentration was less than the low standard (LOQ)

Microbac

946 LW 2/3/09

14

Sample Number: L08110631-14
Client ID: MR08-SS395D-08D
Matrix: Soil
Workgroup Number: WG289406
Collect Date: 11/19/2008 15:00
Sample Tag: 02

PrePrep Method: NONE
Prep Method: 7471A
Analytical Method: 7471A
Analyst: ADC
Dilution: 1
Units: mg/kg

Instrument: HYDRA
Prep Date: 11/25/2008 13:45
Cal Date: 12/03/2008 13:52
Run Date: 12/03/2008 14:38
File ID: HY.120308.143815
Percent Solid: 85.7

Analyte	CAS. Number	Result	Qual	RL	MDL
Mercury, Total	7439-97-6		U	0.116	0.0232

U Undetected; the analyte was analyzed for, but not detected.

Microbac

1807 [illegible]
2/3/09

15

Sample Number: L08110631-15
Client ID: MR08-SS393-08D
Matrix: Soil
Workgroup Number: WG289241
Collect Date: 11/19/2008 15:45
Sample Tag: 01

PrePrep Method: NONE
Prep Method: 3051
Analytical Method: 6010B
Analyst: KHR
Dilution: 1
Units: mg/kg

Instrument: IRIS-ICP
Prep Date: 11/26/2008 12:00
Cal Date: 12/02/2008 10:30
Run Date: 12/02/2008 15:34
File ID: IR.120208.153400
Percent Solid: 87.8

Analyte	CAS. Number	Result	Qual	RL	MDL
Silver, Total	7440-22-4	0.272	J	0.863	0.216
Barium, Total	7440-39-3	8.50		0.432	0.0863
Cadmium, Total	7440-43-9	0.139	J	0.173	0.0432
Chromium, Total	7440-47-3	3.37		0.863	0.104
Copper, Total	7440-50-8	5.96		1.73	0.432
Antimony, Total	7440-36-0	0.448	J	1.73	0.432
Zinc, Total	7440-66-6	19.5		1.73	0.432

J Estimated ; the analyte concentration was less than the low standard (LOQ)

Microbac®

366 lw 2/3/09

15

Sample Number: L08110631-15
Client ID: MR08-SS393-08D
Matrix: Soil
Workgroup Number: WG289513
Collect Date: 11/19/2008 15:45
Sample Tag: 01

PrePrep Method: NONE
Prep Method: 3051
Analytical Method: 6020
Analyst: JYH
Dilution: 1
Units: mg/kg

Instrument: ELAN-ICP
Prep Date: 11/25/2008 13:46
Cal Date: 12/03/2008 12:07
Run Date: 12/03/2008 22:22
File ID: EL.120308.222257
Percent Solid: 87.8

Analyte	CAS. Number	Result	Qual	RL	MDL
Arsenic, Total	7440-38-2	1.06		0.339	0.0847
Lead, Total	7439-92-1	27.4		0.452	0.113
Selenium, Total	7782-49-2	0.168	J	0.452	0.113

J Estimated ; the analyte concentration was less than the low standard (LOQ)

Microbac

947 lw 2/3/09

15

Sample Number: L08110631-15
Client ID: MR08-SS393-08D
Matrix: Soil
Workgroup Number: WG289406
Collect Date: 11/19/2008 15:45
Sample Tag: 02

PrePrep Method: NONE
Prep Method: 7471A
Analytical Method: 7471A
Analyst: ADC
Dilution: 1
Units: mg/kg

Instrument: HYDRA
Prep Date: 11/25/2008 13:45
Cal Date: 12/03/2008 13:52
Run Date: 12/03/2008 14:40
File ID: HY.120308.144007
Percent Solid: 87.8

Analyte	CAS. Number	Result	Qual	RL	MDL
Mercury, Total	7439-97-6	0.0258	J	0.105	0.0210

J Estimated ; the analyte concentration was less than the low standard (LOQ)

Microbac

1808 MW 2/3/09

16

Sample Number: L08110631-16
Client ID: MR08-SS392-08D
Matrix: Soil
Workgroup Number: WG289241
Collect Date: 11/19/2008 16:00
Sample Tag: 01

PrePrep Method: NONE
Prep Method: 3051
Analytical Method: 6010B
Analyst: KHR
Dilution: 1
Units: mg/kg

Instrument: IRIS-ICP
Prep Date: 11/26/2008 12:00
Cal Date: 12/02/2008 10:30
Run Date: 12/02/2008 15:40
File ID: IR.120208.154000
Percent Solid: 83.2

Analyte	CAS. Number	Result	Qual	RL	MDL
Silver, Total	7440-22-4	0.334	J	0.914	0.228
Barium, Total	7440-39-3	17.8		0.457	0.0914
Cadmium, Total	7440-43-9	0.151	J	0.183	0.0457
Chromium, Total	7440-47-3	7.95		0.914	0.110
Copper, Total	7440-50-8	6.63		1.83	0.457
Antimony, Total	7440-36-0	0.754	J	1.83	0.457
Zinc, Total	7440-66-6	37.8		1.83	0.457

J Estimated ; the analyte concentration was less than the low standard (LOQ)

Microbac

 MW 2/3/09

16

Sample Number: L08110631-16
Client ID: MR08-SS392-08D
Matrix: Soil
Workgroup Number: WG289513
Collect Date: 11/19/2008 16:00
Sample Tag: 01

PrePrep Method: NONE
Prep Method: 3051
Analytical Method: 6020
Analyst: JYH
Dilution: 1
Units: mg/kg

Instrument: ELAN-ICP
Prep Date: 11/25/2008 13:46
Cal Date: 12/03/2008 12:07
Run Date: 12/03/2008 22:39
File ID: EL.120308.223944
Percent Solid: 83.2

Analyte	CAS. Number	Result	Qual	RL	MDL
Arsenic, Total	7440-38-2	1.27		0.358	0.0896
Selenium, Total	7782-49-2	0.295	J	0.478	0.119

J Estimated ; the analyte concentration was less than the low standard (LOQ)

Microbac

 DLW 2/3/09

16

Sample Number: L08110631-16
Client ID: MR08-SS392-08D
Matrix: Soil
Workgroup Number: WG289513
Collect Date: 11/19/2008 16:00
Sample Tag: DL01

PrePrep Method: NONE
Prep Method: 3051
Analytical Method: 6020
Analyst: JYH
Dilution: 10
Units: mg/kg

Instrument: ELAN-ICP
Prep Date: 11/25/2008 13:46
Cal Date: 12/04/2008 11:09
Run Date: 12/04/2008 14:53
File ID: EL.120408.145345
Percent Solid: 83.2

Analyte	CAS. Number	Result	Qual	RL	MDL
Lead, Total	7439-92-1	64.6		4.78	1.19

Microbac

949 lw 2/3/09

16

Sample Number: L08110631-16
Client ID: MR08-SS392-08D
Matrix: Soil
Workgroup Number: WG289406
Collect Date: 11/19/2008 16:00
Sample Tag: 02

PrePrep Method: NONE
Prep Method: 7471A
Analytical Method: 7471A
Analyst: ADC
Dilution: 1
Units: mg/kg

Instrument: HYDRA
Prep Date: 11/25/2008 13:45
Cal Date: 12/03/2008 13:52
Run Date: 12/03/2008 14:42
File ID: HY.120308.144233
Percent Solid: 83.2

Analyte	CAS. Number	Result	Qual	RL	MDL
Mercury, Total	7439-97-6	0.0372	J	0.118	0.0236

J Estimated ; the analyte concentration was less than the low standard (LOQ)

Microbac

1809 fwd 2/3/09

17

Sample Number: L08110631-17
Client ID: MR08-SS391-08D
Matrix: Soil
Workgroup Number: WG289241
Collect Date: 11/19/2008 16:30
Sample Tag: 01

PrePrep Method: NONE
Prep Method: 3051
Analytical Method: 6010B
Analyst: KHR
Dilution: 1
Units: mg/kg

Instrument: IRIS-ICP
Prep Date: 11/26/2008 12:00
Cal Date: 12/02/2008 10:30
Run Date: 12/02/2008 15:46
File ID: IR.120208.154600
Percent Solid: 87.6

Analyte	CAS. Number	Result	Qual	RL	MDL
Silver, Total	7440-22-4	0.317	J	0.793	0.198
Barium, Total	7440-39-3	12.7		0.397	0.0793
Cadmium, Total	7440-43-9	0.147	J	0.159	0.0397
Chromium, Total	7440-47-3	5.55		0.793	0.0952
Copper, Total	7440-50-8	4.91		1.59	0.397
Antimony, Total	7440-36-0	0.451	J	1.59	0.397
Zinc, Total	7440-66-6	38.2		1.59	0.397

J Estimated ; the analyte concentration was less than the low standard (LOQ)

Microbac

 lw 2/3/09

17

Sample Number: L08110631-17
Client ID: MR08-SS391-08D
Matrix: Soil
Workgroup Number: WG289513
Collect Date: 11/19/2008 16:30
Sample Tag: 01

PrePrep Method: NONE
Prep Method: 3051
Analytical Method: 6020
Analyst: JYH
Dilution: 1
Units: mg/kg

Instrument: ELAN-ICP
Prep Date: 11/25/2008 13:46
Cal Date: 12/03/2008 12:07
Run Date: 12/03/2008 22:45
File ID: EL.120308.224507
Percent Solid: 87.6

Analyte	CAS. Number	Result	Qual	RL	MDL
Arsenic, Total	7440-38-2	1.66		0.330	0.0825
Lead, Total	7439-92-1	39.8		0.440	0.110
Selenium, Total	7782-49-2	0.297	J	0.440	0.110

J Estimated ; the analyte concentration was less than the low standard (LOQ)

Microbac

950 lw 2/3/09

17

Sample Number: L08110631-17
Client ID: MR08-SS391-08D
Matrix: Soil
Workgroup Number: WG289406
Collect Date: 11/19/2008 16:30
Sample Tag: 02

PrePrep Method: NONE
Prep Method: 7471A
Analytical Method: 7471A
Analyst: ADC
Dilution: 1
Units: mg/kg

Instrument: HYDRA
Prep Date: 11/25/2008 13:45
Cal Date: 12/03/2008 13:52
Run Date: 12/03/2008 14:44
File ID: HY.120308.144426
Percent Solid: 87.6

Analyte	CAS. Number	Result	Qual	RL	MDL
Mercury, Total	7439-97-6		U	0.114	0.0228

U Undetected; the analyte was analyzed for, but not detected.

Microbac

1810 fw 2/3/09

18

Sample Number: L08110631-18
Client ID: MR08-SS391D-08D
Matrix: Soil
Workgroup Number: WG289241
Collect Date: 11/19/2008 16:35
Sample Tag: 01

PrePrep Method: NONE
Prep Method: 3051
Analytical Method: 6010B
Analyst: KHR
Dilution: 1
Units: mg/kg

Instrument: IRIS-ICP
Prep Date: 11/26/2008 12:00
Cal Date: 12/02/2008 10:30
Run Date: 12/02/2008 16:05
File ID: IR.120208.160500
Percent Solid: 87.0

Analyte	CAS. Number	Result	Qual	RL	MDL
Silver, Total	7440-22-4		U	0.853	0.213
Barium, Total	7440-39-3	12.1		0.426	0.0853
Cadmium, Total	7440-43-9	0.149	J	0.171	0.0426
Chromium, Total	7440-47-3	5.47		0.853	0.102
Copper, Total	7440-50-8	4.58		1.71	0.426
Antimony, Total	7440-36-0		U	1.71	0.426
Zinc, Total	7440-66-6	40.6		1.71	0.426

U Undetected; the analyte was analyzed for, but not detected.
J Estimated ; the analyte concentration was less than the low standard (LOQ)

Microbac

369 LW 2/3/09

18

Sample Number: L08110631-18
Client ID: MR08-SS391D-08D
Matrix: Soil
Workgroup Number: WG289513
Collect Date: 11/19/2008 16:35
Sample Tag: 01

PrePrep Method: NONE
Prep Method: 3051
Analytical Method: 6020
Analyst: JYH
Dilution: 1
Units: mg/kg

Instrument: ELAN-ICP
Prep Date: 11/25/2008 13:46
Cal Date: 12/03/2008 12:07
Run Date: 12/03/2008 22:50
File ID: EL.120308.225030
Percent Solid: 87.0

Analyte	CAS. Number	Result	Qual	RL	MDL
Arsenic, Total	7440-38-2	1.59		0.337	0.0844
Lead, Total	7439-92-1	36.4		0.450	0.112
Selenium, Total	7782-49-2	0.269	J	0.450	0.112

J Estimated ; the analyte concentration was less than the low standard (LOQ)

Microbac

95 flw 12/3/09

18

Sample Number: L08110631-18
Client ID: MR08-SS391D-08D
Matrix: Soil
Workgroup Number: WG289406
Collect Date: 11/19/2008 16:35
Sample Tag: 02

PrePrep Method: NONE
Prep Method: 7471A
Analytical Method: 7471A
Analyst: ADC
Dilution: 1
Units: mg/kg

Instrument: HYDRA
Prep Date: 11/25/2008 13:45
Cal Date: 12/03/2008 13:52
Run Date: 12/03/2008 14:50
File ID: HY.120308.145023
Percent Solid: 87.0

Analyte	CAS. Number	Result	Qual	RL	MDL
Mercury, Total	7439-97-6		U	0.113	0.0227

U Undetected; the analyte was analyzed for, but not detected.

Microbac

1811 MW 2/3/09

19

Sample Number: L08110631-19
Client ID: MR08-SS390-08D
Matrix: Soil
Workgroup Number: WG289241
Collect Date: 11/19/2008 17:00
Sample Tag: 01

PrePrep Method: NONE
Prep Method: 3051
Analytical Method: 6010B
Analyst: KHR
Dilution: 1
Units: mg/kg

Instrument: IRIS-ICP
Prep Date: 11/26/2008 12:00
Cal Date: 12/02/2008 10:30
Run Date: 12/02/2008 16:11
File ID: IR.120208.161100
Percent Solid: 80.7

Analyte	CAS. Number	Result	Qual	RL	MDL
Silver, Total	7440-22-4	1.92		0.894	0.223
Barium, Total	7440-39-3	25.9		0.447	0.0894
Cadmium, Total	7440-43-9	0.277		0.179	0.0447
Chromium, Total	7440-47-3	7.65		0.894	0.107
Copper, Total	7440-50-8	6.29		1.79	0.447
Antimony, Total	7440-36-0	0.601	J	1.79	0.447
Zinc, Total	7440-66-6	29.7		1.79	0.447

J Estimated ; the analyte concentration was less than the low standard (LOQ)

Microbac

 DW 2/3/09

19

Sample Number: L08110631-19
Client ID: MR08-SS390-08D
Matrix: Soil
Workgroup Number: WG289513
Collect Date: 11/19/2008 17:00
Sample Tag: 01

PrePrep Method: NONE
Prep Method: 3051
Analytical Method: 6020
Analyst: JYH
Dilution: 1
Units: mg/kg

Instrument: ELAN-ICP
Prep Date: 11/25/2008 13:46
Cal Date: 12/03/2008 12:07
Run Date: 12/03/2008 22:55
File ID: EL.120308.225553
Percent Solid: 80.7

Analyte	CAS. Number	Result	Qual	RL	MDL
Arsenic, Total	7440-38-2	1.83		0.372	0.0929
Lead, Total	7439-92-1	24.7		0.495	0.124
Selenium, Total	7782-49-2	0.223	J	0.495	0.124

J Estimated ; the analyte concentration was less than the low standard (LOQ)

Microbac

952 lw 2/3/09

19

Sample Number: L08110631-19
Client ID: MR08-SS390-08D
Matrix: Soil
Workgroup Number: WG289406
Collect Date: 11/19/2008 17:00
Sample Tag: 02

PrePrep Method: NONE
Prep Method: 7471A
Analytical Method: 7471A
Analyst: ADC
Dilution: 1
Units: mg/kg

Instrument: HYDRA
Prep Date: 11/25/2008 13:45
Cal Date: 12/03/2008 13:52
Run Date: 12/03/2008 14:52
File ID: HY.120308.145218
Percent Solid: 80.7

Analyte	CAS. Number	Result	Qual	RL	MDL
Mercury, Total	7439-97-6	0.182		0.122	0.0244

Microbac

1812 lw 2/3/09

20

Sample Number: L08110631-20
Client ID: MR08-EB111908
Matrix: Water
Workgroup Number: WG289338
Collect Date: 11/19/2008 18:00
Sample Tag: 01

PrePrep Method: NONE
Prep Method: 3005A
Analytical Method: 6010B
Analyst: SLP
Dilution: 1
Units: ug/L

Instrument: PE-ICP2
Prep Date: 11/26/2008 08:02
Cal Date: 12/02/2008 11:16
Run Date: 12/02/2008 18:54
File ID: P2.120208.185411

Analyte	CAS. Number	Result	Qual	RL	MDL
Barium, Total	7440-39-3		U	10.0	2.50
Cadmium, Total	7440-43-9		U	1.00	0.250
Chromium, Total	7440-47-3		U	10.0	2.50
Copper, Total	7440-50-8		U	20.0	5.00
Silver, Total	7440-22-4		U	6.00	2.00
Zinc, Total	7440-66-6		U	20.0	5.00

U Undetected; the analyte was analyzed for, but not detected.

Microbac

MW 2/3/09

20

Sample Number: L08110631-20
Client ID: MR08-EB111908
Matrix: Water
Workgroup Number: WG289546
Collect Date: 11/19/2008 18:00
Sample Tag: 01

PrePrep Method: NONE
Prep Method: 3015
Analytical Method: 6020
Analyst: JYH
Dilution: 1
Units: ug/L

Instrument: ELAN-ICP
Prep Date: 12/05/2008 08:24
Cal Date: 12/04/2008 11:09
Run Date: 12/04/2008 17:12
File ID: EL.120408.171206

Analyte	CAS. Number	Result	Qual	RL	MDL
Arsenic, Total	7440-38-2		U	1.00	0.250
Lead, Total	7439-92-1		U	1.00	0.250
Antimony, Total	7440-36-0		U	1.00	0.250
Selenium, Total	7782-49-2		U	2.00	0.500

U Undetected; the analyte was analyzed for, but not detected.

Microbac

953 lw 2/3/09

20

Sample Number: L08110631-20
Client ID: MR08-EB111908
Matrix: Water
Workgroup Number: WG289152
Collect Date: 11/19/2008 18:00
Sample Tag: 01

PrePrep Method: NONE
Prep Method: 7470A
Analytical Method: 7470A
Analyst: ADC
Dilution: 1
Units: ug/L

Instrument: HYDRA
Prep Date: 11/25/2008 14:41
Cal Date: 11/26/2008 14:52
Run Date: 11/26/2008 15:58
File ID: HY.112608.155819

Analyte	CAS. Number	Result	Qual	RL	MDL
Mercury	7439-97-6		U	0.400	0.100

U Undetected; the analyte was analyzed for, but not detected.

Microbac

1813 LW 2/3/09

ENVIRONMENTAL
Data Services, Inc.

EXPLOSIVES, PETN, NITROGLYCERIN

USEPA Region IV - Level IV Review

Site: MCB Camp Lejeune, TO-09 SDG #: L08110664

Client: CH2M HILL, Inc., Virginia Beach, Virginia Date: February 5, 2009

Laboratory: Microbac Laboratories, Inc., Marietta, Ohio Reviewer: Nancy Weaver

EDS ID	Client Sample ID	Laboratory Sample ID	Matrix
1	MR08-TW24-08D	L08110664-01	Water
2	MR08-TW17-08D	L08110664-02	Water
3	MR08-TW17D-08D	L08110664-03	Water
4	MR08-TW15-08D	L08110664-04	Water
5	MR08-TW15D-08D	L08110664-05	Water
6	MR08-TW16-08D	L08110664-06	Water
7	MR08-TW21-08D	L08110664-07	Water
8	MR08-TW22-08D	L08110664-08	Water
9	MR08-TW23-08D	L08110664-09	Water

The USEPA "Contract Laboratory Program National Functional Guidelines for Organic Data Review," October 1999, and professional judgement were used in evaluating the data in this summary report.

Holding Times - All samples were extracted within 7 days for water samples, 14 days for soil samples and analyzed within 40 days.

Initial Calibration - The initial calibrations exhibited acceptable %RSD and/or correlation coefficient values.

Calibration Verification - The continuing calibrations exhibited acceptable %D values.

Surrogates - All samples exhibited acceptable surrogate recoveries.

MS/MSD - A MS/MSD sample was not analyzed.

Laboratory Control Sample - The LCS samples exhibited acceptable %R values.

Method Blank - The method blanks were free of contamination.

Field and Equipment Blank - Field QC results are summarized below.

Blank ID	Compound	Conc. ug/L	Action Level ug/L	Qualifier	Affected Samples
MR08-EB111708-1	None - ND	-	-	-	-
MR08-FB112008	None - ND	-	-	-	-

Field Duplicates - Field duplicate results are summarized below.

Compound	MR08-TW17-08D ug/L	MR08-TW17D-08D ug/L	RPD	Qualifier
None	ND	ND	-	-

Compound	MR08-TW15-08D ug/L	MR08-TW15D-08D ug/L	RPD	Qualifier
None	ND	ND	-	-

Compound Identification - Retention times were acceptable and no further action was taken.

Compound Quantitation - No discrepancies were identified.

Sample Number: L08110664-01
Client ID: MR08-TW24 -08D
Matrix: Water
Workgroup Number: WG289008
Collect Date: 11/20/2008 16:55
Sample Tag: 02

PrePrep Method: NONE
Prep Method: 3535
Analytical Method: 8330MOD
Analyst: ECL
Dilution: 1
Units: ug/L

Instrument: HPLC5
Prep Date: 11/24/2008 09:30
Cal Date: 08/12/2008 15:23
Run Date: 11/26/2008 18:39
File ID: 5L002963.F

Analyte	CAS. Number	Result	Qual	RL	MDL
PETN	78-11-5		U	1.02	0.255

U Undetected; the analyte was analyzed for, but not detected.

Microbac

15 LW 2/5/09

Sample Number: L08110664-01
Client ID: MR08-TW24 -08D
Matrix: Water
Workgroup Number: WG289008
Collect Date: 11/20/2008 16:55
Sample Tag: 01

PrePrep Method: NONE
Prep Method: 3535
Analytical Method: 8330MOD
Analyst: ECL
Dilution: 1
Units: ug/L

Instrument: HPLC4
Prep Date: 11/24/2008 09:30
Cal Date: 10/30/2008 18:13
Run Date: 11/26/2008 01:32
File ID: 4L014583.F

Analyte	CAS. Number	Result	Qual	RL	MDL
1,3,5-Trinitrobenzene	99-35-4		U	1.02	0.255
1,3-Dinitrobenzene	99-65-0		U	1.02	0.255
2,4,6-Trinitrotoluene	118-96-7		U	1.02	0.255
2,4-Dinitrotoluene	121-14-2		U	1.02	0.255
2,6-Dinitrotoluene	606-20-2		U	1.02	0.255
2-Amino-4,6-dinitrotoluene	35572-78-2		U	1.02	0.255
2-Nitrotoluene	88-72-2		U	1.02	0.255
3-Nitrotoluene	99-08-1		U	1.02	0.255
4-Nitrotoluene	99-99-0		U	1.02	0.255
4-Amino-2,6-dinitrotoluene	19406-51-0		U	1.02	0.255
HMX	2691-41-0		U	1.02	0.255
Nitrobenzene	98-95-3		U	1.02	0.255
RDX	121-82-4		U	1.02	0.255
Tetryl	479-45-8		U	1.02	0.255
Nitroglycerin	55-63-0		U	1.02	0.255

Surrogate	% Recovery	Lower	Upper	Qual
1,2-Dinitrobenzene	70.4	50	150	

U Undetected; the analyte was analyzed for, but not detected.

Microbac

14 LW 2/5/09

2

Sample Number: L08110664-02
Client ID: MR08-TW17 -08D
Matrix: Water
Workgroup Number: WG289008
Collect Date: 11/20/2008 15:40
Sample Tag: 02

PrePrep Method: NONE
Prep Method: 3535
Analytical Method: 8330MOD
Analyst: ECL
Dilution: 1
Units: ug/L

Instrument: HPLC5
Prep Date: 11/24/2008 09:30
Cal Date: 08/12/2008 15:23
Run Date: 11/26/2008 18:52
File ID: 5L002964.F

Analyte	CAS. Number	Result	Qual	RL	MDL
PETN	78-11-5		U	1.03	0.258

U Undetected; the analyte was analyzed for, but not detected.

Microbac

 llw 2/5/09

2

Sample Number: L08110664-02
Client ID: MR08-TW17 -08D
Matrix: Water
Workgroup Number: WG289008
Collect Date: 11/20/2008 15:40
Sample Tag: 01

PrePrep Method: NONE
Prep Method: 3535
Analytical Method: 8330MOD
Analyst: ECL
Dilution: 1
Units: ug/L

Instrument: HPLC4
Prep Date: 11/24/2008 09:30
Cal Date: 10/30/2008 18:13
Run Date: 11/26/2008 02:10
File ID: 4L014584.F

Analyte	CAS. Number	Result	Qual	RL	MDL
1,3,5-Trinitrobenzene	99-35-4		U	1.03	0.258
1,3-Dinitrobenzene	99-65-0		U	1.03	0.258
2,4,6-Trinitrotoluene	118-96-7		U	1.03	0.258
2,4-Dinitrotoluene	121-14-2		U	1.03	0.258
2,6-Dinitrotoluene	606-20-2		U	1.03	0.258
2-Amino-4,6-dinitrotoluene	35572-78-2		U	1.03	0.258
2-Nitrotoluene	88-72-2		U	1.03	0.258
3-Nitrotoluene	99-08-1		U	1.03	0.258
4-Nitrotoluene	99-99-0		U	1.03	0.258
4-Amino-2,6-dinitrotoluene	19406-51-0		U	1.03	0.258
HMX	2691-41-0		U	1.03	0.258
Nitrobenzene	98-95-3		U	1.03	0.258
RDX	121-82-4		U	1.03	0.258
Tetryl	479-45-8		U	1.03	0.258
Nitroglycerin	55-63-0		U	1.03	0.258

Surrogate	% Recovery	Lower	Upper	Qual
1,2-Dinitrobenzene	65.4	50	150	

U Undetected; the analyte was analyzed for, but not detected.

Microbac

17 lw 2/5/09

3

Sample Number: L08110664-03
Client ID: MR08-TW17D -08D
Matrix: Water
Workgroup Number: WG289008
Collect Date: 11/20/2008 15:45
Sample Tag: 02

PrePrep Method: NONE
Prep Method: 3535
Analytical Method: 8330MOD
Analyst: ECL
Dilution: 1
Units: ug/L

Instrument: HPLC5
Prep Date: 11/24/2008 09:30
Cal Date: 08/12/2008 15:23
Run Date: 11/26/2008 19:06
File ID: 5L002965.F

Analyte	CAS. Number	Result	Qual	RL	MDL
PETN	78-11-5		U	1.05	0.263

U Undetected; the analyte was analyzed for, but not detected.

Microbac

18 lw 2/5/09

3

Sample Number: L08110664-03
Client ID: MR08-TW17D -08D
Matrix: Water
Workgroup Number: WG289008
Collect Date: 11/20/2008 15:45
Sample Tag: 01

PrePrep Method: NONE
Prep Method: 3535
Analytical Method: 8330MOD
Analyst: ECL
Dilution: 1
Units: ug/L

Instrument: HPLC4
Prep Date: 11/24/2008 09:30
Cal Date: 10/30/2008 18:13
Run Date: 11/26/2008 02:48
File ID: 4L014585.F

Analyte	CAS. Number	Result	Qual	RL	MDL
1,3,5-Trinitrobenzene	99-35-4		U	1.05	0.263
1,3-Dinitrobenzene	99-65-0		U	1.05	0.263
2,4,6-Trinitrotoluene	118-96-7		U	1.05	0.263
2,4-Dinitrotoluene	121-14-2		U	1.05	0.263
2,6-Dinitrotoluene	606-20-2		U	1.05	0.263
2-Amino-4,6-dinitrotoluene	35572-78-2		U	1.05	0.263
2-Nitrotoluene	88-72-2		U	1.05	0.263
3-Nitrotoluene	99-08-1		U	1.05	0.263
4-Nitrotoluene	99-99-0		U	1.05	0.263
4-Amino-2,6-dinitrotoluene	19406-51-0		U	1.05	0.263
HMX	2691-41-0		U	1.05	0.263
Nitrobenzene	98-95-3		U	1.05	0.263
RDX	121-82-4		U	1.05	0.263
Tetryl	479-45-8		U	1.05	0.263
Nitroglycerin	55-63-0		U	1.05	0.263

Surrogate	% Recovery	Lower	Upper	Qual
1,2-Dinitrobenzene	66.2	50	150	

U Undetected; the analyte was analyzed for, but not detected.

Microbac

19 MW 2/5/09

4

Sample Number: L08110664-04
Client ID: MR08-TW15 -08D
Matrix: Water
Workgroup Number: WG289008
Collect Date: 11/21/2008 08:00
Sample Tag: 02

PrePrep Method: NONE
Prep Method: 3535
Analytical Method: 8330MOD
Analyst: ECL
Dilution: 1
Units: ug/L

Instrument: HPLC5
Prep Date: 11/24/2008 09:30
Cal Date: 08/12/2008 15:23
Run Date: 11/26/2008 19:19
File ID: 5L002966.F

Analyte	CAS. Number	Result	Qual	RL	MDL
PETN	78-11-5		U	1.03	0.258

U Undetected; the analyte was analyzed for, but not detected.

Microbac

20 MW 2/5/09

4

Sample Number: L08110664-04
Client ID: MR08-TW15 -08D
Matrix: Water
Workgroup Number: WG289008
Collect Date: 11/21/2008 08:00
Sample Tag: 01

PrePrep Method: NONE
Prep Method: 3535
Analytical Method: 8330MOD
Analyst: ECL
Dilution: 1
Units: ug/L

Instrument: HPLC4
Prep Date: 11/24/2008 09:30
Cal Date: 10/30/2008 18:13
Run Date: 11/26/2008 03:26
File ID: 4L014586.F

Analyte	CAS. Number	Result	Qual	RL	MDL
1,3,5-Trinitrobenzene	99-35-4		U	1.03	0.258
1,3-Dinitrobenzene	99-65-0		U	1.03	0.258
2,4,6-Trinitrotoluene	118-96-7		U	1.03	0.258
2,4-Dinitrotoluene	121-14-2		U	1.03	0.258
2,6-Dinitrotoluene	606-20-2		U	1.03	0.258
2-Amino-4,6-dinitrotoluene	35572-78-2		U	1.03	0.258
2-Nitrotoluene	88-72-2		U	1.03	0.258
3-Nitrotoluene	99-08-1		U	1.03	0.258
4-Nitrotoluene	99-99-0		U	1.03	0.258
4-Amino-2,6-dinitrotoluene	19406-51-0		U	1.03	0.258
HMX	2691-41-0		U	1.03	0.258
Nitrobenzene	98-95-3		U	1.03	0.258
RDX	121-82-4		U	1.03	0.258
Tetryl	479-45-8		U	1.03	0.258
Nitroglycerin	55-63-0		U	1.03	0.258

Surrogate	% Recovery	Lower	Upper	Qual
1,2-Dinitrobenzene	69.9	50	150	

U Undetected; the analyte was analyzed for, but not detected.

Microbac

21 LW 2/5/09

5

Sample Number: L08110664-05
Client ID: MR08-TW15D -08D
Matrix: Water
Workgroup Number: WG289008
Collect Date: 11/21/2008 08:05
Sample Tag: 02

PrePrep Method: NONE
Prep Method: 3535
Analytical Method: 8330MOD
Analyst: ECL
Dilution: 1
Units: ug/L

Instrument: HPLC5
Prep Date: 11/24/2008 09:30
Cal Date: 08/12/2008 15:23
Run Date: 11/26/2008 20:11
File ID: 5L002970.F

Analyte	CAS. Number	Result	Qual	RL	MDL
PETN	78-11-5		U	1.03	0.258

U Undetected; the analyte was analyzed for, but not detected.

Microbac

23 MW 2/5/09

5

Sample Number: L08110664-05
Client ID: MR08-TW15D -08D
Matrix: Water
Workgroup Number: WG289008
Collect Date: 11/21/2008 08:05
Sample Tag: 01

PrePrep Method: NONE
Prep Method: 3535
Analytical Method: 8330MOD
Analyst: ECL
Dilution: 1
Units: ug/L

Instrument: HPLC4
Prep Date: 11/24/2008 09:30
Cal Date: 10/30/2008 18:13
Run Date: 11/26/2008 04:04
File ID: 4L014587.F

Analyte	CAS. Number	Result	Qual	RL	MDL
1,3,5-Trinitrobenzene	99-35-4		U	1.03	0.258
1,3-Dinitrobenzene	99-65-0		U	1.03	0.258
2,4,6-Trinitrotoluene	118-96-7		U	1.03	0.258
2,4-Dinitrotoluene	121-14-2		U	1.03	0.258
2,6-Dinitrotoluene	606-20-2		U	1.03	0.258
2-Amino-4,6-dinitrotoluene	35572-78-2		U	1.03	0.258
2-Nitrotoluene	88-72-2		U	1.03	0.258
3-Nitrotoluene	99-08-1		U	1.03	0.258
4-Nitrotoluene	99-99-0		U	1.03	0.258
4-Amino-2,6-dinitrotoluene	19406-51-0		U	1.03	0.258
HMX	2691-41-0		U	1.03	0.258
Nitrobenzene	98-95-3		U	1.03	0.258
RDX	121-82-4		U	1.03	0.258
Tetryl	479-45-8		U	1.03	0.258
Nitroglycerin	55-63-0		U	1.03	0.258

Surrogate	% Recovery	Lower	Upper	Qual
1,2-Dinitrobenzene	68.4	50	150	

U Undetected; the analyte was analyzed for, but not detected.

Microbac

22 MW 2/5/09

6

Sample Number: L08110664-06
Client ID: MR08-TW16 -08D
Matrix: Water
Workgroup Number: WG289008
Collect Date: 11/21/2008 08:45
Sample Tag: 02

PrePrep Method: NONE
Prep Method: 3535
Analytical Method: 8330MOD
Analyst: ECL
Dilution: 1
Units: ug/L

Instrument: HPLC5
Prep Date: 11/24/2008 09:30
Cal Date: 08/12/2008 15:23
Run Date: 11/26/2008 20:25
File ID: 5L002971.F

Analyte	CAS. Number	Result	Qual	RL	MDL
PETN	78-11-5		U	1.02	0.255

U Undetected; the analyte was analyzed for, but not detected.

Microbac

 lew 2/5/09

6

Sample Number: L08110664-06
Client ID: MR08-TW16 -08D
Matrix: Water
Workgroup Number: WG289008
Collect Date: 11/21/2008 08:45
Sample Tag: 01

PrePrep Method: NONE
Prep Method: 3535
Analytical Method: 8330MOD
Analyst: ECL
Dilution: 1
Units: ug/L

Instrument: HPLC4
Prep Date: 11/24/2008 09:30
Cal Date: 10/30/2008 18:13
Run Date: 11/26/2008 04:42
File ID: 4L014588.F

Analyte	CAS. Number	Result	Qual	RL	MDL
1,3,5-Trinitrobenzene	99-35-4		U	1.02	0.255
1,3-Dinitrobenzene	99-65-0		U	1.02	0.255
2,4,6-Trinitrotoluene	118-96-7		U	1.02	0.255
2,4-Dinitrotoluene	121-14-2		U	1.02	0.255
2,6-Dinitrotoluene	606-20-2		U	1.02	0.255
2-Amino-4,6-dinitrotoluene	35572-78-2		U	1.02	0.255
2-Nitrotoluene	88-72-2		U	1.02	0.255
3-Nitrotoluene	99-08-1		U	1.02	0.255
4-Nitrotoluene	99-99-0		U	1.02	0.255
4-Amino-2,6-dinitrotoluene	19406-51-0		U	1.02	0.255
HMX	2691-41-0		U	1.02	0.255
Nitrobenzene	98-95-3		U	1.02	0.255
RDX	121-82-4		U	1.02	0.255
Tetryl	479-45-8		U	1.02	0.255
Nitroglycerin	55-63-0		U	1.02	0.255

Surrogate	% Recovery	Lower	Upper	Qual
1,2-Dinitrobenzene	65.7	50	150	

U Undetected; the analyte was analyzed for, but not detected.

Microbac

25 lw 2/5/09

7

Sample Number: L08110664-07
Client ID: MR08-TW21 -08D
Matrix: Water
Workgroup Number: WG289008
Collect Date: 11/21/2008 10:40
Sample Tag: 02

PrePrep Method: NONE
Prep Method: 3535
Analytical Method: 8330MOD
Analyst: ECL
Dilution: 1
Units: ug/L

Instrument: HPLC5
Prep Date: 11/24/2008 09:30
Cal Date: 08/12/2008 15:23
Run Date: 11/26/2008 20:38
File ID: 5L002972.F

Analyte	CAS. Number	Result	Qual	RL	MDL
PETN	78-11-5		U	1.02	0.255

U Undetected; the analyte was analyzed for, but not detected.

Microbac

flw 2/5/09

7

Sample Number: L08110664-07
Client ID: MR08-TW21 -08D
Matrix: Water
Workgroup Number: WG289008
Collect Date: 11/21/2008 10:40
Sample Tag: 01

PrePrep Method: NONE
Prep Method: 3535
Analytical Method: 8330MOD
Analyst: ECL
Dilution: 1
Units: ug/L

Instrument: HPLC4
Prep Date: 11/24/2008 09:30
Cal Date: 10/30/2008 18:13
Run Date: 11/26/2008 07:15
File ID: 4L014592.F

Analyte	CAS. Number	Result	Qual	RL	MDL
1,3,5-Trinitrobenzene	99-35-4		U	1.02	0.255
1,3-Dinitrobenzene	99-65-0		U	1.02	0.255
2,4,6-Trinitrotoluene	118-96-7		U	1.02	0.255
2,4-Dinitrotoluene	121-14-2		U	1.02	0.255
2,6-Dinitrotoluene	606-20-2		U	1.02	0.255
2-Amino-4,6-dinitrotoluene	35572-78-2		U	1.02	0.255
2-Nitrotoluene	88-72-2		U	1.02	0.255
3-Nitrotoluene	99-08-1		U	1.02	0.255
4-Nitrotoluene	99-99-0		U	1.02	0.255
4-Amino-2,6-dinitrotoluene	19406-51-0		U	1.02	0.255
HMX	2691-41-0		U	1.02	0.255
Nitrobenzene	98-95-3		U	1.02	0.255
RDX	121-82-4		U	1.02	0.255
Tetryl	479-45-8		U	1.02	0.255
Nitroglycerin	55-63-0		U	1.02	0.255

Surrogate	% Recovery	Lower	Upper	Qual
1,2-Dinitrobenzene	68.9	50	150	

U Undetected; the analyte was analyzed for, but not detected.

Microbac

2/5/09

8

Sample Number: L08110664-08
Client ID: MR08-TW22 -08D
Matrix: Water
Workgroup Number: WG289008
Collect Date: 11/21/2008 11:00
Sample Tag: 02

PrePrep Method: NONE
Prep Method: 3535
Analytical Method: 8330MOD
Analyst: ECL
Dilution: 1
Units: ug/L

Instrument: HPLC5
Prep Date: 11/24/2008 09:30
Cal Date: 08/12/2008 15:23
Run Date: 11/26/2008 20:51
File ID: 5L002973.F

Analyte	CAS. Number	Result	Qual	RL	MDL
PETN	78-11-5		U	1.04	0.260

U Undetected; the analyte was analyzed for, but not detected.

Microbac

28 lw 2/5/09

8

Sample Number: L08110664-08
Client ID: MR08-TW22 -08D
Matrix: Water
Workgroup Number: WG289008
Collect Date: 11/21/2008 11:00
Sample Tag: 01

PrePrep Method: NONE
Prep Method: 3535
Analytical Method: 8330MOD
Analyst: ECL
Dilution: 1
Units: ug/L

Instrument: HPLC4
Prep Date: 11/24/2008 09:30
Cal Date: 10/30/2008 18:13
Run Date: 11/26/2008 07:53
File ID: 4L014593.F

Analyte	CAS. Number	Result	Qual	RL	MDL
1,3,5-Trinitrobenzene	99-35-4		U	1.04	0.260
1,3-Dinitrobenzene	99-65-0		U	1.04	0.260
2,4,6-Trinitrotoluene	118-96-7		U	1.04	0.260
2,4-Dinitrotoluene	121-14-2		U	1.04	0.260
2,6-Dinitrotoluene	606-20-2		U	1.04	0.260
2-Amino-4,6-dinitrotoluene	35572-78-2		U	1.04	0.260
2-Nitrotoluene	88-72-2		U	1.04	0.260
3-Nitrotoluene	99-08-1		U	1.04	0.260
4-Nitrotoluene	99-99-0		U	1.04	0.260
4-Amino-2,6-dinitrotoluene	19406-51-0		U	1.04	0.260
HMX	2691-41-0		U	1.04	0.260
Nitrobenzene	98-95-3		U	1.04	0.260
RDX	121-82-4		U	1.04	0.260
Tetryl	479-45-8		U	1.04	0.260
Nitroglycerin	55-63-0		U	1.04	0.260

Surrogate	% Recovery	Lower	Upper	Qual
1,2-Dinitrobenzene	79.6	50	150	

U Undetected; the analyte was analyzed for, but not detected.

Microbac

 RW 2/5/09

9

Sample Number: L08110664-09
Client ID: MR08-TW23 -08D
Matrix: Water
Workgroup Number: WG289008
Collect Date: 11/21/2008 12:00
Sample Tag: 02

PrePrep Method: NONE
Prep Method: 3535
Analytical Method: 8330MOD
Analyst: ECL
Dilution: 1
Units: ug/L

Instrument: HPLC5
Prep Date: 11/24/2008 09:30
Cal Date: 08/12/2008 15:23
Run Date: 11/26/2008 21:04
File ID: 5L002974.F

Analyte	CAS. Number	Result	Qual	RL	MDL
PETN	78-11-5		U	1.05	0.263

U Undetected; the analyte was analyzed for, but not detected.

Microbac®

 LW 2/5/09

9

Sample Number: L08110664-09
Client ID: MR08-TW23 -08D
Matrix: Water
Workgroup Number: WG289008
Collect Date: 11/21/2008 12:00
Sample Tag: 01

PrePrep Method: NONE
Prep Method: 3535
Analytical Method: 8330MOD
Analyst: ECL
Dilution: 1
Units: ug/L

Instrument: HPLC4
Prep Date: 11/24/2008 09:30
Cal Date: 10/30/2008 18:13
Run Date: 11/26/2008 08:31
File ID: 4L014594.F

Analyte	CAS. Number	Result	Qual	RL	MDL
1,3,5-Trinitrobenzene	99-35-4		U	1.05	0.263
1,3-Dinitrobenzene	99-65-0		U	1.05	0.263
2,4,6-Trinitrotoluene	118-96-7		U	1.05	0.263
2,4-Dinitrotoluene	121-14-2		U	1.05	0.263
2,6-Dinitrotoluene	606-20-2		U	1.05	0.263
2-Amino-4,6-dinitrotoluene	35572-78-2		U	1.05	0.263
2-Nitrotoluene	88-72-2		U	1.05	0.263
3-Nitrotoluene	99-08-1		U	1.05	0.263
4-Nitrotoluene	99-99-0		U	1.05	0.263
4-Amino-2,6-dinitrotoluene	19406-51-0		U	1.05	0.263
HMX	2691-41-0		U	1.05	0.263
Nitrobenzene	98-95-3		U	1.05	0.263
RDX	121-82-4		U	1.05	0.263
Tetryl	479-45-8		U	1.05	0.263
Nitroglycerin	55-63-0		U	1.05	0.263

Surrogate	% Recovery	Lower	Upper	Qual
1,2-Dinitrobenzene	111	50	150	

U Undetected; the analyte was analyzed for, but not detected.

Microbac

 RW 2/5/09

ENVIRONMENTAL
Data Services, Inc.

METALS

USEPA Region IV - Level IV Review

Site: MCB Camp Lejeune, TO-09 SDG #: L08110664

Client: CH2M HILL, Inc., Virginia Beach, Virginia Date: February 3, 2009

Laboratory: Microbac Laboratories, Inc., Marietta, Ohio Reviewer: Nancy Weaver

EDS ID	Client Sample ID	Laboratory Sample ID	Matrix
1	MR08-TW24-08D	L08110664-01	Water
2	MR08-TW17-08D	L08110664-02	Water
3	MR08-TW17D-08D	L08110664-03	Water
4	MR08-TW15-08D	L08110664-04	Water
5	MR08-TW15D-08D	L08110664-05	Water
6	MR08-TW16-08D	L08110664-06	Water
7	MR08-TW21-08D	L08110664-07	Water
8	MR08-TW22-08D	L08110664-08	Water
9	MR08-TW23-08D	L08110664-09	Water

The USEPA "Contract Laboratory Program National Functional Guidelines for Inorganic Data Review," October 2004, and professional judgement were used in evaluating the data in this summary report.

Holding Times - All samples were prepared and analyzed within 28 days for mercury and 180 days for all other metals.

Calibration - The ICV and CCV %R values were acceptable.

Method and Calibration Blanks - The method blank contaminations are summarized below:

Compound	Conc. ug/L	Action Level ug/L	Qualifier	Affected Samples
Cadmium	0.331	1.655	U	2, 6, 7
Silver	2.36	11.8	U	1-9

Field and Equipment Blank - Field QC results are summarized below.

Blank ID	Compound	Conc. ug/L	Action Level ug/L	Qualifier	Affected Samples
MR08-EB111708-1	None - ND	-	-	-	-
MR08-FB112008	None - ND	-	-	-	-

ICP Interference Check Sample - All %R values were acceptable.

MS/MSD - The MS/MSD sample exhibited acceptable %R and RPD values.

LCS - The LCS samples exhibited acceptable %R values.

ICP Serial Dilution - The ICP serial dilution sample exhibited acceptable %D values.

Field Duplicates - Field duplicate results are summarized below.

Compound	MR08-TW17-08D ug/L	MR08-TW17D-08D ug/L	RPD	Qualifier
Arsenic	0.854	0.779	9%	None
Barium	61.9	58.9	5%	None
Chromium	5.42	5.03	7%	None
Selenium	1.74	1.79	3%	None
Zinc	14.0	14.2	1%	None

Compound	MR08-TW15-08D ug/L	MR08-TW15D-08D ug/L	RPD	Qualifier
Arsenic	0.473	0.410	14%	None
Barium	155	151	3%	None
Copper	13.4	14.1	5%	None
Lead	0.311	0.342	9%	None
Selenium	1.53	1.43	7%	None
Zinc	20.7	21.0	1%	None

Compound Quantitation - No discrepancies were identified.

Report Number: L08110664

Report Date : December 12, 2008

1

Sample Number:	L08110664-01	PrePrep Method:	NONE	Instrument:	PE-ICP2
Client ID:	MR08-TW24 -08D	Prep Method:	3005A	Prep Date:	12/01/2008 11:02
Matrix:	Water	Analytical Method:	6010B	Cal Date:	12/05/2008 11:24
Workgroup Number:	WG289429	Analyst:	ED	Run Date:	12/05/2008 14:14
Collect Date:	11/20/2008 16:55	Dilution:	1	File ID:	P2.120508.141420
Sample Tag:	01	Units:	ug/L		

Analyte	CAS. Number	Result	Qual	RL	MDL
Barium, Total	7440-39-3	124		10.0	2.50
Cadmium, Total	7440-43-9		U	1.00	0.250
Chromium, Total	7440-47-3	3.40	J	10.0	2.50
Copper, Total	7440-50-8		U	20.0	5.00
Silver, Total	7440-22-4	6.00 ~~3.69~~	U ~~J~~	6.00	2.00
Zinc, Total	7440-66-6	10.2	J	20.0	5.00

BL

U Undetected; the analyte was analyzed for, but not detected.
J Estimated ; the analyte concentration was less than the low standard (LOQ)

Microbac

kw 2/3/09

Report Number: L08110664
Report Date : December 12, 2008

Sample Number: L08110664-01
Client ID: MR08-TW24 -08D
Matrix: Water
Workgroup Number: WG289546
Collect Date: 11/20/2008 16:55
Sample Tag: 01

PrePrep Method: NONE
Prep Method: 3015
Analytical Method: 6020
Analyst: JYH
Dilution: 1
Units: ug/L

Instrument: ELAN-ICP
Prep Date: 12/05/2008 08:24
Cal Date: 12/04/2008 11:09
Run Date: 12/04/2008 16:56
File ID: EL.120408.165600

Analyte	CAS. Number	Result	Qual	RL	MDL
Arsenic, Total	7440-38-2		U	1.00	0.250
Lead, Total	7439-92-1		U	1.00	0.250
Antimony, Total	7440-36-0		U	1.00	0.250
Selenium, Total	7782-49-2	0.675	J	2.00	0.500

U Undetected; the analyte was analyzed for, but not detected.
J Estimated ; the analyte concentration was less than the low standard (LOQ)

Microbac

 2/3/09

Report Number: L08110664

Report Date : December 12, 2008

Sample Number: L08110664-01
Client ID: MR08-TW24 -08D
Matrix: Water
Workgroup Number: WG289423
Collect Date: 11/20/2008 16:55
Sample Tag: 01

PrePrep Method: NONE
Prep Method: 7470A
Analytical Method: 7470A
Analyst: ADC
Dilution: 1
Units: ug/L

Instrument: HYDRA
Prep Date: 11/26/2008 08:10
Cal Date: 12/02/2008 15:26
Run Date: 12/02/2008 15:43
File ID: HY.120208.154345

Analyte	CAS. Number	Result	Qual	RL	MDL
Mercury	7439-97-6		U	0.400	0.100

U Undetected; the analyte was analyzed for, but not detected.

Microbac

838

DW 2/3/09

Report Number: L08110664
Report Date : December 12, 2008

2

Sample Number: L08110664-02
Client ID: MR08-TW17 -08D
Matrix: Water
Workgroup Number: WG289429
Collect Date: 11/20/2008 15:40
Sample Tag: 01

PrePrep Method: NONE
Prep Method: 3005A
Analytical Method: 6010B
Analyst: ED
Dilution: 1
Units: ug/L

Instrument: PE-ICP2
Prep Date: 12/01/2008 11:02
Cal Date: 12/05/2008 11:24
Run Date: 12/05/2008 14:45
File ID: P2.120508.144547

Analyte	CAS. Number	Result	Qual	RL	MDL
Barium, Total	7440-39-3	61.9		10.0	2.50
Cadmium, Total	7440-43-9 1.00	~~0.298~~	~~J~~ U	1.00	0.250 BL
Chromium, Total	7440-47-3	5.42	J	10.0	2.50
Copper, Total	7440-50-8		U	20.0	5.00
Silver, Total	7440-22-4 6.00	~~3.21~~	~~J~~ U	6.00	2.00 BL
Zinc, Total	7440-66-6	14.0	J	20.0	5.00

U Undetected; the analyte was analyzed for, but not detected.
J Estimated ; the analyte concentration was less than the low standard (LOQ)

Microbac

MW
2/3/09

2

Sample Number: L08110664-02
Client ID: MR08-TW17 -08D
Matrix: Water
Workgroup Number: WG289546
Collect Date: 11/20/2008 15:40
Sample Tag: 01

PrePrep Method: NONE
Prep Method: 3015
Analytical Method: 6020
Analyst: JYH
Dilution: 1
Units: ug/L

Instrument: ELAN-ICP
Prep Date: 12/05/2008 08:24
Cal Date: 12/04/2008 11:09
Run Date: 12/04/2008 17:39
File ID: EL.120408.173938

Analyte	CAS. Number	Result	Qual	RL	MDL
Arsenic, Total	7440-38-2	0.854	J	1.00	0.250
Lead, Total	7439-92-1		U	1.00	0.250
Antimony, Total	7440-36-0		U	1.00	0.250
Selenium, Total	7782-49-2	1.74	J	2.00	0.500

U Undetected; the analyte was analyzed for, but not detected.
J Estimated ; the analyte concentration was less than the low standard (LOQ)

Microbac

419 LW 2/3/09

2

Sample Number:	L08110664-02	PrePrep Method:	NONE	Instrument:	HYDRA
Client ID:	MR08-TW17 -08D	Prep Method:	7470A	Prep Date:	11/26/2008 08:10
Matrix:	Water	Analytical Method:	7470A	Cal Date:	12/02/2008 15:26
Workgroup Number:	WG289423	Analyst:	ADC	Run Date:	12/02/2008 15:45
Collect Date:	11/20/2008 15:40	Dilution:	1	File ID:	HY.120208.154529
Sample Tag:	01	Units:	ug/L		

Analyte	CAS. Number	Result	Qual	RL	MDL
Mercury	7439-97-6		U	0.400	0.100

U Undetected; the analyte was analyzed for, but not detected.

Microbac

839 MW 2/3/09

Report Number: L08110664

Report Date : December 12, 2008

3

Sample Number: L08110664-03
Client ID: MR08-TW17D -08D
Matrix: Water
Workgroup Number: WG289429
Collect Date: 11/20/2008 15:45
Sample Tag: 01

PrePrep Method: NONE
Prep Method: 3005A
Analytical Method: 6010B
Analyst: ED
Dilution: 1
Units: ug/L

Instrument: PE-ICP2
Prep Date: 12/01/2008 11:02
Cal Date: 12/05/2008 11:24
Run Date: 12/05/2008 14:52
File ID: P2.120508.145200

Analyte	CAS. Number	Result	Qual	RL	MDL
Barium, Total	7440-39-3	58.9		10.0	2.50
Cadmium, Total	7440-43-9		U	1.00	0.250
Chromium, Total	7440-47-3	5.03	J	10.0	2.50
Copper, Total	7440-50-8		U	20.0	5.00
Silver, Total	7440-22-4	6.00 ~~3.28~~	U ~~J~~	6.00	2.00
Zinc, Total	7440-66-6	14.2	J	20.0	5.00

BL

U Undetected; the analyte was analyzed for, but not detected.
J Estimated ; the analyte concentration was less than the low standard (LOQ)

Microbac

199 LW 2/3/09

3

Sample Number: L08110664-03
Client ID: MR08-TW17D -08D
Matrix: Water
Workgroup Number: WG289546
Collect Date: 11/20/2008 15:45
Sample Tag: 01

PrePrep Method: NONE
Prep Method: 3015
Analytical Method: 6020
Analyst: JYH
Dilution: 1
Units: ug/L

Instrument: ELAN-ICP
Prep Date: 12/05/2008 08:24
Cal Date: 12/04/2008 11:09
Run Date: 12/04/2008 17:45
File ID: EL.120408.174502

Analyte	CAS. Number	Result	Qual	RL	MDL
Arsenic, Total	7440-38-2	0.779	J	1.00	0.250
Lead, Total	7439-92-1		U	1.00	0.250
Antimony, Total	7440-36-0		U	1.00	0.250
Selenium, Total	7782-49-2	1.79	J	2.00	0.500

U Undetected; the analyte was analyzed for, but not detected.
J Estimated ; the analyte concentration was less than the low standard (LOQ)

Microbac®

420 JW 2/3/09

3

Sample Number: L08110664-03
Client ID: MR08-TW17D -08D
Matrix: Water
Workgroup Number: WG289423
Collect Date: 11/20/2008 15:45
Sample Tag: 01

PrePrep Method: NONE
Prep Method: 7470A
Analytical Method: 7470A
Analyst: ADC
Dilution: 1
Units: ug/L

Instrument: HYDRA
Prep Date: 11/26/2008 08:10
Cal Date: 12/02/2008 15:26
Run Date: 12/02/2008 15:52
File ID: HY.120208.155256

Analyte	CAS. Number	Result	Qual	RL	MDL
Mercury	7439-97-6		U	0.400	0.100

U Undetected; the analyte was analyzed for, but not detected.

Microbac

840 lw 2/3/09

4

Sample Number: L08110664-04
Client ID: MR08-TW15 -08D
Matrix: Water
Workgroup Number: WG289429
Collect Date: 11/21/2008 08:00
Sample Tag: 01

PrePrep Method: NONE
Prep Method: 3005A
Analytical Method: 6010B
Analyst: ED
Dilution: 1
Units: ug/L

Instrument: PE-ICP2
Prep Date: 12/01/2008 11:02
Cal Date: 12/05/2008 11:24
Run Date: 12/05/2008 14:57
File ID: P2.120508.145720

Analyte	CAS. Number	Result	Qual	RL	MDL
Barium, Total	7440-39-3	155		10.0	2.50
Cadmium, Total	7440-43-9		U	1.00	0.250
Chromium, Total	7440-47-3		U	10.0	2.50
Copper, Total	7440-50-8	13.4	J	20.0	5.00
Silver, Total	7440-22-4	6.00 ~~2.83~~	~~J~~ U	6.00	2.00
Zinc, Total	7440-66-6	20.7		20.0	5.00

BL

U Undetected; the analyte was analyzed for, but not detected.
J Estimated ; the analyte concentration was less than the low standard (LOQ)

Microbac

200 MW 2/3/09

4

Sample Number: L08110664-04
Client ID: MR08-TW15 -08D
Matrix: Water
Workgroup Number: WG289546
Collect Date: 11/21/2008 08:00
Sample Tag: 01

PrePrep Method: NONE
Prep Method: 3015
Analytical Method: 6020
Analyst: JYH
Dilution: 1
Units: ug/L

Instrument: ELAN-ICP
Prep Date: 12/05/2008 08:24
Cal Date: 12/04/2008 11:09
Run Date: 12/04/2008 17:50
File ID: EL.120408.175026

Analyte	CAS. Number	Result	Qual	RL	MDL
Arsenic, Total	7440-38-2	0.473	J	1.00	0.250
Lead, Total	7439-92-1	0.311	J	1.00	0.250
Antimony, Total	7440-36-0		U	1.00	0.250
Selenium, Total	7782-49-2	1.53	J	2.00	0.500

U Undetected; the analyte was analyzed for, but not detected.
J Estimated ; the analyte concentration was less than the low standard (LOQ)

Microbac

421 QW 2/3/09

4

Sample Number: L08110664-04
Client ID: MR08-TW15 -08D
Matrix: Water
Workgroup Number: WG289423
Collect Date: 11/21/2008 08:00
Sample Tag: 01

PrePrep Method: NONE
Prep Method: 7470A
Analytical Method: 7470A
Analyst: ADC
Dilution: 1
Units: ug/L

Instrument: HYDRA
Prep Date: 11/26/2008 08:10
Cal Date: 12/02/2008 15:26
Run Date: 12/02/2008 15:54
File ID: HY.120208.155442

Analyte	CAS. Number	Result	Qual	RL	MDL
Mercury	7439-97-6		U	0.400	0.100

U Undetected; the analyte was analyzed for, but not detected.

Microbac

841 LW 2/3/09

5

Sample Number: L08110664-05
Client ID: MR08-TW15D -08D
Matrix: Water
Workgroup Number: WG289429
Collect Date: 11/21/2008 08:05
Sample Tag: 01

PrePrep Method: NONE
Prep Method: 3005A
Analytical Method: 6010B
Analyst: ED
Dilution: 1
Units: ug/L

Instrument: PE-ICP2
Prep Date: 12/01/2008 11:02
Cal Date: 12/05/2008 11:24
Run Date: 12/05/2008 15:03
File ID: P2.120508.150337

Analyte	CAS. Number	Result	Qual	RL	MDL
Barium, Total	7440-39-3	151		10.0	2.50
Cadmium, Total	7440-43-9		U	1.00	0.250
Chromium, Total	7440-47-3		U	10.0	2.50
Copper, Total	7440-50-8	14.1	J	20.0	5.00
Silver, Total	7440-22-4	6.00 ~~2.07~~	~~J~~ U	6.00	2.00 BL
Zinc, Total	7440-66-6	21.0		20.0	5.00

U Undetected; the analyte was analyzed for, but not detected.
J Estimated ; the analyte concentration was less than the low standard (LOQ)

Microbac

201 fw 2/3/09

5

Sample Number: L08110664-05
Client ID: MR08-TW15D -08D
Matrix: Water
Workgroup Number: WG289546
Collect Date: 11/21/2008 08:05
Sample Tag: 01

PrePrep Method: NONE
Prep Method: 3015
Analytical Method: 6020
Analyst: JYH
Dilution: 1
Units: ug/L

Instrument: ELAN-ICP
Prep Date: 12/05/2008 08:24
Cal Date: 12/04/2008 11:09
Run Date: 12/04/2008 17:55
File ID: EL.120408.175550

Analyte	CAS. Number	Result	Qual	RL	MDL
Arsenic, Total	7440-38-2	0.410	J	1.00	0.250
Lead, Total	7439-92-1	0.342	J	1.00	0.250
Antimony, Total	7440-36-0		U	1.00	0.250
Selenium, Total	7782-49-2	1.43	J	2.00	0.500

U Undetected; the analyte was analyzed for, but not detected.
J Estimated ; the analyte concentration was less than the low standard (LOQ)

Microbac

 fw 2/3/09

5

Sample Number: L08110664-05
Client ID: MR08-TW15D -08D
Matrix: Water
Workgroup Number: WG289423
Collect Date: 11/21/2008 08:05
Sample Tag: 01

PrePrep Method: NONE
Prep Method: 7470A
Analytical Method: 7470A
Analyst: ADC
Dilution: 1
Units: ug/L

Instrument: HYDRA
Prep Date: 11/26/2008 08:10
Cal Date: 12/02/2008 15:26
Run Date: 12/02/2008 16:00
File ID: HY.120208.160013

Analyte	CAS. Number	Result	Qual	RL	MDL
Mercury	7439-97-6		U	0.400	0.100

U Undetected; the analyte was analyzed for, but not detected.

Microbac

842 LW 2/3/09

Report Number: L08110664
Report Date : December 12, 2008

6

Sample Number: L08110664-06
Client ID: MR08-TW16 -08D
Matrix: Water
Workgroup Number: WG289429
Collect Date: 11/21/2008 08:45
Sample Tag: 01

PrePrep Method: NONE
Prep Method: 3005A
Analytical Method: 6010B
Analyst: ED
Dilution: 1
Units: ug/L

Instrument: PE-ICP2
Prep Date: 12/01/2008 11:02
Cal Date: 12/05/2008 11:24
Run Date: 12/05/2008 15:09
File ID: P2.120508.150956

Analyte	CAS. Number	Result	Qual	RL	MDL	
Barium, Total	7440-39-3	170		10.0	2.50	
Cadmium, Total	7440-43-9	1.00 ~~0.285~~	U ~~J~~	1.00	0.250	BL
Chromium, Total	7440-47-3	4.67	J	10.0	2.50	
Copper, Total	7440-50-8		U	20.0	5.00	
Silver, Total	7440-22-4	6.00 ~~3.32~~	U ~~J~~	6.00	2.00	BL
Zinc, Total	7440-66-6	13.3	J	20.0	5.00	

U Undetected; the analyte was analyzed for, but not detected.
J Estimated ; the analyte concentration was less than the low standard (LOQ)

Microbac

202 fw
2/3/09

6

Sample Number: L08110664-06
Client ID: MR08-TW16 -08D
Matrix: Water
Workgroup Number: WG289546
Collect Date: 11/21/2008 08:45
Sample Tag: 01

PrePrep Method: NONE
Prep Method: 3015
Analytical Method: 6020
Analyst: JYH
Dilution: 1
Units: ug/L

Instrument: ELAN-ICP
Prep Date: 12/05/2008 08:24
Cal Date: 12/04/2008 11:09
Run Date: 12/04/2008 18:01
File ID: EL.120408.180115

Analyte	CAS. Number	Result	Qual	RL	MDL
Arsenic, Total	7440-38-2	0.495	J	1.00	0.250
Lead, Total	7439-92-1	0.420	J	1.00	0.250
Antimony, Total	7440-36-0		U	1.00	0.250
Selenium, Total	7782-49-2	1.96	J	2.00	0.500

U Undetected; the analyte was analyzed for, but not detected.
J Estimated ; the analyte concentration was less than the low standard (LOQ)

Microbac

423 lw 2/3/09

6

Sample Number: L08110664-06
Client ID: MR08-TW16 -08D
Matrix: Water
Workgroup Number: WG289423
Collect Date: 11/21/2008 08:45
Sample Tag: 01

PrePrep Method: NONE
Prep Method: 7470A
Analytical Method: 7470A
Analyst: ADC
Dilution: 1
Units: ug/L

Instrument: HYDRA
Prep Date: 11/26/2008 08:10
Cal Date: 12/02/2008 15:26
Run Date: 12/02/2008 16:01
File ID: HY.120208.160158

Analyte	CAS. Number	Result	Qual	RL	MDL
Mercury	7439-97-6		U	0.400	0.100

U Undetected; the analyte was analyzed for, but not detected.

Microbac

843 LW 2/3/09

7

Sample Number: L08110664-07
Client ID: MR08-TW21 -08D
Matrix: Water
Workgroup Number: WG289429
Collect Date: 11/21/2008 10:40
Sample Tag: 01

PrePrep Method: NONE
Prep Method: 3005A
Analytical Method: 6010B
Analyst: ED
Dilution: 1
Units: ug/L

Instrument: PE-ICP2
Prep Date: 12/01/2008 11:02
Cal Date: 12/05/2008 11:24
Run Date: 12/05/2008 15:16
File ID: P2.120508.151617

Analyte	CAS. Number	Result	Qual	RL	MDL
Barium, Total	7440-39-3	71.8		10.0	2.50
Cadmium, Total	7440-43-9 1.00	~~0.579~~	U ~~J~~	1.00	0.250 BL
Chromium, Total	7440-47-3	18.9		10.0	2.50
Copper, Total	7440-50-8		U	20.0	5.00
Silver, Total	7440-22-4 6.00	~~2.55~~	U ~~J~~	6.00	2.00 BL
Zinc, Total	7440-66-6	12.8	J	20.0	5.00

U Undetected; the analyte was analyzed for, but not detected.
J Estimated ; the analyte concentration was less than the low standard (LOQ)

Microbac

 RW 2/3/09

7

Sample Number: L08110664-07
Client ID: MR08-TW21 -08D
Matrix: Water
Workgroup Number: WG289546
Collect Date: 11/21/2008 10:40
Sample Tag: 01

PrePrep Method: NONE
Prep Method: 3015
Analytical Method: 6020
Analyst: JYH
Dilution: 1
Units: ug/L

Instrument: ELAN-ICP
Prep Date: 12/05/2008 08:24
Cal Date: 12/04/2008 11:09
Run Date: 12/04/2008 18:06
File ID: EL.120408.180638

Analyte	CAS. Number	Result	Qual	RL	MDL
Arsenic, Total	7440-38-2	31.8		1.00	0.250
Lead, Total	7439-92-1	7.74		1.00	0.250
Antimony, Total	7440-36-0	1.72		1.00	0.250
Selenium, Total	7782-49-2	0.900	J	2.00	0.500

J Estimated ; the analyte concentration was less than the low standard (LOQ)

Microbac

 RW 2/3/09

7

Sample Number: L08110664-07
Client ID: MR08-TW21 -08D
Matrix: Water
Workgroup Number: WG289423
Collect Date: 11/21/2008 10:40
Sample Tag: 01

PrePrep Method: NONE
Prep Method: 7470A
Analytical Method: 7470A
Analyst: ADC
Dilution: 1
Units: ug/L

Instrument: HYDRA
Prep Date: 11/26/2008 08:10
Cal Date: 12/02/2008 15:26
Run Date: 12/02/2008 16:04
File ID: HY.120208.160404

Analyte	CAS. Number	Result	Qual	RL	MDL
Mercury	7439-97-6		U	0.400	0.100

U Undetected; the analyte was analyzed for, but not detected.

Microbac

844 lw 2/3/09

8

Sample Number: L08110664-08
Client ID: MR08-TW22 -08D
Matrix: Water
Workgroup Number: WG289429
Collect Date: 11/21/2008 11:00
Sample Tag: 01

PrePrep Method: NONE
Prep Method: 3005A
Analytical Method: 6010B
Analyst: ED
Dilution: 1
Units: ug/L

Instrument: PE-ICP2
Prep Date: 12/01/2008 11:02
Cal Date: 12/05/2008 11:24
Run Date: 12/05/2008 15:22
File ID: P2.120508.152231

Analyte	CAS. Number	Result	Qual	RL	MDL
Barium, Total	7440-39-3	92.0		10.0	2.50
Cadmium, Total	7440-43-9		U	1.00	0.250
Chromium, Total	7440-47-3	2.62	J	10.0	2.50
Copper, Total	7440-50-8		U	20.0	5.00
Silver, Total	7440-22-4	6.50 ~~2.65~~	U ~~J~~	6.00	2.00
Zinc, Total	7440-66-6	9.31	J	20.0	5.00

BL

U Undetected; the analyte was analyzed for, but not detected.
J Estimated ; the analyte concentration was less than the low standard (LOQ)

Microbac

204 LW 2/3/09

8

Sample Number: L08110664-08
Client ID: MR08-TW22 -08D
Matrix: Water
Workgroup Number: WG289546
Collect Date: 11/21/2008 11:00
Sample Tag: 01

PrePrep Method: NONE
Prep Method: 3015
Analytical Method: 6020
Analyst: JYH
Dilution: 1
Units: ug/L

Instrument: ELAN-ICP
Prep Date: 12/05/2008 08:24
Cal Date: 12/04/2008 11:09
Run Date: 12/04/2008 18:12
File ID: EL.120408.181200

Analyte	CAS. Number	Result	Qual	RL	MDL
Arsenic, Total	7440-38-2	0.383	J	1.00	0.250
Lead, Total	7439-92-1		U	1.00	0.250
Antimony, Total	7440-36-0		U	1.00	0.250
Selenium, Total	7782-49-2	1.09	J	2.00	0.500

U Undetected; the analyte was analyzed for, but not detected.
J Estimated ; the analyte concentration was less than the low standard (LOQ)

Microbac

 lw 2/3/09

Report Number: L08110664

Report Date : December 12, 2008

8

Sample Number:	L08110664-08	PrePrep Method:	NONE	Instrument:	HYDRA
Client ID:	MR08-TW22 -08D	Prep Method:	7470A	Prep Date:	11/26/2008 08:10
Matrix:	Water	Analytical Method:	7470A	Cal Date:	12/02/2008 15:26
Workgroup Number:	WG289423	Analyst:	ADC	Run Date:	12/02/2008 16:05
Collect Date:	11/21/2008 11:00	Dilution:	1	File ID:	HY.120208.160557
Sample Tag:	01	Units:	ug/L		

Analyte	CAS. Number	Result	Qual	RL	MDL
Mercury	7439-97-6		U	0.400	0.100

U Undetected; the analyte was analyzed for, but not detected.

Microbac

845 LW 2/3/09

9

Sample Number: L08110664-09
Client ID: MR08-TW23 -08D
Matrix: Water
Workgroup Number: WG289429
Collect Date: 11/21/2008 12:00
Sample Tag: 01

PrePrep Method: NONE
Prep Method: 3005A
Analytical Method: 6010B
Analyst: ED
Dilution: 1
Units: ug/L

Instrument: PE-ICP2
Prep Date: 12/01/2008 11:02
Cal Date: 12/05/2008 11:24
Run Date: 12/05/2008 15:28
File ID: P2.120508.152853

Analyte	CAS. Number	Result	Qual	RL	MDL
Barium, Total	7440-39-3	33.2		10.0	2.50
Cadmium, Total	7440-43-9		U	1.00	0.250
Chromium, Total	7440-47-3		U	10.0	2.50
Copper, Total	7440-50-8		U	20.0	5.00
Silver, Total	7440-22-4	6.00 ~~2.88~~	U	6.00	2.00
Zinc, Total	7440-66-6	36.0		20.0	5.00

BL

U Undetected; the analyte was analyzed for, but not detected.
J Estimated ; the analyte concentration was less than the low standard (LOQ)

Microbac

205 lw 2/3/09

9

Sample Number: L08110664-09
Client ID: MR08-TW23 -08D
Matrix: Water
Workgroup Number: WG289546
Collect Date: 11/21/2008 12:00
Sample Tag: 01

PrePrep Method: NONE
Prep Method: 3015
Analytical Method: 6020
Analyst: JYH
Dilution: 1
Units: ug/L

Instrument: ELAN-ICP
Prep Date: 12/05/2008 08:24
Cal Date: 12/04/2008 11:09
Run Date: 12/04/2008 18:17
File ID: EL.120408.181722

Analyte	CAS. Number	Result	Qual	RL	MDL
Arsenic, Total	7440-38-2	0.978	J	1.00	0.250
Lead, Total	7439-92-1	0.337	J	1.00	0.250
Antimony, Total	7440-36-0		U	1.00	0.250
Selenium, Total	7782-49-2	0.557	J	2.00	0.500

U Undetected; the analyte was analyzed for, but not detected.
J Estimated ; the analyte concentration was less than the low standard (LOQ)

Microbac

 MW 2/3/09

9

Sample Number: L08110664-09
Client ID: MR08-TW23 -08D
Matrix: Water
Workgroup Number: WG289423
Collect Date: 11/21/2008 12:00
Sample Tag: 01

PrePrep Method: NONE
Prep Method: 7470A
Analytical Method: 7470A
Analyst: ADC
Dilution: 1
Units: ug/L

Instrument: HYDRA
Prep Date: 11/26/2008 08:10
Cal Date: 12/02/2008 15:26
Run Date: 12/02/2008 16:07
File ID: HY.120208.160744

Analyte	CAS. Number	Result	Qual	RL	MDL
Mercury	7439-97-6		U	0.400	0.100

U Undetected; the analyte was analyzed for, but not detected.

Microbac

846 lew 2/3/09

ENVIRONMENTAL
Data Services, Inc.

VOLATILE ORGANIC COMPOUNDS
USEPA Region IV - Level IV Review

Site: MCB Camp Lejeune, TO-09 SDG #: LEJEUNE015

Client: CH2M HILL, Inc., Virginia Beach, Virginia Date: January 28, 2009

Laboratory: Empirical Laboratories, Nashville, Tennessee Reviewer: Nancy Weaver

EDS ID	Client Sample ID	Laboratory Sample ID	Matrix
1	MR08-SS378-08D	0811141-01	Soil
2	MR08-IS378-08D	0811141-02	Soil
3	MR08-SS380-08D	0811141-03	Soil
4	MR08-FB111108-08D	0811141-04	Water
5	MR08-IS380-08D	0811141-05	Soil
6	MR08-SS381-08D	0811141-06	Soil
7	MR08-EB111108-1	0811141-07	Water
8	MR08-SW01-08D	0811141-08	Water
9	MR08-SD01-08D	0811141-09	Soil
10	MR08-SD01D-08D	0811141-10	Soil
11	MR08-SW03-08D	0811141-11	Water
11MS	MR08-SW03-08DMS	0811141-11MS	Water
11MSD	MR08-SW03-08DMSD	0811141-11MSD	Water
12	MR08-SD03-08D	0811141-12	Soil
13	MR08-GW61-08D	0811141-13	Water
14	MR08-GW03-08D	0811141-14	Water
15	MR08-EB111008	0811141-15	Water
16	IR78-GW02-08D	0811141-16	Water
17	IR78-GW02D-08D	0811141-17	Water
18	IR78-GW42-08D	0811141-18	Water
18DL	IR78-GW42-08DDL	0811141-18DL	Water
19	MR08-SW02-08D	0811141-19	Water
20	MR08-SW02D-08D	0811141-20	Water
21	MR08-SD02-08D	0811141-21	Soil
21MS	MR08-SD02-08DMS	0811141-21MS	Soil
21MSD	MR08-SD02-08DMSD	0811141-21MSD	Soil
22	MR08-SS379-08D	0811141-22	Soil

The USEPA "Contract Laboratory Program National Functional Guidelines for Organic Data Review," October 1999, and professional judgement were used in evaluating the data in this summary report.

Holding Times - All samples were analyzed within 14 days for preserved water and soil samples.

GC/MS Tuning - All of the BFB tunes in the initial and continuing calibrations met the percent relative abundance criteria.

Initial Calibration - The initial calibrations exhibited acceptable %RSD and mean RRF values.

Continuing Calibration - The continuing calibrations exhibited acceptable %D and RRF values except the following.

CCAL Date	Compound	%D/RRF	Qualifier	Affected Samples
11/22/08	Bromomethane	37.1%	J/UJ	1, 2, 5, 9, 12, 21
	1,2,4-Trichlorobenzene	44.4%	J/UJ	1, 2, 5, 9, 12, 21
	Tetrachloroethane	25.9%	J/UJ	1, 2, 5, 9, 12, 21
11/23/08	Bromomethane	45.0%	J/UJ	18DL
	1,2,4-Trichlorobenzene	27.5%	J/UJ	18DL

Surrogates - All samples exhibited acceptable surrogate recoveries except the following.

Sample ID	Surrogate	%R	Qualifier
3	Bromofluorobenzene	78%	J/UJ
6	Bromofluorobenzene	77%	J/UJ
22	Bromofluorobenzene	78%	J/UJ

MS/MSD - The MS/MSD sample exhibited acceptable %R and RPD values except the following.

MS/MSD Sample ID	Compound	MS/MSD %R/RPD	Qualifier
11	Methylene chloride	Ok/Ok/50	None for RPD alone
21	Benzene	70%/67%/Ok	J/UJ
	Bromodichloromethane	68%/68%/Ok	None - Already qualified due to IS
	Chlorobenzene	54%/48%/Ok	None - Already qualified due to IS
	Chloroform	66%/64%/Ok	J/UJ
	1,2-Dibromo-3-chloropropane	38%/48%/Ok	None - Already qualified due to IS
	1,2-Dibromoethane	55%/39%/Ok	None - Already qualified due to IS
	1,2-Dichlorobenzene	42%/39%/Ok	None - Already qualified due to IS
	1,3-Dichlorobenzene	41%/22%/Ok	None - Already qualified due to IS
	1,4-Dichlorobenzene	29%/73%/Ok	None - Already qualified due to IS
	1,1-Dichloroethane	74%/69%/Ok	J/UJ
	1,1-Dichloroethene	53%/54%/Ok	J/UJ

MS/MSD Sample ID	Compound	MS/MSD %R/RPD	Qualifier
21	1,2-Dichloroethane	Ok/69%/Ok	J/UJ
	cis-1,2-Dichloroethene	53%/51%/Ok	J/UJ
	trans-1,2-Dichloroethene	48%/44%/Ok	J/UJ
	cis-1,3-Dichloropropene	54%/50%/Ok	J/UJ
	trans-1,3-Dichloropropene	54%/49%/Ok	None - Already qualified due to IS
	Ethylbenzene	64%/59%/Ok	None - Already qualified due to IS
	Isopropylbenzene	67%/62%/Ok	None - Already qualified due to IS
	Methylene chloride	54%/51%/Ok	J/UJ
	Styrene	37%/28%/Ok	None - Already qualified due to IS
	Tetrachloroethene	Ok/63%/Ok	None - Already qualified due to IS
	1,2,4-Trichlorobenzene	24%/21%/Ok	None - Already qualified due to IS
	1,1,1-Trichloroethane	69%/Ok/Ok	J/UJ
	Trichloroethene	54%/52%/Ok	J/UJ
	Vinyl chloride	51%/52%/Ok	J/UJ
	Xylene (total)	62%/55%/Ok	J/UJ

Laboratory Control Sample - The LCS samples exhibited acceptable %R values except the following.

LCS ID	Compound	%R	Qualifier	Affected Samples
V1BLK1122	1,2,4-Trichlorobenzene	179%	None	All ND
	Tetrachloroethene	147%	None	All ND
	Vinyl chloride	57%	J/UJ	1, 2, 5, 9, 12

Internal Standard (IS) Area Performance - All internal standards met response and retention time (RT) criteria except the following.

Sample ID	Internal Standard	Area Count	Qualifier
1	IS3-1,4-Dichlorobenzene-d4	Low	J/UJ - Associated compounds
3	IS3-1,4-Dichlorobenzene-d4	Low	None - Already qualified due to surrogates
6	IS2-Chlorobenzene-d5	Low	None - Already qualified due to surrogates
	IS3-1,4-Dichlorobenzene-d4	Low	None - Already qualified due to surrogates
9	IS2-Chlorobenzene-d5	Low	J/UJ - Associated compounds
	IS3-1,4-Dichlorobenzene-d4	Low	J/UJ - Associated compounds
10	IS1-Fluorobenzene	Low	J/UJ - Associated compounds
	IS2-Chlorobenzene-d5	Low	J/UJ - Associated compounds
	IS3-1,4-Dichlorobenzene-d4	Low	J/UJ - Associated compounds
12	IS3-1,4-Dichlorobenzene-d4	Low	J/UJ - Associated compounds
21	IS2-Chlorobenzene-d5	Low	J/UJ - Associated compounds
	IS3-1,4-Dichlorobenzene-d4	Low	J/UJ - Associated compounds
22	IS3-1,4-Dichlorobenzene-d4	Low	None - Already qualified due to surrogates

Method Blank - The method blanks exhibited the following contamination.

Blank ID	Compound	Conc.	Action Level	Qualifier	Affected Samples
V3BLK1120E	Methylene chloride	0.33 ug/L	3.3 ug/L	U	4, 7, 19
V1BLK1122	Acetone	2.9 ug/kg	29 ug/kg	U	2, 3, 5, 12
	Methylene chloride	2.2 ug/kg	22 ug/kg	U	1, 2, 5, 6, 9, 10, 12, 21, 22
	1,2,4-Trichlorobenzene	0.51 ug/kg	2.55 ug/kg	None	All ND

Trip, Field, Equipment Blank - Field QC results are summarized below.

Blank ID	Compound	Conc. ug/L	Action Level ug/L or ug/kg	Qualifier	Affected Samples
MR08-FB111108-08D	Bromodichloromethane	0.25	1.25	None	All ND
	Chloroform	2.2	11.0	None	All ND
	Toluene	0.86	4.3	U	1, 8, 13, 18, 18DL, 22
MR08-EB111108-1	Bromodichloromethane	0.22	1.1	None	Use FB
	Chloroform	2.0	10.0	None	Use FB
	Toluene	0.77	3.85	None	Use FB
MR08-EB111008	Acetone	37	370	None	All associated ND
	2-Butanone	9.0	90	None	All associated ND
	1,2,4-Trichlorobenzene	0.12	0.60	None	All associated ND

Field Duplicates - Field duplicate results are summarized below.

Compound	MR08-SD01-08D ug/kg	MR08-SD01D-08D ug/kg	RPD	Qualifier
2-Butanone	14	9.8	34%	None

Compound	MR08-GW02-08D ug/L	MR08-GW02D-08D ug/L	RPD	Qualifier
None	ND	ND	-	-

Compound	MR08-SW02-08D ug/L	MR08-SW02D-08D ug/L	RPD	Qualifier
Acetone	3.8	2.5	41%	None

Tentatively Identified Compounds (TICs) - TICs were not reported.

Compound Quantitation - Several samples exhibited MS/MSD, IS, surrogate, blank and LCS recoveries outside of QC acceptance limits. These samples were qualified estimated (J/UJ) or rejected (R).

FORM 1
VOLATILE ORGANICS ANALYSIS DATA SHEET

CLIENT SAMPLE NO.

MR08-SS378-08D

Lab Name: EMPIRICAL LABS Contract: CH2MHILL

Lab Code: NA Case No.: NA SAS No.: NA SDG No.: LEJEUNE015

Matrix: (soil/water) SOIL Lab Sample ID: 0811141-01

Sample wt/vol: 5.6 (g/mL) G Lab File ID: 1114101B

Level: (low/med) LOW Date Sampled: 11/10/08 14:00

% Moisture: not dec. 9 Date Analyzed: 11/22/08 16:12

GC Column: RTX-VRX ID: 0.25 (mm) Dilution Factor: 1.0

Soil Extract Volume:_____(uL) Soil Aliquot Volume: _____(uL)

CONCENTRATION UNITS: (ug/L or ug/Kg) UG/KG

CAS NO.	COMPOUND	MDL	RL	CONC	Q	
67-64-1	Acetone	2.0	9.8	36	~~B~~	
71-43-2	Benzene	0.46	9.8	1.6	J	
75-27-4	Bromodichloromethane	0.30	9.8		U	
75-25-2	Bromoform	0.98	9.8		U	
74-83-9	Bromomethane	0.71	9.8		~~U~~ UJ	CCH
78-93-3	2-Butanone	1.4	9.8	4.7	J	
75-15-0	Carbon disulfide	1.3	9.8	5.6	J	
56-23-5	Carbon tetrachloride	0.87	9.8		U	
108-90-7	Chlorobenzene	0.34	9.8		U	
75-00-3	Chloroethane	1.1	9.8		U	
67-66-3	Chloroform	0.54	9.8		U	
74-87-3	Chloromethane	0.51	9.8		U	
110-82-7	Cyclohexane	0.53	9.8	0.85	J	
124-48-1	Dibromochloromethane	0.34	9.8		U	
96-12-8	1,2-Dibromo-3-chloropropane	1.2	4.9		~~U~~ UJ	ISL
106-93-4	1,2-Dibromoethane	0.42	9.8		U	
95-50-1	1,2-Dichlorobenzene	0.36	9.8		~~U~~ UJ	ISL
541-73-1	1,3-Dichlorobenzene	0.83	9.8		~~U~~ ↓	↓
106-46-7	1,4-Dichlorobenzene	0.54	9.8		~~U~~	
75-71-8	Dichlorodifluoromethane	1.1	9.8		U	
75-34-3	1,1-Dichloroethane	0.53	9.8		U	
107-06-2	1,2-Dichloroethane	0.45	9.8		U	
75-35-4	1,1-Dichloroethene	1.2	9.8		U	
156-59-2	cis-1,2-Dichloroethene	1.2	9.8		U	
156-60-5	trans-1,2-Dichloroethene	1.1	9.8		U	
78-87-5	1,2-Dichloropropane	0.45	9.8		U	
10061-01-5	cis-1,3-Dichloropropene	0.49	9.8		U	
10061-02-6	trans-1,3-Dichloropropene	0.32	9.8		U	
100-41-4	Ethylbenzene	0.74	9.8	1.1	J	
591-78-6	2-Hexanone	2.3	9.8		U	
98-82-8	Isopropylbenzene	0.87	9.8		U	
79-20-9	Methyl acetate	1.6	9.8		U	
75-09-2	Methylene chloride	0.61	9.8	9.84 ~~0.84~~	~~JB~~	BL
108-87-2	Methyl cyclohexane	0.30	9.8	0.95	J	
1634-04-4	Methyl tert-butyl ether	0.32	9.8		U	
108-10-1	4-Methyl-2-pentanone	0.57	9.8		U	
100-42-5	Styrene	0.34	9.8		U	
79-34-5	1,1,2,2-Tetrachloroethane	0.42	9.8		~~U~~ UJ	ISL
127-18-4	Tetrachloroethene	0.96	9.8		~~U~~ UJ	CCH

LW 11/28/09

FORM 1
VOLATILE ORGANICS ANALYSIS DATA SHEET

CLIENT SAMPLE NO.

MR08-SS378-08D

Lab Name: EMPIRICAL LABS Contract: CH2MHILL

Lab Code: NA Case No.: NA SAS No.: NA SDG No.: LEJEUNE015

Matrix: (soil/water) SOIL Lab Sample ID: 0811141-01

Sample wt/vol: 5.6 (g/mL) G Lab File ID: 1114101B

Level: (low/med) LOW Date Sampled: 11/10/08 14:00

% Moisture: not dec. 9 Date Analyzed: 11/22/08 16:12

GC Column: RTX-VRX ID: 0.25 (mm) Dilution Factor: 1.0

Soil Extract Volume:_____(uL) Soil Aliquot Volume: _____(uL)

CONCENTRATION UNITS: (ug/L or ug/Kg) UG/KG

CAS NO.	COMPOUND	MDL	RL	CONC	Q	
108-88-3	Toluene	0.85	9.8	9.8 ~~1.9~~	J	BL
120-82-1	1,2,4-Trichlorobenzene	0.18	9.8		~~U~~ UJ	CCV
71-55-6	1,1,1-Trichloroethane	0.89	9.8		U	
79-00-5	1,1,2-Trichloroethane	0.34	9.8		U	
79-01-6	Trichloroethene	0.84	9.8		U	
76-13-1	Trichlorotrifluoroethane	0.54	9.8		U	
75-69-4	Trichlorofluoromethane	0.94	9.8		U	
75-01-4	Vinyl chloride	1.1	9.8		~~U~~ UJ	BSL
1330-20-7	Xylene(total)	0.69	9.8		U	

FORM I VOA

MW
1/28/09

2

FORM 1
VOLATILE ORGANICS ANALYSIS DATA SHEET

CLIENT SAMPLE NO.

MR08-IS378-08D

Lab Name: EMPIRICAL LABS Contract: CH2MHILL

Lab Code: NA Case No.: NA SAS No.: NA SDG No.: LEJEUNE015

Matrix: (soil/water) SOIL Lab Sample ID: 0811141-02

Sample wt/vol: 5.2 (g/mL) G Lab File ID: 1114102B

Level: (low/med) LOW Date Sampled: 11/10/08 15:00

% Moisture: not dec. 12 Date Analyzed: 11/22/08 16:51

GC Column: RTX-VRX ID: 0.25 (mm) Dilution Factor: 1.0

Soil Extract Volume:_____(uL) Soil Aliquot Volume: _____(uL)

CONCENTRATION UNITS: (ug/L or ug/Kg) UG/KG

CAS NO.	COMPOUND	MDL	RL	CONC	Q	
67-64-1	Acetone	2.2	11	14	~~B~~ U	BL
71-43-2	Benzene	0.51	11		U	
75-27-4	Bromodichloromethane	0.32	11		U	
75-25-2	Bromoform	1.1	11		U	
74-83-9	Bromomethane	0.78	11		~~U~~ UJ	CCH
78-93-3	2-Butanone	1.5	11	2.8	J	
75-15-0	Carbon disulfide	1.4	11		U	
56-23-5	Carbon tetrachloride	0.95	11		U	
108-90-7	Chlorobenzene	0.37	11		U	
75-00-3	Chloroethane	1.2	11		U	
67-66-3	Chloroform	0.59	11		U	
74-87-3	Chloromethane	0.56	11		U	
110-82-7	Cyclohexane	0.58	11		U	
124-48-1	Dibromochloromethane	0.37	11		U	
96-12-8	1,2-Dibromo-3-chloropropane	1.3	5.4		U	
106-93-4	1,2-Dibromoethane	0.46	11		U	
95-50-1	1,2-Dichlorobenzene	0.40	11		U	
541-73-1	1,3-Dichlorobenzene	0.91	11		U	
106-46-7	1,4-Dichlorobenzene	0.59	11		U	
75-71-8	Dichlorodifluoromethane	1.2	11		U	
75-34-3	1,1-Dichloroethane	0.58	11		U	
107-06-2	1,2-Dichloroethane	0.50	11		U	
75-35-4	1,1-Dichloroethene	1.3	11		U	
156-59-2	cis-1,2-Dichloroethene	1.3	11		U	
156-60-5	trans-1,2-Dichloroethene	1.2	11		U	
78-87-5	1,2-Dichloropropane	0.50	11		U	
10061-01-5	cis-1,3-Dichloropropene	0.54	11		U	
10061-02-6	trans-1,3-Dichloropropene	0.34	11		U	
100-41-4	Ethylbenzene	0.81	11		U	
591-78-6	2-Hexanone	2.5	11		U	
98-82-8	Isopropylbenzene	0.95	11		U	
79-20-9	Methyl acetate	1.7	11		U	
75-09-2	Methylene chloride	0.67	11	11U	~~0.74~~ ~~J~~B	BL
108-87-2	Methyl cyclohexane	0.32	11		U	
1634-04-4	Methyl tert-butyl ether	0.34	11		U	
108-10-1	4-Methyl-2-pentanone	0.63	11		U	
100-42-5	Styrene	0.38	11		U	
79-34-5	1,1,2,2-Tetrachloroethane	0.46	11		U	
127-18-4	Tetrachloroethene	1.0	11		~~U~~ UJ	CCH

FORM I VOA

lw
11/28/09

FORM 1
VOLATILE ORGANICS ANALYSIS DATA SHEET

CLIENT SAMPLE NO. 2

MR08-IS378-08D

Lab Name: EMPIRICAL LABS Contract: CH2MHILL

Lab Code: NA Case No.: NA SAS No.: NA SDG No.: LEJEUNE015

Matrix: (soil/water) SOIL Lab Sample ID: 0811141-02

Sample wt/vol: 5.2 (g/mL) G Lab File ID: 1114102B

Level: (low/med) LOW Date Sampled: 11/10/08 15:00

% Moisture: not dec. 12 Date Analyzed: 11/22/08 16:51

GC Column: RTX-VRX ID: 0.25 (mm) Dilution Factor: 1.0

Soil Extract Volume:_____(uL) Soil Aliquot Volume: _____(uL)

CONCENTRATION UNITS: (ug/L or ug/Kg) UG/KG

CAS NO.	COMPOUND	MDL	RL	CONC	Q	
108-88-3	Toluene	0.93	11		U	
120-82-1	1,2,4-Trichlorobenzene	0.19	11		~~U~~ UJ	CC
71-55-6	1,1,1-Trichloroethane	0.97	11		U	
79-00-5	1,1,2-Trichloroethane	0.38	11		U	
79-01-6	Trichloroethene	0.92	11		U	
76-13-1	Trichlorotrifluoroethane	0.59	11		U	
75-69-4	Trichlorofluoromethane	1.0	11		U	
75-01-4	Vinyl chloride	1.2	11		~~U~~ UJ	BS
1330-20-7	Xylene(total)	0.76	11		U	

LW
1/28/09

FORM 1
VOLATILE ORGANICS ANALYSIS DATA SHEET

CLIENT SAMPLE NO. 3

MR08-SS380-08D

Lab Name: EMPIRICAL LABS Contract: CH2MHILL

Lab Code: NA Case No.: NA SAS No.: NA SDG No.: LEJEUNE015

Matrix: (soil/water) SOIL Lab Sample ID: 0811141-03

Sample wt/vol: 5.0 (g/mL) G Lab File ID: 1114103B

Level: (low/med) LOW Date Sampled: 11/10/08 16:10

% Moisture: not dec. 8 Date Analyzed: 11/22/08 17:30

GC Column: RTX-VRX ID: 0.25 (mm) Dilution Factor: 1.0

Soil Extract Volume:_____(uL) Soil Aliquot Volume: _____(uL)

CONCENTRATION UNITS: (ug/L or ug/Kg) UG/KG

CAS NO.	COMPOUND	MDL	RL	CONC	Q
67-64-1	Acetone	2.2	11	19	~~B~~ UJ
71-43-2	Benzene	0.51	11		U
75-27-4	Bromodichloromethane	0.32	11		U
75-25-2	Bromoform	1.1	11		U
74-83-9	Bromomethane	0.78	11		U
78-93-3	2-Butanone	1.5	11		U
75-15-0	Carbon disulfide	1.4	11		U
56-23-5	Carbon tetrachloride	0.96	11		U
108-90-7	Chlorobenzene	0.37	11		U
75-00-3	Chloroethane	1.2	11		U
67-66-3	Chloroform	0.60	11		U
74-87-3	Chloromethane	0.56	11		U
110-82-7	Cyclohexane	0.59	11		U
124-48-1	Dibromochloromethane	0.37	11		U
96-12-8	1,2-Dibromo-3-chloropropane	1.3	5.4		U
106-93-4	1,2-Dibromoethane	0.47	11		U
95-50-1	1,2-Dichlorobenzene	0.40	11		U
541-73-1	1,3-Dichlorobenzene	0.91	11		U
106-46-7	1,4-Dichlorobenzene	0.60	11		U
75-71-8	Dichlorodifluoromethane	1.2	11		U
75-34-3	1,1-Dichloroethane	0.59	11		U
107-06-2	1,2-Dichloroethane	0.50	11		U
75-35-4	1,1-Dichloroethene	1.3	11		U
156-59-2	cis-1,2-Dichloroethene	1.3	11		U
156-60-5	trans-1,2-Dichloroethene	1.2	11		U
78-87-5	1,2-Dichloropropane	0.50	11		U
10061-01-5	cis-1,3-Dichloropropene	0.54	11		U
10061-02-6	trans-1,3-Dichloropropene	0.35	11		U
100-41-4	Ethylbenzene	0.81	11		U
591-78-6	2-Hexanone	2.5	11		U
98-82-8	Isopropylbenzene	0.96	11		U
79-20-9	Methyl acetate	1.7	11		U
75-09-2	Methylene chloride	0.67	11		U
108-87-2	Methyl cyclohexane	0.32	11		U
1634-04-4	Methyl tert-butyl ether	0.35	11		U
108-10-1	4-Methyl-2-pentanone	0.63	11		U
100-42-5	Styrene	0.38	11		U
79-34-5	1,1,2,2-Tetrachloroethane	0.47	11		U
127-18-4	Tetrachloroethene	1.0	11		U

SS
BK
SS

FORM I VOA

lw
11/28/09

FORM 1
VOLATILE ORGANICS ANALYSIS DATA SHEET

CLIENT SAMPLE NO. 3

MR08-SS380-08D

Lab Name: EMPIRICAL LABS Contract: CH2MHILL

Lab Code: NA Case No.: NA SAS No.: NA SDG No.: LEJEUNE015

Matrix: (soil/water) SOIL Lab Sample ID: 0811141-03

Sample wt/vol: 5.0 (g/mL) G Lab File ID: 1114103B

Level: (low/med) LOW Date Sampled: 11/10/08 16:10

% Moisture: not dec. 8 Date Analyzed: 11/22/08 17:30

GC Column: RTX-VRX ID: 0.25 (mm) Dilution Factor: 1.0

Soil Extract Volume:_____(uL) Soil Aliquot Volume: _____(uL)

CONCENTRATION UNITS: (ug/L or ug/Kg) UG/KG

CAS NO.	COMPOUND	MDL	RL	CONC	Q
108-88-3	Toluene	0.93	11		U UJ
120-82-1	1,2,4-Trichlorobenzene	0.20	11		U
71-55-6	1,1,1-Trichloroethane	0.98	11		U
79-00-5	1,1,2-Trichloroethane	0.38	11		U
79-01-6	Trichloroethene	0.92	11		U
76-13-1	Trichlorotrifluoroethane	0.60	11		U
75-69-4	Trichlorofluoromethane	1.0	11		U
75-01-4	Vinyl chloride	1.2	11		U
1330-20-7	Xylene(total)	0.76	11		U

LW 1/28/09

FORM 1
VOLATILE ORGANICS ANALYSIS DATA SHEET

CLIENT SAMPLE NO. 4

MR08-FB1
11108-08D

Lab Name: EMPIRICAL LABS Contract: CH2MHILL

Lab Code: NA Case No.: NA SAS No.: NA SDG No.: LEJEUNE015

Matrix: (soil/water) WATER Lab Sample ID: 0811141-04

Sample wt/vol: 5.000 (g/mL) ML Lab File ID: 1114104

Level: (low/med) LOW Date Sampled: 11/11/08 08:10

% Moisture: not dec. _____ Date Analyzed: 11/21/08 02:53

GC Column: RTX-VRX ID: 0.25 (mm) Dilution Factor: 1.0

Soil Extract Volume:_____(uL) Soil Aliquot Volume: _____(uL)

CONCENTRATION UNITS: (ug/L or ug/Kg) UG/L

CAS NO.	COMPOUND	MDL	RL	CONC	Q
67-64-1	Acetone	0.84	2.5		U
71-43-2	Benzene	0.11	1.0		U
75-27-4	Bromodichloromethane	0.10	1.0	0.25	J
75-25-2	Bromoform	0.10	1.0		U
74-83-9	Bromomethane	0.32	1.0		U
78-93-3	2-Butanone	1.0	3.0		U
75-15-0	Carbon disulfide	0.13	1.0		U
56-23-5	Carbon tetrachloride	0.15	1.0		U
108-90-7	Chlorobenzene	0.10	1.0		U
75-00-3	Chloroethane	0.18	1.0		U
67-66-3	Chloroform	0.11	1.0	2.2	
74-87-3	Chloromethane	0.29	1.0		U
110-82-7	Cyclohexane	0.20	1.0		U
124-48-1	Dibromochloromethane	0.10	1.0		U
96-12-8	1,2-Dibromo-3-chloropropane	0.11	1.0		U
106-93-4	1,2-Dibromoethane	0.10	1.0		U
95-50-1	1,2-Dichlorobenzene	0.10	1.0		U
541-73-1	1,3-Dichlorobenzene	0.13	1.0		U
106-46-7	1,4-Dichlorobenzene	0.10	1.0		U
75-71-8	Dichlorodifluoromethane	0.22	1.0		U
75-34-3	1,1-Dichloroethane	0.12	1.0		U
107-06-2	1,2-Dichloroethane	0.10	1.0		U
75-35-4	1,1-Dichloroethene	0.15	1.0		U
156-59-2	cis-1,2-Dichloroethene	0.13	1.0		U
156-60-5	trans-1,2-Dichloroethene	0.13	1.0		U
78-87-5	1,2-Dichloropropane	0.10	1.0		U
10061-01-5	cis-1,3-Dichloropropene	0.11	1.0		U
10061-02-6	trans-1,3-Dichloropropene	0.10	1.0		U
100-41-4	Ethylbenzene	0.13	1.0		U
591-78-6	2-Hexanone	0.30	2.0		U
98-82-8	Isopropylbenzene	0.15	1.0		U
79-20-9	Methyl acetate	0.30	1.0		U
75-09-2	Methylene chloride	0.14	1.0	1.0 ~~0.55~~ ~~JB~~	U B
108-87-2	Methyl cyclohexane	0.17	1.0		U
1634-04-4	Methyl tert-butyl ether	0.10	1.0		U
108-10-1	4-Methyl-2-pentanone	0.29	2.0		U
100-42-5	Styrene	0.10	1.0		U
79-34-5	1,1,2,2-Tetrachloroethane	0.10	1.0		U
127-18-4	Tetrachloroethene	0.15	1.0		U

LW
11/28/09

FORM 1
VOLATILE ORGANICS ANALYSIS DATA SHEET

CLIENT SAMPLE NO. 4

MR08-FB1
11108-08D

Lab Name: EMPIRICAL LABS Contract: CH2MHILL

Lab Code: NA Case No.: NA SAS No.: NA SDG No.: LEJEUNE015

Matrix: (soil/water) WATER Lab Sample ID: 0811141-04

Sample wt/vol: 5.000 (g/mL) ML Lab File ID: 1114104

Level: (low/med) LOW Date Sampled: 11/11/08 08:10

% Moisture: not dec. _____ Date Analyzed: 11/21/08 02:53

GC Column: RTX-VRX ID: 0.25 (mm) Dilution Factor: 1.0

Soil Extract Volume:_____(uL) Soil Aliquot Volume: _____(uL)

CONCENTRATION UNITS: (ug/L or ug/Kg) UG/L

CAS NO.	COMPOUND	MDL	RL	CONC	Q
108-88-3	Toluene	0.10	1.0	0.86	J
120-82-1	1,2,4-Trichlorobenzene	0.10	1.0		U
71-55-6	1,1,1-Trichloroethane	0.17	1.0		U
79-00-5	1,1,2-Trichloroethane	0.10	1.0		U
79-01-6	Trichloroethene	0.13	1.0		U
76-13-1	Trichlorotrifluoroethane	0.18	1.0		U
75-69-4	Trichlorofluoromethane	0.17	1.0		U
75-01-4	Vinyl chloride	0.18	1.0		U
1330-20-7	Xylene(total)	0.22	1.0		U

lw
11/28/09

FORM 1
VOLATILE ORGANICS ANALYSIS DATA SHEET

CLIENT SAMPLE NO. 5

MR08-IS380-08D

Lab Name: EMPIRICAL LABS Contract: CH2MHILL

Lab Code: NA Case No.: NA SAS No.: NA SDG No.: LEJEUNE015

Matrix: (soil/water) SOIL Lab Sample ID: 0811141-05

Sample wt/vol: 4.5 (g/mL) G Lab File ID: 1114105B

Level: (low/med) LOW Date Sampled: 11/11/08 10:30

% Moisture: not dec. 5 Date Analyzed: 11/22/08 18:09

GC Column: RTX-VRX ID: 0.25 (mm) Dilution Factor: 1.0

Soil Extract Volume:_____(uL) Soil Aliquot Volume: _____(uL)

CONCENTRATION UNITS: (ug/L or ug/Kg) UG/KG

CAS NO.	COMPOUND	MDL	RL	CONC	Q	
67-64-1	Acetone	2.3	12	12U ~~4.2~~	~~JB~~	B
71-43-2	Benzene	0.55	12		U	
75-27-4	Bromodichloromethane	0.35	12		U	
75-25-2	Bromoform	1.2	12		U	
74-83-9	Bromomethane	0.84	12		~~U~~ UJ	C
78-93-3	2-Butanone	1.6	12		U	
75-15-0	Carbon disulfide	1.5	12		U	
56-23-5	Carbon tetrachloride	1.0	12		U	
108-90-7	Chlorobenzene	0.40	12		U	
75-00-3	Chloroethane	1.3	12		U	
67-66-3	Chloroform	0.64	12		U	
74-87-3	Chloromethane	0.61	12		U	
110-82-7	Cyclohexane	0.63	12		U	
124-48-1	Dibromochloromethane	0.40	12		U	
96-12-8	1,2-Dibromo-3-chloropropane	1.4	5.9		U	
106-93-4	1,2-Dibromoethane	0.50	12		U	
95-50-1	1,2-Dichlorobenzene	0.43	12		U	
541-73-1	1,3-Dichlorobenzene	0.98	12		U	
106-46-7	1,4-Dichlorobenzene	0.64	12		U	
75-71-8	Dichlorodifluoromethane	1.3	12		U	
75-34-3	1,1-Dichloroethane	0.63	12		U	
107-06-2	1,2-Dichloroethane	0.54	12		U	
75-35-4	1,1-Dichloroethene	1.4	12		U	
156-59-2	cis-1,2-Dichloroethene	1.4	12		U	
156-60-5	trans-1,2-Dichloroethene	1.3	12		U	
78-87-5	1,2-Dichloropropane	0.54	12		U	
10061-01-5	cis-1,3-Dichloropropene	0.59	12		U	
10061-02-6	trans-1,3-Dichloropropene	0.38	12		U	
100-41-4	Ethylbenzene	0.88	12		U	
591-78-6	2-Hexanone	2.7	12		U	
98-82-8	Isopropylbenzene	1.0	12		U	
79-20-9	Methyl acetate	1.9	12		U	
75-09-2	Methylene chloride	0.73	12	12U ~~1.3~~	~~JB~~	B
108-87-2	Methyl cyclohexane	0.35	12		U	
1634-04-4	Methyl tert-butyl ether	0.38	12		U	
108-10-1	4-Methyl-2-pentanone	0.68	12		U	
100-42-5	Styrene	0.41	12		U	
79-34-5	1,1,2,2-Tetrachloroethane	0.50	12		U	
127-18-4	Tetrachloroethene	1.1	12		~~U~~ UJ	C

11/28/09

5

FORM 1
VOLATILE ORGANICS ANALYSIS DATA SHEET

CLIENT SAMPLE NO.

MR08-IS380-08D

Lab Name: EMPIRICAL LABS Contract: CH2MHILL

Lab Code: NA Case No.: NA SAS No.: NA SDG No.: LEJEUNE015

Matrix: (soil/water) SOIL Lab Sample ID: 0811141-05

Sample wt/vol: 4.5 (g/mL) G Lab File ID: 1114105B

Level: (low/med) LOW Date Sampled: 11/11/08 10:30

% Moisture: not dec. 5 Date Analyzed: 11/22/08 18:09

GC Column: RTX-VRX ID: 0.25 (mm) Dilution Factor: 1.0

Soil Extract Volume:_____(uL) Soil Aliquot Volume: _____(uL)

CONCENTRATION UNITS: (ug/L or ug/Kg) UG/KG

CAS NO.	COMPOUND	MDL	RL	CONC	Q
108-88-3	Toluene	1.0	12		U
120-82-1	1,2,4-Trichlorobenzene	0.21	12		~~U~~ UJ
71-55-6	1,1,1-Trichloroethane	1.0	12		U
79-00-5	1,1,2-Trichloroethane	0.41	12		U
79-01-6	Trichloroethene	1.00	12		U
76-13-1	Trichlorotrifluoroethane	0.64	12		U
75-69-4	Trichlorofluoromethane	1.1	12		U
75-01-4	Vinyl chloride	1.3	12		~~U~~ UJ
1330-20-7	Xylene(total)	0.82	12		U

FORM I VOA

lw 12/8/09

FORM 1
VOLATILE ORGANICS ANALYSIS DATA SHEET

CLIENT SAMPLE NO. 6

MR08-SS381-08D

Lab Name: EMPIRICAL LABS Contract: CH2MHILL

Lab Code: NA Case No.: NA SAS No.: NA SDG No.: LEJEUNE015

Matrix: (soil/water) SOIL Lab Sample ID: 0811141-06

Sample wt/vol: 5.6 (g/mL) G Lab File ID: 1114106B

Level: (low/med) LOW Date Sampled: 11/11/08 11:30

% Moisture: not dec. 12 Date Analyzed: 11/22/08 18:48

GC Column: RTX-VRX ID: 0.25 (mm) Dilution Factor: 1.0

Soil Extract Volume:_____(uL) Soil Aliquot Volume: _____(uL)

CONCENTRATION UNITS: (ug/L or ug/Kg) UG/KG

CAS NO.	COMPOUND	MDL	RL	CONC	Q	
67-64-1	Acetone	2.0	10	140	~~B~~ J	SS1
71-43-2	Benzene	0.48	10	0.51	J J	
75-27-4	Bromodichloromethane	0.30	10		U UJ	
75-25-2	Bromoform	1.0	10		U	
74-83-9	Bromomethane	0.73	10		U	
78-93-3	2-Butanone	1.4	10	6.9	J J	
75-15-0	Carbon disulfide	1.3	10	2.4	J J	
56-23-5	Carbon tetrachloride	0.90	10		U UJ	
108-90-7	Chlorobenzene	0.35	10		U	
75-00-3	Chloroethane	1.1	10		U	
67-66-3	Chloroform	0.56	10		U	
74-87-3	Chloromethane	0.53	10		U	
110-82-7	Cyclohexane	0.55	10		U	
124-48-1	Dibromochloromethane	0.35	10		U	
96-12-8	1,2-Dibromo-3-chloropropane	1.2	5.1		U	
106-93-4	1,2-Dibromoethane	0.44	10		U	
95-50-1	1,2-Dichlorobenzene	0.38	10		U	
541-73-1	1,3-Dichlorobenzene	0.86	10		U	
106-46-7	1,4-Dichlorobenzene	0.56	10		U	
75-71-8	Dichlorodifluoromethane	1.1	10		U	
75-34-3	1,1-Dichloroethane	0.55	10		U	
107-06-2	1,2-Dichloroethane	0.47	10		U	
75-35-4	1,1-Dichloroethene	1.2	10		U	
156-59-2	cis-1,2-Dichloroethene	1.2	10		U	
156-60-5	trans-1,2-Dichloroethene	1.1	10		U	
78-87-5	1,2-Dichloropropane	0.47	10		U	
10061-01-5	cis-1,3-Dichloropropene	0.51	10		U	
10061-02-6	trans-1,3-Dichloropropene	0.33	10		U	
100-41-4	Ethylbenzene	0.76	10		U	
591-78-6	2-Hexanone	2.3	10		U	
98-82-8	Isopropylbenzene	0.90	10		U	
79-20-9	Methyl acetate	1.6	10		U	
75-09-2	Methylene chloride	0.63	10	10UJ ~~0.67~~	~~JB~~ UJ	B
108-87-2	Methyl cyclohexane	0.30	10		U UJ	
1634-04-4	Methyl tert-butyl ether	0.33	10		U	
108-10-1	4-Methyl-2-pentanone	0.59	10		U	
100-42-5	Styrene	0.36	10		U	
79-34-5	1,1,2,2-Tetrachloroethane	0.44	10		U	
127-18-4	Tetrachloroethene	0.99	10		U	

FORM I VOA

RW 1/28/09

FORM 1
VOLATILE ORGANICS ANALYSIS DATA SHEET

CLIENT SAMPLE NO. 6

MR08-SS381-08D

Lab Name: EMPIRICAL LABS Contract: CH2MHILL

Lab Code: NA Case No.: NA SAS No.: NA SDG No.: LEJEUNE015

Matrix: (soil/water) SOIL Lab Sample ID: 0811141-06

Sample wt/vol: 5.6 (g/mL) G Lab File ID: 1114106B

Level: (low/med) LOW Date Sampled: 11/11/08 11:30

% Moisture: not dec. 12 Date Analyzed: 11/22/08 18:48

GC Column: RTX-VRX ID: 0.25 (mm) Dilution Factor: 1.0

Soil Extract Volume:_____(uL) Soil Aliquot Volume: _____(uL)

CONCENTRATION UNITS: (ug/L or ug/Kg) UG/KG

CAS NO.	COMPOUND	MDL	RL	CONC	Q
108-88-3	Toluene	0.88	10		U uJ SS
120-82-1	1,2,4-Trichlorobenzene	0.18	10		U
71-55-6	1,1,1-Trichloroethane	0.92	10		U
79-00-5	1,1,2-Trichloroethane	0.36	10		U
79-01-6	Trichloroethene	0.87	10		U
76-13-1	Trichlorotrifluoroethane	0.56	10		U
75-69-4	Trichlorofluoromethane	0.97	10		U
75-01-4	Vinyl chloride	1.1	10		U
1330-20-7	Xylene(total)	0.71	10		U

FORM I VOA

hw 1/28/09

FORM 1
VOLATILE ORGANICS ANALYSIS DATA SHEET

CLIENT SAMPLE NO. 7

MR08-EB111108-1

Lab Name: EMPIRICAL LABS Contract: CH2MHILL

Lab Code: NA Case No.: NA SAS No.: NA SDG No.: LEJEUNE015

Matrix: (soil/water) WATER Lab Sample ID: 0811141-07

Sample wt/vol: 5.000 (g/mL) ML Lab File ID: 1114107

Level: (low/med) LOW Date Sampled: 11/11/08 12:00

% Moisture: not dec. _____ Date Analyzed: 11/21/08 01:54

GC Column: RTX-VRX ID: 0.25 (mm) Dilution Factor: 1.0

Soil Extract Volume:_____(uL) Soil Aliquot Volume: _____(uL)

CONCENTRATION UNITS: (ug/L or ug/Kg) UG/L

CAS NO.	COMPOUND	MDL	RL	CONC	Q
67-64-1	Acetone	0.84	2.5		U
71-43-2	Benzene	0.11	1.0		U
75-27-4	Bromodichloromethane	0.10	1.0	0.22	J
75-25-2	Bromoform	0.10	1.0		U
74-83-9	Bromomethane	0.32	1.0		U
78-93-3	2-Butanone	1.0	3.0		U
75-15-0	Carbon disulfide	0.13	1.0		U
56-23-5	Carbon tetrachloride	0.15	1.0		U
108-90-7	Chlorobenzene	0.10	1.0		U
75-00-3	Chloroethane	0.18	1.0		U
67-66-3	Chloroform	0.11	1.0	2.0	
74-87-3	Chloromethane	0.29	1.0		U
110-82-7	Cyclohexane	0.20	1.0		U
124-48-1	Dibromochloromethane	0.10	1.0		U
96-12-8	1,2-Dibromo-3-chloropropane	0.11	1.0		U
106-93-4	1,2-Dibromoethane	0.10	1.0		U
95-50-1	1,2-Dichlorobenzene	0.10	1.0		U
541-73-1	1,3-Dichlorobenzene	0.13	1.0		U
106-46-7	1,4-Dichlorobenzene	0.10	1.0		U
75-71-8	Dichlorodifluoromethane	0.22	1.0		U
75-34-3	1,1-Dichloroethane	0.12	1.0		U
107-06-2	1,2-Dichloroethane	0.10	1.0		U
75-35-4	1,1-Dichloroethene	0.15	1.0		U
156-59-2	cis-1,2-Dichloroethene	0.13	1.0		U
156-60-5	trans-1,2-Dichloroethene	0.13	1.0		U
78-87-5	1,2-Dichloropropane	0.10	1.0		U
10061-01-5	cis-1,3-Dichloropropene	0.11	1.0		U
10061-02-6	trans-1,3-Dichloropropene	0.10	1.0		U
100-41-4	Ethylbenzene	0.13	1.0		U
591-78-6	2-Hexanone	0.30	2.0		U
98-82-8	Isopropylbenzene	0.15	1.0		U
79-20-9	Methyl acetate	0.30	1.0		U
75-09-2	Methylene chloride	0.14	1.0	1.04 ~~0.45~~	JB BL
108-87-2	Methyl cyclohexane	0.17	1.0		U
1634-04-4	Methyl tert-butyl ether	0.10	1.0		U
108-10-1	4-Methyl-2-pentanone	0.29	2.0		U
100-42-5	Styrene	0.10	1.0		U
79-34-5	1,1,2,2-Tetrachloroethane	0.10	1.0		U
127-18-4	Tetrachloroethene	0.15	1.0		U

FORM I VOA

hW 1/28/09

FORM 1
VOLATILE ORGANICS ANALYSIS DATA SHEET

CLIENT SAMPLE NO. 7

MR08-EB111108-1

Lab Name: EMPIRICAL LABS Contract: CH2MHILL

Lab Code: NA Case No.: NA SAS No.: NA SDG No.: LEJEUNE015

Matrix: (soil/water) WATER Lab Sample ID: 0811141-07

Sample wt/vol: 5.000 (g/mL) ML Lab File ID: 1114107

Level: (low/med) LOW Date Sampled: 11/11/08 12:00

% Moisture: not dec. _____ Date Analyzed: 11/21/08 01:54

GC Column: RTX-VRX ID: 0.25 (mm) Dilution Factor: 1.0

Soil Extract Volume:_____(uL) Soil Aliquot Volume: _____(uL)

CONCENTRATION UNITS: (ug/L or ug/Kg) UG/L

CAS NO.	COMPOUND	MDL	RL	CONC	Q
108-88-3	Toluene	0.10	1.0	0.77	J
120-82-1	1,2,4-Trichlorobenzene	0.10	1.0		U
71-55-6	1,1,1-Trichloroethane	0.17	1.0		U
79-00-5	1,1,2-Trichloroethane	0.10	1.0		U
79-01-6	Trichloroethene	0.13	1.0		U
76-13-1	Trichlorotrifluoroethane	0.18	1.0		U
75-69-4	Trichlorofluoromethane	0.17	1.0		U
75-01-4	Vinyl chloride	0.18	1.0		U
1330-20-7	Xylene(total)	0.22	1.0		U

lw 1128109

FORM 1
VOLATILE ORGANICS ANALYSIS DATA SHEET

CLIENT SAMPLE NO.

8

MR08-SW01-08D

Lab Name: EMPIRICAL LABS Contract: CH2MHILL

Lab Code: NA Case No.: NA SAS No.: NA SDG No.: LEJEUNE015

Matrix: (soil/water) WATER Lab Sample ID: 0811141-08

Sample wt/vol: 5.000 (g/mL) ML Lab File ID: 1114108

Level: (low/med) LOW Date Sampled: 11/11/08 08:20

% Moisture: not dec. _____ Date Analyzed: 11/21/08 03:23

GC Column: RTX-VRX ID: 0.25 (mm) Dilution Factor: 1.0

Soil Extract Volume:_____(uL) Soil Aliquot Volume: _____(uL)

CONCENTRATION UNITS: (ug/L or ug/Kg) UG/L

CAS NO.	COMPOUND	MDL	RL	CONC	Q
67-64-1	Acetone	0.84	2.5	13	
71-43-2	Benzene	0.11	1.0		U
75-27-4	Bromodichloromethane	0.10	1.0		U
75-25-2	Bromoform	0.10	1.0		U
74-83-9	Bromomethane	0.32	1.0		U
78-93-3	2-Butanone	1.0	3.0		U
75-15-0	Carbon disulfide	0.13	1.0		U
56-23-5	Carbon tetrachloride	0.15	1.0		U
108-90-7	Chlorobenzene	0.10	1.0		U
75-00-3	Chloroethane	0.18	1.0		U
67-66-3	Chloroform	0.11	1.0		U
74-87-3	Chloromethane	0.29	1.0		U
110-82-7	Cyclohexane	0.20	1.0		U
124-48-1	Dibromochloromethane	0.10	1.0		U
96-12-8	1,2-Dibromo-3-chloropropane	0.11	1.0		U
106-93-4	1,2-Dibromoethane	0.10	1.0		U
95-50-1	1,2-Dichlorobenzene	0.10	1.0		U
541-73-1	1,3-Dichlorobenzene	0.13	1.0		U
106-46-7	1,4-Dichlorobenzene	0.10	1.0		U
75-71-8	Dichlorodifluoromethane	0.22	1.0		U
75-34-3	1,1-Dichloroethane	0.12	1.0		U
107-06-2	1,2-Dichloroethane	0.10	1.0		U
75-35-4	1,1-Dichloroethene	0.15	1.0		U
156-59-2	cis-1,2-Dichloroethene	0.13	1.0		U
156-60-5	trans-1,2-Dichloroethene	0.13	1.0		U
78-87-5	1,2-Dichloropropane	0.10	1.0		U
10061-01-5	cis-1,3-Dichloropropene	0.11	1.0		U
10061-02-6	trans-1,3-Dichloropropene	0.10	1.0		U
100-41-4	Ethylbenzene	0.13	1.0		U
591-78-6	2-Hexanone	0.30	2.0		U
98-82-8	Isopropylbenzene	0.15	1.0		U
79-20-9	Methyl acetate	0.30	1.0		U
75-09-2	Methylene chloride	0.14	1.0		U
108-87-2	Methyl cyclohexane	0.17	1.0		U
1634-04-4	Methyl tert-butyl ether	0.10	1.0		U
108-10-1	4-Methyl-2-pentanone	0.29	2.0		U
100-42-5	Styrene	0.10	1.0		U
79-34-5	1,1,2,2-Tetrachloroethane	0.10	1.0		U
127-18-4	Tetrachloroethene	0.15	1.0		U

lw
1/28/09

FORM 1
VOLATILE ORGANICS ANALYSIS DATA SHEET

CLIENT SAMPLE NO. 8

MR08-SW01-08D

Lab Name: EMPIRICAL LABS Contract: CH2MHILL

Lab Code: NA Case No.: NA SAS No.: NA SDG No.: LEJEUNE015

Matrix: (soil/water) WATER Lab Sample ID: 0811141-08

Sample wt/vol: 5.000 (g/mL) ML Lab File ID: 1114108

Level: (low/med) LOW Date Sampled: 11/11/08 08:20

% Moisture: not dec. _____ Date Analyzed: 11/21/08 03:23

GC Column: RTX-VRX ID: 0.25 (mm) Dilution Factor: 1.0

Soil Extract Volume:_____(uL) Soil Aliquot Volume: _____(uL)

CONCENTRATION UNITS: (ug/L or ug/Kg) UG/L

CAS NO.	COMPOUND	MDL	RL	CONC	Q
108-88-3	Toluene	0.10	1.0	1.0U ~~0.20~~	~~J~~ B
120-82-1	1,2,4-Trichlorobenzene	0.10	1.0		U
71-55-6	1,1,1-Trichloroethane	0.17	1.0		U
79-00-5	1,1,2-Trichloroethane	0.10	1.0		U
79-01-6	Trichloroethene	0.13	1.0		U
76-13-1	Trichlorotrifluoroethane	0.18	1.0		U
75-69-4	Trichlorofluoromethane	0.17	1.0		U
75-01-4	Vinyl chloride	0.18	1.0		U
1330-20-7	Xylene(total)	0.22	1.0		U

lw
1/28/09

FORM 1
VOLATILE ORGANICS ANALYSIS DATA SHEET

CLIENT SAMPLE NO. 9

MR08-SD01-08D

Lab Name: EMPIRICAL LABS Contract: CH2MHILL

Lab Code: NA Case No.: NA SAS No.: NA SDG No.: LEJEUNE015

Matrix: (soil/water) SOIL Lab Sample ID: 0811141-09

Sample wt/vol: 4.9 (g/mL) G Lab File ID: 1114109B

Level: (low/med) LOW Date Sampled: 11/11/08 11:50

% Moisture: not dec. 69 Date Analyzed: 11/22/08 19:27

GC Column: RTX-VRX ID: 0.25 (mm) Dilution Factor: 1.0

Soil Extract Volume:_____(uL) Soil Aliquot Volume: _____(uL)

CONCENTRATION UNITS: (ug/L or ug/Kg) UG/KG

CAS NO.	COMPOUND	MDL	RL	CONC	Q
67-64-1	Acetone	6.6	33	140	~~B~~
71-43-2	Benzene	1.5	33		U
75-27-4	Bromodichloromethane	0.99	33		~~U~~ UJ IS
75-25-2	Bromoform	3.3	33		~~U~~ UJ IS
74-83-9	Bromomethane	2.4	33		~~U~~ UJ CC
78-93-3	2-Butanone	4.6	33	14	J
75-15-0	Carbon disulfide	4.3	33		U
56-23-5	Carbon tetrachloride	2.9	33		U
108-90-7	Chlorobenzene	1.1	33		~~U~~ UJ I
75-00-3	Chloroethane	3.6	33		U
67-66-3	Chloroform	1.8	33		U
74-87-3	Chloromethane	1.7	33		U
110-82-7	Cyclohexane	1.8	33		U
124-48-1	Dibromochloromethane	1.1	33		~~U~~ UJ F
96-12-8	1,2-Dibromo-3-chloropropane	3.9	16		~~U~~ UJ IS
106-93-4	1,2-Dibromoethane	1.4	33		~~U~~ UJ IS
95-50-1	1,2-Dichlorobenzene	1.2	33		~~U~~ UJ IS
541-73-1	1,3-Dichlorobenzene	2.8	33		~~U~~ ↓
106-46-7	1,4-Dichlorobenzene	1.8	33		~~U~~ ↓
75-71-8	Dichlorodifluoromethane	3.6	33		U
75-34-3	1,1-Dichloroethane	1.8	33		U
107-06-2	1,2-Dichloroethane	1.5	33		U
75-35-4	1,1-Dichloroethene	3.9	33		U
156-59-2	cis-1,2-Dichloroethene	3.9	33		U
156-60-5	trans-1,2-Dichloroethene	3.6	33		U
78-87-5	1,2-Dichloropropane	1.5	33		U
10061-01-5	cis-1,3-Dichloropropene	1.6	33		U
10061-02-6	trans-1,3-Dichloropropene	1.0	33		~~U~~ UJ IS
100-41-4	Ethylbenzene	2.5	33		~~U~~ UJ IS
591-78-6	2-Hexanone	7.6	33		~~U~~ UJ IS
98-82-8	Isopropylbenzene	2.9	33		~~U~~ UJ IS
79-20-9	Methyl acetate	5.3	33		U
75-09-2	Methylene chloride	2.0	33	33u ~~11~~	~~JB~~ Bl
108-87-2	Methyl cyclohexane	0.99	33		U
1634-04-4	Methyl tert-butyl ether	1.0	33		U
108-10-1	4-Methyl-2-pentanone	1.9	33		U
100-42-5	Styrene	1.2	33		~~U~~ UJ IS
79-34-5	1,1,2,2-Tetrachloroethane	1.4	33		~~U~~ UJ IS
127-18-4	Tetrachloroethene	3.2	33		~~U~~ UJ ~~IS~~ CC

FORM I VOA

lw 1/28/09

FORM 1
VOLATILE ORGANICS ANALYSIS DATA SHEET

CLIENT SAMPLE NO. 9

MR08-SD01-08D

Lab Name: EMPIRICAL LABS Contract: CH2MHILL

Lab Code: NA Case No.: NA SAS No.: NA SDG No.: LEJEUNE015

Matrix: (soil/water) SOIL Lab Sample ID: 0811141-09

Sample wt/vol: 4.9 (g/mL) G Lab File ID: 1114109B

Level: (low/med) LOW Date Sampled: 11/11/08 11:50

% Moisture: not dec. 69 Date Analyzed: 11/22/08 19:27

GC Column: RTX-VRX ID: 0.25 (mm) Dilution Factor: 1.0

Soil Extract Volume:_____(uL) Soil Aliquot Volume: _____(uL)

CONCENTRATION UNITS: (ug/L or ug/Kg) UG/KG

CAS NO.	COMPOUND	MDL	RL	CONC	Q
108-88-3	Toluene	2.8	33		~~U~~ UJ
120-82-1	1,2,4-Trichlorobenzene	0.59	33		~~U~~ UJ
71-55-6	1,1,1-Trichloroethane	3.0	33		U
79-00-5	1,1,2-Trichloroethane	1.2	33		~~U~~ UJ
79-01-6	Trichloroethene	2.8	33		U
76-13-1	Trichlorotrifluoroethane	1.8	33		U
75-69-4	Trichlorofluoromethane	3.1	33		U
75-01-4	Vinyl chloride	3.6	33		~~U~~ UJ
1330-20-7	Xylene(total)	2.3	33		~~U~~ UJ

FORM I VOA

LW
1/28/09

FORM 1
VOLATILE ORGANICS ANALYSIS DATA SHEET

CLIENT SAMPLE NO. 10

MR08-SD01D-08D

Lab Name: EMPIRICAL LABS Contract: CH2MHILL

Lab Code: NA Case No.: NA SAS No.: NA SDG No.: LEJEUNE015

Matrix: (soil/water) SOIL Lab Sample ID: 0811141-10

Sample wt/vol: 4.9 (g/mL) G Lab File ID: 1114110B

Level: (low/med) LOW Date Sampled: 11/11/08 11:55

% Moisture: not dec. 66 Date Analyzed: 11/22/08 20:06

GC Column: RTX-VRX ID: 0.25 (mm) Dilution Factor: 1.0

Soil Extract Volume:_____(uL) Soil Aliquot Volume: _____(uL)

CONCENTRATION UNITS: (ug/L or ug/Kg) UG/KG

CAS NO.	COMPOUND	MDL	RL	CONC	Q
67-64-1	Acetone	6.0	30	130	~~B~~ J
71-43-2	Benzene	1.4	30		U UJ
75-27-4	Bromodichloromethane	0.90	30		U
75-25-2	Bromoform	3.0	30		U
74-83-9	Bromomethane	2.2	30		U
78-93-3	2-Butanone	4.2	30	9.8	J J
75-15-0	Carbon disulfide	3.9	30		U UJ
56-23-5	Carbon tetrachloride	2.6	30		U
108-90-7	Chlorobenzene	1.0	30		U
75-00-3	Chloroethane	3.3	30		U
67-66-3	Chloroform	1.6	30		U
74-87-3	Chloromethane	1.6	30		U
110-82-7	Cyclohexane	1.6	30		U
124-48-1	Dibromochloromethane	1.0	30		U
96-12-8	1,2-Dibromo-3-chloropropane	3.6	15		U
106-93-4	1,2-Dibromoethane	1.3	30		U
95-50-1	1,2-Dichlorobenzene	1.1	30		U
541-73-1	1,3-Dichlorobenzene	2.5	30		U
106-46-7	1,4-Dichlorobenzene	1.6	30		U
75-71-8	Dichlorodifluoromethane	3.3	30		U
75-34-3	1,1-Dichloroethane	1.6	30		U
107-06-2	1,2-Dichloroethane	1.4	30		U
75-35-4	1,1-Dichloroethene	3.6	30		U
156-59-2	cis-1,2-Dichloroethene	3.6	30		U
156-60-5	trans-1,2-Dichloroethene	3.3	30		U
78-87-5	1,2-Dichloropropane	1.4	30		U
10061-01-5	cis-1,3-Dichloropropene	1.5	30		U
10061-02-6	trans-1,3-Dichloropropene	0.96	30		U
100-41-4	Ethylbenzene	2.2	30		U
591-78-6	2-Hexanone	6.9	30		U
98-82-8	Isopropylbenzene	2.6	30		U
79-20-9	Methyl acetate	4.8	30		U
75-09-2	Methylene chloride	1.9	30	30 UJ ~~6.8 JB~~	VJ B
108-87-2	Methyl cyclohexane	0.90	30		U
1634-04-4	Methyl tert-butyl ether	0.96	30		U
108-10-1	4-Methyl-2-pentanone	1.7	30		U
100-42-5	Styrene	1.0	30		U
79-34-5	1,1,2,2-Tetrachloroethane	1.3	30		U
127-18-4	Tetrachloroethene	2.9	30		U

FORM I VOA

LW 11/28/09

FORM 1
VOLATILE ORGANICS ANALYSIS DATA SHEET

CLIENT SAMPLE NO. 10

MR08-SD01D-08D

Lab Name: EMPIRICAL LABS Contract: CH2MHILL

Lab Code: NA Case No.: NA SAS No.: NA SDG No.: LEJEUNE015

Matrix: (soil/water) SOIL Lab Sample ID: 0811141-10

Sample wt/vol: 4.9 (g/mL) G Lab File ID: 1114110B

Level: (low/med) LOW Date Sampled: 11/11/08 11:55

% Moisture: not dec. 66 Date Analyzed: 11/22/08 20:06

GC Column: RTX-VRX ID: 0.25 (mm) Dilution Factor: 1.0

Soil Extract Volume:_____(uL) Soil Aliquot Volume: _____(uL)

CONCENTRATION UNITS: (ug/L or ug/Kg) UG/KG

CAS NO.	COMPOUND	MDL	RL	CONC	Q
108-88-3	Toluene	2.6	30		U UJ
120-82-1	1,2,4-Trichlorobenzene	0.54	30		U
71-55-6	1,1,1-Trichloroethane	2.7	30		U
79-00-5	1,1,2-Trichloroethane	1.0	30		U
79-01-6	Trichloroethene	2.6	30		U
76-13-1	Trichlorotrifluoroethane	1.6	30		U
75-69-4	Trichlorofluoromethane	2.8	30		U
75-01-4	Vinyl chloride	3.3	30		U
1330-20-7	Xylene(total)	2.1	30		U

JS

FORM I VOA

lw 1/28/09

FORM 1
VOLATILE ORGANICS ANALYSIS DATA SHEET

CLIENT SAMPLE NO.

MR08-SW03-08D

Lab Name: EMPIRICAL LABS Contract: CH2MHILL

Lab Code: NA Case No.: NA SAS No.: NA SDG No.: LEJEUNE015

Matrix: (soil/water) WATER Lab Sample ID: 0811141-11

Sample wt/vol: 5.000 (g/mL) ML Lab File ID: 1114111

Level: (low/med) LOW Date Sampled: 11/11/08 10:05

% Moisture: not dec. _____ Date Analyzed: 11/21/08 03:52

GC Column: RTX-VRX ID: 0.25 (mm) Dilution Factor: 1.0

Soil Extract Volume:_____(uL) Soil Aliquot Volume: _____(uL)

CONCENTRATION UNITS: (ug/L or ug/Kg) UG/L

CAS NO.	COMPOUND	MDL	RL	CONC	Q
67-64-1	Acetone	0.84	2.5	15	
71-43-2	Benzene	0.11	1.0		U
75-27-4	Bromodichloromethane	0.10	1.0		U
75-25-2	Bromoform	0.10	1.0		U
74-83-9	Bromomethane	0.32	1.0		U
78-93-3	2-Butanone	1.0	3.0		U
75-15-0	Carbon disulfide	0.13	1.0		U
56-23-5	Carbon tetrachloride	0.15	1.0		U
108-90-7	Chlorobenzene	0.10	1.0		U
75-00-3	Chloroethane	0.18	1.0		U
67-66-3	Chloroform	0.11	1.0		U
74-87-3	Chloromethane	0.29	1.0		U
110-82-7	Cyclohexane	0.20	1.0		U
124-48-1	Dibromochloromethane	0.10	1.0		U
96-12-8	1,2-Dibromo-3-chloropropane	0.11	1.0		U
106-93-4	1,2-Dibromoethane	0.10	1.0		U
95-50-1	1,2-Dichlorobenzene	0.10	1.0		U
541-73-1	1,3-Dichlorobenzene	0.13	1.0		U
106-46-7	1,4-Dichlorobenzene	0.10	1.0		U
75-71-8	Dichlorodifluoromethane	0.22	1.0		U
75-34-3	1,1-Dichloroethane	0.12	1.0		U
107-06-2	1,2-Dichloroethane	0.10	1.0		U
75-35-4	1,1-Dichloroethene	0.15	1.0		U
156-59-2	cis-1,2-Dichloroethene	0.13	1.0		U
156-60-5	trans-1,2-Dichloroethene	0.13	1.0		U
78-87-5	1,2-Dichloropropane	0.10	1.0		U
10061-01-5	cis-1,3-Dichloropropene	0.11	1.0		U
10061-02-6	trans-1,3-Dichloropropene	0.10	1.0		U
100-41-4	Ethylbenzene	0.13	1.0		U
591-78-6	2-Hexanone	0.30	2.0		U
98-82-8	Isopropylbenzene	0.15	1.0		U
79-20-9	Methyl acetate	0.30	1.0		U
75-09-2	Methylene chloride	0.14	1.0		U
108-87-2	Methyl cyclohexane	0.17	1.0		U
1634-04-4	Methyl tert-butyl ether	0.10	1.0		U
108-10-1	4-Methyl-2-pentanone	0.29	2.0		U
100-42-5	Styrene	0.10	1.0		U
79-34-5	1,1,2,2-Tetrachloroethane	0.10	1.0		U
127-18-4	Tetrachloroethene	0.15	1.0		U

LW
1/28/09

FORM 1
VOLATILE ORGANICS ANALYSIS DATA SHEET

CLIENT SAMPLE NO. 11

MR08-SW03-08D

Lab Name: EMPIRICAL LABS Contract: CH2MHILL

Lab Code: NA Case No.: NA SAS No.: NA SDG No.: LEJEUNE015

Matrix: (soil/water) WATER Lab Sample ID: 0811141-11

Sample wt/vol: 5.000 (g/mL) ML Lab File ID: 1114111

Level: (low/med) LOW Date Sampled: 11/11/08 10:05

% Moisture: not dec. _____ Date Analyzed: 11/21/08 03:52

GC Column: RTX-VRX ID: 0.25 (mm) Dilution Factor: 1.0

Soil Extract Volume:_____(uL) Soil Aliquot Volume: _____(uL)

CONCENTRATION UNITS: (ug/L or ug/Kg) UG/L

CAS NO.	COMPOUND	MDL	RL	CONC	Q
108-88-3	Toluene	0.10	1.0		U
120-82-1	1,2,4-Trichlorobenzene	0.10	1.0		U
71-55-6	1,1,1-Trichloroethane	0.17	1.0		U
79-00-5	1,1,2-Trichloroethane	0.10	1.0		U
79-01-6	Trichloroethene	0.13	1.0		U
76-13-1	Trichlorotrifluoroethane	0.18	1.0		U
75-69-4	Trichlorofluoromethane	0.17	1.0		U
75-01-4	Vinyl chloride	0.18	1.0		U
1330-20-7	Xylene(total)	0.22	1.0		U

11/28/09

FORM 1
VOLATILE ORGANICS ANALYSIS DATA SHEET

CLIENT SAMPLE NO. 12

MR08-SD03-08D

Lab Name: EMPIRICAL LABS Contract: CH2MHILL

Lab Code: NA Case No.: NA SAS No.: NA SDG No.: LEJEUNE015

Matrix: (soil/water) SOIL Lab Sample ID: 0811141-12

Sample wt/vol: 4.8 (g/mL) G Lab File ID: 1114112B

Level: (low/med) LOW Date Sampled: 11/11/08 10:25

% Moisture: not dec. 25 Date Analyzed: 11/22/08 20:45

GC Column: RTX-VRX ID: 0.25 (mm) Dilution Factor: 1.0

Soil Extract Volume:_____(uL) Soil Aliquot Volume: _____(uL)

CONCENTRATION UNITS: (ug/L or ug/Kg) UG/KG

CAS NO.	COMPOUND	MDL	RL	CONC	Q	
67-64-1	Acetone	2.8	14	28	~~B~~ U	B
71-43-2	Benzene	0.65	14		U	
75-27-4	Bromodichloromethane	0.42	14		U	
75-25-2	Bromoform	1.4	14		U	
74-83-9	Bromomethane	1.00	14		~~U~~ UJ	CC
78-93-3	2-Butanone	1.9	14	2.9	J	
75-15-0	Carbon disulfide	1.8	14		U	
56-23-5	Carbon tetrachloride	1.2	14		U	
108-90-7	Chlorobenzene	0.47	14		U	
75-00-3	Chloroethane	1.5	14		U	
67-66-3	Chloroform	0.76	14		U	
74-87-3	Chloromethane	0.72	14		U	
110-82-7	Cyclohexane	0.75	14		U	
124-48-1	Dibromochloromethane	0.47	14		U	
96-12-8	1,2-Dibromo-3-chloropropane	1.7	6.9		~~U~~ UJ	ISI
106-93-4	1,2-Dibromoethane	0.60	14		U	
95-50-1	1,2-Dichlorobenzene	0.51	14		~~U~~ UJ	ISI
541-73-1	1,3-Dichlorobenzene	1.2	14		U	↓
106-46-7	1,4-Dichlorobenzene	0.76	14		U	↓
75-71-8	Dichlorodifluoromethane	1.5	14		U	
75-34-3	1,1-Dichloroethane	0.75	14		U	
107-06-2	1,2-Dichloroethane	0.64	14		U	
75-35-4	1,1-Dichloroethene	1.7	14		U	
156-59-2	cis-1,2-Dichloroethene	1.7	14		U	
156-60-5	trans-1,2-Dichloroethene	1.5	14		U	
78-87-5	1,2-Dichloropropane	0.64	14		U	
10061-01-5	cis-1,3-Dichloropropene	0.69	14		U	
10061-02-6	trans-1,3-Dichloropropene	0.44	14		U	
100-41-4	Ethylbenzene	1.0	14		U	
591-78-6	2-Hexanone	3.2	14		U	
98-82-8	Isopropylbenzene	1.2	14		U	
79-20-9	Methyl acetate	2.2	14		U	
75-09-2	Methylene chloride	0.86	14	14u ~~7.8~~	~~JB~~	BL
108-87-2	Methyl cyclohexane	0.42	14		U	
1634-04-4	Methyl tert-butyl ether	0.44	14		U	
108-10-1	4-Methyl-2-pentanone	0.80	14		U	
100-42-5	Styrene	0.48	14		U	
79-34-5	1,1,2,2-Tetrachloroethane	0.60	14		~~U~~ UJ	ISI
127-18-4	Tetrachloroethene	1.3	14		~~U~~ UJ	CC

FORM I VOA

JWS 1/28/09

FORM 1
VOLATILE ORGANICS ANALYSIS DATA SHEET

CLIENT SAMPLE NO. 12

MR08-SD03-08D

Lab Name: EMPIRICAL LABS Contract: CH2MHILL

Lab Code: NA Case No.: NA SAS No.: NA SDG No.: LEJEUNE015

Matrix: (soil/water) SOIL Lab Sample ID: 0811141-12

Sample wt/vol: 4.8 (g/mL) G Lab File ID: 1114112B

Level: (low/med) LOW Date Sampled: 11/11/08 10:25

% Moisture: not dec. 25 Date Analyzed: 11/22/08 20:45

GC Column: RTX-VRX ID: 0.25 (mm) Dilution Factor: 1.0

Soil Extract Volume:_____(uL) Soil Aliquot Volume: _____(uL)

CONCENTRATION UNITS: (ug/L or ug/Kg) UG/KG

CAS NO.	COMPOUND	MDL	RL	CONC	Q
108-88-3	Toluene	1.2	14		U
120-82-1	1,2,4-Trichlorobenzene	0.25	14		~~U~~ UJ ~~ES~~ CC
71-55-6	1,1,1-Trichloroethane	1.2	14		U
79-00-5	1,1,2-Trichloroethane	0.48	14		U
79-01-6	Trichloroethene	1.2	14		U
76-13-1	Trichlorotrifluoroethane	0.76	14		U
75-69-4	Trichlorofluoromethane	1.3	14		U
75-01-4	Vinyl chloride	1.5	14		~~U~~ UJ B
1330-20-7	Xylene(total)	0.97	14		U

FORM I VOA

LW
11/28/09

FORM 1
VOLATILE ORGANICS ANALYSIS DATA SHEET

CLIENT SAMPLE NO. 13

IR78-GW61-08D

Lab Name: EMPIRICAL LABS Contract: CH2MHILL

Lab Code: NA Case No.: NA SAS No.: NA SDG No.: LEJEUNE015

Matrix: (soil/water) WATER Lab Sample ID: 0811141-13

Sample wt/vol: 5.000 (g/mL) ML Lab File ID: 1114113

Level: (low/med) LOW Date Sampled: 11/10/08 12:05

% Moisture: not dec. _____ Date Analyzed: 11/21/08 04:22

GC Column: RTX-VRX ID: 0.25 (mm) Dilution Factor: 1.0

Soil Extract Volume:_____(uL) Soil Aliquot Volume: _____(uL)

CONCENTRATION UNITS: (ug/L or ug/Kg) UG/L

CAS NO.	COMPOUND	MDL	RL	CONC	Q
67-64-1	Acetone	0.84	2.5		U
71-43-2	Benzene	0.11	1.0		U
75-27-4	Bromodichloromethane	0.10	1.0		U
75-25-2	Bromoform	0.10	1.0		U
74-83-9	Bromomethane	0.32	1.0		U
78-93-3	2-Butanone	1.0	3.0		U
75-15-0	Carbon disulfide	0.13	1.0		U
56-23-5	Carbon tetrachloride	0.15	1.0		U
108-90-7	Chlorobenzene	0.10	1.0		U
75-00-3	Chloroethane	0.18	1.0		U
67-66-3	Chloroform	0.11	1.0		U
74-87-3	Chloromethane	0.29	1.0		U
110-82-7	Cyclohexane	0.20	1.0		U
124-48-1	Dibromochloromethane	0.10	1.0		U
96-12-8	1,2-Dibromo-3-chloropropane	0.11	1.0		U
106-93-4	1,2-Dibromoethane	0.10	1.0		U
95-50-1	1,2-Dichlorobenzene	0.10	1.0		U
541-73-1	1,3-Dichlorobenzene	0.13	1.0		U
106-46-7	1,4-Dichlorobenzene	0.10	1.0		U
75-71-8	Dichlorodifluoromethane	0.22	1.0	0.27	J
75-34-3	1,1-Dichloroethane	0.12	1.0		U
107-06-2	1,2-Dichloroethane	0.10	1.0		U
75-35-4	1,1-Dichloroethene	0.15	1.0		U
156-59-2	cis-1,2-Dichloroethene	0.13	1.0		U
156-60-5	trans-1,2-Dichloroethene	0.13	1.0		U
78-87-5	1,2-Dichloropropane	0.10	1.0		U
10061-01-5	cis-1,3-Dichloropropene	0.11	1.0		U
10061-02-6	trans-1,3-Dichloropropene	0.10	1.0		U
100-41-4	Ethylbenzene	0.13	1.0		U
591-78-6	2-Hexanone	0.30	2.0		U
98-82-8	Isopropylbenzene	0.15	1.0		U
79-20-9	Methyl acetate	0.30	1.0		U
75-09-2	Methylene chloride	0.14	1.0		U
108-87-2	Methyl cyclohexane	0.17	1.0		U
1634-04-4	Methyl tert-butyl ether	0.10	1.0		U
108-10-1	4-Methyl-2-pentanone	0.29	2.0		U
100-42-5	Styrene	0.10	1.0		U
79-34-5	1,1,2,2-Tetrachloroethane	0.10	1.0		U
127-18-4	Tetrachloroethene	0.15	1.0		U

LW 11/28/09

FORM 1
VOLATILE ORGANICS ANALYSIS DATA SHEET

CLIENT SAMPLE NO. 13

IR78-GW61-08D

Lab Name: EMPIRICAL LABS Contract: CH2MHILL

Lab Code: NA Case No.: NA SAS No.: NA SDG No.: LEJEUNE015

Matrix: (soil/water) WATER Lab Sample ID: 0811141-13

Sample wt/vol: 5.000 (g/mL) ML Lab File ID: 1114113

Level: (low/med) LOW Date Sampled: 11/10/08 12:05

% Moisture: not dec. _____ Date Analyzed: 11/21/08 04:22

GC Column: RTX-VRX ID: 0.25 (mm) Dilution Factor: 1.0

Soil Extract Volume:_____(uL) Soil Aliquot Volume: _____(uL)

CONCENTRATION UNITS: (ug/L or ug/Kg) UG/L

CAS NO.	COMPOUND	MDL	RL	CONC	Q
108-88-3	Toluene	0.10	1.0	1.04 ~~0.16~~	J
120-82-1	1,2,4-Trichlorobenzene	0.10	1.0		U
71-55-6	1,1,1-Trichloroethane	0.17	1.0		U
79-00-5	1,1,2-Trichloroethane	0.10	1.0		U
79-01-6	Trichloroethene	0.13	1.0		U
76-13-1	Trichlorotrifluoroethane	0.18	1.0		U
75-69-4	Trichlorofluoromethane	0.17	1.0	1.7	
75-01-4	Vinyl chloride	0.18	1.0		U
1330-20-7	Xylene(total)	0.22	1.0		U

BL

FORM I VOA

lw
11/28/09

FORM 1
VOLATILE ORGANICS ANALYSIS DATA SHEET

CLIENT SAMPLE NO. 14

IR78-GW03-08D

Lab Name: EMPIRICAL LABS Contract: CH2MHILL

Lab Code: NA Case No.: NA SAS No.: NA SDG No.: LEJEUNE015

Matrix: (soil/water) WATER Lab Sample ID: 0811141-14

Sample wt/vol: 5.000 (g/mL) ML Lab File ID: 1114114

Level: (low/med) LOW Date Sampled: 11/10/08 15:45

% Moisture: not dec. _____ Date Analyzed: 11/21/08 04:51

GC Column: RTX-VRX ID: 0.25 (mm) Dilution Factor: 1.0

Soil Extract Volume:_____(uL) Soil Aliquot Volume: _____(uL)

CONCENTRATION UNITS: (ug/L or ug/Kg) UG/L

CAS NO.	COMPOUND	MDL	RL	CONC	Q
67-64-1	Acetone	0.84	2.5		U
71-43-2	Benzene	0.11	1.0		U
75-27-4	Bromodichloromethane	0.10	1.0		U
75-25-2	Bromoform	0.10	1.0		U
74-83-9	Bromomethane	0.32	1.0		U
78-93-3	2-Butanone	1.0	3.0		U
75-15-0	Carbon disulfide	0.13	1.0		U
56-23-5	Carbon tetrachloride	0.15	1.0		U
108-90-7	Chlorobenzene	0.10	1.0		U
75-00-3	Chloroethane	0.18	1.0		U
67-66-3	Chloroform	0.11	1.0		U
74-87-3	Chloromethane	0.29	1.0		U
110-82-7	Cyclohexane	0.20	1.0		U
124-48-1	Dibromochloromethane	0.10	1.0		U
96-12-8	1,2-Dibromo-3-chloropropane	0.11	1.0		U
106-93-4	1,2-Dibromoethane	0.10	1.0		U
95-50-1	1,2-Dichlorobenzene	0.10	1.0		U
541-73-1	1,3-Dichlorobenzene	0.13	1.0		U
106-46-7	1,4-Dichlorobenzene	0.10	1.0		U
75-71-8	Dichlorodifluoromethane	0.22	1.0		U
75-34-3	1,1-Dichloroethane	0.12	1.0		U
107-06-2	1,2-Dichloroethane	0.10	1.0		U
75-35-4	1,1-Dichloroethene	0.15	1.0		U
156-59-2	cis-1,2-Dichloroethene	0.13	1.0	1.1	
156-60-5	trans-1,2-Dichloroethene	0.13	1.0		U
78-87-5	1,2-Dichloropropane	0.10	1.0		U
10061-01-5	cis-1,3-Dichloropropene	0.11	1.0		U
10061-02-6	trans-1,3-Dichloropropene	0.10	1.0		U
100-41-4	Ethylbenzene	0.13	1.0		U
591-78-6	2-Hexanone	0.30	2.0		U
98-82-8	Isopropylbenzene	0.15	1.0		U
79-20-9	Methyl acetate	0.30	1.0		U
75-09-2	Methylene chloride	0.14	1.0		U
108-87-2	Methyl cyclohexane	0.17	1.0		U
1634-04-4	Methyl tert-butyl ether	0.10	1.0		U
108-10-1	4-Methyl-2-pentanone	0.29	2.0		U
100-42-5	Styrene	0.10	1.0		U
79-34-5	1,1,2,2-Tetrachloroethane	0.10	1.0		U
127-18-4	Tetrachloroethene	0.15	1.0		U

1/28/09

FORM 1
VOLATILE ORGANICS ANALYSIS DATA SHEET

CLIENT SAMPLE NO. 14

IR78-GW03-08D

Lab Name: EMPIRICAL LABS Contract: CH2MHILL

Lab Code: NA Case No.: NA SAS No.: NA SDG No.: LEJEUNE015

Matrix: (soil/water) WATER Lab Sample ID: 0811141-14

Sample wt/vol: 5.000 (g/mL) ML Lab File ID: 1114114

Level: (low/med) LOW Date Sampled: 11/10/08 15:45

% Moisture: not dec. _____ Date Analyzed: 11/21/08 04:51

GC Column: RTX-VRX ID: 0.25 (mm) Dilution Factor: 1.0

Soil Extract Volume:_____(uL) Soil Aliquot Volume: _____(uL)

CONCENTRATION UNITS: (ug/L or ug/Kg) UG/L

CAS NO.	COMPOUND	MDL	RL	CONC	Q
108-88-3	Toluene	0.10	1.0		U
120-82-1	1,2,4-Trichlorobenzene	0.10	1.0		U
71-55-6	1,1,1-Trichloroethane	0.17	1.0		U
79-00-5	1,1,2-Trichloroethane	0.10	1.0		U
79-01-6	Trichloroethene	0.13	1.0		U
76-13-1	Trichlorotrifluoroethane	0.18	1.0		U
75-69-4	Trichlorofluoromethane	0.17	1.0		U
75-01-4	Vinyl chloride	0.18	1.0		U
1330-20-7	Xylene(total)	0.22	1.0		U

DCW
11/28/09

FORM 1
VOLATILE ORGANICS ANALYSIS DATA SHEET

CLIENT SAMPLE NO. 15

MR08-EB111008

Lab Name: EMPIRICAL LABS Contract: CH2MHILL

Lab Code: NA Case No.: NA SAS No.: NA SDG No.: LEJEUNE015

Matrix: (soil/water) WATER Lab Sample ID: 0811141-15

Sample wt/vol: 5.000 (g/mL) ML Lab File ID: 1114115

Level: (low/med) LOW Date Sampled: 11/10/08 16:45

% Moisture: not dec. _____ Date Analyzed: 11/21/08 02:23

GC Column: RTX-VRX ID: 0.25 (mm) Dilution Factor: 1.0

Soil Extract Volume:_____(uL) Soil Aliquot Volume: _____(uL)

CONCENTRATION UNITS: (ug/L or ug/Kg) UG/L

CAS NO.	COMPOUND	MDL	RL	CONC	Q
67-64-1	Acetone	0.84	2.5	37	
71-43-2	Benzene	0.11	1.0		U
75-27-4	Bromodichloromethane	0.10	1.0		U
75-25-2	Bromoform	0.10	1.0		U
74-83-9	Bromomethane	0.32	1.0		U
78-93-3	2-Butanone	1.0	3.0	9.0	
75-15-0	Carbon disulfide	0.13	1.0		U
56-23-5	Carbon tetrachloride	0.15	1.0		U
108-90-7	Chlorobenzene	0.10	1.0		U
75-00-3	Chloroethane	0.18	1.0		U
67-66-3	Chloroform	0.11	1.0		U
74-87-3	Chloromethane	0.29	1.0		U
110-82-7	Cyclohexane	0.20	1.0		U
124-48-1	Dibromochloromethane	0.10	1.0		U
96-12-8	1,2-Dibromo-3-chloropropane	0.11	1.0		U
106-93-4	1,2-Dibromoethane	0.10	1.0		U
95-50-1	1,2-Dichlorobenzene	0.10	1.0		U
541-73-1	1,3-Dichlorobenzene	0.13	1.0		U
106-46-7	1,4-Dichlorobenzene	0.10	1.0		U
75-71-8	Dichlorodifluoromethane	0.22	1.0		U
75-34-3	1,1-Dichloroethane	0.12	1.0		U
107-06-2	1,2-Dichloroethane	0.10	1.0		U
75-35-4	1,1-Dichloroethene	0.15	1.0		U
156-59-2	cis-1,2-Dichloroethene	0.13	1.0		U
156-60-5	trans-1,2-Dichloroethene	0.13	1.0		U
78-87-5	1,2-Dichloropropane	0.10	1.0		U
10061-01-5	cis-1,3-Dichloropropene	0.11	1.0		U
10061-02-6	trans-1,3-Dichloropropene	0.10	1.0		U
100-41-4	Ethylbenzene	0.13	1.0		U
591-78-6	2-Hexanone	0.30	2.0		U
98-82-8	Isopropylbenzene	0.15	1.0		U
79-20-9	Methyl acetate	0.30	1.0		U
75-09-2	Methylene chloride	0.14	1.0		U
108-87-2	Methyl cyclohexane	0.17	1.0		U
1634-04-4	Methyl tert-butyl ether	0.10	1.0		U
108-10-1	4-Methyl-2-pentanone	0.29	2.0		U
100-42-5	Styrene	0.10	1.0		U
79-34-5	1,1,2,2-Tetrachloroethane	0.10	1.0		U
127-18-4	Tetrachloroethene	0.15	1.0		U

lw
1/28/09

FORM 1
VOLATILE ORGANICS ANALYSIS DATA SHEET

CLIENT SAMPLE NO. 15

MR08-EB111008

Lab Name: EMPIRICAL LABS Contract: CH2MHILL

Lab Code: NA Case No.: NA SAS No.: NA SDG No.: LEJEUNE015

Matrix: (soil/water) WATER Lab Sample ID: 0811141-15

Sample wt/vol: 5.000 (g/mL) ML Lab File ID: 1114115

Level: (low/med) LOW Date Sampled: 11/10/08 16:45

% Moisture: not dec. _____ Date Analyzed: 11/21/08 02:23

GC Column: RTX-VRX ID: 0.25 (mm) Dilution Factor: 1.0

Soil Extract Volume:_____(uL) Soil Aliquot Volume: _____(uL)

CONCENTRATION UNITS: (ug/L or ug/Kg) UG/L

CAS NO.	COMPOUND	MDL	RL	CONC	Q
108-88-3	Toluene	0.10	1.0		U
120-82-1	1,2,4-Trichlorobenzene	0.10	1.0	0.12	J
71-55-6	1,1,1-Trichloroethane	0.17	1.0		U
79-00-5	1,1,2-Trichloroethane	0.10	1.0		U
79-01-6	Trichloroethene	0.13	1.0		U
76-13-1	Trichlorotrifluoroethane	0.18	1.0		U
75-69-4	Trichlorofluoromethane	0.17	1.0		U
75-01-4	Vinyl chloride	0.18	1.0		U
1330-20-7	Xylene(total)	0.22	1.0		U

11/28/09

FORM 1
VOLATILE ORGANICS ANALYSIS DATA SHEET

CLIENT SAMPLE NO. 16

IR78-GW02-08D

Lab Name: EMPIRICAL LABS Contract: CH2MHILL

Lab Code: NA Case No.: NA SAS No.: NA SDG No.: LEJEUNE015

Matrix: (soil/water) WATER Lab Sample ID: 0811141-16

Sample wt/vol: 5.000 (g/mL) ML Lab File ID: 1114116

Level: (low/med) LOW Date Sampled: 11/11/08 09:10

% Moisture: not dec. _____ Date Analyzed: 11/21/08 05:21

GC Column: RTX-VRX ID: 0.25 (mm) Dilution Factor: 1.0

Soil Extract Volume:_____(uL) Soil Aliquot Volume: _____(uL)

CONCENTRATION UNITS: (ug/L or ug/Kg) UG/L

CAS NO.	COMPOUND	MDL	RL	CONC	Q
67-64-1	Acetone	0.84	2.5		U
71-43-2	Benzene	0.11	1.0		U
75-27-4	Bromodichloromethane	0.10	1.0		U
75-25-2	Bromoform	0.10	1.0		U
74-83-9	Bromomethane	0.32	1.0		U
78-93-3	2-Butanone	1.0	3.0		U
75-15-0	Carbon disulfide	0.13	1.0		U
56-23-5	Carbon tetrachloride	0.15	1.0		U
108-90-7	Chlorobenzene	0.10	1.0		U
75-00-3	Chloroethane	0.18	1.0		U
67-66-3	Chloroform	0.11	1.0		U
74-87-3	Chloromethane	0.29	1.0		U
110-82-7	Cyclohexane	0.20	1.0		U
124-48-1	Dibromochloromethane	0.10	1.0		U
96-12-8	1,2-Dibromo-3-chloropropane	0.11	1.0		U
106-93-4	1,2-Dibromoethane	0.10	1.0		U
95-50-1	1,2-Dichlorobenzene	0.10	1.0		U
541-73-1	1,3-Dichlorobenzene	0.13	1.0		U
106-46-7	1,4-Dichlorobenzene	0.10	1.0		U
75-71-8	Dichlorodifluoromethane	0.22	1.0		U
75-34-3	1,1-Dichloroethane	0.12	1.0		U
107-06-2	1,2-Dichloroethane	0.10	1.0		U
75-35-4	1,1-Dichloroethene	0.15	1.0		U
156-59-2	cis-1,2-Dichloroethene	0.13	1.0		U
156-60-5	trans-1,2-Dichloroethene	0.13	1.0		U
78-87-5	1,2-Dichloropropane	0.10	1.0		U
10061-01-5	cis-1,3-Dichloropropene	0.11	1.0		U
10061-02-6	trans-1,3-Dichloropropene	0.10	1.0		U
100-41-4	Ethylbenzene	0.13	1.0		U
591-78-6	2-Hexanone	0.30	2.0		U
98-82-8	Isopropylbenzene	0.15	1.0		U
79-20-9	Methyl acetate	0.30	1.0		U
75-09-2	Methylene chloride	0.14	1.0		U
108-87-2	Methyl cyclohexane	0.17	1.0		U
1634-04-4	Methyl tert-butyl ether	0.10	1.0		U
108-10-1	4-Methyl-2-pentanone	0.29	2.0		U
100-42-5	Styrene	0.10	1.0		U
79-34-5	1,1,2,2-Tetrachloroethane	0.10	1.0		U
127-18-4	Tetrachloroethene	0.15	1.0		U

RW
1/28/09

FORM 1
VOLATILE ORGANICS ANALYSIS DATA SHEET

CLIENT SAMPLE NO. 16

IR78-GW02-08D

Lab Name: EMPIRICAL LABS Contract: CH2MHILL

Lab Code: NA Case No.: NA SAS No.: NA SDG No.: LEJEUNE015

Matrix: (soil/water) WATER Lab Sample ID: 0811141-16

Sample wt/vol: 5.000 (g/mL) ML Lab File ID: 1114116

Level: (low/med) LOW Date Sampled: 11/11/08 09:10

% Moisture: not dec. _____ Date Analyzed: 11/21/08 05:21

GC Column: RTX-VRX ID: 0.25 (mm) Dilution Factor: 1.0

Soil Extract Volume:_____(uL) Soil Aliquot Volume: _____(uL)

CONCENTRATION UNITS: (ug/L or ug/Kg) UG/L

CAS NO.	COMPOUND	MDL	RL	CONC	Q
108-88-3	Toluene	0.10	1.0		U
120-82-1	1,2,4-Trichlorobenzene	0.10	1.0		U
71-55-6	1,1,1-Trichloroethane	0.17	1.0		U
79-00-5	1,1,2-Trichloroethane	0.10	1.0		U
79-01-6	Trichloroethene	0.13	1.0		U
76-13-1	Trichlorotrifluoroethane	0.18	1.0		U
75-69-4	Trichlorofluoromethane	0.17	1.0		U
75-01-4	Vinyl chloride	0.18	1.0		U
1330-20-7	Xylene(total)	0.22	1.0		U

lcl
11/28/09

FORM 1
VOLATILE ORGANICS ANALYSIS DATA SHEET

CLIENT SAMPLE NO. 17

IR78-GW02D-08D

Lab Name: EMPIRICAL LABS Contract: CH2MHILL

Lab Code: NA Case No.: NA SAS No.: NA SDG No.: LEJEUNE015

Matrix: (soil/water) WATER Lab Sample ID: 0811141-17

Sample wt/vol: 5.000 (g/mL) ML Lab File ID: 1114117

Level: (low/med) LOW Date Sampled: 11/11/08 09:10

% Moisture: not dec. _____ Date Analyzed: 11/21/08 05:50

GC Column: RTX-VRX ID: 0.25 (mm) Dilution Factor: 1.0

Soil Extract Volume:_____(uL) Soil Aliquot Volume: _____(uL)

CONCENTRATION UNITS: (ug/L or ug/Kg) UG/L

CAS NO.	COMPOUND	MDL	RL	CONC	Q
67-64-1	Acetone	0.84	2.5		U
71-43-2	Benzene	0.11	1.0		U
75-27-4	Bromodichloromethane	0.10	1.0		U
75-25-2	Bromoform	0.10	1.0		U
74-83-9	Bromomethane	0.32	1.0		U
78-93-3	2-Butanone	1.0	3.0		U
75-15-0	Carbon disulfide	0.13	1.0		U
56-23-5	Carbon tetrachloride	0.15	1.0		U
108-90-7	Chlorobenzene	0.10	1.0		U
75-00-3	Chloroethane	0.18	1.0		U
67-66-3	Chloroform	0.11	1.0		U
74-87-3	Chloromethane	0.29	1.0		U
110-82-7	Cyclohexane	0.20	1.0		U
124-48-1	Dibromochloromethane	0.10	1.0		U
96-12-8	1,2-Dibromo-3-chloropropane	0.11	1.0		U
106-93-4	1,2-Dibromoethane	0.10	1.0		U
95-50-1	1,2-Dichlorobenzene	0.10	1.0		U
541-73-1	1,3-Dichlorobenzene	0.13	1.0		U
106-46-7	1,4-Dichlorobenzene	0.10	1.0		U
75-71-8	Dichlorodifluoromethane	0.22	1.0		U
75-34-3	1,1-Dichloroethane	0.12	1.0		U
107-06-2	1,2-Dichloroethane	0.10	1.0		U
75-35-4	1,1-Dichloroethene	0.15	1.0		U
156-59-2	cis-1,2-Dichloroethene	0.13	1.0		U
156-60-5	trans-1,2-Dichloroethene	0.13	1.0		U
78-87-5	1,2-Dichloropropane	0.10	1.0		U
10061-01-5	cis-1,3-Dichloropropene	0.11	1.0		U
10061-02-6	trans-1,3-Dichloropropene	0.10	1.0		U
100-41-4	Ethylbenzene	0.13	1.0		U
591-78-6	2-Hexanone	0.30	2.0		U
98-82-8	Isopropylbenzene	0.15	1.0		U
79-20-9	Methyl acetate	0.30	1.0		U
75-09-2	Methylene chloride	0.14	1.0		U
108-87-2	Methyl cyclohexane	0.17	1.0		U
1634-04-4	Methyl tert-butyl ether	0.10	1.0		U
108-10-1	4-Methyl-2-pentanone	0.29	2.0		U
100-42-5	Styrene	0.10	1.0		U
79-34-5	1,1,2,2-Tetrachloroethane	0.10	1.0		U
127-18-4	Tetrachloroethene	0.15	1.0		U

11/28/09

FORM 1
VOLATILE ORGANICS ANALYSIS DATA SHEET

CLIENT SAMPLE NO. 17

IR78-GW02D-08D

Lab Name: EMPIRICAL LABS Contract: CH2MHILL

Lab Code: NA Case No.: NA SAS No.: NA SDG No.: LEJEUNE015

Matrix: (soil/water) WATER Lab Sample ID: 0811141-17

Sample wt/vol: 5.000 (g/mL) ML Lab File ID: 1114117

Level: (low/med) LOW Date Sampled: 11/11/08 09:10

% Moisture: not dec. _____ Date Analyzed: 11/21/08 05:50

GC Column: RTX-VRX ID: 0.25 (mm) Dilution Factor: 1.0

Soil Extract Volume:_____(uL) Soil Aliquot Volume: _____(uL)

CONCENTRATION UNITS: (ug/L or ug/Kg) UG/L

CAS NO.	COMPOUND	MDL	RL	CONC	Q
108-88-3	Toluene	0.10	1.0		U
120-82-1	1,2,4-Trichlorobenzene	0.10	1.0		U
71-55-6	1,1,1-Trichloroethane	0.17	1.0		U
79-00-5	1,1,2-Trichloroethane	0.10	1.0		U
79-01-6	Trichloroethene	0.13	1.0		U
76-13-1	Trichlorotrifluoroethane	0.18	1.0		U
75-69-4	Trichlorofluoromethane	0.17	1.0		U
75-01-4	Vinyl chloride	0.18	1.0		U
1330-20-7	Xylene(total)	0.22	1.0		U

hw
112809

FORM 1
VOLATILE ORGANICS ANALYSIS DATA SHEET

CLIENT SAMPLE NO. 18

IR78-GW42-08D

Lab Name: EMPIRICAL LABS Contract: CH2MHILL

Lab Code: NA Case No.: NA SAS No.: NA SDG No.: LEJEUNE015

Matrix: (soil/water) WATER Lab Sample ID: 0811141-18

Sample wt/vol: 5.000 (g/mL) ML Lab File ID: 1114118

Level: (low/med) LOW Date Sampled: 11/11/08 11:40

% Moisture: not dec. _____ Date Analyzed: 11/21/08 06:21

GC Column: RTX-VRX ID: 0.25 (mm) Dilution Factor: 1.0

Soil Extract Volume:_____(uL) Soil Aliquot Volume: _____(uL)

CONCENTRATION UNITS: (ug/L or ug/Kg) UG/L

CAS NO.	COMPOUND	MDL	RL	CONC	Q
67-64-1	Acetone	0.84	2.5		U
71-43-2	Benzene	0.11	1.0	3.6	
75-27-4	Bromodichloromethane	0.10	1.0		U
75-25-2	Bromoform	0.10	1.0		U
74-83-9	Bromomethane	0.32	1.0		U
78-93-3	2-Butanone	1.0	3.0		U
75-15-0	Carbon disulfide	0.13	1.0		U
56-23-5	Carbon tetrachloride	0.15	1.0		U
108-90-7	Chlorobenzene	0.10	1.0		U
75-00-3	Chloroethane	0.18	1.0	1.2	
67-66-3	Chloroform	0.11	1.0		U
74-87-3	Chloromethane	0.29	1.0		U
110-82-7	Cyclohexane	0.20	1.0	0.33	J
124-48-1	Dibromochloromethane	0.10	1.0		U
96-12-8	1,2-Dibromo-3-chloropropane	0.11	1.0		U
106-93-4	1,2-Dibromoethane	0.10	1.0		U
95-50-1	1,2-Dichlorobenzene	0.10	1.0		U
541-73-1	1,3-Dichlorobenzene	0.13	1.0		U
106-46-7	1,4-Dichlorobenzene	0.10	1.0		U
75-71-8	Dichlorodifluoromethane	0.22	1.0		U
75-34-3	1,1-Dichloroethane	0.12	1.0	170	
107-06-2	1,2-Dichloroethane	0.10	1.0	0.82	J
75-35-4	1,1-Dichloroethene	0.15	1.0	15	
156-59-2	cis-1,2-Dichloroethene	0.13	1.0	520 ~~730~~	~~E~~ R D
156-60-5	trans-1,2-Dichloroethene	0.13	1.0	1.7	
78-87-5	1,2-Dichloropropane	0.10	1.0		U
10061-01-5	cis-1,3-Dichloropropene	0.11	1.0		U
10061-02-6	trans-1,3-Dichloropropene	0.10	1.0		U
100-41-4	Ethylbenzene	0.13	1.0	0.25	J
591-78-6	2-Hexanone	0.30	2.0		U
98-82-8	Isopropylbenzene	0.15	1.0		U
79-20-9	Methyl acetate	0.30	1.0		U
75-09-2	Methylene chloride	0.14	1.0		U
108-87-2	Methyl cyclohexane	0.17	1.0		U
1634-04-4	Methyl tert-butyl ether	0.10	1.0		U
108-10-1	4-Methyl-2-pentanone	0.29	2.0		U
100-42-5	Styrene	0.10	1.0		U
79-34-5	1,1,2,2-Tetrachloroethane	0.10	1.0		U
127-18-4	Tetrachloroethene	0.15	1.0		U

FORM I VOA

MW
1/28/09

FORM 1
VOLATILE ORGANICS ANALYSIS DATA SHEET

CLIENT SAMPLE NO. 18

IR78-GW42-08D

Lab Name: EMPIRICAL LABS Contract: CH2MHILL

Lab Code: NA Case No.: NA SAS No.: NA SDG No.: LEJEUNE015

Matrix: (soil/water) WATER Lab Sample ID: 0811141-18

Sample wt/vol: 5.000 (g/mL) ML Lab File ID: 1114118

Level: (low/med) LOW Date Sampled: 11/11/08 11:40

% Moisture: not dec. _____ Date Analyzed: 11/21/08 06:21

GC Column: RTX-VRX ID: 0.25 (mm) Dilution Factor: 1.0

Soil Extract Volume:_____(uL) Soil Aliquot Volume: _____(uL)

CONCENTRATION UNITS: (ug/L or ug/Kg) UG/L

CAS NO.	COMPOUND	MDL	RL	CONC	Q
108-88-3	Toluene	0.10	1.0	2.3	u
120-82-1	1,2,4-Trichlorobenzene	0.10	1.0		U
71-55-6	1,1,1-Trichloroethane	0.17	1.0		U
79-00-5	1,1,2-Trichloroethane	0.10	1.0		U
79-01-6	Trichloroethene	0.13	1.0	110	
76-13-1	Trichlorotrifluoroethane	0.18	1.0		U
75-69-4	Trichlorofluoromethane	0.17	1.0		U
75-01-4	Vinyl chloride	0.18	1.0	180	
1330-20-7	Xylene(total)	0.22	1.0	2.3	

B

KW 12/8/09

FORM 1
VOLATILE ORGANICS ANALYSIS DATA SHEET

CLIENT SAMPLE NO.

IR78-GW42-08DDL

18D

Lab Name: EMPIRICAL LABS Contract: CH2MHILL

Lab Code: NA Case No.: NA SAS No.: NA SDG No.: LEJEUNE015

Matrix: (soil/water) WATER Lab Sample ID: 0811141-18DL

Sample wt/vol: 5.000 (g/mL) ML Lab File ID: 1114118D

Level: (low/med) LOW Date Sampled: 11/11/08 11:40

% Moisture: not dec. _____ Date Analyzed: 11/23/08 13:51

use original

GC Column: RTX-VRX ID: 0.25 (mm) Dilution Factor: 10.0

Soil Extract Volume:_____(uL) Soil Aliquot Volume: _____(uL)

CONCENTRATION UNITS: (ug/L or ug/Kg) UG/L

CAS NO.	COMPOUND	MDL	RL	CONC	Q
67-64-1	Acetone	8.4	25		UD
71-43-2	Benzene	1.1	10	3.1	JD
75-27-4	Bromodichloromethane	1.0	10		UD
75-25-2	Bromoform	1.0	10		UD
74-83-9	Bromomethane	3.2	10		UD UJ
78-93-3	2-Butanone	10	30		UD
75-15-0	Carbon disulfide	1.3	10		UD
56-23-5	Carbon tetrachloride	1.5	10		UD
108-90-7	Chlorobenzene	1.0	10		UD
75-00-3	Chloroethane	1.8	10		UD
67-66-3	Chloroform	1.1	10		UD
74-87-3	Chloromethane	2.9	10		UD
110-82-7	Cyclohexane	2.0	10		UD
124-48-1	Dibromochloromethane	1.0	10		UD
96-12-8	1,2-Dibromo-3-chloropropane	1.1	10		UD
106-93-4	1,2-Dibromoethane	1.0	10		UD
95-50-1	1,2-Dichlorobenzene	1.0	10		UD
541-73-1	1,3-Dichlorobenzene	1.3	10		UD
106-46-7	1,4-Dichlorobenzene	1.0	10		UD
75-71-8	Dichlorodifluoromethane	2.2	10		UD
75-34-3	1,1-Dichloroethane	1.2	10	130	D
107-06-2	1,2-Dichloroethane	1.0	10		UD
75-35-4	1,1-Dichloroethene	1.5	10	9.5	JD
156-59-2	cis-1,2-Dichloroethene	1.3	10	520	D
156-60-5	trans-1,2-Dichloroethene	1.3	10		UD
78-87-5	1,2-Dichloropropane	1.0	10		UD
10061-01-5	cis-1,3-Dichloropropene	1.1	10		UD
10061-02-6	trans-1,3-Dichloropropene	1.0	10		UD
100-41-4	Ethylbenzene	1.3	10		UD
591-78-6	2-Hexanone	3.0	20		UD
98-82-8	Isopropylbenzene	1.5	10		UD
79-20-9	Methyl acetate	3.0	10		UD
75-09-2	Methylene chloride	1.4	10	4.1	JD
108-87-2	Methyl cyclohexane	1.7	10		UD
1634-04-4	Methyl tert-butyl ether	1.0	10		UD
108-10-1	4-Methyl-2-pentanone	2.9	20		UD
100-42-5	Styrene	1.0	10		UD
79-34-5	1,1,2,2-Tetrachloroethane	1.0	10		UD
127-18-4	Tetrachloroethene	1.5	10		UD

DL

R

FORM I VOA

lw 1/28/09

FORM 1
VOLATILE ORGANICS ANALYSIS DATA SHEET

CLIENT SAMPLE NO. 18DL

IR78-GW42-08DDL

Lab Name: EMPIRICAL LABS Contract: CH2MHILL

Lab Code: NA Case No.: NA SAS No.: NA SDG No.: LEJEUNE015

Matrix: (soil/water) WATER Lab Sample ID: 0811141-18DL

Sample wt/vol: 5.000 (g/mL) ML Lab File ID: 1114118D

Level: (low/med) LOW Date Sampled: 11/11/08 11:40

% Moisture: not dec. _____ Date Analyzed: 11/23/08 13:51 Use original

GC Column: RTX-VRX ID: 0.25 (mm) Dilution Factor: 10.0

Soil Extract Volume:_____(uL) Soil Aliquot Volume: _____(uL)

CONCENTRATION UNITS: (ug/L or ug/Kg) UG/L

CAS NO.	COMPOUND	MDL	RL	CONC	Q
108-88-3	Toluene	1.0	10	10U ~~4.2~~	~~JD~~
120-82-1	1,2,4-Trichlorobenzene	1.0	10		UD
71-55-6	1,1,1-Trichloroethane	1.7	10		UD
79-00-5	1,1,2-Trichloroethane	1.0	10		UD
79-01-6	Trichloroethene	1.3	10	82	D
76-13-1	Trichlorotrifluoroethane	1.8	10		UD
75-69-4	Trichlorofluoromethane	1.7	10		UD
75-01-4	Vinyl chloride	1.8	10	120	D
1330-20-7	Xylene(total)	2.2	10		UD

R

FORM I VOA

11/28/09

FORM 1
VOLATILE ORGANICS ANALYSIS DATA SHEET

CLIENT SAMPLE NO. 19

MR08-SW02-08D

Lab Name: EMPIRICAL LABS Contract: CH2MHILL

Lab Code: NA Case No.: NA SAS No.: NA SDG No.: LEJEUNE015

Matrix: (soil/water) WATER Lab Sample ID: 0811141-19

Sample wt/vol: 5.000 (g/mL) ML Lab File ID: 1114119

Level: (low/med) LOW Date Sampled: 11/11/08 09:10

% Moisture: not dec. _____ Date Analyzed: 11/21/08 06:51

GC Column: RTX-VRX ID: 0.25 (mm) Dilution Factor: 1.0

Soil Extract Volume:_____(uL) Soil Aliquot Volume: _____(uL)

CONCENTRATION UNITS: (ug/L or ug/Kg) UG/L

CAS NO.	COMPOUND	MDL	RL	CONC	Q
67-64-1	Acetone	0.84	2.5	3.8	
71-43-2	Benzene	0.11	1.0		U
75-27-4	Bromodichloromethane	0.10	1.0		U
75-25-2	Bromoform	0.10	1.0		U
74-83-9	Bromomethane	0.32	1.0		U
78-93-3	2-Butanone	1.0	3.0		U
75-15-0	Carbon disulfide	0.13	1.0		U
56-23-5	Carbon tetrachloride	0.15	1.0		U
108-90-7	Chlorobenzene	0.10	1.0		U
75-00-3	Chloroethane	0.18	1.0		U
67-66-3	Chloroform	0.11	1.0		U
74-87-3	Chloromethane	0.29	1.0		U
110-82-7	Cyclohexane	0.20	1.0		U
124-48-1	Dibromochloromethane	0.10	1.0		U
96-12-8	1,2-Dibromo-3-chloropropane	0.11	1.0		U
106-93-4	1,2-Dibromoethane	0.10	1.0		U
95-50-1	1,2-Dichlorobenzene	0.10	1.0		U
541-73-1	1,3-Dichlorobenzene	0.13	1.0		U
106-46-7	1,4-Dichlorobenzene	0.10	1.0		U
75-71-8	Dichlorodifluoromethane	0.22	1.0		U
75-34-3	1,1-Dichloroethane	0.12	1.0		U
107-06-2	1,2-Dichloroethane	0.10	1.0		U
75-35-4	1,1-Dichloroethene	0.15	1.0		U
156-59-2	cis-1,2-Dichloroethene	0.13	1.0		U
156-60-5	trans-1,2-Dichloroethene	0.13	1.0		U
78-87-5	1,2-Dichloropropane	0.10	1.0		U
10061-01-5	cis-1,3-Dichloropropene	0.11	1.0		U
10061-02-6	trans-1,3-Dichloropropene	0.10	1.0		U
100-41-4	Ethylbenzene	0.13	1.0		U
591-78-6	2-Hexanone	0.30	2.0		U
98-82-8	Isopropylbenzene	0.15	1.0		U
79-20-9	Methyl acetate	0.30	1.0		U
75-09-2	Methylene chloride	0.14	1.0	1.0U ~~0.20~~ ~~JB~~	Bi
108-87-2	Methyl cyclohexane	0.17	1.0		U
1634-04-4	Methyl tert-butyl ether	0.10	1.0		U
108-10-1	4-Methyl-2-pentanone	0.29	2.0		U
100-42-5	Styrene	0.10	1.0		U
79-34-5	1,1,2,2-Tetrachloroethane	0.10	1.0		U
127-18-4	Tetrachloroethene	0.15	1.0		U

FORM I VOA

RW
11/28/09

FORM 1
VOLATILE ORGANICS ANALYSIS DATA SHEET

CLIENT SAMPLE NO.

19

MR08-SW02-08D

Lab Name: EMPIRICAL LABS Contract: CH2MHILL

Lab Code: NA Case No.: NA SAS No.: NA SDG No.: LEJEUNE015

Matrix: (soil/water) WATER Lab Sample ID: 0811141-19

Sample wt/vol: 5.000 (g/mL) ML Lab File ID: 1114119

Level: (low/med) LOW Date Sampled: 11/11/08 09:10

% Moisture: not dec. _____ Date Analyzed: 11/21/08 06:51

GC Column: RTX-VRX ID: 0.25 (mm) Dilution Factor: 1.0

Soil Extract Volume:_____(uL) Soil Aliquot Volume: _____(uL)

CONCENTRATION UNITS: (ug/L or ug/Kg) UG/L

CAS NO.	COMPOUND	MDL	RL	CONC	Q
108-88-3	Toluene	0.10	1.0		U
120-82-1	1,2,4-Trichlorobenzene	0.10	1.0		U
71-55-6	1,1,1-Trichloroethane	0.17	1.0		U
79-00-5	1,1,2-Trichloroethane	0.10	1.0		U
79-01-6	Trichloroethene	0.13	1.0		U
76-13-1	Trichlorotrifluoroethane	0.18	1.0		U
75-69-4	Trichlorofluoromethane	0.17	1.0		U
75-01-4	Vinyl chloride	0.18	1.0		U
1330-20-7	Xylene(total)	0.22	1.0		U

lcl
1/28/09

FORM 1
VOLATILE ORGANICS ANALYSIS DATA SHEET

CLIENT SAMPLE NO. 20

MR08-SW02D-08D

Lab Name: EMPIRICAL LABS Contract: CH2MHILL

Lab Code: NA Case No.: NA SAS No.: NA SDG No.: LEJEUNE015

Matrix: (soil/water) WATER Lab Sample ID: 0811141-20

Sample wt/vol: 5.000 (g/mL) ML Lab File ID: 1114120

Level: (low/med) LOW Date Sampled: 11/11/08 09:15

% Moisture: not dec. _____ Date Analyzed: 11/21/08 07:21

GC Column: RTX-VRX ID: 0.25 (mm) Dilution Factor: 1.0

Soil Extract Volume:_____(uL) Soil Aliquot Volume: _____(uL)

CONCENTRATION UNITS: (ug/L or ug/Kg) UG/L

CAS NO.	COMPOUND	MDL	RL	CONC	Q
67-64-1	Acetone	0.84	2.5	2.5	
71-43-2	Benzene	0.11	1.0		U
75-27-4	Bromodichloromethane	0.10	1.0		U
75-25-2	Bromoform	0.10	1.0		U
74-83-9	Bromomethane	0.32	1.0		U
78-93-3	2-Butanone	1.0	3.0		U
75-15-0	Carbon disulfide	0.13	1.0		U
56-23-5	Carbon tetrachloride	0.15	1.0		U
108-90-7	Chlorobenzene	0.10	1.0		U
75-00-3	Chloroethane	0.18	1.0		U
67-66-3	Chloroform	0.11	1.0		U
74-87-3	Chloromethane	0.29	1.0		U
110-82-7	Cyclohexane	0.20	1.0		U
124-48-1	Dibromochloromethane	0.10	1.0		U
96-12-8	1,2-Dibromo-3-chloropropane	0.11	1.0		U
106-93-4	1,2-Dibromoethane	0.10	1.0		U
95-50-1	1,2-Dichlorobenzene	0.10	1.0		U
541-73-1	1,3-Dichlorobenzene	0.13	1.0		U
106-46-7	1,4-Dichlorobenzene	0.10	1.0		U
75-71-8	Dichlorodifluoromethane	0.22	1.0		U
75-34-3	1,1-Dichloroethane	0.12	1.0		U
107-06-2	1,2-Dichloroethane	0.10	1.0		U
75-35-4	1,1-Dichloroethene	0.15	1.0		U
156-59-2	cis-1,2-Dichloroethene	0.13	1.0		U
156-60-5	trans-1,2-Dichloroethene	0.13	1.0		U
78-87-5	1,2-Dichloropropane	0.10	1.0		U
10061-01-5	cis-1,3-Dichloropropene	0.11	1.0		U
10061-02-6	trans-1,3-Dichloropropene	0.10	1.0		U
100-41-4	Ethylbenzene	0.13	1.0		U
591-78-6	2-Hexanone	0.30	2.0		U
98-82-8	Isopropylbenzene	0.15	1.0		U
79-20-9	Methyl acetate	0.30	1.0		U
75-09-2	Methylene chloride	0.14	1.0		U
108-87-2	Methyl cyclohexane	0.17	1.0		U
1634-04-4	Methyl tert-butyl ether	0.10	1.0		U
108-10-1	4-Methyl-2-pentanone	0.29	2.0		U
100-42-5	Styrene	0.10	1.0		U
79-34-5	1,1,2,2-Tetrachloroethane	0.10	1.0		U
127-18-4	Tetrachloroethene	0.15	1.0		U

FORM I VOA

11/28/09

FORM 1
VOLATILE ORGANICS ANALYSIS DATA SHEET

CLIENT SAMPLE NO. 20

MR08-SW02D-08D

Lab Name: EMPIRICAL LABS Contract: CH2MHILL

Lab Code: NA Case No.: NA SAS No.: NA SDG No.: LEJEUNE015

Matrix: (soil/water) WATER Lab Sample ID: 0811141-20

Sample wt/vol: 5.000 (g/mL) ML Lab File ID: 1114120

Level: (low/med) LOW Date Sampled: 11/11/08 09:15

% Moisture: not dec. _____ Date Analyzed: 11/21/08 07:21

GC Column: RTX-VRX ID: 0.25 (mm) Dilution Factor: 1.0

Soil Extract Volume:_____(uL) Soil Aliquot Volume: _____(uL)

CONCENTRATION UNITS: (ug/L or ug/Kg) UG/L

CAS NO.	COMPOUND	MDL	RL	CONC	Q
108-88-3	Toluene	0.10	1.0		U
120-82-1	1,2,4-Trichlorobenzene	0.10	1.0		U
71-55-6	1,1,1-Trichloroethane	0.17	1.0		U
79-00-5	1,1,2-Trichloroethane	0.10	1.0		U
79-01-6	Trichloroethene	0.13	1.0		U
76-13-1	Trichlorotrifluoroethane	0.18	1.0		U
75-69-4	Trichlorofluoromethane	0.17	1.0		U
75-01-4	Vinyl chloride	0.18	1.0		U
1330-20-7	Xylene(total)	0.22	1.0		U

JCW 1/28/09

FORM 1
VOLATILE ORGANICS ANALYSIS DATA SHEET

CLIENT SAMPLE NO. 21

MR08-SD02-08D

Lab Name: EMPIRICAL LABS Contract: CH2MHILL

Lab Code: NA Case No.: NA SAS No.: NA SDG No.: LEJEUNE015

Matrix: (soil/water) SOIL Lab Sample ID: 0811141-21

Sample wt/vol: 4.9 (g/mL) G Lab File ID: 1114121B

Level: (low/med) LOW Date Sampled: 11/11/08 09:25

% Moisture: not dec. 33 Date Analyzed: 11/22/08 21:24

GC Column: RTX-VRX ID: 0.25 (mm) Dilution Factor: 1.0

Soil Extract Volume:_____(uL) Soil Aliquot Volume: _____(uL)

CONCENTRATION UNITS: (ug/L or ug/Kg) UG/KG

CAS NO.	COMPOUND	MDL	RL	CONC	Q	
67-64-1	Acetone	3.0	15	33	~~B~~	
71-43-2	Benzene	0.71	15		~~U~~ UJ	MS
75-27-4	Bromodichloromethane	0.46	15		~~U~~ UJ	ISI
75-25-2	Bromoform	1.5	15		~~U~~ UJ	ISI
74-83-9	Bromomethane	1.1	15		~~U~~ UJ	CC
78-93-3	2-Butanone	2.1	15	2.4	J	
75-15-0	Carbon disulfide	2.0	15		U	
56-23-5	Carbon tetrachloride	1.3	15		U	
108-90-7	Chlorobenzene	0.52	15		~~U~~ UJ	IS
75-00-3	Chloroethane	1.7	15		U	
67-66-3	Chloroform	0.84	15		~~U~~ UJ	MS
74-87-3	Chloromethane	0.79	15		U	
110-82-7	Cyclohexane	0.82	15		U	
124-48-1	Dibromochloromethane	0.52	15		~~U~~ UJ	IS
96-12-8	1,2-Dibromo-3-chloropropane	1.8	7.6		~~U~~	
106-93-4	1,2-Dibromoethane	0.65	15		~~U~~	
95-50-1	1,2-Dichlorobenzene	0.56	15		~~U~~	
541-73-1	1,3-Dichlorobenzene	1.3	15		~~U~~	
106-46-7	1,4-Dichlorobenzene	0.84	15		~~U~~	
75-71-8	Dichlorodifluoromethane	1.7	15		U	
75-34-3	1,1-Dichloroethane	0.82	15		~~U~~ UJ	M
107-06-2	1,2-Dichloroethane	0.70	15		~~U~~ UJ	M
75-35-4	1,1-Dichloroethene	1.8	15		~~U~~ UJ	M
156-59-2	cis-1,2-Dichloroethene	1.8	15		~~U~~	
156-60-5	trans-1,2-Dichloroethene	1.7	15		~~U~~	
78-87-5	1,2-Dichloropropane	0.70	15		U	
10061-01-5	cis-1,3-Dichloropropene	0.76	15		~~U~~ UJ	M
10061-02-6	trans-1,3-Dichloropropene	0.48	15		~~U~~ UJ	IS
100-41-4	Ethylbenzene	1.1	15		~~U~~	
591-78-6	2-Hexanone	3.5	15		~~U~~	
98-82-8	Isopropylbenzene	1.3	15		~~U~~	
79-20-9	Methyl acetate	2.4	15		U	
75-09-2	Methylene chloride	0.94	15	154 J ~~2.3~~	~~JB~~ MSL	B
108-87-2	Methyl cyclohexane	0.46	15		U	
1634-04-4	Methyl tert-butyl ether	0.48	15		U	
108-10-1	4-Methyl-2-pentanone	0.88	15		U	
100-42-5	Styrene	0.53	15		~~U~~ UJ	IS
79-34-5	1,1,2,2-Tetrachloroethane	0.65	15		~~U~~	
127-18-4	Tetrachloroethene	1.5	15		~~U~~	CC

FORM I VOA

lW 11/25/09

FORM 1
VOLATILE ORGANICS ANALYSIS DATA SHEET

CLIENT SAMPLE NO. 21

MR08-SD02-08D

Lab Name: EMPIRICAL LABS Contract: CH2MHILL

Lab Code: NA Case No.: NA SAS No.: NA SDG No.: LEJEUNE015

Matrix: (soil/water) SOIL Lab Sample ID: 0811141-21

Sample wt/vol: 4.9 (g/mL) G Lab File ID: 1114121B

Level: (low/med) LOW Date Sampled: 11/11/08 09:25

% Moisture: not dec. 33 Date Analyzed: 11/22/08 21:24

GC Column: RTX-VRX ID: 0.25 (mm) Dilution Factor: 1.0

Soil Extract Volume:_____(uL) Soil Aliquot Volume: _____(uL)

CONCENTRATION UNITS: (ug/L or ug/Kg) UG/KG

CAS NO.	COMPOUND	MDL	RL	CONC	Q	
108-88-3	Toluene	1.3	15		~~U~~ UJ	IS
120-82-1	1,2,4-Trichlorobenzene	0.27	15		~~U~~ UJ	IS
71-55-6	1,1,1-Trichloroethane	1.4	15		~~U~~ UJ	MS
79-00-5	1,1,2-Trichloroethane	0.53	15		~~U~~ UJ	IS
79-01-6	Trichloroethene	1.3	15		~~U~~ UJ	MS
76-13-1	Trichlorotrifluoroethane	0.84	15		U	
75-69-4	Trichlorofluoromethane	1.4	15		U	
75-01-4	Vinyl chloride	1.7	15		~~U~~ UJ	MS
1330-20-7	Xylene(total)	1.1	15		~~U~~ UJ	IS

FORM I VOA

1/28/09

FORM 1
VOLATILE ORGANICS ANALYSIS DATA SHEET

CLIENT SAMPLE NO. 22

MR08-SS379-08D

Lab Name: EMPIRICAL LABS Contract: CH2MHILL

Lab Code: NA Case No.: NA SAS No.: NA SDG No.: LEJEUNE015

Matrix: (soil/water) SOIL Lab Sample ID: 0811141-22

Sample wt/vol: 5.5 (g/mL) G Lab File ID: 1114122B

Level: (low/med) LOW Date Sampled: 11/11/08 13:00

% Moisture: not dec. 10 Date Analyzed: 11/22/08 22:03

GC Column: RTX-VRX ID: 0.25 (mm) Dilution Factor: 1.0

Soil Extract Volume:_____(uL) Soil Aliquot Volume: _____(uL)

CONCENTRATION UNITS: (ug/L or ug/Kg) UG/KG

CAS NO.	COMPOUND	MDL	RL	CONC	Q	
67-64-1	Acetone	2.0	10	37	~~B~~ J	SS
71-43-2	Benzene	0.47	10	0.78	J J	
75-27-4	Bromodichloromethane	0.30	10		U UJ	
75-25-2	Bromoform	1.0	10		U	
74-83-9	Bromomethane	0.72	10		U	
78-93-3	2-Butanone	1.4	10	2.4	J J	
75-15-0	Carbon disulfide	1.3	10	2.2	J J	
56-23-5	Carbon tetrachloride	0.88	10		U UJ	
108-90-7	Chlorobenzene	0.34	10		U	
75-00-3	Chloroethane	1.1	10		U	
67-66-3	Chloroform	0.55	10		U	
74-87-3	Chloromethane	0.52	10		U	
110-82-7	Cyclohexane	0.54	10		U	
124-48-1	Dibromochloromethane	0.34	10		U	
96-12-8	1,2-Dibromo-3-chloropropane	1.2	5.0		U	
106-93-4	1,2-Dibromoethane	0.43	10		U	
95-50-1	1,2-Dichlorobenzene	0.37	10		U	
541-73-1	1,3-Dichlorobenzene	0.84	10		U	
106-46-7	1,4-Dichlorobenzene	0.55	10		U	
75-71-8	Dichlorodifluoromethane	1.1	10		U	
75-34-3	1,1-Dichloroethane	0.54	10		U	
107-06-2	1,2-Dichloroethane	0.46	10		U	
75-35-4	1,1-Dichloroethene	1.2	10		U	
156-59-2	cis-1,2-Dichloroethene	1.2	10		U	
156-60-5	trans-1,2-Dichloroethene	1.1	10		U	
78-87-5	1,2-Dichloropropane	0.46	10		U	
10061-01-5	cis-1,3-Dichloropropene	0.50	10		U	
10061-02-6	trans-1,3-Dichloropropene	0.32	10		U	
100-41-4	Ethylbenzene	0.76	10		U	
591-78-6	2-Hexanone	2.3	10		U	
98-82-8	Isopropylbenzene	0.88	10		U	
79-20-9	Methyl acetate	1.6	10		U	
75-09-2	Methylene chloride	0.62	10	10UJ ~~0.94~~	~~JB~~	B
108-87-2	Methyl cyclohexane	0.30	10		U	
1634-04-4	Methyl tert-butyl ether	0.32	10		U	
108-10-1	4-Methyl-2-pentanone	0.58	10		U	
100-42-5	Styrene	0.35	10		U	
79-34-5	1,1,2,2-Tetrachloroethane	0.43	10		U	
127-18-4	Tetrachloroethene	0.98	10		U	

FORM I VOA

1/28/09

FORM 1
VOLATILE ORGANICS ANALYSIS DATA SHEET

CLIENT SAMPLE NO. 22

MR08-SS379-08D

Lab Name: EMPIRICAL LABS Contract: CH2MHILL

Lab Code: NA Case No.: NA SAS No.: NA SDG No.: LEJEUNE015

Matrix: (soil/water) SOIL Lab Sample ID: 0811141-22

Sample wt/vol: 5.5 (g/mL) G Lab File ID: 1114122B

Level: (low/med) LOW Date Sampled: 11/11/08 13:00

% Moisture: not dec. 10 Date Analyzed: 11/22/08 22:03

GC Column: RTX-VRX ID: 0.25 (mm) Dilution Factor: 1.0

Soil Extract Volume:_____(uL) Soil Aliquot Volume: _____(uL)

CONCENTRATION UNITS: (ug/L or ug/Kg) UG/KG

CAS NO.	COMPOUND	MDL	RL	CONC	Q
108-88-3	Toluene	0.86	10	104 ~~1.1~~	~~U~~ UJ
120-82-1	1,2,4-Trichlorobenzene	0.18	10		U UJ
71-55-6	1,1,1-Trichloroethane	0.91	10		U
79-00-5	1,1,2-Trichloroethane	0.35	10		U
79-01-6	Trichloroethene	0.86	10		U
76-13-1	Trichlorotrifluoroethane	0.55	10		U
75-69-4	Trichlorofluoromethane	0.96	10		U
75-01-4	Vinyl chloride	1.1	10		U
1330-20-7	Xylene(total)	0.70	10		U

Jul
1/28/09

ENVIRONMENTAL
Data Services, Inc.

VOLATILE ORGANIC COMPOUNDS
USEPA Region IV - Level IV Review

Site: MCB Camp Lejeune, TO-09 SDG #: LEJEUNE016

Client: CH2M HILL, Inc., Virginia Beach, Virginia Date: January 28, 2009

Laboratory: Empirical Laboratories, Nashville, Tennessee Reviewer: Nancy Weaver

EDS ID	Client Sample ID	Laboratory Sample ID	Matrix
1	IR78-GW56-08D	0811198-01	Water
1MS	IR78-GW56-08DMS	0811198-01MS	Water
1MSD	IR78-GW56-08DMSD	0811198-01MSD	Water
2	IR78-GW57-08D	0811198-02	Water
3	IR78-GW57D-08D	0811198-03	Water
4	IR78-GW01-08D	0811198-04	Water
5	IR78-GW59-08D	0811198-05	Water
6	IR78-GW59D-08D	0811198-06	Water
7	USTHPFF-MW15-08D	0811198-07	Water
8	USTHPFF-MW09-08D	0811198-08	Water
9	IR78-GW16-08D	0811198-09	Water
10	MR08-EB111208-08D	0811198-10	Water
11	IR78-GW36-08D	0811198-11	Water
12	MR08-SS382-08D	0811198-12	Soil
13	MR08-SS383-08D	0811198-13	Soil
14	MR08-SS384-08D	0811198-14	Soil
15	MR08-SS385-08D	0811198-15	Soil
16	MR08-SS386-08D	0811198-16	Soil
17	MR08-SS387-08D	0811198-17	Soil
18	MR08-EB111208-02	0811198-18	Water
19	MR08-IS381-08D	0811198-19	Soil
20	MR08-TB111208	0811198-20	Water
21	MR08-IS379-08D	0811198-21	Soil

The USEPA "Contract Laboratory Program National Functional Guidelines for Organic Data Review," October 1999, and professional judgement were used in evaluating the data in this summary report.

Holding Times - All samples were analyzed within 14 days for preserved water and soil samples.

GC/MS Tuning - All of the BFB tunes in the initial and continuing calibrations met the percent relative abundance criteria.

Initial Calibration - The initial calibrations exhibited acceptable %RSD and mean RRF values.

Continuing Calibration - The continuing calibrations exhibited acceptable %D and RRF values except the following.

CCAL Date	Compound	%D/RRF	Qualifier	Affected Samples
11/22/08	Acetone	29.6%	J/UJ	18, 20
11/23/08	Bromomethane	28.9%	J/UJ	1-10
	Carbon tetrachloride	25.8%	J/UJ	1-10

Surrogates - All samples exhibited acceptable surrogate recoveries.

MS/MSD - The MS/MSD sample exhibited acceptable %R and RPD values.

Laboratory Control Sample - The LCS samples exhibited acceptable %R values.

Internal Standard (IS) Area Performance - All internal standards met response and retention time (RT) criteria.

Method Blank - The method blanks exhibited the following contamination.

Blank ID	Compound	Conc. ug/kg	Action Level ug/kg	Qualifier	Affected Samples
V5BLK1125	Acetone	5.3	53	U	13, 14, 19, 21
	1,2-Dichlorobenzene	0.72	3.6	U	12
	1,4-Dichlorobenzene	1.0	5.0	U	12
	4-Methyl-2-pentanone	2.3	11.5	U	13
	Styrene	0.50	2.5	U	12
	1,2,4-Trimethylbenzene	0.95	4.75	U	12-17, 21

Trip, Field, Equipment Blank - Field QC results are summarized below.

Blank ID	Compound	Conc. ug/L	Action Level ug/L or ug/kg	Qualifier	Affected Samples
MR08-FB111108	Bromodichloromethane	0.25	2.5	None	All ND
	Chloroform	2.2	22	None	All ND
	Methylene chloride	0.55	5.5	U	4
	Toluene	0.86	4.3	U	2, 4, 5
MR08-TB111208	Methylene chloride	3.3	33	None	All ND
MR08-EB111208	Chlorobenzene	0.10	0.50	None	All ND

Blank ID	Compound	Conc. ug/L	Action Level ug/L or ug/kg	Qualifier	Affected Samples
MR08-EB111208	Ethylbenzene	0.31	1.55	U	8, 9
	Methylene chloride	0.56	5.6	None	All ND
	Toluene	5.3	26.5	U	8, 9
	Xylene (total)	1.5	7.5	U	8, 9
MR08-EB111208-2	Acetone	2.9	29	None	All ND or already qualified
	Bromodichloromethane	0.20	1.0	None	All ND or already qualified
	Chloroform	1.6	8.0	None	All ND or already qualified
	Methylene chloride	0.37	3.7	None	All ND or already qualified
	Toluene	0.64	3.2	None	All ND or already qualified

Field Duplicates - Field duplicate results are summarized below.

Compound	IR78-GW57-08D ug/L	IR78-GW57D-08D ug/L	RPD	Qualifier
Benzene	2.0	2.5	22%	None
Cyclohexane	9.3	12	25%	None
1,1-Dichloroethane	1.5	1.4	7%	None
1,1-Dichloroethene	0.56	0.43	26%	None
cis-1,2-Dichloroethene	4.0	3.9	3%	None
Isopropylbenzene	0.18	0.23	24%	None
Trichloroethene	0.51	0.69	30%	None
Vinyl chloride	4.0	3.7	8%	None
Xylene (total)	0.22	0.27	20%	None

Compound	IR78-GW59-08D ug/L	IR78-GW59D-08D ug/L	RPD	Qualifier
cis,1-2-Dichloroethene	0.76	0.86	12%	None
Vinyl chloride	0.34	0.23	39%	None

Tentatively Identified Compounds (TICs) - TICs were not reported.

Compound Quantitation - EDS sample ID #7 was analyzed at a 50X dilution due to high concentrations of target analytes. No action was required by the reviewer.

FORM 1
VOLATILE ORGANICS ANALYSIS DATA SHEET

CLIENT SAMPLE NO.

IR78-GW56-08D

Lab Name: EMPIRICAL LABS Contract: CH2MHILL

Lab Code: NA Case No.: NA SAS No.: NA SDG No.: LEJEUNE016

Matrix: (soil/water) WATER Lab Sample ID: 0811198-01

Sample wt/vol: 5.000 (g/mL) ML Lab File ID: 1119801

Level: (low/med) LOW Date Sampled: 11/13/08 10:00

% Moisture: not dec. _____ Date Analyzed: 11/23/08 18:22

GC Column: RTX-VRX ID: 0.25 (mm) Dilution Factor: 1.0

Soil Extract Volume:_____(uL) Soil Aliquot Volume: _____(uL)

CONCENTRATION UNITS: (ug/L or ug/Kg) UG/L

CAS NO.	COMPOUND	MDL	RL	CONC	Q
67-64-1	Acetone	0.84	2.5		U
71-43-2	Benzene	0.11	1.0		U
75-27-4	Bromodichloromethane	0.10	1.0		U
75-25-2	Bromoform	0.10	1.0		U
74-83-9	Bromomethane	0.32	1.0		~~U~~ UJ CC
78-93-3	2-Butanone	1.0	3.0		U
75-15-0	Carbon disulfide	0.13	1.0		U
56-23-5	Carbon tetrachloride	0.15	1.0		~~U~~ UJ CC
108-90-7	Chlorobenzene	0.10	1.0		U
75-00-3	Chloroethane	0.18	1.0		U
67-66-3	Chloroform	0.11	1.0		U
74-87-3	Chloromethane	0.29	1.0		U
110-82-7	Cyclohexane	0.20	1.0		U
124-48-1	Dibromochloromethane	0.10	1.0		U
96-12-8	1,2-Dibromo-3-chloropropane	0.11	1.0		U
106-93-4	1,2-Dibromoethane	0.10	1.0		U
95-50-1	1,2-Dichlorobenzene	0.10	1.0		U
541-73-1	1,3-Dichlorobenzene	0.13	1.0		U
106-46-7	1,4-Dichlorobenzene	0.10	1.0		U
75-71-8	Dichlorodifluoromethane	0.22	1.0		U
75-34-3	1,1-Dichloroethane	0.12	1.0		U
107-06-2	1,2-Dichloroethane	0.10	1.0		U
75-35-4	1,1-Dichloroethene	0.15	1.0		U
156-59-2	cis-1,2-Dichloroethene	0.13	1.0	2.2	
156-60-5	trans-1,2-Dichloroethene	0.13	1.0		U
78-87-5	1,2-Dichloropropane	0.10	1.0		U
10061-01-5	cis-1,3-Dichloropropene	0.11	1.0		U
10061-02-6	trans-1,3-Dichloropropene	0.10	1.0		U
100-41-4	Ethylbenzene	0.13	1.0		U
591-78-6	2-Hexanone	0.30	2.0		U
98-82-8	Isopropylbenzene	0.15	1.0		U
79-20-9	Methyl acetate	0.30	1.0		U
75-09-2	Methylene chloride	0.14	1.0		U
108-87-2	Methyl cyclohexane	0.17	1.0		U
1634-04-4	Methyl tert-butyl ether	0.10	1.0		U
108-10-1	4-Methyl-2-pentanone	0.29	2.0		U
100-42-5	Styrene	0.10	1.0		U
79-34-5	1,1,2,2-Tetrachloroethane	0.10	1.0		U
127-18-4	Tetrachloroethene	0.15	1.0		U

MW
1/28/09

FORM 1
VOLATILE ORGANICS ANALYSIS DATA SHEET

CLIENT SAMPLE NO.

IR78-GW56-08D

Lab Name: EMPIRICAL LABS Contract: CH2MHILL

Lab Code: NA Case No.: NA SAS No.: NA SDG No.: LEJEUNE016

Matrix: (soil/water) WATER Lab Sample ID: 0811198-01

Sample wt/vol: 5.000 (g/mL) ML Lab File ID: 1119801

Level: (low/med) LOW Date Sampled: 11/13/08 10:00

% Moisture: not dec. _____ Date Analyzed: 11/23/08 18:22

GC Column: RTX-VRX ID: 0.25 (mm) Dilution Factor: 1.0

Soil Extract Volume:_____(uL) Soil Aliquot Volume: _____(uL)

CONCENTRATION UNITS: (ug/L or ug/Kg) UG/L

CAS NO.	COMPOUND	MDL	RL	CONC	Q
108-88-3	Toluene	0.10	1.0		U
120-82-1	1,2,4-Trichlorobenzene	0.10	1.0	0.14	J
71-55-6	1,1,1-Trichloroethane	0.17	1.0		U
79-00-5	1,1,2-Trichloroethane	0.10	1.0		U
79-01-6	Trichloroethene	0.13	1.0	3.5	
76-13-1	Trichlorotrifluoroethane	0.18	1.0		U
75-69-4	Trichlorofluoromethane	0.17	1.0		U
75-01-4	Vinyl chloride	0.18	1.0		U
1330-20-7	Xylene(total)	0.22	1.0		U

lw
1/28/09

FORM 1
VOLATILE ORGANICS ANALYSIS DATA SHEET

CLIENT SAMPLE NO. 2

IR78-GW57-08D

Lab Name: EMPIRICAL LABS Contract: CH2MHILL

Lab Code: NA Case No.: NA SAS No.: NA SDG No.: LEJEUNE016

Matrix: (soil/water) WATER Lab Sample ID: 0811199-01

Sample wt/vol: 5.000 (g/mL) ML Lab File ID: 1119901

Level: (low/med) LOW Date Sampled: 11/12/08 09:45

% Moisture: not dec. _____ Date Analyzed: 11/23/08 18:52

GC Column: RTX-VRX ID: 0.25 (mm) Dilution Factor: 1.0

Soil Extract Volume:_____(uL) Soil Aliquot Volume: _____(uL)

CONCENTRATION UNITS: (ug/L or ug/Kg) UG/L

CAS NO.	COMPOUND	MDL	RL	CONC	Q
67-64-1	Acetone	0.84	2.5		U
71-43-2	Benzene	0.11	1.0	2.0	
75-27-4	Bromodichloromethane	0.10	1.0		U
75-25-2	Bromoform	0.10	1.0		U
74-83-9	Bromomethane	0.32	1.0		~~U~~ UJ cc
78-93-3	2-Butanone	1.0	3.0		U
75-15-0	Carbon disulfide	0.13	1.0		U
56-23-5	Carbon tetrachloride	0.15	1.0		~~U~~ UJ cc
108-90-7	Chlorobenzene	0.10	1.0		U
75-00-3	Chloroethane	0.18	1.0		U
67-66-3	Chloroform	0.11	1.0		U
74-87-3	Chloromethane	0.29	1.0		U
110-82-7	Cyclohexane	0.20	1.0	9.3	
124-48-1	Dibromochloromethane	0.10	1.0		U
96-12-8	1,2-Dibromo-3-chloropropane	0.11	1.0		U
106-93-4	1,2-Dibromoethane	0.10	1.0		U
95-50-1	1,2-Dichlorobenzene	0.10	1.0		U
541-73-1	1,3-Dichlorobenzene	0.13	1.0		U
106-46-7	1,4-Dichlorobenzene	0.10	1.0		U
75-71-8	Dichlorodifluoromethane	0.22	1.0		U
75-34-3	1,1-Dichloroethane	0.12	1.0	1.5	
107-06-2	1,2-Dichloroethane	0.10	1.0		U
75-35-4	1,1-Dichloroethene	0.15	1.0	0.56	J
156-59-2	cis-1,2-Dichloroethene	0.13	1.0	4.0	
156-60-5	trans-1,2-Dichloroethene	0.13	1.0		U
78-87-5	1,2-Dichloropropane	0.10	1.0		U
10061-01-5	cis-1,3-Dichloropropene	0.11	1.0		U
10061-02-6	trans-1,3-Dichloropropene	0.10	1.0		U
100-41-4	Ethylbenzene	0.13	1.0		U
591-78-6	2-Hexanone	0.30	2.0		U
98-82-8	Isopropylbenzene	0.15	1.0	0.18	J
79-20-9	Methyl acetate	0.30	1.0		U
75-09-2	Methylene chloride	0.14	1.0		U
108-87-2	Methyl cyclohexane	0.17	1.0		U
1634-04-4	Methyl tert-butyl ether	0.10	1.0		U
108-10-1	4-Methyl-2-pentanone	0.29	2.0		U
100-42-5	Styrene	0.10	1.0		U
79-34-5	1,1,2,2-Tetrachloroethane	0.10	1.0		U
127-18-4	Tetrachloroethene	0.15	1.0		U

lw
1/28/09

FORM 1
VOLATILE ORGANICS ANALYSIS DATA SHEET

CLIENT SAMPLE NO. 2

IR78-GW57-08D

Lab Name: EMPIRICAL LABS Contract: CH2MHILL

Lab Code: NA Case No.: NA SAS No.: NA SDG No.: LEJEUNE016

Matrix: (soil/water) WATER Lab Sample ID: 0811199-01

Sample wt/vol: 5.000 (g/mL) ML Lab File ID: 1119901

Level: (low/med) LOW Date Sampled: 11/12/08 09:45

% Moisture: not dec. _____ Date Analyzed: 11/23/08 18:52

GC Column: RTX-VRX ID: 0.25 (mm) Dilution Factor: 1.0

Soil Extract Volume:_____(uL) Soil Aliquot Volume: _____(uL)

CONCENTRATION UNITS: (ug/L or ug/Kg) UG/L

CAS NO.	COMPOUND	MDL	RL	CONC	Q
108-88-3	Toluene	0.10	1.0	1.0U ~~0.14~~	~~J~~
120-82-1	1,2,4-Trichlorobenzene	0.10	1.0		U
71-55-6	1,1,1-Trichloroethane	0.17	1.0		U
79-00-5	1,1,2-Trichloroethane	0.10	1.0		U
79-01-6	Trichloroethene	0.13	1.0	0.51	J
76-13-1	Trichlorotrifluoroethane	0.18	1.0		U
75-69-4	Trichlorofluoromethane	0.17	1.0		U
75-01-4	Vinyl chloride	0.18	1.0	4.0	
1330-20-7	Xylene(total)	0.22	1.0	0.22	J

B

FORM I VOA

AW
11/28/09

FORM 1
VOLATILE ORGANICS ANALYSIS DATA SHEET

CLIENT SAMPLE NO. 3

IR78-GW57D-08D

Lab Name: EMPIRICAL LABS Contract: CH2MHILL

Lab Code: NA Case No.: NA SAS No.: NA SDG No.: LEJEUNE016

Matrix: (soil/water) WATER Lab Sample ID: 0811199-02

Sample wt/vol: 5.000 (g/mL) ML Lab File ID: 1119902

Level: (low/med) LOW Date Sampled: 11/12/08 09:50

% Moisture: not dec. _____ Date Analyzed: 11/23/08 19:22

GC Column: RTX-VRX ID: 0.25 (mm) Dilution Factor: 1.0

Soil Extract Volume:_____(uL) Soil Aliquot Volume: _____(uL)

CONCENTRATION UNITS: (ug/L or ug/Kg) UG/L

CAS NO.	COMPOUND	MDL	RL	CONC	Q
67-64-1	Acetone	0.84	2.5		U
71-43-2	Benzene	0.11	1.0	2.5	
75-27-4	Bromodichloromethane	0.10	1.0		U
75-25-2	Bromoform	0.10	1.0		U
74-83-9	Bromomethane	0.32	1.0		~~U~~ UJ CC
78-93-3	2-Butanone	1.0	3.0		U
75-15-0	Carbon disulfide	0.13	1.0		U
56-23-5	Carbon tetrachloride	0.15	1.0		~~U~~ UJ CC
108-90-7	Chlorobenzene	0.10	1.0		U
75-00-3	Chloroethane	0.18	1.0		U
67-66-3	Chloroform	0.11	1.0		U
74-87-3	Chloromethane	0.29	1.0		U
110-82-7	Cyclohexane	0.20	1.0	12	
124-48-1	Dibromochloromethane	0.10	1.0		U
96-12-8	1,2-Dibromo-3-chloropropane	0.11	1.0		U
106-93-4	1,2-Dibromoethane	0.10	1.0		U
95-50-1	1,2-Dichlorobenzene	0.10	1.0		U
541-73-1	1,3-Dichlorobenzene	0.13	1.0		U
106-46-7	1,4-Dichlorobenzene	0.10	1.0		U
75-71-8	Dichlorodifluoromethane	0.22	1.0		U
75-34-3	1,1-Dichloroethane	0.12	1.0	1.5	
107-06-2	1,2-Dichloroethane	0.10	1.0		U
75-35-4	1,1-Dichloroethene	0.15	1.0	0.43	J
156-59-2	cis-1,2-Dichloroethene	0.13	1.0	3.9	
156-60-5	trans-1,2-Dichloroethene	0.13	1.0		U
78-87-5	1,2-Dichloropropane	0.10	1.0		U
10061-01-5	cis-1,3-Dichloropropene	0.11	1.0		U
10061-02-6	trans-1,3-Dichloropropene	0.10	1.0		U
100-41-4	Ethylbenzene	0.13	1.0		U
591-78-6	2-Hexanone	0.30	2.0		U
98-82-8	Isopropylbenzene	0.15	1.0	0.23	J
79-20-9	Methyl acetate	0.30	1.0		U
75-09-2	Methylene chloride	0.14	1.0		U
108-87-2	Methyl cyclohexane	0.17	1.0		U
1634-04-4	Methyl tert-butyl ether	0.10	1.0		U
108-10-1	4-Methyl-2-pentanone	0.29	2.0		U
100-42-5	Styrene	0.10	1.0		U
79-34-5	1,1,2,2-Tetrachloroethane	0.10	1.0		U
127-18-4	Tetrachloroethene	0.15	1.0		U

RWD 1/28/09

FORM 1
VOLATILE ORGANICS ANALYSIS DATA SHEET

CLIENT SAMPLE NO.

3

IR78-GW57D-08D

Lab Name: EMPIRICAL LABS Contract: CH2MHILL

Lab Code: NA Case No.: NA SAS No.: NA SDG No.: LEJEUNE016

Matrix: (soil/water) WATER Lab Sample ID: 0811199-02

Sample wt/vol: 5.000 (g/mL) ML Lab File ID: 1119902

Level: (low/med) LOW Date Sampled: 11/12/08 09:50

% Moisture: not dec. _____ Date Analyzed: 11/23/08 19:22

GC Column: RTX-VRX ID: 0.25 (mm) Dilution Factor: 1.0

Soil Extract Volume:_____(uL) Soil Aliquot Volume: _____(uL)

CONCENTRATION UNITS: (ug/L or ug/Kg) UG/L

CAS NO.	COMPOUND	MDL	RL	CONC	Q
108-88-3	Toluene	0.10	1.0		U
120-82-1	1,2,4-Trichlorobenzene	0.10	1.0		U
71-55-6	1,1,1-Trichloroethane	0.17	1.0		U
79-00-5	1,1,2-Trichloroethane	0.10	1.0		U
79-01-6	Trichloroethene	0.13	1.0	0.69	J
76-13-1	Trichlorotrifluoroethane	0.18	1.0		U
75-69-4	Trichlorofluoromethane	0.17	1.0		U
75-01-4	Vinyl chloride	0.18	1.0	3.7	
1330-20-7	Xylene(total)	0.22	1.0	0.27	J

lwo
11/28/09

4

FORM 1
VOLATILE ORGANICS ANALYSIS DATA SHEET

CLIENT SAMPLE NO.

IR78-GW01-08D

Lab Name: EMPIRICAL LABS Contract: CH2MHILL

Lab Code: NA Case No.: NA SAS No.: NA SDG No.: LEJEUNE016

Matrix: (soil/water) WATER Lab Sample ID: 0811199-03

Sample wt/vol: 5.000 (g/mL) ML Lab File ID: 1119903

Level: (low/med) LOW Date Sampled: 11/12/08 12:10

% Moisture: not dec. _____ Date Analyzed: 11/23/08 19:52

GC Column: RTX-VRX ID: 0.25 (mm) Dilution Factor: 1.0

Soil Extract Volume:_____(uL) Soil Aliquot Volume: _____(uL)

CONCENTRATION UNITS: (ug/L or ug/Kg) UG/L

CAS NO.	COMPOUND	MDL	RL	CONC	Q
67-64-1	Acetone	0.84	2.5	2.7	
71-43-2	Benzene	0.11	1.0	0.36	J
75-27-4	Bromodichloromethane	0.10	1.0		U
75-25-2	Bromoform	0.10	1.0		U
74-83-9	Bromomethane	0.32	1.0		~~U~~ UJ CCH
78-93-3	2-Butanone	1.0	3.0		U
75-15-0	Carbon disulfide	0.13	1.0		U
56-23-5	Carbon tetrachloride	0.15	1.0		~~U~~ UJ CCH
108-90-7	Chlorobenzene	0.10	1.0		U
75-00-3	Chloroethane	0.18	1.0		U
67-66-3	Chloroform	0.11	1.0		U
74-87-3	Chloromethane	0.29	1.0		U
110-82-7	Cyclohexane	0.20	1.0		U
124-48-1	Dibromochloromethane	0.10	1.0		U
96-12-8	1,2-Dibromo-3-chloropropane	0.11	1.0		U
106-93-4	1,2-Dibromoethane	0.10	1.0		U
95-50-1	1,2-Dichlorobenzene	0.10	1.0		U
541-73-1	1,3-Dichlorobenzene	0.13	1.0		U
106-46-7	1,4-Dichlorobenzene	0.10	1.0		U
75-71-8	Dichlorodifluoromethane	0.22	1.0		U
75-34-3	1,1-Dichloroethane	0.12	1.0		U
107-06-2	1,2-Dichloroethane	0.10	1.0		U
75-35-4	1,1-Dichloroethene	0.15	1.0	0.27	J
156-59-2	cis-1,2-Dichloroethene	0.13	1.0	8.5	
156-60-5	trans-1,2-Dichloroethene	0.13	1.0	0.37	J
78-87-5	1,2-Dichloropropane	0.10	1.0		U
10061-01-5	cis-1,3-Dichloropropene	0.11	1.0		U
10061-02-6	trans-1,3-Dichloropropene	0.10	1.0		U
100-41-4	Ethylbenzene	0.13	1.0		U
591-78-6	2-Hexanone	0.30	2.0		U
98-82-8	Isopropylbenzene	0.15	1.0	0.34	J
79-20-9	Methyl acetate	0.30	1.0		U
75-09-2	Methylene chloride	0.14	1.0	1.0 ~~0.80~~ ~~J~~	U BL
108-87-2	Methyl cyclohexane	0.17	1.0		U
1634-04-4	Methyl tert-butyl ether	0.10	1.0	0.75	J
108-10-1	4-Methyl-2-pentanone	0.29	2.0		U
100-42-5	Styrene	0.10	1.0		U
79-34-5	1,1,2,2-Tetrachloroethane	0.10	1.0		U
127-18-4	Tetrachloroethene	0.15	1.0		U

FORM I VOA

lw 1/28/09

4

FORM 1
VOLATILE ORGANICS ANALYSIS DATA SHEET

CLIENT SAMPLE NO.

IR78-GW01-08D

Lab Name: EMPIRICAL LABS Contract: CH2MHILL

Lab Code: NA Case No.: NA SAS No.: NA SDG No.: LEJEUNE016

Matrix: (soil/water) WATER Lab Sample ID: 0811199-03

Sample wt/vol: 5.000 (g/mL) ML Lab File ID: 1119903

Level: (low/med) LOW Date Sampled: 11/12/08 12:10

% Moisture: not dec. _____ Date Analyzed: 11/23/08 19:52

GC Column: RTX-VRX ID: 0.25 (mm) Dilution Factor: 1.0

Soil Extract Volume:_____(uL) Soil Aliquot Volume: _____(uL)

CONCENTRATION UNITS: (ug/L or ug/Kg) UG/L

CAS NO.	COMPOUND	MDL	RL	CONC	Q
108-88-3	Toluene	0.10	1.0	1.0U ~~0.21~~	~~J~~ BL
120-82-1	1,2,4-Trichlorobenzene	0.10	1.0		U
71-55-6	1,1,1-Trichloroethane	0.17	1.0		U
79-00-5	1,1,2-Trichloroethane	0.10	1.0		U
79-01-6	Trichloroethene	0.13	1.0	5.4	
76-13-1	Trichlorotrifluoroethane	0.18	1.0		U
75-69-4	Trichlorofluoromethane	0.17	1.0		U
75-01-4	Vinyl chloride	0.18	1.0		U
1330-20-7	Xylene(total)	0.22	1.0		U

FORM I VOA

lwo
11/28/09

FORM 1
VOLATILE ORGANICS ANALYSIS DATA SHEET

CLIENT SAMPLE NO. 5

IR78-GW59-08D

Lab Name: EMPIRICAL LABS Contract: CH2MHILL

Lab Code: NA Case No.: NA SAS No.: NA SDG No.: LEJEUNE016

Matrix: (soil/water) WATER Lab Sample ID: 0811199-04

Sample wt/vol: 5.000 (g/mL) ML Lab File ID: 1119904

Level: (low/med) LOW Date Sampled: 11/12/08 14:05

% Moisture: not dec. _____ Date Analyzed: 11/23/08 20:21

GC Column: RTX-VRX ID: 0.25 (mm) Dilution Factor: 1.0

Soil Extract Volume:_____(uL) Soil Aliquot Volume: _____(uL)

CONCENTRATION UNITS: (ug/L or ug/Kg) UG/L

CAS NO.	COMPOUND	MDL	RL	CONC	Q
67-64-1	Acetone	0.84	2.5		U
71-43-2	Benzene	0.11	1.0		U
75-27-4	Bromodichloromethane	0.10	1.0		U
75-25-2	Bromoform	0.10	1.0		U
74-83-9	Bromomethane	0.32	1.0		~~U~~ UJ cc
78-93-3	2-Butanone	1.0	3.0		U
75-15-0	Carbon disulfide	0.13	1.0		U
56-23-5	Carbon tetrachloride	0.15	1.0		~~U~~ UJ cc
108-90-7	Chlorobenzene	0.10	1.0		U
75-00-3	Chloroethane	0.18	1.0		U
67-66-3	Chloroform	0.11	1.0		U
74-87-3	Chloromethane	0.29	1.0		U
110-82-7	Cyclohexane	0.20	1.0		U
124-48-1	Dibromochloromethane	0.10	1.0		U
96-12-8	1,2-Dibromo-3-chloropropane	0.11	1.0		U
106-93-4	1,2-Dibromoethane	0.10	1.0		U
95-50-1	1,2-Dichlorobenzene	0.10	1.0		U
541-73-1	1,3-Dichlorobenzene	0.13	1.0		U
106-46-7	1,4-Dichlorobenzene	0.10	1.0		U
75-71-8	Dichlorodifluoromethane	0.22	1.0		U
75-34-3	1,1-Dichloroethane	0.12	1.0		U
107-06-2	1,2-Dichloroethane	0.10	1.0		U
75-35-4	1,1-Dichloroethene	0.15	1.0		U
156-59-2	cis-1,2-Dichloroethene	0.13	1.0	0.76	J
156-60-5	trans-1,2-Dichloroethene	0.13	1.0		U
78-87-5	1,2-Dichloropropane	0.10	1.0		U
10061-01-5	cis-1,3-Dichloropropene	0.11	1.0		U
10061-02-6	trans-1,3-Dichloropropene	0.10	1.0		U
100-41-4	Ethylbenzene	0.13	1.0		U
591-78-6	2-Hexanone	0.30	2.0		U
98-82-8	Isopropylbenzene	0.15	1.0		U
79-20-9	Methyl acetate	0.30	1.0		U
75-09-2	Methylene chloride	0.14	1.0		U
108-87-2	Methyl cyclohexane	0.17	1.0		U
1634-04-4	Methyl tert-butyl ether	0.10	1.0		U
108-10-1	4-Methyl-2-pentanone	0.29	2.0		U
100-42-5	Styrene	0.10	1.0		U
79-34-5	1,1,2,2-Tetrachloroethane	0.10	1.0		U
127-18-4	Tetrachloroethene	0.15	1.0		U

kw
1/28/09

FORM 1
VOLATILE ORGANICS ANALYSIS DATA SHEET

CLIENT SAMPLE NO.

IR78-GW59-08D

5

Lab Name: EMPIRICAL LABS Contract: CH2MHILL

Lab Code: NA Case No.: NA SAS No.: NA SDG No.: LEJEUNE016

Matrix: (soil/water) WATER Lab Sample ID: 0811199-04

Sample wt/vol: 5.000 (g/mL) ML Lab File ID: 1119904

Level: (low/med) LOW Date Sampled: 11/12/08 14:05

% Moisture: not dec. _____ Date Analyzed: 11/23/08 20:21

GC Column: RTX-VRX ID: 0.25 (mm) Dilution Factor: 1.0

Soil Extract Volume:_____(uL) Soil Aliquot Volume: _____(uL)

CONCENTRATION UNITS: (ug/L or ug/Kg) UG/L

CAS NO.	COMPOUND	MDL	RL	CONC	Q
108-88-3------	Toluene	0.10	1.0	1.04 ~~0.13~~	~~J~~
120-82-1------	1,2,4-Trichlorobenzene	0.10	1.0		U
71-55-6-------	1,1,1-Trichloroethane	0.17	1.0		U
79-00-5-------	1,1,2-Trichloroethane	0.10	1.0		U
79-01-6-------	Trichloroethene	0.13	1.0		U
76-13-1-------	Trichlorotrifluoroethane	0.18	1.0		U
75-69-4-------	Trichlorofluoromethane	0.17	1.0		U
75-01-4-------	Vinyl chloride	0.18	1.0	0.34	J
1330-20-7-----	Xylene(total)	0.22	1.0		U

BC

FORM I VOA

lw
1/28/09

FORM 1
VOLATILE ORGANICS ANALYSIS DATA SHEET

CLIENT SAMPLE NO. 6

IR78-GW59D-08D

Lab Name: EMPIRICAL LABS Contract: CH2MHILL

Lab Code: NA Case No.: NA SAS No.: NA SDG No.: LEJEUNE016

Matrix: (soil/water) WATER Lab Sample ID: 0811199-05

Sample wt/vol: 5.000 (g/mL) ML Lab File ID: 1119905

Level: (low/med) LOW Date Sampled: 11/12/08 14:10

% Moisture: not dec. _____ Date Analyzed: 11/23/08 20:51

GC Column: RTX-VRX ID: 0.25 (mm) Dilution Factor: 1.0

Soil Extract Volume:_____(uL) Soil Aliquot Volume: _____(uL)

CONCENTRATION UNITS: (ug/L or ug/Kg) UG/L

CAS NO.	COMPOUND	MDL	RL	CONC	Q
67-64-1	Acetone	0.84	2.5		U
71-43-2	Benzene	0.11	1.0		U
75-27-4	Bromodichloromethane	0.10	1.0		U
75-25-2	Bromoform	0.10	1.0		U
74-83-9	Bromomethane	0.32	1.0		~~U~~ UJ cc
78-93-3	2-Butanone	1.0	3.0		U
75-15-0	Carbon disulfide	0.13	1.0		U
56-23-5	Carbon tetrachloride	0.15	1.0		~~U~~ UJ cc
108-90-7	Chlorobenzene	0.10	1.0		U
75-00-3	Chloroethane	0.18	1.0		U
67-66-3	Chloroform	0.11	1.0		U
74-87-3	Chloromethane	0.29	1.0		U
110-82-7	Cyclohexane	0.20	1.0		U
124-48-1	Dibromochloromethane	0.10	1.0		U
96-12-8	1,2-Dibromo-3-chloropropane	0.11	1.0		U
106-93-4	1,2-Dibromoethane	0.10	1.0		U
95-50-1	1,2-Dichlorobenzene	0.10	1.0		U
541-73-1	1,3-Dichlorobenzene	0.13	1.0		U
106-46-7	1,4-Dichlorobenzene	0.10	1.0		U
75-71-8	Dichlorodifluoromethane	0.22	1.0		U
75-34-3	1,1-Dichloroethane	0.12	1.0		U
107-06-2	1,2-Dichloroethane	0.10	1.0		U
75-35-4	1,1-Dichloroethene	0.15	1.0		U
156-59-2	cis-1,2-Dichloroethene	0.13	1.0	0.86	J
156-60-5	trans-1,2-Dichloroethene	0.13	1.0		U
78-87-5	1,2-Dichloropropane	0.10	1.0		U
10061-01-5	cis-1,3-Dichloropropene	0.11	1.0		U
10061-02-6	trans-1,3-Dichloropropene	0.10	1.0		U
100-41-4	Ethylbenzene	0.13	1.0		U
591-78-6	2-Hexanone	0.30	2.0		U
98-82-8	Isopropylbenzene	0.15	1.0		U
79-20-9	Methyl acetate	0.30	1.0		U
75-09-2	Methylene chloride	0.14	1.0		U
108-87-2	Methyl cyclohexane	0.17	1.0		U
1634-04-4	Methyl tert-butyl ether	0.10	1.0		U
108-10-1	4-Methyl-2-pentanone	0.29	2.0		U
100-42-5	Styrene	0.10	1.0		U
79-34-5	1,1,2,2-Tetrachloroethane	0.10	1.0		U
127-18-4	Tetrachloroethene	0.15	1.0		U

lw 11/28/09

FORM 1
VOLATILE ORGANICS ANALYSIS DATA SHEET

CLIENT SAMPLE NO. 6

IR78-GW59D-08D

Lab Name: EMPIRICAL LABS Contract: CH2MHILL

Lab Code: NA Case No.: NA SAS No.: NA SDG No.: LEJEUNE016

Matrix: (soil/water) WATER Lab Sample ID: 0811199-05

Sample wt/vol: 5.000 (g/mL) ML Lab File ID: 1119905

Level: (low/med) LOW Date Sampled: 11/12/08 14:10

% Moisture: not dec. _____ Date Analyzed: 11/23/08 20:51

GC Column: RTX-VRX ID: 0.25 (mm) Dilution Factor: 1.0

Soil Extract Volume:_____(uL) Soil Aliquot Volume: _____(uL)

CONCENTRATION UNITS: (ug/L or ug/Kg) UG/L

CAS NO.	COMPOUND	MDL	RL	CONC	Q
108-88-3	Toluene	0.10	1.0		U
120-82-1	1,2,4-Trichlorobenzene	0.10	1.0		U
71-55-6	1,1,1-Trichloroethane	0.17	1.0		U
79-00-5	1,1,2-Trichloroethane	0.10	1.0		U
79-01-6	Trichloroethene	0.13	1.0		U
76-13-1	Trichlorotrifluoroethane	0.18	1.0		U
75-69-4	Trichlorofluoromethane	0.17	1.0		U
75-01-4	Vinyl chloride	0.18	1.0	0.23	J
1330-20-7	Xylene(total)	0.22	1.0		U

RW
1/28/09

FORM 1
VOLATILE ORGANICS ANALYSIS DATA SHEET

CLIENT SAMPLE NO. 7

USTHPFF-MW15-08D

Lab Name: EMPIRICAL LABS Contract: CH2MHILL

Lab Code: NA Case No.: NA SAS No.: NA SDG No.: LEJEUNE016

Matrix: (soil/water) WATER Lab Sample ID: 0811200-01

Sample wt/vol: 5.000 (g/mL) ML Lab File ID: 1120001D

Level: (low/med) LOW Date Sampled: 11/12/08 11:00

% Moisture: not dec. _____ Date Analyzed: 11/23/08 21:22

GC Column: RTX-VRX ID: 0.25 (mm) Dilution Factor: 50.0

Soil Extract Volume:_____(uL) Soil Aliquot Volume: _____(uL)

CONCENTRATION UNITS: (ug/L or ug/Kg) UG/L

CAS NO.	COMPOUND	MDL	RL	CONC	Q
67-64-1	Acetone	42	120		UD
71-43-2	Benzene	5.5	50	280	D
75-27-4	Bromodichloromethane	5.0	50		UD
75-25-2	Bromoform	5.0	50		UD
74-83-9	Bromomethane	16	50		UD UJ CC
78-93-3	2-Butanone	50	150		UD
75-15-0	Carbon disulfide	6.5	50		UD
56-23-5	Carbon tetrachloride	7.5	50		UD UJ CC
108-90-7	Chlorobenzene	5.0	50		UD
75-00-3	Chloroethane	9.0	50		UD
67-66-3	Chloroform	5.5	50		UD
74-87-3	Chloromethane	14	50		UD
110-82-7	Cyclohexane	10	50	160	D
124-48-1	Dibromochloromethane	5.0	50		UD
96-12-8	1,2-Dibromo-3-chloropropane	5.5	50		UD
106-93-4	1,2-Dibromoethane	5.0	50		UD
95-50-1	1,2-Dichlorobenzene	5.0	50		UD
541-73-1	1,3-Dichlorobenzene	6.5	50		UD
106-46-7	1,4-Dichlorobenzene	5.0	50		UD
75-71-8	Dichlorodifluoromethane	11	50		UD
75-34-3	1,1-Dichloroethane	6.0	50		UD
107-06-2	1,2-Dichloroethane	5.0	50		UD
75-35-4	1,1-Dichloroethene	7.5	50		UD
156-59-2	cis-1,2-Dichloroethene	6.5	50		UD
156-60-5	trans-1,2-Dichloroethene	6.5	50		UD
78-87-5	1,2-Dichloropropane	5.0	50		UD
10061-01-5	cis-1,3-Dichloropropene	5.5	50		UD
10061-02-6	trans-1,3-Dichloropropene	5.0	50		UD
100-41-4	Ethylbenzene	6.5	50	1600	D
591-78-6	2-Hexanone	15	100		UD
98-82-8	Isopropylbenzene	7.5	50	130	D
79-20-9	Methyl acetate	15	50		UD
75-09-2	Methylene chloride	7.0	50		UD
108-87-2	Methyl cyclohexane	8.5	50	110	D
1634-04-4	Methyl tert-butyl ether	5.0	50		UD
108-10-1	4-Methyl-2-pentanone	14	100		UD
100-42-5	Styrene	5.0	50		UD
79-34-5	1,1,2,2-Tetrachloroethane	5.0	50		UD
127-18-4	Tetrachloroethene	7.5	50		UD

FORM I VOA

hw
11/28/09

FORM 1
VOLATILE ORGANICS ANALYSIS DATA SHEET

CLIENT SAMPLE NO. 7

USTHPFF-
MW15-08D

Lab Name: EMPIRICAL LABS Contract: CH2MHILL

Lab Code: NA Case No.: NA SAS No.: NA SDG No.: LEJEUNE016

Matrix: (soil/water) WATER Lab Sample ID: 0811200-01

Sample wt/vol: 5.000 (g/mL) ML Lab File ID: 1120001D

Level: (low/med) LOW Date Sampled: 11/12/08 11:00

% Moisture: not dec. _____ Date Analyzed: 11/23/08 21:22

GC Column: RTX-VRX ID: 0.25 (mm) Dilution Factor: 50.0

Soil Extract Volume:_____(uL) Soil Aliquot Volume: _____(uL)

CONCENTRATION UNITS: (ug/L or ug/Kg) UG/L

CAS NO.	COMPOUND	MDL	RL	CONC	Q
108-88-3	Toluene	5.0	50	2900	D
120-82-1	1,2,4-Trichlorobenzene	5.0	50		UD
71-55-6	1,1,1-Trichloroethane	8.5	50		UD
79-00-5	1,1,2-Trichloroethane	5.0	50		UD
79-01-6	Trichloroethene	6.5	50		UD
76-13-1	Trichlorotrifluoroethane	9.0	50		UD
75-69-4	Trichlorofluoromethane	8.5	50		UD
75-01-4	Vinyl chloride	9.0	50		UD
1330-20-7	Xylene(total)	11	50	8000	D

FORM I VOA

RW
11/28/09

FORM 1
VOLATILE ORGANICS ANALYSIS DATA SHEET

CLIENT SAMPLE NO. 8

USTHPFF-MW09-08D

Lab Name: EMPIRICAL LABS Contract: CH2MHILL

Lab Code: NA Case No.: NA SAS No.: NA SDG No.: LEJEUNE016

Matrix: (soil/water) WATER Lab Sample ID: 0811200-02

Sample wt/vol: 5.000 (g/mL) ML Lab File ID: 1120002

Level: (low/med) LOW Date Sampled: 11/12/08 14:30

% Moisture: not dec. _____ Date Analyzed: 11/23/08 21:52

GC Column: RTX-VRX ID: 0.25 (mm) Dilution Factor: 1.0

Soil Extract Volume:_____(uL) Soil Aliquot Volume: _____(uL)

CONCENTRATION UNITS: (ug/L or ug/Kg) UG/L

CAS NO.	COMPOUND	MDL	RL	CONC	Q
67-64-1	Acetone	0.84	2.5		U
71-43-2	Benzene	0.11	1.0		U
75-27-4	Bromodichloromethane	0.10	1.0		U
75-25-2	Bromoform	0.10	1.0		U
74-83-9	Bromomethane	0.32	1.0		~~U~~ UJ cc
78-93-3	2-Butanone	1.0	3.0		U
75-15-0	Carbon disulfide	0.13	1.0		U
56-23-5	Carbon tetrachloride	0.15	1.0		~~U~~ UJ cc
108-90-7	Chlorobenzene	0.10	1.0		U
75-00-3	Chloroethane	0.18	1.0		U
67-66-3	Chloroform	0.11	1.0		U
74-87-3	Chloromethane	0.29	1.0		U
110-82-7	Cyclohexane	0.20	1.0		U
124-48-1	Dibromochloromethane	0.10	1.0		U
96-12-8	1,2-Dibromo-3-chloropropane	0.11	1.0		U
106-93-4	1,2-Dibromoethane	0.10	1.0		U
95-50-1	1,2-Dichlorobenzene	0.10	1.0		U
541-73-1	1,3-Dichlorobenzene	0.13	1.0		U
106-46-7	1,4-Dichlorobenzene	0.10	1.0		U
75-71-8	Dichlorodifluoromethane	0.22	1.0		U
75-34-3	1,1-Dichloroethane	0.12	1.0		U
107-06-2	1,2-Dichloroethane	0.10	1.0		U
75-35-4	1,1-Dichloroethene	0.15	1.0		U
156-59-2	cis-1,2-Dichloroethene	0.13	1.0		U
156-60-5	trans-1,2-Dichloroethene	0.13	1.0		U
78-87-5	1,2-Dichloropropane	0.10	1.0		U
10061-01-5	cis-1,3-Dichloropropene	0.11	1.0		U
10061-02-6	trans-1,3-Dichloropropene	0.10	1.0		U
100-41-4	Ethylbenzene	0.13	1.0	1.04 ~~0.40~~ ~~J~~	B
591-78-6	2-Hexanone	0.30	2.0		U
98-82-8	Isopropylbenzene	0.15	1.0		U
79-20-9	Methyl acetate	0.30	1.0		U
75-09-2	Methylene chloride	0.14	1.0		U
108-87-2	Methyl cyclohexane	0.17	1.0		U
1634-04-4	Methyl tert-butyl ether	0.10	1.0		U
108-10-1	4-Methyl-2-pentanone	0.29	2.0		U
100-42-5	Styrene	0.10	1.0		U
79-34-5	1,1,2,2-Tetrachloroethane	0.10	1.0		U
127-18-4	Tetrachloroethene	0.15	1.0		U

KW
11/28/09

FORM 1
VOLATILE ORGANICS ANALYSIS DATA SHEET

CLIENT SAMPLE NO. 8

USTHPFF-MW09-08D

Lab Name: EMPIRICAL LABS Contract: CH2MHILL

Lab Code: NA Case No.: NA SAS No.: NA SDG No.: LEJEUNE016

Matrix: (soil/water) WATER Lab Sample ID: 0811200-02

Sample wt/vol: 5.000 (g/mL) ML Lab File ID: 1120002

Level: (low/med) LOW Date Sampled: 11/12/08 14:30

% Moisture: not dec. _____ Date Analyzed: 11/23/08 21:52

GC Column: RTX-VRX ID: 0.25 (mm) Dilution Factor: 1.0

Soil Extract Volume:_____(uL) Soil Aliquot Volume: _____(uL)

CONCENTRATION UNITS: (ug/L or ug/Kg) UG/L

CAS NO.	COMPOUND	MDL	RL	CONC	Q	
108-88-3------	Toluene	0.10	1.0	1.04 ~~0.42~~	~~J~~	B
120-82-1------	1,2,4-Trichlorobenzene	0.10	1.0		U	
71-55-6-------	1,1,1-Trichloroethane	0.17	1.0		U	
79-00-5-------	1,1,2-Trichloroethane	0.10	1.0		U	
79-01-6-------	Trichloroethene	0.13	1.0		U	
76-13-1-------	Trichlorotrifluoroethane	0.18	1.0		U	
75-69-4-------	Trichlorofluoromethane	0.17	1.0		U	
75-01-4-------	Vinyl chloride	0.18	1.0		U	
1330-20-7-----	Xylene(total)	0.22	1.0	2.4	U	B

hw
1/28/09

FORM 1
VOLATILE ORGANICS ANALYSIS DATA SHEET

CLIENT SAMPLE NO. 9

IR78-GW16-08D

Lab Name: EMPIRICAL LABS Contract: CH2MHILL

Lab Code: NA Case No.: NA SAS No.: NA SDG No.: LEJEUNE016

Matrix: (soil/water) WATER Lab Sample ID: 0811200-03

Sample wt/vol: 5.000 (g/mL) ML Lab File ID: 1120003

Level: (low/med) LOW Date Sampled: 11/12/08 16:15

% Moisture: not dec. _____ Date Analyzed: 11/23/08 22:21

GC Column: RTX-VRX ID: 0.25 (mm) Dilution Factor: 1.0

Soil Extract Volume:_____(uL) Soil Aliquot Volume: _____(uL)

CONCENTRATION UNITS: (ug/L or ug/Kg) UG/L

CAS NO.	COMPOUND	MDL	RL	CONC	Q	
67-64-1	Acetone	0.84	2.5		U	
71-43-2	Benzene	0.11	1.0		U	
75-27-4	Bromodichloromethane	0.10	1.0		U	
75-25-2	Bromoform	0.10	1.0		U	
74-83-9	Bromomethane	0.32	1.0		~~U~~ UJ	cc
78-93-3	2-Butanone	1.0	3.0		U	
75-15-0	Carbon disulfide	0.13	1.0		U	
56-23-5	Carbon tetrachloride	0.15	1.0		~~U~~ UJ	cc
108-90-7	Chlorobenzene	0.10	1.0		U	
75-00-3	Chloroethane	0.18	1.0		U	
67-66-3	Chloroform	0.11	1.0		U	
74-87-3	Chloromethane	0.29	1.0		U	
110-82-7	Cyclohexane	0.20	1.0		U	
124-48-1	Dibromochloromethane	0.10	1.0		U	
96-12-8	1,2-Dibromo-3-chloropropane	0.11	1.0		U	
106-93-4	1,2-Dibromoethane	0.10	1.0		U	
95-50-1	1,2-Dichlorobenzene	0.10	1.0		U	
541-73-1	1,3-Dichlorobenzene	0.13	1.0		U	
106-46-7	1,4-Dichlorobenzene	0.10	1.0		U	
75-71-8	Dichlorodifluoromethane	0.22	1.0		U	
75-34-3	1,1-Dichloroethane	0.12	1.0		U	
107-06-2	1,2-Dichloroethane	0.10	1.0		U	
75-35-4	1,1-Dichloroethene	0.15	1.0		U	
156-59-2	cis-1,2-Dichloroethene	0.13	1.0		U	
156-60-5	trans-1,2-Dichloroethene	0.13	1.0		U	
78-87-5	1,2-Dichloropropane	0.10	1.0		U	
10061-01-5	cis-1,3-Dichloropropene	0.11	1.0		U	
10061-02-6	trans-1,3-Dichloropropene	0.10	1.0		U	
100-41-4	Ethylbenzene	0.13	1.0	1.0U ~~0.19~~ ~~J~~		B
591-78-6	2-Hexanone	0.30	2.0		U	
98-82-8	Isopropylbenzene	0.15	1.0		U	
79-20-9	Methyl acetate	0.30	1.0		U	
75-09-2	Methylene chloride	0.14	1.0		U	
108-87-2	Methyl cyclohexane	0.17	1.0		U	
1634-04-4	Methyl tert-butyl ether	0.10	1.0		U	
108-10-1	4-Methyl-2-pentanone	0.29	2.0		U	
100-42-5	Styrene	0.10	1.0		U	
79-34-5	1,1,2,2-Tetrachloroethane	0.10	1.0		U	
127-18-4	Tetrachloroethene	0.15	1.0		U	

LW
11/28/09

9

FORM 1
VOLATILE ORGANICS ANALYSIS DATA SHEET

CLIENT SAMPLE NO.

IR78-GW16-08D

Lab Name: EMPIRICAL LABS Contract: CH2MHILL

Lab Code: NA Case No.: NA SAS No.: NA SDG No.: LEJEUNE016

Matrix: (soil/water) WATER Lab Sample ID: 0811200-03

Sample wt/vol: 5.000 (g/mL) ML Lab File ID: 1120003

Level: (low/med) LOW Date Sampled: 11/12/08 16:15

% Moisture: not dec. _____ Date Analyzed: 11/23/08 22:21

GC Column: RTX-VRX ID: 0.25 (mm) Dilution Factor: 1.0

Soil Extract Volume:_____(uL) Soil Aliquot Volume: _____(uL)

CONCENTRATION UNITS: (ug/L or ug/Kg) UG/L

CAS NO.	COMPOUND	MDL	RL	CONC	Q	
108-88-3	Toluene	0.10	1.0	1.0U ~~0.28~~	J	B
120-82-1	1,2,4-Trichlorobenzene	0.10	1.0		U	
71-55-6	1,1,1-Trichloroethane	0.17	1.0		U	
79-00-5	1,1,2-Trichloroethane	0.10	1.0		U	
79-01-6	Trichloroethene	0.13	1.0		U	
76-13-1	Trichlorotrifluoroethane	0.18	1.0		U	
75-69-4	Trichlorofluoromethane	0.17	1.0		U	
75-01-4	Vinyl chloride	0.18	1.0		U	
1330-20-7	Xylene(total)	0.22	1.0	1.2	U	B

lw
11/28/09

FORM 1
VOLATILE ORGANICS ANALYSIS DATA SHEET

CLIENT SAMPLE NO. 10

MR08-EB1
11208-08D

Lab Name: EMPIRICAL LABS Contract: CH2MHILL

Lab Code: NA Case No.: NA SAS No.: NA SDG No.: LEJEUNE016

Matrix: (soil/water) WATER Lab Sample ID: 0811200-04

Sample wt/vol: 5.000 (g/mL) ML Lab File ID: 1120004

Level: (low/med) LOW Date Sampled: 11/12/08 17:00

% Moisture: not dec. _____ Date Analyzed: 11/23/08 22:51

GC Column: RTX-VRX ID: 0.25 (mm) Dilution Factor: 1.0

Soil Extract Volume:_____(uL) Soil Aliquot Volume: _____(uL)

CONCENTRATION UNITS: (ug/L or ug/Kg) UG/L

CAS NO.	COMPOUND	MDL	RL	CONC	Q
67-64-1	Acetone	0.84	2.5		U
71-43-2	Benzene	0.11	1.0		U
75-27-4	Bromodichloromethane	0.10	1.0		U
75-25-2	Bromoform	0.10	1.0		U
74-83-9	Bromomethane	0.32	1.0		~~U~~ UJ a
78-93-3	2-Butanone	1.0	3.0		U
75-15-0	Carbon disulfide	0.13	1.0		U
56-23-5	Carbon tetrachloride	0.15	1.0		~~U~~ UJ a
108-90-7	Chlorobenzene	0.10	1.0	0.10	J
75-00-3	Chloroethane	0.18	1.0		U
67-66-3	Chloroform	0.11	1.0		U
74-87-3	Chloromethane	0.29	1.0		U
110-82-7	Cyclohexane	0.20	1.0		U
124-48-1	Dibromochloromethane	0.10	1.0		U
96-12-8	1,2-Dibromo-3-chloropropane	0.11	1.0		U
106-93-4	1,2-Dibromoethane	0.10	1.0		U
95-50-1	1,2-Dichlorobenzene	0.10	1.0		U
541-73-1	1,3-Dichlorobenzene	0.13	1.0		U
106-46-7	1,4-Dichlorobenzene	0.10	1.0		U
75-71-8	Dichlorodifluoromethane	0.22	1.0		U
75-34-3	1,1-Dichloroethane	0.12	1.0		U
107-06-2	1,2-Dichloroethane	0.10	1.0		U
75-35-4	1,1-Dichloroethene	0.15	1.0		U
156-59-2	cis-1,2-Dichloroethene	0.13	1.0		U
156-60-5	trans-1,2-Dichloroethene	0.13	1.0		U
78-87-5	1,2-Dichloropropane	0.10	1.0		U
10061-01-5	cis-1,3-Dichloropropene	0.11	1.0		U
10061-02-6	trans-1,3-Dichloropropene	0.10	1.0		U
100-41-4	Ethylbenzene	0.13	1.0	0.31	J
591-78-6	2-Hexanone	0.30	2.0		U
98-82-8	Isopropylbenzene	0.15	1.0		U
79-20-9	Methyl acetate	0.30	1.0		U
75-09-2	Methylene chloride	0.14	1.0	0.56	J
108-87-2	Methyl cyclohexane	0.17	1.0		U
1634-04-4	Methyl tert-butyl ether	0.10	1.0		U
108-10-1	4-Methyl-2-pentanone	0.29	2.0		U
100-42-5	Styrene	0.10	1.0		U
79-34-5	1,1,2,2-Tetrachloroethane	0.10	1.0		U
127-18-4	Tetrachloroethene	0.15	1.0		U

DW
1/28/09

FORM 1
VOLATILE ORGANICS ANALYSIS DATA SHEET

CLIENT SAMPLE NO. 10

MR08-EB1
11208-08D

Lab Name: EMPIRICAL LABS Contract: CH2MHILL

Lab Code: NA Case No.: NA SAS No.: NA SDG No.: LEJEUNE016

Matrix: (soil/water) WATER Lab Sample ID: 0811200-04

Sample wt/vol: 5.000 (g/mL) ML Lab File ID: 1120004

Level: (low/med) LOW Date Sampled: 11/12/08 17:00

% Moisture: not dec. _____ Date Analyzed: 11/23/08 22:51

GC Column: RTX-VRX ID: 0.25 (mm) Dilution Factor: 1.0

Soil Extract Volume:_____(uL) Soil Aliquot Volume: _____(uL)

CONCENTRATION UNITS: (ug/L or ug/Kg) UG/L

CAS NO.	COMPOUND	MDL	RL	CONC	Q
108-88-3	Toluene	0.10	1.0	5.3	
120-82-1	1,2,4-Trichlorobenzene	0.10	1.0		U
71-55-6	1,1,1-Trichloroethane	0.17	1.0		U
79-00-5	1,1,2-Trichloroethane	0.10	1.0		U
79-01-6	Trichloroethene	0.13	1.0		U
76-13-1	Trichlorotrifluoroethane	0.18	1.0		U
75-69-4	Trichlorofluoromethane	0.17	1.0		U
75-01-4	Vinyl chloride	0.18	1.0		U
1330-20-7	Xylene(total)	0.22	1.0	1.5	

lw
11/28/09

FORM 1
VOLATILE ORGANICS ANALYSIS DATA SHEET

CLIENT SAMPLE NO. 11

IR78-GW36-08D

Lab Name: EMPIRICAL LABS Contract: CH2MHILL

Lab Code: NA Case No.: NA SAS No.: NA SDG No.: LEJEUNE016

Matrix: (soil/water) WATER Lab Sample ID: 0811200-05

Sample wt/vol: 5.000 (g/mL) ML Lab File ID: 1120005

Level: (low/med) LOW Date Sampled: 11/13/08 09:45

% Moisture: not dec. _____ Date Analyzed: 11/23/08 23:21

GC Column: RTX-VRX ID: 0.25 (mm) Dilution Factor: 1.0

Soil Extract Volume:_____(uL) Soil Aliquot Volume: _____(uL)

CONCENTRATION UNITS: (ug/L or ug/Kg) UG/L

CAS NO.	COMPOUND	MDL	RL	CONC	Q
67-64-1	Acetone	0.84	2.5		U
71-43-2	Benzene	0.11	1.0		U
75-27-4	Bromodichloromethane	0.10	1.0		U
75-25-2	Bromoform	0.10	1.0		U
74-83-9	Bromomethane	0.32	1.0		U
78-93-3	2-Butanone	1.0	3.0		U
75-15-0	Carbon disulfide	0.13	1.0		U
56-23-5	Carbon tetrachloride	0.15	1.0		U
108-90-7	Chlorobenzene	0.10	1.0		U
75-00-3	Chloroethane	0.18	1.0		U
67-66-3	Chloroform	0.11	1.0		U
74-87-3	Chloromethane	0.29	1.0		U
110-82-7	Cyclohexane	0.20	1.0		U
124-48-1	Dibromochloromethane	0.10	1.0		U
96-12-8	1,2-Dibromo-3-chloropropane	0.11	1.0		U
106-93-4	1,2-Dibromoethane	0.10	1.0		U
95-50-1	1,2-Dichlorobenzene	0.10	1.0		U
541-73-1	1,3-Dichlorobenzene	0.13	1.0		U
106-46-7	1,4-Dichlorobenzene	0.10	1.0		U
75-71-8	Dichlorodifluoromethane	0.22	1.0		U
75-34-3	1,1-Dichloroethane	0.12	1.0		U
107-06-2	1,2-Dichloroethane	0.10	1.0		U
75-35-4	1,1-Dichloroethene	0.15	1.0		U
156-59-2	cis-1,2-Dichloroethene	0.13	1.0		U
156-60-5	trans-1,2-Dichloroethene	0.13	1.0		U
78-87-5	1,2-Dichloropropane	0.10	1.0		U
10061-01-5	cis-1,3-Dichloropropene	0.11	1.0		U
10061-02-6	trans-1,3-Dichloropropene	0.10	1.0		U
100-41-4	Ethylbenzene	0.13	1.0		U
591-78-6	2-Hexanone	0.30	2.0		U
98-82-8	Isopropylbenzene	0.15	1.0		U
79-20-9	Methyl acetate	0.30	1.0		U
75-09-2	Methylene chloride	0.14	1.0		U
108-87-2	Methyl cyclohexane	0.17	1.0		U
1634-04-4	Methyl tert-butyl ether	0.10	1.0		U
108-10-1	4-Methyl-2-pentanone	0.29	2.0		U
100-42-5	Styrene	0.10	1.0		U
79-34-5	1,1,2,2-Tetrachloroethane	0.10	1.0		U
127-18-4	Tetrachloroethene	0.15	1.0		U

bw
11/28/09

FORM 1
VOLATILE ORGANICS ANALYSIS DATA SHEET

CLIENT SAMPLE NO. 11

IR78-GW36-08D

Lab Name: EMPIRICAL LABS Contract: CH2MHILL

Lab Code: NA Case No.: NA SAS No.: NA SDG No.: LEJEUNE016

Matrix: (soil/water) WATER Lab Sample ID: 0811200-05

Sample wt/vol: 5.000 (g/mL) ML Lab File ID: 1120005

Level: (low/med) LOW Date Sampled: 11/13/08 09:45

% Moisture: not dec. _____ Date Analyzed: 11/23/08 23:21

GC Column: RTX-VRX ID: 0.25 (mm) Dilution Factor: 1.0

Soil Extract Volume:_____(uL) Soil Aliquot Volume: _____(uL)

CONCENTRATION UNITS: (ug/L or ug/Kg) UG/L

CAS NO.	COMPOUND	MDL	RL	CONC	Q
108-88-3	Toluene	0.10	1.0		U
120-82-1	1,2,4-Trichlorobenzene	0.10	1.0		U
71-55-6	1,1,1-Trichloroethane	0.17	1.0		U
79-00-5	1,1,2-Trichloroethane	0.10	1.0		U
79-01-6	Trichloroethene	0.13	1.0		U
76-13-1	Trichlorotrifluoroethane	0.18	1.0		U
75-69-4	Trichlorofluoromethane	0.17	1.0		U
75-01-4	Vinyl chloride	0.18	1.0		U
1330-20-7	Xylene(total)	0.22	1.0		U

cw
11/28/09

FORM 1
VOLATILE ORGANICS ANALYSIS DATA SHEET

CLIENT SAMPLE NO. 12

MR08-SS382-08D

Lab Name: EMPIRICAL LABS Contract: CH2MHILL

Lab Code: NA Case No.: NA SAS No.: NA SDG No.: LEJEUNE016

Matrix: (soil/water) SOIL Lab Sample ID: 0811201-01

Sample wt/vol: 5.7 (g/mL) G Lab File ID: 1120101A

Level: (low/med) LOW Date Sampled: 11/12/08 08:45

% Moisture: not dec. 13 Date Analyzed: 11/25/08 22:19

GC Column: RTX-VRX ID: 0.25 (mm) Dilution Factor: 1.0

Soil Extract Volume:_____(uL) Soil Aliquot Volume: _____(uL)

CONCENTRATION UNITS: (ug/L or ug/Kg) UG/KG

CAS NO.	COMPOUND	MDL	RL	CONC	Q	
67-64-1	Acetone	2.0	10	72	~~B~~	
71-43-2	Benzene	0.48	10		U	
75-27-4	Bromodichloromethane	0.30	10		U	
75-25-2	Bromoform	1.0	10		U	
74-83-9	Bromomethane	0.73	10		U	
78-93-3	2-Butanone	1.4	10		U	
75-15-0	Carbon disulfide	1.3	10		U	
56-23-5	Carbon tetrachloride	0.90	10		U	
108-90-7	Chlorobenzene	0.35	10		U	
75-00-3	Chloroethane	1.1	10		U	
67-66-3	Chloroform	0.56	10		U	
74-87-3	Chloromethane	0.53	10		U	
110-82-7	Cyclohexane	0.55	10		U	
124-48-1	Dibromochloromethane	0.35	10		U	
96-12-8	1,2-Dibromo-3-chloropropane	1.2	5.1		U	
106-93-4	1,2-Dibromoethane	0.44	10		U	
95-50-1	1,2-Dichlorobenzene	0.38	10	10U ~~0.54~~	~~JB~~	B
541-73-1	1,3-Dichlorobenzene	0.86	10		U	
106-46-7	1,4-Dichlorobenzene	0.56	10	10U ~~0.63~~	~~JB~~	B
75-71-8	Dichlorodifluoromethane	1.1	10		U	
75-34-3	1,1-Dichloroethane	0.55	10		U	
107-06-2	1,2-Dichloroethane	0.47	10		U	
75-35-4	1,1-Dichloroethene	1.2	10		U	
156-59-2	cis-1,2-Dichloroethene	1.2	10		U	
156-60-5	trans-1,2-Dichloroethene	1.1	10		U	
78-87-5	1,2-Dichloropropane	0.47	10		U	
10061-01-5	cis-1,3-Dichloropropene	0.51	10		U	
10061-02-6	trans-1,3-Dichloropropene	0.33	10		U	
100-41-4	Ethylbenzene	0.76	10		U	
591-78-6	2-Hexanone	2.3	10		U	
98-82-8	Isopropylbenzene	0.90	10		U	
79-20-9	Methyl acetate	1.6	10	15		
75-09-2	Methylene chloride	0.63	10		U	
108-87-2	Methyl cyclohexane	0.30	10		U	
1634-04-4	Methyl tert-butyl ether	0.33	10		U	
108-10-1	4-Methyl-2-pentanone	0.59	10		U	
100-42-5	Styrene	0.36	10	10U ~~0.37~~	~~JB~~	B
79-34-5	1,1,2,2-Tetrachloroethane	0.44	10		U	
127-18-4	Tetrachloroethene	0.99	10		U	

LW
11/28/09

12

FORM 1
VOLATILE ORGANICS ANALYSIS DATA SHEET

CLIENT SAMPLE NO.

MR08-SS382-08D

Lab Name: EMPIRICAL LABS Contract: CH2MHILL

Lab Code: NA Case No.: NA SAS No.: NA SDG No.: LEJEUNE016

Matrix: (soil/water) SOIL Lab Sample ID: 0811201-01

Sample wt/vol: 5.7 (g/mL) G Lab File ID: 1120101A

Level: (low/med) LOW Date Sampled: 11/12/08 08:45

% Moisture: not dec. 13 Date Analyzed: 11/25/08 22:19

GC Column: RTX-VRX ID: 0.25 (mm) Dilution Factor: 1.0

Soil Extract Volume:_____(uL) Soil Aliquot Volume: _____(uL)

CONCENTRATION UNITS: (ug/L or ug/Kg) UG/KG

CAS NO.	COMPOUND	MDL	RL	CONC	Q
108-88-3	Toluene	0.88	10		U
120-82-1	1,2,4-Trichlorobenzene	0.18	10	10U 0.~~66~~ ~~JB~~	B
71-55-6	1,1,1-Trichloroethane	0.92	10		U
79-00-5	1,1,2-Trichloroethane	0.36	10		U
79-01-6	Trichloroethene	0.87	10		U
76-13-1	Trichlorotrifluoroethane	0.56	10		U
75-69-4	Trichlorofluoromethane	0.97	10		U
75-01-4	Vinyl chloride	1.1	10		U
1330-20-7	Xylene(total)	0.71	10		U

MW
11/28/09

FORM 1
VOLATILE ORGANICS ANALYSIS DATA SHEET

CLIENT SAMPLE NO. 13

MR08-SS383-08D

Lab Name: EMPIRICAL LABS Contract: CH2MHILL

Lab Code: NA Case No.: NA SAS No.: NA SDG No.: LEJEUNE016

Matrix: (soil/water) SOIL Lab Sample ID: 0811201-02

Sample wt/vol: 5.5 (g/mL) G Lab File ID: 1120102A

Level: (low/med) LOW Date Sampled: 11/12/08 09:10

% Moisture: not dec. 9 Date Analyzed: 11/25/08 22:50

GC Column: RTX-VRX ID: 0.25 (mm) Dilution Factor: 1.0

Soil Extract Volume:_____(uL) Soil Aliquot Volume: _____(uL)

CONCENTRATION UNITS: (ug/L or ug/Kg) UG/KG

CAS NO.	COMPOUND	MDL	RL	CONC	Q
67-64-1	Acetone	2.0	10	18	~~B~~ U BL
71-43-2	Benzene	0.47	10		U
75-27-4	Bromodichloromethane	0.30	10		U
75-25-2	Bromoform	1.00	10		U
74-83-9	Bromomethane	0.72	10		U
78-93-3	2-Butanone	1.4	10		U
75-15-0	Carbon disulfide	1.3	10		U
56-23-5	Carbon tetrachloride	0.88	10		U
108-90-7	Chlorobenzene	0.34	10		U
75-00-3	Chloroethane	1.1	10		U
67-66-3	Chloroform	0.55	10		U
74-87-3	Chloromethane	0.52	10		U
110-82-7	Cyclohexane	0.54	10		U
124-48-1	Dibromochloromethane	0.34	10		U
96-12-8	1,2-Dibromo-3-chloropropane	1.2	5.0		U
106-93-4	1,2-Dibromoethane	0.43	10		U
95-50-1	1,2-Dichlorobenzene	0.37	10		U
541-73-1	1,3-Dichlorobenzene	0.84	10		U
106-46-7	1,4-Dichlorobenzene	0.55	10		U
75-71-8	Dichlorodifluoromethane	1.1	10		U
75-34-3	1,1-Dichloroethane	0.54	10		U
107-06-2	1,2-Dichloroethane	0.46	10		U
75-35-4	1,1-Dichloroethene	1.2	10		U
156-59-2	cis-1,2-Dichloroethene	1.2	10		U
156-60-5	trans-1,2-Dichloroethene	1.1	10		U
78-87-5	1,2-Dichloropropane	0.46	10		U
10061-01-5	cis-1,3-Dichloropropene	0.50	10		U
10061-02-6	trans-1,3-Dichloropropene	0.32	10		U
100-41-4	Ethylbenzene	0.75	10		U
591-78-6	2-Hexanone	2.3	10		U
98-82-8	Isopropylbenzene	0.88	10		U
79-20-9	Methyl acetate	1.6	10	2.9	J
75-09-2	Methylene chloride	0.62	10		U
108-87-2	Methyl cyclohexane	0.30	10		U
1634-04-4	Methyl tert-butyl ether	0.32	10		U
108-10-1	4-Methyl-2-pentanone	0.58	10	10U ~~0.74~~	~~JB~~ BL
100-42-5	Styrene	0.35	10		U
79-34-5	1,1,2,2-Tetrachloroethane	0.43	10		U
127-18-4	Tetrachloroethene	0.97	10		U

AW 11/28/09

FORM 1
VOLATILE ORGANICS ANALYSIS DATA SHEET

CLIENT SAMPLE NO. 13

MR08-SS383-08D

Lab Name: EMPIRICAL LABS Contract: CH2MHILL

Lab Code: NA Case No.: NA SAS No.: NA SDG No.: LEJEUNE016

Matrix: (soil/water) SOIL Lab Sample ID: 0811201-02

Sample wt/vol: 5.5 (g/mL) G Lab File ID: 1120102A

Level: (low/med) LOW Date Sampled: 11/12/08 09:10

% Moisture: not dec. 9 Date Analyzed: 11/25/08 22:50

GC Column: RTX-VRX ID: 0.25 (mm) Dilution Factor: 1.0

Soil Extract Volume:_____(uL) Soil Aliquot Volume: _____(uL)

CONCENTRATION UNITS: (ug/L or ug/Kg) UG/KG

CAS NO.	COMPOUND	MDL	RL	CONC	Q
108-88-3	Toluene	0.86	10		U
120-82-1	1,2,4-Trichlorobenzene	0.18	10	10u 0.45 ~~JB~~	Bu
71-55-6	1,1,1-Trichloroethane	0.90	10		U
79-00-5	1,1,2-Trichloroethane	0.35	10		U
79-01-6	Trichloroethene	0.85	10		U
76-13-1	Trichlorotrifluoroethane	0.55	10		U
75-69-4	Trichlorofluoromethane	0.95	10		U
75-01-4	Vinyl chloride	1.1	10		U
1330-20-7	Xylene(total)	0.70	10		U

FORM I VOA

CW
11/28/09

FORM 1
VOLATILE ORGANICS ANALYSIS DATA SHEET

CLIENT SAMPLE NO. 14

MR08-SS384-08D

Lab Name: EMPIRICAL LABS Contract: CH2MHILL

Lab Code: NA Case No.: NA SAS No.: NA SDG No.: LEJEUNE016

Matrix: (soil/water) SOIL Lab Sample ID: 0811201-03

Sample wt/vol: 5.9 (g/mL) G Lab File ID: 1120103A

Level: (low/med) LOW Date Sampled: 11/12/08 09:45

% Moisture: not dec. 10 Date Analyzed: 11/25/08 23:21

GC Column: RTX-VRX ID: 0.25 (mm) Dilution Factor: 1.0

Soil Extract Volume:_____(uL) Soil Aliquot Volume: _____(uL)

CONCENTRATION UNITS: (ug/L or ug/Kg) UG/KG

CAS NO.	COMPOUND	MDL	RL	CONC	Q
67-64-1	Acetone	1.9	9.5	17	~~B~~ U BL
71-43-2	Benzene	0.45	9.5		U
75-27-4	Bromodichloromethane	0.28	9.5		U
75-25-2	Bromoform	0.95	9.5		U
74-83-9	Bromomethane	0.68	9.5		U
78-93-3	2-Butanone	1.3	9.5		U
75-15-0	Carbon disulfide	1.2	9.5	2.1	J
56-23-5	Carbon tetrachloride	0.84	9.5		U
108-90-7	Chlorobenzene	0.32	9.5		U
75-00-3	Chloroethane	1.0	9.5		U
67-66-3	Chloroform	0.52	9.5		U
74-87-3	Chloromethane	0.49	9.5		U
110-82-7	Cyclohexane	0.51	9.5		U
124-48-1	Dibromochloromethane	0.32	9.5		U
96-12-8	1,2-Dibromo-3-chloropropane	1.1	4.7		U
106-93-4	1,2-Dibromoethane	0.41	9.5		U
95-50-1	1,2-Dichlorobenzene	0.35	9.5		U
541-73-1	1,3-Dichlorobenzene	0.80	9.5		U
106-46-7	1,4-Dichlorobenzene	0.52	9.5		U
75-71-8	Dichlorodifluoromethane	1.0	9.5		U
75-34-3	1,1-Dichloroethane	0.51	9.5		U
107-06-2	1,2-Dichloroethane	0.44	9.5		U
75-35-4	1,1-Dichloroethene	1.1	9.5		U
156-59-2	cis-1,2-Dichloroethene	1.1	9.5		U
156-60-5	trans-1,2-Dichloroethene	1.0	9.5		U
78-87-5	1,2-Dichloropropane	0.44	9.5		U
10061-01-5	cis-1,3-Dichloropropene	0.47	9.5		U
10061-02-6	trans-1,3-Dichloropropene	0.30	9.5		U
100-41-4	Ethylbenzene	0.71	9.5		U
591-78-6	2-Hexanone	2.2	9.5		U
98-82-8	Isopropylbenzene	0.84	9.5		U
79-20-9	Methyl acetate	1.5	9.5		U
75-09-2	Methylene chloride	0.59	9.5		U
108-87-2	Methyl cyclohexane	0.28	9.5		U
1634-04-4	Methyl tert-butyl ether	0.30	9.5		U
108-10-1	4-Methyl-2-pentanone	0.55	9.5		U
100-42-5	Styrene	0.33	9.5		U
79-34-5	1,1,2,2-Tetrachloroethane	0.41	9.5		U
127-18-4	Tetrachloroethene	0.92	9.5		U

lw 11/28/09

FORM 1
VOLATILE ORGANICS ANALYSIS DATA SHEET

CLIENT SAMPLE NO.

MR08-SS384-08D

Lab Name: EMPIRICAL LABS Contract: CH2MHILL

Lab Code: NA Case No.: NA SAS No.: NA SDG No.: LEJEUNE016

Matrix: (soil/water) SOIL Lab Sample ID: 0811201-03

Sample wt/vol: 5.9 (g/mL) G Lab File ID: 1120103A

Level: (low/med) LOW Date Sampled: 11/12/08 09:45

% Moisture: not dec. 10 Date Analyzed: 11/25/08 23:21

GC Column: RTX-VRX ID: 0.25 (mm) Dilution Factor: 1.0

Soil Extract Volume:_____(uL) Soil Aliquot Volume: _____(uL)

CONCENTRATION UNITS: (ug/L or ug/Kg) UG/KG

CAS NO.	COMPOUND	MDL	RL	CONC	Q
108-88-3	Toluene	0.82	9.5		U
120-82-1	1,2,4-Trichlorobenzene	0.17	9.5	9.5 ~~0.30~~	~~JB~~ BL
71-55-6	1,1,1-Trichloroethane	0.85	9.5		U
79-00-5	1,1,2-Trichloroethane	0.33	9.5		U
79-01-6	Trichloroethene	0.81	9.5		U
76-13-1	Trichlorotrifluoroethane	0.52	9.5		U
75-69-4	Trichlorofluoromethane	0.90	9.5		U
75-01-4	Vinyl chloride	1.0	9.5		U
1330-20-7	Xylene(total)	0.66	9.5		U

AW
11/28/09

FORM 1
VOLATILE ORGANICS ANALYSIS DATA SHEET

CLIENT SAMPLE NO.

MR08-SS385-08D

Lab Name: EMPIRICAL LABS Contract: CH2MHILL

Lab Code: NA Case No.: NA SAS No.: NA SDG No.: LEJEUNE016

Matrix: (soil/water) SOIL Lab Sample ID: 0811201-04

Sample wt/vol: 5.2 (g/mL) G Lab File ID: 1120104A

Level: (low/med) LOW Date Sampled: 11/12/08 11:15

% Moisture: not dec. 6 Date Analyzed: 11/25/08 23:52

GC Column: RTX-VRX ID: 0.25 (mm) Dilution Factor: 1.0

Soil Extract Volume:_____(uL) Soil Aliquot Volume: _____(uL)

CONCENTRATION UNITS: (ug/L or ug/Kg) UG/KG

CAS NO.	COMPOUND	MDL	RL	CONC	Q
67-64-1	Acetone	2.0	10	170	~~B~~
71-43-2	Benzene	0.48	10		U
75-27-4	Bromodichloromethane	0.31	10		U
75-25-2	Bromoform	1.0	10		U
74-83-9	Bromomethane	0.74	10		U
78-93-3	2-Butanone	1.4	10	12	
75-15-0	Carbon disulfide	1.3	10		U
56-23-5	Carbon tetrachloride	0.90	10		U
108-90-7	Chlorobenzene	0.35	10		U
75-00-3	Chloroethane	1.1	10		U
67-66-3	Chloroform	0.56	10		U
74-87-3	Chloromethane	0.53	10	0.60	J
110-82-7	Cyclohexane	0.55	10		U
124-48-1	Dibromochloromethane	0.35	10		U
96-12-8	1,2-Dibromo-3-chloropropane	1.2	5.1		U
106-93-4	1,2-Dibromoethane	0.44	10		U
95-50-1	1,2-Dichlorobenzene	0.38	10		U
541-73-1	1,3-Dichlorobenzene	0.86	10		U
106-46-7	1,4-Dichlorobenzene	0.56	10		U
75-71-8	Dichlorodifluoromethane	1.1	10		U
75-34-3	1,1-Dichloroethane	0.55	10		U
107-06-2	1,2-Dichloroethane	0.47	10		U
75-35-4	1,1-Dichloroethene	1.2	10		U
156-59-2	cis-1,2-Dichloroethene	1.2	10		U
156-60-5	trans-1,2-Dichloroethene	1.1	10		U
78-87-5	1,2-Dichloropropane	0.47	10		U
10061-01-5	cis-1,3-Dichloropropene	0.51	10		U
10061-02-6	trans-1,3-Dichloropropene	0.33	10		U
100-41-4	Ethylbenzene	0.77	10		U
591-78-6	2-Hexanone	2.3	10		U
98-82-8	Isopropylbenzene	0.90	10		U
79-20-9	Methyl acetate	1.6	10		U
75-09-2	Methylene chloride	0.63	10		U
108-87-2	Methyl cyclohexane	0.31	10		U
1634-04-4	Methyl tert-butyl ether	0.33	10		U
108-10-1	4-Methyl-2-pentanone	0.59	10		U
100-42-5	Styrene	0.36	10		U
79-34-5	1,1,2,2-Tetrachloroethane	0.44	10		U
127-18-4	Tetrachloroethene	0.99	10		U

FORM I VOA

ew
1/28/09

FORM 1
VOLATILE ORGANICS ANALYSIS DATA SHEET

CLIENT SAMPLE NO. 15

MR08-SS385-08D

Lab Name: EMPIRICAL LABS Contract: CH2MHILL

Lab Code: NA Case No.: NA SAS No.: NA SDG No.: LEJEUNE016

Matrix: (soil/water) SOIL Lab Sample ID: 0811201-04

Sample wt/vol: 5.2 (g/mL) G Lab File ID: 1120104A

Level: (low/med) LOW Date Sampled: 11/12/08 11:15

% Moisture: not dec. 6 Date Analyzed: 11/25/08 23:52

GC Column: RTX-VRX ID: 0.25 (mm) Dilution Factor: 1.0

Soil Extract Volume:_____(uL) Soil Aliquot Volume: _____(uL)

CONCENTRATION UNITS: (ug/L or ug/Kg) UG/KG

CAS NO.	COMPOUND	MDL	RL	CONC	Q
108-88-3	Toluene	0.88	10		U
120-82-1	1,2,4-Trichlorobenzene	0.18	10	10u ~~0.29~~ ~~JB~~	B
71-55-6	1,1,1-Trichloroethane	0.92	10		U
79-00-5	1,1,2-Trichloroethane	0.36	10		U
79-01-6	Trichloroethene	0.87	10		U
76-13-1	Trichlorotrifluoroethane	0.56	10		U
75-69-4	Trichlorofluoromethane	0.97	10		U
75-01-4	Vinyl chloride	1.1	10		U
1330-20-7	Xylene(total)	0.72	10		U

FORM I VOA

lw
11/28/09

FORM 1
VOLATILE ORGANICS ANALYSIS DATA SHEET

CLIENT SAMPLE NO. 16

MR08-SS386-08D

Lab Name: EMPIRICAL LABS Contract: CH2MHILL

Lab Code: NA Case No.: NA SAS No.: NA SDG No.: LEJEUNE016

Matrix: (soil/water) SOIL Lab Sample ID: 0811201-05

Sample wt/vol: 5.4 (g/mL) G Lab File ID: 1120105A

Level: (low/med) LOW Date Sampled: 11/12/08 11:00

% Moisture: not dec. 12 Date Analyzed: 11/26/08 00:23

GC Column: RTX-VRX ID: 0.25 (mm) Dilution Factor: 1.0

Soil Extract Volume:_____(uL) Soil Aliquot Volume: _____(uL)

CONCENTRATION UNITS: (ug/L or ug/Kg) UG/KG

CAS NO.	COMPOUND	MDL	RL	CONC	Q
67-64-1	Acetone	2.1	10	83	~~B~~
71-43-2	Benzene	0.49	10		U
75-27-4	Bromodichloromethane	0.31	10		U
75-25-2	Bromoform	1.0	10		U
74-83-9	Bromomethane	0.75	10		U
78-93-3	2-Butanone	1.4	10	9.4	J
75-15-0	Carbon disulfide	1.4	10		U
56-23-5	Carbon tetrachloride	0.92	10		U
108-90-7	Chlorobenzene	0.35	10		U
75-00-3	Chloroethane	1.1	10		U
67-66-3	Chloroform	0.57	10		U
74-87-3	Chloromethane	0.54	10		U
110-82-7	Cyclohexane	0.56	10		U
124-48-1	Dibromochloromethane	0.35	10		U
96-12-8	1,2-Dibromo-3-chloropropane	1.2	5.2		U
106-93-4	1,2-Dibromoethane	0.45	10		U
95-50-1	1,2-Dichlorobenzene	0.38	10		U
541-73-1	1,3-Dichlorobenzene	0.87	10		U
106-46-7	1,4-Dichlorobenzene	0.57	10		U
75-71-8	Dichlorodifluoromethane	1.1	10		U
75-34-3	1,1-Dichloroethane	0.56	10		U
107-06-2	1,2-Dichloroethane	0.48	10		U
75-35-4	1,1-Dichloroethene	1.2	10		U
156-59-2	cis-1,2-Dichloroethene	1.2	10		U
156-60-5	trans-1,2-Dichloroethene	1.1	10		U
78-87-5	1,2-Dichloropropane	0.48	10		U
10061-01-5	cis-1,3-Dichloropropene	0.52	10		U
10061-02-6	trans-1,3-Dichloropropene	0.33	10		U
100-41-4	Ethylbenzene	0.78	10		U
591-78-6	2-Hexanone	2.4	10		U
98-82-8	Isopropylbenzene	0.92	10		U
79-20-9	Methyl acetate	1.7	10	12	
75-09-2	Methylene chloride	0.64	10		U
108-87-2	Methyl cyclohexane	0.31	10		U
1634-04-4	Methyl tert-butyl ether	0.33	10		U
108-10-1	4-Methyl-2-pentanone	0.60	10		U
100-42-5	Styrene	0.36	10		U
79-34-5	1,1,2,2-Tetrachloroethane	0.45	10		U
127-18-4	Tetrachloroethene	1.0	10		U

DW 1/7/09

FORM 1
VOLATILE ORGANICS ANALYSIS DATA SHEET

CLIENT SAMPLE NO. 16

MR08-SS386-08D

Lab Name: EMPIRICAL LABS Contract: CH2MHILL

Lab Code: NA Case No.: NA SAS No.: NA SDG No.: LEJEUNE016

Matrix: (soil/water) SOIL Lab Sample ID: 0811201-05

Sample wt/vol: 5.4 (g/mL) G Lab File ID: 1120105A

Level: (low/med) LOW Date Sampled: 11/12/08 11:00

% Moisture: not dec. 12 Date Analyzed: 11/26/08 00:23

GC Column: RTX-VRX ID: 0.25 (mm) Dilution Factor: 1.0

Soil Extract Volume:_____(uL) Soil Aliquot Volume: _____(uL)

CONCENTRATION UNITS: (ug/L or ug/Kg) UG/KG

CAS NO.	COMPOUND	MDL	RL	CONC	Q
108-88-3	Toluene	0.89	10		U
120-82-1	1,2,4-Trichlorobenzene	0.19	10	10U ~~0.25~~ ~~JB~~	B
71-55-6	1,1,1-Trichloroethane	0.94	10		U
79-00-5	1,1,2-Trichloroethane	0.36	10		U
79-01-6	Trichloroethene	0.88	10		U
76-13-1	Trichlorotrifluoroethane	0.57	10		U
75-69-4	Trichlorofluoromethane	0.99	10		U
75-01-4	Vinyl chloride	1.1	10		U
1330-20-7	Xylene(total)	0.73	10		U

lw 11/28/09

FORM 1
VOLATILE ORGANICS ANALYSIS DATA SHEET

CLIENT SAMPLE NO. 17

MR08-SS387-08D

Lab Name: EMPIRICAL LABS Contract: CH2MHILL

Lab Code: NA Case No.: NA SAS No.: NA SDG No.: LEJEUNE016

Matrix: (soil/water) SOIL Lab Sample ID: 0811201-06

Sample wt/vol: 5.5 (g/mL) G Lab File ID: 1120106A

Level: (low/med) LOW Date Sampled: 11/12/08 10:40

% Moisture: not dec. 14 Date Analyzed: 11/26/08 00:53

GC Column: RTX-VRX ID: 0.25 (mm) Dilution Factor: 1.0

Soil Extract Volume:_____(uL) Soil Aliquot Volume: _____(uL)

CONCENTRATION UNITS: (ug/L or ug/Kg) UG/KG

CAS NO.	COMPOUND	MDL	RL	CONC	Q
67-64-1	Acetone	2.1	10	99	~~B~~
71-43-2	Benzene	0.50	10		U
75-27-4	Bromodichloromethane	0.32	10		U
75-25-2	Bromoform	1.0	10		U
74-83-9	Bromomethane	0.76	10		U
78-93-3	2-Butanone	1.5	10	13	
75-15-0	Carbon disulfide	1.4	10		U
56-23-5	Carbon tetrachloride	0.93	10		U
108-90-7	Chlorobenzene	0.36	10		U
75-00-3	Chloroethane	1.2	10		U
67-66-3	Chloroform	0.58	10		U
74-87-3	Chloromethane	0.55	10	0.57	J
110-82-7	Cyclohexane	0.57	10		U
124-48-1	Dibromochloromethane	0.36	10		U
96-12-8	1,2-Dibromo-3-chloropropane	1.3	5.3		U
106-93-4	1,2-Dibromoethane	0.46	10		U
95-50-1	1,2-Dichlorobenzene	0.39	10		U
541-73-1	1,3-Dichlorobenzene	0.89	10		U
106-46-7	1,4-Dichlorobenzene	0.58	10		U
75-71-8	Dichlorodifluoromethane	1.2	10		U
75-34-3	1,1-Dichloroethane	0.57	10		U
107-06-2	1,2-Dichloroethane	0.49	10		U
75-35-4	1,1-Dichloroethene	1.3	10		U
156-59-2	cis-1,2-Dichloroethene	1.3	10		U
156-60-5	trans-1,2-Dichloroethene	1.2	10		U
78-87-5	1,2-Dichloropropane	0.49	10		U
10061-01-5	cis-1,3-Dichloropropene	0.53	10		U
10061-02-6	trans-1,3-Dichloropropene	0.34	10		U
100-41-4	Ethylbenzene	0.79	10		U
591-78-6	2-Hexanone	2.4	10		U
98-82-8	Isopropylbenzene	0.93	10		U
79-20-9	Methyl acetate	1.7	10	26	
75-09-2	Methylene chloride	0.66	10		U
108-87-2	Methyl cyclohexane	0.32	10		U
1634-04-4	Methyl tert-butyl ether	0.34	10		U
108-10-1	4-Methyl-2-pentanone	0.61	10		U
100-42-5	Styrene	0.37	10		U
79-34-5	1,1,2,2-Tetrachloroethane	0.46	10		U
127-18-4	Tetrachloroethene	1.0	10		U

RW 11/28/09

FORM 1
VOLATILE ORGANICS ANALYSIS DATA SHEET

CLIENT SAMPLE NO. 17

MR08-SS387-08D

Lab Name: EMPIRICAL LABS Contract: CH2MHILL

Lab Code: NA Case No.: NA SAS No.: NA SDG No.: LEJEUNE016

Matrix: (soil/water) SOIL Lab Sample ID: 0811201-06

Sample wt/vol: 5.5 (g/mL) G Lab File ID: 1120106A

Level: (low/med) LOW Date Sampled: 11/12/08 10:40

% Moisture: not dec. 14 Date Analyzed: 11/26/08 00:53

GC Column: RTX-VRX ID: 0.25 (mm) Dilution Factor: 1.0

Soil Extract Volume:_____(uL) Soil Aliquot Volume: _____(uL)

CONCENTRATION UNITS: (ug/L or ug/Kg) UG/KG

CAS NO.	COMPOUND	MDL	RL	CONC	Q
108-88-3	Toluene	0.91	10		U
120-82-1	1,2,4-Trichlorobenzene	0.19	10	10U ~~0.32~~	~~JB~~ B
71-55-6	1,1,1-Trichloroethane	0.95	10		U
79-00-5	1,1,2-Trichloroethane	0.37	10		U
79-01-6	Trichloroethene	0.90	10		U
76-13-1	Trichlorotrifluoroethane	0.58	10		U
75-69-4	Trichlorofluoromethane	1.0	10		U
75-01-4	Vinyl chloride	1.2	10		U
1330-20-7	Xylene(total)	0.74	10		U

lew
11/28/09

FORM 1
VOLATILE ORGANICS ANALYSIS DATA SHEET

CLIENT SAMPLE NO. 18

MR08-EB1
11208-02

Lab Name: EMPIRICAL LABS Contract: CH2MHILL

Lab Code: NA Case No.: NA SAS No.: NA SDG No.: LEJEUNE016

Matrix: (soil/water) WATER Lab Sample ID: 0811201-07

Sample wt/vol: 5.000 (g/mL) ML Lab File ID: 1120107

Level: (low/med) LOW Date Sampled: 11/12/08 13:45

% Moisture: not dec. _____ Date Analyzed: 11/22/08 17:34

GC Column: DB-VRX ID: 0.25 (mm) Dilution Factor: 1.0

Soil Extract Volume:_____(uL) Soil Aliquot Volume: _____(uL)

CONCENTRATION UNITS: (ug/L or ug/Kg) UG/L

CAS NO.	COMPOUND	MDL	RL	CONC	Q
67-64-1	Acetone	1.8	2.5	2.9	J
71-43-2	Benzene	0.12	1.0		U
75-27-4	Bromodichloromethane	0.18	1.0	0.20	J
75-25-2	Bromoform	0.10	1.0		U
74-83-9	Bromomethane	0.27	1.0		U
78-93-3	2-Butanone	1.1	3.0		U
75-15-0	Carbon disulfide	0.17	1.0		U
56-23-5	Carbon tetrachloride	0.22	1.0		U
108-90-7	Chlorobenzene	0.10	1.0		U
75-00-3	Chloroethane	0.25	1.0		U
67-66-3	Chloroform	0.17	1.0	1.6	
74-87-3	Chloromethane	0.36	1.0		U
110-82-7	Cyclohexane	0.14	1.0		U
124-48-1	Dibromochloromethane	0.10	1.0		U
96-12-8	1,2-Dibromo-3-chloropropane	0.23	1.0		U
106-93-4	1,2-Dibromoethane	0.14	1.0		U
95-50-1	1,2-Dichlorobenzene	0.16	1.0		U
541-73-1	1,3-Dichlorobenzene	0.13	1.0		U
106-46-7	1,4-Dichlorobenzene	0.10	1.0		U
75-71-8	Dichlorodifluoromethane	0.20	1.0		U
75-34-3	1,1-Dichloroethane	0.19	1.0		U
107-06-2	1,2-Dichloroethane	0.22	1.0		U
75-35-4	1,1-Dichloroethene	0.24	1.0		U
156-59-2	cis-1,2-Dichloroethene	0.16	1.0		U
156-60-5	trans-1,2-Dichloroethene	0.21	1.0		U
78-87-5	1,2-Dichloropropane	0.17	1.0		U
10061-01-5	cis-1,3-Dichloropropene	0.12	1.0		U
10061-02-6	trans-1,3-Dichloropropene	0.17	1.0		U
100-41-4	Ethylbenzene	0.10	1.0		U
591-78-6	2-Hexanone	0.42	1.0		U
98-82-8	Isopropylbenzene	0.11	1.0		U
79-20-9	Methyl acetate	0.51	1.0		U
75-09-2	Methylene chloride	0.27	1.0	0.37	J
108-87-2	Methyl cyclohexane	0.12	1.0		U
1634-04-4	Methyl tert-butyl ether	0.10	1.0		U
108-10-1	4-Methyl-2-pentanone	0.50	1.0		U
100-42-5	Styrene	0.11	1.0		U
79-34-5	1,1,2,2-Tetrachloroethane	0.23	1.0		U
127-18-4	Tetrachloroethene	0.16	1.0		U

cc

FORM I VOA

JW 112809

FORM 1
VOLATILE ORGANICS ANALYSIS DATA SHEET

CLIENT SAMPLE NO. 18

MR08-EB1
11208-02

Lab Name: EMPIRICAL LABS Contract: CH2MHILL

Lab Code: NA Case No.: NA SAS No.: NA SDG No.: LEJEUNE016

Matrix: (soil/water) WATER Lab Sample ID: 0811201-07

Sample wt/vol: 5.000 (g/mL) ML Lab File ID: 1120107

Level: (low/med) LOW Date Sampled: 11/12/08 13:45

% Moisture: not dec. _____ Date Analyzed: 11/22/08 17:34

GC Column: DB-VRX ID: 0.25 (mm) Dilution Factor: 1.0

Soil Extract Volume:_____(uL) Soil Aliquot Volume: _____(uL)

CONCENTRATION UNITS: (ug/L or ug/Kg) UG/L

CAS NO.	COMPOUND	MDL	RL	CONC	Q
108-88-3	Toluene	0.14	1.0	0.64	J
120-82-1	1,2,4-Trichlorobenzene	0.18	1.0		U
71-55-6	1,1,1-Trichloroethane	0.20	1.0		U
79-00-5	1,1,2-Trichloroethane	0.14	1.0		U
79-01-6	Trichloroethene	0.50	1.0		U
76-13-1	Trichlorotrifluoroethane	0.12	1.0		U
75-69-4	Trichlorofluoromethane	0.22	1.0		U
75-01-4	Vinyl chloride	0.19	1.0		U
1330-20-7	Xylene(total)	0.21	1.0		U

fcw
1/28/09

FORM 1
VOLATILE ORGANICS ANALYSIS DATA SHEET

CLIENT SAMPLE NO. 19

MR08-IS381-08D

Lab Name: EMPIRICAL LABS Contract: CH2MHILL

Lab Code: NA Case No.: NA SAS No.: NA SDG No.: LEJEUNE016

Matrix: (soil/water) SOIL Lab Sample ID: 0811201-08

Sample wt/vol: 4.9 (g/mL) G Lab File ID: 1120108A

Level: (low/med) LOW Date Sampled: 11/12/08 13:30

% Moisture: not dec. 3 Date Analyzed: 11/26/08 01:24

GC Column: RTX-VRX ID: 0.25 (mm) Dilution Factor: 1.0

Soil Extract Volume:_____(uL) Soil Aliquot Volume: _____(uL)

CONCENTRATION UNITS: (ug/L or ug/Kg) UG/KG

CAS NO.	COMPOUND	MDL	RL	CONC	Q
67-64-1	Acetone	2.1	10	13	~~B~~ u Bl
71-43-2	Benzene	0.49	10		U
75-27-4	Bromodichloromethane	0.31	10		U
75-25-2	Bromoform	1.0	10		U
74-83-9	Bromomethane	0.75	10		U
78-93-3	2-Butanone	1.5	10		U
75-15-0	Carbon disulfide	1.4	10		U
56-23-5	Carbon tetrachloride	0.92	10		U
108-90-7	Chlorobenzene	0.36	10		U
75-00-3	Chloroethane	1.2	10		U
67-66-3	Chloroform	0.58	10		U
74-87-3	Chloromethane	0.54	10		U
110-82-7	Cyclohexane	0.56	10		U
124-48-1	Dibromochloromethane	0.36	10		U
96-12-8	1,2-Dibromo-3-chloropropane	1.2	5.2		U
106-93-4	1,2-Dibromoethane	0.45	10		U
95-50-1	1,2-Dichlorobenzene	0.39	10		U
541-73-1	1,3-Dichlorobenzene	0.88	10		U
106-46-7	1,4-Dichlorobenzene	0.58	10		U
75-71-8	Dichlorodifluoromethane	1.2	10		U
75-34-3	1,1-Dichloroethane	0.56	10		U
107-06-2	1,2-Dichloroethane	0.48	10		U
75-35-4	1,1-Dichloroethene	1.2	10		U
156-59-2	cis-1,2-Dichloroethene	1.2	10		U
156-60-5	trans-1,2-Dichloroethene	1.2	10		U
78-87-5	1,2-Dichloropropane	0.48	10		U
10061-01-5	cis-1,3-Dichloropropene	0.52	10		U
10061-02-6	trans-1,3-Dichloropropene	0.33	10		U
100-41-4	Ethylbenzene	0.78	10		U
591-78-6	2-Hexanone	2.4	10		U
98-82-8	Isopropylbenzene	0.92	10		U
79-20-9	Methyl acetate	1.7	10		U
75-09-2	Methylene chloride	0.65	10		U
108-87-2	Methyl cyclohexane	0.31	10		U
1634-04-4	Methyl tert-butyl ether	0.33	10		U
108-10-1	4-Methyl-2-pentanone	0.61	10		U
100-42-5	Styrene	0.37	10		U
79-34-5	1,1,2,2-Tetrachloroethane	0.45	10		U
127-18-4	Tetrachloroethene	1.0	10		U

lw
12/8/09

FORM 1
VOLATILE ORGANICS ANALYSIS DATA SHEET

CLIENT SAMPLE NO. 19

MR08-IS381-08D

Lab Name: EMPIRICAL LABS Contract: CH2MHILL

Lab Code: NA Case No.: NA SAS No.: NA SDG No.: LEJEUNE016

Matrix: (soil/water) SOIL Lab Sample ID: 0811201-08

Sample wt/vol: 4.9 (g/mL) G Lab File ID: 1120108A

Level: (low/med) LOW Date Sampled: 11/12/08 13:30

% Moisture: not dec. 3 Date Analyzed: 11/26/08 01:24

GC Column: RTX-VRX ID: 0.25 (mm) Dilution Factor: 1.0

Soil Extract Volume:_____(uL) Soil Aliquot Volume: _____(uL)

CONCENTRATION UNITS: (ug/L or ug/Kg) UG/KG

CAS NO.	COMPOUND	MDL	RL	CONC	Q
108-88-3	Toluene	0.90	10		U
120-82-1	1,2,4-Trichlorobenzene	0.19	10		U
71-55-6	1,1,1-Trichloroethane	0.94	10		U
79-00-5	1,1,2-Trichloroethane	0.37	10		U
79-01-6	Trichloroethene	0.89	10		U
76-13-1	Trichlorotrifluoroethane	0.58	10		U
75-69-4	Trichlorofluoromethane	0.99	10		U
75-01-4	Vinyl chloride	1.2	10		U
1330-20-7	Xylene(total)	0.73	10		U

lw
11/28/09

FORM 1
VOLATILE ORGANICS ANALYSIS DATA SHEET

CLIENT SAMPLE NO. 20

MR08-TB111208

Lab Name: EMPIRICAL LABS Contract: CH2MHILL

Lab Code: NA Case No.: NA SAS No.: NA SDG No.: LEJEUNE016

Matrix: (soil/water) WATER Lab Sample ID: 0811201-09

Sample wt/vol: 5.000 (g/mL) ML Lab File ID: 1120109

Level: (low/med) LOW Date Sampled: 11/12/08 08:00

% Moisture: not dec. _____ Date Analyzed: 11/22/08 18:03

GC Column: DB-VRX ID: 0.25 (mm) Dilution Factor: 1.0

Soil Extract Volume:_____(uL) Soil Aliquot Volume: _____(uL)

CONCENTRATION UNITS: (ug/L or ug/Kg) UG/L

CAS NO.	COMPOUND	MDL	RL	CONC	Q
67-64-1	Acetone	1.8	2.5		~~U~~ UJ CQ
71-43-2	Benzene	0.12	1.0		U
75-27-4	Bromodichloromethane	0.18	1.0		U
75-25-2	Bromoform	0.10	1.0		U
74-83-9	Bromomethane	0.27	1.0		U
78-93-3	2-Butanone	1.1	3.0		U
75-15-0	Carbon disulfide	0.17	1.0		U
56-23-5	Carbon tetrachloride	0.22	1.0		U
108-90-7	Chlorobenzene	0.10	1.0		U
75-00-3	Chloroethane	0.25	1.0		U
67-66-3	Chloroform	0.17	1.0		U
74-87-3	Chloromethane	0.36	1.0		U
110-82-7	Cyclohexane	0.14	1.0		U
124-48-1	Dibromochloromethane	0.10	1.0		U
96-12-8	1,2-Dibromo-3-chloropropane	0.23	1.0		U
106-93-4	1,2-Dibromoethane	0.14	1.0		U
95-50-1	1,2-Dichlorobenzene	0.16	1.0		U
541-73-1	1,3-Dichlorobenzene	0.13	1.0		U
106-46-7	1,4-Dichlorobenzene	0.10	1.0		U
75-71-8	Dichlorodifluoromethane	0.20	1.0		U
75-34-3	1,1-Dichloroethane	0.19	1.0		U
107-06-2	1,2-Dichloroethane	0.22	1.0		U
75-35-4	1,1-Dichloroethene	0.24	1.0		U
156-59-2	cis-1,2-Dichloroethene	0.16	1.0		U
156-60-5	trans-1,2-Dichloroethene	0.21	1.0		U
78-87-5	1,2-Dichloropropane	0.17	1.0		U
10061-01-5	cis-1,3-Dichloropropene	0.12	1.0		U
10061-02-6	trans-1,3-Dichloropropene	0.17	1.0		U
100-41-4	Ethylbenzene	0.10	1.0		U
591-78-6	2-Hexanone	0.42	1.0		U
98-82-8	Isopropylbenzene	0.11	1.0		U
79-20-9	Methyl acetate	0.51	1.0		U
75-09-2	Methylene chloride	0.27	1.0	3.3	
108-87-2	Methyl cyclohexane	0.12	1.0		U
1634-04-4	Methyl tert-butyl ether	0.10	1.0		U
108-10-1	4-Methyl-2-pentanone	0.50	1.0		U
100-42-5	Styrene	0.11	1.0		U
79-34-5	1,1,2,2-Tetrachloroethane	0.23	1.0		U
127-18-4	Tetrachloroethene	0.16	1.0		U

fw
1/28/09

FORM 1
VOLATILE ORGANICS ANALYSIS DATA SHEET

CLIENT SAMPLE NO. 10

MR08-TB111208

Lab Name: EMPIRICAL LABS Contract: CH2MHILL

Lab Code: NA Case No.: NA SAS No.: NA SDG No.: LEJEUNE016

Matrix: (soil/water) WATER Lab Sample ID: 0811201-09

Sample wt/vol: 5.000 (g/mL) ML Lab File ID: 1120109

Level: (low/med) LOW Date Sampled: 11/12/08 08:00

% Moisture: not dec. _____ Date Analyzed: 11/22/08 18:03

GC Column: DB-VRX ID: 0.25 (mm) Dilution Factor: 1.0

Soil Extract Volume:_____(uL) Soil Aliquot Volume: _____(uL)

CONCENTRATION UNITS: (ug/L or ug/Kg) UG/L

CAS NO.	COMPOUND	MDL	RL	CONC	Q
108-88-3	Toluene	0.14	1.0		U
120-82-1	1,2,4-Trichlorobenzene	0.18	1.0		U
71-55-6	1,1,1-Trichloroethane	0.20	1.0		U
79-00-5	1,1,2-Trichloroethane	0.14	1.0		U
79-01-6	Trichloroethene	0.50	1.0		U
76-13-1	Trichlorotrifluoroethane	0.12	1.0		U
75-69-4	Trichlorofluoromethane	0.22	1.0		U
75-01-4	Vinyl chloride	0.19	1.0		U
1330-20-7	Xylene(total)	0.21	1.0		U

[illegible]
11/28/09

21

FORM 1
VOLATILE ORGANICS ANALYSIS DATA SHEET

CLIENT SAMPLE NO.

MR08-IS379-08D

Lab Name: EMPIRICAL LABS Contract: CH2MHILL

Lab Code: NA Case No.: NA SAS No.: NA SDG No.: LEJEUNE016

Matrix: (soil/water) SOIL Lab Sample ID: 0811201-10

Sample wt/vol: 4.8 (g/mL) G Lab File ID: 1120110A

Level: (low/med) LOW Date Sampled: 11/12/08 15:25

% Moisture: not dec. 5 Date Analyzed: 11/26/08 01:55

GC Column: RTX-VRX ID: 0.25 (mm) Dilution Factor: 1.0

Soil Extract Volume:_____(uL) Soil Aliquot Volume: _____(uL)

CONCENTRATION UNITS: (ug/L or ug/Kg) UG/KG

CAS NO.	COMPOUND	MDL	RL	CONC	Q
67-64-1	Acetone	2.2	11	13	~~B~~ u BL
71-43-2	Benzene	0.52	11		U
75-27-4	Bromodichloromethane	0.33	11		U
75-25-2	Bromoform	1.1	11		U
74-83-9	Bromomethane	0.79	11		U
78-93-3	2-Butanone	1.5	11		U
75-15-0	Carbon disulfide	1.4	11		U
56-23-5	Carbon tetrachloride	0.97	11		U
108-90-7	Chlorobenzene	0.38	11		U
75-00-3	Chloroethane	1.2	11		U
67-66-3	Chloroform	0.61	11		U
74-87-3	Chloromethane	0.57	11		U
110-82-7	Cyclohexane	0.60	11		U
124-48-1	Dibromochloromethane	0.38	11		U
96-12-8	1,2-Dibromo-3-chloropropane	1.3	5.5		U
106-93-4	1,2-Dibromoethane	0.47	11		U
95-50-1	1,2-Dichlorobenzene	0.41	11		U
541-73-1	1,3-Dichlorobenzene	0.93	11		U
106-46-7	1,4-Dichlorobenzene	0.61	11		U
75-71-8	Dichlorodifluoromethane	1.2	11		U
75-34-3	1,1-Dichloroethane	0.60	11		U
107-06-2	1,2-Dichloroethane	0.51	11		U
75-35-4	1,1-Dichloroethene	1.3	11		U
156-59-2	cis-1,2-Dichloroethene	1.3	11		U
156-60-5	trans-1,2-Dichloroethene	1.2	11		U
78-87-5	1,2-Dichloropropane	0.51	11		U
10061-01-5	cis-1,3-Dichloropropene	0.55	11		U
10061-02-6	trans-1,3-Dichloropropene	0.35	11		U
100-41-4	Ethylbenzene	0.83	11		U
591-78-6	2-Hexanone	2.5	11		U
98-82-8	Isopropylbenzene	0.97	11		U
79-20-9	Methyl acetate	1.8	11		U
75-09-2	Methylene chloride	0.68	11		U
108-87-2	Methyl cyclohexane	0.33	11		U
1634-04-4	Methyl tert-butyl ether	0.35	11		U
108-10-1	4-Methyl-2-pentanone	0.64	11		U
100-42-5	Styrene	0.39	11		U
79-34-5	1,1,2,2-Tetrachloroethane	0.47	11		U
127-18-4	Tetrachloroethene	1.1	11		U

lw 11/20/09

FORM 1
VOLATILE ORGANICS ANALYSIS DATA SHEET

CLIENT SAMPLE NO. 21

MR08-IS379-08D

Lab Name: EMPIRICAL LABS Contract: CH2MHILL

Lab Code: NA Case No.: NA SAS No.: NA SDG No.: LEJEUNE016

Matrix: (soil/water) SOIL Lab Sample ID: 0811201-10

Sample wt/vol: 4.8 (g/mL) G Lab File ID: 1120110A

Level: (low/med) LOW Date Sampled: 11/12/08 15:25

% Moisture: not dec. 5 Date Analyzed: 11/26/08 01:55

GC Column: RTX-VRX ID: 0.25 (mm) Dilution Factor: 1.0

Soil Extract Volume:_____(uL) Soil Aliquot Volume: _____(uL)

CONCENTRATION UNITS: (ug/L or ug/Kg) UG/KG

CAS NO.	COMPOUND	MDL	RL	CONC	Q
108-88-3	Toluene	0.95	11		U
120-82-1	1,2,4-Trichlorobenzene	0.20	11	1.4 0 ~~.20 JB~~	B
71-55-6	1,1,1-Trichloroethane	0.99	11		U
79-00-5	1,1,2-Trichloroethane	0.39	11		U
79-01-6	Trichloroethene	0.94	11		U
76-13-1	Trichlorotrifluoroethane	0.61	11		U
75-69-4	Trichlorofluoromethane	1.0	11		U
75-01-4	Vinyl chloride	1.2	11		U
1330-20-7	Xylene(total)	0.77	11		U

FORM I VOA

11/28/09

ENVIRONMENTAL
Data Services, Inc.

VOLATILE ORGANIC COMPOUNDS
USEPA Region IV - Level IV Review

Site: MCB Camp Lejeune, TO-09 SDG #: LEJEUNE017

Client: CH2M HILL, Inc., Virginia Beach, Virginia Date: January 29, 2009

Laboratory: Empirical Laboratories, Nashville, Tennessee Reviewer: Nancy Weaver

EDS ID	Client Sample ID	Laboratory Sample ID	Matrix
1	IR78-GW53-08D	0811202-01	Water
2	IR78-GW04-2-08D	0811202-02	Water
3	MR08-SS377-08D	0811202-03	Soil
4	MR08-SS377D-08D	0811202-04	Soil
5	MR08-SS376-08D	0811202-05	Soil
6	MR08-SS375-08D	0811202-06	Soil
6MS	MR08-SS375-08DMS	0811202-06MS	Soil
6MSD	MR08-SS375-08DMSD	0811202-06MSD	Soil
7	MR08-SS374-08D	0811202-07	Soil
8	MR08-SS374D-08D	0811202-08	Soil
9	MR08-TB111108	0811202-09	Water
10	UST1607-MW02-08D	0811202-10	Water
11	IR78-GW09-3-08D	0811202-11	Water
12	IR78-GW11-08D	0811202-12	Water

The USEPA "Contract Laboratory Program National Functional Guidelines for Organic Data Review," October 1999, and professional judgement were used in evaluating the data in this summary report.

Holding Times - All samples were analyzed within 14 days for preserved water and soil samples.

GC/MS Tuning - All of the BFB tunes in the initial and continuing calibrations met the percent relative abundance criteria.

Initial Calibration - The initial calibrations exhibited acceptable %RSD and mean RRF values.

Continuing Calibration - The continuing calibrations exhibited acceptable %D and RRF values except the following.

CCAL Date	Compound	%D/RRF	Qualifier	Affected Samples
11/23/08	Bromomethane	45.0%	J/UJ	1, 2, 9
	1,2,4-Trichlorobenzene	27.5%	J/UJ	1, 2, 9
11/24/08	Bromomethane	25.2%	J/UJ	10-12
11/26/08	Acetone	27.3%	J/UJ	4
	Chloromethane	28.8%	J/UJ	4

Surrogates - All samples exhibited acceptable surrogate recoveries.

MS/MSD - The MS/MSD sample exhibited acceptable %R and RPD values except the following.

MS/MSD Sample ID	Compound	MS/MSD %R/RPD	Qualifier
6	Chlorobenzene	65%/72%/Ok	J/UJ
	1,2-Dichlorobenzene	52%/53%/Ok	J/UJ
	1,3-Dichlorobenzene	51%/56%/Ok	J/UJ
	1,4-Dichlorobenzene	55%56%/Ok	J/UJ
	1,1-Dichloroethane	74%/Ok/Ok	J/UJ
	Ethylbenzene	68%/Ok/Ok	J/UJ
	Isopropylbenzene	68%/73%/Ok	J/UJ
	Styrene	55%/58%/Ok	J/UJ
	Tetrachloroethene	64%/Ok/Ok	J/UJ
	1,2,4-Trichlorobenzene	34%28%/Ok	J/UJ
	Trichloroethene	65%/73%/Ok	J/UJ
	Xylene (total)	65%/Ok/Ok	J/UJ

Laboratory Control Sample - The LCS samples exhibited acceptable %R values.

Internal Standard (IS) Area Performance - All internal standards met response and retention time (RT) criteria.

Method Blank - The method blanks exhibited the following contamination.

Blank ID	Compound	Conc. ug/kg	Action Level ug/kg	Qualifier	Affected Samples
V1BLK1125	Acetone	4.2	42	U	5, 6
	1,2-Dichlorobenzene	0.52	2.5	None	All ND
	Methylene chloride	2.8	28	U	3, 5-8
V1BLK1126	Methylene chloride	3.6	36	U	4

Trip, Field, Equipment Blank - Field QC results are summarized below.

Blank ID	Compound	Conc. ug/L	Action Level ug/L or ug/kg	Qualifier	Affected Samples
MR08-EB111008	Acetone	37	370	None	All ND or already qualified
	2-Butanone	9.0	90	None	All ND or already qualified
	1,2,4-Trichlorobenzene	0.12	0.60	None	All ND or already qualified
MR08-EB111108-1	Bromodichloromethane	0.22	1.1	None	All ND
	Chloroform	2.0	10.0	U	7
	Toluene	0.77	3.85	U	7, 8
MR08-FB111108	Bromodichloromethane	0.25	1.25	None	All ND or already qualified
	Chloroform	2.2	11.0	None	All ND or already qualified
	Methylene chloride	0.55	5.5	None	All ND or already qualified
	Toluene	0.86	4.3	U	1, 5, 10-12
MR08-TB111108	Methylene chloride	1.4	14	None	All ND or already qualified

Field Duplicates - Field duplicate results are summarized below.

Compound	MR08-SS377-08D ug/kg	MR08-SS377D-08D ug/kg	RPD	Qualifier
2-Butanone	2.9	3.4	16%	None
Acetone	68	79	15%	None

Compound	MR08-SS374-08D ug/kg	MR08-SS374D-08D ug/kg	RPD	Qualifier
Acetone	69	49	34%	None
Benzene	0.76	0.67	13%	None
2-Butanone	3.8	2.9	27%	None
Carbon disulfide	5.5	3.8	37%	None
Methyl cyclohexane	0.50	0.80	46%	None

Tentatively Identified Compounds (TICs) - TICs were not reported.

Compound Quantitation - No discrepancies were identified.

FORM 1
VOLATILE ORGANICS ANALYSIS DATA SHEET

CLIENT SAMPLE NO.

IR78-GW53-08D

Lab Name: EMPIRICAL LABS Contract: CH2MHILL

Lab Code: NA Case No.: NA SAS No.: NA SDG No.: LEJEUNE017

Matrix: (soil/water) WATER Lab Sample ID: 0811202-01

Sample wt/vol: 5.000 (g/mL) ML Lab File ID: 1120201

Level: (low/med) LOW Date Sampled: 11/11/08 15:45

% Moisture: not dec. _____ Date Analyzed: 11/23/08 07:22

GC Column: RTX-VRX ID: 0.25 (mm) Dilution Factor: 1.0

Soil Extract Volume:_____(uL) Soil Aliquot Volume: _____(uL)

CONCENTRATION UNITS: (ug/L or ug/Kg) UG/L

CAS NO.	COMPOUND	MDL	RL	CONC	Q
67-64-1	Acetone	0.84	2.5		U
71-43-2	Benzene	0.11	1.0	45	
75-27-4	Bromodichloromethane	0.10	1.0		U
75-25-2	Bromoform	0.10	1.0		U
74-83-9	Bromomethane	0.32	1.0		~~U~~ UJ
78-93-3	2-Butanone	1.0	3.0		U
75-15-0	Carbon disulfide	0.13	1.0		U
56-23-5	Carbon tetrachloride	0.15	1.0		U
108-90-7	Chlorobenzene	0.10	1.0		U
75-00-3	Chloroethane	0.18	1.0		U
67-66-3	Chloroform	0.11	1.0		U
74-87-3	Chloromethane	0.29	1.0		U
110-82-7	Cyclohexane	0.20	1.0	24	
124-48-1	Dibromochloromethane	0.10	1.0		U
96-12-8	1,2-Dibromo-3-chloropropane	0.11	1.0		U
106-93-4	1,2-Dibromoethane	0.10	1.0		U
95-50-1	1,2-Dichlorobenzene	0.10	1.0		U
541-73-1	1,3-Dichlorobenzene	0.13	1.0		U
106-46-7	1,4-Dichlorobenzene	0.10	1.0		U
75-71-8	Dichlorodifluoromethane	0.22	1.0		U
75-34-3	1,1-Dichloroethane	0.12	1.0		U
107-06-2	1,2-Dichloroethane	0.10	1.0		U
75-35-4	1,1-Dichloroethene	0.15	1.0		U
156-59-2	cis-1,2-Dichloroethene	0.13	1.0		U
156-60-5	trans-1,2-Dichloroethene	0.13	1.0		U
78-87-5	1,2-Dichloropropane	0.10	1.0		U
10061-01-5	cis-1,3-Dichloropropene	0.11	1.0		U
10061-02-6	trans-1,3-Dichloropropene	0.10	1.0		U
100-41-4	Ethylbenzene	0.13	1.0	3.1	
591-78-6	2-Hexanone	0.30	2.0		U
98-82-8	Isopropylbenzene	0.15	1.0	0.24	J
79-20-9	Methyl acetate	0.30	1.0		U
75-09-2	Methylene chloride	0.14	1.0		U
108-87-2	Methyl cyclohexane	0.17	1.0	4.7	
1634-04-4	Methyl tert-butyl ether	0.10	1.0	0.29	J
108-10-1	4-Methyl-2-pentanone	0.29	2.0		U
100-42-5	Styrene	0.10	1.0		U
79-34-5	1,1,2,2-Tetrachloroethane	0.10	1.0		U
127-18-4	Tetrachloroethene	0.15	1.0		U

FORM I VOA

DW
11/29/09

FORM 1
VOLATILE ORGANICS ANALYSIS DATA SHEET

CLIENT SAMPLE NO. 1

IR78-GW53-08D

Lab Name: EMPIRICAL LABS Contract: CH2MHILL

Lab Code: NA Case No.: NA SAS No.: NA SDG No.: LEJEUNE017

Matrix: (soil/water) WATER Lab Sample ID: 0811202-01

Sample wt/vol: 5.000 (g/mL) ML Lab File ID: 1120201

Level: (low/med) LOW Date Sampled: 11/11/08 15:45

% Moisture: not dec. _____ Date Analyzed: 11/23/08 07:22

GC Column: RTX-VRX ID: 0.25 (mm) Dilution Factor: 1.0

Soil Extract Volume:_____(uL) Soil Aliquot Volume: _____(uL)

CONCENTRATION UNITS: (ug/L or ug/Kg) UG/L

CAS NO.	COMPOUND	MDL	RL	CONC	Q
108-88-3------	Toluene	0.10	1.0	3.2	U
120-82-1------	1,2,4-Trichlorobenzene	0.10	1.0		U
71-55-6-------	1,1,1-Trichloroethane	0.17	1.0		U
79-00-5-------	1,1,2-Trichloroethane	0.10	1.0		U
79-01-6-------	Trichloroethene	0.13	1.0		U
76-13-1-------	Trichlorotrifluoroethane	0.18	1.0		U
75-69-4-------	Trichlorofluoromethane	0.17	1.0		U
75-01-4-------	Vinyl chloride	0.18	1.0		U
1330-20-7-----	Xylene(total)	0.22	1.0	2.3	

BL
CC

FORM I VOA

MW
11/29/09

2

FORM 1
VOLATILE ORGANICS ANALYSIS DATA SHEET

CLIENT SAMPLE NO.

IR78-GW04-2-08D

Lab Name: EMPIRICAL LABS Contract: CH2MHILL

Lab Code: NA Case No.: NA SAS No.: NA SDG No.: LEJEUNE017

Matrix: (soil/water) WATER Lab Sample ID: 0811202-02

Sample wt/vol: 5.000 (g/mL) ML Lab File ID: 1120202

Level: (low/med) LOW Date Sampled: 11/11/08 16:05

% Moisture: not dec. _____ Date Analyzed: 11/23/08 07:52

GC Column: RTX-VRX ID: 0.25 (mm) Dilution Factor: 1.0

Soil Extract Volume:_____(uL) Soil Aliquot Volume: _____(uL)

CONCENTRATION UNITS: (ug/L or ug/Kg) UG/L

CAS NO.	COMPOUND	MDL	RL	CONC	Q
67-64-1	Acetone	0.84	2.5		U
71-43-2	Benzene	0.11	1.0	5.2	
75-27-4	Bromodichloromethane	0.10	1.0		U
75-25-2	Bromoform	0.10	1.0		U
74-83-9	Bromomethane	0.32	1.0		~~U~~ UJ cc
78-93-3	2-Butanone	1.0	3.0		U
75-15-0	Carbon disulfide	0.13	1.0		U
56-23-5	Carbon tetrachloride	0.15	1.0		U
108-90-7	Chlorobenzene	0.10	1.0		U
75-00-3	Chloroethane	0.18	1.0		U
67-66-3	Chloroform	0.11	1.0		U
74-87-3	Chloromethane	0.29	1.0		U
110-82-7	Cyclohexane	0.20	1.0		U
124-48-1	Dibromochloromethane	0.10	1.0		U
96-12-8	1,2-Dibromo-3-chloropropane	0.11	1.0		U
106-93-4	1,2-Dibromoethane	0.10	1.0		U
95-50-1	1,2-Dichlorobenzene	0.10	1.0		U
541-73-1	1,3-Dichlorobenzene	0.13	1.0		U
106-46-7	1,4-Dichlorobenzene	0.10	1.0		U
75-71-8	Dichlorodifluoromethane	0.22	1.0		U
75-34-3	1,1-Dichloroethane	0.12	1.0		U
107-06-2	1,2-Dichloroethane	0.10	1.0		U
75-35-4	1,1-Dichloroethene	0.15	1.0		U
156-59-2	cis-1,2-Dichloroethene	0.13	1.0		U
156-60-5	trans-1,2-Dichloroethene	0.13	1.0		U
78-87-5	1,2-Dichloropropane	0.10	1.0		U
10061-01-5	cis-1,3-Dichloropropene	0.11	1.0		U
10061-02-6	trans-1,3-Dichloropropene	0.10	1.0		U
100-41-4	Ethylbenzene	0.13	1.0		U
591-78-6	2-Hexanone	0.30	2.0		U
98-82-8	Isopropylbenzene	0.15	1.0		U
79-20-9	Methyl acetate	0.30	1.0		U
75-09-2	Methylene chloride	0.14	1.0		U
108-87-2	Methyl cyclohexane	0.17	1.0		U
1634-04-4	Methyl tert-butyl ether	0.10	1.0		U
108-10-1	4-Methyl-2-pentanone	0.29	2.0		U
100-42-5	Styrene	0.10	1.0		U
79-34-5	1,1,2,2-Tetrachloroethane	0.10	1.0		U
127-18-4	Tetrachloroethene	0.15	1.0		U

lw 1129/09

FORM 1
VOLATILE ORGANICS ANALYSIS DATA SHEET

CLIENT SAMPLE NO. 2

IR78-GW04-2-08D

Lab Name: EMPIRICAL LABS Contract: CH2MHILL

Lab Code: NA Case No.: NA SAS No.: NA SDG No.: LEJEUNE017

Matrix: (soil/water) WATER Lab Sample ID: 0811202-02

Sample wt/vol: 5.000 (g/mL) ML Lab File ID: 1120202

Level: (low/med) LOW Date Sampled: 11/11/08 16:05

% Moisture: not dec. _____ Date Analyzed: 11/23/08 07:52

GC Column: RTX-VRX ID: 0.25 (mm) Dilution Factor: 1.0

Soil Extract Volume:_____(uL) Soil Aliquot Volume: _____(uL)

CONCENTRATION UNITS: (ug/L or ug/Kg) UG/L

CAS NO.	COMPOUND	MDL	RL	CONC	Q
108-88-3	Toluene	0.10	1.0		U
120-82-1	1,2,4-Trichlorobenzene	0.10	1.0		~~U~~ UJ
71-55-6	1,1,1-Trichloroethane	0.17	1.0		U
79-00-5	1,1,2-Trichloroethane	0.10	1.0		U
79-01-6	Trichloroethene	0.13	1.0		U
76-13-1	Trichlorotrifluoroethane	0.18	1.0		U
75-69-4	Trichlorofluoromethane	0.17	1.0		U
75-01-4	Vinyl chloride	0.18	1.0		U
1330-20-7	Xylene(total)	0.22	1.0		U

FORM I VOA

MW 11/29/09

FORM 1
VOLATILE ORGANICS ANALYSIS DATA SHEET

CLIENT SAMPLE NO. 3

MR08-SS377-08D

Lab Name: EMPIRICAL LABS Contract: CH2MHILL

Lab Code: NA Case No.: NA SAS No.: NA SDG No.: LEJEUNE017

Matrix: (soil/water) SOIL Lab Sample ID: 0811202-03

Sample wt/vol: 5.5 (g/mL) G Lab File ID: 1120203A

Level: (low/med) LOW Date Sampled: 11/11/08 13:30

% Moisture: not dec. 12 Date Analyzed: 11/25/08 19:00

GC Column: RTX-VRX ID: 0.25 (mm) Dilution Factor: 1.0

Soil Extract Volume:_____(uL) Soil Aliquot Volume: _____(uL)

CONCENTRATION UNITS: (ug/L or ug/Kg) UG/KG

CAS NO.	COMPOUND	MDL	RL	CONC	Q
67-64-1	Acetone	2.1	10	68	~~B~~
71-43-2	Benzene	0.49	10		U
75-27-4	Bromodichloromethane	0.31	10		U
75-25-2	Bromoform	1.0	10		U
74-83-9	Bromomethane	0.75	10		U
78-93-3	2-Butanone	1.5	10	2.9	J
75-15-0	Carbon disulfide	1.4	10		U
56-23-5	Carbon tetrachloride	0.92	10		U
108-90-7	Chlorobenzene	0.35	10		U
75-00-3	Chloroethane	1.1	10		U
67-66-3	Chloroform	0.57	10		U
74-87-3	Chloromethane	0.54	10		U
110-82-7	Cyclohexane	0.56	10		U
124-48-1	Dibromochloromethane	0.35	10		U
96-12-8	1,2-Dibromo-3-chloropropane	1.2	5.2		U
106-93-4	1,2-Dibromoethane	0.45	10		U
95-50-1	1,2-Dichlorobenzene	0.38	10		U
541-73-1	1,3-Dichlorobenzene	0.88	10		U
106-46-7	1,4-Dichlorobenzene	0.57	10		U
75-71-8	Dichlorodifluoromethane	1.1	10		U
75-34-3	1,1-Dichloroethane	0.56	10		U
107-06-2	1,2-Dichloroethane	0.48	10		U
75-35-4	1,1-Dichloroethene	1.2	10		U
156-59-2	cis-1,2-Dichloroethene	1.2	10		U
156-60-5	trans-1,2-Dichloroethene	1.1	10		U
78-87-5	1,2-Dichloropropane	0.48	10		U
10061-01-5	cis-1,3-Dichloropropene	0.52	10		U
10061-02-6	trans-1,3-Dichloropropene	0.33	10		U
100-41-4	Ethylbenzene	0.78	10		U
591-78-6	2-Hexanone	2.4	10		U
98-82-8	Isopropylbenzene	0.92	10		U
79-20-9	Methyl acetate	1.7	10		U
75-09-2	Methylene chloride	0.65	10	10U ~~2.1 JB~~	B
108-87-2	Methyl cyclohexane	0.31	10		U
1634-04-4	Methyl tert-butyl ether	0.33	10		U
108-10-1	4-Methyl-2-pentanone	0.60	10		U
100-42-5	Styrene	0.36	10		U
79-34-5	1,1,2,2-Tetrachloroethane	0.45	10		U
127-18-4	Tetrachloroethene	1.0	10		U

FORM I VOA

MW
11/29/09

FORM 1
VOLATILE ORGANICS ANALYSIS DATA SHEET

CLIENT SAMPLE NO. 3

MR08-SS377-08D

Lab Name: EMPIRICAL LABS Contract: CH2MHILL

Lab Code: NA Case No.: NA SAS No.: NA SDG No.: LEJEUNE017

Matrix: (soil/water) SOIL Lab Sample ID: 0811202-03

Sample wt/vol: 5.5 (g/mL) G Lab File ID: 1120203A

Level: (low/med) LOW Date Sampled: 11/11/08 13:30

% Moisture: not dec. 12 Date Analyzed: 11/25/08 19:00

GC Column: RTX-VRX ID: 0.25 (mm) Dilution Factor: 1.0

Soil Extract Volume:_____(uL) Soil Aliquot Volume: _____(uL)

CONCENTRATION UNITS: (ug/L or ug/Kg) UG/KG

CAS NO.	COMPOUND	MDL	RL	CONC	Q
108-88-3	Toluene	0.90	10		U
120-82-1	1,2,4-Trichlorobenzene	0.19	10		U
71-55-6	1,1,1-Trichloroethane	0.94	10		U
79-00-5	1,1,2-Trichloroethane	0.36	10		U
79-01-6	Trichloroethene	0.89	10		U
76-13-1	Trichlorotrifluoroethane	0.57	10		U
75-69-4	Trichlorofluoromethane	0.99	10		U
75-01-4	Vinyl chloride	1.1	10		U
1330-20-7	Xylene(total)	0.73	10		U

lw
12/9/09

FORM 1
VOLATILE ORGANICS ANALYSIS DATA SHEET

CLIENT SAMPLE NO. 4

MR08-SS377D-08D

Lab Name: EMPIRICAL LABS Contract: CH2MHILL

Lab Code: NA Case No.: NA SAS No.: NA SDG No.: LEJEUNE017

Matrix: (soil/water) SOIL Lab Sample ID: 0811202-04

Sample wt/vol: 4.8 (g/mL) G Lab File ID: 1120204B

Level: (low/med) LOW Date Sampled: 11/11/08 13:35

% Moisture: not dec. 13 Date Analyzed: 11/26/08 22:08

GC Column: RTX-VRX ID: 0.25 (mm) Dilution Factor: 1.0

Soil Extract Volume:_____(uL) Soil Aliquot Volume: _____(uL)

CONCENTRATION UNITS: (ug/L or ug/Kg) UG/KG

CAS NO.	COMPOUND	MDL	RL	CONC	Q	
67-64-1	Acetone	2.4	12	79	J	cc
71-43-2	Benzene	0.56	12		U	
75-27-4	Bromodichloromethane	0.36	12		U	
75-25-2	Bromoform	1.2	12		U	
74-83-9	Bromomethane	0.86	12		U	
78-93-3	2-Butanone	1.7	12	3.4	J	
75-15-0	Carbon disulfide	1.6	12		U	
56-23-5	Carbon tetrachloride	1.0	12		U	
108-90-7	Chlorobenzene	0.40	12		U	
75-00-3	Chloroethane	1.3	12		U	
67-66-3	Chloroform	0.66	12		U	
74-87-3	Chloromethane	0.62	12		~~U~~ UJ	cc
110-82-7	Cyclohexane	0.64	12		U	
124-48-1	Dibromochloromethane	0.40	12		U	
96-12-8	1,2-Dibromo-3-chloropropane	1.4	6.0		U	
106-93-4	1,2-Dibromoethane	0.51	12		U	
95-50-1	1,2-Dichlorobenzene	0.44	12		U	
541-73-1	1,3-Dichlorobenzene	1.0	12		U	
106-46-7	1,4-Dichlorobenzene	0.66	12		U	
75-71-8	Dichlorodifluoromethane	1.3	12		U	
75-34-3	1,1-Dichloroethane	0.64	12		U	
107-06-2	1,2-Dichloroethane	0.55	12		U	
75-35-4	1,1-Dichloroethene	1.4	12		U	
156-59-2	cis-1,2-Dichloroethene	1.4	12		U	
156-60-5	trans-1,2-Dichloroethene	1.3	12		U	
78-87-5	1,2-Dichloropropane	0.55	12		U	
10061-01-5	cis-1,3-Dichloropropene	0.60	12		U	
10061-02-6	trans-1,3-Dichloropropene	0.38	12		U	
100-41-4	Ethylbenzene	0.90	12		U	
591-78-6	2-Hexanone	2.7	12		U	
98-82-8	Isopropylbenzene	1.0	12		U	
79-20-9	Methyl acetate	1.9	12		U	
75-09-2	Methylene chloride	0.74	12	12u ~~1.7~~	~~JB~~	B
108-87-2	Methyl cyclohexane	0.36	12		U	
1634-04-4	Methyl tert-butyl ether	0.38	12		U	
108-10-1	4-Methyl-2-pentanone	0.69	12		U	
100-42-5	Styrene	0.42	12		U	
79-34-5	1,1,2,2-Tetrachloroethane	0.51	12		U	
127-18-4	Tetrachloroethene	1.2	12		U	

FORM I VOA

lw
1/29/09

FORM 1
VOLATILE ORGANICS ANALYSIS DATA SHEET

CLIENT SAMPLE NO. 4

MR08-SS377D-08D

Lab Name: EMPIRICAL LABS Contract: CH2MHILL

Lab Code: NA Case No.: NA SAS No.: NA SDG No.: LEJEUNE017

Matrix: (soil/water) SOIL Lab Sample ID: 0811202-04

Sample wt/vol: 4.8 (g/mL) G Lab File ID: 1120204B

Level: (low/med) LOW Date Sampled: 11/11/08 13:35

% Moisture: not dec. 13 Date Analyzed: 11/26/08 22:08

GC Column: RTX-VRX ID: 0.25 (mm) Dilution Factor: 1.0

Soil Extract Volume:_____(uL) Soil Aliquot Volume: _____(uL)

CONCENTRATION UNITS: (ug/L or ug/Kg) UG/KG

CAS NO.	COMPOUND	MDL	RL	CONC	Q
108-88-3	Toluene	1.0	12		U
120-82-1	1,2,4-Trichlorobenzene	0.21	12		U
71-55-6	1,1,1-Trichloroethane	1.1	12		U
79-00-5	1,1,2-Trichloroethane	0.42	12		U
79-01-6	Trichloroethene	1.0	12		U
76-13-1	Trichlorotrifluoroethane	0.66	12		U
75-69-4	Trichlorofluoromethane	1.1	12		U
75-01-4	Vinyl chloride	1.3	12		U
1330-20-7	Xylene(total)	0.84	12		U

MW 1129109

FORM 1
VOLATILE ORGANICS ANALYSIS DATA SHEET

CLIENT SAMPLE NO. 5

MR08-SS376-08D

Lab Name: EMPIRICAL LABS Contract: CH2MHILL

Lab Code: NA Case No.: NA SAS No.: NA SDG No.: LEJEUNE017

Matrix: (soil/water) SOIL Lab Sample ID: 0811202-05

Sample wt/vol: 5.6 (g/mL) G Lab File ID: 1120205A

Level: (low/med) LOW Date Sampled: 11/11/08 14:25

% Moisture: not dec. 16 Date Analyzed: 11/25/08 20:18

GC Column: RTX-VRX ID: 0.25 (mm) Dilution Factor: 1.0

Soil Extract Volume:_____(uL) Soil Aliquot Volume: _____(uL)

CONCENTRATION UNITS: (ug/L or ug/Kg) UG/KG

CAS NO.	COMPOUND	MDL	RL	CONC	Q
67-64-1	Acetone	2.1	11	11	~~B~~ u Bl
71-43-2	Benzene	0.50	11	1.1	J
75-27-4	Bromodichloromethane	0.32	11		U
75-25-2	Bromoform	1.1	11		U
74-83-9	Bromomethane	0.77	11		U
78-93-3	2-Butanone	1.5	11	2.9	J
75-15-0	Carbon disulfide	1.4	11		U
56-23-5	Carbon tetrachloride	0.94	11		U
108-90-7	Chlorobenzene	0.36	11		U
75-00-3	Chloroethane	1.2	11		U
67-66-3	Chloroform	0.58	11		U
74-87-3	Chloromethane	0.55	11		U
110-82-7	Cyclohexane	0.58	11		U
124-48-1	Dibromochloromethane	0.36	11		U
96-12-8	1,2-Dibromo-3-chloropropane	1.3	5.3		U
106-93-4	1,2-Dibromoethane	0.46	11		U
95-50-1	1,2-Dichlorobenzene	0.39	11		U
541-73-1	1,3-Dichlorobenzene	0.89	11		U
106-46-7	1,4-Dichlorobenzene	0.58	11		U
75-71-8	Dichlorodifluoromethane	1.2	11		U
75-34-3	1,1-Dichloroethane	0.58	11		U
107-06-2	1,2-Dichloroethane	0.49	11		U
75-35-4	1,1-Dichloroethene	1.3	11		U
156-59-2	cis-1,2-Dichloroethene	1.3	11		U
156-60-5	trans-1,2-Dichloroethene	1.2	11		U
78-87-5	1,2-Dichloropropane	0.49	11		U
10061-01-5	cis-1,3-Dichloropropene	0.53	11		U
10061-02-6	trans-1,3-Dichloropropene	0.34	11		U
100-41-4	Ethylbenzene	0.80	11	2.0	J
591-78-6	2-Hexanone	2.4	11		U
98-82-8	Isopropylbenzene	0.94	11		U
79-20-9	Methyl acetate	1.7	11		U
75-09-2	Methylene chloride	0.66	11	11u ~~2.1 JB~~	B
108-87-2	Methyl cyclohexane	0.32	11	1.2	J
1634-04-4	Methyl tert-butyl ether	0.34	11		U
108-10-1	4-Methyl-2-pentanone	0.62	11		U
100-42-5	Styrene	0.37	11		U
79-34-5	1,1,2,2-Tetrachloroethane	0.46	11		U
127-18-4	Tetrachloroethene	1.0	11		U

FORM I VOA

lw 12/29/09

FORM 1
VOLATILE ORGANICS ANALYSIS DATA SHEET

CLIENT SAMPLE NO. 5

MR08-SS376-08D

Lab Name: EMPIRICAL LABS Contract: CH2MHILL

Lab Code: NA Case No.: NA SAS No.: NA SDG No.: LEJEUNE017

Matrix: (soil/water) SOIL Lab Sample ID: 0811202-05

Sample wt/vol: 5.6 (g/mL) G Lab File ID: 1120205A

Level: (low/med) LOW Date Sampled: 11/11/08 14:25

% Moisture: not dec. 16 Date Analyzed: 11/25/08 20:18

GC Column: RTX-VRX ID: 0.25 (mm) Dilution Factor: 1.0

Soil Extract Volume:_____(uL) Soil Aliquot Volume: _____(uL)

CONCENTRATION UNITS: (ug/L or ug/Kg) UG/KG

CAS NO.	COMPOUND	MDL	RL	CONC	Q
108-88-3	Toluene	0.92	11	11U ~~1.2~~ ~~J~~	BL
120-82-1	1,2,4-Trichlorobenzene	0.19	11		U
71-55-6	1,1,1-Trichloroethane	0.96	11		U
79-00-5	1,1,2-Trichloroethane	0.37	11		U
79-01-6	Trichloroethene	0.90	11		U
76-13-1	Trichlorotrifluoroethane	0.58	11		U
75-69-4	Trichlorofluoromethane	1.0	11		U
75-01-4	Vinyl chloride	1.2	11		U
1330-20-7	Xylene(total)	0.74	11		U

lw
1/29/09

FORM 1
VOLATILE ORGANICS ANALYSIS DATA SHEET

CLIENT SAMPLE NO. 6

MR08-SS375-08D

Lab Name: EMPIRICAL LABS Contract: CH2MHILL

Lab Code: NA Case No.: NA SAS No.: NA SDG No.: LEJEUNE017

Matrix: (soil/water) SOIL Lab Sample ID: 0811202-06

Sample wt/vol: 5.8 (g/mL) G Lab File ID: 1120206A

Level: (low/med) LOW Date Sampled: 11/11/08 14:45

% Moisture: not dec. 11 Date Analyzed: 11/25/08 20:56

GC Column: RTX-VRX ID: 0.25 (mm) Dilution Factor: 1.0

Soil Extract Volume:_____(uL) Soil Aliquot Volume: _____(uL)

CONCENTRATION UNITS: (ug/L or ug/Kg) UG/KG

CAS NO.	COMPOUND	MDL	RL	CONC	Q	
67-64-1	Acetone	1.9	9.6	25	~~B~~ U	BL
71-43-2	Benzene	0.45	9.6		U	
75-27-4	Bromodichloromethane	0.29	9.6		U	
75-25-2	Bromoform	0.96	9.6		U	
74-83-9	Bromomethane	0.69	9.6		U	
78-93-3	2-Butanone	1.3	9.6		U	
75-15-0	Carbon disulfide	1.2	9.6		U	
56-23-5	Carbon tetrachloride	0.84	9.6		U	
108-90-7	Chlorobenzene	0.33	9.6		~~U~~ UJ	M
75-00-3	Chloroethane	1.0	9.6		U	
67-66-3	Chloroform	0.53	9.6		U	
74-87-3	Chloromethane	0.50	9.6		U	
110-82-7	Cyclohexane	0.52	9.6		U	
124-48-1	Dibromochloromethane	0.33	9.6		U	
96-12-8	1,2-Dibromo-3-chloropropane	1.2	4.8		U	
106-93-4	1,2-Dibromoethane	0.41	9.6		U	
95-50-1	1,2-Dichlorobenzene	0.36	9.6		~~U~~ UJ	M
541-73-1	1,3-Dichlorobenzene	0.81	9.6		~~U~~ ↓	↓
106-46-7	1,4-Dichlorobenzene	0.53	9.6		~~U~~ ↓	↓
75-71-8	Dichlorodifluoromethane	1.0	9.6		U	
75-34-3	1,1-Dichloroethane	0.52	9.6		~~U~~ UJ	M
107-06-2	1,2-Dichloroethane	0.44	9.6		U	
75-35-4	1,1-Dichloroethene	1.2	9.6		U	
156-59-2	cis-1,2-Dichloroethene	1.2	9.6		U	
156-60-5	trans-1,2-Dichloroethene	1.0	9.6		U	
78-87-5	1,2-Dichloropropane	0.44	9.6		U	
10061-01-5	cis-1,3-Dichloropropene	0.48	9.6		U	
10061-02-6	trans-1,3-Dichloropropene	0.31	9.6		U	
100-41-4	Ethylbenzene	0.72	9.6		~~U~~ UJ	M
591-78-6	2-Hexanone	2.2	9.6		U	
98-82-8	Isopropylbenzene	0.84	9.6		~~U~~ UJ	M
79-20-9	Methyl acetate	1.5	9.6		U	
75-09-2	Methylene chloride	0.60	9.6	9.6 ~~1.8~~	~~JB~~	B
108-87-2	Methyl cyclohexane	0.29	9.6		U	
1634-04-4	Methyl tert-butyl ether	0.31	9.6		U	
108-10-1	4-Methyl-2-pentanone	0.56	9.6		U	
100-42-5	Styrene	0.34	9.6		~~U~~ UJ	M
79-34-5	1,1,2,2-Tetrachloroethane	0.41	9.6		U	
127-18-4	Tetrachloroethene	0.93	9.6		~~U~~ UJ	M

RW
1/29/09

FORM 1
VOLATILE ORGANICS ANALYSIS DATA SHEET

CLIENT SAMPLE NO. 6

MR08-SS375-08D

Lab Name: EMPIRICAL LABS Contract: CH2MHILL

Lab Code: NA Case No.: NA SAS No.: NA SDG No.: LEJEUNE017

Matrix: (soil/water) SOIL Lab Sample ID: 0811202-06

Sample wt/vol: 5.8 (g/mL) G Lab File ID: 1120206A

Level: (low/med) LOW Date Sampled: 11/11/08 14:45

% Moisture: not dec. 11 Date Analyzed: 11/25/08 20:56

GC Column: RTX-VRX ID: 0.25 (mm) Dilution Factor: 1.0

Soil Extract Volume:_____(uL) Soil Aliquot Volume: _____(uL)

CONCENTRATION UNITS: (ug/L or ug/Kg) UG/KG

CAS NO.	COMPOUND	MDL	RL	CONC	Q	
108-88-3	Toluene	0.83	9.6		U	
120-82-1	1,2,4-Trichlorobenzene	0.17	9.6		~~U~~ UJ	MS
71-55-6	1,1,1-Trichloroethane	0.86	9.6		U	
79-00-5	1,1,2-Trichloroethane	0.34	9.6		U	
79-01-6	Trichloroethene	0.82	9.6		~~U~~ UJ	MS
76-13-1	Trichlorotrifluoroethane	0.53	9.6		U	
75-69-4	Trichlorofluoromethane	0.91	9.6		U	
75-01-4	Vinyl chloride	1.0	9.6		U	
1330-20-7	Xylene(total)	0.67	9.6		~~U~~ UJ	MS

FORM I VOA

LW
11/29/09

FORM 1
VOLATILE ORGANICS ANALYSIS DATA SHEET

CLIENT SAMPLE NO. 7

MR08-SS374-08D

Lab Name: EMPIRICAL LABS Contract: CH2MHILL

Lab Code: NA Case No.: NA SAS No.: NA SDG No.: LEJEUNE017

Matrix: (soil/water) SOIL Lab Sample ID: 0811202-07

Sample wt/vol: 5.1 (g/mL) G Lab File ID: 1120207A

Level: (low/med) LOW Date Sampled: 11/11/08 15:10

% Moisture: not dec. 11 Date Analyzed: 11/25/08 21:36

GC Column: RTX-VRX ID: 0.25 (mm) Dilution Factor: 1.0

Soil Extract Volume:_____(uL) Soil Aliquot Volume: _____(uL)

CONCENTRATION UNITS: (ug/L or ug/Kg) UG/KG

CAS NO.	COMPOUND	MDL	RL	CONC	Q
67-64-1	Acetone	2.2	11	69	~~B~~
71-43-2	Benzene	0.51	11	0.76	J
75-27-4	Bromodichloromethane	0.33	11		U
75-25-2	Bromoform	1.1	11		U
74-83-9	Bromomethane	0.78	11		U
78-93-3	2-Butanone	1.5	11	3.8	J
75-15-0	Carbon disulfide	1.4	11	5.5	J
56-23-5	Carbon tetrachloride	0.96	11		U
108-90-7	Chlorobenzene	0.37	11		U
75-00-3	Chloroethane	1.2	11		U
67-66-3	Chloroform	0.60	11	11u ~~0.62~~	~~J~~ B
74-87-3	Chloromethane	0.57	11		U
110-82-7	Cyclohexane	0.59	11		U
124-48-1	Dibromochloromethane	0.37	11		U
96-12-8	1,2-Dibromo-3-chloropropane	1.3	5.4		U
106-93-4	1,2-Dibromoethane	0.47	11		U
95-50-1	1,2-Dichlorobenzene	0.40	11		U
541-73-1	1,3-Dichlorobenzene	0.91	11		U
106-46-7	1,4-Dichlorobenzene	0.60	11		U
75-71-8	Dichlorodifluoromethane	1.2	11		U
75-34-3	1,1-Dichloroethane	0.59	11		U
107-06-2	1,2-Dichloroethane	0.50	11		U
75-35-4	1,1-Dichloroethene	1.3	11		U
156-59-2	cis-1,2-Dichloroethene	1.3	11		U
156-60-5	trans-1,2-Dichloroethene	1.2	11		U
78-87-5	1,2-Dichloropropane	0.50	11		U
10061-01-5	cis-1,3-Dichloropropene	0.54	11		U
10061-02-6	trans-1,3-Dichloropropene	0.35	11		U
100-41-4	Ethylbenzene	0.82	11		U
591-78-6	2-Hexanone	2.5	11		U
98-82-8	Isopropylbenzene	0.96	11		U
79-20-9	Methyl acetate	1.7	11		U
75-09-2	Methylene chloride	0.68	11	11u ~~2.1~~ ~~JB~~	B
108-87-2	Methyl cyclohexane	0.33	11	0.50	J
1634-04-4	Methyl tert-butyl ether	0.35	11		U
108-10-1	4-Methyl-2-pentanone	0.63	11		U
100-42-5	Styrene	0.38	11		U
79-34-5	1,1,2,2-Tetrachloroethane	0.47	11		U
127-18-4	Tetrachloroethene	1.0	11		U

FORM I VOA

RW
12/9/09

FORM 1
VOLATILE ORGANICS ANALYSIS DATA SHEET

CLIENT SAMPLE NO. 7

MR08-SS374-08D

Lab Name: EMPIRICAL LABS Contract: CH2MHILL

Lab Code: NA Case No.: NA SAS No.: NA SDG No.: LEJEUNE017

Matrix: (soil/water) SOIL Lab Sample ID: 0811202-07

Sample wt/vol: 5.1 (g/mL) G Lab File ID: 1120207A

Level: (low/med) LOW Date Sampled: 11/11/08 15:10

% Moisture: not dec. 11 Date Analyzed: 11/25/08 21:36

GC Column: RTX-VRX ID: 0.25 (mm) Dilution Factor: 1.0

Soil Extract Volume:_____(uL) Soil Aliquot Volume: _____(uL)

CONCENTRATION UNITS: (ug/L or ug/Kg) UG/KG

CAS NO.	COMPOUND	MDL	RL	CONC	Q
108-88-3	Toluene	0.94	11	11u ~~1.1~~	J
120-82-1	1,2,4-Trichlorobenzene	0.20	11		U
71-55-6	1,1,1-Trichloroethane	0.98	11		U
79-00-5	1,1,2-Trichloroethane	0.38	11		U
79-01-6	Trichloroethene	0.92	11		U
76-13-1	Trichlorotrifluoroethane	0.60	11		U
75-69-4	Trichlorofluoromethane	1.0	11		U
75-01-4	Vinyl chloride	1.2	11		U
1330-20-7	Xylene(total)	0.76	11		U

B

FORM I VOA

lw 11/29/09

FORM 1
VOLATILE ORGANICS ANALYSIS DATA SHEET

CLIENT SAMPLE NO. 8

MR08-SS374D-08D

Lab Name: EMPIRICAL LABS Contract: CH2MHILL

Lab Code: NA Case No.: NA SAS No.: NA SDG No.: LEJEUNE017

Matrix: (soil/water) SOIL Lab Sample ID: 0811202-08

Sample wt/vol: 5.6 (g/mL) G Lab File ID: 1120208A

Level: (low/med) LOW Date Sampled: 11/11/08 15:15

% Moisture: not dec. 11 Date Analyzed: 11/25/08 22:14

GC Column: RTX-VRX ID: 0.25 (mm) Dilution Factor: 1.0

Soil Extract Volume:_____(uL) Soil Aliquot Volume: _____(uL)

CONCENTRATION UNITS: (ug/L or ug/Kg) UG/KG

CAS NO.	COMPOUND	MDL	RL	CONC	Q
67-64-1	Acetone	2.0	10	49	~~B~~
71-43-2	Benzene	0.47	10	0.67	J
75-27-4	Bromodichloromethane	0.30	10		U
75-25-2	Bromoform	1.00	10		U
74-83-9	Bromomethane	0.72	10		U
78-93-3	2-Butanone	1.4	10	2.9	J
75-15-0	Carbon disulfide	1.3	10	3.8	J
56-23-5	Carbon tetrachloride	0.88	10		U
108-90-7	Chlorobenzene	0.34	10		U
75-00-3	Chloroethane	1.1	10		U
67-66-3	Chloroform	0.55	10		U
74-87-3	Chloromethane	0.52	10		U
110-82-7	Cyclohexane	0.54	10		U
124-48-1	Dibromochloromethane	0.34	10		U
96-12-8	1,2-Dibromo-3-chloropropane	1.2	5.0		U
106-93-4	1,2-Dibromoethane	0.43	10		U
95-50-1	1,2-Dichlorobenzene	0.37	10		U
541-73-1	1,3-Dichlorobenzene	0.84	10		U
106-46-7	1,4-Dichlorobenzene	0.55	10		U
75-71-8	Dichlorodifluoromethane	1.1	10		U
75-34-3	1,1-Dichloroethane	0.54	10		U
107-06-2	1,2-Dichloroethane	0.46	10		U
75-35-4	1,1-Dichloroethene	1.2	10		U
156-59-2	cis-1,2-Dichloroethene	1.2	10		U
156-60-5	trans-1,2-Dichloroethene	1.1	10		U
78-87-5	1,2-Dichloropropane	0.46	10		U
10061-01-5	cis-1,3-Dichloropropene	0.50	10		U
10061-02-6	trans-1,3-Dichloropropene	0.32	10		U
100-41-4	Ethylbenzene	0.75	10	0.80	J
591-78-6	2-Hexanone	2.3	10		U
98-82-8	Isopropylbenzene	0.88	10		U
79-20-9	Methyl acetate	1.6	10		U
75-09-2	Methylene chloride	0.62	10	10U ~~1.9~~	~~JB~~ B
108-87-2	Methyl cyclohexane	0.30	10		U
1634-04-4	Methyl tert-butyl ether	0.32	10		U
108-10-1	4-Methyl-2-pentanone	0.58	10		U
100-42-5	Styrene	0.35	10		U
79-34-5	1,1,2,2-Tetrachloroethane	0.43	10		U
127-18-4	Tetrachloroethene	0.97	10		U

FORM I VOA

QW 11/29/09

FORM 1
VOLATILE ORGANICS ANALYSIS DATA SHEET

CLIENT SAMPLE NO. 8

MR08-SS374D-08D

Lab Name: EMPIRICAL LABS Contract: CH2MHILL

Lab Code: NA Case No.: NA SAS No.: NA SDG No.: LEJEUNE017

Matrix: (soil/water) SOIL Lab Sample ID: 0811202-08

Sample wt/vol: 5.6 (g/mL) G Lab File ID: 1120208A

Level: (low/med) LOW Date Sampled: 11/11/08 15:15

% Moisture: not dec. 11 Date Analyzed: 11/25/08 22:14

GC Column: RTX-VRX ID: 0.25 (mm) Dilution Factor: 1.0

Soil Extract Volume:_____(uL) Soil Aliquot Volume: _____(uL)

CONCENTRATION UNITS: (ug/L or ug/Kg) UG/KG

CAS NO.	COMPOUND	MDL	RL	CONC	Q
108-88-3	Toluene	0.86	10	10H ~~0.93~~ ~~J~~	B
120-82-1	1,2,4-Trichlorobenzene	0.18	10		U
71-55-6	1,1,1-Trichloroethane	0.90	10		U
79-00-5	1,1,2-Trichloroethane	0.35	10		U
79-01-6	Trichloroethene	0.85	10		U
76-13-1	Trichlorotrifluoroethane	0.55	10		U
75-69-4	Trichlorofluoromethane	0.95	10		U
75-01-4	Vinyl chloride	1.1	10		U
1330-20-7	Xylene(total)	0.70	10		U

lw 11/29/09

FORM 1
VOLATILE ORGANICS ANALYSIS DATA SHEET

CLIENT SAMPLE NO. 9

MR08-TB111108

Lab Name: EMPIRICAL LABS Contract: CH2MHILL

Lab Code: NA Case No.: NA SAS No.: NA SDG No.: LEJEUNE017

Matrix: (soil/water) WATER Lab Sample ID: 0811202-09

Sample wt/vol: 5.000 (g/mL) ML Lab File ID: 1120209

Level: (low/med) LOW Date Sampled: 11/11/08 17:00

% Moisture: not dec. _____ Date Analyzed: 11/23/08 06:53

GC Column: RTX-VRX ID: 0.25 (mm) Dilution Factor: 1.0

Soil Extract Volume:_____(uL) Soil Aliquot Volume: _____(uL)

CONCENTRATION UNITS: (ug/L or ug/Kg) UG/L

CAS NO.	COMPOUND	MDL	RL	CONC	Q
67-64-1	Acetone	0.84	2.5		U
71-43-2	Benzene	0.11	1.0		U
75-27-4	Bromodichloromethane	0.10	1.0		U
75-25-2	Bromoform	0.10	1.0		U
74-83-9	Bromomethane	0.32	1.0		~~U~~ UJ
78-93-3	2-Butanone	1.0	3.0		U
75-15-0	Carbon disulfide	0.13	1.0		U
56-23-5	Carbon tetrachloride	0.15	1.0		U
108-90-7	Chlorobenzene	0.10	1.0		U
75-00-3	Chloroethane	0.18	1.0		U
67-66-3	Chloroform	0.11	1.0		U
74-87-3	Chloromethane	0.29	1.0		U
110-82-7	Cyclohexane	0.20	1.0		U
124-48-1	Dibromochloromethane	0.10	1.0		U
96-12-8	1,2-Dibromo-3-chloropropane	0.11	1.0		U
106-93-4	1,2-Dibromoethane	0.10	1.0		U
95-50-1	1,2-Dichlorobenzene	0.10	1.0		U
541-73-1	1,3-Dichlorobenzene	0.13	1.0		U
106-46-7	1,4-Dichlorobenzene	0.10	1.0		U
75-71-8	Dichlorodifluoromethane	0.22	1.0		U
75-34-3	1,1-Dichloroethane	0.12	1.0		U
107-06-2	1,2-Dichloroethane	0.10	1.0		U
75-35-4	1,1-Dichloroethene	0.15	1.0		U
156-59-2	cis-1,2-Dichloroethene	0.13	1.0		U
156-60-5	trans-1,2-Dichloroethene	0.13	1.0		U
78-87-5	1,2-Dichloropropane	0.10	1.0		U
10061-01-5	cis-1,3-Dichloropropene	0.11	1.0		U
10061-02-6	trans-1,3-Dichloropropene	0.10	1.0		U
100-41-4	Ethylbenzene	0.13	1.0		U
591-78-6	2-Hexanone	0.30	2.0		U
98-82-8	Isopropylbenzene	0.15	1.0		U
79-20-9	Methyl acetate	0.30	1.0		U
75-09-2	Methylene chloride	0.14	1.0	1.4	
108-87-2	Methyl cyclohexane	0.17	1.0		U
1634-04-4	Methyl tert-butyl ether	0.10	1.0		U
108-10-1	4-Methyl-2-pentanone	0.29	2.0		U
100-42-5	Styrene	0.10	1.0		U
79-34-5	1,1,2,2-Tetrachloroethane	0.10	1.0		U
127-18-4	Tetrachloroethene	0.15	1.0		U

11/29/09

FORM 1
VOLATILE ORGANICS ANALYSIS DATA SHEET

CLIENT SAMPLE NO. 9

MR08-TB111108

Lab Name: EMPIRICAL LABS Contract: CH2MHILL

Lab Code: NA Case No.: NA SAS No.: NA SDG No.: LEJEUNE017

Matrix: (soil/water) WATER Lab Sample ID: 0811202-09

Sample wt/vol: 5.000 (g/mL) ML Lab File ID: 1120209

Level: (low/med) LOW Date Sampled: 11/11/08 17:00

% Moisture: not dec. _____ Date Analyzed: 11/23/08 06:53

GC Column: RTX-VRX ID: 0.25 (mm) Dilution Factor: 1.0

Soil Extract Volume:_____(uL) Soil Aliquot Volume: _____(uL)

CONCENTRATION UNITS: (ug/L or ug/Kg) UG/L

CAS NO.	COMPOUND	MDL	RL	CONC	Q
108-88-3	Toluene	0.10	1.0		U
120-82-1	1,2,4-Trichlorobenzene	0.10	1.0		~~U~~ UJ
71-55-6	1,1,1-Trichloroethane	0.17	1.0		U
79-00-5	1,1,2-Trichloroethane	0.10	1.0		U
79-01-6	Trichloroethene	0.13	1.0		U
76-13-1	Trichlorotrifluoroethane	0.18	1.0		U
75-69-4	Trichlorofluoromethane	0.17	1.0		U
75-01-4	Vinyl chloride	0.18	1.0		U
1330-20-7	Xylene(total)	0.22	1.0		U

cc

FORM I VOA

MW
11/29/09

FORM 1
VOLATILE ORGANICS ANALYSIS DATA SHEET

CLIENT SAMPLE NO. 10

UST1607-
MW02-08D

Lab Name: EMPIRICAL LABS Contract: CH2MHILL

Lab Code: NA Case No.: NA SAS No.: NA SDG No.: LEJEUNE017

Matrix: (soil/water) WATER Lab Sample ID: 0811208-01

Sample wt/vol: 5.000 (g/mL) ML Lab File ID: 1120801

Level: (low/med) LOW Date Sampled: 11/13/08 15:25

% Moisture: not dec. _____ Date Analyzed: 11/24/08 14:10

GC Column: RTX-VRX ID: 0.25 (mm) Dilution Factor: 1.0

Soil Extract Volume:_____(uL) Soil Aliquot Volume: _____(uL)

CONCENTRATION UNITS: (ug/L or ug/Kg) UG/L

CAS NO.	COMPOUND	MDL	RL	CONC	Q
67-64-1	Acetone	0.84	2.5		U
71-43-2	Benzene	0.11	1.0		U
75-27-4	Bromodichloromethane	0.10	1.0		U
75-25-2	Bromoform	0.10	1.0		U
74-83-9	Bromomethane	0.32	1.0		~~U~~ UJ
78-93-3	2-Butanone	1.0	3.0		U
75-15-0	Carbon disulfide	0.13	1.0		U
56-23-5	Carbon tetrachloride	0.15	1.0		U
108-90-7	Chlorobenzene	0.10	1.0		U
75-00-3	Chloroethane	0.18	1.0		U
67-66-3	Chloroform	0.11	1.0		U
74-87-3	Chloromethane	0.29	1.0		U
110-82-7	Cyclohexane	0.20	1.0		U
124-48-1	Dibromochloromethane	0.10	1.0		U
96-12-8	1,2-Dibromo-3-chloropropane	0.11	1.0		U
106-93-4	1,2-Dibromoethane	0.10	1.0		U
95-50-1	1,2-Dichlorobenzene	0.10	1.0		U
541-73-1	1,3-Dichlorobenzene	0.13	1.0		U
106-46-7	1,4-Dichlorobenzene	0.10	1.0		U
75-71-8	Dichlorodifluoromethane	0.22	1.0		U
75-34-3	1,1-Dichloroethane	0.12	1.0		U
107-06-2	1,2-Dichloroethane	0.10	1.0		U
75-35-4	1,1-Dichloroethene	0.15	1.0		U
156-59-2	cis-1,2-Dichloroethene	0.13	1.0		U
156-60-5	trans-1,2-Dichloroethene	0.13	1.0		U
78-87-5	1,2-Dichloropropane	0.10	1.0		U
10061-01-5	cis-1,3-Dichloropropene	0.11	1.0		U
10061-02-6	trans-1,3-Dichloropropene	0.10	1.0		U
100-41-4	Ethylbenzene	0.13	1.0		U
591-78-6	2-Hexanone	0.30	2.0		U
98-82-8	Isopropylbenzene	0.15	1.0		U
79-20-9	Methyl acetate	0.30	1.0		U
75-09-2	Methylene chloride	0.14	1.0		U
108-87-2	Methyl cyclohexane	0.17	1.0		U
1634-04-4	Methyl tert-butyl ether	0.10	1.0		U
108-10-1	4-Methyl-2-pentanone	0.29	2.0		U
100-42-5	Styrene	0.10	1.0		U
79-34-5	1,1,2,2-Tetrachloroethane	0.10	1.0		U
127-18-4	Tetrachloroethene	0.15	1.0		U

dlw 11/29/09

FORM 1
VOLATILE ORGANICS ANALYSIS DATA SHEET

CLIENT SAMPLE NO. 10

UST1607-
MW02-08D

Lab Name: EMPIRICAL LABS Contract: CH2MHILL

Lab Code: NA Case No.: NA SAS No.: NA SDG No.: LEJEUNE017

Matrix: (soil/water) WATER Lab Sample ID: 0811208-01

Sample wt/vol: 5.000 (g/mL) ML Lab File ID: 1120801

Level: (low/med) LOW Date Sampled: 11/13/08 15:25

% Moisture: not dec. _____ Date Analyzed: 11/24/08 14:10

GC Column: RTX-VRX ID: 0.25 (mm) Dilution Factor: 1.0

Soil Extract Volume:_____(uL) Soil Aliquot Volume: _____(uL)

CONCENTRATION UNITS: (ug/L or ug/Kg) UG/L

CAS NO.	COMPOUND	MDL	RL	CONC	Q
108-88-3------	Toluene	0.10	1.0	1.0 ~~0.10~~	J
120-82-1------	1,2,4-Trichlorobenzene	0.10	1.0		U
71-55-6-------	1,1,1-Trichloroethane	0.17	1.0		U
79-00-5-------	1,1,2-Trichloroethane	0.10	1.0		U
79-01-6-------	Trichloroethene	0.13	1.0		U
76-13-1-------	Trichlorotrifluoroethane	0.18	1.0		U
75-69-4-------	Trichlorofluoromethane	0.17	1.0		U
75-01-4-------	Vinyl chloride	0.18	1.0		U
1330-20-7-----	Xylene(total)	0.22	1.0	0.75	J

B1

FORM I VOA

lw
1/29/09

FORM 1
VOLATILE ORGANICS ANALYSIS DATA SHEET

CLIENT SAMPLE NO. 11

IR78-GW09-3-08D

Lab Name: EMPIRICAL LABS Contract: CH2MHILL

Lab Code: NA Case No.: NA SAS No.: NA SDG No.: LEJEUNE017

Matrix: (soil/water) WATER Lab Sample ID: 0811208-02

Sample wt/vol: 5.000 (g/mL) ML Lab File ID: 1120802

Level: (low/med) LOW Date Sampled: 11/14/08 12:30

% Moisture: not dec. _____ Date Analyzed: 11/24/08 14:41

GC Column: RTX-VRX ID: 0.25 (mm) Dilution Factor: 1.0

Soil Extract Volume:_____(uL) Soil Aliquot Volume: _____(uL)

CONCENTRATION UNITS: (ug/L or ug/Kg) UG/L

CAS NO.	COMPOUND	MDL	RL	CONC	Q
67-64-1	Acetone	0.84	2.5		U
71-43-2	Benzene	0.11	1.0		U
75-27-4	Bromodichloromethane	0.10	1.0		U
75-25-2	Bromoform	0.10	1.0		U
74-83-9	Bromomethane	0.32	1.0		~~U~~ UJ CC
78-93-3	2-Butanone	1.0	3.0		U
75-15-0	Carbon disulfide	0.13	1.0		U
56-23-5	Carbon tetrachloride	0.15	1.0		U
108-90-7	Chlorobenzene	0.10	1.0		U
75-00-3	Chloroethane	0.18	1.0		U
67-66-3	Chloroform	0.11	1.0		U
74-87-3	Chloromethane	0.29	1.0		U
110-82-7	Cyclohexane	0.20	1.0		U
124-48-1	Dibromochloromethane	0.10	1.0		U
96-12-8	1,2-Dibromo-3-chloropropane	0.11	1.0		U
106-93-4	1,2-Dibromoethane	0.10	1.0		U
95-50-1	1,2-Dichlorobenzene	0.10	1.0		U
541-73-1	1,3-Dichlorobenzene	0.13	1.0		U
106-46-7	1,4-Dichlorobenzene	0.10	1.0		U
75-71-8	Dichlorodifluoromethane	0.22	1.0		U
75-34-3	1,1-Dichloroethane	0.12	1.0		U
107-06-2	1,2-Dichloroethane	0.10	1.0		U
75-35-4	1,1-Dichloroethene	0.15	1.0		U
156-59-2	cis-1,2-Dichloroethene	0.13	1.0		U
156-60-5	trans-1,2-Dichloroethene	0.13	1.0		U
78-87-5	1,2-Dichloropropane	0.10	1.0		U
10061-01-5	cis-1,3-Dichloropropene	0.11	1.0		U
10061-02-6	trans-1,3-Dichloropropene	0.10	1.0		U
100-41-4	Ethylbenzene	0.13	1.0		U
591-78-6	2-Hexanone	0.30	2.0		U
98-82-8	Isopropylbenzene	0.15	1.0		U
79-20-9	Methyl acetate	0.30	1.0		U
75-09-2	Methylene chloride	0.14	1.0		U
108-87-2	Methyl cyclohexane	0.17	1.0		U
1634-04-4	Methyl tert-butyl ether	0.10	1.0		U
108-10-1	4-Methyl-2-pentanone	0.29	2.0		U
100-42-5	Styrene	0.10	1.0		U
79-34-5	1,1,2,2-Tetrachloroethane	0.10	1.0		U
127-18-4	Tetrachloroethene	0.15	1.0		U

lus 11/29/09

FORM 1
VOLATILE ORGANICS ANALYSIS DATA SHEET

CLIENT SAMPLE NO. 11

IR78-GW09-3-08D

Lab Name: EMPIRICAL LABS Contract: CH2MHILL

Lab Code: NA Case No.: NA SAS No.: NA SDG No.: LEJEUNE017

Matrix: (soil/water) WATER Lab Sample ID: 0811208-02

Sample wt/vol: 5.000 (g/mL) ML Lab File ID: 1120802

Level: (low/med) LOW Date Sampled: 11/14/08 12:30

% Moisture: not dec. _____ Date Analyzed: 11/24/08 14:41

GC Column: RTX-VRX ID: 0.25 (mm) Dilution Factor: 1.0

Soil Extract Volume:_____(uL) Soil Aliquot Volume: _____(uL)

CONCENTRATION UNITS: (ug/L or ug/Kg) UG/L

CAS NO.	COMPOUND	MDL	RL	CONC	Q
108-88-3	Toluene	0.10	1.0	1.0U ~~0.31~~	~~J~~
120-82-1	1,2,4-Trichlorobenzene	0.10	1.0		U
71-55-6	1,1,1-Trichloroethane	0.17	1.0		U
79-00-5	1,1,2-Trichloroethane	0.10	1.0		U
79-01-6	Trichloroethene	0.13	1.0		U
76-13-1	Trichlorotrifluoroethane	0.18	1.0		U
75-69-4	Trichlorofluoromethane	0.17	1.0		U
75-01-4	Vinyl chloride	0.18	1.0		U
1330-20-7	Xylene(total)	0.22	1.0	0.23	J

B1

RW
1/29/09

FORM 1
VOLATILE ORGANICS ANALYSIS DATA SHEET

CLIENT SAMPLE NO. 12

IR78-GW11-08D

Lab Name: EMPIRICAL LABS Contract: CH2MHILL

Lab Code: NA Case No.: NA SAS No.: NA SDG No.: LEJEUNE017

Matrix: (soil/water) WATER Lab Sample ID: 0811208-03

Sample wt/vol: 5.000 (g/mL) ML Lab File ID: 1120803

Level: (low/med) LOW Date Sampled: 11/14/08 14:10

% Moisture: not dec. _____ Date Analyzed: 11/24/08 15:11

GC Column: RTX-VRX ID: 0.25 (mm) Dilution Factor: 1.0

Soil Extract Volume:_____(uL) Soil Aliquot Volume: _____(uL)

CONCENTRATION UNITS: (ug/L or ug/Kg) UG/L

CAS NO.	COMPOUND	MDL	RL	CONC	Q
67-64-1	Acetone	0.84	2.5		U
71-43-2	Benzene	0.11	1.0		U
75-27-4	Bromodichloromethane	0.10	1.0		U
75-25-2	Bromoform	0.10	1.0		U
74-83-9	Bromomethane	0.32	1.0		~~U~~ UJ CO
78-93-3	2-Butanone	1.0	3.0		U
75-15-0	Carbon disulfide	0.13	1.0		U
56-23-5	Carbon tetrachloride	0.15	1.0		U
108-90-7	Chlorobenzene	0.10	1.0		U
75-00-3	Chloroethane	0.18	1.0		U
67-66-3	Chloroform	0.11	1.0		U
74-87-3	Chloromethane	0.29	1.0		U
110-82-7	Cyclohexane	0.20	1.0		U
124-48-1	Dibromochloromethane	0.10	1.0		U
96-12-8	1,2-Dibromo-3-chloropropane	0.11	1.0		U
106-93-4	1,2-Dibromoethane	0.10	1.0		U
95-50-1	1,2-Dichlorobenzene	0.10	1.0		U
541-73-1	1,3-Dichlorobenzene	0.13	1.0		U
106-46-7	1,4-Dichlorobenzene	0.10	1.0		U
75-71-8	Dichlorodifluoromethane	0.22	1.0		U
75-34-3	1,1-Dichloroethane	0.12	1.0		U
107-06-2	1,2-Dichloroethane	0.10	1.0		U
75-35-4	1,1-Dichloroethene	0.15	1.0		U
156-59-2	cis-1,2-Dichloroethene	0.13	1.0		U
156-60-5	trans-1,2-Dichloroethene	0.13	1.0		U
78-87-5	1,2-Dichloropropane	0.10	1.0		U
10061-01-5	cis-1,3-Dichloropropene	0.11	1.0		U
10061-02-6	trans-1,3-Dichloropropene	0.10	1.0		U
100-41-4	Ethylbenzene	0.13	1.0		U
591-78-6	2-Hexanone	0.30	2.0		U
98-82-8	Isopropylbenzene	0.15	1.0		U
79-20-9	Methyl acetate	0.30	1.0		U
75-09-2	Methylene chloride	0.14	1.0		U
108-87-2	Methyl cyclohexane	0.17	1.0		U
1634-04-4	Methyl tert-butyl ether	0.10	1.0		U
108-10-1	4-Methyl-2-pentanone	0.29	2.0		U
100-42-5	Styrene	0.10	1.0		U
79-34-5	1,1,2,2-Tetrachloroethane	0.10	1.0		U
127-18-4	Tetrachloroethene	0.15	1.0		U

FORM I VOA

MW 112969

FORM 1
VOLATILE ORGANICS ANALYSIS DATA SHEET

CLIENT SAMPLE NO. 12

IR78-GW11-08D

Lab Name: EMPIRICAL LABS Contract: CH2MHILL

Lab Code: NA Case No.: NA SAS No.: NA SDG No.: LEJEUNE017

Matrix: (soil/water) WATER Lab Sample ID: 0811208-03

Sample wt/vol: 5.000 (g/mL) ML Lab File ID: 1120803

Level: (low/med) LOW Date Sampled: 11/14/08 14:10

% Moisture: not dec. _____ Date Analyzed: 11/24/08 15:11

GC Column: RTX-VRX ID: 0.25 (mm) Dilution Factor: 1.0

Soil Extract Volume:_____(uL) Soil Aliquot Volume: _____(uL)

CONCENTRATION UNITS: (ug/L or ug/Kg) UG/L

CAS NO.	COMPOUND	MDL	RL	CONC	Q
108-88-3	Toluene	0.10	1.0	1.0 ~~0.11~~	~~J~~ B
120-82-1	1,2,4-Trichlorobenzene	0.10	1.0		U
71-55-6	1,1,1-Trichloroethane	0.17	1.0		U
79-00-5	1,1,2-Trichloroethane	0.10	1.0		U
79-01-6	Trichloroethene	0.13	1.0		U
76-13-1	Trichlorotrifluoroethane	0.18	1.0		U
75-69-4	Trichlorofluoromethane	0.17	1.0		U
75-01-4	Vinyl chloride	0.18	1.0		U
1330-20-7	Xylene(total)	0.22	1.0		U

lw
11/29/09

ENVIRONMENTAL
Data Services, Inc.

VOLATILE ORGANIC COMPOUNDS
USEPA Region IV - Level IV Review

Site: MCB Camp Lejeune, TO-09 SDG #: LEJEUNE018

Client: CH2M HILL, Inc., Virginia Beach, Virginia Date: January 29, 2009

Laboratory: Empirical Laboratories, Nashville, Tennessee Reviewer: Nancy Weaver

EDS ID	Client Sample ID	Laboratory Sample ID	Matrix
1	IR78-GW12-08D	0811228-01	Water
2	MR08-IS386-08D	0811228-02	Soil
3	MR08-IS387-09D	0811228-03	Soil
4	MR08-IS384-09D	0811228-04	Soil
5	MR08-IS383-08D	0811228-05	Soil
6	MR08-IS382-08D	0811228-06	Soil
7	MR08-IS374-08D	0811228-07	Soil
8	MR08-IS374D-08D	0811228-08	Soil
9	MR08-IS375-08D	0811228-09	Soil
10	MR08-IS376-08D	0811228-10	Soil
10MS	MR08-IS376-08DMS	0811228-10MS	Soil
10MSD	MR08-IS376-08DMSD	0811228-10MSD	Soil
11	MR08-EB111608-1	0811228-12	Water
12	MR08-SS399-08D	0811228-13	Soil
13	MR08-SS398-08D	0811228-14	Soil
14	MR08-SS397-08D	0811228-15	Soil
15	MR08-SS396-08D	0811228-16	Soil
16	MR08-EB111708-1	0811228-17	Water
17	MR08-TW07-08D	0811228-18	Water
18	MR08-TW08-08D	0811228-19	Water

The USEPA "Contract Laboratory Program National Functional Guidelines for Organic Data Review," October 1999, and professional judgement were used in evaluating the data in this summary report.

Holding Times - All samples were analyzed within 14 days for preserved water and soil samples.

GC/MS Tuning - All of the BFB tunes in the initial and continuing calibrations met the percent relative abundance criteria.

Initial Calibration - The initial calibrations exhibited acceptable %RSD and mean RRF values.

Continuing Calibration - The continuing calibrations exhibited acceptable %D and RRF values except the following.

CCAL Date	Compound	%D/RRF	Qualifier	Affected Samples
11/24/08	Bromomethane	45.1%	J/UJ	1, 11, 16-18

Surrogates - All samples exhibited acceptable surrogate recoveries.

MS/MSD - The MS/MSD sample exhibited acceptable %R and RPD values except the following.

MS/MSD Sample ID	Compound	MS/MSD %R/RPD	Qualifier
10	Methyl acetate	16%/33%/74	J/UJ
	Chloromethane	Ok/Ok/50	None for RPD alone
	Dichlorodifluoromethane	Ok/Ok/36	None for RPD alone
	2-Hexanone	Ok/Ok/31	None for RPD alone

Laboratory Control Sample - The LCS samples exhibited acceptable %R values.

Internal Standard (IS) Area Performance - All internal standards met response and retention time (RT) criteria.

Method Blank - The method blanks exhibited the following contamination.

Blank ID	Compound	Conc.	Action Level	Qualifier	Affected Samples
V3BLK1124E	Methylene chloride	0.44 ug/L	4.4 ug/L	U	16
V1BLK1126E	Acetone	2.2 ug/kg	22 ug/kg	U	2, 4-6, 8, 9
	Methylene chloride	4.4 ug/kg	44 ug/kg	U	2-9, 12-15
V1BLK1205E	Acetone	2.3 ug/kg	23 ug/kg	None	All ND
	Methylene chloride	2.9 ug/kg	29 ug/kg	U	10

Trip, Field, Equipment Blank - Field QC results are summarized below.

Blank ID	Compound	Conc. ug/L	Action Level ug/L or ug/kg	Qualifier	Affected Samples
MR08-EB111008	Acetone	37	370	None	All ND or already qualified
	2-Butanone	9.0	90	None	All ND or already qualified
	1,2,4-Trichlorobenzene	0.12	0.60	None	All ND or already qualified

Blank ID	Compound	Conc. ug/L	Action Level ug/L or ug/kg	Qualifier	Affected Samples
MR08-EB111608-1	Acetone	2.5	25	None	All ND
	Bromodichloromethane	0.15	0.75	None	All ND
	Chloroform	1.4	7.0	U	7
	Toluene	0.81	4.05	U	13
	Xylene (total)	0.39	1.95	None	All ND
MR08-EB111708-1	Methylene chloride	0.62	6.2	None	All ND or already qualified
MR08-FB111108	Bromodichloromethane	0.25	1.25	None	All ND or already qualified
	Chloroform	2.2	11.0	None	All ND or already qualified
	Methylene chloride	0.55	5.5	None	All ND or already qualified
	Toluene	0.86	4.3	U	17, 18
MR08-FB112008	Acetone	4.5	45	None	All ND or already qualified
	Bromodichloromethane	0.24	1.2	None	All ND or already qualified
	Chloroform	1.9	9.5	None	All ND or already qualified
	Methylene chloride	0.53	5.3	None	All ND or already qualified
	Toluene	0.62	3.1	None	All ND or already qualified

Field Duplicates - Field duplicate results are summarized below.

Compound	MR08-IS374-08D ug/kg	MR08-IS374D-08D ug/kg	RPD	Qualifier
None	ND	ND	-	-

Tentatively Identified Compounds (TICs) - TICs were not reported.

Compound Quantitation - No discrepancies were identified.

FORM 1
VOLATILE ORGANICS ANALYSIS DATA SHEET

CLIENT SAMPLE NO.

IR78-GW12-08D

Lab Name: EMPIRICAL LABS Contract: CH2MHILL

Lab Code: NA Case No.: NA SAS No.: NA SDG No.: LEJEUNE018

Matrix: (soil/water) WATER Lab Sample ID: 0811228-01

Sample wt/vol: 5.000 (g/mL) ML Lab File ID: 1122801

Level: (low/med) LOW Date Sampled: 11/14/08 15:35

% Moisture: not dec. _____ Date Analyzed: 11/25/08 00:06

GC Column: RTX-VRX ID: 0.25 (mm) Dilution Factor: 1.0

Soil Extract Volume:_____(uL) Soil Aliquot Volume: _____(uL)

CONCENTRATION UNITS: (ug/L or ug/Kg) UG/L

CAS NO.	COMPOUND	MDL	RL	CONC	Q
67-64-1	Acetone	0.84	2.5		U
71-43-2	Benzene	0.11	1.0		U
75-27-4	Bromodichloromethane	0.10	1.0		U
75-25-2	Bromoform	0.10	1.0		U
74-83-9	Bromomethane	0.32	1.0		~~U~~ UJ
78-93-3	2-Butanone	1.0	3.0		U
75-15-0	Carbon disulfide	0.13	1.0		U
56-23-5	Carbon tetrachloride	0.15	1.0		U
108-90-7	Chlorobenzene	0.10	1.0		U
75-00-3	Chloroethane	0.18	1.0		U
67-66-3	Chloroform	0.11	1.0		U
74-87-3	Chloromethane	0.29	1.0		U
110-82-7	Cyclohexane	0.20	1.0		U
124-48-1	Dibromochloromethane	0.10	1.0		U
96-12-8	1,2-Dibromo-3-chloropropane	0.11	1.0		U
106-93-4	1,2-Dibromoethane	0.10	1.0		U
95-50-1	1,2-Dichlorobenzene	0.10	1.0		U
541-73-1	1,3-Dichlorobenzene	0.13	1.0		U
106-46-7	1,4-Dichlorobenzene	0.10	1.0		U
75-71-8	Dichlorodifluoromethane	0.22	1.0		U
75-34-3	1,1-Dichloroethane	0.12	1.0		U
107-06-2	1,2-Dichloroethane	0.10	1.0		U
75-35-4	1,1-Dichloroethene	0.15	1.0		U
156-59-2	cis-1,2-Dichloroethene	0.13	1.0		U
156-60-5	trans-1,2-Dichloroethene	0.13	1.0		U
78-87-5	1,2-Dichloropropane	0.10	1.0		U
10061-01-5	cis-1,3-Dichloropropene	0.11	1.0		U
10061-02-6	trans-1,3-Dichloropropene	0.10	1.0		U
100-41-4	Ethylbenzene	0.13	1.0		U
591-78-6	2-Hexanone	0.30	2.0		U
98-82-8	Isopropylbenzene	0.15	1.0		U
79-20-9	Methyl acetate	0.30	1.0		U
75-09-2	Methylene chloride	0.14	1.0		U
108-87-2	Methyl cyclohexane	0.17	1.0		U
1634-04-4	Methyl tert-butyl ether	0.10	1.0		U
108-10-1	4-Methyl-2-pentanone	0.29	2.0		U
100-42-5	Styrene	0.10	1.0		U
79-34-5	1,1,2,2-Tetrachloroethane	0.10	1.0		U
127-18-4	Tetrachloroethene	0.15	1.0		U

lw 1129/09

FORM 1
VOLATILE ORGANICS ANALYSIS DATA SHEET

CLIENT SAMPLE NO.

IR78-GW12-08D

Lab Name: EMPIRICAL LABS Contract: CH2MHILL

Lab Code: NA Case No.: NA SAS No.: NA SDG No.: LEJEUNE018

Matrix: (soil/water) WATER Lab Sample ID: 0811228-01

Sample wt/vol: 5.000 (g/mL) ML Lab File ID: 1122801

Level: (low/med) LOW Date Sampled: 11/14/08 15:35

% Moisture: not dec. _____ Date Analyzed: 11/25/08 00:06

GC Column: RTX-VRX ID: 0.25 (mm) Dilution Factor: 1.0

Soil Extract Volume:_____(uL) Soil Aliquot Volume: _____(uL)

CONCENTRATION UNITS: (ug/L or ug/Kg) UG/L

CAS NO.	COMPOUND	MDL	RL	CONC	Q
108-88-3	Toluene	0.10	1.0		U
120-82-1	1,2,4-Trichlorobenzene	0.10	1.0		U
71-55-6	1,1,1-Trichloroethane	0.17	1.0		U
79-00-5	1,1,2-Trichloroethane	0.10	1.0		U
79-01-6	Trichloroethene	0.13	1.0		U
76-13-1	Trichlorotrifluoroethane	0.18	1.0		U
75-69-4	Trichlorofluoromethane	0.17	1.0		U
75-01-4	Vinyl chloride	0.18	1.0		U
1330-20-7	Xylene(total)	0.22	1.0		U

MW
11/29/09

FORM 1
VOLATILE ORGANICS ANALYSIS DATA SHEET

CLIENT SAMPLE NO. 2

MR08-IS386-08D

Lab Name: EMPIRICAL LABS Contract: CH2MHILL

Lab Code: NA Case No.: NA SAS No.: NA SDG No.: LEJEUNE018

Matrix: (soil/water) SOIL Lab Sample ID: 0811228-02

Sample wt/vol: 4.9 (g/mL) G Lab File ID: 1122802A

Level: (low/med) LOW Date Sampled: 11/14/08 15:45

% Moisture: not dec. 12 Date Analyzed: 11/27/08 05:06

GC Column: RTX-VRX ID: 0.25 (mm) Dilution Factor: 1.0

Soil Extract Volume:_____(uL) Soil Aliquot Volume: _____(uL)

CONCENTRATION UNITS: (ug/L or ug/Kg) UG/KG

CAS NO.	COMPOUND	MDL	RL	CONC	Q
67-64-1	Acetone	2.3	12	124 ~~6.6~~	~~JB~~ BL
71-43-2	Benzene	0.55	12		U
75-27-4	Bromodichloromethane	0.35	12		U
75-25-2	Bromoform	1.2	12		U
74-83-9	Bromomethane	0.84	12		U
78-93-3	2-Butanone	1.6	12		U
75-15-0	Carbon disulfide	1.5	12		U
56-23-5	Carbon tetrachloride	1.0	12		U
108-90-7	Chlorobenzene	0.40	12		U
75-00-3	Chloroethane	1.3	12		U
67-66-3	Chloroform	0.64	12		U
74-87-3	Chloromethane	0.60	12		U
110-82-7	Cyclohexane	0.63	12		U
124-48-1	Dibromochloromethane	0.40	12		U
96-12-8	1,2-Dibromo-3-chloropropane	1.4	5.8		U
106-93-4	1,2-Dibromoethane	0.50	12		U
95-50-1	1,2-Dichlorobenzene	0.43	12		U
541-73-1	1,3-Dichlorobenzene	0.98	12		U
106-46-7	1,4-Dichlorobenzene	0.64	12		U
75-71-8	Dichlorodifluoromethane	1.3	12		U
75-34-3	1,1-Dichloroethane	0.63	12		U
107-06-2	1,2-Dichloroethane	0.54	12		U
75-35-4	1,1-Dichloroethene	1.4	12		U
156-59-2	cis-1,2-Dichloroethene	1.4	12		U
156-60-5	trans-1,2-Dichloroethene	1.3	12		U
78-87-5	1,2-Dichloropropane	0.54	12		U
10061-01-5	cis-1,3-Dichloropropene	0.58	12		U
10061-02-6	trans-1,3-Dichloropropene	0.37	12		U
100-41-4	Ethylbenzene	0.87	12		U
591-78-6	2-Hexanone	2.7	12		U
98-82-8	Isopropylbenzene	1.0	12		U
79-20-9	Methyl acetate	1.9	12		U
75-09-2	Methylene chloride	0.72	12	124 3.~~8~~	~~JB~~ B
108-87-2	Methyl cyclohexane	0.35	12		U
1634-04-4	Methyl tert-butyl ether	0.37	12		U
108-10-1	4-Methyl-2-pentanone	0.68	12		U
100-42-5	Styrene	0.41	12		U
79-34-5	1,1,2,2-Tetrachloroethane	0.50	12		U
127-18-4	Tetrachloroethene	1.1	12		U

FORM I VOA

lw 11/29/09

FORM 1
VOLATILE ORGANICS ANALYSIS DATA SHEET

CLIENT SAMPLE NO. 2

MR08-IS386-08D

Lab Name: EMPIRICAL LABS Contract: CH2MHILL

Lab Code: NA Case No.: NA SAS No.: NA SDG No.: LEJEUNE018

Matrix: (soil/water) SOIL Lab Sample ID: 0811228-02

Sample wt/vol: 4.9 (g/mL) G Lab File ID: 1122802A

Level: (low/med) LOW Date Sampled: 11/14/08 15:45

% Moisture: not dec. 12 Date Analyzed: 11/27/08 05:06

GC Column: RTX-VRX ID: 0.25 (mm) Dilution Factor: 1.0

Soil Extract Volume:_____(uL) Soil Aliquot Volume: _____(uL)

CONCENTRATION UNITS: (ug/L or ug/Kg) UG/KG

CAS NO.	COMPOUND	MDL	RL	CONC	Q
108-88-3	Toluene	1.0	12		U
120-82-1	1,2,4-Trichlorobenzene	0.21	12		U
71-55-6	1,1,1-Trichloroethane	1.0	12		U
79-00-5	1,1,2-Trichloroethane	0.41	12		U
79-01-6	Trichloroethene	0.99	12		U
76-13-1	Trichlorotrifluoroethane	0.64	12		U
75-69-4	Trichlorofluoromethane	1.1	12		U
75-01-4	Vinyl chloride	1.3	12		U
1330-20-7	Xylene(total)	0.81	12		U

MW 1/29/09

FORM 1
VOLATILE ORGANICS ANALYSIS DATA SHEET

CLIENT SAMPLE NO.

3

MR08-IS387-08D

Lab Name: EMPIRICAL LABS Contract: CH2MHILL

Lab Code: NA Case No.: NA SAS No.: NA SDG No.: LEJEUNE018

Matrix: (soil/water) SOIL Lab Sample ID: 0811228-03

Sample wt/vol: 5.0 (g/mL) G Lab File ID: 1122803A

Level: (low/med) LOW Date Sampled: 11/15/08 14:30

% Moisture: not dec. 11 Date Analyzed: 11/27/08 05:45

GC Column: RTX-VRX ID: 0.25 (mm) Dilution Factor: 1.0

Soil Extract Volume:_____(uL) Soil Aliquot Volume: _____(uL)

CONCENTRATION UNITS: (ug/L or ug/Kg) UG/KG

CAS NO.	COMPOUND	MDL	RL	CONC	Q
67-64-1	Acetone	2.2	11		U
71-43-2	Benzene	0.53	11		U
75-27-4	Bromodichloromethane	0.34	11		U
75-25-2	Bromoform	1.1	11		U
74-83-9	Bromomethane	0.81	11		U
78-93-3	2-Butanone	1.6	11		U
75-15-0	Carbon disulfide	1.5	11		U
56-23-5	Carbon tetrachloride	0.99	11		U
108-90-7	Chlorobenzene	0.38	11		U
75-00-3	Chloroethane	1.2	11		U
67-66-3	Chloroform	0.62	11		U
74-87-3	Chloromethane	0.58	11		U
110-82-7	Cyclohexane	0.61	11		U
124-48-1	Dibromochloromethane	0.38	11		U
96-12-8	1,2-Dibromo-3-chloropropane	1.4	5.6		U
106-93-4	1,2-Dibromoethane	0.48	11		U
95-50-1	1,2-Dichlorobenzene	0.42	11		U
541-73-1	1,3-Dichlorobenzene	0.94	11		U
106-46-7	1,4-Dichlorobenzene	0.62	11		U
75-71-8	Dichlorodifluoromethane	1.2	11		U
75-34-3	1,1-Dichloroethane	0.61	11		U
107-06-2	1,2-Dichloroethane	0.52	11		U
75-35-4	1,1-Dichloroethene	1.4	11		U
156-59-2	cis-1,2-Dichloroethene	1.4	11		U
156-60-5	trans-1,2-Dichloroethene	1.2	11		U
78-87-5	1,2-Dichloropropane	0.52	11		U
10061-01-5	cis-1,3-Dichloropropene	0.56	11		U
10061-02-6	trans-1,3-Dichloropropene	0.36	11		U
100-41-4	Ethylbenzene	0.84	11		U
591-78-6	2-Hexanone	2.6	11		U
98-82-8	Isopropylbenzene	0.99	11		U
79-20-9	Methyl acetate	1.8	11		U
75-09-2	Methylene chloride	0.70	11	114	~~2.5 JB~~ B
108-87-2	Methyl cyclohexane	0.34	11		U
1634-04-4	Methyl tert-butyl ether	0.36	11		U
108-10-1	4-Methyl-2-pentanone	0.65	11		U
100-42-5	Styrene	0.39	11		U
79-34-5	1,1,2,2-Tetrachloroethane	0.48	11		U
127-18-4	Tetrachloroethene	1.1	11		U

FORM I VOA

NW 11/29/09

FORM 1
VOLATILE ORGANICS ANALYSIS DATA SHEET

CLIENT SAMPLE NO. 3

MR08-IS387-08D

Lab Name: EMPIRICAL LABS Contract: CH2MHILL

Lab Code: NA Case No.: NA SAS No.: NA SDG No.: LEJEUNE018

Matrix: (soil/water) SOIL Lab Sample ID: 0811228-03

Sample wt/vol: 5.0 (g/mL) G Lab File ID: 1122803A

Level: (low/med) LOW Date Sampled: 11/15/08 14:30

% Moisture: not dec. 11 Date Analyzed: 11/27/08 05:45

GC Column: RTX-VRX ID: 0.25 (mm) Dilution Factor: 1.0

Soil Extract Volume:_____(uL) Soil Aliquot Volume: _____(uL)

CONCENTRATION UNITS: (ug/L or ug/Kg) UG/KG

CAS NO.	COMPOUND	MDL	RL	CONC	Q
108-88-3	Toluene	0.97	11		U
120-82-1	1,2,4-Trichlorobenzene	0.20	11		U
71-55-6	1,1,1-Trichloroethane	1.0	11		U
79-00-5	1,1,2-Trichloroethane	0.39	11		U
79-01-6	Trichloroethene	0.96	11		U
76-13-1	Trichlorotrifluoroethane	0.62	11		U
75-69-4	Trichlorofluoromethane	1.1	11		U
75-01-4	Vinyl chloride	1.2	11		U
1330-20-7	Xylene(total)	0.79	11		U

lw
11/29/09

FORM 1
VOLATILE ORGANICS ANALYSIS DATA SHEET

CLIENT SAMPLE NO. 4

MR08-IS384-08D

Lab Name: EMPIRICAL LABS Contract: CH2MHILL

Lab Code: NA Case No.: NA SAS No.: NA SDG No.: LEJEUNE018

Matrix: (soil/water) SOIL Lab Sample ID: 0811228-04

Sample wt/vol: 4.6 (g/mL) G Lab File ID: 1122804A

Level: (low/med) LOW Date Sampled: 11/15/08 15:50

% Moisture: not dec. 12 Date Analyzed: 11/27/08 06:24

GC Column: RTX-VRX ID: 0.25 (mm) Dilution Factor: 1.0

Soil Extract Volume:_____(uL) Soil Aliquot Volume: _____(uL)

CONCENTRATION UNITS: (ug/L or ug/Kg) UG/KG

CAS NO.	COMPOUND	MDL	RL	CONC	Q
67-64-1	Acetone	2.5	12	12U ~~4.5~~ ~~JB~~	BL
71-43-2	Benzene	0.58	12		U
75-27-4	Bromodichloromethane	0.37	12		U
75-25-2	Bromoform	1.2	12		U
74-83-9	Bromomethane	0.89	12		U
78-93-3	2-Butanone	1.7	12		U
75-15-0	Carbon disulfide	1.6	12		U
56-23-5	Carbon tetrachloride	1.1	12		U
108-90-7	Chlorobenzene	0.42	12		U
75-00-3	Chloroethane	1.4	12		U
67-66-3	Chloroform	0.68	12		U
74-87-3	Chloromethane	0.64	12		U
110-82-7	Cyclohexane	0.67	12		U
124-48-1	Dibromochloromethane	0.42	12		U
96-12-8	1,2-Dibromo-3-chloropropane	1.5	6.2		U
106-93-4	1,2-Dibromoethane	0.53	12		U
95-50-1	1,2-Dichlorobenzene	0.46	12		U
541-73-1	1,3-Dichlorobenzene	1.0	12		U
106-46-7	1,4-Dichlorobenzene	0.68	12		U
75-71-8	Dichlorodifluoromethane	1.4	12		U
75-34-3	1,1-Dichloroethane	0.67	12		U
107-06-2	1,2-Dichloroethane	0.57	12		U
75-35-4	1,1-Dichloroethene	1.5	12		U
156-59-2	cis-1,2-Dichloroethene	1.5	12		U
156-60-5	trans-1,2-Dichloroethene	1.4	12		U
78-87-5	1,2-Dichloropropane	0.57	12		U
10061-01-5	cis-1,3-Dichloropropene	0.62	12		U
10061-02-6	trans-1,3-Dichloropropene	0.40	12		U
100-41-4	Ethylbenzene	0.93	12		U
591-78-6	2-Hexanone	2.8	12		U
98-82-8	Isopropylbenzene	1.1	12		U
79-20-9	Methyl acetate	2.0	12		U
75-09-2	Methylene chloride	0.77	12	12U ~~3.2~~ ~~JB~~	B
108-87-2	Methyl cyclohexane	0.37	12		U
1634-04-4	Methyl tert-butyl ether	0.40	12		U
108-10-1	4-Methyl-2-pentanone	0.72	12		U
100-42-5	Styrene	0.43	12		U
79-34-5	1,1,2,2-Tetrachloroethane	0.53	12		U
127-18-4	Tetrachloroethene	1.2	12		U

lw 11/29/09

FORM 1
VOLATILE ORGANICS ANALYSIS DATA SHEET

CLIENT SAMPLE NO. 4

MR08-IS384-08D

Lab Name: EMPIRICAL LABS Contract: CH2MHILL

Lab Code: NA Case No.: NA SAS No.: NA SDG No.: LEJEUNE018

Matrix: (soil/water) SOIL Lab Sample ID: 0811228-04

Sample wt/vol: 4.6 (g/mL) G Lab File ID: 1122804A

Level: (low/med) LOW Date Sampled: 11/15/08 15:50

% Moisture: not dec. 12 Date Analyzed: 11/27/08 06:24

GC Column: RTX-VRX ID: 0.25 (mm) Dilution Factor: 1.0

Soil Extract Volume:_____(uL) Soil Aliquot Volume: _____(uL)

CONCENTRATION UNITS: (ug/L or ug/Kg) UG/KG

CAS NO.	COMPOUND	MDL	RL	CONC	Q
108-88-3	Toluene	1.1	12		U
120-82-1	1,2,4-Trichlorobenzene	0.22	12		U
71-55-6	1,1,1-Trichloroethane	1.1	12		U
79-00-5	1,1,2-Trichloroethane	0.43	12		U
79-01-6	Trichloroethene	1.0	12		U
76-13-1	Trichlorotrifluoroethane	0.68	12		U
75-69-4	Trichlorofluoromethane	1.2	12		U
75-01-4	Vinyl chloride	1.4	12		U
1330-20-7	Xylene(total)	0.86	12		U

AW 11/29/09

FORM 1
VOLATILE ORGANICS ANALYSIS DATA SHEET

CLIENT SAMPLE NO. 5

MR08-IS383-08D

Lab Name: EMPIRICAL LABS Contract: CH2MHILL

Lab Code: NA Case No.: NA SAS No.: NA SDG No.: LEJEUNE018

Matrix: (soil/water) SOIL Lab Sample ID: 0811228-05

Sample wt/vol: 5.4 (g/mL) G Lab File ID: 1122805A

Level: (low/med) LOW Date Sampled: 11/15/08 16:45

% Moisture: not dec. 8 Date Analyzed: 11/27/08 07:03

GC Column: RTX-VRX ID: 0.25 (mm) Dilution Factor: 1.0

Soil Extract Volume:_____(uL) Soil Aliquot Volume: _____(uL)

CONCENTRATION UNITS: (ug/L or ug/Kg) UG/KG

CAS NO.	COMPOUND	MDL	RL	CONC	Q	
67-64-1	Acetone	2.0	10	10U ~~3.5~~	~~JB~~	Bl
71-43-2	Benzene	0.47	10		U	
75-27-4	Bromodichloromethane	0.30	10		U	
75-25-2	Bromoform	1.0	10		U	
74-83-9	Bromomethane	0.73	10		U	
78-93-3	2-Butanone	1.4	10		U	
75-15-0	Carbon disulfide	1.3	10		U	
56-23-5	Carbon tetrachloride	0.89	10		U	
108-90-7	Chlorobenzene	0.34	10		U	
75-00-3	Chloroethane	1.1	10		U	
67-66-3	Chloroform	0.56	10		U	
74-87-3	Chloromethane	0.52	10		U	
110-82-7	Cyclohexane	0.54	10		U	
124-48-1	Dibromochloromethane	0.34	10		U	
96-12-8	1,2-Dibromo-3-chloropropane	1.2	5.0		U	
106-93-4	1,2-Dibromoethane	0.43	10		U	
95-50-1	1,2-Dichlorobenzene	0.37	10		U	
541-73-1	1,3-Dichlorobenzene	0.85	10		U	
106-46-7	1,4-Dichlorobenzene	0.56	10		U	
75-71-8	Dichlorodifluoromethane	1.1	10		U	
75-34-3	1,1-Dichloroethane	0.54	10		U	
107-06-2	1,2-Dichloroethane	0.46	10		U	
75-35-4	1,1-Dichloroethene	1.2	10		U	
156-59-2	cis-1,2-Dichloroethene	1.2	10		U	
156-60-5	trans-1,2-Dichloroethene	1.1	10		U	
78-87-5	1,2-Dichloropropane	0.46	10		U	
10061-01-5	cis-1,3-Dichloropropene	0.50	10		U	
10061-02-6	trans-1,3-Dichloropropene	0.32	10		U	
100-41-4	Ethylbenzene	0.76	10		U	
591-78-6	2-Hexanone	2.3	10		U	
98-82-8	Isopropylbenzene	0.89	10		U	
79-20-9	Methyl acetate	1.6	10		U	
75-09-2	Methylene chloride	0.63	10	10U ~~3.5~~	~~JB~~	Bl
108-87-2	Methyl cyclohexane	0.30	10		U	
1634-04-4	Methyl tert-butyl ether	0.32	10		U	
108-10-1	4-Methyl-2-pentanone	0.58	10		U	
100-42-5	Styrene	0.35	10		U	
79-34-5	1,1,2,2-Tetrachloroethane	0.43	10		U	
127-18-4	Tetrachloroethene	0.98	10		U	

lw 1/29/09

FORM 1
VOLATILE ORGANICS ANALYSIS DATA SHEET

CLIENT SAMPLE NO. 5

MR08-IS383-08D

Lab Name: EMPIRICAL LABS Contract: CH2MHILL

Lab Code: NA Case No.: NA SAS No.: NA SDG No.: LEJEUNE018

Matrix: (soil/water) SOIL Lab Sample ID: 0811228-05

Sample wt/vol: 5.4 (g/mL) G Lab File ID: 1122805A

Level: (low/med) LOW Date Sampled: 11/15/08 16:45

% Moisture: not dec. 8 Date Analyzed: 11/27/08 07:03

GC Column: RTX-VRX ID: 0.25 (mm) Dilution Factor: 1.0

Soil Extract Volume:_____(uL) Soil Aliquot Volume: _____(uL)

CONCENTRATION UNITS: (ug/L or ug/Kg) UG/KG

CAS NO.	COMPOUND	MDL	RL	CONC	Q
108-88-3	Toluene	0.87	10		U
120-82-1	1,2,4-Trichlorobenzene	0.18	10		U
71-55-6	1,1,1-Trichloroethane	0.91	10		U
79-00-5	1,1,2-Trichloroethane	0.35	10		U
79-01-6	Trichloroethene	0.86	10		U
76-13-1	Trichlorotrifluoroethane	0.56	10		U
75-69-4	Trichlorofluoromethane	0.96	10		U
75-01-4	Vinyl chloride	1.1	10		U
1330-20-7	Xylene(total)	0.71	10		U

lw
11/29/09

FORM 1
VOLATILE ORGANICS ANALYSIS DATA SHEET

CLIENT SAMPLE NO. 6

MR08-IS382-08D

Lab Name: EMPIRICAL LABS Contract: CH2MHILL

Lab Code: NA Case No.: NA SAS No.: NA SDG No.: LEJEUNE018

Matrix: (soil/water) SOIL Lab Sample ID: 0811228-06

Sample wt/vol: 4.3 (g/mL) G Lab File ID: 1122806A

Level: (low/med) LOW Date Sampled: 11/16/08 08:10

% Moisture: not dec. 7 Date Analyzed: 11/27/08 07:42

GC Column: RTX-VRX ID: 0.25 (mm) Dilution Factor: 1.0

Soil Extract Volume:_____(uL) Soil Aliquot Volume: _____(uL)

CONCENTRATION UNITS: (ug/L or ug/Kg) UG/KG

CAS NO.	COMPOUND	MDL	RL	CONC	Q	
67-64-1	Acetone	2.5	12	124	~~5.2 JB~~	BL
71-43-2	Benzene	0.59	12		U	
75-27-4	Bromodichloromethane	0.38	12		U	
75-25-2	Bromoform	1.2	12		U	
74-83-9	Bromomethane	0.90	12		U	
78-93-3	2-Butanone	1.8	12		U	
75-15-0	Carbon disulfide	1.6	12		U	
56-23-5	Carbon tetrachloride	1.1	12		U	
108-90-7	Chlorobenzene	0.42	12		U	
75-00-3	Chloroethane	1.4	12		U	
67-66-3	Chloroform	0.69	12		U	
74-87-3	Chloromethane	0.65	12		U	
110-82-7	Cyclohexane	0.68	12		U	
124-48-1	Dibromochloromethane	0.42	12		U	
96-12-8	1,2-Dibromo-3-chloropropane	1.5	6.2		U	
106-93-4	1,2-Dibromoethane	0.54	12		U	
95-50-1	1,2-Dichlorobenzene	0.46	12		U	
541-73-1	1,3-Dichlorobenzene	1.0	12		U	
106-46-7	1,4-Dichlorobenzene	0.69	12		U	
75-71-8	Dichlorodifluoromethane	1.4	12		U	
75-34-3	1,1-Dichloroethane	0.68	12		U	
107-06-2	1,2-Dichloroethane	0.58	12		U	
75-35-4	1,1-Dichloroethene	1.5	12		U	
156-59-2	cis-1,2-Dichloroethene	1.5	12		U	
156-60-5	trans-1,2-Dichloroethene	1.4	12		U	
78-87-5	1,2-Dichloropropane	0.58	12		U	
10061-01-5	cis-1,3-Dichloropropene	0.62	12		U	
10061-02-6	trans-1,3-Dichloropropene	0.40	12		U	
100-41-4	Ethylbenzene	0.94	12		U	
591-78-6	2-Hexanone	2.9	12		U	
98-82-8	Isopropylbenzene	1.1	12		U	
79-20-9	Methyl acetate	2.0	12		U	
75-09-2	Methylene chloride	0.78	12	124	~~4.2 JB~~	B
108-87-2	Methyl cyclohexane	0.38	12		U	
1634-04-4	Methyl tert-butyl ether	0.40	12		U	
108-10-1	4-Methyl-2-pentanone	0.72	12		U	
100-42-5	Styrene	0.44	12		U	
79-34-5	1,1,2,2-Tetrachloroethane	0.54	12		U	
127-18-4	Tetrachloroethene	1.2	12		U	

lw 1/29/09

FORM 1
VOLATILE ORGANICS ANALYSIS DATA SHEET

CLIENT SAMPLE NO. 6

MR08-IS382-08D

Lab Name: EMPIRICAL LABS Contract: CH2MHILL

Lab Code: NA Case No.: NA SAS No.: NA SDG No.: LEJEUNE018

Matrix: (soil/water) SOIL Lab Sample ID: 0811228-06

Sample wt/vol: 4.3 (g/mL) G Lab File ID: 1122806A

Level: (low/med) LOW Date Sampled: 11/16/08 08:10

% Moisture: not dec. 7 Date Analyzed: 11/27/08 07:42

GC Column: RTX-VRX ID: 0.25 (mm) Dilution Factor: 1.0

Soil Extract Volume:_____(uL) Soil Aliquot Volume: _____(uL)

CONCENTRATION UNITS: (ug/L or ug/Kg) UG/KG

CAS NO.	COMPOUND	MDL	RL	CONC	Q
108-88-3	Toluene	1.1	12		U
120-82-1	1,2,4-Trichlorobenzene	0.22	12		U
71-55-6	1,1,1-Trichloroethane	1.1	12		U
79-00-5	1,1,2-Trichloroethane	0.44	12		U
79-01-6	Trichloroethene	1.1	12		U
76-13-1	Trichlorotrifluoroethane	0.69	12		U
75-69-4	Trichlorofluoromethane	1.2	12		U
75-01-4	Vinyl chloride	1.4	12		U
1330-20-7	Xylene(total)	0.88	12		U

lw 11/29/09

FORM 1
VOLATILE ORGANICS ANALYSIS DATA SHEET

CLIENT SAMPLE NO. 7

MR08-IS374-08D

Lab Name: EMPIRICAL LABS Contract: CH2MHILL

Lab Code: NA Case No.: NA SAS No.: NA SDG No.: LEJEUNE018

Matrix: (soil/water) SOIL Lab Sample ID: 0811228-07

Sample wt/vol: 5.0 (g/mL) G Lab File ID: 1122807A

Level: (low/med) LOW Date Sampled: 11/16/08 09:05

% Moisture: not dec. 12 Date Analyzed: 11/27/08 08:21

GC Column: RTX-VRX ID: 0.25 (mm) Dilution Factor: 1.0

Soil Extract Volume:_____(uL) Soil Aliquot Volume: _____(uL)

CONCENTRATION UNITS: (ug/L or ug/Kg) UG/KG

CAS NO.	COMPOUND	MDL	RL	CONC	Q	
67-64-1	Acetone	2.3	11		U	
71-43-2	Benzene	0.53	11		U	
75-27-4	Bromodichloromethane	0.34	11		U	
75-25-2	Bromoform	1.1	11		U	
74-83-9	Bromomethane	0.82	11		U	
78-93-3	2-Butanone	1.6	11		U	
75-15-0	Carbon disulfide	1.5	11		U	
56-23-5	Carbon tetrachloride	1.00	11		U	
108-90-7	Chlorobenzene	0.39	11		U	
75-00-3	Chloroethane	1.2	11		U	
67-66-3	Chloroform	0.62	11	11U ~~0.71~~	~~J~~	BL
74-87-3	Chloromethane	0.59	11		U	
110-82-7	Cyclohexane	0.61	11		U	
124-48-1	Dibromochloromethane	0.39	11		U	
96-12-8	1,2-Dibromo-3-chloropropane	1.4	5.7		U	
106-93-4	1,2-Dibromoethane	0.49	11		U	
95-50-1	1,2-Dichlorobenzene	0.42	11		U	
541-73-1	1,3-Dichlorobenzene	0.95	11		U	
106-46-7	1,4-Dichlorobenzene	0.62	11		U	
75-71-8	Dichlorodifluoromethane	1.2	11		U	
75-34-3	1,1-Dichloroethane	0.61	11		U	
107-06-2	1,2-Dichloroethane	0.52	11		U	
75-35-4	1,1-Dichloroethene	1.4	11		U	
156-59-2	cis-1,2-Dichloroethene	1.4	11		U	
156-60-5	trans-1,2-Dichloroethene	1.2	11		U	
78-87-5	1,2-Dichloropropane	0.52	11		U	
10061-01-5	cis-1,3-Dichloropropene	0.57	11		U	
10061-02-6	trans-1,3-Dichloropropene	0.36	11		U	
100-41-4	Ethylbenzene	0.85	11		U	
591-78-6	2-Hexanone	2.6	11		U	
98-82-8	Isopropylbenzene	1.00	11		U	
79-20-9	Methyl acetate	1.8	11		U	
75-09-2	Methylene chloride	0.70	11	11U ~~3.6~~	~~JB~~	B
108-87-2	Methyl cyclohexane	0.34	11		U	
1634-04-4	Methyl tert-butyl ether	0.36	11		U	
108-10-1	4-Methyl-2-pentanone	0.66	11		U	
100-42-5	Styrene	0.40	11		U	
79-34-5	1,1,2,2-Tetrachloroethane	0.49	11		U	
127-18-4	Tetrachloroethene	1.1	11		U	

FORM I VOA

lw 11/29/09

FORM 1
VOLATILE ORGANICS ANALYSIS DATA SHEET

CLIENT SAMPLE NO.

7

MR08-IS374-08D

Lab Name: EMPIRICAL LABS Contract: CH2MHILL

Lab Code: NA Case No.: NA SAS No.: NA SDG No.: LEJEUNE018

Matrix: (soil/water) SOIL Lab Sample ID: 0811228-07

Sample wt/vol: 5.0 (g/mL) G Lab File ID: 1122807A

Level: (low/med) LOW Date Sampled: 11/16/08 09:05

% Moisture: not dec. 12 Date Analyzed: 11/27/08 08:21

GC Column: RTX-VRX ID: 0.25 (mm) Dilution Factor: 1.0

Soil Extract Volume:_____(uL) Soil Aliquot Volume: _____(uL)

CONCENTRATION UNITS: (ug/L or ug/Kg) UG/KG

CAS NO.	COMPOUND	MDL	RL	CONC	Q
108-88-3	Toluene	0.98	11		U
120-82-1	1,2,4-Trichlorobenzene	0.20	11		U
71-55-6	1,1,1-Trichloroethane	1.0	11		U
79-00-5	1,1,2-Trichloroethane	0.40	11		U
79-01-6	Trichloroethene	0.96	11		U
76-13-1	Trichlorotrifluoroethane	0.62	11		U
75-69-4	Trichlorofluoromethane	1.1	11		U
75-01-4	Vinyl chloride	1.2	11		U
1330-20-7	Xylene(total)	0.80	11		U

lw 11/29/09

FORM 1
VOLATILE ORGANICS ANALYSIS DATA SHEET

CLIENT SAMPLE NO. 8

MR08-IS374D-08D

Lab Name: EMPIRICAL LABS Contract: CH2MHILL

Lab Code: NA Case No.: NA SAS No.: NA SDG No.: LEJEUNE018

Matrix: (soil/water) SOIL Lab Sample ID: 0811228-08

Sample wt/vol: 5.0 (g/mL) G Lab File ID: 1122808A

Level: (low/med) LOW Date Sampled: 11/16/08 09:05

% Moisture: not dec. 19 Date Analyzed: 11/27/08 09:01

GC Column: RTX-VRX ID: 0.25 (mm) Dilution Factor: 1.0

Soil Extract Volume:_____(uL) Soil Aliquot Volume: _____(uL)

CONCENTRATION UNITS: (ug/L or ug/Kg) UG/KG

CAS NO.	COMPOUND	MDL	RL	CONC	Q	
67-64-1	Acetone	2.5	12	12U ~~6.1~~	~~JB~~	BL
71-43-2	Benzene	0.58	12		U	
75-27-4	Bromodichloromethane	0.37	12		U	
75-25-2	Bromoform	1.2	12		U	
74-83-9	Bromomethane	0.90	12		U	
78-93-3	2-Butanone	1.7	12		U	
75-15-0	Carbon disulfide	1.6	12		U	
56-23-5	Carbon tetrachloride	1.1	12		U	
108-90-7	Chlorobenzene	0.42	12		U	
75-00-3	Chloroethane	1.4	12		U	
67-66-3	Chloroform	0.68	12		U	
74-87-3	Chloromethane	0.65	12		U	
110-82-7	Cyclohexane	0.67	12		U	
124-48-1	Dibromochloromethane	0.42	12		U	
96-12-8	1,2-Dibromo-3-chloropropane	1.5	6.2		U	
106-93-4	1,2-Dibromoethane	0.54	12		U	
95-50-1	1,2-Dichlorobenzene	0.46	12		U	
541-73-1	1,3-Dichlorobenzene	1.0	12		U	
106-46-7	1,4-Dichlorobenzene	0.68	12		U	
75-71-8	Dichlorodifluoromethane	1.4	12		U	
75-34-3	1,1-Dichloroethane	0.67	12		U	
107-06-2	1,2-Dichloroethane	0.57	12		U	
75-35-4	1,1-Dichloroethene	1.5	12		U	
156-59-2	cis-1,2-Dichloroethene	1.5	12		U	
156-60-5	trans-1,2-Dichloroethene	1.4	12		U	
78-87-5	1,2-Dichloropropane	0.57	12		U	
10061-01-5	cis-1,3-Dichloropropene	0.62	12		U	
10061-02-6	trans-1,3-Dichloropropene	0.40	12		U	
100-41-4	Ethylbenzene	0.93	12		U	
591-78-6	2-Hexanone	2.9	12		U	
98-82-8	Isopropylbenzene	1.1	12		U	
79-20-9	Methyl acetate	2.0	12		U	
75-09-2	Methylene chloride	0.77	12	12U ~~3.6~~	~~JB~~	B
108-87-2	Methyl cyclohexane	0.37	12		U	
1634-04-4	Methyl tert-butyl ether	0.40	12		U	
108-10-1	4-Methyl-2-pentanone	0.72	12		U	
100-42-5	Styrene	0.44	12		U	
79-34-5	1,1,2,2-Tetrachloroethane	0.54	12		U	
127-18-4	Tetrachloroethene	1.2	12		U	

FORM I VOA

MW
11/29/09

8

FORM 1
VOLATILE ORGANICS ANALYSIS DATA SHEET

CLIENT SAMPLE NO.

MR08-IS374D-08D

Lab Name: EMPIRICAL LABS Contract: CH2MHILL

Lab Code: NA Case No.: NA SAS No.: NA SDG No.: LEJEUNE018

Matrix: (soil/water) SOIL Lab Sample ID: 0811228-08

Sample wt/vol: 5.0 (g/mL) G Lab File ID: 1122808A

Level: (low/med) LOW Date Sampled: 11/16/08 09:05

% Moisture: not dec. 19 Date Analyzed: 11/27/08 09:01

GC Column: RTX-VRX ID: 0.25 (mm) Dilution Factor: 1.0

Soil Extract Volume:_____(uL) Soil Aliquot Volume: _____(uL)

CONCENTRATION UNITS: (ug/L or ug/Kg) UG/KG

CAS NO.	COMPOUND	MDL	RL	CONC	Q
108-88-3	Toluene	1.1	12		U
120-82-1	1,2,4-Trichlorobenzene	0.22	12		U
71-55-6	1,1,1-Trichloroethane	1.1	12		U
79-00-5	1,1,2-Trichloroethane	0.44	12		U
79-01-6	Trichloroethene	1.0	12		U
76-13-1	Trichlorotrifluoroethane	0.68	12		U
75-69-4	Trichlorofluoromethane	1.2	12		U
75-01-4	Vinyl chloride	1.4	12		U
1330-20-7	Xylene(total)	0.87	12		U

lw
11/29/09

FORM 1
VOLATILE ORGANICS ANALYSIS DATA SHEET

CLIENT SAMPLE NO. 9

MR08-IS375-08D

Lab Name: EMPIRICAL LABS Contract: CH2MHILL

Lab Code: NA Case No.: NA SAS No.: NA SDG No.: LEJEUNE018

Matrix: (soil/water) SOIL Lab Sample ID: 0811228-09

Sample wt/vol: 5.2 (g/mL) G Lab File ID: 1122809A

Level: (low/med) LOW Date Sampled: 11/16/08 10:30

% Moisture: not dec. 10 Date Analyzed: 11/27/08 09:39

GC Column: RTX-VRX ID: 0.25 (mm) Dilution Factor: 1.0

Soil Extract Volume:_____(uL) Soil Aliquot Volume: _____(uL)

CONCENTRATION UNITS: (ug/L or ug/Kg) UG/KG

CAS NO.	COMPOUND	MDL	RL	CONC	Q
67-64-1	Acetone	2.2	11	114 3.2 ~~JB~~	B
71-43-2	Benzene	0.51	11		U
75-27-4	Bromodichloromethane	0.32	11		U
75-25-2	Bromoform	1.1	11		U
74-83-9	Bromomethane	0.78	11		U
78-93-3	2-Butanone	1.5	11		U
75-15-0	Carbon disulfide	1.4	11		U
56-23-5	Carbon tetrachloride	0.95	11		U
108-90-7	Chlorobenzene	0.37	11		U
75-00-3	Chloroethane	1.2	11		U
67-66-3	Chloroform	0.59	11		U
74-87-3	Chloromethane	0.56	11		U
110-82-7	Cyclohexane	0.58	11		U
124-48-1	Dibromochloromethane	0.37	11		U
96-12-8	1,2-Dibromo-3-chloropropane	1.3	5.4		U
106-93-4	1,2-Dibromoethane	0.46	11		U
95-50-1	1,2-Dichlorobenzene	0.40	11		U
541-73-1	1,3-Dichlorobenzene	0.91	11		U
106-46-7	1,4-Dichlorobenzene	0.59	11		U
75-71-8	Dichlorodifluoromethane	1.2	11		U
75-34-3	1,1-Dichloroethane	0.58	11		U
107-06-2	1,2-Dichloroethane	0.50	11		U
75-35-4	1,1-Dichloroethene	1.3	11		U
156-59-2	cis-1,2-Dichloroethene	1.3	11		U
156-60-5	trans-1,2-Dichloroethene	1.2	11		U
78-87-5	1,2-Dichloropropane	0.50	11		U
10061-01-5	cis-1,3-Dichloropropene	0.54	11		U
10061-02-6	trans-1,3-Dichloropropene	0.34	11		U
100-41-4	Ethylbenzene	0.81	11		U
591-78-6	2-Hexanone	2.5	11		U
98-82-8	Isopropylbenzene	0.95	11		U
79-20-9	Methyl acetate	1.7	11		U
75-09-2	Methylene chloride	0.67	11	114 3.0 ~~JB~~	B
108-87-2	Methyl cyclohexane	0.32	11		U
1634-04-4	Methyl tert-butyl ether	0.34	11		U
108-10-1	4-Methyl-2-pentanone	0.63	11		U
100-42-5	Styrene	0.38	11		U
79-34-5	1,1,2,2-Tetrachloroethane	0.46	11		U
127-18-4	Tetrachloroethene	1.0	11		U

FORM I VOA

lw
11/29/09

FORM 1
VOLATILE ORGANICS ANALYSIS DATA SHEET

CLIENT SAMPLE NO. 9

MR08-IS375-08D

Lab Name: EMPIRICAL LABS Contract: CH2MHILL

Lab Code: NA Case No.: NA SAS No.: NA SDG No.: LEJEUNE018

Matrix: (soil/water) SOIL Lab Sample ID: 0811228-09

Sample wt/vol: 5.2 (g/mL) G Lab File ID: 1122809A

Level: (low/med) LOW Date Sampled: 11/16/08 10:30

% Moisture: not dec. 10 Date Analyzed: 11/27/08 09:39

GC Column: RTX-VRX ID: 0.25 (mm) Dilution Factor: 1.0

Soil Extract Volume:_____(uL) Soil Aliquot Volume: _____(uL)

CONCENTRATION UNITS: (ug/L or ug/Kg) UG/KG

CAS NO.	COMPOUND	MDL	RL	CONC	Q
108-88-3	Toluene	0.93	11		U
120-82-1	1,2,4-Trichlorobenzene	0.19	11		U
71-55-6	1,1,1-Trichloroethane	0.97	11		U
79-00-5	1,1,2-Trichloroethane	0.38	11		U
79-01-6	Trichloroethene	0.92	11		U
76-13-1	Trichlorotrifluoroethane	0.59	11		U
75-69-4	Trichlorofluoromethane	1.0	11		U
75-01-4	Vinyl chloride	1.2	11		U
1330-20-7	Xylene(total)	0.76	11		U

lw 11/29/09

FORM 1
VOLATILE ORGANICS ANALYSIS DATA SHEET

CLIENT SAMPLE NO. 10

MR08-IS376-08D

Lab Name: EMPIRICAL LABS Contract: CH2MHILL

Lab Code: NA Case No.: NA SAS No.: NA SDG No.: LEJEUNE018

Matrix: (soil/water) SOIL Lab Sample ID: 0811228-10

Sample wt/vol: 5.1 (g/mL) G Lab File ID: 1122810A

Level: (low/med) LOW Date Sampled: 11/16/08 11:05

% Moisture: not dec. 7 Date Analyzed: 11/27/08 10:18

GC Column: RTX-VRX ID: 0.25 (mm) Dilution Factor: 1.0

Soil Extract Volume:_____(uL) Soil Aliquot Volume: _____(uL)

CONCENTRATION UNITS: (ug/L or ug/Kg) UG/KG

CAS NO.	COMPOUND	MDL	RL	CONC	Q
67-64-1	Acetone	2.1	11		U
71-43-2	Benzene	0.50	11		U
75-27-4	Bromodichloromethane	0.32	11		U
75-25-2	Bromoform	1.1	11		U
74-83-9	Bromomethane	0.76	11		U
78-93-3	2-Butanone	1.5	11		U
75-15-0	Carbon disulfide	1.4	11		U
56-23-5	Carbon tetrachloride	0.93	11		U
108-90-7	Chlorobenzene	0.36	11		U
75-00-3	Chloroethane	1.2	11		U
67-66-3	Chloroform	0.58	11		U
74-87-3	Chloromethane	0.55	11		U
110-82-7	Cyclohexane	0.57	11		U
124-48-1	Dibromochloromethane	0.36	11		U
96-12-8	1,2-Dibromo-3-chloropropane	1.3	5.3		U
106-93-4	1,2-Dibromoethane	0.46	11		U
95-50-1	1,2-Dichlorobenzene	0.39	11		U
541-73-1	1,3-Dichlorobenzene	0.89	11		U
106-46-7	1,4-Dichlorobenzene	0.58	11		U
75-71-8	Dichlorodifluoromethane	1.2	11		U
75-34-3	1,1-Dichloroethane	0.57	11		U
107-06-2	1,2-Dichloroethane	0.49	11		U
75-35-4	1,1-Dichloroethene	1.3	11		U
156-59-2	cis-1,2-Dichloroethene	1.3	11		U
156-60-5	trans-1,2-Dichloroethene	1.2	11		U
78-87-5	1,2-Dichloropropane	0.49	11		U
10061-01-5	cis-1,3-Dichloropropene	0.53	11		U
10061-02-6	trans-1,3-Dichloropropene	0.34	11		U
100-41-4	Ethylbenzene	0.80	11		U
591-78-6	2-Hexanone	2.4	11		U
98-82-8	Isopropylbenzene	0.93	11		U
79-20-9	Methyl acetate	1.7	11		U
75-09-2	Methylene chloride	0.66	11	11u ~~2.8~~ ~~JB~~	U UJ
108-87-2	Methyl cyclohexane	0.32	11		U
1634-04-4	Methyl tert-butyl ether	0.34	11		U
108-10-1	4-Methyl-2-pentanone	0.62	11		U
100-42-5	Styrene	0.37	11		U
79-34-5	1,1,2,2-Tetrachloroethane	0.46	11		U
127-18-4	Tetrachloroethene	1.0	11		U

FORM I VOA

lw 11/29/09

FORM 1
VOLATILE ORGANICS ANALYSIS DATA SHEET

CLIENT SAMPLE NO. 10

MR08-IS376-08D

Lab Name: EMPIRICAL LABS Contract: CH2MHILL

Lab Code: NA Case No.: NA SAS No.: NA SDG No.: LEJEUNE018

Matrix: (soil/water) SOIL Lab Sample ID: 0811228-10

Sample wt/vol: 5.1 (g/mL) G Lab File ID: 1122810A

Level: (low/med) LOW Date Sampled: 11/16/08 11:05

% Moisture: not dec. 7 Date Analyzed: 11/27/08 10:18

GC Column: RTX-VRX ID: 0.25 (mm) Dilution Factor: 1.0

Soil Extract Volume:_____(uL) Soil Aliquot Volume: _____(uL)

CONCENTRATION UNITS: (ug/L or ug/Kg) UG/KG

CAS NO.	COMPOUND	MDL	RL	CONC	Q
108-88-3	Toluene	0.91	11		U
120-82-1	1,2,4-Trichlorobenzene	0.19	11		U
71-55-6	1,1,1-Trichloroethane	0.96	11		U
79-00-5	1,1,2-Trichloroethane	0.37	11		U
79-01-6	Trichloroethene	0.90	11		U
76-13-1	Trichlorotrifluoroethane	0.58	11		U
75-69-4	Trichlorofluoromethane	1.0	11		U
75-01-4	Vinyl chloride	1.2	11		U
1330-20-7	Xylene(total)	0.74	11		U

LW
1/29/09

FORM 1
VOLATILE ORGANICS ANALYSIS DATA SHEET

CLIENT SAMPLE NO. 11

MR08-EB111608-1

Lab Name: EMPIRICAL LABS Contract: CH2MHILL

Lab Code: NA Case No.: NA SAS No.: NA SDG No.: LEJEUNE018

Matrix: (soil/water) WATER Lab Sample ID: 0811228-12

Sample wt/vol: 5.000 (g/mL) ML Lab File ID: 1122812

Level: (low/med) LOW Date Sampled: 11/16/08 14:45

% Moisture: not dec. _____ Date Analyzed: 11/25/08 00:35

GC Column: RTX-VRX ID: 0.25 (mm) Dilution Factor: 1.0

Soil Extract Volume:_____(uL) Soil Aliquot Volume: _____(uL)

CONCENTRATION UNITS: (ug/L or ug/Kg) UG/L

CAS NO.	COMPOUND	MDL	RL	CONC	Q
67-64-1	Acetone	0.84	2.5	2.5	J
71-43-2	Benzene	0.11	1.0		U
75-27-4	Bromodichloromethane	0.10	1.0	0.15	J
75-25-2	Bromoform	0.10	1.0		U
74-83-9	Bromomethane	0.32	1.0		~~U~~ UJ CG
78-93-3	2-Butanone	1.0	3.0		U
75-15-0	Carbon disulfide	0.13	1.0		U
56-23-5	Carbon tetrachloride	0.15	1.0		U
108-90-7	Chlorobenzene	0.10	1.0		U
75-00-3	Chloroethane	0.18	1.0		U
67-66-3	Chloroform	0.11	1.0	1.4	
74-87-3	Chloromethane	0.29	1.0		U
110-82-7	Cyclohexane	0.20	1.0		U
124-48-1	Dibromochloromethane	0.10	1.0		U
96-12-8	1,2-Dibromo-3-chloropropane	0.11	1.0		U
106-93-4	1,2-Dibromoethane	0.10	1.0		U
95-50-1	1,2-Dichlorobenzene	0.10	1.0		U
541-73-1	1,3-Dichlorobenzene	0.13	1.0		U
106-46-7	1,4-Dichlorobenzene	0.10	1.0		U
75-71-8	Dichlorodifluoromethane	0.22	1.0		U
75-34-3	1,1-Dichloroethane	0.12	1.0		U
107-06-2	1,2-Dichloroethane	0.10	1.0		U
75-35-4	1,1-Dichloroethene	0.15	1.0		U
156-59-2	cis-1,2-Dichloroethene	0.13	1.0		U
156-60-5	trans-1,2-Dichloroethene	0.13	1.0		U
78-87-5	1,2-Dichloropropane	0.10	1.0		U
10061-01-5	cis-1,3-Dichloropropene	0.11	1.0		U
10061-02-6	trans-1,3-Dichloropropene	0.10	1.0		U
100-41-4	Ethylbenzene	0.13	1.0		U
591-78-6	2-Hexanone	0.30	2.0		U
98-82-8	Isopropylbenzene	0.15	1.0		U
79-20-9	Methyl acetate	0.30	1.0		U
75-09-2	Methylene chloride	0.14	1.0		U
108-87-2	Methyl cyclohexane	0.17	1.0		U
1634-04-4	Methyl tert-butyl ether	0.10	1.0		U
108-10-1	4-Methyl-2-pentanone	0.29	2.0		U
100-42-5	Styrene	0.10	1.0		U
79-34-5	1,1,2,2-Tetrachloroethane	0.10	1.0		U
127-18-4	Tetrachloroethene	0.15	1.0		U

lw 1129/09

FORM 1
VOLATILE ORGANICS ANALYSIS DATA SHEET

CLIENT SAMPLE NO.

MR08-EB111608-1

Lab Name: EMPIRICAL LABS Contract: CH2MHILL

Lab Code: NA Case No.: NA SAS No.: NA SDG No.: LEJEUNE018

Matrix: (soil/water) WATER Lab Sample ID: 0811228-12

Sample wt/vol: 5.000 (g/mL) ML Lab File ID: 1122812

Level: (low/med) LOW Date Sampled: 11/16/08 14:45

% Moisture: not dec. _____ Date Analyzed: 11/25/08 00:35

GC Column: RTX-VRX ID: 0.25 (mm) Dilution Factor: 1.0

Soil Extract Volume:_____(uL) Soil Aliquot Volume: _____(uL)

CONCENTRATION UNITS: (ug/L or ug/Kg) UG/L

CAS NO.	COMPOUND	MDL	RL	CONC	Q
108-88-3	Toluene	0.10	1.0	0.81	J
120-82-1	1,2,4-Trichlorobenzene	0.10	1.0		U
71-55-6	1,1,1-Trichloroethane	0.17	1.0		U
79-00-5	1,1,2-Trichloroethane	0.10	1.0		U
79-01-6	Trichloroethene	0.13	1.0		U
76-13-1	Trichlorotrifluoroethane	0.18	1.0		U
75-69-4	Trichlorofluoromethane	0.17	1.0		U
75-01-4	Vinyl chloride	0.18	1.0		U
1330-20-7	Xylene(total)	0.22	1.0	0.39	J

lwd
1129/09

FORM 1
VOLATILE ORGANICS ANALYSIS DATA SHEET

CLIENT SAMPLE NO. 12

MR08-SS399-08D

Lab Name: EMPIRICAL LABS Contract: CH2MHILL

Lab Code: NA Case No.: NA SAS No.: NA SDG No.: LEJEUNE018

Matrix: (soil/water) SOIL Lab Sample ID: 0811228-13

Sample wt/vol: 4.8 (g/mL) G Lab File ID: 1122813A

Level: (low/med) LOW Date Sampled: 11/16/08 12:40

% Moisture: not dec. 17 Date Analyzed: 11/27/08 10:57

GC Column: RTX-VRX ID: 0.25 (mm) Dilution Factor: 1.0

Soil Extract Volume:_____(uL) Soil Aliquot Volume: _____(uL)

CONCENTRATION UNITS: (ug/L or ug/Kg) UG/KG

CAS NO.	COMPOUND	MDL	RL	CONC	Q
67-64-1	Acetone	2.5	12	160	~~B~~
71-43-2	Benzene	0.59	12		U
75-27-4	Bromodichloromethane	0.37	12		U
75-25-2	Bromoform	1.2	12		U
74-83-9	Bromomethane	0.90	12		U
78-93-3	2-Butanone	1.7	12	4.4	J
75-15-0	Carbon disulfide	1.6	12		U
56-23-5	Carbon tetrachloride	1.1	12		U
108-90-7	Chlorobenzene	0.42	12		U
75-00-3	Chloroethane	1.4	12		U
67-66-3	Chloroform	0.69	12		U
74-87-3	Chloromethane	0.65	12		U
110-82-7	Cyclohexane	0.67	12		U
124-48-1	Dibromochloromethane	0.42	12		U
96-12-8	1,2-Dibromo-3-chloropropane	1.5	6.2		U
106-93-4	1,2-Dibromoethane	0.54	12		U
95-50-1	1,2-Dichlorobenzene	0.46	12		U
541-73-1	1,3-Dichlorobenzene	1.0	12		U
106-46-7	1,4-Dichlorobenzene	0.69	12		U
75-71-8	Dichlorodifluoromethane	1.4	12		U
75-34-3	1,1-Dichloroethane	0.67	12		U
107-06-2	1,2-Dichloroethane	0.57	12		U
75-35-4	1,1-Dichloroethene	1.5	12		U
156-59-2	cis-1,2-Dichloroethene	1.5	12		U
156-60-5	trans-1,2-Dichloroethene	1.4	12		U
78-87-5	1,2-Dichloropropane	0.57	12		U
10061-01-5	cis-1,3-Dichloropropene	0.62	12		U
10061-02-6	trans-1,3-Dichloropropene	0.40	12		U
100-41-4	Ethylbenzene	0.94	12		U
591-78-6	2-Hexanone	2.9	12		U
98-82-8	Isopropylbenzene	1.1	12		U
79-20-9	Methyl acetate	2.0	12	28	
75-09-2	Methylene chloride	0.77	12	124 ~~3.9~~	~~JB~~ B
108-87-2	Methyl cyclohexane	0.37	12		U
1634-04-4	Methyl tert-butyl ether	0.40	12		U
108-10-1	4-Methyl-2-pentanone	0.72	12		U
100-42-5	Styrene	0.44	12		U
79-34-5	1,1,2,2-Tetrachloroethane	0.54	12		U
127-18-4	Tetrachloroethene	1.2	12		U

lw 1129/09

FORM 1
VOLATILE ORGANICS ANALYSIS DATA SHEET

CLIENT SAMPLE NO. 12

MR08-SS399-08D

Lab Name: EMPIRICAL LABS Contract: CH2MHILL

Lab Code: NA Case No.: NA SAS No.: NA SDG No.: LEJEUNE018

Matrix: (soil/water) SOIL Lab Sample ID: 0811228-13

Sample wt/vol: 4.8 (g/mL) G Lab File ID: 1122813A

Level: (low/med) LOW Date Sampled: 11/16/08 12:40

% Moisture: not dec. 17 Date Analyzed: 11/27/08 10:57

GC Column: RTX-VRX ID: 0.25 (mm) Dilution Factor: 1.0

Soil Extract Volume:_____(uL) Soil Aliquot Volume: _____(uL)

CONCENTRATION UNITS: (ug/L or ug/Kg) UG/KG

CAS NO.	COMPOUND	MDL	RL	CONC	Q
108-88-3	Toluene	1.1	12		U
120-82-1	1,2,4-Trichlorobenzene	0.22	12		U
71-55-6	1,1,1-Trichloroethane	1.1	12		U
79-00-5	1,1,2-Trichloroethane	0.44	12		U
79-01-6	Trichloroethene	1.1	12		U
76-13-1	Trichlorotrifluoroethane	0.69	12		U
75-69-4	Trichlorofluoromethane	1.2	12		U
75-01-4	Vinyl chloride	1.4	12		U
1330-20-7	Xylene(total)	0.87	12		U

lw 12/29/09

FORM 1
VOLATILE ORGANICS ANALYSIS DATA SHEET

CLIENT SAMPLE NO. 13

MR08-SS398-08D

Lab Name: EMPIRICAL LABS Contract: CH2MHILL

Lab Code: NA Case No.: NA SAS No.: NA SDG No.: LEJEUNE018

Matrix: (soil/water) SOIL Lab Sample ID: 0811228-14

Sample wt/vol: 5.2 (g/mL) G Lab File ID: 1122814A

Level: (low/med) LOW Date Sampled: 11/16/08 13:00

% Moisture: not dec. 15 Date Analyzed: 11/27/08 11:36

GC Column: RTX-VRX ID: 0.25 (mm) Dilution Factor: 1.0

Soil Extract Volume:_____(uL) Soil Aliquot Volume: _____(uL)

CONCENTRATION UNITS: (ug/L or ug/Kg) UG/KG

CAS NO.	COMPOUND	MDL	RL	CONC	Q
67-64-1	Acetone	2.2	11	92	~~B~~
71-43-2	Benzene	0.53	11	1.8	J
75-27-4	Bromodichloromethane	0.34	11		U
75-25-2	Bromoform	1.1	11		U
74-83-9	Bromomethane	0.81	11		U
78-93-3	2-Butanone	1.6	11	5.5	J
75-15-0	Carbon disulfide	1.4	11	3.8	J
56-23-5	Carbon tetrachloride	0.99	11		U
108-90-7	Chlorobenzene	0.38	11		U
75-00-3	Chloroethane	1.2	11		U
67-66-3	Chloroform	0.62	11		U
74-87-3	Chloromethane	0.58	11		U
110-82-7	Cyclohexane	0.61	11		U
124-48-1	Dibromochloromethane	0.38	11		U
96-12-8	1,2-Dibromo-3-chloropropane	1.3	5.6		U
106-93-4	1,2-Dibromoethane	0.48	11		U
95-50-1	1,2-Dichlorobenzene	0.42	11		U
541-73-1	1,3-Dichlorobenzene	0.94	11		U
106-46-7	1,4-Dichlorobenzene	0.62	11		U
75-71-8	Dichlorodifluoromethane	1.2	11		U
75-34-3	1,1-Dichloroethane	0.61	11		U
107-06-2	1,2-Dichloroethane	0.52	11		U
75-35-4	1,1-Dichloroethene	1.3	11		U
156-59-2	cis-1,2-Dichloroethene	1.3	11		U
156-60-5	trans-1,2-Dichloroethene	1.2	11		U
78-87-5	1,2-Dichloropropane	0.52	11		U
10061-01-5	cis-1,3-Dichloropropene	0.56	11		U
10061-02-6	trans-1,3-Dichloropropene	0.36	11		U
100-41-4	Ethylbenzene	0.84	11	1.1	J
591-78-6	2-Hexanone	2.6	11		U
98-82-8	Isopropylbenzene	0.99	11		U
79-20-9	Methyl acetate	1.8	11	12	
75-09-2	Methylene chloride	0.70	11	11u ~~3.6~~	~~JB~~ B
108-87-2	Methyl cyclohexane	0.34	11		U
1634-04-4	Methyl tert-butyl ether	0.36	11		U
108-10-1	4-Methyl-2-pentanone	0.65	11		U
100-42-5	Styrene	0.39	11		U
79-34-5	1,1,2,2-Tetrachloroethane	0.48	11		U
127-18-4	Tetrachloroethene	1.1	11		U

lw 11 29 09

FORM 1
VOLATILE ORGANICS ANALYSIS DATA SHEET

CLIENT SAMPLE NO. 13

MR08-SS398-08D

Lab Name: EMPIRICAL LABS Contract: CH2MHILL

Lab Code: NA Case No.: NA SAS No.: NA SDG No.: LEJEUNE018

Matrix: (soil/water) SOIL Lab Sample ID: 0811228-14

Sample wt/vol: 5.2 (g/mL) G Lab File ID: 1122814A

Level: (low/med) LOW Date Sampled: 11/16/08 13:00

% Moisture: not dec. 15 Date Analyzed: 11/27/08 11:36

GC Column: RTX-VRX ID: 0.25 (mm) Dilution Factor: 1.0

Soil Extract Volume:_____(uL) Soil Aliquot Volume: _____(uL)

CONCENTRATION UNITS: (ug/L or ug/Kg) UG/KG

CAS NO.	COMPOUND	MDL	RL	CONC	Q
108-88-3	Toluene	0.96	11	11U ~~2.7~~ ~~J~~	B1
120-82-1	1,2,4-Trichlorobenzene	0.20	11		U
71-55-6	1,1,1-Trichloroethane	1.0	11		U
79-00-5	1,1,2-Trichloroethane	0.39	11		U
79-01-6	Trichloroethene	0.95	11		U
76-13-1	Trichlorotrifluoroethane	0.62	11		U
75-69-4	Trichlorofluoromethane	1.1	11		U
75-01-4	Vinyl chloride	1.2	11		U
1330-20-7	Xylene(total)	0.79	11		U

gw 1129/09

FORM 1
VOLATILE ORGANICS ANALYSIS DATA SHEET

CLIENT SAMPLE NO. 14

MR08-SS397-08D

Lab Name: EMPIRICAL LABS Contract: CH2MHILL

Lab Code: NA Case No.: NA SAS No.: NA SDG No.: LEJEUNE018

Matrix: (soil/water) SOIL Lab Sample ID: 0811228-15

Sample wt/vol: 5.4 (g/mL) G Lab File ID: 1122815A

Level: (low/med) LOW Date Sampled: 11/16/08 13:20

% Moisture: not dec. 12 Date Analyzed: 11/27/08 12:15

GC Column: RTX-VRX ID: 0.25 (mm) Dilution Factor: 1.0

Soil Extract Volume:_____(uL) Soil Aliquot Volume: _____(uL)

CONCENTRATION UNITS: (ug/L or ug/Kg) UG/KG

CAS NO.	COMPOUND	MDL	RL	CONC	Q
67-64-1	Acetone	2.1	10	89	~~B~~
71-43-2	Benzene	0.49	10		U
75-27-4	Bromodichloromethane	0.32	10		U
75-25-2	Bromoform	1.0	10		U
74-83-9	Bromomethane	0.76	10		U
78-93-3	2-Butanone	1.5	10	1.6	J
75-15-0	Carbon disulfide	1.4	10		U
56-23-5	Carbon tetrachloride	0.92	10		U
108-90-7	Chlorobenzene	0.36	10		U
75-00-3	Chloroethane	1.2	10		U
67-66-3	Chloroform	0.58	10		U
74-87-3	Chloromethane	0.55	10		U
110-82-7	Cyclohexane	0.57	10		U
124-48-1	Dibromochloromethane	0.36	10		U
96-12-8	1,2-Dibromo-3-chloropropane	1.3	5.2		U
106-93-4	1,2-Dibromoethane	0.45	10		U
95-50-1	1,2-Dichlorobenzene	0.39	10		U
541-73-1	1,3-Dichlorobenzene	0.88	10		U
106-46-7	1,4-Dichlorobenzene	0.58	10		U
75-71-8	Dichlorodifluoromethane	1.2	10		U
75-34-3	1,1-Dichloroethane	0.57	10		U
107-06-2	1,2-Dichloroethane	0.48	10		U
75-35-4	1,1-Dichloroethene	1.3	10		U
156-59-2	cis-1,2-Dichloroethene	1.3	10		U
156-60-5	trans-1,2-Dichloroethene	1.2	10		U
78-87-5	1,2-Dichloropropane	0.48	10		U
10061-01-5	cis-1,3-Dichloropropene	0.52	10		U
10061-02-6	trans-1,3-Dichloropropene	0.34	10		U
100-41-4	Ethylbenzene	0.79	10		U
591-78-6	2-Hexanone	2.4	10		U
98-82-8	Isopropylbenzene	0.92	10		U
79-20-9	Methyl acetate	1.7	10		U
75-09-2	Methylene chloride	0.65	10	104	~~1.8~~ ~~JB~~ BL
108-87-2	Methyl cyclohexane	0.32	10		U
1634-04-4	Methyl tert-butyl ether	0.34	10		U
108-10-1	4-Methyl-2-pentanone	0.61	10		U
100-42-5	Styrene	0.37	10		U
79-34-5	1,1,2,2-Tetrachloroethane	0.45	10		U
127-18-4	Tetrachloroethene	1.0	10		U

lw 11/29/09

FORM 1
VOLATILE ORGANICS ANALYSIS DATA SHEET

CLIENT SAMPLE NO.

14

MR08-SS397-08D

Lab Name: EMPIRICAL LABS Contract: CH2MHILL

Lab Code: NA Case No.: NA SAS No.: NA SDG No.: LEJEUNE018

Matrix: (soil/water) SOIL Lab Sample ID: 0811228-15

Sample wt/vol: 5.4 (g/mL) G Lab File ID: 1122815A

Level: (low/med) LOW Date Sampled: 11/16/08 13:20

% Moisture: not dec. 12 Date Analyzed: 11/27/08 12:15

GC Column: RTX-VRX ID: 0.25 (mm) Dilution Factor: 1.0

Soil Extract Volume:_____(uL) Soil Aliquot Volume: _____(uL)

CONCENTRATION UNITS: (ug/L or ug/Kg) UG/KG

CAS NO.	COMPOUND	MDL	RL	CONC	Q
108-88-3	Toluene	0.90	10		U
120-82-1	1,2,4-Trichlorobenzene	0.19	10		U
71-55-6	1,1,1-Trichloroethane	0.95	10		U
79-00-5	1,1,2-Trichloroethane	0.37	10		U
79-01-6	Trichloroethene	0.89	10		U
76-13-1	Trichlorotrifluoroethane	0.58	10		U
75-69-4	Trichlorofluoromethane	1.00	10		U
75-01-4	Vinyl chloride	1.2	10		U
1330-20-7	Xylene(total)	0.74	10		U

LW
1/29/09

FORM 1
VOLATILE ORGANICS ANALYSIS DATA SHEET

CLIENT SAMPLE NO. 15

MR08-SS396-08D

Lab Name: EMPIRICAL LABS Contract: CH2MHILL

Lab Code: NA Case No.: NA SAS No.: NA SDG No.: LEJEUNE018

Matrix: (soil/water) SOIL Lab Sample ID: 0811228-16

Sample wt/vol: 5.0 (g/mL) G Lab File ID: 1122816A

Level: (low/med) LOW Date Sampled: 11/16/08 13:45

% Moisture: not dec. 12 Date Analyzed: 11/27/08 12:54

GC Column: RTX-VRX ID: 0.25 (mm) Dilution Factor: 1.0

Soil Extract Volume:_____(uL) Soil Aliquot Volume: _____(uL)

CONCENTRATION UNITS: (ug/L or ug/Kg) UG/KG

CAS NO.	COMPOUND	MDL	RL	CONC	Q
67-64-1	Acetone	2.3	12	120	~~B~~
71-43-2	Benzene	0.54	12		U
75-27-4	Bromodichloromethane	0.34	12		U
75-25-2	Bromoform	1.2	12		U
74-83-9	Bromomethane	0.83	12		U
78-93-3	2-Butanone	1.6	12	5.2	J
75-15-0	Carbon disulfide	1.5	12		U
56-23-5	Carbon tetrachloride	1.0	12		U
108-90-7	Chlorobenzene	0.39	12		U
75-00-3	Chloroethane	1.3	12		U
67-66-3	Chloroform	0.63	12		U
74-87-3	Chloromethane	0.60	12		U
110-82-7	Cyclohexane	0.62	12		U
124-48-1	Dibromochloromethane	0.39	12		U
96-12-8	1,2-Dibromo-3-chloropropane	1.4	5.8		U
106-93-4	1,2-Dibromoethane	0.49	12		U
95-50-1	1,2-Dichlorobenzene	0.42	12		U
541-73-1	1,3-Dichlorobenzene	0.97	12		U
106-46-7	1,4-Dichlorobenzene	0.63	12		U
75-71-8	Dichlorodifluoromethane	1.3	12		U
75-34-3	1,1-Dichloroethane	0.62	12		U
107-06-2	1,2-Dichloroethane	0.53	12		U
75-35-4	1,1-Dichloroethene	1.4	12		U
156-59-2	cis-1,2-Dichloroethene	1.4	12		U
156-60-5	trans-1,2-Dichloroethene	1.3	12		U
78-87-5	1,2-Dichloropropane	0.53	12		U
10061-01-5	cis-1,3-Dichloropropene	0.58	12		U
10061-02-6	trans-1,3-Dichloropropene	0.37	12		U
100-41-4	Ethylbenzene	0.86	12		U
591-78-6	2-Hexanone	2.6	12		U
98-82-8	Isopropylbenzene	1.0	12		U
79-20-9	Methyl acetate	1.8	12	17	
75-09-2	Methylene chloride	0.71	12	124 ~~2.5~~	~~JB~~ B
108-87-2	Methyl cyclohexane	0.34	12		U
1634-04-4	Methyl tert-butyl ether	0.37	12		U
108-10-1	4-Methyl-2-pentanone	0.67	12		U
100-42-5	Styrene	0.40	12		U
79-34-5	1,1,2,2-Tetrachloroethane	0.49	12		U
127-18-4	Tetrachloroethene	1.1	12		U

LW 1/29/09

FORM 1
VOLATILE ORGANICS ANALYSIS DATA SHEET

CLIENT SAMPLE NO. 15

MR08-SS396-08D

Lab Name: EMPIRICAL LABS Contract: CH2MHILL

Lab Code: NA Case No.: NA SAS No.: NA SDG No.: LEJEUNE018

Matrix: (soil/water) SOIL Lab Sample ID: 0811228-16

Sample wt/vol: 5.0 (g/mL) G Lab File ID: 1122816A

Level: (low/med) LOW Date Sampled: 11/16/08 13:45

% Moisture: not dec. 12 Date Analyzed: 11/27/08 12:54

GC Column: RTX-VRX ID: 0.25 (mm) Dilution Factor: 1.0

Soil Extract Volume:_____(uL) Soil Aliquot Volume: _____(uL)

CONCENTRATION UNITS: (ug/L or ug/Kg) UG/KG

CAS NO.	COMPOUND	MDL	RL	CONC	Q
108-88-3	Toluene	0.99	12		U
120-82-1	1,2,4-Trichlorobenzene	0.21	12		U
71-55-6	1,1,1-Trichloroethane	1.0	12		U
79-00-5	1,1,2-Trichloroethane	0.40	12		U
79-01-6	Trichloroethene	0.98	12		U
76-13-1	Trichlorotrifluoroethane	0.63	12		U
75-69-4	Trichlorofluoromethane	1.1	12		U
75-01-4	Vinyl chloride	1.3	12		U
1330-20-7	Xylene(total)	0.80	12		U

lw 11/29/09

FORM 1
VOLATILE ORGANICS ANALYSIS DATA SHEET

CLIENT SAMPLE NO. 16

MR08-EB111708-1

Lab Name: EMPIRICAL LABS Contract: CH2MHILL

Lab Code: NA Case No.: NA SAS No.: NA SDG No.: LEJEUNE018

Matrix: (soil/water) WATER Lab Sample ID: 0811228-17

Sample wt/vol: 5.000 (g/mL) ML Lab File ID: 1122817

Level: (low/med) LOW Date Sampled: 11/17/08 08:10

% Moisture: not dec. _____ Date Analyzed: 11/25/08 01:06

GC Column: RTX-VRX ID: 0.25 (mm) Dilution Factor: 1.0

Soil Extract Volume:_____(uL) Soil Aliquot Volume: _____(uL)

CONCENTRATION UNITS: (ug/L or ug/Kg) UG/L

CAS NO.	COMPOUND	MDL	RL	CONC	Q
67-64-1	Acetone	0.84	2.5		U
71-43-2	Benzene	0.11	1.0		U
75-27-4	Bromodichloromethane	0.10	1.0		U
75-25-2	Bromoform	0.10	1.0		U
74-83-9	Bromomethane	0.32	1.0		~~U~~ UJ
78-93-3	2-Butanone	1.0	3.0		U
75-15-0	Carbon disulfide	0.13	1.0		U
56-23-5	Carbon tetrachloride	0.15	1.0		U
108-90-7	Chlorobenzene	0.10	1.0		U
75-00-3	Chloroethane	0.18	1.0		U
67-66-3	Chloroform	0.11	1.0		U
74-87-3	Chloromethane	0.29	1.0		U
110-82-7	Cyclohexane	0.20	1.0		U
124-48-1	Dibromochloromethane	0.10	1.0		U
96-12-8	1,2-Dibromo-3-chloropropane	0.11	1.0		U
106-93-4	1,2-Dibromoethane	0.10	1.0		U
95-50-1	1,2-Dichlorobenzene	0.10	1.0		U
541-73-1	1,3-Dichlorobenzene	0.13	1.0		U
106-46-7	1,4-Dichlorobenzene	0.10	1.0		U
75-71-8	Dichlorodifluoromethane	0.22	1.0		U
75-34-3	1,1-Dichloroethane	0.12	1.0		U
107-06-2	1,2-Dichloroethane	0.10	1.0		U
75-35-4	1,1-Dichloroethene	0.15	1.0		U
156-59-2	cis-1,2-Dichloroethene	0.13	1.0		U
156-60-5	trans-1,2-Dichloroethene	0.13	1.0		U
78-87-5	1,2-Dichloropropane	0.10	1.0		U
10061-01-5	cis-1,3-Dichloropropene	0.11	1.0		U
10061-02-6	trans-1,3-Dichloropropene	0.10	1.0		U
100-41-4	Ethylbenzene	0.13	1.0		U
591-78-6	2-Hexanone	0.30	2.0		U
98-82-8	Isopropylbenzene	0.15	1.0		U
79-20-9	Methyl acetate	0.30	1.0		U
75-09-2	Methylene chloride	0.14	1.0	1.0 ~~0.62~~	JB
108-87-2	Methyl cyclohexane	0.17	1.0		U
1634-04-4	Methyl tert-butyl ether	0.10	1.0		U
108-10-1	4-Methyl-2-pentanone	0.29	2.0		U
100-42-5	Styrene	0.10	1.0		U
79-34-5	1,1,2,2-Tetrachloroethane	0.10	1.0		U
127-18-4	Tetrachloroethene	0.15	1.0		U

FORM I VOA

12/2/09

FORM 1
VOLATILE ORGANICS ANALYSIS DATA SHEET

CLIENT SAMPLE NO. 16

MR08-EB111708-1

Lab Name: EMPIRICAL LABS Contract: CH2MHILL

Lab Code: NA Case No.: NA SAS No.: NA SDG No.: LEJEUNE018

Matrix: (soil/water) WATER Lab Sample ID: 0811228-17

Sample wt/vol: 5.000 (g/mL) ML Lab File ID: 1122817

Level: (low/med) LOW Date Sampled: 11/17/08 08:10

% Moisture: not dec. _____ Date Analyzed: 11/25/08 01:06

GC Column: RTX-VRX ID: 0.25 (mm) Dilution Factor: 1.0

Soil Extract Volume:_____(uL) Soil Aliquot Volume: _____(uL)

CONCENTRATION UNITS: (ug/L or ug/Kg) UG/L

CAS NO.	COMPOUND	MDL	RL	CONC	Q
108-88-3	Toluene	0.10	1.0		U
120-82-1	1,2,4-Trichlorobenzene	0.10	1.0		U
71-55-6	1,1,1-Trichloroethane	0.17	1.0		U
79-00-5	1,1,2-Trichloroethane	0.10	1.0		U
79-01-6	Trichloroethene	0.13	1.0		U
76-13-1	Trichlorotrifluoroethane	0.18	1.0		U
75-69-4	Trichlorofluoromethane	0.17	1.0		U
75-01-4	Vinyl chloride	0.18	1.0		U
1330-20-7	Xylene(total)	0.22	1.0		U

lw 11/29/09

FORM 1
VOLATILE ORGANICS ANALYSIS DATA SHEET

CLIENT SAMPLE NO. 17

MR08-TW07-08D

Lab Name: EMPIRICAL LABS Contract: CH2MHILL

Lab Code: NA Case No.: NA SAS No.: NA SDG No.: LEJEUNE018

Matrix: (soil/water) WATER Lab Sample ID: 0811228-18

Sample wt/vol: 5.000 (g/mL) ML Lab File ID: 1122818

Level: (low/med) LOW Date Sampled: 11/15/08 14:40

% Moisture: not dec. _____ Date Analyzed: 11/25/08 01:36

GC Column: RTX-VRX ID: 0.25 (mm) Dilution Factor: 1.0

Soil Extract Volume:_____(uL) Soil Aliquot Volume: _____(uL)

CONCENTRATION UNITS: (ug/L or ug/Kg) UG/L

CAS NO.	COMPOUND	MDL	RL	CONC	Q
67-64-1	Acetone	0.84	2.5	8.1	
71-43-2	Benzene	0.11	1.0		U
75-27-4	Bromodichloromethane	0.10	1.0		U
75-25-2	Bromoform	0.10	1.0		U
74-83-9	Bromomethane	0.32	1.0		~~U~~ UJ cc
78-93-3	2-Butanone	1.0	3.0		U
75-15-0	Carbon disulfide	0.13	1.0		U
56-23-5	Carbon tetrachloride	0.15	1.0		U
108-90-7	Chlorobenzene	0.10	1.0		U
75-00-3	Chloroethane	0.18	1.0		U
67-66-3	Chloroform	0.11	1.0		U
74-87-3	Chloromethane	0.29	1.0		U
110-82-7	Cyclohexane	0.20	1.0		U
124-48-1	Dibromochloromethane	0.10	1.0		U
96-12-8	1,2-Dibromo-3-chloropropane	0.11	1.0		U
106-93-4	1,2-Dibromoethane	0.10	1.0		U
95-50-1	1,2-Dichlorobenzene	0.10	1.0		U
541-73-1	1,3-Dichlorobenzene	0.13	1.0		U
106-46-7	1,4-Dichlorobenzene	0.10	1.0		U
75-71-8	Dichlorodifluoromethane	0.22	1.0		U
75-34-3	1,1-Dichloroethane	0.12	1.0		U
107-06-2	1,2-Dichloroethane	0.10	1.0		U
75-35-4	1,1-Dichloroethene	0.15	1.0		U
156-59-2	cis-1,2-Dichloroethene	0.13	1.0		U
156-60-5	trans-1,2-Dichloroethene	0.13	1.0		U
78-87-5	1,2-Dichloropropane	0.10	1.0		U
10061-01-5	cis-1,3-Dichloropropene	0.11	1.0		U
10061-02-6	trans-1,3-Dichloropropene	0.10	1.0		U
100-41-4	Ethylbenzene	0.13	1.0		U
591-78-6	2-Hexanone	0.30	2.0		U
98-82-8	Isopropylbenzene	0.15	1.0		U
79-20-9	Methyl acetate	0.30	1.0		U
75-09-2	Methylene chloride	0.14	1.0		U
108-87-2	Methyl cyclohexane	0.17	1.0		U
1634-04-4	Methyl tert-butyl ether	0.10	1.0		U
108-10-1	4-Methyl-2-pentanone	0.29	2.0		U
100-42-5	Styrene	0.10	1.0		U
79-34-5	1,1,2,2-Tetrachloroethane	0.10	1.0		U
127-18-4	Tetrachloroethene	0.15	1.0		U

11/29/09

FORM 1
VOLATILE ORGANICS ANALYSIS DATA SHEET

CLIENT SAMPLE NO. 17

MR08-TW07-08D

Lab Name: EMPIRICAL LABS Contract: CH2MHILL

Lab Code: NA Case No.: NA SAS No.: NA SDG No.: LEJEUNE018

Matrix: (soil/water) WATER Lab Sample ID: 0811228-18

Sample wt/vol: 5.000 (g/mL) ML Lab File ID: 1122818

Level: (low/med) LOW Date Sampled: 11/15/08 14:40

% Moisture: not dec. _____ Date Analyzed: 11/25/08 01:36

GC Column: RTX-VRX ID: 0.25 (mm) Dilution Factor: 1.0

Soil Extract Volume:_____(uL) Soil Aliquot Volume: _____(uL)

CONCENTRATION UNITS: (ug/L or ug/Kg) UG/L

CAS NO.	COMPOUND	MDL	RL	CONC	Q
108-88-3	Toluene	0.10	1.0	2.6	u B
120-82-1	1,2,4-Trichlorobenzene	0.10	1.0		U
71-55-6	1,1,1-Trichloroethane	0.17	1.0		U
79-00-5	1,1,2-Trichloroethane	0.10	1.0		U
79-01-6	Trichloroethene	0.13	1.0		U
76-13-1	Trichlorotrifluoroethane	0.18	1.0		U
75-69-4	Trichlorofluoromethane	0.17	1.0		U
75-01-4	Vinyl chloride	0.18	1.0		U
1330-20-7	Xylene(total)	0.22	1.0	0.40	J

lw 11/29/09

FORM 1
VOLATILE ORGANICS ANALYSIS DATA SHEET

CLIENT SAMPLE NO. 18

MR08-TW08-08D

Lab Name: EMPIRICAL LABS Contract: CH2MHILL

Lab Code: NA Case No.: NA SAS No.: NA SDG No.: LEJEUNE018

Matrix: (soil/water) WATER Lab Sample ID: 0811228-19

Sample wt/vol: 5.000 (g/mL) ML Lab File ID: 1122819

Level: (low/med) LOW Date Sampled: 11/15/08 12:05

% Moisture: not dec. _____ Date Analyzed: 11/25/08 02:06

GC Column: RTX-VRX ID: 0.25 (mm) Dilution Factor: 1.0

Soil Extract Volume:_____(uL) Soil Aliquot Volume: _____(uL)

CONCENTRATION UNITS: (ug/L or ug/Kg) UG/L

CAS NO.	COMPOUND	MDL	RL	CONC	Q
67-64-1	Acetone	0.84	2.5		U
71-43-2	Benzene	0.11	1.0		U
75-27-4	Bromodichloromethane	0.10	1.0		U
75-25-2	Bromoform	0.10	1.0		U
74-83-9	Bromomethane	0.32	1.0		~~U~~ UJ CC
78-93-3	2-Butanone	1.0	3.0		U
75-15-0	Carbon disulfide	0.13	1.0		U
56-23-5	Carbon tetrachloride	0.15	1.0		U
108-90-7	Chlorobenzene	0.10	1.0		U
75-00-3	Chloroethane	0.18	1.0		U
67-66-3	Chloroform	0.11	1.0		U
74-87-3	Chloromethane	0.29	1.0		U
110-82-7	Cyclohexane	0.20	1.0		U
124-48-1	Dibromochloromethane	0.10	1.0		U
96-12-8	1,2-Dibromo-3-chloropropane	0.11	1.0		U
106-93-4	1,2-Dibromoethane	0.10	1.0		U
95-50-1	1,2-Dichlorobenzene	0.10	1.0		U
541-73-1	1,3-Dichlorobenzene	0.13	1.0		U
106-46-7	1,4-Dichlorobenzene	0.10	1.0		U
75-71-8	Dichlorodifluoromethane	0.22	1.0		U
75-34-3	1,1-Dichloroethane	0.12	1.0		U
107-06-2	1,2-Dichloroethane	0.10	1.0		U
75-35-4	1,1-Dichloroethene	0.15	1.0		U
156-59-2	cis-1,2-Dichloroethene	0.13	1.0		U
156-60-5	trans-1,2-Dichloroethene	0.13	1.0		U
78-87-5	1,2-Dichloropropane	0.10	1.0		U
10061-01-5	cis-1,3-Dichloropropene	0.11	1.0		U
10061-02-6	trans-1,3-Dichloropropene	0.10	1.0		U
100-41-4	Ethylbenzene	0.13	1.0		U
591-78-6	2-Hexanone	0.30	2.0		U
98-82-8	Isopropylbenzene	0.15	1.0		U
79-20-9	Methyl acetate	0.30	1.0		U
75-09-2	Methylene chloride	0.14	1.0		U
108-87-2	Methyl cyclohexane	0.17	1.0		U
1634-04-4	Methyl tert-butyl ether	0.10	1.0		U
108-10-1	4-Methyl-2-pentanone	0.29	2.0		U
100-42-5	Styrene	0.10	1.0		U
79-34-5	1,1,2,2-Tetrachloroethane	0.10	1.0		U
127-18-4	Tetrachloroethene	0.15	1.0		U

LW 11/29/09

FORM 1
VOLATILE ORGANICS ANALYSIS DATA SHEET

CLIENT SAMPLE NO. 18

MR08-TW08-08D

Lab Name: EMPIRICAL LABS Contract: CH2MHILL

Lab Code: NA Case No.: NA SAS No.: NA SDG No.: LEJEUNE018

Matrix: (soil/water) WATER Lab Sample ID: 0811228-19

Sample wt/vol: 5.000 (g/mL) ML Lab File ID: 1122819

Level: (low/med) LOW Date Sampled: 11/15/08 12:05

% Moisture: not dec. _____ Date Analyzed: 11/25/08 02:06

GC Column: RTX-VRX ID: 0.25 (mm) Dilution Factor: 1.0

Soil Extract Volume:_____(uL) Soil Aliquot Volume: _____(uL)

CONCENTRATION UNITS: (ug/L or ug/Kg) UG/L

CAS NO.	COMPOUND	MDL	RL	CONC	Q
108-88-3	Toluene	0.10	1.0	1.4	u
120-82-1	1,2,4-Trichlorobenzene	0.10	1.0		U
71-55-6	1,1,1-Trichloroethane	0.17	1.0		U
79-00-5	1,1,2-Trichloroethane	0.10	1.0		U
79-01-6	Trichloroethene	0.13	1.0		U
76-13-1	Trichlorotrifluoroethane	0.18	1.0		U
75-69-4	Trichlorofluoromethane	0.17	1.0		U
75-01-4	Vinyl chloride	0.18	1.0		U
1330-20-7	Xylene(total)	0.22	1.0		U

B

FORM I VOA

lw 11/29/09

ENVIRONMENTAL
Data Services, Inc.

VOLATILE ORGANIC COMPOUNDS
USEPA Region IV - Level IV Review

Site: MCB Camp Lejeune, TO-09 SDG #: LEJEUNE019

Client: CH2M HILL, Inc., Virginia Beach, Virginia Date: January 30, 2009

Laboratory: Empirical Laboratories, Nashville, Tennessee Reviewer: Nancy Weaver

EDS ID	Client Sample ID	Laboratory Sample ID	Matrix
1	MR08-TW05-08D	0811249-01	Water
2	MR08-TW06-08D	0811249-02	Water
3	MR08-TW14-08D	0811249-03	Water
4	MR08-TW13-08D	0811249-04	Water
5	MR08-TW11-08D	0811249-05	Water
6	MR08-TW10-08D	0811249-06	Water
7	MR08-TW09-08D	0811249-07	Water
8	MR08-TW01-08D	0811249-08	Water
8MS	MR08-TW01-08DMS	0811249-08MS	Water
8MSD	MR08-TW01-08DMSD	0811249-08MSD	Water
9	MR08-TB111808	0811249-09	Water
10	MR08-IS377-08D	0811279-01	Soil
11	MR08-IS377D-08D	0811279-02	Soil
12	MR08-IS397-08D	0811279-03	Soil
13	MR08-IS398-08D	0811279-04	Soil
14	MR08-IS398D-08D	0811279-05	Soil
15	MR08-IS399-08D	0811279-06	Soil
16	MR08-IS392-08D	0811279-07	Soil
17	MR08-IS391-08D	0811279-08	Soil
18	MR08-IS390-08D	0811279-09	Soil
19	MR08-IS393-08D	0811279-10	Soil
20	MR08-IS395-08D	0811279-11	Soil
21	MR08-EB111808	0811279-12	Water
22	MR08-TW02-08D	0811279-13	Water
23	MR08-TW02D-08D	0811279-14	Water
24	MR08-TW03-08D	0811279-15	Water
25	MR08-TW03D-08D	0811279-16	Water
26	MR08-TB111908	0811279-17	Water

The USEPA "Contract Laboratory Program National Functional Guidelines for Organic Data Review," October 1999, and professional judgement were used in evaluating the data in this summary report.

Holding Times - All samples were analyzed within 14 days for preserved water and soil samples.

GC/MS Tuning - All of the BFB tunes in the initial and continuing calibrations met the percent relative abundance criteria.

Initial Calibration - The initial calibrations exhibited acceptable %RSD and mean RRF values except the following.

ICAL Date	Compound	%RSD/RRF	Qualifier	Affected Samples
11/07/08	2-Butanone	0.045 RRF	J/R	~~1-26~~ 1-24, 26
12/10/08	2-Butanone	0.043 RRF	J/R	~~1-26~~ 25

Continuing Calibration - The continuing calibrations exhibited acceptable %D and RRF values except the following.

CCAL Date	Compound	%D/RRF	Qualifier	Affected Samples
11/26/08	Bromomethane	33.4%	J/UJ	1-9
11/27/08	Acetone	29.0%	J/UJ	10-20
	Chloromethane	53.2%	J/UJ	10-20
	Methyl acetate	39.9%	J/UJ	10-20
	4-Methyl-2-pentanone	30.6%	J/UJ	10-20
	Vinyl chloride	27.8%	J/UJ	10-20
11/30/08	Acetone	47.7%	J/UJ	21-24, 26
	Carbon tetrachloride	31.1%	J/UJ	21-24, 26
	2-Hexanone	26.3%	J/UJ	21-24, 26
12/18/08	Carbon disulfide	25.3%	J/UJ	25
	MTBE	49.1%	J/UJ	25

Surrogates - All samples exhibited acceptable surrogate recoveries.

MS/MSD - The MS/MSD sample exhibited acceptable %R and RPD values.

Laboratory Control Sample - The LCS samples exhibited acceptable %R values except the following.

LCS ID	Compound	%R	Qualifier	Affected Samples
V1BLK1126F	Chloromethane	153%	None	All associated ND
	1,2-Dichloropropane	126%	None	All associated ND
	trans-1,3-Dichloropropene	127%	None	All associated ND
	Isopropylbenzene	133%	None	All associated ND
	Styrene	130%	None	All associated ND
	Trichlorotrifluoroethane	144%	None	All associated ND
V3BLK1218	2-Butanone	158%	None	All ND

Internal Standard (IS) Area Performance - All internal standards met response and retention time (RT) criteria.

Method Blank - The method blanks exhibited the following contamination.

Blank ID	Compound	Conc.	Action Level	Qualifier	Affected Samples
V1BLK1126F	Methylene chloride	2.4 ug/kg	24 ug/kg	U	10-20
V3BLK1130	1,2,4-Trichlorobenzene	0.25 ug/kg	1.25 ug/kg	None	All ND
V3BLK1218	Methylene chloride	0.64 ug/L	6.4 ug/L	None	All associated ND
	1,2,4-Trichlorobenzene	0.21 ug/L	10.5 ug/L	None	All associated ND

Trip, Field, Equipment Blank - Field QC results are summarized below.

Blank ID	Compound	Conc. ug/L	Action Level ug/L or ug/kg	Qualifier	Affected Samples
MR08-EB111608-1	Acetone	2.5	25	None	All associated ND
	Bromodichloromethane	0.15	0.75	None	All associated ND
	Chloroform	1.4	7.0	None	All associated ND
	Toluene	0.81	4.05	None	All associated ND
	Xylene (total)	0.39	1.95	None	All associated ND
MR08-EB111708-1	Methylene chloride	0.62	6.2	None	All associated ND or already qualified
MR08-EB111808	Bromodichloromethane	0.12	0.60	None	All associated ND
	Chloroform	1.2	6.0	None	All associated ND
	Toluene	0.70	3.5	None	All associated ND
	Xylene (total)	0.42	2.1	None	All associated ND
MR08-FB112008	Acetone	4.5	45	U	11-20
	Bromodichloromethane	0.24	1.2	None	All associated ND
	Chloroform	1.9	9.5	None	All associated ND
	Methylene chloride	0.53	5.3	None	All associated ND or already qualified
	Toluene	0.62	3.1	U	2, 5, 7, 8, 22-25
MR08-TB111908-1	None - ND	-	-	-	-
MR08-TB111808	None - ND	-	-	-	-

Field Duplicates - Field duplicate results are summarized below.

Compound	MR08-IS377-08D ug/kg	MR08-IS377D-08D ug/kg	RPD	Qualifier
None	ND	ND	-	-

Compound	MR08-IS398-08D ug/kg	MR08-IS398D-08D ug/kg	RPD	Qualifier
None	ND	ND	-	-

Compound	MR08-TW02-08D ug/L	MR08-TW02D-08D ug/L	RPD	Qualifier
None	ND	ND	-	-

Compound	MR08-TW03-08D ug/L	MR08-TW03D-08D ug/L	RPD	Qualifier
None	ND	ND	-	-

Tentatively Identified Compounds (TICs) - TICs were not reported.

Compound Quantitation - No discrepancies were identified.

FORM 1
VOLATILE ORGANICS ANALYSIS DATA SHEET

CLIENT SAMPLE NO.

MR08-TW05-08D

Lab Name: EMPIRICAL LABS Contract: CH2MHILL

Lab Code: NA Case No.: NA SAS No.: NA SDG No.: LEJEUNE019

Matrix: (soil/water) WATER Lab Sample ID: 0811249-01

Sample wt/vol: 5.000 (g/mL) ML Lab File ID: 1124901

Level: (low/med) LOW Date Sampled: 11/17/08 08:55

% Moisture: not dec. _____ Date Analyzed: 11/26/08 03:23

GC Column: RTX-VRX ID: 0.25 (mm) Dilution Factor: 1.0

Soil Extract Volume:_____(uL) Soil Aliquot Volume: _____(uL)

CONCENTRATION UNITS: (ug/L or ug/Kg) UG/L

CAS NO.	COMPOUND	MDL	RL	CONC	Q
67-64-1	Acetone	0.84	2.5		U
71-43-2	Benzene	0.11	1.0		U
75-27-4	Bromodichloromethane	0.10	1.0		U
75-25-2	Bromoform	0.10	1.0		U
74-83-9	Bromomethane	0.32	1.0		~~U~~ UJ CH
78-93-3	2-Butanone	1.0	3.0		~~U~~ R ICL
75-15-0	Carbon disulfide	0.13	1.0		U
56-23-5	Carbon tetrachloride	0.15	1.0		U
108-90-7	Chlorobenzene	0.10	1.0		U
75-00-3	Chloroethane	0.18	1.0		U
67-66-3	Chloroform	0.11	1.0		U
74-87-3	Chloromethane	0.29	1.0		U
110-82-7	Cyclohexane	0.20	1.0		U
124-48-1	Dibromochloromethane	0.10	1.0		U
96-12-8	1,2-Dibromo-3-chloropropane	0.11	1.0		U
106-93-4	1,2-Dibromoethane	0.10	1.0		U
95-50-1	1,2-Dichlorobenzene	0.10	1.0		U
541-73-1	1,3-Dichlorobenzene	0.13	1.0		U
106-46-7	1,4-Dichlorobenzene	0.10	1.0		U
75-71-8	Dichlorodifluoromethane	0.22	1.0		U
75-34-3	1,1-Dichloroethane	0.12	1.0		U
107-06-2	1,2-Dichloroethane	0.10	1.0		U
75-35-4	1,1-Dichloroethene	0.15	1.0		U
156-59-2	cis-1,2-Dichloroethene	0.13	1.0		U
156-60-5	trans-1,2-Dichloroethene	0.13	1.0		U
78-87-5	1,2-Dichloropropane	0.10	1.0		U
10061-01-5	cis-1,3-Dichloropropene	0.11	1.0		U
10061-02-6	trans-1,3-Dichloropropene	0.10	1.0		U
100-41-4	Ethylbenzene	0.13	1.0		U
591-78-6	2-Hexanone	0.30	2.0		U
98-82-8	Isopropylbenzene	0.15	1.0		U
79-20-9	Methyl acetate	0.30	1.0		U
75-09-2	Methylene chloride	0.14	1.0		U
108-87-2	Methyl cyclohexane	0.17	1.0		U
1634-04-4	Methyl tert-butyl ether	0.10	1.0		U
108-10-1	4-Methyl-2-pentanone	0.29	2.0		U
100-42-5	Styrene	0.10	1.0		U
79-34-5	1,1,2,2-Tetrachloroethane	0.10	1.0		U
127-18-4	Tetrachloroethene	0.15	1.0		U

lw 1/30/09

FORM 1
VOLATILE ORGANICS ANALYSIS DATA SHEET

CLIENT SAMPLE NO.

MR08-TW05-08D

Lab Name: EMPIRICAL LABS Contract: CH2MHILL

Lab Code: NA Case No.: NA SAS No.: NA SDG No.: LEJEUNE019

Matrix: (soil/water) WATER Lab Sample ID: 0811249-01

Sample wt/vol: 5.000 (g/mL) ML Lab File ID: 1124901

Level: (low/med) LOW Date Sampled: 11/17/08 08:55

% Moisture: not dec. _____ Date Analyzed: 11/26/08 03:23

GC Column: RTX-VRX ID: 0.25 (mm) Dilution Factor: 1.0

Soil Extract Volume:_____(uL) Soil Aliquot Volume: _____(uL)

CONCENTRATION UNITS: (ug/L or ug/Kg) UG/L

CAS NO.	COMPOUND	MDL	RL	CONC	Q
108-88-3	Toluene	0.10	1.0		U
120-82-1	1,2,4-Trichlorobenzene	0.10	1.0		U
71-55-6	1,1,1-Trichloroethane	0.17	1.0		U
79-00-5	1,1,2-Trichloroethane	0.10	1.0		U
79-01-6	Trichloroethene	0.13	1.0		U
76-13-1	Trichlorotrifluoroethane	0.18	1.0		U
75-69-4	Trichlorofluoromethane	0.17	1.0		U
75-01-4	Vinyl chloride	0.18	1.0		U
1330-20-7	Xylene(total)	0.22	1.0		U

LW
1/30/09

FORM 1
VOLATILE ORGANICS ANALYSIS DATA SHEET

CLIENT SAMPLE NO. 2

MR08-TW06-08D

Lab Name: EMPIRICAL LABS Contract: CH2MHILL

Lab Code: NA Case No.: NA SAS No.: NA SDG No.: LEJEUNE019

Matrix: (soil/water) WATER Lab Sample ID: 0811249-02

Sample wt/vol: 5.000 (g/mL) ML Lab File ID: 1124902

Level: (low/med) LOW Date Sampled: 11/17/08 09:00

% Moisture: not dec. _____ Date Analyzed: 11/26/08 03:53

GC Column: RTX-VRX ID: 0.25 (mm) Dilution Factor: 1.0

Soil Extract Volume:_____(uL) Soil Aliquot Volume: _____(uL)

CONCENTRATION UNITS: (ug/L or ug/Kg) UG/L

CAS NO.	COMPOUND	MDL	RL	CONC	Q
67-64-1	Acetone	0.84	2.5		U
71-43-2	Benzene	0.11	1.0		U
75-27-4	Bromodichloromethane	0.10	1.0		U
75-25-2	Bromoform	0.10	1.0		U
74-83-9	Bromomethane	0.32	1.0		~~U~~ UJ
78-93-3	2-Butanone	1.0	3.0		~~U~~ R
75-15-0	Carbon disulfide	0.13	1.0		U
56-23-5	Carbon tetrachloride	0.15	1.0		U
108-90-7	Chlorobenzene	0.10	1.0		U
75-00-3	Chloroethane	0.18	1.0		U
67-66-3	Chloroform	0.11	1.0		U
74-87-3	Chloromethane	0.29	1.0		U
110-82-7	Cyclohexane	0.20	1.0		U
124-48-1	Dibromochloromethane	0.10	1.0		U
96-12-8	1,2-Dibromo-3-chloropropane	0.11	1.0		U
106-93-4	1,2-Dibromoethane	0.10	1.0		U
95-50-1	1,2-Dichlorobenzene	0.10	1.0		U
541-73-1	1,3-Dichlorobenzene	0.13	1.0		U
106-46-7	1,4-Dichlorobenzene	0.10	1.0		U
75-71-8	Dichlorodifluoromethane	0.22	1.0		U
75-34-3	1,1-Dichloroethane	0.12	1.0		U
107-06-2	1,2-Dichloroethane	0.10	1.0		U
75-35-4	1,1-Dichloroethene	0.15	1.0		U
156-59-2	cis-1,2-Dichloroethene	0.13	1.0		U
156-60-5	trans-1,2-Dichloroethene	0.13	1.0		U
78-87-5	1,2-Dichloropropane	0.10	1.0		U
10061-01-5	cis-1,3-Dichloropropene	0.11	1.0		U
10061-02-6	trans-1,3-Dichloropropene	0.10	1.0		U
100-41-4	Ethylbenzene	0.13	1.0		U
591-78-6	2-Hexanone	0.30	2.0		U
98-82-8	Isopropylbenzene	0.15	1.0		U
79-20-9	Methyl acetate	0.30	1.0		U
75-09-2	Methylene chloride	0.14	1.0		U
108-87-2	Methyl cyclohexane	0.17	1.0		U
1634-04-4	Methyl tert-butyl ether	0.10	1.0		U
108-10-1	4-Methyl-2-pentanone	0.29	2.0		U
100-42-5	Styrene	0.10	1.0		U
79-34-5	1,1,2,2-Tetrachloroethane	0.10	1.0		U
127-18-4	Tetrachloroethene	0.15	1.0		U

lw 11/30/09

FORM 1
VOLATILE ORGANICS ANALYSIS DATA SHEET

CLIENT SAMPLE NO. 2

MR08-TW06-08D

Lab Name: EMPIRICAL LABS Contract: CH2MHILL

Lab Code: NA Case No.: NA SAS No.: NA SDG No.: LEJEUNE019

Matrix: (soil/water) WATER Lab Sample ID: 0811249-02

Sample wt/vol: 5.000 (g/mL) ML Lab File ID: 1124902

Level: (low/med) LOW Date Sampled: 11/17/08 09:00

% Moisture: not dec. _____ Date Analyzed: 11/26/08 03:53

GC Column: RTX-VRX ID: 0.25 (mm) Dilution Factor: 1.0

Soil Extract Volume:_____(uL) Soil Aliquot Volume: _____(uL)

CONCENTRATION UNITS: (ug/L or ug/Kg) UG/L

CAS NO.	COMPOUND	MDL	RL	CONC	Q
108-88-3	Toluene	0.10	1.0	1.04 ~~0.94~~	J B
120-82-1	1,2,4-Trichlorobenzene	0.10	1.0		U
71-55-6	1,1,1-Trichloroethane	0.17	1.0		U
79-00-5	1,1,2-Trichloroethane	0.10	1.0		U
79-01-6	Trichloroethene	0.13	1.0		U
76-13-1	Trichlorotrifluoroethane	0.18	1.0		U
75-69-4	Trichlorofluoromethane	0.17	1.0		U
75-01-4	Vinyl chloride	0.18	1.0		U
1330-20-7	Xylene(total)	0.22	1.0		U

Rev 11/30/09

FORM 1
VOLATILE ORGANICS ANALYSIS DATA SHEET

CLIENT SAMPLE NO. 3

MR08-TW14-08D

Lab Name: EMPIRICAL LABS Contract: CH2MHILL

Lab Code: NA Case No.: NA SAS No.: NA SDG No.: LEJEUNE019

Matrix: (soil/water) WATER Lab Sample ID: 0811249-03

Sample wt/vol: 5.000 (g/mL) ML Lab File ID: 1124903

Level: (low/med) LOW Date Sampled: 11/17/08 10:25

% Moisture: not dec. _____ Date Analyzed: 11/26/08 04:23

GC Column: RTX-VRX ID: 0.25 (mm) Dilution Factor: 1.0

Soil Extract Volume:_____(uL) Soil Aliquot Volume: _____(uL)

CONCENTRATION UNITS: (ug/L or ug/Kg) UG/L

CAS NO.	COMPOUND	MDL	RL	CONC	Q
67-64-1	Acetone	0.84	2.5		U
71-43-2	Benzene	0.11	1.0		U
75-27-4	Bromodichloromethane	0.10	1.0		U
75-25-2	Bromoform	0.10	1.0		U
74-83-9	Bromomethane	0.32	1.0		~~U~~ UJ
78-93-3	2-Butanone	1.0	3.0		~~U~~ R
75-15-0	Carbon disulfide	0.13	1.0		U
56-23-5	Carbon tetrachloride	0.15	1.0		U
108-90-7	Chlorobenzene	0.10	1.0		U
75-00-3	Chloroethane	0.18	1.0		U
67-66-3	Chloroform	0.11	1.0		U
74-87-3	Chloromethane	0.29	1.0		U
110-82-7	Cyclohexane	0.20	1.0		U
124-48-1	Dibromochloromethane	0.10	1.0		U
96-12-8	1,2-Dibromo-3-chloropropane	0.11	1.0		U
106-93-4	1,2-Dibromoethane	0.10	1.0		U
95-50-1	1,2-Dichlorobenzene	0.10	1.0		U
541-73-1	1,3-Dichlorobenzene	0.13	1.0		U
106-46-7	1,4-Dichlorobenzene	0.10	1.0		U
75-71-8	Dichlorodifluoromethane	0.22	1.0		U
75-34-3	1,1-Dichloroethane	0.12	1.0		U
107-06-2	1,2-Dichloroethane	0.10	1.0		U
75-35-4	1,1-Dichloroethene	0.15	1.0		U
156-59-2	cis-1,2-Dichloroethene	0.13	1.0		U
156-60-5	trans-1,2-Dichloroethene	0.13	1.0		U
78-87-5	1,2-Dichloropropane	0.10	1.0		U
10061-01-5	cis-1,3-Dichloropropene	0.11	1.0		U
10061-02-6	trans-1,3-Dichloropropene	0.10	1.0		U
100-41-4	Ethylbenzene	0.13	1.0		U
591-78-6	2-Hexanone	0.30	2.0		U
98-82-8	Isopropylbenzene	0.15	1.0		U
79-20-9	Methyl acetate	0.30	1.0		U
75-09-2	Methylene chloride	0.14	1.0		U
108-87-2	Methyl cyclohexane	0.17	1.0		U
1634-04-4	Methyl tert-butyl ether	0.10	1.0		U
108-10-1	4-Methyl-2-pentanone	0.29	2.0		U
100-42-5	Styrene	0.10	1.0		U
79-34-5	1,1,2,2-Tetrachloroethane	0.10	1.0		U
127-18-4	Tetrachloroethene	0.15	1.0		U

CW 1130109

FORM 1
VOLATILE ORGANICS ANALYSIS DATA SHEET

CLIENT SAMPLE NO. 3

MR08-TW14-08D

Lab Name: EMPIRICAL LABS Contract: CH2MHILL

Lab Code: NA Case No.: NA SAS No.: NA SDG No.: LEJEUNE019

Matrix: (soil/water) WATER Lab Sample ID: 0811249-03

Sample wt/vol: 5.000 (g/mL) ML Lab File ID: 1124903

Level: (low/med) LOW Date Sampled: 11/17/08 10:25

% Moisture: not dec. _____ Date Analyzed: 11/26/08 04:23

GC Column: RTX-VRX ID: 0.25 (mm) Dilution Factor: 1.0

Soil Extract Volume:_____(uL) Soil Aliquot Volume: _____(uL)

CONCENTRATION UNITS: (ug/L or ug/Kg) UG/L

CAS NO.	COMPOUND	MDL	RL	CONC	Q
108-88-3	Toluene	0.10	1.0		U
120-82-1	1,2,4-Trichlorobenzene	0.10	1.0		U
71-55-6	1,1,1-Trichloroethane	0.17	1.0		U
79-00-5	1,1,2-Trichloroethane	0.10	1.0		U
79-01-6	Trichloroethene	0.13	1.0		U
76-13-1	Trichlorotrifluoroethane	0.18	1.0		U
75-69-4	Trichlorofluoromethane	0.17	1.0		U
75-01-4	Vinyl chloride	0.18	1.0		U
1330-20-7	Xylene(total)	0.22	1.0		U

11/30/09

FORM 1
VOLATILE ORGANICS ANALYSIS DATA SHEET

CLIENT SAMPLE NO. 4

MR08-TW13-08D

Lab Name: EMPIRICAL LABS Contract: CH2MHILL

Lab Code: NA Case No.: NA SAS No.: NA SDG No.: LEJEUNE019

Matrix: (soil/water) WATER Lab Sample ID: 0811249-04

Sample wt/vol: 5.000 (g/mL) ML Lab File ID: 1124904

Level: (low/med) LOW Date Sampled: 11/17/08 11:05

% Moisture: not dec. _____ Date Analyzed: 11/26/08 04:53

GC Column: RTX-VRX ID: 0.25 (mm) Dilution Factor: 1.0

Soil Extract Volume:_____(uL) Soil Aliquot Volume: _____(uL)

CONCENTRATION UNITS: (ug/L or ug/Kg) UG/L

CAS NO.	COMPOUND	MDL	RL	CONC	Q
67-64-1	Acetone	0.84	2.5		U
71-43-2	Benzene	0.11	1.0		U
75-27-4	Bromodichloromethane	0.10	1.0		U
75-25-2	Bromoform	0.10	1.0		U
74-83-9	Bromomethane	0.32	1.0		~~U~~ UJ
78-93-3	2-Butanone	1.0	3.0		~~U~~ R
75-15-0	Carbon disulfide	0.13	1.0		U
56-23-5	Carbon tetrachloride	0.15	1.0		U
108-90-7	Chlorobenzene	0.10	1.0		U
75-00-3	Chloroethane	0.18	1.0		U
67-66-3	Chloroform	0.11	1.0		U
74-87-3	Chloromethane	0.29	1.0		U
110-82-7	Cyclohexane	0.20	1.0		U
124-48-1	Dibromochloromethane	0.10	1.0		U
96-12-8	1,2-Dibromo-3-chloropropane	0.11	1.0		U
106-93-4	1,2-Dibromoethane	0.10	1.0		U
95-50-1	1,2-Dichlorobenzene	0.10	1.0		U
541-73-1	1,3-Dichlorobenzene	0.13	1.0		U
106-46-7	1,4-Dichlorobenzene	0.10	1.0		U
75-71-8	Dichlorodifluoromethane	0.22	1.0		U
75-34-3	1,1-Dichloroethane	0.12	1.0		U
107-06-2	1,2-Dichloroethane	0.10	1.0		U
75-35-4	1,1-Dichloroethene	0.15	1.0		U
156-59-2	cis-1,2-Dichloroethene	0.13	1.0		U
156-60-5	trans-1,2-Dichloroethene	0.13	1.0		U
78-87-5	1,2-Dichloropropane	0.10	1.0		U
10061-01-5	cis-1,3-Dichloropropene	0.11	1.0		U
10061-02-6	trans-1,3-Dichloropropene	0.10	1.0		U
100-41-4	Ethylbenzene	0.13	1.0		U
591-78-6	2-Hexanone	0.30	2.0		U
98-82-8	Isopropylbenzene	0.15	1.0		U
79-20-9	Methyl acetate	0.30	1.0		U
75-09-2	Methylene chloride	0.14	1.0		U
108-87-2	Methyl cyclohexane	0.17	1.0		U
1634-04-4	Methyl tert-butyl ether	0.10	1.0		U
108-10-1	4-Methyl-2-pentanone	0.29	2.0		U
100-42-5	Styrene	0.10	1.0		U
79-34-5	1,1,2,2-Tetrachloroethane	0.10	1.0		U
127-18-4	Tetrachloroethene	0.15	1.0		U

FORM I VOA

LW
11/30/09

FORM 1
VOLATILE ORGANICS ANALYSIS DATA SHEET

CLIENT SAMPLE NO. 4

MR08-TW13-08D

Lab Name: EMPIRICAL LABS Contract: CH2MHILL

Lab Code: NA Case No.: NA SAS No.: NA SDG No.: LEJEUNE019

Matrix: (soil/water) WATER Lab Sample ID: 0811249-04

Sample wt/vol: 5.000 (g/mL) ML Lab File ID: 1124904

Level: (low/med) LOW Date Sampled: 11/17/08 11:05

% Moisture: not dec. _____ Date Analyzed: 11/26/08 04:53

GC Column: RTX-VRX ID: 0.25 (mm) Dilution Factor: 1.0

Soil Extract Volume:_____(uL) Soil Aliquot Volume: _____(uL)

CONCENTRATION UNITS: (ug/L or ug/Kg) UG/L

CAS NO.	COMPOUND	MDL	RL	CONC	Q
108-88-3	Toluene	0.10	1.0	5.1	
120-82-1	1,2,4-Trichlorobenzene	0.10	1.0		U
71-55-6	1,1,1-Trichloroethane	0.17	1.0		U
79-00-5	1,1,2-Trichloroethane	0.10	1.0		U
79-01-6	Trichloroethene	0.13	1.0		U
76-13-1	Trichlorotrifluoroethane	0.18	1.0		U
75-69-4	Trichlorofluoromethane	0.17	1.0		U
75-01-4	Vinyl chloride	0.18	1.0		U
1330-20-7	Xylene(total)	0.22	1.0		U

lw
1/30/09

FORM 1
VOLATILE ORGANICS ANALYSIS DATA SHEET

CLIENT SAMPLE NO. 5

MR08-TW11-08D

Lab Name: EMPIRICAL LABS Contract: CH2MHILL

Lab Code: NA Case No.: NA SAS No.: NA SDG No.: LEJEUNE019

Matrix: (soil/water) WATER Lab Sample ID: 0811249-05

Sample wt/vol: 5.000 (g/mL) ML Lab File ID: 1124905

Level: (low/med) LOW Date Sampled: 11/17/08 13:25

% Moisture: not dec. _____ Date Analyzed: 11/26/08 05:23

GC Column: RTX-VRX ID: 0.25 (mm) Dilution Factor: 1.0

Soil Extract Volume:_____(uL) Soil Aliquot Volume: _____(uL)

CONCENTRATION UNITS: (ug/L or ug/Kg) UG/L

CAS NO.	COMPOUND	MDL	RL	CONC	Q
67-64-1	Acetone	0.84	2.5		U
71-43-2	Benzene	0.11	1.0		U
75-27-4	Bromodichloromethane	0.10	1.0		U
75-25-2	Bromoform	0.10	1.0		U
74-83-9	Bromomethane	0.32	1.0		~~U~~ UJ
78-93-3	2-Butanone	1.0	3.0		~~U~~ R
75-15-0	Carbon disulfide	0.13	1.0		U
56-23-5	Carbon tetrachloride	0.15	1.0		U
108-90-7	Chlorobenzene	0.10	1.0		U
75-00-3	Chloroethane	0.18	1.0		U
67-66-3	Chloroform	0.11	1.0		U
74-87-3	Chloromethane	0.29	1.0		U
110-82-7	Cyclohexane	0.20	1.0		U
124-48-1	Dibromochloromethane	0.10	1.0		U
96-12-8	1,2-Dibromo-3-chloropropane	0.11	1.0		U
106-93-4	1,2-Dibromoethane	0.10	1.0		U
95-50-1	1,2-Dichlorobenzene	0.10	1.0		U
541-73-1	1,3-Dichlorobenzene	0.13	1.0		U
106-46-7	1,4-Dichlorobenzene	0.10	1.0		U
75-71-8	Dichlorodifluoromethane	0.22	1.0		U
75-34-3	1,1-Dichloroethane	0.12	1.0		U
107-06-2	1,2-Dichloroethane	0.10	1.0		U
75-35-4	1,1-Dichloroethene	0.15	1.0		U
156-59-2	cis-1,2-Dichloroethene	0.13	1.0		U
156-60-5	trans-1,2-Dichloroethene	0.13	1.0		U
78-87-5	1,2-Dichloropropane	0.10	1.0		U
10061-01-5	cis-1,3-Dichloropropene	0.11	1.0		U
10061-02-6	trans-1,3-Dichloropropene	0.10	1.0		U
100-41-4	Ethylbenzene	0.13	1.0		U
591-78-6	2-Hexanone	0.30	2.0		U
98-82-8	Isopropylbenzene	0.15	1.0		U
79-20-9	Methyl acetate	0.30	1.0		U
75-09-2	Methylene chloride	0.14	1.0		U
108-87-2	Methyl cyclohexane	0.17	1.0		U
1634-04-4	Methyl tert-butyl ether	0.10	1.0		U
108-10-1	4-Methyl-2-pentanone	0.29	2.0		U
100-42-5	Styrene	0.10	1.0		U
79-34-5	1,1,2,2-Tetrachloroethane	0.10	1.0		U
127-18-4	Tetrachloroethene	0.15	1.0		U

FORM I VOA

lw
11/30/09

FORM 1
VOLATILE ORGANICS ANALYSIS DATA SHEET

CLIENT SAMPLE NO. 5

MR08-TW11-08D

Lab Name: EMPIRICAL LABS Contract: CH2MHILL

Lab Code: NA Case No.: NA SAS No.: NA SDG No.: LEJEUNE019

Matrix: (soil/water) WATER Lab Sample ID: 0811249-05

Sample wt/vol: 5.000 (g/mL) ML Lab File ID: 1124905

Level: (low/med) LOW Date Sampled: 11/17/08 13:25

% Moisture: not dec. _____ Date Analyzed: 11/26/08 05:23

GC Column: RTX-VRX ID: 0.25 (mm) Dilution Factor: 1.0

Soil Extract Volume:_____(uL) Soil Aliquot Volume: _____(uL)

CONCENTRATION UNITS: (ug/L or ug/Kg) UG/L

CAS NO.	COMPOUND	MDL	RL	CONC	Q
108-88-3	Toluene	0.10	1.0	1.00 ~~0.24~~	~~J~~
120-82-1	1,2,4-Trichlorobenzene	0.10	1.0		U
71-55-6	1,1,1-Trichloroethane	0.17	1.0		U
79-00-5	1,1,2-Trichloroethane	0.10	1.0		U
79-01-6	Trichloroethene	0.13	1.0		U
76-13-1	Trichlorotrifluoroethane	0.18	1.0		U
75-69-4	Trichlorofluoromethane	0.17	1.0		U
75-01-4	Vinyl chloride	0.18	1.0		U
1330-20-7	Xylene(total)	0.22	1.0		U

lw
1130109

FORM 1
VOLATILE ORGANICS ANALYSIS DATA SHEET

CLIENT SAMPLE NO. 6

MR08-TW10-08D

Lab Name: EMPIRICAL LABS Contract: CH2MHILL

Lab Code: NA Case No.: NA SAS No.: NA SDG No.: LEJEUNE019

Matrix: (soil/water) WATER Lab Sample ID: 0811249-06

Sample wt/vol: 5.000 (g/mL) ML Lab File ID: 1124906

Level: (low/med) LOW Date Sampled: 11/17/08 13:50

% Moisture: not dec. _____ Date Analyzed: 11/26/08 05:53

GC Column: RTX-VRX ID: 0.25 (mm) Dilution Factor: 1.0

Soil Extract Volume:_____(uL) Soil Aliquot Volume: _____(uL)

CONCENTRATION UNITS: (ug/L or ug/Kg) UG/L

CAS NO.	COMPOUND	MDL	RL	CONC	Q
67-64-1	Acetone	0.84	2.5		U
71-43-2	Benzene	0.11	1.0		U
75-27-4	Bromodichloromethane	0.10	1.0		U
75-25-2	Bromoform	0.10	1.0		U
74-83-9	Bromomethane	0.32	1.0		~~U~~ UJ
78-93-3	2-Butanone	1.0	3.0		~~U~~ R
75-15-0	Carbon disulfide	0.13	1.0		U
56-23-5	Carbon tetrachloride	0.15	1.0		U
108-90-7	Chlorobenzene	0.10	1.0		U
75-00-3	Chloroethane	0.18	1.0		U
67-66-3	Chloroform	0.11	1.0		U
74-87-3	Chloromethane	0.29	1.0		U
110-82-7	Cyclohexane	0.20	1.0		U
124-48-1	Dibromochloromethane	0.10	1.0		U
96-12-8	1,2-Dibromo-3-chloropropane	0.11	1.0		U
106-93-4	1,2-Dibromoethane	0.10	1.0		U
95-50-1	1,2-Dichlorobenzene	0.10	1.0		U
541-73-1	1,3-Dichlorobenzene	0.13	1.0		U
106-46-7	1,4-Dichlorobenzene	0.10	1.0		U
75-71-8	Dichlorodifluoromethane	0.22	1.0		U
75-34-3	1,1-Dichloroethane	0.12	1.0		U
107-06-2	1,2-Dichloroethane	0.10	1.0		U
75-35-4	1,1-Dichloroethene	0.15	1.0		U
156-59-2	cis-1,2-Dichloroethene	0.13	1.0		U
156-60-5	trans-1,2-Dichloroethene	0.13	1.0		U
78-87-5	1,2-Dichloropropane	0.10	1.0		U
10061-01-5	cis-1,3-Dichloropropene	0.11	1.0		U
10061-02-6	trans-1,3-Dichloropropene	0.10	1.0		U
100-41-4	Ethylbenzene	0.13	1.0		U
591-78-6	2-Hexanone	0.30	2.0		U
98-82-8	Isopropylbenzene	0.15	1.0		U
79-20-9	Methyl acetate	0.30	1.0		U
75-09-2	Methylene chloride	0.14	1.0		U
108-87-2	Methyl cyclohexane	0.17	1.0		U
1634-04-4	Methyl tert-butyl ether	0.10	1.0		U
108-10-1	4-Methyl-2-pentanone	0.29	2.0		U
100-42-5	Styrene	0.10	1.0		U
79-34-5	1,1,2,2-Tetrachloroethane	0.10	1.0		U
127-18-4	Tetrachloroethene	0.15	1.0		U

FORM I VOA

hW 1/30/09

FORM 1
VOLATILE ORGANICS ANALYSIS DATA SHEET

CLIENT SAMPLE NO.

MR08-TW10-08D

Lab Name: EMPIRICAL LABS Contract: CH2MHILL

Lab Code: NA Case No.: NA SAS No.: NA SDG No.: LEJEUNE019

Matrix: (soil/water) WATER Lab Sample ID: 0811249-06

Sample wt/vol: 5.000 (g/mL) ML Lab File ID: 1124906

Level: (low/med) LOW Date Sampled: 11/17/08 13:50

% Moisture: not dec. _____ Date Analyzed: 11/26/08 05:53

GC Column: RTX-VRX ID: 0.25 (mm) Dilution Factor: 1.0

Soil Extract Volume:_____(uL) Soil Aliquot Volume: _____(uL)

CONCENTRATION UNITS: (ug/L or ug/Kg) UG/L

CAS NO.	COMPOUND	MDL	RL	CONC	Q
108-88-3	Toluene	0.10	1.0	16	
120-82-1	1,2,4-Trichlorobenzene	0.10	1.0		U
71-55-6	1,1,1-Trichloroethane	0.17	1.0		U
79-00-5	1,1,2-Trichloroethane	0.10	1.0		U
79-01-6	Trichloroethene	0.13	1.0		U
76-13-1	Trichlorotrifluoroethane	0.18	1.0		U
75-69-4	Trichlorofluoromethane	0.17	1.0		U
75-01-4	Vinyl chloride	0.18	1.0		U
1330-20-7	Xylene(total)	0.22	1.0		U

RW
1/30/09

FORM 1
VOLATILE ORGANICS ANALYSIS DATA SHEET

CLIENT SAMPLE NO. 7

MR08-TW09-08D

Lab Name: EMPIRICAL LABS Contract: CH2MHILL

Lab Code: NA Case No.: NA SAS No.: NA SDG No.: LEJEUNE019

Matrix: (soil/water) WATER Lab Sample ID: 0811249-07

Sample wt/vol: 5.000 (g/mL) ML Lab File ID: 1124907

Level: (low/med) LOW Date Sampled: 11/17/08 15:20

% Moisture: not dec. _____ Date Analyzed: 11/26/08 06:23

GC Column: RTX-VRX ID: 0.25 (mm) Dilution Factor: 1.0

Soil Extract Volume:_____(uL) Soil Aliquot Volume: _____(uL)

CONCENTRATION UNITS: (ug/L or ug/Kg) UG/L

CAS NO.	COMPOUND	MDL	RL	CONC	Q
67-64-1	Acetone	0.84	2.5		U
71-43-2	Benzene	0.11	1.0		U
75-27-4	Bromodichloromethane	0.10	1.0		U
75-25-2	Bromoform	0.10	1.0		U
74-83-9	Bromomethane	0.32	1.0		~~U~~ UJ cc
78-93-3	2-Butanone	1.0	3.0		~~U~~ R IC
75-15-0	Carbon disulfide	0.13	1.0		U
56-23-5	Carbon tetrachloride	0.15	1.0		U
108-90-7	Chlorobenzene	0.10	1.0		U
75-00-3	Chloroethane	0.18	1.0		U
67-66-3	Chloroform	0.11	1.0		U
74-87-3	Chloromethane	0.29	1.0		U
110-82-7	Cyclohexane	0.20	1.0		U
124-48-1	Dibromochloromethane	0.10	1.0		U
96-12-8	1,2-Dibromo-3-chloropropane	0.11	1.0		U
106-93-4	1,2-Dibromoethane	0.10	1.0		U
95-50-1	1,2-Dichlorobenzene	0.10	1.0		U
541-73-1	1,3-Dichlorobenzene	0.13	1.0		U
106-46-7	1,4-Dichlorobenzene	0.10	1.0		U
75-71-8	Dichlorodifluoromethane	0.22	1.0		U
75-34-3	1,1-Dichloroethane	0.12	1.0		U
107-06-2	1,2-Dichloroethane	0.10	1.0		U
75-35-4	1,1-Dichloroethene	0.15	1.0		U
156-59-2	cis-1,2-Dichloroethene	0.13	1.0		U
156-60-5	trans-1,2-Dichloroethene	0.13	1.0		U
78-87-5	1,2-Dichloropropane	0.10	1.0		U
10061-01-5	cis-1,3-Dichloropropene	0.11	1.0		U
10061-02-6	trans-1,3-Dichloropropene	0.10	1.0		U
100-41-4	Ethylbenzene	0.13	1.0		U
591-78-6	2-Hexanone	0.30	2.0		U
98-82-8	Isopropylbenzene	0.15	1.0		U
79-20-9	Methyl acetate	0.30	1.0		U
75-09-2	Methylene chloride	0.14	1.0		U
108-87-2	Methyl cyclohexane	0.17	1.0		U
1634-04-4	Methyl tert-butyl ether	0.10	1.0		U
108-10-1	4-Methyl-2-pentanone	0.29	2.0		U
100-42-5	Styrene	0.10	1.0		U
79-34-5	1,1,2,2-Tetrachloroethane	0.10	1.0		U
127-18-4	Tetrachloroethene	0.15	1.0		U

FORM I VOA

lw
1/20/09

FORM 1
VOLATILE ORGANICS ANALYSIS DATA SHEET

CLIENT SAMPLE NO. 7

MR08-TW09-08D

Lab Name: EMPIRICAL LABS Contract: CH2MHILL

Lab Code: NA Case No.: NA SAS No.: NA SDG No.: LEJEUNE019

Matrix: (soil/water) WATER Lab Sample ID: 0811249-07

Sample wt/vol: 5.000 (g/mL) ML Lab File ID: 1124907

Level: (low/med) LOW Date Sampled: 11/17/08 15:20

% Moisture: not dec. _____ Date Analyzed: 11/26/08 06:23

GC Column: RTX-VRX ID: 0.25 (mm) Dilution Factor: 1.0

Soil Extract Volume:_____(uL) Soil Aliquot Volume: _____(uL)

CONCENTRATION UNITS: (ug/L or ug/Kg) UG/L

CAS NO.	COMPOUND	MDL	RL	CONC	Q
108-88-3	Toluene	0.10	1.0	2.7	U B1
120-82-1	1,2,4-Trichlorobenzene	0.10	1.0		U
71-55-6	1,1,1-Trichloroethane	0.17	1.0		U
79-00-5	1,1,2-Trichloroethane	0.10	1.0		U
79-01-6	Trichloroethene	0.13	1.0		U
76-13-1	Trichlorotrifluoroethane	0.18	1.0		U
75-69-4	Trichlorofluoromethane	0.17	1.0		U
75-01-4	Vinyl chloride	0.18	1.0		U
1330-20-7	Xylene(total)	0.22	1.0		U

ewJ
11/30/09

FORM 1
VOLATILE ORGANICS ANALYSIS DATA SHEET

CLIENT SAMPLE NO. 8

MR08-TW01-08D

Lab Name: EMPIRICAL LABS Contract: CH2MHILL

Lab Code: NA Case No.: NA SAS No.: NA SDG No.: LEJEUNE019

Matrix: (soil/water) WATER Lab Sample ID: 0811249-08

Sample wt/vol: 5.000 (g/mL) ML Lab File ID: 1124908

Level: (low/med) LOW Date Sampled: 11/17/08 16:10

% Moisture: not dec. _____ Date Analyzed: 11/26/08 06:53

GC Column: RTX-VRX ID: 0.25 (mm) Dilution Factor: 1.0

Soil Extract Volume:_____(uL) Soil Aliquot Volume: _____(uL)

CONCENTRATION UNITS: (ug/L or ug/Kg) UG/L

CAS NO.	COMPOUND	MDL	RL	CONC	Q
67-64-1	Acetone	0.84	2.5		U
71-43-2	Benzene	0.11	1.0		U
75-27-4	Bromodichloromethane	0.10	1.0		U
75-25-2	Bromoform	0.10	1.0		U
74-83-9	Bromomethane	0.32	1.0		~~U~~ UJ
78-93-3	2-Butanone	1.0	3.0		~~U~~ R
75-15-0	Carbon disulfide	0.13	1.0		U
56-23-5	Carbon tetrachloride	0.15	1.0		U
108-90-7	Chlorobenzene	0.10	1.0		U
75-00-3	Chloroethane	0.18	1.0		U
67-66-3	Chloroform	0.11	1.0		U
74-87-3	Chloromethane	0.29	1.0		U
110-82-7	Cyclohexane	0.20	1.0		U
124-48-1	Dibromochloromethane	0.10	1.0		U
96-12-8	1,2-Dibromo-3-chloropropane	0.11	1.0		U
106-93-4	1,2-Dibromoethane	0.10	1.0		U
95-50-1	1,2-Dichlorobenzene	0.10	1.0		U
541-73-1	1,3-Dichlorobenzene	0.13	1.0		U
106-46-7	1,4-Dichlorobenzene	0.10	1.0		U
75-71-8	Dichlorodifluoromethane	0.22	1.0		U
75-34-3	1,1-Dichloroethane	0.12	1.0		U
107-06-2	1,2-Dichloroethane	0.10	1.0		U
75-35-4	1,1-Dichloroethene	0.15	1.0		U
156-59-2	cis-1,2-Dichloroethene	0.13	1.0		U
156-60-5	trans-1,2-Dichloroethene	0.13	1.0		U
78-87-5	1,2-Dichloropropane	0.10	1.0		U
10061-01-5	cis-1,3-Dichloropropene	0.11	1.0		U
10061-02-6	trans-1,3-Dichloropropene	0.10	1.0		U
100-41-4	Ethylbenzene	0.13	1.0		U
591-78-6	2-Hexanone	0.30	2.0		U
98-82-8	Isopropylbenzene	0.15	1.0		U
79-20-9	Methyl acetate	0.30	1.0		U
75-09-2	Methylene chloride	0.14	1.0		U
108-87-2	Methyl cyclohexane	0.17	1.0		U
1634-04-4	Methyl tert-butyl ether	0.10	1.0		U
108-10-1	4-Methyl-2-pentanone	0.29	2.0		U
100-42-5	Styrene	0.10	1.0		U
79-34-5	1,1,2,2-Tetrachloroethane	0.10	1.0		U
127-18-4	Tetrachloroethene	0.15	1.0		U

FORM I VOA

MW 11/30/09

FORM 1
VOLATILE ORGANICS ANALYSIS DATA SHEET

CLIENT SAMPLE NO. 8

MR08-TW01-08D

Lab Name: EMPIRICAL LABS Contract: CH2MHILL

Lab Code: NA Case No.: NA SAS No.: NA SDG No.: LEJEUNE019

Matrix: (soil/water) WATER Lab Sample ID: 0811249-08

Sample wt/vol: 5.000 (g/mL) ML Lab File ID: 1124908

Level: (low/med) LOW Date Sampled: 11/17/08 16:10

% Moisture: not dec. _____ Date Analyzed: 11/26/08 06:53

GC Column: RTX-VRX ID: 0.25 (mm) Dilution Factor: 1.0

Soil Extract Volume:_____(uL) Soil Aliquot Volume: _____(uL)

CONCENTRATION UNITS: (ug/L or ug/Kg) UG/L

CAS NO.	COMPOUND	MDL	RL	CONC	Q
108-88-3	Toluene	0.10	1.0	1.04 ~~0.18~~	~~J~~ B
120-82-1	1,2,4-Trichlorobenzene	0.10	1.0		U
71-55-6	1,1,1-Trichloroethane	0.17	1.0		U
79-00-5	1,1,2-Trichloroethane	0.10	1.0		U
79-01-6	Trichloroethene	0.13	1.0		U
76-13-1	Trichlorotrifluoroethane	0.18	1.0		U
75-69-4	Trichlorofluoromethane	0.17	1.0		U
75-01-4	Vinyl chloride	0.18	1.0		U
1330-20-7	Xylene(total)	0.22	1.0		U

hw 11/30/09

FORM 1
VOLATILE ORGANICS ANALYSIS DATA SHEET

CLIENT SAMPLE NO. 9

MR08-TB111808

Lab Name: EMPIRICAL LABS Contract: CH2MHILL

Lab Code: NA Case No.: NA SAS No.: NA SDG No.: LEJEUNE019

Matrix: (soil/water) WATER Lab Sample ID: 0811249-09

Sample wt/vol: 5.000 (g/mL) ML Lab File ID: 1124909

Level: (low/med) LOW Date Sampled: 11/18/08 :

% Moisture: not dec. _____ Date Analyzed: 11/26/08 02:53

GC Column: RTX-VRX ID: 0.25 (mm) Dilution Factor: 1.0

Soil Extract Volume:_____(uL) Soil Aliquot Volume: _____(uL)

CONCENTRATION UNITS: (ug/L or ug/Kg) UG/L

CAS NO.	COMPOUND	MDL	RL	CONC	Q
67-64-1	Acetone	0.84	2.5		U
71-43-2	Benzene	0.11	1.0		U
75-27-4	Bromodichloromethane	0.10	1.0		U
75-25-2	Bromoform	0.10	1.0		U
74-83-9	Bromomethane	0.32	1.0		~~U~~ UJ
78-93-3	2-Butanone	1.0	3.0		~~U~~ R
75-15-0	Carbon disulfide	0.13	1.0		U
56-23-5	Carbon tetrachloride	0.15	1.0		U
108-90-7	Chlorobenzene	0.10	1.0		U
75-00-3	Chloroethane	0.18	1.0		U
67-66-3	Chloroform	0.11	1.0		U
74-87-3	Chloromethane	0.29	1.0		U
110-82-7	Cyclohexane	0.20	1.0		U
124-48-1	Dibromochloromethane	0.10	1.0		U
96-12-8	1,2-Dibromo-3-chloropropane	0.11	1.0		U
106-93-4	1,2-Dibromoethane	0.10	1.0		U
95-50-1	1,2-Dichlorobenzene	0.10	1.0		U
541-73-1	1,3-Dichlorobenzene	0.13	1.0		U
106-46-7	1,4-Dichlorobenzene	0.10	1.0		U
75-71-8	Dichlorodifluoromethane	0.22	1.0		U
75-34-3	1,1-Dichloroethane	0.12	1.0		U
107-06-2	1,2-Dichloroethane	0.10	1.0		U
75-35-4	1,1-Dichloroethene	0.15	1.0		U
156-59-2	cis-1,2-Dichloroethene	0.13	1.0		U
156-60-5	trans-1,2-Dichloroethene	0.13	1.0		U
78-87-5	1,2-Dichloropropane	0.10	1.0		U
10061-01-5	cis-1,3-Dichloropropene	0.11	1.0		U
10061-02-6	trans-1,3-Dichloropropene	0.10	1.0		U
100-41-4	Ethylbenzene	0.13	1.0		U
591-78-6	2-Hexanone	0.30	2.0		U
98-82-8	Isopropylbenzene	0.15	1.0		U
79-20-9	Methyl acetate	0.30	1.0		U
75-09-2	Methylene chloride	0.14	1.0		U
108-87-2	Methyl cyclohexane	0.17	1.0		U
1634-04-4	Methyl tert-butyl ether	0.10	1.0		U
108-10-1	4-Methyl-2-pentanone	0.29	2.0		U
100-42-5	Styrene	0.10	1.0		U
79-34-5	1,1,2,2-Tetrachloroethane	0.10	1.0		U
127-18-4	Tetrachloroethene	0.15	1.0		U

AW 11/30/09

FORM 1
VOLATILE ORGANICS ANALYSIS DATA SHEET

CLIENT SAMPLE NO. 9

MR08-TB111808

Lab Name: EMPIRICAL LABS Contract: CH2MHILL

Lab Code: NA Case No.: NA SAS No.: NA SDG No.: LEJEUNE019

Matrix: (soil/water) WATER Lab Sample ID: 0811249-09

Sample wt/vol: 5.000 (g/mL) ML Lab File ID: 1124909

Level: (low/med) LOW Date Sampled: 11/18/08 :

% Moisture: not dec. _____ Date Analyzed: 11/26/08 02:53

GC Column: RTX-VRX ID: 0.25 (mm) Dilution Factor: 1.0

Soil Extract Volume:_____(uL) Soil Aliquot Volume: _____(uL)

CONCENTRATION UNITS: (ug/L or ug/Kg) UG/L

CAS NO.	COMPOUND	MDL	RL	CONC	Q
108-88-3	Toluene	0.10	1.0		U
120-82-1	1,2,4-Trichlorobenzene	0.10	1.0		U
71-55-6	1,1,1-Trichloroethane	0.17	1.0		U
79-00-5	1,1,2-Trichloroethane	0.10	1.0		U
79-01-6	Trichloroethene	0.13	1.0		U
76-13-1	Trichlorotrifluoroethane	0.18	1.0		U
75-69-4	Trichlorofluoromethane	0.17	1.0		U
75-01-4	Vinyl chloride	0.18	1.0		U
1330-20-7	Xylene(total)	0.22	1.0		U

lcw
1/30/09

FORM 1
VOLATILE ORGANICS ANALYSIS DATA SHEET

CLIENT SAMPLE NO. 10

MR08-IS377-08D

Lab Name: EMPIRICAL LABS Contract: CH2MHILL

Lab Code: NA Case No.: NA SAS No.: NA SDG No.: LEJEUNE019

Matrix: (soil/water) SOIL Lab Sample ID: 0811279-01

Sample wt/vol: 4.9 (g/mL) G Lab File ID: 1127901B

Level: (low/med) LOW Date Sampled: 11/17/08 11:25

% Moisture: not dec. 7 Date Analyzed: 11/27/08 17:55

GC Column: RTX-VRX ID: 0.25 (mm) Dilution Factor: 1.0

Soil Extract Volume:_____(uL) Soil Aliquot Volume: _____(uL)

CONCENTRATION UNITS: (ug/L or ug/Kg) UG/KG

CAS NO.	COMPOUND	MDL	RL	CONC	Q
67-64-1	Acetone	2.2	11		~~U~~ UJ CC
71-43-2	Benzene	0.51	11		U
75-27-4	Bromodichloromethane	0.33	11		U
75-25-2	Bromoform	1.1	11		U
74-83-9	Bromomethane	0.78	11		U
78-93-3	2-Butanone	1.5	11		U
75-15-0	Carbon disulfide	1.4	11		U
56-23-5	Carbon tetrachloride	0.96	11		U
108-90-7	Chlorobenzene	0.37	11		U
75-00-3	Chloroethane	1.2	11		U
67-66-3	Chloroform	0.60	11		U
74-87-3	Chloromethane	0.56	11		~~U~~ UJ CC
110-82-7	Cyclohexane	0.59	11		U
124-48-1	Dibromochloromethane	0.37	11		U
96-12-8	1,2-Dibromo-3-chloropropane	1.3	5.4		U
106-93-4	1,2-Dibromoethane	0.47	11		U
95-50-1	1,2-Dichlorobenzene	0.40	11		U
541-73-1	1,3-Dichlorobenzene	0.91	11		U
106-46-7	1,4-Dichlorobenzene	0.60	11		U
75-71-8	Dichlorodifluoromethane	1.2	11		U
75-34-3	1,1-Dichloroethane	0.59	11		U
107-06-2	1,2-Dichloroethane	0.50	11		U
75-35-4	1,1-Dichloroethene	1.3	11		U
156-59-2	cis-1,2-Dichloroethene	1.3	11		U
156-60-5	trans-1,2-Dichloroethene	1.2	11		U
78-87-5	1,2-Dichloropropane	0.50	11		U
10061-01-5	cis-1,3-Dichloropropene	0.54	11		U
10061-02-6	trans-1,3-Dichloropropene	0.35	11		U
100-41-4	Ethylbenzene	0.82	11		U
591-78-6	2-Hexanone	2.5	11		U
98-82-8	Isopropylbenzene	0.96	11		U
79-20-9	Methyl acetate	1.7	11		~~U~~ UJ CC
75-09-2	Methylene chloride	0.67	11	11u ~~3.4~~	~~JB~~ B
108-87-2	Methyl cyclohexane	0.33	11		U
1634-04-4	Methyl tert-butyl ether	0.35	11		U
108-10-1	4-Methyl-2-pentanone	0.63	11		~~U~~ UJ CC
100-42-5	Styrene	0.38	11		U
79-34-5	1,1,2,2-Tetrachloroethane	0.47	11		U
127-18-4	Tetrachloroethene	1.0	11		U

FORM I VOA

lw 1/30/09

FORM 1
VOLATILE ORGANICS ANALYSIS DATA SHEET

CLIENT SAMPLE NO. 10

MR08-IS377-08D

Lab Name: EMPIRICAL LABS Contract: CH2MHILL

Lab Code: NA Case No.: NA SAS No.: NA SDG No.: LEJEUNE019

Matrix: (soil/water) SOIL Lab Sample ID: 0811279-01

Sample wt/vol: 4.9 (g/mL) G Lab File ID: 1127901B

Level: (low/med) LOW Date Sampled: 11/17/08 11:25

% Moisture: not dec. 7 Date Analyzed: 11/27/08 17:55

GC Column: RTX-VRX ID: 0.25 (mm) Dilution Factor: 1.0

Soil Extract Volume:_____(uL) Soil Aliquot Volume: _____(uL)

CONCENTRATION UNITS: (ug/L or ug/Kg) UG/KG

CAS NO.	COMPOUND	MDL	RL	CONC	Q
108-88-3	Toluene	0.93	11		U
120-82-1	1,2,4-Trichlorobenzene	0.20	11		U
71-55-6	1,1,1-Trichloroethane	0.98	11		U
79-00-5	1,1,2-Trichloroethane	0.38	11		U
79-01-6	Trichloroethene	0.92	11		U
76-13-1	Trichlorotrifluoroethane	0.60	11		U
75-69-4	Trichlorofluoromethane	1.0	11		U
75-01-4	Vinyl chloride	1.2	11		~~U~~ UJ cc
1330-20-7	Xylene(total)	0.76	11		U

FORM I VOA

lcw
11/30/09

FORM 1
VOLATILE ORGANICS ANALYSIS DATA SHEET

CLIENT SAMPLE NO. 11

MR08-IS377D-08D

Lab Name: EMPIRICAL LABS Contract: CH2MHILL

Lab Code: NA Case No.: NA SAS No.: NA SDG No.: LEJEUNE019

Matrix: (soil/water) SOIL Lab Sample ID: 0811279-02

Sample wt/vol: 5.2 (g/mL) G Lab File ID: 1127902B

Level: (low/med) LOW Date Sampled: 11/17/08 11:30

% Moisture: not dec. 5 Date Analyzed: 11/27/08 18:34

GC Column: RTX-VRX ID: 0.25 (mm) Dilution Factor: 1.0

Soil Extract Volume:_____(uL) Soil Aliquot Volume: _____(uL)

CONCENTRATION UNITS: (ug/L or ug/Kg) UG/KG

CAS NO.	COMPOUND	MDL	RL	CONC	Q
67-64-1	Acetone	2.0	10	10UJ ~~3.8~~	~~J~~ CCH BC
71-43-2	Benzene	0.48	10		U
75-27-4	Bromodichloromethane	0.30	10		U
75-25-2	Bromoform	1.0	10		U
74-83-9	Bromomethane	0.73	10		U
78-93-3	2-Butanone	1.4	10		U
75-15-0	Carbon disulfide	1.3	10		U
56-23-5	Carbon tetrachloride	0.90	10		U
108-90-7	Chlorobenzene	0.35	10		U
75-00-3	Chloroethane	1.1	10		U
67-66-3	Chloroform	0.56	10		U
74-87-3	Chloromethane	0.53	10		~~U~~ UJ CC
110-82-7	Cyclohexane	0.55	10		U
124-48-1	Dibromochloromethane	0.35	10		U
96-12-8	1,2-Dibromo-3-chloropropane	1.2	5.1		U
106-93-4	1,2-Dibromoethane	0.44	10		U
95-50-1	1,2-Dichlorobenzene	0.38	10		U
541-73-1	1,3-Dichlorobenzene	0.86	10		U
106-46-7	1,4-Dichlorobenzene	0.56	10		U
75-71-8	Dichlorodifluoromethane	1.1	10		U
75-34-3	1,1-Dichloroethane	0.55	10		U
107-06-2	1,2-Dichloroethane	0.47	10		U
75-35-4	1,1-Dichloroethene	1.2	10		U
156-59-2	cis-1,2-Dichloroethene	1.2	10		U
156-60-5	trans-1,2-Dichloroethene	1.1	10		U
78-87-5	1,2-Dichloropropane	0.47	10		U
10061-01-5	cis-1,3-Dichloropropene	0.51	10		U
10061-02-6	trans-1,3-Dichloropropene	0.33	10		U
100-41-4	Ethylbenzene	0.76	10		U
591-78-6	2-Hexanone	2.3	10		U
98-82-8	Isopropylbenzene	0.90	10		U
79-20-9	Methyl acetate	1.6	10		~~U~~ UJ C
75-09-2	Methylene chloride	0.63	10	10U ~~3.2~~	~~JB~~ B
108-87-2	Methyl cyclohexane	0.30	10		U
1634-04-4	Methyl tert-butyl ether	0.33	10		U
108-10-1	4-Methyl-2-pentanone	0.59	10		~~U~~ UJ CC
100-42-5	Styrene	0.36	10		U
79-34-5	1,1,2,2-Tetrachloroethane	0.44	10		U
127-18-4	Tetrachloroethene	0.99	10		U

FORM I VOA

AW
11/30/09

FORM 1
VOLATILE ORGANICS ANALYSIS DATA SHEET

CLIENT SAMPLE NO. 11

MR08-IS377D-08D

Lab Name: EMPIRICAL LABS Contract: CH2MHILL

Lab Code: NA Case No.: NA SAS No.: NA SDG No.: LEJEUNE019

Matrix: (soil/water) SOIL Lab Sample ID: 0811279-02

Sample wt/vol: 5.2 (g/mL) G Lab File ID: 1127902B

Level: (low/med) LOW Date Sampled: 11/17/08 11:30

% Moisture: not dec. 5 Date Analyzed: 11/27/08 18:34

GC Column: RTX-VRX ID: 0.25 (mm) Dilution Factor: 1.0

Soil Extract Volume:_____(uL) Soil Aliquot Volume: _____(uL)

CONCENTRATION UNITS: (ug/L or ug/Kg) UG/KG

CAS NO.	COMPOUND	MDL	RL	CONC	Q
108-88-3	Toluene	0.88	10		U
120-82-1	1,2,4-Trichlorobenzene	0.18	10		U
71-55-6	1,1,1-Trichloroethane	0.92	10		U
79-00-5	1,1,2-Trichloroethane	0.36	10		U
79-01-6	Trichloroethene	0.87	10		U
76-13-1	Trichlorotrifluoroethane	0.56	10		U
75-69-4	Trichlorofluoromethane	0.97	10		U
75-01-4	Vinyl chloride	1.1	10		~~U~~ UJ
1330-20-7	Xylene(total)	0.71	10		U

cc

FORM I VOA

MW
11/30/09

FORM 1
VOLATILE ORGANICS ANALYSIS DATA SHEET

CLIENT SAMPLE NO. 12

MR08-IS397-08D

Lab Name: EMPIRICAL LABS Contract: CH2MHILL

Lab Code: NA Case No.: NA SAS No.: NA SDG No.: LEJEUNE019

Matrix: (soil/water) SOIL Lab Sample ID: 0811279-03

Sample wt/vol: 5.5 (g/mL) G Lab File ID: 1127903B

Level: (low/med) LOW Date Sampled: 11/17/08 16:00

% Moisture: not dec. 17 Date Analyzed: 11/27/08 19:13

GC Column: RTX-VRX ID: 0.25 (mm) Dilution Factor: 1.0

Soil Extract Volume:_____(uL) Soil Aliquot Volume: _____(uL)

CONCENTRATION UNITS: (ug/L or ug/Kg) UG/KG

CAS NO.	COMPOUND	MDL	RL	CONC	Q
67-64-1	Acetone	2.2	11	14	UJ CC B
71-43-2	Benzene	0.51	11		U
75-27-4	Bromodichloromethane	0.33	11		U
75-25-2	Bromoform	1.1	11		U
74-83-9	Bromomethane	0.78	11		U
78-93-3	2-Butanone	1.5	11		U
75-15-0	Carbon disulfide	1.4	11		U
56-23-5	Carbon tetrachloride	0.96	11		U
108-90-7	Chlorobenzene	0.37	11		U
75-00-3	Chloroethane	1.2	11		U
67-66-3	Chloroform	0.60	11		U
74-87-3	Chloromethane	0.56	11		~~U~~ UJ CC
110-82-7	Cyclohexane	0.59	11		U
124-48-1	Dibromochloromethane	0.37	11		U
96-12-8	1,2-Dibromo-3-chloropropane	1.3	5.4		U
106-93-4	1,2-Dibromoethane	0.47	11		U
95-50-1	1,2-Dichlorobenzene	0.40	11		U
541-73-1	1,3-Dichlorobenzene	0.91	11		U
106-46-7	1,4-Dichlorobenzene	0.60	11		U
75-71-8	Dichlorodifluoromethane	1.2	11		U
75-34-3	1,1-Dichloroethane	0.59	11		U
107-06-2	1,2-Dichloroethane	0.50	11		U
75-35-4	1,1-Dichloroethene	1.3	11		U
156-59-2	cis-1,2-Dichloroethene	1.3	11		U
156-60-5	trans-1,2-Dichloroethene	1.2	11		U
78-87-5	1,2-Dichloropropane	0.50	11		U
10061-01-5	cis-1,3-Dichloropropene	0.54	11		U
10061-02-6	trans-1,3-Dichloropropene	0.35	11		U
100-41-4	Ethylbenzene	0.82	11		U
591-78-6	2-Hexanone	2.5	11		U
98-82-8	Isopropylbenzene	0.96	11		U
79-20-9	Methyl acetate	1.7	11		~~U~~ UJ CC
75-09-2	Methylene chloride	0.67	11	11u	~~2.8~~ ~~JB~~ B
108-87-2	Methyl cyclohexane	0.33	11		U
1634-04-4	Methyl tert-butyl ether	0.35	11		U
108-10-1	4-Methyl-2-pentanone	0.63	11		~~U~~ UJ CC
100-42-5	Styrene	0.38	11		U
79-34-5	1,1,2,2-Tetrachloroethane	0.47	11		U
127-18-4	Tetrachloroethene	1.0	11		U

FORM I VOA

LW 11/30/09

FORM 1
VOLATILE ORGANICS ANALYSIS DATA SHEET

CLIENT SAMPLE NO. 12

MR08-IS397-08D

Lab Name: EMPIRICAL LABS Contract: CH2MHILL

Lab Code: NA Case No.: NA SAS No.: NA SDG No.: LEJEUNE019

Matrix: (soil/water) SOIL Lab Sample ID: 0811279-03

Sample wt/vol: 5.5 (g/mL) G Lab File ID: 1127903B

Level: (low/med) LOW Date Sampled: 11/17/08 16:00

% Moisture: not dec. 17 Date Analyzed: 11/27/08 19:13

GC Column: RTX-VRX ID: 0.25 (mm) Dilution Factor: 1.0

Soil Extract Volume:_____(uL) Soil Aliquot Volume: _____(uL)

CONCENTRATION UNITS: (ug/L or ug/Kg) UG/KG

CAS NO.	COMPOUND	MDL	RL	CONC	Q
108-88-3	Toluene	0.93	11		U
120-82-1	1,2,4-Trichlorobenzene	0.20	11		U
71-55-6	1,1,1-Trichloroethane	0.98	11		U
79-00-5	1,1,2-Trichloroethane	0.38	11		U
79-01-6	Trichloroethene	0.92	11		U
76-13-1	Trichlorotrifluoroethane	0.60	11		U
75-69-4	Trichlorofluoromethane	1.0	11		U
75-01-4	Vinyl chloride	1.2	11		~~U~~ UJ CCV
1330-20-7	Xylene(total)	0.76	11		U

lw
113009

13

FORM 1
VOLATILE ORGANICS ANALYSIS DATA SHEET

CLIENT SAMPLE NO.

MR08-IS398-08D

Lab Name: EMPIRICAL LABS Contract: CH2MHILL

Lab Code: NA Case No.: NA SAS No.: NA SDG No.: LEJEUNE019

Matrix: (soil/water) SOIL Lab Sample ID: 0811279-04

Sample wt/vol: 6.6 (g/mL) G Lab File ID: 1127904B

Level: (low/med) LOW Date Sampled: 11/18/08 08:35

% Moisture: not dec. 14 Date Analyzed: 11/27/08 19:52

GC Column: RTX-VRX ID: 0.25 (mm) Dilution Factor: 1.0

Soil Extract Volume:_____(uL) Soil Aliquot Volume: _____(uL)

CONCENTRATION UNITS: (ug/L or ug/Kg) UG/KG

CAS NO.	COMPOUND	MDL	RL	CONC	Q
67-64-1	Acetone	1.8	8.9	31	UJ ~~UB~~
71-43-2	Benzene	0.42	8.9		U
75-27-4	Bromodichloromethane	0.26	8.9		U
75-25-2	Bromoform	0.89	8.9		U
74-83-9	Bromomethane	0.64	8.9		U
78-93-3	2-Butanone	1.2	8.9		U
75-15-0	Carbon disulfide	1.2	8.9		U
56-23-5	Carbon tetrachloride	0.78	8.9		U
108-90-7	Chlorobenzene	0.30	8.9		U
75-00-3	Chloroethane	0.97	8.9		U
67-66-3	Chloroform	0.49	8.9		U
74-87-3	Chloromethane	0.46	8.9		~~U~~ UJ CH
110-82-7	Cyclohexane	0.48	8.9		U
124-48-1	Dibromochloromethane	0.30	8.9		U
96-12-8	1,2-Dibromo-3-chloropropane	1.1	4.4		U
106-93-4	1,2-Dibromoethane	0.38	8.9		U
95-50-1	1,2-Dichlorobenzene	0.33	8.9		U
541-73-1	1,3-Dichlorobenzene	0.74	8.9		U
106-46-7	1,4-Dichlorobenzene	0.49	8.9		U
75-71-8	Dichlorodifluoromethane	0.97	8.9		U
75-34-3	1,1-Dichloroethane	0.48	8.9		U
107-06-2	1,2-Dichloroethane	0.41	8.9		U
75-35-4	1,1-Dichloroethene	1.1	8.9		U
156-59-2	cis-1,2-Dichloroethene	1.1	8.9		U
156-60-5	trans-1,2-Dichloroethene	0.97	8.9		U
78-87-5	1,2-Dichloropropane	0.41	8.9		U
10061-01-5	cis-1,3-Dichloropropene	0.44	8.9		U
10061-02-6	trans-1,3-Dichloropropene	0.28	8.9		U
100-41-4	Ethylbenzene	0.66	8.9		U
591-78-6	2-Hexanone	2.0	8.9		U
98-82-8	Isopropylbenzene	0.78	8.9		U
79-20-9	Methyl acetate	1.4	8.9		~~U~~ UJ CH
75-09-2	Methylene chloride	0.55	8.9	8.9u ~~2.3 JB~~	B
108-87-2	Methyl cyclohexane	0.26	8.9		U
1634-04-4	Methyl tert-butyl ether	0.28	8.9		U
108-10-1	4-Methyl-2-pentanone	0.51	8.9		~~U~~ UJ CH
100-42-5	Styrene	0.31	8.9		U
79-34-5	1,1,2,2-Tetrachloroethane	0.38	8.9		U
127-18-4	Tetrachloroethene	0.86	8.9		U

FORM I VOA

11/30/09

13

FORM 1
VOLATILE ORGANICS ANALYSIS DATA SHEET

CLIENT SAMPLE NO.

MR08-IS398-08D

Lab Name: EMPIRICAL LABS Contract: CH2MHILL

Lab Code: NA Case No.: NA SAS No.: NA SDG No.: LEJEUNE019

Matrix: (soil/water) SOIL Lab Sample ID: 0811279-04

Sample wt/vol: 6.6 (g/mL) G Lab File ID: 1127904B

Level: (low/med) LOW Date Sampled: 11/18/08 08:35

% Moisture: not dec. 14 Date Analyzed: 11/27/08 19:52

GC Column: RTX-VRX ID: 0.25 (mm) Dilution Factor: 1.0

Soil Extract Volume:_____(uL) Soil Aliquot Volume: _____(uL)

CONCENTRATION UNITS: (ug/L or ug/Kg) UG/KG

CAS NO.	COMPOUND	MDL	RL	CONC	Q
108-88-3	Toluene	0.76	8.9		U
120-82-1	1,2,4-Trichlorobenzene	0.16	8.9		U
71-55-6	1,1,1-Trichloroethane	0.80	8.9		U
79-00-5	1,1,2-Trichloroethane	0.31	8.9		U
79-01-6	Trichloroethene	0.75	8.9		U
76-13-1	Trichlorotrifluoroethane	0.49	8.9		U
75-69-4	Trichlorofluoromethane	0.84	8.9		U
75-01-4	Vinyl chloride	0.97	8.9		U
1330-20-7	Xylene(total)	0.62	8.9		U

FORM I VOA

11/30/09

FORM 1
VOLATILE ORGANICS ANALYSIS DATA SHEET

CLIENT SAMPLE NO. 14

MR08-IS398D-08D

Lab Name: EMPIRICAL LABS Contract: CH2MHILL

Lab Code: NA Case No.: NA SAS No.: NA SDG No.: LEJEUNE019

Matrix: (soil/water) SOIL Lab Sample ID: 0811279-05

Sample wt/vol: 6.1 (g/mL) G Lab File ID: 1127905B

Level: (low/med) LOW Date Sampled: 11/18/08 08:40

% Moisture: not dec. 15 Date Analyzed: 11/27/08 20:31

GC Column: RTX-VRX ID: 0.25 (mm) Dilution Factor: 1.0

Soil Extract Volume:_____(uL) Soil Aliquot Volume: _____(uL)

CONCENTRATION UNITS: (ug/L or ug/Kg) UG/KG

CAS NO.	COMPOUND	MDL	RL	CONC	Q
67-64-1	Acetone	1.9	9.7	30	UJ CH
71-43-2	Benzene	0.46	9.7		U
75-27-4	Bromodichloromethane	0.29	9.7		U
75-25-2	Bromoform	0.97	9.7		U
74-83-9	Bromomethane	0.70	9.7		U
78-93-3	2-Butanone	1.4	9.7		U
75-15-0	Carbon disulfide	1.3	9.7		U
56-23-5	Carbon tetrachloride	0.86	9.7		U
108-90-7	Chlorobenzene	0.33	9.7		U
75-00-3	Chloroethane	1.1	9.7		U
67-66-3	Chloroform	0.54	9.7		U
74-87-3	Chloromethane	0.50	9.7		~~U~~ UJ CCH
110-82-7	Cyclohexane	0.52	9.7		U
124-48-1	Dibromochloromethane	0.33	9.7		U
96-12-8	1,2-Dibromo-3-chloropropane	1.2	4.9		U
106-93-4	1,2-Dibromoethane	0.42	9.7		U
95-50-1	1,2-Dichlorobenzene	0.36	9.7		U
541-73-1	1,3-Dichlorobenzene	0.82	9.7		U
106-46-7	1,4-Dichlorobenzene	0.54	9.7		U
75-71-8	Dichlorodifluoromethane	1.1	9.7		U
75-34-3	1,1-Dichloroethane	0.52	9.7		U
107-06-2	1,2-Dichloroethane	0.45	9.7		U
75-35-4	1,1-Dichloroethene	1.2	9.7		U
156-59-2	cis-1,2-Dichloroethene	1.2	9.7		U
156-60-5	trans-1,2-Dichloroethene	1.1	9.7		U
78-87-5	1,2-Dichloropropane	0.45	9.7		U
10061-01-5	cis-1,3-Dichloropropene	0.49	9.7		U
10061-02-6	trans-1,3-Dichloropropene	0.31	9.7		U
100-41-4	Ethylbenzene	0.73	9.7		U
591-78-6	2-Hexanone	2.2	9.7		U
98-82-8	Isopropylbenzene	0.86	9.7		U
79-20-9	Methyl acetate	1.6	9.7		UJ CCH
75-09-2	Methylene chloride	0.60	9.7	9.7u ~~3.0~~	JB BL
108-87-2	Methyl cyclohexane	0.29	9.7		U
1634-04-4	Methyl tert-butyl ether	0.31	9.7		U
108-10-1	4-Methyl-2-pentanone	0.56	9.7		~~U~~ UJ CCH
100-42-5	Styrene	0.34	9.7		U
79-34-5	1,1,2,2-Tetrachloroethane	0.42	9.7		U
127-18-4	Tetrachloroethene	0.94	9.7		U

FORM I VOA

lw
11/30/09

FORM 1
VOLATILE ORGANICS ANALYSIS DATA SHEET

CLIENT SAMPLE NO. 14

MR08-IS398D-08D

Lab Name: EMPIRICAL LABS Contract: CH2MHILL

Lab Code: NA Case No.: NA SAS No.: NA SDG No.: LEJEUNE019

Matrix: (soil/water) SOIL Lab Sample ID: 0811279-05

Sample wt/vol: 6.1 (g/mL) G Lab File ID: 1127905B

Level: (low/med) LOW Date Sampled: 11/18/08 08:40

% Moisture: not dec. 15 Date Analyzed: 11/27/08 20:31

GC Column: RTX-VRX ID: 0.25 (mm) Dilution Factor: 1.0

Soil Extract Volume:_____(uL) Soil Aliquot Volume: _____(uL)

CONCENTRATION UNITS: (ug/L or ug/Kg) UG/KG

CAS NO.	COMPOUND	MDL	RL	CONC	Q
108-88-3	Toluene	0.84	9.7		U
120-82-1	1,2,4-Trichlorobenzene	0.18	9.7		U
71-55-6	1,1,1-Trichloroethane	0.88	9.7		U
79-00-5	1,1,2-Trichloroethane	0.34	9.7		U
79-01-6	Trichloroethene	0.83	9.7		U
76-13-1	Trichlorotrifluoroethane	0.54	9.7		U
75-69-4	Trichlorofluoromethane	0.92	9.7		U
75-01-4	Vinyl chloride	1.1	9.7		~~U~~ UJ CH
1330-20-7	Xylene(total)	0.68	9.7		U

FORM I VOA

LW
11/30/09

FORM 1
VOLATILE ORGANICS ANALYSIS DATA SHEET

CLIENT SAMPLE NO. 15

MR08-IS399-08D

Lab Name: EMPIRICAL LABS Contract: CH2MHILL

Lab Code: NA Case No.: NA SAS No.: NA SDG No.: LEJEUNE019

Matrix: (soil/water) SOIL Lab Sample ID: 0811279-06

Sample wt/vol: 5.1 (g/mL) G Lab File ID: 1127906B

Level: (low/med) LOW Date Sampled: 11/18/08 09:20

% Moisture: not dec. 5 Date Analyzed: 11/27/08 21:10

GC Column: RTX-VRX ID: 0.25 (mm) Dilution Factor: 1.0

Soil Extract Volume:_____(uL) Soil Aliquot Volume: _____(uL)

CONCENTRATION UNITS: (ug/L or ug/Kg) UG/KG

CAS NO.	COMPOUND	MDL	RL	CONC	Q
67-64-1	Acetone	2.0	10	10U 8.5	~~J~~ CCH B
71-43-2	Benzene	0.48	10		U
75-27-4	Bromodichloromethane	0.31	10		U
75-25-2	Bromoform	1.0	10		U
74-83-9	Bromomethane	0.74	10		U
78-93-3	2-Butanone	1.4	10		U
75-15-0	Carbon disulfide	1.3	10		U
56-23-5	Carbon tetrachloride	0.90	10		U
108-90-7	Chlorobenzene	0.35	10		U
75-00-3	Chloroethane	1.1	10		U
67-66-3	Chloroform	0.56	10		U
74-87-3	Chloromethane	0.53	10		~~U~~ UJ CCH
110-82-7	Cyclohexane	0.56	10		U
124-48-1	Dibromochloromethane	0.35	10		U
96-12-8	1,2-Dibromo-3-chloropropane	1.2	5.1		U
106-93-4	1,2-Dibromoethane	0.44	10		U
95-50-1	1,2-Dichlorobenzene	0.38	10		U
541-73-1	1,3-Dichlorobenzene	0.86	10		U
106-46-7	1,4-Dichlorobenzene	0.56	10		U
75-71-8	Dichlorodifluoromethane	1.1	10		U
75-34-3	1,1-Dichloroethane	0.56	10		U
107-06-2	1,2-Dichloroethane	0.47	10		U
75-35-4	1,1-Dichloroethene	1.2	10		U
156-59-2	cis-1,2-Dichloroethene	1.2	10		U
156-60-5	trans-1,2-Dichloroethene	1.1	10		U
78-87-5	1,2-Dichloropropane	0.47	10		U
10061-01-5	cis-1,3-Dichloropropene	0.51	10		U
10061-02-6	trans-1,3-Dichloropropene	0.33	10		U
100-41-4	Ethylbenzene	0.77	10		U
591-78-6	2-Hexanone	2.4	10		U
98-82-8	Isopropylbenzene	0.90	10		U
79-20-9	Methyl acetate	1.6	10		~~U~~ UJ CCH
75-09-2	Methylene chloride	0.64	10	10U ~~2.7~~ ~~JB~~	B
108-87-2	Methyl cyclohexane	0.31	10		U
1634-04-4	Methyl tert-butyl ether	0.33	10		U
108-10-1	4-Methyl-2-pentanone	0.60	10		~~U~~ UJ CCH
100-42-5	Styrene	0.36	10		U
79-34-5	1,1,2,2-Tetrachloroethane	0.44	10		U
127-18-4	Tetrachloroethene	1.00	10		U

FORM I VOA

lcw 113009

FORM 1
VOLATILE ORGANICS ANALYSIS DATA SHEET

CLIENT SAMPLE NO. 15

MR08-IS399-08D

Lab Name: EMPIRICAL LABS Contract: CH2MHILL

Lab Code: NA Case No.: NA SAS No.: NA SDG No.: LEJEUNE019

Matrix: (soil/water) SOIL Lab Sample ID: 0811279-06

Sample wt/vol: 5.1 (g/mL) G Lab File ID: 1127906B

Level: (low/med) LOW Date Sampled: 11/18/08 09:20

% Moisture: not dec. 5 Date Analyzed: 11/27/08 21:10

GC Column: RTX-VRX ID: 0.25 (mm) Dilution Factor: 1.0

Soil Extract Volume:_____(uL) Soil Aliquot Volume: _____(uL)

CONCENTRATION UNITS: (ug/L or ug/Kg) UG/KG

CAS NO.	COMPOUND	MDL	RL	CONC	Q
108-88-3	Toluene	0.88	10		U
120-82-1	1,2,4-Trichlorobenzene	0.18	10		U
71-55-6	1,1,1-Trichloroethane	0.92	10		U
79-00-5	1,1,2-Trichloroethane	0.36	10		U
79-01-6	Trichloroethene	0.87	10		U
76-13-1	Trichlorotrifluoroethane	0.56	10		U
75-69-4	Trichlorofluoromethane	0.98	10		U
75-01-4	Vinyl chloride	1.1	10		U UJ CC
1330-20-7	Xylene(total)	0.72	10		U

FORM I VOA

RW
11/30/09

FORM 1
VOLATILE ORGANICS ANALYSIS DATA SHEET

CLIENT SAMPLE NO. 16

MR08-IS392-08D

Lab Name: EMPIRICAL LABS Contract: CH2MHILL

Lab Code: NA Case No.: NA SAS No.: NA SDG No.: LEJEUNE019

Matrix: (soil/water) SOIL Lab Sample ID: 0811279-07

Sample wt/vol: 5.1 (g/mL) G Lab File ID: 1127907B

Level: (low/med) LOW Date Sampled: 11/18/08 10:40

% Moisture: not dec. 11 Date Analyzed: 11/27/08 21:49

GC Column: RTX-VRX ID: 0.25 (mm) Dilution Factor: 1.0

Soil Extract Volume:_____(uL) Soil Aliquot Volume: _____(uL)

CONCENTRATION UNITS: (ug/L or ug/Kg) UG/KG

CAS NO.	COMPOUND	MDL	RL	CONC	Q
67-64-1	Acetone	2.2	11	11U ~~10~~	~~J~~ CCH B
71-43-2	Benzene	0.51	11		U
75-27-4	Bromodichloromethane	0.33	11		U
75-25-2	Bromoform	1.1	11		U
74-83-9	Bromomethane	0.78	11		U
78-93-3	2-Butanone	1.5	11		U
75-15-0	Carbon disulfide	1.4	11		U
56-23-5	Carbon tetrachloride	0.96	11		U
108-90-7	Chlorobenzene	0.37	11		U
75-00-3	Chloroethane	1.2	11		U
67-66-3	Chloroform	0.60	11		U
74-87-3	Chloromethane	0.57	11		~~J~~ UJ CCH
110-82-7	Cyclohexane	0.59	11		U
124-48-1	Dibromochloromethane	0.37	11		U
96-12-8	1,2-Dibromo-3-chloropropane	1.3	5.4		U
106-93-4	1,2-Dibromoethane	0.47	11		U
95-50-1	1,2-Dichlorobenzene	0.40	11		U
541-73-1	1,3-Dichlorobenzene	0.91	11		U
106-46-7	1,4-Dichlorobenzene	0.60	11		U
75-71-8	Dichlorodifluoromethane	1.2	11		U
75-34-3	1,1-Dichloroethane	0.59	11		U
107-06-2	1,2-Dichloroethane	0.50	11		U
75-35-4	1,1-Dichloroethene	1.3	11		U
156-59-2	cis-1,2-Dichloroethene	1.3	11		U
156-60-5	trans-1,2-Dichloroethene	1.2	11		U
78-87-5	1,2-Dichloropropane	0.50	11		U
10061-01-5	cis-1,3-Dichloropropene	0.54	11		U
10061-02-6	trans-1,3-Dichloropropene	0.35	11		U
100-41-4	Ethylbenzene	0.82	11		U
591-78-6	2-Hexanone	2.5	11		U
98-82-8	Isopropylbenzene	0.96	11		U
79-20-9	Methyl acetate	1.7	11		~~J~~ UJ CCH
75-09-2	Methylene chloride	0.68	11	11U ~~3.6~~	~~JB~~ B
108-87-2	Methyl cyclohexane	0.33	11		U
1634-04-4	Methyl tert-butyl ether	0.35	11		U
108-10-1	4-Methyl-2-pentanone	0.63	11		~~J~~ UJ CCH
100-42-5	Styrene	0.38	11		U
79-34-5	1,1,2,2-Tetrachloroethane	0.47	11		U
127-18-4	Tetrachloroethene	1.0	11		U

FORM I VOA

LW
1/30/09

FORM 1
VOLATILE ORGANICS ANALYSIS DATA SHEET

CLIENT SAMPLE NO. 16

MR08-IS392-08D

Lab Name: EMPIRICAL LABS Contract: CH2MHILL

Lab Code: NA Case No.: NA SAS No.: NA SDG No.: LEJEUNE019

Matrix: (soil/water) SOIL Lab Sample ID: 0811279-07

Sample wt/vol: 5.1 (g/mL) G Lab File ID: 1127907B

Level: (low/med) LOW Date Sampled: 11/18/08 10:40

% Moisture: not dec. 11 Date Analyzed: 11/27/08 21:49

GC Column: RTX-VRX ID: 0.25 (mm) Dilution Factor: 1.0

Soil Extract Volume:_____(uL) Soil Aliquot Volume: _____(uL)

CONCENTRATION UNITS: (ug/L or ug/Kg) UG/KG

CAS NO.	COMPOUND	MDL	RL	CONC	Q
108-88-3	Toluene	0.94	11		U
120-82-1	1,2,4-Trichlorobenzene	0.20	11		U
71-55-6	1,1,1-Trichloroethane	0.98	11		U
79-00-5	1,1,2-Trichloroethane	0.38	11		U
79-01-6	Trichloroethene	0.92	11		U
76-13-1	Trichlorotrifluoroethane	0.60	11		U
75-69-4	Trichlorofluoromethane	1.0	11		U
75-01-4	Vinyl chloride	1.2	11		~~U~~ UJ CCH
1330-20-7	Xylene(total)	0.76	11		U

FORM I VOA

JW
11/30/09

FORM 1
VOLATILE ORGANICS ANALYSIS DATA SHEET

CLIENT SAMPLE NO. 17

MR08-IS391-08D

Lab Name: EMPIRICAL LABS Contract: CH2MHILL

Lab Code: NA Case No.: NA SAS No.: NA SDG No.: LEJEUNE019

Matrix: (soil/water) SOIL Lab Sample ID: 0811279-08

Sample wt/vol: 4.8 (g/mL) G Lab File ID: 1127908B

Level: (low/med) LOW Date Sampled: 11/18/08 12:15

% Moisture: not dec. 6 Date Analyzed: 11/27/08 22:28

GC Column: RTX-VRX ID: 0.25 (mm) Dilution Factor: 1.0

Soil Extract Volume:_____(uL) Soil Aliquot Volume: _____(uL)

CONCENTRATION UNITS: (ug/L or ug/Kg) UG/KG

CAS NO.	COMPOUND	MDL	RL	CONC	Q
67-64-1	Acetone	2.2	11	14	UJ CH B
71-43-2	Benzene	0.52	11		U
75-27-4	Bromodichloromethane	0.33	11		U
75-25-2	Bromoform	1.1	11		U
74-83-9	Bromomethane	0.79	11		U
78-93-3	2-Butanone	1.5	11		U
75-15-0	Carbon disulfide	1.4	11		U
56-23-5	Carbon tetrachloride	0.97	11		U
108-90-7	Chlorobenzene	0.38	11		U
75-00-3	Chloroethane	1.2	11		U
67-66-3	Chloroform	0.61	11		U
74-87-3	Chloromethane	0.57	11		~~U~~ UJ CH
110-82-7	Cyclohexane	0.60	11		U
124-48-1	Dibromochloromethane	0.38	11		U
96-12-8	1,2-Dibromo-3-chloropropane	1.3	5.5		U
106-93-4	1,2-Dibromoethane	0.47	11		U
95-50-1	1,2-Dichlorobenzene	0.41	11		U
541-73-1	1,3-Dichlorobenzene	0.93	11		U
106-46-7	1,4-Dichlorobenzene	0.61	11		U
75-71-8	Dichlorodifluoromethane	1.2	11		U
75-34-3	1,1-Dichloroethane	0.60	11		U
107-06-2	1,2-Dichloroethane	0.51	11		U
75-35-4	1,1-Dichloroethene	1.3	11		U
156-59-2	cis-1,2-Dichloroethene	1.3	11		U
156-60-5	trans-1,2-Dichloroethene	1.2	11		U
78-87-5	1,2-Dichloropropane	0.51	11		U
10061-01-5	cis-1,3-Dichloropropene	0.55	11		U
10061-02-6	trans-1,3-Dichloropropene	0.35	11		U
100-41-4	Ethylbenzene	0.83	11		U
591-78-6	2-Hexanone	2.5	11		U
98-82-8	Isopropylbenzene	0.97	11		U
79-20-9	Methyl acetate	1.8	11		~~U~~ UJ CH
75-09-2	Methylene chloride	0.68	11	11u ~~2.6~~ ~~JB~~	B
108-87-2	Methyl cyclohexane	0.33	11		U
1634-04-4	Methyl tert-butyl ether	0.35	11		U
108-10-1	4-Methyl-2-pentanone	0.64	11		~~U~~ UJ CH
100-42-5	Styrene	0.39	11		U
79-34-5	1,1,2,2-Tetrachloroethane	0.47	11		U
127-18-4	Tetrachloroethene	1.1	11		U

FORM I VOA

LW
11/30/09

FORM 1
VOLATILE ORGANICS ANALYSIS DATA SHEET

CLIENT SAMPLE NO. 17

MR08-IS391-08D

Lab Name: EMPIRICAL LABS Contract: CH2MHILL

Lab Code: NA Case No.: NA SAS No.: NA SDG No.: LEJEUNE019

Matrix: (soil/water) SOIL Lab Sample ID: 0811279-08

Sample wt/vol: 4.8 (g/mL) G Lab File ID: 1127908B

Level: (low/med) LOW Date Sampled: 11/18/08 12:15

% Moisture: not dec. 6 Date Analyzed: 11/27/08 22:28

GC Column: RTX-VRX ID: 0.25 (mm) Dilution Factor: 1.0

Soil Extract Volume:_____(uL) Soil Aliquot Volume: _____(uL)

CONCENTRATION UNITS: (ug/L or ug/Kg) UG/KG

CAS NO.	COMPOUND	MDL	RL	CONC	Q
108-88-3	Toluene	0.95	11		U
120-82-1	1,2,4-Trichlorobenzene	0.20	11		U
71-55-6	1,1,1-Trichloroethane	0.99	11		U
79-00-5	1,1,2-Trichloroethane	0.39	11		U
79-01-6	Trichloroethene	0.94	11		U
76-13-1	Trichlorotrifluoroethane	0.61	11		U
75-69-4	Trichlorofluoromethane	1.0	11		U
75-01-4	Vinyl chloride	1.2	11		~~U~~ UJ CH
1330-20-7	Xylene(total)	0.77	11		U

FORM I VOA

MW
11/30/09

FORM 1
VOLATILE ORGANICS ANALYSIS DATA SHEET

CLIENT SAMPLE NO. 18

MR08-IS390-08D

Lab Name: EMPIRICAL LABS Contract: CH2MHILL

Lab Code: NA Case No.: NA SAS No.: NA SDG No.: LEJEUNE019

Matrix: (soil/water) SOIL Lab Sample ID: 0811279-09

Sample wt/vol: 5.4 (g/mL) G Lab File ID: 1127909B

Level: (low/med) LOW Date Sampled: 11/18/08 14:00

% Moisture: not dec. 10 Date Analyzed: 11/27/08 23:07

GC Column: RTX-VRX ID: 0.25 (mm) Dilution Factor: 1.0

Soil Extract Volume: _____(uL) Soil Aliquot Volume: _____(uL)

CONCENTRATION UNITS: (ug/L or ug/Kg) UG/KG

CAS NO.	COMPOUND	MDL	RL	CONC	Q
67-64-1	Acetone	2.1	10	10UJ ~~8.8~~	~~J~~ CCH B
71-43-2	Benzene	0.48	10		U
75-27-4	Bromodichloromethane	0.31	10		U
75-25-2	Bromoform	1.0	10		U
74-83-9	Bromomethane	0.74	10		U
78-93-3	2-Butanone	1.4	10		U
75-15-0	Carbon disulfide	1.3	10		U
56-23-5	Carbon tetrachloride	0.91	10		U
108-90-7	Chlorobenzene	0.35	10		U
75-00-3	Chloroethane	1.1	10		U
67-66-3	Chloroform	0.57	10		U
74-87-3	Chloromethane	0.54	10		~~U~~ UJ CCH
110-82-7	Cyclohexane	0.56	10		U
124-48-1	Dibromochloromethane	0.35	10		U
96-12-8	1,2-Dibromo-3-chloropropane	1.2	5.2		U
106-93-4	1,2-Dibromoethane	0.44	10		U
95-50-1	1,2-Dichlorobenzene	0.38	10		U
541-73-1	1,3-Dichlorobenzene	0.87	10		U
106-46-7	1,4-Dichlorobenzene	0.57	10		U
75-71-8	Dichlorodifluoromethane	1.1	10		U
75-34-3	1,1-Dichloroethane	0.56	10		U
107-06-2	1,2-Dichloroethane	0.47	10		U
75-35-4	1,1-Dichloroethene	1.2	10		U
156-59-2	cis-1,2-Dichloroethene	1.2	10		U
156-60-5	trans-1,2-Dichloroethene	1.1	10		U
78-87-5	1,2-Dichloropropane	0.47	10		U
10061-01-5	cis-1,3-Dichloropropene	0.52	10		U
10061-02-6	trans-1,3-Dichloropropene	0.33	10		U
100-41-4	Ethylbenzene	0.77	10		U
591-78-6	2-Hexanone	2.4	10		U
98-82-8	Isopropylbenzene	0.91	10		U
79-20-9	Methyl acetate	1.6	10		~~U~~ UJ CCH
75-09-2	Methylene chloride	0.64	10	10U ~~3.0~~	~~JB~~ BL
108-87-2	Methyl cyclohexane	0.31	10		U
1634-04-4	Methyl tert-butyl ether	0.33	10		U
108-10-1	4-Methyl-2-pentanone	0.60	10		~~U~~ UJ CCH
100-42-5	Styrene	0.36	10		U
79-34-5	1,1,2,2-Tetrachloroethane	0.44	10		U
127-18-4	Tetrachloroethene	1.0	10		U

FORM I VOA

LW 1/30/09

FORM 1
VOLATILE ORGANICS ANALYSIS DATA SHEET

CLIENT SAMPLE NO. 18

MR08-IS390-08D

Lab Name: EMPIRICAL LABS Contract: CH2MHILL

Lab Code: NA Case No.: NA SAS No.: NA SDG No.: LEJEUNE019

Matrix: (soil/water) SOIL Lab Sample ID: 0811279-09

Sample wt/vol: 5.4 (g/mL) G Lab File ID: 1127909B

Level: (low/med) LOW Date Sampled: 11/18/08 14:00

% Moisture: not dec. 10 Date Analyzed: 11/27/08 23:07

GC Column: RTX-VRX ID: 0.25 (mm) Dilution Factor: 1.0

Soil Extract Volume:_____(uL) Soil Aliquot Volume: _____(uL)

CONCENTRATION UNITS: (ug/L or ug/Kg) UG/KG

CAS NO.	COMPOUND	MDL	RL	CONC	Q
108-88-3	Toluene	0.89	10		U
120-82-1	1,2,4-Trichlorobenzene	0.18	10		U
71-55-6	1,1,1-Trichloroethane	0.93	10		U
79-00-5	1,1,2-Trichloroethane	0.36	10		U
79-01-6	Trichloroethene	0.88	10		U
76-13-1	Trichlorotrifluoroethane	0.57	10		U
75-69-4	Trichlorofluoromethane	0.98	10		U
75-01-4	Vinyl chloride	1.1	10		~~U~~ UJ CCM
1330-20-7	Xylene(total)	0.72	10		U

FORM I VOA

fw
11/30/09

FORM 1
VOLATILE ORGANICS ANALYSIS DATA SHEET

CLIENT SAMPLE NO.

MR08-IS393-08D

19

Lab Name: EMPIRICAL LABS Contract: CH2MHILL

Lab Code: NA Case No.: NA SAS No.: NA SDG No.: LEJEUNE019

Matrix: (soil/water) SOIL Lab Sample ID: 0811279-10

Sample wt/vol: 5.0 (g/mL) G Lab File ID: 1127910B

Level: (low/med) LOW Date Sampled: 11/18/08 14:55

% Moisture: not dec. 6 Date Analyzed: 11/27/08 23:46

GC Column: RTX-VRX ID: 0.25 (mm) Dilution Factor: 1.0

Soil Extract Volume:_____(uL) Soil Aliquot Volume: _____(uL)

CONCENTRATION UNITS: (ug/L or ug/Kg) UG/KG

CAS NO.	COMPOUND	MDL	RL	CONC	Q
67-64-1	Acetone	2.1	10	17	UJ ~~B~~
71-43-2	Benzene	0.49	10		U
75-27-4	Bromodichloromethane	0.31	10		U
75-25-2	Bromoform	1.0	10		U
74-83-9	Bromomethane	0.76	10		U
78-93-3	2-Butanone	1.5	10		U
75-15-0	Carbon disulfide	1.4	10		U
56-23-5	Carbon tetrachloride	0.92	10		U
108-90-7	Chlorobenzene	0.36	10		U
75-00-3	Chloroethane	1.2	10		U
67-66-3	Chloroform	0.58	10		U
74-87-3	Chloromethane	0.54	10		~~U~~ UJ CH
110-82-7	Cyclohexane	0.57	10		U
124-48-1	Dibromochloromethane	0.36	10		U
96-12-8	1,2-Dibromo-3-chloropropane	1.2	5.2		U
106-93-4	1,2-Dibromoethane	0.45	10		U
95-50-1	1,2-Dichlorobenzene	0.39	10		U
541-73-1	1,3-Dichlorobenzene	0.88	10		U
106-46-7	1,4-Dichlorobenzene	0.58	10		U
75-71-8	Dichlorodifluoromethane	1.2	10		U
75-34-3	1,1-Dichloroethane	0.57	10		U
107-06-2	1,2-Dichloroethane	0.48	10		U
75-35-4	1,1-Dichloroethene	1.2	10		U
156-59-2	cis-1,2-Dichloroethene	1.2	10		U
156-60-5	trans-1,2-Dichloroethene	1.2	10		U
78-87-5	1,2-Dichloropropane	0.48	10		U
10061-01-5	cis-1,3-Dichloropropene	0.52	10		U
10061-02-6	trans-1,3-Dichloropropene	0.34	10		U
100-41-4	Ethylbenzene	0.79	10		U
591-78-6	2-Hexanone	2.4	10		U
98-82-8	Isopropylbenzene	0.92	10		U
79-20-9	Methyl acetate	1.7	10		~~U~~ UJ CH
75-09-2	Methylene chloride	0.65	10	10U ~~1.8 JB~~	1
108-87-2	Methyl cyclohexane	0.31	10		U
1634-04-4	Methyl tert-butyl ether	0.34	10		U
108-10-1	4-Methyl-2-pentanone	0.61	10		~~U~~ UJ CH
100-42-5	Styrene	0.37	10		U
79-34-5	1,1,2,2-Tetrachloroethane	0.45	10		U
127-18-4	Tetrachloroethene	1.0	10		U

FORM I VOA

DW
11/30/09

FORM 1
VOLATILE ORGANICS ANALYSIS DATA SHEET

CLIENT SAMPLE NO. 19

MR08-IS393-08D

Lab Name: EMPIRICAL LABS Contract: CH2MHILL

Lab Code: NA Case No.: NA SAS No.: NA SDG No.: LEJEUNE019

Matrix: (soil/water) SOIL Lab Sample ID: 0811279-10

Sample wt/vol: 5.0 (g/mL) G Lab File ID: 1127910B

Level: (low/med) LOW Date Sampled: 11/18/08 14:55

% Moisture: not dec. 6 Date Analyzed: 11/27/08 23:46

GC Column: RTX-VRX ID: 0.25 (mm) Dilution Factor: 1.0

Soil Extract Volume:_____(uL) Soil Aliquot Volume: _____(uL)

CONCENTRATION UNITS: (ug/L or ug/Kg) UG/KG

CAS NO.	COMPOUND	MDL	RL	CONC	Q
108-88-3	Toluene	0.90	10		U
120-82-1	1,2,4-Trichlorobenzene	0.19	10		U
71-55-6	1,1,1-Trichloroethane	0.94	10		U
79-00-5	1,1,2-Trichloroethane	0.37	10		U
79-01-6	Trichloroethene	0.89	10		U
76-13-1	Trichlorotrifluoroethane	0.58	10		U
75-69-4	Trichlorofluoromethane	1.00	10		U
75-01-4	Vinyl chloride	1.2	10		~~U~~ UJ CH
1330-20-7	Xylene(total)	0.73	10		U

lw
11/30/09

FORM 1
VOLATILE ORGANICS ANALYSIS DATA SHEET

CLIENT SAMPLE NO. 20

MR08-IS395-08D

Lab Name: EMPIRICAL LABS Contract: CH2MHILL

Lab Code: NA Case No.: NA SAS No.: NA SDG No.: LEJEUNE019

Matrix: (soil/water) SOIL Lab Sample ID: 0811279-11

Sample wt/vol: 5.1 (g/mL) G Lab File ID: 1127911B

Level: (low/med) LOW Date Sampled: 11/18/08 16:00

% Moisture: not dec. 12 Date Analyzed: 11/28/08 00:25

GC Column: RTX-VRX ID: 0.25 (mm) Dilution Factor: 1.0

Soil Extract Volume:_____(uL) Soil Aliquot Volume: _____(uL)

CONCENTRATION UNITS: (ug/L or ug/Kg) UG/KG

CAS NO.	COMPOUND	MDL	RL	CONC	Q
67-64-1	Acetone	2.2	11	12	UJ CCHB
71-43-2	Benzene	0.53	11		U
75-27-4	Bromodichloromethane	0.34	11		U
75-25-2	Bromoform	1.1	11		U
74-83-9	Bromomethane	0.80	11		U
78-93-3	2-Butanone	1.6	11		U
75-15-0	Carbon disulfide	1.4	11		U
56-23-5	Carbon tetrachloride	0.98	11		U
108-90-7	Chlorobenzene	0.38	11		U
75-00-3	Chloroethane	1.2	11		U
67-66-3	Chloroform	0.62	11		U
74-87-3	Chloromethane	0.58	11		UJ UJ CCH
110-82-7	Cyclohexane	0.60	11		U
124-48-1	Dibromochloromethane	0.38	11		U
96-12-8	1,2-Dibromo-3-chloropropane	1.3	5.6		U
106-93-4	1,2-Dibromoethane	0.48	11		U
95-50-1	1,2-Dichlorobenzene	0.41	11		U
541-73-1	1,3-Dichlorobenzene	0.94	11		U
106-46-7	1,4-Dichlorobenzene	0.62	11		U
75-71-8	Dichlorodifluoromethane	1.2	11		U
75-34-3	1,1-Dichloroethane	0.60	11		U
107-06-2	1,2-Dichloroethane	0.51	11		U
75-35-4	1,1-Dichloroethene	1.3	11		U
156-59-2	cis-1,2-Dichloroethene	1.3	11		U
156-60-5	trans-1,2-Dichloroethene	1.2	11		U
78-87-5	1,2-Dichloropropane	0.51	11		U
10061-01-5	cis-1,3-Dichloropropene	0.56	11		U
10061-02-6	trans-1,3-Dichloropropene	0.36	11		U
100-41-4	Ethylbenzene	0.84	11		U
591-78-6	2-Hexanone	2.6	11		U
98-82-8	Isopropylbenzene	0.98	11		U
79-20-9	Methyl acetate	1.8	11		UJ UJ CCH
75-09-2	Methylene chloride	0.69	11	11u ~~1.9~~	JB B1
108-87-2	Methyl cyclohexane	0.34	11		U
1634-04-4	Methyl tert-butyl ether	0.36	11		U
108-10-1	4-Methyl-2-pentanone	0.65	11		UJ UJ CCH
100-42-5	Styrene	0.39	11		U
79-34-5	1,1,2,2-Tetrachloroethane	0.48	11		U
127-18-4	Tetrachloroethene	1.1	11		U

FORM I VOA

lw 11/30/09

FORM 1
VOLATILE ORGANICS ANALYSIS DATA SHEET

CLIENT SAMPLE NO. 20

MR08-IS395-08D

Lab Name: EMPIRICAL LABS Contract: CH2MHILL

Lab Code: NA Case No.: NA SAS No.: NA SDG No.: LEJEUNE019

Matrix: (soil/water) SOIL Lab Sample ID: 0811279-11

Sample wt/vol: 5.1 (g/mL) G Lab File ID: 1127911B

Level: (low/med) LOW Date Sampled: 11/18/08 16:00

% Moisture: not dec. 12 Date Analyzed: 11/28/08 00:25

GC Column: RTX-VRX ID: 0.25 (mm) Dilution Factor: 1.0

Soil Extract Volume:_____(uL) Soil Aliquot Volume: _____(uL)

CONCENTRATION UNITS: (ug/L or ug/Kg) UG/KG

CAS NO.	COMPOUND	MDL	RL	CONC	Q
108-88-3	Toluene	0.96	11		U
120-82-1	1,2,4-Trichlorobenzene	0.20	11		U
71-55-6	1,1,1-Trichloroethane	1.0	11		U
79-00-5	1,1,2-Trichloroethane	0.39	11		U
79-01-6	Trichloroethene	0.95	11		U
76-13-1	Trichlorotrifluoroethane	0.62	11		U
75-69-4	Trichlorofluoromethane	1.1	11		U
75-01-4	Vinyl chloride	1.2	11		~~U~~ UJ CCH
1330-20-7	Xylene(total)	0.78	11		U

FORM I VOA

MW
11/30/09

FORM 1
VOLATILE ORGANICS ANALYSIS DATA SHEET

CLIENT SAMPLE NO. 21

MR08-EB111808

Lab Name: EMPIRICAL LABS Contract: CH2MHILL

Lab Code: NA Case No.: NA SAS No.: NA SDG No.: LEJEUNE019

Matrix: (soil/water) WATER Lab Sample ID: 0811279-12

Sample wt/vol: 5.000 (g/mL) ML Lab File ID: 1127912

Level: (low/med) LOW Date Sampled: 11/18/08 17:30

% Moisture: not dec. _____ Date Analyzed: 12/01/08 00:39

GC Column: RTX-VRX ID: 0.25 (mm) Dilution Factor: 1.0

Soil Extract Volume:_____(uL) Soil Aliquot Volume: _____(uL)

CONCENTRATION UNITS: (ug/L or ug/Kg) UG/L

CAS NO.	COMPOUND	MDL	RL	CONC	Q
67-64-1	Acetone	0.84	2.5		~~U~~ UJ CH
71-43-2	Benzene	0.11	1.0		U
75-27-4	Bromodichloromethane	0.10	1.0	0.12	J
75-25-2	Bromoform	0.10	1.0		U
74-83-9	Bromomethane	0.32	1.0		U
78-93-3	2-Butanone	1.0	3.0		~~U~~ R IC
75-15-0	Carbon disulfide	0.13	1.0		U
56-23-5	Carbon tetrachloride	0.15	1.0		~~U~~ UJ CH
108-90-7	Chlorobenzene	0.10	1.0		U
75-00-3	Chloroethane	0.18	1.0		U
67-66-3	Chloroform	0.11	1.0	1.2	
74-87-3	Chloromethane	0.29	1.0		U
110-82-7	Cyclohexane	0.20	1.0		U
124-48-1	Dibromochloromethane	0.10	1.0		U
96-12-8	1,2-Dibromo-3-chloropropane	0.11	1.0		U
106-93-4	1,2-Dibromoethane	0.10	1.0		U
95-50-1	1,2-Dichlorobenzene	0.10	1.0		U
541-73-1	1,3-Dichlorobenzene	0.13	1.0		U
106-46-7	1,4-Dichlorobenzene	0.10	1.0		U
75-71-8	Dichlorodifluoromethane	0.22	1.0		U
75-34-3	1,1-Dichloroethane	0.12	1.0		U
107-06-2	1,2-Dichloroethane	0.10	1.0		U
75-35-4	1,1-Dichloroethene	0.15	1.0		U
156-59-2	cis-1,2-Dichloroethene	0.13	1.0		U
156-60-5	trans-1,2-Dichloroethene	0.13	1.0		U
78-87-5	1,2-Dichloropropane	0.10	1.0		U
10061-01-5	cis-1,3-Dichloropropene	0.11	1.0		U
10061-02-6	trans-1,3-Dichloropropene	0.10	1.0		U
100-41-4	Ethylbenzene	0.13	1.0		U
591-78-6	2-Hexanone	0.30	2.0		~~U~~ UJ CH
98-82-8	Isopropylbenzene	0.15	1.0		U
79-20-9	Methyl acetate	0.30	1.0		U
75-09-2	Methylene chloride	0.14	1.0		U
108-87-2	Methyl cyclohexane	0.17	1.0		U
1634-04-4	Methyl tert-butyl ether	0.10	1.0		U
108-10-1	4-Methyl-2-pentanone	0.29	2.0		U
100-42-5	Styrene	0.10	1.0		U
79-34-5	1,1,2,2-Tetrachloroethane	0.10	1.0		U
127-18-4	Tetrachloroethene	0.15	1.0		U

FORM I VOA

LW
1/30/09

FORM 1
VOLATILE ORGANICS ANALYSIS DATA SHEET

CLIENT SAMPLE NO. 21

MR08-EB111808

Lab Name: EMPIRICAL LABS Contract: CH2MHILL

Lab Code: NA Case No.: NA SAS No.: NA SDG No.: LEJEUNE019

Matrix: (soil/water) WATER Lab Sample ID: 0811279-12

Sample wt/vol: 5.000 (g/mL) ML Lab File ID: 1127912

Level: (low/med) LOW Date Sampled: 11/18/08 17:30

% Moisture: not dec. _____ Date Analyzed: 12/01/08 00:39

GC Column: RTX-VRX ID: 0.25 (mm) Dilution Factor: 1.0

Soil Extract Volume:_____(uL) Soil Aliquot Volume: _____(uL)

CONCENTRATION UNITS: (ug/L or ug/Kg) UG/L

CAS NO.	COMPOUND	MDL	RL	CONC	Q
108-88-3	Toluene	0.10	1.0	0.70	J
120-82-1	1,2,4-Trichlorobenzene	0.10	1.0		U
71-55-6	1,1,1-Trichloroethane	0.17	1.0		U
79-00-5	1,1,2-Trichloroethane	0.10	1.0		U
79-01-6	Trichloroethene	0.13	1.0		U
76-13-1	Trichlorotrifluoroethane	0.18	1.0		U
75-69-4	Trichlorofluoromethane	0.17	1.0		U
75-01-4	Vinyl chloride	0.18	1.0		U
1330-20-7	Xylene(total)	0.22	1.0	0.42	J

RW
1/30/09

FORM 1
VOLATILE ORGANICS ANALYSIS DATA SHEET

CLIENT SAMPLE NO. 22

MR08-TW02-08D

Lab Name: EMPIRICAL LABS Contract: CH2MHILL

Lab Code: NA Case No.: NA SAS No.: NA SDG No.: LEJEUNE019

Matrix: (soil/water) WATER Lab Sample ID: 0811279-13

Sample wt/vol: 5.000 (g/mL) ML Lab File ID: 1127913

Level: (low/med) LOW Date Sampled: 11/18/08 09:30

% Moisture: not dec. _____ Date Analyzed: 12/01/08 01:09

GC Column: RTX-VRX ID: 0.25 (mm) Dilution Factor: 1.0

Soil Extract Volume:_____(uL) Soil Aliquot Volume: _____(uL)

CONCENTRATION UNITS: (ug/L or ug/Kg) UG/L

CAS NO.	COMPOUND	MDL	RL	CONC	Q
67-64-1	Acetone	0.84	2.5		~~U~~ UNJ CCH
71-43-2	Benzene	0.11	1.0		U
75-27-4	Bromodichloromethane	0.10	1.0		U
75-25-2	Bromoform	0.10	1.0		U
74-83-9	Bromomethane	0.32	1.0		U
78-93-3	2-Butanone	1.0	3.0		~~U~~ R ICL
75-15-0	Carbon disulfide	0.13	1.0		U
56-23-5	Carbon tetrachloride	0.15	1.0		~~U~~ UNJ CCH
108-90-7	Chlorobenzene	0.10	1.0		U
75-00-3	Chloroethane	0.18	1.0		U
67-66-3	Chloroform	0.11	1.0		U
74-87-3	Chloromethane	0.29	1.0		U
110-82-7	Cyclohexane	0.20	1.0		U
124-48-1	Dibromochloromethane	0.10	1.0		U
96-12-8	1,2-Dibromo-3-chloropropane	0.11	1.0		U
106-93-4	1,2-Dibromoethane	0.10	1.0		U
95-50-1	1,2-Dichlorobenzene	0.10	1.0		U
541-73-1	1,3-Dichlorobenzene	0.13	1.0		U
106-46-7	1,4-Dichlorobenzene	0.10	1.0		U
75-71-8	Dichlorodifluoromethane	0.22	1.0		U
75-34-3	1,1-Dichloroethane	0.12	1.0		U
107-06-2	1,2-Dichloroethane	0.10	1.0		U
75-35-4	1,1-Dichloroethene	0.15	1.0		U
156-59-2	cis-1,2-Dichloroethene	0.13	1.0		U
156-60-5	trans-1,2-Dichloroethene	0.13	1.0		U
78-87-5	1,2-Dichloropropane	0.10	1.0		U
10061-01-5	cis-1,3-Dichloropropene	0.11	1.0		U
10061-02-6	trans-1,3-Dichloropropene	0.10	1.0		U
100-41-4	Ethylbenzene	0.13	1.0		U
591-78-6	2-Hexanone	0.30	2.0		~~U~~ UNJ CCH
98-82-8	Isopropylbenzene	0.15	1.0		U
79-20-9	Methyl acetate	0.30	1.0		U
75-09-2	Methylene chloride	0.14	1.0		U
108-87-2	Methyl cyclohexane	0.17	1.0		U
1634-04-4	Methyl tert-butyl ether	0.10	1.0		U
108-10-1	4-Methyl-2-pentanone	0.29	2.0		U
100-42-5	Styrene	0.10	1.0		U
79-34-5	1,1,2,2-Tetrachloroethane	0.10	1.0		U
127-18-4	Tetrachloroethene	0.15	1.0		U

JW 1/30/09

FORM 1
VOLATILE ORGANICS ANALYSIS DATA SHEET

CLIENT SAMPLE NO. 22

MR08-TW02-08D

Lab Name: EMPIRICAL LABS Contract: CH2MHILL

Lab Code: NA Case No.: NA SAS No.: NA SDG No.: LEJEUNE019

Matrix: (soil/water) WATER Lab Sample ID: 0811279-13

Sample wt/vol: 5.000 (g/mL) ML Lab File ID: 1127913

Level: (low/med) LOW Date Sampled: 11/18/08 09:30

% Moisture: not dec. _____ Date Analyzed: 12/01/08 01:09

GC Column: RTX-VRX ID: 0.25 (mm) Dilution Factor: 1.0

Soil Extract Volume:_____(uL) Soil Aliquot Volume: _____(uL)

CONCENTRATION UNITS: (ug/L or ug/Kg) UG/L

CAS NO.	COMPOUND	MDL	RL	CONC	Q
108-88-3	Toluene	0.10	1.0	1.04 ~~0.17~~	~~J~~
120-82-1	1,2,4-Trichlorobenzene	0.10	1.0		U
71-55-6	1,1,1-Trichloroethane	0.17	1.0		U
79-00-5	1,1,2-Trichloroethane	0.10	1.0		U
79-01-6	Trichloroethene	0.13	1.0		U
76-13-1	Trichlorotrifluoroethane	0.18	1.0		U
75-69-4	Trichlorofluoromethane	0.17	1.0		U
75-01-4	Vinyl chloride	0.18	1.0		U
1330-20-7	Xylene(total)	0.22	1.0		U

B

FORM I VOA

lw
1/30/09

FORM 1
VOLATILE ORGANICS ANALYSIS DATA SHEET

CLIENT SAMPLE NO. 23

MR08-TW02D-08D

Lab Name: EMPIRICAL LABS Contract: CH2MHILL

Lab Code: NA Case No.: NA SAS No.: NA SDG No.: LEJEUNE019

Matrix: (soil/water) WATER Lab Sample ID: 0811279-14

Sample wt/vol: 5.000 (g/mL) ML Lab File ID: 1127914

Level: (low/med) LOW Date Sampled: 11/18/08 09:35

% Moisture: not dec. _____ Date Analyzed: 12/01/08 01:39

GC Column: RTX-VRX ID: 0.25 (mm) Dilution Factor: 1.0

Soil Extract Volume:_____(uL) Soil Aliquot Volume: _____(uL)

CONCENTRATION UNITS: (ug/L or ug/Kg) UG/L

CAS NO.	COMPOUND	MDL	RL	CONC	Q
67-64-1-------	Acetone	0.84	2.5		~~U~~ UJ CCH
71-43-2-------	Benzene	0.11	1.0		U
75-27-4-------	Bromodichloromethane	0.10	1.0		U
75-25-2-------	Bromoform	0.10	1.0		U
74-83-9-------	Bromomethane	0.32	1.0		U
78-93-3-------	2-Butanone	1.0	3.0		~~U~~ R ICC
75-15-0-------	Carbon disulfide	0.13	1.0		U
56-23-5-------	Carbon tetrachloride	0.15	1.0		~~U~~ UJ CCH
108-90-7------	Chlorobenzene	0.10	1.0		U
75-00-3-------	Chloroethane	0.18	1.0		U
67-66-3-------	Chloroform	0.11	1.0		U
74-87-3-------	Chloromethane	0.29	1.0		U
110-82-7------	Cyclohexane	0.20	1.0		U
124-48-1------	Dibromochloromethane	0.10	1.0		U
96-12-8-------	1,2-Dibromo-3-chloropropane	0.11	1.0		U
106-93-4------	1,2-Dibromoethane	0.10	1.0		U
95-50-1-------	1,2-Dichlorobenzene	0.10	1.0		U
541-73-1------	1,3-Dichlorobenzene	0.13	1.0		U
106-46-7------	1,4-Dichlorobenzene	0.10	1.0		U
75-71-8-------	Dichlorodifluoromethane	0.22	1.0		U
75-34-3-------	1,1-Dichloroethane	0.12	1.0		U
107-06-2------	1,2-Dichloroethane	0.10	1.0		U
75-35-4-------	1,1-Dichloroethene	0.15	1.0		U
156-59-2------	cis-1,2-Dichloroethene	0.13	1.0		U
156-60-5------	trans-1,2-Dichloroethene	0.13	1.0		U
78-87-5-------	1,2-Dichloropropane	0.10	1.0		U
10061-01-5----	cis-1,3-Dichloropropene	0.11	1.0		U
10061-02-6----	trans-1,3-Dichloropropene	0.10	1.0		U
100-41-4------	Ethylbenzene	0.13	1.0		U
591-78-6------	2-Hexanone	0.30	2.0		~~U~~ UJ CCH
98-82-8-------	Isopropylbenzene	0.15	1.0		U
79-20-9-------	Methyl acetate	0.30	1.0		U
75-09-2-------	Methylene chloride	0.14	1.0		U
108-87-2------	Methyl cyclohexane	0.17	1.0		U
1634-04-4-----	Methyl tert-butyl ether	0.10	1.0		U
108-10-1------	4-Methyl-2-pentanone	0.29	2.0		U
100-42-5------	Styrene	0.10	1.0		U
79-34-5-------	1,1,2,2-Tetrachloroethane	0.10	1.0		U
127-18-4------	Tetrachloroethene	0.15	1.0		U

FORM I VOA

lcd
11/30/09

FORM 1
VOLATILE ORGANICS ANALYSIS DATA SHEET

CLIENT SAMPLE NO. 23

MR08-TW02D-08D

Lab Name: EMPIRICAL LABS Contract: CH2MHILL

Lab Code: NA Case No.: NA SAS No.: NA SDG No.: LEJEUNE019

Matrix: (soil/water) WATER Lab Sample ID: 0811279-14

Sample wt/vol: 5.000 (g/mL) ML Lab File ID: 1127914

Level: (low/med) LOW Date Sampled: 11/18/08 09:35

% Moisture: not dec. _____ Date Analyzed: 12/01/08 01:39

GC Column: RTX-VRX ID: 0.25 (mm) Dilution Factor: 1.0

Soil Extract Volume:_____(uL) Soil Aliquot Volume: _____(uL)

CONCENTRATION UNITS: (ug/L or ug/Kg) UG/L

CAS NO.	COMPOUND	MDL	RL	CONC	Q
108-88-3------	Toluene	0.10	1.0	1.0 U ~~0.17~~	~~J~~
120-82-1------	1,2,4-Trichlorobenzene	0.10	1.0		U
71-55-6-------	1,1,1-Trichloroethane	0.17	1.0		U
79-00-5-------	1,1,2-Trichloroethane	0.10	1.0		U
79-01-6-------	Trichloroethene	0.13	1.0		U
76-13-1-------	Trichlorotrifluoroethane	0.18	1.0		U
75-69-4-------	Trichlorofluoromethane	0.17	1.0		U
75-01-4-------	Vinyl chloride	0.18	1.0		U
1330-20-7-----	Xylene(total)	0.22	1.0		U

BL

FORM I VOA

LW
1/30/09

FORM 1
VOLATILE ORGANICS ANALYSIS DATA SHEET

CLIENT SAMPLE NO. 24

MR08-TW03-08D

Lab Name: EMPIRICAL LABS Contract: CH2MHILL

Lab Code: NA Case No.: NA SAS No.: NA SDG No.: LEJEUNE019

Matrix: (soil/water) WATER Lab Sample ID: 0811279-15

Sample wt/vol: 5.000 (g/mL) ML Lab File ID: 1127915

Level: (low/med) LOW Date Sampled: 11/18/08 09:50

% Moisture: not dec. _____ Date Analyzed: 12/01/08 02:09

GC Column: RTX-VRX ID: 0.25 (mm) Dilution Factor: 1.0

Soil Extract Volume:_____(uL) Soil Aliquot Volume: _____(uL)

CONCENTRATION UNITS: (ug/L or ug/Kg) UG/L

CAS NO.	COMPOUND	MDL	RL	CONC	Q
67-64-1	Acetone	0.84	2.5		~~U~~ UJ CH
71-43-2	Benzene	0.11	1.0		U
75-27-4	Bromodichloromethane	0.10	1.0		U
75-25-2	Bromoform	0.10	1.0		U
74-83-9	Bromomethane	0.32	1.0		U
78-93-3	2-Butanone	1.0	3.0		~~U~~ R IC
75-15-0	Carbon disulfide	0.13	1.0		U
56-23-5	Carbon tetrachloride	0.15	1.0		~~U~~ UJ CC4
108-90-7	Chlorobenzene	0.10	1.0		U
75-00-3	Chloroethane	0.18	1.0		U
67-66-3	Chloroform	0.11	1.0		U
74-87-3	Chloromethane	0.29	1.0		U
110-82-7	Cyclohexane	0.20	1.0		U
124-48-1	Dibromochloromethane	0.10	1.0		U
96-12-8	1,2-Dibromo-3-chloropropane	0.11	1.0		U
106-93-4	1,2-Dibromoethane	0.10	1.0		U
95-50-1	1,2-Dichlorobenzene	0.10	1.0		U
541-73-1	1,3-Dichlorobenzene	0.13	1.0		U
106-46-7	1,4-Dichlorobenzene	0.10	1.0		U
75-71-8	Dichlorodifluoromethane	0.22	1.0		U
75-34-3	1,1-Dichloroethane	0.12	1.0		U
107-06-2	1,2-Dichloroethane	0.10	1.0		U
75-35-4	1,1-Dichloroethene	0.15	1.0		U
156-59-2	cis-1,2-Dichloroethene	0.13	1.0		U
156-60-5	trans-1,2-Dichloroethene	0.13	1.0		U
78-87-5	1,2-Dichloropropane	0.10	1.0		U
10061-01-5	cis-1,3-Dichloropropene	0.11	1.0		U
10061-02-6	trans-1,3-Dichloropropene	0.10	1.0		U
100-41-4	Ethylbenzene	0.13	1.0		U
591-78-6	2-Hexanone	0.30	2.0		~~U~~ UJ CC4
98-82-8	Isopropylbenzene	0.15	1.0		U
79-20-9	Methyl acetate	0.30	1.0		U
75-09-2	Methylene chloride	0.14	1.0		U
108-87-2	Methyl cyclohexane	0.17	1.0		U
1634-04-4	Methyl tert-butyl ether	0.10	1.0		U
108-10-1	4-Methyl-2-pentanone	0.29	2.0		U
100-42-5	Styrene	0.10	1.0		U
79-34-5	1,1,2,2-Tetrachloroethane	0.10	1.0		U
127-18-4	Tetrachloroethene	0.15	1.0		U

FORM I VOA

JW
1/30/09

FORM 1
VOLATILE ORGANICS ANALYSIS DATA SHEET

CLIENT SAMPLE NO. 24

MR08-TW03-08D

Lab Name: EMPIRICAL LABS Contract: CH2MHILL

Lab Code: NA Case No.: NA SAS No.: NA SDG No.: LEJEUNE019

Matrix: (soil/water) WATER Lab Sample ID: 0811279-15

Sample wt/vol: 5.000 (g/mL) ML Lab File ID: 1127915

Level: (low/med) LOW Date Sampled: 11/18/08 09:50

% Moisture: not dec. _____ Date Analyzed: 12/01/08 02:09

GC Column: RTX-VRX ID: 0.25 (mm) Dilution Factor: 1.0

Soil Extract Volume:_____(uL) Soil Aliquot Volume: _____(uL)

CONCENTRATION UNITS: (ug/L or ug/Kg) UG/L

CAS NO.	COMPOUND	MDL	RL	CONC	Q
108-88-3------	Toluene	0.10	1.0	1.0U ~~0.12~~ ~~J~~	B
120-82-1------	1,2,4-Trichlorobenzene	0.10	1.0		U
71-55-6-------	1,1,1-Trichloroethane	0.17	1.0		U
79-00-5-------	1,1,2-Trichloroethane	0.10	1.0		U
79-01-6-------	Trichloroethene	0.13	1.0		U
76-13-1-------	Trichlorotrifluoroethane	0.18	1.0		U
75-69-4-------	Trichlorofluoromethane	0.17	1.0		U
75-01-4-------	Vinyl chloride	0.18	1.0		U
1330-20-7-----	Xylene(total)	0.22	1.0		U

lw
11/30/09

25

FORM 1
VOLATILE ORGANICS ANALYSIS DATA SHEET

CLIENT SAMPLE NO.

MR08-TW03D-08D

Lab Name: EMPIRICAL LABS Contract: CH2MHILL

Lab Code: NA Case No.: NA SAS No.: NA SDG No.: LEJEUNE019

Matrix: (soil/water) WATER Lab Sample ID: 0811279-16

Sample wt/vol: 5.000 (g/mL) ML Lab File ID: 1127916

Level: (low/med) LOW Date Sampled: 11/18/08 09:55

% Moisture: not dec. _____ Date Analyzed: 12/18/08 16:58

GC Column: RTX-VRX ID: 0.25 (mm) Dilution Factor: 1.0

Soil Extract Volume:_____(uL) Soil Aliquot Volume: _____(uL)

CONCENTRATION UNITS: (ug/L or ug/Kg) UG/L

CAS NO.	COMPOUND	MDL	RL	CONC	Q
67-64-1	Acetone	0.84	2.5		U
71-43-2	Benzene	0.11	1.0		U
75-27-4	Bromodichloromethane	0.10	1.0		U
75-25-2	Bromoform	0.10	1.0		U
74-83-9	Bromomethane	0.32	1.0		U
78-93-3	2-Butanone	1.0	3.0		~~U~~ R ICL
75-15-0	Carbon disulfide	0.13	1.0		~~U~~ UJ CCV
56-23-5	Carbon tetrachloride	0.15	1.0		U
108-90-7	Chlorobenzene	0.10	1.0		U
75-00-3	Chloroethane	0.18	1.0		U
67-66-3	Chloroform	0.11	1.0		U
74-87-3	Chloromethane	0.29	1.0		U
110-82-7	Cyclohexane	0.20	1.0		U
124-48-1	Dibromochloromethane	0.10	1.0		U
96-12-8	1,2-Dibromo-3-chloropropane	0.11	1.0		U
106-93-4	1,2-Dibromoethane	0.10	1.0		U
95-50-1	1,2-Dichlorobenzene	0.10	1.0		U
541-73-1	1,3-Dichlorobenzene	0.13	1.0		U
106-46-7	1,4-Dichlorobenzene	0.10	1.0		U
75-71-8	Dichlorodifluoromethane	0.22	1.0		U
75-34-3	1,1-Dichloroethane	0.12	1.0		U
107-06-2	1,2-Dichloroethane	0.10	1.0		U
75-35-4	1,1-Dichloroethene	0.15	1.0		U
156-59-2	cis-1,2-Dichloroethene	0.13	1.0		U
156-60-5	trans-1,2-Dichloroethene	0.13	1.0		U
78-87-5	1,2-Dichloropropane	0.10	1.0		U
10061-01-5	cis-1,3-Dichloropropene	0.11	1.0		U
10061-02-6	trans-1,3-Dichloropropene	0.10	1.0		U
100-41-4	Ethylbenzene	0.13	1.0		U
591-78-6	2-Hexanone	0.30	4.0		U
98-82-8	Isopropylbenzene	0.15	1.0		U
79-20-9	Methyl acetate	0.30	2.0		U
75-09-2	Methylene chloride	0.14	1.0		U
108-87-2	Methyl cyclohexane	0.17	1.0		U
1634-04-4	Methyl tert-butyl ether	0.10	1.0		~~U~~ UJ CCV
108-10-1	4-Methyl-2-pentanone	0.29	2.0		U
100-42-5	Styrene	0.10	1.0		U
79-34-5	1,1,2,2-Tetrachloroethane	0.10	1.0		U
127-18-4	Tetrachloroethene	0.15	1.0		U

FORM I VOA

ALD 1/30/09

FORM 1
VOLATILE ORGANICS ANALYSIS DATA SHEET

CLIENT SAMPLE NO. 25

MR08-TW03D-08D

Lab Name: EMPIRICAL LABS Contract: CH2MHILL

Lab Code: NA Case No.: NA SAS No.: NA SDG No.: LEJEUNE019

Matrix: (soil/water) WATER Lab Sample ID: 0811279-16

Sample wt/vol: 5.000 (g/mL) ML Lab File ID: 1127916

Level: (low/med) LOW Date Sampled: 11/18/08 09:55

% Moisture: not dec. _____ Date Analyzed: 12/18/08 16:58

GC Column: RTX-VRX ID: 0.25 (mm) Dilution Factor: 1.0

Soil Extract Volume:_____(uL) Soil Aliquot Volume: _____(uL)

CONCENTRATION UNITS: (ug/L or ug/Kg) UG/L

CAS NO.	COMPOUND	MDL	RL	CONC	Q
108-88-3	Toluene	0.10	1.0	1.0U ~~0.18~~	J
120-82-1	1,2,4-Trichlorobenzene	0.10	1.0		U
71-55-6	1,1,1-Trichloroethane	0.17	1.0		U
79-00-5	1,1,2-Trichloroethane	0.10	1.0		U
79-01-6	Trichloroethene	0.13	1.0		U
76-13-1	Trichlorotrifluoroethane	0.18	1.0		U
75-69-4	Trichlorofluoromethane	0.17	1.0		U
75-01-4	Vinyl chloride	0.18	1.0		U
1330-20-7	Xylene(total)	0.22	1.0		U

BL

FORM I VOA

lus
1/30/09

FORM 1
VOLATILE ORGANICS ANALYSIS DATA SHEET

CLIENT SAMPLE NO. 26

MR08-TB111908-1

Lab Name: EMPIRICAL LABS Contract: CH2MHILL

Lab Code: NA Case No.: NA SAS No.: NA SDG No.: LEJEUNE019

Matrix: (soil/water) WATER Lab Sample ID: 0811279-17

Sample wt/vol: 5.000 (g/mL) ML Lab File ID: 1127917

Level: (low/med) LOW Date Sampled: 11/19/08 :

% Moisture: not dec. _____ Date Analyzed: 11/30/08 23:39

GC Column: RTX-VRX ID: 0.25 (mm) Dilution Factor: 1.0

Soil Extract Volume:_____(uL) Soil Aliquot Volume: _____(uL)

CONCENTRATION UNITS: (ug/L or ug/Kg) UG/L

CAS NO.	COMPOUND	MDL	RL	CONC	Q
67-64-1-------	Acetone	0.84	2.5		~~U~~ UJ CH
71-43-2-------	Benzene	0.11	1.0		U
75-27-4-------	Bromodichloromethane	0.10	1.0		U
75-25-2-------	Bromoform	0.10	1.0		U
74-83-9-------	Bromomethane	0.32	1.0		U
78-93-3-------	2-Butanone	1.0	3.0		~~U~~ R ICL
75-15-0-------	Carbon disulfide	0.13	1.0		U
56-23-5-------	Carbon tetrachloride	0.15	1.0		~~U~~ UJ CH
108-90-7------	Chlorobenzene	0.10	1.0		U
75-00-3-------	Chloroethane	0.18	1.0		U
67-66-3-------	Chloroform	0.11	1.0		U
74-87-3-------	Chloromethane	0.29	1.0		U
110-82-7------	Cyclohexane	0.20	1.0		U
124-48-1------	Dibromochloromethane	0.10	1.0		U
96-12-8-------	1,2-Dibromo-3-chloropropane	0.11	1.0		U
106-93-4------	1,2-Dibromoethane	0.10	1.0		U
95-50-1-------	1,2-Dichlorobenzene	0.10	1.0		U
541-73-1------	1,3-Dichlorobenzene	0.13	1.0		U
106-46-7------	1,4-Dichlorobenzene	0.10	1.0		U
75-71-8-------	Dichlorodifluoromethane	0.22	1.0		U
75-34-3-------	1,1-Dichloroethane	0.12	1.0		U
107-06-2------	1,2-Dichloroethane	0.10	1.0		U
75-35-4-------	1,1-Dichloroethene	0.15	1.0		U
156-59-2------	cis-1,2-Dichloroethene	0.13	1.0		U
156-60-5------	trans-1,2-Dichloroethene	0.13	1.0		U
78-87-5-------	1,2-Dichloropropane	0.10	1.0		U
10061-01-5----	cis-1,3-Dichloropropene	0.11	1.0		U
10061-02-6----	trans-1,3-Dichloropropene	0.10	1.0		U
100-41-4------	Ethylbenzene	0.13	1.0		U
591-78-6------	2-Hexanone	0.30	2.0		~~U~~ UJ CH
98-82-8-------	Isopropylbenzene	0.15	1.0		U
79-20-9-------	Methyl acetate	0.30	1.0		U
75-09-2-------	Methylene chloride	0.14	1.0		U
108-87-2------	Methyl cyclohexane	0.17	1.0		U
1634-04-4-----	Methyl tert-butyl ether	0.10	1.0		U
108-10-1------	4-Methyl-2-pentanone	0.29	2.0		U
100-42-5------	Styrene	0.10	1.0		U
79-34-5-------	1,1,2,2-Tetrachloroethane	0.10	1.0		U
127-18-4------	Tetrachloroethene	0.15	1.0		U

FORM I VOA

lw
1130/09

FORM 1
VOLATILE ORGANICS ANALYSIS DATA SHEET

CLIENT SAMPLE NO. 26

MR08-TB111908-1

Lab Name: EMPIRICAL LABS Contract: CH2MHILL

Lab Code: NA Case No.: NA SAS No.: NA SDG No.: LEJEUNE019

Matrix: (soil/water) WATER Lab Sample ID: 0811279-17

Sample wt/vol: 5.000 (g/mL) ML Lab File ID: 1127917

Level: (low/med) LOW Date Sampled: 11/19/08 :

% Moisture: not dec. _____ Date Analyzed: 11/30/08 23:39

GC Column: RTX-VRX ID: 0.25 (mm) Dilution Factor: 1.0

Soil Extract Volume:_____(uL) Soil Aliquot Volume: _____(uL)

CONCENTRATION UNITS: (ug/L or ug/Kg) UG/L

CAS NO.	COMPOUND	MDL	RL	CONC	Q
108-88-3	Toluene	0.10	1.0		U
120-82-1	1,2,4-Trichlorobenzene	0.10	1.0		U
71-55-6	1,1,1-Trichloroethane	0.17	1.0		U
79-00-5	1,1,2-Trichloroethane	0.10	1.0		U
79-01-6	Trichloroethene	0.13	1.0		U
76-13-1	Trichlorotrifluoroethane	0.18	1.0		U
75-69-4	Trichlorofluoromethane	0.17	1.0		U
75-01-4	Vinyl chloride	0.18	1.0		U
1330-20-7	Xylene(total)	0.22	1.0		U

Rev
12/30/09

ENVIRONMENTAL
Data Services, Inc.

VOLATILE ORGANIC COMPOUNDS
USEPA Region IV - Level IV Review

Site: MCB Camp Lejeune, TO-09 SDG #: LEJEUNE020

Client: CH2M HILL, Inc., Virginia Beach, Virginia Date: January 30, 2009

Laboratory: Empirical Laboratories, Nashville, Tennessee Reviewer: Nancy Weaver

EDS ID	Client Sample ID	Laboratory Sample ID	Matrix
1	TB-112008	0811289-01	Water
2	MR08-TW26-08D	0811289-02	Water
2MS	MR08-TW26-08DMS	0811289-02MS	Water
2MSD	MR08-TW26-08DMSD	0811289-02MSD	Water
3	MR08-TW04-08D	0811289-03	Water
4	MR08-FB112008	0811289-04	Water
5	MR08-TW19-08D	0811289-05	Water
6	MR08-TW20-08D	0811289-06	Water
7	MR08-TW25-08D	0811289-07	Water
8	MR08-TW18-08D	0811289-08	Water
9	MR08-SS388-08D	0811296-01	Soil
10	MR08-IS388-08D	0811296-02	Soil
11	MR08-SS389-08D	0811296-03	Soil
11MS	MR08-SS389-08DMS	0811296-03MS	Soil
11MSD	MR08-SS389-08DMSD	0811296-03MSD	Soil
11DL	MR08-SS389-08DDL	0811296-03DL	Soil
12	MR08-IS389-08D	0811296-04	Soil
13	MR08-IS389D-08D	0811296-05	Soil
14	MR08-SS394-08D	0811296-06	Soil
14DL	MR08-SS394-08DDL	0811296-06DL	Soil
15	MR08-IS394-08D	0811296-07	Soil
15MS	MR08-IS394-08DMS	0811296-07MS	Soil
15MSD	MR08-IS394-08DMSD	0811296-07MSD	Soil
16	MR08-IS396-08D	0811296-08	Soil
17	MR08-SS395-08D	0811296-09	Soil
18	MR08-SS395D-08D	0811296-10	Soil
19	MR08-SS393-08D	0811296-11	Soil
20	MR08-SS392-08D	0811296-12	Soil
21	MR08-SS391-08D	0811296-13	Soil
22	MR08-SS391D-08D	0811296-14	Soil
23	MR08-SS390-08D	0811296-15	Soil
24	MR08-EB111908	0811296-16	Water
25	MR08-TB111908	0811296-17	Water

The USEPA "Contract Laboratory Program National Functional Guidelines for Organic Data Review," October 1999, and professional judgement were used in evaluating the data in this summary report.

Holding Times - All samples were analyzed within 14 days for preserved water and soil samples.

GC/MS Tuning - All of the BFB tunes in the initial and continuing calibrations met the percent relative abundance criteria.

Initial Calibration - The initial calibrations exhibited acceptable %RSD and mean RRF values.

Continuing Calibration - The continuing calibrations exhibited acceptable %D and RRF values except the following.

CCAL Date	Compound	%D/RRF	Qualifier	Affected Samples
11/29/08	Carbon tetrachloride	34.4%	J/UJ	24, 25
11/30/08	Acetone	47.7%	J/UJ	9, 10, 12, 13, 15-23
	Carbon tetrachloride	41.2%	J/UJ	9, 10, 12, 13, 15-23
	2-Hexanone	26.3%	J/UJ	9, 10, 12, 13, 15-23

Surrogates - All samples exhibited acceptable surrogate recoveries except the following.

Sample ID	Surrogate	%R	Qualifier
9	Dibromofluoromethane	129%	J - All positive results
10	Dibromofluoromethane	127%	None - ND
12	Dibromofluoromethane	133%	None - Already qualified
13	Dibromofluoromethane	142%	None - Already qualified
15	Dibromofluoromethane	146%	None - ND
16	Dibromofluoromethane	130%	None - ND
17	Dibromofluoromethane	136%	J - All positive results
18	Dibromofluoromethane	134%	None - Already qualified
19	Dibromofluoromethane	127%	J - All positive results
20	Dibromofluoromethane	126%	J - All positive results
21	Dibromofluoromethane	130%	J - All positive results
23	Dibromofluoromethane	134%	J - All positive results
11	Dibromofluoromethane	21%	None - Already qualified
	1,2-Dichloroethane-d4	19%	None - Already qualified
11DL	Dibromofluoromethane	146%	None - Already qualified
14	Dibromofluoromethane	50%	None - Already qualified
	1,2-Dichloroethane-d4	45%	None - Already qualified
14DL	Dibromofluoromethane	150%	None - Already qualified

MS/MSD - The MS/MSD sample exhibited acceptable %R and RPD values except the following.

MS/MSD Sample ID	Compound	MS/MSD %R/RPD	Qualifier
11	Benzene	73%/68%/Ok	None - Already qualified due to IS
	Bromodichloromethane	45%/55%/Ok	None - Already qualified due to IS
	Bromoform	52%/52%/Ok	None - Already qualified due to IS
	Carbon tetrachloride	63%/Ok/Ok	None - Already qualified due to IS
	Chlorobenzene	62%/57%/Ok	None - Already qualified due to IS
	Chloroform	42%/55%/37	None - Already qualified due to IS
	Chloromethane	150%/137%/Ok	None - Already qualified due to IS
	Cyclohexane	63%/Ok/Ok	None - Already qualified due to IS
	Dibromochloromethane	53%/59%/Ok	None - Already qualified due to IS
	1,2-Dibromoethane	59%//61%/Ok	None - Already qualified due to IS
	1,2-Dichlorobenzene	40%/35%/Ok	None - Already qualified due to IS
	1,3-Dichlorobenzene	38%/38%/Ok	None - Already qualified due to IS
	1,4-Dichlorobenzene	45%/34%/Ok	None - Already qualified due to IS
	1,1-Dichloroethane	63%/74%/Ok	None - Already qualified due to IS
	1,2-Dichloroethane	43%/56%/35	None - Already qualified due to IS
	cis-1,2-Dichloroethene	44%/50%/Ok	None - Already qualified due to IS
	trans-1,2-Dichloroethene	46%/60%/35	None - Already qualified due to IS
	1,2-Dichloropropane	54%/62%/Ok	None - Already qualified due to IS
	cis-1,3-Dichloropropene	45%/49%/Ok	None - Already qualified due to IS
	trans-1,3-Dichloropropene	47%/50%/Ok	None - Already qualified due to IS
	Ethylbenzene	67%/60%/Ok	None - Already qualified due to IS
	2-Hexanone	Ok/Ok/35	None for RPD alone
	Isopropylbenzene	Ok/71%/Ok	None - Already qualified due to IS
	Methyl acetate	Ok/Ok/32	None for RPD alone
	MTBE	47%/Ok/38	None - Already qualified due to IS
	4-Methyl-2-pentanone	Ok/56%/Ok	None - Already qualified due to IS
	Styrene	64%/56%/Ok	None - Already qualified due to IS
	Tetrachloroethene	56%/54%/Ok	None - Already qualified due to IS
	Toluene	59%/49%/Ok	None - Already qualified due to IS
	1,2,4-Trichlorobenzene	17%/16%/Ok	None - Already qualified due to IS
	1,1,1-Trichloroethane	54%/65%/Ok	None - Already qualified due to IS
	1,1,2-Trichloroethane	51%/56%/Ok	None - Already qualified due to IS
	Trichloroethene	58%/59%/Ok	None - Already qualified due to IS
	Vinyl chloride	139%/Ok/Ok	None - Already qualified due to IS
	Xylene (total)	Ok/65%/Ok	None - Already qualified due to IS
15	1,2-Dibromo-3-chloropropene	Ok/Ok/31	None for RPD alone
	1,4-Dichlorobenzene	66%/Ok/38	J/UJ
	1,1-Dichloroethane	Ok/131%/Ok	None - All ND
	1,1-Dichloroethene	Ok/150%/Ok	None - All ND
	Methyl acetate	30%/23%/Ok	J/UJ
	1,2,4-Trichlorobenzene	46%/Ok/47	J/UJ
	Trichlorotrifluoroethane	Ok/148%/Ok	None - All ND
	Vinyl chloride	Ok/139%/Ok	None - All ND

Laboratory Control Sample - The LCS samples exhibited acceptable %R values except the following.

LCS ID	Compound	%R	Qualifier	Affected Samples
V5BLK1129E	Carbon disulfide	168%	None	All ND
	Chloromethane	143%	None	All ND
	1,4-Dichlorobenzene	128%	None	All ND
	1,1-Dichloroethane	135%	None	All ND
	1,2-Dichloroethane	129%	None	All ND
	1,1-Dichloroethene	152%	None	All ND
	Trichlorotrifluoroethane	166%	None	All ND
	Vinyl chloride	128%	None	All ND
V5MBLK1202	Bromomethane	170%	None	All ND
	Carbon disulfide	188%	None	All ND
	Chloromethane	155%	J	11DL, 14DL
	1,4-Dichlorobenzene	127%	None	All ND
	1,1-Dichloroethane	138%	None	All ND
	1,1-Dichloroethene	157%	None	All ND
	trans-1,2-Dichloroethene	148%	None	All ND
	Methylene chloride	142%	J	11DL, 14DL
	Trichlorotrifluoroethane	176%	None	All ND
	Vinyl chloride	150%	None	All ND

Internal Standard (IS) Area Performance - All internal standards met response and retention time (RT) criteria except the following.

Sample ID	Internal Standard	Area Count	Qualifier
11	IS1-Fluorobenzene	Severely Low	J/R
	IS2-Chlorobenzene-d5	Low	J/UJ
	IS3-1,4-Dichlorobenzene-d4	Low	J/UJ
14	IS1-Fluorobenzene	Low	J/UJ
	IS2-Chlorobenzene-d5	Low	J/UJ
	IS3-1,4-Dichlorobenzene-d4	Low	J/UJ

Method Blank - The method blanks exhibited the following contamination.

Blank ID	Compound	Conc.	Action Level	Qualifier	Affected Samples
V3BLK1129	1,2,4-Trichlorobenzene	0.40 ug/L	2.0 ug/L	None	All ND
V3BLK1130	1,2,4-Trichlorobenzene	0.25 ug/L	1.25 ug/L	None	All ND
V5BLK1129E	Acetone	5.0 ug/kg	50 ug/kg	U	12, 13, 15, 16
	1,2,4-Trichlorobenzene	0.28 ug/kg	1.4 ug/kg	None	All ND

Trip, Field, Equipment Blank - Field QC results are summarized below.

Blank ID	Compound	Conc. ug/L	Action Level ug/L or ug/kg	Qualifier	Affected Samples
MR08-EB111708-1	Methylene chloride	0.62	6.2	None	All ND
MR08-EB111908	Acetone	4.1	41	None	All ND or already qualified
	Bromodichloromethane	0.19	0.95	None	All ND
	Chloroform	1.6	8.0	U	17, 20-23
	Toluene	0.69	3.45	U	19
	Xylene (total)	0.24	1.2	None	All ND
MR08-FB112008	Acetone	4.5	45	U	3
	Bromodichloromethane	0.24	1.2	None	All ND
	Chloroform	1.9	9.5	U	2
	Methylene chloride	0.53	5.3	None	All ND
	Toluene	0.62	3.1	U	5, 7, 8
MR08-TB-112008	Methylene chloride	1.6	16	None	All ND
MR08-TB111908-2	Methylene chloride	1.4	14	None	All ND

Field Duplicates - Field duplicate results are summarized below.

Compound	MR08-IS389-08D ug/kg	MR08-IS389D-08D ug/kg	RPD	Qualifier
None	ND	ND	-	-

Compound	MR08-SS395-08D ug/kg	MR08-SS395D-08D ug/kg	RPD	Qualifier
Acetone	110	120	9%	None
Methyl acetate	32	11U	NC	None

Compound	MR08-SS391-08D ug/kg	MR08-SS391D-08D ug/kg	RPD	Qualifier
Acetone	330	240	32%	None

Tentatively Identified Compounds (TICs) - TICs were not reported.

Compound Quantitation - EDS samples #11 and 14 were analyzed at a medium level extraction due to problems with the low level analyses. The medium level results should be used for reporting purposes.

FORM 1
VOLATILE ORGANICS ANALYSIS DATA SHEET

CLIENT SAMPLE NO.

TB-112008

Lab Name: EMPIRICAL LABS Contract: CH2MHILL

Lab Code: NA Case No.: NA SAS No.: NA SDG No.: LEJEUNE020

Matrix: (soil/water) WATER Lab Sample ID: 0811289-01

Sample wt/vol: 5.000 (g/mL) ML Lab File ID: 1128901

Level: (low/med) LOW Date Sampled: 11/20/08 :

% Moisture: not dec. _____ Date Analyzed: 12/01/08 00:09

GC Column: RTX-VRX ID: 0.25 (mm) Dilution Factor: 1.0

Soil Extract Volume:_____(uL) Soil Aliquot Volume: _____(uL)

CONCENTRATION UNITS: (ug/L or ug/Kg) UG/L

CAS NO.	COMPOUND	MDL	RL	CONC	Q
67-64-1	Acetone	0.84	2.5		U
71-43-2	Benzene	0.11	1.0		U
75-27-4	Bromodichloromethane	0.10	1.0		U
75-25-2	Bromoform	0.10	1.0		U
74-83-9	Bromomethane	0.32	1.0		U
78-93-3	2-Butanone	1.0	3.0		U
75-15-0	Carbon disulfide	0.13	1.0		U
56-23-5	Carbon tetrachloride	0.15	1.0		U
108-90-7	Chlorobenzene	0.10	1.0		U
75-00-3	Chloroethane	0.18	1.0		U
67-66-3	Chloroform	0.11	1.0		U
74-87-3	Chloromethane	0.29	1.0		U
110-82-7	Cyclohexane	0.20	1.0		U
124-48-1	Dibromochloromethane	0.10	1.0		U
96-12-8	1,2-Dibromo-3-chloropropane	0.11	1.0		U
106-93-4	1,2-Dibromoethane	0.10	1.0		U
95-50-1	1,2-Dichlorobenzene	0.10	1.0		U
541-73-1	1,3-Dichlorobenzene	0.13	1.0		U
106-46-7	1,4-Dichlorobenzene	0.10	1.0		U
75-71-8	Dichlorodifluoromethane	0.22	1.0		U
75-34-3	1,1-Dichloroethane	0.12	1.0		U
107-06-2	1,2-Dichloroethane	0.10	1.0		U
75-35-4	1,1-Dichloroethene	0.15	1.0		U
156-59-2	cis-1,2-Dichloroethene	0.13	1.0		U
156-60-5	trans-1,2-Dichloroethene	0.13	1.0		U
78-87-5	1,2-Dichloropropane	0.10	1.0		U
10061-01-5	cis-1,3-Dichloropropene	0.11	1.0		U
10061-02-6	trans-1,3-Dichloropropene	0.10	1.0		U
100-41-4	Ethylbenzene	0.13	1.0		U
591-78-6	2-Hexanone	0.30	2.0		U
98-82-8	Isopropylbenzene	0.15	1.0		U
79-20-9	Methyl acetate	0.30	1.0		U
75-09-2	Methylene chloride	0.14	1.0	1.6	
108-87-2	Methyl cyclohexane	0.17	1.0		U
1634-04-4	Methyl tert-butyl ether	0.10	1.0		U
108-10-1	4-Methyl-2-pentanone	0.29	2.0		U
100-42-5	Styrene	0.10	1.0		U
79-34-5	1,1,2,2-Tetrachloroethane	0.10	1.0		U
127-18-4	Tetrachloroethene	0.15	1.0		U

lw
1130/09

FORM 1
VOLATILE ORGANICS ANALYSIS DATA SHEET

CLIENT SAMPLE NO.

TB-112008

Lab Name: EMPIRICAL LABS Contract: CH2MHILL

Lab Code: NA Case No.: NA SAS No.: NA SDG No.: LEJEUNE020

Matrix: (soil/water) WATER Lab Sample ID: 0811289-01

Sample wt/vol: 5.000 (g/mL) ML Lab File ID: 1128901

Level: (low/med) LOW Date Sampled: 11/20/08 :

% Moisture: not dec. _____ Date Analyzed: 12/01/08 00:09

GC Column: RTX-VRX ID: 0.25 (mm) Dilution Factor: 1.0

Soil Extract Volume:_____(uL) Soil Aliquot Volume: _____(uL)

CONCENTRATION UNITS: (ug/L or ug/Kg) UG/L

CAS NO.	COMPOUND	MDL	RL	CONC	Q
108-88-3	Toluene	0.10	1.0		U
120-82-1	1,2,4-Trichlorobenzene	0.10	1.0		U
71-55-6	1,1,1-Trichloroethane	0.17	1.0		U
79-00-5	1,1,2-Trichloroethane	0.10	1.0		U
79-01-6	Trichloroethene	0.13	1.0		U
76-13-1	Trichlorotrifluoroethane	0.18	1.0		U
75-69-4	Trichlorofluoromethane	0.17	1.0		U
75-01-4	Vinyl chloride	0.18	1.0		U
1330-20-7	Xylene(total)	0.22	1.0		U

lw
1/30/09

FORM 1
VOLATILE ORGANICS ANALYSIS DATA SHEET

CLIENT SAMPLE NO. 2

MR08-TW26-08D

Lab Name: EMPIRICAL LABS Contract: CH2MHILL

Lab Code: NA Case No.: NA SAS No.: NA SDG No.: LEJEUNE020

Matrix: (soil/water) WATER Lab Sample ID: 0811289-02

Sample wt/vol: 5.000 (g/mL) ML Lab File ID: 1128902

Level: (low/med) LOW Date Sampled: 11/20/08 09:40

% Moisture: not dec. _____ Date Analyzed: 12/01/08 03:09

GC Column: RTX-VRX ID: 0.25 (mm) Dilution Factor: 1.0

Soil Extract Volume:_____(uL) Soil Aliquot Volume: _____(uL)

CONCENTRATION UNITS: (ug/L or ug/Kg) UG/L

CAS NO.	COMPOUND	MDL	RL	CONC	Q
67-64-1	Acetone	0.84	2.5		U
71-43-2	Benzene	0.11	1.0		U
75-27-4	Bromodichloromethane	0.10	1.0		U
75-25-2	Bromoform	0.10	1.0		U
74-83-9	Bromomethane	0.32	1.0		U
78-93-3	2-Butanone	1.0	3.0		U
75-15-0	Carbon disulfide	0.13	1.0		U
56-23-5	Carbon tetrachloride	0.15	1.0		U
108-90-7	Chlorobenzene	0.10	1.0		U
75-00-3	Chloroethane	0.18	1.0		U
67-66-3	Chloroform	0.11	1.0	1.0 ~~0.20~~	~~J~~ U
74-87-3	Chloromethane	0.29	1.0		U
110-82-7	Cyclohexane	0.20	1.0		U
124-48-1	Dibromochloromethane	0.10	1.0		U
96-12-8	1,2-Dibromo-3-chloropropane	0.11	1.0		U
106-93-4	1,2-Dibromoethane	0.10	1.0		U
95-50-1	1,2-Dichlorobenzene	0.10	1.0		U
541-73-1	1,3-Dichlorobenzene	0.13	1.0		U
106-46-7	1,4-Dichlorobenzene	0.10	1.0		U
75-71-8	Dichlorodifluoromethane	0.22	1.0		U
75-34-3	1,1-Dichloroethane	0.12	1.0		U
107-06-2	1,2-Dichloroethane	0.10	1.0		U
75-35-4	1,1-Dichloroethene	0.15	1.0		U
156-59-2	cis-1,2-Dichloroethene	0.13	1.0		U
156-60-5	trans-1,2-Dichloroethene	0.13	1.0		U
78-87-5	1,2-Dichloropropane	0.10	1.0		U
10061-01-5	cis-1,3-Dichloropropene	0.11	1.0		U
10061-02-6	trans-1,3-Dichloropropene	0.10	1.0		U
100-41-4	Ethylbenzene	0.13	1.0		U
591-78-6	2-Hexanone	0.30	2.0		U
98-82-8	Isopropylbenzene	0.15	1.0		U
79-20-9	Methyl acetate	0.30	1.0		U
75-09-2	Methylene chloride	0.14	1.0		U
108-87-2	Methyl cyclohexane	0.17	1.0		U
1634-04-4	Methyl tert-butyl ether	0.10	1.0		U
108-10-1	4-Methyl-2-pentanone	0.29	2.0		U
100-42-5	Styrene	0.10	1.0		U
79-34-5	1,1,2,2-Tetrachloroethane	0.10	1.0		U
127-18-4	Tetrachloroethene	0.15	1.0		U

lw
1/30/09

FORM 1
VOLATILE ORGANICS ANALYSIS DATA SHEET

CLIENT SAMPLE NO. 2

MR08-TW26-08D

Lab Name: EMPIRICAL LABS Contract: CH2MHILL

Lab Code: NA Case No.: NA SAS No.: NA SDG No.: LEJEUNE020

Matrix: (soil/water) WATER Lab Sample ID: 0811289-02

Sample wt/vol: 5.000 (g/mL) ML Lab File ID: 1128902

Level: (low/med) LOW Date Sampled: 11/20/08 09:40

% Moisture: not dec. _____ Date Analyzed: 12/01/08 03:09

GC Column: RTX-VRX ID: 0.25 (mm) Dilution Factor: 1.0

Soil Extract Volume:_____(uL) Soil Aliquot Volume: _____(uL)

CONCENTRATION UNITS: (ug/L or ug/Kg) UG/L

CAS NO.	COMPOUND	MDL	RL	CONC	Q
108-88-3	Toluene	0.10	1.0	7.0	
120-82-1	1,2,4-Trichlorobenzene	0.10	1.0		U
71-55-6	1,1,1-Trichloroethane	0.17	1.0		U
79-00-5	1,1,2-Trichloroethane	0.10	1.0		U
79-01-6	Trichloroethene	0.13	1.0		U
76-13-1	Trichlorotrifluoroethane	0.18	1.0		U
75-69-4	Trichlorofluoromethane	0.17	1.0		U
75-01-4	Vinyl chloride	0.18	1.0		U
1330-20-7	Xylene(total)	0.22	1.0		U

lcw
11/30/09

FORM 1
VOLATILE ORGANICS ANALYSIS DATA SHEET

CLIENT SAMPLE NO. 3

MR08-TW04-08D

Lab Name: EMPIRICAL LABS Contract: CH2MHILL

Lab Code: NA Case No.: NA SAS No.: NA SDG No.: LEJEUNE020

Matrix: (soil/water) WATER Lab Sample ID: 0811289-03

Sample wt/vol: 5.000 (g/mL) ML Lab File ID: 1128903

Level: (low/med) LOW Date Sampled: 11/20/08 09:25

% Moisture: not dec. _____ Date Analyzed: 12/01/08 03:38

GC Column: RTX-VRX ID: 0.25 (mm) Dilution Factor: 1.0

Soil Extract Volume:_____(uL) Soil Aliquot Volume: _____(uL)

CONCENTRATION UNITS: (ug/L or ug/Kg) UG/L

CAS NO.	COMPOUND	MDL	RL	CONC	Q
67-64-1	Acetone	0.84	2.5	2.5U ~~2.4~~	~~J~~
71-43-2	Benzene	0.11	1.0		U
75-27-4	Bromodichloromethane	0.10	1.0		U
75-25-2	Bromoform	0.10	1.0		U
74-83-9	Bromomethane	0.32	1.0		U
78-93-3	2-Butanone	1.0	3.0		U
75-15-0	Carbon disulfide	0.13	1.0		U
56-23-5	Carbon tetrachloride	0.15	1.0		U
108-90-7	Chlorobenzene	0.10	1.0		U
75-00-3	Chloroethane	0.18	1.0		U
67-66-3	Chloroform	0.11	1.0		U
74-87-3	Chloromethane	0.29	1.0		U
110-82-7	Cyclohexane	0.20	1.0		U
124-48-1	Dibromochloromethane	0.10	1.0		U
96-12-8	1,2-Dibromo-3-chloropropane	0.11	1.0		U
106-93-4	1,2-Dibromoethane	0.10	1.0		U
95-50-1	1,2-Dichlorobenzene	0.10	1.0		U
541-73-1	1,3-Dichlorobenzene	0.13	1.0		U
106-46-7	1,4-Dichlorobenzene	0.10	1.0		U
75-71-8	Dichlorodifluoromethane	0.22	1.0		U
75-34-3	1,1-Dichloroethane	0.12	1.0		U
107-06-2	1,2-Dichloroethane	0.10	1.0		U
75-35-4	1,1-Dichloroethene	0.15	1.0		U
156-59-2	cis-1,2-Dichloroethene	0.13	1.0		U
156-60-5	trans-1,2-Dichloroethene	0.13	1.0		U
78-87-5	1,2-Dichloropropane	0.10	1.0		U
10061-01-5	cis-1,3-Dichloropropene	0.11	1.0		U
10061-02-6	trans-1,3-Dichloropropene	0.10	1.0		U
100-41-4	Ethylbenzene	0.13	1.0		U
591-78-6	2-Hexanone	0.30	2.0		U
98-82-8	Isopropylbenzene	0.15	1.0		U
79-20-9	Methyl acetate	0.30	1.0		U
75-09-2	Methylene chloride	0.14	1.0		U
108-87-2	Methyl cyclohexane	0.17	1.0		U
1634-04-4	Methyl tert-butyl ether	0.10	1.0		U
108-10-1	4-Methyl-2-pentanone	0.29	2.0		U
100-42-5	Styrene	0.10	1.0		U
79-34-5	1,1,2,2-Tetrachloroethane	0.10	1.0		U
127-18-4	Tetrachloroethene	0.15	1.0		U

B

FORM I VOA

lw 11/30/09

FORM 1
VOLATILE ORGANICS ANALYSIS DATA SHEET

CLIENT SAMPLE NO. 3

MR08-TW04-08D

Lab Name: EMPIRICAL LABS Contract: CH2MHILL

Lab Code: NA Case No.: NA SAS No.: NA SDG No.: LEJEUNE020

Matrix: (soil/water) WATER Lab Sample ID: 0811289-03

Sample wt/vol: 5.000 (g/mL) ML Lab File ID: 1128903

Level: (low/med) LOW Date Sampled: 11/20/08 09:25

% Moisture: not dec. _____ Date Analyzed: 12/01/08 03:38

GC Column: RTX-VRX ID: 0.25 (mm) Dilution Factor: 1.0

Soil Extract Volume:_____(uL) Soil Aliquot Volume: _____(uL)

CONCENTRATION UNITS: (ug/L or ug/Kg) UG/L

CAS NO.	COMPOUND	MDL	RL	CONC	Q
108-88-3	Toluene	0.10	1.0	12	
120-82-1	1,2,4-Trichlorobenzene	0.10	1.0		U
71-55-6	1,1,1-Trichloroethane	0.17	1.0		U
79-00-5	1,1,2-Trichloroethane	0.10	1.0		U
79-01-6	Trichloroethene	0.13	1.0		U
76-13-1	Trichlorotrifluoroethane	0.18	1.0		U
75-69-4	Trichlorofluoromethane	0.17	1.0		U
75-01-4	Vinyl chloride	0.18	1.0		U
1330-20-7	Xylene(total)	0.22	1.0		U

lwo
1/30/09

FORM 1
VOLATILE ORGANICS ANALYSIS DATA SHEET

CLIENT SAMPLE NO. 4

MR08-FB112008

Lab Name: EMPIRICAL LABS Contract: CH2MHILL

Lab Code: NA Case No.: NA SAS No.: NA SDG No.: LEJEUNE020

Matrix: (soil/water) WATER Lab Sample ID: 0811289-04

Sample wt/vol: 5.000 (g/mL) ML Lab File ID: 1128904

Level: (low/med) LOW Date Sampled: 11/20/08 09:25

% Moisture: not dec. _____ Date Analyzed: 12/01/08 04:09

GC Column: RTX-VRX ID: 0.25 (mm) Dilution Factor: 1.0

Soil Extract Volume:_____(uL) Soil Aliquot Volume: _____(uL)

CONCENTRATION UNITS: (ug/L or ug/Kg) UG/L

CAS NO.	COMPOUND	MDL	RL	CONC	Q
67-64-1	Acetone	0.84	2.5	4.5	
71-43-2	Benzene	0.11	1.0		U
75-27-4	Bromodichloromethane	0.10	1.0	0.24	J
75-25-2	Bromoform	0.10	1.0		U
74-83-9	Bromomethane	0.32	1.0		U
78-93-3	2-Butanone	1.0	3.0		U
75-15-0	Carbon disulfide	0.13	1.0		U
56-23-5	Carbon tetrachloride	0.15	1.0		U
108-90-7	Chlorobenzene	0.10	1.0		U
75-00-3	Chloroethane	0.18	1.0		U
67-66-3	Chloroform	0.11	1.0	1.9	
74-87-3	Chloromethane	0.29	1.0		U
110-82-7	Cyclohexane	0.20	1.0		U
124-48-1	Dibromochloromethane	0.10	1.0		U
96-12-8	1,2-Dibromo-3-chloropropane	0.11	1.0		U
106-93-4	1,2-Dibromoethane	0.10	1.0		U
95-50-1	1,2-Dichlorobenzene	0.10	1.0		U
541-73-1	1,3-Dichlorobenzene	0.13	1.0		U
106-46-7	1,4-Dichlorobenzene	0.10	1.0		U
75-71-8	Dichlorodifluoromethane	0.22	1.0		U
75-34-3	1,1-Dichloroethane	0.12	1.0		U
107-06-2	1,2-Dichloroethane	0.10	1.0		U
75-35-4	1,1-Dichloroethene	0.15	1.0		U
156-59-2	cis-1,2-Dichloroethene	0.13	1.0		U
156-60-5	trans-1,2-Dichloroethene	0.13	1.0		U
78-87-5	1,2-Dichloropropane	0.10	1.0		U
10061-01-5	cis-1,3-Dichloropropene	0.11	1.0		U
10061-02-6	trans-1,3-Dichloropropene	0.10	1.0		U
100-41-4	Ethylbenzene	0.13	1.0		U
591-78-6	2-Hexanone	0.30	2.0		U
98-82-8	Isopropylbenzene	0.15	1.0		U
79-20-9	Methyl acetate	0.30	1.0		U
75-09-2	Methylene chloride	0.14	1.0	0.53	J
108-87-2	Methyl cyclohexane	0.17	1.0		U
1634-04-4	Methyl tert-butyl ether	0.10	1.0		U
108-10-1	4-Methyl-2-pentanone	0.29	2.0		U
100-42-5	Styrene	0.10	1.0		U
79-34-5	1,1,2,2-Tetrachloroethane	0.10	1.0		U
127-18-4	Tetrachloroethene	0.15	1.0		U

Ok 1/30/09

FORM 1
VOLATILE ORGANICS ANALYSIS DATA SHEET

CLIENT SAMPLE NO. 4

MR08-FB112008

Lab Name: EMPIRICAL LABS Contract: CH2MHILL

Lab Code: NA Case No.: NA SAS No.: NA SDG No.: LEJEUNE020

Matrix: (soil/water) WATER Lab Sample ID: 0811289-04

Sample wt/vol: 5.000 (g/mL) ML Lab File ID: 1128904

Level: (low/med) LOW Date Sampled: 11/20/08 09:25

% Moisture: not dec. _____ Date Analyzed: 12/01/08 04:09

GC Column: RTX-VRX ID: 0.25 (mm) Dilution Factor: 1.0

Soil Extract Volume:_____(uL) Soil Aliquot Volume: _____(uL)

CONCENTRATION UNITS: (ug/L or ug/Kg) UG/L

CAS NO.	COMPOUND	MDL	RL	CONC	Q
108-88-3	Toluene	0.10	1.0	0.62	J
120-82-1	1,2,4-Trichlorobenzene	0.10	1.0		U
71-55-6	1,1,1-Trichloroethane	0.17	1.0		U
79-00-5	1,1,2-Trichloroethane	0.10	1.0		U
79-01-6	Trichloroethene	0.13	1.0		U
76-13-1	Trichlorotrifluoroethane	0.18	1.0		U
75-69-4	Trichlorofluoromethane	0.17	1.0		U
75-01-4	Vinyl chloride	0.18	1.0		U
1330-20-7	Xylene(total)	0.22	1.0		U

lwo
1130/09

5

FORM 1
VOLATILE ORGANICS ANALYSIS DATA SHEET

CLIENT SAMPLE NO.

MR08-TW19-08D

Lab Name: EMPIRICAL LABS Contract: CH2MHILL

Lab Code: NA Case No.: NA SAS No.: NA SDG No.: LEJEUNE020

Matrix: (soil/water) WATER Lab Sample ID: 0811289-05

Sample wt/vol: 5.000 (g/mL) ML Lab File ID: 1128905

Level: (low/med) LOW Date Sampled: 11/20/08 13:05

% Moisture: not dec. _____ Date Analyzed: 12/01/08 04:39

GC Column: RTX-VRX ID: 0.25 (mm) Dilution Factor: 1.0

Soil Extract Volume:_____(uL) Soil Aliquot Volume: _____(uL)

CONCENTRATION UNITS: (ug/L or ug/Kg) UG/L

CAS NO.	COMPOUND	MDL	RL	CONC	Q
67-64-1	Acetone	0.84	2.5		U
71-43-2	Benzene	0.11	1.0		U
75-27-4	Bromodichloromethane	0.10	1.0		U
75-25-2	Bromoform	0.10	1.0		U
74-83-9	Bromomethane	0.32	1.0		U
78-93-3	2-Butanone	1.0	3.0		U
75-15-0	Carbon disulfide	0.13	1.0		U
56-23-5	Carbon tetrachloride	0.15	1.0		U
108-90-7	Chlorobenzene	0.10	1.0		U
75-00-3	Chloroethane	0.18	1.0		U
67-66-3	Chloroform	0.11	1.0		U
74-87-3	Chloromethane	0.29	1.0		U
110-82-7	Cyclohexane	0.20	1.0		U
124-48-1	Dibromochloromethane	0.10	1.0		U
96-12-8	1,2-Dibromo-3-chloropropane	0.11	1.0		U
106-93-4	1,2-Dibromoethane	0.10	1.0		U
95-50-1	1,2-Dichlorobenzene	0.10	1.0		U
541-73-1	1,3-Dichlorobenzene	0.13	1.0		U
106-46-7	1,4-Dichlorobenzene	0.10	1.0		U
75-71-8	Dichlorodifluoromethane	0.22	1.0		U
75-34-3	1,1-Dichloroethane	0.12	1.0		U
107-06-2	1,2-Dichloroethane	0.10	1.0		U
75-35-4	1,1-Dichloroethene	0.15	1.0		U
156-59-2	cis-1,2-Dichloroethene	0.13	1.0	1.9	
156-60-5	trans-1,2-Dichloroethene	0.13	1.0		U
78-87-5	1,2-Dichloropropane	0.10	1.0		U
10061-01-5	cis-1,3-Dichloropropene	0.11	1.0		U
10061-02-6	trans-1,3-Dichloropropene	0.10	1.0		U
100-41-4	Ethylbenzene	0.13	1.0		U
591-78-6	2-Hexanone	0.30	2.0		U
98-82-8	Isopropylbenzene	0.15	1.0		U
79-20-9	Methyl acetate	0.30	1.0		U
75-09-2	Methylene chloride	0.14	1.0		U
108-87-2	Methyl cyclohexane	0.17	1.0		U
1634-04-4	Methyl tert-butyl ether	0.10	1.0		U
108-10-1	4-Methyl-2-pentanone	0.29	2.0		U
100-42-5	Styrene	0.10	1.0		U
79-34-5	1,1,2,2-Tetrachloroethane	0.10	1.0		U
127-18-4	Tetrachloroethene	0.15	1.0		U

1130109

FORM 1
VOLATILE ORGANICS ANALYSIS DATA SHEET

CLIENT SAMPLE NO. 5

MR08-TW19-08D

Lab Name: EMPIRICAL LABS Contract: CH2MHILL

Lab Code: NA Case No.: NA SAS No.: NA SDG No.: LEJEUNE020

Matrix: (soil/water) WATER Lab Sample ID: 0811289-05

Sample wt/vol: 5.000 (g/mL) ML Lab File ID: 1128905

Level: (low/med) LOW Date Sampled: 11/20/08 13:05

% Moisture: not dec. _____ Date Analyzed: 12/01/08 04:39

GC Column: RTX-VRX ID: 0.25 (mm) Dilution Factor: 1.0

Soil Extract Volume:_____(uL) Soil Aliquot Volume: _____(uL)

CONCENTRATION UNITS: (ug/L or ug/Kg) UG/L

CAS NO.	COMPOUND	MDL	RL	CONC	Q
108-88-3	Toluene	0.10	1.0	1.0U ~~0.22~~	~~J~~ U
120-82-1	1,2,4-Trichlorobenzene	0.10	1.0		U
71-55-6	1,1,1-Trichloroethane	0.17	1.0		U
79-00-5	1,1,2-Trichloroethane	0.10	1.0		U
79-01-6	Trichloroethene	0.13	1.0		U
76-13-1	Trichlorotrifluoroethane	0.18	1.0		U
75-69-4	Trichlorofluoromethane	0.17	1.0		U
75-01-4	Vinyl chloride	0.18	1.0		U
1330-20-7	Xylene(total)	0.22	1.0		U

FORM I VOA

AW
1130109

FORM 1
VOLATILE ORGANICS ANALYSIS DATA SHEET

CLIENT SAMPLE NO.

MR08-TW20-08D

Lab Name: EMPIRICAL LABS Contract: CH2MHILL

Lab Code: NA Case No.: NA SAS No.: NA SDG No.: LEJEUNE020

Matrix: (soil/water) WATER Lab Sample ID: 0811289-06

Sample wt/vol: 5.000 (g/mL) ML Lab File ID: 1128906

Level: (low/med) LOW Date Sampled: 11/20/08 13:15

% Moisture: not dec. _____ Date Analyzed: 12/01/08 05:09

GC Column: RTX-VRX ID: 0.25 (mm) Dilution Factor: 1.0

Soil Extract Volume:_____(uL) Soil Aliquot Volume: _____(uL)

CONCENTRATION UNITS: (ug/L or ug/Kg) UG/L

CAS NO.	COMPOUND	MDL	RL	CONC	Q
67-64-1	Acetone	0.84	2.5		U
71-43-2	Benzene	0.11	1.0		U
75-27-4	Bromodichloromethane	0.10	1.0		U
75-25-2	Bromoform	0.10	1.0		U
74-83-9	Bromomethane	0.32	1.0		U
78-93-3	2-Butanone	1.0	3.0		U
75-15-0	Carbon disulfide	0.13	1.0		U
56-23-5	Carbon tetrachloride	0.15	1.0		U
108-90-7	Chlorobenzene	0.10	1.0		U
75-00-3	Chloroethane	0.18	1.0		U
67-66-3	Chloroform	0.11	1.0		U
74-87-3	Chloromethane	0.29	1.0		U
110-82-7	Cyclohexane	0.20	1.0		U
124-48-1	Dibromochloromethane	0.10	1.0		U
96-12-8	1,2-Dibromo-3-chloropropane	0.11	1.0		U
106-93-4	1,2-Dibromoethane	0.10	1.0		U
95-50-1	1,2-Dichlorobenzene	0.10	1.0		U
541-73-1	1,3-Dichlorobenzene	0.13	1.0		U
106-46-7	1,4-Dichlorobenzene	0.10	1.0		U
75-71-8	Dichlorodifluoromethane	0.22	1.0		U
75-34-3	1,1-Dichloroethane	0.12	1.0		U
107-06-2	1,2-Dichloroethane	0.10	1.0		U
75-35-4	1,1-Dichloroethene	0.15	1.0		U
156-59-2	cis-1,2-Dichloroethene	0.13	1.0		U
156-60-5	trans-1,2-Dichloroethene	0.13	1.0		U
78-87-5	1,2-Dichloropropane	0.10	1.0		U
10061-01-5	cis-1,3-Dichloropropene	0.11	1.0		U
10061-02-6	trans-1,3-Dichloropropene	0.10	1.0		U
100-41-4	Ethylbenzene	0.13	1.0		U
591-78-6	2-Hexanone	0.30	2.0		U
98-82-8	Isopropylbenzene	0.15	1.0		U
79-20-9	Methyl acetate	0.30	1.0		U
75-09-2	Methylene chloride	0.14	1.0		U
108-87-2	Methyl cyclohexane	0.17	1.0		U
1634-04-4	Methyl tert-butyl ether	0.10	1.0		U
108-10-1	4-Methyl-2-pentanone	0.29	2.0		U
100-42-5	Styrene	0.10	1.0		U
79-34-5	1,1,2,2-Tetrachloroethane	0.10	1.0		U
127-18-4	Tetrachloroethene	0.15	1.0		U

LW 11/30/09

FORM 1
VOLATILE ORGANICS ANALYSIS DATA SHEET

CLIENT SAMPLE NO.

MR08-TW20-08D

Lab Name: EMPIRICAL LABS Contract: CH2MHILL

Lab Code: NA Case No.: NA SAS No.: NA SDG No.: LEJEUNE020

Matrix: (soil/water) WATER Lab Sample ID: 0811289-06

Sample wt/vol: 5.000 (g/mL) ML Lab File ID: 1128906

Level: (low/med) LOW Date Sampled: 11/20/08 13:15

% Moisture: not dec. _____ Date Analyzed: 12/01/08 05:09

GC Column: RTX-VRX ID: 0.25 (mm) Dilution Factor: 1.0

Soil Extract Volume:_____(uL) Soil Aliquot Volume: _____(uL)

CONCENTRATION UNITS: (ug/L or ug/Kg) UG/L

CAS NO.	COMPOUND	MDL	RL	CONC	Q
108-88-3	Toluene	0.10	1.0	4.8	
120-82-1	1,2,4-Trichlorobenzene	0.10	1.0		U
71-55-6	1,1,1-Trichloroethane	0.17	1.0		U
79-00-5	1,1,2-Trichloroethane	0.10	1.0		U
79-01-6	Trichloroethene	0.13	1.0		U
76-13-1	Trichlorotrifluoroethane	0.18	1.0		U
75-69-4	Trichlorofluoromethane	0.17	1.0		U
75-01-4	Vinyl chloride	0.18	1.0		U
1330-20-7	Xylene(total)	0.22	1.0		U

lcw
11/30/09

FORM 1
VOLATILE ORGANICS ANALYSIS DATA SHEET

CLIENT SAMPLE NO. 7

MR08-TW25-08D

Lab Name: EMPIRICAL LABS Contract: CH2MHILL

Lab Code: NA Case No.: NA SAS No.: NA SDG No.: LEJEUNE020

Matrix: (soil/water) WATER Lab Sample ID: 0811289-07

Sample wt/vol: 5.000 (g/mL) ML Lab File ID: 1128907

Level: (low/med) LOW Date Sampled: 11/20/08 14:15

% Moisture: not dec. _____ Date Analyzed: 12/01/08 05:39

GC Column: RTX-VRX ID: 0.25 (mm) Dilution Factor: 1.0

Soil Extract Volume:_____(uL) Soil Aliquot Volume: _____(uL)

CONCENTRATION UNITS: (ug/L or ug/Kg) UG/L

CAS NO.	COMPOUND	MDL	RL	CONC	Q
67-64-1	Acetone	0.84	2.5		U
71-43-2	Benzene	0.11	1.0		U
75-27-4	Bromodichloromethane	0.10	1.0		U
75-25-2	Bromoform	0.10	1.0		U
74-83-9	Bromomethane	0.32	1.0		U
78-93-3	2-Butanone	1.0	3.0		U
75-15-0	Carbon disulfide	0.13	1.0		U
56-23-5	Carbon tetrachloride	0.15	1.0		U
108-90-7	Chlorobenzene	0.10	1.0		U
75-00-3	Chloroethane	0.18	1.0		U
67-66-3	Chloroform	0.11	1.0		U
74-87-3	Chloromethane	0.29	1.0		U
110-82-7	Cyclohexane	0.20	1.0		U
124-48-1	Dibromochloromethane	0.10	1.0		U
96-12-8	1,2-Dibromo-3-chloropropane	0.11	1.0		U
106-93-4	1,2-Dibromoethane	0.10	1.0		U
95-50-1	1,2-Dichlorobenzene	0.10	1.0		U
541-73-1	1,3-Dichlorobenzene	0.13	1.0		U
106-46-7	1,4-Dichlorobenzene	0.10	1.0		U
75-71-8	Dichlorodifluoromethane	0.22	1.0		U
75-34-3	1,1-Dichloroethane	0.12	1.0		U
107-06-2	1,2-Dichloroethane	0.10	1.0		U
75-35-4	1,1-Dichloroethene	0.15	1.0		U
156-59-2	cis-1,2-Dichloroethene	0.13	1.0		U
156-60-5	trans-1,2-Dichloroethene	0.13	1.0		U
78-87-5	1,2-Dichloropropane	0.10	1.0		U
10061-01-5	cis-1,3-Dichloropropene	0.11	1.0		U
10061-02-6	trans-1,3-Dichloropropene	0.10	1.0		U
100-41-4	Ethylbenzene	0.13	1.0		U
591-78-6	2-Hexanone	0.30	2.0		U
98-82-8	Isopropylbenzene	0.15	1.0		U
79-20-9	Methyl acetate	0.30	1.0		U
75-09-2	Methylene chloride	0.14	1.0		U
108-87-2	Methyl cyclohexane	0.17	1.0		U
1634-04-4	Methyl tert-butyl ether	0.10	1.0		U
108-10-1	4-Methyl-2-pentanone	0.29	2.0		U
100-42-5	Styrene	0.10	1.0		U
79-34-5	1,1,2,2-Tetrachloroethane	0.10	1.0		U
127-18-4	Tetrachloroethene	0.15	1.0		U

lw
1/30/09

FORM 1
VOLATILE ORGANICS ANALYSIS DATA SHEET

CLIENT SAMPLE NO. 7

MR08-TW25-08D

Lab Name: EMPIRICAL LABS Contract: CH2MHILL

Lab Code: NA Case No.: NA SAS No.: NA SDG No.: LEJEUNE020

Matrix: (soil/water) WATER Lab Sample ID: 0811289-07

Sample wt/vol: 5.000 (g/mL) ML Lab File ID: 1128907

Level: (low/med) LOW Date Sampled: 11/20/08 14:15

% Moisture: not dec. _____ Date Analyzed: 12/01/08 05:39

GC Column: RTX-VRX ID: 0.25 (mm) Dilution Factor: 1.0

Soil Extract Volume:_____(uL) Soil Aliquot Volume: _____(uL)

CONCENTRATION UNITS: (ug/L or ug/Kg) UG/L

CAS NO.	COMPOUND	MDL	RL	CONC	Q
108-88-3	Toluene	0.10	1.0	1.7	u BL
120-82-1	1,2,4-Trichlorobenzene	0.10	1.0		U
71-55-6	1,1,1-Trichloroethane	0.17	1.0		U
79-00-5	1,1,2-Trichloroethane	0.10	1.0		U
79-01-6	Trichloroethene	0.13	1.0		U
76-13-1	Trichlorotrifluoroethane	0.18	1.0		U
75-69-4	Trichlorofluoromethane	0.17	1.0		U
75-01-4	Vinyl chloride	0.18	1.0		U
1330-20-7	Xylene(total)	0.22	1.0		U

FORM I VOA

lcw
1/30/09

8

FORM 1
VOLATILE ORGANICS ANALYSIS DATA SHEET

CLIENT SAMPLE NO.

MR08-TW18-08D

Lab Name: EMPIRICAL LABS Contract: CH2MHILL

Lab Code: NA Case No.: NA SAS No.: NA SDG No.: LEJEUNE020

Matrix: (soil/water) WATER Lab Sample ID: 0811289-08

Sample wt/vol: 5.000 (g/mL) ML Lab File ID: 1128908

Level: (low/med) LOW Date Sampled: 11/20/08 14:50

% Moisture: not dec. _____ Date Analyzed: 12/01/08 06:09

GC Column: RTX-VRX ID: 0.25 (mm) Dilution Factor: 1.0

Soil Extract Volume:_____(uL) Soil Aliquot Volume: _____(uL)

CONCENTRATION UNITS: (ug/L or ug/Kg) UG/L

CAS NO.	COMPOUND	MDL	RL	CONC	Q
67-64-1	Acetone	0.84	2.5		U
71-43-2	Benzene	0.11	1.0		U
75-27-4	Bromodichloromethane	0.10	1.0		U
75-25-2	Bromoform	0.10	1.0		U
74-83-9	Bromomethane	0.32	1.0		U
78-93-3	2-Butanone	1.0	3.0		U
75-15-0	Carbon disulfide	0.13	1.0		U
56-23-5	Carbon tetrachloride	0.15	1.0		U
108-90-7	Chlorobenzene	0.10	1.0		U
75-00-3	Chloroethane	0.18	1.0		U
67-66-3	Chloroform	0.11	1.0		U
74-87-3	Chloromethane	0.29	1.0		U
110-82-7	Cyclohexane	0.20	1.0		U
124-48-1	Dibromochloromethane	0.10	1.0		U
96-12-8	1,2-Dibromo-3-chloropropane	0.11	1.0		U
106-93-4	1,2-Dibromoethane	0.10	1.0		U
95-50-1	1,2-Dichlorobenzene	0.10	1.0		U
541-73-1	1,3-Dichlorobenzene	0.13	1.0		U
106-46-7	1,4-Dichlorobenzene	0.10	1.0		U
75-71-8	Dichlorodifluoromethane	0.22	1.0		U
75-34-3	1,1-Dichloroethane	0.12	1.0		U
107-06-2	1,2-Dichloroethane	0.10	1.0		U
75-35-4	1,1-Dichloroethene	0.15	1.0		U
156-59-2	cis-1,2-Dichloroethene	0.13	1.0		U
156-60-5	trans-1,2-Dichloroethene	0.13	1.0		U
78-87-5	1,2-Dichloropropane	0.10	1.0		U
10061-01-5	cis-1,3-Dichloropropene	0.11	1.0		U
10061-02-6	trans-1,3-Dichloropropene	0.10	1.0		U
100-41-4	Ethylbenzene	0.13	1.0		U
591-78-6	2-Hexanone	0.30	2.0		U
98-82-8	Isopropylbenzene	0.15	1.0		U
79-20-9	Methyl acetate	0.30	1.0		U
75-09-2	Methylene chloride	0.14	1.0		U
108-87-2	Methyl cyclohexane	0.17	1.0		U
1634-04-4	Methyl tert-butyl ether	0.10	1.0		U
108-10-1	4-Methyl-2-pentanone	0.29	2.0		U
100-42-5	Styrene	0.10	1.0		U
79-34-5	1,1,2,2-Tetrachloroethane	0.10	1.0		U
127-18-4	Tetrachloroethene	0.15	1.0		U

MS
11/30/09

8

FORM 1
VOLATILE ORGANICS ANALYSIS DATA SHEET

CLIENT SAMPLE NO.

MR08-TW18-08D

Lab Name: EMPIRICAL LABS Contract: CH2MHILL

Lab Code: NA Case No.: NA SAS No.: NA SDG No.: LEJEUNE020

Matrix: (soil/water) WATER Lab Sample ID: 0811289-08

Sample wt/vol: 5.000 (g/mL) ML Lab File ID: 1128908

Level: (low/med) LOW Date Sampled: 11/20/08 14:50

% Moisture: not dec. _____ Date Analyzed: 12/01/08 06:09

GC Column: RTX-VRX ID: 0.25 (mm) Dilution Factor: 1.0

Soil Extract Volume:_____(uL) Soil Aliquot Volume: _____(uL)

CONCENTRATION UNITS: (ug/L or ug/Kg) UG/L

CAS NO.	COMPOUND	MDL	RL	CONC	Q
108-88-3	Toluene	0.10	1.0	1.04 ~~0.90~~	~~J~~
120-82-1	1,2,4-Trichlorobenzene	0.10	1.0		U
71-55-6	1,1,1-Trichloroethane	0.17	1.0		U
79-00-5	1,1,2-Trichloroethane	0.10	1.0		U
79-01-6	Trichloroethene	0.13	1.0		U
76-13-1	Trichlorotrifluoroethane	0.18	1.0		U
75-69-4	Trichlorofluoromethane	0.17	1.0		U
75-01-4	Vinyl chloride	0.18	1.0		U
1330-20-7	Xylene(total)	0.22	1.0		U

B1

FORM I VOA

lcw
1130/09

9

FORM 1
VOLATILE ORGANICS ANALYSIS DATA SHEET

CLIENT SAMPLE NO.

MR08-SS388-08D

Lab Name: EMPIRICAL LABS Contract: CH2MHILL

Lab Code: NA Case No.: NA SAS No.: NA SDG No.: LEJEUNE020

Matrix: (soil/water) SOIL Lab Sample ID: 0811296-01

Sample wt/vol: 5.5 (g/mL) G Lab File ID: 1129601A

Level: (low/med) LOW Date Sampled: 11/19/08 07:30

% Moisture: not dec. 15 Date Analyzed: 11/30/08 02:21

GC Column: RTX-VRX ID: 0.25 (mm) Dilution Factor: 1.0

Soil Extract Volume:_____(uL) Soil Aliquot Volume: _____(uL)

CONCENTRATION UNITS: (ug/L or ug/Kg) UG/KG

CAS NO.	COMPOUND	MDL	RL	CONC	Q
67-64-1	Acetone	2.1	11	150	~~B~~ J CC
71-43-2	Benzene	0.50	11		U
75-27-4	Bromodichloromethane	0.32	11		U
75-25-2	Bromoform	1.1	11		U
74-83-9	Bromomethane	0.77	11		U
78-93-3	2-Butanone	1.5	11		U
75-15-0	Carbon disulfide	1.4	11		U
56-23-5	Carbon tetrachloride	0.94	11		~~U~~ UJ CC
108-90-7	Chlorobenzene	0.36	11		U
75-00-3	Chloroethane	1.2	11		U
67-66-3	Chloroform	0.59	11		U
74-87-3	Chloromethane	0.56	11		U
110-82-7	Cyclohexane	0.58	11		U
124-48-1	Dibromochloromethane	0.36	11		U
96-12-8	1,2-Dibromo-3-chloropropane	1.3	5.3		U
106-93-4	1,2-Dibromoethane	0.46	11		U
95-50-1	1,2-Dichlorobenzene	0.39	11		U
541-73-1	1,3-Dichlorobenzene	0.90	11		U
106-46-7	1,4-Dichlorobenzene	0.59	11		U
75-71-8	Dichlorodifluoromethane	1.2	11		U
75-34-3	1,1-Dichloroethane	0.58	11		U
107-06-2	1,2-Dichloroethane	0.49	11		U
75-35-4	1,1-Dichloroethene	1.3	11		U
156-59-2	cis-1,2-Dichloroethene	1.3	11		U
156-60-5	trans-1,2-Dichloroethene	1.2	11		U
78-87-5	1,2-Dichloropropane	0.49	11		U
10061-01-5	cis-1,3-Dichloropropene	0.53	11		U
10061-02-6	trans-1,3-Dichloropropene	0.34	11		U
100-41-4	Ethylbenzene	0.80	11		U
591-78-6	2-Hexanone	2.4	11		~~U~~ UJ CC
98-82-8	Isopropylbenzene	0.94	11		U
79-20-9	Methyl acetate	1.7	11	32	~~B~~ J SSI
75-09-2	Methylene chloride	0.66	11		U
108-87-2	Methyl cyclohexane	0.32	11		U
1634-04-4	Methyl tert-butyl ether	0.34	11		U
108-10-1	4-Methyl-2-pentanone	0.62	11		U
100-42-5	Styrene	0.37	11		U
79-34-5	1,1,2,2-Tetrachloroethane	0.46	11		U
127-18-4	Tetrachloroethene	1.0	11		U

FORM I VOA

lw
1130/09

9

FORM 1
VOLATILE ORGANICS ANALYSIS DATA SHEET

CLIENT SAMPLE NO.

MR08-SS388-08D

Lab Name: EMPIRICAL LABS Contract: CH2MHILL

Lab Code: NA Case No.: NA SAS No.: NA SDG No.: LEJEUNE020

Matrix: (soil/water) SOIL Lab Sample ID: 0811296-01

Sample wt/vol: 5.5 (g/mL) G Lab File ID: 1129601A

Level: (low/med) LOW Date Sampled: 11/19/08 07:30

% Moisture: not dec. 15 Date Analyzed: 11/30/08 02:21

GC Column: RTX-VRX ID: 0.25 (mm) Dilution Factor: 1.0

Soil Extract Volume:_____(uL) Soil Aliquot Volume: _____(uL)

CONCENTRATION UNITS: (ug/L or ug/Kg) UG/KG

CAS NO.	COMPOUND	MDL	RL	CONC	Q
108-88-3	Toluene	0.92	11		U
120-82-1	1,2,4-Trichlorobenzene	0.19	11		U
71-55-6	1,1,1-Trichloroethane	0.96	11		U
79-00-5	1,1,2-Trichloroethane	0.37	11		U
79-01-6	Trichloroethene	0.91	11		U
76-13-1	Trichlorotrifluoroethane	0.59	11		U
75-69-4	Trichlorofluoromethane	1.0	11		U
75-01-4	Vinyl chloride	1.2	11		U
1330-20-7	Xylene(total)	0.75	11		U

lw
113010 9

FORM 1
VOLATILE ORGANICS ANALYSIS DATA SHEET

CLIENT SAMPLE NO. 10

MR08-IS388-08D

Lab Name: EMPIRICAL LABS Contract: CH2MHILL

Lab Code: NA Case No.: NA SAS No.: NA SDG No.: LEJEUNE020

Matrix: (soil/water) SOIL Lab Sample ID: 0811296-02

Sample wt/vol: 5.0 (g/mL) G Lab File ID: 1129602A

Level: (low/med) LOW Date Sampled: 11/19/08 08:45

% Moisture: not dec. 8 Date Analyzed: 11/30/08 02:51

GC Column: RTX-VRX ID: 0.25 (mm) Dilution Factor: 1.0

Soil Extract Volume:_____(uL) Soil Aliquot Volume: _____(uL)

CONCENTRATION UNITS: (ug/L or ug/Kg) UG/KG

CAS NO.	COMPOUND	MDL	RL	CONC	Q
67-64-1	Acetone	2.1	11	60	~~B~~ J CCH
71-43-2	Benzene	0.50	11		U
75-27-4	Bromodichloromethane	0.32	11		U
75-25-2	Bromoform	1.1	11		U
74-83-9	Bromomethane	0.77	11		U
78-93-3	2-Butanone	1.5	11		U
75-15-0	Carbon disulfide	1.4	11		U
56-23-5	Carbon tetrachloride	0.94	11		~~U~~ UJ CCH
108-90-7	Chlorobenzene	0.36	11		U
75-00-3	Chloroethane	1.2	11		U
67-66-3	Chloroform	0.59	11		U
74-87-3	Chloromethane	0.56	11		U
110-82-7	Cyclohexane	0.58	11		U
124-48-1	Dibromochloromethane	0.36	11		U
96-12-8	1,2-Dibromo-3-chloropropane	1.3	5.4		U
106-93-4	1,2-Dibromoethane	0.46	11		U
95-50-1	1,2-Dichlorobenzene	0.40	11		U
541-73-1	1,3-Dichlorobenzene	0.90	11		U
106-46-7	1,4-Dichlorobenzene	0.59	11		U
75-71-8	Dichlorodifluoromethane	1.2	11		U
75-34-3	1,1-Dichloroethane	0.58	11		U
107-06-2	1,2-Dichloroethane	0.49	11		U
75-35-4	1,1-Dichloroethene	1.3	11		U
156-59-2	cis-1,2-Dichloroethene	1.3	11		U
156-60-5	trans-1,2-Dichloroethene	1.2	11		U
78-87-5	1,2-Dichloropropane	0.49	11		U
10061-01-5	cis-1,3-Dichloropropene	0.54	11		U
10061-02-6	trans-1,3-Dichloropropene	0.34	11		U
100-41-4	Ethylbenzene	0.80	11		U
591-78-6	2-Hexanone	2.5	11		~~U~~ UJ CCH
98-82-8	Isopropylbenzene	0.94	11		U
79-20-9	Methyl acetate	1.7	11		U
75-09-2	Methylene chloride	0.66	11		U
108-87-2	Methyl cyclohexane	0.32	11		U
1634-04-4	Methyl tert-butyl ether	0.34	11		U
108-10-1	4-Methyl-2-pentanone	0.62	11		U
100-42-5	Styrene	0.38	11		U
79-34-5	1,1,2,2-Tetrachloroethane	0.46	11		U
127-18-4	Tetrachloroethene	1.0	11		U

FORM I VOA

LW
1/30/09

FORM 1
VOLATILE ORGANICS ANALYSIS DATA SHEET

CLIENT SAMPLE NO. 10

MR08-IS388-08D

Lab Name: EMPIRICAL LABS Contract: CH2MHILL

Lab Code: NA Case No.: NA SAS No.: NA SDG No.: LEJEUNE020

Matrix: (soil/water) SOIL Lab Sample ID: 0811296-02

Sample wt/vol: 5.0 (g/mL) G Lab File ID: 1129602A

Level: (low/med) LOW Date Sampled: 11/19/08 08:45

% Moisture: not dec. 8 Date Analyzed: 11/30/08 02:51

GC Column: RTX-VRX ID: 0.25 (mm) Dilution Factor: 1.0

Soil Extract Volume:_____(uL) Soil Aliquot Volume: _____(uL)

CONCENTRATION UNITS: (ug/L or ug/Kg) UG/KG

CAS NO.	COMPOUND	MDL	RL	CONC	Q
108-88-3	Toluene	0.92	11		U
120-82-1	1,2,4-Trichlorobenzene	0.19	11		U
71-55-6	1,1,1-Trichloroethane	0.97	11		U
79-00-5	1,1,2-Trichloroethane	0.38	11		U
79-01-6	Trichloroethene	0.91	11		U
76-13-1	Trichlorotrifluoroethane	0.59	11		U
75-69-4	Trichlorofluoromethane	1.0	11		U
75-01-4	Vinyl chloride	1.2	11		U
1330-20-7	Xylene(total)	0.75	11		U

11/30/09

FORM 1
VOLATILE ORGANICS ANALYSIS DATA SHEET

CLIENT SAMPLE NO.

MR08-SS389-08D

Lab Name: EMPIRICAL LABS Contract: CH2MHILL

Lab Code: NA Case No.: NA SAS No.: NA SDG No.: LEJEUNE020

Matrix: (soil/water) SOIL Lab Sample ID: 0811296-03

Sample wt/vol: 5.9 (g/mL) G Lab File ID: 1129603B

Level: (low/med) LOW Date Sampled: 11/19/08 09:30

% Moisture: not dec. 9 Date Analyzed: 11/30/08 10:04

GC Column: RTX-VRX ID: 0.25 (mm) Dilution Factor: 1.0

Soil Extract Volume:_____(uL) Soil Aliquot Volume: _____(uL)

CONCENTRATION UNITS: (ug/L or ug/Kg) B-VIAL

CAS NO.	COMPOUND	MDL	RL	CONC	Q
67-64-1	Acetone	1.8	9.3		U R
71-43-2	Benzene	0.44	9.3		U R
75-27-4	Bromodichloromethane	0.28	9.3		U UJ
75-25-2	Bromoform	0.93	9.3		U UJ
74-83-9	Bromomethane	0.67	9.3		U R
78-93-3	2-Butanone	1.3	9.3		U R
75-15-0	Carbon disulfide	1.2	9.3		U R
56-23-5	Carbon tetrachloride	0.82	9.3		U R
108-90-7	Chlorobenzene	0.32	9.3		U UJ
75-00-3	Chloroethane	1.0	9.3		U R
67-66-3	Chloroform	0.51	9.3		U R
74-87-3	Chloromethane	0.48	9.3		U R
110-82-7	Cyclohexane	0.50	9.3		U R
124-48-1	Dibromochloromethane	0.32	9.3		U UJ
96-12-8	1,2-Dibromo-3-chloropropane	1.1	4.6		U UJ
106-93-4	1,2-Dibromoethane	0.40	9.3		U UJ
95-50-1	1,2-Dichlorobenzene	0.34	9.3		U
541-73-1	1,3-Dichlorobenzene	0.78	9.3		U
106-46-7	1,4-Dichlorobenzene	0.51	9.3		U
75-71-8	Dichlorodifluoromethane	1.0	9.3		U R
75-34-3	1,1-Dichloroethane	0.50	9.3		U R
107-06-2	1,2-Dichloroethane	0.43	9.3		U R
75-35-4	1,1-Dichloroethene	1.1	9.3		U R
156-59-2	cis-1,2-Dichloroethene	1.1	9.3		U R
156-60-5	trans-1,2-Dichloroethene	1.0	9.3		U R
78-87-5	1,2-Dichloropropane	0.43	9.3		U R
10061-01-5	cis-1,3-Dichloropropene	0.46	9.3		U R
10061-02-6	trans-1,3-Dichloropropene	0.30	9.3		U UJ
100-41-4	Ethylbenzene	0.70	9.3	0.94	J J
591-78-6	2-Hexanone	2.1	9.3		U R
98-82-8	Isopropylbenzene	0.82	9.3		U UJ
79-20-9	Methyl acetate	1.5	9.3		U R
75-09-2	Methylene chloride	0.58	9.3		U R
108-87-2	Methyl cyclohexane	0.28	9.3		U R
1634-04-4	Methyl tert-butyl ether	0.30	9.3		U R
108-10-1	4-Methyl-2-pentanone	0.54	9.3		U R
100-42-5	Styrene	0.32	9.3		U UJ
79-34-5	1,1,2,2-Tetrachloroethane	0.40	9.3		U UJ
127-18-4	Tetrachloroethene	0.90	9.3		U UJ

FORM I VOA

11/30/09

FORM 1
VOLATILE ORGANICS ANALYSIS DATA SHEET

CLIENT SAMPLE NO.

MR08-SS389-08D

Lab Name: EMPIRICAL LABS Contract: CH2MHILL

Lab Code: NA Case No.: NA SAS No.: NA SDG No.: LEJEUNE020

Matrix: (soil/water) SOIL Lab Sample ID: 0811296-03

Sample wt/vol: 5.9 (g/mL) G Lab File ID: 1129603B

Level: (low/med) LOW Date Sampled: 11/19/08 09:30

% Moisture: not dec. 9 Date Analyzed: 11/30/08 10:04

GC Column: RTX-VRX ID: 0.25 (mm) Dilution Factor: 1.0

Soil Extract Volume:_____(uL) Soil Aliquot Volume: _____(uL)

CONCENTRATION UNITS: (ug/L or ug/Kg) B-VIAL

CAS NO.	COMPOUND	MDL	RL	CONC	Q
108-88-3	Toluene	0.80	9.3	7.5	J
120-82-1	1,2,4-Trichlorobenzene	0.17	9.3		U
71-55-6	1,1,1-Trichloroethane	0.84	9.3		U
79-00-5	1,1,2-Trichloroethane	0.32	9.3		U
79-01-6	Trichloroethene	0.79	9.3		U
76-13-1	Trichlorotrifluoroethane	0.51	9.3		U
75-69-4	Trichlorofluoromethane	0.88	9.3		U
75-01-4	Vinyl chloride	1.0	9.3		U
1330-20-7	Xylene(total)	0.65	9.3		U

FORM I VOA

FORM 1
VOLATILE ORGANICS ANALYSIS DATA SHEET

CLIENT SAMPLE NO. 1DL

MR08-SS3
89-08DDL

Lab Name: EMPIRICAL LABS Contract: CH2MHILL

Lab Code: NA Case No.: NA SAS No.: NA SDG No.: LEJEUNE020

Matrix: (soil/water) SOIL Lab Sample ID: 0811296-03DL

Sample wt/vol: 5.7 (g/mL) G Lab File ID: 1129603D

Level: (low/med) MED Date Sampled: 11/19/08 09:30

% Moisture: not dec. 9 Date Analyzed: 12/02/08 22:32

GC Column: RTX-VRX ID: 0.25 (mm) Dilution Factor: 1.0

Soil Extract Volume: 5000(uL) Soil Aliquot Volume: 100(uL)

CONCENTRATION UNITS: (ug/L or ug/Kg) UG/KG

CAS NO.	COMPOUND	MDL	RL	CONC	Q
67-64-1	Acetone	96	480		UD
71-43-2	Benzene	22	480		UD
75-27-4	Bromodichloromethane	14	480		UD
75-25-2	Bromoform	48	480		UD
74-83-9	Bromomethane	34	480		UD
78-93-3	2-Butanone	67	480		UD
75-15-0	Carbon disulfide	62	480		UD
56-23-5	Carbon tetrachloride	42	480		UD
108-90-7	Chlorobenzene	16	480		UD
75-00-3	Chloroethane	52	480		UD
67-66-3	Chloroform	26	480		UD
74-87-3	Chloromethane	25	480	29	~~JD~~ JBSH
110-82-7	Cyclohexane	26	480		UD
124-48-1	Dibromochloromethane	16	480		UD
96-12-8	1,2-Dibromo-3-chloropropane	57	240		UD
106-93-4	1,2-Dibromoethane	20	480		UD
95-50-1	1,2-Dichlorobenzene	18	480		UD
541-73-1	1,3-Dichlorobenzene	40	480		UD
106-46-7	1,4-Dichlorobenzene	26	480		UD
75-71-8	Dichlorodifluoromethane	52	480		UD
75-34-3	1,1-Dichloroethane	26	480		UD
107-06-2	1,2-Dichloroethane	22	480		UD
75-35-4	1,1-Dichloroethene	57	480		UD
156-59-2	cis-1,2-Dichloroethene	57	480		UD
156-60-5	trans-1,2-Dichloroethene	52	480		UD
78-87-5	1,2-Dichloropropane	22	480		UD
10061-01-5	cis-1,3-Dichloropropene	24	480		UD
10061-02-6	trans-1,3-Dichloropropene	15	480		UD
100-41-4	Ethylbenzene	36	480		UD
591-78-6	2-Hexanone	110	480		UD
98-82-8	Isopropylbenzene	42	480		UD
79-20-9	Methyl acetate	76	480		UD
75-09-2	Methylene chloride	30	480	91	~~JD~~ J BSI
108-87-2	Methyl cyclohexane	14	480		UD
1634-04-4	Methyl tert-butyl ether	15	480		UD
108-10-1	4-Methyl-2-pentanone	28	480		UD
100-42-5	Styrene	17	480		UD
79-34-5	1,1,2,2-Tetrachloroethane	20	480		UD
127-18-4	Tetrachloroethene	46	480		UD

FORM I VOA

11/30/09

FORM 1
VOLATILE ORGANICS ANALYSIS DATA SHEET

CLIENT SAMPLE NO. 11DL

MR08-SS3
89-08DDL

Lab Name: EMPIRICAL LABS Contract: CH2MHILL

Lab Code: NA Case No.: NA SAS No.: NA SDG No.: LEJEUNE020

Matrix: (soil/water) SOIL Lab Sample ID: 0811296-03DL

Sample wt/vol: 5.7 (g/mL) G Lab File ID: 1129603D

Level: (low/med) MED Date Sampled: 11/19/08 09:30

% Moisture: not dec. 9 Date Analyzed: 12/02/08 22:32

GC Column: RTX-VRX ID: 0.25 (mm) Dilution Factor: 1.0

Soil Extract Volume: 5000(uL) Soil Aliquot Volume: 100(uL)

CONCENTRATION UNITS: (ug/L or ug/Kg) UG/KG

CAS NO.	COMPOUND	MDL	RL	CONC	Q
108-88-3	Toluene	41	480		UD
120-82-1	1,2,4-Trichlorobenzene	8.6	480		UD
71-55-6	1,1,1-Trichloroethane	43	480		UD
79-00-5	1,1,2-Trichloroethane	17	480		UD
79-01-6	Trichloroethene	41	480		UD
76-13-1	Trichlorotrifluoroethane	26	480		UD
75-69-4	Trichlorofluoromethane	45	480		UD
75-01-4	Vinyl chloride	52	480		UD
1330-20-7	Xylene(total)	33	480		UD

lw
1/30/09

FORM 1
VOLATILE ORGANICS ANALYSIS DATA SHEET

CLIENT SAMPLE NO. 12

MR08-IS389-08D

Lab Name: EMPIRICAL LABS Contract: CH2MHILL

Lab Code: NA Case No.: NA SAS No.: NA SDG No.: LEJEUNE020

Matrix: (soil/water) SOIL Lab Sample ID: 0811296-04

Sample wt/vol: 5.0 (g/mL) G Lab File ID: 1129604A

Level: (low/med) LOW Date Sampled: 11/19/08 10:10

% Moisture: not dec. 9 Date Analyzed: 11/30/08 03:53

GC Column: RTX-VRX ID: 0.25 (mm) Dilution Factor: 1.0

Soil Extract Volume:_____(uL) Soil Aliquot Volume: _____(uL)

CONCENTRATION UNITS: (ug/L or ug/Kg) UG/KG

CAS NO.	COMPOUND	MDL	RL	CONC	Q
67-64-1	Acetone	2.2	11	35	~~B~~ UJ
71-43-2	Benzene	0.52	11		U
75-27-4	Bromodichloromethane	0.33	11		U
75-25-2	Bromoform	1.1	11		U
74-83-9	Bromomethane	0.80	11		U
78-93-3	2-Butanone	1.6	11		U
75-15-0	Carbon disulfide	1.4	11		U
56-23-5	Carbon tetrachloride	0.98	11		~~U~~ UJ
108-90-7	Chlorobenzene	0.38	11		U
75-00-3	Chloroethane	1.2	11		U
67-66-3	Chloroform	0.61	11		U
74-87-3	Chloromethane	0.58	11		U
110-82-7	Cyclohexane	0.60	11		U
124-48-1	Dibromochloromethane	0.38	11		U
96-12-8	1,2-Dibromo-3-chloropropane	1.3	5.6		U
106-93-4	1,2-Dibromoethane	0.48	11		U
95-50-1	1,2-Dichlorobenzene	0.41	11		U
541-73-1	1,3-Dichlorobenzene	0.93	11		U
106-46-7	1,4-Dichlorobenzene	0.61	11		U
75-71-8	Dichlorodifluoromethane	1.2	11		U
75-34-3	1,1-Dichloroethane	0.60	11		U
107-06-2	1,2-Dichloroethane	0.51	11		U
75-35-4	1,1-Dichloroethene	1.3	11		U
156-59-2	cis-1,2-Dichloroethene	1.3	11		U
156-60-5	trans-1,2-Dichloroethene	1.2	11		U
78-87-5	1,2-Dichloropropane	0.51	11		U
10061-01-5	cis-1,3-Dichloropropene	0.56	11		U
10061-02-6	trans-1,3-Dichloropropene	0.36	11		U
100-41-4	Ethylbenzene	0.83	11		U
591-78-6	2-Hexanone	2.6	11		~~U~~ UJ
98-82-8	Isopropylbenzene	0.98	11		U
79-20-9	Methyl acetate	1.8	11		U
75-09-2	Methylene chloride	0.69	11		U
108-87-2	Methyl cyclohexane	0.33	11		U
1634-04-4	Methyl tert-butyl ether	0.36	11		U
108-10-1	4-Methyl-2-pentanone	0.64	11		U
100-42-5	Styrene	0.39	11		U
79-34-5	1,1,2,2-Tetrachloroethane	0.48	11		U
127-18-4	Tetrachloroethene	1.1	11		U

lw 11/30/09

FORM 1
VOLATILE ORGANICS ANALYSIS DATA SHEET

CLIENT SAMPLE NO. 12

MR08-IS389-08D

Lab Name: EMPIRICAL LABS Contract: CH2MHILL

Lab Code: NA Case No.: NA SAS No.: NA SDG No.: LEJEUNE020

Matrix: (soil/water) SOIL Lab Sample ID: 0811296-04

Sample wt/vol: 5.0 (g/mL) G Lab File ID: 1129604A

Level: (low/med) LOW Date Sampled: 11/19/08 10:10

% Moisture: not dec. 9 Date Analyzed: 11/30/08 03:53

GC Column: RTX-VRX ID: 0.25 (mm) Dilution Factor: 1.0

Soil Extract Volume:_____(uL) Soil Aliquot Volume: _____(uL)

CONCENTRATION UNITS: (ug/L or ug/Kg) UG/KG

CAS NO.	COMPOUND	MDL	RL	CONC	Q
108-88-3	Toluene	0.96	11		U
120-82-1	1,2,4-Trichlorobenzene	0.20	11		U
71-55-6	1,1,1-Trichloroethane	1.0	11		U
79-00-5	1,1,2-Trichloroethane	0.39	11		U
79-01-6	Trichloroethene	0.94	11		U
76-13-1	Trichlorotrifluoroethane	0.61	11		U
75-69-4	Trichlorofluoromethane	1.0	11		U
75-01-4	Vinyl chloride	1.2	11		U
1330-20-7	Xylene(total)	0.78	11		U

11/30/09

FORM 1
VOLATILE ORGANICS ANALYSIS DATA SHEET

CLIENT SAMPLE NO. 13

MR08-IS389D-08D

Lab Name: EMPIRICAL LABS Contract: CH2MHILL

Lab Code: NA Case No.: NA SAS No.: NA SDG No.: LEJEUNE020

Matrix: (soil/water) SOIL Lab Sample ID: 0811296-05

Sample wt/vol: 5.1 (g/mL) G Lab File ID: 1129605A

Level: (low/med) LOW Date Sampled: 11/19/08 10:15

% Moisture: not dec. 9 Date Analyzed: 11/30/08 04:24

GC Column: RTX-VRX ID: 0.25 (mm) Dilution Factor: 1.0

Soil Extract Volume:_____(uL) Soil Aliquot Volume: _____(uL)

CONCENTRATION UNITS: (ug/L or ug/Kg) UG/KG

CAS NO.	COMPOUND	MDL	RL	CONC	Q	
67-64-1	Acetone	2.2	11	44	~~B~~ UJ	CC Bt
71-43-2	Benzene	0.51	11		U	
75-27-4	Bromodichloromethane	0.32	11		U	
75-25-2	Bromoform	1.1	11		U	
74-83-9	Bromomethane	0.78	11		U	
78-93-3	2-Butanone	1.5	11		U	
75-15-0	Carbon disulfide	1.4	11		U	
56-23-5	Carbon tetrachloride	0.95	11		~~U~~ UJ	CC
108-90-7	Chlorobenzene	0.37	11		U	
75-00-3	Chloroethane	1.2	11		U	
67-66-3	Chloroform	0.59	11		U	
74-87-3	Chloromethane	0.56	11		U	
110-82-7	Cyclohexane	0.58	11		U	
124-48-1	Dibromochloromethane	0.37	11		U	
96-12-8	1,2-Dibromo-3-chloropropane	1.3	5.4		U	
106-93-4	1,2-Dibromoethane	0.46	11		U	
95-50-1	1,2-Dichlorobenzene	0.40	11		U	
541-73-1	1,3-Dichlorobenzene	0.91	11		U	
106-46-7	1,4-Dichlorobenzene	0.59	11		U	
75-71-8	Dichlorodifluoromethane	1.2	11		U	
75-34-3	1,1-Dichloroethane	0.58	11		U	
107-06-2	1,2-Dichloroethane	0.50	11		U	
75-35-4	1,1-Dichloroethene	1.3	11		U	
156-59-2	cis-1,2-Dichloroethene	1.3	11		U	
156-60-5	trans-1,2-Dichloroethene	1.2	11		U	
78-87-5	1,2-Dichloropropane	0.50	11		U	
10061-01-5	cis-1,3-Dichloropropene	0.54	11		U	
10061-02-6	trans-1,3-Dichloropropene	0.34	11		U	
100-41-4	Ethylbenzene	0.81	11		U	
591-78-6	2-Hexanone	2.5	11		~~U~~ UJ	CC
98-82-8	Isopropylbenzene	0.95	11		U	
79-20-9	Methyl acetate	1.7	11		U	
75-09-2	Methylene chloride	0.67	11		U	
108-87-2	Methyl cyclohexane	0.32	11		U	
1634-04-4	Methyl tert-butyl ether	0.34	11		U	
108-10-1	4-Methyl-2-pentanone	0.63	11		U	
100-42-5	Styrene	0.38	11		U	
79-34-5	1,1,2,2-Tetrachloroethane	0.46	11		U	
127-18-4	Tetrachloroethene	1.0	11		U	

lw 11/30/09

FORM 1
VOLATILE ORGANICS ANALYSIS DATA SHEET

CLIENT SAMPLE NO. 13

MR08-IS389D-08D

Lab Name: EMPIRICAL LABS Contract: CH2MHILL

Lab Code: NA Case No.: NA SAS No.: NA SDG No.: LEJEUNE020

Matrix: (soil/water) SOIL Lab Sample ID: 0811296-05

Sample wt/vol: 5.1 (g/mL) G Lab File ID: 1129605A

Level: (low/med) LOW Date Sampled: 11/19/08 10:15

% Moisture: not dec. 9 Date Analyzed: 11/30/08 04:24

GC Column: RTX-VRX ID: 0.25 (mm) Dilution Factor: 1.0

Soil Extract Volume:_____(uL) Soil Aliquot Volume: _____(uL)

CONCENTRATION UNITS: (ug/L or ug/Kg) UG/KG

CAS NO.	COMPOUND	MDL	RL	CONC	Q
108-88-3	Toluene	0.93	11		U
120-82-1	1,2,4-Trichlorobenzene	0.19	11		U
71-55-6	1,1,1-Trichloroethane	0.97	11		U
79-00-5	1,1,2-Trichloroethane	0.38	11		U
79-01-6	Trichloroethene	0.92	11		U
76-13-1	Trichlorotrifluoroethane	0.59	11		U
75-69-4	Trichlorofluoromethane	1.0	11		U
75-01-4	Vinyl chloride	1.2	11		U
1330-20-7	Xylene(total)	0.76	11		U

RW
11/30/09

FORM 1
VOLATILE ORGANICS ANALYSIS DATA SHEET

CLIENT SAMPLE NO.

14

MR08-SS394-08D

Lab Name: EMPIRICAL LABS Contract: CH2MHILL

Lab Code: NA Case No.: NA SAS No.: NA SDG No.: LEJEUNE020

Matrix: (soil/water) SOIL Lab Sample ID: 0811296-06

Sample wt/vol: 5.9 (g/mL) G Lab File ID: 1129606B

Level: (low/med) LOW Date Sampled: 11/19/08 10:45

% Moisture: not dec. 6 Date Analyzed: 11/30/08 10:35

GC Column: RTX-VRX ID: 0.25 (mm) Dilution Factor: 1.0

Soil Extract Volume:_____(uL) Soil Aliquot Volume: _____(uL)

CONCENTRATION UNITS: (ug/L or ug/Kg) UG/KG

CAS NO.	COMPOUND	MDL	RL	CONC	Q
67-64-1	Acetone	1.8	9.0		U UJ
71-43-2	Benzene	0.42	9.0		U
75-27-4	Bromodichloromethane	0.27	9.0		U
75-25-2	Bromoform	0.90	9.0		U
74-83-9	Bromomethane	0.65	9.0		U
78-93-3	2-Butanone	1.3	9.0		U
75-15-0	Carbon disulfide	1.2	9.0		U
56-23-5	Carbon tetrachloride	0.80	9.0		U
108-90-7	Chlorobenzene	0.31	9.0		U
75-00-3	Chloroethane	1.00	9.0		U
67-66-3	Chloroform	0.50	9.0		U
74-87-3	Chloromethane	0.47	9.0		U
110-82-7	Cyclohexane	0.49	9.0		U
124-48-1	Dibromochloromethane	0.31	9.0		U
96-12-8	1,2-Dibromo-3-chloropropane	1.1	4.5		U
106-93-4	1,2-Dibromoethane	0.39	9.0		U
95-50-1	1,2-Dichlorobenzene	0.33	9.0		U
541-73-1	1,3-Dichlorobenzene	0.76	9.0		U
106-46-7	1,4-Dichlorobenzene	0.50	9.0		U
75-71-8	Dichlorodifluoromethane	1.00	9.0		U
75-34-3	1,1-Dichloroethane	0.49	9.0		U
107-06-2	1,2-Dichloroethane	0.42	9.0		U
75-35-4	1,1-Dichloroethene	1.1	9.0		U
156-59-2	cis-1,2-Dichloroethene	1.1	9.0		U
156-60-5	trans-1,2-Dichloroethene	1.00	9.0		U
78-87-5	1,2-Dichloropropane	0.42	9.0		U
10061-01-5	cis-1,3-Dichloropropene	0.45	9.0		U
10061-02-6	trans-1,3-Dichloropropene	0.29	9.0		U
100-41-4	Ethylbenzene	0.68	9.0	0.96	U J UJ
591-78-6	2-Hexanone	2.1	9.0		U
98-82-8	Isopropylbenzene	0.80	9.0		U
79-20-9	Methyl acetate	1.4	9.0		U
75-09-2	Methylene chloride	0.56	9.0		U
108-87-2	Methyl cyclohexane	0.27	9.0		U
1634-04-4	Methyl tert-butyl ether	0.29	9.0		U
108-10-1	4-Methyl-2-pentanone	0.52	9.0		U
100-42-5	Styrene	0.32	9.0		U
79-34-5	1,1,2,2-Tetrachloroethane	0.39	9.0		U
127-18-4	Tetrachloroethene	0.88	9.0		U

JS

FORM I VOA

1130/09

FORM 1
VOLATILE ORGANICS ANALYSIS DATA SHEET

CLIENT SAMPLE NO. 14

MR08-SS394-08D

Lab Name: EMPIRICAL LABS Contract: CH2MHILL

Lab Code: NA Case No.: NA SAS No.: NA SDG No.: LEJEUNE020

Matrix: (soil/water) SOIL Lab Sample ID: 0811296-06

Sample wt/vol: 5.9 (g/mL) G Lab File ID: 1129606B

Level: (low/med) LOW Date Sampled: 11/19/08 10:45

% Moisture: not dec. 6 Date Analyzed: 11/30/08 10:35 use DL

GC Column: RTX-VRX ID: 0.25 (mm) Dilution Factor: 1.0

Soil Extract Volume:_____(uL) Soil Aliquot Volume: _____(uL)

CONCENTRATION UNITS: (ug/L or ug/Kg) UG/KG

CAS NO.	COMPOUND	MDL	RL	CONC	Q
108-88-3	Toluene	0.78	9.0	5.5	~~J~~ J
120-82-1	1,2,4-Trichlorobenzene	0.16	9.0		U
71-55-6	1,1,1-Trichloroethane	0.81	9.0		U UJ
79-00-5	1,1,2-Trichloroethane	0.32	9.0		U
79-01-6	Trichloroethene	0.77	9.0		U
76-13-1	Trichlorotrifluoroethane	0.50	9.0		U
75-69-4	Trichlorofluoromethane	0.86	9.0		U
75-01-4	Vinyl chloride	1.00	9.0		U
1330-20-7	Xylene(total)	0.63	9.0		U

R DL

FORM I VOA

1130/09

FORM 1
VOLATILE ORGANICS ANALYSIS DATA SHEET

CLIENT SAMPLE NO. 14DL

MR08-SS3
94-08DDL

Lab Name: EMPIRICAL LABS Contract: CH2MHILL

Lab Code: NA Case No.: NA SAS No.: NA SDG No.: LEJEUNE020

Matrix: (soil/water) SOIL Lab Sample ID: 0811296-06DL

Sample wt/vol: 6.1 (g/mL) G Lab File ID: 1129606D

Level: (low/med) MED Date Sampled: 11/19/08 10:45

% Moisture: not dec. 6 Date Analyzed: 12/02/08 23:03

GC Column: RTX-VRX ID: 0.25 (mm) Dilution Factor: 1.0

Soil Extract Volume: 5000(uL) Soil Aliquot Volume: 100(uL)

CONCENTRATION UNITS: (ug/L or ug/Kg) UG/KG

CAS NO.	COMPOUND	MDL	RL	CONC	Q
67-64-1	Acetone	88	440		UD
71-43-2	Benzene	21	440		UD
75-27-4	Bromodichloromethane	13	440		UD
75-25-2	Bromoform	44	440		UD
74-83-9	Bromomethane	32	440		UD
78-93-3	2-Butanone	61	440		UD
75-15-0	Carbon disulfide	57	440		UD
56-23-5	Carbon tetrachloride	38	440		UD
108-90-7	Chlorobenzene	15	440		UD
75-00-3	Chloroethane	48	440		UD
67-66-3	Chloroform	24	440		UD
74-87-3	Chloromethane	23	440	27	~~JD~~ J BSH
110-82-7	Cyclohexane	24	440		UD
124-48-1	Dibromochloromethane	15	440		UD
96-12-8	1,2-Dibromo-3-chloropropane	53	220		UD
106-93-4	1,2-Dibromoethane	19	440		UD
95-50-1	1,2-Dichlorobenzene	16	440		UD
541-73-1	1,3-Dichlorobenzene	37	440		UD
106-46-7	1,4-Dichlorobenzene	24	440		UD
75-71-8	Dichlorodifluoromethane	48	440		UD
75-34-3	1,1-Dichloroethane	24	440		UD
107-06-2	1,2-Dichloroethane	20	440		UD
75-35-4	1,1-Dichloroethene	53	440		UD
156-59-2	cis-1,2-Dichloroethene	53	440		UD
156-60-5	trans-1,2-Dichloroethene	48	440		UD
78-87-5	1,2-Dichloropropane	20	440		UD
10061-01-5	cis-1,3-Dichloropropene	22	440		UD
10061-02-6	trans-1,3-Dichloropropene	14	440		UD
100-41-4	Ethylbenzene	33	440		UD
591-78-6	2-Hexanone	100	440		UD
98-82-8	Isopropylbenzene	38	440		UD
79-20-9	Methyl acetate	70	440		UD
75-09-2	Methylene chloride	27	440	130	~~JD~~ J BSH
108-87-2	Methyl cyclohexane	13	440		UD
1634-04-4	Methyl tert-butyl ether	14	440		UD
108-10-1	4-Methyl-2-pentanone	25	440		UD
100-42-5	Styrene	15	440		UD
79-34-5	1,1,2,2-Tetrachloroethane	19	440		UD
127-18-4	Tetrachloroethene	42	440		UD

lw
1130/09

FORM 1
VOLATILE ORGANICS ANALYSIS DATA SHEET

CLIENT SAMPLE NO. 14DL

MR08-SS3
94-08DDL

Lab Name: EMPIRICAL LABS Contract: CH2MHILL

Lab Code: NA Case No.: NA SAS No.: NA SDG No.: LEJEUNE020

Matrix: (soil/water) SOIL Lab Sample ID: 0811296-06DL

Sample wt/vol: 6.1 (g/mL) G Lab File ID: 1129606D

Level: (low/med) MED Date Sampled: 11/19/08 10:45

% Moisture: not dec. 6 Date Analyzed: 12/02/08 23:03

GC Column: RTX-VRX ID: 0.25 (mm) Dilution Factor: 1.0

Soil Extract Volume: 5000(uL) Soil Aliquot Volume: 100(uL)

CONCENTRATION UNITS: (ug/L or ug/Kg) UG/KG

CAS NO.	COMPOUND	MDL	RL	CONC	Q
108-88-3	Toluene	38	440		~~UD~~
120-82-1	1,2,4-Trichlorobenzene	7.9	440		~~UD~~
71-55-6	1,1,1-Trichloroethane	39	440		~~UD~~
79-00-5	1,1,2-Trichloroethane	15	440		~~UD~~
79-01-6	Trichloroethene	37	440		~~UD~~
76-13-1	Trichlorotrifluoroethane	24	440		~~UD~~
75-69-4	Trichlorofluoromethane	42	440		~~UD~~
75-01-4	Vinyl chloride	48	440		~~UD~~
1330-20-7	Xylene(total)	31	440		~~UD~~

lew
1130/09

15

FORM 1
VOLATILE ORGANICS ANALYSIS DATA SHEET

CLIENT SAMPLE NO.

MR08-IS394-08D

Lab Name: EMPIRICAL LABS Contract: CH2MHILL

Lab Code: NA Case No.: NA SAS No.: NA SDG No.: LEJEUNE020

Matrix: (soil/water) SOIL Lab Sample ID: 0811296-07

Sample wt/vol: 4.8 (g/mL) G Lab File ID: 1129607A

Level: (low/med) LOW Date Sampled: 11/19/08 11:35

% Moisture: not dec. 7 Date Analyzed: 11/30/08 05:26

GC Column: RTX-VRX ID: 0.25 (mm) Dilution Factor: 1.0

Soil Extract Volume:_____(uL) Soil Aliquot Volume: _____(uL)

CONCENTRATION UNITS: (ug/L or ug/Kg) UG/KG

CAS NO.	COMPOUND	MDL	RL	CONC	Q
67-64-1	Acetone	2.3	11	22	~~B~~ UJ CC BI
71-43-2	Benzene	0.53	11		U
75-27-4	Bromodichloromethane	0.34	11		U
75-25-2	Bromoform	1.1	11		U
74-83-9	Bromomethane	0.81	11		U
78-93-3	2-Butanone	1.6	11		U
75-15-0	Carbon disulfide	1.5	11		U
56-23-5	Carbon tetrachloride	1.00	11		~~U~~ UJ CC
108-90-7	Chlorobenzene	0.38	11		U
75-00-3	Chloroethane	1.2	11		U
67-66-3	Chloroform	0.62	11		U
74-87-3	Chloromethane	0.59	11		U
110-82-7	Cyclohexane	0.61	11		U
124-48-1	Dibromochloromethane	0.38	11		U
96-12-8	1,2-Dibromo-3-chloropropane	1.4	5.6		U
106-93-4	1,2-Dibromoethane	0.49	11		U
95-50-1	1,2-Dichlorobenzene	0.42	11		U
541-73-1	1,3-Dichlorobenzene	0.95	11		U
106-46-7	1,4-Dichlorobenzene	0.62	11		~~U~~ UJ MSI
75-71-8	Dichlorodifluoromethane	1.2	11		U
75-34-3	1,1-Dichloroethane	0.61	11		U
107-06-2	1,2-Dichloroethane	0.52	11		U
75-35-4	1,1-Dichloroethene	1.4	11		U
156-59-2	cis-1,2-Dichloroethene	1.4	11		U
156-60-5	trans-1,2-Dichloroethene	1.2	11		U
78-87-5	1,2-Dichloropropane	0.52	11		U
10061-01-5	cis-1,3-Dichloropropene	0.56	11		U
10061-02-6	trans-1,3-Dichloropropene	0.36	11		U
100-41-4	Ethylbenzene	0.85	11		U
591-78-6	2-Hexanone	2.6	11		~~U~~ UJ CC
98-82-8	Isopropylbenzene	1.00	11		U
79-20-9	Methyl acetate	1.8	11		~~U~~ UJ MSI
75-09-2	Methylene chloride	0.70	11		U
108-87-2	Methyl cyclohexane	0.34	11		U
1634-04-4	Methyl tert-butyl ether	0.36	11		U
108-10-1	4-Methyl-2-pentanone	0.66	11		U
100-42-5	Styrene	0.40	11		U
79-34-5	1,1,2,2-Tetrachloroethane	0.49	11		U
127-18-4	Tetrachloroethene	1.1	11		U

FORM I VOA

hw
1/30/09

FORM 1
VOLATILE ORGANICS ANALYSIS DATA SHEET

CLIENT SAMPLE NO. 15

MR08-IS394-08D

Lab Name: EMPIRICAL LABS Contract: CH2MHILL

Lab Code: NA Case No.: NA SAS No.: NA SDG No.: LEJEUNE020

Matrix: (soil/water) SOIL Lab Sample ID: 0811296-07

Sample wt/vol: 4.8 (g/mL) G Lab File ID: 1129607A

Level: (low/med) LOW Date Sampled: 11/19/08 11:35

% Moisture: not dec. 7 Date Analyzed: 11/30/08 05:26

GC Column: RTX-VRX ID: 0.25 (mm) Dilution Factor: 1.0

Soil Extract Volume:_____(uL) Soil Aliquot Volume: _____(uL)

CONCENTRATION UNITS: (ug/L or ug/Kg) UG/KG

CAS NO.	COMPOUND	MDL	RL	CONC	Q
108-88-3	Toluene	0.97	11		U
120-82-1	1,2,4-Trichlorobenzene	0.20	11		U
71-55-6	1,1,1-Trichloroethane	1.0	11		U
79-00-5	1,1,2-Trichloroethane	0.40	11		U
79-01-6	Trichloroethene	0.96	11		U
76-13-1	Trichlorotrifluoroethane	0.62	11		U
75-69-4	Trichlorofluoromethane	1.1	11		U
75-01-4	Vinyl chloride	1.2	11		U
1330-20-7	Xylene(total)	0.79	11		U

FORM I VOA

11/30/09

FORM 1
VOLATILE ORGANICS ANALYSIS DATA SHEET

CLIENT SAMPLE NO. 16

MR08-IS396-08D

Lab Name: EMPIRICAL LABS Contract: CH2MHILL

Lab Code: NA Case No.: NA SAS No.: NA SDG No.: LEJEUNE020

Matrix: (soil/water) SOIL Lab Sample ID: 0811296-08

Sample wt/vol: 4.8 (g/mL) G Lab File ID: 1129608A

Level: (low/med) LOW Date Sampled: 11/19/08 13:00

% Moisture: not dec. 8 Date Analyzed: 11/30/08 05:57

GC Column: RTX-VRX ID: 0.25 (mm) Dilution Factor: 1.0

Soil Extract Volume:_____(uL) Soil Aliquot Volume: _____(uL)

CONCENTRATION UNITS: (ug/L or ug/Kg) UG/KG

CAS NO.	COMPOUND	MDL	RL	CONC	Q
67-64-1	Acetone	2.3	11	11 UJ ~~9.5~~	~~JB~~ CA B
71-43-2	Benzene	0.54	11		U
75-27-4	Bromodichloromethane	0.34	11		U
75-25-2	Bromoform	1.1	11		U
74-83-9	Bromomethane	0.82	11		U
78-93-3	2-Butanone	1.6	11		U
75-15-0	Carbon disulfide	1.5	11		U
56-23-5	Carbon tetrachloride	1.0	11		~~U~~ UJ CA
108-90-7	Chlorobenzene	0.39	11		U
75-00-3	Chloroethane	1.2	11		U
67-66-3	Chloroform	0.63	11		U
74-87-3	Chloromethane	0.59	11		U
110-82-7	Cyclohexane	0.61	11		U
124-48-1	Dibromochloromethane	0.39	11		U
96-12-8	1,2-Dibromo-3-chloropropane	1.4	5.7		U
106-93-4	1,2-Dibromoethane	0.49	11		U
95-50-1	1,2-Dichlorobenzene	0.42	11		U
541-73-1	1,3-Dichlorobenzene	0.96	11		U
106-46-7	1,4-Dichlorobenzene	0.63	11		U
75-71-8	Dichlorodifluoromethane	1.2	11		U
75-34-3	1,1-Dichloroethane	0.61	11		U
107-06-2	1,2-Dichloroethane	0.52	11		U
75-35-4	1,1-Dichloroethene	1.4	11		U
156-59-2	cis-1,2-Dichloroethene	1.4	11		U
156-60-5	trans-1,2-Dichloroethene	1.2	11		U
78-87-5	1,2-Dichloropropane	0.52	11		U
10061-01-5	cis-1,3-Dichloropropene	0.57	11		U
10061-02-6	trans-1,3-Dichloropropene	0.36	11		U
100-41-4	Ethylbenzene	0.85	11		U
591-78-6	2-Hexanone	2.6	11		~~U~~ UJ CA
98-82-8	Isopropylbenzene	1.0	11		U
79-20-9	Methyl acetate	1.8	11		U
75-09-2	Methylene chloride	0.70	11		U
108-87-2	Methyl cyclohexane	0.34	11		U
1634-04-4	Methyl tert-butyl ether	0.36	11		U
108-10-1	4-Methyl-2-pentanone	0.66	11		U
100-42-5	Styrene	0.40	11		U
79-34-5	1,1,2,2-Tetrachloroethane	0.49	11		U
127-18-4	Tetrachloroethene	1.1	11		U

11/30/09

FORM 1
VOLATILE ORGANICS ANALYSIS DATA SHEET

CLIENT SAMPLE NO. 16

MR08-IS396-08D

Lab Name: EMPIRICAL LABS Contract: CH2MHILL

Lab Code: NA Case No.: NA SAS No.: NA SDG No.: LEJEUNE020

Matrix: (soil/water) SOIL Lab Sample ID: 0811296-08

Sample wt/vol: 4.8 (g/mL) G Lab File ID: 1129608A

Level: (low/med) LOW Date Sampled: 11/19/08 13:00

% Moisture: not dec. 8 Date Analyzed: 11/30/08 05:57

GC Column: RTX-VRX ID: 0.25 (mm) Dilution Factor: 1.0

Soil Extract Volume:_____(uL) Soil Aliquot Volume: _____(uL)

CONCENTRATION UNITS: (ug/L or ug/Kg) UG/KG

CAS NO.	COMPOUND	MDL	RL	CONC	Q
108-88-3	Toluene	0.98	11		U
120-82-1	1,2,4-Trichlorobenzene	0.20	11		U
71-55-6	1,1,1-Trichloroethane	1.0	11		U
79-00-5	1,1,2-Trichloroethane	0.40	11		U
79-01-6	Trichloroethene	0.97	11		U
76-13-1	Trichlorotrifluoroethane	0.63	11		U
75-69-4	Trichlorofluoromethane	1.1	11		U
75-01-4	Vinyl chloride	1.2	11		U
1330-20-7	Xylene(total)	0.80	11		U

JLW
11/30/09

17

FORM 1
VOLATILE ORGANICS ANALYSIS DATA SHEET

CLIENT SAMPLE NO.

MR08-SS395-08D

Lab Name: EMPIRICAL LABS Contract: CH2MHILL

Lab Code: NA Case No.: NA SAS No.: NA SDG No.: LEJEUNE020

Matrix: (soil/water) SOIL Lab Sample ID: 0811296-09

Sample wt/vol: 5.6 (g/mL) G Lab File ID: 1129609A

Level: (low/med) LOW Date Sampled: 11/19/08 14:55

% Moisture: not dec. 14 Date Analyzed: 11/30/08 06:28

GC Column: RTX-VRX ID: 0.25 (mm) Dilution Factor: 1.0

Soil Extract Volume:_____(uL) Soil Aliquot Volume: _____(uL)

CONCENTRATION UNITS: (ug/L or ug/Kg) UG/KG

CAS NO.	COMPOUND	MDL	RL	CONC	Q
67-64-1	Acetone	2.1	10	110	~~B~~ J CH
71-43-2	Benzene	0.48	10		U
75-27-4	Bromodichloromethane	0.31	10		U
75-25-2	Bromoform	1.0	10		U
74-83-9	Bromomethane	0.74	10		U
78-93-3	2-Butanone	1.4	10		U
75-15-0	Carbon disulfide	1.3	10		U
56-23-5	Carbon tetrachloride	0.91	10		~~U~~ UJ CH
108-90-7	Chlorobenzene	0.35	10		U
75-00-3	Chloroethane	1.1	10		U
67-66-3	Chloroform	0.57	10	low ~~0.77~~	~~J~~ ~~SSH~~ BL
74-87-3	Chloromethane	0.54	10		U
110-82-7	Cyclohexane	0.56	10		U
124-48-1	Dibromochloromethane	0.35	10		U
96-12-8	1,2-Dibromo-3-chloropropane	1.2	5.2		U
106-93-4	1,2-Dibromoethane	0.44	10		U
95-50-1	1,2-Dichlorobenzene	0.38	10		U
541-73-1	1,3-Dichlorobenzene	0.87	10		U
106-46-7	1,4-Dichlorobenzene	0.57	10		U
75-71-8	Dichlorodifluoromethane	1.1	10		U
75-34-3	1,1-Dichloroethane	0.56	10		U
107-06-2	1,2-Dichloroethane	0.47	10		U
75-35-4	1,1-Dichloroethene	1.2	10		U
156-59-2	cis-1,2-Dichloroethene	1.2	10		U
156-60-5	trans-1,2-Dichloroethene	1.1	10		U
78-87-5	1,2-Dichloropropane	0.47	10		U
10061-01-5	cis-1,3-Dichloropropene	0.52	10		U
10061-02-6	trans-1,3-Dichloropropene	0.33	10		U
100-41-4	Ethylbenzene	0.77	10		U
591-78-6	2-Hexanone	2.4	10		~~U~~ UJ C
98-82-8	Isopropylbenzene	0.91	10		U
79-20-9	Methyl acetate	1.6	10	32	~~X~~ J SSH
75-09-2	Methylene chloride	0.64	10		U
108-87-2	Methyl cyclohexane	0.31	10		U
1634-04-4	Methyl tert-butyl ether	0.33	10		U
108-10-1	4-Methyl-2-pentanone	0.60	10		U
100-42-5	Styrene	0.36	10		U
79-34-5	1,1,2,2-Tetrachloroethane	0.44	10		U
127-18-4	Tetrachloroethene	1.0	10		U

lw
113009

FORM 1
VOLATILE ORGANICS ANALYSIS DATA SHEET

CLIENT SAMPLE NO. 17

MR08-SS395-08D

Lab Name: EMPIRICAL LABS Contract: CH2MHILL

Lab Code: NA Case No.: NA SAS No.: NA SDG No.: LEJEUNE020

Matrix: (soil/water) SOIL Lab Sample ID: 0811296-09

Sample wt/vol: 5.6 (g/mL) G Lab File ID: 1129609A

Level: (low/med) LOW Date Sampled: 11/19/08 14:55

% Moisture: not dec. 14 Date Analyzed: 11/30/08 06:28

GC Column: RTX-VRX ID: 0.25 (mm) Dilution Factor: 1.0

Soil Extract Volume:_____(uL) Soil Aliquot Volume: _____(uL)

CONCENTRATION UNITS: (ug/L or ug/Kg) UG/KG

CAS NO.	COMPOUND	MDL	RL	CONC	Q
108-88-3	Toluene	0.89	10		U
120-82-1	1,2,4-Trichlorobenzene	0.18	10		U
71-55-6	1,1,1-Trichloroethane	0.93	10		U
79-00-5	1,1,2-Trichloroethane	0.36	10		U
79-01-6	Trichloroethene	0.88	10		U
76-13-1	Trichlorotrifluoroethane	0.57	10		U
75-69-4	Trichlorofluoromethane	0.98	10		U
75-01-4	Vinyl chloride	1.1	10		U
1330-20-7	Xylene(total)	0.72	10		U

lw
1/30/09

18

FORM 1
VOLATILE ORGANICS ANALYSIS DATA SHEET

CLIENT SAMPLE NO.

MR08-SS395D-08D

Lab Name: EMPIRICAL LABS Contract: CH2MHILL

Lab Code: NA Case No.: NA SAS No.: NA SDG No.: LEJEUNE020

Matrix: (soil/water) SOIL Lab Sample ID: 0811296-10

Sample wt/vol: 5.5 (g/mL) G Lab File ID: 1129610A

Level: (low/med) LOW Date Sampled: 11/19/08 15:00

% Moisture: not dec. 16 Date Analyzed: 11/30/08 06:59

GC Column: RTX-VRX ID: 0.25 (mm) Dilution Factor: 1.0

Soil Extract Volume:_____(uL) Soil Aliquot Volume: _____(uL)

CONCENTRATION UNITS: (ug/L or ug/Kg) UG/KG

CAS NO.	COMPOUND	MDL	RL	CONC	Q
67-64-1	Acetone	2.1	11	120	~~B~~ J CU
71-43-2	Benzene	0.50	11		U
75-27-4	Bromodichloromethane	0.32	11		U
75-25-2	Bromoform	1.1	11		U
74-83-9	Bromomethane	0.77	11		U
78-93-3	2-Butanone	1.5	11		U
75-15-0	Carbon disulfide	1.4	11		U
56-23-5	Carbon tetrachloride	0.94	11		~~U~~ UJ CU
108-90-7	Chlorobenzene	0.36	11		U
75-00-3	Chloroethane	1.2	11		U
67-66-3	Chloroform	0.59	11		U
74-87-3	Chloromethane	0.56	11		U
110-82-7	Cyclohexane	0.58	11		U
124-48-1	Dibromochloromethane	0.36	11		U
96-12-8	1,2-Dibromo-3-chloropropane	1.3	5.4		U
106-93-4	1,2-Dibromoethane	0.46	11		U
95-50-1	1,2-Dichlorobenzene	0.40	11		U
541-73-1	1,3-Dichlorobenzene	0.90	11		U
106-46-7	1,4-Dichlorobenzene	0.59	11		U
75-71-8	Dichlorodifluoromethane	1.2	11		U
75-34-3	1,1-Dichloroethane	0.58	11		U
107-06-2	1,2-Dichloroethane	0.49	11		U
75-35-4	1,1-Dichloroethene	1.3	11		U
156-59-2	cis-1,2-Dichloroethene	1.3	11		U
156-60-5	trans-1,2-Dichloroethene	1.2	11		U
78-87-5	1,2-Dichloropropane	0.49	11		U
10061-01-5	cis-1,3-Dichloropropene	0.54	11		U
10061-02-6	trans-1,3-Dichloropropene	0.34	11		U
100-41-4	Ethylbenzene	0.80	11		U
591-78-6	2-Hexanone	2.5	11		~~U~~ UJ CU
98-82-8	Isopropylbenzene	0.94	11		U
79-20-9	Methyl acetate	1.7	11		U
75-09-2	Methylene chloride	0.66	11		U
108-87-2	Methyl cyclohexane	0.32	11		U
1634-04-4	Methyl tert-butyl ether	0.34	11		U
108-10-1	4-Methyl-2-pentanone	0.62	11		U
100-42-5	Styrene	0.38	11		U
79-34-5	1,1,2,2-Tetrachloroethane	0.46	11		U
127-18-4	Tetrachloroethene	1.0	11		U

FORM I VOA

LW
11/30/09

FORM 1
VOLATILE ORGANICS ANALYSIS DATA SHEET

CLIENT SAMPLE NO. 18

MR08-SS395D-08D

Lab Name: EMPIRICAL LABS Contract: CH2MHILL

Lab Code: NA Case No.: NA SAS No.: NA SDG No.: LEJEUNE020

Matrix: (soil/water) SOIL Lab Sample ID: 0811296-10

Sample wt/vol: 5.5 (g/mL) G Lab File ID: 1129610A

Level: (low/med) LOW Date Sampled: 11/19/08 15:00

% Moisture: not dec. 16 Date Analyzed: 11/30/08 06:59

GC Column: RTX-VRX ID: 0.25 (mm) Dilution Factor: 1.0

Soil Extract Volume:_____(uL) Soil Aliquot Volume: _____(uL)

CONCENTRATION UNITS: (ug/L or ug/Kg) UG/KG

CAS NO.	COMPOUND	MDL	RL	CONC	Q
108-88-3	Toluene	0.92	11		U
120-82-1	1,2,4-Trichlorobenzene	0.19	11		U
71-55-6	1,1,1-Trichloroethane	0.96	11		U
79-00-5	1,1,2-Trichloroethane	0.38	11		U
79-01-6	Trichloroethene	0.91	11		U
76-13-1	Trichlorotrifluoroethane	0.59	11		U
75-69-4	Trichlorofluoromethane	1.0	11		U
75-01-4	Vinyl chloride	1.2	11		U
1330-20-7	Xylene(total)	0.75	11		U

lw 1130/09

FORM 1
VOLATILE ORGANICS ANALYSIS DATA SHEET

CLIENT SAMPLE NO. 19

MR08-SS393-08D

Lab Name: EMPIRICAL LABS Contract: CH2MHILL

Lab Code: NA Case No.: NA SAS No.: NA SDG No.: LEJEUNE020

Matrix: (soil/water) SOIL Lab Sample ID: 0811296-11

Sample wt/vol: 5.2 (g/mL) G Lab File ID: 1129611A

Level: (low/med) LOW Date Sampled: 11/19/08 15:45

% Moisture: not dec. 14 Date Analyzed: 11/30/08 07:30

GC Column: RTX-VRX ID: 0.25 (mm) Dilution Factor: 1.0

Soil Extract Volume:_____(uL) Soil Aliquot Volume: _____(uL)

CONCENTRATION UNITS: (ug/L or ug/Kg) UG/KG

CAS NO.	COMPOUND	MDL	RL	CONC	Q
67-64-1	Acetone	2.2	11	170	~~B~~ J CCI
71-43-2	Benzene	0.53	11	3.2	~~J~~ J SSI
75-27-4	Bromodichloromethane	0.34	11		U
75-25-2	Bromoform	1.1	11		U
74-83-9	Bromomethane	0.81	11		U
78-93-3	2-Butanone	1.6	11		U
75-15-0	Carbon disulfide	1.5	11		U
56-23-5	Carbon tetrachloride	0.99	11		~~U~~ UJ CCI
108-90-7	Chlorobenzene	0.38	11		U
75-00-3	Chloroethane	1.2	11		U
67-66-3	Chloroform	0.62	11		U
74-87-3	Chloromethane	0.58	11		U
110-82-7	Cyclohexane	0.61	11		U
124-48-1	Dibromochloromethane	0.38	11		U
96-12-8	1,2-Dibromo-3-chloropropane	1.4	5.6		U
106-93-4	1,2-Dibromoethane	0.48	11		U
95-50-1	1,2-Dichlorobenzene	0.42	11		U
541-73-1	1,3-Dichlorobenzene	0.95	11		U
106-46-7	1,4-Dichlorobenzene	0.62	11		U
75-71-8	Dichlorodifluoromethane	1.2	11		U
75-34-3	1,1-Dichloroethane	0.61	11		U
107-06-2	1,2-Dichloroethane	0.52	11		U
75-35-4	1,1-Dichloroethene	1.4	11		U
156-59-2	cis-1,2-Dichloroethene	1.4	11		U
156-60-5	trans-1,2-Dichloroethene	1.2	11		U
78-87-5	1,2-Dichloropropane	0.52	11		U
10061-01-5	cis-1,3-Dichloropropene	0.56	11		U
10061-02-6	trans-1,3-Dichloropropene	0.36	11		U
100-41-4	Ethylbenzene	0.84	11		U
591-78-6	2-Hexanone	2.6	11		~~U~~ UJ CCI
98-82-8	Isopropylbenzene	0.99	11		U
79-20-9	Methyl acetate	1.8	11	22	~~X~~ J SSI
75-09-2	Methylene chloride	0.70	11		U
108-87-2	Methyl cyclohexane	0.34	11		U
1634-04-4	Methyl tert-butyl ether	0.36	11		U
108-10-1	4-Methyl-2-pentanone	0.65	11		U
100-42-5	Styrene	0.39	11		U
79-34-5	1,1,2,2-Tetrachloroethane	0.48	11		U
127-18-4	Tetrachloroethene	1.1	11		U

LW
1130/09

FORM 1
VOLATILE ORGANICS ANALYSIS DATA SHEET

CLIENT SAMPLE NO. 19

MR08-SS393-08D

Lab Name: EMPIRICAL LABS Contract: CH2MHILL

Lab Code: NA Case No.: NA SAS No.: NA SDG No.: LEJEUNE020

Matrix: (soil/water) SOIL Lab Sample ID: 0811296-11

Sample wt/vol: 5.2 (g/mL) G Lab File ID: 1129611A

Level: (low/med) LOW Date Sampled: 11/19/08 15:45

% Moisture: not dec. 14 Date Analyzed: 11/30/08 07:30

GC Column: RTX-VRX ID: 0.25 (mm) Dilution Factor: 1.0

Soil Extract Volume:_____(uL) Soil Aliquot Volume: _____(uL)

CONCENTRATION UNITS: (ug/L or ug/Kg) UG/KG

CAS NO.	COMPOUND	MDL	RL	CONC	Q
108-88-3	Toluene	0.97	11	1.7	~~J~~ BL ~~J~~ SH
120-82-1	1,2,4-Trichlorobenzene	0.20	11		U
71-55-6	1,1,1-Trichloroethane	1.0	11		U
79-00-5	1,1,2-Trichloroethane	0.39	11		U
79-01-6	Trichloroethene	0.96	11		U
76-13-1	Trichlorotrifluoroethane	0.62	11		U
75-69-4	Trichlorofluoromethane	1.1	11		U
75-01-4	Vinyl chloride	1.2	11		U
1330-20-7	Xylene(total)	0.79	11		U

FORM I VOA

lw
1130/09

FORM 1
VOLATILE ORGANICS ANALYSIS DATA SHEET

CLIENT SAMPLE NO. 20

MR08-SS392-08D

Lab Name: EMPIRICAL LABS Contract: CH2MHILL

Lab Code: NA Case No.: NA SAS No.: NA SDG No.: LEJEUNE020

Matrix: (soil/water) SOIL Lab Sample ID: 0811296-12

Sample wt/vol: 5.8 (g/mL) G Lab File ID: 1129612A

Level: (low/med) LOW Date Sampled: 11/19/08 16:00

% Moisture: not dec. 18 Date Analyzed: 11/30/08 08:01

GC Column: RTX-VRX ID: 0.25 (mm) Dilution Factor: 1.0

Soil Extract Volume:_____(uL) Soil Aliquot Volume: _____(uL)

CONCENTRATION UNITS: (ug/L or ug/Kg) UG/KG

CAS NO.	COMPOUND	MDL	RL	CONC	Q
67-64-1	Acetone	2.1	10	120	~~B~~ J CCH
71-43-2	Benzene	0.50	10		U
75-27-4	Bromodichloromethane	0.32	10		U
75-25-2	Bromoform	1.0	10		U
74-83-9	Bromomethane	0.76	10		U
78-93-3	2-Butanone	1.5	10		U
75-15-0	Carbon disulfide	1.4	10		U
56-23-5	Carbon tetrachloride	0.93	10		~~U~~ UJ CCH
108-90-7	Chlorobenzene	0.36	10		U
75-00-3	Chloroethane	1.2	10		U
67-66-3	Chloroform	0.58	10	10U 0.63	~~J~~ ~~J SSH~~ BL
74-87-3	Chloromethane	0.55	10		U
110-82-7	Cyclohexane	0.57	10		U
124-48-1	Dibromochloromethane	0.36	10		U
96-12-8	1,2-Dibromo-3-chloropropane	1.3	5.3		U
106-93-4	1,2-Dibromoethane	0.46	10		U
95-50-1	1,2-Dichlorobenzene	0.39	10		U
541-73-1	1,3-Dichlorobenzene	0.89	10		U
106-46-7	1,4-Dichlorobenzene	0.58	10		U
75-71-8	Dichlorodifluoromethane	1.2	10		U
75-34-3	1,1-Dichloroethane	0.57	10		U
107-06-2	1,2-Dichloroethane	0.49	10		U
75-35-4	1,1-Dichloroethene	1.3	10		U
156-59-2	cis-1,2-Dichloroethene	1.3	10		U
156-60-5	trans-1,2-Dichloroethene	1.2	10		U
78-87-5	1,2-Dichloropropane	0.49	10		U
10061-01-5	cis-1,3-Dichloropropene	0.53	10		U
10061-02-6	trans-1,3-Dichloropropene	0.34	10		U
100-41-4	Ethylbenzene	0.79	10		U
591-78-6	2-Hexanone	2.4	10		~~U~~ UJ CC
98-82-8	Isopropylbenzene	0.93	10		U
79-20-9	Methyl acetate	1.7	10	22	~~X~~ J SSH
75-09-2	Methylene chloride	0.66	10		U
108-87-2	Methyl cyclohexane	0.32	10		U
1634-04-4	Methyl tert-butyl ether	0.34	10		U
108-10-1	4-Methyl-2-pentanone	0.61	10		U
100-42-5	Styrene	0.37	10		U
79-34-5	1,1,2,2-Tetrachloroethane	0.46	10		U
127-18-4	Tetrachloroethene	1.0	10		U

lw 1130/09

20

FORM 1
VOLATILE ORGANICS ANALYSIS DATA SHEET

CLIENT SAMPLE NO.

MR08-SS392-08D

Lab Name: EMPIRICAL LABS Contract: CH2MHILL

Lab Code: NA Case No.: NA SAS No.: NA SDG No.: LEJEUNE020

Matrix: (soil/water) SOIL Lab Sample ID: 0811296-12

Sample wt/vol: 5.8 (g/mL) G Lab File ID: 1129612A

Level: (low/med) LOW Date Sampled: 11/19/08 16:00

% Moisture: not dec. 18 Date Analyzed: 11/30/08 08:01

GC Column: RTX-VRX ID: 0.25 (mm) Dilution Factor: 1.0

Soil Extract Volume:_____(uL) Soil Aliquot Volume: _____(uL)

CONCENTRATION UNITS: (ug/L or ug/Kg) UG/KG

CAS NO.	COMPOUND	MDL	RL	CONC	Q
108-88-3	Toluene	0.91	10		U
120-82-1	1,2,4-Trichlorobenzene	0.19	10		U
71-55-6	1,1,1-Trichloroethane	0.95	10		U
79-00-5	1,1,2-Trichloroethane	0.37	10		U
79-01-6	Trichloroethene	0.90	10		U
76-13-1	Trichlorotrifluoroethane	0.58	10		U
75-69-4	Trichlorofluoromethane	1.0	10		U
75-01-4	Vinyl chloride	1.2	10		U
1330-20-7	Xylene(total)	0.74	10		U

lew
1130/09

FORM 1
VOLATILE ORGANICS ANALYSIS DATA SHEET

CLIENT SAMPLE NO. 21

MR08-SS391-08D

Lab Name: EMPIRICAL LABS Contract: CH2MHILL

Lab Code: NA Case No.: NA SAS No.: NA SDG No.: LEJEUNE020

Matrix: (soil/water) SOIL Lab Sample ID: 0811296-13

Sample wt/vol: 4.5 (g/mL) G Lab File ID: 1129613A

Level: (low/med) LOW Date Sampled: 11/19/08 16:30

% Moisture: not dec. 13 Date Analyzed: 11/30/08 08:32

GC Column: RTX-VRX ID: 0.25 (mm) Dilution Factor: 1.0

Soil Extract Volume:_____(uL) Soil Aliquot Volume: _____(uL)

CONCENTRATION UNITS: (ug/L or ug/Kg) UG/KG

CAS NO.	COMPOUND	MDL	RL	CONC	Q
67-64-1	Acetone	2.6	13	330	~~B~~ J CH
71-43-2	Benzene	0.60	13		U
75-27-4	Bromodichloromethane	0.38	13		U
75-25-2	Bromoform	1.3	13		U
74-83-9	Bromomethane	0.92	13		U
78-93-3	2-Butanone	1.8	13		U
75-15-0	Carbon disulfide	1.7	13		U
56-23-5	Carbon tetrachloride	1.1	13		~~U~~ UJ CH
108-90-7	Chlorobenzene	0.43	13		U
75-00-3	Chloroethane	1.4	13		U
67-66-3	Chloroform	0.70	13	13U ~~3.0~~	~~J~~ ~~J CH~~ BL
74-87-3	Chloromethane	0.66	13		U
110-82-7	Cyclohexane	0.69	13		U
124-48-1	Dibromochloromethane	0.43	13		U
96-12-8	1,2-Dibromo-3-chloropropane	1.5	6.4		U
106-93-4	1,2-Dibromoethane	0.55	13		U
95-50-1	1,2-Dichlorobenzene	0.47	13		U
541-73-1	1,3-Dichlorobenzene	1.1	13		U
106-46-7	1,4-Dichlorobenzene	0.70	13		U
75-71-8	Dichlorodifluoromethane	1.4	13		U
75-34-3	1,1-Dichloroethane	0.69	13		U
107-06-2	1,2-Dichloroethane	0.59	13		U
75-35-4	1,1-Dichloroethene	1.5	13		U
156-59-2	cis-1,2-Dichloroethene	1.5	13		U
156-60-5	trans-1,2-Dichloroethene	1.4	13		U
78-87-5	1,2-Dichloropropane	0.59	13		U
10061-01-5	cis-1,3-Dichloropropene	0.64	13		U
10061-02-6	trans-1,3-Dichloropropene	0.41	13		U
100-41-4	Ethylbenzene	0.96	13		U
591-78-6	2-Hexanone	2.9	13		~~U~~ UJ CH
98-82-8	Isopropylbenzene	1.1	13		U
79-20-9	Methyl acetate	2.0	13		U
75-09-2	Methylene chloride	0.79	13		U
108-87-2	Methyl cyclohexane	0.38	13		U
1634-04-4	Methyl tert-butyl ether	0.41	13		U
108-10-1	4-Methyl-2-pentanone	0.74	13		U
100-42-5	Styrene	0.45	13		U
79-34-5	1,1,2,2-Tetrachloroethane	0.55	13		U
127-18-4	Tetrachloroethene	1.2	13		U

FORM I VOA

LW
1130/09

FORM 1
VOLATILE ORGANICS ANALYSIS DATA SHEET

CLIENT SAMPLE NO. 21

MR08-SS391-08D

Lab Name: EMPIRICAL LABS Contract: CH2MHILL

Lab Code: NA Case No.: NA SAS No.: NA SDG No.: LEJEUNE020

Matrix: (soil/water) SOIL Lab Sample ID: 0811296-13

Sample wt/vol: 4.5 (g/mL) G Lab File ID: 1129613A

Level: (low/med) LOW Date Sampled: 11/19/08 16:30

% Moisture: not dec. 13 Date Analyzed: 11/30/08 08:32

GC Column: RTX-VRX ID: 0.25 (mm) Dilution Factor: 1.0

Soil Extract Volume:_____(uL) Soil Aliquot Volume: _____(uL)

CONCENTRATION UNITS: (ug/L or ug/Kg) UG/KG

CAS NO.	COMPOUND	MDL	RL	CONC	Q
108-88-3	Toluene	1.1	13		U
120-82-1	1,2,4-Trichlorobenzene	0.23	13		U
71-55-6	1,1,1-Trichloroethane	1.2	13		U
79-00-5	1,1,2-Trichloroethane	0.45	13		U
79-01-6	Trichloroethene	1.1	13		U
76-13-1	Trichlorotrifluoroethane	0.70	13		U
75-69-4	Trichlorofluoromethane	1.2	13		U
75-01-4	Vinyl chloride	1.4	13		U
1330-20-7	Xylene(total)	0.89	13		U

QCV
113009

FORM 1
VOLATILE ORGANICS ANALYSIS DATA SHEET

CLIENT SAMPLE NO. 22

MR08-SS391D-08D

Lab Name: EMPIRICAL LABS Contract: CH2MHILL

Lab Code: NA Case No.: NA SAS No.: NA SDG No.: LEJEUNE020

Matrix: (soil/water) SOIL Lab Sample ID: 0811296-14

Sample wt/vol: 5.0 (g/mL) G Lab File ID: 1129614A

Level: (low/med) LOW Date Sampled: 11/19/08 16:35

% Moisture: not dec. 13 Date Analyzed: 11/30/08 09:03

GC Column: RTX-VRX ID: 0.25 (mm) Dilution Factor: 1.0

Soil Extract Volume:_____(uL) Soil Aliquot Volume: _____(uL)

CONCENTRATION UNITS: (ug/L or ug/Kg) UG/KG

CAS NO.	COMPOUND	MDL	RL	CONC	Q
67-64-1	Acetone	2.3	11	240	~~B~~ J CH
71-43-2	Benzene	0.54	11		U
75-27-4	Bromodichloromethane	0.34	11		U
75-25-2	Bromoform	1.1	11		U
74-83-9	Bromomethane	0.83	11		U
78-93-3	2-Butanone	1.6	11		U
75-15-0	Carbon disulfide	1.5	11		U
56-23-5	Carbon tetrachloride	1.0	11		~~U~~ UJ CH
108-90-7	Chlorobenzene	0.39	11		U
75-00-3	Chloroethane	1.3	11		U
67-66-3	Chloroform	0.63	11	11u	~~2.5~~ U BL
74-87-3	Chloromethane	0.60	11		U
110-82-7	Cyclohexane	0.62	11		U
124-48-1	Dibromochloromethane	0.39	11		U
96-12-8	1,2-Dibromo-3-chloropropane	1.4	5.7		U
106-93-4	1,2-Dibromoethane	0.49	11		U
95-50-1	1,2-Dichlorobenzene	0.42	11		U
541-73-1	1,3-Dichlorobenzene	0.96	11		U
106-46-7	1,4-Dichlorobenzene	0.63	11		U
75-71-8	Dichlorodifluoromethane	1.3	11		U
75-34-3	1,1-Dichloroethane	0.62	11		U
107-06-2	1,2-Dichloroethane	0.53	11		U
75-35-4	1,1-Dichloroethene	1.4	11		U
156-59-2	cis-1,2-Dichloroethene	1.4	11		U
156-60-5	trans-1,2-Dichloroethene	1.3	11		U
78-87-5	1,2-Dichloropropane	0.53	11		U
10061-01-5	cis-1,3-Dichloropropene	0.57	11		U
10061-02-6	trans-1,3-Dichloropropene	0.37	11		U
100-41-4	Ethylbenzene	0.86	11		U
591-78-6	2-Hexanone	2.6	11		~~U~~ UJ CH
98-82-8	Isopropylbenzene	1.0	11		U
79-20-9	Methyl acetate	1.8	11		U
75-09-2	Methylene chloride	0.71	11		U
108-87-2	Methyl cyclohexane	0.34	11		U
1634-04-4	Methyl tert-butyl ether	0.37	11		U
108-10-1	4-Methyl-2-pentanone	0.67	11		U
100-42-5	Styrene	0.40	11		U
79-34-5	1,1,2,2-Tetrachloroethane	0.49	11		U
127-18-4	Tetrachloroethene	1.1	11		U

lw 113009

FORM 1
VOLATILE ORGANICS ANALYSIS DATA SHEET

CLIENT SAMPLE NO. 22

MR08-SS391D-08D

Lab Name: EMPIRICAL LABS Contract: CH2MHILL

Lab Code: NA Case No.: NA SAS No.: NA SDG No.: LEJEUNE020

Matrix: (soil/water) SOIL Lab Sample ID: 0811296-14

Sample wt/vol: 5.0 (g/mL) G Lab File ID: 1129614A

Level: (low/med) LOW Date Sampled: 11/19/08 16:35

% Moisture: not dec. 13 Date Analyzed: 11/30/08 09:03

GC Column: RTX-VRX ID: 0.25 (mm) Dilution Factor: 1.0

Soil Extract Volume:_____(uL) Soil Aliquot Volume: _____(uL)

CONCENTRATION UNITS: (ug/L or ug/Kg) UG/KG

CAS NO.	COMPOUND	MDL	RL	CONC	Q
108-88-3	Toluene	0.99	11		U
120-82-1	1,2,4-Trichlorobenzene	0.21	11		U
71-55-6	1,1,1-Trichloroethane	1.0	11		U
79-00-5	1,1,2-Trichloroethane	0.40	11		U
79-01-6	Trichloroethene	0.98	11		U
76-13-1	Trichlorotrifluoroethane	0.63	11		U
75-69-4	Trichlorofluoromethane	1.1	11		U
75-01-4	Vinyl chloride	1.3	11		U
1330-20-7	Xylene(total)	0.80	11		U

lw
1/30/09

FORM 1
VOLATILE ORGANICS ANALYSIS DATA SHEET

CLIENT SAMPLE NO. 23

MR08-SS390-08D

Lab Name: EMPIRICAL LABS Contract: CH2MHILL

Lab Code: NA Case No.: NA SAS No.: NA SDG No.: LEJEUNE020

Matrix: (soil/water) SOIL Lab Sample ID: 0811296-15

Sample wt/vol: 5.2 (g/mL) G Lab File ID: 1129615A

Level: (low/med) LOW Date Sampled: 11/19/08 17:00

% Moisture: not dec. 19 Date Analyzed: 11/30/08 09:34

GC Column: RTX-VRX ID: 0.25 (mm) Dilution Factor: 1.0

Soil Extract Volume:_____(uL) Soil Aliquot Volume: _____(uL)

CONCENTRATION UNITS: (ug/L or ug/Kg) UG/KG

CAS NO.	COMPOUND	MDL	RL	CONC	Q
67-64-1	Acetone	2.4	12	110	~~B~~ J CCH
71-43-2	Benzene	0.56	12		U
75-27-4	Bromodichloromethane	0.36	12		U
75-25-2	Bromoform	1.2	12		U
74-83-9	Bromomethane	0.86	12		U
78-93-3	2-Butanone	1.7	12		U
75-15-0	Carbon disulfide	1.6	12		U
56-23-5	Carbon tetrachloride	1.0	12		~~U~~ UJ CU
108-90-7	Chlorobenzene	0.41	12		U
75-00-3	Chloroethane	1.3	12		U
67-66-3	Chloroform	0.66	12	12U ~~0.70~~	~~J~~ ~~SSI~~ BL
74-87-3	Chloromethane	0.62	12		U
110-82-7	Cyclohexane	0.65	12		U
124-48-1	Dibromochloromethane	0.41	12		U
96-12-8	1,2-Dibromo-3-chloropropane	1.4	6.0		U
106-93-4	1,2-Dibromoethane	0.51	12		U
95-50-1	1,2-Dichlorobenzene	0.44	12		U
541-73-1	1,3-Dichlorobenzene	1.0	12		U
106-46-7	1,4-Dichlorobenzene	0.66	12		U
75-71-8	Dichlorodifluoromethane	1.3	12		U
75-34-3	1,1-Dichloroethane	0.65	12		U
107-06-2	1,2-Dichloroethane	0.55	12		U
75-35-4	1,1-Dichloroethene	1.4	12		U
156-59-2	cis-1,2-Dichloroethene	1.4	12		U
156-60-5	trans-1,2-Dichloroethene	1.3	12		U
78-87-5	1,2-Dichloropropane	0.55	12		U
10061-01-5	cis-1,3-Dichloropropene	0.60	12		U
10061-02-6	trans-1,3-Dichloropropene	0.38	12		U
100-41-4	Ethylbenzene	0.90	12		U
591-78-6	2-Hexanone	2.8	12		~~U~~ UJ CU
98-82-8	Isopropylbenzene	1.0	12		U
79-20-9	Methyl acetate	1.9	12	33	~~X~~ J SSI
75-09-2	Methylene chloride	0.74	12		U
108-87-2	Methyl cyclohexane	0.36	12		U
1634-04-4	Methyl tert-butyl ether	0.38	12		U
108-10-1	4-Methyl-2-pentanone	0.69	12		U
100-42-5	Styrene	0.42	12		U
79-34-5	1,1,2,2-Tetrachloroethane	0.51	12		U
127-18-4	Tetrachloroethene	1.2	12		U

lw 1/30/09

FORM 1
VOLATILE ORGANICS ANALYSIS DATA SHEET

CLIENT SAMPLE NO. 23

MR08-SS390-08D

Lab Name: EMPIRICAL LABS Contract: CH2MHILL

Lab Code: NA Case No.: NA SAS No.: NA SDG No.: LEJEUNE020

Matrix: (soil/water) SOIL Lab Sample ID: 0811296-15

Sample wt/vol: 5.2 (g/mL) G Lab File ID: 1129615A

Level: (low/med) LOW Date Sampled: 11/19/08 17:00

% Moisture: not dec. 19 Date Analyzed: 11/30/08 09:34

GC Column: RTX-VRX ID: 0.25 (mm) Dilution Factor: 1.0

Soil Extract Volume:_____(uL) Soil Aliquot Volume: _____(uL)

CONCENTRATION UNITS: (ug/L or ug/Kg) UG/KG

CAS NO.	COMPOUND	MDL	RL	CONC	Q
108-88-3	Toluene	1.0	12		U
120-82-1	1,2,4-Trichlorobenzene	0.22	12		U
71-55-6	1,1,1-Trichloroethane	1.1	12		U
79-00-5	1,1,2-Trichloroethane	0.42	12		U
79-01-6	Trichloroethene	1.0	12		U
76-13-1	Trichlorotrifluoroethane	0.66	12		U
75-69-4	Trichlorofluoromethane	1.1	12		U
75-01-4	Vinyl chloride	1.3	12		U
1330-20-7	Xylene(total)	0.84	12		U

gw
1/30/09

FORM 1
VOLATILE ORGANICS ANALYSIS DATA SHEET

CLIENT SAMPLE NO. 24

MR08-EB111908

Lab Name: EMPIRICAL LABS Contract: CH2MHILL

Lab Code: NA Case No.: NA SAS No.: NA SDG No.: LEJEUNE020

Matrix: (soil/water) WATER Lab Sample ID: 0811296-16

Sample wt/vol: 5.000 (g/mL) ML Lab File ID: 1129616

Level: (low/med) LOW Date Sampled: 11/19/08 18:00

% Moisture: not dec. _____ Date Analyzed: 11/29/08 14:50

GC Column: RTX-VRX ID: 0.25 (mm) Dilution Factor: 1.0

Soil Extract Volume:_____(uL) Soil Aliquot Volume: _____(uL)

CONCENTRATION UNITS: (ug/L or ug/Kg) UG/L

CAS NO.	COMPOUND	MDL	RL	CONC	Q
67-64-1	Acetone	0.84	2.5	4.1	
71-43-2	Benzene	0.11	1.0		U
75-27-4	Bromodichloromethane	0.10	1.0	0.19	J
75-25-2	Bromoform	0.10	1.0		U
74-83-9	Bromomethane	0.32	1.0		U
78-93-3	2-Butanone	1.0	3.0		U
75-15-0	Carbon disulfide	0.13	1.0		U
56-23-5	Carbon tetrachloride	0.15	1.0		~~U~~ UJ
108-90-7	Chlorobenzene	0.10	1.0		U
75-00-3	Chloroethane	0.18	1.0		U
67-66-3	Chloroform	0.11	1.0	1.6	
74-87-3	Chloromethane	0.29	1.0		U
110-82-7	Cyclohexane	0.20	1.0		U
124-48-1	Dibromochloromethane	0.10	1.0		U
96-12-8	1,2-Dibromo-3-chloropropane	0.11	1.0		U
106-93-4	1,2-Dibromoethane	0.10	1.0		U
95-50-1	1,2-Dichlorobenzene	0.10	1.0		U
541-73-1	1,3-Dichlorobenzene	0.13	1.0		U
106-46-7	1,4-Dichlorobenzene	0.10	1.0		U
75-71-8	Dichlorodifluoromethane	0.22	1.0		U
75-34-3	1,1-Dichloroethane	0.12	1.0		U
107-06-2	1,2-Dichloroethane	0.10	1.0		U
75-35-4	1,1-Dichloroethene	0.15	1.0		U
156-59-2	cis-1,2-Dichloroethene	0.13	1.0		U
156-60-5	trans-1,2-Dichloroethene	0.13	1.0		U
78-87-5	1,2-Dichloropropane	0.10	1.0		U
10061-01-5	cis-1,3-Dichloropropene	0.11	1.0		U
10061-02-6	trans-1,3-Dichloropropene	0.10	1.0		U
100-41-4	Ethylbenzene	0.13	1.0		U
591-78-6	2-Hexanone	0.30	2.0		U
98-82-8	Isopropylbenzene	0.15	1.0		U
79-20-9	Methyl acetate	0.30	1.0		U
75-09-2	Methylene chloride	0.14	1.0		U
108-87-2	Methyl cyclohexane	0.17	1.0		U
1634-04-4	Methyl tert-butyl ether	0.10	1.0		U
108-10-1	4-Methyl-2-pentanone	0.29	2.0		U
100-42-5	Styrene	0.10	1.0		U
79-34-5	1,1,2,2-Tetrachloroethane	0.10	1.0		U
127-18-4	Tetrachloroethene	0.15	1.0		U

FORM I VOA

11/30/09

FORM 1
VOLATILE ORGANICS ANALYSIS DATA SHEET

CLIENT SAMPLE NO. 24

MR08-EB111908

Lab Name: EMPIRICAL LABS Contract: CH2MHILL

Lab Code: NA Case No.: NA SAS No.: NA SDG No.: LEJEUNE020

Matrix: (soil/water) WATER Lab Sample ID: 0811296-16

Sample wt/vol: 5.000 (g/mL) ML Lab File ID: 1129616

Level: (low/med) LOW Date Sampled: 11/19/08 18:00

% Moisture: not dec. _____ Date Analyzed: 11/29/08 14:50

GC Column: RTX-VRX ID: 0.25 (mm) Dilution Factor: 1.0

Soil Extract Volume:_____(uL) Soil Aliquot Volume: _____(uL)

CONCENTRATION UNITS: (ug/L or ug/Kg) UG/L

CAS NO.	COMPOUND	MDL	RL	CONC	Q
108-88-3	Toluene	0.10	1.0	0.69	J
120-82-1	1,2,4-Trichlorobenzene	0.10	1.0		U
71-55-6	1,1,1-Trichloroethane	0.17	1.0		U
79-00-5	1,1,2-Trichloroethane	0.10	1.0		U
79-01-6	Trichloroethene	0.13	1.0		U
76-13-1	Trichlorotrifluoroethane	0.18	1.0		U
75-69-4	Trichlorofluoromethane	0.17	1.0		U
75-01-4	Vinyl chloride	0.18	1.0		U
1330-20-7	Xylene(total)	0.22	1.0	0.24	J

lew
1/30/09

25

FORM 1
VOLATILE ORGANICS ANALYSIS DATA SHEET

CLIENT SAMPLE NO.

MR08-TB111908-2

Lab Name: EMPIRICAL LABS Contract: CH2MHILL

Lab Code: NA Case No.: NA SAS No.: NA SDG No.: LEJEUNE020

Matrix: (soil/water) WATER Lab Sample ID: 0811296-17

Sample wt/vol: 5.000 (g/mL) ML Lab File ID: 1129617

Level: (low/med) LOW Date Sampled: 11/19/08 18:15

% Moisture: not dec. _____ Date Analyzed: 11/29/08 13:49

GC Column: RTX-VRX ID: 0.25 (mm) Dilution Factor: 1.0

Soil Extract Volume:_____(uL) Soil Aliquot Volume: _____(uL)

CONCENTRATION UNITS: (ug/L or ug/Kg) UG/L

CAS NO.	COMPOUND	MDL	RL	CONC	Q
67-64-1	Acetone	0.84	2.5		U
71-43-2	Benzene	0.11	1.0		U
75-27-4	Bromodichloromethane	0.10	1.0		U
75-25-2	Bromoform	0.10	1.0		U
74-83-9	Bromomethane	0.32	1.0		U
78-93-3	2-Butanone	1.0	3.0		U
75-15-0	Carbon disulfide	0.13	1.0		U
56-23-5	Carbon tetrachloride	0.15	1.0		~~U~~ UJ
108-90-7	Chlorobenzene	0.10	1.0		U
75-00-3	Chloroethane	0.18	1.0		U
67-66-3	Chloroform	0.11	1.0		U
74-87-3	Chloromethane	0.29	1.0		U
110-82-7	Cyclohexane	0.20	1.0		U
124-48-1	Dibromochloromethane	0.10	1.0		U
96-12-8	1,2-Dibromo-3-chloropropane	0.11	1.0		U
106-93-4	1,2-Dibromoethane	0.10	1.0		U
95-50-1	1,2-Dichlorobenzene	0.10	1.0		U
541-73-1	1,3-Dichlorobenzene	0.13	1.0		U
106-46-7	1,4-Dichlorobenzene	0.10	1.0		U
75-71-8	Dichlorodifluoromethane	0.22	1.0		U
75-34-3	1,1-Dichloroethane	0.12	1.0		U
107-06-2	1,2-Dichloroethane	0.10	1.0		U
75-35-4	1,1-Dichloroethene	0.15	1.0		U
156-59-2	cis-1,2-Dichloroethene	0.13	1.0		U
156-60-5	trans-1,2-Dichloroethene	0.13	1.0		U
78-87-5	1,2-Dichloropropane	0.10	1.0		U
10061-01-5	cis-1,3-Dichloropropene	0.11	1.0		U
10061-02-6	trans-1,3-Dichloropropene	0.10	1.0		U
100-41-4	Ethylbenzene	0.13	1.0		U
591-78-6	2-Hexanone	0.30	2.0		U
98-82-8	Isopropylbenzene	0.15	1.0		U
79-20-9	Methyl acetate	0.30	1.0		U
75-09-2	Methylene chloride	0.14	1.0	1.4	
108-87-2	Methyl cyclohexane	0.17	1.0		U
1634-04-4	Methyl tert-butyl ether	0.10	1.0		U
108-10-1	4-Methyl-2-pentanone	0.29	2.0		U
100-42-5	Styrene	0.10	1.0		U
79-34-5	1,1,2,2-Tetrachloroethane	0.10	1.0		U
127-18-4	Tetrachloroethene	0.15	1.0		U

LW
11/30/09

FORM 1
VOLATILE ORGANICS ANALYSIS DATA SHEET

CLIENT SAMPLE NO. 25

MR08-TB111908-2

Lab Name: EMPIRICAL LABS Contract: CH2MHILL

Lab Code: NA Case No.: NA SAS No.: NA SDG No.: LEJEUNE020

Matrix: (soil/water) WATER Lab Sample ID: 0811296-17

Sample wt/vol: 5.000 (g/mL) ML Lab File ID: 1129617

Level: (low/med) LOW Date Sampled: 11/19/08 18:15

% Moisture: not dec. _____ Date Analyzed: 11/29/08 13:49

GC Column: RTX-VRX ID: 0.25 (mm) Dilution Factor: 1.0

Soil Extract Volume:_____(uL) Soil Aliquot Volume: _____(uL)

CONCENTRATION UNITS: (ug/L or ug/Kg) UG/L

CAS NO.	COMPOUND	MDL	RL	CONC	Q
108-88-3	Toluene	0.10	1.0		U
120-82-1	1,2,4-Trichlorobenzene	0.10	1.0		U
71-55-6	1,1,1-Trichloroethane	0.17	1.0		U
79-00-5	1,1,2-Trichloroethane	0.10	1.0		U
79-01-6	Trichloroethene	0.13	1.0		U
76-13-1	Trichlorotrifluoroethane	0.18	1.0		U
75-69-4	Trichlorofluoromethane	0.17	1.0		U
75-01-4	Vinyl chloride	0.18	1.0		U
1330-20-7	Xylene(total)	0.22	1.0		U

lw
11/30/09

ENVIRONMENTAL
Data Services, Inc.

VOLATILE ORGANIC COMPOUNDS

USEPA Region IV - Level IV Review

Site: MCB Camp Lejeune, TO-09 SDG #: LEJEUNE21

Client: CH2M HILL, Inc., Virginia Beach, Virginia Date: February 9, 2009

Laboratory: Empirical Laboratories, Nashville, Tennessee Reviewer: Nancy Weaver

EDS ID	Client Sample ID	Laboratory Sample ID	Matrix
1	MR08-TW24-08D	0811302-02	Water
2	MR08-TW17-08D	0811302-03	Water
3	MR08-TW17D-08D	0811302-04	Water
4	MR08-TW15-08D	0811302-05	Water
5	MR08-TW15D-08D	0811302-06	Water
6	MR08-TW16-08D	0811302-07	Water
7	MR08-TW21-08D	0811302-08	Water
8	MR08-TW22-08D	0811302-09	Water
9	MR08-TW23-08D	0811302-10	Water
10	MR08-TB112108	0811302-11	Water
11	MR08-SS051-08D	0812021-01	Soil
11DL	MR08-SS051-08DDL	0812021-01DL	Soil
12	MR08-IS05-1-5-6-08D	0812021-02	Soil
13	MR08-SS050-08D	0812021-03	Soil
14	MR08-IS050-5-6-08D	0812021-04	Soil
15	MR08-SS052-08D	0812021-05	Soil
15DL	MR08-SS052-08DDL	0812021-05DL	Soil
16	MR08-IS052-5-6-08D	0812021-06	Soil
17	MR08-SS053-08D	0812021-07	Soil
17DL	MR08-SS053-08DDL	0812021-07DL	Soil
18	MR08-IS053-5-6-08D	0812021-08	Soil
19	MR08-SS054-08D	0812021-09	Soil
19DL	MR08-SS054-08DDL	0812021-09DL	Soil
20	MR08-IS054-6-7-08D	0812021-10	Soil
21	MR08-SS055-08D	0812021-11	Soil
21DL	MR08-SS055-08DDL	0812021-11DL	Soil
22	MR08-IS055-4-5-08D	0812021-12	Soil
23	MR08-TB-120208	0812021-13	Water
24	MR08-EB-120208-SS	0812021-14	Water
25	MR08-EB-120208-IS	0812021-15	Water

The USEPA "Contract Laboratory Program National Functional Guidelines for Organic Data Review," October 1999, and professional judgement were used in evaluating the data in this summary report.

Holding Times - All samples were analyzed within 14 days for preserved water and soil samples.

GC/MS Tuning - All of the BFB tunes in the initial and continuing calibrations met the percent relative abundance criteria.

Initial Calibration - The initial calibrations exhibited acceptable %RSD and mean RRF values except the following.

ICAL Date	Compound	%RSD/RRF	Qualifier	Affected Samples
11/07/08	2-Butanone	0.045	J/R	1-10, 23, 24, 25

Continuing Calibration - The continuing calibrations exhibited acceptable %D and RRF values except the following.

CCAL Date	Compound	%D/RRF	Qualifier	Affected Samples
12/02/08	Carbon tetrachloride	30.9%	J/UJ	1-10
	1,2,4-Trichlorobenzene	26.7%	J/UJ	1-10
12/06/08	Acetone	31.3%	J/UJ	23
	Bromomethane	49.5%	J/UJ	23
	Carbon tetrachloride	29.8%	J/UJ	23
12/08/08	Bromomethane	33.5%	J/UJ	24, 25
	Chloroethane	42.6%	J/UJ	24, 25
	2-Butanone	0.049 RRF	None	Already qualified due to ICAL
	1,1,2,2-Tetrachloroethane	30.3%	J/UJ	24, 25
12/12/08	Bromomethane	25.9%	J/UJ	12-14, 16, 18, 20, 22

Surrogates - All samples exhibited acceptable surrogate recoveries except the following.

Sample ID	Surrogate	%R	Qualifier
11	Toluene-d8	124%	J/UJ
	Bromofluorobenzene	75%	
15	Toluene-d8	131%	None - Already qualified due to IS
	Bromofluorobenzene	75%	
17	Bromofluorobenzene	79%	J/UJ
19	Toluene-d8	126%	J/UJ
	Bromofluorobenzene	72%	
21	Toluene-d8	125%	J/UJ
	Bromofluorobenzene	71%	

MS/MSD - A MS/MSD sample was not analyzed from this data package.

Laboratory Control Sample - The LCS samples exhibited acceptable %R values.

Internal Standard (IS) Area Performance - All internal standards met response and retention time (RT) criteria except the following.

Sample ID	Internal Standard	Area Count	Qualifier
11	1,4-Dichlorobenzene-d4	Low	None - Already qualified due to surrogates
15	Fluorobenzene	Low	J/UJ - Associated compounds
	Chlorobenzene-d5	Low	J/UJ - Associated compounds
	1,4-Dichlorobenzene-d4	Low	J/R - Associated compounds
17	1,4-Dichlorobenzene-d4	Low	None - Already qualified due to surrogates
19	1,4-Dichlorobenzene-d4	Low	None - Already qualified due to surrogates
21	1,4-Dichlorobenzene-d4	Low	None - Already qualified due to surrogates

Method Blank - The method blanks exhibited the following contamination.

Blank ID	Compound	Conc.	Action Level	Qualifier	Affected Samples
V3BLK1206	Methylene chloride	0.47 ug/L	4.7 ug/L	U	23
	1,2,4-Trichlorobenzene	0.20 ug/L	2.0 ug/L	None	All ND
V2BLK1207E	Methylene chloride	0.22 ug/L	2.2 ug/L	U	24, 25
V1BLK1211E	Methylene chloride	4.1 ug/kg	41 ug/kg	U	11-20, 22
V1MBLK1211E	Acetone	100 ug/kg	1000 ug/kg	U	17DL
	Methylene chloride	680 ug/kg	6800 ug/kg	U	17DL
V1MBLK1215E	Methylene chloride	110 ug/kg	1100 ug/kg	U	11DL, 15DL, 19DL, 21DL

Trip, Field, Equipment Blank - Field QC results are summarized below.

Blank ID	Compound	Conc. ug/L	Action Level	Qualifier	Affected Samples
MR08-EB120208-SS	None - ND	-	-	-	-
MR08-EB120208-IS	None - ND	-	-	-	-
MR08-TB112108	None - ND	-	-	-	-
MR08-FB112008	Acetone	4.5	45 ug/L	U	4, 9
	Bromodichloromethane	0.24	1.2 ug/L	U	4
	Chloroform	1.9	9.5 ug/L	U	4, 8
	Methylene chloride	0.53	5.3 ug/L	None	All ND or already qualified
	Toluene	0.62	3.1 ug/L	U	2-5, 8
MR08-FB1120608	Acetone	3.8	38 ug/kg	U	12, 16, 18, 22
	Bromodichloromethane	0.20	1.0 ug/kg	None	All ND
	Chloroform	3.0	1.5 ug/kg	U	13, 15, 16
	Toluene	0.35	1.75 ug/kg	None	All >5X

Field Duplicates - Field duplicate results are summarized below.

Compound	MR08-TW17-08D ug/L	MR08-TW17D-08D ug/L	RPD	Qualifier
None	ND	ND	-	-

Compound	MR08-TW15-08D ug/L	MR08-TW15D-08D ug/L	RPD	Qualifier
None	ND	ND	-	-

Tentatively Identified Compounds (TICs) - TICs were not reported.

Compound Quantitation - Several samples exhibited high concentrations of target compounds over the calibration range and were flagged (E). The laboratory diluted and reanalyzed samples. The reviewer replaced the original results with the dilution results. The original Form Is should be used for reporting purposes.

Several exhibited IS and/or surrogate deficiencies and were reanalyzed at a medium level with non-detect results. The original Form Is should be used for reporting purposes.

FORM 1
VOLATILE ORGANICS ANALYSIS DATA SHEET

CLIENT SAMPLE NO. 1

MR08-TW24-08D

Lab Name: EMPIRICAL LABS Contract: CH2MHILL

Lab Code: NA Case No.: NA SAS No.: NA SDG No.: LEJEUNE021

Matrix: (soil/water) WATER Lab Sample ID: 0811302-02

Sample wt/vol: 5.000 (g/mL) ML Lab File ID: 1130202

Level: (low/med) LOW Date Sampled: 11/20/08 16:55

% Moisture: not dec. _____ Date Analyzed: 12/02/08 03:56

GC Column: RTX-VRX ID: 0.25 (mm) Dilution Factor: 1.0

Soil Extract Volume:_____(uL) Soil Aliquot Volume: _____(uL)

CONCENTRATION UNITS: (ug/L or ug/Kg) UG/L

CAS NO.	COMPOUND	MDL	RL	CONC	Q
67-64-1	Acetone	0.84	2.5		U
71-43-2	Benzene	0.11	1.0		U
75-27-4	Bromodichloromethane	0.10	1.0		U
75-25-2	Bromoform	0.10	1.0		U
74-83-9	Bromomethane	0.32	1.0		U
78-93-3	2-Butanone	1.0	3.0		UR ICI
75-15-0	Carbon disulfide	0.13	1.0		U
56-23-5	Carbon tetrachloride	0.15	1.0		UUJCCH
108-90-7	Chlorobenzene	0.10	1.0		U
75-00-3	Chloroethane	0.18	1.0		U
67-66-3	Chloroform	0.11	1.0		U
74-87-3	Chloromethane	0.29	1.0		U
110-82-7	Cyclohexane	0.20	1.0		U
124-48-1	Dibromochloromethane	0.10	1.0		U
96-12-8	1,2-Dibromo-3-chloropropane	0.11	1.0		U
106-93-4	1,2-Dibromoethane	0.10	1.0		U
95-50-1	1,2-Dichlorobenzene	0.10	1.0		U
541-73-1	1,3-Dichlorobenzene	0.13	1.0		U
106-46-7	1,4-Dichlorobenzene	0.10	1.0		U
75-71-8	Dichlorodifluoromethane	0.22	1.0		U
75-34-3	1,1-Dichloroethane	0.12	1.0		U
107-06-2	1,2-Dichloroethane	0.10	1.0		U
75-35-4	1,1-Dichloroethene	0.15	1.0		U
156-59-2	cis-1,2-Dichloroethene	0.13	1.0		U
156-60-5	trans-1,2-Dichloroethene	0.13	1.0		U
78-87-5	1,2-Dichloropropane	0.10	1.0		U
10061-01-5	cis-1,3-Dichloropropene	0.11	1.0		U
10061-02-6	trans-1,3-Dichloropropene	0.10	1.0		U
100-41-4	Ethylbenzene	0.13	1.0		U
591-78-6	2-Hexanone	0.30	2.0		U
98-82-8	Isopropylbenzene	0.15	1.0		U
79-20-9	Methyl acetate	0.30	1.0		U
75-09-2	Methylene chloride	0.14	1.0		U
108-87-2	Methyl cyclohexane	0.17	1.0		U
1634-04-4	Methyl tert-butyl ether	0.10	1.0		U
108-10-1	4-Methyl-2-pentanone	0.29	2.0		U
100-42-5	Styrene	0.10	1.0		U
79-34-5	1,1,2,2-Tetrachloroethane	0.10	1.0		U
127-18-4	Tetrachloroethene	0.15	1.0		U

ewv
2/9/09

FORM 1
VOLATILE ORGANICS ANALYSIS DATA SHEET

CLIENT SAMPLE NO.

MR08-TW24-08D

Lab Name: EMPIRICAL LABS Contract: CH2MHILL

Lab Code: NA Case No.: NA SAS No.: NA SDG No.: LEJEUNE021

Matrix: (soil/water) WATER Lab Sample ID: 0811302-02

Sample wt/vol: 5.000 (g/mL) ML Lab File ID: 1130202

Level: (low/med) LOW Date Sampled: 11/20/08 16:55

% Moisture: not dec. _____ Date Analyzed: 12/02/08 03:56

GC Column: RTX-VRX ID: 0.25 (mm) Dilution Factor: 1.0

Soil Extract Volume:_____(uL) Soil Aliquot Volume: _____(uL)

CONCENTRATION UNITS: (ug/L or ug/Kg) UG/L

CAS NO.	COMPOUND	MDL	RL	CONC	Q
108-88-3	Toluene	0.10	1.0	3.2	
120-82-1	1,2,4-Trichlorobenzene	0.10	1.0		~~U~~ UJ CC
71-55-6	1,1,1-Trichloroethane	0.17	1.0		U
79-00-5	1,1,2-Trichloroethane	0.10	1.0		U
79-01-6	Trichloroethene	0.13	1.0		U
76-13-1	Trichlorotrifluoroethane	0.18	1.0		U
75-69-4	Trichlorofluoromethane	0.17	1.0		U
75-01-4	Vinyl chloride	0.18	1.0		U
1330-20-7	Xylene(total)	0.22	1.0		U

lw 2/9/09

FORM 1
VOLATILE ORGANICS ANALYSIS DATA SHEET

CLIENT SAMPLE NO. 2

MR08-TW17-08D

Lab Name: EMPIRICAL LABS Contract: CH2MHILL

Lab Code: NA Case No.: NA SAS No.: NA SDG No.: LEJEUNE021

Matrix: (soil/water) WATER Lab Sample ID: 0811302-03

Sample wt/vol: 5.000 (g/mL) ML Lab File ID: 1130203

Level: (low/med) LOW Date Sampled: 11/20/08 15:40

% Moisture: not dec. _____ Date Analyzed: 12/02/08 04:26

GC Column: RTX-VRX ID: 0.25 (mm) Dilution Factor: 1.0

Soil Extract Volume:_____(uL) Soil Aliquot Volume: _____(uL)

CONCENTRATION UNITS: (ug/L or ug/Kg) UG/L

CAS NO.	COMPOUND	MDL	RL	CONC	Q
67-64-1	Acetone	0.84	2.5		U
71-43-2	Benzene	0.11	1.0		U
75-27-4	Bromodichloromethane	0.10	1.0		U
75-25-2	Bromoform	0.10	1.0		U
74-83-9	Bromomethane	0.32	1.0		U
78-93-3	2-Butanone	1.0	3.0		~~U~~ R
75-15-0	Carbon disulfide	0.13	1.0		U
56-23-5	Carbon tetrachloride	0.15	1.0		~~U~~ UJ
108-90-7	Chlorobenzene	0.10	1.0		U
75-00-3	Chloroethane	0.18	1.0		U
67-66-3	Chloroform	0.11	1.0		U
74-87-3	Chloromethane	0.29	1.0		U
110-82-7	Cyclohexane	0.20	1.0		U
124-48-1	Dibromochloromethane	0.10	1.0		U
96-12-8	1,2-Dibromo-3-chloropropane	0.11	1.0		U
106-93-4	1,2-Dibromoethane	0.10	1.0		U
95-50-1	1,2-Dichlorobenzene	0.10	1.0		U
541-73-1	1,3-Dichlorobenzene	0.13	1.0		U
106-46-7	1,4-Dichlorobenzene	0.10	1.0		U
75-71-8	Dichlorodifluoromethane	0.22	1.0		U
75-34-3	1,1-Dichloroethane	0.12	1.0		U
107-06-2	1,2-Dichloroethane	0.10	1.0		U
75-35-4	1,1-Dichloroethene	0.15	1.0		U
156-59-2	cis-1,2-Dichloroethene	0.13	1.0		U
156-60-5	trans-1,2-Dichloroethene	0.13	1.0		U
78-87-5	1,2-Dichloropropane	0.10	1.0		U
10061-01-5	cis-1,3-Dichloropropene	0.11	1.0		U
10061-02-6	trans-1,3-Dichloropropene	0.10	1.0		U
100-41-4	Ethylbenzene	0.13	1.0		U
591-78-6	2-Hexanone	0.30	2.0		U
98-82-8	Isopropylbenzene	0.15	1.0		U
79-20-9	Methyl acetate	0.30	1.0		U
75-09-2	Methylene chloride	0.14	1.0		U
108-87-2	Methyl cyclohexane	0.17	1.0		U
1634-04-4	Methyl tert-butyl ether	0.10	1.0		U
108-10-1	4-Methyl-2-pentanone	0.29	2.0		U
100-42-5	Styrene	0.10	1.0		U
79-34-5	1,1,2,2-Tetrachloroethane	0.10	1.0		U
127-18-4	Tetrachloroethene	0.15	1.0		U

FORM I VOA

MW 2/9/09

FORM 1
VOLATILE ORGANICS ANALYSIS DATA SHEET

CLIENT SAMPLE NO. 2

MR08-TW17-08D

Lab Name: EMPIRICAL LABS Contract: CH2MHILL

Lab Code: NA Case No.: NA SAS No.: NA SDG No.: LEJEUNE021

Matrix: (soil/water) WATER Lab Sample ID: 0811302-03

Sample wt/vol: 5.000 (g/mL) ML Lab File ID: 1130203

Level: (low/med) LOW Date Sampled: 11/20/08 15:40

% Moisture: not dec. _____ Date Analyzed: 12/02/08 04:26

GC Column: RTX-VRX ID: 0.25 (mm) Dilution Factor: 1.0

Soil Extract Volume:_____(uL) Soil Aliquot Volume: _____(uL)

CONCENTRATION UNITS: (ug/L or ug/Kg) UG/L

CAS NO.	COMPOUND	MDL	RL	CONC	Q
108-88-3	Toluene	0.10	1.0	1.0 ~~0.88~~	~~J~~ U BL
120-82-1	1,2,4-Trichlorobenzene	0.10	1.0		~~U~~ UJ CCV
71-55-6	1,1,1-Trichloroethane	0.17	1.0		U
79-00-5	1,1,2-Trichloroethane	0.10	1.0		U
79-01-6	Trichloroethene	0.13	1.0		U
76-13-1	Trichlorotrifluoroethane	0.18	1.0		U
75-69-4	Trichlorofluoromethane	0.17	1.0		U
75-01-4	Vinyl chloride	0.18	1.0		U
1330-20-7	Xylene(total)	0.22	1.0		U

FORM I VOA

QW
2/9/09

FORM 1
VOLATILE ORGANICS ANALYSIS DATA SHEET

CLIENT SAMPLE NO. 3

MR08-TW17D-08D

Lab Name: EMPIRICAL LABS Contract: CH2MHILL

Lab Code: NA Case No.: NA SAS No.: NA SDG No.: LEJEUNE021

Matrix: (soil/water) WATER Lab Sample ID: 0811302-04

Sample wt/vol: 5.000 (g/mL) ML Lab File ID: 1130204

Level: (low/med) LOW Date Sampled: 11/20/08 15:45

% Moisture: not dec. _____ Date Analyzed: 12/02/08 04:56

GC Column: RTX-VRX ID: 0.25 (mm) Dilution Factor: 1.0

Soil Extract Volume:_____(uL) Soil Aliquot Volume: _____(uL)

CONCENTRATION UNITS: (ug/L or ug/Kg) UG/L

CAS NO.	COMPOUND	MDL	RL	CONC	Q
67-64-1	Acetone	0.84	2.5		U
71-43-2	Benzene	0.11	1.0		U
75-27-4	Bromodichloromethane	0.10	1.0		U
75-25-2	Bromoform	0.10	1.0		U
74-83-9	Bromomethane	0.32	1.0		U
78-93-3	2-Butanone	1.0	3.0		~~U~~ R IUB
75-15-0	Carbon disulfide	0.13	1.0		U
56-23-5	Carbon tetrachloride	0.15	1.0		~~U~~ UJ CCH
108-90-7	Chlorobenzene	0.10	1.0		U
75-00-3	Chloroethane	0.18	1.0		U
67-66-3	Chloroform	0.11	1.0		U
74-87-3	Chloromethane	0.29	1.0		U
110-82-7	Cyclohexane	0.20	1.0		U
124-48-1	Dibromochloromethane	0.10	1.0		U
96-12-8	1,2-Dibromo-3-chloropropane	0.11	1.0		U
106-93-4	1,2-Dibromoethane	0.10	1.0		U
95-50-1	1,2-Dichlorobenzene	0.10	1.0		U
541-73-1	1,3-Dichlorobenzene	0.13	1.0		U
106-46-7	1,4-Dichlorobenzene	0.10	1.0		U
75-71-8	Dichlorodifluoromethane	0.22	1.0		U
75-34-3	1,1-Dichloroethane	0.12	1.0		U
107-06-2	1,2-Dichloroethane	0.10	1.0		U
75-35-4	1,1-Dichloroethene	0.15	1.0		U
156-59-2	cis-1,2-Dichloroethene	0.13	1.0		U
156-60-5	trans-1,2-Dichloroethene	0.13	1.0		U
78-87-5	1,2-Dichloropropane	0.10	1.0		U
10061-01-5	cis-1,3-Dichloropropene	0.11	1.0		U
10061-02-6	trans-1,3-Dichloropropene	0.10	1.0		U
100-41-4	Ethylbenzene	0.13	1.0		U
591-78-6	2-Hexanone	0.30	2.0		U
98-82-8	Isopropylbenzene	0.15	1.0		U
79-20-9	Methyl acetate	0.30	1.0		U
75-09-2	Methylene chloride	0.14	1.0		U
108-87-2	Methyl cyclohexane	0.17	1.0		U
1634-04-4	Methyl tert-butyl ether	0.10	1.0		U
108-10-1	4-Methyl-2-pentanone	0.29	2.0		U
100-42-5	Styrene	0.10	1.0		U
79-34-5	1,1,2,2-Tetrachloroethane	0.10	1.0		U
127-18-4	Tetrachloroethene	0.15	1.0		U

LW 2/9/09

FORM 1
VOLATILE ORGANICS ANALYSIS DATA SHEET

CLIENT SAMPLE NO. 3

MR08-TW17D-08D

Lab Name: EMPIRICAL LABS Contract: CH2MHILL

Lab Code: NA Case No.: NA SAS No.: NA SDG No.: LEJEUNE021

Matrix: (soil/water) WATER Lab Sample ID: 0811302-04

Sample wt/vol: 5.000 (g/mL) ML Lab File ID: 1130204

Level: (low/med) LOW Date Sampled: 11/20/08 15:45

% Moisture: not dec. _____ Date Analyzed: 12/02/08 04:56

GC Column: RTX-VRX ID: 0.25 (mm) Dilution Factor: 1.0

Soil Extract Volume:_____(uL) Soil Aliquot Volume: _____(uL)

CONCENTRATION UNITS: (ug/L or ug/Kg) UG/L

CAS NO.	COMPOUND	MDL	RL	CONC	Q
108-88-3	Toluene	0.10	1.0	1.0 ~~0.90~~	~~J~~ U B
120-82-1	1,2,4-Trichlorobenzene	0.10	1.0		~~U~~ UJ CH
71-55-6	1,1,1-Trichloroethane	0.17	1.0		U
79-00-5	1,1,2-Trichloroethane	0.10	1.0		U
79-01-6	Trichloroethene	0.13	1.0		U
76-13-1	Trichlorotrifluoroethane	0.18	1.0		U
75-69-4	Trichlorofluoromethane	0.17	1.0		U
75-01-4	Vinyl chloride	0.18	1.0		U
1330-20-7	Xylene(total)	0.22	1.0		U

lw 2/9/09

FORM 1
VOLATILE ORGANICS ANALYSIS DATA SHEET

CLIENT SAMPLE NO. 4

MR08-TW15-08D

Lab Name: EMPIRICAL LABS Contract: CH2MHILL

Lab Code: NA Case No.: NA SAS No.: NA SDG No.: LEJEUNE021

Matrix: (soil/water) WATER Lab Sample ID: 0811302-05

Sample wt/vol: 5.000 (g/mL) ML Lab File ID: 1130205

Level: (low/med) LOW Date Sampled: 11/21/08 08:00

% Moisture: not dec. _____ Date Analyzed: 12/02/08 05:25

GC Column: RTX-VRX ID: 0.25 (mm) Dilution Factor: 1.0

Soil Extract Volume:_____(uL) Soil Aliquot Volume: _____(uL)

CONCENTRATION UNITS: (ug/L or ug/Kg) UG/L

CAS NO.	COMPOUND	MDL	RL	CONC	Q
67-64-1	Acetone	0.84	2.5	6.2	U BL
71-43-2	Benzene	0.11	1.0		U
75-27-4	Bromodichloromethane	0.10	1.0	1.0 ~~0.25~~	U BL
75-25-2	Bromoform	0.10	1.0		U
74-83-9	Bromomethane	0.32	1.0		U
78-93-3	2-Butanone	1.0	3.0		~~U~~ R IC
75-15-0	Carbon disulfide	0.13	1.0		U
56-23-5	Carbon tetrachloride	0.15	1.0		~~U~~ UJ CCV
108-90-7	Chlorobenzene	0.10	1.0		U
75-00-3	Chloroethane	0.18	1.0		U
67-66-3	Chloroform	0.11	1.0	1.1	U BL
74-87-3	Chloromethane	0.29	1.0		U
110-82-7	Cyclohexane	0.20	1.0		U
124-48-1	Dibromochloromethane	0.10	1.0		U
96-12-8	1,2-Dibromo-3-chloropropane	0.11	1.0		U
106-93-4	1,2-Dibromoethane	0.10	1.0		U
95-50-1	1,2-Dichlorobenzene	0.10	1.0		U
541-73-1	1,3-Dichlorobenzene	0.13	1.0		U
106-46-7	1,4-Dichlorobenzene	0.10	1.0		U
75-71-8	Dichlorodifluoromethane	0.22	1.0		U
75-34-3	1,1-Dichloroethane	0.12	1.0		U
107-06-2	1,2-Dichloroethane	0.10	1.0		U
75-35-4	1,1-Dichloroethene	0.15	1.0		U
156-59-2	cis-1,2-Dichloroethene	0.13	1.0		U
156-60-5	trans-1,2-Dichloroethene	0.13	1.0		U
78-87-5	1,2-Dichloropropane	0.10	1.0		U
10061-01-5	cis-1,3-Dichloropropene	0.11	1.0		U
10061-02-6	trans-1,3-Dichloropropene	0.10	1.0		U
100-41-4	Ethylbenzene	0.13	1.0		U
591-78-6	2-Hexanone	0.30	2.0		U
98-82-8	Isopropylbenzene	0.15	1.0		U
79-20-9	Methyl acetate	0.30	1.0		U
75-09-2	Methylene chloride	0.14	1.0		U
108-87-2	Methyl cyclohexane	0.17	1.0		U
1634-04-4	Methyl tert-butyl ether	0.10	1.0		U
108-10-1	4-Methyl-2-pentanone	0.29	2.0		U
100-42-5	Styrene	0.10	1.0		U
79-34-5	1,1,2,2-Tetrachloroethane	0.10	1.0		U
127-18-4	Tetrachloroethene	0.15	1.0		U

lw 2/9/09

FORM 1
VOLATILE ORGANICS ANALYSIS DATA SHEET

CLIENT SAMPLE NO. 4

MR08-TW15-08D

Lab Name: EMPIRICAL LABS Contract: CH2MHILL

Lab Code: NA Case No.: NA SAS No.: NA SDG No.: LEJEUNE021

Matrix: (soil/water) WATER Lab Sample ID: 0811302-05

Sample wt/vol: 5.000 (g/mL) ML Lab File ID: 1130205

Level: (low/med) LOW Date Sampled: 11/21/08 08:00

% Moisture: not dec. _____ Date Analyzed: 12/02/08 05:25

GC Column: RTX-VRX ID: 0.25 (mm) Dilution Factor: 1.0

Soil Extract Volume:_____(uL) Soil Aliquot Volume: _____(uL)

CONCENTRATION UNITS: (ug/L or ug/Kg) UG/L

CAS NO.	COMPOUND	MDL	RL	CONC	Q
108-88-3	Toluene	0.10	1.0	2.3	uBL
120-82-1	1,2,4-Trichlorobenzene	0.10	1.0		~~U~~ uJ CG
71-55-6	1,1,1-Trichloroethane	0.17	1.0		U
79-00-5	1,1,2-Trichloroethane	0.10	1.0		U
79-01-6	Trichloroethene	0.13	1.0		U
76-13-1	Trichlorotrifluoroethane	0.18	1.0		U
75-69-4	Trichlorofluoromethane	0.17	1.0		U
75-01-4	Vinyl chloride	0.18	1.0		U
1330-20-7	Xylene(total)	0.22	1.0		U

FORM I VOA

2/9/09

FORM 1
VOLATILE ORGANICS ANALYSIS DATA SHEET

CLIENT SAMPLE NO. 5

MR08-TW15D-08D

Lab Name: EMPIRICAL LABS Contract: CH2MHILL

Lab Code: NA Case No.: NA SAS No.: NA SDG No.: LEJEUNE021

Matrix: (soil/water) WATER Lab Sample ID: 0811302-06

Sample wt/vol: 5.000 (g/mL) ML Lab File ID: 1130206

Level: (low/med) LOW Date Sampled: 11/21/08 08:05

% Moisture: not dec. _____ Date Analyzed: 12/02/08 05:55

GC Column: RTX-VRX ID: 0.25 (mm) Dilution Factor: 1.0

Soil Extract Volume:_____(uL) Soil Aliquot Volume: _____(uL)

CONCENTRATION UNITS: (ug/L or ug/Kg) UG/L

CAS NO.	COMPOUND	MDL	RL	CONC	Q
67-64-1	Acetone	0.84	2.5		U
71-43-2	Benzene	0.11	1.0		U
75-27-4	Bromodichloromethane	0.10	1.0		U
75-25-2	Bromoform	0.10	1.0		U
74-83-9	Bromomethane	0.32	1.0		U
78-93-3	2-Butanone	1.0	3.0		~~U~~ R IC!
75-15-0	Carbon disulfide	0.13	1.0		U
56-23-5	Carbon tetrachloride	0.15	1.0		~~U~~ US CC
108-90-7	Chlorobenzene	0.10	1.0		U
75-00-3	Chloroethane	0.18	1.0		U
67-66-3	Chloroform	0.11	1.0		U
74-87-3	Chloromethane	0.29	1.0		U
110-82-7	Cyclohexane	0.20	1.0		U
124-48-1	Dibromochloromethane	0.10	1.0		U
96-12-8	1,2-Dibromo-3-chloropropane	0.11	1.0		U
106-93-4	1,2-Dibromoethane	0.10	1.0		U
95-50-1	1,2-Dichlorobenzene	0.10	1.0		U
541-73-1	1,3-Dichlorobenzene	0.13	1.0		U
106-46-7	1,4-Dichlorobenzene	0.10	1.0		U
75-71-8	Dichlorodifluoromethane	0.22	1.0		U
75-34-3	1,1-Dichloroethane	0.12	1.0		U
107-06-2	1,2-Dichloroethane	0.10	1.0		U
75-35-4	1,1-Dichloroethene	0.15	1.0		U
156-59-2	cis-1,2-Dichloroethene	0.13	1.0		U
156-60-5	trans-1,2-Dichloroethene	0.13	1.0		U
78-87-5	1,2-Dichloropropane	0.10	1.0		U
10061-01-5	cis-1,3-Dichloropropene	0.11	1.0		U
10061-02-6	trans-1,3-Dichloropropene	0.10	1.0		U
100-41-4	Ethylbenzene	0.13	1.0		U
591-78-6	2-Hexanone	0.30	2.0		U
98-82-8	Isopropylbenzene	0.15	1.0		U
79-20-9	Methyl acetate	0.30	1.0		U
75-09-2	Methylene chloride	0.14	1.0		U
108-87-2	Methyl cyclohexane	0.17	1.0		U
1634-04-4	Methyl tert-butyl ether	0.10	1.0		U
108-10-1	4-Methyl-2-pentanone	0.29	2.0		U
100-42-5	Styrene	0.10	1.0		U
79-34-5	1,1,2,2-Tetrachloroethane	0.10	1.0		U
127-18-4	Tetrachloroethene	0.15	1.0		U

FORM I VOA

fus
2/9/09

FORM 1
VOLATILE ORGANICS ANALYSIS DATA SHEET

CLIENT SAMPLE NO. 5

MR08-TW15D-08D

Lab Name: EMPIRICAL LABS Contract: CH2MHILL

Lab Code: NA Case No.: NA SAS No.: NA SDG No.: LEJEUNE021

Matrix: (soil/water) WATER Lab Sample ID: 0811302-06

Sample wt/vol: 5.000 (g/mL) ML Lab File ID: 1130206

Level: (low/med) LOW Date Sampled: 11/21/08 08:05

% Moisture: not dec. _____ Date Analyzed: 12/02/08 05:55

GC Column: RTX-VRX ID: 0.25 (mm) Dilution Factor: 1.0

Soil Extract Volume:_____(uL) Soil Aliquot Volume: _____(uL)

CONCENTRATION UNITS: (ug/L or ug/Kg) UG/L

CAS NO.	COMPOUND	MDL	RL	CONC	Q
108-88-3	Toluene	0.10	1.0	3.0	u BL
120-82-1	1,2,4-Trichlorobenzene	0.10	1.0		~~U~~ UJ CCH
71-55-6	1,1,1-Trichloroethane	0.17	1.0		U
79-00-5	1,1,2-Trichloroethane	0.10	1.0		U
79-01-6	Trichloroethene	0.13	1.0		U
76-13-1	Trichlorotrifluoroethane	0.18	1.0		U
75-69-4	Trichlorofluoromethane	0.17	1.0		U
75-01-4	Vinyl chloride	0.18	1.0		U
1330-20-7	Xylene(total)	0.22	1.0		U

lw
2/9/09

FORM 1
VOLATILE ORGANICS ANALYSIS DATA SHEET

CLIENT SAMPLE NO. 6

MR08-TW16-08D

Lab Name: EMPIRICAL LABS Contract: CH2MHILL

Lab Code: NA Case No.: NA SAS No.: NA SDG No.: LEJEUNE021

Matrix: (soil/water) WATER Lab Sample ID: 0811302-07

Sample wt/vol: 5.000 (g/mL) ML Lab File ID: 1130207

Level: (low/med) LOW Date Sampled: 11/21/08 08:45

% Moisture: not dec. _____ Date Analyzed: 12/02/08 06:25

GC Column: RTX-VRX ID: 0.25 (mm) Dilution Factor: 1.0

Soil Extract Volume:_____(uL) Soil Aliquot Volume: _____(uL)

CONCENTRATION UNITS: (ug/L or ug/Kg) UG/L

CAS NO.	COMPOUND	MDL	RL	CONC	Q
67-64-1	Acetone	0.84	2.5		U
71-43-2	Benzene	0.11	1.0		U
75-27-4	Bromodichloromethane	0.10	1.0		U
75-25-2	Bromoform	0.10	1.0		U
74-83-9	Bromomethane	0.32	1.0		U
78-93-3	2-Butanone	1.0	3.0		~~U~~ R ICV
75-15-0	Carbon disulfide	0.13	1.0		U
56-23-5	Carbon tetrachloride	0.15	1.0		~~U~~ UJ CCV
108-90-7	Chlorobenzene	0.10	1.0		U
75-00-3	Chloroethane	0.18	1.0		U
67-66-3	Chloroform	0.11	1.0		U
74-87-3	Chloromethane	0.29	1.0		U
110-82-7	Cyclohexane	0.20	1.0		U
124-48-1	Dibromochloromethane	0.10	1.0		U
96-12-8	1,2-Dibromo-3-chloropropane	0.11	1.0		U
106-93-4	1,2-Dibromoethane	0.10	1.0		U
95-50-1	1,2-Dichlorobenzene	0.10	1.0		U
541-73-1	1,3-Dichlorobenzene	0.13	1.0		U
106-46-7	1,4-Dichlorobenzene	0.10	1.0		U
75-71-8	Dichlorodifluoromethane	0.22	1.0		U
75-34-3	1,1-Dichloroethane	0.12	1.0		U
107-06-2	1,2-Dichloroethane	0.10	1.0		U
75-35-4	1,1-Dichloroethene	0.15	1.0		U
156-59-2	cis-1,2-Dichloroethene	0.13	1.0		U
156-60-5	trans-1,2-Dichloroethene	0.13	1.0		U
78-87-5	1,2-Dichloropropane	0.10	1.0		U
10061-01-5	cis-1,3-Dichloropropene	0.11	1.0		U
10061-02-6	trans-1,3-Dichloropropene	0.10	1.0		U
100-41-4	Ethylbenzene	0.13	1.0		U
591-78-6	2-Hexanone	0.30	2.0		U
98-82-8	Isopropylbenzene	0.15	1.0		U
79-20-9	Methyl acetate	0.30	1.0		U
75-09-2	Methylene chloride	0.14	1.0		U
108-87-2	Methyl cyclohexane	0.17	1.0		U
1634-04-4	Methyl tert-butyl ether	0.10	1.0		U
108-10-1	4-Methyl-2-pentanone	0.29	2.0		U
100-42-5	Styrene	0.10	1.0		U
79-34-5	1,1,2,2-Tetrachloroethane	0.10	1.0		U
127-18-4	Tetrachloroethene	0.15	1.0		U

lw
2/9/09

FORM 1
VOLATILE ORGANICS ANALYSIS DATA SHEET

CLIENT SAMPLE NO. 6

MR08-TW16-08D

Lab Name: EMPIRICAL LABS Contract: CH2MHILL

Lab Code: NA Case No.: NA SAS No.: NA SDG No.: LEJEUNE021

Matrix: (soil/water) WATER Lab Sample ID: 0811302-07

Sample wt/vol: 5.000 (g/mL) ML Lab File ID: 1130207

Level: (low/med) LOW Date Sampled: 11/21/08 08:45

% Moisture: not dec. _____ Date Analyzed: 12/02/08 06:25

GC Column: RTX-VRX ID: 0.25 (mm) Dilution Factor: 1.0

Soil Extract Volume:_____(uL) Soil Aliquot Volume: _____(uL)

CONCENTRATION UNITS: (ug/L or ug/Kg) UG/L

CAS NO.	COMPOUND	MDL	RL	CONC	Q
108-88-3------	Toluene	0.10	1.0	9.5	
120-82-1------	1,2,4-Trichlorobenzene	0.10	1.0		~~U~~ UJ CA
71-55-6-------	1,1,1-Trichloroethane	0.17	1.0		U
79-00-5-------	1,1,2-Trichloroethane	0.10	1.0		U
79-01-6-------	Trichloroethene	0.13	1.0		U
76-13-1-------	Trichlorotrifluoroethane	0.18	1.0		U
75-69-4-------	Trichlorofluoromethane	0.17	1.0		U
75-01-4-------	Vinyl chloride	0.18	1.0		U
1330-20-7-----	Xylene(total)	0.22	1.0		U

lw 2/9/09

7

FORM 1
VOLATILE ORGANICS ANALYSIS DATA SHEET

CLIENT SAMPLE NO.

MR08-TW21-08D

Lab Name: EMPIRICAL LABS Contract: CH2MHILL

Lab Code: NA Case No.: NA SAS No.: NA SDG No.: LEJEUNE021

Matrix: (soil/water) WATER Lab Sample ID: 0811302-08

Sample wt/vol: 5.000 (g/mL) ML Lab File ID: 1130208

Level: (low/med) LOW Date Sampled: 11/21/08 10:40

% Moisture: not dec. _____ Date Analyzed: 12/02/08 06:54

GC Column: RTX-VRX ID: 0.25 (mm) Dilution Factor: 1.0

Soil Extract Volume:_____(uL) Soil Aliquot Volume: _____(uL)

CONCENTRATION UNITS: (ug/L or ug/Kg) UG/L

CAS NO.	COMPOUND	MDL	RL	CONC	Q
67-64-1	Acetone	0.84	2.5		U
71-43-2	Benzene	0.11	1.0		U
75-27-4	Bromodichloromethane	0.10	1.0		U
75-25-2	Bromoform	0.10	1.0		U
74-83-9	Bromomethane	0.32	1.0		U
78-93-3	2-Butanone	1.0	3.0		~~U~~ R JC
75-15-0	Carbon disulfide	0.13	1.0		U
56-23-5	Carbon tetrachloride	0.15	1.0		~~U~~ UJ CCH
108-90-7	Chlorobenzene	0.10	1.0		U
75-00-3	Chloroethane	0.18	1.0		U
67-66-3	Chloroform	0.11	1.0		U
74-87-3	Chloromethane	0.29	1.0		U
110-82-7	Cyclohexane	0.20	1.0		U
124-48-1	Dibromochloromethane	0.10	1.0		U
96-12-8	1,2-Dibromo-3-chloropropane	0.11	1.0		U
106-93-4	1,2-Dibromoethane	0.10	1.0		U
95-50-1	1,2-Dichlorobenzene	0.10	1.0		U
541-73-1	1,3-Dichlorobenzene	0.13	1.0		U
106-46-7	1,4-Dichlorobenzene	0.10	1.0		U
75-71-8	Dichlorodifluoromethane	0.22	1.0		U
75-34-3	1,1-Dichloroethane	0.12	1.0		U
107-06-2	1,2-Dichloroethane	0.10	1.0		U
75-35-4	1,1-Dichloroethene	0.15	1.0		U
156-59-2	cis-1,2-Dichloroethene	0.13	1.0		U
156-60-5	trans-1,2-Dichloroethene	0.13	1.0		U
78-87-5	1,2-Dichloropropane	0.10	1.0		U
10061-01-5	cis-1,3-Dichloropropene	0.11	1.0		U
10061-02-6	trans-1,3-Dichloropropene	0.10	1.0		U
100-41-4	Ethylbenzene	0.13	1.0		U
591-78-6	2-Hexanone	0.30	2.0		U
98-82-8	Isopropylbenzene	0.15	1.0		U
79-20-9	Methyl acetate	0.30	1.0		U
75-09-2	Methylene chloride	0.14	1.0		U
108-87-2	Methyl cyclohexane	0.17	1.0		U
1634-04-4	Methyl tert-butyl ether	0.10	1.0		U
108-10-1	4-Methyl-2-pentanone	0.29	2.0		U
100-42-5	Styrene	0.10	1.0		U
79-34-5	1,1,2,2-Tetrachloroethane	0.10	1.0		U
127-18-4	Tetrachloroethene	0.15	1.0		U

FORM I VOA

LW
2/9/09

FORM 1
VOLATILE ORGANICS ANALYSIS DATA SHEET

CLIENT SAMPLE NO. 7

MR08-TW21-08D

Lab Name: EMPIRICAL LABS Contract: CH2MHILL

Lab Code: NA Case No.: NA SAS No.: NA SDG No.: LEJEUNE021

Matrix: (soil/water) WATER Lab Sample ID: 0811302-08

Sample wt/vol: 5.000 (g/mL) ML Lab File ID: 1130208

Level: (low/med) LOW Date Sampled: 11/21/08 10:40

% Moisture: not dec. _____ Date Analyzed: 12/02/08 06:54

GC Column: RTX-VRX ID: 0.25 (mm) Dilution Factor: 1.0

Soil Extract Volume:_____(uL) Soil Aliquot Volume: _____(uL)

CONCENTRATION UNITS: (ug/L or ug/Kg) UG/L

CAS NO.	COMPOUND	MDL	RL	CONC	Q
108-88-3------	Toluene	0.10	1.0	15	
120-82-1------	1,2,4-Trichlorobenzene	0.10	1.0		~~U~~ U3 CH
71-55-6-------	1,1,1-Trichloroethane	0.17	1.0		U
79-00-5-------	1,1,2-Trichloroethane	0.10	1.0		U
79-01-6-------	Trichloroethene	0.13	1.0		U
76-13-1-------	Trichlorotrifluoroethane	0.18	1.0		U
75-69-4-------	Trichlorofluoromethane	0.17	1.0		U
75-01-4-------	Vinyl chloride	0.18	1.0		U
1330-20-7-----	Xylene(total)	0.22	1.0		U

MW 2/9/09

FORM 1
VOLATILE ORGANICS ANALYSIS DATA SHEET

CLIENT SAMPLE NO. 8

MR08-TW22-08D

Lab Name: EMPIRICAL LABS Contract: CH2MHILL

Lab Code: NA Case No.: NA SAS No.: NA SDG No.: LEJEUNE021

Matrix: (soil/water) WATER Lab Sample ID: 0811302-09

Sample wt/vol: 5.000 (g/mL) ML Lab File ID: 1130209

Level: (low/med) LOW Date Sampled: 11/21/08 11:00

% Moisture: not dec. _____ Date Analyzed: 12/02/08 07:24

GC Column: RTX-VRX ID: 0.25 (mm) Dilution Factor: 1.0

Soil Extract Volume:_____(uL) Soil Aliquot Volume: _____(uL)

CONCENTRATION UNITS: (ug/L or ug/Kg) UG/L

CAS NO.	COMPOUND	MDL	RL	CONC	Q
67-64-1	Acetone	0.84	2.5		U
71-43-2	Benzene	0.11	1.0		U
75-27-4	Bromodichloromethane	0.10	1.0		U
75-25-2	Bromoform	0.10	1.0		U
74-83-9	Bromomethane	0.32	1.0		U
78-93-3	2-Butanone	1.0	3.0		~~U~~ R
75-15-0	Carbon disulfide	0.13	1.0		U
56-23-5	Carbon tetrachloride	0.15	1.0		~~U~~ UJ
108-90-7	Chlorobenzene	0.10	1.0		U
75-00-3	Chloroethane	0.18	1.0		U
67-66-3	Chloroform	0.11	1.0	1.0 ~~0.77~~	~~J~~ U BL
74-87-3	Chloromethane	0.29	1.0		U
110-82-7	Cyclohexane	0.20	1.0		U
124-48-1	Dibromochloromethane	0.10	1.0		U
96-12-8	1,2-Dibromo-3-chloropropane	0.11	1.0		U
106-93-4	1,2-Dibromoethane	0.10	1.0		U
95-50-1	1,2-Dichlorobenzene	0.10	1.0		U
541-73-1	1,3-Dichlorobenzene	0.13	1.0		U
106-46-7	1,4-Dichlorobenzene	0.10	1.0		U
75-71-8	Dichlorodifluoromethane	0.22	1.0		U
75-34-3	1,1-Dichloroethane	0.12	1.0		U
107-06-2	1,2-Dichloroethane	0.10	1.0		U
75-35-4	1,1-Dichloroethene	0.15	1.0		U
156-59-2	cis-1,2-Dichloroethene	0.13	1.0		U
156-60-5	trans-1,2-Dichloroethene	0.13	1.0		U
78-87-5	1,2-Dichloropropane	0.10	1.0		U
10061-01-5	cis-1,3-Dichloropropene	0.11	1.0		U
10061-02-6	trans-1,3-Dichloropropene	0.10	1.0		U
100-41-4	Ethylbenzene	0.13	1.0		U
591-78-6	2-Hexanone	0.30	2.0		U
98-82-8	Isopropylbenzene	0.15	1.0		U
79-20-9	Methyl acetate	0.30	1.0		U
75-09-2	Methylene chloride	0.14	1.0		U
108-87-2	Methyl cyclohexane	0.17	1.0		U
1634-04-4	Methyl tert-butyl ether	0.10	1.0		U
108-10-1	4-Methyl-2-pentanone	0.29	2.0		U
100-42-5	Styrene	0.10	1.0		U
79-34-5	1,1,2,2-Tetrachloroethane	0.10	1.0		U
127-18-4	Tetrachloroethene	0.15	1.0		U

MW 7/1/09

FORM 1
VOLATILE ORGANICS ANALYSIS DATA SHEET

CLIENT SAMPLE NO. 8

MR08-TW22-08D

Lab Name: EMPIRICAL LABS Contract: CH2MHILL

Lab Code: NA Case No.: NA SAS No.: NA SDG No.: LEJEUNE021

Matrix: (soil/water) WATER Lab Sample ID: 0811302-09

Sample wt/vol: 5.000 (g/mL) ML Lab File ID: 1130209

Level: (low/med) LOW Date Sampled: 11/21/08 11:00

% Moisture: not dec. _____ Date Analyzed: 12/02/08 07:24

GC Column: RTX-VRX ID: 0.25 (mm) Dilution Factor: 1.0

Soil Extract Volume:_____(uL) Soil Aliquot Volume: _____(uL)

CONCENTRATION UNITS: (ug/L or ug/Kg) UG/L

CAS NO.	COMPOUND	MDL	RL	CONC	Q
108-88-3	Toluene	0.10	1.0	1.0 0.36	~~J~~ U BL
120-82-1	1,2,4-Trichlorobenzene	0.10	1.0		~~U~~ UJ CCd
71-55-6	1,1,1-Trichloroethane	0.17	1.0		U
79-00-5	1,1,2-Trichloroethane	0.10	1.0		U
79-01-6	Trichloroethene	0.13	1.0		U
76-13-1	Trichlorotrifluoroethane	0.18	1.0		U
75-69-4	Trichlorofluoromethane	0.17	1.0		U
75-01-4	Vinyl chloride	0.18	1.0		U
1330-20-7	Xylene(total)	0.22	1.0		U

lw
2/9/09

FORM 1
VOLATILE ORGANICS ANALYSIS DATA SHEET

CLIENT SAMPLE NO. 9

MR08-TW23-08D

Lab Name: EMPIRICAL LABS Contract: CH2MHILL

Lab Code: NA Case No.: NA SAS No.: NA SDG No.: LEJEUNE021

Matrix: (soil/water) WATER Lab Sample ID: 0811302-10

Sample wt/vol: 5.000 (g/mL) ML Lab File ID: 1130210

Level: (low/med) LOW Date Sampled: 11/21/08 12:00

% Moisture: not dec. _____ Date Analyzed: 12/02/08 07:54

GC Column: RTX-VRX ID: 0.25 (mm) Dilution Factor: 1.0

Soil Extract Volume:_____(uL) Soil Aliquot Volume: _____(uL)

CONCENTRATION UNITS: (ug/L or ug/Kg) UG/L

CAS NO.	COMPOUND	MDL	RL	CONC	Q
67-64-1	Acetone	0.84	2.5	6.0	U BL
71-43-2	Benzene	0.11	1.0		U
75-27-4	Bromodichloromethane	0.10	1.0		U
75-25-2	Bromoform	0.10	1.0		U
74-83-9	Bromomethane	0.32	1.0		U
78-93-3	2-Butanone	1.0	3.0		~~U~~ R
75-15-0	Carbon disulfide	0.13	1.0		U
56-23-5	Carbon tetrachloride	0.15	1.0		~~U~~ UJ
108-90-7	Chlorobenzene	0.10	1.0		U
75-00-3	Chloroethane	0.18	1.0		U
67-66-3	Chloroform	0.11	1.0		U
74-87-3	Chloromethane	0.29	1.0		U
110-82-7	Cyclohexane	0.20	1.0		U
124-48-1	Dibromochloromethane	0.10	1.0		U
96-12-8	1,2-Dibromo-3-chloropropane	0.11	1.0		U
106-93-4	1,2-Dibromoethane	0.10	1.0		U
95-50-1	1,2-Dichlorobenzene	0.10	1.0		U
541-73-1	1,3-Dichlorobenzene	0.13	1.0		U
106-46-7	1,4-Dichlorobenzene	0.10	1.0		U
75-71-8	Dichlorodifluoromethane	0.22	1.0		U
75-34-3	1,1-Dichloroethane	0.12	1.0		U
107-06-2	1,2-Dichloroethane	0.10	1.0		U
75-35-4	1,1-Dichloroethene	0.15	1.0		U
156-59-2	cis-1,2-Dichloroethene	0.13	1.0		U
156-60-5	trans-1,2-Dichloroethene	0.13	1.0		U
78-87-5	1,2-Dichloropropane	0.10	1.0		U
10061-01-5	cis-1,3-Dichloropropene	0.11	1.0		U
10061-02-6	trans-1,3-Dichloropropene	0.10	1.0		U
100-41-4	Ethylbenzene	0.13	1.0	0.36	J
591-78-6	2-Hexanone	0.30	2.0		U
98-82-8	Isopropylbenzene	0.15	1.0		U
79-20-9	Methyl acetate	0.30	1.0		U
75-09-2	Methylene chloride	0.14	1.0		U
108-87-2	Methyl cyclohexane	0.17	1.0		U
1634-04-4	Methyl tert-butyl ether	0.10	1.0		U
108-10-1	4-Methyl-2-pentanone	0.29	2.0		U
100-42-5	Styrene	0.10	1.0		U
79-34-5	1,1,2,2-Tetrachloroethane	0.10	1.0		U
127-18-4	Tetrachloroethene	0.15	1.0		U

RW 7/19/09

9

FORM 1
VOLATILE ORGANICS ANALYSIS DATA SHEET

CLIENT SAMPLE NO.

MR08-TW23-08D

Lab Name: EMPIRICAL LABS Contract: CH2MHILL

Lab Code: NA Case No.: NA SAS No.: NA SDG No.: LEJEUNE021

Matrix: (soil/water) WATER Lab Sample ID: 0811302-10

Sample wt/vol: 5.000 (g/mL) ML Lab File ID: 1130210

Level: (low/med) LOW Date Sampled: 11/21/08 12:00

% Moisture: not dec. _____ Date Analyzed: 12/02/08 07:54

GC Column: RTX-VRX ID: 0.25 (mm) Dilution Factor: 1.0

Soil Extract Volume:_____(uL) Soil Aliquot Volume: _____(uL)

CONCENTRATION UNITS: (ug/L or ug/Kg) UG/L

CAS NO.	COMPOUND	MDL	RL	CONC	Q
108-88-3	Toluene	0.10	1.0	40	
120-82-1	1,2,4-Trichlorobenzene	0.10	1.0		~~U~~ J cm
71-55-6	1,1,1-Trichloroethane	0.17	1.0		U
79-00-5	1,1,2-Trichloroethane	0.10	1.0		U
79-01-6	Trichloroethene	0.13	1.0		U
76-13-1	Trichlorotrifluoroethane	0.18	1.0		U
75-69-4	Trichlorofluoromethane	0.17	1.0		U
75-01-4	Vinyl chloride	0.18	1.0		U
1330-20-7	Xylene(total)	0.22	1.0		U

FORM I VOA

2/9/09

FORM 1
VOLATILE ORGANICS ANALYSIS DATA SHEET

CLIENT SAMPLE NO. 10

MR08-TB112108

Lab Name: EMPIRICAL LABS Contract: CH2MHILL

Lab Code: NA Case No.: NA SAS No.: NA SDG No.: LEJEUNE021

Matrix: (soil/water) WATER Lab Sample ID: 0811302-11

Sample wt/vol: 5.000 (g/mL) ML Lab File ID: 1130211

Level: (low/med) LOW Date Sampled: 11/21/08 13:00

% Moisture: not dec. _____ Date Analyzed: 12/02/08 02:27

GC Column: RTX-VRX ID: 0.25 (mm) Dilution Factor: 1.0

Soil Extract Volume:_____(uL) Soil Aliquot Volume: _____(uL)

CONCENTRATION UNITS: (ug/L or ug/Kg) UG/L

CAS NO.	COMPOUND	MDL	RL	CONC	Q
67-64-1	Acetone	0.84	2.5		U
71-43-2	Benzene	0.11	1.0		U
75-27-4	Bromodichloromethane	0.10	1.0		U
75-25-2	Bromoform	0.10	1.0		U
74-83-9	Bromomethane	0.32	1.0		U
78-93-3	2-Butanone	1.0	3.0		~~U~~R IOB
75-15-0	Carbon disulfide	0.13	1.0		U
56-23-5	Carbon tetrachloride	0.15	1.0		~~U~~ UJ CCV
108-90-7	Chlorobenzene	0.10	1.0		U
75-00-3	Chloroethane	0.18	1.0		U
67-66-3	Chloroform	0.11	1.0		U
74-87-3	Chloromethane	0.29	1.0		U
110-82-7	Cyclohexane	0.20	1.0		U
124-48-1	Dibromochloromethane	0.10	1.0		U
96-12-8	1,2-Dibromo-3-chloropropane	0.11	1.0		U
106-93-4	1,2-Dibromoethane	0.10	1.0		U
95-50-1	1,2-Dichlorobenzene	0.10	1.0		U
541-73-1	1,3-Dichlorobenzene	0.13	1.0		U
106-46-7	1,4-Dichlorobenzene	0.10	1.0		U
75-71-8	Dichlorodifluoromethane	0.22	1.0		U
75-34-3	1,1-Dichloroethane	0.12	1.0		U
107-06-2	1,2-Dichloroethane	0.10	1.0		U
75-35-4	1,1-Dichloroethene	0.15	1.0		U
156-59-2	cis-1,2-Dichloroethene	0.13	1.0		U
156-60-5	trans-1,2-Dichloroethene	0.13	1.0		U
78-87-5	1,2-Dichloropropane	0.10	1.0		U
10061-01-5	cis-1,3-Dichloropropene	0.11	1.0		U
10061-02-6	trans-1,3-Dichloropropene	0.10	1.0		U
100-41-4	Ethylbenzene	0.13	1.0		U
591-78-6	2-Hexanone	0.30	2.0		U
98-82-8	Isopropylbenzene	0.15	1.0		U
79-20-9	Methyl acetate	0.30	1.0		U
75-09-2	Methylene chloride	0.14	1.0		U
108-87-2	Methyl cyclohexane	0.17	1.0		U
1634-04-4	Methyl tert-butyl ether	0.10	1.0		U
108-10-1	4-Methyl-2-pentanone	0.29	2.0		U
100-42-5	Styrene	0.10	1.0		U
79-34-5	1,1,2,2-Tetrachloroethane	0.10	1.0		U
127-18-4	Tetrachloroethene	0.15	1.0		U

FORM I VOA

2/9/09

FORM 1
VOLATILE ORGANICS ANALYSIS DATA SHEET

CLIENT SAMPLE NO. 10

MR08-TB112108

Lab Name: EMPIRICAL LABS Contract: CH2MHILL

Lab Code: NA Case No.: NA SAS No.: NA SDG No.: LEJEUNE021

Matrix: (soil/water) WATER Lab Sample ID: 0811302-11

Sample wt/vol: 5.000 (g/mL) ML Lab File ID: 1130211

Level: (low/med) LOW Date Sampled: 11/21/08 13:00

% Moisture: not dec. _____ Date Analyzed: 12/02/08 02:27

GC Column: RTX-VRX ID: 0.25 (mm) Dilution Factor: 1.0

Soil Extract Volume:_____(uL) Soil Aliquot Volume: _____(uL)

CONCENTRATION UNITS: (ug/L or ug/Kg) UG/L

CAS NO.	COMPOUND	MDL	RL	CONC	Q
108-88-3	Toluene	0.10	1.0		U
120-82-1	1,2,4-Trichlorobenzene	0.10	1.0		~~U~~ UJ CU
71-55-6	1,1,1-Trichloroethane	0.17	1.0		U
79-00-5	1,1,2-Trichloroethane	0.10	1.0		U
79-01-6	Trichloroethene	0.13	1.0		U
76-13-1	Trichlorotrifluoroethane	0.18	1.0		U
75-69-4	Trichlorofluoromethane	0.17	1.0		U
75-01-4	Vinyl chloride	0.18	1.0		U
1330-20-7	Xylene(total)	0.22	1.0		U

RW
2/9/09

FORM 1
VOLATILE ORGANICS ANALYSIS DATA SHEET

CLIENT SAMPLE NO. 11

MR08-SS051-08D

Lab Name: EMPIRICAL LABS Contract: CH2MHILL

Lab Code: NA Case No.: NA SAS No.: NA SDG No.: LEJEUNE021

Matrix: (soil/water) SOIL Lab Sample ID: 0812021-01

Sample wt/vol: 4.3 (g/mL) G Lab File ID: 1202101A

Level: (low/med) LOW Date Sampled: 12/02/08 10:25

% Moisture: not dec. 40 Date Analyzed: 12/12/08 05:32

GC Column: RTX-VRX ID: 0.25 (mm) Dilution Factor: 1.0

Soil Extract Volume:_____(uL) Soil Aliquot Volume: _____(uL)

CONCENTRATION UNITS: (ug/L or ug/Kg) UG/KG

CAS NO.	COMPOUND	MDL	RL	CONC	Q
67-64-1	Acetone	3.8	19	1400 ~~1400~~	E ~~R~~
71-43-2	Benzene	0.90	19		U UJ
75-27-4	Bromodichloromethane	0.58	19		U
75-25-2	Bromoform	1.9	19		U
74-83-9	Bromomethane	1.4	19		U
78-93-3	2-Butanone	2.7	19	12	J
75-15-0	Carbon disulfide	2.5	19		U UJ
56-23-5	Carbon tetrachloride	1.7	19		U
108-90-7	Chlorobenzene	0.65	19		U
75-00-3	Chloroethane	2.1	19		U
67-66-3	Chloroform	1.0	19		U
74-87-3	Chloromethane	1.0	19		U
110-82-7	Cyclohexane	1.0	19		U
124-48-1	Dibromochloromethane	0.65	19		U
96-12-8	1,2-Dibromo-3-chloropropane	2.3	9.6		U
106-93-4	1,2-Dibromoethane	0.83	19		U
95-50-1	1,2-Dichlorobenzene	0.71	19		U
541-73-1	1,3-Dichlorobenzene	1.6	19		U
106-46-7	1,4-Dichlorobenzene	1.0	19		U
75-71-8	Dichlorodifluoromethane	2.1	19		U UJ
75-34-3	1,1-Dichloroethane	1.0	19		U
107-06-2	1,2-Dichloroethane	0.88	19		U
75-35-4	1,1-Dichloroethene	2.3	19		U
156-59-2	cis-1,2-Dichloroethene	2.3	19		U
156-60-5	trans-1,2-Dichloroethene	2.1	19		U
78-87-5	1,2-Dichloropropane	0.88	19		U
10061-01-5	cis-1,3-Dichloropropene	0.96	19		U
10061-02-6	trans-1,3-Dichloropropene	0.62	19		U
100-41-4	Ethylbenzene	1.4	19		U
591-78-6	2-Hexanone	4.4	19		U
98-82-8	Isopropylbenzene	1.7	19		U
79-20-9	Methyl acetate	3.1	19		U
75-09-2	Methylene chloride	1.2	19	19 ~~3.8~~	UJ ~~JB~~
108-87-2	Methyl cyclohexane	0.58	19		U
1634-04-4	Methyl tert-butyl ether	0.62	19		U
108-10-1	4-Methyl-2-pentanone	1.1	19		U
100-42-5	Styrene	0.67	19	1.4	J
79-34-5	1,1,2,2-Tetrachloroethane	0.83	19		U UJ
127-18-4	Tetrachloroethene	1.9	19		U UJ

FORM I VOA

LW 2/9/09

11

FORM 1
VOLATILE ORGANICS ANALYSIS DATA SHEET

CLIENT SAMPLE NO.

MR08-SS051-08D

Lab Name: EMPIRICAL LABS Contract: CH2MHILL

Lab Code: NA Case No.: NA SAS No.: NA SDG No.: LEJEUNE021

Matrix: (soil/water) SOIL Lab Sample ID: 0812021-01

Sample wt/vol: 4.3 (g/mL) G Lab File ID: 1202101A

Level: (low/med) LOW Date Sampled: 12/02/08 10:25

% Moisture: not dec. 40 Date Analyzed: 12/12/08 05:32

GC Column: RTX-VRX ID: 0.25 (mm) Dilution Factor: 1.0

Soil Extract Volume:_____(uL) Soil Aliquot Volume: _____(uL)

CONCENTRATION UNITS: (ug/L or ug/Kg) UG/KG

CAS NO.	COMPOUND	MDL	RL	CONC	Q	
108-88-3	Toluene	1.6	19	2.2	~~J~~ J	SSL
120-82-1	1,2,4-Trichlorobenzene	0.35	19		U UJ	
71-55-6	1,1,1-Trichloroethane	1.7	19		U	
79-00-5	1,1,2-Trichloroethane	0.67	19		U	
79-01-6	Trichloroethene	1.6	19		U	
76-13-1	Trichlorotrifluoroethane	1.0	19		U	
75-69-4	Trichlorofluoromethane	1.8	19		U	
75-01-4	Vinyl chloride	2.1	19		U	
1330-20-7	Xylene(total)	1.3	19		U	

FORM I VOA

RW 2/9/09

FORM 1
VOLATILE ORGANICS ANALYSIS DATA SHEET

CLIENT SAMPLE NO. 11DL

MR08-SS0
51-08DDL

Lab Name: EMPIRICAL LABS Contract: CH2MHILL

Lab Code: NA Case No.: NA SAS No.: NA SDG No.: LEJEUNE021

Matrix: (soil/water) SOIL Lab Sample ID: 0812021-01DL

Sample wt/vol: 3.1 (g/mL) G Lab File ID: 1202101D

Level: (low/med) MED Date Sampled: 12/02/08 10:25

% Moisture: not dec. 40 Date Analyzed: 12/16/08 04:03 use original

GC Column: RTX-VRX ID: 0.25 (mm) Dilution Factor: 1.0

Soil Extract Volume: 5000(uL) Soil Aliquot Volume: 100(uL)

CONCENTRATION UNITS: (ug/L or ug/Kg) UG/KG

CAS NO.	COMPOUND	MDL	RL	CONC	Q
67-64-1	Acetone	260	1300	1400	D
71-43-2	Benzene	62	1300		UD
75-27-4	Bromodichloromethane	40	1300		UD
75-25-2	Bromoform	130	1300		UD
74-83-9	Bromomethane	96	1300		UD
78-93-3	2-Butanone	190	1300		UD
75-15-0	Carbon disulfide	170	1300		UD
56-23-5	Carbon tetrachloride	120	1300		UD
108-90-7	Chlorobenzene	45	1300		UD
75-00-3	Chloroethane	150	1300		UD
67-66-3	Chloroform	73	1300		UD
74-87-3	Chloromethane	69	1300		UD
110-82-7	Cyclohexane	72	1300		UD
124-48-1	Dibromochloromethane	45	1300		UD
96-12-8	1,2-Dibromo-3-chloropropane	160	660		UD
106-93-4	1,2-Dibromoethane	57	1300		UD
95-50-1	1,2-Dichlorobenzene	49	1300		UD
541-73-1	1,3-Dichlorobenzene	110	1300		UD
106-46-7	1,4-Dichlorobenzene	73	1300		UD
75-71-8	Dichlorodifluoromethane	150	1300		UD
75-34-3	1,1-Dichloroethane	72	1300		UD
107-06-2	1,2-Dichloroethane	61	1300		UD
75-35-4	1,1-Dichloroethene	160	1300		UD
156-59-2	cis-1,2-Dichloroethene	160	1300		UD
156-60-5	trans-1,2-Dichloroethene	150	1300		UD
78-87-5	1,2-Dichloropropane	61	1300		UD
10061-01-5	cis-1,3-Dichloropropene	66	1300		UD
10061-02-6	trans-1,3-Dichloropropene	42	1300		UD
100-41-4	Ethylbenzene	100	1300		UD
591-78-6	2-Hexanone	300	1300		UD
98-82-8	Isopropylbenzene	120	1300		UD
79-20-9	Methyl acetate	210	1300		UD
75-09-2	Methylene chloride	82	1300	1300 ~~530~~ ~~JBD~~	B
108-87-2	Methyl cyclohexane	40	1300		UD
1634-04-4	Methyl tert-butyl ether	42	1300		UD
108-10-1	4-Methyl-2-pentanone	77	1300		UD
100-42-5	Styrene	46	1300		UD
79-34-5	1,1,2,2-Tetrachloroethane	57	1300		UD
127-18-4	Tetrachloroethene	130	1300		UD

DL

R

mc 1/2/09

FORM I VOA

lw 2/9/09

FORM 1
VOLATILE ORGANICS ANALYSIS DATA SHEET

CLIENT SAMPLE NO. 11DL

MR08-SS0
51-08DDL

Lab Name: EMPIRICAL LABS Contract: CH2MHILL

Lab Code: NA Case No.: NA SAS No.: NA SDG No.: LEJEUNE021

Matrix: (soil/water) SOIL Lab Sample ID: 0812021-01DL

Sample wt/vol: 3.1 (g/mL) G Lab File ID: 1202101D

Level: (low/med) MED Date Sampled: 12/02/08 10:25

% Moisture: not dec. 40 Date Analyzed: 12/16/08 04:03 Use original

GC Column: RTX-VRX ID: 0.25 (mm) Dilution Factor: 1.0

Soil Extract Volume: 5000(uL) Soil Aliquot Volume: 100(uL)

CONCENTRATION UNITS: (ug/L or ug/Kg) UG/KG

DL

CAS NO.	COMPOUND	MDL	RL	CONC	Q
108-88-3	Toluene	110	1300		UD
120-82-1	1,2,4-Trichlorobenzene	24	1300		UD
71-55-6	1,1,1-Trichloroethane	120	1300		UD
79-00-5	1,1,2-Trichloroethane	46	1300		UD
79-01-6	Trichloroethene	110	1300		UD
76-13-1	Trichlorotrifluoroethane	73	1300		UD
75-69-4	Trichlorofluoromethane	130	1300		UD
75-01-4	Vinyl chloride	150	1300		UD
1330-20-7	Xylene(total)	93	1300		UD

MW 2/9/09

FORM 1
VOLATILE ORGANICS ANALYSIS DATA SHEET

CLIENT SAMPLE NO. 12

MR08-IS05
1-5-6-08D

Lab Name: EMPIRICAL LABS Contract: CH2MHILL

Lab Code: NA Case No.: NA SAS No.: NA SDG No.: LEJEUNE021

Matrix: (soil/water) SOIL Lab Sample ID: 0812021-02

Sample wt/vol: 6.0 (g/mL) G Lab File ID: 1202102A

Level: (low/med) LOW Date Sampled: 12/02/08 10:50

% Moisture: not dec. 16 Date Analyzed: 12/12/08 06:11

GC Column: RTX-VRX ID: 0.25 (mm) Dilution Factor: 1.0

Soil Extract Volume:_____(uL) Soil Aliquot Volume: _____(uL)

CONCENTRATION UNITS: (ug/L or ug/Kg) UG/KG

CAS NO.	COMPOUND	MDL	RL	CONC	Q	
67-64-1	Acetone	2.0	9.9	9.9 ~~8.7~~	~~J~~	BL
71-43-2	Benzene	0.46	9.9		U	
75-27-4	Bromodichloromethane	0.30	9.9		U	
75-25-2	Bromoform	0.99	9.9		U	
74-83-9	Bromomethane	0.71	9.9		~~U~~ UJ	CCV
78-93-3	2-Butanone	1.4	9.9		U	
75-15-0	Carbon disulfide	1.3	9.9		U	
56-23-5	Carbon tetrachloride	0.87	9.9		U	
108-90-7	Chlorobenzene	0.34	9.9		U	
75-00-3	Chloroethane	1.1	9.9		U	
67-66-3	Chloroform	0.54	9.9		U	
74-87-3	Chloromethane	0.51	9.9		U	
110-82-7	Cyclohexane	0.53	9.9		U	
124-48-1	Dibromochloromethane	0.34	9.9		U	
96-12-8	1,2-Dibromo-3-chloropropane	1.2	4.9		U	
106-93-4	1,2-Dibromoethane	0.42	9.9		U	
95-50-1	1,2-Dichlorobenzene	0.36	9.9		U	
541-73-1	1,3-Dichlorobenzene	0.83	9.9		U	
106-46-7	1,4-Dichlorobenzene	0.54	9.9		U	
75-71-8	Dichlorodifluoromethane	1.1	9.9		U	
75-34-3	1,1-Dichloroethane	0.53	9.9		U	
107-06-2	1,2-Dichloroethane	0.45	9.9		U	
75-35-4	1,1-Dichloroethene	1.2	9.9		U	
156-59-2	cis-1,2-Dichloroethene	1.2	9.9		U	
156-60-5	trans-1,2-Dichloroethene	1.1	9.9		U	
78-87-5	1,2-Dichloropropane	0.45	9.9		U	
10061-01-5	cis-1,3-Dichloropropene	0.49	9.9		U	
10061-02-6	trans-1,3-Dichloropropene	0.32	9.9		U	
100-41-4	Ethylbenzene	0.74	9.9		U	
591-78-6	2-Hexanone	2.3	9.9		U	
98-82-8	Isopropylbenzene	0.87	9.9		U	
79-20-9	Methyl acetate	1.6	9.9		U	
75-09-2	Methylene chloride	0.61	9.9	9.9 ~~1.7~~	~~JB~~ U	B
108-87-2	Methyl cyclohexane	0.30	9.9		U	
1634-04-4	Methyl tert-butyl ether	0.32	9.9		U	
108-10-1	4-Methyl-2-pentanone	0.57	9.9		U	
100-42-5	Styrene	0.34	9.9		U	
79-34-5	1,1,2,2-Tetrachloroethane	0.42	9.9		U	
127-18-4	Tetrachloroethene	0.96	9.9		U	

FORM I VOA

2/9/09

FORM 1
VOLATILE ORGANICS ANALYSIS DATA SHEET

CLIENT SAMPLE NO. 12

MR08-IS05
1-5-6-08D

Lab Name: EMPIRICAL LABS Contract: CH2MHILL

Lab Code: NA Case No.: NA SAS No.: NA SDG No.: LEJEUNE021

Matrix: (soil/water) SOIL Lab Sample ID: 0812021-02

Sample wt/vol: 6.0 (g/mL) G Lab File ID: 1202102A

Level: (low/med) LOW Date Sampled: 12/02/08 10:50

% Moisture: not dec. 16 Date Analyzed: 12/12/08 06:11

GC Column: RTX-VRX ID: 0.25 (mm) Dilution Factor: 1.0

Soil Extract Volume:_____(uL) Soil Aliquot Volume: _____(uL)

CONCENTRATION UNITS: (ug/L or ug/Kg) UG/KG

CAS NO.	COMPOUND	MDL	RL	CONC	Q
108-88-3	Toluene	0.85	9.9		U
120-82-1	1,2,4-Trichlorobenzene	0.18	9.9		U
71-55-6	1,1,1-Trichloroethane	0.89	9.9		U
79-00-5	1,1,2-Trichloroethane	0.34	9.9		U
79-01-6	Trichloroethene	0.84	9.9		U
76-13-1	Trichlorotrifluoroethane	0.54	9.9		U
75-69-4	Trichlorofluoromethane	0.94	9.9		U
75-01-4	Vinyl chloride	1.1	9.9		U
1330-20-7	Xylene(total)	0.69	9.9		U

gw
2/9/09

FORM 1
VOLATILE ORGANICS ANALYSIS DATA SHEET

CLIENT SAMPLE NO. 13

MR08-SS050-08D

Lab Name: EMPIRICAL LABS Contract: CH2MHILL

Lab Code: NA Case No.: NA SAS No.: NA SDG No.: LEJEUNE021

Matrix: (soil/water) SOIL Lab Sample ID: 0812021-03

Sample wt/vol: 5.2 (g/mL) G Lab File ID: 1202103A

Level: (low/med) LOW Date Sampled: 12/02/08 11:25

% Moisture: not dec. 18 Date Analyzed: 12/12/08 06:50

GC Column: RTX-VRX ID: 0.25 (mm) Dilution Factor: 1.0

Soil Extract Volume:_____(uL) Soil Aliquot Volume: _____(uL)

CONCENTRATION UNITS: (ug/L or ug/Kg) UG/KG

CAS NO.	COMPOUND	MDL	RL	CONC	Q
67-64-1	Acetone	2.3	12	170	
71-43-2	Benzene	0.55	12	0.76	J
75-27-4	Bromodichloromethane	0.35	12		U
75-25-2	Bromoform	1.2	12		U
74-83-9	Bromomethane	0.84	12		~~U~~ UJ CCH
78-93-3	2-Butanone	1.6	12	7.0	J
75-15-0	Carbon disulfide	1.5	12	4.6	J
56-23-5	Carbon tetrachloride	1.0	12		U
108-90-7	Chlorobenzene	0.40	12		U
75-00-3	Chloroethane	1.3	12		U
67-66-3	Chloroform	0.64	12	12U ~~0.74~~ ~~J~~	BL
74-87-3	Chloromethane	0.61	12		U
110-82-7	Cyclohexane	0.63	12		U
124-48-1	Dibromochloromethane	0.40	12		U
96-12-8	1,2-Dibromo-3-chloropropane	1.4	5.8		U
106-93-4	1,2-Dibromoethane	0.50	12		U
95-50-1	1,2-Dichlorobenzene	0.43	12		U
541-73-1	1,3-Dichlorobenzene	0.98	12		U
106-46-7	1,4-Dichlorobenzene	0.64	12		U
75-71-8	Dichlorodifluoromethane	1.3	12		U
75-34-3	1,1-Dichloroethane	0.63	12		U
107-06-2	1,2-Dichloroethane	0.54	12		U
75-35-4	1,1-Dichloroethene	1.4	12		U
156-59-2	cis-1,2-Dichloroethene	1.4	12		U
156-60-5	trans-1,2-Dichloroethene	1.3	12		U
78-87-5	1,2-Dichloropropane	0.54	12		U
10061-01-5	cis-1,3-Dichloropropene	0.58	12		U
10061-02-6	trans-1,3-Dichloropropene	0.37	12		U
100-41-4	Ethylbenzene	0.88	12		U
591-78-6	2-Hexanone	2.7	12		U
98-82-8	Isopropylbenzene	1.0	12		U
79-20-9	Methyl acetate	1.9	12		U
75-09-2	Methylene chloride	0.72	12	12U ~~2.4~~ ~~JB~~	B
108-87-2	Methyl cyclohexane	0.35	12	0.45	J
1634-04-4	Methyl tert-butyl ether	0.37	12		U
108-10-1	4-Methyl-2-pentanone	0.68	12	0.96	J
100-42-5	Styrene	0.41	12		U
79-34-5	1,1,2,2-Tetrachloroethane	0.50	12		U
127-18-4	Tetrachloroethene	1.1	12		U

2/9/09

13

FORM 1
VOLATILE ORGANICS ANALYSIS DATA SHEET

CLIENT SAMPLE NO.

MR08-SS050-08D

Lab Name: EMPIRICAL LABS Contract: CH2MHILL

Lab Code: NA Case No.: NA SAS No.: NA SDG No.: LEJEUNE021

Matrix: (soil/water) SOIL Lab Sample ID: 0812021-03

Sample wt/vol: 5.2 (g/mL) G Lab File ID: 1202103A

Level: (low/med) LOW Date Sampled: 12/02/08 11:25

% Moisture: not dec. 18 Date Analyzed: 12/12/08 06:50

GC Column: RTX-VRX ID: 0.25 (mm) Dilution Factor: 1.0

Soil Extract Volume:_____(uL) Soil Aliquot Volume: _____(uL)

CONCENTRATION UNITS: (ug/L or ug/Kg) UG/KG

CAS NO.	COMPOUND	MDL	RL	CONC	Q
108-88-3	Toluene	1.0	12	2.4	J
120-82-1	1,2,4-Trichlorobenzene	0.21	12		U
71-55-6	1,1,1-Trichloroethane	1.0	12		U
79-00-5	1,1,2-Trichloroethane	0.41	12		U
79-01-6	Trichloroethene	0.99	12		U
76-13-1	Trichlorotrifluoroethane	0.64	12		U
75-69-4	Trichlorofluoromethane	1.1	12		U
75-01-4	Vinyl chloride	1.3	12		U
1330-20-7	Xylene(total)	0.82	12		U

FORM I VOA

LW
2/9/09

FORM 1
VOLATILE ORGANICS ANALYSIS DATA SHEET

CLIENT SAMPLE NO. 14

MR08-IS05
0-5-6-08D

Lab Name: EMPIRICAL LABS Contract: CH2MHILL

Lab Code: NA Case No.: NA SAS No.: NA SDG No.: LEJEUNE021

Matrix: (soil/water) SOIL Lab Sample ID: 0812021-04

Sample wt/vol: 5.4 (g/mL) G Lab File ID: 1202104A

Level: (low/med) LOW Date Sampled: 12/02/08 11:50

% Moisture: not dec. 20 Date Analyzed: 12/12/08 07:29

GC Column: RTX-VRX ID: 0.25 (mm) Dilution Factor: 1.0

Soil Extract Volume:_____(uL) Soil Aliquot Volume: _____(uL)

CONCENTRATION UNITS: (ug/L or ug/Kg) UG/KG

CAS NO.	COMPOUND	MDL	RL	CONC	Q
67-64-1	Acetone	2.3	12	46	
71-43-2	Benzene	0.54	12		U
75-27-4	Bromodichloromethane	0.35	12		U
75-25-2	Bromoform	1.2	12		U
74-83-9	Bromomethane	0.83	12		~~U~~ UJCC
78-93-3	2-Butanone	1.6	12		U
75-15-0	Carbon disulfide	1.5	12		U
56-23-5	Carbon tetrachloride	1.0	12		U
108-90-7	Chlorobenzene	0.39	12		U
75-00-3	Chloroethane	1.3	12		U
67-66-3	Chloroform	0.64	12		U
74-87-3	Chloromethane	0.60	12		U
110-82-7	Cyclohexane	0.63	12		U
124-48-1	Dibromochloromethane	0.39	12		U
96-12-8	1,2-Dibromo-3-chloropropane	1.4	5.8		U
106-93-4	1,2-Dibromoethane	0.50	12		U
95-50-1	1,2-Dichlorobenzene	0.43	12		U
541-73-1	1,3-Dichlorobenzene	0.97	12		U
106-46-7	1,4-Dichlorobenzene	0.64	12		U
75-71-8	Dichlorodifluoromethane	1.3	12		U
75-34-3	1,1-Dichloroethane	0.63	12		U
107-06-2	1,2-Dichloroethane	0.53	12		U
75-35-4	1,1-Dichloroethene	1.4	12		U
156-59-2	cis-1,2-Dichloroethene	1.4	12		U
156-60-5	trans-1,2-Dichloroethene	1.3	12		U
78-87-5	1,2-Dichloropropane	0.53	12		U
10061-01-5	cis-1,3-Dichloropropene	0.58	12		U
10061-02-6	trans-1,3-Dichloropropene	0.37	12		U
100-41-4	Ethylbenzene	0.87	12		U
591-78-6	2-Hexanone	2.7	12		U
98-82-8	Isopropylbenzene	1.0	12		U
79-20-9	Methyl acetate	1.8	12		U
75-09-2	Methylene chloride	0.72	12	12U ~~2.0 JB~~	B
108-87-2	Methyl cyclohexane	0.35	12		U
1634-04-4	Methyl tert-butyl ether	0.37	12		U
108-10-1	4-Methyl-2-pentanone	0.67	12		U
100-42-5	Styrene	0.40	12		U
79-34-5	1,1,2,2-Tetrachloroethane	0.50	12		U
127-18-4	Tetrachloroethene	1.1	12		U

FORM I VOA

lw 2/9/09

FORM 1
VOLATILE ORGANICS ANALYSIS DATA SHEET

CLIENT SAMPLE NO. 14

MR08-IS05
0-5-6-08D

Lab Name: EMPIRICAL LABS Contract: CH2MHILL

Lab Code: NA Case No.: NA SAS No.: NA SDG No.: LEJEUNE021

Matrix: (soil/water) SOIL Lab Sample ID: 0812021-04

Sample wt/vol: 5.4 (g/mL) G Lab File ID: 1202104A

Level: (low/med) LOW Date Sampled: 12/02/08 11:50

% Moisture: not dec. 20 Date Analyzed: 12/12/08 07:29

GC Column: RTX-VRX ID: 0.25 (mm) Dilution Factor: 1.0

Soil Extract Volume:_____(uL) Soil Aliquot Volume: _____(uL)

CONCENTRATION UNITS: (ug/L or ug/Kg) UG/KG

CAS NO.	COMPOUND	MDL	RL	CONC	Q
108-88-3	Toluene	1.00	12		U
120-82-1	1,2,4-Trichlorobenzene	0.21	12		U
71-55-6	1,1,1-Trichloroethane	1.0	12		U
79-00-5	1,1,2-Trichloroethane	0.40	12		U
79-01-6	Trichloroethene	0.98	12		U
76-13-1	Trichlorotrifluoroethane	0.64	12		U
75-69-4	Trichlorofluoromethane	1.1	12		U
75-01-4	Vinyl chloride	1.3	12		U
1330-20-7	Xylene(total)	0.81	12		U

DW 2/9/09

FORM 1
VOLATILE ORGANICS ANALYSIS DATA SHEET

CLIENT SAMPLE NO. 15

MR08-SS052-08D

Lab Name: EMPIRICAL LABS Contract: CH2MHILL

Lab Code: NA Case No.: NA SAS No.: NA SDG No.: LEJEUNE021

Matrix: (soil/water) SOIL Lab Sample ID: 0812021-05

Sample wt/vol: 3.7 (g/mL) G Lab File ID: 1202105B

Level: (low/med) LOW Date Sampled: 12/02/08 13:20

% Moisture: not dec. 29 Date Analyzed: 12/12/08 08:08

GC Column: RTX-VRX ID: 0.25 (mm) Dilution Factor: 1.0

Soil Extract Volume:_____(uL) Soil Aliquot Volume: _____(uL)

CONCENTRATION UNITS: (ug/L or ug/Kg) UG/KG

CAS NO.	COMPOUND	MDL	RL	CONC	Q
67-64-1	Acetone	3.8	19	640J ~~1100~~	~~E~~ R DL
71-43-2	Benzene	0.89	19		~~U~~ UJ ISL
75-27-4	Bromodichloromethane	0.57	19		~~U~~
75-25-2	Bromoform	1.9	19		~~U~~
74-83-9	Bromomethane	1.4	19		~~U~~
78-93-3	2-Butanone	2.6	19	17	~~J~~ J
75-15-0	Carbon disulfide	2.5	19		~~U~~ UJ
56-23-5	Carbon tetrachloride	1.7	19		~~U~~
108-90-7	Chlorobenzene	0.64	19		~~U~~
75-00-3	Chloroethane	2.1	19		~~U~~
67-66-3	Chloroform	1.0	19	19 ~~1.3~~ BC	~~J~~ UJ
74-87-3	Chloromethane	0.99	19		~~U~~ UJ
110-82-7	Cyclohexane	1.0	19		~~U~~
124-48-1	Dibromochloromethane	0.64	19		~~U~~
96-12-8	1,2-Dibromo-3-chloropropane	2.3	9.5		~~U~~ R ISL
106-93-4	1,2-Dibromoethane	0.82	19		~~U~~ UJ
95-50-1	1,2-Dichlorobenzene	0.70	19		~~U~~ R ISL
541-73-1	1,3-Dichlorobenzene	1.6	19		~~U~~
106-46-7	1,4-Dichlorobenzene	1.0	19		~~U~~
75-71-8	Dichlorodifluoromethane	2.1	19		~~U~~ UJ
75-34-3	1,1-Dichloroethane	1.0	19		~~U~~ UJ
107-06-2	1,2-Dichloroethane	0.87	19		~~U~~
75-35-4	1,1-Dichloroethene	2.3	19		~~U~~
156-59-2	cis-1,2-Dichloroethene	2.3	19		~~U~~
156-60-5	trans-1,2-Dichloroethene	2.1	19		~~U~~
78-87-5	1,2-Dichloropropane	0.87	19		~~U~~
10061-01-5	cis-1,3-Dichloropropene	0.95	19		~~U~~
10061-02-6	trans-1,3-Dichloropropene	0.61	19		~~U~~
100-41-4	Ethylbenzene	1.4	19	4.4	J J
591-78-6	2-Hexanone	4.4	19		~~U~~ UJ
98-82-8	Isopropylbenzene	1.7	19		~~U~~
79-20-9	Methyl acetate	3.0	19		~~U~~
75-09-2	Methylene chloride	1.2	19	19UJ ~~5.2~~	~~JB~~ ISL B
108-87-2	Methyl cyclohexane	0.57	19		~~U~~ UJ ISL
1634-04-4	Methyl tert-butyl ether	0.61	19		~~U~~
108-10-1	4-Methyl-2-pentanone	1.1	19		~~U~~
100-42-5	Styrene	0.66	19	16	~~J~~ J
79-34-5	1,1,2,2-Tetrachloroethane	0.82	19		~~U~~ R ISL
127-18-4	Tetrachloroethene	1.8	19		~~U~~ UJ ISL

m 1/2/09

FORM I VOA

lw 2/9/09

FORM 1
VOLATILE ORGANICS ANALYSIS DATA SHEET

CLIENT SAMPLE NO. 15

MR08-SS052-08D

Lab Name: EMPIRICAL LABS Contract: CH2MHILL

Lab Code: NA Case No.: NA SAS No.: NA SDG No.: LEJEUNE021

Matrix: (soil/water) SOIL Lab Sample ID: 0812021-05

Sample wt/vol: 3.7 (g/mL) G Lab File ID: 1202105B

Level: (low/med) LOW Date Sampled: 12/02/08 13:20

% Moisture: not dec. 29 Date Analyzed: 12/12/08 08:08

GC Column: RTX-VRX ID: 0.25 (mm) Dilution Factor: 1.0

Soil Extract Volume:_____(uL) Soil Aliquot Volume: _____(uL)

CONCENTRATION UNITS: (ug/L or ug/Kg) UG/KG

CAS NO.	COMPOUND	MDL	RL	CONC	Q
108-88-3	Toluene	1.6	19	5.6	~~J~~ J I SL
120-82-1	1,2,4-Trichlorobenzene	0.34	19		~~U~~ R JSL
71-55-6	1,1,1-Trichloroethane	1.7	19		~~U~~ UJ
79-00-5	1,1,2-Trichloroethane	0.66	19		U
79-01-6	Trichloroethene	1.6	19		U
76-13-1	Trichlorotrifluoroethane	1.0	19		U
75-69-4	Trichlorofluoromethane	1.8	19		U
75-01-4	Vinyl chloride	2.1	19		U
1330-20-7	Xylene(total)	1.3	19		U

FORM I VOA

lw 2/9/09

FORM 1
VOLATILE ORGANICS ANALYSIS DATA SHEET

CLIENT SAMPLE NO. 15DL

MR08-SS0
52-08DDL

Lab Name: EMPIRICAL LABS Contract: CH2MHILL

Lab Code: NA Case No.: NA SAS No.: NA SDG No.: LEJEUNE021

Matrix: (soil/water) SOIL Lab Sample ID: 0812021-05DL

Sample wt/vol: 4.1 (g/mL) G Lab File ID: 1202105D

Level: (low/med) MED Date Sampled: 12/02/08 13:20

% Moisture: not dec. 29 Date Analyzed: 12/16/08 04:42 Use Original

GC Column: RTX-VRX ID: 0.25 (mm) Dilution Factor: 1.0

Soil Extract Volume: 5000(uL) Soil Aliquot Volume: 100(uL)

CONCENTRATION UNITS: (ug/L or ug/Kg) UG/KG

CAS NO.	COMPOUND	MDL	RL	CONC	Q
67-64-1	Acetone	170	860	640	UD
71-43-2	Benzene	40	860		UD
75-27-4	Bromodichloromethane	26	860		UD
75-25-2	Bromoform	86	860		UD
74-83-9	Bromomethane	62	860		UD
78-93-3	2-Butanone	120	860		UD
75-15-0	Carbon disulfide	110	860		UD
56-23-5	Carbon tetrachloride	75	860		UD
108-90-7	Chlorobenzene	29	860		UD
75-00-3	Chloroethane	94	860		UD
67-66-3	Chloroform	47	860		UD
74-87-3	Chloromethane	44	860		UD
110-82-7	Cyclohexane	46	860		UD
124-48-1	Dibromochloromethane	29	860		UD
96-12-8	1,2-Dibromo-3-chloropropane	100	430		UD
106-93-4	1,2-Dibromoethane	37	860		UD
95-50-1	1,2-Dichlorobenzene	32	860		UD
541-73-1	1,3-Dichlorobenzene	72	860		UD
106-46-7	1,4-Dichlorobenzene	47	860		UD
75-71-8	Dichlorodifluoromethane	94	860		UD
75-34-3	1,1-Dichloroethane	46	860		UD
107-06-2	1,2-Dichloroethane	39	860		UD
75-35-4	1,1-Dichloroethene	100	860		UD
156-59-2	cis-1,2-Dichloroethene	100	860		UD
156-60-5	trans-1,2-Dichloroethene	94	860		UD
78-87-5	1,2-Dichloropropane	39	860		UD
10061-01-5	cis-1,3-Dichloropropene	43	860		UD
10061-02-6	trans-1,3-Dichloropropene	27	860		UD
100-41-4	Ethylbenzene	64	860		UD
591-78-6	2-Hexanone	200	860		UD
98-82-8	Isopropylbenzene	75	860		UD
79-20-9	Methyl acetate	140	860		UD
75-09-2	Methylene chloride	53	860	860U 350	~~UD~~ B
108-87-2	Methyl cyclohexane	26	860		UD
1634-04-4	Methyl tert-butyl ether	27	860		UD
108-10-1	4-Methyl-2-pentanone	50	860		UD
100-42-5	Styrene	30	860		UD
79-34-5	1,1,2,2-Tetrachloroethane	37	860		UD
127-18-4	Tetrachloroethene	83	860		UD

FORM I VOA

2/9/09

FORM 1
VOLATILE ORGANICS ANALYSIS DATA SHEET

CLIENT SAMPLE NO. 15DL

MR08-SS0
52-08DDL

Lab Name: EMPIRICAL LABS Contract: CH2MHILL

Lab Code: NA Case No.: NA SAS No.: NA SDG No.: LEJEUNE021

Matrix: (soil/water) SOIL Lab Sample ID: 0812021-05DL

Sample wt/vol: 4.1 (g/mL) G Lab File ID: 1202105D

Level: (low/med) MED Date Sampled: 12/02/08 13:20 use

% Moisture: not dec. 29 Date Analyzed: 12/16/08 04:42

GC Column: RTX-VRX ID: 0.25 (mm) Dilution Factor: 1.0 Original

Soil Extract Volume: 5000(uL) Soil Aliquot Volume: 100(uL)

CONCENTRATION UNITS: (ug/L or ug/Kg) UG/KG

CAS NO.	COMPOUND	MDL	RL	CONC	Q
108-88-3	Toluene	74	860		UD
120-82-1	1,2,4-Trichlorobenzene	15	860		UD
71-55-6	1,1,1-Trichloroethane	77	860		UD
79-00-5	1,1,2-Trichloroethane	30	860		UD
79-01-6	Trichloroethene	73	860		UD
76-13-1	Trichlorotrifluoroethane	47	860		UD
75-69-4	Trichlorofluoromethane	81	860		UD
75-01-4	Vinyl chloride	94	860		UD
1330-20-7	Xylene(total)	60	860		UD

R DL

FORM I VOA

lw
2/9/09

16

FORM 1
VOLATILE ORGANICS ANALYSIS DATA SHEET

CLIENT SAMPLE NO.

MR08-IS05
2-5-6-08D

Lab Name: EMPIRICAL LABS Contract: CH2MHILL

Lab Code: NA Case No.: NA SAS No.: NA SDG No.: LEJEUNE021

Matrix: (soil/water) SOIL Lab Sample ID: 0812021-06

Sample wt/vol: 5.1 (g/mL) G Lab File ID: 1202106A

Level: (low/med) LOW Date Sampled: 12/02/08 13:45

% Moisture: not dec. 17 Date Analyzed: 12/12/08 08:47

GC Column: RTX-VRX ID: 0.25 (mm) Dilution Factor: 1.0

Soil Extract Volume:_____(uL) Soil Aliquot Volume: _____(uL)

CONCENTRATION UNITS: (ug/L or ug/Kg) UG/KG

CAS NO.	COMPOUND	MDL	RL	CONC	Q
67-64-1	Acetone	2.4	12	18	U BL
71-43-2	Benzene	0.56	12		U
75-27-4	Bromodichloromethane	0.35	12		U
75-25-2	Bromoform	1.2	12		U
74-83-9	Bromomethane	0.85	12		~~U~~ UJ CCH
78-93-3	2-Butanone	1.6	12		U
75-15-0	Carbon disulfide	1.5	12		U
56-23-5	Carbon tetrachloride	1.0	12		U
108-90-7	Chlorobenzene	0.40	12		U
75-00-3	Chloroethane	1.3	12		U
67-66-3	Chloroform	0.65	12	12U ~~0.83~~ ~~J~~	BL
74-87-3	Chloromethane	0.61	12		U
110-82-7	Cyclohexane	0.64	12		U
124-48-1	Dibromochloromethane	0.40	12		U
96-12-8	1,2-Dibromo-3-chloropropane	1.4	5.9		U
106-93-4	1,2-Dibromoethane	0.51	12		U
95-50-1	1,2-Dichlorobenzene	0.44	12		U
541-73-1	1,3-Dichlorobenzene	0.99	12		U
106-46-7	1,4-Dichlorobenzene	0.65	12		U
75-71-8	Dichlorodifluoromethane	1.3	12		U
75-34-3	1,1-Dichloroethane	0.64	12		U
107-06-2	1,2-Dichloroethane	0.54	12		U
75-35-4	1,1-Dichloroethene	1.4	12		U
156-59-2	cis-1,2-Dichloroethene	1.4	12		U
156-60-5	trans-1,2-Dichloroethene	1.3	12		U
78-87-5	1,2-Dichloropropane	0.54	12		U
10061-01-5	cis-1,3-Dichloropropene	0.59	12		U
10061-02-6	trans-1,3-Dichloropropene	0.38	12		U
100-41-4	Ethylbenzene	0.89	12		U
591-78-6	2-Hexanone	2.7	12		U
98-82-8	Isopropylbenzene	1.0	12		U
79-20-9	Methyl acetate	1.9	12		U
75-09-2	Methylene chloride	0.73	12	12U ~~2.0~~ ~~JB~~	B
108-87-2	Methyl cyclohexane	0.35	12		U
1634-04-4	Methyl tert-butyl ether	0.38	12		U
108-10-1	4-Methyl-2-pentanone	0.68	12		U
100-42-5	Styrene	0.41	12		U
79-34-5	1,1,2,2-Tetrachloroethane	0.51	12		U
127-18-4	Tetrachloroethene	1.1	12		U

FORM I VOA

LW 2/9/09

FORM 1
VOLATILE ORGANICS ANALYSIS DATA SHEET

CLIENT SAMPLE NO. 16

MR08-IS05
2-5-6-08D

Lab Name: EMPIRICAL LABS Contract: CH2MHILL

Lab Code: NA Case No.: NA SAS No.: NA SDG No.: LEJEUNE021

Matrix: (soil/water) SOIL Lab Sample ID: 0812021-06

Sample wt/vol: 5.1 (g/mL) G Lab File ID: 1202106A

Level: (low/med) LOW Date Sampled: 12/02/08 13:45

% Moisture: not dec. 17 Date Analyzed: 12/12/08 08:47

GC Column: RTX-VRX ID: 0.25 (mm) Dilution Factor: 1.0

Soil Extract Volume:_____(uL) Soil Aliquot Volume: _____(uL)

CONCENTRATION UNITS: (ug/L or ug/Kg) UG/KG

CAS NO.	COMPOUND	MDL	RL	CONC	Q
108-88-3	Toluene	1.0	12		U
120-82-1	1,2,4-Trichlorobenzene	0.21	12		U
71-55-6	1,1,1-Trichloroethane	1.1	12		U
79-00-5	1,1,2-Trichloroethane	0.41	12		U
79-01-6	Trichloroethene	1.0	12		U
76-13-1	Trichlorotrifluoroethane	0.65	12		U
75-69-4	Trichlorofluoromethane	1.1	12		U
75-01-4	Vinyl chloride	1.3	12		U
1330-20-7	Xylene(total)	0.83	12		U

2/9/09

FORM 1
VOLATILE ORGANICS ANALYSIS DATA SHEET

CLIENT SAMPLE NO. 17

MR08-SS053-08D

Lab Name: EMPIRICAL LABS Contract: CH2MHILL

Lab Code: NA Case No.: NA SAS No.: NA SDG No.: LEJEUNE021

Matrix: (soil/water) SOIL Lab Sample ID: 0812021-07

Sample wt/vol: 4.5 (g/mL) G Lab File ID: 1202107A

Level: (low/med) LOW Date Sampled: 12/02/08 14:05

% Moisture: not dec. 19 Date Analyzed: 12/12/08 09:26

GC Column: RTX-VRX ID: 0.25 (mm) Dilution Factor: 1.0

Soil Extract Volume:_____(uL) Soil Aliquot Volume: _____(uL)

CONCENTRATION UNITS: (ug/L or ug/Kg) UG/KG

CAS NO.	COMPOUND	MDL	RL	CONC	Q	
67-64-1	Acetone	2.7	14	470	J	SS
71-43-2	Benzene	0.64	14		U UJ	
75-27-4	Bromodichloromethane	0.41	14		U	
75-25-2	Bromoform	1.4	14		U	
74-83-9	Bromomethane	0.99	14		U	
78-93-3	2-Butanone	1.9	14	4.4	J J	
75-15-0	Carbon disulfide	1.8	14		U UJ	
56-23-5	Carbon tetrachloride	1.2	14		U	
108-90-7	Chlorobenzene	0.47	14		U	
75-00-3	Chloroethane	1.5	14		U	
67-66-3	Chloroform	0.76	14		U	
74-87-3	Chloromethane	0.71	14		U	
110-82-7	Cyclohexane	0.74	14		U	
124-48-1	Dibromochloromethane	0.47	14		U	
96-12-8	1,2-Dibromo-3-chloropropane	1.6	6.9		U	
106-93-4	1,2-Dibromoethane	0.59	14		U	
95-50-1	1,2-Dichlorobenzene	0.51	14		U	
541-73-1	1,3-Dichlorobenzene	1.2	14		U	
106-46-7	1,4-Dichlorobenzene	0.76	14		U	
75-71-8	Dichlorodifluoromethane	1.5	14		U	
75-34-3	1,1-Dichloroethane	0.74	14		U	
107-06-2	1,2-Dichloroethane	0.63	14		U	
75-35-4	1,1-Dichloroethene	1.6	14		U	
156-59-2	cis-1,2-Dichloroethene	1.6	14		U	
156-60-5	trans-1,2-Dichloroethene	1.5	14		U	
78-87-5	1,2-Dichloropropane	0.63	14		U	
10061-01-5	cis-1,3-Dichloropropene	0.69	14		U	
10061-02-6	trans-1,3-Dichloropropene	0.44	14		U	
100-41-4	Ethylbenzene	1.0	14		U	
591-78-6	2-Hexanone	3.2	14		U	
98-82-8	Isopropylbenzene	1.2	14		U	
79-20-9	Methyl acetate	2.2	14		U	
75-09-2	Methylene chloride	0.85	14	14	UJ ~~2.4~~ ~~JB~~	SS LB
108-87-2	Methyl cyclohexane	0.41	14		U UJ	
1634-04-4	Methyl tert-butyl ether	0.44	14		U	
108-10-1	4-Methyl-2-pentanone	0.80	14		U	
100-42-5	Styrene	0.48	14		U	
79-34-5	1,1,2,2-Tetrachloroethane	0.59	14		U	
127-18-4	Tetrachloroethene	1.3	14		U	

FORM I VOA

2/9/09

FORM 1
VOLATILE ORGANICS ANALYSIS DATA SHEET

CLIENT SAMPLE NO. 17

MR08-SS053-08D

Lab Name: EMPIRICAL LABS Contract: CH2MHILL

Lab Code: NA Case No.: NA SAS No.: NA SDG No.: LEJEUNE021

Matrix: (soil/water) SOIL Lab Sample ID: 0812021-07

Sample wt/vol: 4.5 (g/mL) G Lab File ID: 1202107A

Level: (low/med) LOW Date Sampled: 12/02/08 14:05

% Moisture: not dec. 19 Date Analyzed: 12/12/08 09:26

GC Column: RTX-VRX ID: 0.25 (mm) Dilution Factor: 1.0

Soil Extract Volume:_____(uL) Soil Aliquot Volume: _____(uL)

CONCENTRATION UNITS: (ug/L or ug/Kg) UG/KG

CAS NO.	COMPOUND	MDL	RL	CONC	Q
108-88-3------	Toluene	1.2	14		U UJ SS
120-82-1------	1,2,4-Trichlorobenzene	0.25	14		U
71-55-6-------	1,1,1-Trichloroethane	1.2	14		U
79-00-5-------	1,1,2-Trichloroethane	0.48	14		U
79-01-6-------	Trichloroethene	1.2	14		U
76-13-1-------	Trichlorotrifluoroethane	0.76	14		U
75-69-4-------	Trichlorofluoromethane	1.3	14		U
75-01-4-------	Vinyl chloride	1.5	14		U
1330-20-7-----	Xylene(total)	0.96	14		U

MW 2/9/09

FORM 1
VOLATILE ORGANICS ANALYSIS DATA SHEET

CLIENT SAMPLE NO. 17DL

MR08-SS0
53-08DDL

Lab Name: EMPIRICAL LABS Contract: CH2MHILL

Lab Code: NA Case No.: NA SAS No.: NA SDG No.: LEJEUNE021

Matrix: (soil/water) SOIL Lab Sample ID: 0812021-07DL

Sample wt/vol: 3.6 (g/mL) G Lab File ID: 1202107D

Level: (low/med) MED Date Sampled: 12/02/08 14:05

% Moisture: not dec. 19 Date Analyzed: 12/12/08 14:39 Use original

GC Column: RTX-VRX ID: 0.25 (mm) Dilution Factor: 1.0

Soil Extract Volume: 5000(uL) Soil Aliquot Volume: 100(uL)

CONCENTRATION UNITS: (ug/L or ug/Kg) UG/KG

CAS NO.	COMPOUND	MDL	RL	CONC	Q
67-64-1	Acetone	170	850	850U ~~390~~ ~~JBD~~	BL
71-43-2	Benzene	40	850		UD
75-27-4	Bromodichloromethane	26	850		UD
75-25-2	Bromoform	85	850		UD
74-83-9	Bromomethane	61	850		UD
78-93-3	2-Butanone	120	850		UD
75-15-0	Carbon disulfide	110	850		UD
56-23-5	Carbon tetrachloride	75	850		UD
108-90-7	Chlorobenzene	29	850		UD
75-00-3	Chloroethane	94	850		UD
67-66-3	Chloroform	47	850		UD
74-87-3	Chloromethane	44	850		UD
110-82-7	Cyclohexane	46	850		UD
124-48-1	Dibromochloromethane	29	850		UD
96-12-8	1,2-Dibromo-3-chloropropane	100	420		UD
106-93-4	1,2-Dibromoethane	37	850		UD
95-50-1	1,2-Dichlorobenzene	32	850		UD
541-73-1	1,3-Dichlorobenzene	72	850		UD
106-46-7	1,4-Dichlorobenzene	47	850		UD
75-71-8	Dichlorodifluoromethane	94	850		UD
75-34-3	1,1-Dichloroethane	46	850		UD
107-06-2	1,2-Dichloroethane	39	850		UD
75-35-4	1,1-Dichloroethene	100	850		UD
156-59-2	cis-1,2-Dichloroethene	100	850		UD
156-60-5	trans-1,2-Dichloroethene	94	850		UD
78-87-5	1,2-Dichloropropane	39	850		UD
10061-01-5	cis-1,3-Dichloropropene	42	850		UD
10061-02-6	trans-1,3-Dichloropropene	27	850		UD
100-41-4	Ethylbenzene	64	850		UD
591-78-6	2-Hexanone	200	850		UD
98-82-8	Isopropylbenzene	75	850		UD
79-20-9	Methyl acetate	140	850		UD
75-09-2	Methylene chloride	53	850	850U ~~700~~ ~~JBD~~	B
108-87-2	Methyl cyclohexane	26	850		UD
1634-04-4	Methyl tert-butyl ether	27	850		UD
108-10-1	4-Methyl-2-pentanone	49	850		UD
100-42-5	Styrene	30	850		UD
79-34-5	1,1,2,2-Tetrachloroethane	37	850		UD
127-18-4	Tetrachloroethene	83	850		UD

DL

cm 12/08

FORM I VOA

cw 2/9/09

FORM 1
VOLATILE ORGANICS ANALYSIS DATA SHEET

CLIENT SAMPLE NO. 17DL

MR08-SS0
53-08DDL

Lab Name: EMPIRICAL LABS Contract: CH2MHILL

Lab Code: NA Case No.: NA SAS No.: NA SDG No.: LEJEUNE021

Matrix: (soil/water) SOIL Lab Sample ID: 0812021-07DL

Sample wt/vol: 3.6 (g/mL) G Lab File ID: 1202107D

Level: (low/med) MED Date Sampled: 12/02/08 14:05

% Moisture: not dec. 19 Date Analyzed: 12/12/08 14:39

GC Column: RTX-VRX ID: 0.25 (mm) Dilution Factor: 1.0

Use origin

Soil Extract Volume: 5000(uL) Soil Aliquot Volume: 100(uL)

CONCENTRATION UNITS: (ug/L or ug/Kg) UG/KG

CAS NO.	COMPOUND	MDL	RL	CONC	Q
108-88-3	Toluene	73	850		UD
120-82-1	1,2,4-Trichlorobenzene	15	850		UD
71-55-6	1,1,1-Trichloroethane	77	850		UD
79-00-5	1,1,2-Trichloroethane	30	850		UD
79-01-6	Trichloroethene	72	850		UD
76-13-1	Trichlorotrifluoroethane	47	850		UD
75-69-4	Trichlorofluoromethane	81	850		UD
75-01-4	Vinyl chloride	94	850		UD
1330-20-7	Xylene(total)	60	850		UD

RDL

FORM I VOA

RW
2/9/09

FORM 1
VOLATILE ORGANICS ANALYSIS DATA SHEET

CLIENT SAMPLE NO. 18

MR08-IS05
3-5-6-08D

Lab Name: EMPIRICAL LABS Contract: CH2MHILL

Lab Code: NA Case No.: NA SAS No.: NA SDG No.: LEJEUNE021

Matrix: (soil/water) SOIL Lab Sample ID: 0812021-08

Sample wt/vol: 4.1 (g/mL) G Lab File ID: 1202108A

Level: (low/med) LOW Date Sampled: 12/02/08 14:15

% Moisture: not dec. 14 Date Analyzed: 12/12/08 10:44

GC Column: RTX-VRX ID: 0.25 (mm) Dilution Factor: 1.0

Soil Extract Volume:_____(uL) Soil Aliquot Volume: _____(uL)

CONCENTRATION UNITS: (ug/L or ug/Kg) UG/KG

CAS NO.	COMPOUND	MDL	RL	CONC	Q
67-64-1	Acetone	2.8	14	16	U BL
71-43-2	Benzene	0.67	14		U
75-27-4	Bromodichloromethane	0.43	14		U
75-25-2	Bromoform	1.4	14		U
74-83-9	Bromomethane	1.0	14		~~U~~ UJ CCA
78-93-3	2-Butanone	2.0	14		U
75-15-0	Carbon disulfide	1.8	14		U
56-23-5	Carbon tetrachloride	1.2	14		U
108-90-7	Chlorobenzene	0.49	14		U
75-00-3	Chloroethane	1.6	14		U
67-66-3	Chloroform	0.79	14	2.4	~~J~~
74-87-3	Chloromethane	0.74	14		U
110-82-7	Cyclohexane	0.77	14		U
124-48-1	Dibromochloromethane	0.49	14		U
96-12-8	1,2-Dibromo-3-chloropropane	1.7	7.1		U
106-93-4	1,2-Dibromoethane	0.61	14		U
95-50-1	1,2-Dichlorobenzene	0.53	14		U
541-73-1	1,3-Dichlorobenzene	1.2	14		U
106-46-7	1,4-Dichlorobenzene	0.79	14		U
75-71-8	Dichlorodifluoromethane	1.6	14		U
75-34-3	1,1-Dichloroethane	0.77	14		U
107-06-2	1,2-Dichloroethane	0.66	14		U
75-35-4	1,1-Dichloroethene	1.7	14		U
156-59-2	cis-1,2-Dichloroethene	1.7	14		U
156-60-5	trans-1,2-Dichloroethene	1.6	14		U
78-87-5	1,2-Dichloropropane	0.66	14		U
10061-01-5	cis-1,3-Dichloropropene	0.71	14		U
10061-02-6	trans-1,3-Dichloropropene	0.46	14		U
100-41-4	Ethylbenzene	1.1	14		U
591-78-6	2-Hexanone	3.3	14		U
98-82-8	Isopropylbenzene	1.2	14		U
79-20-9	Methyl acetate	2.3	14		U
75-09-2	Methylene chloride	0.89	14	14 ~~4.3~~	~~JB~~ B
108-87-2	Methyl cyclohexane	0.43	14		U
1634-04-4	Methyl tert-butyl ether	0.46	14		U
108-10-1	4-Methyl-2-pentanone	0.83	14		U
100-42-5	Styrene	0.50	14		U
79-34-5	1,1,2,2-Tetrachloroethane	0.61	14		U
127-18-4	Tetrachloroethene	1.4	14		U

mc 1/2/09

FORM I VOA

lw 2/9/09

FORM 1
VOLATILE ORGANICS ANALYSIS DATA SHEET

CLIENT SAMPLE NO. 18

MR08-IS05
3-5-6-08D

Lab Name: EMPIRICAL LABS Contract: CH2MHILL

Lab Code: NA Case No.: NA SAS No.: NA SDG No.: LEJEUNE021

Matrix: (soil/water) SOIL Lab Sample ID: 0812021-08

Sample wt/vol: 4.1 (g/mL) G Lab File ID: 1202108A

Level: (low/med) LOW Date Sampled: 12/02/08 14:15

% Moisture: not dec. 14 Date Analyzed: 12/12/08 10:44

GC Column: RTX-VRX ID: 0.25 (mm) Dilution Factor: 1.0

Soil Extract Volume:_____(uL) Soil Aliquot Volume: _____(uL)

CONCENTRATION UNITS: (ug/L or ug/Kg) UG/KG

CAS NO.	COMPOUND	MDL	RL	CONC	Q
108-88-3	Toluene	1.2	14		U
120-82-1	1,2,4-Trichlorobenzene	0.26	14		U
71-55-6	1,1,1-Trichloroethane	1.3	14		U
79-00-5	1,1,2-Trichloroethane	0.50	14		U
79-01-6	Trichloroethene	1.2	14		U
76-13-1	Trichlorotrifluoroethane	0.79	14		U
75-69-4	Trichlorofluoromethane	1.4	14		U
75-01-4	Vinyl chloride	1.6	14		U
1330-20-7	Xylene(total)	1.0	14		U

ews
2/9/09

FORM 1
VOLATILE ORGANICS ANALYSIS DATA SHEET

CLIENT SAMPLE NO.

MR08-SS054-08D

Lab Name: EMPIRICAL LABS Contract: CH2MHILL

Lab Code: NA Case No.: NA SAS No.: NA SDG No.: LEJEUNE021

Matrix: (soil/water) SOIL Lab Sample ID: 0812021-09

Sample wt/vol: 2.7 (g/mL) G Lab File ID: 1202109A

Level: (low/med) LOW Date Sampled: 12/02/08 15:10

% Moisture: not dec. 38 Date Analyzed: 12/12/08 11:24

GC Column: RTX-VRX ID: 0.25 (mm) Dilution Factor: 1.0

Soil Extract Volume:_____(uL) Soil Aliquot Volume: _____(uL)

CONCENTRATION UNITS: (ug/L or ug/Kg) UG/KG

CAS NO.	COMPOUND	MDL	RL	CONC	Q		
67-64-1	Acetone	5.9	30	1000 J ~~1800~~	E	R	DL
71-43-2	Benzene	1.4	30		U	UJ	SSL
75-27-4	Bromodichloromethane	0.89	30		U		
75-25-2	Bromoform	3.0	30		U		
74-83-9	Bromomethane	2.1	30		U		
78-93-3	2-Butanone	4.2	30	15	~~J~~	J	
75-15-0	Carbon disulfide	3.8	30		U	UJ	
56-23-5	Carbon tetrachloride	2.6	30		U		
108-90-7	Chlorobenzene	1.0	30		U		
75-00-3	Chloroethane	3.3	30		U		
67-66-3	Chloroform	1.6	30	4.5	~~J~~	J	
74-87-3	Chloromethane	1.5	30		U	UJ	
110-82-7	Cyclohexane	1.6	30		U		
124-48-1	Dibromochloromethane	1.0	30		U		
96-12-8	1,2-Dibromo-3-chloropropane	3.6	15		U		
106-93-4	1,2-Dibromoethane	1.3	30		U		
95-50-1	1,2-Dichlorobenzene	1.1	30		U		
541-73-1	1,3-Dichlorobenzene	2.5	30		U		
106-46-7	1,4-Dichlorobenzene	1.6	30		U		
75-71-8	Dichlorodifluoromethane	3.3	30		U		
75-34-3	1,1-Dichloroethane	1.6	30		U		
107-06-2	1,2-Dichloroethane	1.4	30		U		
75-35-4	1,1-Dichloroethene	3.6	30		U		
156-59-2	cis-1,2-Dichloroethene	3.6	30		U		
156-60-5	trans-1,2-Dichloroethene	3.3	30		U		
78-87-5	1,2-Dichloropropane	1.4	30		U		
10061-01-5	cis-1,3-Dichloropropene	1.5	30		U		
10061-02-6	trans-1,3-Dichloropropene	0.95	30		U		
100-41-4	Ethylbenzene	2.2	30		U		
591-78-6	2-Hexanone	6.8	30		U		
98-82-8	Isopropylbenzene	2.6	30		U		
79-20-9	Methyl acetate	4.7	30		U		
75-09-2	Methylene chloride	1.8	30	30 UJ ~~6.0 JB~~			SSL
108-87-2	Methyl cyclohexane	0.89	30		U	UJ	
1634-04-4	Methyl tert-butyl ether	0.95	30		U		
108-10-1	4-Methyl-2-pentanone	1.7	30		U		
100-42-5	Styrene	1.0	30		U		
79-34-5	1,1,2,2-Tetrachloroethane	1.3	30		U		
127-18-4	Tetrachloroethene	2.9	30		U		

m 12/09

RW 1/9/09

FORM 1
VOLATILE ORGANICS ANALYSIS DATA SHEET

CLIENT SAMPLE NO. 19

MR08-SS054-08D

Lab Name: EMPIRICAL LABS Contract: CH2MHILL

Lab Code: NA Case No.: NA SAS No.: NA SDG No.: LEJEUNE021

Matrix: (soil/water) SOIL Lab Sample ID: 0812021-09

Sample wt/vol: 2.7 (g/mL) G Lab File ID: 1202109A

Level: (low/med) LOW Date Sampled: 12/02/08 15:10

% Moisture: not dec. 38 Date Analyzed: 12/12/08 11:24

GC Column: RTX-VRX ID: 0.25 (mm) Dilution Factor: 1.0

Soil Extract Volume:_____(uL) Soil Aliquot Volume: _____(uL)

CONCENTRATION UNITS: (ug/L or ug/Kg) UG/KG

CAS NO.	COMPOUND	MDL	RL	CONC	Q
108-88-3	Toluene	2.5	30		U
120-82-1	1,2,4-Trichlorobenzene	0.53	30		U
71-55-6	1,1,1-Trichloroethane	2.7	30		U
79-00-5	1,1,2-Trichloroethane	1.0	30		U
79-01-6	Trichloroethene	2.5	30		U
76-13-1	Trichlorotrifluoroethane	1.6	30		U
75-69-4	Trichlorofluoromethane	2.8	30		U
75-01-4	Vinyl chloride	3.3	30		U
1330-20-7	Xylene(total)	2.1	30		U

U75S1

FORM I VOA

lw 2/9/09

FORM 1
VOLATILE ORGANICS ANALYSIS DATA SHEET

CLIENT SAMPLE NO. 19DL

MR08-SS0
54-08DDL

Lab Name: EMPIRICAL LABS Contract: CH2MHILL

Lab Code: NA Case No.: NA SAS No.: NA SDG No.: LEJEUNE021

Matrix: (soil/water) SOIL Lab Sample ID: 0812021-09DL

Sample wt/vol: 2.6 (g/mL) G Lab File ID: 1202109D

Level: (low/med) MED Date Sampled: 12/02/08 15:10 Use only

% Moisture: not dec. 38 Date Analyzed: 12/16/08 05:21

GC Column: RTX-VRX ID: 0.25 (mm) Dilution Factor: 1.0

Soil Extract Volume: 5000(uL) Soil Aliquot Volume: 100(uL)

CONCENTRATION UNITS: (ug/L or ug/Kg) UG/KG

CAS NO.	COMPOUND	MDL	RL	CONC	Q
67-64-1	Acetone	310	1500	1000	JD
71-43-2	Benzene	73	1500		UD
75-27-4	Bromodichloromethane	46	1500		UD
75-25-2	Bromoform	150	1500		UD
74-83-9	Bromomethane	110	1500		UD
78-93-3	2-Butanone	220	1500		UD
75-15-0	Carbon disulfide	200	1500		UD
56-23-5	Carbon tetrachloride	140	1500		UD
108-90-7	Chlorobenzene	52	1500		UD
75-00-3	Chloroethane	170	1500		UD
67-66-3	Chloroform	85	1500		UD
74-87-3	Chloromethane	80	1500		UD
110-82-7	Cyclohexane	83	1500		UD
124-48-1	Dibromochloromethane	52	1500		UD
96-12-8	1,2-Dibromo-3-chloropropane	180	770		UD
106-93-4	1,2-Dibromoethane	66	1500		UD
95-50-1	1,2-Dichlorobenzene	57	1500		UD
541-73-1	1,3-Dichlorobenzene	130	1500		UD
106-46-7	1,4-Dichlorobenzene	85	1500		UD
75-71-8	Dichlorodifluoromethane	170	1500		UD
75-34-3	1,1-Dichloroethane	83	1500		UD
107-06-2	1,2-Dichloroethane	71	1500		UD
75-35-4	1,1-Dichloroethene	180	1500		UD
156-59-2	cis-1,2-Dichloroethene	180	1500		UD
156-60-5	trans-1,2-Dichloroethene	170	1500		UD
78-87-5	1,2-Dichloropropane	71	1500		UD
10061-01-5	cis-1,3-Dichloropropene	77	1500		UD
10061-02-6	trans-1,3-Dichloropropene	49	1500		UD
100-41-4	Ethylbenzene	120	1500		UD
591-78-6	2-Hexanone	360	1500		UD
98-82-8	Isopropylbenzene	140	1500		UD
79-20-9	Methyl acetate	250	1500		UD
75-09-2	Methylene chloride	96	1500	1500U ~~900~~ ~~JBD~~	B
108-87-2	Methyl cyclohexane	46	1500		UD
1634-04-4	Methyl tert-butyl ether	49	1500		UD
108-10-1	4-Methyl-2-pentanone	90	1500		UD
100-42-5	Styrene	54	1500		UD
79-34-5	1,1,2,2-Tetrachloroethane	66	1500		UD
127-18-4	Tetrachloroethene	150	1500		UD

DL

m 1/2/09

FORM I VOA

MW 2/9/09

FORM 1
VOLATILE ORGANICS ANALYSIS DATA SHEET

CLIENT SAMPLE NO. 19DL

MR08-SS0
54-08DDL

Lab Name: EMPIRICAL LABS Contract: CH2MHILL

Lab Code: NA Case No.: NA SAS No.: NA SDG No.: LEJEUNE021

Matrix: (soil/water) SOIL Lab Sample ID: 0812021-09DL

Sample wt/vol: 2.6 (g/mL) G Lab File ID: 1202109D

Level: (low/med) MED Date Sampled: 12/02/08 15:10

% Moisture: not dec. 38 Date Analyzed: 12/16/08 05:21

GC Column: RTX-VRX ID: 0.25 (mm) Dilution Factor: 1.0

Soil Extract Volume: 5000(uL) Soil Aliquot Volume: 100(uL)

Use only Neil

CONCENTRATION UNITS: (ug/L or ug/Kg) UG/KG

CAS NO.	COMPOUND	MDL	RL	CONC	Q
108-88-3	Toluene	130	1500		UD
120-82-1	1,2,4-Trichlorobenzene	28	1500		UD
71-55-6	1,1,1-Trichloroethane	140	1500		UD
79-00-5	1,1,2-Trichloroethane	54	1500		UD
79-01-6	Trichloroethene	130	1500		UD
76-13-1	Trichlorotrifluoroethane	85	1500		UD
75-69-4	Trichlorofluoromethane	150	1500		UD
75-01-4	Vinyl chloride	170	1500		UD
1330-20-7	Xylene(total)	110	1500		UD

RDL

lw 2/9/09

FORM 1
VOLATILE ORGANICS ANALYSIS DATA SHEET

CLIENT SAMPLE NO.

MR08-IS05
4-6-7-08D

Lab Name: EMPIRICAL LABS Contract: CH2MHILL

Lab Code: NA Case No.: NA SAS No.: NA SDG No.: LEJEUNE021

Matrix: (soil/water) SOIL Lab Sample ID: 0812021-10

Sample wt/vol: 4.5 (g/mL) G Lab File ID: 1202110A

Level: (low/med) LOW Date Sampled: 12/02/08 15:30

% Moisture: not dec. 15 Date Analyzed: 12/12/08 12:03

GC Column: RTX-VRX ID: 0.25 (mm) Dilution Factor: 1.0

Soil Extract Volume:_____(uL) Soil Aliquot Volume: _____(uL)

CONCENTRATION UNITS: (ug/L or ug/Kg) UG/KG

CAS NO.	COMPOUND	MDL	RL	CONC	Q
67-64-1	Acetone	2.6	13	62	
71-43-2	Benzene	0.62	13		U
75-27-4	Bromodichloromethane	0.40	13		U
75-25-2	Bromoform	1.3	13		U
74-83-9	Bromomethane	0.95	13		~~U~~ UJ CCL
78-93-3	2-Butanone	1.8	13		U
75-15-0	Carbon disulfide	1.7	13		U
56-23-5	Carbon tetrachloride	1.2	13		U
108-90-7	Chlorobenzene	0.45	13		U
75-00-3	Chloroethane	1.4	13		U
67-66-3	Chloroform	0.72	13	3.9	J
74-87-3	Chloromethane	0.68	13		U
110-82-7	Cyclohexane	0.71	13		U
124-48-1	Dibromochloromethane	0.45	13		U
96-12-8	1,2-Dibromo-3-chloropropane	1.6	6.6		U
106-93-4	1,2-Dibromoethane	0.57	13		U
95-50-1	1,2-Dichlorobenzene	0.49	13		U
541-73-1	1,3-Dichlorobenzene	1.1	13		U
106-46-7	1,4-Dichlorobenzene	0.72	13		U
75-71-8	Dichlorodifluoromethane	1.4	13		U ~~X~~
75-34-3	1,1-Dichloroethane	0.71	13		U
107-06-2	1,2-Dichloroethane	0.61	13		U
75-35-4	1,1-Dichloroethene	1.6	13		U
156-59-2	cis-1,2-Dichloroethene	1.6	13		U
156-60-5	trans-1,2-Dichloroethene	1.4	13		U
78-87-5	1,2-Dichloropropane	0.61	13		U
10061-01-5	cis-1,3-Dichloropropene	0.66	13		U
10061-02-6	trans-1,3-Dichloropropene	0.42	13		U
100-41-4	Ethylbenzene	0.99	13		U
591-78-6	2-Hexanone	3.0	13		U
98-82-8	Isopropylbenzene	1.2	13		U
79-20-9	Methyl acetate	2.1	13		U
75-09-2	Methylene chloride	0.82	13	13U	3.4 ~~JB~~ BL
108-87-2	Methyl cyclohexane	0.40	13		U
1634-04-4	Methyl tert-butyl ether	0.42	13		U
108-10-1	4-Methyl-2-pentanone	0.76	13		U
100-42-5	Styrene	0.46	13		U
79-34-5	1,1,2,2-Tetrachloroethane	0.57	13		U
127-18-4	Tetrachloroethene	1.3	13		U

m 1/2/09

FORM I VOA

lew 2/9/09

FORM 1
VOLATILE ORGANICS ANALYSIS DATA SHEET

CLIENT SAMPLE NO. 20

MR08-IS05
4-6-7-08D

Lab Name: EMPIRICAL LABS Contract: CH2MHILL

Lab Code: NA Case No.: NA SAS No.: NA SDG No.: LEJEUNE021

Matrix: (soil/water) SOIL Lab Sample ID: 0812021-10

Sample wt/vol: 4.5 (g/mL) G Lab File ID: 1202110A

Level: (low/med) LOW Date Sampled: 12/02/08 15:30

% Moisture: not dec. 15 Date Analyzed: 12/12/08 12:03

GC Column: RTX-VRX ID: 0.25 (mm) Dilution Factor: 1.0

Soil Extract Volume:_____(uL) Soil Aliquot Volume: _____(uL)

CONCENTRATION UNITS: (ug/L or ug/Kg) UG/KG

CAS NO.	COMPOUND	MDL	RL	CONC	Q
108-88-3	Toluene	1.1	13		U
120-82-1	1,2,4-Trichlorobenzene	0.24	13		U
71-55-6	1,1,1-Trichloroethane	1.2	13		U
79-00-5	1,1,2-Trichloroethane	0.46	13		U
79-01-6	Trichloroethene	1.1	13		U
76-13-1	Trichlorotrifluoroethane	0.72	13		U
75-69-4	Trichlorofluoromethane	1.2	13		U
75-01-4	Vinyl chloride	1.4	13		U
1330-20-7	Xylene(total)	0.92	13		U

QW 2/9/09

FORM 1
VOLATILE ORGANICS ANALYSIS DATA SHEET

CLIENT SAMPLE NO. 21

MR08-SS055-08D

Lab Name: EMPIRICAL LABS Contract: CH2MHILL

Lab Code: NA Case No.: NA SAS No.: NA SDG No.: LEJEUNE021

Matrix: (soil/water) SOIL Lab Sample ID: 0812021-11

Sample wt/vol: 3.4 (g/mL) G Lab File ID: 1202111A

Level: (low/med) LOW Date Sampled: 12/02/08 15:55

% Moisture: not dec. 40 Date Analyzed: 12/12/08 12:42

GC Column: RTX-VRX ID: 0.25 (mm) Dilution Factor: 1.0

Soil Extract Volume:_____(uL) Soil Aliquot Volume: _____(uL)

CONCENTRATION UNITS: (ug/L or ug/Kg) UG/KG

CAS NO.	COMPOUND	MDL	RL	CONC	Q
67-64-1-------	Acetone	4.9	24	900J ~~1300~~	~~E~~ R
71-43-2-------	Benzene	1.2	24		U UJ
75-27-4-------	Bromodichloromethane	0.74	24		U
75-25-2-------	Bromoform	2.4	24		U
74-83-9-------	Bromomethane	1.8	24		U
78-93-3-------	2-Butanone	3.4	24	37	J
75-15-0-------	Carbon disulfide	3.2	24		U UJ
56-23-5-------	Carbon tetrachloride	2.2	24		U
108-90-7------	Chlorobenzene	0.83	24		U
75-00-3-------	Chloroethane	2.7	24		U
67-66-3-------	Chloroform	1.3	24		U
74-87-3-------	Chloromethane	1.3	24		U
110-82-7------	Cyclohexane	1.3	24		U
124-48-1------	Dibromochloromethane	0.83	24		U
96-12-8-------	1,2-Dibromo-3-chloropropane	2.9	12		U
106-93-4------	1,2-Dibromoethane	1.0	24		U
95-50-1-------	1,2-Dichlorobenzene	0.91	24		U
541-73-1------	1,3-Dichlorobenzene	2.0	24		U
106-46-7------	1,4-Dichlorobenzene	1.3	24		U
75-71-8-------	Dichlorodifluoromethane	2.7	24		U
75-34-3-------	1,1-Dichloroethane	1.3	24		U
107-06-2------	1,2-Dichloroethane	1.1	24		U
75-35-4-------	1,1-Dichloroethene	2.9	24		U
156-59-2------	cis-1,2-Dichloroethene	2.9	24		U
156-60-5------	trans-1,2-Dichloroethene	2.7	24		U
78-87-5-------	1,2-Dichloropropane	1.1	24		U
10061-01-5----	cis-1,3-Dichloropropene	1.2	24		U
10061-02-6----	trans-1,3-Dichloropropene	0.78	24		U
100-41-4------	Ethylbenzene	1.8	24		U
591-78-6------	2-Hexanone	5.6	24		U
98-82-8-------	Isopropylbenzene	2.2	24		U
79-20-9-------	Methyl acetate	3.9	24		U
75-09-2-------	Methylene chloride	1.5	24		U
108-87-2------	Methyl cyclohexane	0.74	24		U
1634-04-4-----	Methyl tert-butyl ether	0.78	24		U
108-10-1------	4-Methyl-2-pentanone	1.4	24		U
100-42-5------	Styrene	0.86	24		U
79-34-5-------	1,1,2,2-Tetrachloroethane	1.0	24		U
127-18-4------	Tetrachloroethene	2.4	24		U

DI SSC

AM 1/2/09

FORM I VOA

lw 2/9/09

FORM 1
VOLATILE ORGANICS ANALYSIS DATA SHEET

CLIENT SAMPLE NO. 21

MR08-SS055-08D

Lab Name: EMPIRICAL LABS Contract: CH2MHILL

Lab Code: NA Case No.: NA SAS No.: NA SDG No.: LEJEUNE021

Matrix: (soil/water) SOIL Lab Sample ID: 0812021-11

Sample wt/vol: 3.4 (g/mL) G Lab File ID: 1202111A

Level: (low/med) LOW Date Sampled: 12/02/08 15:55

% Moisture: not dec. 40 Date Analyzed: 12/12/08 12:42

GC Column: RTX-VRX ID: 0.25 (mm) Dilution Factor: 1.0

Soil Extract Volume:_____(uL) Soil Aliquot Volume: _____(uL)

CONCENTRATION UNITS: (ug/L or ug/Kg) UG/KG

CAS NO.	COMPOUND	MDL	RL	CONC	Q
108-88-3	Toluene	2.1	24	3.8	~~J~~ J SS
120-82-1	1,2,4-Trichlorobenzene	0.44	24		~~U~~ UJ
71-55-6	1,1,1-Trichloroethane	2.2	24		~~U~~
79-00-5	1,1,2-Trichloroethane	0.86	24		~~U~~
79-01-6	Trichloroethene	2.1	24		~~U~~
76-13-1	Trichlorotrifluoroethane	1.3	24		~~U~~
75-69-4	Trichlorofluoromethane	2.3	24		~~U~~
75-01-4	Vinyl chloride	2.7	24		~~U~~
1330-20-7	Xylene(total)	1.7	24		U

FORM I VOA

MU
2/9/09

FORM 1
VOLATILE ORGANICS ANALYSIS DATA SHEET

CLIENT SAMPLE NO. 21DL

MR08-SS0
55-08DDL

Lab Name: EMPIRICAL LABS Contract: CH2MHILL

Lab Code: NA Case No.: NA SAS No.: NA SDG No.: LEJEUNE021

Matrix: (soil/water) SOIL Lab Sample ID: 0812021-11DL

Sample wt/vol: 3.0 (g/mL) G Lab File ID: 1202111D

Level: (low/med) MED Date Sampled: 12/02/08 15:55

% Moisture: not dec. 40 Date Analyzed: 12/16/08 06:01

GC Column: RTX-VRX ID: 0.25 (mm) Dilution Factor: 1.0 use original

Soil Extract Volume: 5000(uL) Soil Aliquot Volume: 100(uL)

CONCENTRATION UNITS: (ug/L or ug/Kg) UG/KG

CAS NO.	COMPOUND	MDL	RL	CONC	Q
67-64-1	Acetone	280	1400	900	UD
71-43-2	Benzene	66	1400		UD
75-27-4	Bromodichloromethane	42	1400		UD
75-25-2	Bromoform	140	1400		UD
74-83-9	Bromomethane	100	1400		UD
78-93-3	2-Butanone	200	1400		UD
75-15-0	Carbon disulfide	180	1400		UD
56-23-5	Carbon tetrachloride	120	1400		UD
108-90-7	Chlorobenzene	48	1400		UD
75-00-3	Chloroethane	150	1400		UD
67-66-3	Chloroform	77	1400		UD
74-87-3	Chloromethane	73	1400		UD
110-82-7	Cyclohexane	76	1400		UD
124-48-1	Dibromochloromethane	48	1400		UD
96-12-8	1,2-Dibromo-3-chloropropane	170	700		UD
106-93-4	1,2-Dibromoethane	60	1400		UD
95-50-1	1,2-Dichlorobenzene	52	1400		UD
541-73-1	1,3-Dichlorobenzene	120	1400		UD
106-46-7	1,4-Dichlorobenzene	77	1400		UD
75-71-8	Dichlorodifluoromethane	150	1400		UD
75-34-3	1,1-Dichloroethane	76	1400		UD
107-06-2	1,2-Dichloroethane	64	1400		UD
75-35-4	1,1-Dichloroethene	170	1400		UD
156-59-2	cis-1,2-Dichloroethene	170	1400		UD
156-60-5	trans-1,2-Dichloroethene	150	1400		UD
78-87-5	1,2-Dichloropropane	64	1400		UD
10061-01-5	cis-1,3-Dichloropropene	70	1400		UD
10061-02-6	trans-1,3-Dichloropropene	45	1400		UD
100-41-4	Ethylbenzene	100	1400		UD
591-78-6	2-Hexanone	320	1400		UD
98-82-8	Isopropylbenzene	120	1400		UD
79-20-9	Methyl acetate	220	1400		UD
75-09-2	Methylene chloride	87	1400	1400 U 600 ~~JBD~~	B
108-87-2	Methyl cyclohexane	42	1400		UD
1634-04-4	Methyl tert-butyl ether	45	1400		UD
108-10-1	4-Methyl-2-pentanone	81	1400		UD
100-42-5	Styrene	49	1400		UD
79-34-5	1,1,2,2-Tetrachloroethane	60	1400		UD
127-18-4	Tetrachloroethene	140	1400		UD

DL

ms 2/2/09

lw 2/9/09

FORM 1
VOLATILE ORGANICS ANALYSIS DATA SHEET

CLIENT SAMPLE NO. 21DL

MR08-SS0
55-08DDL

Lab Name: EMPIRICAL LABS Contract: CH2MHILL

Lab Code: NA Case No.: NA SAS No.: NA SDG No.: LEJEUNE021

Matrix: (soil/water) SOIL Lab Sample ID: 0812021-11DL

Sample wt/vol: 3.0 (g/mL) G Lab File ID: 1202111D

Level: (low/med) MED Date Sampled: 12/02/08 15:55

% Moisture: not dec. 40 Date Analyzed: 12/16/08 06:01

GC Column: RTX-VRX ID: 0.25 (mm) Dilution Factor: 1.0

Use only 1ml

Soil Extract Volume: 5000(uL) Soil Aliquot Volume: 100(uL)

CONCENTRATION UNITS: (ug/L or ug/Kg) UG/KG

CAS NO.	COMPOUND	MDL	RL	CONC	Q
108-88-3	Toluene	120	1400		UD
120-82-1	1,2,4-Trichlorobenzene	25	1400		UD
71-55-6	1,1,1-Trichloroethane	130	1400		UD
79-00-5	1,1,2-Trichloroethane	49	1400		UD
79-01-6	Trichloroethene	120	1400		UD
76-13-1	Trichlorotrifluoroethane	77	1400		UD
75-69-4	Trichlorofluoromethane	130	1400		UD
75-01-4	Vinyl chloride	150	1400		UD
1330-20-7	Xylene(total)	98	1400		UD

R

lw 2/9/09

FORM 1
VOLATILE ORGANICS ANALYSIS DATA SHEET

CLIENT SAMPLE NO. 22

MR08-IS05
5-4-5-08D

Lab Name: EMPIRICAL LABS Contract: CH2MHILL

Lab Code: NA Case No.: NA SAS No.: NA SDG No.: LEJEUNE021

Matrix: (soil/water) SOIL Lab Sample ID: 0812021-12

Sample wt/vol: 3.4 (g/mL) G Lab File ID: 1202112A

Level: (low/med) LOW Date Sampled: 12/02/08 16:15

% Moisture: not dec. 16 Date Analyzed: 12/12/08 13:21

GC Column: RTX-VRX ID: 0.25 (mm) Dilution Factor: 1.0

Soil Extract Volume:_____(uL) Soil Aliquot Volume: _____(uL)

CONCENTRATION UNITS: (ug/L or ug/Kg) UG/KG

CAS NO.	COMPOUND	MDL	RL	CONC	Q
67-64-1	Acetone	3.5	17	21	U BL
71-43-2	Benzene	0.82	17		U
75-27-4	Bromodichloromethane	0.52	17		U
75-25-2	Bromoform	1.7	17		U
74-83-9	Bromomethane	1.2	17		~~U~~ UJ CC
78-93-3	2-Butanone	2.4	17		U
75-15-0	Carbon disulfide	2.3	17		U
56-23-5	Carbon tetrachloride	1.5	17		U
108-90-7	Chlorobenzene	0.59	17		U
75-00-3	Chloroethane	1.9	17		U
67-66-3	Chloroform	0.96	17		U
74-87-3	Chloromethane	0.91	17		U
110-82-7	Cyclohexane	0.94	17		U
124-48-1	Dibromochloromethane	0.59	17		U
96-12-8	1,2-Dibromo-3-chloropropane	2.1	8.7		U
106-93-4	1,2-Dibromoethane	0.75	17		U
95-50-1	1,2-Dichlorobenzene	0.64	17		U
541-73-1	1,3-Dichlorobenzene	1.5	17		U
106-46-7	1,4-Dichlorobenzene	0.96	17		U
75-71-8	Dichlorodifluoromethane	1.9	17		U
75-34-3	1,1-Dichloroethane	0.94	17		U
107-06-2	1,2-Dichloroethane	0.80	17		U
75-35-4	1,1-Dichloroethene	2.1	17		U
156-59-2	cis-1,2-Dichloroethene	2.1	17		U
156-60-5	trans-1,2-Dichloroethene	1.9	17		U
78-87-5	1,2-Dichloropropane	0.80	17		U
10061-01-5	cis-1,3-Dichloropropene	0.87	17		U
10061-02-6	trans-1,3-Dichloropropene	0.56	17		U
100-41-4	Ethylbenzene	1.3	17		U
591-78-6	2-Hexanone	4.0	17		U
98-82-8	Isopropylbenzene	1.5	17		U
79-20-9	Methyl acetate	2.8	17		U
75-09-2	Methylene chloride	1.1	17	174 ~~2.8~~ ~~JB~~	B
108-87-2	Methyl cyclohexane	0.52	17		U
1634-04-4	Methyl tert-butyl ether	0.56	17		U
108-10-1	4-Methyl-2-pentanone	1.0	17		U
100-42-5	Styrene	0.61	17		U
79-34-5	1,1,2,2-Tetrachloroethane	0.75	17		U
127-18-4	Tetrachloroethene	1.7	17		U

FORM I VOA

lus 2/9/09

FORM 1
VOLATILE ORGANICS ANALYSIS DATA SHEET

CLIENT SAMPLE NO. 22

MR08-IS05
5-4-5-08D

Lab Name: EMPIRICAL LABS Contract: CH2MHILL

Lab Code: NA Case No.: NA SAS No.: NA SDG No.: LEJEUNE021

Matrix: (soil/water) SOIL Lab Sample ID: 0812021-12

Sample wt/vol: 3.4 (g/mL) G Lab File ID: 1202112A

Level: (low/med) LOW Date Sampled: 12/02/08 16:15

% Moisture: not dec. 16 Date Analyzed: 12/12/08 13:21

GC Column: RTX-VRX ID: 0.25 (mm) Dilution Factor: 1.0

Soil Extract Volume:_____(uL) Soil Aliquot Volume: _____(uL)

CONCENTRATION UNITS: (ug/L or ug/Kg) UG/KG

CAS NO.	COMPOUND	MDL	RL	CONC	Q
108-88-3	Toluene	1.5	17		U
120-82-1	1,2,4-Trichlorobenzene	0.31	17		U
71-55-6	1,1,1-Trichloroethane	1.6	17		U
79-00-5	1,1,2-Trichloroethane	0.61	17		U
79-01-6	Trichloroethene	1.5	17		U
76-13-1	Trichlorotrifluoroethane	0.96	17		U
75-69-4	Trichlorofluoromethane	1.6	17		U
75-01-4	Vinyl chloride	1.9	17		U
1330-20-7	Xylene(total)	1.2	17		U

LW
2/9/09

FORM 1
VOLATILE ORGANICS ANALYSIS DATA SHEET

CLIENT SAMPLE NO. 23

MR08-TB-120208

Lab Name: EMPIRICAL LABS Contract: CH2MHILL

Lab Code: NA Case No.: NA SAS No.: NA SDG No.: LEJEUNE021

Matrix: (soil/water) WATER Lab Sample ID: 0812021-13

Sample wt/vol: 5.000 (g/mL) ML Lab File ID: 1202113

Level: (low/med) LOW Date Sampled: 12/02/08 16:30

% Moisture: not dec. _____ Date Analyzed: 12/06/08 14:01

GC Column: RTX-VRX ID: 0.25 (mm) Dilution Factor: 1.0

Soil Extract Volume:_____(uL) Soil Aliquot Volume: _____(uL)

CONCENTRATION UNITS: (ug/L or ug/Kg) UG/L

CAS NO.	COMPOUND	MDL	RL	CONC	Q
67-64-1	Acetone	0.84	2.5		~~U~~ UJ CG
71-43-2	Benzene	0.11	1.0		U
75-27-4	Bromodichloromethane	0.10	1.0		U
75-25-2	Bromoform	0.10	1.0		~~U~~ UJ CCV
74-83-9	Bromomethane	0.32	1.0		U
78-93-3	2-Butanone	1.0	3.0		~~U~~ R ICB
75-15-0	Carbon disulfide	0.13	1.0		U
56-23-5	Carbon tetrachloride	0.15	1.0		~~U~~ UJ CCV
108-90-7	Chlorobenzene	0.10	1.0		U
75-00-3	Chloroethane	0.18	1.0		U
67-66-3	Chloroform	0.11	1.0		U
74-87-3	Chloromethane	0.29	1.0		U
110-82-7	Cyclohexane	0.20	1.0		U
124-48-1	Dibromochloromethane	0.10	1.0		U
96-12-8	1,2-Dibromo-3-chloropropane	0.11	1.0		U
106-93-4	1,2-Dibromoethane	0.10	1.0		U
95-50-1	1,2-Dichlorobenzene	0.10	1.0		U
541-73-1	1,3-Dichlorobenzene	0.13	1.0		U
106-46-7	1,4-Dichlorobenzene	0.10	1.0		U
75-71-8	Dichlorodifluoromethane	0.22	1.0		U
75-34-3	1,1-Dichloroethane	0.12	1.0		U
107-06-2	1,2-Dichloroethane	0.10	1.0		U
75-35-4	1,1-Dichloroethene	0.15	1.0		U
156-59-2	cis-1,2-Dichloroethene	0.13	1.0		U
156-60-5	trans-1,2-Dichloroethene	0.13	1.0		U
78-87-5	1,2-Dichloropropane	0.10	1.0		U
10061-01-5	cis-1,3-Dichloropropene	0.11	1.0		U
10061-02-6	trans-1,3-Dichloropropene	0.10	1.0		U
100-41-4	Ethylbenzene	0.13	1.0		U
591-78-6	2-Hexanone	0.30	2.0		U
98-82-8	Isopropylbenzene	0.15	1.0		U
79-20-9	Methyl acetate	0.30	1.0		U
75-09-2	Methylene chloride	0.14	1.0	1.5 ~~1.5~~	~~B~~ B
108-87-2	Methyl cyclohexane	0.17	1.0		U
1634-04-4	Methyl tert-butyl ether	0.10	1.0		U
108-10-1	4-Methyl-2-pentanone	0.29	2.0		U
100-42-5	Styrene	0.10	1.0		U
79-34-5	1,1,2,2-Tetrachloroethane	0.10	1.0		U
127-18-4	Tetrachloroethene	0.15	1.0		U

FORM I VOA

2/9/09

FORM 1
VOLATILE ORGANICS ANALYSIS DATA SHEET

CLIENT SAMPLE NO. 23

MR08-TB-120208

Lab Name: EMPIRICAL LABS Contract: CH2MHILL

Lab Code: NA Case No.: NA SAS No.: NA SDG No.: LEJEUNE021

Matrix: (soil/water) WATER Lab Sample ID: 0812021-13

Sample wt/vol: 5.000 (g/mL) ML Lab File ID: 1202113

Level: (low/med) LOW Date Sampled: 12/02/08 16:30

% Moisture: not dec. _____ Date Analyzed: 12/06/08 14:01

GC Column: RTX-VRX ID: 0.25 (mm) Dilution Factor: 1.0

Soil Extract Volume:_____(uL) Soil Aliquot Volume: _____(uL)

CONCENTRATION UNITS: (ug/L or ug/Kg) UG/L

CAS NO.	COMPOUND	MDL	RL	CONC	Q
108-88-3	Toluene	0.10	1.0		U
120-82-1	1,2,4-Trichlorobenzene	0.10	1.0		U
71-55-6	1,1,1-Trichloroethane	0.17	1.0		U
79-00-5	1,1,2-Trichloroethane	0.10	1.0		U
79-01-6	Trichloroethene	0.13	1.0		U
76-13-1	Trichlorotrifluoroethane	0.18	1.0		U
75-69-4	Trichlorofluoromethane	0.17	1.0		U
75-01-4	Vinyl chloride	0.18	1.0		U
1330-20-7	Xylene(total)	0.22	1.0		U

ew
2/9/09

FORM 1
VOLATILE ORGANICS ANALYSIS DATA SHEET

CLIENT SAMPLE NO. 24

MR08-EB-
120208-SS

Lab Name: EMPIRICAL LABS Contract: CH2MHILL

Lab Code: NA Case No.: NA SAS No.: NA SDG No.: LEJEUNE021

Matrix: (soil/water) WATER Lab Sample ID: 0812021-14

Sample wt/vol: 5.000 (g/mL) ML Lab File ID: 1202114

Level: (low/med) LOW Date Sampled: 12/02/08 15:50

% Moisture: not dec. _____ Date Analyzed: 12/08/08 13:05

GC Column: RTX-VRX ID: 0.25 (mm) Dilution Factor: 1.0

Soil Extract Volume:_____(uL) Soil Aliquot Volume: _____(uL)

CONCENTRATION UNITS: (ug/L or ug/Kg) UG/L

CAS NO.	COMPOUND	MDL	RL	CONC	Q
67-64-1	Acetone	0.84	2.5		U
71-43-2	Benzene	0.11	1.0		U
75-27-4	Bromodichloromethane	0.10	1.0		U
75-25-2	Bromoform	0.10	1.0		U
74-83-9	Bromomethane	0.32	1.0		~~U~~ UJ CCV
78-93-3	2-Butanone	1.0	3.0		~~U~~ R ICS
75-15-0	Carbon disulfide	0.13	1.0		U
56-23-5	Carbon tetrachloride	0.15	1.0		U
108-90-7	Chlorobenzene	0.10	1.0		U
75-00-3	Chloroethane	0.18	1.0		~~U~~ UJ CCV
67-66-3	Chloroform	0.11	1.0		U
74-87-3	Chloromethane	0.29	1.0		U
110-82-7	Cyclohexane	0.20	1.0		U
124-48-1	Dibromochloromethane	0.10	1.0		U
96-12-8	1,2-Dibromo-3-chloropropane	0.11	1.0		U
106-93-4	1,2-Dibromoethane	0.10	1.0		U
95-50-1	1,2-Dichlorobenzene	0.10	1.0		U
541-73-1	1,3-Dichlorobenzene	0.13	1.0		U
106-46-7	1,4-Dichlorobenzene	0.10	1.0		U
75-71-8	Dichlorodifluoromethane	0.22	1.0		U
75-34-3	1,1-Dichloroethane	0.12	1.0		U
107-06-2	1,2-Dichloroethane	0.10	1.0		U
75-35-4	1,1-Dichloroethene	0.15	1.0		U
156-59-2	cis-1,2-Dichloroethene	0.13	1.0		U
156-60-5	trans-1,2-Dichloroethene	0.13	1.0		U
78-87-5	1,2-Dichloropropane	0.10	1.0		U
10061-01-5	cis-1,3-Dichloropropene	0.11	1.0		U
10061-02-6	trans-1,3-Dichloropropene	0.10	1.0		U
100-41-4	Ethylbenzene	0.13	1.0		U
591-78-6	2-Hexanone	0.30	2.0		U
98-82-8	Isopropylbenzene	0.15	1.0		U
79-20-9	Methyl acetate	0.30	1.0		U
75-09-2	Methylene chloride	0.14	1.0	1.04 ~~0.89~~ ~~JB~~	B
108-87-2	Methyl cyclohexane	0.17	1.0		U
1634-04-4	Methyl tert-butyl ether	0.10	1.0		U
108-10-1	4-Methyl-2-pentanone	0.29	2.0		U
100-42-5	Styrene	0.10	1.0		U
79-34-5	1,1,2,2-Tetrachloroethane	0.10	1.0		~~U~~ UJ CCV
127-18-4	Tetrachloroethene	0.15	1.0		U

FORM I VOA

ELW
2/9/09

FORM 1
VOLATILE ORGANICS ANALYSIS DATA SHEET

CLIENT SAMPLE NO. 24

MR08-EB-
120208-SS

Lab Name: EMPIRICAL LABS Contract: CH2MHILL

Lab Code: NA Case No.: NA SAS No.: NA SDG No.: LEJEUNE021

Matrix: (soil/water) WATER Lab Sample ID: 0812021-14

Sample wt/vol: 5.000 (g/mL) ML Lab File ID: 1202114

Level: (low/med) LOW Date Sampled: 12/02/08 15:50

% Moisture: not dec. _____ Date Analyzed: 12/08/08 13:05

GC Column: RTX-VRX ID: 0.25 (mm) Dilution Factor: 1.0

Soil Extract Volume:_____(uL) Soil Aliquot Volume: _____(uL)

CONCENTRATION UNITS: (ug/L or ug/Kg) UG/L

CAS NO.	COMPOUND	MDL	RL	CONC	Q
108-88-3	Toluene	0.10	1.0		U
120-82-1	1,2,4-Trichlorobenzene	0.10	1.0		U
71-55-6	1,1,1-Trichloroethane	0.17	1.0		U
79-00-5	1,1,2-Trichloroethane	0.10	1.0		U
79-01-6	Trichloroethene	0.13	1.0		U
76-13-1	Trichlorotrifluoroethane	0.18	1.0		U
75-69-4	Trichlorofluoromethane	0.17	1.0		U
75-01-4	Vinyl chloride	0.18	1.0		U
1330-20-7	Xylene(total)	0.22	1.0		U

lw 2/9/09

FORM 1
VOLATILE ORGANICS ANALYSIS DATA SHEET

CLIENT SAMPLE NO. 25

MR08-EB-120208-IS

Lab Name: EMPIRICAL LABS Contract: CH2MHILL

Lab Code: NA Case No.: NA SAS No.: NA SDG No.: LEJEUNE021

Matrix: (soil/water) WATER Lab Sample ID: 0812021-15

Sample wt/vol: 5.000 (g/mL) ML Lab File ID: 1202115

Level: (low/med) LOW Date Sampled: 12/02/08 15:30

% Moisture: not dec. _____ Date Analyzed: 12/08/08 13:34

GC Column: RTX-VRX ID: 0.25 (mm) Dilution Factor: 1.0

Soil Extract Volume:_____(uL) Soil Aliquot Volume: _____(uL)

CONCENTRATION UNITS: (ug/L or ug/Kg) UG/L

CAS NO.	COMPOUND	MDL	RL	CONC	Q
67-64-1	Acetone	0.84	2.5		U
71-43-2	Benzene	0.11	1.0		U
75-27-4	Bromodichloromethane	0.10	1.0		U
75-25-2	Bromoform	0.10	1.0		U
74-83-9	Bromomethane	0.32	1.0		~~U~~ UJ CU
78-93-3	2-Butanone	1.0	3.0		~~U~~ R ICB
75-15-0	Carbon disulfide	0.13	1.0		U
56-23-5	Carbon tetrachloride	0.15	1.0		U
108-90-7	Chlorobenzene	0.10	1.0		U
75-00-3	Chloroethane	0.18	1.0		~~U~~ UJ CU
67-66-3	Chloroform	0.11	1.0		U
74-87-3	Chloromethane	0.29	1.0		U
110-82-7	Cyclohexane	0.20	1.0		U
124-48-1	Dibromochloromethane	0.10	1.0		U
96-12-8	1,2-Dibromo-3-chloropropane	0.11	1.0		U
106-93-4	1,2-Dibromoethane	0.10	1.0		U
95-50-1	1,2-Dichlorobenzene	0.10	1.0		U
541-73-1	1,3-Dichlorobenzene	0.13	1.0		U
106-46-7	1,4-Dichlorobenzene	0.10	1.0		U
75-71-8	Dichlorodifluoromethane	0.22	1.0		U
75-34-3	1,1-Dichloroethane	0.12	1.0		U
107-06-2	1,2-Dichloroethane	0.10	1.0		U
75-35-4	1,1-Dichloroethene	0.15	1.0		U
156-59-2	cis-1,2-Dichloroethene	0.13	1.0		U
156-60-5	trans-1,2-Dichloroethene	0.13	1.0		U
78-87-5	1,2-Dichloropropane	0.10	1.0		U
10061-01-5	cis-1,3-Dichloropropene	0.11	1.0		U
10061-02-6	trans-1,3-Dichloropropene	0.10	1.0		U
100-41-4	Ethylbenzene	0.13	1.0		U
591-78-6	2-Hexanone	0.30	2.0		U
98-82-8	Isopropylbenzene	0.15	1.0		U
79-20-9	Methyl acetate	0.30	1.0		U
75-09-2	Methylene chloride	0.14	1.0	1.0u ~~0.75~~	~~JB~~ B
108-87-2	Methyl cyclohexane	0.17	1.0		U
1634-04-4	Methyl tert-butyl ether	0.10	1.0		U
108-10-1	4-Methyl-2-pentanone	0.29	2.0		U
100-42-5	Styrene	0.10	1.0		U
79-34-5	1,1,2,2-Tetrachloroethane	0.10	1.0		~~U~~ UJ CU
127-18-4	Tetrachloroethene	0.15	1.0		U

FORM I VOA

RLW 2/9/09

FORM 1
VOLATILE ORGANICS ANALYSIS DATA SHEET

CLIENT SAMPLE NO. 25

MR08-EB-
120208-IS

Lab Name: EMPIRICAL LABS Contract: CH2MHILL

Lab Code: NA Case No.: NA SAS No.: NA SDG No.: LEJEUNE021

Matrix: (soil/water) WATER Lab Sample ID: 0812021-15

Sample wt/vol: 5.000 (g/mL) ML Lab File ID: 1202115

Level: (low/med) LOW Date Sampled: 12/02/08 15:30

% Moisture: not dec. _____ Date Analyzed: 12/08/08 13:34

GC Column: RTX-VRX ID: 0.25 (mm) Dilution Factor: 1.0

Soil Extract Volume:_____(uL) Soil Aliquot Volume: _____(uL)

CONCENTRATION UNITS: (ug/L or ug/Kg) UG/L

CAS NO.	COMPOUND	MDL	RL	CONC	Q
108-88-3	Toluene	0.10	1.0		U
120-82-1	1,2,4-Trichlorobenzene	0.10	1.0		U
71-55-6	1,1,1-Trichloroethane	0.17	1.0		U
79-00-5	1,1,2-Trichloroethane	0.10	1.0		U
79-01-6	Trichloroethene	0.13	1.0		U
76-13-1	Trichlorotrifluoroethane	0.18	1.0		U
75-69-4	Trichlorofluoromethane	0.17	1.0		U
75-01-4	Vinyl chloride	0.18	1.0		U
1330-20-7	Xylene(total)	0.22	1.0		U

MW
2/9/09

ENVIRONMENTAL
Data Services, Inc.

PERCHLORATE

USEPA Region IV - Level IV Review

Site: MCB Camp Lejeune, TO-09 SDG #: R2847219

Client: CH2M HILL, Inc., Virginia Beach, Virginia Date: February 3, 2009

Laboratory: Columbia Analytical Services, Inc., Rochester, NY Reviewer: Nancy Weaver

EDS ID	Client Sample ID	Laboratory Sample ID	Matrix
1	MR08-SD01-08D	1154482	Soil
2	MR08-SD01D-08D	1154483	Soil
3	MR08-SD03D-08D	1154484	Soil
4	MR08-SD02-08D	1154485	Soil
4MS	MR08-SD02-08DMS	1154485MS	Soil
4MSD	MR08-SD02-08DMSD	1154485MSD	Soil
5	MR08-FB111108	1154493	Water
6	MR08-EB111108-1	1154498	Water
7	MR08-SW01-08D	1154503	Water
8	MR08-SW03-08D	1154508	Water
8MS	MR08-SW03-08DMS	1154508MS	Water
8MSD	MR08-SW03-08DMSD	1154508MSD	Water
8DL	MR08-SW03-08DDL	1154508DL	Water
9	MR08-SW02-08D	1154509	Water
9DL	MR08-SW02-08DDL	1154509DL	Water
10	MR08-SW02D-08D	1154510	Water
10DL	MR08-SW02D-08DDL	1154510DL	Water
11	IR78-GW61-08D	1154511	Water
12	IR78-GW03-08D	1154512	Water
13	IR78-GW02-08D	1154513	Water
14	IR78-GW02D-08D	1154514	Water
15	IR78-GW42-08D	1154515	Water
16	MR08-EB111008	1154516	Water

The USEPA "Contract Laboratory Program National Functional Guidelines for Inorganic Data Review," October 2004, and professional judgement were used in evaluating the data in this summary report.

Holding Times - All samples were prepared and analyzed within 28 days for perchlorate.

Calibration - The ICAL & CCAL exhibited acceptable %RSD and %D values respectively.

Method and Calibration Blanks - The method blanks and continuing calibration blanks were free of contamination.

Field and Equipment Blank - Field QC results are summarized below.

Blank ID	Compound	Conc. ug/L	Action Level ug/L	Qualifier	Affected Samples
MR08-EB111008	None - ND	-	-	-	-
MR08-EB111108-1	None - ND	-	-	-	-
MR08-FB111108	None - ND	-	-	-	-

Matrix Spike/Duplicate - The matrix spike/duplicate sample exhibited acceptable %R and RPD values except the following.

MS/MSD Sample ID	Compound	%R	Qualifier	Affected Samples
8	Perchlorate	0%/200%/Ok/Ok	None	Result not valid due to 4X rule

LCS - The LCS samples exhibited acceptable %R values.

Field Duplicates - Field duplicate results are summarized below.

Compound	MR08-SD01-08D ug/kg	MR08-SD01D-08D ug/kg	RPD	Qualifier
None	ND	ND	-	-

Compound	MR08-SW02-08D ug/L	MR08-SW02D-08D ug/L	RPD	Qualifier
Perchlorate	6.3	6.3	0%	None

Compound Quantitation - EDS sample ID #s 8, 9 and 10 exhibited high concentrations of perchlorate which were over the calibration curve and were flagged (E) by the laboratory. All three samples were analyzed at a 2X dilution. The reviewer replaced the original results with the dilution results. The original Form Is should be used for reporting purposes.

COLUMBIA ANALYTICAL SERVICES

EXTRACTABLE ORGANICS
METHOD 6850
Reported: 12/10/08

Microbac Laboratories, Inc.
Project Reference: CH2M HILL - CAMP LEJEUNE
Client Sample ID : MR08-SD01-08D

Date Sampled : 11/11/08 11:50 **Order #:** 1154482 **Sample Matrix:** SOIL/SEDIMENT
Date Received: 11/17/08 **Submission #:** R2847219 **Percent Solid:** 39.3

ANALYTE	PQL	RESULT	UNITS
DATE EXTRACTED : 12/03/08			
DATE ANALYZED : 12/03/08			
ANALYTICAL DILUTION: 10.00			Dry Weight
PERCHLORATE	0.20	5.1 U	UG/KG

lw
2/3/09

COLUMBIA ANALYTICAL SERVICES

EXTRACTABLE ORGANICS
METHOD 6850
Reported: 12/10/08

Microbac Laboratories, Inc.
Project Reference: CH2M HILL - CAMP LEJEUNE
Client Sample ID : MR08-SD01D-08D

Date Sampled : 11/11/08 11:55 **Order #:** 1154483 **Sample Matrix:** SOIL/SEDIMENT
Date Received: 11/17/08 **Submission #:** R2847219 **Percent Solid:** 39.8

ANALYTE	PQL	RESULT	UNITS
DATE EXTRACTED : 12/03/08			
DATE ANALYZED : 12/03/08			
ANALYTICAL DILUTION: 10.00			Dry Weight
PERCHLORATE	0.20	5.0 U	UG/KG

lw 213109

COLUMBIA ANALYTICAL SERVICES

EXTRACTABLE ORGANICS
METHOD 6850
Reported: 12/10/08

Microbac Laboratories, Inc.
Project Reference: CH2M HILL - CAMP LEJEUNE
Client Sample ID : MR08-SD03D-08D

Date Sampled : 11/11/08 10:25 **Order #:** 1154484 **Sample Matrix:** SOIL/SEDIMENT
Date Received: 11/17/08 **Submission #:** R2847219 **Percent Solid:** 75.4

ANALYTE	PQL	RESULT	UNITS
DATE EXTRACTED : 12/03/08			
DATE ANALYZED : 12/03/08			
ANALYTICAL DILUTION: 10.00			Dry Weight
PERCHLORATE	0.20	2.7 U	UG/KG

lw
2/3/09

COLUMBIA ANALYTICAL SERVICES

EXTRACTABLE ORGANICS
METHOD 6850
Reported: 12/10/08

Microbac Laboratories, Inc.
Project Reference: CH2M HILL - CAMP LEJEUNE
Client Sample ID : MR08-SD02-08D

Date Sampled : 11/11/08 09:25 **Order #:** 1154485 **Sample Matrix:** SOIL/SEDIMENT
Date Received: 11/17/08 **Submission #:** R2847219 **Percent Solid:** 72.4

ANALYTE	PQL	RESULT	UNITS
DATE EXTRACTED : 12/03/08			
DATE ANALYZED : 12/03/08			
ANALYTICAL DILUTION: 10.00			Dry Weight
PERCHLORATE	0.20	0.97 J	UG/KG

lw
2/3/09

COLUMBIA ANALYTICAL SERVICES

EXTRACTABLE ORGANICS
METHOD 6850
Reported: 12/10/08

Microbac Laboratories, Inc.
Project Reference: CH2M HILL - CAMP LEJEUNE
Client Sample ID : MR08-FB111108

Date Sampled : 11/11/08 08:10 **Order #:** 1154493 **Sample Matrix:** WATER
Date Received: 11/17/08 **Submission #:** R2847219 **Analytical Run** 170976

ANALYTE	PQL	RESULT	UNITS
DATE EXTRACTED : 11/20/08			
DATE ANALYZED : 11/21/08			
ANALYTICAL DILUTION: 1.00			
PERCHLORATE	0.20	0.20 U	UG/L

lcw
2/3/09

6

COLUMBIA ANALYTICAL SERVICES

EXTRACTABLE ORGANICS
METHOD 6850
Reported: 12/10/08

Microbac Laboratories, Inc.
Project Reference: CH2M HILL - CAMP LEJEUNE
Client Sample ID : MR08-EB111108-1

Date Sampled : 11/11/08 12:00 **Order #:** 1154498 **Sample Matrix:** WATER
Date Received: 11/17/08 **Submission #:** R2847219 **Analytical Run** 170976

ANALYTE	PQL	RESULT	UNITS
DATE EXTRACTED : 11/20/08			
DATE ANALYZED : 11/21/08			
ANALYTICAL DILUTION: 1.00			
PERCHLORATE	0.20	0.20 U	UG/L

Lid 2/3/09

COLUMBIA ANALYTICAL SERVICES

EXTRACTABLE ORGANICS
METHOD 6850
Reported: 12/10/08

Microbac Laboratories, Inc.
Project Reference: CH2M HILL - CAMP LEJEUNE
Client Sample ID : MR08-SW01-08D

Date Sampled : 11/11/08 08:20 **Order #:** 1154503 **Sample Matrix:** WATER
Date Received: 11/17/08 **Submission #:** R2847219 **Analytical Run** 170976

ANALYTE	PQL	RESULT	UNITS
DATE EXTRACTED : 11/20/08			
DATE ANALYZED : 11/21/08			
ANALYTICAL DILUTION: 1.00			
PERCHLORATE	0.20	4.9	UG/L

lw
2/3/09

8

COLUMBIA ANALYTICAL SERVICES

EXTRACTABLE ORGANICS
METHOD 6850
Reported: 12/10/08

Microbac Laboratories, Inc.
Project Reference: CH2M HILL - CAMP LEJEUNE
Client Sample ID : MR08-SW03-08D

Date Sampled : 11/11/08 10:05 **Order #:** 1154508 **Sample Matrix:** WATER
Date Received: 11/17/08 **Submission #:** R2847219 **Analytical Run** 170976

ANALYTE	PQL	RESULT		UNITS
DATE EXTRACTED : 11/20/08				
DATE ANALYZED : 11/21/08				
ANALYTICAL DILUTION: 1.00				
PERCHLORATE	0.20	5.8	~~5.7 E~~ R DL	UG/L

JW
2/3/09

8DL

COLUMBIA ANALYTICAL SERVICES

EXTRACTABLE ORGANICS
METHOD 6850
Reported: 12/10/08

Use original

Microbac Laboratories, Inc.
Project Reference: CH2M HILL - CAMP LEJEUNE
Client Sample ID : MR08-SW03-08D

Date Sampled : 11/11/08 10:05 **Order #:** 1154508 **Sample Matrix:** WATER
Date Received: 11/17/08 **Submission #:** R2847219 **Analytical Run** 170976

ANALYTE	PQL	RESULT	UNITS
DATE EXTRACTED : 11/20/08			
DATE ANALYZED : 11/21/08			
ANALYTICAL DILUTION: 2.00			
PERCHLORATE	0.20	5.8 ~~D~~	UG/L

R DL

lw 2/3/09

COLUMBIA ANALYTICAL SERVICES

EXTRACTABLE ORGANICS
METHOD 6850
Reported: 12/10/08

Microbac Laboratories, Inc.
Project Reference: CH2M HILL - CAMP LEJEUNE
Client Sample ID : MR08-SW02-08D

Date Sampled : 11/11/08 09:10 **Order #:** 1154509 **Sample Matrix:** WATER
Date Received: 11/17/08 **Submission #:** R2847219 **Analytical Run** 170976

ANALYTE	PQL	RESULT	UNITS
DATE EXTRACTED : 11/20/08			
DATE ANALYZED : 11/21/08			
ANALYTICAL DILUTION: 1.00			
PERCHLORATE	0.20	6.3 ~~6.5 E~~ R DL	UG/L

LW
2/3/09

9DL

COLUMBIA ANALYTICAL SERVICES

EXTRACTABLE ORGANICS
METHOD 6850
Reported: 12/10/08

Microbac Laboratories, Inc.
Project Reference: CH2M HILL - CAMP LEJEUNE
Client Sample ID : MR08-SW02-08D

Use: Original

Date Sampled : 11/11/08 09:10 **Order #:** 1154509 **Sample Matrix:** WATER
Date Received: 11/17/08 **Submission #:** R2847219 **Analytical Run** 170976

ANALYTE	PQL	RESULT	UNITS
DATE EXTRACTED : 11/20/08			
DATE ANALYZED : 11/21/08			
ANALYTICAL DILUTION: 2.00			
PERCHLORATE	0.20	6.3 D	UG/L

R DL

lw
2/3/09

10

COLUMBIA ANALYTICAL SERVICES

EXTRACTABLE ORGANICS
METHOD 6850
Reported: 12/10/08

Microbac Laboratories, Inc.
Project Reference: CH2M HILL - CAMP LEJEUNE
Client Sample ID : MR08-SW02D-08D

Date Sampled : 11/11/08 09:15 **Order #:** 1154510 **Sample Matrix:** WATER
Date Received: 11/17/08 **Submission #:** R2847219 **Analytical Run** 170976

ANALYTE	PQL	RESULT	UNITS
DATE EXTRACTED : 11/20/08			
DATE ANALYZED : 11/21/08			
ANALYTICAL DILUTION: 1.00			
PERCHLORATE	0.20	6.3 ~~6.5 E~~ R DL	UG/L

kw
2/3/09

10DL

COLUMBIA ANALYTICAL SERVICES

EXTRACTABLE ORGANICS
METHOD 6850
Reported: 12/10/08

Use original

Microbac Laboratories, Inc.
Project Reference: CH2M HILL - CAMP LEJEUNE
Client Sample ID : MR08-SW02D-08D

Date Sampled : 11/11/08 09:15 **Order #:** 1154510 **Sample Matrix:** WATER
Date Received: 11/17/08 **Submission #:** R2847219 **Analytical Run** 170976

ANALYTE	PQL	RESULT	UNITS
DATE EXTRACTED : 11/20/08			
DATE ANALYZED : 11/21/08			
ANALYTICAL DILUTION: 2.00			
PERCHLORATE	0.20	6.3 D	UG/L

R DL

LW 2/3/09

11

COLUMBIA ANALYTICAL SERVICES

EXTRACTABLE ORGANICS
METHOD 6850
Reported: 12/10/08

Microbac Laboratories, Inc.
Project Reference: CH2M HILL - CAMP LEJEUNE
Client Sample ID : IR78-GW61-08D

Date Sampled : 11/10/08 12:05 **Order #:** 1154511 **Sample Matrix:** WATER
Date Received: 11/17/08 **Submission #:** R2847219 **Analytical Run** 170976

ANALYTE	PQL	RESULT	UNITS
DATE EXTRACTED : 11/20/08			
DATE ANALYZED : 11/21/08			
ANALYTICAL DILUTION: 1.00			
PERCHLORATE	0.20	0.20 U	UG/L

dw 2/3/09

COLUMBIA ANALYTICAL SERVICES

EXTRACTABLE ORGANICS
METHOD 6850
Reported: 12/10/08

Microbac Laboratories, Inc.
Project Reference: CH2M HILL - CAMP LEJEUNE
Client Sample ID : IR78-GW03-08D

Date Sampled : 11/10/08 15:45 **Order #:** 1154512 **Sample Matrix:** WATER
Date Received: 11/17/08 **Submission #:** R2847219 **Analytical Run** 170976

ANALYTE	PQL	RESULT	UNITS
DATE EXTRACTED : 11/20/08			
DATE ANALYZED : 11/21/08			
ANALYTICAL DILUTION: 1.00			
PERCHLORATE	0.20	0.20 U	UG/L

lw 2/3/09

COLUMBIA ANALYTICAL SERVICES

EXTRACTABLE ORGANICS
METHOD 6850
Reported: 12/10/08

Microbac Laboratories, Inc.
Project Reference: CH2M HILL - CAMP LEJEUNE
Client Sample ID : IR78-GW02-08D

Date Sampled : 11/11/08 09:10 **Order #:** 1154513 **Sample Matrix:** WATER
Date Received: 11/17/08 **Submission #:** R2847219 **Analytical Run** 170976

ANALYTE	PQL	RESULT	UNITS
DATE EXTRACTED : 11/20/08			
DATE ANALYZED : 11/21/08			
ANALYTICAL DILUTION: 1.00			
PERCHLORATE	0.20	0.080 J	UG/L

lw
2/3/09

COLUMBIA ANALYTICAL SERVICES

EXTRACTABLE ORGANICS
METHOD 6850
Reported: 12/10/08

Microbac Laboratories, Inc.
Project Reference: CH2M HILL - CAMP LEJEUNE
Client Sample ID : IR78-GW02D-08D

Date Sampled : 11/11/08 09:10 **Order #:** 1154514 **Sample Matrix:** WATER
Date Received: 11/17/08 **Submission #:** R2847219 **Analytical Run** 170976

ANALYTE	PQL	RESULT	UNITS
DATE EXTRACTED : 11/20/08			
DATE ANALYZED : 11/21/08			
ANALYTICAL DILUTION: 1.00			
PERCHLORATE	0.20	0.080 J	UG/L

lw
2/3/09

COLUMBIA ANALYTICAL SERVICES

EXTRACTABLE ORGANICS
METHOD 6850
Reported: 12/10/08

Microbac Laboratories, Inc.
Project Reference: CH2M HILL - CAMP LEJEUNE
Client Sample ID : IR78-GW42-08D

Date Sampled : 11/11/08 11:40 **Order #:** 1154515 **Sample Matrix:** WATER
Date Received: 11/17/08 **Submission #:** R2847219 **Analytical Run** 170976

ANALYTE	PQL	RESULT	UNITS
DATE EXTRACTED : 11/20/08			
DATE ANALYZED : 11/21/08			
ANALYTICAL DILUTION: 1.00			
PERCHLORATE	0.20	0.20 U	UG/L

lw
2/3/09

16

COLUMBIA ANALYTICAL SERVICES

EXTRACTABLE ORGANICS
METHOD 6850
Reported: 12/10/08

Microbac Laboratories, Inc.
Project Reference: CH2M HILL - CAMP LEJEUNE
Client Sample ID : MR08-CEB111008

Date Sampled : 11/10/08 16:45 **Order #:** 1154516 **Sample Matrix:** WATER
Date Received: 11/17/08 **Submission #:** R2847219 **Analytical Run** 170976

ANALYTE	PQL	RESULT	UNITS
DATE EXTRACTED : 11/20/08			
DATE ANALYZED : 11/21/08			
ANALYTICAL DILUTION: 1.00			
PERCHLORATE	0.20	0.20 U	UG/L

LW
2/3/09

ENVIRONMENTAL
Data Services, Inc.

PERCHLORATE

USEPA Region IV - Level IV Review

Site: MCB Camp Lejeune, TO-09 SDG #: R2847287

Client: CH2M HILL, Inc., Virginia Beach, Virginia Date: February 3, 2009

Laboratory: Columbia Analytical Services, Inc., Rochester, NY Reviewer: Nancy Weaver

EDS ID	Client Sample ID	Laboratory Sample ID	Matrix
1	MR08-SS377-08D	1155502	Soil
2	MR08-SS377-08D	1155503	Soil
3	MR08-SS376-08D	1155504	Soil
4	MR08-SS375-08D	1155505	Soil
4MS	MR08-SS375-08DMS	1155505MS	Soil
4MSD	MR08-SS375-08DMSD	1155505MSD	Soil
5	MR08-SS374-08D	1155506	Soil
6	MR08-SS374D-08D	1155507	Soil
7	IR78-GW04-2-08D	1155508	Water
8	IR78-GW57-08D	1155510	Water
9	IR78-GW57D-08D	1155511	Water
10	IR78-GW01-08D	1155512	Water
11	IR78-GW59-08D	1155513	Water
12	IR78-GW59D-08D	1155514	Water
13	IR78-GW56-08D	1155517	Water
13MS	IR78-GW56-08DMS	1155517MS	Water
13MSD	IR78-GW56-08DMSD	1155517MSD	Water
14	MR78-IS374-08D	1155519	Soil
15	MR78-IS374D-08D	1155520	Soil
16	MR78-IS375-08D	1155521	Soil
17	MR78-IS376-08D	1155522	Soil
17MS	MR78-IS376-08DMS	1155522MS	Soil
17MSD	MR78-IS376-08DMSD	1155522MSD	Soil
18	MR78-SS399-08D	1155524	Soil
19	MR78-SS398-08D	1155525	Soil
20	MR78-SS397-08D	1155526	Soil
21	MR78-SS396-08D	1155527	Soil
22	MR78-EB111608-1	1155528	Water
23	MR78-EB111708-1	1155529	Water
24	MR08-EB111208-1	1155710	Water

The USEPA "Contract Laboratory Program National Functional Guidelines for Inorganic Data Review," October 2004, and professional judgement were used in evaluating the data in this summary report.

Holding Times - All samples were prepared and analyzed within 28 days for perchlorate.

Calibration - The ICAL & CCAL exhibited acceptable %RSD and %D values respectively.

Method and Calibration Blanks - The method blanks and continuing calibration blanks were free of contamination.

Field and Equipment Blank - Field QC results are summarized below.

Blank ID	Compound	Conc. ug/L	Action Level ug/L	Qualifier	Affected Samples
MR08-EB111208-1	None - ND	-	-	-	-
MR08-EB111108-1	None - ND	-	-	-	-
MR08-FB111108	None - ND	-	-	-	-
MR08-FB112008	None - ND	-	-	-	-
MR08-EB111608-1	None - ND	-	-	-	-

Matrix Spike/Duplicate - The matrix spike/duplicate sample exhibited acceptable %R and RPD values except the following.

MS/MSD Sample ID	Compound	MS%R/MSD%R/RPD	Qualifier	Affected Samples
4	Perchlorate	135%/150%/Ok	None	Sample ND
17	Perchlorate	Ok/160%/25	None	Sample ND

LCS - The LCS samples exhibited acceptable %R values.

Field Duplicates - Field duplicate results are summarized below.

Compound	MR08-SS374-08D ug/kg	MR08-SS374D-08D ug/kg	RPD	Qualifier
Perchlorate	1.6	2.4 U	NC	None

Compound	IR78-GW57-08D ug/L	IR78-GW57D-08D ug/L	RPD	Qualifier
None	ND	ND	-	-

Compound	IR78-GW59-08D ug/L	IR78-GW59D-08D ug/L	RPD	Qualifier
None	ND	ND	-	-

Compound	MR78-IS374-08D ug/kg	MR78-IS374-08D ug/kg	RPD	Qualifier
None	ND	ND	-	-

Compound Quantitation - No discrepancies were identified.

COLUMBIA ANALYTICAL SERVICES

EXTRACTABLE ORGANICS
METHOD 6850
Reported: 12/10/08

Microbac Laboratories, Inc.
Project Reference: CH2M HILL - CAMP LEJEUNE
Client Sample ID : MR08-SS377-08D

Date Sampled : 11/11/08 13:30 **Order #:** 1155502 **Sample Matrix:** SOIL/SEDIMENT
Date Received: 11/19/08 **Submission #:** R2847287 **Percent Solid:** 88.5

ANALYTE	PQL	RESULT	UNITS
DATE EXTRACTED : 12/03/08			
DATE ANALYZED : 12/03/08			
ANALYTICAL DILUTION: 10.00			Dry Weight
PERCHLORATE	0.20	2.3 U	UG/KG

lw
2/3/09

2

COLUMBIA ANALYTICAL SERVICES

EXTRACTABLE ORGANICS
METHOD 6850
Reported: 12/10/08

Microbac Laboratories, Inc.
Project Reference: CH2M HILL - CAMP LEJEUNE
Client Sample ID : MR08-SS377D-08D

Date Sampled : 11/11/08 13:35 **Order #:** 1155503 **Sample Matrix:** SOIL/SEDIMENT
Date Received: 11/19/08 **Submission #:** R2847287 **Percent Solid:** 82.7

ANALYTE	PQL	RESULT	UNITS
DATE EXTRACTED : 12/03/08			
DATE ANALYZED : 12/03/08			
ANALYTICAL DILUTION: 10.00			Dry Weight
PERCHLORATE	0.20	2.4 U	UG/KG

lw
2/3/09

COLUMBIA ANALYTICAL SERVICES

EXTRACTABLE ORGANICS
METHOD 6850
Reported: 12/10/08

Microbac Laboratories, Inc.
Project Reference: CH2M HILL - CAMP LEJEUNE
Client Sample ID : MR08-SS376-08D

Date Sampled : 11/11/08 14:25 **Order #:** 1155504 **Sample Matrix:** SOIL/SEDIMENT
Date Received: 11/19/08 **Submission #:** R2847287 **Percent Solid:** 93.9

ANALYTE	PQL	RESULT	UNITS
DATE EXTRACTED : 12/03/08			
DATE ANALYZED : 12/03/08			
ANALYTICAL DILUTION: 10.00			Dry Weight
PERCHLORATE	0.20	2.1 U	UG/KG

fw
2/3/09

COLUMBIA ANALYTICAL SERVICES

EXTRACTABLE ORGANICS
METHOD 6850
Reported: 12/10/08

Microbac Laboratories, Inc.
Project Reference: CH2M HILL - CAMP LEJEUNE
Client Sample ID : MR08-SS375-08D

Date Sampled : 11/11/08 14:45 **Order #:** 1155505 **Sample Matrix:** SOIL/SEDIMENT
Date Received: 11/19/08 **Submission #:** R2847287 **Percent Solid:** 90.5

ANALYTE	PQL	RESULT	UNITS
DATE EXTRACTED : 12/03/08			
DATE ANALYZED : 12/03/08			
ANALYTICAL DILUTION: 10.00			Dry Weight
PERCHLORATE	0.20	2.2 U	UG/KG

lw
2/3/09

5

COLUMBIA ANALYTICAL SERVICES

EXTRACTABLE ORGANICS
METHOD 6850
Reported: 12/10/08

Microbac Laboratories, Inc.
Project Reference: CH2M HILL - CAMP LEJEUNE
Client Sample ID : MR08-SS374-08D

Date Sampled : 11/11/08 15:10 **Order #:** 1155506 **Sample Matrix:** SOIL/SEDIMENT
Date Received: 11/19/08 **Submission #:** R2847287 **Percent Solid:** 88.4

ANALYTE	PQL	RESULT	UNITS
DATE EXTRACTED : 12/03/08			
DATE ANALYZED : 12/03/08			
ANALYTICAL DILUTION: 10.00			Dry Weight
PERCHLORATE	0.20	1.6 J	UG/KG

lw
2/3/09

6

COLUMBIA ANALYTICAL SERVICES

EXTRACTABLE ORGANICS
METHOD 6850
Reported: 12/10/08

Microbac Laboratories, Inc.
Project Reference: CH2M HILL - CAMP LEJEUNE
Client Sample ID : MR08-SS374D-08D

Date Sampled : 11/11/08 15:15 **Order #:** 1155507 **Sample Matrix:** SOIL/SEDIMENT
Date Received: 11/19/08 **Submission #:** R2847287 **Percent Solid:** 85.0

ANALYTE	PQL	RESULT	UNITS
DATE EXTRACTED : 12/03/08			
DATE ANALYZED : 12/03/08			
ANALYTICAL DILUTION: 10.00			Dry Weight
PERCHLORATE	0.20	2.4 U	UG/KG

lw
2/3/09

7

COLUMBIA ANALYTICAL SERVICES

EXTRACTABLE ORGANICS
METHOD 6850
Reported: 12/10/08

Microbac Laboratories, Inc.
Project Reference: CH2M HILL - CAMP LEJEUNE
Client Sample ID : IR78-GW04-2-08D

Date Sampled : 11/11/08 16:05 **Order #:** 1155508 **Sample Matrix:** WATER
Date Received: 11/19/08 **Submission #:** R2847287 **Analytical Run** 170635

ANALYTE	PQL	RESULT	UNITS
DATE EXTRACTED : 11/20/08			
DATE ANALYZED : 11/21/08			
ANALYTICAL DILUTION: 1.00			
PERCHLORATE	0.20	0.20 U	UG/L

lw
2/3/09

8

COLUMBIA ANALYTICAL SERVICES

EXTRACTABLE ORGANICS
METHOD 6850
Reported: 12/10/08

Microbac Laboratories, Inc.
Project Reference: CH2M HILL - CAMP LEJEUNE
Client Sample ID : IR78-GW57-08D

Date Sampled : 11/12/08 09:45 **Order #:** 1155510 **Sample Matrix:** WATER
Date Received: 11/19/08 **Submission #:** R2847287 **Analytical Run** 170635

ANALYTE	PQL	RESULT	UNITS
DATE EXTRACTED : 11/20/08			
DATE ANALYZED : 11/21/08			
ANALYTICAL DILUTION: 1.00			
PERCHLORATE	0.20	0.20 U	UG/L

lw
2/3/09

COLUMBIA ANALYTICAL SERVICES

EXTRACTABLE ORGANICS
METHOD 6850
Reported: 12/10/08

Microbac Laboratories, Inc.
Project Reference: CH2M HILL - CAMP LEJEUNE
Client Sample ID : IR78-GW57D-08D

Date Sampled : 11/12/08 09:50 **Order #:** 1155511 **Sample Matrix:** WATER
Date Received: 11/19/08 **Submission #:** R2847287 **Analytical Run** 170635

ANALYTE	PQL	RESULT	UNITS
DATE EXTRACTED : 11/20/08			
DATE ANALYZED : 11/21/08			
ANALYTICAL DILUTION: 1.00			
PERCHLORATE	0.20	0.20 U	UG/L

lw
2/3/09

COLUMBIA ANALYTICAL SERVICES

EXTRACTABLE ORGANICS
METHOD 6850
Reported: 12/10/08

Microbac Laboratories, Inc.
Project Reference: CH2M HILL - CAMP LEJEUNE
Client Sample ID : IR78-GW01-08D

Date Sampled : 11/12/08 12:10 **Order #:** 1155512 **Sample Matrix:** WATER
Date Received: 11/19/08 **Submission #:** R2847287 **Analytical Run** 170635

ANALYTE	PQL	RESULT	UNITS
DATE EXTRACTED : 11/20/08			
DATE ANALYZED : 11/21/08			
ANALYTICAL DILUTION: 1.00			
PERCHLORATE	0.20	0.20 U	UG/L

QW
2/31/09

COLUMBIA ANALYTICAL SERVICES

EXTRACTABLE ORGANICS
METHOD 6850
Reported: 12/10/08

Microbac Laboratories, Inc.
Project Reference: CH2M HILL - CAMP LEJEUNE
Client Sample ID : IR78-GW59-08D

Date Sampled : 11/12/08 14:05 **Order #:** 1155513 **Sample Matrix:** WATER
Date Received: 11/19/08 **Submission #:** R2847287 **Analytical Run** 170635

ANALYTE	PQL	RESULT	UNITS
DATE EXTRACTED : 11/20/08			
DATE ANALYZED : 11/21/08			
ANALYTICAL DILUTION: 1.00			
PERCHLORATE	0.20	0.20 U	UG/L

lw
2/3/09

COLUMBIA ANALYTICAL SERVICES

EXTRACTABLE ORGANICS
METHOD 6850
Reported: 12/10/08

Microbac Laboratories, Inc.
Project Reference: CH2M HILL - CAMP LEJEUNE
Client Sample ID : IR78-GW59D-08D

Date Sampled : 11/12/08 14:10 **Order #:** 1155514 **Sample Matrix:** WATER
Date Received: 11/19/08 **Submission #:** R2847287 **Analytical Run** 170635

ANALYTE	PQL	RESULT	UNITS
DATE EXTRACTED : 11/20/08			
DATE ANALYZED : 11/22/08			
ANALYTICAL DILUTION: 1.00			
PERCHLORATE	0.20	0.20 U	UG/L

lw
2/3/09

COLUMBIA ANALYTICAL SERVICES

EXTRACTABLE ORGANICS
METHOD 6850
Reported: 12/10/08

Microbac Laboratories, Inc.
Project Reference: CH2M HILL - CAMP LEJEUNE
Client Sample ID : IR78-GW56-08D

Date Sampled : 11/13/08 10:00 **Order #:** 1155517 **Sample Matrix:** WATER
Date Received: 11/19/08 **Submission #:** R2847287 **Analytical Run** 170635

ANALYTE	PQL	RESULT	UNITS
DATE EXTRACTED : 11/20/08			
DATE ANALYZED : 11/22/08			
ANALYTICAL DILUTION: 1.00			
PERCHLORATE	0.20	0.20 U	UG/L

lw
2/3/09

COLUMBIA ANALYTICAL SERVICES

EXTRACTABLE ORGANICS
METHOD 6850
Reported: 12/10/08

Microbac Laboratories, Inc.
Project Reference: CH2M HILL - CAMP LEJEUNE
Client Sample ID : MR08-IS374-08D

Date Sampled : 11/16/08 09:05 **Order #:** 1155519 **Sample Matrix:** SOIL/SEDIMENT
Date Received: 11/19/08 **Submission #:** R2847287 **Percent Solid:** 88.4

ANALYTE	PQL	RESULT	UNITS
DATE EXTRACTED : 12/03/08			
DATE ANALYZED : 12/03/08			
ANALYTICAL DILUTION: 10.00			Dry Weight
PERCHLORATE	0.20	2.3 U	UG/KG

hw
2/3/09

COLUMBIA ANALYTICAL SERVICES

EXTRACTABLE ORGANICS
METHOD 6850
Reported: 12/10/08

Microbac Laboratories, Inc.
Project Reference: CH2M HILL - CAMP LEJEUNE
Client Sample ID : MR08-IS374D-08D

Date Sampled : 11/16/08 09:05 **Order #:** 1155520 **Sample Matrix:** SOIL/SEDIMENT
Date Received: 11/19/08 **Submission #:** R2847287 **Percent Solid:** 78.2

ANALYTE	PQL	RESULT	UNITS
DATE EXTRACTED : 12/03/08			
DATE ANALYZED : 12/03/08			
ANALYTICAL DILUTION: 10.00			Dry Weight
PERCHLORATE	0.20	2.6 U	UG/KG

JW
2/3/09

COLUMBIA ANALYTICAL SERVICES

EXTRACTABLE ORGANICS
METHOD 6850
Reported: 12/10/08

Microbac Laboratories, Inc.
Project Reference: CH2M HILL - CAMP LEJEUNE
Client Sample ID : MR08-IS375-08D

Date Sampled : 11/16/08 10:30 **Order #:** 1155521 **Sample Matrix:** SOIL/SEDIMENT
Date Received: 11/19/08 **Submission #:** R2847287 **Percent Solid:** 77.9

ANALYTE	PQL	RESULT	UNITS
DATE EXTRACTED : 12/03/08			
DATE ANALYZED : 12/03/08			
ANALYTICAL DILUTION: 10.00			Dry Weight
PERCHLORATE	0.20	2.6 U	UG/KG

lw
2/3/09

COLUMBIA ANALYTICAL SERVICES

EXTRACTABLE ORGANICS
METHOD 6850
Reported: 12/10/08

Microbac Laboratories, Inc.
Project Reference: CH2M HILL - CAMP LEJEUNE
Client Sample ID : MR08-IS376-08D

Date Sampled : 11/16/08 11:05 **Order #:** 1155522 **Sample Matrix:** SOIL/SEDIMENT
Date Received: 11/19/08 **Submission #:** R2847287 **Percent Solid:** 79.5

ANALYTE	PQL	RESULT	UNITS
DATE EXTRACTED : 12/03/08			
DATE ANALYZED : 12/04/08			
ANALYTICAL DILUTION: 10.00			Dry Weight
PERCHLORATE	0.20	2.5 U	UG/KG

MW
2/3/09

COLUMBIA ANALYTICAL SERVICES

EXTRACTABLE ORGANICS
METHOD 6850
Reported: 12/10/08

Microbac Laboratories, Inc.
Project Reference: CH2M HILL - CAMP LEJEUNE
Client Sample ID : MR08-SS399-08D

Date Sampled : 11/16/08 12:40 **Order #:** 1155524 **Sample Matrix:** SOIL/SEDIMENT
Date Received: 11/19/08 **Submission #:** R2847287 **Percent Solid:** 82.7

ANALYTE	PQL	RESULT	UNITS
DATE EXTRACTED : 12/03/08			
DATE ANALYZED : 12/04/08			
ANALYTICAL DILUTION: 10.00			Dry Weight
PERCHLORATE	0.20	2.4 U	UG/KG

MW
2/3/09

COLUMBIA ANALYTICAL SERVICES

EXTRACTABLE ORGANICS
METHOD 6850
Reported: 12/10/08

Microbac Laboratories, Inc.
Project Reference: CH2M HILL - CAMP LEJEUNE
Client Sample ID : MR08-SS398-08D

Date Sampled : 11/16/08 13:00 **Order #:** 1155525 **Sample Matrix:** SOIL/SEDIMENT
Date Received: 11/19/08 **Submission #:** R2847287 **Percent Solid:** 84.9

ANALYTE	PQL	RESULT	UNITS
DATE EXTRACTED : 12/03/08			
DATE ANALYZED : 12/04/08			
ANALYTICAL DILUTION: 10.00			Dry Weight
PERCHLORATE	0.20	2.4 U	UG/KG

MW
2/3/09

20

COLUMBIA ANALYTICAL SERVICES

EXTRACTABLE ORGANICS
METHOD 6850
Reported: 12/10/08

Microbac Laboratories, Inc.
Project Reference: CH2M HILL - CAMP LEJEUNE
Client Sample ID : MR08-SS397-08D

Date Sampled : 11/16/08 13:20 **Order #:** 1155526 **Sample Matrix:** SOIL/SEDIMENT
Date Received: 11/19/08 **Submission #:** R2847287 **Percent Solid:** 75.4

ANALYTE	PQL	RESULT	UNITS
DATE EXTRACTED : 12/03/08			
DATE ANALYZED : 12/04/08			
ANALYTICAL DILUTION: 10.00			Dry Weight
PERCHLORATE	0.20	1.2 J	UG/KG

dw
2/3/09

COLUMBIA ANALYTICAL SERVICES

EXTRACTABLE ORGANICS
METHOD 6850
Reported: 12/10/08

Microbac Laboratories, Inc.
Project Reference: CH2M HILL - CAMP LEJEUNE
Client Sample ID : MR08-SS396-08D

Date Sampled : 11/16/08 13:45 **Order #:** 1155527 **Sample Matrix:** SOIL/SEDIMENT
Date Received: 11/19/08 **Submission #:** R2847287 **Percent Solid:** 83.1

ANALYTE	PQL	RESULT	UNITS
DATE EXTRACTED : 12/03/08			
DATE ANALYZED : 12/04/08			
ANALYTICAL DILUTION: 10.00			Dry Weight
PERCHLORATE	0.20	2.4 U	UG/KG

MW
2/3/09

COLUMBIA ANALYTICAL SERVICES

EXTRACTABLE ORGANICS
METHOD 6850
Reported: 12/10/08

Microbac Laboratories, Inc.
Project Reference: CH2M HILL - CAMP LEJEUNE
Client Sample ID : MR08-EB111608-1

Date Sampled : 11/16/08 14:45 **Order #:** 1155528 **Sample Matrix:** WATER
Date Received: 11/19/08 **Submission #:** R2847287 **Analytical Run** 170635

ANALYTE	PQL	RESULT	UNITS
DATE EXTRACTED : 11/20/08			
DATE ANALYZED : 11/22/08			
ANALYTICAL DILUTION: 1.00			
PERCHLORATE	0.20	0.20 U	UG/L

MW
2/3/09

23

COLUMBIA ANALYTICAL SERVICES

EXTRACTABLE ORGANICS
METHOD 6850
Reported: 12/10/08

Microbac Laboratories, Inc.
Project Reference: CH2M HILL - CAMP LEJEUNE
Client Sample ID : MR08-EB111708-1

Date Sampled : 11/17/08 08:10 **Order #:** 1155529 **Sample Matrix:** WATER
Date Received: 11/19/08 **Submission #:** R2847287 **Analytical Run** 170635

ANALYTE	PQL	RESULT	UNITS
DATE EXTRACTED : 11/20/08			
DATE ANALYZED : 11/22/08			
ANALYTICAL DILUTION: 1.00			
PERCHLORATE	0.20	0.20 U	UG/L

MW
2/3/09

COLUMBIA ANALYTICAL SERVICES

EXTRACTABLE ORGANICS
METHOD 6850
Reported: 12/10/08

Microbac Laboratories, Inc.
Project Reference: CH2M HILL - CAMP LEJEUNE
Client Sample ID : MR08-EB111208-1

Date Sampled : 11/12/08 08:30 **Order #:** 1155710 **Sample Matrix:** WATER
Date Received: 11/19/08 **Submission #:** R2847287 **Analytical Run** 170635

ANALYTE	PQL	RESULT	UNITS
DATE EXTRACTED : 11/20/08			
DATE ANALYZED : 11/22/08			
ANALYTICAL DILUTION: 1.00			
PERCHLORATE	0.20	0.20 U	UG/L

lw
2/3/09

ENVIRONMENTAL
Data Services, Inc.

PERCHLORATE

USEPA Region IV - Level IV Review

Site: MCB Camp Lejeune, TO-09 SDG #: R2847358

Client: CH2M HILL, Inc., Virginia Beach, Virginia Date: February 4, 2008

Laboratory: Columbia Analytical Services, Inc., Rochester, NY Reviewer: Nancy Weaver

EDS ID	Client Sample ID	Laboratory Sample ID	Matrix
1	MR08-IS377-08D	1156553	Soil
2	MR08-IS377D-08D	1156557	Soil
3	MR08-IS397-08D	1156558	Soil
4	MR08-IS398-08D	1156559	Soil
5	MR08-IS398D-08D	1156560	Soil
6	MR08-IS399-08D	1156561	Soil
7	MR08-IS392-08D	1156562	Soil
8	MR08-IS391-08D	1156563	Soil
9	MR08-IS390-08D	1156564	Soil
10	MR08-IS393-08D	1156565	Soil
11	MR08-IS395-08D	1156566	Soil
12	MR08-EB111808	1156567	Water
13	MR08-TW01-08D	1156568	Water
14	MR08-TW02-08D	1156569	Water
15	MR08-TW02D-08D	1156570	Water
16	MR08-TW03-08D	1156571	Water
17	MR08-TW03D-08D	1156572	Water

The USEPA "Contract Laboratory Program National Functional Guidelines for Inorganic Data Review," October 2004, and professional judgement were used in evaluating the data in this summary report.

Holding Times - All samples were prepared and analyzed within 28 days for perchlorate.

Calibration - The ICAL and CCAL exhibited acceptable %RSD and %D values respectively.

Method and Calibration Blanks - The method blanks and continuing calibration blanks were free of contamination.

Field and Equipment Blank - Field QC results are summarized below.

Blank ID	Compound	Conc. ug/L	Action Level ug/L	Qualifier	Affected Samples
MR08-EB111708-1	None - ND	-	-	-	-
MR08-EB111608-1	None - ND	-	-	-	-
MR08-EB11808	None - ND	-	-	-	-
MR08-EB112008	None - ND	-	-	-	-

Matrix Spike/Duplicate - The matrix spike/duplicate sample exhibited acceptable %R and RPD values.

LCS - The LCS samples exhibited acceptable %R values.

Field Duplicates - Field duplicate results are summarized below.

Compound	MR08-IS377-08D ug/kg	MR08-IS377D-08D ug/kg	RPD	Qualifier
None	ND	ND	-	-

Compound	MR08-IS398-08D ug/kg	MR08-IS398D-08D ug/kg	RPD	Qualifier
None	ND	ND	-	-

Compound	MR08-TW02-08D ug/L	MR08-TW02D-08D ug/L	RPD	Qualifier
Perchlorate	0.38	0.37	3%	None

Compound	MR08-TW03-08D ug/L	MR08-TW03D-08D ug/L	RPD	Qualifier
Perchlorate	0.43	0.46	7%	None

Compound Quantitation - No discrepancies were identified.

COLUMBIA ANALYTICAL SERVICES

EXTRACTABLE ORGANICS
METHOD 6850
Reported: 12/11/08

Microbac Laboratories, Inc.
Project Reference: CH2M HILL - CAMP LEJEUNE
Client Sample ID : MR08-1S377-08D

Date Sampled : 11/17/08 11:25 **Order #:** 1156553 **Sample Matrix:** SOIL/SEDIMENT
Date Received: 11/21/08 **Submission #:** R2847358 **Percent Solid:** 95.5

ANALYTE	PQL	RESULT	UNITS
DATE EXTRACTED : 11/25/08			
DATE ANALYZED : 12/01/08			
ANALYTICAL DILUTION: 10.00			Dry Weight
PERCHLORATE	0.20	2.1 U	UG/KG

lcw 2/4/09

2

COLUMBIA ANALYTICAL SERVICES

EXTRACTABLE ORGANICS
METHOD 6850
Reported: 12/11/08

Microbac Laboratories, Inc.
Project Reference: CH2M HILL - CAMP LEJEUNE
Client Sample ID : MR08-1S377D-08D

Date Sampled : 11/17/08 11:30 **Order #:** 1156557 **Sample Matrix:** SOIL/SEDIMENT
Date Received: 11/21/08 **Submission #:** R2847358 **Percent Solid:** 96.6

ANALYTE	PQL	RESULT	UNITS
DATE EXTRACTED : 11/25/08			
DATE ANALYZED : 12/01/08			
ANALYTICAL DILUTION: 10.00			Dry Weight
PERCHLORATE	0.20	2.1 U	UG/KG

lw
2/4/09

3

COLUMBIA ANALYTICAL SERVICES

EXTRACTABLE ORGANICS
METHOD 6850
Reported: 12/11/08

Microbac Laboratories, Inc.
Project Reference: CH2M HILL - CAMP LEJEUNE
Client Sample ID : MR08-1S397-08D

Date Sampled : 11/17/08 16:00 **Order #:** 1156558 **Sample Matrix:** SOIL/SEDIMENT
Date Received: 11/21/08 **Submission #:** R2847358 **Percent Solid:** 89.5

ANALYTE	PQL	RESULT	UNITS
DATE EXTRACTED : 11/25/08			
DATE ANALYZED : 12/01/08			
ANALYTICAL DILUTION: 10.00			Dry Weight
PERCHLORATE	0.20	2.2 U	UG/KG

lw
2/4/09

COLUMBIA ANALYTICAL SERVICES

4

EXTRACTABLE ORGANICS
METHOD 6850
Reported: 12/11/08

Microbac Laboratories, Inc.
Project Reference: CH2M HILL - CAMP LEJEUNE
Client Sample ID : MR08-1S398-08D

Date Sampled : 11/18/08 08:35 **Order #:** 1156559 **Sample Matrix:** SOIL/SEDIMENT
Date Received: 11/21/08 **Submission #:** R2847358 **Percent Solid:** 84.7

ANALYTE	PQL	RESULT	UNITS
DATE EXTRACTED : 11/25/08			
DATE ANALYZED : 12/01/08			
ANALYTICAL DILUTION: 10.00			Dry Weight
PERCHLORATE	0.20	2.4 U	UG/KG

lew 2/4/09

COLUMBIA ANALYTICAL SERVICES

EXTRACTABLE ORGANICS
METHOD 6850
Reported: 12/11/08

Microbac Laboratories, Inc.
Project Reference: CH2M HILL - CAMP LEJEUNE
Client Sample ID : MR08-1S398D-08D

Date Sampled : 11/18/08 08:40 **Order #:** 1156560 **Sample Matrix:** SOIL/SEDIMENT
Date Received: 11/21/08 **Submission #:** R2847358 **Percent Solid:** 85.2

ANALYTE	PQL	RESULT	UNITS
DATE EXTRACTED : 11/25/08			
DATE ANALYZED : 12/01/08			
ANALYTICAL DILUTION: 10.00			Dry Weight
PERCHLORATE	0.20	2.3 U	UG/KG

MW 2/4/09

6

COLUMBIA ANALYTICAL SERVICES

EXTRACTABLE ORGANICS
METHOD 6850
Reported: 12/11/08

Microbac Laboratories, Inc.
Project Reference: CH2M HILL - CAMP LEJEUNE
Client Sample ID : MR08-1S399-08D

Date Sampled : 11/18/08 09:20 **Order #:** 1156561 **Sample Matrix:** SOIL/SEDIMENT
Date Received: 11/21/08 **Submission #:** R2847358 **Percent Solid:** 95.7

ANALYTE	PQL	RESULT	UNITS
DATE EXTRACTED : 11/25/08			
DATE ANALYZED : 12/01/08			
ANALYTICAL DILUTION: 10.00			Dry Weight
PERCHLORATE	0.20	2.1 U	UG/KG

lw
2/4/09

COLUMBIA ANALYTICAL SERVICES

EXTRACTABLE ORGANICS
METHOD 6850
Reported: 12/11/08

Microbac Laboratories, Inc.
Project Reference: CH2M HILL - CAMP LEJEUNE
Client Sample ID : MR08-1S392-08D

Date Sampled : 11/18/08 10:40 **Order #:** 1156562 **Sample Matrix:** SOIL/SEDIMENT
Date Received: 11/21/08 **Submission #:** R2847358 **Percent Solid:** 90.9

ANALYTE	PQL	RESULT	UNITS
DATE EXTRACTED : 11/25/08			
DATE ANALYZED : 12/01/08			
ANALYTICAL DILUTION: 10.00			Dry Weight
PERCHLORATE	0.20	2.2 U	UG/KG

lew
2/4/09

8

COLUMBIA ANALYTICAL SERVICES

EXTRACTABLE ORGANICS
METHOD 6850
Reported: 12/11/08

Microbac Laboratories, Inc.
Project Reference: CH2M HILL - CAMP LEJEUNE
Client Sample ID : MR08-1S391-08D

Date Sampled : 11/18/08 12:15 **Order #:** 1156563 **Sample Matrix:** SOIL/SEDIMENT
Date Received: 11/21/08 **Submission #:** R2847358 **Percent Solid:** 93.7

ANALYTE	PQL	RESULT	UNITS
DATE EXTRACTED : 11/25/08			
DATE ANALYZED : 12/01/08			
ANALYTICAL DILUTION: 10.00			Dry Weight
PERCHLORATE	0.20	2.1 U	UG/KG

lw
2/4/09

COLUMBIA ANALYTICAL SERVICES

EXTRACTABLE ORGANICS
METHOD 6850
Reported: 12/11/08

Microbac Laboratories, Inc.
Project Reference: CH2M HILL - CAMP LEJEUNE
Client Sample ID : MR08-1S390-08D

Date Sampled : 11/18/08 14:00 **Order #:** 1156564 **Sample Matrix:** SOIL/SEDIMENT
Date Received: 11/21/08 **Submission #:** R2847358 **Percent Solid:** 89.6

ANALYTE	PQL	RESULT	UNITS
DATE EXTRACTED : 11/25/08			
DATE ANALYZED : 12/01/08			
ANALYTICAL DILUTION: 10.00			Dry Weight
PERCHLORATE	0.20	2.2 U	UG/KG

lw
2/4/09

COLUMBIA ANALYTICAL SERVICES

EXTRACTABLE ORGANICS
METHOD 6850
Reported: 12/11/08

Microbac Laboratories, Inc.
Project Reference: CH2M HILL - CAMP LEJEUNE
Client Sample ID : MR08-1S393-08D

Date Sampled : 11/18/08 14:55 **Order #:** 1156565 **Sample Matrix:** SOIL/SEDIMENT
Date Received: 11/21/08 **Submission #:** R2847358 **Percent Solid:** 94.1

ANALYTE	PQL	RESULT	UNITS
DATE EXTRACTED : 11/25/08			
DATE ANALYZED : 12/01/08			
ANALYTICAL DILUTION: 10.00			Dry Weight
PERCHLORATE	0.20	2.1 U	UG/KG

lew
2/4/09

COLUMBIA ANALYTICAL SERVICES

11

EXTRACTABLE ORGANICS
METHOD 6850
Reported: 12/11/08

Microbac Laboratories, Inc.
Project Reference: CH2M HILL - CAMP LEJEUNE
Client Sample ID : MR08-1S395-08D

Date Sampled : 11/18/08 16:00 **Order #:** 1156566 **Sample Matrix:** SOIL/SEDIMENT
Date Received: 11/21/08 **Submission #:** R2847358 **Percent Solid:** 93.0

ANALYTE	PQL	RESULT	UNITS
DATE EXTRACTED : 11/25/08			
DATE ANALYZED : 12/01/08			
ANALYTICAL DILUTION: 10.00			Dry Weight
PERCHLORATE	0.20	2.2 U	UG/KG

MW 2/4/09

12

COLUMBIA ANALYTICAL SERVICES

EXTRACTABLE ORGANICS
METHOD 6850
Reported: 12/11/08

Microbac Laboratories, Inc.
Project Reference: CH2M HILL - CAMP LEJEUNE
Client Sample ID : MR08-EB111808

Date Sampled : 11/18/08 17:30 **Order #:** 1156567 **Sample Matrix:** WATER
Date Received: 11/21/08 **Submission #:** R2847358 **Analytical Run** 171051

ANALYTE	PQL	RESULT	UNITS
DATE EXTRACTED : 11/24/08			
DATE ANALYZED : 11/24/08			
ANALYTICAL DILUTION: 1.00			
PERCHLORATE	0.20	0.20 U	UG/L

MW
2/4/09

COLUMBIA ANALYTICAL SERVICES

EXTRACTABLE ORGANICS
METHOD 6850
Reported: 12/11/08

Microbac Laboratories, Inc.
Project Reference: CH2M HILL - CAMP LEJEUNE
Client Sample ID : MR08-TW01-08D

Date Sampled : 11/17/08 16:10 **Order #:** 1156568 **Sample Matrix:** WATER
Date Received: 11/21/08 **Submission #:** R2847358 **Analytical Run** 171051

ANALYTE	PQL	RESULT	UNITS
DATE EXTRACTED : 11/24/08			
DATE ANALYZED : 11/24/08			
ANALYTICAL DILUTION: 1.00			
PERCHLORATE	0.20	0.87	UG/L

lw
2/4/09

14

COLUMBIA ANALYTICAL SERVICES

EXTRACTABLE ORGANICS
METHOD 6850
Reported: 12/11/08

Microbac Laboratories, Inc.
Project Reference: CH2M HILL - CAMP LEJEUNE
Client Sample ID : MR08-TW02-08D

Date Sampled : 11/18/08 09:30 **Order #:** 1156569 **Sample Matrix:** WATER
Date Received: 11/21/08 **Submission #:** R2847358 **Analytical Run** 171051

ANALYTE	PQL	RESULT	UNITS
DATE EXTRACTED : 11/24/08			
DATE ANALYZED : 11/24/08			
ANALYTICAL DILUTION: 1.00			
PERCHLORATE	0.20	0.38	UG/L

lw 2/4/09

COLUMBIA ANALYTICAL SERVICES

15

EXTRACTABLE ORGANICS
METHOD 6850
Reported: 12/11/08

Microbac Laboratories, Inc.
Project Reference: CH2M HILL - CAMP LEJEUNE
Client Sample ID : MR08-TW02D-08D

Date Sampled : 11/18/08 09:35 **Order #:** 1156570 **Sample Matrix:** WATER
Date Received: 11/21/08 **Submission #:** R2847358 **Analytical Run** 171051

ANALYTE	PQL	RESULT	UNITS
DATE EXTRACTED : 11/24/08			
DATE ANALYZED : 11/24/08			
ANALYTICAL DILUTION: 1.00			
PERCHLORATE	0.20	0.37	UG/L

MW 2/4/09

16

COLUMBIA ANALYTICAL SERVICES

EXTRACTABLE ORGANICS
METHOD 6850
Reported: 12/11/08

Microbac Laboratories, Inc.
Project Reference: CH2M HILL - CAMP LEJEUNE
Client Sample ID : MR08-TW03-08D

Date Sampled : 11/18/08 09:50 **Order #:** 1156571 **Sample Matrix:** WATER
Date Received: 11/21/08 **Submission #:** R2847358 **Analytical Run** 171051

ANALYTE	PQL	RESULT	UNITS
DATE EXTRACTED : 11/24/08			
DATE ANALYZED : 11/24/08			
ANALYTICAL DILUTION: 1.00			
PERCHLORATE	0.20	0.43	UG/L

lw
2/4/09

17

COLUMBIA ANALYTICAL SERVICES

EXTRACTABLE ORGANICS
METHOD 6850
Reported: 12/11/08

Microbac Laboratories, Inc.
Project Reference: CH2M HILL - CAMP LEJEUNE
Client Sample ID : MR08-TW03D-08D

Date Sampled : 11/18/08 09:55 **Order #:** 1156572 **Sample Matrix:** WATER
Date Received: 11/21/08 **Submission #:** R2847358 **Analytical Run** 171051

ANALYTE	PQL	RESULT	UNITS
DATE EXTRACTED : 11/24/08			
DATE ANALYZED : 11/24/08			
ANALYTICAL DILUTION: 1.00			
PERCHLORATE	0.20	0.46	UG/L

lew
2/4/09

ENVIRONMENTAL
Data Services, Inc.

PERCHLORATE

USEPA Region IV - Level IV Review

Site: MCB Camp Lejeune, TO-09 SDG #: R2847385

Client: CH2M HILL, Inc., Virginia Beach, Virginia Date: February 4, 2009

Laboratory: Columbia Analytical Services, Inc., Rochester, NY Reviewer: Nancy Weaver

EDS ID	Client Sample ID	Laboratory Sample ID	Matrix
1	MR08-SS388-08D	1156962	Soil
2	MR08-IS388-08D	1156963	Soil
3	MR08-SS389-08D	1156964	Soil
3MS	MR08-SS389-08DMS	1156964MS	Soil
3MSD	MR08-SS389-08DMSD	1156964MSD	Soil
4	MR08-IS389-08D	1156965	Soil
5	MR08-IS389D-08D	1156966	Soil
6	MR08-SS394-08D	1156967	Soil
7	MR08-IS394-08D	1156968	Soil
7MS	MR08-IS394-08DMS	1156968MS	Soil
7MSD	MR08-IS394-08DMSD	1156968MSD	Soil
8	MR08-IS396-08D	1156969	Soil
9	MR08-SS395-08D	1156970	Soil
10	MR08-SS395D-08D	1156971	Soil
11	MR08-SS393-08D	1156972	Soil
12	MR08-SS392-08D	1156973	Soil
13	MR08-SS391-08D	1156974	Soil
14	MR08-SS391D-08D	1156975	Soil
15	MR08-SS390-08D	1156976	Soil
16	MR08-TW25-08D	1156977	Water
17	MR08-TW18-08D	1156978	Water
18	MR08-TW26-08D	1156979	Water
18MS	MR08-TW26-08DMS	1156979MS	Water
18MSD	MR08-TW26-08DMSD	1156979MSD	Water
19	MR08-TW04-08D	1156980	Water
20	MR08-TW19-08D	1156981	Water
21	MR08-TW20-08D	1156982	Water
22	MR08-FB112008	1156983	Water
23	MR08-EB111908	1157641	Water

The USEPA "Contract Laboratory Program National Functional Guidelines for Inorganic Data Review," October 2004, and professional judgement were used in evaluating the data in this summary report.

Holding Times - All samples were prepared and analyzed within 28 days for perchlorate.

Calibration - The ICAL and CCAL exhibited acceptable %RSD and %D values respectively.

Method and Calibration Blanks - The method blanks and continuing calibration blanks were free of contamination.

Field and Equipment Blank - Field QC results are summarized below.

Blank ID	Compound	Conc. ug/L	Action Level ug/L	Qualifier	Affected Samples
MR08-EB111708-1	None - ND	-	-	-	-
MR08-EB111908	None - ND	-	-	-	-
MR08-FB112008	None - ND	-	-	-	-

Matrix Spike/Duplicate - The matrix spike/duplicate sample exhibited acceptable %R and RPD values.

LCS - The LCS samples exhibited acceptable %R values.

Field Duplicates - Field duplicate results are summarized below.

Compound	MR08-IS389-08D ug/kg	MR08-IS389D-08D ug/kg	RPD	Qualifier
None	ND	ND	-	-

Compound	MR08-SS395-08D ug/kg	MR08-SS395D-08D ug/kg	RPD	Qualifier
None	ND	ND	-	-

Compound	MR08-SS391-08D ug/kg	MR08-SS391D-08D ug/kg	RPD	Qualifier
None	ND	ND	-	-

Compound Quantitation - No discrepancies were identified.

COLUMBIA ANALYTICAL SERVICES

EXTRACTABLE ORGANICS
METHOD 6850
Reported: 12/16/08

Microbac Laboratories, Inc.
Project Reference: CH2M HILL - CAMP LEJEUNE
Client Sample ID : MR08-SS388-08D

Date Sampled : 11/19/08 07:30 **Order #:** 1156962 **Sample Matrix:** SOIL/SEDIMENT
Date Received: 11/22/08 **Submission #:** R2847385 **Percent Solid:** 84.2

ANALYTE	PQL	RESULT	UNITS
DATE EXTRACTED : 11/25/08			
DATE ANALYZED : 12/02/08			
ANALYTICAL DILUTION: 10.00			Dry Weight
PERCHLORATE	0.20	2.4 U	UG/KG

MW 2/4/09

2

COLUMBIA ANALYTICAL SERVICES

EXTRACTABLE ORGANICS
METHOD 6850
Reported: 12/16/08

Microbac Laboratories, Inc.
Project Reference: CH2M HILL - CAMP LEJEUNE
Client Sample ID : MR08-IS388-08D

Date Sampled : 11/19/08 08:45 **Order #:** 1156963 **Sample Matrix:** SOIL/SEDIMENT
Date Received: 11/22/08 **Submission #:** R2847385 **Percent Solid:** 92.5

ANALYTE	PQL	RESULT	UNITS
DATE EXTRACTED : 11/25/08			
DATE ANALYZED : 12/02/08			
ANALYTICAL DILUTION: 10.00			Dry Weight
PERCHLORATE	0.20	2.2 U	UG/KG

QW 2/4/09

3

COLUMBIA ANALYTICAL SERVICES

EXTRACTABLE ORGANICS
METHOD 6850
Reported: 12/16/08

Microbac Laboratories, Inc.
Project Reference: CH2M HILL - CAMP LEJEUNE
Client Sample ID : MR08-SS389-08D

Date Sampled : 11/19/08 09:30 **Order #:** 1156964 **Sample Matrix:** SOIL/SEDIMENT
Date Received: 11/22/08 **Submission #:** R2847385 **Percent Solid:** 91.1

ANALYTE	PQL	RESULT	UNITS
DATE EXTRACTED : 11/25/08			
DATE ANALYZED : 12/02/08			
ANALYTICAL DILUTION: 10.00			Dry Weight
PERCHLORATE	0.20	2.2 U	UG/KG

JW 2/4/09

4

COLUMBIA ANALYTICAL SERVICES

EXTRACTABLE ORGANICS
METHOD 6850
Reported: 12/16/08

Microbac Laboratories, Inc.
Project Reference: CH2M HILL - CAMP LEJEUNE
Client Sample ID : MR08-IS389-08D

Date Sampled : 11/19/08 10:10 **Order #:** 1156965 **Sample Matrix:** SOIL/SEDIMENT
Date Received: 11/22/08 **Submission #:** R2847385 **Percent Solid:** 91.1

ANALYTE	PQL	RESULT	UNITS
DATE EXTRACTED : 11/25/08			
DATE ANALYZED : 12/02/08			
ANALYTICAL DILUTION: 10.00			Dry Weight
PERCHLORATE	0.20	2.2 U	UG/KG

LW
2/4/09

COLUMBIA ANALYTICAL SERVICES

EXTRACTABLE ORGANICS
METHOD 6850
Reported: 12/16/08

Microbac Laboratories, Inc.
Project Reference: CH2M HILL - CAMP LEJEUNE
Client Sample ID : MR08-IS389D-08D

Date Sampled : 11/19/08 10:15 **Order #:** 1156966 **Sample Matrix:** SOIL/SEDIMENT
Date Received: 11/22/08 **Submission #:** R2847385 **Percent Solid:** 88.2

ANALYTE	PQL	RESULT	UNITS
DATE EXTRACTED : 11/25/08			
DATE ANALYZED : 12/02/08			
ANALYTICAL DILUTION: 10.00			Dry Weight
PERCHLORATE	0.20	2.3 U	UG/KG

lul
2/4/09

COLUMBIA ANALYTICAL SERVICES

6

EXTRACTABLE ORGANICS
METHOD 6850
Reported: 12/16/08

Microbac Laboratories, Inc.
Project Reference: CH2M HILL - CAMP LEJEUNE
Client Sample ID : MR08-SS394-08D

Date Sampled : 11/19/08 10:45 **Order #:** 1156967 **Sample Matrix:** SOIL/SEDIMENT
Date Received: 11/22/08 **Submission #:** R2847385 **Percent Solid:** 91.7

ANALYTE	PQL	RESULT	UNITS
DATE EXTRACTED : 11/25/08			
DATE ANALYZED : 12/02/08			
ANALYTICAL DILUTION: 10.00			Dry Weight
PERCHLORATE	0.20	2.2 U	UG/KG

MW 2/4/09

7

COLUMBIA ANALYTICAL SERVICES

EXTRACTABLE ORGANICS
METHOD 6850
Reported: 12/16/08

Microbac Laboratories, Inc.
Project Reference: CH2M HILL - CAMP LEJEUNE
Client Sample ID : MR08-IS394-08D

Date Sampled : 11/19/08 11:35 **Order #:** 1156968 **Sample Matrix:** SOIL/SEDIMENT
Date Received: 11/22/08 **Submission #:** R2847385 **Percent Solid:** 89.4

ANALYTE	PQL	RESULT	UNITS
DATE EXTRACTED : 11/25/08			
DATE ANALYZED : 12/02/08			
ANALYTICAL DILUTION: 10.00			Dry Weight
PERCHLORATE	0.20	2.2 U	UG/KG

MW
2/4/09

8

COLUMBIA ANALYTICAL SERVICES

EXTRACTABLE ORGANICS
METHOD 6850
Reported: 12/16/08

Microbac Laboratories, Inc.
Project Reference: CH2M HILL - CAMP LEJEUNE
Client Sample ID : MR08-IS396-08D

Date Sampled : 11/19/08 13:00 **Order #:** 1156969 **Sample Matrix:** SOIL/SEDIMENT
Date Received: 11/22/08 **Submission #:** R2847385 **Percent Solid:** 90.1

ANALYTE	PQL	RESULT	UNITS
DATE EXTRACTED : 11/25/08			
DATE ANALYZED : 12/02/08			
ANALYTICAL DILUTION: 10.00			Dry Weight
PERCHLORATE	0.20	2.2 U	UG/KG

lw 2/4/09

COLUMBIA ANALYTICAL SERVICES

EXTRACTABLE ORGANICS
METHOD 6850
Reported: 12/16/08

Microbac Laboratories, Inc.
Project Reference: CH2M HILL - CAMP LEJEUNE
Client Sample ID : MR08-SS395-08D

Date Sampled : 11/19/08 14:55 **Order #:** 1156970 **Sample Matrix:** SOIL/SEDIMENT
Date Received: 11/22/08 **Submission #:** R2847385 **Percent Solid:** 84.6

ANALYTE	PQL	RESULT	UNITS
DATE EXTRACTED : 11/25/08			
DATE ANALYZED : 12/02/08			
ANALYTICAL DILUTION: 10.00			Dry Weight
PERCHLORATE	0.20	2.4 U	UG/KG

lw
2/4/09

COLUMBIA ANALYTICAL SERVICES

EXTRACTABLE ORGANICS
METHOD 6850
Reported: 12/16/08

Microbac Laboratories, Inc.
Project Reference: CH2M HILL - CAMP LEJEUNE
Client Sample ID : MR08-SS395D-08D

Date Sampled : 11/19/08 15:00 **Order #:** 1156971 **Sample Matrix:** SOIL/SEDIMENT
Date Received: 11/22/08 **Submission #:** R2847385 **Percent Solid:** 86.5

ANALYTE	PQL	RESULT	UNITS
DATE EXTRACTED : 11/25/08			
DATE ANALYZED : 12/02/08			
ANALYTICAL DILUTION: 10.00			Dry Weight
PERCHLORATE	0.20	2.3 U	UG/KG

lw
2/4/09

11

COLUMBIA ANALYTICAL SERVICES

EXTRACTABLE ORGANICS
METHOD 6850
Reported: 12/16/08

Microbac Laboratories, Inc.
Project Reference: CH2M HILL - CAMP LEJEUNE
Client Sample ID : MR08-SS393-08D

Date Sampled : 11/19/08 15:45 **Order #:** 1156972 **Sample Matrix:** SOIL/SEDIMENT
Date Received: 11/22/08 **Submission #:** R2847385 **Percent Solid:** 86.4

ANALYTE	PQL	RESULT	UNITS
DATE EXTRACTED : 11/25/08			
DATE ANALYZED : 12/02/08			
ANALYTICAL DILUTION: 10.00			Dry Weight
PERCHLORATE	0.20	2.3 U	UG/KG

MW 2/4/09

COLUMBIA ANALYTICAL SERVICES

EXTRACTABLE ORGANICS
METHOD 6850
Reported: 12/16/08

Microbac Laboratories, Inc.
Project Reference: CH2M HILL - CAMP LEJEUNE
Client Sample ID : MR08-SS392-08D

Date Sampled : 11/19/08 16:00 **Order #:** 1156973 **Sample Matrix:** SOIL/SEDIMENT
Date Received: 11/22/08 **Submission #:** R2847385 **Percent Solid:** 85.5

ANALYTE	PQL	RESULT	UNITS
DATE EXTRACTED : 11/25/08			
DATE ANALYZED : 12/02/08			
ANALYTICAL DILUTION: 10.00			Dry Weight
PERCHLORATE	0.20	2.3 U	UG/KG

lw
2/4/09

COLUMBIA ANALYTICAL SERVICES

EXTRACTABLE ORGANICS
METHOD 6850
Reported: 12/16/08

Microbac Laboratories, Inc.
Project Reference: CH2M HILL - CAMP LEJEUNE
Client Sample ID : MR08-SS391-08D

Date Sampled : 11/19/08 16:30 **Order #:** 1156974 **Sample Matrix:** SOIL/SEDIMENT
Date Received: 11/22/08 **Submission #:** R2847385 **Percent Solid:** 85.3

ANALYTE	PQL	RESULT	UNITS
DATE EXTRACTED : 11/25/08			
DATE ANALYZED : 12/02/08			
ANALYTICAL DILUTION: 10.00			Dry Weight
PERCHLORATE	0.20	2.3 U	UG/KG

lw
2/4/09

COLUMBIA ANALYTICAL SERVICES

EXTRACTABLE ORGANICS
METHOD 6850
Reported: 12/16/08

Microbac Laboratories, Inc.
Project Reference: CH2M HILL - CAMP LEJEUNE
Client Sample ID : MR08-SS391D-08D

Date Sampled : 11/19/08 16:35 **Order #:** 1156975 **Sample Matrix:** SOIL/SEDIMENT
Date Received: 11/22/08 **Submission #:** R2847385 **Percent Solid:** 87.2

ANALYTE	PQL	RESULT	UNITS
DATE EXTRACTED : 11/25/08			
DATE ANALYZED : 12/02/08			
ANALYTICAL DILUTION: 10.00			Dry Weight
PERCHLORATE	0.20	2.3 U	UG/KG

MW 12/4/09

COLUMBIA ANALYTICAL SERVICES

EXTRACTABLE ORGANICS
METHOD 6850
Reported: 12/16/08

Microbac Laboratories, Inc.
Project Reference: CH2M HILL - CAMP LEJEUNE
Client Sample ID : MR08-SS390-08D

Date Sampled : 11/19/08 17:00 **Order #:** 1156976 **Sample Matrix:** SOIL/SEDIMENT
Date Received: 11/22/08 **Submission #:** R2847385 **Percent Solid:** 81.0

ANALYTE	PQL	RESULT	UNITS
DATE EXTRACTED : 11/25/08			
DATE ANALYZED : 12/02/08			
ANALYTICAL DILUTION: 10.00			Dry Weight
PERCHLORATE	0.20	2.5 U	UG/KG

MW 2/4/09

COLUMBIA ANALYTICAL SERVICES

EXTRACTABLE ORGANICS
METHOD 6850
Reported: 12/16/08

Microbac Laboratories, Inc.
Project Reference: CH2M HILL - CAMP LEJEUNE
Client Sample ID : MR08-TW25-08D

Date Sampled : 11/20/08 14:15 **Order #:** 1156977 **Sample Matrix:** WATER
Date Received: 11/22/08 **Submission #:** R2847385 **Analytical Run** 171051

ANALYTE	PQL	RESULT	UNITS
DATE EXTRACTED : 11/24/08			
DATE ANALYZED : 11/24/08			
ANALYTICAL DILUTION: 1.00			
PERCHLORATE	0.20	0.60	UG/L

lw
2/4/09

COLUMBIA ANALYTICAL SERVICES

EXTRACTABLE ORGANICS
METHOD 6850
Reported: 12/16/08

Microbac Laboratories, Inc.
Project Reference: CH2M HILL - CAMP LEJEUNE
Client Sample ID : MR08-TW18-08D

Date Sampled : 11/20/08 14:50 **Order #:** 1156978 **Sample Matrix:** WATER
Date Received: 11/22/08 **Submission #:** R2847385 **Analytical Run** 171051

ANALYTE	PQL	RESULT	UNITS
DATE EXTRACTED : 11/24/08			
DATE ANALYZED : 11/24/08			
ANALYTICAL DILUTION: 1.00			
PERCHLORATE	0.20	0.20 U	UG/L

MW 2/4/09

COLUMBIA ANALYTICAL SERVICES

EXTRACTABLE ORGANICS
METHOD 6850
Reported: 12/16/08

Microbac Laboratories, Inc.
Project Reference: CH2M HILL - CAMP LEJEUNE
Client Sample ID : MR08-TW26-08D

Date Sampled : 11/20/08 09:40 **Order #:** 1156979 **Sample Matrix:** WATER
Date Received: 11/22/08 **Submission #:** R2847385 **Analytical Run** 171052

ANALYTE	PQL	RESULT	UNITS
DATE EXTRACTED : 11/24/08			
DATE ANALYZED : 11/24/08			
ANALYTICAL DILUTION: 1.00			
PERCHLORATE	0.20	0.47	UG/L

kw
2/4/09

COLUMBIA ANALYTICAL SERVICES

EXTRACTABLE ORGANICS
METHOD 6850
Reported: 12/16/08

Microbac Laboratories, Inc.
Project Reference: CH2M HILL - CAMP LEJEUNE
Client Sample ID : MR08-TW04-08D

Date Sampled : 11/20/08 09:25 **Order #:** 1156980 **Sample Matrix:** WATER
Date Received: 11/22/08 **Submission #:** R2847385 **Analytical Run** 171051

ANALYTE	PQL	RESULT	UNITS
DATE EXTRACTED : 11/24/08			
DATE ANALYZED : 11/24/08			
ANALYTICAL DILUTION: 1.00			
PERCHLORATE	0.20	0.60	UG/L

GW
2/4/09

COLUMBIA ANALYTICAL SERVICES

EXTRACTABLE ORGANICS
METHOD 6850
Reported: 12/16/08

Microbac Laboratories, Inc.
Project Reference: CH2M HILL - CAMP LEJEUNE
Client Sample ID : MR08-TW19-08D

Date Sampled : 11/20/08 13:05 **Order #:** 1156981 **Sample Matrix:** WATER
Date Received: 11/22/08 **Submission #:** R2847385 **Analytical Run** 171051

ANALYTE	PQL	RESULT	UNITS
DATE EXTRACTED : 11/24/08			
DATE ANALYZED : 11/25/08			
ANALYTICAL DILUTION: 1.00			
PERCHLORATE	0.20	0.10 J	UG/L

LW
2/4/09

COLUMBIA ANALYTICAL SERVICES

EXTRACTABLE ORGANICS
METHOD 6850
Reported: 12/16/08

Microbac Laboratories, Inc.
Project Reference: CH2M HILL - CAMP LEJEUNE
Client Sample ID : MR08-TW20-08D

Date Sampled : 11/20/08 13:15 **Order #:** 1156982 **Sample Matrix:** WATER
Date Received: 11/22/08 **Submission #:** R2847385 **Analytical Run** 171051

ANALYTE	PQL	RESULT	UNITS
DATE EXTRACTED : 11/24/08			
DATE ANALYZED : 11/25/08			
ANALYTICAL DILUTION: 1.00			
PERCHLORATE	0.20	0.18 J	UG/L

fw 2/4/09

COLUMBIA ANALYTICAL SERVICES

EXTRACTABLE ORGANICS
METHOD 6850
Reported: 12/16/08

Microbac Laboratories, Inc.
Project Reference: CH2M HILL - CAMP LEJEUNE
Client Sample ID : MR08-FB112008

Date Sampled : 11/20/08 09:45 **Order #:** 1156983 **Sample Matrix:** WATER
Date Received: 11/22/08 **Submission #:** R2847385 **Analytical Run** 171051

ANALYTE	PQL	RESULT	UNITS
DATE EXTRACTED : 11/24/08			
DATE ANALYZED : 11/24/08			
ANALYTICAL DILUTION: 1.00			
PERCHLORATE	0.20	0.20 U	UG/L

MW
2/4/09

23

COLUMBIA ANALYTICAL SERVICES

EXTRACTABLE ORGANICS
METHOD 6850
Reported: 12/16/08

Microbac Laboratories, Inc.
Project Reference: CH2M HILL - CAMP LEJEUNE
Client Sample ID : MR08-EB111908

Date Sampled : 11/19/08 18:00 **Order #:** 1157641 **Sample Matrix:** WATER
Date Received: 11/25/08 **Submission #:** R2847385 **Analytical Run** 171348

ANALYTE	PQL	RESULT	UNITS
DATE EXTRACTED : 12/04/08			
DATE ANALYZED : 12/04/08			
ANALYTICAL DILUTION: 1.00			
PERCHLORATE	0.20	0.20 U	UG/L

gw
2/4/09

ENVIRONMENTAL
Data Services, Inc.

PERCHLORATE

USEPA Region IV - Level IV Review

Site: MCB Camp Lejeune, TO-09 SDG #: R2847421

Client: CH2M HILL, Inc., Virginia Beach, Virginia Date: February 4, 2009

Laboratory: Columbia Analytical Services, Inc., Rochester, NY Reviewer: Nancy Weaver

EDS ID	Client Sample ID	Laboratory Sample ID	Matrix
1	MR08-TW24-08D	1157591	Water
1MS	MR08-TW24-08DMS	1157591MS	Water
1MSD	MR08-TW24-08DMSD	1157591MSD	Water
2	MR08-TW17-08D	1157592	Water
3	MR08-TW17D-08D	1157593	Water
4	MR08-TW15-08D	1157594	Water
5	MR08-TW15D-08D	1157596	Water
6	MR08-TW16-08D	1157597	Water
7	MR08-TW21-08D	1157599	Water
8	MR08-TW22-08D	1157600	Water
9	MR08-TW23-08D	1157601	Water

The USEPA "Contract Laboratory Program National Functional Guidelines for Inorganic Data Review," October 2004, and professional judgement were used in evaluating the data in this summary report.

Holding Times - All samples were prepared and analyzed within 28 days for perchlorate.

Calibration - The ICAL & CCAL exhibited acceptable %RSD and %D values respectively.

Method and Calibration Blanks - The method blanks and continuing calibration blanks were free of contamination.

Field and Equipment Blank - Field QC results are summarized below.

Blank ID	Compound	Conc. ug/L	Action Level ug/L	Qualifier	Affected Samples
MR08-EB111708-1	None - ND	-	-	-	-
MR08-FB112008	None - ND	-	-	-	-

Matrix Spike/Duplicate - The matrix spike/duplicate sample exhibited acceptable %R and RPD values.

LCS - The LCS samples exhibited acceptable %R values.

Field Duplicates - Field duplicate results are summarized below.

Compound	MR08-TW17-08D ug/L	MR08-TW17D-08D ug/L	RPD	Qualifier
Perchlorate	0.40	0.40	0%	None

Compound	MR08-TW15-08D ug/L	MR08-TW15D-08D ug/L	RPD	Qualifier
Perchlorate	0.40	0.40	0%	None

Compound Quantitation - No discrepancies were identified.

COLUMBIA ANALYTICAL SERVICES

EXTRACTABLE ORGANICS
METHOD 6850
Reported: 12/17/08

Microbac Laboratories, Inc.
Project Reference: CH2M HILL - CAMP LEJEUNE
Client Sample ID : MR08-TW24-08D

Date Sampled : 11/20/08 16:55 **Order #:** 1157591 **Sample Matrix:** WATER
Date Received: 11/25/08 **Submission #:** R2847421 **Analytical Run** 171381

ANALYTE	PQL	RESULT	UNITS
DATE EXTRACTED : 12/04/08			
DATE ANALYZED : 12/04/08			
ANALYTICAL DILUTION: 1.00			
PERCHLORATE	0.20	0.12 J	UG/L

lw 21409

2

COLUMBIA ANALYTICAL SERVICES

EXTRACTABLE ORGANICS
METHOD 6850
Reported: 12/17/08

Microbac Laboratories, Inc.
Project Reference: CH2M HILL - CAMP LEJEUNE
Client Sample ID : MR08-TW17-08D

Date Sampled : 11/20/08 15:40 **Order #:** 1157592 **Sample Matrix:** WATER
Date Received: 11/25/08 **Submission #:** R2847421 **Analytical Run** 171381

ANALYTE	PQL	RESULT	UNITS
DATE EXTRACTED : 12/04/08			
DATE ANALYZED : 12/04/08			
ANALYTICAL DILUTION: 1.00			
PERCHLORATE	0.20	0.40	UG/L

MW
2/4/09

COLUMBIA ANALYTICAL SERVICES

EXTRACTABLE ORGANICS
METHOD 6850
Reported: 12/17/08

Microbac Laboratories, Inc.
Project Reference: CH2M HILL - CAMP LEJEUNE
Client Sample ID : MR08-TW17D-08D

Date Sampled : 11/20/08 15:45 **Order #:** 1157593 **Sample Matrix:** WATER
Date Received: 11/25/08 **Submission #:** R2847421 **Analytical Run** 171381

ANALYTE	PQL	RESULT	UNITS
DATE EXTRACTED : 12/04/08			
DATE ANALYZED : 12/04/08			
ANALYTICAL DILUTION: 1.00			
PERCHLORATE	0.20	0.40	UG/L

lw
2/4/09

COLUMBIA ANALYTICAL SERVICES

EXTRACTABLE ORGANICS
METHOD 6850
Reported: 12/17/08

Microbac Laboratories, Inc.
Project Reference: CH2M HILL - CAMP LEJEUNE
Client Sample ID : MR08-TW15-08D

Date Sampled : 11/21/08 08:00 **Order #:** 1157594 **Sample Matrix:** WATER
Date Received: 11/25/08 **Submission #:** R2847421 **Analytical Run** 171381

ANALYTE	PQL	RESULT	UNITS
DATE EXTRACTED : 12/04/08			
DATE ANALYZED : 12/04/08			
ANALYTICAL DILUTION: 1.00			
PERCHLORATE	0.20	0.40	UG/L

lw
2/4/09

5

COLUMBIA ANALYTICAL SERVICES

EXTRACTABLE ORGANICS
METHOD 6850
Reported: 12/17/08

Microbac Laboratories, Inc.
Project Reference: CH2M HILL - CAMP LEJEUNE
Client Sample ID : MR08-TW15D-08D

Date Sampled : 11/21/08 08:05 **Order #:** 1157596 **Sample Matrix:** WATER
Date Received: 11/25/08 **Submission #:** R2847421 **Analytical Run** 171381

ANALYTE	PQL	RESULT	UNITS
DATE EXTRACTED : 12/04/08			
DATE ANALYZED : 12/04/08			
ANALYTICAL DILUTION: 1.00			
PERCHLORATE	0.20	0.40	UG/L

lw
2/4/09

6

COLUMBIA ANALYTICAL SERVICES

EXTRACTABLE ORGANICS
METHOD 6850
Reported: 12/17/08

Microbac Laboratories, Inc.
Project Reference: CH2M HILL - CAMP LEJEUNE
Client Sample ID : MR08-TW16-08D

Date Sampled : 11/21/08 08:45 **Order #:** 1157597 **Sample Matrix:** WATER
Date Received: 11/25/08 **Submission #:** R2847421 **Analytical Run** 171381

ANALYTE	PQL	RESULT	UNITS
DATE EXTRACTED : 12/04/08			
DATE ANALYZED : 12/04/08			
ANALYTICAL DILUTION: 1.00			
PERCHLORATE	0.20	0.48	UG/L

MW 2/4/09

COLUMBIA ANALYTICAL SERVICES

EXTRACTABLE ORGANICS
METHOD 6850
Reported: 12/17/08

Microbac Laboratories, Inc.
Project Reference: CH2M HILL - CAMP LEJEUNE
Client Sample ID : MR08-TW21-08D

Date Sampled : 11/21/08 10:40 **Order #:** 1157599 **Sample Matrix:** WATER
Date Received: 11/25/08 **Submission #:** R2847421 **Analytical Run** 171381

ANALYTE	PQL	RESULT	UNITS
DATE EXTRACTED : 12/04/08			
DATE ANALYZED : 12/04/08			
ANALYTICAL DILUTION: 1.00			
PERCHLORATE	0.20	0.20 U	UG/L

lus
2/4/09

8

COLUMBIA ANALYTICAL SERVICES

EXTRACTABLE ORGANICS
METHOD 6850
Reported: 12/17/08

Microbac Laboratories, Inc.
Project Reference: CH2M HILL - CAMP LEJEUNE
Client Sample ID : MR08-TW22-08D

Date Sampled : 11/21/08 11:00 **Order #:** 1157600 **Sample Matrix:** WATER
Date Received: 11/25/08 **Submission #:** R2847421 **Analytical Run** 171381

ANALYTE	PQL	RESULT	UNITS
DATE EXTRACTED : 12/04/08			
DATE ANALYZED : 12/04/08			
ANALYTICAL DILUTION: 1.00			
PERCHLORATE	0.20	0.13 J	UG/L

lw
2/4/09

COLUMBIA ANALYTICAL SERVICES

9

EXTRACTABLE ORGANICS
METHOD 6850
Reported: 12/17/08

Microbac Laboratories, Inc.
Project Reference: CH2M HILL - CAMP LEJEUNE
Client Sample ID : MR08-TW23-08D

Date Sampled : 11/21/08 12:00 **Order #:** 1157601 **Sample Matrix:** WATER
Date Received: 11/25/08 **Submission #:** R2847421 **Analytical Run** 171381

ANALYTE	PQL	RESULT	UNITS
DATE EXTRACTED : 12/04/08			
DATE ANALYZED : 12/04/08			
ANALYTICAL DILUTION: 1.00			
PERCHLORATE	0.20	0.20 U	UG/L

Dw
2/4/09

ENVIRONMENTAL
Data Services, Inc.

POLYNUCLEAR AROMATIC COMPOUNDS BY 8270 SIM

USEPA Region IV - Level IV Review

Site: MCB Camp Lejeune, TO-09 SDG #: T09-1

Client: CH2M HILL, Inc., Virginia Beach, Virginia Date: January 30, 2009

Laboratory: Katahdin Analytical Services, Scarborough, Maine Reviewer: Nancy Weaver

EDS ID	Client Sample ID	Laboratory Sample ID	Matrix
1	IR78-GW61-08D	SB6511-2	Water
2	IR78-GW03-08D	SB6511-4	Water
2MS	IR78-GW03-08DMS	SB6511-4MS	Water
2MSD	IR78-GW03-08DMSD	SB6511-4MSD	Water
3	MR08-EB111008	SB6511-6	Water
4	IR78-GW02-08D	SB6511-8	Water
5	IR78-GW02D-08D	SB6511-10	Water
6	IR78-GW42-08D	SB6511-12	Water
7	MR08-SW02-08D	SB6511-14	Water
8	MR08-SW02D-08D	SB6511-16	Water
9	MR08-FB111108	SB6511-18	Water
10	MR08-EB111108-1	SB6511-20	Water
11	MR08-SW01-08D	SB6511-22	Water
12	MR08-SW03-08D	SB6511-24	Water
13	IR78-GW57-08D	SB6584-2	Water
14	IR78-GW57D-08D	SB6584-4	Water
15	IR78-GW01-08D	SB6584-6	Water
16	IR78-GW59-08D	SB6584-8	Water
17	IR78-GW59D-08D	SB6584-10	Water
18	MR08-EB111208-02	SB6584-12	Water
19	USTHPFF-MW15-08D	SB6584-14	Water
19DL	USTHPFF-MW15-08DDL	SB6584-14DL	Water
20	USTHPFF-MW09-08D	SB6584-16	Water

The USEPA "Contract Laboratory Program National Functional Guidelines for Organic Data Review," October 1999, and professional judgement were used in evaluating the data in this summary report.

Holding Times - All samples were extracted within 7 days for water samples and analyzed within 40 days for all samples.

GC/MS Tuning - All of the DFTPP tunes in the initial and continuing calibrations met the percent relative abundance criteria.

Initial Calibration - The initial calibrations exhibited acceptable %RSD and mean RRF values.

Continuing Calibration - The continuing calibrations exhibited acceptable %D and RRF values except the following.

CCAL Date	Compound	%D/RRF	Qualifier	Affected Samples
12/08/08	Phenanthrene	25.99%	J/UJ	1-4
	Hexachlorobenzene	47.41%	J/UJ	1-4
	Hexachlorocyclopentadiene	51.34%	J/UJ	1-4
12/09/08	Naphthalene	48.48%	J/UJ	5-15, 18, 20
	Benzo (b) fluoranthene	28.15%	J/UJ	5-15, 18, 20
	Hexachlorobenzene	26.85%	J/UJ	5-15, 18, 20
	Hexachlorocyclopentadiene	39.76%	J/UJ	5-15, 18, 20
12/10/08	Naphthalene	65.62%	J/UJ	16, 17, 19, 19DL
	Hexachlorocyclopentadiene	33.97%	J/UJ	16, 17, 19, 19DL

Surrogates - All samples exhibited acceptable surrogate recoveries except the following.

Sample ID	Surrogate	%R	Qualifier
1	S2-2,4-Dibromophenol	1%	None since acids were not reported
19DL	None	OD	None - diluted out

MS/MSD - The MS/MSD sample exhibited acceptable %R and RPD values except the following.

MS/MSD Sample ID	Compound	MS/MSD %R/RPD	Qualifier
2	Naphthalene	Ok/125%/47	None - All ND
	2-Methylnaphthalene	Ok/Ok/36	None for RPD alone
	Hexachlorobutadiene	Ok/Ok/37	None for RPD alone
	Hexachlorocyclopentadiene	19%/20%/Ok	None - Already qualified due to CCAL

Laboratory Control Sample - The LCS samples exhibited acceptable %R values except the following.

LCS ID	Compound	%R	Qualifier	Affected Samples
WG58011-LCS	Hexachlorocyclopentadiene	16%	None	Already qualified due to CCAL
WG58068-LCS	Hexachlorocyclopentadiene	26%	None	Already qualified due to CCAL
WG58142-2LCS	Naphthalene	167%	None	Already qualified due to CCAL
	Hexachlorocyclopentadiene	17%	None	Already qualified due to CCAL
WG58171-LCS	Naphthalene	138%	None	Already qualified due to CCAL

Internal Standard (IS) Area Performance - All internal standards met response and retention time (RT) criteria except the following.

Sample ID	Internal Standard	Area Count	Qualifier
19DL	IS3-Acenaphthene-d10	High	None - All associated ND

Method Blank - The method blanks were free of contamination.

Field, Equipment Blank - Field QC results are summarized below.

Blank ID	Compound	Conc. ug/L	Action Level ug/L	Qualifier	Affected Samples
MR08-EB111008	None - ND	-	-	-	-
MR08-FB111108	None - ND	-	-	-	-
MR08-EB111108-1	None - ND	-	-	-	-
MR08-EB111208-02	None - ND	-	-	-	-

Field Duplicates - Field duplicate results are summarized below.

Compound	IR78-GW02-08D ug/L	IR78-GW02D-08D ug/L	RPD	Qualifier
None	ND	ND	-	-

Compound	MR08-SW02-08D ug/L	MR08-SW02D-08D ug/L	RPD	Qualifier
None	ND	ND	-	-

Compound	IR78-GW57-08D ug/L	IR78-GW57D-08D ug/L	RPD	Qualifier
None	ND	ND	-	-

Compound	IR78-GW59-08D ug/L	IR78-GW59D-08D ug/L	RPD	Qualifier
None	ND	ND	-	-

Tentatively Identified Compounds (TICs) - TICs were not reported.

Compound Quantitation - EDS sample ID #19 exhibited a high concentration of naphthalene which exceeded the calibration curve and was flagged (E) by the laboratory. The sample was reanalyzed at a 100X dilution. The reviewer replaced the original results with the dilution results. The original Form Is should be used for reporting purposes.

KATAHDIN ANALYTICAL SERVICES
Report of Analytical Results

1

Client: CH2MHill
Project: TO-009 Lejeune
PO No:
Sample Date: 11/10/08
Received Date: 11/12/08
Extraction Date: 11/13/08
Analysis Date: 08-DEC-2008 21:29
Report Date: 12/11/2008
Matrix: WATER
% Solids: NA

Lab ID: SB6511-2
Client ID: IR78-GW61-08D
SDG: TO9-1
Extracted by: KF
Extraction Method: SW846 3520
Analyst: JCG
Analysis Method: SW846 M8270C
Lab Prep Batch: WG58011
Units: ug/L

CAS#	Compound	Flags	Results	DF	PQL	Adj.PQL	Adj.MDL	
91-20-3	Naphthalene	U	0.24	1.0	0.25	0.24	0.060	
91-57-6	2-Methylnaphthalene	U	0.24	1.0	0.25	0.24	0.073	
86-73-7	Fluorene	U	0.24	1.0	0.25	0.24	0.058	
85-01-8	Phenanthrene	~~U~~ UJ	0.24	1.0	0.25	0.24	0.048	CCH
206-44-0	Fluoranthene	U	0.24	1.0	0.25	0.24	0.069	
129-00-0	Pyrene	U	0.24	1.0	0.25	0.24	0.056	
56-55-3	Benzo(a)anthracene	U	0.24	1.0	0.25	0.24	0.043	
205-99-2	Benzo(b)fluoranthene	U	0.25	1.0	0.27	0.25	0.084	
207-08-9	Benzo(k)fluoranthene	U	0.24	1.0	0.25	0.24	0.046	
50-32-8	Benzo(a)pyrene	U	0.24	1.0	0.25	0.24	0.062	
193-39-5	Indeno(1,2,3-cd)pyrene	U	0.24	1.0	0.25	0.24	0.049	
53-70-3	Dibenzo(a,h)anthracene	U	0.24	1.0	0.25	0.24	0.066	
191-24-2	Benzo(g,h,i)perylene	U	0.24	1.0	0.25	0.24	0.061	
118-74-1	Hexachlorobenzene	~~U~~ UJ	0.24	1.0	0.25	0.24	0.052	CCH
87-68-3	Hexachlorobutadiene	U	0.25	1.0	0.27	0.25	0.082	
77-47-4	Hexachlorocyclopentadiene	~~U~~ UJ	0.25	1.0	0.27	0.25	0.063	CCH
7297-45-2	2-Methylnaphthalene-D10		70%					
367-12-4	2,4-Dibromophenol		* 1%					
81103-79-9	Fluorene-d10		60%					
1718-51-1	Pyrene-D10		82%					

lw 1130/09

2

KATAHDIN ANALYTICAL SERVICES
Report of Analytical Results

Client: CH2MHill
Project: TO-009 Lejeune
PO No:
Sample Date: 11/10/08
Received Date: 11/12/08
Extraction Date: 11/13/08
Analysis Date: 08-DEC-2008 22:11
Report Date: 12/11/2008
Matrix: WATER
% Solids: NA

Lab ID: SB6511-4
Client ID: IR78-GW03-08D
SDG: TO9-1
Extracted by: KF
Extraction Method: SW846 3520
Analyst: JCG
Analysis Method: SW846 M8270C
Lab Prep Batch: WG58011
Units: ug/L

CAS#	Compound	Flags	Results	DF	PQL	Adj.PQL	Adj.MDL	
91-20-3	Naphthalene	U	0.24	1.0	0.25	0.24	0.060	
91-57-6	2-Methylnaphthalene	U	0.24	1.0	0.25	0.24	0.073	
86-73-7	Fluorene	U	0.24	1.0	0.25	0.24	0.058	
85-01-8	Phenanthrene	~~U~~ UJ	0.24	1.0	0.25	0.24	0.048	CCH
206-44-0	Fluoranthene	U	0.24	1.0	0.25	0.24	0.069	
129-00-0	Pyrene	U	0.24	1.0	0.25	0.24	0.056	
56-55-3	Benzo(a)anthracene	U	0.24	1.0	0.25	0.24	0.043	
205-99-2	Benzo(b)fluoranthene	U	0.25	1.0	0.27	0.25	0.084	
207-08-9	Benzo(k)fluoranthene	U	0.24	1.0	0.25	0.24	0.046	
50-32-8	Benzo(a)pyrene	U	0.24	1.0	0.25	0.24	0.062	
193-39-5	Indeno(1,2,3-cd)pyrene	U	0.24	1.0	0.25	0.24	0.049	
53-70-3	Dibenzo(a,h)anthracene	U	0.24	1.0	0.25	0.24	0.066	
191-24-2	Benzo(g,h,i)perylene	U	0.24	1.0	0.25	0.24	0.061	
118-74-1	Hexachlorobenzene	~~U~~ UJ	0.24	1.0	0.25	0.24	0.052	CCH
87-68-3	Hexachlorobutadiene	U	0.25	1.0	0.27	0.25	0.082	
77-47-4	Hexachlorocyclopentadiene	~~U~~ UJ	0.25	1.0	0.27	0.25	0.063	CCH
7297-45-2	2-Methylnaphthalene-D10		63%					
367-12-4	2,4-Dibromophenol		95%					
81103-79-9	Fluorene-d10		70%					
1718-51-1	Pyrene-D10		90%					

LW 1/30/09

KATAHDIN ANALYTICAL SERVICES
Report of Analytical Results

3

Client: CH2MHill
Project: TO-009 Lejeune
PO No:
Sample Date: 11/10/08
Received Date: 11/12/08
Extraction Date: 11/13/08
Analysis Date: 08-DEC-2008 22:53
Report Date: 12/11/2008
Matrix: WATER
% Solids: NA

Lab ID: SB6511-6
Client ID: MR08-EB111008
SDG: TO9-1
Extracted by: KF
Extraction Method: SW846 3520
Analyst: JCG
Analysis Method: SW846 M8270C
Lab Prep Batch: WG58011
Units: ug/L

CAS#	Compound	Flags	Results	DF	PQL	Adj.PQL	Adj.MDL	
91-20-3	Naphthalene	U	0.24	1.0	0.25	0.24	0.060	
91-57-6	2-Methylnaphthalene	U	0.24	1.0	0.25	0.24	0.073	
86-73-7	Fluorene	U	0.24	1.0	0.25	0.24	0.058	
85-01-8	Phenanthrene	~~U~~ UJ	0.24	1.0	0.25	0.24	0.048	CCH
206-44-0	Fluoranthene	U	0.24	1.0	0.25	0.24	0.069	
129-00-0	Pyrene	U	0.24	1.0	0.25	0.24	0.056	
56-55-3	Benzo(a)anthracene	U	0.24	1.0	0.25	0.24	0.043	
205-99-2	Benzo(b)fluoranthene	U	0.25	1.0	0.27	0.25	0.084	
207-08-9	Benzo(k)fluoranthene	U	0.24	1.0	0.25	0.24	0.046	
50-32-8	Benzo(a)pyrene	U	0.24	1.0	0.25	0.24	0.062	
193-39-5	Indeno(1,2,3-cd)pyrene	U	0.24	1.0	0.25	0.24	0.049	
53-70-3	Dibenzo(a,h)anthracene	U	0.24	1.0	0.25	0.24	0.066	
191-24-2	Benzo(g,h,i)perylene	U	0.24	1.0	0.25	0.24	0.061	
118-74-1	Hexachlorobenzene	~~U~~ UJ	0.24	1.0	0.25	0.24	0.052	CCH
87-68-3	Hexachlorobutadiene	U	0.25	1.0	0.27	0.25	0.082	
77-47-4	Hexachlorocyclopentadiene	~~U~~ UJ	0.25	1.0	0.27	0.25	0.063	CCH
7297-45-2	2-Methylnaphthalene-D10		61%					
367-12-4	2,4-Dibromophenol		90%					
81103-79-9	Fluorene-d10		57%					
1718-51-1	Pyrene-D10		100%					

lcd
1/30/09

4

KATAHDIN ANALYTICAL SERVICES
Report of Analytical Results

Client: CH2MHill
Project: TO-009 Lejeune
PO No:
Sample Date: 11/11/08
Received Date: 11/12/08
Extraction Date: 11/14/08
Analysis Date: 09-DEC-2008 00:59
Report Date: 12/11/2008
Matrix: WATER
% Solids: NA

Lab ID: SB6511-8
Client ID: IR78-GW02-08D
SDG: TO9-1
Extracted by: KF
Extraction Method: SW846 3510
Analyst: JCG
Analysis Method: SW846 M8270C
Lab Prep Batch: WG58068
Units: ug/L

CAS#	Compound	Flags	Results	DF	PQL	Adj.PQL	Adj.MDL	
91-20-3	Naphthalene	U	0.24	1.0	0.25	0.24	0.060	
91-57-6	2-Methylnaphthalene	U	0.24	1.0	0.25	0.24	0.073	
86-73-7	Fluorene	U	0.24	1.0	0.25	0.24	0.058	
85-01-8	Phenanthrene	~~U~~ UJ	0.24	1.0	0.25	0.24	0.048	CCH
206-44-0	Fluoranthene	U	0.24	1.0	0.25	0.24	0.069	
129-00-0	Pyrene	U	0.24	1.0	0.25	0.24	0.056	
56-55-3	Benzo(a)anthracene	U	0.24	1.0	0.25	0.24	0.043	
205-99-2	Benzo(b)fluoranthene	U	0.25	1.0	0.27	0.25	0.084	
207-08-9	Benzo(k)fluoranthene	U	0.24	1.0	0.25	0.24	0.046	
50-32-8	Benzo(a)pyrene	U	0.24	1.0	0.25	0.24	0.062	
193-39-5	Indeno(1,2,3-cd)pyrene	U	0.24	1.0	0.25	0.24	0.049	
53-70-3	Dibenzo(a,h)anthracene	U	0.24	1.0	0.25	0.24	0.066	
191-24-2	Benzo(g,h,i)perylene	U	0.24	1.0	0.25	0.24	0.061	
118-74-1	Hexachlorobenzene	~~U~~ UJ	0.24	1.0	0.25	0.24	0.052	CCH
87-68-3	Hexachlorobutadiene	U	0.25	1.0	0.27	0.25	0.082	
77-47-4	Hexachlorocyclopentadiene	~~U~~ UJ	0.25	1.0	0.27	0.25	0.063	CCH
7297-45-2	2-Methylnaphthalene-D10		64%					
367-12-4	2,4-Dibromophenol		94%					
81103-79-9	Fluorene-d10		59%					
1718-51-1	Pyrene-D10		92%					

lrw
11/30/09

5

KATAHDIN ANALYTICAL SERVICES
Report of Analytical Results

Client: CH2MHill
Project: TO-009 Lejeune
PO No:
Sample Date: 11/11/08
Received Date: 11/12/08
Extraction Date: 11/14/08
Analysis Date: 09-DEC-2008 11:54
Report Date: 12/11/2008
Matrix: WATER
% Solids: NA

Lab ID: SB6511-10
Client ID: IR78-GW02D-08D
SDG: TO9-1
Extracted by: KF
Extraction Method: SW846 3510
Analyst: JCG
Analysis Method: SW846 M8270C
Lab Prep Batch: WG58068
Units: ug/L

CAS#	Compound	Flags	Results	DF	PQL	Adj.PQL	Adj.MDL	
91-20-3	Naphthalene	~~U~~ UJ	0.24	1.0	0.25	0.24	0.060	CCH
91-57-6	2-Methylnaphthalene	U	0.24	1.0	0.25	0.24	0.073	
86-73-7	Fluorene	U	0.24	1.0	0.25	0.24	0.058	
85-01-8	Phenanthrene	U	0.24	1.0	0.25	0.24	0.048	
206-44-0	Fluoranthene	U	0.24	1.0	0.25	0.24	0.069	
129-00-0	Pyrene	U	0.24	1.0	0.25	0.24	0.056	
56-55-3	Benzo(a)anthracene	U	0.24	1.0	0.25	0.24	0.043	
205-99-2	Benzo(b)fluoranthene	~~U~~ UJ	0.25	1.0	0.27	0.25	0.084	CCH
207-08-9	Benzo(k)fluoranthene	U	0.24	1.0	0.25	0.24	0.046	
50-32-8	Benzo(a)pyrene	U	0.24	1.0	0.25	0.24	0.062	
193-39-5	Indeno(1,2,3-cd)pyrene	U	0.24	1.0	0.25	0.24	0.049	
53-70-3	Dibenzo(a,h)anthracene	U	0.24	1.0	0.25	0.24	0.066	
191-24-2	Benzo(g,h,i)perylene	U	0.24	1.0	0.25	0.24	0.061	
118-74-1	Hexachlorobenzene	~~U~~ UJ	0.24	1.0	0.25	0.24	0.052	CCH
87-68-3	Hexachlorobutadiene	U	0.25	1.0	0.27	0.25	0.082	
77-47-4	Hexachlorocyclopentadiene	~~U~~ UJ	0.25	1.0	0.27	0.25	0.063	CCH
7297-45-2	2-Methylnaphthalene-D10		64%					
367-12-4	2,4-Dibromophenol		86%					
81103-79-9	Fluorene-d10		56%					
1718-51-1	Pyrene-D10		108%					

MW
1/30/09

6

KATAHDIN ANALYTICAL SERVICES
Report of Analytical Results

Client: CH2MHill
Project: TO-009 Lejeune
PO No:
Sample Date: 11/11/08
Received Date: 11/12/08
Extraction Date: 11/14/08
Analysis Date: 09-DEC-2008 12:36
Report Date: 12/11/2008
Matrix: WATER
% Solids: NA

Lab ID: SB6511-12
Client ID: IR78-GW42-08D
SDG: TO9-1
Extracted by: KF
Extraction Method: SW846 3510
Analyst: JCG
Analysis Method: SW846 M8270C
Lab Prep Batch: WG58068
Units: ug/L

CAS#	Compound	Flags	Results	DF	PQL	Adj.PQL	Adj.MDL	
91-20-3	Naphthalene	~~U~~ UJ	0.24	1.0	0.25	0.24	0.060	CCH
91-57-6	2-Methylnaphthalene	U	0.24	1.0	0.25	0.24	0.073	
86-73-7	Fluorene	U	0.24	1.0	0.25	0.24	0.058	
85-01-8	Phenanthrene	U	0.24	1.0	0.25	0.24	0.048	
206-44-0	Fluoranthene	U	0.24	1.0	0.25	0.24	0.069	
129-00-0	Pyrene	U	0.24	1.0	0.25	0.24	0.056	
56-55-3	Benzo(a)anthracene	U	0.24	1.0	0.25	0.24	0.043	
205-99-2	Benzo(b)fluoranthene	~~U~~ UJ	0.25	1.0	0.27	0.25	0.084	CCH
207-08-9	Benzo(k)fluoranthene	U	0.24	1.0	0.25	0.24	0.046	
50-32-8	Benzo(a)pyrene	U	0.24	1.0	0.25	0.24	0.062	
193-39-5	Indeno(1,2,3-cd)pyrene	U	0.24	1.0	0.25	0.24	0.049	
53-70-3	Dibenzo(a,h)anthracene	U	0.24	1.0	0.25	0.24	0.066	
191-24-2	Benzo(g,h,i)perylene	U	0.24	1.0	0.25	0.24	0.061	
118-74-1	Hexachlorobenzene	~~U~~ UJ	0.24	1.0	0.25	0.24	0.052	CCH
87-68-3	Hexachlorobutadiene	U	0.25	1.0	0.27	0.25	0.082	
77-47-4	Hexachlorocyclopentadiene	~~U~~ UJ	0.25	1.0	0.27	0.25	0.063	CCH
7297-45-2	2-Methylnaphthalene-D10		67%					
367-12-4	2,4-Dibromophenol		93%					
81103-79-9	Fluorene-d10		54%					
1718-51-1	Pyrene-D10		100%					

lw 1/30/09

7

KATAHDIN ANALYTICAL SERVICES
Report of Analytical Results

Client: CH2MHill
Project: TO-009 Lejeune
PO No:
Sample Date: 11/11/08
Received Date: 11/12/08
Extraction Date: 11/14/08
Analysis Date: 09-DEC-2008 13:18
Report Date: 12/11/2008
Matrix: WATER
% Solids: NA

Lab ID: SB6511-14
Client ID: MR08-SW02-08D
SDG: TO9-1
Extracted by: KF
Extraction Method: SW846 3510
Analyst: JCG
Analysis Method: SW846 M8270C
Lab Prep Batch: WG58068
Units: ug/L

CAS#	Compound	Flags	Results	DF	PQL	Adj.PQL	Adj.MDL	
91-20-3	Naphthalene	~~U~~ UJ	0.24	1.0	0.25	0.24	0.062	CCH
91-57-6	2-Methylnaphthalene	U	0.24	1.0	0.25	0.24	0.074	
86-73-7	Fluorene	U	0.24	1.0	0.25	0.24	0.059	
85-01-8	Phenanthrene	U	0.24	1.0	0.25	0.24	0.049	
206-44-0	Fluoranthene	U	0.24	1.0	0.25	0.24	0.070	
129-00-0	Pyrene	U	0.24	1.0	0.25	0.24	0.057	
56-55-3	Benzo(a)anthracene	U	0.24	1.0	0.25	0.24	0.044	
205-99-2	Benzo(b)fluoranthene	~~U~~ UJ	0.26	1.0	0.27	0.26	0.086	CCH
207-08-9	Benzo(k)fluoranthene	U	0.24	1.0	0.25	0.24	0.047	
50-32-8	Benzo(a)pyrene	U	0.24	1.0	0.25	0.24	0.063	
193-39-5	Indeno(1,2,3-cd)pyrene	U	0.24	1.0	0.25	0.24	0.050	
53-70-3	Dibenzo(a,h)anthracene	U	0.24	1.0	0.25	0.24	0.067	
191-24-2	Benzo(g,h,i)perylene	U	0.24	1.0	0.25	0.24	0.062	
118-74-1	Hexachlorobenzene	~~U~~ UJ	0.24	1.0	0.25	0.24	0.053	CCH
87-68-3	Hexachlorobutadiene	U	0.26	1.0	0.27	0.26	0.084	
77-47-4	Hexachlorocyclopentadiene	~~U~~ UJ	0.26	1.0	0.27	0.26	0.064	CCH
7297-45-2	2-Methylnaphthalene-D10		75%					
367-12-4	2,4-Dibromophenol		77%					
81103-79-9	Fluorene-d10		69%					
1718-51-1	Pyrene-D10		111%					

fw 1/30/09

8

KATAHDIN ANALYTICAL SERVICES
Report of Analytical Results

Client: CH2MHill
Project: TO-009 Lejeune
PO No:
Sample Date: 11/11/08
Received Date: 11/12/08
Extraction Date: 11/14/08
Analysis Date: 09-DEC-2008 14:00
Report Date: 12/11/2008
Matrix: WATER
% Solids: NA

Lab ID: SB6511-16
Client ID: MR08-SW02D-08D
SDG: TO9-1
Extracted by: KF
Extraction Method: SW846 3510
Analyst: JCG
Analysis Method: SW846 M8270C
Lab Prep Batch: WG58068
Units: ug/L

CAS#	Compound	Flags	Results	DF	PQL	Adj.PQL	Adj.MDL	
91-20-3	Naphthalene	~~U~~ UJ	0.24	1.0	0.25	0.24	0.061	CCH
91-57-6	2-Methylnaphthalene	U	0.24	1.0	0.25	0.24	0.073	
86-73-7	Fluorene	U	0.24	1.0	0.25	0.24	0.058	
85-01-8	Phenanthrene	U	0.24	1.0	0.25	0.24	0.048	
206-44-0	Fluoranthene	U	0.24	1.0	0.25	0.24	0.070	
129-00-0	Pyrene	U	0.24	1.0	0.25	0.24	0.056	
56-55-3	Benzo(a)anthracene	U	0.24	1.0	0.25	0.24	0.044	
205-99-2	Benzo(b)fluoranthene	~~U~~ UJ	0.26	1.0	0.27	0.26	0.085	CCH
207-08-9	Benzo(k)fluoranthene	U	0.24	1.0	0.25	0.24	0.047	
50-32-8	Benzo(a)pyrene	U	0.24	1.0	0.25	0.24	0.063	
193-39-5	Indeno(1,2,3-cd)pyrene	U	0.24	1.0	0.25	0.24	0.050	
53-70-3	Dibenzo(a,h)anthracene	U	0.24	1.0	0.25	0.24	0.067	
191-24-2	Benzo(g,h,i)perylene	U	0.24	1.0	0.25	0.24	0.062	
118-74-1	Hexachlorobenzene	~~U~~ UJ	0.24	1.0	0.25	0.24	0.052	CCH
87-68-3	Hexachlorobutadiene	U	0.26	1.0	0.27	0.26	0.083	
77-47-4	Hexachlorocyclopentadiene	~~U~~ UJ	0.26	1.0	0.27	0.26	0.064	CCH
7297-45-2	2-Methylnaphthalene-D10		68%					
367-12-4	2,4-Dibromophenol		83%					
81103-79-9	Fluorene-d10		64%					
1718-51-1	Pyrene-D10		99%					

lw 1/30/09

9

KATAHDIN ANALYTICAL SERVICES
Report of Analytical Results

Client: CH2MHill
Project: TO-009 Lejeune
PO No:
Sample Date: 11/11/08
Received Date: 11/12/08
Extraction Date: 11/14/08
Analysis Date: 09-DEC-2008 14:42
Report Date: 12/11/2008
Matrix: WATER
% Solids: NA

Lab ID: SB6511-18
Client ID: MR08-FB111108
SDG: TO9-1
Extracted by: KF
Extraction Method: SW846 3510
Analyst: JCG
Analysis Method: SW846 M8270C
Lab Prep Batch: WG58068
Units: ug/L

CAS#	Compound	Flags	Results	DF	PQL	Adj.PQL	Adj.MDL	
91-20-3	Naphthalene	~~U~~ UJ	0.24	1.0	0.25	0.24	0.062	CCH
91-57-6	2-Methylnaphthalene	U	0.24	1.0	0.25	0.24	0.074	
86-73-7	Fluorene	U	0.24	1.0	0.25	0.24	0.059	
85-01-8	Phenanthrene	U	0.24	1.0	0.25	0.24	0.049	
206-44-0	Fluoranthene	U	0.24	1.0	0.25	0.24	0.070	
129-00-0	Pyrene	U	0.24	1.0	0.25	0.24	0.057	
56-55-3	Benzo(a)anthracene	U	0.24	1.0	0.25	0.24	0.044	
205-99-2	Benzo(b)fluoranthene	~~U~~ UJ	0.26	1.0	0.27	0.26	0.086	CCH
207-08-9	Benzo(k)fluoranthene	U	0.24	1.0	0.25	0.24	0.047	
50-32-8	Benzo(a)pyrene	U	0.24	1.0	0.25	0.24	0.063	
193-39-5	Indeno(1,2,3-cd)pyrene	U	0.24	1.0	0.25	0.24	0.050	
53-70-3	Dibenzo(a,h)anthracene	U	0.24	1.0	0.25	0.24	0.067	
191-24-2	Benzo(g,h,i)perylene	U	0.24	1.0	0.25	0.24	0.062	
118-74-1	Hexachlorobenzene	~~U~~ UJ	0.24	1.0	0.25	0.24	0.053	CCH
87-68-3	Hexachlorobutadiene	U	0.26	1.0	0.27	0.26	0.084	
77-47-4	Hexachlorocyclopentadiene	~~U~~ UJ	0.26	1.0	0.27	0.26	0.064	CCH
7297-45-2	2-Methylnaphthalene-D10		82%					
367-12-4	2,4-Dibromophenol		119%					
81103-79-9	Fluorene-d10		66%					
1718-51-1	Pyrene-D10		105%					

JCW
1/30/09

10

KATAHDIN ANALYTICAL SERVICES
Report of Analytical Results

Client: CH2MHill
Project: TO-009 Lejeune
PO No:
Sample Date: 11/11/08
Received Date: 11/12/08
Extraction Date: 11/14/08
Analysis Date: 09-DEC-2008 15:25
Report Date: 12/11/2008
Matrix: WATER
% Solids: NA

Lab ID: SB6511-20
Client ID: MR08-EB111108-1
SDG: TO9-1
Extracted by: KF
Extraction Method: SW846 3510
Analyst: JCG
Analysis Method: SW846 M8270C
Lab Prep Batch: WG58068
Units: ug/L

CAS#	Compound	Flags	Results	DF	PQL	Adj.PQL	Adj.MDL	
91-20-3	Naphthalene	~~U~~ UJ	0.24	1.0	0.25	0.24	0.062	CCH
91-57-6	2-Methylnaphthalene	U	0.24	1.0	0.25	0.24	0.075	
86-73-7	Fluorene	U	0.24	1.0	0.25	0.24	0.059	
85-01-8	Phenanthrene	U	0.24	1.0	0.25	0.24	0.050	
206-44-0	Fluoranthene	U	0.24	1.0	0.25	0.24	0.071	
129-00-0	Pyrene	U	0.24	1.0	0.25	0.24	0.057	
56-55-3	Benzo(a)anthracene	U	0.24	1.0	0.25	0.24	0.045	
205-99-2	Benzo(b)fluoranthene	~~U~~ UJ	0.26	1.0	0.27	0.26	0.086	CCH
207-08-9	Benzo(k)fluoranthene	U	0.24	1.0	0.25	0.24	0.048	
50-32-8	Benzo(a)pyrene	U	0.24	1.0	0.25	0.24	0.064	
193-39-5	Indeno(1,2,3-cd)pyrene	U	0.24	1.0	0.25	0.24	0.050	
53-70-3	Dibenzo(a,h)anthracene	U	0.24	1.0	0.25	0.24	0.068	
191-24-2	Benzo(g,h,i)perylene	U	0.24	1.0	0.25	0.24	0.063	
118-74-1	Hexachlorobenzene	~~U~~ UJ	0.24	1.0	0.25	0.24	0.053	CCH
87-68-3	Hexachlorobutadiene	U	0.26	1.0	0.27	0.26	0.084	
77-47-4	Hexachlorocyclopentadiene	~~U~~ UJ	0.26	1.0	0.27	0.26	0.065	CCH
7297-45-2	2-Methylnaphthalene-D10		79%					
367-12-4	2,4-Dibromophenol		110%					
81103-79-9	Fluorene-d10		64%					
1718-51-1	Pyrene-D10		109%					

ewj
1/30/09

11

KATAHDIN ANALYTICAL SERVICES
Report of Analytical Results

Client: CH2MHill
Project: TO-009 Lejeune
PO No:
Sample Date: 11/11/08
Received Date: 11/12/08
Extraction Date: 11/14/08
Analysis Date: 09-DEC-2008 16:07
Report Date: 12/11/2008
Matrix: WATER
% Solids: NA

Lab ID: SB6511-22
Client ID: MR08-SW01-08D
SDG: TO9-1
Extracted by: KF
Extraction Method: SW846 3510
Analyst: JCG
Analysis Method: SW846 M8270C
Lab Prep Batch: WG58068
Units: ug/L

CAS#	Compound	Flags	Results	DF	PQL	Adj.PQL	Adj.MDL	
91-20-3	Naphthalene	~~U~~ UJ	0.24	1.0	0.25	0.24	0.063	CCH
91-57-6	2-Methylnaphthalene	U	0.24	1.0	0.25	0.24	0.075	
86-73-7	Fluorene	U	0.24	1.0	0.25	0.24	0.060	
85-01-8	Phenanthrene	U	0.24	1.0	0.25	0.24	0.050	
206-44-0	Fluoranthene	U	0.24	1.0	0.25	0.24	0.072	
129-00-0	Pyrene	U	0.24	1.0	0.25	0.24	0.058	
56-55-3	Benzo(a)anthracene	U	0.24	1.0	0.25	0.24	0.045	
205-99-2	Benzo(b)fluoranthene	~~U~~ UJ	0.26	1.0	0.27	0.26	0.087	CCH
207-08-9	Benzo(k)fluoranthene	U	0.24	1.0	0.25	0.24	0.048	
50-32-8	Benzo(a)pyrene	U	0.24	1.0	0.25	0.24	0.065	
193-39-5	Indeno(1,2,3-cd)pyrene	U	0.24	1.0	0.25	0.24	0.051	
53-70-3	Dibenzo(a,h)anthracene	U	0.24	1.0	0.25	0.24	0.069	
191-24-2	Benzo(g,h,i)perylene	U	0.24	1.0	0.25	0.24	0.064	
118-74-1	Hexachlorobenzene	~~U~~ UJ	0.24	1.0	0.25	0.24	0.054	CCH
87-68-3	Hexachlorobutadiene	U	0.26	1.0	0.27	0.26	0.085	
77-47-4	Hexachlorocyclopentadiene	~~U~~ UJ	0.26	1.0	0.27	0.26	0.066	CCH
7297-45-2	2-Methylnaphthalene-D10		68%					
367-12-4	2,4-Dibromophenol		98%					
81103-79-9	Fluorene-d10		60%					
1718-51-1	Pyrene-D10		99%					

lw
1/30/09

KATAHDIN ANALYTICAL SERVICES
Report of Analytical Results

Client: CH2MHill
Project: TO-009 Lejeune
PO No:
Sample Date: 11/11/08
Received Date: 11/12/08
Extraction Date: 11/14/08
Analysis Date: 09-DEC-2008 16:49
Report Date: 12/11/2008
Matrix: WATER
% Solids: NA

Lab ID: SB6511-24
Client ID: MR08-SW03-08D
SDG: TO9-1
Extracted by: KF
Extraction Method: SW846 3510
Analyst: JCG
Analysis Method: SW846 M8270C
Lab Prep Batch: WG58068
Units: ug/L

CAS#	Compound	Flags	Results	DF	PQL	Adj.PQL	Adj.MDL	
91-20-3	Naphthalene	~~U~~ UJ	0.33	1.0	0.25	0.33	0.085	CCH
91-57-6	2-Methylnaphthalene	U	0.33	1.0	0.25	0.33	0.10	
86-73-7	Fluorene	U	0.33	1.0	0.25	0.33	0.081	
85-01-8	Phenanthrene	J	0.072	1.0	0.25	0.33	0.068	
206-44-0	Fluoranthene	U	0.33	1.0	0.25	0.33	0.097	
129-00-0	Pyrene	U	0.33	1.0	0.25	0.33	0.079	
56-55-3	Benzo(a)anthracene	U	0.33	1.0	0.25	0.33	0.061	
205-99-2	Benzo(b)fluoranthene	~~U~~ UJ	0.36	1.0	0.27	0.36	0.12	CCH
207-08-9	Benzo(k)fluoranthene	U	0.33	1.0	0.25	0.33	0.065	
50-32-8	Benzo(a)pyrene	U	0.33	1.0	0.25	0.33	0.088	
193-39-5	Indeno(1,2,3-cd)pyrene	U	0.33	1.0	0.25	0.33	0.069	
53-70-3	Dibenzo(a,h)anthracene	U	0.33	1.0	0.25	0.33	0.093	
191-24-2	Benzo(g,h,i)perylene	U	0.33	1.0	0.25	0.33	0.087	
118-74-1	Hexachlorobenzene	~~U~~ UJ	0.33	1.0	0.25	0.33	0.073	CCH
87-68-3	Hexachlorobutadiene	U	0.36	1.0	0.27	0.36	0.12	
77-47-4	Hexachlorocyclopentadiene	~~U~~ UJ	0.36	1.0	0.27	0.36	0.089	CCH
7297-45-2	2-Methylnaphthalene-D10		74%					
367-12-4	2,4-Dibromophenol		108%					
81103-79-9	Fluorene-d10		65%					
1718-51-1	Pyrene-D10		101%					

JW
1/30/09

KATAHDIN ANALYTICAL SERVICES
Report of Analytical Results

Client: CH2MHill
Project: TO-009 Lejeune
PO No:
Sample Date: 11/12/08
Received Date: 11/14/08
Extraction Date: 11/17/08
Analysis Date: 09-DEC-2008 21:02
Report Date: 12/11/2008
Matrix: WATER
% Solids: NA

Lab ID: SB6584-2
Client ID: IR78-GW57-08D
SDG: TO9-1
Extracted by: KF
Extraction Method: SW846 3520
Analyst: JCG
Analysis Method: SW846 M8270C
Lab Prep Batch: WG58142
Units: ug/L

CAS#	Compound	Flags	Results	DF	PQL	Adj.PQL	Adj.MDL	
91-20-3	Naphthalene	~~U~~ UJ	0.24	1.0	0.25	0.24	0.060	CCH
91-57-6	2-Methylnaphthalene	U	0.24	1.0	0.25	0.24	0.073	
86-73-7	Fluorene	U	0.24	1.0	0.25	0.24	0.058	
85-01-8	Phenanthrene	U	0.24	1.0	0.25	0.24	0.048	
206-44-0	Fluoranthene	U	0.24	1.0	0.25	0.24	0.069	
129-00-0	Pyrene	U	0.24	1.0	0.25	0.24	0.056	
56-55-3	Benzo(a)anthracene	U	0.24	1.0	0.25	0.24	0.043	
205-99-2	Benzo(b)fluoranthene	~~U~~ UJ	0.25	1.0	0.27	0.25	0.084	CCH
207-08-9	Benzo(k)fluoranthene	U	0.24	1.0	0.25	0.24	0.046	
50-32-8	Benzo(a)pyrene	U	0.24	1.0	0.25	0.24	0.062	
193-39-5	Indeno(1,2,3-cd)pyrene	U	0.24	1.0	0.25	0.24	0.049	
53-70-3	Dibenzo(a,h)anthracene	U	0.24	1.0	0.25	0.24	0.066	
191-24-2	Benzo(g,h,i)perylene	U	0.24	1.0	0.25	0.24	0.061	
118-74-1	Hexachlorobenzene	~~U~~ UJ	0.24	1.0	0.25	0.24	0.052	CCH
87-68-3	Hexachlorobutadiene	U	0.25	1.0	0.27	0.25	0.082	
77-47-4	Hexachlorocyclopentadiene	~~U~~ UJ	0.25	1.0	0.27	0.25	0.063	CCH
7297-45-2	2-Methylnaphthalene-D10		67%					
367-12-4	2,4-Dibromophenol		96%					
81103-79-9	Fluorene-d10		61%					
1718-51-1	Pyrene-D10		93%					

MW
1/30/09

14

KATAHDIN ANALYTICAL SERVICES
Report of Analytical Results

Client: CH2MHill
Project: TO-009 Lejeune
PO No:
Sample Date: 11/12/08
Received Date: 11/14/08
Extraction Date: 11/17/08
Analysis Date: 09-DEC-2008 21:44
Report Date: 12/11/2008
Matrix: WATER
% Solids: NA

Lab ID: SB6584-4
Client ID: IR78-GW57D-08D
SDG: TO9-1
Extracted by: KF
Extraction Method: SW846 3520
Analyst: JCG
Analysis Method: SW846 M8270C
Lab Prep Batch: WG58142
Units: ug/L

CAS#	Compound	Flags	Results	DF	PQL	Adj.PQL	Adj.MDL	
91-20-3	Naphthalene	~~U~~ UJ	0.24	1.0	0.25	0.24	0.060	CCH
91-57-6	2-Methylnaphthalene	U	0.24	1.0	0.25	0.24	0.073	
86-73-7	Fluorene	U	0.24	1.0	0.25	0.24	0.058	
85-01-8	Phenanthrene	U	0.24	1.0	0.25	0.24	0.048	
206-44-0	Fluoranthene	U	0.24	1.0	0.25	0.24	0.069	
129-00-0	Pyrene	U	0.24	1.0	0.25	0.24	0.056	
56-55-3	Benzo(a)anthracene	U	0.24	1.0	0.25	0.24	0.043	
205-99-2	Benzo(b)fluoranthene	~~U~~ UJ	0.25	1.0	0.27	0.25	0.084	CCH
207-08-9	Benzo(k)fluoranthene	U	0.24	1.0	0.25	0.24	0.046	
50-32-8	Benzo(a)pyrene	U	0.24	1.0	0.25	0.24	0.062	
193-39-5	Indeno(1,2,3-cd)pyrene	U	0.24	1.0	0.25	0.24	0.049	
53-70-3	Dibenzo(a,h)anthracene	U	0.24	1.0	0.25	0.24	0.066	
191-24-2	Benzo(g,h,i)perylene	U	0.24	1.0	0.25	0.24	0.061	
118-74-1	Hexachlorobenzene	~~U~~ UJ	0.24	1.0	0.25	0.24	0.052	CCH
87-68-3	Hexachlorobutadiene	U	0.25	1.0	0.27	0.25	0.082	
77-47-4	Hexachlorocyclopentadiene	~~U~~ UJ	0.25	1.0	0.27	0.25	0.063	CCH
7297-45-2	2-Methylnaphthalene-D10		67%					
367-12-4	2,4-Dibromophenol		89%					
81103-79-9	Fluorene-d10		57%					
1718-51-1	Pyrene-D10		84%					

kW
1/30/09

KATAHDIN ANALYTICAL SERVICES
Report of Analytical Results

Client: CH2MHill
Project: TO-009 Lejeune
PO No:
Sample Date: 11/12/08
Received Date: 11/14/08
Extraction Date: 11/17/08
Analysis Date: 09-DEC-2008 22:27
Report Date: 12/11/2008
Matrix: WATER
% Solids: NA

Lab ID: SB6584-6
Client ID: IR78-GW01-08D
SDG: TO9-1
Extracted by: KF
Extraction Method: SW846 3520
Analyst: JCG
Analysis Method: SW846 M8270C
Lab Prep Batch: WG58142
Units: ug/L

CAS#	Compound	Flags	Results	DF	PQL	Adj.PQL	Adj.MDL	
91-20-3	Naphthalene	J	3.1	1.0	0.25	0.25	0.063	CCH
91-57-6	2-Methylnaphthalene	U	0.25	1.0	0.25	0.25	0.076	
86-73-7	Fluorene	U	0.25	1.0	0.25	0.25	0.060	
85-01-8	Phenanthrene	U	0.25	1.0	0.25	0.25	0.050	
206-44-0	Fluoranthene	U	0.25	1.0	0.25	0.25	0.072	
129-00-0	Pyrene	U	0.25	1.0	0.25	0.25	0.058	
56-55-3	Benzo(a)anthracene	U	0.25	1.0	0.25	0.25	0.046	
205-99-2	Benzo(b)fluoranthene	~~J~~ UJ	0.27	1.0	0.27	0.27	0.088	CCH
207-08-9	Benzo(k)fluoranthene	U	0.25	1.0	0.25	0.25	0.048	
50-32-8	Benzo(a)pyrene	U	0.25	1.0	0.25	0.25	0.065	
193-39-5	Indeno(1,2,3-cd)pyrene	U	0.25	1.0	0.25	0.25	0.051	
53-70-3	Dibenzo(a,h)anthracene	U	0.25	1.0	0.25	0.25	0.069	
191-24-2	Benzo(g,h,i)perylene	U	0.25	1.0	0.25	0.25	0.064	
118-74-1	Hexachlorobenzene	~~J~~ UJ	0.25	1.0	0.25	0.25	0.054	CCH
87-68-3	Hexachlorobutadiene	U	0.27	1.0	0.27	0.27	0.086	
77-47-4	Hexachlorocyclopentadiene	~~J~~ UJ	0.27	1.0	0.27	0.27	0.066	CCH
7297-45-2	2-Methylnaphthalene-D10		60%					
367-12-4	2,4-Dibromophenol		120%					
81103-79-9	Fluorene-d10		64%					
1718-51-1	Pyrene-D10		99%					

lw
1/30/09

16

KATAHDIN ANALYTICAL SERVICES
Report of Analytical Results

Client: CH2MHill
Project: TO-009 Lejeune
PO No:
Sample Date: 11/12/08
Received Date: 11/14/08
Extraction Date: 11/17/08
Analysis Date: 10-DEC-2008 13:25
Report Date: 12/11/2008
Matrix: WATER
% Solids: NA

Lab ID: SB6584-8
Client ID: IR78-GW59-08D
SDG: TO9-1
Extracted by: KF
Extraction Method: SW846 3520
Analyst: JCG
Analysis Method: SW846 M8270C
Lab Prep Batch: WG58142
Units: ug/L

CAS#	Compound	Flags	Results	DF	PQL	Adj.PQL	Adj.MDL	
91-20-3	Naphthalene	~~U~~ UJ	0.24	1.0	0.25	0.24	0.060	CCH
91-57-6	2-Methylnaphthalene	U	0.24	1.0	0.25	0.24	0.073	
86-73-7	Fluorene	U	0.24	1.0	0.25	0.24	0.058	
85-01-8	Phenanthrene	U	0.24	1.0	0.25	0.24	0.048	
206-44-0	Fluoranthene	U	0.24	1.0	0.25	0.24	0.069	
129-00-0	Pyrene	U	0.24	1.0	0.25	0.24	0.056	
56-55-3	Benzo(a)anthracene	U	0.24	1.0	0.25	0.24	0.043	
205-99-2	Benzo(b)fluoranthene	U	0.25	1.0	0.27	0.25	0.084	
207-08-9	Benzo(k)fluoranthene	U	0.24	1.0	0.25	0.24	0.046	
50-32-8	Benzo(a)pyrene	U	0.24	1.0	0.25	0.24	0.062	
193-39-5	Indeno(1,2,3-cd)pyrene	U	0.24	1.0	0.25	0.24	0.049	
53-70-3	Dibenzo(a,h)anthracene	U	0.24	1.0	0.25	0.24	0.066	
191-24-2	Benzo(g,h,i)perylene	U	0.24	1.0	0.25	0.24	0.061	
118-74-1	Hexachlorobenzene	U	0.24	1.0	0.25	0.24	0.052	
87-68-3	Hexachlorobutadiene	U	0.25	1.0	0.27	0.25	0.082	
77-47-4	Hexachlorocyclopentadiene	~~U~~ UJ	0.25	1.0	0.27	0.25	0.063	CCH
7297-45-2	2-Methylnaphthalene-D10		51%					
367-12-4	2,4-Dibromophenol		80%					
81103-79-9	Fluorene-d10		54%					
1718-51-1	Pyrene-D10		83%					

lil
1/30/09

17

KATAHDIN ANALYTICAL SERVICES
Report of Analytical Results

Client: CH2MHill
Project: TO-009 Lejeune
PO No:
Sample Date: 11/12/08
Received Date: 11/14/08
Extraction Date: 11/17/08
Analysis Date: 10-DEC-2008 14:07
Report Date: 12/11/2008
Matrix: WATER
% Solids: NA

Lab ID: SB6584-10
Client ID: IR78-GW59D-08D
SDG: TO9-1
Extracted by: KF
Extraction Method: SW846 3520
Analyst: JCG
Analysis Method: SW846 M8270C
Lab Prep Batch: WG58142
Units: ug/L

CAS#	Compound	Flags	Results	DF	PQL	Adj.PQL	Adj.MDL	
91-20-3	Naphthalene	~~U~~ UJ	0.24	1.0	0.25	0.24	0.060	CCH
91-57-6	2-Methylnaphthalene	U	0.24	1.0	0.25	0.24	0.073	
86-73-7	Fluorene	U	0.24	1.0	0.25	0.24	0.058	
85-01-8	Phenanthrene	U	0.24	1.0	0.25	0.24	0.048	
206-44-0	Fluoranthene	U	0.24	1.0	0.25	0.24	0.069	
129-00-0	Pyrene	U	0.24	1.0	0.25	0.24	0.056	
56-55-3	Benzo(a)anthracene	U	0.24	1.0	0.25	0.24	0.043	
205-99-2	Benzo(b)fluoranthene	U	0.25	1.0	0.27	0.25	0.084	
207-08-9	Benzo(k)fluoranthene	U	0.24	1.0	0.25	0.24	0.046	
50-32-8	Benzo(a)pyrene	U	0.24	1.0	0.25	0.24	0.062	
193-39-5	Indeno(1,2,3-cd)pyrene	U	0.24	1.0	0.25	0.24	0.049	
53-70-3	Dibenzo(a,h)anthracene	U	0.24	1.0	0.25	0.24	0.066	
191-24-2	Benzo(g,h,i)perylene	U	0.24	1.0	0.25	0.24	0.061	
118-74-1	Hexachlorobenzene	U	0.24	1.0	0.25	0.24	0.052	
87-68-3	Hexachlorobutadiene	U	0.25	1.0	0.27	0.25	0.082	
77-47-4	Hexachlorocyclopentadiene	~~U~~ UJ	0.25	1.0	0.27	0.25	0.063	CCH
7297-45-2	2-Methylnaphthalene-D10		54%					
367-12-4	2,4-Dibromophenol		91%					
81103-79-9	Fluorene-d10		52%					
1718-51-1	Pyrene-D10		89%					

lus
1130/09

KATAHDIN ANALYTICAL SERVICES
Report of Analytical Results

Client: CH2MHill
Project: TO-009 Lejeune
PO No:
Sample Date: 11/12/08
Received Date: 11/14/08
Extraction Date: 11/17/08
Analysis Date: 09-DEC-2008 17:31
Report Date: 12/11/2008
Matrix: WATER
% Solids: NA

Lab ID: SB6584-12
Client ID: MR08-EB111208-02
SDG: TO9-1
Extracted by: KF
Extraction Method: SW846 3510
Analyst: JCG
Analysis Method: SW846 M8270C
Lab Prep Batch: WG58171
Units: ug/L

CAS#	Compound	Flags	Results	DF	PQL	Adj.PQL	Adj.MDL	
91-20-3	Naphthalene	~~U~~ UJ	0.24	1.0	0.25	0.24	0.062	CCH
91-57-6	2-Methylnaphthalene	U	0.24	1.0	0.25	0.24	0.075	
86-73-7	Fluorene	U	0.24	1.0	0.25	0.24	0.059	
85-01-8	Phenanthrene	U	0.24	1.0	0.25	0.24	0.050	
206-44-0	Fluoranthene	U	0.24	1.0	0.25	0.24	0.071	
129-00-0	Pyrene	U	0.24	1.0	0.25	0.24	0.057	
56-55-3	Benzo(a)anthracene	U	0.24	1.0	0.25	0.24	0.045	
205-99-2	Benzo(b)fluoranthene	~~U~~ UJ	0.26	1.0	0.27	0.26	0.086	CCH
207-08-9	Benzo(k)fluoranthene	U	0.24	1.0	0.25	0.24	0.048	
50-32-8	Benzo(a)pyrene	U	0.24	1.0	0.25	0.24	0.064	
193-39-5	Indeno(1,2,3-cd)pyrene	U	0.24	1.0	0.25	0.24	0.050	
53-70-3	Dibenzo(a,h)anthracene	U	0.24	1.0	0.25	0.24	0.068	
191-24-2	Benzo(g,h,i)perylene	U	0.24	1.0	0.25	0.24	0.063	
118-74-1	Hexachlorobenzene	~~U~~ UJ	0.24	1.0	0.25	0.24	0.053	CCH
87-68-3	Hexachlorobutadiene	U	0.26	1.0	0.27	0.26	0.084	
77-47-4	Hexachlorocyclopentadiene	~~U~~ UJ	0.26	1.0	0.27	0.26	0.065	CCH
7297-45-2	2-Methylnaphthalene-D10		76%					
367-12-4	2,4-Dibromophenol		89%					
81103-79-9	Fluorene-d10		56%					
1718-51-1	Pyrene-D10		115%					

MW
1/30/09

KATAHDIN ANALYTICAL SERVICES
Report of Analytical Results

19

Client: CH2MHill
Project: TO-009 Lejeune
PO No:
Sample Date: 11/12/08
Received Date: 11/14/08
Extraction Date: 11/17/08
Analysis Date: 10-DEC-2008 15:32
Report Date: 12/11/2008
Matrix: WATER
% Solids: NA

Lab ID: SB6584-14DL
Client ID: USTHPFF-MW15-08D
SDG: TO9-1
Extracted by: KF
Extraction Method: SW846 3510
Analyst: JCG
Analysis Method: SW846 M8270C
Lab Prep Batch: WG58171
Units: ug/L

CAS#	Compound	Flags	Results	DF	PQL	Adj.PQL	Adj.MDL	
91-20-3	Naphthalene	500J ~~B~~ CCH	~~580~~	10	0.25	2.5	0.64	R DL
91-57-6	2-Methylnaphthalene		50	10	0.25	2.5	0.77	
86-73-7	Fluorene	U	2.5	10	0.25	2.5	0.61	
85-01-8	Phenanthrene	J	0.57	10	0.25	2.5	0.51	
206-44-0	Fluoranthene	U	2.5	10	0.25	2.5	0.73	
129-00-0	Pyrene	U	2.5	10	0.25	2.5	0.59	
56-55-3	Benzo(a)anthracene	U	2.5	10	0.25	2.5	0.46	
205-99-2	Benzo(b)fluoranthene	U	2.7	10	0.27	2.7	0.89	
207-08-9	Benzo(k)fluoranthene	U	2.5	10	0.25	2.5	0.49	
50-32-8	Benzo(a)pyrene	U	2.5	10	0.25	2.5	0.66	
193-39-5	Indeno(1,2,3-cd)pyrene	U	2.5	10	0.25	2.5	0.52	
53-70-3	Dibenzo(a,h)anthracene	U	2.5	10	0.25	2.5	0.70	
191-24-2	Benzo(g,h,i)perylene	U	2.5	10	0.25	2.5	0.65	
118-74-1	Hexachlorobenzene	U	2.5	10	0.25	2.5	0.55	
87-68-3	Hexachlorobutadiene	U	2.7	10	0.27	2.7	0.87	
77-47-4	Hexachlorocyclopentadiene	~~J~~ UJ	2.7	10	0.27	2.7	0.67	CCH
7297-45-2	2-Methylnaphthalene-D10		D					
367-12-4	2,4-Dibromophenol		D					
81103-79-9	Fluorene-d10		D					
1718-51-1	Pyrene-D10		D					

MW
11/30/09

19DL

KATAHDIN ANALYTICAL SERVICES
Report of Analytical Results

Client: CH2MHill
Project: TO-009 Lejeune
PO No:
Sample Date: 11/12/08
Received Date: 11/14/08
Extraction Date: 11/17/08
Analysis Date: 10-DEC-2008 16:14
Report Date: 12/11/2008
Matrix: WATER
% Solids: NA

Lab ID: SB6584-14DL3
Client ID: USTHPFF-MW15-08D
SDG: TO9-1
Extracted by: KF
Extraction Method: SW846 3510
Analyst: JCG
Analysis Method: SW846 M8270C
Lab Prep Batch: WG58171
Units: ug/L

Use ORIGINAL

CAS#	Compound	Flags	Results	DF	PQL	Adj.PQL	Adj.MDL	
91-20-3	Naphthalene		500 J	100	0.2	25	6	CCH
91-57-6	2-Methylnaphthalene		52	100	0.2	25	8	
86-73-7	Fluorene	U	25	100	0.2	25	6	
85-01-8	Phenanthrene	U	25	100	0.2	25	5	
206-44-0	Fluoranthene	U	25	100	0.2	25	7	
129-00-0	Pyrene	U	25	100	0.2	25	6	
56-55-3	Benzo(a)anthracene	U	25	100	0.2	25	5	
205-99-2	Benzo(b)fluoranthene	U	27	100	0.3	27	9	
207-08-9	Benzo(k)fluoranthene	U	25	100	0.2	25	5	
50-32-8	Benzo(a)pyrene	U	25	100	0.2	25	7	
193-39-5	Indeno(1,2,3-cd)pyrene	U	25	100	0.2	25	5	
53-70-3	Dibenzo(a,h)anthracene	U	25	100	0.2	25	7	
191-24-2	Benzo(g,h,i)perylene	U	25	100	0.2	25	6	
118-74-1	Hexachlorobenzene	U	25	100	0.2	25	6	
87-68-3	Hexachlorobutadiene	U	27	100	0.3	27	9	
77-47-4	Hexachlorocyclopentadiene	~~U~~ UJ	27	100	0.3	27	7	CCH
7297-45-2	2-Methylnaphthalene-D10		D					
367-12-4	2,4-Dibromophenol		D					
81103-79-9	Fluorene-d10		D					
1718-51-1	Pyrene-D10		D					

R DL

kw 1/30/09

20

KATAHDIN ANALYTICAL SERVICES
Report of Analytical Results

Client: CH2MHill
Project: TO-009 Lejeune
PO No:
Sample Date: 11/12/08
Received Date: 11/14/08
Extraction Date: 11/17/08
Analysis Date: 09-DEC-2008 18:55
Report Date: 12/11/2008
Matrix: WATER
% Solids: NA

Lab ID: SB6584-16
Client ID: USTHPFF-MW09-08D
SDG: TO9-1
Extracted by: KF
Extraction Method: SW846 3510
Analyst: JCG
Analysis Method: SW846 M8270C
Lab Prep Batch: WG58171
Units: ug/L

CAS#	Compound	Flags	Results	DF	PQL	Adj.PQL	Adj.MDL	
91-20-3	Naphthalene	~~U~~ UJ	0.30	1.0	0.25	0.30	0.077	CCH
91-57-6	2-Methylnaphthalene	U	0.30	1.0	0.25	0.30	0.093	
86-73-7	Fluorene	U	0.30	1.0	0.25	0.30	0.073	
85-01-8	Phenanthrene	U	0.30	1.0	0.25	0.30	0.061	
206-44-0	Fluoranthene	U	0.30	1.0	0.25	0.30	0.088	
129-00-0	Pyrene	U	0.30	1.0	0.25	0.30	0.071	
56-55-3	Benzo(a)anthracene	U	0.30	1.0	0.25	0.30	0.055	
205-99-2	Benzo(b)fluoranthene	~~U~~ UJ	0.32	1.0	0.27	0.32	0.11	CCH
207-08-9	Benzo(k)fluoranthene	U	0.30	1.0	0.25	0.30	0.059	
50-32-8	Benzo(a)pyrene	U	0.30	1.0	0.25	0.30	0.080	
193-39-5	Indeno(1,2,3-cd)pyrene	U	0.30	1.0	0.25	0.30	0.063	
53-70-3	Dibenzo(a,h)anthracene	U	0.30	1.0	0.25	0.30	0.084	
191-24-2	Benzo(g,h,i)perylene	U	0.30	1.0	0.25	0.30	0.078	
118-74-1	Hexachlorobenzene	~~U~~ UJ	0.30	1.0	0.25	0.30	0.066	CCH
87-68-3	Hexachlorobutadiene	U	0.32	1.0	0.27	0.32	0.10	
77-47-4	Hexachlorocyclopentadiene	~~U~~ UJ	0.32	1.0	0.27	0.32	0.081	CCH
7297-45-2	2-Methylnaphthalene-D10		78%					
367-12-4	2,4-Dibromophenol		120%					
81103-79-9	Fluorene-d10		66%					
1718-51-1	Pyrene-D10		112%					

lhW
1/30/09

ENVIRONMENTAL
Data Services, Inc.

SEMIVOLATILE ORGANIC COMPOUNDS

USEPA Region IV - Level IV Review

Site: MCB Camp Lejeune, TO-09 SDG #: T09-1

Client: CH2M HILL, Inc., Virginia Beach, Virginia Date: January 30, 2009

Laboratory: Katahdin Analytical Services, Scarborough, Maine Reviewer: Nancy Weaver

EDS ID	Client Sample ID	Laboratory Sample ID	Matrix
1	IR78-GW61-08D	SB6511-1	Water
2	IR78-GW03-08D	SB6511-3	Water
2MS	IR78-GW03-08DMS	SB6511-3MS	Water
2MSD	IR78-GW03-08DMSD	SB6511-3MSD	Water
3	MR08-EB111008	SB6511-5	Water
4	IR78-GW02-08D	SB6511-7	Water
5	IR78-GW02D-08D	SB6511-9	Water
6	IR78-GW42-08D	SB6511-11	Water
7	MR08-SW02-08D	SB6511-13	Water
8	MR08-SW02D-08D	SB6511-15	Water
9	MR08-FB111108	SB6511-17	Water
10	MR08-EB111108-1	SB6511-19	Water
11	MR08-SW01-08D	SB6511-21	Water
12	MR08-SW03-08D	SB6511-23	Water
13	IR78-GW57-08D	SB6584-1	Water
14	IR78-GW57D-08D	SB6584-3	Water
15	IR78-GW01-08D	SB6584-5	Water
16	IR78-GW59-08D	SB6584-7	Water
17	IR78-GW59D-08D	SB6584-9	Water
18	MR08-EB111208-02	SB6584-11	Water
19	USTHPFF-MW15-08D	SB6584-13	Water
20	USTHPFF-MW09-08D	SB6584-15	Water

The USEPA "Contract Laboratory Program National Functional Guidelines for Organic Data Review," October 1999, and professional judgement were used in evaluating the data in this summary report.

Holding Times - All samples were extracted within 7 days for water samples and analyzed within 40 days for all samples.

GC/MS Tuning - All of the DFTPP tunes in the initial and continuing calibrations met the percent relative abundance criteria.

Initial Calibration - The initial calibrations exhibited acceptable %RSD and mean RRF values.

Continuing Calibration - The continuing calibrations exhibited acceptable %D and RRF values except the following.

CCAL Date	Compound	%D/RRF	Qualifier	Affected Samples
11/18/08	Butylbenzlphthalate	32.81%	J/UJ	1-3
	bis (2-Ethylhexyl) phthalate	38.46%	J/UJ	1-3
	Di-n-octylphthalate	53.64%	J/UJ	1-3
11/24/08	Atrazine	86.61%/0.025 RRF	J/R	4-12, 18, 19
11/25/08	Benzaldehyde	28.21%	J/UJ	20
11/26/08	Benzaldehyde	28.46%	J/UJ	13-17
	Butylbenzylphthalate	37.00%	J/UJ	13-17
	bis (2-Ethylhexyl) phthalate	40.06%	J/UJ	13-17
	Di-n-octylphthalate	76.59%	J/UJ	13-17

Surrogates - All samples exhibited acceptable surrogate recoveries except the following.

Sample ID	Surrogate	%R	Qualifier
1	S1-2-Fluorophenol	0%	J/R (acid compounds)
	S2-Phenol-d6	0%	
	S5-2,4,6-Tribromophenol	0%	

MS/MSD - The MS/MSD sample exhibited acceptable %R and RPD values.

Laboratory Control Sample - The LCS samples exhibited acceptable %R values except the following.

LCS ID	Compound	%R	Qualifier	Affected Samples
WG58066-LCS	Benzaldehyde	9%	J/R	4-12
WG58009-LCS	Caprolactam	73%	J/UJ	1-3
	bis (2-Ethylhexyl)phthalate	148%	None	All ND or already qualified
	Di-n-octyl phthalate	153%	None	All ND
WG58141-LCS	Caprolactam	65%	J/UJ	13-17
	Benzaldehyde	117%	None	All ND or already qualified due to CCAL
	bis (2-Ethylhexyl)phthalate	127%	None	All ND or already qualified due to CCAL
	Di-n-octyl phthalate	164%	None	All ND or already qualified due to CCAL
WG-58168-LCS	Di-n-octyl phthalate	136%	None	All ND

Internal Standard (IS) Area Performance - All internal standards met response and retention time (RT) criteria.

Method Blank - The method blanks were free of contamination.

Field, Equipment Blank - Field QC results are summarized below.

Blank ID	Compound	Conc. ug/L	Action Level ug/L	Qualifier	Affected Samples
MR08-FB111108	None - ND	-	-	-	-
MR08-EB111008	bis (2-Ethylhexyl) phthalate	2	20	U	1, 2
MR08-EB111108-1	None - ND	-	-	-	-
MR08-EB111208-2	None - ND	-	-	-	-

Field Duplicates - Field duplicate results are summarized below.

Compound	IR78-GW02-08D ug/L	IR78-GW02D-08D ug/L	RPD	Qualifier
None	ND	ND	-	-

Compound	MR08-SW02-08D ug/L	MR08-SW02D-08D ug/L	RPD	Qualifier
None	ND	ND	-	-

Compound	IR78-GW57-08D ug/L	IR78-GW57D-08D ug/L	RPD	Qualifier
bis (2-Ethylhexyl) phthalate	9 U	6	NC	None

Compound	IR78-GW59-08D ug/L	IR78-GW59D-08D ug/L	RPD	Qualifier
None	ND	ND	-	-

Tentatively Identified Compounds (TICs) - TICs were not reported.

Compound Quantitation - No discrepancies were identified.

KATAHDIN ANALYTICAL SERVICES
Report of Analytical Results

Client: CH2MHill
Project: TO-009 Lejeune
PO No:
Sample Date: 11/10/08
Received Date: 11/12/08
Extraction Date: 11/13/08
Analysis Date: 18-NOV-2008 14:02
Report Date: 12/06/2008
Matrix: WATER
% Solids: NA

Lab ID: SB6511-1
Client ID: IR78-GW61-08D
SDG: TO9-1
Extracted by: KF
Extraction Method: SW846 3520
Analyst: JCG
Analysis Method: SW846 8270C
Lab Prep Batch: WG58009
Units: ug/L

CAS#	Compound	Flags	Results	DF	PQL	Adj.PQL	Adj.MDL
100-52-7	Benzaldehyde	U	9	1.0	10	9	3
108-95-2	Phenol	~~U~~ R	9	1.0	10	9	2 SSL
111-44-4	Bis(2-Chloroethyl)ether	U	9	1.0	10	9	2
95-57-8	2-Chlorophenol	~~U~~ R	11	1.0	12	11	3 SSL
95-48-7	2-Methylphenol	~~U~~ R	11	1.0	12	11	4 SSL
108-60-1	2,2'-Oxybis(1-chloropropane)	U	9	1.0	10	9	2
98-86-2	Acetophenone	U	11	1.0	12	11	4
621-64-7	N-Nitroso-di-n-propylamine	U	9	1.0	10	9	2
65794-96-9	3&4-Methylphenol	~~U~~ R	9	1.0	10	9	2 SSL
67-72-1	Hexachloroethane	U	9	1.0	10	9	2
98-95-3	Nitrobenzene	U	9	1.0	10	9	2
78-59-1	Isophorone	U	9	1.0	10	9	2
88-75-5	2-Nitrophenol	~~U~~ R	9	1.0	10	9	3 SSL
105-67-9	2,4-Dimethylphenol	~~U~~ R	11	1.0	12	11	4 SSL
111-91-1	Bis(2-Chloroethoxy)methane	U	9	1.0	10	9	2
120-83-2	2,4-Dichlorophenol	~~U~~ R	11	1.0	12	11	4 SSL
106-47-8	4-Chloroaniline	U	9	1.0	10	9	2
105-60-2	Caprolactam	~~U~~ UJ	9	1.0	10	9	0.4 BSL
59-50-7	4-Chloro-3-Methylphenol	~~U~~ R	9	1.0	10	9	2 SSL
88-06-2	2,4,6-Trichlorophenol	~~U~~ ↓	9	1.0	10	9	3 ↓
95-95-4	2,4,5-Trichlorophenol	~~U~~ ↓	24	1.0	25	24	4
91-58-7	2-Chloronaphthalene	U	9	1.0	10	9	2
92-52-4	1,1'-Biphenyl	U	9	1.0	10	9	2
88-74-4	2-Nitroaniline	U	24	1.0	25	24	1
131-11-3	Dimethyl Phthalate	U	9	1.0	10	9	0.7
606-20-2	2,6-Dinitrotoluene	U	9	1.0	10	9	1.0
208-96-8	Acenaphthylene	U	9	1.0	10	9	2
99-09-2	3-Nitroaniline	U	24	1.0	25	24	1
83-32-9	Acenaphthene	U	9	1.0	10	9	2
51-28-5	2,4-Dinitrophenol	~~U~~ R	42	1.0	45	42	14 SSL
132-64-9	Dibenzofuran	U	9	1.0	10	9	1
100-02-7	4-Nitrophenol	~~U~~ R	24	1.0	25	24	5 SSL
121-14-2	2,4-Dinitrotoluene	U	9	1.0	10	9	1
84-66-2	Diethylphthalate	U	9	1.0	10	9	1
7005-72-3	4-Chlorophenyl-phenylether	U	9	1.0	10	9	1
100-01-6	4-Nitroaniline	U	24	1.0	25	24	2
534-52-1	4,6-Dinitro-2-Methylphenol	~~U~~ R	24	1.0	25	24	6 SSL
86-30-6	N-Nitrosodiphenylamine	U	9	1.0	10	9	2
101-55-3	4-Bromophenyl-phenylether	U	9	1.0	10	9	1
1912-24-9	Atrazine	U	9	1.0	10	9	2
87-86-5	Pentachlorophenol	~~U~~ R	24	1.0	25	24	7 SSL
120-12-7	Anthracene	U	9	1.0	10	9	1
86-74-8	Carbazole	U	9	1.0	10	9	1

LeW

KATAHDIN ANALYTICAL SERVICES
Report of Analytical Results

Client: CH2MHill
Project: TO-009 Lejeune
PO No:
Sample Date: 11/10/08
Received Date: 11/12/08
Extraction Date: 11/13/08
Analysis Date: 18-NOV-2008 14:02
Report Date: 12/06/2008
Matrix: WATER
% Solids: NA

Lab ID: SB6511-1
Client ID: IR78-GW61-08D
SDG: TO9-1
Extracted by: KF
Extraction Method: SW846 3520
Analyst: JCG
Analysis Method: SW846 8270C
Lab Prep Batch: WG58009
Units: ug/L

CAS#	Compound	Flags	Results	DF	PQL	Adj.PQL	Adj.MDL	
84-74-2	Di-n-butylphthalate	U	9	1.0	10	9	1	
85-68-7	Butylbenzylphthalate	~~U~~ UJ	9	1.0	10	9	1	CCH
91-94-1	3,3'-Dichlorobenzidine	U	9	1.0	10	9	3	
218-01-9	Chrysene	U	9	1.0	10	9	1	
117-81-7	bis(2-Ethylhexyl)phthalate	~~J~~ UJ	9~~4~~	1.0	10	9	2	CCH ~~BL~~
117-84-0	Di-n-octylphthalate	~~J~~ UJ	9	1.0	10	9	2	CCH
367-12-4	2-Fluorophenol		* 0%					
13127-88-3	Phenol-D6		* 0%					
4165-60-0	Nitrobenzene-D5		75%					
321-60-8	2-Fluorobiphenyl		74%					
118-79-6	2,4,6-Tribromophenol		* 0%					
1718-51-0	Terphenyl-D14		*117%					

11/30/09

2

KATAHDIN ANALYTICAL SERVICES
Report of Analytical Results

Client: CH2MHill
Project: TO-009 Lejeune
PO No:
Sample Date: 11/10/08
Received Date: 11/12/08
Extraction Date: 11/13/08
Analysis Date: 18-NOV-2008 14:44
Report Date: 12/06/2008
Matrix: WATER
% Solids: NA

Lab ID: SB6511-3
Client ID: IR78-GW03-08D
SDG: TO9-1
Extracted by: KF
Extraction Method: SW846 3520
Analyst: JCG
Analysis Method: SW846 8270C
Lab Prep Batch: WG58009
Units: ug/L

CAS#	Compound	Flags	Results	DF	PQL	Adj.PQL	Adj.MDL
100-52-7	Benzaldehyde	U	9	1.0	10	9	3
108-95-2	Phenol	U	9	1.0	10	9	2
111-44-4	Bis(2-Chloroethyl)ether	U	9	1.0	10	9	2
95-57-8	2-Chlorophenol	U	11	1.0	12	11	3
95-48-7	2-Methylphenol	U	11	1.0	12	11	4
108-60-1	2,2'-Oxybis(1-chloropropane)	U	9	1.0	10	9	2
98-86-2	Acetophenone	U	11	1.0	12	11	4
621-64-7	N-Nitroso-di-n-propylamine	U	9	1.0	10	9	2
65794-96-9	3&4-Methylphenol	U	9	1.0	10	9	2
67-72-1	Hexachloroethane	U	9	1.0	10	9	2
98-95-3	Nitrobenzene	U	9	1.0	10	9	2
78-59-1	Isophorone	U	9	1.0	10	9	2
88-75-5	2-Nitrophenol	U	9	1.0	10	9	3
105-67-9	2,4-Dimethylphenol	U	11	1.0	12	11	4
111-91-1	Bis(2-Chloroethoxy)methane	U	9	1.0	10	9	2
120-83-2	2,4-Dichlorophenol	U	11	1.0	12	11	4
106-47-8	4-Chloroaniline	U	9	1.0	10	9	2
105-60-2	Caprolactam	~~U~~ UJ	9	1.0	10	9	0.4 BSL
59-50-7	4-Chloro-3-Methylphenol	U	9	1.0	10	9	2
88-06-2	2,4,6-Trichlorophenol	U	9	1.0	10	9	3
95-95-4	2,4,5-Trichlorophenol	U	24	1.0	25	24	4
91-58-7	2-Chloronaphthalene	U	9	1.0	10	9	2
92-52-4	1,1'-Biphenyl	U	9	1.0	10	9	2
88-74-4	2-Nitroaniline	U	24	1.0	25	24	1
131-11-3	Dimethyl Phthalate	U	9	1.0	10	9	0.7
606-20-2	2,6-Dinitrotoluene	U	9	1.0	10	9	1.0
208-96-8	Acenaphthylene	U	9	1.0	10	9	2
99-09-2	3-Nitroaniline	U	24	1.0	25	24	1
83-32-9	Acenaphthene	U	9	1.0	10	9	2
51-28-5	2,4-Dinitrophenol	U	42	1.0	45	42	14
132-64-9	Dibenzofuran	U	9	1.0	10	9	1
100-02-7	4-Nitrophenol	U	24	1.0	25	24	5
121-14-2	2,4-Dinitrotoluene	U	9	1.0	10	9	1
84-66-2	Diethylphthalate	U	9	1.0	10	9	1
7005-72-3	4-Chlorophenyl-phenylether	U	9	1.0	10	9	1
100-01-6	4-Nitroaniline	U	24	1.0	25	24	2
534-52-1	4,6-Dinitro-2-Methylphenol	U	24	1.0	25	24	6
86-30-6	N-Nitrosodiphenylamine	U	9	1.0	10	9	2
101-55-3	4-Bromophenyl-phenylether	U	9	1.0	10	9	1
1912-24-9	Atrazine	U	9	1.0	10	9	2
87-86-5	Pentachlorophenol	U	24	1.0	25	24	7
120-12-7	Anthracene	U	9	1.0	10	9	1
86-74-8	Carbazole	U	9	1.0	10	9	1

RW 12/2/09

2

KATAHDIN ANALYTICAL SERVICES
Report of Analytical Results

Client: CH2MHill
Project: TO-009 Lejeune
PO No:
Sample Date: 11/10/08
Received Date: 11/12/08
Extraction Date: 11/13/08
Analysis Date: 18-NOV-2008 14:44
Report Date: 12/06/2008
Matrix: WATER
% Solids: NA

Lab ID: SB6511-3
Client ID: IR78-GW03-08D
SDG: TO9-1
Extracted by: KF
Extraction Method: SW846 3520
Analyst: JCG
Analysis Method: SW846 8270C
Lab Prep Batch: WG58009
Units: ug/L

CAS#	Compound	Flags	Results	DF	PQL	Adj.PQL	Adj.MDL	
84-74-2	Di-n-butylphthalate	U	9	1.0	10	9	1	
85-68-7	Butylbenzylphthalate	~~U~~ UJ	9	1.0	10	9	1	CCH
91-94-1	3,3'-Dichlorobenzidine	U	9	1.0	10	9	3	
218-01-9	Chrysene	U	9	1.0	10	9	1	
117-81-7	bis(2-Ethylhexyl)phthalate	~~U~~ UJ	9 ~~2~~	1.0	10	9	2	CCH BL
117-84-0	Di-n-octylphthalate	~~U~~ UJ	9	1.0	10	9	2	CCH
367-12-4	2-Fluorophenol		* 74%					
13127-88-3	Phenol-D6		* 82%					
4165-60-0	Nitrobenzene-D5		84%					
321-60-8	2-Fluorobiphenyl		84%					
118-79-6	2,4,6-Tribromophenol		81%					
1718-51-0	Terphenyl-D14		*118%					

LW 11/30/09

3

KATAHDIN ANALYTICAL SERVICES
Report of Analytical Results

Client: CH2MHill
Project: TO-009 Lejeune
PO No:
Sample Date: 11/10/08
Received Date: 11/12/08
Extraction Date: 11/13/08
Analysis Date: 18-NOV-2008 15:26
Report Date: 12/06/2008
Matrix: WATER
% Solids: NA

Lab ID: SB6511-5
Client ID: MR08-EB111008
SDG: TO9-1
Extracted by: KF
Extraction Method: SW846 3520
Analyst: JCG
Analysis Method: SW846 8270C
Lab Prep Batch: WG58009
Units: ug/L

CAS#	Compound	Flags	Results	DF	PQL	Adj.PQL	Adj.MDL	
100-52-7	Benzaldehyde	U	9	1.0	10	9	3	
108-95-2	Phenol	U	9	1.0	10	9	2	
111-44-4	Bis(2-Chloroethyl)ether	U	9	1.0	10	9	2	
95-57-8	2-Chlorophenol	U	11	1.0	12	11	3	
95-48-7	2-Methylphenol	U	11	1.0	12	11	4	
108-60-1	2,2'-Oxybis(1-chloropropane)	U	9	1.0	10	9	2	
98-86-2	Acetophenone	U	11	1.0	12	11	4	
621-64-7	N-Nitroso-di-n-propylamine	U	9	1.0	10	9	2	
65794-96-9	3&4-Methylphenol	U	9	1.0	10	9	2	
67-72-1	Hexachloroethane	U	9	1.0	10	9	2	
98-95-3	Nitrobenzene	U	9	1.0	10	9	2	
78-59-1	Isophorone	U	9	1.0	10	9	2	
88-75-5	2-Nitrophenol	U	9	1.0	10	9	3	
105-67-9	2,4-Dimethylphenol	U	11	1.0	12	11	4	
111-91-1	Bis(2-Chloroethoxy)methane	U	9	1.0	10	9	2	
120-83-2	2,4-Dichlorophenol	U	11	1.0	12	11	4	
106-47-8	4-Chloroaniline	U	9	1.0	10	9	2	
105-60-2	Caprolactam	~~U~~ UJ	9	1.0	10	9	0.4	BSL
59-50-7	4-Chloro-3-Methylphenol	U	9	1.0	10	9	2	
88-06-2	2,4,6-Trichlorophenol	U	9	1.0	10	9	3	
95-95-4	2,4,5-Trichlorophenol	U	24	1.0	25	24	4	
91-58-7	2-Chloronaphthalene	U	9	1.0	10	9	2	
92-52-4	1,1'-Biphenyl	U	9	1.0	10	9	2	
88-74-4	2-Nitroaniline	U	24	1.0	25	24	1	
131-11-3	Dimethyl Phthalate	U	9	1.0	10	9	0.7	
606-20-2	2,6-Dinitrotoluene	U	9	1.0	10	9	1.0	
208-96-8	Acenaphthylene	U	9	1.0	10	9	2	
99-09-2	3-Nitroaniline	U	24	1.0	25	24	1	
83-32-9	Acenaphthene	U	9	1.0	10	9	2	
51-28-5	2,4-Dinitrophenol	U	42	1.0	45	42	14	
132-64-9	Dibenzofuran	U	9	1.0	10	9	1	
100-02-7	4-Nitrophenol	U	24	1.0	25	24	5	
121-14-2	2,4-Dinitrotoluene	U	9	1.0	10	9	1	
84-66-2	Diethylphthalate	U	9	1.0	10	9	1	
7005-72-3	4-Chlorophenyl-phenylether	U	9	1.0	10	9	1	
100-01-6	4-Nitroaniline	U	24	1.0	25	24	2	
534-52-1	4,6-Dinitro-2-Methylphenol	U	24	1.0	25	24	6	
86-30-6	N-Nitrosodiphenylamine	U	9	1.0	10	9	2	
101-55-3	4-Bromophenyl-phenylether	U	9	1.0	10	9	1	
1912-24-9	Atrazine	U	9	1.0	10	9	2	
87-86-5	Pentachlorophenol	U	24	1.0	25	24	7	
120-12-7	Anthracene	U	9	1.0	10	9	1	
86-74-8	Carbazole	U	9	1.0	10	9	1	

LW 1/20/09

3

KATAHDIN ANALYTICAL SERVICES
Report of Analytical Results

Client: CH2MHill
Project: TO-009 Lejeune
PO No:
Sample Date: 11/10/08
Received Date: 11/12/08
Extraction Date: 11/13/08
Analysis Date: 18-NOV-2008 15:26
Report Date: 12/06/2008
Matrix: WATER
% Solids: NA

Lab ID: SB6511-5
Client ID: MR08-EB111008
SDG: TO9-1
Extracted by: KF
Extraction Method: SW846 3520
Analyst: JCG
Analysis Method: SW846 8270C
Lab Prep Batch: WG58009
Units: ug/L

CAS#	Compound	Flags	Results	DF	PQL	Adj.PQL	Adj.MDL	
84-74-2	Di-n-butylphthalate	U	9	1.0	10	9	1	
85-68-7	Butylbenzylphthalate	~~U~~ UJ	9	1.0	10	9	1	CCH
91-94-1	3,3'-Dichlorobenzidine	U	9	1.0	10	9	3	
218-01-9	Chrysene	U	9	1.0	10	9	1	
117-81-7	bis(2-Ethylhexyl)phthalate	~~J~~ J	2	1.0	10	9	2	CCH
117-84-0	Di-n-octylphthalate	~~J~~ UJ	9	1.0	10	9	2	CCH
367-12-4	2-Fluorophenol		* 65%					
13127-88-3	Phenol-D6		* 69%					
4165-60-0	Nitrobenzene-D5		66%					
321-60-8	2-Fluorobiphenyl		65%					
118-79-6	2,4,6-Tribromophenol		68%					
1718-51-0	Terphenyl-D14		113%					

lcw
11/30/09

KATAHDIN ANALYTICAL SERVICES
Report of Analytical Results

Client: CH2MHill
Project: TO-009 Lejeune
PO No:
Sample Date: 11/11/08
Received Date: 11/12/08
Extraction Date: 11/14/08
Analysis Date: 24-NOV-2008 15:35
Report Date: 12/06/2008
Matrix: WATER
% Solids: NA

Lab ID: SB6511-7
Client ID: IR78-GW02-08D
SDG: TO9-1
Extracted by: KF
Extraction Method: SW846 3510
Analyst: JCG
Analysis Method: SW846 8270C
Lab Prep Batch: WG58066
Units: ug/L

CAS#	Compound	Flags	Results	DF	PQL	Adj.PQL	Adj.MDL	
100-52-7	Benzaldehyde	~~U~~ R	9	1.0	10	9	3	BSL
108-95-2	Phenol	U	9	1.0	10	9	2	
111-44-4	Bis(2-Chloroethyl)ether	U	9	1.0	10	9	2	
95-57-8	2-Chlorophenol	U	11	1.0	12	11	3	
95-48-7	2-Methylphenol	U	11	1.0	12	11	4	
108-60-1	2,2'-Oxybis(1-chloropropane)	U	9	1.0	10	9	2	
98-86-2	Acetophenone	U	11	1.0	12	11	4	
621-64-7	N-Nitroso-di-n-propylamine	U	9	1.0	10	9	2	
65794-96-9	3&4-Methylphenol	U	9	1.0	10	9	2	
67-72-1	Hexachloroethane	U	9	1.0	10	9	2	
98-95-3	Nitrobenzene	U	9	1.0	10	9	2	
78-59-1	Isophorone	U	9	1.0	10	9	2	
88-75-5	2-Nitrophenol	U	9	1.0	10	9	3	
105-67-9	2,4-Dimethylphenol	U	11	1.0	12	11	4	
111-91-1	Bis(2-Chloroethoxy)methane	U	9	1.0	10	9	2	
120-83-2	2,4-Dichlorophenol	U	11	1.0	12	11	4	
106-47-8	4-Chloroaniline	U	9	1.0	10	9	2	
105-60-2	Caprolactam	U	9	1.0	10	9	0.4	
59-50-7	4-Chloro-3-Methylphenol	U	9	1.0	10	9	2	
88-06-2	2,4,6-Trichlorophenol	U	9	1.0	10	9	3	
95-95-4	2,4,5-Trichlorophenol	U	24	1.0	25	24	4	
91-58-7	2-Chloronaphthalene	U	9	1.0	10	9	2	
92-52-4	1,1'-Biphenyl	U	9	1.0	10	9	2	
88-74-4	2-Nitroaniline	U	24	1.0	25	24	1	
131-11-3	Dimethyl Phthalate	U	9	1.0	10	9	0.7	
606-20-2	2,6-Dinitrotoluene	U	9	1.0	10	9	1.0	
208-96-8	Acenaphthylene	U	9	1.0	10	9	2	
99-09-2	3-Nitroaniline	U	24	1.0	25	24	1	
83-32-9	Acenaphthene	U	9	1.0	10	9	2	
51-28-5	2,4-Dinitrophenol	U	42	1.0	45	42	14	
132-64-9	Dibenzofuran	U	9	1.0	10	9	1	
100-02-7	4-Nitrophenol	U	24	1.0	25	24	5	
121-14-2	2,4-Dinitrotoluene	U	9	1.0	10	9	1	
84-66-2	Diethylphthalate	U	9	1.0	10	9	1	
7005-72-3	4-Chlorophenyl-phenylether	U	9	1.0	10	9	1	
100-01-6	4-Nitroaniline	U	24	1.0	25	24	2	
534-52-1	4,6-Dinitro-2-Methylphenol	U	24	1.0	25	24	6	
86-30-6	N-Nitrosodiphenylamine	U	9	1.0	10	9	2	
101-55-3	4-Bromophenyl-phenylether	U	9	1.0	10	9	1	
1912-24-9	Atrazine	~~U~~ R	9	1.0	10	9	2	JCL
87-86-5	Pentachlorophenol	U	24	1.0	25	24	7	
120-12-7	Anthracene	U	9	1.0	10	9	1	
86-74-8	Carbazole	U	9	1.0	10	9	1	

lw 1/30/09

KATAHDIN ANALYTICAL SERVICES
Report of Analytical Results

Client: CH2MHill
Project: TO-009 Lejeune
PO No:
Sample Date: 11/11/08
Received Date: 11/12/08
Extraction Date: 11/14/08
Analysis Date: 24-NOV-2008 15:35
Report Date: 12/06/2008
Matrix: WATER
% Solids: NA

Lab ID: SB6511-7
Client ID: IR78-GW02-08D
SDG: TO9-1
Extracted by: KF
Extraction Method: SW846 3510
Analyst: JCG
Analysis Method: SW846 8270C
Lab Prep Batch: WG58066
Units: ug/L

CAS#	Compound	Flags	Results	DF	PQL	Adj.PQL	Adj.MDL
84-74-2	Di-n-butylphthalate	U	9	1.0	10	9	1
85-68-7	Butylbenzylphthalate	U	9	1.0	10	9	1
91-94-1	3,3'-Dichlorobenzidine	U	9	1.0	10	9	3
218-01-9	Chrysene	U	9	1.0	10	9	1
117-81-7	bis(2-Ethylhexyl)phthalate	U	9	1.0	10	9	2
117-84-0	Di-n-octylphthalate	U	9	1.0	10	9	2
367-12-4	2-Fluorophenol		38%				
13127-88-3	Phenol-D6		24%				
4165-60-0	Nitrobenzene-D5		62%				
321-60-8	2-Fluorobiphenyl		59%				
118-79-6	2,4,6-Tribromophenol		67%				
1718-51-0	Terphenyl-D14		86%				

LW 1130/09

5

KATAHDIN ANALYTICAL SERVICES
Report of Analytical Results

Client: CH2MHill
Project: TO-009 Lejeune
PO No:
Sample Date: 11/11/08
Received Date: 11/12/08
Extraction Date: 11/14/08
Analysis Date: 24-NOV-2008 16:17
Report Date: 12/06/2008
Matrix: WATER
% Solids: NA

Lab ID: SB6511-9
Client ID: IR78-GW02D-08D
SDG: TO9-1
Extracted by: KF
Extraction Method: SW846 3510
Analyst: JCG
Analysis Method: SW846 8270C
Lab Prep Batch: WG58066
Units: ug/L

CAS#	Compound	Flags	Results	DF	PQL	Adj.PQL	Adj.MDL	
100-52-7	Benzaldehyde	~~U~~ R	9	1.0	10	9	3	BSL
108-95-2	Phenol	U	9	1.0	10	9	2	
111-44-4	Bis(2-Chloroethyl)ether	U	9	1.0	10	9	2	
95-57-8	2-Chlorophenol	U	11	1.0	12	11	3	
95-48-7	2-Methylphenol	U	11	1.0	12	11	4	
108-60-1	2,2'-Oxybis(1-chloropropane)	U	9	1.0	10	9	2	
98-86-2	Acetophenone	U	11	1.0	12	11	4	
621-64-7	N-Nitroso-di-n-propylamine	U	9	1.0	10	9	2	
65794-96-9	3&4-Methylphenol	U	9	1.0	10	9	2	
67-72-1	Hexachloroethane	U	9	1.0	10	9	2	
98-95-3	Nitrobenzene	U	9	1.0	10	9	2	
78-59-1	Isophorone	U	9	1.0	10	9	2	
88-75-5	2-Nitrophenol	U	9	1.0	10	9	3	
105-67-9	2,4-Dimethylphenol	U	11	1.0	12	11	4	
111-91-1	Bis(2-Chloroethoxy)methane	U	9	1.0	10	9	2	
120-83-2	2,4-Dichlorophenol	U	11	1.0	12	11	4	
106-47-8	4-Chloroaniline	U	9	1.0	10	9	2	
105-60-2	Caprolactam	U	9	1.0	10	9	0.4	
59-50-7	4-Chloro-3-Methylphenol	U	9	1.0	10	9	2	
88-06-2	2,4,6-Trichlorophenol	U	9	1.0	10	9	3	
95-95-4	2,4,5-Trichlorophenol	U	24	1.0	25	24	4	
91-58-7	2-Chloronaphthalene	U	9	1.0	10	9	2	
92-52-4	1,1'-Biphenyl	U	9	1.0	10	9	2	
88-74-4	2-Nitroaniline	U	24	1.0	25	24	1	
131-11-3	Dimethyl Phthalate	U	9	1.0	10	9	0.7	
606-20-2	2,6-Dinitrotoluene	U	9	1.0	10	9	1.0	
208-96-8	Acenaphthylene	U	9	1.0	10	9	2	
99-09-2	3-Nitroaniline	U	24	1.0	25	24	1	
83-32-9	Acenaphthene	U	9	1.0	10	9	2	
51-28-5	2,4-Dinitrophenol	U	42	1.0	45	42	14	
132-64-9	Dibenzofuran	U	9	1.0	10	9	1	
100-02-7	4-Nitrophenol	U	24	1.0	25	24	5	
121-14-2	2,4-Dinitrotoluene	U	9	1.0	10	9	1	
84-66-2	Diethylphthalate	U	9	1.0	10	9	1	
7005-72-3	4-Chlorophenyl-phenylether	U	9	1.0	10	9	1	
100-01-6	4-Nitroaniline	U	24	1.0	25	24	2	
534-52-1	4,6-Dinitro-2-Methylphenol	U	24	1.0	25	24	6	
86-30-6	N-Nitrosodiphenylamine	U	9	1.0	10	9	2	
101-55-3	4-Bromophenyl-phenylether	U	9	1.0	10	9	1	
1912-24-9	Atrazine	~~U~~ R	9	1.0	10	9	2	ICL
87-86-5	Pentachlorophenol	U	24	1.0	25	24	7	
120-12-7	Anthracene	U	9	1.0	10	9	1	
86-74-8	Carbazole	U	9	1.0	10	9	1	

lw 1/30/09

5

KATAHDIN ANALYTICAL SERVICES
Report of Analytical Results

Client: CH2MHill
Project: TO-009 Lejeune
PO No:
Sample Date: 11/11/08
Received Date: 11/12/08
Extraction Date: 11/14/08
Analysis Date: 24-NOV-2008 16:17
Report Date: 12/06/2008
Matrix: WATER
% Solids: NA

Lab ID: SB6511-9
Client ID: IR78-GW02D-08D
SDG: TO9-1
Extracted by: KF
Extraction Method: SW846 3510
Analyst: JCG
Analysis Method: SW846 8270C
Lab Prep Batch: WG58066
Units: ug/L

CAS#	Compound	Flags	Results	DF	PQL	Adj.PQL	Adj.MDL
84-74-2	Di-n-butylphthalate	U	9	1.0	10	9	1
85-68-7	Butylbenzylphthalate	U	9	1.0	10	9	1
91-94-1	3,3'-Dichlorobenzidine	U	9	1.0	10	9	3
218-01-9	Chrysene	U	9	1.0	10	9	1
117-81-7	bis(2-Ethylhexyl)phthalate	U	9	1.0	10	9	2
117-84-0	Di-n-octylphthalate	U	9	1.0	10	9	2
367-12-4	2-Fluorophenol		45%				
13127-88-3	Phenol-D6		30%				
4165-60-0	Nitrobenzene-D5		61%				
321-60-8	2-Fluorobiphenyl		59%				
118-79-6	2,4,6-Tribromophenol		68%				
1718-51-0	Terphenyl-D14		86%				

hw
1/30/09

6

KATAHDIN ANALYTICAL SERVICES
Report of Analytical Results

Client: CH2MHill
Project: TO-009 Lejeune
PO No:
Sample Date: 11/11/08
Received Date: 11/12/08
Extraction Date: 11/14/08
Analysis Date: 24-NOV-2008 16:59
Report Date: 12/06/2008
Matrix: WATER
% Solids: NA

Lab ID: SB6511-11
Client ID: IR78-GW42-08D
SDG: TO9-1
Extracted by: KF
Extraction Method: SW846 3510
Analyst: JCG
Analysis Method: SW846 8270C
Lab Prep Batch: WG58066
Units: ug/L

CAS#	Compound	Flags	Results	DF	PQL	Adj.PQL	Adj.MDL
100-52-7	Benzaldehyde	~~U~~ R	9	1.0	10	9	3 BSL
108-95-2	Phenol	U	9	1.0	10	9	2
111-44-4	Bis(2-Chloroethyl)ether	U	9	1.0	10	9	2
95-57-8	2-Chlorophenol	U	11	1.0	12	11	3
95-48-7	2-Methylphenol	U	11	1.0	12	11	4
108-60-1	2,2'-Oxybis(1-chloropropane)	U	9	1.0	10	9	2
98-86-2	Acetophenone	U	11	1.0	12	11	4
621-64-7	N-Nitroso-di-n-propylamine	U	9	1.0	10	9	2
65794-96-9	3&4-Methylphenol	U	9	1.0	10	9	2
67-72-1	Hexachloroethane	U	9	1.0	10	9	2
98-95-3	Nitrobenzene	U	9	1.0	10	9	2
78-59-1	Isophorone	U	9	1.0	10	9	2
88-75-5	2-Nitrophenol	U	9	1.0	10	9	3
105-67-9	2,4-Dimethylphenol	U	11	1.0	12	11	4
111-91-1	Bis(2-Chloroethoxy)methane	U	9	1.0	10	9	2
120-83-2	2,4-Dichlorophenol	U	11	1.0	12	11	4
106-47-8	4-Chloroaniline	U	9	1.0	10	9	2
105-60-2	Caprolactam	U	9	1.0	10	9	0.4
59-50-7	4-Chloro-3-Methylphenol	U	9	1.0	10	9	2
88-06-2	2,4,6-Trichlorophenol	U	9	1.0	10	9	3
95-95-4	2,4,5-Trichlorophenol	U	24	1.0	25	24	4
91-58-7	2-Chloronaphthalene	U	9	1.0	10	9	2
92-52-4	1,1'-Biphenyl	U	9	1.0	10	9	2
88-74-4	2-Nitroaniline	U	24	1.0	25	24	1
131-11-3	Dimethyl Phthalate	U	9	1.0	10	9	0.7
606-20-2	2,6-Dinitrotoluene	U	9	1.0	10	9	1.0
208-96-8	Acenaphthylene	U	9	1.0	10	9	2
99-09-2	3-Nitroaniline	U	24	1.0	25	24	1
83-32-9	Acenaphthene	U	9	1.0	10	9	2
51-28-5	2,4-Dinitrophenol	U	42	1.0	45	42	14
132-64-9	Dibenzofuran	U	9	1.0	10	9	1
100-02-7	4-Nitrophenol	U	24	1.0	25	24	5
121-14-2	2,4-Dinitrotoluene	U	9	1.0	10	9	1
84-66-2	Diethylphthalate	U	9	1.0	10	9	1
7005-72-3	4-Chlorophenyl-phenylether	U	9	1.0	10	9	1
100-01-6	4-Nitroaniline	U	24	1.0	25	24	2
534-52-1	4,6-Dinitro-2-Methylphenol	U	24	1.0	25	24	6
86-30-6	N-Nitrosodiphenylamine	U	9	1.0	10	9	2
101-55-3	4-Bromophenyl-phenylether	U	9	1.0	10	9	1
1912-24-9	Atrazine	~~U~~ R	9	1.0	10	9	2 ICL
87-86-5	Pentachlorophenol	U	24	1.0	25	24	7
120-12-7	Anthracene	U	9	1.0	10	9	1
86-74-8	Carbazole	U	9	1.0	10	9	1

MW 12/30/09

6

KATAHDIN ANALYTICAL SERVICES
Report of Analytical Results

Client: CH2MHill
Project: TO-009 Lejeune
PO No:
Sample Date: 11/11/08
Received Date: 11/12/08
Extraction Date: 11/14/08
Analysis Date: 24-NOV-2008 16:59
Report Date: 12/06/2008
Matrix: WATER
% Solids: NA

Lab ID: SB6511-11
Client ID: IR78-GW42-08D
SDG: TO9-1
Extracted by: KF
Extraction Method: SW846 3510
Analyst: JCG
Analysis Method: SW846 8270C
Lab Prep Batch: WG58066
Units: ug/L

CAS#	Compound	Flags	Results	DF	PQL	Adj.PQL	Adj.MDL
84-74-2	Di-n-butylphthalate	U	9	1.0	10	9	1
85-68-7	Butylbenzylphthalate	U	9	1.0	10	9	1
91-94-1	3,3'-Dichlorobenzidine	U	9	1.0	10	9	3
218-01-9	Chrysene	U	9	1.0	10	9	1
117-81-7	bis(2-Ethylhexyl)phthalate	U	9	1.0	10	9	2
117-84-0	Di-n-octylphthalate	U	9	1.0	10	9	2
367-12-4	2-Fluorophenol		52%				
13127-88-3	Phenol-D6		35%				
4165-60-0	Nitrobenzene-D5		70%				
321-60-8	2-Fluorobiphenyl		65%				
118-79-6	2,4,6-Tribromophenol		74%				
1718-51-0	Terphenyl-D14		90%				

RW
1/30/09

KATAHDIN ANALYTICAL SERVICES
Report of Analytical Results

Client: CH2MHill
Project: TO-009 Lejeune
PO No:
Sample Date: 11/11/08
Received Date: 11/12/08
Extraction Date: 11/14/08
Analysis Date: 24-NOV-2008 17:41
Report Date: 12/06/2008
Matrix: WATER
% Solids: NA

Lab ID: SB6511-13
Client ID: MR08-SW02-08D
SDG: TO9-1
Extracted by: KF
Extraction Method: SW846 3510
Analyst: JCG
Analysis Method: SW846 8270C
Lab Prep Batch: WG58066
Units: ug/L

CAS#	Compound	Flags	Results	DF	PQL	Adj.PQL	Adj.MDL
100-52-7	Benzaldehyde	~~U~~ R	10	1.0	10	10	3 BSL
108-95-2	Phenol	U	10	1.0	10	10	2
111-44-4	Bis(2-Chloroethyl)ether	U	10	1.0	10	10	2
95-57-8	2-Chlorophenol	U	12	1.0	12	12	3
95-48-7	2-Methylphenol	U	12	1.0	12	12	4
108-60-1	2,2'-Oxybis(1-chloropropane)	U	10	1.0	10	10	2
98-86-2	Acetophenone	U	12	1.0	12	12	4
621-64-7	N-Nitroso-di-n-propylamine	U	10	1.0	10	10	2
65794-96-9	3&4-Methylphenol	U	10	1.0	10	10	2
67-72-1	Hexachloroethane	U	10	1.0	10	10	2
98-95-3	Nitrobenzene	U	10	1.0	10	10	2
78-59-1	Isophorone	U	10	1.0	10	10	2
88-75-5	2-Nitrophenol	U	10	1.0	10	10	3
105-67-9	2,4-Dimethylphenol	U	12	1.0	12	12	4
111-91-1	Bis(2-Chloroethoxy)methane	U	10	1.0	10	10	2
120-83-2	2,4-Dichlorophenol	U	12	1.0	12	12	4
106-47-8	4-Chloroaniline	U	10	1.0	10	10	2
105-60-2	Caprolactam	U	10	1.0	10	10	0.4
59-50-7	4-Chloro-3-Methylphenol	U	10	1.0	10	10	2
88-06-2	2,4,6-Trichlorophenol	U	10	1.0	10	10	3
95-95-4	2,4,5-Trichlorophenol	U	24	1.0	25	24	4
91-58-7	2-Chloronaphthalene	U	10	1.0	10	10	2
92-52-4	1,1'-Biphenyl	U	10	1.0	10	10	2
88-74-4	2-Nitroaniline	U	24	1.0	25	24	1
131-11-3	Dimethyl Phthalate	U	10	1.0	10	10	0.8
606-20-2	2,6-Dinitrotoluene	U	10	1.0	10	10	1
208-96-8	Acenaphthylene	U	10	1.0	10	10	2
99-09-2	3-Nitroaniline	U	24	1.0	25	24	1
83-32-9	Acenaphthene	U	10	1.0	10	10	2
51-28-5	2,4-Dinitrophenol	U	43	1.0	45	43	14
132-64-9	Dibenzofuran	U	10	1.0	10	10	1
100-02-7	4-Nitrophenol	U	24	1.0	25	24	5
121-14-2	2,4-Dinitrotoluene	U	10	1.0	10	10	1
84-66-2	Diethylphthalate	U	10	1.0	10	10	1
7005-72-3	4-Chlorophenyl-phenylether	U	10	1.0	10	10	1
100-01-6	4-Nitroaniline	U	24	1.0	25	24	2
534-52-1	4,6-Dinitro-2-Methylphenol	U	24	1.0	25	24	6
86-30-6	N-Nitrosodiphenylamine	U	10	1.0	10	10	2
101-55-3	4-Bromophenyl-phenylether	U	10	1.0	10	10	1
1912-24-9	Atrazine	~~U~~ R	10	1.0	10	10	2 ICL
87-86-5	Pentachlorophenol	U	24	1.0	25	24	7
120-12-7	Anthracene	U	10	1.0	10	10	1
86-74-8	Carbazole	U	10	1.0	10	10	1

kw 1/30/09

7

KATAHDIN ANALYTICAL SERVICES
Report of Analytical Results

Client: CH2MHill
Project: TO-009 Lejeune
PO No:
Sample Date: 11/11/08
Received Date: 11/12/08
Extraction Date: 11/14/08
Analysis Date: 24-NOV-2008 17:41
Report Date: 12/06/2008
Matrix: WATER
% Solids: NA

Lab ID: SB6511-13
Client ID: MR08-SW02-08D
SDG: TO9-1
Extracted by: KF
Extraction Method: SW846 3510
Analyst: JCG
Analysis Method: SW846 8270C
Lab Prep Batch: WG58066
Units: ug/L

CAS#	Compound	Flags	Results	DF	PQL	Adj.PQL	Adj.MDL
84-74-2	Di-n-butylphthalate	U	10	1.0	10	10	1
85-68-7	Butylbenzylphthalate	U	10	1.0	10	10	1
91-94-1	3,3'-Dichlorobenzidine	U	10	1.0	10	10	3
218-01-9	Chrysene	U	10	1.0	10	10	1
117-81-7	bis(2-Ethylhexyl)phthalate	U	10	1.0	10	10	2
117-84-0	Di-n-octylphthalate	U	10	1.0	10	10	2
367-12-4	2-Fluorophenol		26%				
13127-88-3	Phenol-D6		19%				
4165-60-0	Nitrobenzene-D5		76%				
321-60-8	2-Fluorobiphenyl		70%				
118-79-6	2,4,6-Tribromophenol		61%				
1718-51-0	Terphenyl-D14		85%				

lw 1130/19

8

KATAHDIN ANALYTICAL SERVICES
Report of Analytical Results

Client: CH2MHill
Project: TO-009 Lejeune
PO No:
Sample Date: 11/11/08
Received Date: 11/12/08
Extraction Date: 11/14/08
Analysis Date: 24-NOV-2008 18:24
Report Date: 12/06/2008
Matrix: WATER
% Solids: NA

Lab ID: SB6511-15
Client ID: MR08-SW02D-08D
SDG: TO9-1
Extracted by: KF
Extraction Method: SW846 3510
Analyst: JCG
Analysis Method: SW846 8270C
Lab Prep Batch: WG58066
Units: ug/L

CAS#	Compound	Flags	Results	DF	PQL	Adj.PQL	Adj.MDL	
100-52-7	Benzaldehyde	~~U~~ R	10	1.0	10	10	3	BSL
108-95-2	Phenol	U	10	1.0	10	10	2	
111-44-4	Bis(2-Chloroethyl)ether	U	10	1.0	10	10	2	
95-57-8	2-Chlorophenol	U	11	1.0	12	11	3	
95-48-7	2-Methylphenol	U	11	1.0	12	11	4	
108-60-1	2,2'-Oxybis(1-chloropropane)	U	10	1.0	10	10	2	
98-86-2	Acetophenone	U	11	1.0	12	11	4	
621-64-7	N-Nitroso-di-n-propylamine	U	10	1.0	10	10	2	
65794-96-9	3&4-Methylphenol	U	10	1.0	10	10	2	
67-72-1	Hexachloroethane	U	10	1.0	10	10	2	
98-95-3	Nitrobenzene	U	10	1.0	10	10	2	
78-59-1	Isophorone	U	10	1.0	10	10	2	
88-75-5	2-Nitrophenol	U	10	1.0	10	10	3	
105-67-9	2,4-Dimethylphenol	U	11	1.0	12	11	4	
111-91-1	Bis(2-Chloroethoxy)methane	U	10	1.0	10	10	2	
120-83-2	2,4-Dichlorophenol	U	11	1.0	12	11	4	
106-47-8	4-Chloroaniline	U	10	1.0	10	10	2	
105-60-2	Caprolactam	U	10	1.0	10	10	0.4	
59-50-7	4-Chloro-3-Methylphenol	U	10	1.0	10	10	2	
88-06-2	2,4,6-Trichlorophenol	U	10	1.0	10	10	3	
95-95-4	2,4,5-Trichlorophenol	U	24	1.0	25	24	4	
91-58-7	2-Chloronaphthalene	U	10	1.0	10	10	2	
92-52-4	1,1'-Biphenyl	U	10	1.0	10	10	2	
88-74-4	2-Nitroaniline	U	24	1.0	25	24	1	
131-11-3	Dimethyl Phthalate	U	10	1.0	10	10	0.8	
606-20-2	2,6-Dinitrotoluene	U	10	1.0	10	10	1	
208-96-8	Acenaphthylene	U	10	1.0	10	10	2	
99-09-2	3-Nitroaniline	U	24	1.0	25	24	1	
83-32-9	Acenaphthene	U	10	1.0	10	10	2	
51-28-5	2,4-Dinitrophenol	U	43	1.0	45	43	14	
132-64-9	Dibenzofuran	U	10	1.0	10	10	1	
100-02-7	4-Nitrophenol	U	24	1.0	25	24	5	
121-14-2	2,4-Dinitrotoluene	U	10	1.0	10	10	1	
84-66-2	Diethylphthalate	U	10	1.0	10	10	1	
7005-72-3	4-Chlorophenyl-phenylether	U	10	1.0	10	10	1	
100-01-6	4-Nitroaniline	U	24	1.0	25	24	2	
534-52-1	4,6-Dinitro-2-Methylphenol	U	24	1.0	25	24	6	
86-30-6	N-Nitrosodiphenylamine	U	10	1.0	10	10	2	
101-55-3	4-Bromophenyl-phenylether	U	10	1.0	10	10	1	
1912-24-9	Atrazine	~~U~~ R	10	1.0	10	10	2	ICL
87-86-5	Pentachlorophenol	U	24	1.0	25	24	7	
120-12-7	Anthracene	U	10	1.0	10	10	1	
86-74-8	Carbazole	U	10	1.0	10	10	1	

lcw 1/30/09

8

KATAHDIN ANALYTICAL SERVICES
Report of Analytical Results

Client: CH2MHill
Project: TO-009 Lejeune
PO No:
Sample Date: 11/11/08
Received Date: 11/12/08
Extraction Date: 11/14/08
Analysis Date: 24-NOV-2008 18:24
Report Date: 12/06/2008
Matrix: WATER
% Solids: NA

Lab ID: SB6511-15
Client ID: MR08-SW02D-08D
SDG: TO9-1
Extracted by: KF
Extraction Method: SW846 3510
Analyst: JCG
Analysis Method: SW846 8270C
Lab Prep Batch: WG58066
Units: ug/L

CAS#	Compound	Flags	Results	DF	PQL	Adj.PQL	Adj.MDL
84-74-2	Di-n-butylphthalate	U	10	1.0	10	10	1
85-68-7	Butylbenzylphthalate	U	10	1.0	10	10	1
91-94-1	3,3'-Dichlorobenzidine	U	10	1.0	10	10	3
218-01-9	Chrysene	U	10	1.0	10	10	1
117-81-7	bis(2-Ethylhexyl)phthalate	U	10	1.0	10	10	2
117-84-0	Di-n-octylphthalate	U	10	1.0	10	10	2
367-12-4	2-Fluorophenol		25%				
13127-88-3	Phenol-D6		18%				
4165-60-0	Nitrobenzene-D5		68%				
321-60-8	2-Fluorobiphenyl		62%				
118-79-6	2,4,6-Tribromophenol		62%				
1718-51-0	Terphenyl-D14		81%				

QW
1/30/09

9

KATAHDIN ANALYTICAL SERVICES
Report of Analytical Results

Client: CH2MHill
Project: TO-009 Lejeune
PO No:
Sample Date: 11/11/08
Received Date: 11/12/08
Extraction Date: 11/14/08
Analysis Date: 24-NOV-2008 19:07
Report Date: 12/06/2008
Matrix: WATER
% Solids: NA

Lab ID: SB6511-17
Client ID: MR08-FB111108
SDG: TO9-1
Extracted by: KF
Extraction Method: SW846 3510
Analyst: JCG
Analysis Method: SW846 8270C
Lab Prep Batch: WG58066
Units: ug/L

CAS#	Compound	Flags	Results	DF	PQL	Adj.PQL	Adj.MDL	
100-52-7	Benzaldehyde	~~U~~ R	10	1.0	10	10	3	BSL
108-95-2	Phenol	U	10	1.0	10	10	2	
111-44-4	Bis(2-Chloroethyl)ether	U	10	1.0	10	10	2	
95-57-8	2-Chlorophenol	U	12	1.0	12	12	3	
95-48-7	2-Methylphenol	U	12	1.0	12	12	4	
108-60-1	2,2'-Oxybis(1-chloropropane)	U	10	1.0	10	10	2	
98-86-2	Acetophenone	U	12	1.0	12	12	4	
621-64-7	N-Nitroso-di-n-propylamine	U	10	1.0	10	10	2	
65794-96-9	3&4-Methylphenol	U	10	1.0	10	10	2	
67-72-1	Hexachloroethane	U	10	1.0	10	10	2	
98-95-3	Nitrobenzene	U	10	1.0	10	10	2	
78-59-1	Isophorone	U	10	1.0	10	10	2	
88-75-5	2-Nitrophenol	U	10	1.0	10	10	3	
105-67-9	2,4-Dimethylphenol	U	12	1.0	12	12	4	
111-91-1	Bis(2-Chloroethoxy)methane	U	10	1.0	10	10	2	
120-83-2	2,4-Dichlorophenol	U	12	1.0	12	12	4	
106-47-8	4-Chloroaniline	U	10	1.0	10	10	2	
105-60-2	Caprolactam	U	10	1.0	10	10	0.4	
59-50-7	4-Chloro-3-Methylphenol	U	10	1.0	10	10	2	
88-06-2	2,4,6-Trichlorophenol	U	10	1.0	10	10	3	
95-95-4	2,4,5-Trichlorophenol	U	24	1.0	25	24	4	
91-58-7	2-Chloronaphthalene	U	10	1.0	10	10	2	
92-52-4	1,1'-Biphenyl	U	10	1.0	10	10	2	
88-74-4	2-Nitroaniline	U	24	1.0	25	24	1	
131-11-3	Dimethyl Phthalate	U	10	1.0	10	10	0.8	
606-20-2	2,6-Dinitrotoluene	U	10	1.0	10	10	1	
208-96-8	Acenaphthylene	U	10	1.0	10	10	2	
99-09-2	3-Nitroaniline	U	24	1.0	25	24	1	
83-32-9	Acenaphthene	U	10	1.0	10	10	2	
51-28-5	2,4-Dinitrophenol	U	43	1.0	45	43	14	
132-64-9	Dibenzofuran	U	10	1.0	10	10	1	
100-02-7	4-Nitrophenol	U	24	1.0	25	24	5	
121-14-2	2,4-Dinitrotoluene	U	10	1.0	10	10	1	
84-66-2	Diethylphthalate	U	10	1.0	10	10	1	
7005-72-3	4-Chlorophenyl-phenylether	U	10	1.0	10	10	1	
100-01-6	4-Nitroaniline	U	24	1.0	25	24	2	
534-52-1	4,6-Dinitro-2-Methylphenol	U	24	1.0	25	24	6	
86-30-6	N-Nitrosodiphenylamine	U	10	1.0	10	10	2	
101-55-3	4-Bromophenyl-phenylether	U	10	1.0	10	10	1	
1912-24-9	Atrazine	~~U~~ R	10	1.0	10	10	2	ICL
87-86-5	Pentachlorophenol	U	24	1.0	25	24	7	
120-12-7	Anthracene	U	10	1.0	10	10	1	
86-74-8	Carbazole	U	10	1.0	10	10	1	

lw
113009

9

KATAHDIN ANALYTICAL SERVICES
Report of Analytical Results

Client: CH2MHill
Project: TO-009 Lejeune
PO No:
Sample Date: 11/11/08
Received Date: 11/12/08
Extraction Date: 11/14/08
Analysis Date: 24-NOV-2008 19:07
Report Date: 12/06/2008
Matrix: WATER
% Solids: NA

Lab ID: SB6511-17
Client ID: MR08-FB111108
SDG: TO9-1
Extracted by: KF
Extraction Method: SW846 3510
Analyst: JCG
Analysis Method: SW846 8270C
Lab Prep Batch: WG58066
Units: ug/L

CAS#	Compound	Flags	Results	DF	PQL	Adj.PQL	Adj.MDL
84-74-2	Di-n-butylphthalate	U	10	1.0	10	10	1
85-68-7	Butylbenzylphthalate	U	10	1.0	10	10	1
91-94-1	3,3'-Dichlorobenzidine	U	10	1.0	10	10	3
218-01-9	Chrysene	U	10	1.0	10	10	1
117-81-7	bis(2-Ethylhexyl)phthalate	U	10	1.0	10	10	2
117-84-0	Di-n-octylphthalate	U	10	1.0	10	10	2
367-12-4	2-Fluorophenol		58%				
13127-88-3	Phenol-D6		36%				
4165-60-0	Nitrobenzene-D5		76%				
321-60-8	2-Fluorobiphenyl		72%				
118-79-6	2,4,6-Tribromophenol		73%				
1718-51-0	Terphenyl-D14		87%				

lw
1/30/09

10

KATAHDIN ANALYTICAL SERVICES
Report of Analytical Results

Client: CH2MHill
Project: TO-009 Lejeune
PO No:
Sample Date: 11/11/08
Received Date: 11/12/08
Extraction Date: 11/14/08
Analysis Date: 24-NOV-2008 19:50
Report Date: 12/06/2008
Matrix: WATER
% Solids: NA

Lab ID: SB6511-19
Client ID: MR08-EB111108-1
SDG: TO9-1
Extracted by: KF
Extraction Method: SW846 3510
Analyst: JCG
Analysis Method: SW846 8270C
Lab Prep Batch: WG58066
Units: ug/L

CAS#	Compound	Flags	Results	DF	PQL	Adj.PQL	Adj.MDL
100-52-7	Benzaldehyde	~~U~~ R	10	1.0	10	10	3 BSL
108-95-2	Phenol	U	10	1.0	10	10	2
111-44-4	Bis(2-Chloroethyl)ether	U	10	1.0	10	10	2
95-57-8	2-Chlorophenol	U	12	1.0	12	12	3
95-48-7	2-Methylphenol	U	12	1.0	12	12	4
108-60-1	2,2'-Oxybis(1-chloropropane)	U	10	1.0	10	10	2
98-86-2	Acetophenone	U	12	1.0	12	12	4
621-64-7	N-Nitroso-di-n-propylamine	U	10	1.0	10	10	2
65794-96-9	3&4-Methylphenol	U	10	1.0	10	10	3
67-72-1	Hexachloroethane	U	10	1.0	10	10	2
98-95-3	Nitrobenzene	U	10	1.0	10	10	2
78-59-1	Isophorone	U	10	1.0	10	10	2
88-75-5	2-Nitrophenol	U	10	1.0	10	10	4
105-67-9	2,4-Dimethylphenol	U	12	1.0	12	12	4
111-91-1	Bis(2-Chloroethoxy)methane	U	10	1.0	10	10	2
120-83-2	2,4-Dichlorophenol	U	12	1.0	12	12	4
106-47-8	4-Chloroaniline	U	10	1.0	10	10	2
105-60-2	Caprolactam	U	10	1.0	10	10	0.4
59-50-7	4-Chloro-3-Methylphenol	U	10	1.0	10	10	2
88-06-2	2,4,6-Trichlorophenol	U	10	1.0	10	10	3
95-95-4	2,4,5-Trichlorophenol	U	24	1.0	25	24	4
91-58-7	2-Chloronaphthalene	U	10	1.0	10	10	2
92-52-4	1,1'-Biphenyl	U	10	1.0	10	10	2
88-74-4	2-Nitroaniline	U	24	1.0	25	24	1
131-11-3	Dimethyl Phthalate	U	10	1.0	10	10	0.8
606-20-2	2,6-Dinitrotoluene	U	10	1.0	10	10	1
208-96-8	Acenaphthylene	U	10	1.0	10	10	2
99-09-2	3-Nitroaniline	U	24	1.0	25	24	1
83-32-9	Acenaphthene	U	10	1.0	10	10	2
51-28-5	2,4-Dinitrophenol	U	44	1.0	45	44	14
132-64-9	Dibenzofuran	U	10	1.0	10	10	1
100-02-7	4-Nitrophenol	U	24	1.0	25	24	6
121-14-2	2,4-Dinitrotoluene	U	10	1.0	10	10	1
84-66-2	Diethylphthalate	U	10	1.0	10	10	1
7005-72-3	4-Chlorophenyl-phenylether	U	10	1.0	10	10	1
100-01-6	4-Nitroaniline	U	24	1.0	25	24	2
534-52-1	4,6-Dinitro-2-Methylphenol	U	24	1.0	25	24	6
86-30-6	N-Nitrosodiphenylamine	U	10	1.0	10	10	2
101-55-3	4-Bromophenyl-phenylether	U	10	1.0	10	10	1
1912-24-9	Atrazine	~~U~~ R	10	1.0	10	10	2 ICL
87-86-5	Pentachlorophenol	U	24	1.0	25	24	7
120-12-7	Anthracene	U	10	1.0	10	10	1
86-74-8	Carbazole	U	10	1.0	10	10	1

kW
11/30/09

KATAHDIN ANALYTICAL SERVICES
Report of Analytical Results

Client: CH2MHill
Project: TO-009 Lejeune
PO No:
Sample Date: 11/11/08
Received Date: 11/12/08
Extraction Date: 11/14/08
Analysis Date: 24-NOV-2008 19:50
Report Date: 12/06/2008
Matrix: WATER
% Solids: NA

Lab ID: SB6511-19
Client ID: MR08-EB111108-1
SDG: TO9-1
Extracted by: KF
Extraction Method: SW846 3510
Analyst: JCG
Analysis Method: SW846 8270C
Lab Prep Batch: WG58066
Units: ug/L

CAS#	Compound	Flags	Results	DF	PQL	Adj.PQL	Adj.MDL
84-74-2	Di-n-butylphthalate	U	10	1.0	10	10	1
85-68-7	Butylbenzylphthalate	U	10	1.0	10	10	1
91-94-1	3,3'-Dichlorobenzidine	U	10	1.0	10	10	3
218-01-9	Chrysene	U	10	1.0	10	10	1
117-81-7	bis(2-Ethylhexyl)phthalate	U	10	1.0	10	10	2
117-84-0	Di-n-octylphthalate	U	10	1.0	10	10	2
367-12-4	2-Fluorophenol		51%				
13127-88-3	Phenol-D6		31%				
4165-60-0	Nitrobenzene-D5		69%				
321-60-8	2-Fluorobiphenyl		66%				
118-79-6	2,4,6-Tribromophenol		66%				
1718-51-0	Terphenyl-D14		80%				

DW
1/30/09

KATAHDIN ANALYTICAL SERVICES
Report of Analytical Results

Client: CH2MHill
Project: TO-009 Lejeune
PO No:
Sample Date: 11/11/08
Received Date: 11/12/08
Extraction Date: 11/14/08
Analysis Date: 24-NOV-2008 20:33
Report Date: 12/06/2008
Matrix: WATER
% Solids: NA

Lab ID: SB6511-21
Client ID: MR08-SW01-08D
SDG: TO9-1
Extracted by: KF
Extraction Method: SW846 3510
Analyst: JCG
Analysis Method: SW846 8270C
Lab Prep Batch: WG58066
Units: ug/L

CAS#	Compound	Flags	Results	DF	PQL	Adj.PQL	Adj.MDL
100-52-7	Benzaldehyde	~~U~~ R	10	1.0	10	10	3 BSL
108-95-2	Phenol	U	10	1.0	10	10	2
111-44-4	Bis(2-Chloroethyl)ether	U	10	1.0	10	10	2
95-57-8	2-Chlorophenol	U	12	1.0	12	12	3
95-48-7	2-Methylphenol	U	12	1.0	12	12	4
108-60-1	2,2'-Oxybis(1-chloropropane)	U	10	1.0	10	10	2
98-86-2	Acetophenone	U	12	1.0	12	12	4
621-64-7	N-Nitroso-di-n-propylamine	U	10	1.0	10	10	2
65794-96-9	3&4-Methylphenol	U	10	1.0	10	10	3
67-72-1	Hexachloroethane	U	10	1.0	10	10	2
98-95-3	Nitrobenzene	U	10	1.0	10	10	2
78-59-1	Isophorone	U	10	1.0	10	10	2
88-75-5	2-Nitrophenol	U	10	1.0	10	10	4
105-67-9	2,4-Dimethylphenol	U	12	1.0	12	12	4
111-91-1	Bis(2-Chloroethoxy)methane	U	10	1.0	10	10	2
120-83-2	2,4-Dichlorophenol	U	12	1.0	12	12	4
106-47-8	4-Chloroaniline	U	10	1.0	10	10	2
105-60-2	Caprolactam	U	10	1.0	10	10	0.4
59-50-7	4-Chloro-3-Methylphenol	U	10	1.0	10	10	2
88-06-2	2,4,6-Trichlorophenol	U	10	1.0	10	10	3
95-95-4	2,4,5-Trichlorophenol	U	24	1.0	25	24	4
91-58-7	2-Chloronaphthalene	U	10	1.0	10	10	2
92-52-4	1,1'-Biphenyl	U	10	1.0	10	10	2
88-74-4	2-Nitroaniline	U	24	1.0	25	24	2
131-11-3	Dimethyl Phthalate	U	10	1.0	10	10	0.8
606-20-2	2,6-Dinitrotoluene	U	10	1.0	10	10	1
208-96-8	Acenaphthylene	U	10	1.0	10	10	2
99-09-2	3-Nitroaniline	U	24	1.0	25	24	1
83-32-9	Acenaphthene	U	10	1.0	10	10	2
51-28-5	2,4-Dinitrophenol	U	44	1.0	45	44	15
132-64-9	Dibenzofuran	U	10	1.0	10	10	1
100-02-7	4-Nitrophenol	U	24	1.0	25	24	6
121-14-2	2,4-Dinitrotoluene	U	10	1.0	10	10	1
84-66-2	Diethylphthalate	U	10	1.0	10	10	1
7005-72-3	4-Chlorophenyl-phenylether	U	10	1.0	10	10	1
100-01-6	4-Nitroaniline	U	24	1.0	25	24	2
534-52-1	4,6-Dinitro-2-Methylphenol	U	24	1.0	25	24	6
86-30-6	N-Nitrosodiphenylamine	U	10	1.0	10	10	2
101-55-3	4-Bromophenyl-phenylether	U	10	1.0	10	10	1
1912-24-9	Atrazine	~~U~~ R	10	1.0	10	10	2 ICL
87-86-5	Pentachlorophenol	U	24	1.0	25	24	8
120-12-7	Anthracene	U	10	1.0	10	10	1
86-74-8	Carbazole	U	10	1.0	10	10	1

LW 1/30/09

11

KATAHDIN ANALYTICAL SERVICES
Report of Analytical Results

Client: CH2MHill
Project: TO-009 Lejeune
PO No:
Sample Date: 11/11/08
Received Date: 11/12/08
Extraction Date: 11/14/08
Analysis Date: 24-NOV-2008 20:33
Report Date: 12/06/2008
Matrix: WATER
% Solids: NA

Lab ID: SB6511-21
Client ID: MR08-SW01-08D
SDG: TO9-1
Extracted by: KF
Extraction Method: SW846 3510
Analyst: JCG
Analysis Method: SW846 8270C
Lab Prep Batch: WG58066
Units: ug/L

CAS#	Compound	Flags	Results	DF	PQL	Adj.PQL	Adj.MDL
84-74-2	Di-n-butylphthalate	U	10	1.0	10	10	1
85-68-7	Butylbenzylphthalate	U	10	1.0	10	10	1
91-94-1	3,3'-Dichlorobenzidine	U	10	1.0	10	10	3
218-01-9	Chrysene	U	10	1.0	10	10	1
117-81-7	bis(2-Ethylhexyl)phthalate	U	10	1.0	10	10	2
117-84-0	Di-n-octylphthalate	U	10	1.0	10	10	2
367-12-4	2-Fluorophenol		42%				
13127-88-3	Phenol-D6		28%				
4165-60-0	Nitrobenzene-D5		65%				
321-60-8	2-Fluorobiphenyl		59%				
118-79-6	2,4,6-Tribromophenol		68%				
1718-51-0	Terphenyl-D14		78%				

LCW
11/30/09

12

KATAHDIN ANALYTICAL SERVICES
Report of Analytical Results

Client: CH2MHill
Project: TO-009 Lejeune
PO No:
Sample Date: 11/11/08
Received Date: 11/12/08
Extraction Date: 11/14/08
Analysis Date: 24-NOV-2008 21:16
Report Date: 12/06/2008
Matrix: WATER
% Solids: NA

Lab ID: SB6511-23
Client ID: MR08-SW03-08D
SDG: TO9-1
Extracted by: KF
Extraction Method: SW846 3510
Analyst: JCG
Analysis Method: SW846 8270C
Lab Prep Batch: WG58066
Units: ug/L

CAS#	Compound	Flags	Results	DF	PQL	Adj.PQL	Adj.MDL	
100-52-7	Benzaldehyde	~~U~~ R	13	1.0	10	13	4	BSL
108-95-2	Phenol	U	13	1.0	10	13	2	
111-44-4	Bis(2-Chloroethyl)ether	U	13	1.0	10	13	2	
95-57-8	2-Chlorophenol	U	16	1.0	12	16	4	
95-48-7	2-Methylphenol	U	16	1.0	12	16	5	
108-60-1	2,2'-Oxybis(1-chloropropane)	U	13	1.0	10	13	2	
98-86-2	Acetophenone	U	16	1.0	12	16	5	
621-64-7	N-Nitroso-di-n-propylamine	U	13	1.0	10	13	3	
65794-96-9	3&4-Methylphenol	U	13	1.0	10	13	4	
67-72-1	Hexachloroethane	U	13	1.0	10	13	3	
98-95-3	Nitrobenzene	U	13	1.0	10	13	3	
78-59-1	Isophorone	U	13	1.0	10	13	2	
88-75-5	2-Nitrophenol	U	13	1.0	10	13	5	
105-67-9	2,4-Dimethylphenol	U	16	1.0	12	16	5	
111-91-1	Bis(2-Chloroethoxy)methane	U	13	1.0	10	13	3	
120-83-2	2,4-Dichlorophenol	U	16	1.0	12	16	5	
106-47-8	4-Chloroaniline	U	13	1.0	10	13	2	
105-60-2	Caprolactam	U	13	1.0	10	13	0.5	
59-50-7	4-Chloro-3-Methylphenol	U	13	1.0	10	13	3	
88-06-2	2,4,6-Trichlorophenol	U	13	1.0	10	13	4	
95-95-4	2,4,5-Trichlorophenol	U	33	1.0	25	33	6	
91-58-7	2-Chloronaphthalene	U	13	1.0	10	13	3	
92-52-4	1,1'-Biphenyl	U	13	1.0	10	13	2	
88-74-4	2-Nitroaniline	U	33	1.0	25	33	2	
131-11-3	Dimethyl Phthalate	U	13	1.0	10	13	1	
606-20-2	2,6-Dinitrotoluene	U	13	1.0	10	13	1	
208-96-8	Acenaphthylene	U	13	1.0	10	13	2	
99-09-2	3-Nitroaniline	U	33	1.0	25	33	2	
83-32-9	Acenaphthene	U	13	1.0	10	13	2	
51-28-5	2,4-Dinitrophenol	U	60	1.0	45	60	20	
132-64-9	Dibenzofuran	U	13	1.0	10	13	2	
100-02-7	4-Nitrophenol	U	33	1.0	25	33	8	
121-14-2	2,4-Dinitrotoluene	U	13	1.0	10	13	2	
84-66-2	Diethylphthalate	U	13	1.0	10	13	1	
7005-72-3	4-Chlorophenyl-phenylether	U	13	1.0	10	13	2	
100-01-6	4-Nitroaniline	U	33	1.0	25	33	2	
534-52-1	4,6-Dinitro-2-Methylphenol	U	33	1.0	25	33	8	
86-30-6	N-Nitrosodiphenylamine	U	13	1.0	10	13	2	
101-55-3	4-Bromophenyl-phenylether	U	13	1.0	10	13	2	
1912-24-9	Atrazine	~~U~~ R	13	1.0	10	13	2	ICL
87-86-5	Pentachlorophenol	U	33	1.0	25	33	10	
120-12-7	Anthracene	U	13	1.0	10	13	2	
86-74-8	Carbazole	U	13	1.0	10	13	2	

kw
1/30/09

12

KATAHDIN ANALYTICAL SERVICES
Report of Analytical Results

Client: CH2MHill
Project: TO-009 Lejeune
PO No:
Sample Date: 11/11/08
Received Date: 11/12/08
Extraction Date: 11/14/08
Analysis Date: 24-NOV-2008 21:16
Report Date: 12/06/2008
Matrix: WATER
% Solids: NA

Lab ID: SB6511-23
Client ID: MR08-SW03-08D
SDG: TO9-1
Extracted by: KF
Extraction Method: SW846 3510
Analyst: JCG
Analysis Method: SW846 8270C
Lab Prep Batch: WG58066
Units: ug/L

CAS#	Compound	Flags	Results	DF	PQL	Adj.PQL	Adj.MDL
84-74-2	Di-n-butylphthalate	U	13	1.0	10	13	2
85-68-7	Butylbenzylphthalate	U	13	1.0	10	13	2
91-94-1	3,3'-Dichlorobenzidine	U	13	1.0	10	13	4
218-01-9	Chrysene	U	13	1.0	10	13	2
117-81-7	bis(2-Ethylhexyl)phthalate	J	2	1.0	10	13	2
117-84-0	Di-n-octylphthalate	U	13	1.0	10	13	3
367-12-4	2-Fluorophenol		50%				
13127-88-3	Phenol-D6		36%				
4165-60-0	Nitrobenzene-D5		70%				
321-60-8	2-Fluorobiphenyl		65%				
118-79-6	2,4,6-Tribromophenol		77%				
1718-51-0	Terphenyl-D14		79%				

lw
113009

13

KATAHDIN ANALYTICAL SERVICES
Report of Analytical Results

Client: CH2MHill
Project: TO-009 Lejeune
PO No:
Sample Date: 11/12/08
Received Date: 11/14/08
Extraction Date: 11/17/08
Analysis Date: 26-NOV-2008 16:47
Report Date: 12/10/2008
Matrix: WATER
% Solids: NA

Lab ID: SB6584-1
Client ID: IR78-GW57-08D
SDG: TO9-1
Extracted by: KF
Extraction Method: SW846 3520
Analyst: EKC
Analysis Method: SW846 8270C
Lab Prep Batch: WG58141
Units: ug/L

CAS#	Compound	Flags	Results	DF	PQL	Adj.PQL	Adj.MDL	
100-52-7	Benzaldehyde	~~U~~ UJ	9	1.0	10	9	3	ccH
108-95-2	Phenol	U	9	1.0	10	9	2	
111-44-4	Bis(2-Chloroethyl)ether	U	9	1.0	10	9	2	
95-57-8	2-Chlorophenol	U	11	1.0	12	11	3	
95-48-7	2-Methylphenol	U	11	1.0	12	11	4	
108-60-1	2,2'-Oxybis(1-chloropropane)	U	9	1.0	10	9	2	
98-86-2	Acetophenone	U	11	1.0	12	11	4	
621-64-7	N-Nitroso-di-n-propylamine	U	9	1.0	10	9	2	
65794-96-9	3&4-Methylphenol	U	9	1.0	10	9	2	
67-72-1	Hexachloroethane	U	9	1.0	10	9	2	
98-95-3	Nitrobenzene	U	9	1.0	10	9	2	
78-59-1	Isophorone	U	9	1.0	10	9	2	
88-75-5	2-Nitrophenol	U	9	1.0	10	9	3	
105-67-9	2,4-Dimethylphenol	U	11	1.0	12	11	4	
111-91-1	Bis(2-Chloroethoxy)methane	U	9	1.0	10	9	2	
120-83-2	2,4-Dichlorophenol	U	11	1.0	12	11	4	
106-47-8	4-Chloroaniline	U	9	1.0	10	9	2	
105-60-2	Caprolactam	~~U~~ UJ	9	1.0	10	9	0.4	BSL
59-50-7	4-Chloro-3-Methylphenol	U	9	1.0	10	9	2	
88-06-2	2,4,6-Trichlorophenol	U	9	1.0	10	9	3	
95-95-4	2,4,5-Trichlorophenol	U	24	1.0	25	24	4	
91-58-7	2-Chloronaphthalene	U	9	1.0	10	9	2	
92-52-4	1,1'-Biphenyl	U	9	1.0	10	9	2	
88-74-4	2-Nitroaniline	U	24	1.0	25	24	1	
131-11-3	Dimethyl Phthalate	U	9	1.0	10	9	0.7	
606-20-2	2,6-Dinitrotoluene	U	9	1.0	10	9	1.0	
208-96-8	Acenaphthylene	U	9	1.0	10	9	2	
99-09-2	3-Nitroaniline	U	24	1.0	25	24	1	
83-32-9	Acenaphthene	U	9	1.0	10	9	2	
51-28-5	2,4-Dinitrophenol	U	42	1.0	45	42	14	
132-64-9	Dibenzofuran	U	9	1.0	10	9	1	
100-02-7	4-Nitrophenol	U	24	1.0	25	24	5	
121-14-2	2,4-Dinitrotoluene	U	9	1.0	10	9	1	
84-66-2	Diethylphthalate	U	9	1.0	10	9	1	
7005-72-3	4-Chlorophenyl-phenylether	U	9	1.0	10	9	1	
100-01-6	4-Nitroaniline	U	24	1.0	25	24	2	
534-52-1	4,6-Dinitro-2-Methylphenol	U	24	1.0	25	24	6	
86-30-6	N-Nitrosodiphenylamine	U	9	1.0	10	9	2	
101-55-3	4-Bromophenyl-phenylether	U	9	1.0	10	9	1	
1912-24-9	Atrazine	U	9	1.0	10	9	2	
87-86-5	Pentachlorophenol	U	24	1.0	25	24	7	
120-12-7	Anthracene	U	9	1.0	10	9	1	
86-74-8	Carbazole	U	9	1.0	10	9	1	

LMS 11/30/09

13

KATAHDIN ANALYTICAL SERVICES
Report of Analytical Results

Client: CH2MHill
Project: TO-009 Lejeune
PO No:
Sample Date: 11/12/08
Received Date: 11/14/08
Extraction Date: 11/17/08
Analysis Date: 26-NOV-2008 16:47
Report Date: 12/10/2008
Matrix: WATER
% Solids: NA

Lab ID: SB6584-1
Client ID: IR78-GW57-08D
SDG: TO9-1
Extracted by: KF
Extraction Method: SW846 3520
Analyst: EKC
Analysis Method: SW846 8270C
Lab Prep Batch: WG58141
Units: ug/L

CAS#	Compound	Flags	Results	DF	PQL	Adj.PQL	Adj.MDL	
84-74-2	Di-n-butylphthalate	U	9	1.0	10	9	1	
85-68-7	Butylbenzylphthalate	~~U~~ UJ	9	1.0	10	9	1	CCH
91-94-1	3,3'-Dichlorobenzidine	U	9	1.0	10	9	3	
218-01-9	Chrysene	U	9	1.0	10	9	1	
117-81-7	bis(2-Ethylhexyl)phthalate	~~U~~ UJ	9	1.0	10	9	2	CCH
117-84-0	Di-n-octylphthalate	~~U~~ UJ	9	1.0	10	9	2	CCH
367-12-4	2-Fluorophenol		62%					
13127-88-3	Phenol-D6		58%					
4165-60-0	Nitrobenzene-D5		59%					
321-60-8	2-Fluorobiphenyl		63%					
118-79-6	2,4,6-Tribromophenol		64%					
1718-51-0	Terphenyl-D14		115%					

MW
1/30/09

KATAHDIN ANALYTICAL SERVICES
Report of Analytical Results

Client: CH2MHill
Project: TO-009 Lejeune
PO No:
Sample Date: 11/12/08
Received Date: 11/14/08
Extraction Date: 11/17/08
Analysis Date: 26-NOV-2008 17:29
Report Date: 12/10/2008
Matrix: WATER
% Solids: NA

Lab ID: SB6584-3
Client ID: IR78-GW57D-08D
SDG: TO9-1
Extracted by: KF
Extraction Method: SW846 3520
Analyst: EKC
Analysis Method: SW846 8270C
Lab Prep Batch: WG58141
Units: ug/L

CAS#	Compound	Flags	Results	DF	PQL	Adj.PQL	Adj.MDL
100-52-7	Benzaldehyde	~~U~~ UJ	9	1.0	10	9	3 CCH
108-95-2	Phenol	U	9	1.0	10	9	2
111-44-4	Bis(2-Chloroethyl)ether	U	9	1.0	10	9	2
95-57-8	2-Chlorophenol	U	11	1.0	12	11	3
95-48-7	2-Methylphenol	U	11	1.0	12	11	4
108-60-1	2,2'-Oxybis(1-chloropropane)	U	9	1.0	10	9	2
98-86-2	Acetophenone	U	11	1.0	12	11	4
621-64-7	N-Nitroso-di-n-propylamine	U	9	1.0	10	9	2
65794-96-9	3&4-Methylphenol	U	9	1.0	10	9	2
67-72-1	Hexachloroethane	U	9	1.0	10	9	2
98-95-3	Nitrobenzene	U	9	1.0	10	9	2
78-59-1	Isophorone	U	9	1.0	10	9	2
88-75-5	2-Nitrophenol	U	9	1.0	10	9	3
105-67-9	2,4-Dimethylphenol	U	11	1.0	12	11	4
111-91-1	Bis(2-Chloroethoxy)methane	U	9	1.0	10	9	2
120-83-2	2,4-Dichlorophenol	U	11	1.0	12	11	4
106-47-8	4-Chloroaniline	U	9	1.0	10	9	2
105-60-2	Caprolactam	~~U~~ UJ	9	1.0	10	9	0.4 BSL
59-50-7	4-Chloro-3-Methylphenol	U	9	1.0	10	9	2
88-06-2	2,4,6-Trichlorophenol	U	9	1.0	10	9	3
95-95-4	2,4,5-Trichlorophenol	U	24	1.0	25	24	4
91-58-7	2-Chloronaphthalene	U	9	1.0	10	9	2
92-52-4	1,1'-Biphenyl	U	9	1.0	10	9	2
88-74-4	2-Nitroaniline	U	24	1.0	25	24	1
131-11-3	Dimethyl Phthalate	U	9	1.0	10	9	0.7
606-20-2	2,6-Dinitrotoluene	U	9	1.0	10	9	1.0
208-96-8	Acenaphthylene	U	9	1.0	10	9	2
99-09-2	3-Nitroaniline	U	24	1.0	25	24	1
83-32-9	Acenaphthene	U	9	1.0	10	9	2
51-28-5	2,4-Dinitrophenol	U	42	1.0	45	42	14
132-64-9	Dibenzofuran	U	9	1.0	10	9	1
100-02-7	4-Nitrophenol	U	24	1.0	25	24	5
121-14-2	2,4-Dinitrotoluene	U	9	1.0	10	9	1
84-66-2	Diethylphthalate	U	9	1.0	10	9	1
7005-72-3	4-Chlorophenyl-phenylether	U	9	1.0	10	9	1
100-01-6	4-Nitroaniline	U	24	1.0	25	24	2
534-52-1	4,6-Dinitro-2-Methylphenol	U	24	1.0	25	24	6
86-30-6	N-Nitrosodiphenylamine	U	9	1.0	10	9	2
101-55-3	4-Bromophenyl-phenylether	U	9	1.0	10	9	1
1912-24-9	Atrazine	U	9	1.0	10	9	2
87-86-5	Pentachlorophenol	U	24	1.0	25	24	7
120-12-7	Anthracene	U	9	1.0	10	9	1
86-74-8	Carbazole	U	9	1.0	10	9	1

JW 11/30/09

KATAHDIN ANALYTICAL SERVICES
Report of Analytical Results

Client: CH2MHill
Project: TO-009 Lejeune
PO No:
Sample Date: 11/12/08
Received Date: 11/14/08
Extraction Date: 11/17/08
Analysis Date: 26-NOV-2008 17:29
Report Date: 12/10/2008
Matrix: WATER
% Solids: NA

Lab ID: SB6584-3
Client ID: IR78-GW57D-08D
SDG: TO9-1
Extracted by: KF
Extraction Method: SW846 3520
Analyst: EKC
Analysis Method: SW846 8270C
Lab Prep Batch: WG58141
Units: ug/L

CAS#	Compound	Flags	Results	DF	PQL	Adj.PQL	Adj.MDL
84-74-2	Di-n-butylphthalate	U	9	1.0	10	9	1
85-68-7	Butylbenzylphthalate	~~U~~ UJ	9	1.0	10	9	1 CCH
91-94-1	3,3'-Dichlorobenzidine	U	9	1.0	10	9	3
218-01-9	Chrysene	U	9	1.0	10	9	1
117-81-7	bis(2-Ethylhexyl)phthalate	~~J~~ J	6	1.0	10	9	2 CCH
117-84-0	Di-n-octylphthalate	~~U~~ UJ	9	1.0	10	9	2 CCH
367-12-4	2-Fluorophenol		60%				
13127-88-3	Phenol-D6		58%				
4165-60-0	Nitrobenzene-D5		53%				
321-60-8	2-Fluorobiphenyl		63%				
118-79-6	2,4,6-Tribromophenol		61%				
1718-51-0	Terphenyl-D14		101%				

MW 1/30/09

15

KATAHDIN ANALYTICAL SERVICES
Report of Analytical Results

Client: CH2MHill
Project: TO-009 Lejeune
PO No:
Sample Date: 11/12/08
Received Date: 11/14/08
Extraction Date: 11/17/08
Analysis Date: 26-NOV-2008 18:12
Report Date: 12/10/2008
Matrix: WATER
% Solids: NA

Lab ID: SB6584-5
Client ID: IR78-GW01-08D
SDG: TO9-1
Extracted by: KF
Extraction Method: SW846 3520
Analyst: EKC
Analysis Method: SW846 8270C
Lab Prep Batch: WG58141
Units: ug/L

CAS#	Compound	Flags	Results	DF	PQL	Adj.PQL	Adj.MDL	
100-52-7	Benzaldehyde	~~U~~ UJ	10	1.0	10	10	3	CCH
108-95-2	Phenol	U	10	1.0	10	10	2	
111-44-4	Bis(2-Chloroethyl)ether	U	10	1.0	10	10	2	
95-57-8	2-Chlorophenol	U	12	1.0	12	12	3	
95-48-7	2-Methylphenol	U	12	1.0	12	12	4	
108-60-1	2,2'-Oxybis(1-chloropropane)	U	10	1.0	10	10	2	
98-86-2	Acetophenone	U	12	1.0	12	12	4	
621-64-7	N-Nitroso-di-n-propylamine	U	10	1.0	10	10	2	
65794-96-9	3&4-Methylphenol	U	10	1.0	10	10	3	
67-72-1	Hexachloroethane	U	10	1.0	10	10	2	
98-95-3	Nitrobenzene	U	10	1.0	10	10	2	
78-59-1	Isophorone	U	10	1.0	10	10	2	
88-75-5	2-Nitrophenol	U	10	1.0	10	10	4	
105-67-9	2,4-Dimethylphenol	U	12	1.0	12	12	4	
111-91-1	Bis(2-Chloroethoxy)methane	U	10	1.0	10	10	2	
120-83-2	2,4-Dichlorophenol	U	12	1.0	12	12	4	
106-47-8	4-Chloroaniline	U	10	1.0	10	10	2	
105-60-2	Caprolactam	~~U~~ UJ	10	1.0	10	10	0.4	BSL
59-50-7	4-Chloro-3-Methylphenol	U	10	1.0	10	10	2	
88-06-2	2,4,6-Trichlorophenol	U	10	1.0	10	10	3	
95-95-4	2,4,5-Trichlorophenol	U	25	1.0	25	25	4	
91-58-7	2-Chloronaphthalene	U	10	1.0	10	10	2	
92-52-4	1,1'-Biphenyl	U	10	1.0	10	10	2	
88-74-4	2-Nitroaniline	U	25	1.0	25	25	2	
131-11-3	Dimethyl Phthalate	U	10	1.0	10	10	0.8	
606-20-2	2,6-Dinitrotoluene	U	10	1.0	10	10	1	
208-96-8	Acenaphthylene	U	10	1.0	10	10	2	
99-09-2	3-Nitroaniline	U	25	1.0	25	25	1	
83-32-9	Acenaphthene	U	10	1.0	10	10	2	
51-28-5	2,4-Dinitrophenol	U	44	1.0	45	44	15	
132-64-9	Dibenzofuran	U	10	1.0	10	10	1	
100-02-7	4-Nitrophenol	U	25	1.0	25	25	6	
121-14-2	2,4-Dinitrotoluene	U	10	1.0	10	10	1	
84-66-2	Diethylphthalate	U	10	1.0	10	10	1	
7005-72-3	4-Chlorophenyl-phenylether	U	10	1.0	10	10	1	
100-01-6	4-Nitroaniline	U	25	1.0	25	25	2	
534-52-1	4,6-Dinitro-2-Methylphenol	U	25	1.0	25	25	6	
86-30-6	N-Nitrosodiphenylamine	U	10	1.0	10	10	2	
101-55-3	4-Bromophenyl-phenylether	U	10	1.0	10	10	1	
1912-24-9	Atrazine	U	10	1.0	10	10	2	
87-86-5	Pentachlorophenol	U	25	1.0	25	25	8	
120-12-7	Anthracene	U	10	1.0	10	10	1	
86-74-8	Carbazole	U	10	1.0	10	10	1	

LW 11/30/09

15

KATAHDIN ANALYTICAL SERVICES
Report of Analytical Results

Client: CH2MHill
Project: TO-009 Lejeune
PO No:
Sample Date: 11/12/08
Received Date: 11/14/08
Extraction Date: 11/17/08
Analysis Date: 26-NOV-2008 18:12
Report Date: 12/10/2008
Matrix: WATER
% Solids: NA

Lab ID: SB6584-5
Client ID: IR78-GW01-08D
SDG: TO9-1
Extracted by: KF
Extraction Method: SW846 3520
Analyst: EKC
Analysis Method: SW846 8270C
Lab Prep Batch: WG58141
Units: ug/L

CAS#	Compound	Flags	Results	DF	PQL	Adj.PQL	Adj.MDL	
84-74-2	Di-n-butylphthalate	~~U~~	10	1.0	10	10	1	
85-68-7	Butylbenzylphthalate	~~U~~ UJ	10	1.0	10	10	1	CCH
91-94-1	3,3'-Dichlorobenzidine	U	10	1.0	10	10	3	
218-01-9	Chrysene	U	10	1.0	10	10	1	
117-81-7	bis(2-Ethylhexyl)phthalate	~~J~~ J	6	1.0	10	10	2	CCH
117-84-0	Di-n-octylphthalate	~~U~~ UJ	10	1.0	10	10	2	CCH
367-12-4	2-Fluorophenol		58%					
13127-88-3	Phenol-D6		57%					
4165-60-0	Nitrobenzene-D5		58%					
321-60-8	2-Fluorobiphenyl		63%					
118-79-6	2,4,6-Tribromophenol		71%					
1718-51-0	Terphenyl-D14		99%					

LW 1/30/09

16

KATAHDIN ANALYTICAL SERVICES
Report of Analytical Results

Client: CH2MHill
Project: TO-009 Lejeune
PO No:
Sample Date: 11/12/08
Received Date: 11/14/08
Extraction Date: 11/17/08
Analysis Date: 26-NOV-2008 18:55
Report Date: 12/10/2008
Matrix: WATER
% Solids: NA

Lab ID: SB6584-7
Client ID: IR78-GW59-08D
SDG: TO9-1
Extracted by: KF
Extraction Method: SW846 3520
Analyst: EKC
Analysis Method: SW846 8270C
Lab Prep Batch: WG58141
Units: ug/L

CAS#	Compound	Flags	Results	DF	PQL	Adj.PQL	Adj.MDL
100-52-7	Benzaldehyde	~~U~~ UJ	9	1.0	10	9	3 CCH
108-95-2	Phenol	U	9	1.0	10	9	2
111-44-4	Bis(2-Chloroethyl)ether	U	9	1.0	10	9	2
95-57-8	2-Chlorophenol	U	11	1.0	12	11	3
95-48-7	2-Methylphenol	U	11	1.0	12	11	4
108-60-1	2,2'-Oxybis(1-chloropropane)	U	9	1.0	10	9	2
98-86-2	Acetophenone	U	11	1.0	12	11	4
621-64-7	N-Nitroso-di-n-propylamine	U	9	1.0	10	9	2
65794-96-9	3&4-Methylphenol	U	9	1.0	10	9	2
67-72-1	Hexachloroethane	U	9	1.0	10	9	2
98-95-3	Nitrobenzene	U	9	1.0	10	9	2
78-59-1	Isophorone	U	9	1.0	10	9	2
88-75-5	2-Nitrophenol	U	9	1.0	10	9	3
105-67-9	2,4-Dimethylphenol	U	11	1.0	12	11	4
111-91-1	Bis(2-Chloroethoxy)methane	U	9	1.0	10	9	2
120-83-2	2,4-Dichlorophenol	U	11	1.0	12	11	4
106-47-8	4-Chloroaniline	U	9	1.0	10	9	2
105-60-2	Caprolactam	~~U~~ UJ	9	1.0	10	9	0.4 BSL
59-50-7	4-Chloro-3-Methylphenol	U	9	1.0	10	9	2
88-06-2	2,4,6-Trichlorophenol	U	9	1.0	10	9	3
95-95-4	2,4,5-Trichlorophenol	U	24	1.0	25	24	4
91-58-7	2-Chloronaphthalene	U	9	1.0	10	9	2
92-52-4	1,1'-Biphenyl	U	9	1.0	10	9	2
88-74-4	2-Nitroaniline	U	24	1.0	25	24	1
131-11-3	Dimethyl Phthalate	U	9	1.0	10	9	0.7
606-20-2	2,6-Dinitrotoluene	U	9	1.0	10	9	1.0
208-96-8	Acenaphthylene	U	9	1.0	10	9	2
99-09-2	3-Nitroaniline	U	24	1.0	25	24	1
83-32-9	Acenaphthene	U	9	1.0	10	9	2
51-28-5	2,4-Dinitrophenol	U	42	1.0	45	42	14
132-64-9	Dibenzofuran	U	9	1.0	10	9	1
100-02-7	4-Nitrophenol	U	24	1.0	25	24	5
121-14-2	2,4-Dinitrotoluene	U	9	1.0	10	9	1
84-66-2	Diethylphthalate	U	9	1.0	10	9	1
7005-72-3	4-Chlorophenyl-phenylether	U	9	1.0	10	9	1
100-01-6	4-Nitroaniline	U	24	1.0	25	24	2
534-52-1	4,6-Dinitro-2-Methylphenol	U	24	1.0	25	24	6
86-30-6	N-Nitrosodiphenylamine	U	9	1.0	10	9	2
101-55-3	4-Bromophenyl-phenylether	U	9	1.0	10	9	1
1912-24-9	Atrazine	U	9	1.0	10	9	2
87-86-5	Pentachlorophenol	U	24	1.0	25	24	7
120-12-7	Anthracene	U	9	1.0	10	9	1
86-74-8	Carbazole	U	9	1.0	10	9	1

LW 11/30/09

16

KATAHDIN ANALYTICAL SERVICES
Report of Analytical Results

Client: CH2MHill
Project: TO-009 Lejeune
PO No:
Sample Date: 11/12/08
Received Date: 11/14/08
Extraction Date: 11/17/08
Analysis Date: 26-NOV-2008 18:55
Report Date: 12/10/2008
Matrix: WATER
% Solids: NA

Lab ID: SB6584-7
Client ID: IR78-GW59-08D
SDG: TO9-1
Extracted by: KF
Extraction Method: SW846 3520
Analyst: EKC
Analysis Method: SW846 8270C
Lab Prep Batch: WG58141
Units: ug/L

CAS#	Compound	Flags	Results	DF	PQL	Adj.PQL	Adj.MDL	
84-74-2	Di-n-butylphthalate	U	9	1.0	10	9	1	
85-68-7	Butylbenzylphthalate	~~U~~ UJ	9	1.0	10	9	1	CCH
91-94-1	3,3'-Dichlorobenzidine	U	9	1.0	10	9	3	
218-01-9	Chrysene	U	9	1.0	10	9	1	
117-81-7	bis(2-Ethylhexyl)phthalate	~~U~~ UJ	9	1.0	10	9	2	CCH
117-84-0	Di-n-octylphthalate	~~U~~ UJ	9	1.0	10	9	2	CCH
367-12-4	2-Fluorophenol		54%					
13127-88-3	Phenol-D6		48%					
4165-60-0	Nitrobenzene-D5		49%					
321-60-8	2-Fluorobiphenyl		59%					
118-79-6	2,4,6-Tribromophenol		63%					
1718-51-0	Terphenyl-D14		100%					

LW 1/30/09

17

KATAHDIN ANALYTICAL SERVICES
Report of Analytical Results

Client: CH2MHill
Project: TO-009 Lejeune
PO No:
Sample Date: 11/12/08
Received Date: 11/14/08
Extraction Date: 11/17/08
Analysis Date: 26-NOV-2008 19:38
Report Date: 12/10/2008
Matrix: WATER
% Solids: NA

Lab ID: SB6584-9
Client ID: IR78-GW59D-08D
SDG: TO9-1
Extracted by: KF
Extraction Method: SW846 3520
Analyst: EKC
Analysis Method: SW846 8270C
Lab Prep Batch: WG58141
Units: ug/L

CAS#	Compound	Flags	Results	DF	PQL	Adj.PQL	Adj.MDL
100-52-7	Benzaldehyde	~~U~~ UJ	9	1.0	10	9	3 CCH
108-95-2	Phenol	U	9	1.0	10	9	2
111-44-4	Bis(2-Chloroethyl)ether	U	9	1.0	10	9	2
95-57-8	2-Chlorophenol	U	11	1.0	12	11	3
95-48-7	2-Methylphenol	U	11	1.0	12	11	4
108-60-1	2,2'-Oxybis(1-chloropropane)	U	9	1.0	10	9	2
98-86-2	Acetophenone	U	11	1.0	12	11	4
621-64-7	N-Nitroso-di-n-propylamine	U	9	1.0	10	9	2
65794-96-9	3&4-Methylphenol	U	9	1.0	10	9	2
67-72-1	Hexachloroethane	U	9	1.0	10	9	2
98-95-3	Nitrobenzene	U	9	1.0	10	9	2
78-59-1	Isophorone	U	9	1.0	10	9	2
88-75-5	2-Nitrophenol	U	9	1.0	10	9	3
105-67-9	2,4-Dimethylphenol	U	11	1.0	12	11	4
111-91-1	Bis(2-Chloroethoxy)methane	U	9	1.0	10	9	2
120-83-2	2,4-Dichlorophenol	U	11	1.0	12	11	4
106-47-8	4-Chloroaniline	U	9	1.0	10	9	2
105-60-2	Caprolactam	~~U~~ UJ	9	1.0	10	9	0.4 BSL
59-50-7	4-Chloro-3-Methylphenol	U	9	1.0	10	9	2
88-06-2	2,4,6-Trichlorophenol	U	9	1.0	10	9	3
95-95-4	2,4,5-Trichlorophenol	U	24	1.0	25	24	4
91-58-7	2-Chloronaphthalene	U	9	1.0	10	9	2
92-52-4	1,1'-Biphenyl	U	9	1.0	10	9	2
88-74-4	2-Nitroaniline	U	24	1.0	25	24	1
131-11-3	Dimethyl Phthalate	U	9	1.0	10	9	0.7
606-20-2	2,6-Dinitrotoluene	U	9	1.0	10	9	1.0
208-96-8	Acenaphthylene	U	9	1.0	10	9	2
99-09-2	3-Nitroaniline	U	24	1.0	25	24	1
83-32-9	Acenaphthene	U	9	1.0	10	9	2
51-28-5	2,4-Dinitrophenol	U	42	1.0	45	42	14
132-64-9	Dibenzofuran	U	9	1.0	10	9	1
100-02-7	4-Nitrophenol	U	24	1.0	25	24	5
121-14-2	2,4-Dinitrotoluene	U	9	1.0	10	9	1
84-66-2	Diethylphthalate	U	9	1.0	10	9	1
7005-72-3	4-Chlorophenyl-phenylether	U	9	1.0	10	9	1
100-01-6	4-Nitroaniline	U	24	1.0	25	24	2
534-52-1	4,6-Dinitro-2-Methylphenol	U	24	1.0	25	24	6
86-30-6	N-Nitrosodiphenylamine	U	9	1.0	10	9	2
101-55-3	4-Bromophenyl-phenylether	U	9	1.0	10	9	1
1912-24-9	Atrazine	U	9	1.0	10	9	2
87-86-5	Pentachlorophenol	U	24	1.0	25	24	7
120-12-7	Anthracene	U	9	1.0	10	9	1
86-74-8	Carbazole	U	9	1.0	10	9	1

kw 11/30/09

17

KATAHDIN ANALYTICAL SERVICES
Report of Analytical Results

Client: CH2MHill
Project: TO-009 Lejeune
PO No:
Sample Date: 11/12/08
Received Date: 11/14/08
Extraction Date: 11/17/08
Analysis Date: 26-NOV-2008 19:38
Report Date: 12/10/2008
Matrix: WATER
% Solids: NA

Lab ID: SB6584-9
Client ID: IR78-GW59D-08D
SDG: TO9-1
Extracted by: KF
Extraction Method: SW846 3520
Analyst: EKC
Analysis Method: SW846 8270C
Lab Prep Batch: WG58141
Units: ug/L

CAS#	Compound	Flags	Results	DF	PQL	Adj.PQL	Adj.MDL	
84-74-2	Di-n-butylphthalate	U	9	1.0	10	9	1	
85-68-7	Butylbenzylphthalate	~~U~~ UJ	9	1.0	10	9	1	CCH
91-94-1	3,3'-Dichlorobenzidine	U	9	1.0	10	9	3	
218-01-9	Chrysene	U	9	1.0	10	9	1	
117-81-7	bis(2-Ethylhexyl)phthalate	~~U~~ UJ	9	1.0	10	9	2	CCH
117-84-0	Di-n-octylphthalate	~~U~~ UJ	9	1.0	10	9	2	CCH
367-12-4	2-Fluorophenol		56%					
13127-88-3	Phenol-D6		52%					
4165-60-0	Nitrobenzene-D5		52%					
321-60-8	2-Fluorobiphenyl		59%					
118-79-6	2,4,6-Tribromophenol		66%					
1718-51-0	Terphenyl-D14		110%					

MW
1/30/09

KATAHDIN ANALYTICAL SERVICES
Report of Analytical Results

Client: CH2MHill
Project: TO-009 Lejeune
PO No:
Sample Date: 11/12/08
Received Date: 11/14/08
Extraction Date: 11/17/08
Analysis Date: 24-NOV-2008 21:59
Report Date: 12/06/2008
Matrix: WATER
% Solids: NA

Lab ID: SB6584-11
Client ID: MR08-EB111208-02
SDG: TO9-1
Extracted by: KF
Extraction Method: SW846 3510
Analyst: JCG
Analysis Method: SW846 8270C
Lab Prep Batch: WG58168
Units: ug/L

CAS#	Compound	Flags	Results	DF	PQL	Adj.PQL	Adj.MDL
100-52-7	Benzaldehyde	U	10	1.0	10	10	3
108-95-2	Phenol	U	10	1.0	10	10	2
111-44-4	Bis(2-Chloroethyl)ether	U	10	1.0	10	10	2
95-57-8	2-Chlorophenol	U	12	1.0	12	12	3
95-48-7	2-Methylphenol	U	12	1.0	12	12	4
108-60-1	2,2'-Oxybis(1-chloropropane)	U	10	1.0	10	10	2
98-86-2	Acetophenone	U	12	1.0	12	12	4
621-64-7	N-Nitroso-di-n-propylamine	U	10	1.0	10	10	2
65794-96-9	3&4-Methylphenol	U	10	1.0	10	10	3
67-72-1	Hexachloroethane	U	10	1.0	10	10	2
98-95-3	Nitrobenzene	U	10	1.0	10	10	2
78-59-1	Isophorone	U	10	1.0	10	10	2
88-75-5	2-Nitrophenol	U	10	1.0	10	10	4
105-67-9	2,4-Dimethylphenol	U	12	1.0	12	12	4
111-91-1	Bis(2-Chloroethoxy)methane	U	10	1.0	10	10	2
120-83-2	2,4-Dichlorophenol	U	12	1.0	12	12	4
106-47-8	4-Chloroaniline	U	10	1.0	10	10	2
105-60-2	Caprolactam	U	10	1.0	10	10	0.4
59-50-7	4-Chloro-3-Methylphenol	U	10	1.0	10	10	2
88-06-2	2,4,6-Trichlorophenol	U	10	1.0	10	10	3
95-95-4	2,4,5-Trichlorophenol	U	24	1.0	25	24	4
91-58-7	2-Chloronaphthalene	U	10	1.0	10	10	2
92-52-4	1,1'-Biphenyl	U	10	1.0	10	10	2
88-74-4	2-Nitroaniline	U	24	1.0	25	24	1
131-11-3	Dimethyl Phthalate	U	10	1.0	10	10	0.8
606-20-2	2,6-Dinitrotoluene	U	10	1.0	10	10	1
208-96-8	Acenaphthylene	U	10	1.0	10	10	2
99-09-2	3-Nitroaniline	U	24	1.0	25	24	1
83-32-9	Acenaphthene	U	10	1.0	10	10	2
51-28-5	2,4-Dinitrophenol	U	44	1.0	45	44	14
132-64-9	Dibenzofuran	U	10	1.0	10	10	1
100-02-7	4-Nitrophenol	U	24	1.0	25	24	6
121-14-2	2,4-Dinitrotoluene	U	10	1.0	10	10	1
84-66-2	Diethylphthalate	U	10	1.0	10	10	1
7005-72-3	4-Chlorophenyl-phenylether	U	10	1.0	10	10	1
100-01-6	4-Nitroaniline	U	24	1.0	25	24	2
534-52-1	4,6-Dinitro-2-Methylphenol	U	24	1.0	25	24	6
86-30-6	N-Nitrosodiphenylamine	U	10	1.0	10	10	2
101-55-3	4-Bromophenyl-phenylether	U	10	1.0	10	10	1
1912-24-9	Atrazine	~~U~~ R	10	1.0	10	10	2 ICL
87-86-5	Pentachlorophenol	U	24	1.0	25	24	7
120-12-7	Anthracene	U	10	1.0	10	10	1
86-74-8	Carbazole	U	10	1.0	10	10	1

113009

KATAHDIN ANALYTICAL SERVICES
Report of Analytical Results

Client: CH2MHill
Project: TO-009 Lejeune
PO No:
Sample Date: 11/12/08
Received Date: 11/14/08
Extraction Date: 11/17/08
Analysis Date: 24-NOV-2008 21:59
Report Date: 12/06/2008
Matrix: WATER
% Solids: NA

Lab ID: SB6584-11
Client ID: MR08-EB111208-02
SDG: TO9-1
Extracted by: KF
Extraction Method: SW846 3510
Analyst: JCG
Analysis Method: SW846 8270C
Lab Prep Batch: WG58168
Units: ug/L

CAS#	Compound	Flags	Results	DF	PQL	Adj.PQL	Adj.MDL
84-74-2	Di-n-butylphthalate	U	10	1.0	10	10	1
85-68-7	Butylbenzylphthalate	U	10	1.0	10	10	1
91-94-1	3,3'-Dichlorobenzidine	U	10	1.0	10	10	3
218-01-9	Chrysene	U	10	1.0	10	10	1
117-81-7	bis(2-Ethylhexyl)phthalate	U	10	1.0	10	10	2
117-84-0	Di-n-octylphthalate	U	10	1.0	10	10	2
367-12-4	2-Fluorophenol		43%				
13127-88-3	Phenol-D6		27%				
4165-60-0	Nitrobenzene-D5		63%				
321-60-8	2-Fluorobiphenyl		63%				
118-79-6	2,4,6-Tribromophenol		68%				
1718-51-0	Terphenyl-D14		84%				

MW 1/30/09

19

KATAHDIN ANALYTICAL SERVICES
Report of Analytical Results

Client: CH2MHill
Project: TO-009 Lejeune
PO No:
Sample Date: 11/12/08
Received Date: 11/14/08
Extraction Date: 11/17/08
Analysis Date: 24-NOV-2008 22:41
Report Date: 12/06/2008
Matrix: WATER
% Solids: NA

Lab ID: SB6584-13
Client ID: USTHPFF-MW15-08D
SDG: TO9-1
Extracted by: KF
Extraction Method: SW846 3510
Analyst: JCG
Analysis Method: SW846 8270C
Lab Prep Batch: WG58168
Units: ug/L

CAS#	Compound	Flags	Results	DF	PQL	Adj.PQL	Adj.MDL
100-52-7	Benzaldehyde	U	10	1.0	10	10	3
108-95-2	Phenol	U	10	1.0	10	10	2
111-44-4	Bis(2-Chloroethyl)ether	U	10	1.0	10	10	2
95-57-8	2-Chlorophenol	U	12	1.0	12	12	3
95-48-7	2-Methylphenol	U	12	1.0	12	12	4
108-60-1	2,2'-Oxybis(1-chloropropane)	U	10	1.0	10	10	2
98-86-2	Acetophenone	U	12	1.0	12	12	4
621-64-7	N-Nitroso-di-n-propylamine	U	10	1.0	10	10	2
65794-96-9	3&4-Methylphenol	U	10	1.0	10	10	3
67-72-1	Hexachloroethane	U	10	1.0	10	10	2
98-95-3	Nitrobenzene	U	10	1.0	10	10	2
78-59-1	Isophorone	U	10	1.0	10	10	2
88-75-5	2-Nitrophenol	U	10	1.0	10	10	4
105-67-9	2,4-Dimethylphenol		19	1.0	12	12	4
111-91-1	Bis(2-Chloroethoxy)methane	U	10	1.0	10	10	2
120-83-2	2,4-Dichlorophenol	U	12	1.0	12	12	4
106-47-8	4-Chloroaniline	U	10	1.0	10	10	2
105-60-2	Caprolactam	U	10	1.0	10	10	0.4
59-50-7	4-Chloro-3-Methylphenol	U	10	1.0	10	10	2
88-06-2	2,4,6-Trichlorophenol	U	10	1.0	10	10	3
95-95-4	2,4,5-Trichlorophenol	U	25	1.0	25	25	4
91-58-7	2-Chloronaphthalene	U	10	1.0	10	10	2
92-52-4	1,1'-Biphenyl	U	10	1.0	10	10	2
88-74-4	2-Nitroaniline	U	25	1.0	25	25	2
131-11-3	Dimethyl Phthalate	U	10	1.0	10	10	0.8
606-20-2	2,6-Dinitrotoluene	U	10	1.0	10	10	1
208-96-8	Acenaphthylene	U	10	1.0	10	10	2
99-09-2	3-Nitroaniline	U	25	1.0	25	25	1
83-32-9	Acenaphthene	U	10	1.0	10	10	2
51-28-5	2,4-Dinitrophenol	U	45	1.0	45	45	15
132-64-9	Dibenzofuran	U	10	1.0	10	10	1
100-02-7	4-Nitrophenol	U	25	1.0	25	25	6
121-14-2	2,4-Dinitrotoluene	U	10	1.0	10	10	1
84-66-2	Diethylphthalate	U	10	1.0	10	10	1
7005-72-3	4-Chlorophenyl-phenylether	U	10	1.0	10	10	1
100-01-6	4-Nitroaniline	U	25	1.0	25	25	2
534-52-1	4,6-Dinitro-2-Methylphenol	U	25	1.0	25	25	6
86-30-6	N-Nitrosodiphenylamine	U	10	1.0	10	10	2
101-55-3	4-Bromophenyl-phenylether	U	10	1.0	10	10	1
1912-24-9	Atrazine	~~U~~ R	10	1.0	10	10	2 JCL
87-86-5	Pentachlorophenol	U	25	1.0	25	25	8
120-12-7	Anthracene	U	10	1.0	10	10	1
86-74-8	Carbazole	U	10	1.0	10	10	1

QCW 11/30/09

KATAHDIN ANALYTICAL SERVICES
Report of Analytical Results

Client: CH2MHill
Project: TO-009 Lejeune
PO No:
Sample Date: 11/12/08
Received Date: 11/14/08
Extraction Date: 11/17/08
Analysis Date: 24-NOV-2008 22:41
Report Date: 12/06/2008
Matrix: WATER
% Solids: NA

Lab ID: SB6584-13
Client ID: USTHPFF-MW15-08D
SDG: TO9-1
Extracted by: KF
Extraction Method: SW846 3510
Analyst: JCG
Analysis Method: SW846 8270C
Lab Prep Batch: WG58168
Units: ug/L

CAS#	Compound	Flags	Results	DF	PQL	Adj.PQL	Adj.MDL
84-74-2	Di-n-butylphthalate	U	10	1.0	10	10	1
85-68-7	Butylbenzylphthalate	U	10	1.0	10	10	2
91-94-1	3,3'-Dichlorobenzidine	U	10	1.0	10	10	3
218-01-9	Chrysene	U	10	1.0	10	10	1
117-81-7	bis(2-Ethylhexyl)phthalate	U	10	1.0	10	10	2
117-84-0	Di-n-octylphthalate	U	10	1.0	10	10	2
367-12-4	2-Fluorophenol		41%				
13127-88-3	Phenol-D6		28%				
4165-60-0	Nitrobenzene-D5		57%				
321-60-8	2-Fluorobiphenyl		65%				
118-79-6	2,4,6-Tribromophenol		81%				
1718-51-0	Terphenyl-D14		82%				

lw
11/30/09

20

KATAHDIN ANALYTICAL SERVICES
Report of Analytical Results

Client: CH2MHill
Project: TO-009 Lejeune
PO No:
Sample Date: 11/12/08
Received Date: 11/14/08
Extraction Date: 11/17/08
Analysis Date: 25-NOV-2008 11:57
Report Date: 12/06/2008
Matrix: WATER
% Solids: NA

Lab ID: SB6584-15
Client ID: USTHPFF-MW09-08D
SDG: TO9-1
Extracted by: KF
Extraction Method: SW846 3510
Analyst: JCG
Analysis Method: SW846 8270C
Lab Prep Batch: WG58168
Units: ug/L

CAS#	Compound	Flags	Results	DF	PQL	Adj.PQL	Adj.MDL
100-52-7	Benzaldehyde	~~U~~ UJ	12	1.0	10	12	4 CCH
108-95-2	Phenol	U	12	1.0	10	12	2
111-44-4	Bis(2-Chloroethyl)ether	U	12	1.0	10	12	2
95-57-8	2-Chlorophenol	U	14	1.0	12	14	4
95-48-7	2-Methylphenol	U	14	1.0	12	14	5
108-60-1	2,2'-Oxybis(1-chloropropane)	U	12	1.0	10	12	2
98-86-2	Acetophenone	U	14	1.0	12	14	5
621-64-7	N-Nitroso-di-n-propylamine	U	12	1.0	10	12	2
65794-96-9	3&4-Methylphenol	U	12	1.0	10	12	3
67-72-1	Hexachloroethane	U	12	1.0	10	12	3
98-95-3	Nitrobenzene	U	12	1.0	10	12	2
78-59-1	Isophorone	U	12	1.0	10	12	2
88-75-5	2-Nitrophenol	U	12	1.0	10	12	4
105-67-9	2,4-Dimethylphenol	U	14	1.0	12	14	4
111-91-1	Bis(2-Chloroethoxy)methane	U	12	1.0	10	12	3
120-83-2	2,4-Dichlorophenol	U	14	1.0	12	14	5
106-47-8	4-Chloroaniline	U	12	1.0	10	12	2
105-60-2	Caprolactam	U	12	1.0	10	12	0.5
59-50-7	4-Chloro-3-Methylphenol	U	12	1.0	10	12	3
88-06-2	2,4,6-Trichlorophenol	U	12	1.0	10	12	4
95-95-4	2,4,5-Trichlorophenol	U	30	1.0	25	30	5
91-58-7	2-Chloronaphthalene	U	12	1.0	10	12	2
92-52-4	1,1'-Biphenyl	U	12	1.0	10	12	2
88-74-4	2-Nitroaniline	U	30	1.0	25	30	2
131-11-3	Dimethyl Phthalate	U	12	1.0	10	12	1.0
606-20-2	2,6-Dinitrotoluene	U	12	1.0	10	12	1
208-96-8	Acenaphthylene	U	12	1.0	10	12	2
99-09-2	3-Nitroaniline	U	30	1.0	25	30	2
83-32-9	Acenaphthene	U	12	1.0	10	12	2
51-28-5	2,4-Dinitrophenol	U	54	1.0	45	54	18
132-64-9	Dibenzofuran	U	12	1.0	10	12	2
100-02-7	4-Nitrophenol	U	30	1.0	25	30	7
121-14-2	2,4-Dinitrotoluene	U	12	1.0	10	12	2
84-66-2	Diethylphthalate	U	12	1.0	10	12	1
7005-72-3	4-Chlorophenyl-phenylether	U	12	1.0	10	12	2
100-01-6	4-Nitroaniline	U	30	1.0	25	30	2
534-52-1	4,6-Dinitro-2-Methylphenol	U	30	1.0	25	30	7
86-30-6	N-Nitrosodiphenylamine	U	12	1.0	10	12	2
101-55-3	4-Bromophenyl-phenylether	U	12	1.0	10	12	2
1912-24-9	Atrazine	U	12	1.0	10	12	2
87-86-5	Pentachlorophenol	U	30	1.0	25	30	9
120-12-7	Anthracene	U	12	1.0	10	12	2
86-74-8	Carbazole	U	12	1.0	10	12	2

RW 11/30/09

KATAHDIN ANALYTICAL SERVICES
Report of Analytical Results

Client: CH2MHill
Project: TO-009 Lejeune
PO No:
Sample Date: 11/12/08
Received Date: 11/14/08
Extraction Date: 11/17/08
Analysis Date: 25-NOV-2008 11:57
Report Date: 12/06/2008
Matrix: WATER
% Solids: NA

Lab ID: SB6584-15
Client ID: USTHPFF-MW09-08D
SDG: TO9-1
Extracted by: KF
Extraction Method: SW846 3510
Analyst: JCG
Analysis Method: SW846 8270C
Lab Prep Batch: WG58168
Units: ug/L

CAS#	Compound	Flags	Results	DF	PQL	Adj.PQL	Adj.MDL
84-74-2	Di-n-butylphthalate	U	12	1.0	10	12	1
85-68-7	Butylbenzylphthalate	U	12	1.0	10	12	2
91-94-1	3,3'-Dichlorobenzidine	U	12	1.0	10	12	3
218-01-9	Chrysene	U	12	1.0	10	12	2
117-81-7	bis(2-Ethylhexyl)phthalate	U	12	1.0	10	12	2
117-84-0	Di-n-octylphthalate	U	12	1.0	10	12	3
367-12-4	2-Fluorophenol		48%				
13127-88-3	Phenol-D6		31%				
4165-60-0	Nitrobenzene-D5		67%				
321-60-8	2-Fluorobiphenyl		66%				
118-79-6	2,4,6-Tribromophenol		77%				
1718-51-0	Terphenyl-D14		82%				

lw
1130/09

ENVIRONMENTAL
Data Services, Inc.

POLYNUCLEAR AROMATIC COMPOUNDS BY 8270 SIM

USEPA Region IV - Level IV Review

Site: MCB Camp Lejeune, TO-09 SDG #: TO9-2

Client: CH2M HILL, Inc., Virginia Beach, Virginia Date: January 30, 2009

Laboratory: Katahdin Analytical Services, Scarborough, Maine Reviewer: Nancy Weaver

EDS ID	Client Sample ID	Laboratory Sample ID	Matrix
1	MR08-SD02-08D	SB6512-2	Soil
1MS	MR08-SD02-08DMS	SB6512-2MS	Soil
1MSD	MR08-SD02-08DMSD	SB6512-2MSD	Soil
2	MR08-SS378-08D	SB6512-4	Soil
3	MR08-IS378-08D	SB6512-6	Soil
4	MR08-SS380-08D	SB6512-8	Soil
5	MR08-IS380-08D	SB6512-10	Soil
6	MR08-SS381-08D	SB6512-12	Soil
7	MR08-SD01-08D	SB6512-14	Soil
8	MR08-SD01D-08D	SB6512-16	Soil
9	MR08-SS379-08D	SB6512-18	Soil
10	MR08-SD03-08D	SB6512-20	Soil
11	MR08-SS382-08D	SB6587-2	Soil
12	MR08-SS383-08D	SB6587-4	Soil
13	MR08-SS384-08D	SB6587-6	Soil
14	MR08-SS385-08D	SB6587-8	Soil
15	MR08-SS386-08D	SB6587-10	Soil
16	MR08-SS387-08D	SB6587-12	Soil
17	MR08-IS381-08D	SB6587-14	Soil
18	MR08-IS379-08D	SB6587-16	Soil
19	MR08-SS377-08D	SB6587-20	Soil
20	MR08-SS377D-08D	SB6587-22	Soil
21	MR08-SS376-08D	SB6587-24	Soil

The USEPA "Contract Laboratory Program National Functional Guidelines for Organic Data Review," October 1999, and professional judgement were used in evaluating the data in this summary report.

Holding Times - All samples were extracted within 14 days for soil samples and analyzed within 40 days for all samples.

GC/MS Tuning - All of the DFTPP tunes in the initial and continuing calibrations met the percent relative abundance criteria.

Initial Calibration - The initial calibrations exhibited acceptable %RSD and mean RRF values.

Continuing Calibration - The continuing calibrations exhibited acceptable %D and RRF values except the following.

CCAL Date	Compound	%D/RRF	Qualifier	Affected Samples
12/07/08	Naphthalene	28.80%	J/UJ	7-20
	Hexachlorobenzene	56.91%	J/UJ	7-20
	Hexachlorocyclopentadiene	41.12%	J/UJ	7-20
12/08/08	Phenanthrene	25.99%	J/UJ	21
	Hexachlorobenzene	47.41%	J/UJ	21
	Hexachlorocyclopentadiene	51.34%	J/UJ	21

Surrogates - All samples exhibited acceptable surrogate recoveries except the following.

Sample ID	Surrogate	%R	Qualifier
7	S3-Fluorene-d10	51%	None for 1 out per fraction
8	S3-Fluorene-d10	48%	None for 1 out per fraction

MS/MSD - The MS/MSD sample exhibited acceptable %R and RPD values except the following.

MS/MSD Sample ID	Compound	MS/MSD %R/RPD	Qualifier
1	2-Methylnaphthalene	142%/Ok/Ok	Already qualified due to LCS
	Fluoranthene	26%/294%/94	J/UJ
	Pyrene	Ok/220%/73	J/UJ
	Benzo (a) anthracene	Ok/200%/72	J/UJ
	Benzo (b) fluoranthene	Ok/197%/64	J/UJ
	Benzo (k) fluoranthene	37%/Ok/56	Already qualified due to LCS
	Benzo (a) pyrene	40%/Ok/Ok	J/UJ
	Hexachlorocyclopentadiene	11%/11%/Ok	J/UJ

Laboratory Control Sample - The LCS samples exhibited acceptable %R values except the following.

LCS ID	Compound	%R	Qualifier	Affected Samples
WG58145-LCS	Naphthalene	145%	J	1
	2-Methylnaphthalene	166%	J	1, 7, 8, 10
	Benzo (k) fluoranthene	115%	J	1, 2, 4, 6-8, 11, 12, 14-16

Internal Standard (IS) Area Performance - All internal standards met response and retention time (RT) criteria.

Method Blank - The method blanks were free of contamination.

Field, Equipment Blank - Field QC results are summarized below.

Blank ID	Compound	Conc. ug/L	Action Level ug/L	Qualifier	Affected Samples
MR08-EB111108-1	None - ND	-	-	-	-
MR08-FB111108	None - ND	-	-	-	-
MR08-EB111208-2	None - ND	-	-	-	-

Field Duplicates - Field duplicate results are summarized below.

Compound	MR08-SD01-08D ug/kg	MR08-SD01D-08D ug/kg	RPD	Qualifier
Naphthalene	170	130	27%	None
2-Methylnaphthalene	230	170	30%	None
Fluorene	33	23	36%	None
Phenanthrene	380	310	20%	None
Fluoranthene	200	210	5%	None
Pyrene	140	110	24%	None
Benzo (a) anthracene	76	47	47%	None
Benzo (b) fluoranthene	150	95	45%	None
Benzo (k) fluoranthene	66	39	51%	None
Benzo (a) pyrene	62	39	46%	None
Indeno (1,2,3-cd) pyrene	32	22	37%	None
Benzo (g,h,i) perylene	41	28	38%	None
Hexachlorobenzene	26 U	9.2	NC	None

Compound	MR08-SS377-08D ug/kg	MR08-SS377D-08D ug/kg	RPD	Qualifier
Fluoranthene	4.0	11 U	NC	None
Pyrene	3.5	11 U	NC	None
Benzo (a) anthracene	2.4	11 U	NC	None

Tentatively Identified Compounds (TICs) - TICs were not reported.

Compound Quantitation - No discrepancies were identified.

KATAHDIN ANALYTICAL SERVICES
Report of Analytical Results

Client: CH2MHill
Project: TO-009 Lejeune
PO No:
Sample Date: 11/11/08
Received Date: 11/12/08
Extraction Date: 11/17/08
Analysis Date: 06-DEC-2008 21:18
Report Date: 12/11/2008
Matrix: SOIL
% Solids: 72.6

Lab ID: SB6512-2
Client ID: MR08-SD02-08D
SDG: TO9-2
Extracted by: CB
Extraction Method: SW846 3550
Analyst: JCG
Analysis Method: SW846 M8270C
Lab Prep Batch: WG58145
Units: ug/Kgdrywt

CAS#	Compound	Flags	Results	DF	PQL	Adj.PQL	Adj.MDL	
91-20-3	Naphthalene		110 J	1.0	10	14	3.6	BSH
91-57-6	2-Methylnaphthalene		110 J	1.0	10	14	3.0	BSH
86-73-7	Fluorene		18	1.0	10	14	4.4	
85-01-8	Phenanthrene		150	1.0	10	14	2.5	
206-44-0	Fluoranthene		120 J	1.0	10	14	2.5	MSH
129-00-0	Pyrene		74 J	1.0	10	14	2.9	↓
56-55-3	Benzo(a)anthracene		37 J	1.0	10	14	2.6	↓
205-99-2	Benzo(b)fluoranthene		57 J	1.0	10	14	3.3	↓
207-08-9	Benzo(k)fluoranthene		24 J	1.0	10	14	4.3	BSH
50-32-8	Benzo(a)pyrene		29 J	1.0	10	14	4.5	MSL
193-39-5	Indeno(1,2,3-cd)pyrene	J	13	1.0	10	14	2.6	
53-70-3	Dibenzo(a,h)anthracene	U	14	1.0	10	14	2.5	
191-24-2	Benzo(g,h,i)perylene		16	1.0	10	14	2.8	
118-74-1	Hexachlorobenzene	J	3.4	1.0	10	14	2.5	
87-68-3	Hexachlorobutadiene	U	14	1.0	10	14	3.2	
77-47-4	Hexachlorocyclopentadiene	~~J~~ UJ	14	1.0	10	14	2.1	MSL
7297-45-2	2-Methylnaphthalene-D10		113%					
367-12-4	2,4-Dibromophenol		114%					
81103-79-9	Fluorene-d10		67%					
1718-51-1	Pyrene-D10		75%					

lw 1/20/09

2

KATAHDIN ANALYTICAL SERVICES
Report of Analytical Results

Client: CH2MHill
Project: TO-009 Lejeune
PO No:
Sample Date: 11/10/08
Received Date: 11/12/08
Extraction Date: 11/17/08
Analysis Date: 06-DEC-2008 19:11
Report Date: 12/11/2008
Matrix: SOIL
% Solids: 91.1

Lab ID: SB6512-4
Client ID: MR08-SS378-08D
SDG: TO9-2
Extracted by: CB
Extraction Method: SW846 3550
Analyst: JCG
Analysis Method: SW846 M8270C
Lab Prep Batch: WG58145
Units: ug/Kgdrywt

CAS#	Compound	Flags	Results	DF	PQL	Adj.PQL	Adj.MDL
91-20-3	Naphthalene	U	11	1.0	10	11	2.8
91-57-6	2-Methylnaphthalene	U	11	1.0	10	11	2.4
86-73-7	Fluorene	U	11	1.0	10	11	3.5
85-01-8	Phenanthrene	J	9.3	1.0	10	11	2.0
206-44-0	Fluoranthene		28	1.0	10	11	2.0
129-00-0	Pyrene		30	1.0	10	11	2.3
56-55-3	Benzo(a)anthracene		16	1.0	10	11	2.1
205-99-2	Benzo(b)fluoranthene		35	1.0	10	11	2.6
207-08-9	Benzo(k)fluoranthene		17 J	1.0	10	11	3.4 BSH
50-32-8	Benzo(a)pyrene		18	1.0	10	11	3.6
193-39-5	Indeno(1,2,3-cd)pyrene		14	1.0	10	11	2.1
53-70-3	Dibenzo(a,h)anthracene	U	11	1.0	10	11	2.0
191-24-2	Benzo(g,h,i)perylene		18	1.0	10	11	2.2
118-74-1	Hexachlorobenzene	U	11	1.0	10	11	2.0
87-68-3	Hexachlorobutadiene	U	11	1.0	10	11	2.5
77-47-4	Hexachlorocyclopentadiene	U	11	1.0	10	11	1.6
7297-45-2	2-Methylnaphthalene-D10		100%				
367-12-4	2,4-Dibromophenol		124%				
81103-79-9	Fluorene-d10		74%				
1718-51-1	Pyrene-D10		105%				

hw
1/30/09

3

KATAHDIN ANALYTICAL SERVICES
Report of Analytical Results

Client: CH2MHill
Project: TO-009 Lejeune
PO No:
Sample Date: 11/10/08
Received Date: 11/12/08
Extraction Date: 11/17/08
Analysis Date: 06-DEC-2008 18:29
Report Date: 12/11/2008
Matrix: SOIL
% Solids: 91.0

Lab ID: SB6512-6
Client ID: MR08-IS378-08D
SDG: TO9-2
Extracted by: CB
Extraction Method: SW846 3550
Analyst: JCG
Analysis Method: SW846 M8270C
Lab Prep Batch: WG58145
Units: ug/Kgdrywt

CAS#	Compound	Flags	Results	DF	PQL	Adj.PQL	Adj.MDL
91-20-3	Naphthalene	U	11	1.0	10	11	2.8
91-57-6	2-Methylnaphthalene	U	11	1.0	10	11	2.4
86-73-7	Fluorene	U	11	1.0	10	11	3.5
85-01-8	Phenanthrene	U	11	1.0	10	11	2.0
206-44-0	Fluoranthene	U	11	1.0	10	11	2.0
129-00-0	Pyrene	U	11	1.0	10	11	2.3
56-55-3	Benzo(a)anthracene	U	11	1.0	10	11	2.1
205-99-2	Benzo(b)fluoranthene	U	11	1.0	10	11	2.6
207-08-9	Benzo(k)fluoranthene	U	11	1.0	10	11	3.4
50-32-8	Benzo(a)pyrene	U	11	1.0	10	11	3.6
193-39-5	Indeno(1,2,3-cd)pyrene	U	11	1.0	10	11	2.1
53-70-3	Dibenzo(a,h)anthracene	U	11	1.0	10	11	2.0
191-24-2	Benzo(g,h,i)perylene	U	11	1.0	10	11	2.2
118-74-1	Hexachlorobenzene	U	11	1.0	10	11	2.0
87-68-3	Hexachlorobutadiene	U	11	1.0	10	11	2.5
77-47-4	Hexachlorocyclopentadiene	U	11	1.0	10	11	1.6
7297-45-2	2-Methylnaphthalene-D10		100%				
367-12-4	2,4-Dibromophenol		120%				
81103-79-9	Fluorene-d10		72%				
1718-51-1	Pyrene-D10		93%				

hw
1/30/09

4

KATAHDIN ANALYTICAL SERVICES
Report of Analytical Results

Client: CH2MHill
Project: TO-009 Lejeune
PO No:
Sample Date: 11/10/08
Received Date: 11/12/08
Extraction Date: 11/17/08
Analysis Date: 06-DEC-2008 17:04
Report Date: 12/11/2008
Matrix: SOIL
% Solids: 90.2

Lab ID: SB6512-8
Client ID: MR08-SS380-08D
SDG: TO9-2
Extracted by: CB
Extraction Method: SW846 3550
Analyst: JCG
Analysis Method: SW846 M8270C
Lab Prep Batch: WG58145
Units: ug/Kgdrywt

CAS#	Compound	Flags	Results	DF	PQL	Adj.PQL	Adj.MDL
91-20-3	Naphthalene	U	11	1.0	10	11	2.9
91-57-6	2-Methylnaphthalene	U	11	1.0	10	11	2.4
86-73-7	Fluorene	U	11	1.0	10	11	3.5
85-01-8	Phenanthrene	U	11	1.0	10	11	2.0
206-44-0	Fluoranthene	J	6.3	1.0	10	11	2.0
129-00-0	Pyrene	J	5.3	1.0	10	11	2.3
56-55-3	Benzo(a)anthracene	J	2.8	1.0	10	11	2.1
205-99-2	Benzo(b)fluoranthene	J	6.1	1.0	10	11	2.7
207-08-9	Benzo(k)fluoranthene	~~J~~ J	4.8	1.0	10	11	3.4 BSH
50-32-8	Benzo(a)pyrene	J	3.8	1.0	10	11	3.6
193-39-5	Indeno(1,2,3-cd)pyrene	J	3.3	1.0	10	11	2.1
53-70-3	Dibenzo(a,h)anthracene	U	11	1.0	10	11	2.0
191-24-2	Benzo(g,h,i)perylene	J	4.1	1.0	10	11	2.2
118-74-1	Hexachlorobenzene	U	11	1.0	10	11	2.0
87-68-3	Hexachlorobutadiene	U	11	1.0	10	11	2.6
77-47-4	Hexachlorocyclopentadiene	U	11	1.0	10	11	1.7
7297-45-2	2-Methylnaphthalene-D10		90%				
367-12-4	2,4-Dibromophenol		104%				
81103-79-9	Fluorene-d10		69%				
1718-51-1	Pyrene-D10		95%				

JW 1/30/09

KATAHDIN ANALYTICAL SERVICES
Report of Analytical Results

Client: CH2MHill
Project: TO-009 Lejeune
PO No:
Sample Date: 11/11/08
Received Date: 11/12/08
Extraction Date: 11/17/08
Analysis Date: 06-DEC-2008 16:22
Report Date: 12/11/2008
Matrix: SOIL
% Solids: 93.7

Lab ID: SB6512-10
Client ID: MR08-IS380-08D
SDG: TO9-2
Extracted by: CB
Extraction Method: SW846 3550
Analyst: JCG
Analysis Method: SW846 M8270C
Lab Prep Batch: WG58145
Units: ug/Kgdrywt

CAS#	Compound	Flags	Results	DF	PQL	Adj.PQL	Adj.MDL
91-20-3	Naphthalene	U	11	1.0	10	11	2.8
91-57-6	2-Methylnaphthalene	U	11	1.0	10	11	2.3
86-73-7	Fluorene	U	11	1.0	10	11	3.4
85-01-8	Phenanthrene	U	11	1.0	10	11	1.9
206-44-0	Fluoranthene	U	11	1.0	10	11	1.9
129-00-0	Pyrene	U	11	1.0	10	11	2.2
56-55-3	Benzo(a)anthracene	U	11	1.0	10	11	2.0
205-99-2	Benzo(b)fluoranthene	U	11	1.0	10	11	2.6
207-08-9	Benzo(k)fluoranthene	U	11	1.0	10	11	3.3
50-32-8	Benzo(a)pyrene	U	11	1.0	10	11	3.5
193-39-5	Indeno(1,2,3-cd)pyrene	U	11	1.0	10	11	2.0
53-70-3	Dibenzo(a,h)anthracene	U	11	1.0	10	11	1.9
191-24-2	Benzo(g,h,i)perylene	U	11	1.0	10	11	2.1
118-74-1	Hexachlorobenzene	U	11	1.0	10	11	1.9
87-68-3	Hexachlorobutadiene	U	11	1.0	10	11	2.4
77-47-4	Hexachlorocyclopentadiene	U	11	1.0	10	11	1.6
7297-45-2	2-Methylnaphthalene-D10		95%				
367-12-4	2,4-Dibromophenol		110%				
81103-79-9	Fluorene-d10		69%				
1718-51-1	Pyrene-D10		86%				

MW
1/30/09

6

KATAHDIN ANALYTICAL SERVICES
Report of Analytical Results

Client: CH2MHill
Project: TO-009 Lejeune
PO No:
Sample Date: 11/11/08
Received Date: 11/12/08
Extraction Date: 11/17/08
Analysis Date: 06-DEC-2008 17:46
Report Date: 12/11/2008
Matrix: SOIL
% Solids: 90.9

Lab ID: SB6512-12
Client ID: MR08-SS381-08D
SDG: TO9-2
Extracted by: CB
Extraction Method: SW846 3550
Analyst: JCG
Analysis Method: SW846 M8270C
Lab Prep Batch: WG58145
Units: ug/Kgdrywt

CAS#	Compound	Flags	Results	DF	PQL	Adj.PQL	Adj.MDL	
91-20-3	Naphthalene	U	11	1.0	10	11	2.9	
91-57-6	2-Methylnaphthalene	U	11	1.0	10	11	2.4	
86-73-7	Fluorene	U	11	1.0	10	11	3.5	
85-01-8	Phenanthrene	J	4.3	1.0	10	11	2.0	
206-44-0	Fluoranthene		14	1.0	10	11	2.0	
129-00-0	Pyrene		16	1.0	10	11	2.3	
56-55-3	Benzo(a)anthracene	J	9.6	1.0	10	11	2.1	
205-99-2	Benzo(b)fluoranthene		21	1.0	10	11	2.6	
207-08-9	Benzo(k)fluoranthene	~~U~~ J	11	1.0	10	11	3.4	BSH
50-32-8	Benzo(a)pyrene	J	10	1.0	10	11	3.6	
193-39-5	Indeno(1,2,3-cd)pyrene	J	9.0	1.0	10	11	2.1	
53-70-3	Dibenzo(a,h)anthracene	U	11	1.0	10	11	2.0	
191-24-2	Benzo(g,h,i)perylene		12	1.0	10	11	2.2	
118-74-1	Hexachlorobenzene	U	11	1.0	10	11	2.0	
87-68-3	Hexachlorobutadiene	U	11	1.0	10	11	2.5	
77-47-4	Hexachlorocyclopentadiene	U	11	1.0	10	11	1.6	
7297-45-2	2-Methylnaphthalene-D10		102%					
367-12-4	2,4-Dibromophenol		114%					
81103-79-9	Fluorene-d10		73%					
1718-51-1	Pyrene-D10		91%					

DLW
1/30/09

7

KATAHDIN ANALYTICAL SERVICES
Report of Analytical Results

Client: CH2MHill
Project: TO-009 Lejeune
PO No:
Sample Date: 11/11/08
Received Date: 11/12/08
Extraction Date: 11/17/08
Analysis Date: 08-DEC-2008 01:44
Report Date: 12/11/2008
Matrix: SOIL
% Solids: 38.0

Lab ID: SB6512-14
Client ID: MR08-SD01-08D
SDG: TO9-2
Extracted by: CB
Extraction Method: SW846 3550
Analyst: JCG
Analysis Method: SW846 M8270C
Lab Prep Batch: WG58145
Units: ug/Kgdrywt

CAS#	Compound	Flags	Results	DF	PQL	Adj.PQL	Adj.MDL	
91-20-3	Naphthalene		170 J	1.0	10	26	6.8	CCH
91-57-6	2-Methylnaphthalene		230 J	1.0	10	26	5.8	BSH
86-73-7	Fluorene		33	1.0	10	26	8.4	
85-01-8	Phenanthrene		380	1.0	10	26	4.7	
206-44-0	Fluoranthene		200	1.0	10	26	4.7	
129-00-0	Pyrene		140	1.0	10	26	5.5	
56-55-3	Benzo(a)anthracene		76	1.0	10	26	5.0	
205-99-2	Benzo(b)fluoranthene		150	1.0	10	26	6.3	
207-08-9	Benzo(k)fluoranthene		66 J	1.0	10	26	8.2	BSH
50-32-8	Benzo(a)pyrene		62	1.0	10	26	8.7	
193-39-5	Indeno(1,2,3-cd)pyrene		32	1.0	10	26	5.0	
53-70-3	Dibenzo(a,h)anthracene	U	26	1.0	10	26	4.7	
191-24-2	Benzo(g,h,i)perylene		41	1.0	10	26	5.3	
118-74-1	Hexachlorobenzene	~~U~~ UJ	26	1.0	10	26	4.7	CCH
87-68-3	Hexachlorobutadiene	U	26	1.0	10	26	6.0	
77-47-4	Hexachlorocyclopentadiene	~~U~~ UJ	26	1.0	10	26	3.9	CCH
7297-45-2	2-Methylnaphthalene-D10		48%					
367-12-4	2,4-Dibromophenol		100%					
81103-79-9	Fluorene-d10		* 51%					
1718-51-1	Pyrene-D10		56%					

hW
11/30/09

KATAHDIN ANALYTICAL SERVICES
Report of Analytical Results

Client: CH2MHill
Project: TO-009 Lejeune
PO No:
Sample Date: 11/11/08
Received Date: 11/12/08
Extraction Date: 11/17/08
Analysis Date: 08-DEC-2008 01:02
Report Date: 12/11/2008
Matrix: SOIL
% Solids: 39.0

Lab ID: SB6512-16
Client ID: MR08-SD01D-08D
SDG: TO9-2
Extracted by: CB
Extraction Method: SW846 3550
Analyst: JCG
Analysis Method: SW846 M8270C
Lab Prep Batch: WG58145
Units: ug/Kgdrywt

CAS#	Compound	Flags	Results	DF	PQL	Adj.PQL	Adj.MDL	
91-20-3	Naphthalene		130 J	1.0	10	26	6.7	CCH
91-57-6	2-Methylnaphthalene		170 J	1.0	10	26	5.6	BSH
86-73-7	Fluorene	J	23	1.0	10	26	8.2	
85-01-8	Phenanthrene		310	1.0	10	26	4.6	
206-44-0	Fluoranthene		210	1.0	10	26	4.6	
129-00-0	Pyrene		110	1.0	10	26	5.4	
56-55-3	Benzo(a)anthracene		47	1.0	10	26	4.9	
205-99-2	Benzo(b)fluoranthene		95	1.0	10	26	6.2	
207-08-9	Benzo(k)fluoranthene		39 J	1.0	10	26	8.0	BSH
50-32-8	Benzo(a)pyrene		39	1.0	10	26	8.5	
193-39-5	Indeno(1,2,3-cd)pyrene	J	22	1.0	10	26	4.9	
53-70-3	Dibenzo(a,h)anthracene	U	26	1.0	10	26	4.6	
191-24-2	Benzo(g,h,i)perylene		28	1.0	10	26	5.1	
118-74-1	Hexachlorobenzene	~~J~~ J	9.2	1.0	10	26	4.6	CCH
87-68-3	Hexachlorobutadiene	U	26	1.0	10	26	5.9	
77-47-4	Hexachlorocyclopentadiene	~~U~~ UJ	26	1.0	10	26	3.8	CCH
7297-45-2	2-Methylnaphthalene-D10		43%					
367-12-4	2,4-Dibromophenol		97%					
81103-79-9	Fluorene-d10		* 48%					
1718-51-1	Pyrene-D10		47%					

MW 1/30/09

9

KATAHDIN ANALYTICAL SERVICES
Report of Analytical Results

Client: CH2MHill
Project: TO-009 Lejeune
PO No:
Sample Date: 11/11/08
Received Date: 11/12/08
Extraction Date: 11/17/08
Analysis Date: 07-DEC-2008 21:30
Report Date: 12/11/2008
Matrix: SOIL
% Solids: 91.1

Lab ID: SB6512-18
Client ID: MR08-SS379-08D
SDG: TO9-2
Extracted by: CB
Extraction Method: SW846 3550
Analyst: JCG
Analysis Method: SW846 M8270C
Lab Prep Batch: WG58145
Units: ug/Kgdrywt

CAS#	Compound	Flags	Results	DF	PQL	Adj.PQL	Adj.MDL	
91-20-3	Naphthalene	~~U~~ UJ	11	1.0	10	11	2.8	CCH
91-57-6	2-Methylnaphthalene	U	11	1.0	10	11	2.4	
86-73-7	Fluorene	U	11	1.0	10	11	3.5	
85-01-8	Phenanthrene	U	11	1.0	10	11	2.0	
206-44-0	Fluoranthene	J	3.2	1.0	10	11	2.0	
129-00-0	Pyrene	J	2.9	1.0	10	11	2.3	
56-55-3	Benzo(a)anthracene	J	2.5	1.0	10	11	2.1	
205-99-2	Benzo(b)fluoranthene	U	11	1.0	10	11	2.6	
207-08-9	Benzo(k)fluoranthene	U	11	1.0	10	11	3.4	
50-32-8	Benzo(a)pyrene	J	4.7	1.0	10	11	3.6	
193-39-5	Indeno(1,2,3-cd)pyrene	J	3.1	1.0	10	11	2.1	
53-70-3	Dibenzo(a,h)anthracene	U	11	1.0	10	11	2.0	
191-24-2	Benzo(g,h,i)perylene	J	4.3	1.0	10	11	2.2	
118-74-1	Hexachlorobenzene	~~U~~ UJ	11	1.0	10	11	2.0	CCH
87-68-3	Hexachlorobutadiene	U	11	1.0	10	11	2.5	
77-47-4	Hexachlorocyclopentadiene	~~U~~ UJ	11	1.0	10	11	1.6	CCH
7297-45-2	2-Methylnaphthalene-D10		62%					
367-12-4	2,4-Dibromophenol		103%					
81103-79-9	Fluorene-d10		62%					
1718-51-1	Pyrene-D10		98%					

lmw
1/30/09

10

KATAHDIN ANALYTICAL SERVICES
Report of Analytical Results

Client: CH2MHill
Project: TO-009 Lejeune
PO No:
Sample Date: 11/11/08
Received Date: 11/12/08
Extraction Date: 11/17/08
Analysis Date: 07-DEC-2008 20:47
Report Date: 12/11/2008
Matrix: SOIL
% Solids: 80.2

Lab ID: SB6512-20
Client ID: MR08-SD03-08D
SDG: TO9-2
Extracted by: CB
Extraction Method: SW846 3550
Analyst: JCG
Analysis Method: SW846 M8270C
Lab Prep Batch: WG58145
Units: ug/Kgdrywt

CAS#	Compound	Flags	Results	DF	PQL	Adj.PQL	Adj.MDL	
91-20-3	Naphthalene	~~U~~ UJ	12	1.0	10	12	3.2	CCH
91-57-6	2-Methylnaphthalene	~~J~~ J	5.2	1.0	10	12	2.7	BSH
86-73-7	Fluorene	U	12	1.0	10	12	4.0	
85-01-8	Phenanthrene		16	1.0	10	12	2.2	
206-44-0	Fluoranthene		30	1.0	10	12	2.2	
129-00-0	Pyrene		20	1.0	10	12	2.6	
56-55-3	Benzo(a)anthracene	J	3.9	1.0	10	12	2.4	
205-99-2	Benzo(b)fluoranthene	U	12	1.0	10	12	3.0	
207-08-9	Benzo(k)fluoranthene	U	12	1.0	10	12	3.9	
50-32-8	Benzo(a)pyrene	U	12	1.0	10	12	4.1	
193-39-5	Indeno(1,2,3-cd)pyrene	U	12	1.0	10	12	2.4	
53-70-3	Dibenzo(a,h)anthracene	U	12	1.0	10	12	2.2	
191-24-2	Benzo(g,h,i)perylene	J	3.4	1.0	10	12	2.5	
118-74-1	Hexachlorobenzene	~~U~~ UJ	12	1.0	10	12	2.2	CCH
87-68-3	Hexachlorobutadiene	U	12	1.0	10	12	2.9	
77-47-4	Hexachlorocyclopentadiene	~~U~~ UJ	12	1.0	10	12	1.9	CCH
7297-45-2	2-Methylnaphthalene-D10		57%					
367-12-4	2,4-Dibromophenol		87%					
81103-79-9	Fluorene-d10		57%					
1718-51-1	Pyrene-D10		86%					

hw
1/30/09

11

KATAHDIN ANALYTICAL SERVICES
Report of Analytical Results

Client: CH2MHill
Project: TO-009 Lejeune
PO No:
Sample Date: 11/12/08
Received Date: 11/14/08
Extraction Date: 11/17/08
Analysis Date: 07-DEC-2008 22:12
Report Date: 12/11/2008
Matrix: SOIL
% Solids: 86.8

Lab ID: SB6587-2
Client ID: MR08-SS382-08D
SDG: TO9-2
Extracted by: CB
Extraction Method: SW846 3550
Analyst: JCG
Analysis Method: SW846 M8270C
Lab Prep Batch: WG58145
Units: ug/Kgdrywt

CAS#	Compound	Flags	Results	DF	PQL	Adj.PQL	Adj.MDL	
91-20-3	Naphthalene	~~U~~ UJ	12	1.0	10	12	3.0	CCH
91-57-6	2-Methylnaphthalene	U	12	1.0	10	12	2.5	
86-73-7	Fluorene	U	12	1.0	10	12	3.7	
85-01-8	Phenanthrene		27	1.0	10	12	2.1	
206-44-0	Fluoranthene		70	1.0	10	12	2.1	
129-00-0	Pyrene		53	1.0	10	12	2.4	
56-55-3	Benzo(a)anthracene		42	1.0	10	12	2.2	
205-99-2	Benzo(b)fluoranthene		66	1.0	10	12	2.8	
207-08-9	Benzo(k)fluoranthene		32 J	1.0	10	12	3.6	BSH
50-32-8	Benzo(a)pyrene		38	1.0	10	12	3.8	
193-39-5	Indeno(1,2,3-cd)pyrene		22	1.0	10	12	2.2	
53-70-3	Dibenzo(a,h)anthracene	J	6.9	1.0	10	12	2.1	
191-24-2	Benzo(g,h,i)perylene		20	1.0	10	12	2.3	
118-74-1	Hexachlorobenzene	~~U~~ UJ	12	1.0	10	12	2.1	CCH
87-68-3	Hexachlorobutadiene	U	12	1.0	10	12	2.6	
77-47-4	Hexachlorocyclopentadiene	~~U~~ UJ	12	1.0	10	12	1.7	CCH
7297-45-2	2-Methylnaphthalene-D10		68%					
367-12-4	2,4-Dibromophenol		125%					
81103-79-9	Fluorene-d10		72%					
1718-51-1	Pyrene-D10		110%					

lw 12/10/09

12

KATAHDIN ANALYTICAL SERVICES
Report of Analytical Results

Client: CH2MHill
Project: TO-009 Lejeune
PO No:
Sample Date: 11/12/08
Received Date: 11/14/08
Extraction Date: 11/17/08
Analysis Date: 07-DEC-2008 19:22
Report Date: 12/11/2008
Matrix: SOIL
% Solids: 90.4

Lab ID: SB6587-4
Client ID: MR08-SS383-08D
SDG: TO9-2
Extracted by: CB
Extraction Method: SW846 3550
Analyst: JCG
Analysis Method: SW846 M8270C
Lab Prep Batch: WG58145
Units: ug/Kgdrywt

CAS#	Compound	Flags	Results	DF	PQL	Adj.PQL	Adj.MDL	
91-20-3	Naphthalene	~~U~~ UJ	11	1.0	10	11	2.9	CCH
91-57-6	2-Methylnaphthalene	U	11	1.0	10	11	2.4	
86-73-7	Fluorene	U	11	1.0	10	11	3.5	
85-01-8	Phenanthrene		51	1.0	10	11	2.0	
206-44-0	Fluoranthene		150	1.0	10	11	2.0	
129-00-0	Pyrene		120	1.0	10	11	2.3	
56-55-3	Benzo(a)anthracene		99	1.0	10	11	2.1	
205-99-2	Benzo(b)fluoranthene		150	1.0	10	11	2.6	
207-08-9	Benzo(k)fluoranthene		69 J	1.0	10	11	3.4	BSH
50-32-8	Benzo(a)pyrene		91	1.0	10	11	3.6	
193-39-5	Indeno(1,2,3-cd)pyrene		44	1.0	10	11	2.1	
53-70-3	Dibenzo(a,h)anthracene		17	1.0	10	11	2.0	
191-24-2	Benzo(g,h,i)perylene		42	1.0	10	11	2.2	
118-74-1	Hexachlorobenzene	~~U~~ UJ	11	1.0	10	11	2.0	CCH
87-68-3	Hexachlorobutadiene	U	11	1.0	10	11	2.5	
77-47-4	Hexachlorocyclopentadiene	~~U~~ UJ	11	1.0	10	11	1.6	CCH
7297-45-2	2-Methylnaphthalene-D10		70%					
367-12-4	2,4-Dibromophenol		110%					
81103-79-9	Fluorene-d10		69%					
1718-51-1	Pyrene-D10		108%					

lus
1130/09

KATAHDIN ANALYTICAL SERVICES
Report of Analytical Results

Client: CH2MHill
Project: TO-009 Lejeune
PO No:
Sample Date: 11/12/08
Received Date: 11/14/08
Extraction Date: 11/17/08
Analysis Date: 07-DEC-2008 20:05
Report Date: 12/11/2008
Matrix: SOIL
% Solids: 89.1

Lab ID: SB6587-6
Client ID: MR08-SS384-08D
SDG: TO9-2
Extracted by: CB
Extraction Method: SW846 3550
Analyst: JCG
Analysis Method: SW846 M8270C
Lab Prep Batch: WG58145
Units: ug/Kgdrywt

CAS#	Compound	Flags	Results	DF	PQL	Adj.PQL	Adj.MDL	
91-20-3	Naphthalene	~~U~~ UJ	11	1.0	10	11	2.9	CCH
91-57-6	2-Methylnaphthalene	U	11	1.0	10	11	2.5	
86-73-7	Fluorene	U	11	1.0	10	11	3.6	
85-01-8	Phenanthrene	J	2.3	1.0	10	11	2.0	
206-44-0	Fluoranthene	J	6.4	1.0	10	11	2.0	
129-00-0	Pyrene	J	5.7	1.0	10	11	2.4	
56-55-3	Benzo(a)anthracene	J	3.4	1.0	10	11	2.1	
205-99-2	Benzo(b)fluoranthene	U	11	1.0	10	11	2.7	
207-08-9	Benzo(k)fluoranthene	U	11	1.0	10	11	3.5	
50-32-8	Benzo(a)pyrene	U	11	1.0	10	11	3.7	
193-39-5	Indeno(1,2,3-cd)pyrene	U	11	1.0	10	11	2.1	
53-70-3	Dibenzo(a,h)anthracene	U	11	1.0	10	11	2.0	
191-24-2	Benzo(g,h,i)perylene	J	2.6	1.0	10	11	2.2	
118-74-1	Hexachlorobenzene	~~U~~ UJ	11	1.0	10	11	2.0	CCH
87-68-3	Hexachlorobutadiene	U	11	1.0	10	11	2.6	
77-47-4	Hexachlorocyclopentadiene	~~U~~ UJ	11	1.0	10	11	1.7	CCH
7297-45-2	2-Methylnaphthalene-D10		72%					
367-12-4	2,4-Dibromophenol		102%					
81103-79-9	Fluorene-d10		69%					
1718-51-1	Pyrene-D10		110%					

MW
11/30/09

14

KATAHDIN ANALYTICAL SERVICES
Report of Analytical Results

Client: CH2MHill
Project: TO-009 Lejeune
PO No:
Sample Date: 11/12/08
Received Date: 11/14/08
Extraction Date: 11/17/08
Analysis Date: 07-DEC-2008 22:54
Report Date: 12/11/2008
Matrix: SOIL
% Solids: 94.5

Lab ID: SB6587-8
Client ID: MR08-SS385-08D
SDG: TO9-2
Extracted by: CB
Extraction Method: SW846 3550
Analyst: JCG
Analysis Method: SW846 M8270C
Lab Prep Batch: WG58145
Units: ug/Kgdrywt

CAS#	Compound	Flags	Results	DF	PQL	Adj.PQL	Adj.MDL	
91-20-3	Naphthalene	~~U~~ UJ	10	1.0	10	10	2.8	CCH
91-57-6	2-Methylnaphthalene	U	10	1.0	10	10	2.3	
86-73-7	Fluorene	U	10	1.0	10	10	3.4	
85-01-8	Phenanthrene	J	9.3	1.0	10	10	1.9	
206-44-0	Fluoranthene		32	1.0	10	10	1.9	
129-00-0	Pyrene		25	1.0	10	10	2.2	
56-55-3	Benzo(a)anthracene		21	1.0	10	10	2.0	
205-99-2	Benzo(b)fluoranthene		32	1.0	10	10	2.5	
207-08-9	Benzo(k)fluoranthene		18 J	1.0	10	10	3.3	BSH
50-32-8	Benzo(a)pyrene		19	1.0	10	10	3.5	
193-39-5	Indeno(1,2,3-cd)pyrene	J	10	1.0	10	10	2.0	
53-70-3	Dibenzo(a,h)anthracene	U	10	1.0	10	10	1.9	
191-24-2	Benzo(g,h,i)perylene		11	1.0	10	10	2.1	
118-74-1	Hexachlorobenzene	~~U~~ UJ	10	1.0	10	10	1.9	CCH
87-68-3	Hexachlorobutadiene	U	10	1.0	10	10	2.4	
77-47-4	Hexachlorocyclopentadiene	~~U~~ UJ	10	1.0	10	10	1.6	CCH
7297-45-2	2-Methylnaphthalene-D10		55%					
367-12-4	2,4-Dibromophenol		105%					
81103-79-9	Fluorene-d10		67%					
1718-51-1	Pyrene-D10		107%					

lw
1/30/09

KATAHDIN ANALYTICAL SERVICES
Report of Analytical Results

Client: CH2MHill
Project: TO-009 Lejeune
PO No:
Sample Date: 11/12/08
Received Date: 11/14/08
Extraction Date: 11/17/08
Analysis Date: 08-DEC-2008 00:19
Report Date: 12/11/2008
Matrix: SOIL
% Solids: 87.2

Lab ID: SB6587-10
Client ID: MR08-SS386-08D
SDG: TO9-2
Extracted by: CB
Extraction Method: SW846 3550
Analyst: JCG
Analysis Method: SW846 M8270C
Lab Prep Batch: WG58145
Units: ug/Kgdrywt

CAS#	Compound	Flags	Results	DF	PQL	Adj.PQL	Adj.MDL	
91-20-3	Naphthalene	~~U~~ UJ	11	1.0	10	11	3.0	CCH
91-57-6	2-Methylnaphthalene	U	11	1.0	10	11	2.5	
86-73-7	Fluorene	U	11	1.0	10	11	3.7	
85-01-8	Phenanthrene		62	1.0	10	11	2.1	
206-44-0	Fluoranthene		140	1.0	10	11	2.1	
129-00-0	Pyrene		140	1.0	10	11	2.4	
56-55-3	Benzo(a)anthracene		100	1.0	10	11	2.2	
205-99-2	Benzo(b)fluoranthene		120	1.0	10	11	2.8	
207-08-9	Benzo(k)fluoranthene		100 J	1.0	10	11	3.6	BSH
50-32-8	Benzo(a)pyrene		96	1.0	10	11	3.8	
193-39-5	Indeno(1,2,3-cd)pyrene		48	1.0	10	11	2.2	
53-70-3	Dibenzo(a,h)anthracene		17	1.0	10	11	2.1	
191-24-2	Benzo(g,h,i)perylene		46	1.0	10	11	2.3	
118-74-1	Hexachlorobenzene	~~U~~ UJ	11	1.0	10	11	2.1	CCH
87-68-3	Hexachlorobutadiene	U	11	1.0	10	11	2.6	
77-47-4	Hexachlorocyclopentadiene	~~U~~ UJ	11	1.0	10	11	1.7	CCH
7297-45-2	2-Methylnaphthalene-D10		60%					
367-12-4	2,4-Dibromophenol		112%					
81103-79-9	Fluorene-d10		66%					
1718-51-1	Pyrene-D10		107%					

fw
1/30/09

KATAHDIN ANALYTICAL SERVICES
Report of Analytical Results

Client: CH2MHill
Project: TO-009 Lejeune
PO No:
Sample Date: 11/12/08
Received Date: 11/14/08
Extraction Date: 11/17/08
Analysis Date: 07-DEC-2008 23:37
Report Date: 12/11/2008
Matrix: SOIL
% Solids: 83.0

Lab ID: SB6587-12
Client ID: MR08-SS387-08D
SDG: TO9-2
Extracted by: CB
Extraction Method: SW846 3550
Analyst: JCG
Analysis Method: SW846 M8270C
Lab Prep Batch: WG58145
Units: ug/Kgdrywt

CAS#	Compound	Flags	Results	DF	PQL	Adj.PQL	Adj.MDL	
91-20-3	Naphthalene	~~U~~ UJ	12	1.0	10	12	3.1	CCH
91-57-6	2-Methylnaphthalene	U	12	1.0	10	12	2.6	
86-73-7	Fluorene	U	12	1.0	10	12	3.8	
85-01-8	Phenanthrene		66	1.0	10	12	2.2	
206-44-0	Fluoranthene		130	1.0	10	12	2.2	
129-00-0	Pyrene		110	1.0	10	12	2.5	
56-55-3	Benzo(a)anthracene		79	1.0	10	12	2.3	
205-99-2	Benzo(b)fluoranthene		86	1.0	10	12	2.9	
207-08-9	Benzo(k)fluoranthene		72 J	1.0	10	12	3.7	BSH
50-32-8	Benzo(a)pyrene		66	1.0	10	12	4.0	
193-39-5	Indeno(1,2,3-cd)pyrene		39	1.0	10	12	2.3	
53-70-3	Dibenzo(a,h)anthracene		13	1.0	10	12	2.2	
191-24-2	Benzo(g,h,i)perylene		36	1.0	10	12	2.4	
118-74-1	Hexachlorobenzene	~~U~~ UJ	12	1.0	10	12	2.2	CCH
87-68-3	Hexachlorobutadiene	U	12	1.0	10	12	2.8	
77-47-4	Hexachlorocyclopentadiene	~~U~~ UJ	12	1.0	10	12	1.8	CCH
7297-45-2	2-Methylnaphthalene-D10		64%					
367-12-4	2,4-Dibromophenol		110%					
81103-79-9	Fluorene-d10		65%					
1718-51-1	Pyrene-D10		99%					

MW 1/30/09

KATAHDIN ANALYTICAL SERVICES
Report of Analytical Results

Client: CH2MHill
Project: TO-009 Lejeune
PO No:
Sample Date: 11/12/08
Received Date: 11/14/08
Extraction Date: 11/17/08
Analysis Date: 07-DEC-2008 15:08
Report Date: 12/11/2008
Matrix: SOIL
% Solids: 91.9

Lab ID: SB6587-14
Client ID: MR08-IS381-08D
SDG: TO9-2
Extracted by: CB
Extraction Method: SW846 3550
Analyst: JCG
Analysis Method: SW846 M8270C
Lab Prep Batch: WG58145
Units: ug/Kgdrywt

CAS#	Compound	Flags	Results	DF	PQL	Adj.PQL	Adj.MDL	
91-20-3	Naphthalene	~~U~~ UJ	11	1.0	10	11	2.8	CCH
91-57-6	2-Methylnaphthalene	U	11	1.0	10	11	2.4	
86-73-7	Fluorene	U	11	1.0	10	11	3.5	
85-01-8	Phenanthrene	U	11	1.0	10	11	2.0	
206-44-0	Fluoranthene	U	11	1.0	10	11	2.0	
129-00-0	Pyrene	U	11	1.0	10	11	2.3	
56-55-3	Benzo(a)anthracene	U	11	1.0	10	11	2.1	
205-99-2	Benzo(b)fluoranthene	U	11	1.0	10	11	2.6	
207-08-9	Benzo(k)fluoranthene	U	11	1.0	10	11	3.4	
50-32-8	Benzo(a)pyrene	U	11	1.0	10	11	3.6	
193-39-5	Indeno(1,2,3-cd)pyrene	U	11	1.0	10	11	2.1	
53-70-3	Dibenzo(a,h)anthracene	U	11	1.0	10	11	2.0	
191-24-2	Benzo(g,h,i)perylene	U	11	1.0	10	11	2.2	
118-74-1	Hexachlorobenzene	~~U~~ UJ	11	1.0	10	11	2.0	CCH
87-68-3	Hexachlorobutadiene	U	11	1.0	10	11	2.5	
77-47-4	Hexachlorocyclopentadiene	~~U~~ UJ	11	1.0	10	11	1.6	CCH
7297-45-2	2-Methylnaphthalene-D10		91%					
367-12-4	2,4-Dibromophenol		133%					
81103-79-9	Fluorene-d10		80%					
1718-51-1	Pyrene-D10		96%					

MW
1/30/09

KATAHDIN ANALYTICAL SERVICES
Report of Analytical Results

Client: CH2MHill
Project: TO-009 Lejeune
PO No:
Sample Date: 11/12/08
Received Date: 11/14/08
Extraction Date: 11/17/08
Analysis Date: 07-DEC-2008 15:50
Report Date: 12/11/2008
Matrix: SOIL
% Solids: 90.9

Lab ID: SB6587-16
Client ID: MR08-IS379-08D
SDG: TO9-2
Extracted by: CB
Extraction Method: SW846 3550
Analyst: JCG
Analysis Method: SW846 M8270C
Lab Prep Batch: WG58145
Units: ug/Kgdrywt

CAS#	Compound	Flags	Results	DF	PQL	Adj.PQL	Adj.MDL	
91-20-3	Naphthalene	~~U~~ UJ	11	1.0	10	11	2.8	CCH
91-57-6	2-Methylnaphthalene	U	11	1.0	10	11	2.4	
86-73-7	Fluorene	U	11	1.0	10	11	3.5	
85-01-8	Phenanthrene	U	11	1.0	10	11	2.0	
206-44-0	Fluoranthene	U	11	1.0	10	11	2.0	
129-00-0	Pyrene	U	11	1.0	10	11	2.3	
56-55-3	Benzo(a)anthracene	U	11	1.0	10	11	2.1	
205-99-2	Benzo(b)fluoranthene	U	11	1.0	10	11	2.6	
207-08-9	Benzo(k)fluoranthene	U	11	1.0	10	11	3.4	
50-32-8	Benzo(a)pyrene	U	11	1.0	10	11	3.6	
193-39-5	Indeno(1,2,3-cd)pyrene	U	11	1.0	10	11	2.1	
53-70-3	Dibenzo(a,h)anthracene	U	11	1.0	10	11	2.0	
191-24-2	Benzo(g,h,i)perylene	U	11	1.0	10	11	2.2	
118-74-1	Hexachlorobenzene	~~U~~ UJ	11	1.0	10	11	2.0	CCH
87-68-3	Hexachlorobutadiene	U	11	1.0	10	11	2.5	
77-47-4	Hexachlorocyclopentadiene	~~U~~ UJ	11	1.0	10	11	1.6	CCH
7297-45-2	2-Methylnaphthalene-D10		73%					
367-12-4	2,4-Dibromophenol		103%					
81103-79-9	Fluorene-d10		67%					
1718-51-1	Pyrene-D10		90%					

QW 1/30/09

19

KATAHDIN ANALYTICAL SERVICES
Report of Analytical Results

Client: CH2MHill
Project: TO-009 Lejeune
PO No:
Sample Date: 11/11/08
Received Date: 11/14/08
Extraction Date: 11/17/08
Analysis Date: 07-DEC-2008 17:57
Report Date: 12/11/2008
Matrix: SOIL
% Solids: 89.1

Lab ID: SB6587-20
Client ID: MR08-SS377-08D
SDG: TO9-2
Extracted by: CB
Extraction Method: SW846 3550
Analyst: JCG
Analysis Method: SW846 M8270C
Lab Prep Batch: WG58145
Units: ug/Kgdrywt

CAS#	Compound	Flags	Results	DF	PQL	Adj.PQL	Adj.MDL	
91-20-3	Naphthalene	~~U~~ UJ	11	1.0	10	11	2.9	ccal
91-57-6	2-Methylnaphthalene	U	11	1.0	10	11	2.5	
86-73-7	Fluorene	U	11	1.0	10	11	3.6	
85-01-8	Phenanthrene	U	11	1.0	10	11	2.0	
206-44-0	Fluoranthene	J	4.0	1.0	10	11	2.0	
129-00-0	Pyrene	J	3.5	1.0	10	11	2.4	
56-55-3	Benzo(a)anthracene	J	2.4	1.0	10	11	2.1	
205-99-2	Benzo(b)fluoranthene	U	11	1.0	10	11	2.7	
207-08-9	Benzo(k)fluoranthene	U	11	1.0	10	11	3.5	
50-32-8	Benzo(a)pyrene	U	11	1.0	10	11	3.7	
193-39-5	Indeno(1,2,3-cd)pyrene	U	11	1.0	10	11	2.1	
53-70-3	Dibenzo(a,h)anthracene	U	11	1.0	10	11	2.0	
191-24-2	Benzo(g,h,i)perylene	U	11	1.0	10	11	2.2	
118-74-1	Hexachlorobenzene	~~U~~ UJ	11	1.0	10	11	2.0	ccal
87-68-3	Hexachlorobutadiene	U	11	1.0	10	11	2.6	
77-47-4	Hexachlorocyclopentadiene	~~U~~ UJ	11	1.0	10	11	1.7	ccal
7297-45-2	2-Methylnaphthalene-D10		74%					
367-12-4	2,4-Dibromophenol		110%					
81103-79-9	Fluorene-d10		68%					
1718-51-1	Pyrene-D10		97%					

lw
11/30/09

KATAHDIN ANALYTICAL SERVICES
Report of Analytical Results

Client: CH2MHill
Project: TO-009 Lejeune
PO No:
Sample Date: 11/11/08
Received Date: 11/14/08
Extraction Date: 11/17/08
Analysis Date: 07-DEC-2008 18:40
Report Date: 12/11/2008
Matrix: SOIL
% Solids: 89.4

Lab ID: SB6587-22
Client ID: MR08-SS377D-08D
SDG: TO9-2
Extracted by: CB
Extraction Method: SW846 3550
Analyst: JCG
Analysis Method: SW846 M8270C
Lab Prep Batch: WG58145
Units: ug/Kgdrywt

CAS#	Compound	Flags	Results	DF	PQL	Adj.PQL	Adj.MDL	
91-20-3	Naphthalene	~~U~~ UJ	11	1.0	10	11	2.9	CCH
91-57-6	2-Methylnaphthalene	U	11	1.0	10	11	2.5	
86-73-7	Fluorene	U	11	1.0	10	11	3.6	
85-01-8	Phenanthrene	U	11	1.0	10	11	2.0	
206-44-0	Fluoranthene	U	11	1.0	10	11	2.0	
129-00-0	Pyrene	U	11	1.0	10	11	2.3	
56-55-3	Benzo(a)anthracene	U	11	1.0	10	11	2.1	
205-99-2	Benzo(b)fluoranthene	U	11	1.0	10	11	2.7	
207-08-9	Benzo(k)fluoranthene	U	11	1.0	10	11	3.5	
50-32-8	Benzo(a)pyrene	U	11	1.0	10	11	3.7	
193-39-5	Indeno(1,2,3-cd)pyrene	U	11	1.0	10	11	2.1	
53-70-3	Dibenzo(a,h)anthracene	U	11	1.0	10	11	2.0	
191-24-2	Benzo(g,h,i)perylene	U	11	1.0	10	11	2.2	
118-74-1	Hexachlorobenzene	~~U~~ UJ	11	1.0	10	11	2.0	CCH
87-68-3	Hexachlorobutadiene	U	11	1.0	10	11	2.6	
77-47-4	Hexachlorocyclopentadiene	~~U~~ UJ	11	1.0	10	11	1.7	CCH
7297-45-2	2-Methylnaphthalene-D10		63%					
367-12-4	2,4-Dibromophenol		87%					
81103-79-9	Fluorene-d10		58%					
1718-51-1	Pyrene-D10		88%					

RW
11/30/09

21

KATAHDIN ANALYTICAL SERVICES
Report of Analytical Results

Client: CH2MHill
Project: TO-009 Lejeune
PO No:
Sample Date: 11/11/08
Received Date: 11/14/08
Extraction Date: 11/18/08
Analysis Date: 08-DEC-2008 20:47
Report Date: 12/11/2008
Matrix: SOIL
% Solids: 95.2

Lab ID: SB6587-24
Client ID: MR08-SS376-08D
SDG: TO9-2
Extracted by: AC
Extraction Method: SW846 3550
Analyst: JCG
Analysis Method: SW846 M8270C
Lab Prep Batch: WG58205
Units: ug/Kgdrywt

CAS#	Compound	Flags	Results	DF	PQL	Adj.PQL	Adj.MDL	
91-20-3	Naphthalene	U	10	1.0	10	10	2.7	
91-57-6	2-Methylnaphthalene	U	10	1.0	10	10	2.3	
86-73-7	Fluorene	U	10	1.0	10	10	3.4	
85-01-8	Phenanthrene	~~J~~ J	2.3	1.0	10	10	1.9	CCH
206-44-0	Fluoranthene	J	6.6	1.0	10	10	1.9	
129-00-0	Pyrene	J	6.8	1.0	10	10	2.2	
56-55-3	Benzo(a)anthracene	J	4.0	1.0	10	10	2.0	
205-99-2	Benzo(b)fluoranthene		13	1.0	10	10	2.5	
207-08-9	Benzo(k)fluoranthene	J	7.7	1.0	10	10	3.2	
50-32-8	Benzo(a)pyrene	J	6.3	1.0	10	10	3.5	
193-39-5	Indeno(1,2,3-cd)pyrene	J	3.6	1.0	10	10	2.0	
53-70-3	Dibenzo(a,h)anthracene	U	10	1.0	10	10	1.9	
191-24-2	Benzo(g,h,i)perylene	J	3.7	1.0	10	10	2.1	
118-74-1	Hexachlorobenzene	~~U~~ UJ	10	1.0	10	10	1.9	CCH
87-68-3	Hexachlorobutadiene	U	10	1.0	10	10	2.4	
77-47-4	Hexachlorocyclopentadiene	~~U~~ UJ	10	1.0	10	10	1.6	CCH
7297-45-2	2-Methylnaphthalene-D10		67%					
367-12-4	2,4-Dibromophenol		100%					
81103-79-9	Fluorene-d10		64%					
1718-51-1	Pyrene-D10		90%					

lw 1/30/09

ENVIRONMENTAL
Data Services, Inc.

SEMIVOLATILE ORGANIC COMPOUNDS

USEPA Region IV - Level IV Review

Site: MCB Camp Lejeune, TO-09 SDG #: TO9-2

Client: CH2M HILL, Inc., Virginia Beach, Virginia Date: January 30, 2009

Laboratory: Katahdin Analytical Services, Scarborough, Maine Reviewer: Nancy Weaver

EDS ID	Client Sample ID	Laboratory Sample ID	Matrix
1	MR08-SD02-08D	SB6512-1	Soil
1MS	MR08-SD02-08DMS	SB6512-1MS	Soil
1MSD	MR08-SD02-08DMSD	SB6512-1MSD	Soil
2	MR08-SS378-08D	SB6512-3	Soil
3	MR08-IS378-08D	SB6512-5	Soil
4	MR08-SS380-08D	SB6512-7	Soil
5	MR08-IS380-08D	SB6512-9	Soil
6	MR08-SS381-08D	SB6512-11	Soil
7	MR08-SD01-08D	SB6512-13	Soil
8	MR08-SD01D-08D	SB6512-15	Soil
9	MR08-SS379-08D	SB6512-17	Soil
10	MR08-SD03-08D	SB6512-19	Soil
11	MR08-SS382-08D	SB6587-1	Soil
12	MR08-SS383-08D	SB6587-3	Soil
13	MR08-SS384-08D	SB6587-5	Soil
14	MR08-SS385-08D	SB6587-7	Soil
15	MR08-SS386-08D	SB6587-9	Soil
16	MR08-SS387-08D	SB6587-11	Soil
17	MR08-IS381-08D	SB6587-13	Soil
18	MR08-IS379-08D	SB6587-15	Soil
19	MR08-SS377-08D	SB6587-19	Soil
20	MR08-SS377D-08D	SB6587-21	Soil
21	MR08-SS376-08D	SB6587-23	Soil

The USEPA "Contract Laboratory Program National Functional Guidelines for Organic Data Review," October 1999, and professional judgment were used in evaluating the data in this summary report.

Holding Times - All samples were extracted within 14 days for soil samples and analyzed within 40 days for all samples.

GC/MS Tuning - All of the DFTPP tunes in the initial and continuing calibrations met the percent relative abundance criteria.

Initial Calibration - The initial calibrations exhibited acceptable %RSD and mean RRF values.

Continuing Calibration - The continuing calibrations exhibited acceptable %D and RRF values except the following.

CCAL Date	Compound	%D/RRF	Qualifier	Affected Samples
12/05/08	4-Nitrophenol	26.27%	J/UJ	21
12/07/08	bis (2-Ethylhexyl) phthalate	25.58%	J/UJ	3-17
	Di-n-octylphthalate	25.92%	J/UJ	3-17
12/08/08	Benzaldehyde	26.62%	J/UJ	18-20
	Butylbenzylphthalate	27.65%	J/UJ	18-20
	bis (2-Ethylhexyl) phthalate	27.69%	J/UJ	18-20
	Di-n-octylphthalate	28.46%	J/UJ	18-20

Surrogates - All samples exhibited acceptable surrogate recoveries.

MS/MSD The MS/MSD sample exhibited acceptable %R and RPD values except the following.

MS/MSD Sample ID	Compound	MS/MSD %R/RPD	Qualifier
1	4-Chloroaniline	Ok/9%/Ok	J/R
	3-Nitroaniline	Ok/18%/52	J/UJ
	4-Nitroaniline	Ok/33%/Ok	J/UJ
	3,3'-Dichlorobenzidine	Ok/7%/Ok	J/R

Laboratory Control Sample - The LCS samples exhibited acceptable %R values.

Internal Standard (IS) Area Performance - All internal standards met response and retention time (RT) criteria.

Method Blank - The method blanks were free of contamination.

Field, Equipment Blank - Field QC results are summarized below.

Blank ID	Compound	Conc. ug/L	Action Level ug/L	Qualifier	Affected Samples
MR08-FB11108	None - ND	-	-	-	-
MR08-EB11108-1	None - ND	-	-	-	-

Blank ID	Compound	Conc. ug/L	Action Level ug/L	Qualifier	Affected Samples
MR08-EB111208-2	None - ND	-	-	-	-

Field Duplicates - Field duplicate results are summarized below.

Compound	MR08-SD01-08D ug/kg	MR08-SD01D-08D ug/kg	RPD	Qualifier
bis (2-Ethylhexyl) phthalate	1200	720	50%	None

Compound	MR08-SS377-08D ug/kg	MR08-SS377D-08D ug/kg	RPD	Qualifier
None	ND	ND	-	-

Tentatively Identified Compounds (TICs) - TICs were not reported.

Compound Quantitation - No discrepancies were identified.

KATAHDIN ANALYTICAL SERVICES
Report of Analytical Results

Client: CH2MHill
Project: TO-009 Lejeune
PO No:
Sample Date: 11/11/08
Received Date: 11/12/08
Extraction Date: 11/17/08
Analysis Date: 06-DEC-2008 21:21
Report Date: 12/10/2008
Matrix: SOIL
% Solids: 72.6

Lab ID: SB6512-1
Client ID: MR08-SD02-08D
SDG: TO9-2
Extracted by: CB
Extraction Method: SW846 3550
Analyst: JCG
Analysis Method: SW846 8270C
Lab Prep Batch: WG58144
Units: ug/Kgdrywt

CAS#	Compound	Flags	Results	DF	PQL	Adj.PQL	Adj.MDL	
100-52-7	Benzaldehyde	U	690	1.0	500	690	160	
108-95-2	Phenol	U	690	1.0	500	690	210	
111-44-4	Bis(2-Chloroethyl)ether	U	450	1.0	330	450	110	
95-57-8	2-Chlorophenol	U	690	1.0	500	690	220	
95-48-7	2-Methylphenol	U	830	1.0	600	830	280	
108-60-1	2,2'-Oxybis(1-chloropropane)	U	450	1.0	330	450	120	
98-86-2	Acetophenone	U	830	1.0	600	830	240	
621-64-7	N-Nitroso-di-n-propylamine	U	450	1.0	330	450	110	
65794-96-9	3&4-Methylphenol	U	830	1.0	600	830	260	
67-72-1	Hexachloroethane	U	450	1.0	330	450	130	
98-95-3	Nitrobenzene	U	450	1.0	330	450	120	
78-59-1	Isophorone	U	450	1.0	330	450	100	
88-75-5	2-Nitrophenol	U	830	1.0	600	830	230	
105-67-9	2,4-Dimethylphenol	U	690	1.0	500	690	230	
111-91-1	Bis(2-Chloroethoxy)methane	U	450	1.0	330	450	130	
120-83-2	2,4-Dichlorophenol	U	690	1.0	500	690	210	
106-47-8	4-Chloroaniline	~~U~~ R	690	1.0	500	690	160	MSL
105-60-2	Caprolactam	U	690	1.0	500	690	200	
59-50-7	4-Chloro-3-Methylphenol	U	690	1.0	500	690	230	
88-06-2	2,4,6-Trichlorophenol	U	690	1.0	500	690	210	
95-95-4	2,4,5-Trichlorophenol	U	690	1.0	500	690	210	
91-58-7	2-Chloronaphthalene	U	450	1.0	330	450	120	
92-52-4	1,1'-Biphenyl	U	450	1.0	330	450	100	
88-74-4	2-Nitroaniline	U	690	1.0	500	690	100	
131-11-3	Dimethyl Phthalate	U	450	1.0	330	450	110	
606-20-2	2,6-Dinitrotoluene	U	450	1.0	330	450	110	
208-96-8	Acenaphthylene	U	450	1.0	330	450	96	
99-09-2	3-Nitroaniline	~~U~~ UJ	690	1.0	500	690	130	MSL
83-32-9	Acenaphthene	U	450	1.0	330	450	89	
51-28-5	2,4-Dinitrophenol	U	1600	1.0	1200	1600	520	
132-64-9	Dibenzofuran	U	450	1.0	330	450	110	
100-02-7	4-Nitrophenol	U	1600	1.0	1200	1600	420	
121-14-2	2,4-Dinitrotoluene	U	450	1.0	330	450	120	
84-66-2	Diethylphthalate	U	450	1.0	330	450	110	
7005-72-3	4-Chlorophenyl-phenylether	U	450	1.0	330	450	110	
100-01-6	4-Nitroaniline	~~U~~ UJ	690	1.0	500	690	180	MSL
534-52-1	4,6-Dinitro-2-Methylphenol	U	1600	1.0	1200	1600	460	
86-30-6	N-Nitrosodiphenylamine	U	910	1.0	660	910	300	
101-55-3	4-Bromophenyl-phenylether	U	450	1.0	330	450	120	
1912-24-9	Atrazine	U	450	1.0	330	450	120	
87-86-5	Pentachlorophenol	U	1100	1.0	820	1100	330	
120-12-7	Anthracene	U	450	1.0	330	450	120	
86-74-8	Carbazole	U	690	1.0	500	690	150	

lw 1/30/09

KATAHDIN ANALYTICAL SERVICES
Report of Analytical Results

Client: CH2MHill
Project: TO-009 Lejeune
PO No:
Sample Date: 11/11/08
Received Date: 11/12/08
Extraction Date: 11/17/08
Analysis Date: 06-DEC-2008 21:21
Report Date: 12/10/2008
Matrix: SOIL
% Solids: 72.6

Lab ID: SB6512-1
Client ID: MR08-SD02-08D
SDG: TO9-2
Extracted by: CB
Extraction Method: SW846 3550
Analyst: JCG
Analysis Method: SW846 8270C
Lab Prep Batch: WG58144
Units: ug/Kgdrywt

CAS#	Compound	Flags	Results	DF	PQL	Adj.PQL	Adj.MDL	
84-74-2	Di-n-butylphthalate	U	450	1.0	330	450	140	
85-68-7	Butylbenzylphthalate	U	450	1.0	330	450	130	
91-94-1	3,3'-Dichlorobenzidine	~~U~~ R	690	1.0	500	690	160	MSL
218-01-9	Chrysene	U	450	1.0	330	450	130	
117-81-7	bis(2-Ethylhexyl)phthalate	J	180	1.0	330	450	130	
117-84-0	Di-n-octylphthalate	U	450	1.0	330	450	290	
367-12-4	2-Fluorophenol		75%					
13127-88-3	Phenol-D6		82%					
4165-60-0	Nitrobenzene-D5		72%					
321-60-8	2-Fluorobiphenyl		82%					
118-79-6	2,4,6-Tribromophenol		85%					
1718-51-0	Terphenyl-D14		91%					

MW 1/30/09

KATAHDIN ANALYTICAL SERVICES
Report of Analytical Results

Client: CH2MHill
Project: TO-009 Lejeune
PO No:
Sample Date: 11/10/08
Received Date: 11/12/08
Extraction Date: 11/17/08
Analysis Date: 06-DEC-2008 22:03
Report Date: 12/10/2008
Matrix: SOIL
% Solids: 91.1

Lab ID: SB6512-3
Client ID: MR08-SS378-08D
SDG: TO9-2
Extracted by: CB
Extraction Method: SW846 3550
Analyst: JCG
Analysis Method: SW846 8270C
Lab Prep Batch: WG58144
Units: ug/Kgdrywt

CAS#	Compound	Flags	Results	DF	PQL	Adj.PQL	Adj.MDL
100-52-7	Benzaldehyde	U	550	1.0	500	550	130
108-95-2	Phenol	U	550	1.0	500	550	170
111-44-4	Bis(2-Chloroethyl)ether	U	360	1.0	330	360	89
95-57-8	2-Chlorophenol	U	550	1.0	500	550	180
95-48-7	2-Methylphenol	U	660	1.0	600	660	220
108-60-1	2,2'-Oxybis(1-chloropropane)	U	360	1.0	330	360	98
98-86-2	Acetophenone	U	660	1.0	600	660	200
621-64-7	N-Nitroso-di-n-propylamine	U	360	1.0	330	360	91
65794-96-9	3&4-Methylphenol	U	660	1.0	600	660	200
67-72-1	Hexachloroethane	U	360	1.0	330	360	100
98-95-3	Nitrobenzene	U	360	1.0	330	360	100
78-59-1	Isophorone	U	360	1.0	330	360	82
88-75-5	2-Nitrophenol	U	660	1.0	600	660	180
105-67-9	2,4-Dimethylphenol	U	550	1.0	500	550	180
111-91-1	Bis(2-Chloroethoxy)methane	U	360	1.0	330	360	100
120-83-2	2,4-Dichlorophenol	U	550	1.0	500	550	160
106-47-8	4-Chloroaniline	U	550	1.0	500	550	130
105-60-2	Caprolactam	U	550	1.0	500	550	160
59-50-7	4-Chloro-3-Methylphenol	U	550	1.0	500	550	180
88-06-2	2,4,6-Trichlorophenol	U	550	1.0	500	550	170
95-95-4	2,4,5-Trichlorophenol	U	550	1.0	500	550	170
91-58-7	2-Chloronaphthalene	U	360	1.0	330	360	95
92-52-4	1,1'-Biphenyl	U	360	1.0	330	360	80
88-74-4	2-Nitroaniline	U	550	1.0	500	550	82
131-11-3	Dimethyl Phthalate	U	360	1.0	330	360	86
606-20-2	2,6-Dinitrotoluene	U	360	1.0	330	360	87
208-96-8	Acenaphthylene	U	360	1.0	330	360	77
99-09-2	3-Nitroaniline	U	550	1.0	500	550	100
83-32-9	Acenaphthene	U	360	1.0	330	360	71
51-28-5	2,4-Dinitrophenol	U	1300	1.0	1200	1300	410
132-64-9	Dibenzofuran	U	360	1.0	330	360	87
100-02-7	4-Nitrophenol	U	1300	1.0	1200	1300	340
121-14-2	2,4-Dinitrotoluene	U	360	1.0	330	360	93
84-66-2	Diethylphthalate	U	360	1.0	330	360	88
7005-72-3	4-Chlorophenyl-phenylether	U	360	1.0	330	360	86
100-01-6	4-Nitroaniline	U	550	1.0	500	550	150
534-52-1	4,6-Dinitro-2-Methylphenol	U	1300	1.0	1200	1300	370
86-30-6	N-Nitrosodiphenylamine	U	720	1.0	660	720	240
101-55-3	4-Bromophenyl-phenylether	U	360	1.0	330	360	93
1912-24-9	Atrazine	U	360	1.0	330	360	100
87-86-5	Pentachlorophenol	U	900	1.0	820	900	260
120-12-7	Anthracene	U	360	1.0	330	360	92
86-74-8	Carbazole	U	550	1.0	500	550	120

lcs
1/30/09

2

KATAHDIN ANALYTICAL SERVICES
Report of Analytical Results

Client: CH2MHill
Project: TO-009 Lejeune
PO No:
Sample Date: 11/10/08
Received Date: 11/12/08
Extraction Date: 11/17/08
Analysis Date: 06-DEC-2008 22:03
Report Date: 12/10/2008
Matrix: SOIL
% Solids: 91.1

Lab ID: SB6512-3
Client ID: MR08-SS378-08D
SDG: TO9-2
Extracted by: CB
Extraction Method: SW846 3550
Analyst: JCG
Analysis Method: SW846 8270C
Lab Prep Batch: WG58144
Units: ug/Kgdrywt

CAS#	Compound	Flags	Results	DF	PQL	Adj.PQL	Adj.MDL
84-74-2	Di-n-butylphthalate	U	360	1.0	330	360	110
85-68-7	Butylbenzylphthalate	U	360	1.0	330	360	100
91-94-1	3,3'-Dichlorobenzidine	U	550	1.0	500	550	120
218-01-9	Chrysene	U	360	1.0	330	360	100
117-81-7	bis(2-Ethylhexyl)phthalate	J	200	1.0	330	360	110
117-84-0	Di-n-octylphthalate	U	360	1.0	330	360	230
367-12-4	2-Fluorophenol		69%				
13127-88-3	Phenol-D6		74%				
4165-60-0	Nitrobenzene-D5		73%				
321-60-8	2-Fluorobiphenyl		80%				
118-79-6	2,4,6-Tribromophenol		89%				
1718-51-0	Terphenyl-D14		92%				

MW
1/30/09

KATAHDIN ANALYTICAL SERVICES
Report of Analytical Results

Client: CH2MHill
Project: TO-009 Lejeune
PO No:
Sample Date: 11/10/08
Received Date: 11/12/08
Extraction Date: 11/17/08
Analysis Date: 07-DEC-2008 14:38
Report Date: 12/10/2008
Matrix: SOIL
% Solids: 91.0

Lab ID: SB6512-5
Client ID: MR08-IS378-08D
SDG: TO9-2
Extracted by: CB
Extraction Method: SW846 3550
Analyst: JCG
Analysis Method: SW846 8270C
Lab Prep Batch: WG58144
Units: ug/Kgdrywt

CAS#	Compound	Flags	Results	DF	PQL	Adj.PQL	Adj.MDL
100-52-7	Benzaldehyde	U	550	1.0	500	550	130
108-95-2	Phenol	U	550	1.0	500	550	170
111-44-4	Bis(2-Chloroethyl)ether	U	360	1.0	330	360	89
95-57-8	2-Chlorophenol	U	550	1.0	500	550	180
95-48-7	2-Methylphenol	U	660	1.0	600	660	220
108-60-1	2,2'-Oxybis(1-chloropropane)	U	360	1.0	330	360	98
98-86-2	Acetophenone	U	660	1.0	600	660	200
621-64-7	N-Nitroso-di-n-propylamine	U	360	1.0	330	360	91
65794-96-9	3&4-Methylphenol	U	660	1.0	600	660	200
67-72-1	Hexachloroethane	U	360	1.0	330	360	100
98-95-3	Nitrobenzene	U	360	1.0	330	360	100
78-59-1	Isophorone	U	360	1.0	330	360	82
88-75-5	2-Nitrophenol	U	660	1.0	600	660	180
105-67-9	2,4-Dimethylphenol	U	550	1.0	500	550	180
111-91-1	Bis(2-Chloroethoxy)methane	U	360	1.0	330	360	100
120-83-2	2,4-Dichlorophenol	U	550	1.0	500	550	160
106-47-8	4-Chloroaniline	U	550	1.0	500	550	130
105-60-2	Caprolactam	U	550	1.0	500	550	160
59-50-7	4-Chloro-3-Methylphenol	U	550	1.0	500	550	180
88-06-2	2,4,6-Trichlorophenol	U	550	1.0	500	550	170
95-95-4	2,4,5-Trichlorophenol	U	550	1.0	500	550	170
91-58-7	2-Chloronaphthalene	U	360	1.0	330	360	96
92-52-4	1,1'-Biphenyl	U	360	1.0	330	360	80
88-74-4	2-Nitroaniline	U	550	1.0	500	550	82
131-11-3	Dimethyl Phthalate	U	360	1.0	330	360	86
606-20-2	2,6-Dinitrotoluene	U	360	1.0	330	360	87
208-96-8	Acenaphthylene	U	360	1.0	330	360	77
99-09-2	3-Nitroaniline	U	550	1.0	500	550	100
83-32-9	Acenaphthene	U	360	1.0	330	360	71
51-28-5	2,4-Dinitrophenol	U	1300	1.0	1200	1300	410
132-64-9	Dibenzofuran	U	360	1.0	330	360	87
100-02-7	4-Nitrophenol	U	1300	1.0	1200	1300	340
121-14-2	2,4-Dinitrotoluene	U	360	1.0	330	360	93
84-66-2	Diethylphthalate	U	360	1.0	330	360	88
7005-72-3	4-Chlorophenyl-phenylether	U	360	1.0	330	360	86
100-01-6	4-Nitroaniline	U	550	1.0	500	550	150
534-52-1	4,6-Dinitro-2-Methylphenol	U	1300	1.0	1200	1300	370
86-30-6	N-Nitrosodiphenylamine	U	720	1.0	660	720	240
101-55-3	4-Bromophenyl-phenylether	U	360	1.0	330	360	93
1912-24-9	Atrazine	U	360	1.0	330	360	100
87-86-5	Pentachlorophenol	U	900	1.0	820	900	260
120-12-7	Anthracene	U	360	1.0	330	360	92
86-74-8	Carbazole	U	550	1.0	500	550	120

lrw
1/30/09

3

KATAHDIN ANALYTICAL SERVICES
Report of Analytical Results

Client: CH2MHill
Project: TO-009 Lejeune
PO No:
Sample Date: 11/10/08
Received Date: 11/12/08
Extraction Date: 11/17/08
Analysis Date: 07-DEC-2008 14:38
Report Date: 12/10/2008
Matrix: SOIL
% Solids: 91.0

Lab ID: SB6512-5
Client ID: MR08-IS378-08D
SDG: TO9-2
Extracted by: CB
Extraction Method: SW846 3550
Analyst: JCG
Analysis Method: SW846 8270C
Lab Prep Batch: WG58144
Units: ug/Kgdrywt

CAS#	Compound	Flags	Results	DF	PQL	Adj.PQL	Adj.MDL	
84-74-2	Di-n-butylphthalate	U	360	1.0	330	360	110	
85-68-7	Butylbenzylphthalate	U	360	1.0	330	360	100	
91-94-1	3,3'-Dichlorobenzidine	U	550	1.0	500	550	120	
218-01-9	Chrysene	U	360	1.0	330	360	100	
117-81-7	bis(2-Ethylhexyl)phthalate	J	1800	1.0	330	360	110	CCH
117-84-0	Di-n-octylphthalate	~~U~~ UJ	360	1.0	330	360	230	CCH
367-12-4	2-Fluorophenol		75%					
13127-88-3	Phenol-D6		77%					
4165-60-0	Nitrobenzene-D5		78%					
321-60-8	2-Fluorobiphenyl		82%					
118-79-6	2,4,6-Tribromophenol		87%					
1718-51-0	Terphenyl-D14		102%					

LW 1/30/09

KATAHDIN ANALYTICAL SERVICES
Report of Analytical Results

Client: CH2MHill
Project: TO-009 Lejeune
PO No:
Sample Date: 11/10/08
Received Date: 11/12/08
Extraction Date: 11/17/08
Analysis Date: 07-DEC-2008 15:20
Report Date: 12/10/2008
Matrix: SOIL
% Solids: 90.2

Lab ID: SB6512-7
Client ID: MR08-SS380-08D
SDG: TO9-2
Extracted by: CB
Extraction Method: SW846 3550
Analyst: JCG
Analysis Method: SW846 8270C
Lab Prep Batch: WG58144
Units: ug/Kgdrywt

CAS#	Compound	Flags	Results	DF	PQL	Adj.PQL	Adj.MDL
100-52-7	Benzaldehyde	U	550	1.0	500	550	130
108-95-2	Phenol	U	550	1.0	500	550	170
111-44-4	Bis(2-Chloroethyl)ether	U	360	1.0	330	360	90
95-57-8	2-Chlorophenol	U	550	1.0	500	550	180
95-48-7	2-Methylphenol	U	660	1.0	600	660	220
108-60-1	2,2'-Oxybis(1-chloropropane)	U	360	1.0	330	360	99
98-86-2	Acetophenone	U	660	1.0	600	660	200
621-64-7	N-Nitroso-di-n-propylamine	U	360	1.0	330	360	92
65794-96-9	3&4-Methylphenol	U	660	1.0	600	660	210
67-72-1	Hexachloroethane	U	360	1.0	330	360	110
98-95-3	Nitrobenzene	U	360	1.0	330	360	100
78-59-1	Isophorone	U	360	1.0	330	360	83
88-75-5	2-Nitrophenol	U	660	1.0	600	660	180
105-67-9	2,4-Dimethylphenol	U	550	1.0	500	550	180
111-91-1	Bis(2-Chloroethoxy)methane	U	360	1.0	330	360	110
120-83-2	2,4-Dichlorophenol	U	550	1.0	500	550	170
106-47-8	4-Chloroaniline	U	550	1.0	500	550	130
105-60-2	Caprolactam	U	550	1.0	500	550	160
59-50-7	4-Chloro-3-Methylphenol	U	550	1.0	500	550	180
88-06-2	2,4,6-Trichlorophenol	U	550	1.0	500	550	170
95-95-4	2,4,5-Trichlorophenol	U	550	1.0	500	550	170
91-58-7	2-Chloronaphthalene	U	360	1.0	330	360	96
92-52-4	1,1'-Biphenyl	U	360	1.0	330	360	81
88-74-4	2-Nitroaniline	U	550	1.0	500	550	83
131-11-3	Dimethyl Phthalate	U	360	1.0	330	360	86
606-20-2	2,6-Dinitrotoluene	U	360	1.0	330	360	88
208-96-8	Acenaphthylene	U	360	1.0	330	360	78
99-09-2	3-Nitroaniline	U	550	1.0	500	550	100
83-32-9	Acenaphthene	U	360	1.0	330	360	72
51-28-5	2,4-Dinitrophenol	U	1300	1.0	1200	1300	420
132-64-9	Dibenzofuran	U	360	1.0	330	360	88
100-02-7	4-Nitrophenol	U	1300	1.0	1200	1300	340
121-14-2	2,4-Dinitrotoluene	U	360	1.0	330	360	94
84-66-2	Diethylphthalate	U	360	1.0	330	360	89
7005-72-3	4-Chlorophenyl-phenylether	U	360	1.0	330	360	86
100-01-6	4-Nitroaniline	U	550	1.0	500	550	150
534-52-1	4,6-Dinitro-2-Methylphenol	U	1300	1.0	1200	1300	370
86-30-6	N-Nitrosodiphenylamine	U	730	1.0	660	730	240
101-55-3	4-Bromophenyl-phenylether	U	360	1.0	330	360	94
1912-24-9	Atrazine	U	360	1.0	330	360	100
87-86-5	Pentachlorophenol	U	910	1.0	820	910	260
120-12-7	Anthracene	U	360	1.0	330	360	93
86-74-8	Carbazole	U	550	1.0	500	550	120

lw 1130/09

4

KATAHDIN ANALYTICAL SERVICES
Report of Analytical Results

Client: CH2MHill
Project: TO-009 Lejeune
PO No:
Sample Date: 11/10/08
Received Date: 11/12/08
Extraction Date: 11/17/08
Analysis Date: 07-DEC-2008 15:20
Report Date: 12/10/2008
Matrix: SOIL
% Solids: 90.2

Lab ID: SB6512-7
Client ID: MR08-SS380-08D
SDG: TO9-2
Extracted by: CB
Extraction Method: SW846 3550
Analyst: JCG
Analysis Method: SW846 8270C
Lab Prep Batch: WG58144
Units: ug/Kgdrywt

CAS#	Compound	Flags	Results	DF	PQL	Adj.PQL	Adj.MDL	
84-74-2	Di-n-butylphthalate	U	360	1.0	330	360	110	
85-68-7	Butylbenzylphthalate	U	360	1.0	330	360	100	
91-94-1	3,3'-Dichlorobenzidine	U	550	1.0	500	550	130	
218-01-9	Chrysene	U	360	1.0	330	360	100	
117-81-7	bis(2-Ethylhexyl)phthalate	~~U~~ UJ	360	1.0	330	360	110	CCH
117-84-0	Di-n-octylphthalate	~~U~~ UJ	360	1.0	330	360	230	CCH
367-12-4	2-Fluorophenol		75%					
13127-88-3	Phenol-D6		82%					
4165-60-0	Nitrobenzene-D5		77%					
321-60-8	2-Fluorobiphenyl		81%					
118-79-6	2,4,6-Tribromophenol		90%					
1718-51-0	Terphenyl-D14		112%					

LW 11/30/09

KATAHDIN ANALYTICAL SERVICES
Report of Analytical Results

Client: CH2MHill
Project: TO-009 Lejeune
PO No:
Sample Date: 11/11/08
Received Date: 11/12/08
Extraction Date: 11/17/08
Analysis Date: 07-DEC-2008 13:14
Report Date: 12/10/2008
Matrix: SOIL
% Solids: 93.7

Lab ID: SB6512-9
Client ID: MR08-IS380-08D
SDG: TO9-2
Extracted by: CB
Extraction Method: SW846 3550
Analyst: JCG
Analysis Method: SW846 8270C
Lab Prep Batch: WG58144
Units: ug/Kgdrywt

CAS#	Compound	Flags	Results	DF	PQL	Adj.PQL	Adj.MDL
100-52-7	Benzaldehyde	U	530	1.0	500	530	130
108-95-2	Phenol	U	530	1.0	500	530	170
111-44-4	Bis(2-Chloroethyl)ether	U	350	1.0	330	350	86
95-57-8	2-Chlorophenol	U	530	1.0	500	530	170
95-48-7	2-Methylphenol	U	640	1.0	600	640	210
108-60-1	2,2'-Oxybis(1-chloropropane)	U	350	1.0	330	350	95
98-86-2	Acetophenone	U	640	1.0	600	640	190
621-64-7	N-Nitroso-di-n-propylamine	U	350	1.0	330	350	88
65794-96-9	3&4-Methylphenol	U	640	1.0	600	640	200
67-72-1	Hexachloroethane	U	350	1.0	330	350	100
98-95-3	Nitrobenzene	U	350	1.0	330	350	97
78-59-1	Isophorone	U	350	1.0	330	350	80
88-75-5	2-Nitrophenol	U	640	1.0	600	640	180
105-67-9	2,4-Dimethylphenol	U	530	1.0	500	530	180
111-91-1	Bis(2-Chloroethoxy)methane	U	350	1.0	330	350	100
120-83-2	2,4-Dichlorophenol	U	530	1.0	500	530	160
106-47-8	4-Chloroaniline	U	530	1.0	500	530	130
105-60-2	Caprolactam	U	530	1.0	500	530	150
59-50-7	4-Chloro-3-Methylphenol	U	530	1.0	500	530	180
88-06-2	2,4,6-Trichlorophenol	U	530	1.0	500	530	160
95-95-4	2,4,5-Trichlorophenol	U	530	1.0	500	530	160
91-58-7	2-Chloronaphthalene	U	350	1.0	330	350	93
92-52-4	1,1'-Biphenyl	U	350	1.0	330	350	78
88-74-4	2-Nitroaniline	U	530	1.0	500	530	80
131-11-3	Dimethyl Phthalate	U	350	1.0	330	350	83
606-20-2	2,6-Dinitrotoluene	U	350	1.0	330	350	84
208-96-8	Acenaphthylene	U	350	1.0	330	350	75
99-09-2	3-Nitroaniline	U	530	1.0	500	530	100
83-32-9	Acenaphthene	U	350	1.0	330	350	69
51-28-5	2,4-Dinitrophenol	U	1300	1.0	1200	1300	400
132-64-9	Dibenzofuran	U	350	1.0	330	350	84
100-02-7	4-Nitrophenol	U	1300	1.0	1200	1300	330
121-14-2	2,4-Dinitrotoluene	U	350	1.0	330	350	91
84-66-2	Diethylphthalate	U	350	1.0	330	350	85
7005-72-3	4-Chlorophenyl-phenylether	U	350	1.0	330	350	83
100-01-6	4-Nitroaniline	U	530	1.0	500	530	140
534-52-1	4,6-Dinitro-2-Methylphenol	U	1300	1.0	1200	1300	360
86-30-6	N-Nitrosodiphenylamine	U	700	1.0	660	700	230
101-55-3	4-Bromophenyl-phenylether	U	350	1.0	330	350	91
1912-24-9	Atrazine	U	350	1.0	330	350	97
87-86-5	Pentachlorophenol	U	870	1.0	820	870	250
120-12-7	Anthracene	U	350	1.0	330	350	90
86-74-8	Carbazole	U	530	1.0	500	530	120

lw 1/30/09

5

KATAHDIN ANALYTICAL SERVICES
Report of Analytical Results

Client: CH2MHill
Project: TO-009 Lejeune
PO No:
Sample Date: 11/11/08
Received Date: 11/12/08
Extraction Date: 11/17/08
Analysis Date: 07-DEC-2008 13:14
Report Date: 12/10/2008
Matrix: SOIL
% Solids: 93.7

Lab ID: SB6512-9
Client ID: MR08-IS380-08D
SDG: TO9-2
Extracted by: CB
Extraction Method: SW846 3550
Analyst: JCG
Analysis Method: SW846 8270C
Lab Prep Batch: WG58144
Units: ug/Kgdrywt

CAS#	Compound	Flags	Results	DF	PQL	Adj.PQL	Adj.MDL	
84-74-2	Di-n-butylphthalate	U	350	1.0	330	350	110	
85-68-7	Butylbenzylphthalate	U	350	1.0	330	350	99	
91-94-1	3,3'-Dichlorobenzidine	U	530	1.0	500	530	120	
218-01-9	Chrysene	U	350	1.0	330	350	100	
117-81-7	bis(2-Ethylhexyl)phthalate	~~U~~ UJ	350	1.0	330	350	100	CCH
117-84-0	Di-n-octylphthalate	~~U~~ UJ	350	1.0	330	350	220	CCH
367-12-4	2-Fluorophenol		74%					
13127-88-3	Phenol-D6		81%					
4165-60-0	Nitrobenzene-D5		79%					
321-60-8	2-Fluorobiphenyl		83%					
118-79-6	2,4,6-Tribromophenol		77%					
1718-51-0	Terphenyl-D14		95%					

lw 11/30/09

6

KATAHDIN ANALYTICAL SERVICES
Report of Analytical Results

Client: CH2MHill
Project: TO-009 Lejeune
PO No:
Sample Date: 11/11/08
Received Date: 11/12/08
Extraction Date: 11/17/08
Analysis Date: 07-DEC-2008 16:02
Report Date: 12/10/2008
Matrix: SOIL
% Solids: 90.9

Lab ID: SB6512-11
Client ID: MR08-SS381-08D
SDG: TO9-2
Extracted by: CB
Extraction Method: SW846 3550
Analyst: JCG
Analysis Method: SW846 8270C
Lab Prep Batch: WG58144
Units: ug/Kgdrywt

CAS#	Compound	Flags	Results	DF	PQL	Adj.PQL	Adj.MDL
100-52-7	Benzaldehyde	U	550	1.0	500	550	130
108-95-2	Phenol	U	550	1.0	500	550	170
111-44-4	Bis(2-Chloroethyl)ether	U	360	1.0	330	360	89
95-57-8	2-Chlorophenol	U	550	1.0	500	550	180
95-48-7	2-Methylphenol	U	660	1.0	600	660	220
108-60-1	2,2'-Oxybis(1-chloropropane)	U	360	1.0	330	360	98
98-86-2	Acetophenone	U	660	1.0	600	660	200
621-64-7	N-Nitroso-di-n-propylamine	U	360	1.0	330	360	91
65794-96-9	3&4-Methylphenol	U	660	1.0	600	660	200
67-72-1	Hexachloroethane	U	360	1.0	330	360	100
98-95-3	Nitrobenzene	U	360	1.0	330	360	100
78-59-1	Isophorone	U	360	1.0	330	360	82
88-75-5	2-Nitrophenol	U	660	1.0	600	660	180
105-67-9	2,4-Dimethylphenol	U	550	1.0	500	550	180
111-91-1	Bis(2-Chloroethoxy)methane	U	360	1.0	330	360	100
120-83-2	2,4-Dichlorophenol	U	550	1.0	500	550	160
106-47-8	4-Chloroaniline	U	550	1.0	500	550	130
105-60-2	Caprolactam	U	550	1.0	500	550	160
59-50-7	4-Chloro-3-Methylphenol	U	550	1.0	500	550	180
88-06-2	2,4,6-Trichlorophenol	U	550	1.0	500	550	170
95-95-4	2,4,5-Trichlorophenol	U	550	1.0	500	550	170
91-58-7	2-Chloronaphthalene	U	360	1.0	330	360	96
92-52-4	1,1'-Biphenyl	U	360	1.0	330	360	80
88-74-4	2-Nitroaniline	U	550	1.0	500	550	82
131-11-3	Dimethyl Phthalate	U	360	1.0	330	360	86
606-20-2	2,6-Dinitrotoluene	U	360	1.0	330	360	87
208-96-8	Acenaphthylene	U	360	1.0	330	360	77
99-09-2	3-Nitroaniline	U	550	1.0	500	550	100
83-32-9	Acenaphthene	U	360	1.0	330	360	72
51-28-5	2,4-Dinitrophenol	U	1300	1.0	1200	1300	410
132-64-9	Dibenzofuran	U	360	1.0	330	360	87
100-02-7	4-Nitrophenol	U	1300	1.0	1200	1300	340
121-14-2	2,4-Dinitrotoluene	U	360	1.0	330	360	94
84-66-2	Diethylphthalate	U	360	1.0	330	360	88
7005-72-3	4-Chlorophenyl-phenylether	U	360	1.0	330	360	86
100-01-6	4-Nitroaniline	U	550	1.0	500	550	150
534-52-1	4,6-Dinitro-2-Methylphenol	U	1300	1.0	1200	1300	370
86-30-6	N-Nitrosodiphenylamine	U	730	1.0	660	730	240
101-55-3	4-Bromophenyl-phenylether	U	360	1.0	330	360	94
1912-24-9	Atrazine	U	360	1.0	330	360	100
87-86-5	Pentachlorophenol	U	900	1.0	820	900	260
120-12-7	Anthracene	U	360	1.0	330	360	92
86-74-8	Carbazole	U	550	1.0	500	550	120

lw
1/30/09

6

KATAHDIN ANALYTICAL SERVICES
Report of Analytical Results

Client: CH2MHill
Project: TO-009 Lejeune
PO No:
Sample Date: 11/11/08
Received Date: 11/12/08
Extraction Date: 11/17/08
Analysis Date: 07-DEC-2008 16:02
Report Date: 12/10/2008
Matrix: SOIL
% Solids: 90.9

Lab ID: SB6512-11
Client ID: MR08-SS381-08D
SDG: TO9-2
Extracted by: CB
Extraction Method: SW846 3550
Analyst: JCG
Analysis Method: SW846 8270C
Lab Prep Batch: WG58144
Units: ug/Kgdrywt

CAS#	Compound	Flags	Results	DF	PQL	Adj.PQL	Adj.MDL	
84-74-2	Di-n-butylphthalate	U	360	1.0	330	360	110	
85-68-7	Butylbenzylphthalate	U	360	1.0	330	360	100	
91-94-1	3,3'-Dichlorobenzidine	U	550	1.0	500	550	120	
218-01-9	Chrysene	U	360	1.0	330	360	100	
117-81-7	bis(2-Ethylhexyl)phthalate	~~U~~ UJ	360	1.0	330	360	110	CCH
117-84-0	Di-n-octylphthalate	~~U~~ UJ	360	1.0	330	360	230	CCH
367-12-4	2-Fluorophenol		69%					
13127-88-3	Phenol-D6		76%					
4165-60-0	Nitrobenzene-D5		70%					
321-60-8	2-Fluorobiphenyl		80%					
118-79-6	2,4,6-Tribromophenol		85%					
1718-51-0	Terphenyl-D14		92%					

KW
1/30/09

7

KATAHDIN ANALYTICAL SERVICES
Report of Analytical Results

Client: CH2MHill
Project: TO-009 Lejeune
PO No:
Sample Date: 11/11/08
Received Date: 11/12/08
Extraction Date: 11/17/08
Analysis Date: 07-DEC-2008 23:01
Report Date: 12/10/2008
Matrix: SOIL
% Solids: 38.0

Lab ID: SB6512-13
Client ID: MR08-SD01-08D
SDG: TO9-2
Extracted by: CB
Extraction Method: SW846 3550
Analyst: JCG
Analysis Method: SW846 8270C
Lab Prep Batch: WG58144
Units: ug/Kgdrywt

CAS#	Compound	Flags	Results	DF	PQL	Adj.PQL	Adj.MDL
100-52-7	Benzaldehyde	U	1300	1.0	500	1300	320
108-95-2	Phenol	U	1300	1.0	500	1300	410
111-44-4	Bis(2-Chloroethyl)ether	U	870	1.0	330	870	210
95-57-8	2-Chlorophenol	U	1300	1.0	500	1300	430
95-48-7	2-Methylphenol	U	1600	1.0	600	1600	530
108-60-1	2,2'-Oxybis(1-chloropropane)	U	870	1.0	330	870	230
98-86-2	Acetophenone	U	1600	1.0	600	1600	470
621-64-7	N-Nitroso-di-n-propylamine	U	870	1.0	330	870	220
65794-96-9	3&4-Methylphenol	U	1600	1.0	600	1600	490
67-72-1	Hexachloroethane	U	870	1.0	330	870	250
98-95-3	Nitrobenzene	U	870	1.0	330	870	240
78-59-1	Isophorone	U	870	1.0	330	870	200
88-75-5	2-Nitrophenol	U	1600	1.0	600	1600	440
105-67-9	2,4-Dimethylphenol	U	1300	1.0	500	1300	430
111-91-1	Bis(2-Chloroethoxy)methane	U	870	1.0	330	870	250
120-83-2	2,4-Dichlorophenol	U	1300	1.0	500	1300	390
106-47-8	4-Chloroaniline	U	1300	1.0	500	1300	310
105-60-2	Caprolactam	U	1300	1.0	500	1300	380
59-50-7	4-Chloro-3-Methylphenol	U	1300	1.0	500	1300	440
88-06-2	2,4,6-Trichlorophenol	U	1300	1.0	500	1300	410
95-95-4	2,4,5-Trichlorophenol	U	1300	1.0	500	1300	410
91-58-7	2-Chloronaphthalene	U	870	1.0	330	870	230
92-52-4	1,1'-Biphenyl	U	870	1.0	330	870	190
88-74-4	2-Nitroaniline	U	1300	1.0	500	1300	200
131-11-3	Dimethyl Phthalate	U	870	1.0	330	870	200
606-20-2	2,6-Dinitrotoluene	U	870	1.0	330	870	210
208-96-8	Acenaphthylene	U	870	1.0	330	870	180
99-09-2	3-Nitroaniline	U	1300	1.0	500	1300	250
83-32-9	Acenaphthene	U	870	1.0	330	870	170
51-28-5	2,4-Dinitrophenol	U	3200	1.0	1200	3200	990
132-64-9	Dibenzofuran	U	870	1.0	330	870	210
100-02-7	4-Nitrophenol	U	3200	1.0	1200	3200	810
121-14-2	2,4-Dinitrotoluene	U	870	1.0	330	870	220
84-66-2	Diethylphthalate	U	870	1.0	330	870	210
7005-72-3	4-Chlorophenyl-phenylether	U	870	1.0	330	870	200
100-01-6	4-Nitroaniline	U	1300	1.0	500	1300	350
534-52-1	4,6-Dinitro-2-Methylphenol	U	3200	1.0	1200	3200	890
86-30-6	N-Nitrosodiphenylamine	U	1700	1.0	660	1700	580
101-55-3	4-Bromophenyl-phenylether	U	870	1.0	330	870	220
1912-24-9	Atrazine	U	870	1.0	330	870	240
87-86-5	Pentachlorophenol	U	2200	1.0	820	2200	620
120-12-7	Anthracene	U	870	1.0	330	870	220
86-74-8	Carbazole	U	1300	1.0	500	1300	290

LW 1/30/09

7

KATAHDIN ANALYTICAL SERVICES
Report of Analytical Results

Client: CH2MHill
Project: TO-009 Lejeune
PO No:
Sample Date: 11/11/08
Received Date: 11/12/08
Extraction Date: 11/17/08
Analysis Date: 07-DEC-2008 23:01
Report Date: 12/10/2008
Matrix: SOIL
% Solids: 38.0

Lab ID: SB6512-13
Client ID: MR08-SD01-08D
SDG: TO9-2
Extracted by: CB
Extraction Method: SW846 3550
Analyst: JCG
Analysis Method: SW846 8270C
Lab Prep Batch: WG58144
Units: ug/Kgdrywt

CAS#	Compound	Flags	Results	DF	PQL	Adj.PQL	Adj.MDL	
84-74-2	Di-n-butylphthalate	U	870	1.0	330	870	260	
85-68-7	Butylbenzylphthalate	U	870	1.0	330	870	240	
91-94-1	3,3'-Dichlorobenzidine	U	1300	1.0	500	1300	300	
218-01-9	Chrysene	U	870	1.0	330	870	250	
117-81-7	bis(2-Ethylhexyl)phthalate	J	1200	1.0	330	870	260	CCH
117-84-0	Di-n-octylphthalate	~~U~~ UJ	870	1.0	330	870	560	CCH
367-12-4	2-Fluorophenol		69%					
13127-88-3	Phenol-D6		77%					
4165-60-0	Nitrobenzene-D5		58%					
321-60-8	2-Fluorobiphenyl		72%					
118-79-6	2,4,6-Tribromophenol		81%					
1718-51-0	Terphenyl-D14		81%					

lw 1/30/09

8

KATAHDIN ANALYTICAL SERVICES
Report of Analytical Results

Client: CH2MHill
Project: TO-009 Lejeune
PO No:
Sample Date: 11/11/08
Received Date: 11/12/08
Extraction Date: 11/17/08
Analysis Date: 07-DEC-2008 22:19
Report Date: 12/10/2008
Matrix: SOIL
% Solids: 39.0

Lab ID: SB6512-15
Client ID: MR08-SD01D-08D
SDG: TO9-2
Extracted by: CB
Extraction Method: SW846 3550
Analyst: JCG
Analysis Method: SW846 8270C
Lab Prep Batch: WG58144
Units: ug/Kgdrywt

CAS#	Compound	Flags	Results	DF	PQL	Adj.PQL	Adj.MDL
100-52-7	Benzaldehyde	U	1300	1.0	500	1300	310
108-95-2	Phenol	U	1300	1.0	500	1300	400
111-44-4	Bis(2-Chloroethyl)ether	U	850	1.0	330	850	210
95-57-8	2-Chlorophenol	U	1300	1.0	500	1300	420
95-48-7	2-Methylphenol	U	1500	1.0	600	1500	510
108-60-1	2,2'-Oxybis(1-chloropropane)	U	850	1.0	330	850	230
98-86-2	Acetophenone	U	1500	1.0	600	1500	460
621-64-7	N-Nitroso-di-n-propylamine	U	850	1.0	330	850	210
65794-96-9	3&4-Methylphenol	U	1500	1.0	600	1500	480
67-72-1	Hexachloroethane	U	850	1.0	330	850	250
98-95-3	Nitrobenzene	U	850	1.0	330	850	230
78-59-1	Isophorone	U	850	1.0	330	850	190
88-75-5	2-Nitrophenol	U	1500	1.0	600	1500	430
105-67-9	2,4-Dimethylphenol	U	1300	1.0	500	1300	420
111-91-1	Bis(2-Chloroethoxy)methane	U	850	1.0	330	850	250
120-83-2	2,4-Dichlorophenol	U	1300	1.0	500	1300	380
106-47-8	4-Chloroaniline	U	1300	1.0	500	1300	300
105-60-2	Caprolactam	U	1300	1.0	500	1300	370
59-50-7	4-Chloro-3-Methylphenol	U	1300	1.0	500	1300	420
88-06-2	2,4,6-Trichlorophenol	U	1300	1.0	500	1300	400
95-95-4	2,4,5-Trichlorophenol	U	1300	1.0	500	1300	400
91-58-7	2-Chloronaphthalene	U	850	1.0	330	850	220
92-52-4	1,1'-Biphenyl	U	850	1.0	330	850	190
88-74-4	2-Nitroaniline	U	1300	1.0	500	1300	190
131-11-3	Dimethyl Phthalate	U	850	1.0	330	850	200
606-20-2	2,6-Dinitrotoluene	U	850	1.0	330	850	200
208-96-8	Acenaphthylene	U	850	1.0	330	850	180
99-09-2	3-Nitroaniline	U	1300	1.0	500	1300	240
83-32-9	Acenaphthene	U	850	1.0	330	850	170
51-28-5	2,4-Dinitrophenol	U	3100	1.0	1200	3100	970
132-64-9	Dibenzofuran	U	850	1.0	330	850	200
100-02-7	4-Nitrophenol	U	3100	1.0	1200	3100	790
121-14-2	2,4-Dinitrotoluene	U	850	1.0	330	850	220
84-66-2	Diethylphthalate	U	850	1.0	330	850	200
7005-72-3	4-Chlorophenyl-phenylether	U	850	1.0	330	850	200
100-01-6	4-Nitroaniline	U	1300	1.0	500	1300	340
534-52-1	4,6-Dinitro-2-Methylphenol	U	3100	1.0	1200	3100	860
86-30-6	N-Nitrosodiphenylamine	U	1700	1.0	660	1700	560
101-55-3	4-Bromophenyl-phenylether	U	850	1.0	330	850	220
1912-24-9	Atrazine	U	850	1.0	330	850	230
87-86-5	Pentachlorophenol	U	2100	1.0	820	2100	610
120-12-7	Anthracene	U	850	1.0	330	850	220
86-74-8	Carbazole	U	1300	1.0	500	1300	280

1/30/09

8

KATAHDIN ANALYTICAL SERVICES
Report of Analytical Results

Client: CH2MHill
Project: TO-009 Lejeune
PO No:
Sample Date: 11/11/08
Received Date: 11/12/08
Extraction Date: 11/17/08
Analysis Date: 07-DEC-2008 22:19
Report Date: 12/10/2008
Matrix: SOIL
% Solids: 39.0

Lab ID: SB6512-15
Client ID: MR08-SD01D-08D
SDG: TO9-2
Extracted by: CB
Extraction Method: SW846 3550
Analyst: JCG
Analysis Method: SW846 8270C
Lab Prep Batch: WG58144
Units: ug/Kgdrywt

CAS#	Compound	Flags	Results	DF	PQL	Adj.PQL	Adj.MDL
84-74-2	Di-n-butylphthalate	U	850	1.0	330	850	260
85-68-7	Butylbenzylphthalate	U	850	1.0	330	850	240
91-94-1	3,3'-Dichlorobenzidine	U	1300	1.0	500	1300	290
218-01-9	Chrysene	U	850	1.0	330	850	240
117-81-7	bis(2-Ethylhexyl)phthalate	~~U~~ J	720	1.0	330	850	250 CCH
117-84-0	Di-n-octylphthalate	~~U~~ UJ	850	1.0	330	850	540 CCH
367-12-4	2-Fluorophenol		58%				
13127-88-3	Phenol-D6		70%				
4165-60-0	Nitrobenzene-D5		48%				
321-60-8	2-Fluorobiphenyl		60%				
118-79-6	2,4,6-Tribromophenol		77%				
1718-51-0	Terphenyl-D14		71%				

lw
1/30/09

9

KATAHDIN ANALYTICAL SERVICES
Report of Analytical Results

Client: CH2MHill
Project: TO-009 Lejeune
PO No:
Sample Date: 11/11/08
Received Date: 11/12/08
Extraction Date: 11/17/08
Analysis Date: 07-DEC-2008 16:44
Report Date: 12/10/2008
Matrix: SOIL
% Solids: 91.1

Lab ID: SB6512-17
Client ID: MR08-SS379-08D
SDG: TO9-2
Extracted by: CB
Extraction Method: SW846 3550
Analyst: JCG
Analysis Method: SW846 8270C
Lab Prep Batch: WG58144
Units: ug/Kgdrywt

CAS#	Compound	Flags	Results	DF	PQL	Adj.PQL	Adj.MDL
100-52-7	Benzaldehyde	U	550	1.0	500	550	130
108-95-2	Phenol	U	550	1.0	500	550	170
111-44-4	Bis(2-Chloroethyl)ether	U	360	1.0	330	360	89
95-57-8	2-Chlorophenol	U	550	1.0	500	550	180
95-48-7	2-Methylphenol	U	660	1.0	600	660	220
108-60-1	2,2'-Oxybis(1-chloropropane)	U	360	1.0	330	360	98
98-86-2	Acetophenone	U	660	1.0	600	660	200
621-64-7	N-Nitroso-di-n-propylamine	U	360	1.0	330	360	91
65794-96-9	3&4-Methylphenol	U	660	1.0	600	660	200
67-72-1	Hexachloroethane	U	360	1.0	330	360	100
98-95-3	Nitrobenzene	U	360	1.0	330	360	100
78-59-1	Isophorone	U	360	1.0	330	360	82
88-75-5	2-Nitrophenol	U	660	1.0	600	660	180
105-67-9	2,4-Dimethylphenol	U	550	1.0	500	550	180
111-91-1	Bis(2-Chloroethoxy)methane	U	360	1.0	330	360	100
120-83-2	2,4-Dichlorophenol	U	550	1.0	500	550	160
106-47-8	4-Chloroaniline	U	550	1.0	500	550	130
105-60-2	Caprolactam	U	550	1.0	500	550	160
59-50-7	4-Chloro-3-Methylphenol	U	550	1.0	500	550	180
88-06-2	2,4,6-Trichlorophenol	U	550	1.0	500	550	170
95-95-4	2,4,5-Trichlorophenol	U	550	1.0	500	550	170
91-58-7	2-Chloronaphthalene	U	360	1.0	330	360	95
92-52-4	1,1'-Biphenyl	U	360	1.0	330	360	80
88-74-4	2-Nitroaniline	U	550	1.0	500	550	82
131-11-3	Dimethyl Phthalate	U	360	1.0	330	360	86
606-20-2	2,6-Dinitrotoluene	U	360	1.0	330	360	87
208-96-8	Acenaphthylene	U	360	1.0	330	360	77
99-09-2	3-Nitroaniline	U	550	1.0	500	550	100
83-32-9	Acenaphthene	U	360	1.0	330	360	71
51-28-5	2,4-Dinitrophenol	U	1300	1.0	1200	1300	410
132-64-9	Dibenzofuran	U	360	1.0	330	360	87
100-02-7	4-Nitrophenol	U	1300	1.0	1200	1300	340
121-14-2	2,4-Dinitrotoluene	U	360	1.0	330	360	93
84-66-2	Diethylphthalate	U	360	1.0	330	360	88
7005-72-3	4-Chlorophenyl-phenylether	U	360	1.0	330	360	86
100-01-6	4-Nitroaniline	U	550	1.0	500	550	150
534-52-1	4,6-Dinitro-2-Methylphenol	U	1300	1.0	1200	1300	370
86-30-6	N-Nitrosodiphenylamine	U	720	1.0	660	720	240
101-55-3	4-Bromophenyl-phenylether	U	360	1.0	330	360	93
1912-24-9	Atrazine	U	360	1.0	330	360	100
87-86-5	Pentachlorophenol	U	900	1.0	820	900	260
120-12-7	Anthracene	U	360	1.0	330	360	92
86-74-8	Carbazole	U	550	1.0	500	550	120

lw
1/30/09

9

KATAHDIN ANALYTICAL SERVICES
Report of Analytical Results

Client: CH2MHill
Project: TO-009 Lejeune
PO No:
Sample Date: 11/11/08
Received Date: 11/12/08
Extraction Date: 11/17/08
Analysis Date: 07-DEC-2008 16:44
Report Date: 12/10/2008
Matrix: SOIL
% Solids: 91.1

Lab ID: SB6512-17
Client ID: MR08-SS379-08D
SDG: TO9-2
Extracted by: CB
Extraction Method: SW846 3550
Analyst: JCG
Analysis Method: SW846 8270C
Lab Prep Batch: WG58144
Units: ug/Kgdrywt

CAS#	Compound	Flags	Results	DF	PQL	Adj.PQL	Adj.MDL	
84-74-2	Di-n-butylphthalate	U	360	1.0	330	360	110	
85-68-7	Butylbenzylphthalate	U	360	1.0	330	360	100	
91-94-1	3,3'-Dichlorobenzidine	U	550	1.0	500	550	120	
218-01-9	Chrysene	U	360	1.0	330	360	100	
117-81-7	bis(2-Ethylhexyl)phthalate	~~U~~ UJ	360	1.0	330	360	110	CCH
117-84-0	Di-n-octylphthalate	~~U~~ UJ	360	1.0	330	360	230	CCH
367-12-4	2-Fluorophenol		74%					
13127-88-3	Phenol-D6		79%					
4165-60-0	Nitrobenzene-D5		73%					
321-60-8	2-Fluorobiphenyl		79%					
118-79-6	2,4,6-Tribromophenol		80%					
1718-51-0	Terphenyl-D14		93%					

MW 1/30/09

KATAHDIN ANALYTICAL SERVICES
Report of Analytical Results

Client: CH2MHill
Project: TO-009 Lejeune
PO No:
Sample Date: 11/11/08
Received Date: 11/12/08
Extraction Date: 11/17/08
Analysis Date: 07-DEC-2008 18:50
Report Date: 12/10/2008
Matrix: SOIL
% Solids: 80.2

Lab ID: SB6512-19
Client ID: MR08-SD03-08D
SDG: TO9-2
Extracted by: CB
Extraction Method: SW846 3550
Analyst: JCG
Analysis Method: SW846 8270C
Lab Prep Batch: WG58144
Units: ug/Kgdrywt

CAS#	Compound	Flags	Results	DF	PQL	Adj.PQL	Adj.MDL
100-52-7	Benzaldehyde	U	620	1.0	500	620	150
108-95-2	Phenol	U	620	1.0	500	620	190
111-44-4	Bis(2-Chloroethyl)ether	U	410	1.0	330	410	100
95-57-8	2-Chlorophenol	U	620	1.0	500	620	200
95-48-7	2-Methylphenol	U	750	1.0	600	750	250
108-60-1	2,2'-Oxybis(1-chloropropane)	U	410	1.0	330	410	110
98-86-2	Acetophenone	U	750	1.0	600	750	220
621-64-7	N-Nitroso-di-n-propylamine	U	410	1.0	330	410	100
65794-96-9	3&4-Methylphenol	U	750	1.0	600	750	230
67-72-1	Hexachloroethane	U	410	1.0	330	410	120
98-95-3	Nitrobenzene	U	410	1.0	330	410	110
78-59-1	Isophorone	U	410	1.0	330	410	94
88-75-5	2-Nitrophenol	U	750	1.0	600	750	210
105-67-9	2,4-Dimethylphenol	U	620	1.0	500	620	200
111-91-1	Bis(2-Chloroethoxy)methane	U	410	1.0	330	410	120
120-83-2	2,4-Dichlorophenol	U	620	1.0	500	620	190
106-47-8	4-Chloroaniline	U	620	1.0	500	620	150
105-60-2	Caprolactam	U	620	1.0	500	620	180
59-50-7	4-Chloro-3-Methylphenol	U	620	1.0	500	620	210
88-06-2	2,4,6-Trichlorophenol	U	620	1.0	500	620	190
95-95-4	2,4,5-Trichlorophenol	U	620	1.0	500	620	190
91-58-7	2-Chloronaphthalene	U	410	1.0	330	410	110
92-52-4	1,1'-Biphenyl	U	410	1.0	330	410	91
88-74-4	2-Nitroaniline	U	620	1.0	500	620	94
131-11-3	Dimethyl Phthalate	U	410	1.0	330	410	97
606-20-2	2,6-Dinitrotoluene	U	410	1.0	330	410	98
208-96-8	Acenaphthylene	U	410	1.0	330	410	87
99-09-2	3-Nitroaniline	U	620	1.0	500	620	120
83-32-9	Acenaphthene	U	410	1.0	330	410	81
51-28-5	2,4-Dinitrophenol	U	1500	1.0	1200	1500	470
132-64-9	Dibenzofuran	U	410	1.0	330	410	98
100-02-7	4-Nitrophenol	U	1500	1.0	1200	1500	380
121-14-2	2,4-Dinitrotoluene	U	410	1.0	330	410	100
84-66-2	Diethylphthalate	U	410	1.0	330	410	100
7005-72-3	4-Chlorophenyl-phenylether	U	410	1.0	330	410	97
100-01-6	4-Nitroaniline	U	620	1.0	500	620	170
534-52-1	4,6-Dinitro-2-Methylphenol	U	1500	1.0	1200	1500	420
86-30-6	N-Nitrosodiphenylamine	U	820	1.0	660	820	270
101-55-3	4-Bromophenyl-phenylether	U	410	1.0	330	410	100
1912-24-9	Atrazine	U	410	1.0	330	410	110
87-86-5	Pentachlorophenol	U	1000	1.0	820	1000	300
120-12-7	Anthracene	U	410	1.0	330	410	100
86-74-8	Carbazole	U	620	1.0	500	620	140

hw
1/30/09

KATAHDIN ANALYTICAL SERVICES
Report of Analytical Results

Client: CH2MHill
Project: TO-009 Lejeune
PO No:
Sample Date: 11/11/08
Received Date: 11/12/08
Extraction Date: 11/17/08
Analysis Date: 07-DEC-2008 18:50
Report Date: 12/10/2008
Matrix: SOIL
% Solids: 80.2

Lab ID: SB6512-19
Client ID: MR08-SD03-08D
SDG: TO9-2
Extracted by: CB
Extraction Method: SW846 3550
Analyst: JCG
Analysis Method: SW846 8270C
Lab Prep Batch: WG58144
Units: ug/Kgdrywt

CAS#	Compound	Flags	Results	DF	PQL	Adj.PQL	Adj.MDL	
84-74-2	Di-n-butylphthalate	U	410	1.0	330	410	120	
85-68-7	Butylbenzylphthalate	U	410	1.0	330	410	120	
91-94-1	3,3'-Dichlorobenzidine	U	620	1.0	500	620	140	
218-01-9	Chrysene	U	410	1.0	330	410	120	
117-81-7	bis(2-Ethylhexyl)phthalate	~~U~~ J	120	1.0	330	410	120	CCH
117-84-0	Di-n-octylphthalate	~~U~~ UJ	410	1.0	330	410	260	CCH
367-12-4	2-Fluorophenol		68%					
13127-88-3	Phenol-D6		71%					
4165-60-0	Nitrobenzene-D5		66%					
321-60-8	2-Fluorobiphenyl		73%					
118-79-6	2,4,6-Tribromophenol		81%					
1718-51-0	Terphenyl-D14		87%					

lw
1/30/09

11

KATAHDIN ANALYTICAL SERVICES
Report of Analytical Results

Client: CH2MHill
Project: TO-009 Lejeune
PO No:
Sample Date: 11/12/08
Received Date: 11/14/08
Extraction Date: 11/17/08
Analysis Date: 07-DEC-2008 19:32
Report Date: 12/10/2008
Matrix: SOIL
% Solids: 86.8

Lab ID: SB6587-1
Client ID: MR08-SS382-08D
SDG: TO9-2
Extracted by: CB
Extraction Method: SW846 3550
Analyst: JCG
Analysis Method: SW846 8270C
Lab Prep Batch: WG58144
Units: ug/Kgdrywt

CAS#	Compound	Flags	Results	DF	PQL	Adj.PQL	Adj.MDL
100-52-7	Benzaldehyde	U	580	1.0	500	580	140
108-95-2	Phenol	U	580	1.0	500	580	180
111-44-4	Bis(2-Chloroethyl)ether	U	380	1.0	330	380	93
95-57-8	2-Chlorophenol	U	580	1.0	500	580	190
95-48-7	2-Methylphenol	U	690	1.0	600	690	230
108-60-1	2,2'-Oxybis(1-chloropropane)	U	380	1.0	330	380	100
98-86-2	Acetophenone	U	690	1.0	600	690	200
621-64-7	N-Nitroso-di-n-propylamine	U	380	1.0	330	380	96
65794-96-9	3&4-Methylphenol	U	690	1.0	600	690	220
67-72-1	Hexachloroethane	U	380	1.0	330	380	110
98-95-3	Nitrobenzene	U	380	1.0	330	380	100
78-59-1	Isophorone	U	380	1.0	330	380	86
88-75-5	2-Nitrophenol	U	690	1.0	600	690	190
105-67-9	2,4-Dimethylphenol	U	580	1.0	500	580	190
111-91-1	Bis(2-Chloroethoxy)methane	U	380	1.0	330	380	110
120-83-2	2,4-Dichlorophenol	U	580	1.0	500	580	170
106-47-8	4-Chloroaniline	U	580	1.0	500	580	140
105-60-2	Caprolactam	U	580	1.0	500	580	160
59-50-7	4-Chloro-3-Methylphenol	U	580	1.0	500	580	190
88-06-2	2,4,6-Trichlorophenol	U	580	1.0	500	580	180
95-95-4	2,4,5-Trichlorophenol	U	580	1.0	500	580	180
91-58-7	2-Chloronaphthalene	U	380	1.0	330	380	100
92-52-4	1,1'-Biphenyl	U	380	1.0	330	380	84
88-74-4	2-Nitroaniline	U	580	1.0	500	580	86
131-11-3	Dimethyl Phthalate	U	380	1.0	330	380	90
606-20-2	2,6-Dinitrotoluene	U	380	1.0	330	380	91
208-96-8	Acenaphthylene	U	380	1.0	330	380	81
99-09-2	3-Nitroaniline	U	580	1.0	500	580	110
83-32-9	Acenaphthene	U	380	1.0	330	380	75
51-28-5	2,4-Dinitrophenol	U	1400	1.0	1200	1400	430
132-64-9	Dibenzofuran	U	380	1.0	330	380	91
100-02-7	4-Nitrophenol	U	1400	1.0	1200	1400	360
121-14-2	2,4-Dinitrotoluene	U	380	1.0	330	380	98
84-66-2	Diethylphthalate	U	380	1.0	330	380	92
7005-72-3	4-Chlorophenyl-phenylether	U	380	1.0	330	380	90
100-01-6	4-Nitroaniline	U	580	1.0	500	580	150
534-52-1	4,6-Dinitro-2-Methylphenol	U	1400	1.0	1200	1400	390
86-30-6	N-Nitrosodiphenylamine	U	760	1.0	660	760	250
101-55-3	4-Bromophenyl-phenylether	U	380	1.0	330	380	98
1912-24-9	Atrazine	U	380	1.0	330	380	100
87-86-5	Pentachlorophenol	U	940	1.0	820	940	270
120-12-7	Anthracene	U	380	1.0	330	380	97
86-74-8	Carbazole	U	580	1.0	500	580	130

lcw 11/30/09

11

KATAHDIN ANALYTICAL SERVICES
Report of Analytical Results

Client: CH2MHill
Project: TO-009 Lejeune
PO No:
Sample Date: 11/12/08
Received Date: 11/14/08
Extraction Date: 11/17/08
Analysis Date: 07-DEC-2008 19:32
Report Date: 12/10/2008
Matrix: SOIL
% Solids: 86.8

Lab ID: SB6587-1
Client ID: MR08-SS382-08D
SDG: TO9-2
Extracted by: CB
Extraction Method: SW846 3550
Analyst: JCG
Analysis Method: SW846 8270C
Lab Prep Batch: WG58144
Units: ug/Kgdrywt

CAS#	Compound	Flags	Results	DF	PQL	Adj.PQL	Adj.MDL	
84-74-2	Di-n-butylphthalate	U	380	1.0	330	380	120	
85-68-7	Butylbenzylphthalate	U	380	1.0	330	380	110	
91-94-1	3,3'-Dichlorobenzidine	U	580	1.0	500	580	130	
218-01-9	Chrysene	U	380	1.0	330	380	110	
117-81-7	bis(2-Ethylhexyl)phthalate	~~U~~ UJ	380	1.0	330	380	110	CCU
117-84-0	Di-n-octylphthalate	~~U~~ UJ	380	1.0	330	380	240	CCU
367-12-4	2-Fluorophenol		77%					
13127-88-3	Phenol-D6		84%					
4165-60-0	Nitrobenzene-D5		80%					
321-60-8	2-Fluorobiphenyl		90%					
118-79-6	2,4,6-Tribromophenol		99%					
1718-51-0	Terphenyl-D14		112%					

JCW
1/30/09

KATAHDIN ANALYTICAL SERVICES
Report of Analytical Results

Client: CH2MHill
Project: TO-009 Lejeune
PO No:
Sample Date: 11/12/08
Received Date: 11/14/08
Extraction Date: 11/17/08
Analysis Date: 07-DEC-2008 17:26
Report Date: 12/10/2008
Matrix: SOIL
% Solids: 90.4

Lab ID: SB6587-3
Client ID: MR08-SS383-08D
SDG: TO9-2
Extracted by: CB
Extraction Method: SW846 3550
Analyst: JCG
Analysis Method: SW846 8270C
Lab Prep Batch: WG58144
Units: ug/Kgdrywt

CAS#	Compound	Flags	Results	DF	PQL	Adj.PQL	Adj.MDL
100-52-7	Benzaldehyde	U	550	1.0	500	550	130
108-95-2	Phenol	U	550	1.0	500	550	170
111-44-4	Bis(2-Chloroethyl)ether	U	360	1.0	330	360	90
95-57-8	2-Chlorophenol	U	550	1.0	500	550	180
95-48-7	2-Methylphenol	U	660	1.0	600	660	220
108-60-1	2,2'-Oxybis(1-chloropropane)	U	360	1.0	330	360	98
98-86-2	Acetophenone	U	660	1.0	600	660	200
621-64-7	N-Nitroso-di-n-propylamine	U	360	1.0	330	360	92
65794-96-9	3&4-Methylphenol	U	660	1.0	600	660	210
67-72-1	Hexachloroethane	U	360	1.0	330	360	110
98-95-3	Nitrobenzene	U	360	1.0	330	360	100
78-59-1	Isophorone	U	360	1.0	330	360	83
88-75-5	2-Nitrophenol	U	660	1.0	600	660	180
105-67-9	2,4-Dimethylphenol	U	550	1.0	500	550	180
111-91-1	Bis(2-Chloroethoxy)methane	U	360	1.0	330	360	110
120-83-2	2,4-Dichlorophenol	U	550	1.0	500	550	160
106-47-8	4-Chloroaniline	U	550	1.0	500	550	130
105-60-2	Caprolactam	U	550	1.0	500	550	160
59-50-7	4-Chloro-3-Methylphenol	U	550	1.0	500	550	180
88-06-2	2,4,6-Trichlorophenol	U	550	1.0	500	550	170
95-95-4	2,4,5-Trichlorophenol	U	550	1.0	500	550	170
91-58-7	2-Chloronaphthalene	U	360	1.0	330	360	96
92-52-4	1,1'-Biphenyl	U	360	1.0	330	360	81
88-74-4	2-Nitroaniline	U	550	1.0	500	550	83
131-11-3	Dimethyl Phthalate	U	360	1.0	330	360	86
606-20-2	2,6-Dinitrotoluene	U	360	1.0	330	360	87
208-96-8	Acenaphthylene	U	360	1.0	330	360	77
99-09-2	3-Nitroaniline	U	550	1.0	500	550	100
83-32-9	Acenaphthene	U	360	1.0	330	360	72
51-28-5	2,4-Dinitrophenol	U	1300	1.0	1200	1300	420
132-64-9	Dibenzofuran	U	360	1.0	330	360	87
100-02-7	4-Nitrophenol	U	1300	1.0	1200	1300	340
121-14-2	2,4-Dinitrotoluene	U	360	1.0	330	360	94
84-66-2	Diethylphthalate	U	360	1.0	330	360	88
7005-72-3	4-Chlorophenyl-phenylether	U	360	1.0	330	360	86
100-01-6	4-Nitroaniline	U	550	1.0	500	550	150
534-52-1	4,6-Dinitro-2-Methylphenol	U	1300	1.0	1200	1300	370
86-30-6	N-Nitrosodiphenylamine	U	730	1.0	660	730	240
101-55-3	4-Bromophenyl-phenylether	U	360	1.0	330	360	94
1912-24-9	Atrazine	U	360	1.0	330	360	100
87-86-5	Pentachlorophenol	U	910	1.0	820	910	260
120-12-7	Anthracene	U	360	1.0	330	360	93
86-74-8	Carbazole	U	550	1.0	500	550	120

lus
1/30/09

KATAHDIN ANALYTICAL SERVICES
Report of Analytical Results

Client: CH2MHill
Project: TO-009 Lejeune
PO No:
Sample Date: 11/12/08
Received Date: 11/14/08
Extraction Date: 11/17/08
Analysis Date: 07-DEC-2008 17:26
Report Date: 12/10/2008
Matrix: SOIL
% Solids: 90.4

Lab ID: SB6587-3
Client ID: MR08-SS383-08D
SDG: TO9-2
Extracted by: CB
Extraction Method: SW846 3550
Analyst: JCG
Analysis Method: SW846 8270C
Lab Prep Batch: WG58144
Units: ug/Kgdrywt

CAS#	Compound	Flags	Results	DF	PQL	Adj.PQL	Adj.MDL	
84-74-2	Di-n-butylphthalate	U	360	1.0	330	360	110	
85-68-7	Butylbenzylphthalate	U	360	1.0	330	360	100	
91-94-1	3,3'-Dichlorobenzidine	U	550	1.0	500	550	130	
218-01-9	Chrysene	U	360	1.0	330	360	100	
117-81-7	bis(2-Ethylhexyl)phthalate	~~U~~ UJ	360	1.0	330	360	110	CCH
117-84-0	Di-n-octylphthalate	~~U~~ UJ	360	1.0	330	360	230	CCH
367-12-4	2-Fluorophenol		75%					
13127-88-3	Phenol-D6		78%					
4165-60-0	Nitrobenzene-D5		75%					
321-60-8	2-Fluorobiphenyl		80%					
118-79-6	2,4,6-Tribromophenol		81%					
1718-51-0	Terphenyl-D14		90%					

JW 11/30/09

KATAHDIN ANALYTICAL SERVICES
Report of Analytical Results

Client: CH2MHill
Project: TO-009 Lejeune
PO No:
Sample Date: 11/12/08
Received Date: 11/14/08
Extraction Date: 11/17/08
Analysis Date: 07-DEC-2008 18:08
Report Date: 12/10/2008
Matrix: SOIL
% Solids: 89.1

Lab ID: SB6587-5
Client ID: MR08-SS384-08D
SDG: TO9-2
Extracted by: CB
Extraction Method: SW846 3550
Analyst: JCG
Analysis Method: SW846 8270C
Lab Prep Batch: WG58144
Units: ug/Kgdrywt

CAS#	Compound	Flags	Results	DF	PQL	Adj.PQL	Adj.MDL
100-52-7	Benzaldehyde	U	560	1.0	500	560	130
108-95-2	Phenol	U	560	1.0	500	560	180
111-44-4	Bis(2-Chloroethyl)ether	U	370	1.0	330	370	91
95-57-8	2-Chlorophenol	U	560	1.0	500	560	180
95-48-7	2-Methylphenol	U	670	1.0	600	670	220
108-60-1	2,2'-Oxybis(1-chloropropane)	U	370	1.0	330	370	100
98-86-2	Acetophenone	U	670	1.0	600	670	200
621-64-7	N-Nitroso-di-n-propylamine	U	370	1.0	330	370	93
65794-96-9	3&4-Methylphenol	U	670	1.0	600	670	210
67-72-1	Hexachloroethane	U	370	1.0	330	370	110
98-95-3	Nitrobenzene	U	370	1.0	330	370	100
78-59-1	Isophorone	U	370	1.0	330	370	84
88-75-5	2-Nitrophenol	U	670	1.0	600	670	190
105-67-9	2,4-Dimethylphenol	U	560	1.0	500	560	180
111-91-1	Bis(2-Chloroethoxy)methane	U	370	1.0	330	370	110
120-83-2	2,4-Dichlorophenol	U	560	1.0	500	560	170
106-47-8	4-Chloroaniline	U	560	1.0	500	560	130
105-60-2	Caprolactam	U	560	1.0	500	560	160
59-50-7	4-Chloro-3-Methylphenol	U	560	1.0	500	560	190
88-06-2	2,4,6-Trichlorophenol	U	560	1.0	500	560	170
95-95-4	2,4,5-Trichlorophenol	U	560	1.0	500	560	170
91-58-7	2-Chloronaphthalene	U	370	1.0	330	370	98
92-52-4	1,1'-Biphenyl	U	370	1.0	330	370	82
88-74-4	2-Nitroaniline	U	560	1.0	500	560	84
131-11-3	Dimethyl Phthalate	U	370	1.0	330	370	88
606-20-2	2,6-Dinitrotoluene	U	370	1.0	330	370	89
208-96-8	Acenaphthylene	U	370	1.0	330	370	78
99-09-2	3-Nitroaniline	U	560	1.0	500	560	100
83-32-9	Acenaphthene	U	370	1.0	330	370	73
51-28-5	2,4-Dinitrophenol	U	1300	1.0	1200	1300	420
132-64-9	Dibenzofuran	U	370	1.0	330	370	89
100-02-7	4-Nitrophenol	U	1300	1.0	1200	1300	350
121-14-2	2,4-Dinitrotoluene	U	370	1.0	330	370	95
84-66-2	Diethylphthalate	U	370	1.0	330	370	90
7005-72-3	4-Chlorophenyl-phenylether	U	370	1.0	330	370	88
100-01-6	4-Nitroaniline	U	560	1.0	500	560	150
534-52-1	4,6-Dinitro-2-Methylphenol	U	1300	1.0	1200	1300	380
86-30-6	N-Nitrosodiphenylamine	U	740	1.0	660	740	240
101-55-3	4-Bromophenyl-phenylether	U	370	1.0	330	370	95
1912-24-9	Atrazine	U	370	1.0	330	370	100
87-86-5	Pentachlorophenol	U	920	1.0	820	920	270
120-12-7	Anthracene	U	370	1.0	330	370	94
86-74-8	Carbazole	U	560	1.0	500	560	120

LW 1/30/09

KATAHDIN ANALYTICAL SERVICES
Report of Analytical Results

Client: CH2MHill
Project: TO-009 Lejeune
PO No:
Sample Date: 11/12/08
Received Date: 11/14/08
Extraction Date: 11/17/08
Analysis Date: 07-DEC-2008 18:08
Report Date: 12/10/2008
Matrix: SOIL
% Solids: 89.1

Lab ID: SB6587-5
Client ID: MR08-SS384-08D
SDG: TO9-2
Extracted by: CB
Extraction Method: SW846 3550
Analyst: JCG
Analysis Method: SW846 8270C
Lab Prep Batch: WG58144
Units: ug/Kgdrywt

CAS#	Compound	Flags	Results	DF	PQL	Adj.PQL	Adj.MDL	
84-74-2	Di-n-butylphthalate	U	370	1.0	330	370	110	
85-68-7	Butylbenzylphthalate	U	370	1.0	330	370	100	
91-94-1	3,3'-Dichlorobenzidine	U	560	1.0	500	560	130	
218-01-9	Chrysene	U	370	1.0	330	370	110	
117-81-7	bis(2-Ethylhexyl)phthalate	~~U~~ UJ	370	1.0	330	370	110	CCH
117-84-0	Di-n-octylphthalate	~~U~~ UJ	370	1.0	330	370	240	CCH
367-12-4	2-Fluorophenol		77%					
13127-88-3	Phenol-D6		76%					
4165-60-0	Nitrobenzene-D5		76%					
321-60-8	2-Fluorobiphenyl		80%					
118-79-6	2,4,6-Tribromophenol		88%					
1718-51-0	Terphenyl-D14		105%					

GW
1/30/09

KATAHDIN ANALYTICAL SERVICES
Report of Analytical Results

Client: CH2MHill
Project: TO-009 Lejeune
PO No:
Sample Date: 11/12/08
Received Date: 11/14/08
Extraction Date: 11/17/08
Analysis Date: 07-DEC-2008 20:14
Report Date: 12/10/2008
Matrix: SOIL
% Solids: 94.5

Lab ID: SB6587-7
Client ID: MR08-SS385-08D
SDG: TO9-2
Extracted by: CB
Extraction Method: SW846 3550
Analyst: JCG
Analysis Method: SW846 8270C
Lab Prep Batch: WG58144
Units: ug/Kgdrywt

CAS#	Compound	Flags	Results	DF	PQL	Adj.PQL	Adj.MDL
100-52-7	Benzaldehyde	U	530	1.0	500	530	130
108-95-2	Phenol	U	530	1.0	500	530	160
111-44-4	Bis(2-Chloroethyl)ether	U	350	1.0	330	350	86
95-57-8	2-Chlorophenol	U	530	1.0	500	530	170
95-48-7	2-Methylphenol	U	630	1.0	600	630	210
108-60-1	2,2'-Oxybis(1-chloropropane)	U	350	1.0	330	350	94
98-86-2	Acetophenone	U	630	1.0	600	630	190
621-64-7	N-Nitroso-di-n-propylamine	U	350	1.0	330	350	88
65794-96-9	3&4-Methylphenol	U	630	1.0	600	630	200
67-72-1	Hexachloroethane	U	350	1.0	330	350	100
98-95-3	Nitrobenzene	U	350	1.0	330	350	96
78-59-1	Isophorone	U	350	1.0	330	350	79
88-75-5	2-Nitrophenol	U	630	1.0	600	630	180
105-67-9	2,4-Dimethylphenol	U	530	1.0	500	530	170
111-91-1	Bis(2-Chloroethoxy)methane	U	350	1.0	330	350	100
120-83-2	2,4-Dichlorophenol	U	530	1.0	500	530	160
106-47-8	4-Chloroaniline	U	530	1.0	500	530	120
105-60-2	Caprolactam	U	530	1.0	500	530	150
59-50-7	4-Chloro-3-Methylphenol	U	530	1.0	500	530	180
88-06-2	2,4,6-Trichlorophenol	U	530	1.0	500	530	160
95-95-4	2,4,5-Trichlorophenol	U	530	1.0	500	530	160
91-58-7	2-Chloronaphthalene	U	350	1.0	330	350	92
92-52-4	1,1'-Biphenyl	U	350	1.0	330	350	77
88-74-4	2-Nitroaniline	U	530	1.0	500	530	79
131-11-3	Dimethyl Phthalate	U	350	1.0	330	350	82
606-20-2	2,6-Dinitrotoluene	U	350	1.0	330	350	84
208-96-8	Acenaphthylene	U	350	1.0	330	350	74
99-09-2	3-Nitroaniline	U	530	1.0	500	530	99
83-32-9	Acenaphthene	U	350	1.0	330	350	69
51-28-5	2,4-Dinitrophenol	U	1300	1.0	1200	1300	400
132-64-9	Dibenzofuran	U	350	1.0	330	350	84
100-02-7	4-Nitrophenol	U	1300	1.0	1200	1300	330
121-14-2	2,4-Dinitrotoluene	U	350	1.0	330	350	90
84-66-2	Diethylphthalate	U	350	1.0	330	350	85
7005-72-3	4-Chlorophenyl-phenylether	U	350	1.0	330	350	82
100-01-6	4-Nitroaniline	U	530	1.0	500	530	140
534-52-1	4,6-Dinitro-2-Methylphenol	U	1300	1.0	1200	1300	360
86-30-6	N-Nitrosodiphenylamine	U	700	1.0	660	700	230
101-55-3	4-Bromophenyl-phenylether	U	350	1.0	330	350	90
1912-24-9	Atrazine	U	350	1.0	330	350	96
87-86-5	Pentachlorophenol	U	870	1.0	820	870	250
120-12-7	Anthracene	U	350	1.0	330	350	89
86-74-8	Carbazole	U	530	1.0	500	530	120

AW
1130/09

KATAHDIN ANALYTICAL SERVICES
Report of Analytical Results

Client: CH2MHill
Project: TO-009 Lejeune
PO No:
Sample Date: 11/12/08
Received Date: 11/14/08
Extraction Date: 11/17/08
Analysis Date: 07-DEC-2008 20:14
Report Date: 12/10/2008
Matrix: SOIL
% Solids: 94.5

Lab ID: SB6587-7
Client ID: MR08-SS385-08D
SDG: TO9-2
Extracted by: CB
Extraction Method: SW846 3550
Analyst: JCG
Analysis Method: SW846 8270C
Lab Prep Batch: WG58144
Units: ug/Kgdrywt

CAS#	Compound	Flags	Results	DF	PQL	Adj.PQL	Adj.MDL	
84-74-2	Di-n-butylphthalate	U	350	1.0	330	350	110	
85-68-7	Butylbenzylphthalate	U	350	1.0	330	350	98	
91-94-1	3,3'-Dichlorobenzidine	U	530	1.0	500	530	120	
218-01-9	Chrysene	U	350	1.0	330	350	100	
117-81-7	bis(2-Ethylhexyl)phthalate	~~U~~ UJ	350	1.0	330	350	100	CCH
117-84-0	Di-n-octylphthalate	~~U~~ UJ	350	1.0	330	350	220	CCH
367-12-4	2-Fluorophenol		72%					
13127-88-3	Phenol-D6		74%					
4165-60-0	Nitrobenzene-D5		70%					
321-60-8	2-Fluorobiphenyl		79%					
118-79-6	2,4,6-Tribromophenol		87%					
1718-51-0	Terphenyl-D14		96%					

LW
1/30/09

KATAHDIN ANALYTICAL SERVICES
Report of Analytical Results

Client: CH2MHill
Project: TO-009 Lejeune
PO No:
Sample Date: 11/12/08
Received Date: 11/14/08
Extraction Date: 11/17/08
Analysis Date: 07-DEC-2008 20:56
Report Date: 12/10/2008
Matrix: SOIL
% Solids: 87.2

Lab ID: SB6587-9
Client ID: MR08-SS386-08D
SDG: TO9-2
Extracted by: CB
Extraction Method: SW846 3550
Analyst: JCG
Analysis Method: SW846 8270C
Lab Prep Batch: WG58144
Units: ug/Kgdrywt

CAS#	Compound	Flags	Results	DF	PQL	Adj.PQL	Adj.MDL
100-52-7	Benzaldehyde	U	570	1.0	500	570	140
108-95-2	Phenol	U	570	1.0	500	570	180
111-44-4	Bis(2-Chloroethyl)ether	U	380	1.0	330	380	93
95-57-8	2-Chlorophenol	U	570	1.0	500	570	190
95-48-7	2-Methylphenol	U	690	1.0	600	690	230
108-60-1	2,2'-Oxybis(1-chloropropane)	U	380	1.0	330	380	100
98-86-2	Acetophenone	U	690	1.0	600	690	200
621-64-7	N-Nitroso-di-n-propylamine	U	380	1.0	330	380	95
65794-96-9	3&4-Methylphenol	U	690	1.0	600	690	210
67-72-1	Hexachloroethane	U	380	1.0	330	380	110
98-95-3	Nitrobenzene	U	380	1.0	330	380	100
78-59-1	Isophorone	U	380	1.0	330	380	86
88-75-5	2-Nitrophenol	U	690	1.0	600	690	190
105-67-9	2,4-Dimethylphenol	U	570	1.0	500	570	190
111-91-1	Bis(2-Chloroethoxy)methane	U	380	1.0	330	380	110
120-83-2	2,4-Dichlorophenol	U	570	1.0	500	570	170
106-47-8	4-Chloroaniline	U	570	1.0	500	570	140
105-60-2	Caprolactam	U	570	1.0	500	570	160
59-50-7	4-Chloro-3-Methylphenol	U	570	1.0	500	570	190
88-06-2	2,4,6-Trichlorophenol	U	570	1.0	500	570	180
95-95-4	2,4,5-Trichlorophenol	U	570	1.0	500	570	180
91-58-7	2-Chloronaphthalene	U	380	1.0	330	380	100
92-52-4	1,1'-Biphenyl	U	380	1.0	330	380	84
88-74-4	2-Nitroaniline	U	570	1.0	500	570	86
131-11-3	Dimethyl Phthalate	U	380	1.0	330	380	89
606-20-2	2,6-Dinitrotoluene	U	380	1.0	330	380	91
208-96-8	Acenaphthylene	U	380	1.0	330	380	80
99-09-2	3-Nitroaniline	U	570	1.0	500	570	110
83-32-9	Acenaphthene	U	380	1.0	330	380	74
51-28-5	2,4-Dinitrophenol	U	1400	1.0	1200	1400	430
132-64-9	Dibenzofuran	U	380	1.0	330	380	91
100-02-7	4-Nitrophenol	U	1400	1.0	1200	1400	350
121-14-2	2,4-Dinitrotoluene	U	380	1.0	330	380	97
84-66-2	Diethylphthalate	U	380	1.0	330	380	92
7005-72-3	4-Chlorophenyl-phenylether	U	380	1.0	330	380	89
100-01-6	4-Nitroaniline	U	570	1.0	500	570	150
534-52-1	4,6-Dinitro-2-Methylphenol	U	1400	1.0	1200	1400	390
86-30-6	N-Nitrosodiphenylamine	U	760	1.0	660	760	250
101-55-3	4-Bromophenyl-phenylether	U	380	1.0	330	380	97
1912-24-9	Atrazine	U	380	1.0	330	380	100
87-86-5	Pentachlorophenol	U	940	1.0	820	940	270
120-12-7	Anthracene	U	380	1.0	330	380	96
86-74-8	Carbazole	U	570	1.0	500	570	130

lw
1/30/09

KATAHDIN ANALYTICAL SERVICES
Report of Analytical Results

Client: CH2MHill
Project: TO-009 Lejeune
PO No:
Sample Date: 11/12/08
Received Date: 11/14/08
Extraction Date: 11/17/08
Analysis Date: 07-DEC-2008 20:56
Report Date: 12/10/2008
Matrix: SOIL
% Solids: 87.2

Lab ID: SB6587-9
Client ID: MR08-SS386-08D
SDG: TO9-2
Extracted by: CB
Extraction Method: SW846 3550
Analyst: JCG
Analysis Method: SW846 8270C
Lab Prep Batch: WG58144
Units: ug/Kgdrywt

CAS#	Compound	Flags	Results	DF	PQL	Adj.PQL	Adj.MDL	
84-74-2	Di-n-butylphthalate	U	380	1.0	330	380	120	
85-68-7	Butylbenzylphthalate	U	380	1.0	330	380	110	
91-94-1	3,3'-Dichlorobenzidine	U	570	1.0	500	570	130	
218-01-9	Chrysene	U	380	1.0	330	380	110	
117-81-7	bis(2-Ethylhexyl)phthalate	~~U~~ UJ	380	1.0	330	380	110	CCH
117-84-0	Di-n-octylphthalate	~~U~~ UJ	380	1.0	330	380	240	CCH
367-12-4	2-Fluorophenol		70%					
13127-88-3	Phenol-D6		80%					
4165-60-0	Nitrobenzene-D5		68%					
321-60-8	2-Fluorobiphenyl		73%					
118-79-6	2,4,6-Tribromophenol		85%					
1718-51-0	Terphenyl-D14		96%					

LW
1/30/09

16

KATAHDIN ANALYTICAL SERVICES
Report of Analytical Results

Client: CH2MHill
Project: TO-009 Lejeune
PO No:
Sample Date: 11/12/08
Received Date: 11/14/08
Extraction Date: 11/17/08
Analysis Date: 07-DEC-2008 21:38
Report Date: 12/10/2008
Matrix: SOIL
% Solids: 83.0

Lab ID: SB6587-11
Client ID: MR08-SS387-08D
SDG: TO9-2
Extracted by: CB
Extraction Method: SW846 3550
Analyst: JCG
Analysis Method: SW846 8270C
Lab Prep Batch: WG58144
Units: ug/Kgdrywt

CAS#	Compound	Flags	Results	DF	PQL	Adj.PQL	Adj.MDL
100-52-7	Benzaldehyde	U	600	1.0	500	600	140
108-95-2	Phenol	U	600	1.0	500	600	190
111-44-4	Bis(2-Chloroethyl)ether	U	400	1.0	330	400	98
95-57-8	2-Chlorophenol	U	600	1.0	500	600	200
95-48-7	2-Methylphenol	U	720	1.0	600	720	240
108-60-1	2,2'-Oxybis(1-chloropropane)	U	400	1.0	330	400	110
98-86-2	Acetophenone	U	720	1.0	600	720	210
621-64-7	N-Nitroso-di-n-propylamine	U	400	1.0	330	400	100
65794-96-9	3&4-Methylphenol	U	720	1.0	600	720	220
67-72-1	Hexachloroethane	U	400	1.0	330	400	120
98-95-3	Nitrobenzene	U	400	1.0	330	400	110
78-59-1	Isophorone	U	400	1.0	330	400	90
88-75-5	2-Nitrophenol	U	720	1.0	600	720	200
105-67-9	2,4-Dimethylphenol	U	600	1.0	500	600	200
111-91-1	Bis(2-Chloroethoxy)methane	U	400	1.0	330	400	120
120-83-2	2,4-Dichlorophenol	U	600	1.0	500	600	180
106-47-8	4-Chloroaniline	U	600	1.0	500	600	140
105-60-2	Caprolactam	U	600	1.0	500	600	170
59-50-7	4-Chloro-3-Methylphenol	U	600	1.0	500	600	200
88-06-2	2,4,6-Trichlorophenol	U	600	1.0	500	600	190
95-95-4	2,4,5-Trichlorophenol	U	600	1.0	500	600	190
91-58-7	2-Chloronaphthalene	U	400	1.0	330	400	100
92-52-4	1,1'-Biphenyl	U	400	1.0	330	400	88
88-74-4	2-Nitroaniline	U	600	1.0	500	600	90
131-11-3	Dimethyl Phthalate	U	400	1.0	330	400	94
606-20-2	2,6-Dinitrotoluene	U	400	1.0	330	400	95
208-96-8	Acenaphthylene	U	400	1.0	330	400	84
99-09-2	3-Nitroaniline	U	600	1.0	500	600	110
83-32-9	Acenaphthene	U	400	1.0	330	400	78
51-28-5	2,4-Dinitrophenol	U	1400	1.0	1200	1400	450
132-64-9	Dibenzofuran	U	400	1.0	330	400	95
100-02-7	4-Nitrophenol	U	1400	1.0	1200	1400	370
121-14-2	2,4-Dinitrotoluene	U	400	1.0	330	400	100
84-66-2	Diethylphthalate	U	400	1.0	330	400	96
7005-72-3	4-Chlorophenyl-phenylether	U	400	1.0	330	400	94
100-01-6	4-Nitroaniline	U	600	1.0	500	600	160
534-52-1	4,6-Dinitro-2-Methylphenol	U	1400	1.0	1200	1400	410
86-30-6	N-Nitrosodiphenylamine	U	800	1.0	660	800	260
101-55-3	4-Bromophenyl-phenylether	U	400	1.0	330	400	100
1912-24-9	Atrazine	U	400	1.0	330	400	110
87-86-5	Pentachlorophenol	U	990	1.0	820	990	280
120-12-7	Anthracene	U	400	1.0	330	400	100
86-74-8	Carbazole	U	600	1.0	500	600	130

MW
1130/09

16

KATAHDIN ANALYTICAL SERVICES
Report of Analytical Results

Client: CH2MHill
Project: TO-009 Lejeune
PO No:
Sample Date: 11/12/08
Received Date: 11/14/08
Extraction Date: 11/17/08
Analysis Date: 07-DEC-2008 21:38
Report Date: 12/10/2008
Matrix: SOIL
% Solids: 83.0

Lab ID: SB6587-11
Client ID: MR08-SS387-08D
SDG: TO9-2
Extracted by: CB
Extraction Method: SW846 3550
Analyst: JCG
Analysis Method: SW846 8270C
Lab Prep Batch: WG58144
Units: ug/Kgdrywt

CAS#	Compound	Flags	Results	DF	PQL	Adj.PQL	Adj.MDL	
84-74-2	Di-n-butylphthalate	U	400	1.0	330	400	120	
85-68-7	Butylbenzylphthalate	U	400	1.0	330	400	110	
91-94-1	3,3'-Dichlorobenzidine	U	600	1.0	500	600	140	
218-01-9	Chrysene	U	400	1.0	330	400	110	
117-81-7	bis(2-Ethylhexyl)phthalate	~~U~~ UJ	400	1.0	330	400	120	CCH
117-84-0	Di-n-octylphthalate	~~U~~ UJ	400	1.0	330	400	250	CCH
367-12-4	2-Fluorophenol		74%					
13127-88-3	Phenol-D6		74%					
4165-60-0	Nitrobenzene-D5		73%					
321-60-8	2-Fluorobiphenyl		80%					
118-79-6	2,4,6-Tribromophenol		83%					
1718-51-0	Terphenyl-D14		86%					

JWS
11/30/09

KATAHDIN ANALYTICAL SERVICES
Report of Analytical Results

Client: CH2MHill
Project: TO-009 Lejeune
PO No:
Sample Date: 11/12/08
Received Date: 11/14/08
Extraction Date: 11/17/08
Analysis Date: 07-DEC-2008 13:56
Report Date: 12/10/2008
Matrix: SOIL
% Solids: 91.9

Lab ID: SB6587-13
Client ID: MR08-IS381-08D
SDG: TO9-2
Extracted by: CB
Extraction Method: SW846 3550
Analyst: JCG
Analysis Method: SW846 8270C
Lab Prep Batch: WG58144
Units: ug/Kgdrywt

CAS#	Compound	Flags	Results	DF	PQL	Adj.PQL	Adj.MDL
100-52-7	Benzaldehyde	U	540	1.0	500	540	130
108-95-2	Phenol	U	540	1.0	500	540	170
111-44-4	Bis(2-Chloroethyl)ether	U	360	1.0	330	360	88
95-57-8	2-Chlorophenol	U	540	1.0	500	540	180
95-48-7	2-Methylphenol	U	650	1.0	600	650	220
108-60-1	2,2'-Oxybis(1-chloropropane)	U	360	1.0	330	360	97
98-86-2	Acetophenone	U	650	1.0	600	650	190
621-64-7	N-Nitroso-di-n-propylamine	U	360	1.0	330	360	90
65794-96-9	3&4-Methylphenol	U	650	1.0	600	650	200
67-72-1	Hexachloroethane	U	360	1.0	330	360	100
98-95-3	Nitrobenzene	U	360	1.0	330	360	99
78-59-1	Isophorone	U	360	1.0	330	360	82
88-75-5	2-Nitrophenol	U	650	1.0	600	650	180
105-67-9	2,4-Dimethylphenol	U	540	1.0	500	540	180
111-91-1	Bis(2-Chloroethoxy)methane	U	360	1.0	330	360	100
120-83-2	2,4-Dichlorophenol	U	540	1.0	500	540	160
106-47-8	4-Chloroaniline	U	540	1.0	500	540	130
105-60-2	Caprolactam	U	540	1.0	500	540	160
59-50-7	4-Chloro-3-Methylphenol	U	540	1.0	500	540	180
88-06-2	2,4,6-Trichlorophenol	U	540	1.0	500	540	170
95-95-4	2,4,5-Trichlorophenol	U	540	1.0	500	540	170
91-58-7	2-Chloronaphthalene	U	360	1.0	330	360	95
92-52-4	1,1'-Biphenyl	U	360	1.0	330	360	79
88-74-4	2-Nitroaniline	U	540	1.0	500	540	82
131-11-3	Dimethyl Phthalate	U	360	1.0	330	360	85
606-20-2	2,6-Dinitrotoluene	U	360	1.0	330	360	86
208-96-8	Acenaphthylene	U	360	1.0	330	360	76
99-09-2	3-Nitroaniline	U	540	1.0	500	540	100
83-32-9	Acenaphthene	U	360	1.0	330	360	71
51-28-5	2,4-Dinitrophenol	U	1300	1.0	1200	1300	410
132-64-9	Dibenzofuran	U	360	1.0	330	360	86
100-02-7	4-Nitrophenol	U	1300	1.0	1200	1300	340
121-14-2	2,4-Dinitrotoluene	U	360	1.0	330	360	92
84-66-2	Diethylphthalate	U	360	1.0	330	360	87
7005-72-3	4-Chlorophenyl-phenylether	U	360	1.0	330	360	85
100-01-6	4-Nitroaniline	U	540	1.0	500	540	140
534-52-1	4,6-Dinitro-2-Methylphenol	U	1300	1.0	1200	1300	370
86-30-6	N-Nitrosodiphenylamine	U	720	1.0	660	720	240
101-55-3	4-Bromophenyl-phenylether	U	360	1.0	330	360	92
1912-24-9	Atrazine	U	360	1.0	330	360	99
87-86-5	Pentachlorophenol	U	890	1.0	820	890	260
120-12-7	Anthracene	U	360	1.0	330	360	91
86-74-8	Carbazole	U	540	1.0	500	540	120

lw
1/30/09

17

KATAHDIN ANALYTICAL SERVICES
Report of Analytical Results

Client: CH2MHill
Project: TO-009 Lejeune
PO No:
Sample Date: 11/12/08
Received Date: 11/14/08
Extraction Date: 11/17/08
Analysis Date: 07-DEC-2008 13:56
Report Date: 12/10/2008
Matrix: SOIL
% Solids: 91.9

Lab ID: SB6587-13
Client ID: MR08-IS381-08D
SDG: TO9-2
Extracted by: CB
Extraction Method: SW846 3550
Analyst: JCG
Analysis Method: SW846 8270C
Lab Prep Batch: WG58144
Units: ug/Kgdrywt

CAS#	Compound	Flags	Results	DF	PQL	Adj.PQL	Adj.MDL	
84-74-2	Di-n-butylphthalate	U	360	1.0	330	360	110	
85-68-7	Butylbenzylphthalate	U	360	1.0	330	360	100	
91-94-1	3,3'-Dichlorobenzidine	U	540	1.0	500	540	120	
218-01-9	Chrysene	U	360	1.0	330	360	100	
117-81-7	bis(2-Ethylhexyl)phthalate	J	900	1.0	330	360	110	CCH
117-84-0	Di-n-octylphthalate	~~U~~ UJ	360	1.0	330	360	230	CCH
367-12-4	2-Fluorophenol		71%					
13127-88-3	Phenol-D6		82%					
4165-60-0	Nitrobenzene-D5		78%					
321-60-8	2-Fluorobiphenyl		90%					
118-79-6	2,4,6-Tribromophenol		81%					
1718-51-0	Terphenyl-D14		95%					

lrw 11/30/09

KATAHDIN ANALYTICAL SERVICES
Report of Analytical Results

Client: CH2MHill
Project: TO-009 Lejeune
PO No:
Sample Date: 11/12/08
Received Date: 11/14/08
Extraction Date: 11/17/08
Analysis Date: 08-DEC-2008 10:36
Report Date: 12/10/2008
Matrix: SOIL
% Solids: 90.9

Lab ID: SB6587-15
Client ID: MR08-IS379-08D
SDG: TO9-2
Extracted by: CB
Extraction Method: SW846 3550
Analyst: JCG
Analysis Method: SW846 8270C
Lab Prep Batch: WG58144
Units: ug/Kgdrywt

CAS#	Compound	Flags	Results	DF	PQL	Adj.PQL	Adj.MDL
100-52-7	Benzaldehyde	~~U~~ UJ	550	1.0	500	550	130 CCH
108-95-2	Phenol	U	550	1.0	500	550	170
111-44-4	Bis(2-Chloroethyl)ether	U	360	1.0	330	360	89
95-57-8	2-Chlorophenol	U	550	1.0	500	550	180
95-48-7	2-Methylphenol	U	660	1.0	600	660	220
108-60-1	2,2'-Oxybis(1-chloropropane)	U	360	1.0	330	360	98
98-86-2	Acetophenone	U	660	1.0	600	660	200
621-64-7	N-Nitroso-di-n-propylamine	U	360	1.0	330	360	91
65794-96-9	3&4-Methylphenol	U	660	1.0	600	660	200
67-72-1	Hexachloroethane	U	360	1.0	330	360	100
98-95-3	Nitrobenzene	U	360	1.0	330	360	100
78-59-1	Isophorone	U	360	1.0	330	360	82
88-75-5	2-Nitrophenol	U	660	1.0	600	660	180
105-67-9	2,4-Dimethylphenol	U	550	1.0	500	550	180
111-91-1	Bis(2-Chloroethoxy)methane	U	360	1.0	330	360	100
120-83-2	2,4-Dichlorophenol	U	550	1.0	500	550	160
106-47-8	4-Chloroaniline	U	550	1.0	500	550	130
105-60-2	Caprolactam	U	550	1.0	500	550	160
59-50-7	4-Chloro-3-Methylphenol	U	550	1.0	500	550	180
88-06-2	2,4,6-Trichlorophenol	U	550	1.0	500	550	170
95-95-4	2,4,5-Trichlorophenol	U	550	1.0	500	550	170
91-58-7	2-Chloronaphthalene	U	360	1.0	330	360	96
92-52-4	1,1'-Biphenyl	U	360	1.0	330	360	80
88-74-4	2-Nitroaniline	U	550	1.0	500	550	82
131-11-3	Dimethyl Phthalate	U	360	1.0	330	360	86
606-20-2	2,6-Dinitrotoluene	U	360	1.0	330	360	87
208-96-8	Acenaphthylene	U	360	1.0	330	360	77
99-09-2	3-Nitroaniline	U	550	1.0	500	550	100
83-32-9	Acenaphthene	U	360	1.0	330	360	71
51-28-5	2,4-Dinitrophenol	U	1300	1.0	1200	1300	410
132-64-9	Dibenzofuran	U	360	1.0	330	360	87
100-02-7	4-Nitrophenol	U	1300	1.0	1200	1300	340
121-14-2	2,4-Dinitrotoluene	U	360	1.0	330	360	93
84-66-2	Diethylphthalate	U	360	1.0	330	360	88
7005-72-3	4-Chlorophenyl-phenylether	U	360	1.0	330	360	86
100-01-6	4-Nitroaniline	U	550	1.0	500	550	150
534-52-1	4,6-Dinitro-2-Methylphenol	U	1300	1.0	1200	1300	370
86-30-6	N-Nitrosodiphenylamine	U	720	1.0	660	720	240
101-55-3	4-Bromophenyl-phenylether	U	360	1.0	330	360	93
1912-24-9	Atrazine	U	360	1.0	330	360	100
87-86-5	Pentachlorophenol	U	900	1.0	820	900	260
120-12-7	Anthracene	U	360	1.0	330	360	92
86-74-8	Carbazole	U	550	1.0	500	550	120

1130/09

18

KATAHDIN ANALYTICAL SERVICES
Report of Analytical Results

Client: CH2MHill
Project: TO-009 Lejeune
PO No:
Sample Date: 11/12/08
Received Date: 11/14/08
Extraction Date: 11/17/08
Analysis Date: 08-DEC-2008 10:36
Report Date: 12/10/2008
Matrix: SOIL
% Solids: 90.9

Lab ID: SB6587-15
Client ID: MR08-IS379-08D
SDG: TO9-2
Extracted by: CB
Extraction Method: SW846 3550
Analyst: JCG
Analysis Method: SW846 8270C
Lab Prep Batch: WG58144
Units: ug/Kgdrywt

CAS#	Compound	Flags	Results	DF	PQL	Adj.PQL	Adj.MDL	
84-74-2	Di-n-butylphthalate	U	360	1.0	330	360	110	
85-68-7	Butylbenzylphthalate	~~U~~ UJ	360	1.0	330	360	100	CCH
91-94-1	3,3'-Dichlorobenzidine	U	550	1.0	500	550	120	
218-01-9	Chrysene	U	360	1.0	330	360	100	
117-81-7	bis(2-Ethylhexyl)phthalate	J	720	1.0	330	360	110	CCH
117-84-0	Di-n-octylphthalate	~~U~~ UJ	360	1.0	330	360	230	CCH
367-12-4	2-Fluorophenol		75%					
13127-88-3	Phenol-D6		84%					
4165-60-0	Nitrobenzene-D5		82%					
321-60-8	2-Fluorobiphenyl		76%					
118-79-6	2,4,6-Tribromophenol		86%					
1718-51-0	Terphenyl-D14		110%					

lw
1/30/09

19

KATAHDIN ANALYTICAL SERVICES
Report of Analytical Results

Client: CH2MHill
Project: TO-009 Lejeune
PO No:
Sample Date: 11/11/08
Received Date: 11/14/08
Extraction Date: 11/17/08
Analysis Date: 08-DEC-2008 11:18
Report Date: 12/10/2008
Matrix: SOIL
% Solids: 89.1

Lab ID: SB6587-19
Client ID: MR08-SS377-08D
SDG: TO9-2
Extracted by: CB
Extraction Method: SW846 3550
Analyst: JCG
Analysis Method: SW846 8270C
Lab Prep Batch: WG58144
Units: ug/Kgdrywt

CAS#	Compound	Flags	Results	DF	PQL	Adj.PQL	Adj.MDL
100-52-7	Benzaldehyde	~~U~~ UJ	560	1.0	500	560	130 CCH
108-95-2	Phenol	U	560	1.0	500	560	180
111-44-4	Bis(2-Chloroethyl)ether	U	370	1.0	330	370	91
95-57-8	2-Chlorophenol	U	560	1.0	500	560	180
95-48-7	2-Methylphenol	U	670	1.0	600	670	220
108-60-1	2,2'-Oxybis(1-chloropropane)	U	370	1.0	330	370	100
98-86-2	Acetophenone	U	670	1.0	600	670	200
621-64-7	N-Nitroso-di-n-propylamine	U	370	1.0	330	370	93
65794-96-9	3&4-Methylphenol	U	670	1.0	600	670	210
67-72-1	Hexachloroethane	U	370	1.0	330	370	110
98-95-3	Nitrobenzene	U	370	1.0	330	370	100
78-59-1	Isophorone	U	370	1.0	330	370	84
88-75-5	2-Nitrophenol	U	670	1.0	600	670	190
105-67-9	2,4-Dimethylphenol	U	560	1.0	500	560	180
111-91-1	Bis(2-Chloroethoxy)methane	U	370	1.0	330	370	110
120-83-2	2,4-Dichlorophenol	U	560	1.0	500	560	170
106-47-8	4-Chloroaniline	U	560	1.0	500	560	130
105-60-2	Caprolactam	U	560	1.0	500	560	160
59-50-7	4-Chloro-3-Methylphenol	U	560	1.0	500	560	190
88-06-2	2,4,6-Trichlorophenol	U	560	1.0	500	560	170
95-95-4	2,4,5-Trichlorophenol	U	560	1.0	500	560	170
91-58-7	2-Chloronaphthalene	U	370	1.0	330	370	98
92-52-4	1,1'-Biphenyl	U	370	1.0	330	370	82
88-74-4	2-Nitroaniline	U	560	1.0	500	560	84
131-11-3	Dimethyl Phthalate	U	370	1.0	330	370	88
606-20-2	2,6-Dinitrotoluene	U	370	1.0	330	370	89
208-96-8	Acenaphthylene	U	370	1.0	330	370	78
99-09-2	3-Nitroaniline	U	560	1.0	500	560	100
83-32-9	Acenaphthene	U	370	1.0	330	370	73
51-28-5	2,4-Dinitrophenol	U	1300	1.0	1200	1300	420
132-64-9	Dibenzofuran	U	370	1.0	330	370	89
100-02-7	4-Nitrophenol	U	1300	1.0	1200	1300	350
121-14-2	2,4-Dinitrotoluene	U	370	1.0	330	370	95
84-66-2	Diethylphthalate	U	370	1.0	330	370	90
7005-72-3	4-Chlorophenyl-phenylether	U	370	1.0	330	370	88
100-01-6	4-Nitroaniline	U	560	1.0	500	560	150
534-52-1	4,6-Dinitro-2-Methylphenol	U	1300	1.0	1200	1300	380
86-30-6	N-Nitrosodiphenylamine	U	740	1.0	660	740	240
101-55-3	4-Bromophenyl-phenylether	U	370	1.0	330	370	95
1912-24-9	Atrazine	U	370	1.0	330	370	100
87-86-5	Pentachlorophenol	U	920	1.0	820	920	260
120-12-7	Anthracene	U	370	1.0	330	370	94
86-74-8	Carbazole	U	560	1.0	500	560	120

lcw 1/30/09

KATAHDIN ANALYTICAL SERVICES
Report of Analytical Results

Client: CH2MHill
Project: TO-009 Lejeune
PO No:
Sample Date: 11/11/08
Received Date: 11/14/08
Extraction Date: 11/17/08
Analysis Date: 08-DEC-2008 11:18
Report Date: 12/10/2008
Matrix: SOIL
% Solids: 89.1

Lab ID: SB6587-19
Client ID: MR08-SS377-08D
SDG: TO9-2
Extracted by: CB
Extraction Method: SW846 3550
Analyst: JCG
Analysis Method: SW846 8270C
Lab Prep Batch: WG58144
Units: ug/Kgdrywt

CAS#	Compound	Flags	Results	DF	PQL	Adj.PQL	Adj.MDL	
84-74-2	Di-n-butylphthalate	U	370	1.0	330	370	110	
85-68-7	Butylbenzylphthalate	~~U~~ UJ	370	1.0	330	370	100	CCH
91-94-1	3,3'-Dichlorobenzidine	U	560	1.0	500	560	130	
218-01-9	Chrysene	U	370	1.0	330	370	110	
117-81-7	bis(2-Ethylhexyl)phthalate	~~U~~ UJ	370	1.0	330	370	110	CCH
117-84-0	Di-n-octylphthalate	~~U~~ UJ	370	1.0	330	370	240	CCH
367-12-4	2-Fluorophenol		78%					
13127-88-3	Phenol-D6		86%					
4165-60-0	Nitrobenzene-D5		83%					
321-60-8	2-Fluorobiphenyl		83%					
118-79-6	2,4,6-Tribromophenol		91%					
1718-51-0	Terphenyl-D14		102%					

lew
11/30/09

20

KATAHDIN ANALYTICAL SERVICES
Report of Analytical Results

Client: CH2MHill
Project: TO-009 Lejeune
PO No:
Sample Date: 11/11/08
Received Date: 11/14/08
Extraction Date: 11/17/08
Analysis Date: 08-DEC-2008 12:00
Report Date: 12/10/2008
Matrix: SOIL
% Solids: 89.4

Lab ID: SB6587-21
Client ID: MR08-SS377D-08D
SDG: TO9-2
Extracted by: CB
Extraction Method: SW846 3550
Analyst: JCG
Analysis Method: SW846 8270C
Lab Prep Batch: WG58144
Units: ug/Kgdrywt

CAS#	Compound	Flags	Results	DF	PQL	Adj.PQL	Adj.MDL
100-52-7	Benzaldehyde	~~U~~ UJ	560	1.0	500	560	130 CH
108-95-2	Phenol	U	560	1.0	500	560	170
111-44-4	Bis(2-Chloroethyl)ether	U	370	1.0	330	370	91
95-57-8	2-Chlorophenol	U	560	1.0	500	560	180
95-48-7	2-Methylphenol	U	670	1.0	600	670	220
108-60-1	2,2'-Oxybis(1-chloropropane)	U	370	1.0	330	370	100
98-86-2	Acetophenone	U	670	1.0	600	670	200
621-64-7	N-Nitroso-di-n-propylamine	U	370	1.0	330	370	93
65794-96-9	3&4-Methylphenol	U	670	1.0	600	670	210
67-72-1	Hexachloroethane	U	370	1.0	330	370	110
98-95-3	Nitrobenzene	U	370	1.0	330	370	100
78-59-1	Isophorone	U	370	1.0	330	370	84
88-75-5	2-Nitrophenol	U	670	1.0	600	670	190
105-67-9	2,4-Dimethylphenol	U	560	1.0	500	560	180
111-91-1	Bis(2-Chloroethoxy)methane	U	370	1.0	330	370	110
120-83-2	2,4-Dichlorophenol	U	560	1.0	500	560	170
106-47-8	4-Chloroaniline	U	560	1.0	500	560	130
105-60-2	Caprolactam	U	560	1.0	500	560	160
59-50-7	4-Chloro-3-Methylphenol	U	560	1.0	500	560	180
88-06-2	2,4,6-Trichlorophenol	U	560	1.0	500	560	170
95-95-4	2,4,5-Trichlorophenol	U	560	1.0	500	560	170
91-58-7	2-Chloronaphthalene	U	370	1.0	330	370	97
92-52-4	1,1'-Biphenyl	U	370	1.0	330	370	82
88-74-4	2-Nitroaniline	U	560	1.0	500	560	84
131-11-3	Dimethyl Phthalate	U	370	1.0	330	370	87
606-20-2	2,6-Dinitrotoluene	U	370	1.0	330	370	88
208-96-8	Acenaphthylene	U	370	1.0	330	370	78
99-09-2	3-Nitroaniline	U	560	1.0	500	560	100
83-32-9	Acenaphthene	U	370	1.0	330	370	73
51-28-5	2,4-Dinitrophenol	U	1300	1.0	1200	1300	420
132-64-9	Dibenzofuran	U	370	1.0	330	370	88
100-02-7	4-Nitrophenol	U	1300	1.0	1200	1300	340
121-14-2	2,4-Dinitrotoluene	U	370	1.0	330	370	95
84-66-2	Diethylphthalate	U	370	1.0	330	370	89
7005-72-3	4-Chlorophenyl-phenylether	U	370	1.0	330	370	87
100-01-6	4-Nitroaniline	U	560	1.0	500	560	150
534-52-1	4,6-Dinitro-2-Methylphenol	U	1300	1.0	1200	1300	380
86-30-6	N-Nitrosodiphenylamine	U	740	1.0	660	740	240
101-55-3	4-Bromophenyl-phenylether	U	370	1.0	330	370	95
1912-24-9	Atrazine	U	370	1.0	330	370	100
87-86-5	Pentachlorophenol	U	920	1.0	820	920	260
120-12-7	Anthracene	U	370	1.0	330	370	94
86-74-8	Carbazole	U	560	1.0	500	560	120

MW 1/30/09

KATAHDIN ANALYTICAL SERVICES
Report of Analytical Results

Client: CH2MHill
Project: TO-009 Lejeune
PO No:
Sample Date: 11/11/08
Received Date: 11/14/08
Extraction Date: 11/17/08
Analysis Date: 08-DEC-2008 12:00
Report Date: 12/10/2008
Matrix: SOIL
% Solids: 89.4

Lab ID: SB6587-21
Client ID: MR08-SS377D-08D
SDG: TO9-2
Extracted by: CB
Extraction Method: SW846 3550
Analyst: JCG
Analysis Method: SW846 8270C
Lab Prep Batch: WG58144
Units: ug/Kgdrywt

CAS#	Compound	Flags	Results	DF	PQL	Adj.PQL	Adj.MDL	
84-74-2	Di-n-butylphthalate	U	370	1.0	330	370	110	
85-68-7	Butylbenzylphthalate	~~U~~ UJ	370	1.0	330	370	100	CCH
91-94-1	3,3'-Dichlorobenzidine	U	560	1.0	500	560	130	
218-01-9	Chrysene	U	370	1.0	330	370	110	
117-81-7	bis(2-Ethylhexyl)phthalate	~~U~~ UJ	370	1.0	330	370	110	CCH
117-84-0	Di-n-octylphthalate	~~U~~ UJ	370	1.0	330	370	240	CCH
367-12-4	2-Fluorophenol		64%					
13127-88-3	Phenol-D6		70%					
4165-60-0	Nitrobenzene-D5		64%					
321-60-8	2-Fluorobiphenyl		64%					
118-79-6	2,4,6-Tribromophenol		78%					
1718-51-0	Terphenyl-D14		84%					

JW 1130/09

21

KATAHDIN ANALYTICAL SERVICES
Report of Analytical Results

Client: CH2MHill
Project: TO-009 Lejeune
PO No:
Sample Date: 11/11/08
Received Date: 11/14/08
Extraction Date: 11/18/08
Analysis Date: 05-DEC-2008 20:36
Report Date: 12/10/2008
Matrix: SOIL
% Solids: 95.2

Lab ID: SB6587-23
Client ID: MR08-SS376-08D
SDG: TO9-2
Extracted by: AC
Extraction Method: SW846 3550
Analyst: EKC
Analysis Method: SW846 8270C
Lab Prep Batch: WG58204
Units: ug/Kgdrywt

CAS#	Compound	Flags	Results	DF	PQL	Adj.PQL	Adj.MDL	
100-52-7	Benzaldehyde	U	520	1.0	500	520	120	
108-95-2	Phenol	U	520	1.0	500	520	160	
111-44-4	Bis(2-Chloroethyl)ether	U	350	1.0	330	350	85	
95-57-8	2-Chlorophenol	U	520	1.0	500	520	170	
95-48-7	2-Methylphenol	U	630	1.0	600	630	210	
108-60-1	2,2'-Oxybis(1-chloropropane)	U	350	1.0	330	350	93	
98-86-2	Acetophenone	U	630	1.0	600	630	190	
621-64-7	N-Nitroso-di-n-propylamine	U	350	1.0	330	350	87	
65794-96-9	3&4-Methylphenol	U	630	1.0	600	630	200	
67-72-1	Hexachloroethane	U	350	1.0	330	350	100	
98-95-3	Nitrobenzene	U	350	1.0	330	350	96	
78-59-1	Isophorone	U	350	1.0	330	350	79	
88-75-5	2-Nitrophenol	U	630	1.0	600	630	180	
105-67-9	2,4-Dimethylphenol	U	520	1.0	500	520	170	
111-91-1	Bis(2-Chloroethoxy)methane	U	350	1.0	330	350	100	
120-83-2	2,4-Dichlorophenol	U	520	1.0	500	520	160	
106-47-8	4-Chloroaniline	U	520	1.0	500	520	120	
105-60-2	Caprolactam	U	520	1.0	500	520	150	
59-50-7	4-Chloro-3-Methylphenol	U	520	1.0	500	520	170	
88-06-2	2,4,6-Trichlorophenol	U	520	1.0	500	520	160	
95-95-4	2,4,5-Trichlorophenol	U	520	1.0	500	520	160	
91-58-7	2-Chloronaphthalene	U	350	1.0	330	350	91	
92-52-4	1,1'-Biphenyl	U	350	1.0	330	350	77	
88-74-4	2-Nitroaniline	U	520	1.0	500	520	79	
131-11-3	Dimethyl Phthalate	U	350	1.0	330	350	82	
606-20-2	2,6-Dinitrotoluene	U	350	1.0	330	350	83	
208-96-8	Acenaphthylene	U	350	1.0	330	350	73	
99-09-2	3-Nitroaniline	U	520	1.0	500	520	99	
83-32-9	Acenaphthene	U	350	1.0	330	350	68	
51-28-5	2,4-Dinitrophenol	U	1200	1.0	1200	1200	400	
132-64-9	Dibenzofuran	U	350	1.0	330	350	83	
100-02-7	4-Nitrophenol	~~U~~ UJ	1200	1.0	1200	1200	320	CCH
121-14-2	2,4-Dinitrotoluene	U	350	1.0	330	350	89	
84-66-2	Diethylphthalate	U	350	1.0	330	350	84	
7005-72-3	4-Chlorophenyl-phenylether	U	350	1.0	330	350	82	
100-01-6	4-Nitroaniline	U	520	1.0	500	520	140	
534-52-1	4,6-Dinitro-2-Methylphenol	U	1200	1.0	1200	1200	350	
86-30-6	N-Nitrosodiphenylamine	U	690	1.0	660	690	230	
101-55-3	4-Bromophenyl-phenylether	U	350	1.0	330	350	89	
1912-24-9	Atrazine	U	350	1.0	330	350	96	
87-86-5	Pentachlorophenol	U	860	1.0	820	860	250	
120-12-7	Anthracene	U	350	1.0	330	350	88	
86-74-8	Carbazole	U	520	1.0	500	520	120	

kw 1/30/09

KATAHDIN ANALYTICAL SERVICES
Report of Analytical Results

Client: CH2MHill
Project: TO-009 Lejeune
PO No:
Sample Date: 11/11/08
Received Date: 11/14/08
Extraction Date: 11/18/08
Analysis Date: 05-DEC-2008 20:36
Report Date: 12/10/2008
Matrix: SOIL
% Solids: 95.2

Lab ID: SB6587-23
Client ID: MR08-SS376-08D
SDG: TO9-2
Extracted by: AC
Extraction Method: SW846 3550
Analyst: EKC
Analysis Method: SW846 8270C
Lab Prep Batch: WG58204
Units: ug/Kgdrywt

CAS#	Compound	Flags	Results	DF	PQL	Adj.PQL	Adj.MDL
84-74-2	Di-n-butylphthalate	U	350	1.0	330	350	110
85-68-7	Butylbenzylphthalate	U	350	1.0	330	350	98
91-94-1	3,3'-Dichlorobenzidine	U	520	1.0	500	520	120
218-01-9	Chrysene	U	350	1.0	330	350	100
117-81-7	bis(2-Ethylhexyl)phthalate	U	350	1.0	330	350	100
117-84-0	Di-n-octylphthalate	U	350	1.0	330	350	220
367-12-4	2-Fluorophenol		79%				
13127-88-3	Phenol-D6		90%				
4165-60-0	Nitrobenzene-D5		84%				
321-60-8	2-Fluorobiphenyl		85%				
118-79-6	2,4,6-Tribromophenol		83%				
1718-51-0	Terphenyl-D14		103%				

lw 11/30/09

ENVIRONMENTAL
Data Services, Inc.

POLYNUCLEAR AROMATIC COMPOUNDS BY 8270 SIM

USEPA Region IV - Level IV Review

Site: MCB Camp Lejeune, TO-09 SDG #: TO9-3

Client: CH2M HILL, Inc., Virginia Beach, Virginia Date: January 31, 2009

Laboratory: Katahdin Analytical Services, Scarborough, Maine Reviewer: Nancy Weaver

EDS ID	Client Sample ID	Laboratory Sample ID	Matrix
1	IR78-GW16-08D	SB6586-2	Water
2	MR08-EB111208	SB6586-4	Water
3	IR78-GW36-08D	SB6586-6	Water
4	IR78-GW53-08D	SB6586-8	Water
5	IR78-GW04-2-08D	SB6586-10	Water
6	IR78-GW56-08D	SB6586-12	Water
6MS	IR78-GW56-08DMS	SB6586-12MS	Water
6MSD	IR78-GW56-08DMSD	SB6586-12MSD	Water
7	MR08-EB111208-1	SB6586-18	Water
7RE	MR08-EB111208-1RE	SB6586-18RE	Water
8	UST1607-MW02-08D	SB6614-2	Water
9	IR78-GW09-3-08D	SB6614-4	Water
10	IR78-GW11-08D	SB6614-6	Water
11	IR78-GW12-08D	SB6645-2	Water
12	MR08-EB111608-1	SB6645-4	Water
13	MR08-EB111708-1	SB6645-6	Water
14	MR08-TW07-08D	SB6645-8	Water
15	MR08-TW08-08D	SB6645-10RA	Water
16	MR08-TW06-08D	SB6673-2	Water
17	MR08-TW05-08D	SB6673-4	Water
18	MR08-TW14-08D	SB6673-6	Water
19	MR08-TW13-08D	SB6673-8	Water
20	MR08-TW11-08D	SB6673-10	Water
21	MR08-TW10-08D	SB6673-12	Water

The USEPA "Contract Laboratory Program National Functional Guidelines for Organic Data Review," October 1999, and professional judgement were used in evaluating the data in this summary report.

Holding Times - All samples were extracted within 7 days for water samples and analyzed within 40 days for all samples.

GC/MS Tuning - All of the DFTPP tunes in the initial and continuing calibrations met the percent relative abundance criteria.

Initial Calibration - The initial calibrations exhibited acceptable %RSD and mean RRF values.

Continuing Calibration - The continuing calibrations exhibited acceptable %D and RRF values except the following.

CCAL Date	Compound	%D/RRF	Qualifier	Affected Samples
12/10/08	Naphthalene	65.62%	J/UJ	1-7
	Hexachlorocyclopentadiene	33.97%	None	Already qualified due to LCS
12/11/08 0831	Naphthalene	96.00%	J/UJ	9, 10, 16, 17, 19-21
	Hexachlorobenzene	49.63%	J/UJ	9, 10, 16, 17, 19-21
12/11/08 1855	Naphthalene	105.33%	J/UJ	7RE, 8, 11-14
	Benzo (k) fluoranthene	26.31%	J/UJ	7RE, 8, 11-14
	Hexachlorobenzene	33.03%	J/UJ	7RE, 8, 11-14
12/15/08	Naphthalene	29.81%	J/UJ	15
	Fluoranthene	25.79%	J/UJ	15

Surrogates - All samples exhibited acceptable surrogate recoveries except the following.

Sample ID	Surrogate	%R	Qualifier
7	S4-Pyrene-d10	25%	None for 1 out
7RE	S4-Pyrene-d10	13%	None for 1 out
8	S3-Fluorene-d10	44%	None for 1 out
18	S1-2-Methylnaphthalene	2%	J/R - All compounds
	S3-Fluorene-d10	40%	J/R - All compounds

MS/MSD - The MS/MSD sample exhibited acceptable %R and RPD values except the following.

MS/MSD Sample ID	Compound	MS/MSD %R/RPD	Qualifier
6	Naphthalene	132%/128%/Ok	None - All ND
	Hexachlorocyclopentadiene	23%/21%/Ok	None - Already qualified due to LCS

Laboratory Control Sample - The LCS samples exhibited acceptable %R values except the following.

LCS ID	Compound	%R	Qualifier	Affected Samples
WG58142-LCS	Naphthalene	167%	None	All ND
	Hexachlorocyclopentadiene	17%	J/UJ	1-7, 7RE, 8-10
WG58243-LCS	Naphthalene	168%	None	All ND
WG58316-LCS	Naphthalene	178%	None	All ND

Internal Standard (IS) Area Performance - All internal standards met response and retention time (RT) criteria.

Method Blank - The method blanks were free of contamination.

Field, Equipment Blank - Field QC results are summarized below.

Blank ID	Compound	Conc. ug/L	Action Level ug/L	Qualifier	Affected Samples
MR08-EB111008	None - ND	-	-	-	-
MR08-EB111208	None - ND	-	-	-	-
MR08-EB111208-1	None - ND	-	-	-	-
MR08-EB111608-1	None - ND	-	-	-	-
MR08-EB111708-1	None - ND	-	-	-	-
MR08-FB111108	None - ND	-	-	-	-

Field Duplicates - Field duplicate samples were not included in this data package.

Tentatively Identified Compounds (TICs) - TICs were not reported.

Compound Quantitation - EDS sample #7 exhibited high surrogate recovery values and was reanalyzed with similar results. The original Form Is should be used for reporting purposes. No qualifiers were required for one surrogate out.

KATAHDIN ANALYTICAL SERVICES
Report of Analytical Results

Client: CH2MHill
Project: TO-009 Lejeune
PO No:
Sample Date: 11/12/08
Received Date: 11/14/08
Extraction Date: 11/17/08
Analysis Date: 10-DEC-2008 19:03
Report Date: 12/16/2008
Matrix: WATER
% Solids: NA

Lab ID: SB6586-2
Client ID: IR78-GW16-08D
SDG: TO9-3
Extracted by: KF
Extraction Method: SW846 3520
Analyst: JCG
Analysis Method: SW846 M8270C
Lab Prep Batch: WG58142
Units: ug/L

CAS#	Compound	Flags	Results	DF	PQL	Adj.PQL	Adj.MDL	
91-20-3	Naphthalene	~~U~~ UJ	0.25	1.0	0.25	0.25	0.064	CCH
91-57-6	2-Methylnaphthalene	U	0.25	1.0	0.25	0.25	0.077	
86-73-7	Fluorene	U	0.25	1.0	0.25	0.25	0.061	
85-01-8	Phenanthrene	U	0.25	1.0	0.25	0.25	0.051	
206-44-0	Fluoranthene	U	0.25	1.0	0.25	0.25	0.073	
129-00-0	Pyrene	U	0.25	1.0	0.25	0.25	0.059	
56-55-3	Benzo(a)anthracene	U	0.25	1.0	0.25	0.25	0.046	
205-99-2	Benzo(b)fluoranthene	U	0.27	1.0	0.27	0.27	0.089	
207-08-9	Benzo(k)fluoranthene	U	0.25	1.0	0.25	0.25	0.049	
50-32-8	Benzo(a)pyrene	U	0.25	1.0	0.25	0.25	0.066	
193-39-5	Indeno(1,2,3-cd)pyrene	U	0.25	1.0	0.25	0.25	0.052	
53-70-3	Dibenzo(a,h)anthracene	U	0.25	1.0	0.25	0.25	0.070	
191-24-2	Benzo(g,h,i)perylene	U	0.25	1.0	0.25	0.25	0.065	
118-74-1	Hexachlorobenzene	U	0.25	1.0	0.25	0.25	0.055	
87-68-3	Hexachlorobutadiene	U	0.27	1.0	0.27	0.27	0.087	
77-47-4	Hexachlorocyclopentadiene	~~U~~ UJ	0.25	1.0	0.25	0.25	0.067	BSL
7297-45-2	2-Methylnaphthalene-D10		54%					
367-12-4	2,4-Dibromophenol		90%					
81103-79-9	Fluorene-d10		52%					
1718-51-1	Pyrene-D10		85%					

lw
1/31/09

7

KATAHDIN ANALYTICAL SERVICES
Report of Analytical Results

Client: CH2MHill
Project: TO-009 Lejeune
PO No:
Sample Date: 11/12/08
Received Date: 11/14/08
Extraction Date: 11/17/08
Analysis Date: 10-DEC-2008 19:46
Report Date: 12/16/2008
Matrix: WATER
% Solids: NA

Lab ID: SB6586-4
Client ID: MR08-EB111208
SDG: TO9-3
Extracted by: KF
Extraction Method: SW846 3520
Analyst: JCG
Analysis Method: SW846 M8270C
Lab Prep Batch: WG58142
Units: ug/L

CAS#	Compound	Flags	Results	DF	PQL	Adj.PQL	Adj.MDL	
91-20-3	Naphthalene	~~U~~ UJ	0.24	1.0	0.25	0.24	0.060	CCH
91-57-6	2-Methylnaphthalene	U	0.24	1.0	0.25	0.24	0.073	
86-73-7	Fluorene	U	0.24	1.0	0.25	0.24	0.058	
85-01-8	Phenanthrene	U	0.24	1.0	0.25	0.24	0.048	
206-44-0	Fluoranthene	U	0.24	1.0	0.25	0.24	0.069	
129-00-0	Pyrene	U	0.24	1.0	0.25	0.24	0.056	
56-55-3	Benzo(a)anthracene	U	0.24	1.0	0.25	0.24	0.043	
205-99-2	Benzo(b)fluoranthene	U	0.25	1.0	0.27	0.25	0.084	
207-08-9	Benzo(k)fluoranthene	U	0.24	1.0	0.25	0.24	0.046	
50-32-8	Benzo(a)pyrene	U	0.24	1.0	0.25	0.24	0.062	
193-39-5	Indeno(1,2,3-cd)pyrene	U	0.24	1.0	0.25	0.24	0.049	
53-70-3	Dibenzo(a,h)anthracene	U	0.24	1.0	0.25	0.24	0.066	
191-24-2	Benzo(g,h,i)perylene	U	0.24	1.0	0.25	0.24	0.061	
118-74-1	Hexachlorobenzene	U	0.24	1.0	0.25	0.24	0.052	
87-68-3	Hexachlorobutadiene	U	0.25	1.0	0.27	0.25	0.082	
77-47-4	Hexachlorocyclopentadiene	~~U~~ UJ	0.24	1.0	0.25	0.24	0.063	BSL
7297-45-2	2-Methylnaphthalene-D10		52%					
367-12-4	2,4-Dibromophenol		69%					
81103-79-9	Fluorene-d10		49%					
1718-51-1	Pyrene-D10		79%					

fuw
1/31/09

3

KATAHDIN ANALYTICAL SERVICES
Report of Analytical Results

Client: CH2MHill
Project: TO-009 Lejeune
PO No:
Sample Date: 11/13/08
Received Date: 11/14/08
Extraction Date: 11/17/08
Analysis Date: 10-DEC-2008 20:28
Report Date: 12/16/2008
Matrix: WATER
% Solids: NA

Lab ID: SB6586-6
Client ID: IR78-GW36-08D
SDG: TO9-3
Extracted by: KF
Extraction Method: SW846 3520
Analyst: JCG
Analysis Method: SW846 M8270C
Lab Prep Batch: WG58142
Units: ug/L

CAS#	Compound	Flags	Results	DF	PQL	Adj.PQL	Adj.MDL	
91-20-3	Naphthalene	~~U~~ UJ	0.24	1.0	0.25	0.24	0.063	CCH
91-57-6	2-Methylnaphthalene	U	0.24	1.0	0.25	0.24	0.075	
86-73-7	Fluorene	U	0.24	1.0	0.25	0.24	0.060	
85-01-8	Phenanthrene	U	0.24	1.0	0.25	0.24	0.050	
206-44-0	Fluoranthene	U	0.24	1.0	0.25	0.24	0.072	
129-00-0	Pyrene	U	0.24	1.0	0.25	0.24	0.058	
56-55-3	Benzo(a)anthracene	U	0.24	1.0	0.25	0.24	0.045	
205-99-2	Benzo(b)fluoranthene	U	0.26	1.0	0.27	0.26	0.087	
207-08-9	Benzo(k)fluoranthene	U	0.24	1.0	0.25	0.24	0.048	
50-32-8	Benzo(a)pyrene	U	0.24	1.0	0.25	0.24	0.065	
193-39-5	Indeno(1,2,3-cd)pyrene	U	0.24	1.0	0.25	0.24	0.051	
53-70-3	Dibenzo(a,h)anthracene	U	0.24	1.0	0.25	0.24	0.069	
191-24-2	Benzo(g,h,i)perylene	U	0.24	1.0	0.25	0.24	0.064	
118-74-1	Hexachlorobenzene	U	0.24	1.0	0.25	0.24	0.054	
87-68-3	Hexachlorobutadiene	U	0.26	1.0	0.27	0.26	0.085	
77-47-4	Hexachlorocyclopentadiene	~~U~~ UJ	0.24	1.0	0.25	0.24	0.066	BSL
7297-45-2	2-Methylnaphthalene-D10		56%					
367-12-4	2,4-Dibromophenol		91%					
81103-79-9	Fluorene-d10		57%					
1718-51-1	Pyrene-D10		76%					

AW 12/31/09

4

KATAHDIN ANALYTICAL SERVICES
Report of Analytical Results

Client: CH2MHill
Project: TO-009 Lejeune
PO No:
Sample Date: 11/11/08
Received Date: 11/14/08
Extraction Date: 11/17/08
Analysis Date: 10-DEC-2008 21:11
Report Date: 12/16/2008
Matrix: WATER
% Solids: NA

Lab ID: SB6586-8
Client ID: IR78-GW53-08D
SDG: TO9-3
Extracted by: KF
Extraction Method: SW846 3520
Analyst: JCG
Analysis Method: SW846 M8270C
Lab Prep Batch: WG58142
Units: ug/L

CAS#	Compound	Flags	Results	DF	PQL	Adj.PQL	Adj.MDL	
91-20-3	Naphthalene	~~U~~ UJ	0.24	1.0	0.25	0.24	0.060	CCH
91-57-6	2-Methylnaphthalene	U	0.24	1.0	0.25	0.24	0.073	
86-73-7	Fluorene	U	0.24	1.0	0.25	0.24	0.058	
85-01-8	Phenanthrene	U	0.24	1.0	0.25	0.24	0.048	
206-44-0	Fluoranthene	U	0.24	1.0	0.25	0.24	0.069	
129-00-0	Pyrene	U	0.24	1.0	0.25	0.24	0.056	
56-55-3	Benzo(a)anthracene	U	0.24	1.0	0.25	0.24	0.043	
205-99-2	Benzo(b)fluoranthene	U	0.25	1.0	0.27	0.25	0.084	
207-08-9	Benzo(k)fluoranthene	U	0.24	1.0	0.25	0.24	0.046	
50-32-8	Benzo(a)pyrene	U	0.24	1.0	0.25	0.24	0.062	
193-39-5	Indeno(1,2,3-cd)pyrene	U	0.24	1.0	0.25	0.24	0.049	
53-70-3	Dibenzo(a,h)anthracene	U	0.24	1.0	0.25	0.24	0.066	
191-24-2	Benzo(g,h,i)perylene	U	0.24	1.0	0.25	0.24	0.061	
118-74-1	Hexachlorobenzene	U	0.24	1.0	0.25	0.24	0.052	
87-68-3	Hexachlorobutadiene	U	0.25	1.0	0.27	0.25	0.082	
77-47-4	Hexachlorocyclopentadiene	~~U~~ UJ	0.24	1.0	0.25	0.24	0.063	BSL
7297-45-2	2-Methylnaphthalene-D10		48%					
367-12-4	2,4-Dibromophenol		90%					
81103-79-9	Fluorene-d10		52%					
1718-51-1	Pyrene-D10		75%					

QCJ
1/21/09

5

KATAHDIN ANALYTICAL SERVICES
Report of Analytical Results

Client: CH2MHill
Project: TO-009 Lejeune
PO No:
Sample Date: 11/11/08
Received Date: 11/14/08
Extraction Date: 11/17/08
Analysis Date: 10-DEC-2008 21:53
Report Date: 12/16/2008
Matrix: WATER
% Solids: NA

Lab ID: SB6586-10
Client ID: IR78-GW04-2-08D
SDG: TO9-3
Extracted by: KF
Extraction Method: SW846 3520
Analyst: JCG
Analysis Method: SW846 M8270C
Lab Prep Batch: WG58142
Units: ug/L

CAS#	Compound	Flags	Results	DF	PQL	Adj.PQL	Adj.MDL	
91-20-3	Naphthalene	~~U~~ UJ	0.24	1.0	0.25	0.24	0.060	CCH
91-57-6	2-Methylnaphthalene	U	0.24	1.0	0.25	0.24	0.073	
86-73-7	Fluorene	U	0.24	1.0	0.25	0.24	0.058	
85-01-8	Phenanthrene	U	0.24	1.0	0.25	0.24	0.048	
206-44-0	Fluoranthene	U	0.24	1.0	0.25	0.24	0.069	
129-00-0	Pyrene	U	0.24	1.0	0.25	0.24	0.056	
56-55-3	Benzo(a)anthracene	U	0.24	1.0	0.25	0.24	0.043	
205-99-2	Benzo(b)fluoranthene	U	0.25	1.0	0.27	0.25	0.084	
207-08-9	Benzo(k)fluoranthene	U	0.24	1.0	0.25	0.24	0.046	
50-32-8	Benzo(a)pyrene	U	0.24	1.0	0.25	0.24	0.062	
193-39-5	Indeno(1,2,3-cd)pyrene	U	0.24	1.0	0.25	0.24	0.049	
53-70-3	Dibenzo(a,h)anthracene	U	0.24	1.0	0.25	0.24	0.066	
191-24-2	Benzo(g,h,i)perylene	U	0.24	1.0	0.25	0.24	0.061	
118-74-1	Hexachlorobenzene	U	0.24	1.0	0.25	0.24	0.052	
87-68-3	Hexachlorobutadiene	U	0.25	1.0	0.27	0.25	0.082	
77-47-4	Hexachlorocyclopentadiene	~~U~~ UJ	0.24	1.0	0.25	0.24	0.063	BSL
7297-45-2	2-Methylnaphthalene-D10		59%					
367-12-4	2,4-Dibromophenol		75%					
81103-79-9	Fluorene-d10		54%					
1718-51-1	Pyrene-D10		70%					

DLO 1/31/09

6

KATAHDIN ANALYTICAL SERVICES
Report of Analytical Results

Client: CH2MHill
Project: TO-009 Lejeune
PO No:
Sample Date: 11/13/08
Received Date: 11/14/08
Extraction Date: 11/17/08
Analysis Date: 10-DEC-2008 22:35
Report Date: 12/16/2008
Matrix: WATER
% Solids: NA

Lab ID: SB6586-12
Client ID: IR78-GW56-08D
SDG: TO9-3
Extracted by: KF
Extraction Method: SW846 3520
Analyst: JCG
Analysis Method: SW846 M8270C
Lab Prep Batch: WG58142
Units: ug/L

CAS#	Compound	Flags	Results	DF	PQL	Adj.PQL	Adj.MDL	
91-20-3	Naphthalene	~~U~~ UJ	0.26	1.0	0.25	0.26	0.068	CCH
91-57-6	2-Methylnaphthalene	U	0.26	1.0	0.25	0.26	0.082	
86-73-7	Fluorene	U	0.26	1.0	0.25	0.26	0.065	
85-01-8	Phenanthrene	U	0.26	1.0	0.25	0.26	0.054	
206-44-0	Fluoranthene	U	0.26	1.0	0.25	0.26	0.078	
129-00-0	Pyrene	U	0.26	1.0	0.25	0.26	0.063	
56-55-3	Benzo(a)anthracene	U	0.26	1.0	0.25	0.26	0.049	
205-99-2	Benzo(b)fluoranthene	U	0.29	1.0	0.27	0.29	0.095	
207-08-9	Benzo(k)fluoranthene	U	0.26	1.0	0.25	0.26	0.052	
50-32-8	Benzo(a)pyrene	U	0.26	1.0	0.25	0.26	0.070	
193-39-5	Indeno(1,2,3-cd)pyrene	U	0.26	1.0	0.25	0.26	0.055	
53-70-3	Dibenzo(a,h)anthracene	U	0.26	1.0	0.25	0.26	0.074	
191-24-2	Benzo(g,h,i)perylene	U	0.26	1.0	0.25	0.26	0.069	
118-74-1	Hexachlorobenzene	U	0.26	1.0	0.25	0.26	0.058	
87-68-3	Hexachlorobutadiene	U	0.29	1.0	0.27	0.29	0.092	
77-47-4	Hexachlorocyclopentadiene	~~U~~ UJ	0.26	1.0	0.25	0.26	0.071	BSL
7297-45-2	2-Methylnaphthalene-D10		51%					
367-12-4	2,4-Dibromophenol		72%					
81103-79-9	Fluorene-d10		46%					
1718-51-1	Pyrene-D10		69%					

LW 11/21/09

7

KATAHDIN ANALYTICAL SERVICES
Report of Analytical Results

Client: CH2MHill
Project: TO-009 Lejeune
PO No:
Sample Date: 11/13/08
Received Date: 11/14/08
Extraction Date: 11/17/08
Analysis Date: 10-DEC-2008 23:18
Report Date: 12/16/2008
Matrix: WATER
% Solids: NA

Lab ID: SB6586-18
Client ID: MR08-EB111208-1
SDG: TO9-3
Extracted by: KF
Extraction Method: SW846 3520
Analyst: JCG
Analysis Method: SW846 M8270C
Lab Prep Batch: WG58142
Units: ug/L

CAS#	Compound	Flags	Results	DF	PQL	Adj.PQL	Adj.MDL	
91-20-3	Naphthalene	~~U~~ UJ	0.24	1.0	0.25	0.24	0.060	CCH
91-57-6	2-Methylnaphthalene	U	0.24	1.0	0.25	0.24	0.073	
86-73-7	Fluorene	U	0.24	1.0	0.25	0.24	0.058	
85-01-8	Phenanthrene	U	0.24	1.0	0.25	0.24	0.048	
206-44-0	Fluoranthene	U	0.24	1.0	0.25	0.24	0.069	
129-00-0	Pyrene	U	0.24	1.0	0.25	0.24	0.056	
56-55-3	Benzo(a)anthracene	U	0.24	1.0	0.25	0.24	0.043	
205-99-2	Benzo(b)fluoranthene	U	0.25	1.0	0.27	0.25	0.084	
207-08-9	Benzo(k)fluoranthene	U	0.24	1.0	0.25	0.24	0.046	
50-32-8	Benzo(a)pyrene	U	0.24	1.0	0.25	0.24	0.062	
193-39-5	Indeno(1,2,3-cd)pyrene	U	0.24	1.0	0.25	0.24	0.049	
53-70-3	Dibenzo(a,h)anthracene	U	0.24	1.0	0.25	0.24	0.066	
191-24-2	Benzo(g,h,i)perylene	U	0.24	1.0	0.25	0.24	0.061	
118-74-1	Hexachlorobenzene	U	0.24	1.0	0.25	0.24	0.052	
87-68-3	Hexachlorobutadiene	U	0.25	1.0	0.27	0.25	0.082	
77-47-4	Hexachlorocyclopentadiene	~~U~~ UJ	0.24	1.0	0.25	0.24	0.063	BSL
7297-45-2	2-Methylnaphthalene-D10		58%					
367-12-4	2,4-Dibromophenol		136%					
81103-79-9	Fluorene-d10		83%					
1718-51-1	Pyrene-D10		* 25%					

AW 1/31/09

7RE

KATAHDIN ANALYTICAL SERVICES
Report of Analytical Results

Client: CH2MHill
Project: TO-009 Lejeune
PO No:
Sample Date: 11/13/08
Received Date: 11/14/08
Extraction Date: 11/17/08
Analysis Date: 11-DEC-2008 20:20
Report Date: 12/16/2008
Matrix: WATER
% Solids: NA

Lab ID: SB6586-18RA
Client ID: MR08-EB111208-1
SDG: TO9-3
Extracted by: KF
Extraction Method: SW846 3520
Analyst: JCG
Analysis Method: SW846 M8270C
Lab Prep Batch: WG58142
Units: ug/L

Use original

CAS#	Compound	Flags	Results	DF	PQL	Adj.PQL	Adj.MDL	
91-20-3	Naphthalene	~~U~~ UJ	0.24	1.0	0.25	0.24	0.060	CCH
91-57-6	2-Methylnaphthalene	U	0.24	1.0	0.25	0.24	0.073	
86-73-7	Fluorene	U	0.24	1.0	0.25	0.24	0.058	
85-01-8	Phenanthrene	U	0.24	1.0	0.25	0.24	0.048	
206-44-0	Fluoranthene	U	0.24	1.0	0.25	0.24	0.069	
129-00-0	Pyrene	U	0.24	1.0	0.25	0.24	0.056	
56-55-3	Benzo(a)anthracene	U	0.24	1.0	0.25	0.24	0.043	
205-99-2	Benzo(b)fluoranthene	U	0.25	1.0	0.27	0.25	0.084	
207-08-9	Benzo(k)fluoranthene	~~U~~ UJ	0.24	1.0	0.25	0.24	0.046	CCH
50-32-8	Benzo(a)pyrene	U	0.24	1.0	0.25	0.24	0.062	
193-39-5	Indeno(1,2,3-cd)pyrene	U	0.24	1.0	0.25	0.24	0.049	
53-70-3	Dibenzo(a,h)anthracene	U	0.24	1.0	0.25	0.24	0.066	
191-24-2	Benzo(g,h,i)perylene	U	0.24	1.0	0.25	0.24	0.061	
118-74-1	Hexachlorobenzene	~~U~~ UJ	0.24	1.0	0.25	0.24	0.052	CCH
87-68-3	Hexachlorobutadiene	U	0.25	1.0	0.27	0.25	0.082	
77-47-4	Hexachlorocyclopentadiene	~~U~~ UJ	0.24	1.0	0.25	0.24	0.063	BSL
7297-45-2	2-Methylnaphthalene-D10		52%					
367-12-4	~~2,4-Dibromophenol~~		~~*152%~~					
81103-79-9	Fluorene-d10		91%					
1718-51-1	Pyrene-D10		* 13%					

Page 01 of 01 R0285.D

MW 12/1/09

8

KATAHDIN ANALYTICAL SERVICES
Report of Analytical Results

Client: CH2MHill
Project: TO-009 Lejeune
PO No:
Sample Date: 11/13/08
Received Date: 11/15/08
Extraction Date: 11/17/08
Analysis Date: 11-DEC-2008 21:02
Report Date: 12/16/2008
Matrix: WATER
% Solids: NA

Lab ID: SB6614-2RA
Client ID: UST1607-MW02-08D
SDG: TO9-3
Extracted by: KF
Extraction Method: SW846 3520
Analyst: JCG
Analysis Method: SW846 M8270C
Lab Prep Batch: WG58142
Units: ug/L

CAS#	Compound	Flags	Results	DF	PQL	Adj.PQL	Adj.MDL	
91-20-3	Naphthalene	~~U~~ UJ	0.24	1.0	0.25	0.24	0.060	CCH
91-57-6	2-Methylnaphthalene	U	0.24	1.0	0.25	0.24	0.073	
86-73-7	Fluorene	U	0.24	1.0	0.25	0.24	0.058	
85-01-8	Phenanthrene	U	0.24	1.0	0.25	0.24	0.048	
206-44-0	Fluoranthene	U	0.24	1.0	0.25	0.24	0.069	
129-00-0	Pyrene	U	0.24	1.0	0.25	0.24	0.056	
56-55-3	Benzo(a)anthracene	U	0.24	1.0	0.25	0.24	0.043	
205-99-2	Benzo(b)fluoranthene	U	0.25	1.0	0.27	0.25	0.084	
207-08-9	Benzo(k)fluoranthene	~~U~~ UJ	0.24	1.0	0.25	0.24	0.046	CCH
50-32-8	Benzo(a)pyrene	U	0.24	1.0	0.25	0.24	0.062	
193-39-5	Indeno(1,2,3-cd)pyrene	U	0.24	1.0	0.25	0.24	0.049	
53-70-3	Dibenzo(a,h)anthracene	U	0.24	1.0	0.25	0.24	0.066	
191-24-2	Benzo(g,h,i)perylene	U	0.24	1.0	0.25	0.24	0.061	
118-74-1	Hexachlorobenzene	~~U~~ UJ	0.24	1.0	0.25	0.24	0.052	CCH
87-68-3	Hexachlorobutadiene	U	0.25	1.0	0.27	0.25	0.082	
77-47-4	Hexachlorocyclopentadiene	~~U~~ UJ	0.24	1.0	0.25	0.24	0.063	BSL
7297-45-2	2-Methylnaphthalene-D10		54%					
367-12-4	2,4-Dibromophenol		92%					
81103-79-9	Fluorene-d10		* 44%					
1718-51-1	Pyrene-D10		43%					

LW
1/31/09

KATAHDIN ANALYTICAL SERVICES
Report of Analytical Results

Client: CH2MHill
Project: TO-009 Lejeune
PO No:
Sample Date: 11/13/08
Received Date: 11/15/08
Extraction Date: 11/17/08
Analysis Date: 11-DEC-2008 10:40
Report Date: 12/16/2008
Matrix: WATER
% Solids: NA

Lab ID: SB6614-4
Client ID: IR78-GW09-3-08D
SDG: TO9-3
Extracted by: KF
Extraction Method: SW846 3520
Analyst: JLP
Analysis Method: SW846 M8270C
Lab Prep Batch: WG58142
Units: ug/L

CAS#	Compound	Flags	Results	DF	PQL	Adj.PQL	Adj.MDL	
91-20-3	Naphthalene	~~U~~ UJ	0.24	1.0	0.25	0.24	0.060	CCH
91-57-6	2-Methylnaphthalene	U	0.24	1.0	0.25	0.24	0.073	
86-73-7	Fluorene	U	0.24	1.0	0.25	0.24	0.058	
85-01-8	Phenanthrene	U	0.24	1.0	0.25	0.24	0.048	
206-44-0	Fluoranthene	U	0.24	1.0	0.25	0.24	0.069	
129-00-0	Pyrene	U	0.24	1.0	0.25	0.24	0.056	
56-55-3	Benzo(a)anthracene	U	0.24	1.0	0.25	0.24	0.043	
205-99-2	Benzo(b)fluoranthene	U	0.25	1.0	0.27	0.25	0.084	
207-08-9	Benzo(k)fluoranthene	U	0.24	1.0	0.25	0.24	0.046	
50-32-8	Benzo(a)pyrene	U	0.24	1.0	0.25	0.24	0.062	
193-39-5	Indeno(1,2,3-cd)pyrene	U	0.24	1.0	0.25	0.24	0.049	
53-70-3	Dibenzo(a,h)anthracene	U	0.24	1.0	0.25	0.24	0.066	
191-24-2	Benzo(g,h,i)perylene	U	0.24	1.0	0.25	0.24	0.061	
118-74-1	Hexachlorobenzene	~~U~~ UJ	0.24	1.0	0.25	0.24	0.052	CCH
87-68-3	Hexachlorobutadiene	U	0.25	1.0	0.27	0.25	0.082	
77-47-4	Hexachlorocyclopentadiene	~~U~~ UJ	0.24	1.0	0.25	0.24	0.063	BSL
7297-45-2	2-Methylnaphthalene-D10		62%					
367-12-4	2,4-Dibromophenol		101%					
81103-79-9	Fluorene-d10		67%					
1718-51-1	Pyrene-D10		73%					

lw 1/31/09

10

KATAHDIN ANALYTICAL SERVICES
Report of Analytical Results

Client: CH2MHill
Project: TO-009 Lejeune
PO No:
Sample Date: 11/13/08
Received Date: 11/15/08
Extraction Date: 11/17/08
Analysis Date: 11-DEC-2008 11:22
Report Date: 12/16/2008
Matrix: WATER
% Solids: NA

Lab ID: SB6614-6
Client ID: IR78-GW11-08D
SDG: TO9-3
Extracted by: KF
Extraction Method: SW846 3520
Analyst: JLP
Analysis Method: SW846 M8270C
Lab Prep Batch: WG58142
Units: ug/L

CAS#	Compound	Flags	Results	DF	PQL	Adj.PQL	Adj.MDL	
91-20-3	Naphthalene	~~U~~ UJ	0.24	1.0	0.25	0.24	0.060	CCH
91-57-6	2-Methylnaphthalene	U	0.24	1.0	0.25	0.24	0.073	
86-73-7	Fluorene	U	0.24	1.0	0.25	0.24	0.058	
85-01-8	Phenanthrene	U	0.24	1.0	0.25	0.24	0.048	
206-44-0	Fluoranthene	U	0.24	1.0	0.25	0.24	0.069	
129-00-0	Pyrene	U	0.24	1.0	0.25	0.24	0.056	
56-55-3	Benzo(a)anthracene	U	0.24	1.0	0.25	0.24	0.043	
205-99-2	Benzo(b)fluoranthene	U	0.25	1.0	0.27	0.25	0.084	
207-08-9	Benzo(k)fluoranthene	U	0.24	1.0	0.25	0.24	0.046	
50-32-8	Benzo(a)pyrene	U	0.24	1.0	0.25	0.24	0.062	
193-39-5	Indeno(1,2,3-cd)pyrene	U	0.24	1.0	0.25	0.24	0.049	
53-70-3	Dibenzo(a,h)anthracene	U	0.24	1.0	0.25	0.24	0.066	
191-24-2	Benzo(g,h,i)perylene	U	0.24	1.0	0.25	0.24	0.061	
118-74-1	Hexachlorobenzene	~~U~~ UJ	0.24	1.0	0.25	0.24	0.052	CCH
87-68-3	Hexachlorobutadiene	U	0.25	1.0	0.27	0.25	0.082	
77-47-4	Hexachlorocyclopentadiene	~~U~~ UJ	0.24	1.0	0.25	0.24	0.063	BSL
7297-45-2	2-Methylnaphthalene-D10		54%					
367-12-4	2,4-Dibromophenol		46%					
81103-79-9	Fluorene-d10		51%					
1718-51-1	Pyrene-D10		78%					

lw
11-31-09

11

KATAHDIN ANALYTICAL SERVICES
Report of Analytical Results

Client: CH2MHill
Project: TO-009 Lejeune
PO No:
Sample Date: 11/14/08
Received Date: 11/18/08
Extraction Date: 11/19/08
Analysis Date: 12-DEC-2008 00:34
Report Date: 12/16/2008
Matrix: WATER
% Solids: NA

Lab ID: SB6645-2
Client ID: IR78-GW12-08D
SDG: TO9-3
Extracted by: KF
Extraction Method: SW846 3510
Analyst: JCG
Analysis Method: SW846 M8270C
Lab Prep Batch: WG58243
Units: ug/L

CAS#	Compound	Flags	Results	DF	PQL	Adj.PQL	Adj.MDL	
91-20-3	Naphthalene	~~U~~ UJ	0.24	1.0	0.25	0.24	0.060	CCH
91-57-6	2-Methylnaphthalene	U	0.24	1.0	0.25	0.24	0.073	
86-73-7	Fluorene	U	0.24	1.0	0.25	0.24	0.058	
85-01-8	Phenanthrene	U	0.24	1.0	0.25	0.24	0.048	
206-44-0	Fluoranthene	U	0.24	1.0	0.25	0.24	0.069	
129-00-0	Pyrene	U	0.24	1.0	0.25	0.24	0.056	
56-55-3	Benzo(a)anthracene	U	0.24	1.0	0.25	0.24	0.043	
205-99-2	Benzo(b)fluoranthene	U	0.25	1.0	0.27	0.25	0.084	
207-08-9	Benzo(k)fluoranthene	~~U~~ UJ	0.24	1.0	0.25	0.24	0.046	CCH
50-32-8	Benzo(a)pyrene	U	0.24	1.0	0.25	0.24	0.062	
193-39-5	Indeno(1,2,3-cd)pyrene	U	0.24	1.0	0.25	0.24	0.049	
53-70-3	Dibenzo(a,h)anthracene	U	0.24	1.0	0.25	0.24	0.066	
191-24-2	Benzo(g,h,i)perylene	U	0.24	1.0	0.25	0.24	0.061	
118-74-1	Hexachlorobenzene	~~U~~ UJ	0.24	1.0	0.25	0.24	0.052	CCH
87-68-3	Hexachlorobutadiene	U	0.25	1.0	0.27	0.25	0.082	
77-47-4	Hexachlorocyclopentadiene	U	0.24	1.0	0.25	0.24	0.063	
7297-45-2	2-Methylnaphthalene-D10		55%					
367-12-4	2,4-Dibromophenol		77%					
81103-79-9	Fluorene-d10		46%					
1718-51-1	Pyrene-D10		83%					

lw
1/21/09

12

KATAHDIN ANALYTICAL SERVICES
Report of Analytical Results

Client: CH2MHill
Project: TO-009 Lejeune
PO No:
Sample Date: 11/16/08
Received Date: 11/18/08
Extraction Date: 11/19/08
Analysis Date: 12-DEC-2008 01:16
Report Date: 12/16/2008
Matrix: WATER
% Solids: NA

Lab ID: SB6645-4
Client ID: MR08-EB111608-1
SDG: TO9-3
Extracted by: KF
Extraction Method: SW846 3510
Analyst: JCG
Analysis Method: SW846 M8270C
Lab Prep Batch: WG58243
Units: ug/L

CAS#	Compound	Flags	Results	DF	PQL	Adj.PQL	Adj.MDL	
91-20-3	Naphthalene	~~U~~ UJ	0.26	1.0	0.25	0.26	0.066	CCH
91-57-6	2-Methylnaphthalene	U	0.26	1.0	0.25	0.26	0.079	
86-73-7	Fluorene	U	0.26	1.0	0.25	0.26	0.063	
85-01-8	Phenanthrene	U	0.26	1.0	0.25	0.26	0.052	
206-44-0	Fluoranthene	U	0.26	1.0	0.25	0.26	0.075	
129-00-0	Pyrene	U	0.26	1.0	0.25	0.26	0.061	
56-55-3	Benzo(a)anthracene	U	0.26	1.0	0.25	0.26	0.047	
205-99-2	Benzo(b)fluoranthene	U	0.28	1.0	0.27	0.28	0.092	
207-08-9	Benzo(k)fluoranthene	~~U~~ UJ	0.26	1.0	0.25	0.26	0.050	CCH
50-32-8	Benzo(a)pyrene	U	0.26	1.0	0.25	0.26	0.068	
193-39-5	Indeno(1,2,3-cd)pyrene	U	0.26	1.0	0.25	0.26	0.054	
53-70-3	Dibenzo(a,h)anthracene	U	0.26	1.0	0.25	0.26	0.072	
191-24-2	Benzo(g,h,i)perylene	U	0.26	1.0	0.25	0.26	0.067	
118-74-1	Hexachlorobenzene	~~U~~ UJ	0.26	1.0	0.25	0.26	0.057	CCH
87-68-3	Hexachlorobutadiene	U	0.28	1.0	0.27	0.28	0.090	
77-47-4	Hexachlorocyclopentadiene	U	0.26	1.0	0.25	0.26	0.069	
7297-45-2	2-Methylnaphthalene-D10		70%					
367-12-4	2,4-Dibromophenol		87%					
81103-79-9	Fluorene-d10		61%					
1718-51-1	Pyrene-D10		91%					

QW 11/31/09

13

KATAHDIN ANALYTICAL SERVICES
Report of Analytical Results

Client: CH2MHill
Project: TO-009 Lejeune
PO No:
Sample Date: 11/17/08
Received Date: 11/18/08
Extraction Date: 11/19/08
Analysis Date: 12-DEC-2008 01:59
Report Date: 12/16/2008
Matrix: WATER
% Solids: NA

Lab ID: SB6645-6
Client ID: MR08-EB111708-1
SDG: TO9-3
Extracted by: KF
Extraction Method: SW846 3510
Analyst: JCG
Analysis Method: SW846 M8270C
Lab Prep Batch: WG58243
Units: ug/L

CAS#	Compound	Flags	Results	DF	PQL	Adj.PQL	Adj.MDL	
91-20-3	Naphthalene	~~U~~ UJ	0.24	1.0	0.25	0.24	0.062	CCH
91-57-6	2-Methylnaphthalene	U	0.24	1.0	0.25	0.24	0.075	
86-73-7	Fluorene	U	0.24	1.0	0.25	0.24	0.059	
85-01-8	Phenanthrene	U	0.24	1.0	0.25	0.24	0.050	
206-44-0	Fluoranthene	U	0.24	1.0	0.25	0.24	0.071	
129-00-0	Pyrene	U	0.24	1.0	0.25	0.24	0.057	
56-55-3	Benzo(a)anthracene	U	0.24	1.0	0.25	0.24	0.045	
205-99-2	Benzo(b)fluoranthene	U	0.26	1.0	0.27	0.26	0.086	
207-08-9	Benzo(k)fluoranthene	~~U~~ UJ	0.24	1.0	0.25	0.24	0.048	CCH
50-32-8	Benzo(a)pyrene	U	0.24	1.0	0.25	0.24	0.064	
193-39-5	Indeno(1,2,3-cd)pyrene	U	0.24	1.0	0.25	0.24	0.050	
53-70-3	Dibenzo(a,h)anthracene	U	0.24	1.0	0.25	0.24	0.068	
191-24-2	Benzo(g,h,i)perylene	U	0.24	1.0	0.25	0.24	0.063	
118-74-1	Hexachlorobenzene	~~U~~ UJ	0.24	1.0	0.25	0.24	0.053	CCH
87-68-3	Hexachlorobutadiene	U	0.26	1.0	0.27	0.26	0.084	
77-47-4	Hexachlorocyclopentadiene	U	0.24	1.0	0.25	0.24	0.065	
7297-45-2	2-Methylnaphthalene-D10		69%					
367-12-4	2,4-Dibromophenol		82%					
81103-79-9	Fluorene-d10		54%					
1718-51-1	Pyrene-D10		110%					

lw 1/31/09

KATAHDIN ANALYTICAL SERVICES
Report of Analytical Results

Client: CH2MHill
Project: TO-009 Lejeune
PO No:
Sample Date: 11/15/08
Received Date: 11/18/08
Extraction Date: 11/19/08
Analysis Date: 12-DEC-2008 02:41
Report Date: 12/16/2008
Matrix: WATER
% Solids: NA

Lab ID: SB6645-8
Client ID: MR08-TW07-08D
SDG: TO9-3
Extracted by: KF
Extraction Method: SW846 3510
Analyst: JCG
Analysis Method: SW846 M8270C
Lab Prep Batch: WG58243
Units: ug/L

CAS#	Compound	Flags	Results	DF	PQL	Adj.PQL	Adj.MDL	
91-20-3	Naphthalene	~~U~~ UJ	0.31	1.0	0.25	0.31	0.080	CCH
91-57-6	2-Methylnaphthalene	U	0.31	1.0	0.25	0.31	0.096	
86-73-7	Fluorene	U	0.31	1.0	0.25	0.31	0.076	
85-01-8	Phenanthrene	U	0.31	1.0	0.25	0.31	0.064	
206-44-0	Fluoranthene	U	0.31	1.0	0.25	0.31	0.091	
129-00-0	Pyrene	U	0.31	1.0	0.25	0.31	0.074	
56-55-3	Benzo(a)anthracene	U	0.31	1.0	0.25	0.31	0.058	
205-99-2	Benzo(b)fluoranthene	U	0.34	1.0	0.27	0.34	0.11	
207-08-9	Benzo(k)fluoranthene	~~U~~ UJ	0.31	1.0	0.25	0.31	0.061	CCH
50-32-8	Benzo(a)pyrene	U	0.31	1.0	0.25	0.31	0.082	
193-39-5	Indeno(1,2,3-cd)pyrene	U	0.31	1.0	0.25	0.31	0.065	
53-70-3	Dibenzo(a,h)anthracene	U	0.31	1.0	0.25	0.31	0.088	
191-24-2	Benzo(g,h,i)perylene	U	0.31	1.0	0.25	0.31	0.081	
118-74-1	Hexachlorobenzene	~~U~~ UJ	0.31	1.0	0.25	0.31	0.069	CCH
87-68-3	Hexachlorobutadiene	U	0.34	1.0	0.27	0.34	0.11	
77-47-4	Hexachlorocyclopentadiene	U	0.31	1.0	0.25	0.31	0.084	
7297-45-2	2-Methylnaphthalene-D10		60%					
367-12-4	2,4-Dibromophenol		61%					
81103-79-9	Fluorene-d10		60%					
1718-51-1	Pyrene-D10		85%					

lw 1/31/09

15

KATAHDIN ANALYTICAL SERVICES
Report of Analytical Results

Client: CH2MHill
Project: TO-009 Lejeune
PO No:
Sample Date: 11/15/08
Received Date: 11/18/08
Extraction Date: 11/19/08
Analysis Date: 15-DEC-2008 14:50
Report Date: 12/16/2008
Matrix: WATER
% Solids: NA

Lab ID: SB6645-10RA
Client ID: MR08-TW08-08D
SDG: TO9-3
Extracted by: KF
Extraction Method: SW846 3510
Analyst: JCG
Analysis Method: SW846 M8270C
Lab Prep Batch: WG58243
Units: ug/L

CAS#	Compound	Flags	Results	DF	PQL	Adj.PQL	Adj.MDL	
91-20-3	Naphthalene	~~U~~ UJ	0.26	1.0	0.25	0.26	0.065	CCH
91-57-6	2-Methylnaphthalene	U	0.26	1.0	0.25	0.26	0.078	
86-73-7	Fluorene	U	0.26	1.0	0.25	0.26	0.062	
85-01-8	Phenanthrene	U	0.26	1.0	0.25	0.26	0.052	
206-44-0	Fluoranthene	~~U~~ UJ	0.26	1.0	0.25	0.26	0.074	CCH
129-00-0	Pyrene	U	0.26	1.0	0.25	0.26	0.060	
56-55-3	Benzo(a)anthracene	U	0.26	1.0	0.25	0.26	0.047	
205-99-2	Benzo(b)fluoranthene	U	0.28	1.0	0.27	0.28	0.091	
207-08-9	Benzo(k)fluoranthene	U	0.26	1.0	0.25	0.26	0.050	
50-32-8	Benzo(a)pyrene	U	0.26	1.0	0.25	0.26	0.067	
193-39-5	Indeno(1,2,3-cd)pyrene	U	0.26	1.0	0.25	0.26	0.053	
53-70-3	Dibenzo(a,h)anthracene	U	0.26	1.0	0.25	0.26	0.071	
191-24-2	Benzo(g,h,i)perylene	U	0.26	1.0	0.25	0.26	0.066	
118-74-1	Hexachlorobenzene	U	0.26	1.0	0.25	0.26	0.056	
87-68-3	Hexachlorobutadiene	U	0.28	1.0	0.27	0.28	0.089	
77-47-4	Hexachlorocyclopentadiene	U	0.26	1.0	0.25	0.26	0.068	
7297-45-2	2-Methylnaphthalene-D10		75%					
367-12-4	2,4-Dibromophenol		74%					
81103-79-9	Fluorene-d10		61%					
1718-51-1	Pyrene-D10		97%					

lw 1/31/09

16

KATAHDIN ANALYTICAL SERVICES
Report of Analytical Results

Client: CH2MHill
Project: TO-009 Lejeune
PO No:
Sample Date: 11/17/08
Received Date: 11/19/08
Extraction Date: 11/20/08
Analysis Date: 11-DEC-2008 12:06
Report Date: 12/16/2008
Matrix: WATER
% Solids: NA

Lab ID: SB6673-2
Client ID: MR08-TW06-08D
SDG: TO9-3
Extracted by: KF
Extraction Method: SW846 3510
Analyst: JLP
Analysis Method: SW846 M8270C
Lab Prep Batch: WG58316
Units: ug/L

CAS#	Compound	Flags	Results	DF	PQL	Adj.PQL	Adj.MDL	
91-20-3	Naphthalene	~~U~~ UJ	0.24	1.0	0.25	0.24	0.060	CCH
91-57-6	2-Methylnaphthalene	U	0.24	1.0	0.25	0.24	0.073	
86-73-7	Fluorene	U	0.24	1.0	0.25	0.24	0.058	
85-01-8	Phenanthrene	U	0.24	1.0	0.25	0.24	0.048	
206-44-0	Fluoranthene	U	0.24	1.0	0.25	0.24	0.069	
129-00-0	Pyrene	U	0.24	1.0	0.25	0.24	0.056	
56-55-3	Benzo(a)anthracene	U	0.24	1.0	0.25	0.24	0.043	
205-99-2	Benzo(b)fluoranthene	U	0.25	1.0	0.27	0.25	0.084	
207-08-9	Benzo(k)fluoranthene	U	0.24	1.0	0.25	0.24	0.046	
50-32-8	Benzo(a)pyrene	U	0.24	1.0	0.25	0.24	0.062	
193-39-5	Indeno(1,2,3-cd)pyrene	U	0.24	1.0	0.25	0.24	0.049	
53-70-3	Dibenzo(a,h)anthracene	U	0.24	1.0	0.25	0.24	0.066	
191-24-2	Benzo(g,h,i)perylene	U	0.24	1.0	0.25	0.24	0.061	
118-74-1	Hexachlorobenzene	~~U~~ UJ	0.24	1.0	0.25	0.24	0.052	CCH
87-68-3	Hexachlorobutadiene	U	0.25	1.0	0.27	0.25	0.082	
77-47-4	Hexachlorocyclopentadiene	U	0.24	1.0	0.25	0.24	0.063	
7297-45-2	2-Methylnaphthalene-D10		59%					
367-12-4	2,4-Dibromophenol		90%					
81103-79-9	Fluorene-d10		55%					
1718-51-1	Pyrene-D10		84%					

LW
1/31/09

17

KATAHDIN ANALYTICAL SERVICES
Report of Analytical Results

Client: CH2MHill
Project: TO-009 Lejeune
PO No:
Sample Date: 11/17/08
Received Date: 11/19/08
Extraction Date: 11/20/08
Analysis Date: 11-DEC-2008 12:48
Report Date: 12/16/2008
Matrix: WATER
% Solids: NA

Lab ID: SB6673-4
Client ID: MR08-TW05-08D
SDG: TO9-3
Extracted by: KF
Extraction Method: SW846 3510
Analyst: JLP
Analysis Method: SW846 M8270C
Lab Prep Batch: WG58316
Units: ug/L

CAS#	Compound	Flags	Results	DF	PQL	Adj.PQL	Adj.MDL	
91-20-3	Naphthalene	~~U~~ UJ	0.27	1.0	0.25	0.27	0.069	CCH
91-57-6	2-Methylnaphthalene	U	0.27	1.0	0.25	0.27	0.083	
86-73-7	Fluorene	U	0.27	1.0	0.25	0.27	0.066	
85-01-8	Phenanthrene	U	0.27	1.0	0.25	0.27	0.055	
206-44-0	Fluoranthene	U	0.27	1.0	0.25	0.27	0.078	
129-00-0	Pyrene	U	0.27	1.0	0.25	0.27	0.063	
56-55-3	Benzo(a)anthracene	U	0.27	1.0	0.25	0.27	0.049	
205-99-2	Benzo(b)fluoranthene	U	0.29	1.0	0.27	0.29	0.096	
207-08-9	Benzo(k)fluoranthene	U	0.27	1.0	0.25	0.27	0.053	
50-32-8	Benzo(a)pyrene	U	0.27	1.0	0.25	0.27	0.071	
193-39-5	Indeno(1,2,3-cd)pyrene	U	0.27	1.0	0.25	0.27	0.056	
53-70-3	Dibenzo(a,h)anthracene	U	0.27	1.0	0.25	0.27	0.075	
191-24-2	Benzo(g,h,i)perylene	U	0.27	1.0	0.25	0.27	0.070	
118-74-1	Hexachlorobenzene	~~U~~ UJ	0.27	1.0	0.25	0.27	0.059	CCH
87-68-3	Hexachlorobutadiene	U	0.29	1.0	0.27	0.29	0.094	
77-47-4	Hexachlorocyclopentadiene	U	0.27	1.0	0.25	0.27	0.072	
7297-45-2	2-Methylnaphthalene-D10		60%					
367-12-4	2,4-Dibromophenol		92%					
81103-79-9	Fluorene-d10		54%					
1718-51-1	Pyrene-D10		94%					

lwl 1/31/09

KATAHDIN ANALYTICAL SERVICES
Report of Analytical Results

18

Client: CH2MHill
Project: TO-009 Lejeune
PO No:
Sample Date: 11/17/08
Received Date: 11/19/08
Extraction Date: 11/20/08
Analysis Date: 11-DEC-2008 13:31
Report Date: 12/16/2008
Matrix: WATER
% Solids: NA

Lab ID: SB6673-6
Client ID: MR08-TW14-08D
SDG: TO9-3
Extracted by: KF
Extraction Method: SW846 3510
Analyst: JLP
Analysis Method: SW846 M8270C
Lab Prep Batch: WG58316
Units: ug/L

CAS#	Compound	Flags	Results	DF	PQL	Adj.PQL	Adj.MDL
91-20-3	Naphthalene	U R	0.27	1.0	0.25	0.27	0.069 SSL
91-57-6	2-Methylnaphthalene	U	0.27	1.0	0.25	0.27	0.083
86-73-7	Fluorene	U	0.27	1.0	0.25	0.27	0.066
85-01-8	Phenanthrene	U	0.27	1.0	0.25	0.27	0.055
206-44-0	Fluoranthene	U	0.27	1.0	0.25	0.27	0.078
129-00-0	Pyrene	U	0.27	1.0	0.25	0.27	0.063
56-55-3	Benzo(a)anthracene	U	0.27	1.0	0.25	0.27	0.049
205-99-2	Benzo(b)fluoranthene	U	0.29	1.0	0.27	0.29	0.096
207-08-9	Benzo(k)fluoranthene	U	0.27	1.0	0.25	0.27	0.053
50-32-8	Benzo(a)pyrene	U	0.27	1.0	0.25	0.27	0.071
193-39-5	Indeno(1,2,3-cd)pyrene	U	0.27	1.0	0.25	0.27	0.056
53-70-3	Dibenzo(a,h)anthracene	U	0.27	1.0	0.25	0.27	0.075
191-24-2	Benzo(g,h,i)perylene	U	0.27	1.0	0.25	0.27	0.070
118-74-1	Hexachlorobenzene	U	0.27	1.0	0.25	0.27	0.059
87-68-3	Hexachlorobutadiene	U	0.29	1.0	0.27	0.29	0.094
77-47-4	Hexachlorocyclopentadiene	U	0.27	1.0	0.25	0.27	0.072
7297-45-2	2-Methylnaphthalene-D10		* 2%				
367-12-4	2,4-Dibromophenol		63%				
81103-79-9	Fluorene-d10		* 40%				
1718-51-1	Pyrene-D10		84%				

lw 1/31/09

19

KATAHDIN ANALYTICAL SERVICES
Report of Analytical Results

Client: CH2MHill
Project: TO-009 Lejeune
PO No:
Sample Date: 11/17/08
Received Date: 11/19/08
Extraction Date: 11/20/08
Analysis Date: 11-DEC-2008 14:13
Report Date: 12/16/2008
Matrix: WATER
% Solids: NA

Lab ID: SB6673-8
Client ID: MR08-TW13-08D
SDG: TO9-3
Extracted by: KF
Extraction Method: SW846 3510
Analyst: JLP
Analysis Method: SW846 M8270C
Lab Prep Batch: WG58316
Units: ug/L

CAS#	Compound	Flags	Results	DF	PQL	Adj.PQL	Adj.MDL	
91-20-3	Naphthalene	~~U~~ UJ	0.24	1.0	0.25	0.24	0.060	CCH
91-57-6	2-Methylnaphthalene	U	0.24	1.0	0.25	0.24	0.073	
86-73-7	Fluorene	U	0.24	1.0	0.25	0.24	0.058	
85-01-8	Phenanthrene	U	0.24	1.0	0.25	0.24	0.048	
206-44-0	Fluoranthene	U	0.24	1.0	0.25	0.24	0.069	
129-00-0	Pyrene	U	0.24	1.0	0.25	0.24	0.056	
56-55-3	Benzo(a)anthracene	U	0.24	1.0	0.25	0.24	0.043	
205-99-2	Benzo(b)fluoranthene	U	0.25	1.0	0.27	0.25	0.084	
207-08-9	Benzo(k)fluoranthene	U	0.24	1.0	0.25	0.24	0.046	
50-32-8	Benzo(a)pyrene	U	0.24	1.0	0.25	0.24	0.062	
193-39-5	Indeno(1,2,3-cd)pyrene	U	0.24	1.0	0.25	0.24	0.049	
53-70-3	Dibenzo(a,h)anthracene	U	0.24	1.0	0.25	0.24	0.066	
191-24-2	Benzo(g,h,i)perylene	U	0.24	1.0	0.25	0.24	0.061	
118-74-1	Hexachlorobenzene	~~U~~ UJ	0.24	1.0	0.25	0.24	0.052	CCH
87-68-3	Hexachlorobutadiene	U	0.25	1.0	0.27	0.25	0.082	
77-47-4	Hexachlorocyclopentadiene	U	0.24	1.0	0.25	0.24	0.063	
7297-45-2	2-Methylnaphthalene-D10		57%					
367-12-4	2,4-Dibromophenol		94%					
81103-79-9	Fluorene-d10		55%					
1718-51-1	Pyrene-D10		95%					

fw
1/31/09

20

KATAHDIN ANALYTICAL SERVICES
Report of Analytical Results

Client: CH2MHill
Project: TO-009 Lejeune
PO No:
Sample Date: 11/17/08
Received Date: 11/19/08
Extraction Date: 11/20/08
Analysis Date: 11-DEC-2008 14:55
Report Date: 12/16/2008
Matrix: WATER
% Solids: NA

Lab ID: SB6673-10
Client ID: MR08-TW11-08D
SDG: TO9-3
Extracted by: KF
Extraction Method: SW846 3510
Analyst: JLP
Analysis Method: SW846 M8270C
Lab Prep Batch: WG58316
Units: ug/L

CAS#	Compound	Flags	Results	DF	PQL	Adj.PQL	Adj.MDL	
91-20-3	Naphthalene	~~U~~ UJ	0.24	1.0	0.25	0.24	0.061	CCH
91-57-6	2-Methylnaphthalene	U	0.24	1.0	0.25	0.24	0.073	
86-73-7	Fluorene	U	0.24	1.0	0.25	0.24	0.058	
85-01-8	Phenanthrene	U	0.24	1.0	0.25	0.24	0.048	
206-44-0	Fluoranthene	U	0.24	1.0	0.25	0.24	0.070	
129-00-0	Pyrene	U	0.24	1.0	0.25	0.24	0.056	
56-55-3	Benzo(a)anthracene	U	0.24	1.0	0.25	0.24	0.044	
205-99-2	Benzo(b)fluoranthene	U	0.26	1.0	0.27	0.26	0.085	
207-08-9	Benzo(k)fluoranthene	U	0.24	1.0	0.25	0.24	0.047	
50-32-8	Benzo(a)pyrene	U	0.24	1.0	0.25	0.24	0.063	
193-39-5	Indeno(1,2,3-cd)pyrene	U	0.24	1.0	0.25	0.24	0.050	
53-70-3	Dibenzo(a,h)anthracene	U	0.24	1.0	0.25	0.24	0.067	
191-24-2	Benzo(g,h,i)perylene	U	0.24	1.0	0.25	0.24	0.062	
118-74-1	Hexachlorobenzene	~~U~~ UJ	0.24	1.0	0.25	0.24	0.052	CCH
87-68-3	Hexachlorobutadiene	U	0.26	1.0	0.27	0.26	0.083	
77-47-4	Hexachlorocyclopentadiene	U	0.24	1.0	0.25	0.24	0.064	
7297-45-2	2-Methylnaphthalene-D10		59%					
367-12-4	2,4-Dibromophenol		86%					
81103-79-9	Fluorene-d10		54%					
1718-51-1	Pyrene-D10		84%					

CW
1/31/09

21

KATAHDIN ANALYTICAL SERVICES
Report of Analytical Results

Client: CH2MHill
Project: TO-009 Lejeune
PO No:
Sample Date: 11/17/08
Received Date: 11/19/08
Extraction Date: 11/20/08
Analysis Date: 11-DEC-2008 15:37
Report Date: 12/16/2008
Matrix: WATER
% Solids: NA

Lab ID: SB6673-12
Client ID: MR08-TW10-08D
SDG: TO9-3
Extracted by: KF
Extraction Method: SW846 3510
Analyst: JLP
Analysis Method: SW846 M8270C
Lab Prep Batch: WG58316
Units: ug/L

CAS#	Compound	Flags	Results	DF	PQL	Adj.PQL	Adj.MDL	
91-20-3	Naphthalene	~~U~~ UJ	0.27	1.0	0.25	0.27	0.070	CCH
91-57-6	2-Methylnaphthalene	U	0.27	1.0	0.25	0.27	0.085	
86-73-7	Fluorene	U	0.27	1.0	0.25	0.27	0.067	
85-01-8	Phenanthrene	U	0.27	1.0	0.25	0.27	0.056	
206-44-0	Fluoranthene	U	0.27	1.0	0.25	0.27	0.080	
129-00-0	Pyrene	U	0.27	1.0	0.25	0.27	0.065	
56-55-3	Benzo(a)anthracene	U	0.27	1.0	0.25	0.27	0.050	
205-99-2	Benzo(b)fluoranthene	U	0.30	1.0	0.27	0.30	0.098	
207-08-9	Benzo(k)fluoranthene	U	0.27	1.0	0.25	0.27	0.054	
50-32-8	Benzo(a)pyrene	U	0.27	1.0	0.25	0.27	0.072	
193-39-5	Indeno(1,2,3-cd)pyrene	U	0.27	1.0	0.25	0.27	0.057	
53-70-3	Dibenzo(a,h)anthracene	U	0.27	1.0	0.25	0.27	0.077	
191-24-2	Benzo(g,h,i)perylene	U	0.27	1.0	0.25	0.27	0.071	
118-74-1	Hexachlorobenzene	~~U~~ UJ	0.27	1.0	0.25	0.27	0.060	CCH
87-68-3	Hexachlorobutadiene	U	0.30	1.0	0.27	0.30	0.096	
77-47-4	Hexachlorocyclopentadiene	U	0.27	1.0	0.25	0.27	0.074	
7297-45-2	2-Methylnaphthalene-D10		59%					
367-12-4	2,4-Dibromophenol		88%					
81103-79-9	Fluorene-d10		52%					
1718-51-1	Pyrene-D10		89%					

lw 1/31/09

ENVIRONMENTAL
Data Services, Inc.

SEMIVOLATILE ORGANIC COMPOUNDS

USEPA Region IV - Level IV Review

Site: MCB Camp Lejeune, TO-09 SDG #: TO9-3

Client: CH2M HILL, Inc., Virginia Beach, Virginia Date: January 31, 2009

Laboratory: Katahdin Analytical Services, Scarborough, Maine Reviewer: Nancy Weaver

EDS ID	Client Sample ID	Laboratory Sample ID	Matrix
1	IR78-GW16-08D	SB6586-1	Water
2	MR08-EB111208	SB6586-3	Water
3	IR78-GW36-08D	SB6586-5	Water
4	IR78-GW53-08D	SB6586-7	Water
5	IR78-GW04-2-08D	SB6586-9	Water
6	IR78-GW56-08D	SB6586-11	Water
6MS	IR78-GW56-08DMS	SB6586-11MS	Water
6MSD	IR78-GW56-08DMSD	SB6586-11MSD	Water
7	MR08-EB111208-1	SB6586-17	Water
7RE	MR08-EB111208-1RE	SB6586-17RE	Water
8	UST1607-MW02-08D	SB6614-1	Water
9	IR78-GW09-3-08D	SB6614-3	Water
10	IR78-GW11-08D	SB6614-5	Water
11	IR78-GW12-08D	SB6645-1	Water
12	MR08-EB111608-1	SB6645-3	Water
13	MR08-EB111708-1	SB6645-5	Water
14	MR08-TW07-08D	SB6645-7	Water
15	MR08-TW08-08D	SB6645-9	Water
16	MR08-TW06-08D	SB6673-1	Water
17	MR08-TW05-08D	SB6673-3	Water
18	MR08-TW14-08D	SB6673-5	Water
19	MR08-TW13-08D	SB6673-7	Water
20	MR08-TW11-08D	SB6673-9	Water
21	MR08-TW10-08D	SB6673-11	Water

The USEPA "Contract Laboratory Program National Functional Guidelines for Organic Data Review," October 1999, and professional judgement were used in evaluating the data in this summary report.

Holding Times - All samples were extracted within 7 days for water samples and analyzed within 40 days for all samples.

GC/MS Tuning - All of the DFTPP tunes in the initial and continuing calibrations met the percent relative abundance criteria.

Initial Calibration - The initial calibrations exhibited acceptable %RSD and mean RRF values.

Continuing Calibration - The continuing calibrations exhibited acceptable %D and RRF values except the following.

CCAL Date	Compound	%D/RRF	Qualifier	Affected Samples
12/08/08	Benzaldehyde	26.62%	J/UJ	1-10
	Butylbenzylphthalate	27.65%	J/UJ	1-10
	bis (2-Ethylhexyl) phthalate	27.69%	J/UJ	1-10
	Di-n-octyl phthalate	28.46%	J/UJ	1-10
12/09/08	Benzaldehyde	32.34%	J/UJ	7RE, 11-15, 19-21
	Caprolactam	35.00%	J/UJ	7RE, 11-15, 19-21

Surrogates - All samples exhibited acceptable surrogate recoveries except the following.

Sample ID	Surrogate	%R	Qualifier
7RE	S6-Terphenyl-d14	149%	None for 1 out
8	S6-Terphenyl-d14	34%	None for 1 out
18	S1-2-Fluorophenol	0%	J/R - All compounds
	S2-Phenol-d6	0%	J/R - All compounds
	S3-Nitrobenzene-d5	0%	J/R - All compounds
	S4-2-Fluorobiphenyl	5%	J/R - All compounds

MS/MSD - The MS/MSD sample exhibited acceptable %R and RPD values except the following.

MS/MSD Sample ID	Compound	MS/MSD %R/RPD	Qualifier
6	Caprolactam	81%/91%/Ok	None - ND
	3,3'-Dichlorobenzidine	10%/6%/Ok	J/R

Laboratory Control Sample - The LCS samples exhibited acceptable %R values except the following.

LCS ID	Compound	%R	Qualifier	Affected Samples
WG58141-LCS	Caprolactam	66%	None	All ND
WG58242-LCS	bis (2-Ethylhexyl) phthalate	132%	None	All ND
	Di-n-octyl phthalate	142%	None	All ND

Internal Standard (IS) Area Performance - All internal standards met response and retention time (RT) criteria.

Method Blank - The method blanks were free of contamination.

Field, Equipment Blank - Field QC results are summarized below.

Blank ID	Compound	Conc. ug/L	Action Level ug/L	Qualifier	Affected Samples
MR08-EB111008	bis (2-Ethylhexyl) phthalate	2	20	None	All ND
MR08-EB111208	bis (2-Ethylhexyl) phthalate	3	30	U	1
MR08-EB111208-1	None - ND	-	-	-	-
MR08-EB111608-1	None - ND	-	-	-	-
MR08-EB111708-1	None - ND	-	-	-	-
MR08-FB111108	None - ND	-	-	-	-

Field Duplicates - Field duplicate samples were not included in this data package.

Tentatively Identified Compounds (TICs) - TICs were not reported.

Compound Quantitation - No discrepancies were identified.

KATAHDIN ANALYTICAL SERVICES
Report of Analytical Results

Client: CH2MHill
Project: TO-009 Lejeune
PO No:
Sample Date: 11/12/08
Received Date: 11/14/08
Extraction Date: 11/17/08
Analysis Date: 08-DEC-2008 12:42
Report Date: 12/15/2008
Matrix: WATER
% Solids: NA

Lab ID: SB6586-1
Client ID: IR78-GW16-08D
SDG: TO9-3
Extracted by: KF
Extraction Method: SW846 3520
Analyst: JCG
Analysis Method: SW846 8270C
Lab Prep Batch: WG58141
Units: ug/L

CAS#	Compound	Flags	Results	DF	PQL	Adj.PQL	Adj.MDL
100-52-7	Benzaldehyde	~~U~~ UJ	10	1.0	10	10	3 CCH
108-95-2	Phenol	U	10	1.0	10	10	2
111-44-4	Bis(2-Chloroethyl)ether	U	10	1.0	10	10	2
95-57-8	2-Chlorophenol	U	12	1.0	12	12	3
95-48-7	2-Methylphenol	U	12	1.0	12	12	4
108-60-1	2,2'-Oxybis(1-chloropropane)	U	10	1.0	10	10	2
98-86-2	Acetophenone	U	12	1.0	12	12	4
621-64-7	N-Nitroso-di-n-propylamine	U	10	1.0	10	10	2
65794-96-9	3&4-Methylphenol	U	10	1.0	10	10	3
67-72-1	Hexachloroethane	U	10	1.0	10	10	2
98-95-3	Nitrobenzene	U	10	1.0	10	10	2
78-59-1	Isophorone	U	10	1.0	10	10	2
88-75-5	2-Nitrophenol	U	10	1.0	10	10	4
105-67-9	2,4-Dimethylphenol	U	12	1.0	12	12	4
111-91-1	Bis(2-Chloroethoxy)methane	U	10	1.0	10	10	2
120-83-2	2,4-Dichlorophenol	U	12	1.0	12	12	4
106-47-8	4-Chloroaniline	U	10	1.0	10	10	2
105-60-2	Caprolactam	U	10	1.0	10	10	0.4
59-50-7	4-Chloro-3-Methylphenol	U	10	1.0	10	10	2
88-06-2	2,4,6-Trichlorophenol	U	10	1.0	10	10	3
95-95-4	2,4,5-Trichlorophenol	U	25	1.0	25	25	4
91-58-7	2-Chloronaphthalene	U	10	1.0	10	10	2
92-52-4	1,1'-Biphenyl	U	10	1.0	10	10	2
88-74-4	2-Nitroaniline	U	25	1.0	25	25	2
131-11-3	Dimethyl Phthalate	U	10	1.0	10	10	0.8
606-20-2	2,6-Dinitrotoluene	U	10	1.0	10	10	1
208-96-8	Acenaphthylene	U	10	1.0	10	10	2
99-09-2	3-Nitroaniline	U	25	1.0	25	25	1
83-32-9	Acenaphthene	U	10	1.0	10	10	2
51-28-5	2,4-Dinitrophenol	U	45	1.0	45	45	15
132-64-9	Dibenzofuran	U	10	1.0	10	10	1
100-02-7	4-Nitrophenol	U	25	1.0	25	25	6
121-14-2	2,4-Dinitrotoluene	U	10	1.0	10	10	1
84-66-2	Diethylphthalate	U	10	1.0	10	10	1
7005-72-3	4-Chlorophenyl-phenylether	U	10	1.0	10	10	1
100-01-6	4-Nitroaniline	U	25	1.0	25	25	2
534-52-1	4,6-Dinitro-2-Methylphenol	U	25	1.0	25	25	6
86-30-6	N-Nitrosodiphenylamine	U	10	1.0	10	10	2
101-55-3	4-Bromophenyl-phenylether	U	10	1.0	10	10	1
1912-24-9	Atrazine	U	10	1.0	10	10	2
87-86-5	Pentachlorophenol	U	25	1.0	25	25	8
120-12-7	Anthracene	U	10	1.0	10	10	1
86-74-8	Carbazole	U	10	1.0	10	10	1

lw 1/31/09

KATAHDIN ANALYTICAL SERVICES
Report of Analytical Results

Client: CH2MHill
Project: TO-009 Lejeune
PO No:
Sample Date: 11/12/08
Received Date: 11/14/08
Extraction Date: 11/17/08
Analysis Date: 08-DEC-2008 12:42
Report Date: 12/15/2008
Matrix: WATER
% Solids: NA

Lab ID: SB6586-1
Client ID: IR78-GW16-08D
SDG: TO9-3
Extracted by: KF
Extraction Method: SW846 3520
Analyst: JCG
Analysis Method: SW846 8270C
Lab Prep Batch: WG58141
Units: ug/L

CAS#	Compound	Flags	Results	DF	PQL	Adj.PQL	Adj.MDL	
84-74-2	Di-n-butylphthalate	U	10	1.0	10	10	1	
85-68-7	Butylbenzylphthalate	~~U~~ UJ	10	1.0	10	10	2	CCH
91-94-1	3,3'-Dichlorobenzidine	U	10	1.0	10	10	3	
218-01-9	Chrysene	U	10	1.0	10	10	1	
117-81-7	bis(2-Ethylhexyl)phthalate	~~J~~	10 UJ ~~2~~	1.0	10	10	2	~~BL~~ CCH
117-84-0	Di-n-octylphthalate	~~U~~ UJ	10	1.0	10	10	2	CCH
367-12-4	2-Fluorophenol		54%					
13127-88-3	Phenol-D6		64%					
4165-60-0	Nitrobenzene-D5		66%					
321-60-8	2-Fluorobiphenyl		63%					
118-79-6	2,4,6-Tribromophenol		78%					
1718-51-0	Terphenyl-D14		91%					

hw
1/31/09

2

KATAHDIN ANALYTICAL SERVICES
Report of Analytical Results

Client: CH2MHill
Project: TO-009 Lejeune
PO No:
Sample Date: 11/12/08
Received Date: 11/14/08
Extraction Date: 11/17/08
Analysis Date: 08-DEC-2008 13:24
Report Date: 12/15/2008
Matrix: WATER
% Solids: NA

Lab ID: SB6586-3
Client ID: MR08-EB111208
SDG: TO9-3
Extracted by: KF
Extraction Method: SW846 3520
Analyst: JCG
Analysis Method: SW846 8270C
Lab Prep Batch: WG58141
Units: ug/L

CAS#	Compound	Flags	Results	DF	PQL	Adj.PQL	Adj.MDL
100-52-7	Benzaldehyde	~~U~~ UJ	9	1.0	10	9	3 Cell
108-95-2	Phenol	U	9	1.0	10	9	2
111-44-4	Bis(2-Chloroethyl)ether	U	9	1.0	10	9	2
95-57-8	2-Chlorophenol	U	11	1.0	12	11	3
95-48-7	2-Methylphenol	U	11	1.0	12	11	4
108-60-1	2,2'-Oxybis(1-chloropropane)	U	9	1.0	10	9	2
98-86-2	Acetophenone	U	11	1.0	12	11	4
621-64-7	N-Nitroso-di-n-propylamine	U	9	1.0	10	9	2
65794-96-9	3&4-Methylphenol	U	9	1.0	10	9	2
67-72-1	Hexachloroethane	U	9	1.0	10	9	2
98-95-3	Nitrobenzene	U	9	1.0	10	9	2
78-59-1	Isophorone	U	9	1.0	10	9	2
88-75-5	2-Nitrophenol	U	9	1.0	10	9	3
105-67-9	2,4-Dimethylphenol	U	11	1.0	12	11	4
111-91-1	Bis(2-Chloroethoxy)methane	U	9	1.0	10	9	2
120-83-2	2,4-Dichlorophenol	U	11	1.0	12	11	4
106-47-8	4-Chloroaniline	U	9	1.0	10	9	2
105-60-2	Caprolactam	U	9	1.0	10	9	0.4
59-50-7	4-Chloro-3-Methylphenol	U	9	1.0	10	9	2
88-06-2	2,4,6-Trichlorophenol	U	9	1.0	10	9	3
95-95-4	2,4,5-Trichlorophenol	U	24	1.0	25	24	4
91-58-7	2-Chloronaphthalene	U	9	1.0	10	9	2
92-52-4	1,1'-Biphenyl	U	9	1.0	10	9	2
88-74-4	2-Nitroaniline	U	24	1.0	25	24	1
131-11-3	Dimethyl Phthalate	U	9	1.0	10	9	0.7
606-20-2	2,6-Dinitrotoluene	U	9	1.0	10	9	1.0
208-96-8	Acenaphthylene	U	9	1.0	10	9	2
99-09-2	3-Nitroaniline	U	24	1.0	25	24	1
83-32-9	Acenaphthene	U	9	1.0	10	9	2
51-28-5	2,4-Dinitrophenol	U	42	1.0	45	42	14
132-64-9	Dibenzofuran	U	9	1.0	10	9	1
100-02-7	4-Nitrophenol	U	24	1.0	25	24	5
121-14-2	2,4-Dinitrotoluene	U	9	1.0	10	9	1
84-66-2	Diethylphthalate	U	9	1.0	10	9	1
7005-72-3	4-Chlorophenyl-phenylether	U	9	1.0	10	9	1
100-01-6	4-Nitroaniline	U	24	1.0	25	24	2
534-52-1	4,6-Dinitro-2-Methylphenol	U	24	1.0	25	24	6
86-30-6	N-Nitrosodiphenylamine	U	9	1.0	10	9	2
101-55-3	4-Bromophenyl-phenylether	U	9	1.0	10	9	1
1912-24-9	Atrazine	U	9	1.0	10	9	2
87-86-5	Pentachlorophenol	U	24	1.0	25	24	7
120-12-7	Anthracene	U	9	1.0	10	9	1
86-74-8	Carbazole	U	9	1.0	10	9	1

LW
1/31/09

2

KATAHDIN ANALYTICAL SERVICES
Report of Analytical Results

Client: CH2MHill
Project: TO-009 Lejeune
PO No:
Sample Date: 11/12/08
Received Date: 11/14/08
Extraction Date: 11/17/08
Analysis Date: 08-DEC-2008 13:24
Report Date: 12/15/2008
Matrix: WATER
% Solids: NA

Lab ID: SB6586-3
Client ID: MR08-EB111208
SDG: TO9-3
Extracted by: KF
Extraction Method: SW846 3520
Analyst: JCG
Analysis Method: SW846 8270C
Lab Prep Batch: WG58141
Units: ug/L

CAS#	Compound	Flags	Results	DF	PQL	Adj.PQL	Adj.MDL	
84-74-2	Di-n-butylphthalate	U	9	1.0	10	9	1	CCH
85-68-7	Butylbenzylphthalate	~~U~~ UJ	9	1.0	10	9	1	
91-94-1	3,3'-Dichlorobenzidine	U	9	1.0	10	9	3	
218-01-9	Chrysene	U	9	1.0	10	9	1	
117-81-7	bis(2-Ethylhexyl)phthalate	~~J~~ J	3	1.0	10	9	2	CCH
117-84-0	Di-n-octylphthalate	~~U~~ UJ	9	1.0	10	9	2	CCH
367-12-4	2-Fluorophenol		59%					
13127-88-3	Phenol-D6		63%					
4165-60-0	Nitrobenzene-D5		65%					
321-60-8	2-Fluorobiphenyl		62%					
118-79-6	2,4,6-Tribromophenol		73%					
1718-51-0	Terphenyl-D14		100%					

MW
11/31/09

3

KATAHDIN ANALYTICAL SERVICES
Report of Analytical Results

Client: CH2MHill
Project: TO-009 Lejeune
PO No:
Sample Date: 11/13/08
Received Date: 11/14/08
Extraction Date: 11/17/08
Analysis Date: 08-DEC-2008 14:06
Report Date: 12/15/2008
Matrix: WATER
% Solids: NA

Lab ID: SB6586-5
Client ID: IR78-GW36-08D
SDG: TO9-3
Extracted by: KF
Extraction Method: SW846 3520
Analyst: JCG
Analysis Method: SW846 8270C
Lab Prep Batch: WG58141
Units: ug/L

CAS#	Compound	Flags	Results	DF	PQL	Adj.PQL	Adj.MDL
100-52-7	Benzaldehyde	~~U~~ UJ	10	1.0	10	10	3 CCH
108-95-2	Phenol	U	10	1.0	10	10	2
111-44-4	Bis(2-Chloroethyl)ether	U	10	1.0	10	10	2
95-57-8	2-Chlorophenol	U	12	1.0	12	12	3
95-48-7	2-Methylphenol	U	12	1.0	12	12	4
108-60-1	2,2'-Oxybis(1-chloropropane)	U	10	1.0	10	10	2
98-86-2	Acetophenone	U	12	1.0	12	12	4
621-64-7	N-Nitroso-di-n-propylamine	U	10	1.0	10	10	2
65794-96-9	3&4-Methylphenol	U	10	1.0	10	10	3
67-72-1	Hexachloroethane	U	10	1.0	10	10	2
98-95-3	Nitrobenzene	U	10	1.0	10	10	2
78-59-1	Isophorone	U	10	1.0	10	10	2
88-75-5	2-Nitrophenol	U	10	1.0	10	10	4
105-67-9	2,4-Dimethylphenol	U	12	1.0	12	12	4
111-91-1	Bis(2-Chloroethoxy)methane	U	10	1.0	10	10	2
120-83-2	2,4-Dichlorophenol	U	12	1.0	12	12	4
106-47-8	4-Chloroaniline	U	10	1.0	10	10	2
105-60-2	Caprolactam	U	10	1.0	10	10	0.4
59-50-7	4-Chloro-3-Methylphenol	U	10	1.0	10	10	2
88-06-2	2,4,6-Trichlorophenol	U	10	1.0	10	10	3
95-95-4	2,4,5-Trichlorophenol	U	24	1.0	25	24	4
91-58-7	2-Chloronaphthalene	U	10	1.0	10	10	2
92-52-4	1,1'-Biphenyl	U	10	1.0	10	10	2
88-74-4	2-Nitroaniline	U	24	1.0	25	24	2
131-11-3	Dimethyl Phthalate	U	10	1.0	10	10	0.8
606-20-2	2,6-Dinitrotoluene	U	10	1.0	10	10	1
208-96-8	Acenaphthylene	U	10	1.0	10	10	2
99-09-2	3-Nitroaniline	U	24	1.0	25	24	1
83-32-9	Acenaphthene	U	10	1.0	10	10	2
51-28-5	2,4-Dinitrophenol	U	44	1.0	45	44	15
132-64-9	Dibenzofuran	U	10	1.0	10	10	1
100-02-7	4-Nitrophenol	U	24	1.0	25	24	6
121-14-2	2,4-Dinitrotoluene	U	10	1.0	10	10	1
84-66-2	Diethylphthalate	U	10	1.0	10	10	1
7005-72-3	4-Chlorophenyl-phenylether	U	10	1.0	10	10	1
100-01-6	4-Nitroaniline	U	24	1.0	25	24	2
534-52-1	4,6-Dinitro-2-Methylphenol	U	24	1.0	25	24	6
86-30-6	N-Nitrosodiphenylamine	U	10	1.0	10	10	2
101-55-3	4-Bromophenyl-phenylether	U	10	1.0	10	10	1
1912-24-9	Atrazine	U	10	1.0	10	10	2
87-86-5	Pentachlorophenol	U	24	1.0	25	24	8
120-12-7	Anthracene	U	10	1.0	10	10	1
86-74-8	Carbazole	U	10	1.0	10	10	1

lw 11/31/09

3

KATAHDIN ANALYTICAL SERVICES
Report of Analytical Results

Client: CH2MHill
Project: TO-009 Lejeune
PO No:
Sample Date: 11/13/08
Received Date: 11/14/08
Extraction Date: 11/17/08
Analysis Date: 08-DEC-2008 14:06
Report Date: 12/15/2008
Matrix: WATER
% Solids: NA

Lab ID: SB6586-5
Client ID: IR78-GW36-08D
SDG: TO9-3
Extracted by: KF
Extraction Method: SW846 3520
Analyst: JCG
Analysis Method: SW846 8270C
Lab Prep Batch: WG58141
Units: ug/L

CAS#	Compound	Flags	Results	DF	PQL	Adj.PQL	Adj.MDL	
84-74-2	Di-n-butylphthalate	U	10	1.0	10	10	1	
85-68-7	Butylbenzylphthalate	~~U~~ UJ	10	1.0	10	10	1	CCH
91-94-1	3,3'-Dichlorobenzidine	U	10	1.0	10	10	3	
218-01-9	Chrysene	U	10	1.0	10	10	1	
117-81-7	bis(2-Ethylhexyl)phthalate	~~U~~ UJ	10	1.0	10	10	2	CCH
117-84-0	Di-n-octylphthalate	~~U~~ UJ	10	1.0	10	10	2	CCH
367-12-4	2-Fluorophenol		62%					
13127-88-3	Phenol-D6		68%					
4165-60-0	Nitrobenzene-D5		69%					
321-60-8	2-Fluorobiphenyl		69%					
118-79-6	2,4,6-Tribromophenol		81%					
1718-51-0	Terphenyl-D14		87%					

RW
1/31/09

4

KATAHDIN ANALYTICAL SERVICES
Report of Analytical Results

Client: CH2MHill
Project: TO-009 Lejeune
PO No:
Sample Date: 11/11/08
Received Date: 11/14/08
Extraction Date: 11/17/08
Analysis Date: 08-DEC-2008 14:48
Report Date: 12/15/2008
Matrix: WATER
% Solids: NA

Lab ID: SB6586-7
Client ID: IR78-GW53-08D
SDG: TO9-3
Extracted by: KF
Extraction Method: SW846 3520
Analyst: JCG
Analysis Method: SW846 8270C
Lab Prep Batch: WG58141
Units: ug/L

CAS#	Compound	Flags	Results	DF	PQL	Adj.PQL	Adj.MDL
100-52-7	Benzaldehyde	~~U~~ UJ	9	1.0	10	9	3 CCH
108-95-2	Phenol	U	9	1.0	10	9	2
111-44-4	Bis(2-Chloroethyl)ether	U	9	1.0	10	9	2
95-57-8	2-Chlorophenol	U	11	1.0	12	11	3
95-48-7	2-Methylphenol	U	11	1.0	12	11	4
108-60-1	2,2'-Oxybis(1-chloropropane)	U	9	1.0	10	9	2
98-86-2	Acetophenone	U	11	1.0	12	11	4
621-64-7	N-Nitroso-di-n-propylamine	U	9	1.0	10	9	2
65794-96-9	3&4-Methylphenol	U	9	1.0	10	9	2
67-72-1	Hexachloroethane	U	9	1.0	10	9	2
98-95-3	Nitrobenzene	U	9	1.0	10	9	2
78-59-1	Isophorone	U	9	1.0	10	9	2
88-75-5	2-Nitrophenol	U	9	1.0	10	9	3
105-67-9	2,4-Dimethylphenol	U	11	1.0	12	11	4
111-91-1	Bis(2-Chloroethoxy)methane	U	9	1.0	10	9	2
120-83-2	2,4-Dichlorophenol	U	11	1.0	12	11	4
106-47-8	4-Chloroaniline	U	9	1.0	10	9	2
105-60-2	Caprolactam	U	9	1.0	10	9	0.4
59-50-7	4-Chloro-3-Methylphenol	U	9	1.0	10	9	2
88-06-2	2,4,6-Trichlorophenol	U	9	1.0	10	9	3
95-95-4	2,4,5-Trichlorophenol	U	24	1.0	25	24	4
91-58-7	2-Chloronaphthalene	U	9	1.0	10	9	2
92-52-4	1,1'-Biphenyl	U	9	1.0	10	9	2
88-74-4	2-Nitroaniline	U	24	1.0	25	24	1
131-11-3	Dimethyl Phthalate	U	9	1.0	10	9	0.7
606-20-2	2,6-Dinitrotoluene	U	9	1.0	10	9	1.0
208-96-8	Acenaphthylene	U	9	1.0	10	9	2
99-09-2	3-Nitroaniline	U	24	1.0	25	24	1
83-32-9	Acenaphthene	U	9	1.0	10	9	2
51-28-5	2,4-Dinitrophenol	U	42	1.0	45	42	14
132-64-9	Dibenzofuran	U	9	1.0	10	9	1
100-02-7	4-Nitrophenol	U	24	1.0	25	24	5
121-14-2	2,4-Dinitrotoluene	U	9	1.0	10	9	1
84-66-2	Diethylphthalate	U	9	1.0	10	9	1
7005-72-3	4-Chlorophenyl-phenylether	U	9	1.0	10	9	1
100-01-6	4-Nitroaniline	U	24	1.0	25	24	2
534-52-1	4,6-Dinitro-2-Methylphenol	U	24	1.0	25	24	6
86-30-6	N-Nitrosodiphenylamine	U	9	1.0	10	9	2
101-55-3	4-Bromophenyl-phenylether	U	9	1.0	10	9	1
1912-24-9	Atrazine	U	9	1.0	10	9	2
87-86-5	Pentachlorophenol	U	24	1.0	25	24	7
120-12-7	Anthracene	U	9	1.0	10	9	1
86-74-8	Carbazole	U	9	1.0	10	9	1

CW 1/31/09

KATAHDIN ANALYTICAL SERVICES
Report of Analytical Results

4

Client: CH2MHill
Project: TO-009 Lejeune
PO No:
Sample Date: 11/11/08
Received Date: 11/14/08
Extraction Date: 11/17/08
Analysis Date: 08-DEC-2008 14:48
Report Date: 12/15/2008
Matrix: WATER
% Solids: NA

Lab ID: SB6586-7
Client ID: IR78-GW53-08D
SDG: TO9-3
Extracted by: KF
Extraction Method: SW846 3520
Analyst: JCG
Analysis Method: SW846 8270C
Lab Prep Batch: WG58141
Units: ug/L

CAS#	Compound	Flags	Results	DF	PQL	Adj.PQL	Adj.MDL	
84-74-2	Di-n-butylphthalate	U	9	1.0	10	9	1	
85-68-7	Butylbenzylphthalate	~~U~~ UJ	9	1.0	10	9	1	CCH
91-94-1	3,3'-Dichlorobenzidine	U	9	1.0	10	9	3	
218-01-9	Chrysene	U	9	1.0	10	9	1	
117-81-7	bis(2-Ethylhexyl)phthalate	~~U~~ UJ	9	1.0	10	9	2	CCH
117-84-0	Di-n-octylphthalate	~~U~~ UJ	9	1.0	10	9	2	CCH
367-12-4	2-Fluorophenol		55%					
13127-88-3	Phenol-D6		59%					
4165-60-0	Nitrobenzene-D5		61%					
321-60-8	2-Fluorobiphenyl		61%					
118-79-6	2,4,6-Tribromophenol		79%					
1718-51-0	Terphenyl-D14		92%					

LW
1/31/09

5

KATAHDIN ANALYTICAL SERVICES
Report of Analytical Results

Client: CH2MHill
Project: TO-009 Lejeune
PO No:
Sample Date: 11/11/08
Received Date: 11/14/08
Extraction Date: 11/17/08
Analysis Date: 08-DEC-2008 15:30
Report Date: 12/15/2008
Matrix: WATER
% Solids: NA

Lab ID: SB6586-9
Client ID: IR78-GW04-2-08D
SDG: TO9-3
Extracted by: KF
Extraction Method: SW846 3520
Analyst: JCG
Analysis Method: SW846 8270C
Lab Prep Batch: WG58141
Units: ug/L

CAS#	Compound	Flags	Results	DF	PQL	Adj.PQL	Adj.MDL
100-52-7	Benzaldehyde	U UJ	9	1.0	10	9	3 CCA
108-95-2	Phenol	U	9	1.0	10	9	2
111-44-4	Bis(2-Chloroethyl)ether	U	9	1.0	10	9	2
95-57-8	2-Chlorophenol	U	11	1.0	12	11	3
95-48-7	2-Methylphenol	U	11	1.0	12	11	4
108-60-1	2,2'-Oxybis(1-chloropropane)	U	9	1.0	10	9	2
98-86-2	Acetophenone	U	11	1.0	12	11	4
621-64-7	N-Nitroso-di-n-propylamine	U	9	1.0	10	9	2
65794-96-9	3&4-Methylphenol	U	9	1.0	10	9	2
67-72-1	Hexachloroethane	U	9	1.0	10	9	2
98-95-3	Nitrobenzene	U	9	1.0	10	9	2
78-59-1	Isophorone	U	9	1.0	10	9	2
88-75-5	2-Nitrophenol	U	9	1.0	10	9	3
105-67-9	2,4-Dimethylphenol	U	11	1.0	12	11	4
111-91-1	Bis(2-Chloroethoxy)methane	U	9	1.0	10	9	2
120-83-2	2,4-Dichlorophenol	U	11	1.0	12	11	4
106-47-8	4-Chloroaniline	U	9	1.0	10	9	2
105-60-2	Caprolactam	U	9	1.0	10	9	0.4
59-50-7	4-Chloro-3-Methylphenol	U	9	1.0	10	9	2
88-06-2	2,4,6-Trichlorophenol	U	9	1.0	10	9	3
95-95-4	2,4,5-Trichlorophenol	U	24	1.0	25	24	4
91-58-7	2-Chloronaphthalene	U	9	1.0	10	9	2
92-52-4	1,1'-Biphenyl	U	9	1.0	10	9	2
88-74-4	2-Nitroaniline	U	24	1.0	25	24	1
131-11-3	Dimethyl Phthalate	U	9	1.0	10	9	0.7
606-20-2	2,6-Dinitrotoluene	U	9	1.0	10	9	1.0
208-96-8	Acenaphthylene	U	9	1.0	10	9	2
99-09-2	3-Nitroaniline	U	24	1.0	25	24	1
83-32-9	Acenaphthene	U	9	1.0	10	9	2
51-28-5	2,4-Dinitrophenol	U	42	1.0	45	42	14
132-64-9	Dibenzofuran	U	9	1.0	10	9	1
100-02-7	4-Nitrophenol	U	24	1.0	25	24	5
121-14-2	2,4-Dinitrotoluene	U	9	1.0	10	9	1
84-66-2	Diethylphthalate	U	9	1.0	10	9	1
7005-72-3	4-Chlorophenyl-phenylether	U	9	1.0	10	9	1
100-01-6	4-Nitroaniline	U	24	1.0	25	24	2
534-52-1	4,6-Dinitro-2-Methylphenol	U	24	1.0	25	24	6
86-30-6	N-Nitrosodiphenylamine	U	9	1.0	10	9	2
101-55-3	4-Bromophenyl-phenylether	U	9	1.0	10	9	1
1912-24-9	Atrazine	U	9	1.0	10	9	2
87-86-5	Pentachlorophenol	U	24	1.0	25	24	7
120-12-7	Anthracene	U	9	1.0	10	9	1
86-74-8	Carbazole	U	9	1.0	10	9	1

MW 1/31/09

5

KATAHDIN ANALYTICAL SERVICES
Report of Analytical Results

Client: CH2MHill
Project: TO-009 Lejeune
PO No:
Sample Date: 11/11/08
Received Date: 11/14/08
Extraction Date: 11/17/08
Analysis Date: 08-DEC-2008 15:30
Report Date: 12/15/2008
Matrix: WATER
% Solids: NA

Lab ID: SB6586-9
Client ID: IR78-GW04-2-08D
SDG: TO9-3
Extracted by: KF
Extraction Method: SW846 3520
Analyst: JCG
Analysis Method: SW846 8270C
Lab Prep Batch: WG58141
Units: ug/L

CAS#	Compound	Flags	Results	DF	PQL	Adj.PQL	Adj.MDL	
84-74-2	Di-n-butylphthalate	U	9	1.0	10	9	1	
85-68-7	Butylbenzylphthalate	~~U~~ UJ	9	1.0	10	9	1	CCH
91-94-1	3,3'-Dichlorobenzidine	U	9	1.0	10	9	3	
218-01-9	Chrysene	U	9	1.0	10	9	1	
117-81-7	bis(2-Ethylhexyl)phthalate	~~U~~ UJ	9	1.0	10	9	2	CCH
117-84-0	Di-n-octylphthalate	~~U~~ UJ	9	1.0	10	9	2	CCH
367-12-4	2-Fluorophenol		55%					
13127-88-3	Phenol-D6		70%					
4165-60-0	Nitrobenzene-D5		74%					
321-60-8	2-Fluorobiphenyl		76%					
118-79-6	2,4,6-Tribromophenol		65%					
1718-51-0	Terphenyl-D14		102%					

LW
1/31/09

6

KATAHDIN ANALYTICAL SERVICES
Report of Analytical Results

Client: CH2MHill
Project: TO-009 Lejeune
PO No:
Sample Date: 11/13/08
Received Date: 11/14/08
Extraction Date: 11/17/08
Analysis Date: 08-DEC-2008 16:13
Report Date: 12/15/2008
Matrix: WATER
% Solids: NA

Lab ID: SB6586-11
Client ID: IR78-GW56-08D
SDG: TO9-3
Extracted by: KF
Extraction Method: SW846 3520
Analyst: JCG
Analysis Method: SW846 8270C
Lab Prep Batch: WG58141
Units: ug/L

CAS#	Compound	Flags	Results	DF	PQL	Adj.PQL	Adj.MDL
100-52-7	Benzaldehyde	~~U~~ UJ	11	1.0	10	11	3 CCH
108-95-2	Phenol	U	11	1.0	10	11	2
111-44-4	Bis(2-Chloroethyl)ether	U	11	1.0	10	11	2
95-57-8	2-Chlorophenol	U	13	1.0	12	13	4
95-48-7	2-Methylphenol	U	13	1.0	12	13	4
108-60-1	2,2'-Oxybis(1-chloropropane)	U	11	1.0	10	11	2
98-86-2	Acetophenone	U	13	1.0	12	13	4
621-64-7	N-Nitroso-di-n-propylamine	U	11	1.0	10	11	2
65794-96-9	3&4-Methylphenol	U	11	1.0	10	11	3
67-72-1	Hexachloroethane	U	11	1.0	10	11	2
98-95-3	Nitrobenzene	U	11	1.0	10	11	2
78-59-1	Isophorone	U	11	1.0	10	11	2
88-75-5	2-Nitrophenol	U	11	1.0	10	11	4
105-67-9	2,4-Dimethylphenol	U	13	1.0	12	13	4
111-91-1	Bis(2-Chloroethoxy)methane	U	11	1.0	10	11	3
120-83-2	2,4-Dichlorophenol	U	13	1.0	12	13	4
106-47-8	4-Chloroaniline	U	11	1.0	10	11	2
105-60-2	Caprolactam	U	11	1.0	10	11	0.4
59-50-7	4-Chloro-3-Methylphenol	U	11	1.0	10	11	3
88-06-2	2,4,6-Trichlorophenol	U	11	1.0	10	11	3
95-95-4	2,4,5-Trichlorophenol	U	26	1.0	25	26	4
91-58-7	2-Chloronaphthalene	U	11	1.0	10	11	2
92-52-4	1,1'-Biphenyl	U	11	1.0	10	11	2
88-74-4	2-Nitroaniline	U	26	1.0	25	26	2
131-11-3	Dimethyl Phthalate	U	11	1.0	10	11	0.8
606-20-2	2,6-Dinitrotoluene	U	11	1.0	10	11	1
208-96-8	Acenaphthylene	U	11	1.0	10	11	2
99-09-2	3-Nitroaniline	U	26	1.0	25	26	1
83-32-9	Acenaphthene	U	11	1.0	10	11	2
51-28-5	2,4-Dinitrophenol	U	48	1.0	45	48	16
132-64-9	Dibenzofuran	U	11	1.0	10	11	2
100-02-7	4-Nitrophenol	U	26	1.0	25	26	6
121-14-2	2,4-Dinitrotoluene	U	11	1.0	10	11	2
84-66-2	Diethylphthalate	U	11	1.0	10	11	1
7005-72-3	4-Chlorophenyl-phenylether	U	11	1.0	10	11	1
100-01-6	4-Nitroaniline	U	26	1.0	25	26	2
534-52-1	4,6-Dinitro-2-Methylphenol	U	26	1.0	25	26	6
86-30-6	N-Nitrosodiphenylamine	U	11	1.0	10	11	2
101-55-3	4-Bromophenyl-phenylether	U	11	1.0	10	11	1
1912-24-9	Atrazine	U	11	1.0	10	11	2
87-86-5	Pentachlorophenol	U	26	1.0	25	26	8
120-12-7	Anthracene	U	11	1.0	10	11	2
86-74-8	Carbazole	U	11	1.0	10	11	1

lew
1/31/09

6

KATAHDIN ANALYTICAL SERVICES
Report of Analytical Results

Client: CH2MHill
Project: TO-009 Lejeune
PO No:
Sample Date: 11/13/08
Received Date: 11/14/08
Extraction Date: 11/17/08
Analysis Date: 08-DEC-2008 16:13
Report Date: 12/15/2008
Matrix: WATER
% Solids: NA

Lab ID: SB6586-11
Client ID: IR78-GW56-08D
SDG: TO9-3
Extracted by: KF
Extraction Method: SW846 3520
Analyst: JCG
Analysis Method: SW846 8270C
Lab Prep Batch: WG58141
Units: ug/L

CAS#	Compound	Flags	Results	DF	PQL	Adj.PQL	Adj.MDL	
84-74-2	Di-n-butylphthalate	U	11	1.0	10	11	1	
85-68-7	Butylbenzylphthalate	~~U~~ UJ	11	1.0	10	11	2	CCH
91-94-1	3,3'-Dichlorobenzidine	~~U~~ R	11	1.0	10	11	3	MSL
218-01-9	Chrysene	U	11	1.0	10	11	1	
117-81-7	bis(2-Ethylhexyl)phthalate	~~J~~ J	4	1.0	10	11	2	CCH
117-84-0	Di-n-octylphthalate	~~U~~ UJ	11	1.0	10	11	2	CCH
367-12-4	2-Fluorophenol		52%					
13127-88-3	Phenol-D6		64%					
4165-60-0	Nitrobenzene-D5		64%					
321-60-8	2-Fluorobiphenyl		63%					
118-79-6	2,4,6-Tribromophenol		77%					
1718-51-0	Terphenyl-D14		95%					

MW
11/31/09

7

KATAHDIN ANALYTICAL SERVICES
Report of Analytical Results

Client: CH2MHill
Project: TO-009 Lejeune
PO No:
Sample Date: 11/13/08
Received Date: 11/14/08
Extraction Date: 11/17/08
Analysis Date: 08-DEC-2008 16:55
Report Date: 12/15/2008
Matrix: WATER
% Solids: NA

Lab ID: SB6586-17
Client ID: MR08-EB111208-1
SDG: TO9-3
Extracted by: KF
Extraction Method: SW846 3520
Analyst: JCG
Analysis Method: SW846 8270C
Lab Prep Batch: WG58141
Units: ug/L

CAS#	Compound	Flags	Results	DF	PQL	Adj.PQL	Adj.MDL
100-52-7	Benzaldehyde	~~U~~ UJ	9	1.0	10	9	3 CCH
108-95-2	Phenol	U	9	1.0	10	9	2
111-44-4	Bis(2-Chloroethyl)ether	U	9	1.0	10	9	2
95-57-8	2-Chlorophenol	U	11	1.0	12	11	3
95-48-7	2-Methylphenol	U	11	1.0	12	11	4
108-60-1	2,2'-Oxybis(1-chloropropane)	U	9	1.0	10	9	2
98-86-2	Acetophenone	U	11	1.0	12	11	4
621-64-7	N-Nitroso-di-n-propylamine	U	9	1.0	10	9	2
65794-96-9	3&4-Methylphenol	U	9	1.0	10	9	2
67-72-1	Hexachloroethane	U	9	1.0	10	9	2
98-95-3	Nitrobenzene	U	9	1.0	10	9	2
78-59-1	Isophorone	U	9	1.0	10	9	2
88-75-5	2-Nitrophenol	U	9	1.0	10	9	3
105-67-9	2,4-Dimethylphenol	U	11	1.0	12	11	4
111-91-1	Bis(2-Chloroethoxy)methane	U	9	1.0	10	9	2
120-83-2	2,4-Dichlorophenol	U	11	1.0	12	11	4
106-47-8	4-Chloroaniline	U	9	1.0	10	9	2
105-60-2	Caprolactam	U	9	1.0	10	9	0.4
59-50-7	4-Chloro-3-Methylphenol	U	9	1.0	10	9	2
88-06-2	2,4,6-Trichlorophenol	U	9	1.0	10	9	3
95-95-4	2,4,5-Trichlorophenol	U	24	1.0	25	24	4
91-58-7	2-Chloronaphthalene	U	9	1.0	10	9	2
92-52-4	1,1'-Biphenyl	U	9	1.0	10	9	2
88-74-4	2-Nitroaniline	U	24	1.0	25	24	1
131-11-3	Dimethyl Phthalate	U	9	1.0	10	9	0.7
606-20-2	2,6-Dinitrotoluene	U	9	1.0	10	9	1.0
208-96-8	Acenaphthylene	U	9	1.0	10	9	2
99-09-2	3-Nitroaniline	U	24	1.0	25	24	1
83-32-9	Acenaphthene	U	9	1.0	10	9	2
51-28-5	2,4-Dinitrophenol	U	42	1.0	45	42	14
132-64-9	Dibenzofuran	U	9	1.0	10	9	1
100-02-7	4-Nitrophenol	U	24	1.0	25	24	5
121-14-2	2,4-Dinitrotoluene	U	9	1.0	10	9	1
84-66-2	Diethylphthalate	U	9	1.0	10	9	1
7005-72-3	4-Chlorophenyl-phenylether	U	9	1.0	10	9	1
100-01-6	4-Nitroaniline	U	24	1.0	25	24	2
534-52-1	4,6-Dinitro-2-Methylphenol	U	24	1.0	25	24	6
86-30-6	N-Nitrosodiphenylamine	U	9	1.0	10	9	2
101-55-3	4-Bromophenyl-phenylether	U	9	1.0	10	9	1
1912-24-9	Atrazine	U	9	1.0	10	9	2
87-86-5	Pentachlorophenol	U	24	1.0	25	24	7
120-12-7	Anthracene	U	9	1.0	10	9	1
86-74-8	Carbazole	U	9	1.0	10	9	1

MW 12/31/09

7

KATAHDIN ANALYTICAL SERVICES
Report of Analytical Results

Client: CH2MHill
Project: TO-009 Lejeune
PO No:
Sample Date: 11/13/08
Received Date: 11/14/08
Extraction Date: 11/17/08
Analysis Date: 08-DEC-2008 16:55
Report Date: 12/15/2008
Matrix: WATER
% Solids: NA

Lab ID: SB6586-17
Client ID: MR08-EB111208-1
SDG: TO9-3
Extracted by: KF
Extraction Method: SW846 3520
Analyst: JCG
Analysis Method: SW846 8270C
Lab Prep Batch: WG58141
Units: ug/L

CAS#	Compound	Flags	Results	DF	PQL	Adj.PQL	Adj.MDL	
84-74-2	Di-n-butylphthalate	U	9	1.0	10	9	1	
85-68-7	Butylbenzylphthalate	~~U~~ UJ	9	1.0	10	9	1	CCH
91-94-1	3,3'-Dichlorobenzidine	U	9	1.0	10	9	3	
218-01-9	Chrysene	U	9	1.0	10	9	1	
117-81-7	bis(2-Ethylhexyl)phthalate	~~U~~ UJ	9	1.0	10	9	2	CCH
117-84-0	Di-n-octylphthalate	~~U~~ UJ	9	1.0	10	9	2	CCH
367-12-4	2-Fluorophenol		70%					
13127-88-3	Phenol-D6		64%					
4165-60-0	Nitrobenzene-D5		77%					
321-60-8	2-Fluorobiphenyl		102%					
118-79-6	2,4,6-Tribromophenol		107%					
1718-51-0	Terphenyl-D14		120%					

LW 1/31/09

7RE

KATAHDIN ANALYTICAL SERVICES
Report of Analytical Results

Client: CH2MHill
Project: TO-009 Lejeune
PO No:
Sample Date: 11/13/08
Received Date: 11/14/08
Extraction Date: 11/17/08
Analysis Date: 10-DEC-2008 00:06
Report Date: 12/15/2008
Matrix: WATER
% Solids: NA

Lab ID: SB6586-17RA
Client ID: MR08-EB111208-1
SDG: TO9-3
Extracted by: KF
Extraction Method: SW846 3520
Analyst: JCG
Analysis Method: SW846 8270C
Lab Prep Batch: WG58141
Units: ug/L

Use original

CAS#	Compound	Flags	Results	DF	PQL	Adj.PQL	Adj.MDL
100-52-7	Benzaldehyde	~~U~~ UJ	9	1.0	10	9	3 CCH
108-95-2	Phenol	U	9	1.0	10	9	2
111-44-4	Bis(2-Chloroethyl)ether	U	9	1.0	10	9	2
95-57-8	2-Chlorophenol	U	11	1.0	12	11	3
95-48-7	2-Methylphenol	U	11	1.0	12	11	4
108-60-1	2,2'-Oxybis(1-chloropropane)	U	9	1.0	10	9	2
98-86-2	Acetophenone	U	11	1.0	12	11	4
621-64-7	N-Nitroso-di-n-propylamine	U	9	1.0	10	9	2
65794-96-9	3&4-Methylphenol	U	9	1.0	10	9	2
67-72-1	Hexachloroethane	U	9	1.0	10	9	2
98-95-3	Nitrobenzene	U	9	1.0	10	9	2
78-59-1	Isophorone	U	9	1.0	10	9	2
88-75-5	2-Nitrophenol	U	9	1.0	10	9	3
105-67-9	2,4-Dimethylphenol	U	11	1.0	12	11	4
111-91-1	Bis(2-Chloroethoxy)methane	U	9	1.0	10	9	2
120-83-2	2,4-Dichlorophenol	U	11	1.0	12	11	4
106-47-8	4-Chloroaniline	U	9	1.0	10	9	2
105-60-2	Caprolactam	~~U~~ UJ	9	1.0	10	9	0.4 CCH
59-50-7	4-Chloro-3-Methylphenol	U	9	1.0	10	9	2
88-06-2	2,4,6-Trichlorophenol	U	9	1.0	10	9	3
95-95-4	2,4,5-Trichlorophenol	U	24	1.0	25	24	4
91-58-7	2-Chloronaphthalene	U	9	1.0	10	9	2
92-52-4	1,1'-Biphenyl	U	9	1.0	10	9	2
88-74-4	2-Nitroaniline	U	24	1.0	25	24	1
131-11-3	Dimethyl Phthalate	U	9	1.0	10	9	0.7
606-20-2	2,6-Dinitrotoluene	U	9	1.0	10	9	1.0
208-96-8	Acenaphthylene	U	9	1.0	10	9	2
99-09-2	3-Nitroaniline	U	24	1.0	25	24	1
83-32-9	Acenaphthene	U	9	1.0	10	9	2
51-28-5	2,4-Dinitrophenol	U	42	1.0	45	42	14
132-64-9	Dibenzofuran	U	9	1.0	10	9	1
100-02-7	4-Nitrophenol	U	24	1.0	25	24	5
121-14-2	2,4-Dinitrotoluene	U	9	1.0	10	9	1
84-66-2	Diethylphthalate	U	9	1.0	10	9	1
7005-72-3	4-Chlorophenyl-phenylether	U	9	1.0	10	9	1
100-01-6	4-Nitroaniline	U	24	1.0	25	24	2
534-52-1	4,6-Dinitro-2-Methylphenol	U	24	1.0	25	24	6
86-30-6	N-Nitrosodiphenylamine	U	9	1.0	10	9	2
101-55-3	4-Bromophenyl-phenylether	U	9	1.0	10	9	1
1912-24-9	Atrazine	U	9	1.0	10	9	2
87-86-5	Pentachlorophenol	U	24	1.0	25	24	7
120-12-7	Anthracene	U	9	1.0	10	9	1
86-74-8	Carbazole	U	9	1.0	10	9	1

RE

1/31/09

7RE

KATAHDIN ANALYTICAL SERVICES
Report of Analytical Results

Client: CH2MHill
Project: TO-009 Lejeune
PO No:
Sample Date: 11/13/08
Received Date: 11/14/08
Extraction Date: 11/17/08
Analysis Date: 10-DEC-2008 00:06
Report Date: 12/15/2008
Matrix: WATER
% Solids: NA

Lab ID: SB6586-17RA
Client ID: MR08-EB111208-1
SDG: TO9-3
Extracted by: KF
Extraction Method: SW846 3520
Analyst: JCG
Analysis Method: SW846 8270C
Lab Prep Batch: WG58141
Units: ug/L

use orig. NAC

CAS#	Compound	Flags	Results	DF	PQL	Adj.PQL	Adj.MDL
84-74-2	Di-n-butylphthalate	U	9	1.0	10	9	1
85-68-7	Butylbenzylphthalate	~~U~~	9	1.0	10	9	1
91-94-1	3,3'-Dichlorobenzidine	U	9	1.0	10	9	3
218-01-9	Chrysene	U	9	1.0	10	9	1
117-81-7	bis(2-Ethylhexyl)phthalate	~~U~~	9	1.0	10	9	2
117-84-0	Di-n-octylphthalate	~~U~~	9	1.0	10	9	2
367-12-4	2-Fluorophenol		66%				
13127-88-3	Phenol-D6		57%				
4165-60-0	Nitrobenzene-D5		78%				
321-60-8	2-Fluorobiphenyl		101%				
118-79-6	2,4,6-Tribromophenol		101%				
1718-51-0	Terphenyl-D14		*149%				

RE

R

lew
1/31/09

8

KATAHDIN ANALYTICAL SERVICES
Report of Analytical Results

Client: CH2MHill
Project: TO-009 Lejeune
PO No:
Sample Date: 11/13/08
Received Date: 11/15/08
Extraction Date: 11/17/08
Analysis Date: 08-DEC-2008 17:37
Report Date: 12/15/2008
Matrix: WATER
% Solids: NA

Lab ID: SB6614-1
Client ID: UST1607-MW02-08D
SDG: TO9-3
Extracted by: KF
Extraction Method: SW846 3520
Analyst: JCG
Analysis Method: SW846 8270C
Lab Prep Batch: WG58141
Units: ug/L

CAS#	Compound	Flags	Results	DF	PQL	Adj.PQL	Adj.MDL
100-52-7	Benzaldehyde	U UJ	9	1.0	10	9	3
108-95-2	Phenol	U	9	1.0	10	9	2
111-44-4	Bis(2-Chloroethyl)ether	U	9	1.0	10	9	2
95-57-8	2-Chlorophenol	U	11	1.0	12	11	3
95-48-7	2-Methylphenol	U	11	1.0	12	11	4
108-60-1	2,2'-Oxybis(1-chloropropane)	U	9	1.0	10	9	2
98-86-2	Acetophenone	U	11	1.0	12	11	4
621-64-7	N-Nitroso-di-n-propylamine	U	9	1.0	10	9	2
65794-96-9	3&4-Methylphenol	U	9	1.0	10	9	2
67-72-1	Hexachloroethane	U	9	1.0	10	9	2
98-95-3	Nitrobenzene	U	9	1.0	10	9	2
78-59-1	Isophorone	U	9	1.0	10	9	2
88-75-5	2-Nitrophenol	U	9	1.0	10	9	3
105-67-9	2,4-Dimethylphenol	U	11	1.0	12	11	4
111-91-1	Bis(2-Chloroethoxy)methane	U	9	1.0	10	9	2
120-83-2	2,4-Dichlorophenol	U	11	1.0	12	11	4
106-47-8	4-Chloroaniline	U	9	1.0	10	9	2
105-60-2	Caprolactam	U	9	1.0	10	9	0.4
59-50-7	4-Chloro-3-Methylphenol	U	9	1.0	10	9	2
88-06-2	2,4,6-Trichlorophenol	U	9	1.0	10	9	3
95-95-4	2,4,5-Trichlorophenol	U	24	1.0	25	24	4
91-58-7	2-Chloronaphthalene	U	9	1.0	10	9	2
92-52-4	1,1'-Biphenyl	U	9	1.0	10	9	2
88-74-4	2-Nitroaniline	U	24	1.0	25	24	1
131-11-3	Dimethyl Phthalate	U	9	1.0	10	9	0.7
606-20-2	2,6-Dinitrotoluene	U	9	1.0	10	9	1.0
208-96-8	Acenaphthylene	U	9	1.0	10	9	2
99-09-2	3-Nitroaniline	U	24	1.0	25	24	1
83-32-9	Acenaphthene	U	9	1.0	10	9	2
51-28-5	2,4-Dinitrophenol	U	42	1.0	45	42	14
132-64-9	Dibenzofuran	U	9	1.0	10	9	1
100-02-7	4-Nitrophenol	U	24	1.0	25	24	5
121-14-2	2,4-Dinitrotoluene	U	9	1.0	10	9	1
84-66-2	Diethylphthalate	U	9	1.0	10	9	1
7005-72-3	4-Chlorophenyl-phenylether	U	9	1.0	10	9	1
100-01-6	4-Nitroaniline	U	24	1.0	25	24	2
534-52-1	4,6-Dinitro-2-Methylphenol	U	24	1.0	25	24	6
86-30-6	N-Nitrosodiphenylamine	U	9	1.0	10	9	2
101-55-3	4-Bromophenyl-phenylether	U	9	1.0	10	9	1
1912-24-9	Atrazine	U	9	1.0	10	9	2
87-86-5	Pentachlorophenol	U	24	1.0	25	24	7
120-12-7	Anthracene	U	9	1.0	10	9	1
86-74-8	Carbazole	U	9	1.0	10	9	1

CCH

LW 1/31/09

8

KATAHDIN ANALYTICAL SERVICES
Report of Analytical Results

Client: CH2MHill
Project: TO-009 Lejeune
PO No:
Sample Date: 11/13/08
Received Date: 11/15/08
Extraction Date: 11/17/08
Analysis Date: 08-DEC-2008 17:37
Report Date: 12/15/2008
Matrix: WATER
% Solids: NA

Lab ID: SB6614-1
Client ID: UST1607-MW02-08D
SDG: TO9-3
Extracted by: KF
Extraction Method: SW846 3520
Analyst: JCG
Analysis Method: SW846 8270C
Lab Prep Batch: WG58141
Units: ug/L

CAS#	Compound	Flags	Results	DF	PQL	Adj.PQL	Adj.MDL
84-74-2	Di-n-butylphthalate	U	9	1.0	10	9	1
85-68-7	Butylbenzylphthalate	~~U~~ UJ	9	1.0	10	9	1 CCH
91-94-1	3,3'-Dichlorobenzidine	U	9	1.0	10	9	3
218-01-9	Chrysene	U	9	1.0	10	9	1
117-81-7	bis(2-Ethylhexyl)phthalate	~~U~~ UJ	9	1.0	10	9	2 CCH
117-84-0	Di-n-octylphthalate	~~U~~ UJ	9	1.0	10	9	2 CCH
367-12-4	2-Fluorophenol		63%				
13127-88-3	Phenol-D6		69%				
4165-60-0	Nitrobenzene-D5		76%				
321-60-8	2-Fluorobiphenyl		54%				
118-79-6	2,4,6-Tribromophenol		83%				
1718-51-0	Terphenyl-D14		* 34%				

MW
1/31/09

9

KATAHDIN ANALYTICAL SERVICES
Report of Analytical Results

Client: CH2MHill
Project: TO-009 Lejeune
PO No:
Sample Date: 11/13/08
Received Date: 11/15/08
Extraction Date: 11/17/08
Analysis Date: 08-DEC-2008 19:42
Report Date: 12/15/2008
Matrix: WATER
% Solids: NA

Lab ID: SB6614-3
Client ID: IR78-GW09-3-08D
SDG: TO9-3
Extracted by: KF
Extraction Method: SW846 3520
Analyst: JCG
Analysis Method: SW846 8270C
Lab Prep Batch: WG58141
Units: ug/L

CAS#	Compound	Flags	Results	DF	PQL	Adj.PQL	Adj.MDL
100-52-7	Benzaldehyde	~~U~~ UJ	9	1.0	10	9	3 CCH
108-95-2	Phenol	U	9	1.0	10	9	2
111-44-4	Bis(2-Chloroethyl)ether	U	9	1.0	10	9	2
95-57-8	2-Chlorophenol	U	11	1.0	12	11	3
95-48-7	2-Methylphenol	U	11	1.0	12	11	4
108-60-1	2,2'-Oxybis(1-chloropropane)	U	9	1.0	10	9	2
98-86-2	Acetophenone	U	11	1.0	12	11	4
621-64-7	N-Nitroso-di-n-propylamine	U	9	1.0	10	9	2
65794-96-9	3&4-Methylphenol	U	9	1.0	10	9	2
67-72-1	Hexachloroethane	U	9	1.0	10	9	2
98-95-3	Nitrobenzene	U	9	1.0	10	9	2
78-59-1	Isophorone	U	9	1.0	10	9	2
88-75-5	2-Nitrophenol	U	9	1.0	10	9	3
105-67-9	2,4-Dimethylphenol	U	11	1.0	12	11	4
111-91-1	Bis(2-Chloroethoxy)methane	U	9	1.0	10	9	2
120-83-2	2,4-Dichlorophenol	U	11	1.0	12	11	4
106-47-8	4-Chloroaniline	U	9	1.0	10	9	2
105-60-2	Caprolactam	U	9	1.0	10	9	0.4
59-50-7	4-Chloro-3-Methylphenol	U	9	1.0	10	9	2
88-06-2	2,4,6-Trichlorophenol	U	9	1.0	10	9	3
95-95-4	2,4,5-Trichlorophenol	U	24	1.0	25	24	4
91-58-7	2-Chloronaphthalene	U	9	1.0	10	9	2
92-52-4	1,1'-Biphenyl	U	9	1.0	10	9	2
88-74-4	2-Nitroaniline	U	24	1.0	25	24	1
131-11-3	Dimethyl Phthalate	U	9	1.0	10	9	0.7
606-20-2	2,6-Dinitrotoluene	U	9	1.0	10	9	1.0
208-96-8	Acenaphthylene	U	9	1.0	10	9	2
99-09-2	3-Nitroaniline	U	24	1.0	25	24	1
83-32-9	Acenaphthene	U	9	1.0	10	9	2
51-28-5	2,4-Dinitrophenol	U	42	1.0	45	42	14
132-64-9	Dibenzofuran	U	9	1.0	10	9	1
100-02-7	4-Nitrophenol	U	24	1.0	25	24	5
121-14-2	2,4-Dinitrotoluene	U	9	1.0	10	9	1
84-66-2	Diethylphthalate	U	9	1.0	10	9	1
7005-72-3	4-Chlorophenyl-phenylether	U	9	1.0	10	9	1
100-01-6	4-Nitroaniline	U	24	1.0	25	24	2
534-52-1	4,6-Dinitro-2-Methylphenol	U	24	1.0	25	24	6
86-30-6	N-Nitrosodiphenylamine	U	9	1.0	10	9	2
101-55-3	4-Bromophenyl-phenylether	U	9	1.0	10	9	1
1912-24-9	Atrazine	U	9	1.0	10	9	2
87-86-5	Pentachlorophenol	U	24	1.0	25	24	7
120-12-7	Anthracene	U	9	1.0	10	9	1
86-74-8	Carbazole	U	9	1.0	10	9	1

lw
1/3/09

9

KATAHDIN ANALYTICAL SERVICES
Report of Analytical Results

Client: CH2MHill
Project: TO-009 Lejeune
PO No:
Sample Date: 11/13/08
Received Date: 11/15/08
Extraction Date: 11/17/08
Analysis Date: 08-DEC-2008 19:42
Report Date: 12/15/2008
Matrix: WATER
% Solids: NA

Lab ID: SB6614-3
Client ID: IR78-GW09-3-08D
SDG: TO9-3
Extracted by: KF
Extraction Method: SW846 3520
Analyst: JCG
Analysis Method: SW846 8270C
Lab Prep Batch: WG58141
Units: ug/L

CAS#	Compound	Flags	Results	DF	PQL	Adj.PQL	Adj.MDL	
84-74-2	Di-n-butylphthalate	U	9	1.0	10	9	1	
85-68-7	Butylbenzylphthalate	~~U~~ UJ	9	1.0	10	9	1	CCH
91-94-1	3,3'-Dichlorobenzidine	U	9	1.0	10	9	3	
218-01-9	Chrysene	U	9	1.0	10	9	1	
117-81-7	bis(2-Ethylhexyl)phthalate	~~J~~ J	2	1.0	10	9	2	CCH
117-84-0	Di-n-octylphthalate	~~U~~ UJ	9	1.0	10	9	2	CCH
367-12-4	2-Fluorophenol		53%					
13127-88-3	Phenol-D6		76%					
4165-60-0	Nitrobenzene-D5		73%					
321-60-8	2-Fluorobiphenyl		75%					
118-79-6	2,4,6-Tribromophenol		82%					
1718-51-0	Terphenyl-D14		92%					

lw
11/31/09

10

KATAHDIN ANALYTICAL SERVICES
Report of Analytical Results

Client: CH2MHill
Project: TO-009 Lejeune
PO No:
Sample Date: 11/13/08
Received Date: 11/15/08
Extraction Date: 11/17/08
Analysis Date: 08-DEC-2008 20:23
Report Date: 12/15/2008
Matrix: WATER
% Solids: NA

Lab ID: SB6614-5
Client ID: IR78-GW11-08D
SDG: TO9-3
Extracted by: KF
Extraction Method: SW846 3520
Analyst: JCG
Analysis Method: SW846 8270C
Lab Prep Batch: WG58141
Units: ug/L

CAS#	Compound	Flags	Results	DF	PQL	Adj.PQL	Adj.MDL
100-52-7	Benzaldehyde	~~U~~ UJ	9	1.0	10	9	3 CCH
108-95-2	Phenol	U	9	1.0	10	9	2
111-44-4	Bis(2-Chloroethyl)ether	U	9	1.0	10	9	2
95-57-8	2-Chlorophenol	U	11	1.0	12	11	3
95-48-7	2-Methylphenol	U	11	1.0	12	11	4
108-60-1	2,2'-Oxybis(1-chloropropane)	U	9	1.0	10	9	2
98-86-2	Acetophenone	U	11	1.0	12	11	4
621-64-7	N-Nitroso-di-n-propylamine	U	9	1.0	10	9	2
65794-96-9	3&4-Methylphenol	U	9	1.0	10	9	2
67-72-1	Hexachloroethane	U	9	1.0	10	9	2
98-95-3	Nitrobenzene	U	9	1.0	10	9	2
78-59-1	Isophorone	U	9	1.0	10	9	2
88-75-5	2-Nitrophenol	U	9	1.0	10	9	3
105-67-9	2,4-Dimethylphenol	U	11	1.0	12	11	4
111-91-1	Bis(2-Chloroethoxy)methane	U	9	1.0	10	9	2
120-83-2	2,4-Dichlorophenol	U	11	1.0	12	11	4
106-47-8	4-Chloroaniline	U	9	1.0	10	9	2
105-60-2	Caprolactam	U	9	1.0	10	9	0.4
59-50-7	4-Chloro-3-Methylphenol	U	9	1.0	10	9	2
88-06-2	2,4,6-Trichlorophenol	U	9	1.0	10	9	3
95-95-4	2,4,5-Trichlorophenol	U	24	1.0	25	24	4
91-58-7	2-Chloronaphthalene	U	9	1.0	10	9	2
92-52-4	1,1'-Biphenyl	U	9	1.0	10	9	2
88-74-4	2-Nitroaniline	U	24	1.0	25	24	1
131-11-3	Dimethyl Phthalate	U	9	1.0	10	9	0.7
606-20-2	2,6-Dinitrotoluene	U	9	1.0	10	9	1.0
208-96-8	Acenaphthylene	U	9	1.0	10	9	2
99-09-2	3-Nitroaniline	U	24	1.0	25	24	1
83-32-9	Acenaphthene	U	9	1.0	10	9	2
51-28-5	2,4-Dinitrophenol	U	42	1.0	45	42	14
132-64-9	Dibenzofuran	U	9	1.0	10	9	1
100-02-7	4-Nitrophenol	U	24	1.0	25	24	5
121-14-2	2,4-Dinitrotoluene	U	9	1.0	10	9	1
84-66-2	Diethylphthalate	U	9	1.0	10	9	1
7005-72-3	4-Chlorophenyl-phenylether	U	9	1.0	10	9	1
100-01-6	4-Nitroaniline	U	24	1.0	25	24	2
534-52-1	4,6-Dinitro-2-Methylphenol	U	24	1.0	25	24	6
86-30-6	N-Nitrosodiphenylamine	U	9	1.0	10	9	2
101-55-3	4-Bromophenyl-phenylether	U	9	1.0	10	9	1
1912-24-9	Atrazine	U	9	1.0	10	9	2
87-86-5	Pentachlorophenol	U	24	1.0	25	24	7
120-12-7	Anthracene	U	9	1.0	10	9	1
86-74-8	Carbazole	U	9	1.0	10	9	1

LW
1/31/09

10

KATAHDIN ANALYTICAL SERVICES
Report of Analytical Results

Client: CH2MHill
Project: TO-009 Lejeune
PO No:
Sample Date: 11/13/08
Received Date: 11/15/08
Extraction Date: 11/17/08
Analysis Date: 08-DEC-2008 20:23
Report Date: 12/15/2008
Matrix: WATER
% Solids: NA

Lab ID: SB6614-5
Client ID: IR78-GW11-08D
SDG: TO9-3
Extracted by: KF
Extraction Method: SW846 3520
Analyst: JCG
Analysis Method: SW846 8270C
Lab Prep Batch: WG58141
Units: ug/L

CAS#	Compound	Flags	Results	DF	PQL	Adj.PQL	Adj.MDL	
84-74-2	Di-n-butylphthalate	U	9	1.0	10	9	1	
85-68-7	Butylbenzylphthalate	~~U~~ UJ	9	1.0	10	9	1	CCH
91-94-1	3,3'-Dichlorobenzidine	U	9	1.0	10	9	3	
218-01-9	Chrysene	U	9	1.0	10	9	1	
117-81-7	bis(2-Ethylhexyl)phthalate	~~J~~ J	4	1.0	10	9	2	CCH
117-84-0	Di-n-octylphthalate	~~U~~ UJ	9	1.0	10	9	2	CCH
367-12-4	2-Fluorophenol		22%					
13127-88-3	Phenol-D6		50%					
4165-60-0	Nitrobenzene-D5		65%					
321-60-8	2-Fluorobiphenyl		67%					
118-79-6	2,4,6-Tribromophenol		50%					
1718-51-0	Terphenyl-D14		106%					

LW
1/31/09

KATAHDIN ANALYTICAL SERVICES
Report of Analytical Results

Client: CH2MHill
Project: TO-009 Lejeune
PO No:
Sample Date: 11/14/08
Received Date: 11/18/08
Extraction Date: 11/19/08
Analysis Date: 09-DEC-2008 18:27
Report Date: 12/11/2008
Matrix: WATER
% Solids: NA

Lab ID: SB6645-1
Client ID: IR78-GW12-08D
SDG: TO9-3
Extracted by: KF
Extraction Method: SW846 3510
Analyst: JCG
Analysis Method: SW846 8270C
Lab Prep Batch: WG58242
Units: ug/L

CAS#	Compound	Flags	Results	DF	PQL	Adj.PQL	Adj.MDL
100-52-7	Benzaldehyde	~~U~~ UJ	9	1.0	10	9	3 CCH
108-95-2	Phenol	U	9	1.0	10	9	2
111-44-4	Bis(2-Chloroethyl)ether	U	9	1.0	10	9	2
95-57-8	2-Chlorophenol	U	11	1.0	12	11	3
95-48-7	2-Methylphenol	U	11	1.0	12	11	4
108-60-1	2,2'-Oxybis(1-chloropropane)	U	9	1.0	10	9	2
98-86-2	Acetophenone	U	11	1.0	12	11	4
621-64-7	N-Nitroso-di-n-propylamine	U	9	1.0	10	9	2
65794-96-9	3&4-Methylphenol	U	9	1.0	10	9	2
67-72-1	Hexachloroethane	U	9	1.0	10	9	2
98-95-3	Nitrobenzene	U	9	1.0	10	9	2
78-59-1	Isophorone	U	9	1.0	10	9	2
88-75-5	2-Nitrophenol	U	9	1.0	10	9	3
105-67-9	2,4-Dimethylphenol	U	11	1.0	12	11	4
111-91-1	Bis(2-Chloroethoxy)methane	U	9	1.0	10	9	2
120-83-2	2,4-Dichlorophenol	U	11	1.0	12	11	4
106-47-8	4-Chloroaniline	U	9	1.0	10	9	2
105-60-2	Caprolactam	~~U~~ UJ	9	1.0	10	9	0.4 CCH
59-50-7	4-Chloro-3-Methylphenol	U	9	1.0	10	9	2
88-06-2	2,4,6-Trichlorophenol	U	9	1.0	10	9	3
95-95-4	2,4,5-Trichlorophenol	U	24	1.0	25	24	4
91-58-7	2-Chloronaphthalene	U	9	1.0	10	9	2
92-52-4	1,1'-Biphenyl	U	9	1.0	10	9	2
88-74-4	2-Nitroaniline	U	24	1.0	25	24	1
131-11-3	Dimethyl Phthalate	U	9	1.0	10	9	0.7
606-20-2	2,6-Dinitrotoluene	U	9	1.0	10	9	1.0
208-96-8	Acenaphthylene	U	9	1.0	10	9	2
99-09-2	3-Nitroaniline	U	24	1.0	25	24	1
83-32-9	Acenaphthene	U	9	1.0	10	9	2
51-28-5	2,4-Dinitrophenol	U	42	1.0	45	42	14
132-64-9	Dibenzofuran	U	9	1.0	10	9	1
100-02-7	4-Nitrophenol	U	24	1.0	25	24	5
121-14-2	2,4-Dinitrotoluene	U	9	1.0	10	9	1
84-66-2	Diethylphthalate	U	9	1.0	10	9	1
7005-72-3	4-Chlorophenyl-phenylether	U	9	1.0	10	9	1
100-01-6	4-Nitroaniline	U	24	1.0	25	24	2
534-52-1	4,6-Dinitro-2-Methylphenol	U	24	1.0	25	24	6
86-30-6	N-Nitrosodiphenylamine	U	9	1.0	10	9	2
101-55-3	4-Bromophenyl-phenylether	U	9	1.0	10	9	1
1912-24-9	Atrazine	U	9	1.0	10	9	2
87-86-5	Pentachlorophenol	U	24	1.0	25	24	7
120-12-7	Anthracene	U	9	1.0	10	9	1
86-74-8	Carbazole	U	9	1.0	10	9	1

1/31/09

KATAHDIN ANALYTICAL SERVICES
Report of Analytical Results

Client: CH2MHill
Project: TO-009 Lejeune
PO No:
Sample Date: 11/14/08
Received Date: 11/18/08
Extraction Date: 11/19/08
Analysis Date: 09-DEC-2008 18:27
Report Date: 12/11/2008
Matrix: WATER
% Solids: NA

Lab ID: SB6645-1
Client ID: IR78-GW12-08D
SDG: TO9-3
Extracted by: KF
Extraction Method: SW846 3510
Analyst: JCG
Analysis Method: SW846 8270C
Lab Prep Batch: WG58242
Units: ug/L

CAS#	Compound	Flags	Results	DF	PQL	Adj.PQL	Adj.MDL
84-74-2	Di-n-butylphthalate	U	9	1.0	10	9	1
85-68-7	Butylbenzylphthalate	U	9	1.0	10	9	1
91-94-1	3,3'-Dichlorobenzidine	U	9	1.0	10	9	3
218-01-9	Chrysene	U	9	1.0	10	9	1
117-81-7	bis(2-Ethylhexyl)phthalate	U	9	1.0	10	9	2
117-84-0	Di-n-octylphthalate	U	9	1.0	10	9	2
367-12-4	2-Fluorophenol		40%				
13127-88-3	Phenol-D6		25%				
4165-60-0	Nitrobenzene-D5		63%				
321-60-8	2-Fluorobiphenyl		61%				
118-79-6	2,4,6-Tribromophenol		78%				
1718-51-0	Terphenyl-D14		116%				

MW 1/31/09

12

KATAHDIN ANALYTICAL SERVICES
Report of Analytical Results

Client: CH2MHill
Project: TO-009 Lejeune
PO No:
Sample Date: 11/16/08
Received Date: 11/18/08
Extraction Date: 11/19/08
Analysis Date: 09-DEC-2008 19:09
Report Date: 12/11/2008
Matrix: WATER
% Solids: NA

Lab ID: SB6645-3
Client ID: MR08-EB111608-1
SDG: TO9-3
Extracted by: KF
Extraction Method: SW846 3510
Analyst: JCG
Analysis Method: SW846 8270C
Lab Prep Batch: WG58242
Units: ug/L

CAS#	Compound	Flags	Results	DF	PQL	Adj.PQL	Adj.MDL	
100-52-7	Benzaldehyde	~~U~~ UJ	10	1.0	10	10	3	CCH
108-95-2	Phenol	U	10	1.0	10	10	2	
111-44-4	Bis(2-Chloroethyl)ether	U	10	1.0	10	10	2	
95-57-8	2-Chlorophenol	U	12	1.0	12	12	4	
95-48-7	2-Methylphenol	U	12	1.0	12	12	4	
108-60-1	2,2'-Oxybis(1-chloropropane)	U	10	1.0	10	10	2	
98-86-2	Acetophenone	U	12	1.0	12	12	4	
621-64-7	N-Nitroso-di-n-propylamine	U	10	1.0	10	10	2	
65794-96-9	3&4-Methylphenol	U	10	1.0	10	10	3	
67-72-1	Hexachloroethane	U	10	1.0	10	10	2	
98-95-3	Nitrobenzene	U	10	1.0	10	10	2	
78-59-1	Isophorone	U	10	1.0	10	10	2	
88-75-5	2-Nitrophenol	U	10	1.0	10	10	4	
105-67-9	2,4-Dimethylphenol	U	12	1.0	12	12	4	
111-91-1	Bis(2-Chloroethoxy)methane	U	10	1.0	10	10	2	
120-83-2	2,4-Dichlorophenol	U	12	1.0	12	12	4	
106-47-8	4-Chloroaniline	U	10	1.0	10	10	2	
105-60-2	Caprolactam	~~U~~ UJ	10	1.0	10	10	0.4	CCH
59-50-7	4-Chloro-3-Methylphenol	U	10	1.0	10	10	3	
88-06-2	2,4,6-Trichlorophenol	U	10	1.0	10	10	3	
95-95-4	2,4,5-Trichlorophenol	U	26	1.0	25	26	4	
91-58-7	2-Chloronaphthalene	U	10	1.0	10	10	2	
92-52-4	1,1'-Biphenyl	U	10	1.0	10	10	2	
88-74-4	2-Nitroaniline	U	26	1.0	25	26	2	
131-11-3	Dimethyl Phthalate	U	10	1.0	10	10	0.8	
606-20-2	2,6-Dinitrotoluene	U	10	1.0	10	10	1	
208-96-8	Acenaphthylene	U	10	1.0	10	10	2	
99-09-2	3-Nitroaniline	U	26	1.0	25	26	1	
83-32-9	Acenaphthene	U	10	1.0	10	10	2	
51-28-5	2,4-Dinitrophenol	U	46	1.0	45	46	15	
132-64-9	Dibenzofuran	U	10	1.0	10	10	2	
100-02-7	4-Nitrophenol	U	26	1.0	25	26	6	
121-14-2	2,4-Dinitrotoluene	U	10	1.0	10	10	1	
84-66-2	Diethylphthalate	U	10	1.0	10	10	1	
7005-72-3	4-Chlorophenyl-phenylether	U	10	1.0	10	10	1	
100-01-6	4-Nitroaniline	U	26	1.0	25	26	2	
534-52-1	4,6-Dinitro-2-Methylphenol	U	26	1.0	25	26	6	
86-30-6	N-Nitrosodiphenylamine	U	10	1.0	10	10	2	
101-55-3	4-Bromophenyl-phenylether	U	10	1.0	10	10	1	
1912-24-9	Atrazine	U	10	1.0	10	10	2	
87-86-5	Pentachlorophenol	U	26	1.0	25	26	8	
120-12-7	Anthracene	U	10	1.0	10	10	1	
86-74-8	Carbazole	U	10	1.0	10	10	1	

MW
1/31/09

KATAHDIN ANALYTICAL SERVICES
Report of Analytical Results

12

Client: CH2MHill
Project: TO-009 Lejeune
PO No:
Sample Date: 11/16/08
Received Date: 11/18/08
Extraction Date: 11/19/08
Analysis Date: 09-DEC-2008 19:09
Report Date: 12/11/2008
Matrix: WATER
% Solids: NA

Lab ID: SB6645-3
Client ID: MR08-EB111608-1
SDG: TO9-3
Extracted by: KF
Extraction Method: SW846 3510
Analyst: JCG
Analysis Method: SW846 8270C
Lab Prep Batch: WG58242
Units: ug/L

CAS#	Compound	Flags	Results	DF	PQL	Adj.PQL	Adj.MDL
84-74-2	Di-n-butylphthalate	U	10	1.0	10	10	1
85-68-7	Butylbenzylphthalate	U	10	1.0	10	10	2
91-94-1	3,3'-Dichlorobenzidine	U	10	1.0	10	10	3
218-01-9	Chrysene	U	10	1.0	10	10	1
117-81-7	bis(2-Ethylhexyl)phthalate	U	10	1.0	10	10	2
117-84-0	Di-n-octylphthalate	U	10	1.0	10	10	2
367-12-4	2-Fluorophenol		50%				
13127-88-3	Phenol-D6		33%				
4165-60-0	Nitrobenzene-D5		77%				
321-60-8	2-Fluorobiphenyl		71%				
118-79-6	2,4,6-Tribromophenol		80%				
1718-51-0	Terphenyl-D14		124%				

kW
1/31/09

13

KATAHDIN ANALYTICAL SERVICES
Report of Analytical Results

Client: CH2MHill
Project: TO-009 Lejeune
PO No:
Sample Date: 11/17/08
Received Date: 11/18/08
Extraction Date: 11/19/08
Analysis Date: 09-DEC-2008 20:34
Report Date: 12/11/2008
Matrix: WATER
% Solids: NA

Lab ID: SB6645-5
Client ID: MR08-EB111708-1
SDG: TO9-3
Extracted by: KF
Extraction Method: SW846 3510
Analyst: JCG
Analysis Method: SW846 8270C
Lab Prep Batch: WG58242
Units: ug/L

CAS#	Compound	Flags	Results	DF	PQL	Adj.PQL	Adj.MDL
100-52-7	Benzaldehyde	~~U~~ UJ	10	1.0	10	10	3 CCH
108-95-2	Phenol	U	10	1.0	10	10	2
111-44-4	Bis(2-Chloroethyl)ether	U	10	1.0	10	10	2
95-57-8	2-Chlorophenol	U	12	1.0	12	12	3
95-48-7	2-Methylphenol	U	12	1.0	12	12	4
108-60-1	2,2'-Oxybis(1-chloropropane)	U	10	1.0	10	10	2
98-86-2	Acetophenone	U	12	1.0	12	12	4
621-64-7	N-Nitroso-di-n-propylamine	U	10	1.0	10	10	2
65794-96-9	3&4-Methylphenol	U	10	1.0	10	10	3
67-72-1	Hexachloroethane	U	10	1.0	10	10	2
98-95-3	Nitrobenzene	U	10	1.0	10	10	2
78-59-1	Isophorone	U	10	1.0	10	10	2
88-75-5	2-Nitrophenol	U	10	1.0	10	10	4
105-67-9	2,4-Dimethylphenol	U	12	1.0	12	12	4
111-91-1	Bis(2-Chloroethoxy)methane	U	10	1.0	10	10	2
120-83-2	2,4-Dichlorophenol	U	12	1.0	12	12	4
106-47-8	4-Chloroaniline	U	10	1.0	10	10	2
105-60-2	Caprolactam	~~U~~ UJ	10	1.0	10	10	0.4 CCH
59-50-7	4-Chloro-3-Methylphenol	U	10	1.0	10	10	2
88-06-2	2,4,6-Trichlorophenol	U	10	1.0	10	10	3
95-95-4	2,4,5-Trichlorophenol	U	24	1.0	25	24	4
91-58-7	2-Chloronaphthalene	U	10	1.0	10	10	2
92-52-4	1,1'-Biphenyl	U	10	1.0	10	10	2
88-74-4	2-Nitroaniline	U	24	1.0	25	24	1
131-11-3	Dimethyl Phthalate	U	10	1.0	10	10	0.8
606-20-2	2,6-Dinitrotoluene	U	10	1.0	10	10	1
208-96-8	Acenaphthylene	U	10	1.0	10	10	2
99-09-2	3-Nitroaniline	U	24	1.0	25	24	1
83-32-9	Acenaphthene	U	10	1.0	10	10	2
51-28-5	2,4-Dinitrophenol	U	44	1.0	45	44	14
132-64-9	Dibenzofuran	U	10	1.0	10	10	1
100-02-7	4-Nitrophenol	U	24	1.0	25	24	6
121-14-2	2,4-Dinitrotoluene	U	10	1.0	10	10	1
84-66-2	Diethylphthalate	U	10	1.0	10	10	1
7005-72-3	4-Chlorophenyl-phenylether	U	10	1.0	10	10	1
100-01-6	4-Nitroaniline	U	24	1.0	25	24	2
534-52-1	4,6-Dinitro-2-Methylphenol	U	24	1.0	25	24	6
86-30-6	N-Nitrosodiphenylamine	U	10	1.0	10	10	2
101-55-3	4-Bromophenyl-phenylether	U	10	1.0	10	10	1
1912-24-9	Atrazine	U	10	1.0	10	10	2
87-86-5	Pentachlorophenol	U	24	1.0	25	24	7
120-12-7	Anthracene	U	10	1.0	10	10	1
86-74-8	Carbazole	U	10	1.0	10	10	1

LW
1/31/09

KATAHDIN ANALYTICAL SERVICES
Report of Analytical Results

Client: CH2MHill
Project: TO-009 Lejeune
PO No:
Sample Date: 11/17/08
Received Date: 11/18/08
Extraction Date: 11/19/08
Analysis Date: 09-DEC-2008 20:34
Report Date: 12/11/2008
Matrix: WATER
% Solids: NA

Lab ID: SB6645-5
Client ID: MR08-EB111708-1
SDG: TO9-3
Extracted by: KF
Extraction Method: SW846 3510
Analyst: JCG
Analysis Method: SW846 8270C
Lab Prep Batch: WG58242
Units: ug/L

CAS#	Compound	Flags	Results	DF	PQL	Adj.PQL	Adj.MDL
84-74-2	Di-n-butylphthalate	U	10	1.0	10	10	1
85-68-7	Butylbenzylphthalate	U	10	1.0	10	10	1
91-94-1	3,3'-Dichlorobenzidine	U	10	1.0	10	10	3
218-01-9	Chrysene	U	10	1.0	10	10	1
117-81-7	bis(2-Ethylhexyl)phthalate	U	10	1.0	10	10	2
117-84-0	Di-n-octylphthalate	U	10	1.0	10	10	2
367-12-4	2-Fluorophenol		42%				
13127-88-3	Phenol-D6		27%				
4165-60-0	Nitrobenzene-D5		72%				
321-60-8	2-Fluorobiphenyl		66%				
118-79-6	2,4,6-Tribromophenol		76%				
1718-51-0	Terphenyl-D14		123%				

MW
1/21/09

14

KATAHDIN ANALYTICAL SERVICES
Report of Analytical Results

Client: CH2MHill
Project: TO-009 Lejeune
PO No:
Sample Date: 11/15/08
Received Date: 11/18/08
Extraction Date: 11/19/08
Analysis Date: 09-DEC-2008 21:16
Report Date: 12/11/2008
Matrix: WATER
% Solids: NA

Lab ID: SB6645-7
Client ID: MR08-TW07-08D
SDG: TO9-3
Extracted by: KF
Extraction Method: SW846 3510
Analyst: JCG
Analysis Method: SW846 8270C
Lab Prep Batch: WG58242
Units: ug/L

CAS#	Compound	Flags	Results	DF	PQL	Adj.PQL	Adj.MDL	
100-52-7	Benzaldehyde	~~U~~ UJ	12	1.0	10	12	4	CCH
108-95-2	Phenol	U	12	1.0	10	12	2	
111-44-4	Bis(2-Chloroethyl)ether	U	12	1.0	10	12	2	
95-57-8	2-Chlorophenol	U	15	1.0	12	15	4	
95-48-7	2-Methylphenol	U	15	1.0	12	15	5	
108-60-1	2,2'-Oxybis(1-chloropropane)	U	12	1.0	10	12	2	
98-86-2	Acetophenone	U	15	1.0	12	15	5	
621-64-7	N-Nitroso-di-n-propylamine	U	12	1.0	10	12	3	
65794-96-9	3&4-Methylphenol	U	12	1.0	10	12	3	
67-72-1	Hexachloroethane	U	12	1.0	10	12	3	
98-95-3	Nitrobenzene	U	12	1.0	10	12	3	
78-59-1	Isophorone	U	12	1.0	10	12	2	
88-75-5	2-Nitrophenol	U	12	1.0	10	12	4	
105-67-9	2,4-Dimethylphenol	U	15	1.0	12	15	5	
111-91-1	Bis(2-Chloroethoxy)methane	U	12	1.0	10	12	3	
120-83-2	2,4-Dichlorophenol	U	15	1.0	12	15	5	
106-47-8	4-Chloroaniline	U	12	1.0	10	12	2	
105-60-2	Caprolactam	~~U~~ UJ	12	1.0	10	12	0.5	CCH
59-50-7	4-Chloro-3-Methylphenol	U	12	1.0	10	12	3	
88-06-2	2,4,6-Trichlorophenol	U	12	1.0	10	12	4	
95-95-4	2,4,5-Trichlorophenol	U	31	1.0	25	31	5	
91-58-7	2-Chloronaphthalene	U	12	1.0	10	12	3	
92-52-4	1,1'-Biphenyl	U	12	1.0	10	12	2	
88-74-4	2-Nitroaniline	U	31	1.0	25	31	2	
131-11-3	Dimethyl Phthalate	U	12	1.0	10	12	1.0	
606-20-2	2,6-Dinitrotoluene	U	12	1.0	10	12	1	
208-96-8	Acenaphthylene	U	12	1.0	10	12	2	
99-09-2	3-Nitroaniline	U	31	1.0	25	31	2	
83-32-9	Acenaphthene	U	12	1.0	10	12	2	
51-28-5	2,4-Dinitrophenol	U	56	1.0	45	56	19	
132-64-9	Dibenzofuran	U	12	1.0	10	12	2	
100-02-7	4-Nitrophenol	U	31	1.0	25	31	7	
121-14-2	2,4-Dinitrotoluene	U	12	1.0	10	12	2	
84-66-2	Diethylphthalate	U	12	1.0	10	12	1	
7005-72-3	4-Chlorophenyl-phenylether	U	12	1.0	10	12	2	
100-01-6	4-Nitroaniline	U	31	1.0	25	31	2	
534-52-1	4,6-Dinitro-2-Methylphenol	U	31	1.0	25	31	7	
86-30-6	N-Nitrosodiphenylamine	U	12	1.0	10	12	2	
101-55-3	4-Bromophenyl-phenylether	U	12	1.0	10	12	2	
1912-24-9	Atrazine	U	12	1.0	10	12	2	
87-86-5	Pentachlorophenol	U	31	1.0	25	31	10	
120-12-7	Anthracene	U	12	1.0	10	12	2	
86-74-8	Carbazole	U	12	1.0	10	12	2	

hw
1/31/09

KATAHDIN ANALYTICAL SERVICES
Report of Analytical Results

Client: CH2MHill
Project: TO-009 Lejeune
PO No:
Sample Date: 11/15/08
Received Date: 11/18/08
Extraction Date: 11/19/08
Analysis Date: 09-DEC-2008 21:16
Report Date: 12/11/2008
Matrix: WATER
% Solids: NA

Lab ID: SB6645-7
Client ID: MR08-TW07-08D
SDG: TO9-3
Extracted by: KF
Extraction Method: SW846 3510
Analyst: JCG
Analysis Method: SW846 8270C
Lab Prep Batch: WG58242
Units: ug/L

CAS#	Compound	Flags	Results	DF	PQL	Adj.PQL	Adj.MDL
84-74-2	Di-n-butylphthalate	U	12	1.0	10	12	2
85-68-7	Butylbenzylphthalate	U	12	1.0	10	12	2
91-94-1	3,3'-Dichlorobenzidine	U	12	1.0	10	12	4
218-01-9	Chrysene	U	12	1.0	10	12	2
117-81-7	bis(2-Ethylhexyl)phthalate	U	12	1.0	10	12	2
117-84-0	Di-n-octylphthalate	U	12	1.0	10	12	3
367-12-4	2-Fluorophenol		20%				
13127-88-3	Phenol-D6		15%				
4165-60-0	Nitrobenzene-D5		74%				
321-60-8	2-Fluorobiphenyl		69%				
118-79-6	2,4,6-Tribromophenol		59%				
1718-51-0	Terphenyl-D14		100%				

lw
1/31/09

15

KATAHDIN ANALYTICAL SERVICES
Report of Analytical Results

Client: CH2MHill
Project: TO-009 Lejeune
PO No:
Sample Date: 11/15/08
Received Date: 11/18/08
Extraction Date: 11/19/08
Analysis Date: 09-DEC-2008 19:51
Report Date: 12/11/2008
Matrix: WATER
% Solids: NA

Lab ID: SB6645-9
Client ID: MR08-TW08-08D
SDG: TO9-3
Extracted by: KF
Extraction Method: SW846 3510
Analyst: JCG
Analysis Method: SW846 8270C
Lab Prep Batch: WG58242
Units: ug/L

CAS#	Compound	Flags	Results	DF	PQL	Adj.PQL	Adj.MDL
100-52-7	Benzaldehyde	~~U~~ UJ	10	1.0	10	10	3 CCH
108-95-2	Phenol	U	10	1.0	10	10	2
111-44-4	Bis(2-Chloroethyl)ether	U	10	1.0	10	10	2
95-57-8	2-Chlorophenol	U	12	1.0	12	12	4
95-48-7	2-Methylphenol	U	12	1.0	12	12	4
108-60-1	2,2'-Oxybis(1-chloropropane)	U	10	1.0	10	10	2
98-86-2	Acetophenone	U	12	1.0	12	12	4
621-64-7	N-Nitroso-di-n-propylamine	U	10	1.0	10	10	2
65794-96-9	3&4-Methylphenol	U	10	1.0	10	10	3
67-72-1	Hexachloroethane	U	10	1.0	10	10	2
98-95-3	Nitrobenzene	U	10	1.0	10	10	2
78-59-1	Isophorone	U	10	1.0	10	10	2
88-75-5	2-Nitrophenol	U	10	1.0	10	10	4
105-67-9	2,4-Dimethylphenol	U	12	1.0	12	12	4
111-91-1	Bis(2-Chloroethoxy)methane	U	10	1.0	10	10	2
120-83-2	2,4-Dichlorophenol	U	12	1.0	12	12	4
106-47-8	4-Chloroaniline	U	10	1.0	10	10	2
105-60-2	Caprolactam	~~U~~ UJ	10	1.0	10	10	0.4 CCH
59-50-7	4-Chloro-3-Methylphenol	U	10	1.0	10	10	3
88-06-2	2,4,6-Trichlorophenol	U	10	1.0	10	10	3
95-95-4	2,4,5-Trichlorophenol	U	26	1.0	25	26	4
91-58-7	2-Chloronaphthalene	U	10	1.0	10	10	2
92-52-4	1,1'-Biphenyl	U	10	1.0	10	10	2
88-74-4	2-Nitroaniline	U	26	1.0	25	26	2
131-11-3	Dimethyl Phthalate	U	10	1.0	10	10	0.8
606-20-2	2,6-Dinitrotoluene	U	10	1.0	10	10	1
208-96-8	Acenaphthylene	U	10	1.0	10	10	2
99-09-2	3-Nitroaniline	U	26	1.0	25	26	1
83-32-9	Acenaphthene	U	10	1.0	10	10	2
51-28-5	2,4-Dinitrophenol	U	46	1.0	45	46	15
132-64-9	Dibenzofuran	U	10	1.0	10	10	2
100-02-7	4-Nitrophenol	U	26	1.0	25	26	6
121-14-2	2,4-Dinitrotoluene	U	10	1.0	10	10	1
84-66-2	Diethylphthalate	U	10	1.0	10	10	1
7005-72-3	4-Chlorophenyl-phenylether	U	10	1.0	10	10	1
100-01-6	4-Nitroaniline	U	26	1.0	25	26	2
534-52-1	4,6-Dinitro-2-Methylphenol	U	26	1.0	25	26	6
86-30-6	N-Nitrosodiphenylamine	U	10	1.0	10	10	2
101-55-3	4-Bromophenyl-phenylether	U	10	1.0	10	10	1
1912-24-9	Atrazine	U	10	1.0	10	10	2
87-86-5	Pentachlorophenol	U	26	1.0	25	26	8
120-12-7	Anthracene	U	10	1.0	10	10	1
86-74-8	Carbazole	U	10	1.0	10	10	1

AW
1/31/09

KATAHDIN ANALYTICAL SERVICES
Report of Analytical Results

Client: CH2MHill
Project: TO-009 Lejeune
PO No:
Sample Date: 11/15/08
Received Date: 11/18/08
Extraction Date: 11/19/08
Analysis Date: 09-DEC-2008 19:51
Report Date: 12/11/2008
Matrix: WATER
% Solids: NA

Lab ID: SB6645-9
Client ID: MR08-TW08-08D
SDG: TO9-3
Extracted by: KF
Extraction Method: SW846 3510
Analyst: JCG
Analysis Method: SW846 8270C
Lab Prep Batch: WG58242
Units: ug/L

CAS#	Compound	Flags	Results	DF	PQL	Adj.PQL	Adj.MDL
84-74-2	Di-n-butylphthalate	U	10	1.0	10	10	1
85-68-7	Butylbenzylphthalate	U	10	1.0	10	10	2
91-94-1	3,3'-Dichlorobenzidine	U	10	1.0	10	10	3
218-01-9	Chrysene	U	10	1.0	10	10	1
117-81-7	bis(2-Ethylhexyl)phthalate	U	10	1.0	10	10	2
117-84-0	Di-n-octylphthalate	U	10	1.0	10	10	2
367-12-4	2-Fluorophenol		40%				
13127-88-3	Phenol-D6		26%				
4165-60-0	Nitrobenzene-D5		78%				
321-60-8	2-Fluorobiphenyl		73%				
118-79-6	2,4,6-Tribromophenol		82%				
1718-51-0	Terphenyl-D14		101%				

lcw
1/31/09

KATAHDIN ANALYTICAL SERVICES
Report of Analytical Results

Client: CH2MHill
Project: TO-009 Lejeune
PO No:
Sample Date: 11/17/08
Received Date: 11/19/08
Extraction Date: 11/20/08
Analysis Date: 23-NOV-2008 23:55
Report Date: 12/11/2008
Matrix: WATER
% Solids: NA

Lab ID: SB6673-1
Client ID: MR08-TW06-08D
SDG: TO9-3
Extracted by: KF
Extraction Method: SW846 3510
Analyst: JCG
Analysis Method: SW846 8270C
Lab Prep Batch: WG58315
Units: ug/L

CAS#	Compound	Flags	Results	DF	PQL	Adj.PQL	Adj.MDL
100-52-7	Benzaldehyde	U	9	1.0	10	9	3
108-95-2	Phenol	U	9	1.0	10	9	2
111-44-4	Bis(2-Chloroethyl)ether	U	9	1.0	10	9	2
95-57-8	2-Chlorophenol	U	11	1.0	12	11	3
95-48-7	2-Methylphenol	U	11	1.0	12	11	4
108-60-1	2,2'-Oxybis(1-chloropropane)	U	9	1.0	10	9	2
98-86-2	Acetophenone	U	11	1.0	12	11	4
621-64-7	N-Nitroso-di-n-propylamine	U	9	1.0	10	9	2
65794-96-9	3&4-Methylphenol	U	9	1.0	10	9	2
67-72-1	Hexachloroethane	U	9	1.0	10	9	2
98-95-3	Nitrobenzene	U	9	1.0	10	9	2
78-59-1	Isophorone	U	9	1.0	10	9	2
88-75-5	2-Nitrophenol	U	9	1.0	10	9	3
105-67-9	2,4-Dimethylphenol	U	11	1.0	12	11	4
111-91-1	Bis(2-Chloroethoxy)methane	U	9	1.0	10	9	2
120-83-2	2,4-Dichlorophenol	U	11	1.0	12	11	4
106-47-8	4-Chloroaniline	U	9	1.0	10	9	2
105-60-2	Caprolactam	U	9	1.0	10	9	0.4
59-50-7	4-Chloro-3-Methylphenol	U	9	1.0	10	9	2
88-06-2	2,4,6-Trichlorophenol	U	9	1.0	10	9	3
95-95-4	2,4,5-Trichlorophenol	U	24	1.0	25	24	4
91-58-7	2-Chloronaphthalene	U	9	1.0	10	9	2
92-52-4	1,1'-Biphenyl	U	9	1.0	10	9	2
88-74-4	2-Nitroaniline	U	24	1.0	25	24	1
131-11-3	Dimethyl Phthalate	U	9	1.0	10	9	0.7
606-20-2	2,6-Dinitrotoluene	U	9	1.0	10	9	1.0
208-96-8	Acenaphthylene	U	9	1.0	10	9	2
99-09-2	3-Nitroaniline	U	24	1.0	25	24	1
83-32-9	Acenaphthene	U	9	1.0	10	9	2
51-28-5	2,4-Dinitrophenol	U	42	1.0	45	42	14
132-64-9	Dibenzofuran	U	9	1.0	10	9	1
100-02-7	4-Nitrophenol	U	24	1.0	25	24	5
121-14-2	2,4-Dinitrotoluene	U	9	1.0	10	9	1
84-66-2	Diethylphthalate	U	9	1.0	10	9	1
7005-72-3	4-Chlorophenyl-phenylether	U	9	1.0	10	9	1
100-01-6	4-Nitroaniline	U	24	1.0	25	24	2
534-52-1	4,6-Dinitro-2-Methylphenol	U	24	1.0	25	24	6
86-30-6	N-Nitrosodiphenylamine	U	9	1.0	10	9	2
101-55-3	4-Bromophenyl-phenylether	U	9	1.0	10	9	1
1912-24-9	Atrazine	U	9	1.0	10	9	2
87-86-5	Pentachlorophenol	U	24	1.0	25	24	7
120-12-7	Anthracene	U	9	1.0	10	9	1
86-74-8	Carbazole	U	9	1.0	10	9	1

MW
1/31/09

16

KATAHDIN ANALYTICAL SERVICES
Report of Analytical Results

Client: CH2MHill
Project: TO-009 Lejeune
PO No:
Sample Date: 11/17/08
Received Date: 11/19/08
Extraction Date: 11/20/08
Analysis Date: 23-NOV-2008 23:55
Report Date: 12/11/2008
Matrix: WATER
% Solids: NA

Lab ID: SB6673-1
Client ID: MR08-TW06-08D
SDG: TO9-3
Extracted by: KF
Extraction Method: SW846 3510
Analyst: JCG
Analysis Method: SW846 8270C
Lab Prep Batch: WG58315
Units: ug/L

CAS#	Compound	Flags	Results	DF	PQL	Adj.PQL	Adj.MDL
84-74-2	Di-n-butylphthalate	U	9	1.0	10	9	1
85-68-7	Butylbenzylphthalate	U	9	1.0	10	9	1
91-94-1	3,3'-Dichlorobenzidine	U	9	1.0	10	9	3
218-01-9	Chrysene	U	9	1.0	10	9	1
117-81-7	bis(2-Ethylhexyl)phthalate	U	9	1.0	10	9	2
117-84-0	Di-n-octylphthalate	U	9	1.0	10	9	2
367-12-4	2-Fluorophenol		43%				
13127-88-3	Phenol-D6		26%				
4165-60-0	Nitrobenzene-D5		68%				
321-60-8	2-Fluorobiphenyl		68%				
118-79-6	2,4,6-Tribromophenol		69%				
1718-51-0	Terphenyl-D14		92%				

lw
1/31/09

KATAHDIN ANALYTICAL SERVICES
Report of Analytical Results

Client: CH2MHill
Project: TO-009 Lejeune
PO No:
Sample Date: 11/17/08
Received Date: 11/19/08
Extraction Date: 11/20/08
Analysis Date: 24-NOV-2008 00:36
Report Date: 12/11/2008
Matrix: WATER
% Solids: NA

Lab ID: SB6673-3
Client ID: MR08-TW05-08D
SDG: TO9-3
Extracted by: KF
Extraction Method: SW846 3510
Analyst: JCG
Analysis Method: SW846 8270C
Lab Prep Batch: WG58315
Units: ug/L

CAS#	Compound	Flags	Results	DF	PQL	Adj.PQL	Adj.MDL
100-52-7	Benzaldehyde	U	11	1.0	10	11	3
108-95-2	Phenol	U	11	1.0	10	11	2
111-44-4	Bis(2-Chloroethyl)ether	U	11	1.0	10	11	2
95-57-8	2-Chlorophenol	U	13	1.0	12	13	4
95-48-7	2-Methylphenol	U	13	1.0	12	13	4
108-60-1	2,2'-Oxybis(1-chloropropane)	U	11	1.0	10	11	2
98-86-2	Acetophenone	U	13	1.0	12	13	4
621-64-7	N-Nitroso-di-n-propylamine	U	11	1.0	10	11	2
65794-96-9	3&4-Methylphenol	U	11	1.0	10	11	3
67-72-1	Hexachloroethane	U	11	1.0	10	11	2
98-95-3	Nitrobenzene	U	11	1.0	10	11	2
78-59-1	Isophorone	U	11	1.0	10	11	2
88-75-5	2-Nitrophenol	U	11	1.0	10	11	4
105-67-9	2,4-Dimethylphenol	U	13	1.0	12	13	4
111-91-1	Bis(2-Chloroethoxy)methane	U	11	1.0	10	11	3
120-83-2	2,4-Dichlorophenol	U	13	1.0	12	13	4
106-47-8	4-Chloroaniline	U	11	1.0	10	11	2
105-60-2	Caprolactam	U	11	1.0	10	11	0.4
59-50-7	4-Chloro-3-Methylphenol	U	11	1.0	10	11	3
88-06-2	2,4,6-Trichlorophenol	U	11	1.0	10	11	4
95-95-4	2,4,5-Trichlorophenol	U	27	1.0	25	27	4
91-58-7	2-Chloronaphthalene	U	11	1.0	10	11	2
92-52-4	1,1'-Biphenyl	U	11	1.0	10	11	2
88-74-4	2-Nitroaniline	U	27	1.0	25	27	2
131-11-3	Dimethyl Phthalate	U	11	1.0	10	11	0.8
606-20-2	2,6-Dinitrotoluene	U	11	1.0	10	11	1
208-96-8	Acenaphthylene	U	11	1.0	10	11	2
99-09-2	3-Nitroaniline	U	27	1.0	25	27	1
83-32-9	Acenaphthene	U	11	1.0	10	11	2
51-28-5	2,4-Dinitrophenol	U	48	1.0	45	48	16
132-64-9	Dibenzofuran	U	11	1.0	10	11	2
100-02-7	4-Nitrophenol	U	27	1.0	25	27	6
121-14-2	2,4-Dinitrotoluene	U	11	1.0	10	11	2
84-66-2	Diethylphthalate	U	11	1.0	10	11	1
7005-72-3	4-Chlorophenyl-phenylether	U	11	1.0	10	11	1
100-01-6	4-Nitroaniline	U	27	1.0	25	27	2
534-52-1	4,6-Dinitro-2-Methylphenol	U	27	1.0	25	27	6
86-30-6	N-Nitrosodiphenylamine	U	11	1.0	10	11	2
101-55-3	4-Bromophenyl-phenylether	U	11	1.0	10	11	1
1912-24-9	Atrazine	U	11	1.0	10	11	2
87-86-5	Pentachlorophenol	U	27	1.0	25	27	8
120-12-7	Anthracene	U	11	1.0	10	11	2
86-74-8	Carbazole	U	11	1.0	10	11	1

1/31/09

KATAHDIN ANALYTICAL SERVICES
Report of Analytical Results

Client: CH2MHill
Project: TO-009 Lejeune
PO No:
Sample Date: 11/17/08
Received Date: 11/19/08
Extraction Date: 11/20/08
Analysis Date: 24-NOV-2008 00:36
Report Date: 12/11/2008
Matrix: WATER
% Solids: NA

Lab ID: SB6673-3
Client ID: MR08-TW05-08D
SDG: TO9-3
Extracted by: KF
Extraction Method: SW846 3510
Analyst: JCG
Analysis Method: SW846 8270C
Lab Prep Batch: WG58315
Units: ug/L

CAS#	Compound	Flags	Results	DF	PQL	Adj.PQL	Adj.MDL
84-74-2	Di-n-butylphthalate	U	11	1.0	10	11	1
85-68-7	Butylbenzylphthalate	U	11	1.0	10	11	2
91-94-1	3,3'-Dichlorobenzidine	U	11	1.0	10	11	3
218-01-9	Chrysene	U	11	1.0	10	11	1
117-81-7	bis(2-Ethylhexyl)phthalate	U	11	1.0	10	11	2
117-84-0	Di-n-octylphthalate	U	11	1.0	10	11	2
367-12-4	2-Fluorophenol		45%				
13127-88-3	Phenol-D6		28%				
4165-60-0	Nitrobenzene-D5		66%				
321-60-8	2-Fluorobiphenyl		66%				
118-79-6	2,4,6-Tribromophenol		69%				
1718-51-0	Terphenyl-D14		92%				

lw
12/31/09

18

KATAHDIN ANALYTICAL SERVICES
Report of Analytical Results

Client: CH2MHill
Project: TO-009 Lejeune
PO No:
Sample Date: 11/17/08
Received Date: 11/19/08
Extraction Date: 11/20/08
Analysis Date: 08-DEC-2008 21:05
Report Date: 12/11/2008
Matrix: WATER
% Solids: NA

Lab ID: SB6673-5
Client ID: MR08-TW14-08D
SDG: TO9-3
Extracted by: KF
Extraction Method: SW846 3510
Analyst: JCG
Analysis Method: SW846 8270C
Lab Prep Batch: WG58315
Units: ug/L

CAS#	Compound	Flags	Results	DF	PQL	Adj.PQL	Adj.MDL
100-52-7	Benzaldehyde	U R	11	1.0	10	11	3 SSL
108-95-2	Phenol	U	11	1.0	10	11	2
111-44-4	Bis(2-Chloroethyl)ether	U	11	1.0	10	11	2
95-57-8	2-Chlorophenol	U	13	1.0	12	13	4
95-48-7	2-Methylphenol	U	13	1.0	12	13	4
108-60-1	2,2'-Oxybis(1-chloropropane)	U	11	1.0	10	11	2
98-86-2	Acetophenone	U	13	1.0	12	13	4
621-64-7	N-Nitroso-di-n-propylamine	U	11	1.0	10	11	2
65794-96-9	3&4-Methylphenol	U	11	1.0	10	11	3
67-72-1	Hexachloroethane	U	11	1.0	10	11	2
98-95-3	Nitrobenzene	U	11	1.0	10	11	2
78-59-1	Isophorone	U	11	1.0	10	11	2
88-75-5	2-Nitrophenol	U	11	1.0	10	11	4
105-67-9	2,4-Dimethylphenol	U	13	1.0	12	13	4
111-91-1	Bis(2-Chloroethoxy)methane	U	11	1.0	10	11	3
120-83-2	2,4-Dichlorophenol	U	13	1.0	12	13	4
106-47-8	4-Chloroaniline	U	11	1.0	10	11	2
105-60-2	Caprolactam	U	11	1.0	10	11	0.4
59-50-7	4-Chloro-3-Methylphenol	U	11	1.0	10	11	3
88-06-2	2,4,6-Trichlorophenol	U	11	1.0	10	11	4
95-95-4	2,4,5-Trichlorophenol	U	27	1.0	25	27	4
91-58-7	2-Chloronaphthalene	U	11	1.0	10	11	2
92-52-4	1,1'-Biphenyl	U	11	1.0	10	11	2
88-74-4	2-Nitroaniline	U	27	1.0	25	27	2
131-11-3	Dimethyl Phthalate	U	11	1.0	10	11	0.8
606-20-2	2,6-Dinitrotoluene	U	11	1.0	10	11	1
208-96-8	Acenaphthylene	U	11	1.0	10	11	2
99-09-2	3-Nitroaniline	U	27	1.0	25	27	1
83-32-9	Acenaphthene	U	11	1.0	10	11	2
51-28-5	2,4-Dinitrophenol	U	48	1.0	45	48	16
132-64-9	Dibenzofuran	U	11	1.0	10	11	2
100-02-7	4-Nitrophenol	U	27	1.0	25	27	6
121-14-2	2,4-Dinitrotoluene	U	11	1.0	10	11	2
84-66-2	Diethylphthalate	U	11	1.0	10	11	1
7005-72-3	4-Chlorophenyl-phenylether	U	11	1.0	10	11	1
100-01-6	4-Nitroaniline	U	27	1.0	25	27	2
534-52-1	4,6-Dinitro-2-Methylphenol	U	27	1.0	25	27	6
86-30-6	N-Nitrosodiphenylamine	U	11	1.0	10	11	2
101-55-3	4-Bromophenyl-phenylether	U	11	1.0	10	11	1
1912-24-9	Atrazine	U	11	1.0	10	11	2
87-86-5	Pentachlorophenol	U	27	1.0	25	27	8
120-12-7	Anthracene	U	11	1.0	10	11	2
86-74-8	Carbazole	U	11	1.0	10	11	1

MW 1/31/09

18

KATAHDIN ANALYTICAL SERVICES
Report of Analytical Results

Client: CH2MHill
Project: TO-009 Lejeune
PO No:
Sample Date: 11/17/08
Received Date: 11/19/08
Extraction Date: 11/20/08
Analysis Date: 08-DEC-2008 21:05
Report Date: 12/11/2008
Matrix: WATER
% Solids: NA

Lab ID: SB6673-5
Client ID: MR08-TW14-08D
SDG: TO9-3
Extracted by: KF
Extraction Method: SW846 3510
Analyst: JCG
Analysis Method: SW846 8270C
Lab Prep Batch: WG58315
Units: ug/L

CAS#	Compound	Flags	Results	DF	PQL	Adj.PQL	Adj.MDL
84-74-2	Di-n-butylphthalate	U R	11	1.0	10	11	1 SSL
85-68-7	Butylbenzylphthalate	U	11	1.0	10	11	2
91-94-1	3,3'-Dichlorobenzidine	U	11	1.0	10	11	3
218-01-9	Chrysene	U	11	1.0	10	11	1
117-81-7	bis(2-Ethylhexyl)phthalate	U	11	1.0	10	11	2
117-84-0	Di-n-octylphthalate	U	11	1.0	10	11	2
367-12-4	2-Fluorophenol		* 0%				
13127-88-3	Phenol-D6		* 0%				
4165-60-0	Nitrobenzene-D5		* 0%				
321-60-8	2-Fluorobiphenyl		* 5%				
118-79-6	2,4,6-Tribromophenol		81%				
1718-51-0	Terphenyl-D14		104%				

lw
1/31/09

19

KATAHDIN ANALYTICAL SERVICES
Report of Analytical Results

Client: CH2MHill
Project: TO-009 Lejeune
PO No:
Sample Date: 11/17/08
Received Date: 11/19/08
Extraction Date: 11/20/08
Analysis Date: 09-DEC-2008 14:14
Report Date: 12/11/2008
Matrix: WATER
% Solids: NA

Lab ID: SB6673-7
Client ID: MR08-TW13-08D
SDG: TO9-3
Extracted by: KF
Extraction Method: SW846 3510
Analyst: JCG
Analysis Method: SW846 8270C
Lab Prep Batch: WG58315
Units: ug/L

CAS#	Compound	Flags	Results	DF	PQL	Adj.PQL	Adj.MDL
100-52-7	Benzaldehyde	~~U~~ UJ	9	1.0	10	9	3 CCH
108-95-2	Phenol	U	9	1.0	10	9	2
111-44-4	Bis(2-Chloroethyl)ether	U	9	1.0	10	9	2
95-57-8	2-Chlorophenol	U	11	1.0	12	11	3
95-48-7	2-Methylphenol	U	11	1.0	12	11	4
108-60-1	2,2'-Oxybis(1-chloropropane)	U	9	1.0	10	9	2
98-86-2	Acetophenone	U	11	1.0	12	11	4
621-64-7	N-Nitroso-di-n-propylamine	U	9	1.0	10	9	2
65794-96-9	3&4-Methylphenol	U	9	1.0	10	9	2
67-72-1	Hexachloroethane	U	9	1.0	10	9	2
98-95-3	Nitrobenzene	U	9	1.0	10	9	2
78-59-1	Isophorone	U	9	1.0	10	9	2
88-75-5	2-Nitrophenol	U	9	1.0	10	9	3
105-67-9	2,4-Dimethylphenol	U	11	1.0	12	11	4
111-91-1	Bis(2-Chloroethoxy)methane	U	9	1.0	10	9	2
120-83-2	2,4-Dichlorophenol	U	11	1.0	12	11	4
106-47-8	4-Chloroaniline	U	9	1.0	10	9	2
105-60-2	Caprolactam	~~U~~ UJ	9	1.0	10	9	0.4 CCH
59-50-7	4-Chloro-3-Methylphenol	U	9	1.0	10	9	2
88-06-2	2,4,6-Trichlorophenol	U	9	1.0	10	9	3
95-95-4	2,4,5-Trichlorophenol	U	24	1.0	25	24	4
91-58-7	2-Chloronaphthalene	U	9	1.0	10	9	2
92-52-4	1,1'-Biphenyl	U	9	1.0	10	9	2
88-74-4	2-Nitroaniline	U	24	1.0	25	24	1
131-11-3	Dimethyl Phthalate	U	9	1.0	10	9	0.7
606-20-2	2,6-Dinitrotoluene	U	9	1.0	10	9	1.0
208-96-8	Acenaphthylene	U	9	1.0	10	9	2
99-09-2	3-Nitroaniline	U	24	1.0	25	24	1
83-32-9	Acenaphthene	U	9	1.0	10	9	2
51-28-5	2,4-Dinitrophenol	U	42	1.0	45	42	14
132-64-9	Dibenzofuran	U	9	1.0	10	9	1
100-02-7	4-Nitrophenol	U	24	1.0	25	24	5
121-14-2	2,4-Dinitrotoluene	U	9	1.0	10	9	1
84-66-2	Diethylphthalate	U	9	1.0	10	9	1
7005-72-3	4-Chlorophenyl-phenylether	U	9	1.0	10	9	1
100-01-6	4-Nitroaniline	U	24	1.0	25	24	2
534-52-1	4,6-Dinitro-2-Methylphenol	U	24	1.0	25	24	6
86-30-6	N-Nitrosodiphenylamine	U	9	1.0	10	9	2
101-55-3	4-Bromophenyl-phenylether	U	9	1.0	10	9	1
1912-24-9	Atrazine	U	9	1.0	10	9	2
87-86-5	Pentachlorophenol	U	24	1.0	25	24	7
120-12-7	Anthracene	U	9	1.0	10	9	1
86-74-8	Carbazole	U	9	1.0	10	9	1

MJ 1/31/09

KATAHDIN ANALYTICAL SERVICES
Report of Analytical Results

Client: CH2MHill
Project: TO-009 Lejeune
PO No:
Sample Date: 11/17/08
Received Date: 11/19/08
Extraction Date: 11/20/08
Analysis Date: 09-DEC-2008 14:14
Report Date: 12/11/2008
Matrix: WATER
% Solids: NA

Lab ID: SB6673-7
Client ID: MR08-TW13-08D
SDG: TO9-3
Extracted by: KF
Extraction Method: SW846 3510
Analyst: JCG
Analysis Method: SW846 8270C
Lab Prep Batch: WG58315
Units: ug/L

CAS#	Compound	Flags	Results	DF	PQL	Adj.PQL	Adj.MDL
84-74-2	Di-n-butylphthalate	U	9	1.0	10	9	1
85-68-7	Butylbenzylphthalate	U	9	1.0	10	9	1
91-94-1	3,3'-Dichlorobenzidine	U	9	1.0	10	9	3
218-01-9	Chrysene	U	9	1.0	10	9	1
117-81-7	bis(2-Ethylhexyl)phthalate	U	9	1.0	10	9	2
117-84-0	Di-n-octylphthalate	U	9	1.0	10	9	2
367-12-4	2-Fluorophenol		35%				
13127-88-3	Phenol-D6		21%				
4165-60-0	Nitrobenzene-D5		71%				
321-60-8	2-Fluorobiphenyl		66%				
118-79-6	2,4,6-Tribromophenol		80%				
1718-51-0	Terphenyl-D14		100%				

lw
1/31/09

20

KATAHDIN ANALYTICAL SERVICES
Report of Analytical Results

Client: CH2MHill
Project: TO-009 Lejeune
PO No:
Sample Date: 11/17/08
Received Date: 11/19/08
Extraction Date: 11/20/08
Analysis Date: 09-DEC-2008 14:56
Report Date: 12/11/2008
Matrix: WATER
% Solids: NA

Lab ID: SB6673-9
Client ID: MR08-TW11-08D
SDG: TO9-3
Extracted by: KF
Extraction Method: SW846 3510
Analyst: JCG
Analysis Method: SW846 8270C
Lab Prep Batch: WG58315
Units: ug/L

CAS#	Compound	Flags	Results	DF	PQL	Adj.PQL	Adj.MDL	
100-52-7	Benzaldehyde	~~U~~ UJ	10	1.0	10	10	3	CCH
108-95-2	Phenol	U	10	1.0	10	10	2	
111-44-4	Bis(2-Chloroethyl)ether	U	10	1.0	10	10	2	
95-57-8	2-Chlorophenol	U	11	1.0	12	11	3	
95-48-7	2-Methylphenol	U	11	1.0	12	11	4	
108-60-1	2,2'-Oxybis(1-chloropropane)	U	10	1.0	10	10	2	
98-86-2	Acetophenone	U	11	1.0	12	11	4	
621-64-7	N-Nitroso-di-n-propylamine	U	10	1.0	10	10	2	
65794-96-9	3&4-Methylphenol	U	10	1.0	10	10	2	
67-72-1	Hexachloroethane	U	10	1.0	10	10	2	
98-95-3	Nitrobenzene	U	10	1.0	10	10	2	
78-59-1	Isophorone	U	10	1.0	10	10	2	
88-75-5	2-Nitrophenol	U	10	1.0	10	10	3	
105-67-9	2,4-Dimethylphenol	U	11	1.0	12	11	4	
111-91-1	Bis(2-Chloroethoxy)methane	U	10	1.0	10	10	2	
120-83-2	2,4-Dichlorophenol	U	11	1.0	12	11	4	
106-47-8	4-Chloroaniline	U	10	1.0	10	10	2	
105-60-2	Caprolactam	~~U~~ UJ	10	1.0	10	10	0.4	CCH
59-50-7	4-Chloro-3-Methylphenol	U	10	1.0	10	10	2	
88-06-2	2,4,6-Trichlorophenol	U	10	1.0	10	10	3	
95-95-4	2,4,5-Trichlorophenol	U	24	1.0	25	24	4	
91-58-7	2-Chloronaphthalene	U	10	1.0	10	10	2	
92-52-4	1,1'-Biphenyl	U	10	1.0	10	10	2	
88-74-4	2-Nitroaniline	U	24	1.0	25	24	1	
131-11-3	Dimethyl Phthalate	U	10	1.0	10	10	0.8	
606-20-2	2,6-Dinitrotoluene	U	10	1.0	10	10	1	
208-96-8	Acenaphthylene	U	10	1.0	10	10	2	
99-09-2	3-Nitroaniline	U	24	1.0	25	24	1	
83-32-9	Acenaphthene	U	10	1.0	10	10	2	
51-28-5	2,4-Dinitrophenol	U	43	1.0	45	43	14	
132-64-9	Dibenzofuran	U	10	1.0	10	10	1	
100-02-7	4-Nitrophenol	U	24	1.0	25	24	5	
121-14-2	2,4-Dinitrotoluene	U	10	1.0	10	10	1	
84-66-2	Diethylphthalate	U	10	1.0	10	10	1	
7005-72-3	4-Chlorophenyl-phenylether	U	10	1.0	10	10	1	
100-01-6	4-Nitroaniline	U	24	1.0	25	24	2	
534-52-1	4,6-Dinitro-2-Methylphenol	U	24	1.0	25	24	6	
86-30-6	N-Nitrosodiphenylamine	U	10	1.0	10	10	2	
101-55-3	4-Bromophenyl-phenylether	U	10	1.0	10	10	1	
1912-24-9	Atrazine	U	10	1.0	10	10	2	
87-86-5	Pentachlorophenol	U	24	1.0	25	24	7	
120-12-7	Anthracene	U	10	1.0	10	10	1	
86-74-8	Carbazole	U	10	1.0	10	10	1	

1/31/09

20

KATAHDIN ANALYTICAL SERVICES
Report of Analytical Results

Client: CH2MHill
Project: TO-009 Lejeune
PO No:
Sample Date: 11/17/08
Received Date: 11/19/08
Extraction Date: 11/20/08
Analysis Date: 09-DEC-2008 14:56
Report Date: 12/11/2008
Matrix: WATER
% Solids: NA

Lab ID: SB6673-9
Client ID: MR08-TW11-08D
SDG: TO9-3
Extracted by: KF
Extraction Method: SW846 3510
Analyst: JCG
Analysis Method: SW846 8270C
Lab Prep Batch: WG58315
Units: ug/L

CAS#	Compound	Flags	Results	DF	PQL	Adj.PQL	Adj.MDL
84-74-2	Di-n-butylphthalate	U	10	1.0	10	10	1
85-68-7	Butylbenzylphthalate	U	10	1.0	10	10	1
91-94-1	3,3'-Dichlorobenzidine	U	10	1.0	10	10	3
218-01-9	Chrysene	U	10	1.0	10	10	1
117-81-7	bis(2-Ethylhexyl)phthalate	U	10	1.0	10	10	2
117-84-0	Di-n-octylphthalate	U	10	1.0	10	10	2
367-12-4	2-Fluorophenol		31%				
13127-88-3	Phenol-D6		19%				
4165-60-0	Nitrobenzene-D5		69%				
321-60-8	2-Fluorobiphenyl		68%				
118-79-6	2,4,6-Tribromophenol		78%				
1718-51-0	Terphenyl-D14		116%				

MW
1/31/09

21

KATAHDIN ANALYTICAL SERVICES
Report of Analytical Results

Client: CH2MHill
Project: TO-009 Lejeune
PO No:
Sample Date: 11/17/08
Received Date: 11/19/08
Extraction Date: 11/20/08
Analysis Date: 09-DEC-2008 15:38
Report Date: 12/11/2008
Matrix: WATER
% Solids: NA

Lab ID: SB6673-11
Client ID: MR08-TW10-08D
SDG: TO9-3
Extracted by: KF
Extraction Method: SW846 3510
Analyst: JCG
Analysis Method: SW846 8270C
Lab Prep Batch: WG58315
Units: ug/L

CAS#	Compound	Flags	Results	DF	PQL	Adj.PQL	Adj.MDL
100-52-7	Benzaldehyde	~~U~~ UJ	11	1.0	10	11	3 CCH
108-95-2	Phenol	U	11	1.0	10	11	2
111-44-4	Bis(2-Chloroethyl)ether	U	11	1.0	10	11	2
95-57-8	2-Chlorophenol	U	13	1.0	12	13	4
95-48-7	2-Methylphenol	U	13	1.0	12	13	4
108-60-1	2,2'-Oxybis(1-chloropropane)	U	11	1.0	10	11	2
98-86-2	Acetophenone	U	13	1.0	12	13	4
621-64-7	N-Nitroso-di-n-propylamine	U	11	1.0	10	11	2
65794-96-9	3&4-Methylphenol	U	11	1.0	10	11	3
67-72-1	Hexachloroethane	U	11	1.0	10	11	2
98-95-3	Nitrobenzene	U	11	1.0	10	11	2
78-59-1	Isophorone	U	11	1.0	10	11	2
88-75-5	2-Nitrophenol	U	11	1.0	10	11	4
105-67-9	2,4-Dimethylphenol	U	13	1.0	12	13	4
111-91-1	Bis(2-Chloroethoxy)methane	U	11	1.0	10	11	3
120-83-2	2,4-Dichlorophenol	U	13	1.0	12	13	4
106-47-8	4-Chloroaniline	U	11	1.0	10	11	2
105-60-2	Caprolactam	~~U~~ UJ	11	1.0	10	11	0.4 CCH
59-50-7	4-Chloro-3-Methylphenol	U	11	1.0	10	11	3
88-06-2	2,4,6-Trichlorophenol	U	11	1.0	10	11	4
95-95-4	2,4,5-Trichlorophenol	U	27	1.0	25	27	5
91-58-7	2-Chloronaphthalene	U	11	1.0	10	11	2
92-52-4	1,1'-Biphenyl	U	11	1.0	10	11	2
88-74-4	2-Nitroaniline	U	27	1.0	25	27	2
131-11-3	Dimethyl Phthalate	U	11	1.0	10	11	0.9
606-20-2	2,6-Dinitrotoluene	U	11	1.0	10	11	1
208-96-8	Acenaphthylene	U	11	1.0	10	11	2
99-09-2	3-Nitroaniline	U	27	1.0	25	27	2
83-32-9	Acenaphthene	U	11	1.0	10	11	2
51-28-5	2,4-Dinitrophenol	U	49	1.0	45	49	16
132-64-9	Dibenzofuran	U	11	1.0	10	11	2
100-02-7	4-Nitrophenol	U	27	1.0	25	27	6
121-14-2	2,4-Dinitrotoluene	U	11	1.0	10	11	2
84-66-2	Diethylphthalate	U	11	1.0	10	11	1
7005-72-3	4-Chlorophenyl-phenylether	U	11	1.0	10	11	2
100-01-6	4-Nitroaniline	U	27	1.0	25	27	2
534-52-1	4,6-Dinitro-2-Methylphenol	U	27	1.0	25	27	6
86-30-6	N-Nitrosodiphenylamine	U	11	1.0	10	11	2
101-55-3	4-Bromophenyl-phenylether	U	11	1.0	10	11	1
1912-24-9	Atrazine	U	11	1.0	10	11	2
87-86-5	Pentachlorophenol	U	27	1.0	25	27	8
120-12-7	Anthracene	U	11	1.0	10	11	2
86-74-8	Carbazole	U	11	1.0	10	11	1

MW 1/31/09

KATAHDIN ANALYTICAL SERVICES
Report of Analytical Results

21

Client: CH2MHill
Project: TO-009 Lejeune
PO No:
Sample Date: 11/17/08
Received Date: 11/19/08
Extraction Date: 11/20/08
Analysis Date: 09-DEC-2008 15:38
Report Date: 12/11/2008
Matrix: WATER
% Solids: NA

Lab ID: SB6673-11
Client ID: MR08-TW10-08D
SDG: TO9-3
Extracted by: KF
Extraction Method: SW846 3510
Analyst: JCG
Analysis Method: SW846 8270C
Lab Prep Batch: WG58315
Units: ug/L

CAS#	Compound	Flags	Results	DF	PQL	Adj.PQL	Adj.MDL
84-74-2	Di-n-butylphthalate	U	11	1.0	10	11	1
85-68-7	Butylbenzylphthalate	U	11	1.0	10	11	2
91-94-1	3,3'-Dichlorobenzidine	U	11	1.0	10	11	3
218-01-9	Chrysene	U	11	1.0	10	11	1
117-81-7	bis(2-Ethylhexyl)phthalate	U	11	1.0	10	11	2
117-84-0	Di-n-octylphthalate	U	11	1.0	10	11	2
367-12-4	2-Fluorophenol		39%				
13127-88-3	Phenol-D6		24%				
4165-60-0	Nitrobenzene-D5		77%				
321-60-8	2-Fluorobiphenyl		71%				
118-79-6	2,4,6-Tribromophenol		82%				
1718-51-0	Terphenyl-D14		110%				

MW
1/3/09

ENVIRONMENTAL
Data Services, Inc.

POLYNUCLEAR AROMATIC COMPOUNDS BY 8270 SIM

USEPA Region IV - Level IV Review

Site: MCB Camp Lejeune, TO-09 SDG #: TO9-4

Client: CH2M HILL, Inc., Virginia Beach, Virginia Date: January 31, 2009

Laboratory: Katahdin Analytical Services, Scarborough, Maine Reviewer: Nancy Weaver

EDS ID	Client Sample ID	Laboratory Sample ID	Matrix
1	MR08-SS375-08D	SB6588-2	Soil
1MS	MR08-SS375-08DMS	SB6588-2MS	Soil
1MSD	MR08-SS375-08DMSD	SB6588-2MSD	Soil
2	MR08-SS374-08D	SB6588-4	Soil
3	MR08-SS374D-08D	SB6588-6	Soil
4	MR08-IS386-08D	SB6649-2RA	Soil
5	MR08-IS387-08D	SB6649-4	Soil
6	MR08-IS384-08D	SB6649-6	Soil
7	MR08-IS383-08D	SB6649-8RA	Soil
8	MR08-IS382-08D	SB6649-10	Soil
9	MR08-IS374-08D	SB6649-12	Soil
10	MR08-IS374D-08D	SB6649-14RA	Soil
11	MR08-IS375-08D	SB6649-16	Soil
12	MR08-IS376-08D	SB6649-18	Soil
13	MR08-SS399-08D	SB6649-20RA	Soil
13DL	MR08-SS399-08DDL	SB6649-20DL	Soil
14	MR08-SS398-08D	SB6649-22	Soil
15	MR08-SS397-08D	SB6649-24RA	Soil
16	MR08-SS396-08D	SB6649-26RA	Soil
17	MR08-IS377-08D	SB6714-2	Soil
18	MR08-IS377D-08D	SB6714-4	Soil
19	MR08-IS397-08D	SB6714-6	Soil
20	MR08-IS398-08D	SB6714-8	Soil

The USEPA "Contract Laboratory Program National Functional Guidelines for Organic Data Review," October 1999, and professional judgement were used in evaluating the data in this summary report.

Holding Times - All samples were extracted within 14 days for soil samples and analyzed within 40 days for all samples.

GC/MS Tuning - All of the DFTPP tunes in the initial and continuing calibrations met the percent relative abundance criteria.

Initial Calibration - The initial calibrations exhibited acceptable %RSD and mean RRF values.

Continuing Calibration - The continuing calibrations exhibited acceptable %D and RRF values except the following.

CCAL Date	Compound	%D/RRF	Qualifier	Affected Samples
12/11/08	2-Methylnaphthalene	35.80%	J/UJ	5, 6, 8, 9, 11, 12, 14
	Benzo (a) anthracene	36.84%	J/UJ	5, 6, 8, 9, 11, 12, 14
	Benzo (b) fluoranthene	49.82%	J/UJ	5, 6, 8, 9, 11, 12, 14
	Indeno (1,2,3-cd) pyrene	28.89%	J/UJ	5, 6, 8, 9, 11, 12, 14
	Hexachlorobenzene	28.98%	J/UJ	5, 6, 8, 9, 11, 12, 14
12/13/08 1222	Pyrene	40.59%	J/UJ	1-3, 17-20
	Hexachlorobenzene	46.70%	J/UJ	1-3, 17-20
	Hexachlorobutadiene	32.14%	J/UJ	1-3, 17-20
	Hexachlorocyclopentadiene	107.33%	J/UJ	1-3, 17-20
12/13/08 2328	2-Methylnaphthalene	44.06%	None	Already qualified due to LCS
	Pyrene	37.65%	J/UJ	4, 7, 10, 13, 15, 16
	Benzo (k) fluoranthene	35.53%	J/UJ	4, 7, 10, 13, 15, 16
	Hexachlorobenzene	49.75%	J/UJ	4, 7, 10, 13, 15, 16
	Hexachlorobutadiene	77.78%	J/UJ	4, 7, 10, 13, 15, 16
	Hexachlorocyclopentadiene	83.03%	J/UJ	4, 7, 10, 13, 15, 16
12/14/09	Pyrene	36.28%	None	Already qualified due to LCS
	Benzo (b) fluoranthene	35.31%	J/UJ	13DL
	Benzo (k) fluoranthene	44.49%	J/UJ	13DL
	Hexachlorobenzene	40.71%	J/UJ	13DL
	Hexachlorocyclopentadiene	29.02%	J/UJ	13DL

Surrogates - All samples exhibited acceptable surrogate recoveries.

MS/MSD - The MS/MSD sample exhibited acceptable %R and RPD values except the following.

MS/MSD Sample ID	Compound	MS/MSD %R/RPD	Qualifier
1	Pyrene	Ok/124%/Ok	None - Already qualified due to LCS

Laboratory Control Sample - The LCS samples exhibited acceptable %R values except the following.

LCS ID	Compound	%R	Qualifier	Affected Samples
WG58205-LCS	Pyrene	109%	J	1-3
WG58249-LCS	Pyrene	111%	J	13DL, 14-16

Internal Standard (IS) Area Performance - All internal standards met response and retention time (RT) criteria.

Method Blank - The method blanks were free of contamination.

Field, Equipment Blank - Field QC results are summarized below.

Blank ID	Compound	Conc. ug/L	Action Level ug/L	Qualifier	Affected Samples
MR08-EB111108-1	None - ND	-	-	-	-
MR08-EB111608-1	None - ND	-	-	-	-
MR08-FB111108	None - ND	-	-	-	-
MR08-FB112008	None - ND	-	-	-	-

Field Duplicates - Field duplicate results are summarized below.

Compound	MR08-SS374-08D ug/kg	MR08-SS374D-08D ug/kg	RPD	Qualifier
Phenanthrene	4.2	5.3	23%	None
Fluoranthene	15	16	6%	None
Pyrene	37	34	8%	None
Benzo (a) anthracene	14	14	0%	None
Benzo (b) fluoranthene	35	33	6%	None
Benzo (k) fluoranthene	34	32	6%	None
Benzo (a) pyrene	25	24	4%	None
Indeno (1,2,3-cd) perylene	17	16	6%	None
Dibenzo (a,h) anthracene	9.3	9.4	1%	None
Benzo (g,h,i) perylene	17	15	13%	None

Compound	MR08-IS374-08D ug/kg	MR08-IS374D-08D ug/kg	RPD	Qualifier
None	ND	ND	-	-

Compound	MR08-IS377-08D ug/kg	MR08-IS377D-08D ug/kg	RPD	Qualifier
None	ND	ND	-	-

Tentatively Identified Compounds (TICs) - TICs were not reported.

Compound Quantitation - EDS sample #13 exhibited a high concentration of fluoranthene and pyrene which exceeded the calibration curve. The laboratory flagged these compounds (E) and reanalyzed at a 2X dilution. The reviewer replaced the original results with the dilution results. The original Form Is should be used for reporting purposes.

KATAHDIN ANALYTICAL SERVICES
Report of Analytical Results

Client: CH2MHill
Project: TO-009 Lejeune
PO No:
Sample Date: 11/11/08
Received Date: 11/14/08
Extraction Date: 11/18/08
Analysis Date: 13-DEC-2008 14:29
Report Date: 12/16/2008
Matrix: SOIL
% Solids: 90.4

Lab ID: SB6588-2
Client ID: MR08-SS375-08D
SDG: TO9-4
Extracted by: AC
Extraction Method: SW846 3550
Analyst: JCG
Analysis Method: SW846 M8270C
Lab Prep Batch: WG58205
Units: ug/Kgdrywt

CAS#	Compound	Flags	Results	DF	PQL	Adj.PQL	Adj.MDL	
91-20-3	Naphthalene	U	11	1.0	10	11	2.9	
91-57-6	2-Methylnaphthalene	U	11	1.0	10	11	2.4	
86-73-7	Fluorene	U	11	1.0	10	11	3.5	
85-01-8	Phenanthrene	U	11	1.0	10	11	2.0	
206-44-0	Fluoranthene	J	5.5	1.0	10	11	2.0	
129-00-0	Pyrene	~~J~~ J	6.0	1.0	10	11	2.3	BSH
56-55-3	Benzo(a)anthracene	J	3.3	1.0	10	11	2.1	
205-99-2	Benzo(b)fluoranthene	J	4.2	1.0	10	11	2.6	
207-08-9	Benzo(k)fluoranthene	J	5.0	1.0	10	11	3.4	
50-32-8	Benzo(a)pyrene	U	11	1.0	10	11	3.6	
193-39-5	Indeno(1,2,3-cd)pyrene	J	3.3	1.0	10	11	2.1	
53-70-3	Dibenzo(a,h)anthracene	U	11	1.0	10	11	2.0	
191-24-2	Benzo(g,h,i)perylene	J	3.2	1.0	10	11	2.2	
118-74-1	Hexachlorobenzene	U UJ	11	1.0	10	11	2.0	CCH
87-68-3	Hexachlorobutadiene	U	11	1.0	10	11	2.5	
77-47-4	Hexachlorocyclopentadiene	U	11	1.0	10	11	1.6	
7297-45-2	2-Methylnaphthalene-D10		78%					
367-12-4	2,4-Dibromophenol		132%					
81103-79-9	Fluorene-d10		58%					
1718-51-1	Pyrene-D10		73%					

LW
1/31/09

2

KATAHDIN ANALYTICAL SERVICES
Report of Analytical Results

Client: CH2MHill
Project: TO-009 Lejeune
PO No:
Sample Date: 11/11/08
Received Date: 11/14/08
Extraction Date: 11/18/08
Analysis Date: 13-DEC-2008 15:11
Report Date: 12/16/2008
Matrix: SOIL
% Solids: 90.4

Lab ID: SB6588-4
Client ID: MR08-SS374-08D
SDG: TO9-4
Extracted by: AC
Extraction Method: SW846 3550
Analyst: JCG
Analysis Method: SW846 M8270C
Lab Prep Batch: WG58205
Units: ug/Kgdrywt

CAS#	Compound	Flags	Results	DF	PQL	Adj.PQL	Adj.MDL	
91-20-3	Naphthalene	U	11	1.0	10	11	2.9	
91-57-6	2-Methylnaphthalene	U	11	1.0	10	11	2.4	
86-73-7	Fluorene	U	11	1.0	10	11	3.5	
85-01-8	Phenanthrene	J	4.2	1.0	10	11	2.0	
206-44-0	Fluoranthene		15	1.0	10	11	2.0	
129-00-0	Pyrene	J	37	1.0	10	11	2.3	BSH
56-55-3	Benzo(a)anthracene		14	1.0	10	11	2.1	
205-99-2	Benzo(b)fluoranthene		35	1.0	10	11	2.6	
207-08-9	Benzo(k)fluoranthene		34	1.0	10	11	3.4	
50-32-8	Benzo(a)pyrene		25	1.0	10	11	3.6	
193-39-5	Indeno(1,2,3-cd)pyrene		17	1.0	10	11	2.1	
53-70-3	Dibenzo(a,h)anthracene	J	9.3	1.0	10	11	2.0	
191-24-2	Benzo(g,h,i)perylene		17	1.0	10	11	2.2	
118-74-1	Hexachlorobenzene	~~U~~ UJ	11	1.0	10	11	2.0	CCH
87-68-3	Hexachlorobutadiene	~~U~~	11	1.0	10	11	2.5	
77-47-4	Hexachlorocyclopentadiene	~~U~~	11	1.0	10	11	1.6	
7297-45-2	2-Methylnaphthalene-D10		69%					
367-12-4	2,4-Dibromophenol		124%					
81103-79-9	Fluorene-d10		55%					
1718-51-1	Pyrene-D10		66%					

MW
1/31/09

3

KATAHDIN ANALYTICAL SERVICES
Report of Analytical Results

Client: CH2MHill
Project: TO-009 Lejeune
PO No:
Sample Date: 11/11/08
Received Date: 11/14/08
Extraction Date: 11/18/08
Analysis Date: 13-DEC-2008 15:52
Report Date: 12/16/2008
Matrix: SOIL
% Solids: 89.8

Lab ID: SB6588-6
Client ID: MR08-SS374D-08D
SDG: TO9-4
Extracted by: AC
Extraction Method: SW846 3550
Analyst: JCG
Analysis Method: SW846 M8270C
Lab Prep Batch: WG58205
Units: ug/Kgdrywt

CAS#	Compound	Flags	Results	DF	PQL	Adj.PQL	Adj.MDL	
91-20-3	Naphthalene	U	11	1.0	10	11	2.9	
91-57-6	2-Methylnaphthalene	U	11	1.0	10	11	2.4	
86-73-7	Fluorene	U	11	1.0	10	11	3.6	
85-01-8	Phenanthrene	J	5.3	1.0	10	11	2.0	
206-44-0	Fluoranthene		16	1.0	10	11	2.0	
129-00-0	Pyrene	J	34	1.0	10	11	2.3	BSH
56-55-3	Benzo(a)anthracene		14	1.0	10	11	2.1	
205-99-2	Benzo(b)fluoranthene		33	1.0	10	11	2.7	
207-08-9	Benzo(k)fluoranthene		32	1.0	10	11	3.4	
50-32-8	Benzo(a)pyrene		24	1.0	10	11	3.7	
193-39-5	Indeno(1,2,3-cd)pyrene		16	1.0	10	11	2.1	
53-70-3	Dibenzo(a,h)anthracene	J	9.4	1.0	10	11	2.0	
191-24-2	Benzo(g,h,i)perylene		15	1.0	10	11	2.2	
118-74-1	Hexachlorobenzene	U UJ	11	1.0	10	11	2.0	CCH
87-68-3	Hexachlorobutadiene	U ↓	11	1.0	10	11	2.6	↓
77-47-4	Hexachlorocyclopentadiene	U ↓	11	1.0	10	11	1.7	↓
7297-45-2	2-Methylnaphthalene-D10		72%					
367-12-4	2,4-Dibromophenol		123%					
81103-79-9	Fluorene-d10		54%					
1718-51-1	Pyrene-D10		68%					

lw
1/31/09

4

KATAHDIN ANALYTICAL SERVICES
Report of Analytical Results

Client: CH2MHill
Project: TO-009 Lejeune
PO No:
Sample Date: 11/14/08
Received Date: 11/18/08
Extraction Date: 11/19/08
Analysis Date: 14-DEC-2008 02:16
Report Date: 12/16/2008
Matrix: SOIL
% Solids: 85.8

Lab ID: SB6649-2RA
Client ID: MR08-IS386-08D
SDG: TO9-4
Extracted by: CB
Extraction Method: SW846 3550
Analyst: JCG
Analysis Method: SW846 M8270C
Lab Prep Batch: WG58249
Units: ug/Kgdrywt

CAS#	Compound	Flags	Results	DF	PQL	Adj.PQL	Adj.MDL	
91-20-3	Naphthalene	U	12	1.0	10	12	3.0	
91-57-6	2-Methylnaphthalene	~~U~~ UJ	12	1.0	10	12	2.6	CCH
86-73-7	Fluorene	U	12	1.0	10	12	3.7	
85-01-8	Phenanthrene	U	12	1.0	10	12	2.1	
206-44-0	Fluoranthene	U	12	1.0	10	12	2.1	
129-00-0	Pyrene	~~U~~ UJ	12	1.0	10	12	2.4	CCH
56-55-3	Benzo(a)anthracene	U	12	1.0	10	12	2.2	
205-99-2	Benzo(b)fluoranthene	U	12	1.0	10	12	2.8	
207-08-9	Benzo(k)fluoranthene	~~U~~ UJ	12	1.0	10	12	3.6	CCH
50-32-8	Benzo(a)pyrene	U	12	1.0	10	12	3.8	
193-39-5	Indeno(1,2,3-cd)pyrene	U	12	1.0	10	12	2.2	
53-70-3	Dibenzo(a,h)anthracene	U	12	1.0	10	12	2.1	
191-24-2	Benzo(g,h,i)perylene	U	12	1.0	10	12	2.3	
118-74-1	Hexachlorobenzene	U UJ	12	1.0	10	12	2.1	CCH
87-68-3	Hexachlorobutadiene	U	12	1.0	10	12	2.7	
77-47-4	Hexachlorocyclopentadiene	U	12	1.0	10	12	1.7	
7297-45-2	2-Methylnaphthalene-D10		64%					
367-12-4	2,4-Dibromophenol		124%					
81103-79-9	Fluorene-d10		58%					
1718-51-1	Pyrene-D10		92%					

LW
1/31/09

KATAHDIN ANALYTICAL SERVICES
Report of Analytical Results

Client: CH2MHill
Project: TO-009 Lejeune
PO No:
Sample Date: 11/15/08
Received Date: 11/18/08
Extraction Date: 11/19/08
Analysis Date: 11-DEC-2008 14:46
Report Date: 12/16/2008
Matrix: SOIL
% Solids: 91.7

Lab ID: SB6649-4
Client ID: MR08-IS387-08D
SDG: TO9-4
Extracted by: CB
Extraction Method: SW846 3550
Analyst: JLP
Analysis Method: SW846 M8270C
Lab Prep Batch: WG58249
Units: ug/Kgdrywt

CAS#	Compound	Flags	Results	DF	PQL	Adj.PQL	Adj.MDL	
91-20-3	Naphthalene	U	11	1.0	10	11	2.8	
91-57-6	2-Methylnaphthalene	~~U~~ UJ	11	1.0	10	11	2.4	CCH
86-73-7	Fluorene	U	11	1.0	10	11	3.5	
85-01-8	Phenanthrene	U	11	1.0	10	11	2.0	
206-44-0	Fluoranthene	U	11	1.0	10	11	2.0	
129-00-0	Pyrene	U	11	1.0	10	11	2.3	
56-55-3	Benzo(a)anthracene	~~U~~ UJ	11	1.0	10	11	2.1	CCH
205-99-2	Benzo(b)fluoranthene	~~U~~ UJ	11	1.0	10	11	2.6	CCH
207-08-9	Benzo(k)fluoranthene	U	11	1.0	10	11	3.4	
50-32-8	Benzo(a)pyrene	U	11	1.0	10	11	3.6	
193-39-5	Indeno(1,2,3-cd)pyrene	~~U~~ UJ	11	1.0	10	11	2.1	CCH
53-70-3	Dibenzo(a,h)anthracene	U	11	1.0	10	11	2.0	
191-24-2	Benzo(g,h,i)perylene	U	11	1.0	10	11	2.2	
118-74-1	Hexachlorobenzene	~~U~~ UJ	11	1.0	10	11	2.0	CCH
87-68-3	Hexachlorobutadiene	U	11	1.0	10	11	2.5	
77-47-4	Hexachlorocyclopentadiene	U	11	1.0	10	11	1.6	
7297-45-2	2-Methylnaphthalene-D10		78%					
367-12-4	2,4-Dibromophenol		103%					
81103-79-9	Fluorene-d10		56%					
1718-51-1	Pyrene-D10		84%					

kw
1/31/09

6

KATAHDIN ANALYTICAL SERVICES
Report of Analytical Results

Client: CH2MHill
Project: TO-009 Lejeune
PO No:
Sample Date: 11/15/08
Received Date: 11/18/08
Extraction Date: 11/19/08
Analysis Date: 11-DEC-2008 15:29
Report Date: 12/16/2008
Matrix: SOIL
% Solids: 89.4

Lab ID: SB6649-6
Client ID: MR08-IS384-08D
SDG: TO9-4
Extracted by: CB
Extraction Method: SW846 3550
Analyst: JLP
Analysis Method: SW846 M8270C
Lab Prep Batch: WG58249
Units: ug/Kgdrywt

CAS#	Compound	Flags	Results	DF	PQL	Adj.PQL	Adj.MDL	
91-20-3	Naphthalene	U	11	1.0	10	11	2.9	
91-57-6	2-Methylnaphthalene	~~U~~ UJ	11	1.0	10	11	2.5	CLH
86-73-7	Fluorene	U	11	1.0	10	11	3.6	
85-01-8	Phenanthrene	U	11	1.0	10	11	2.0	
206-44-0	Fluoranthene	U	11	1.0	10	11	2.0	
129-00-0	Pyrene	U	11	1.0	10	11	2.3	
56-55-3	Benzo(a)anthracene	~~U~~ UJ	11	1.0	10	11	2.1	CLH
205-99-2	Benzo(b)fluoranthene	~~U~~ UJ	11	1.0	10	11	2.7	CLH
207-08-9	Benzo(k)fluoranthene	U	11	1.0	10	11	3.5	
50-32-8	Benzo(a)pyrene	U	11	1.0	10	11	3.7	
193-39-5	Indeno(1,2,3-cd)pyrene	~~U~~ UJ	11	1.0	10	11	2.1	CLH
53-70-3	Dibenzo(a,h)anthracene	U	11	1.0	10	11	2.0	
191-24-2	Benzo(g,h,i)perylene	U	11	1.0	10	11	2.2	
118-74-1	Hexachlorobenzene	~~U~~ UJ	11	1.0	10	11	2.0	CLH
87-68-3	Hexachlorobutadiene	U	11	1.0	10	11	2.6	
77-47-4	Hexachlorocyclopentadiene	U	11	1.0	10	11	1.7	
7297-45-2	2-Methylnaphthalene-D10		73%					
367-12-4	2,4-Dibromophenol		99%					
81103-79-9	Fluorene-d10		56%					
1718-51-1	Pyrene-D10		88%					

hw
1/31/09

7

KATAHDIN ANALYTICAL SERVICES
Report of Analytical Results

Client: CH2MHill
Project: TO-009 Lejeune
PO No:
Sample Date: 11/15/08
Received Date: 11/18/08
Extraction Date: 11/19/08
Analysis Date: 14-DEC-2008 02:56
Report Date: 12/16/2008
Matrix: SOIL
% Solids: 90.2

Lab ID: SB6649-8RA
Client ID: MR08-IS383-08D
SDG: TO9-4
Extracted by: CB
Extraction Method: SW846 3550
Analyst: JCG
Analysis Method: SW846 M8270C
Lab Prep Batch: WG58249
Units: ug/Kgdrywt

CAS#	Compound	Flags	Results	DF	PQL	Adj.PQL	Adj.MDL	
91-20-3	Naphthalene	U	11	1.0	10	11	2.9	
91-57-6	2-Methylnaphthalene	~~U~~ UJ	11	1.0	10	11	2.4	CCH
86-73-7	Fluorene	U	11	1.0	10	11	3.5	
85-01-8	Phenanthrene	U	11	1.0	10	11	2.0	
206-44-0	Fluoranthene	U	11	1.0	10	11	2.0	
129-00-0	Pyrene	~~U~~ UJ	11	1.0	10	11	2.3	CCH
56-55-3	Benzo(a)anthracene	U	11	1.0	10	11	2.1	
205-99-2	Benzo(b)fluoranthene	U	11	1.0	10	11	2.7	
207-08-9	Benzo(k)fluoranthene	~~U~~ UJ	11	1.0	10	11	3.4	CCH
50-32-8	Benzo(a)pyrene	U	11	1.0	10	11	3.6	
193-39-5	Indeno(1,2,3-cd)pyrene	U	11	1.0	10	11	2.1	
53-70-3	Dibenzo(a,h)anthracene	U	11	1.0	10	11	2.0	
191-24-2	Benzo(g,h,i)perylene	U	11	1.0	10	11	2.2	
118-74-1	Hexachlorobenzene	~~U~~ UJ	11	1.0	10	11	2.0	CCH
87-68-3	Hexachlorobutadiene	~~U~~ ↓	11	1.0	10	11	2.6	↓
77-47-4	Hexachlorocyclopentadiene	~~U~~ ↓	11	1.0	10	11	1.7	↓
7297-45-2	2-Methylnaphthalene-D10		66%					
367-12-4	2,4-Dibromophenol		130%					
81103-79-9	Fluorene-d10		67%					
1718-51-1	Pyrene-D10		96%					

lw
1/31/09

8

KATAHDIN ANALYTICAL SERVICES
Report of Analytical Results

Client: CH2MHill
Project: TO-009 Lejeune
PO No:
Sample Date: 11/16/08
Received Date: 11/18/08
Extraction Date: 11/19/08
Analysis Date: 11-DEC-2008 16:56
Report Date: 12/16/2008
Matrix: SOIL
% Solids: 92.7

Lab ID: SB6649-10
Client ID: MR08-IS382-08D
SDG: TO9-4
Extracted by: CB
Extraction Method: SW846 3550
Analyst: JLP
Analysis Method: SW846 M8270C
Lab Prep Batch: WG58249
Units: ug/Kgdrywt

CAS#	Compound	Flags	Results	DF	PQL	Adj.PQL	Adj.MDL	
91-20-3	Naphthalene	U	11	1.0	10	11	2.8	
91-57-6	2-Methylnaphthalene	~~U~~ UJ	11	1.0	10	11	2.4	CCH
86-73-7	Fluorene	U	11	1.0	10	11	3.4	
85-01-8	Phenanthrene	U	11	1.0	10	11	1.9	
206-44-0	Fluoranthene	U	11	1.0	10	11	1.9	
129-00-0	Pyrene	U	11	1.0	10	11	2.3	
56-55-3	Benzo(a)anthracene	~~U~~ UJ	11	1.0	10	11	2.0	CCH
205-99-2	Benzo(b)fluoranthene	~~U~~ UJ	11	1.0	10	11	2.6	CCH
207-08-9	Benzo(k)fluoranthene	U	11	1.0	10	11	3.3	
50-32-8	Benzo(a)pyrene	U	11	1.0	10	11	3.6	
193-39-5	Indeno(1,2,3-cd)pyrene	~~U~~ UJ	11	1.0	10	11	2.0	CCH
53-70-3	Dibenzo(a,h)anthracene	U	11	1.0	10	11	1.9	
191-24-2	Benzo(g,h,i)perylene	U	11	1.0	10	11	2.2	
118-74-1	Hexachlorobenzene	~~U~~ UJ	11	1.0	10	11	1.9	CCH
87-68-3	Hexachlorobutadiene	U	11	1.0	10	11	2.5	
77-47-4	Hexachlorocyclopentadiene	U	11	1.0	10	11	1.6	
7297-45-2	2-Methylnaphthalene-D10		66%					
367-12-4	2,4-Dibromophenol		101%					
81103-79-9	Fluorene-d10		58%					
1718-51-1	Pyrene-D10		76%					

hcJ
1/31/09

9

KATAHDIN ANALYTICAL SERVICES
Report of Analytical Results

Client: CH2MHill
Project: TO-009 Lejeune
PO No:
Sample Date: 11/16/08
Received Date: 11/18/08
Extraction Date: 11/19/08
Analysis Date: 11-DEC-2008 17:40
Report Date: 12/16/2008
Matrix: SOIL
% Solids: 88.0

Lab ID: SB6649-12
Client ID: MR08-IS374-08D
SDG: TO9-4
Extracted by: CB
Extraction Method: SW846 3550
Analyst: JLP
Analysis Method: SW846 M8270C
Lab Prep Batch: WG58249
Units: ug/Kgdrywt

CAS#	Compound	Flags	Results	DF	PQL	Adj.PQL	Adj.MDL	
91-20-3	Naphthalene	U	11	1.0	10	11	3.0	
91-57-6	2-Methylnaphthalene	~~U~~ UJ	11	1.0	10	11	2.5	CCH
86-73-7	Fluorene	U	11	1.0	10	11	3.6	
85-01-8	Phenanthrene	U	11	1.0	10	11	2.0	
206-44-0	Fluoranthene	U	11	1.0	10	11	2.0	
129-00-0	Pyrene	U	11	1.0	10	11	2.4	
56-55-3	Benzo(a)anthracene	~~U~~ UJ	11	1.0	10	11	2.2	CCH
205-99-2	Benzo(b)fluoranthene	~~U~~ UJ	11	1.0	10	11	2.7	CCH
207-08-9	Benzo(k)fluoranthene	U	11	1.0	10	11	3.5	
50-32-8	Benzo(a)pyrene	U	11	1.0	10	11	3.8	
193-39-5	Indeno(1,2,3-cd)pyrene	~~U~~ UJ	11	1.0	10	11	2.2	CCH
53-70-3	Dibenzo(a,h)anthracene	U	11	1.0	10	11	2.0	
191-24-2	Benzo(g,h,i)perylene	U	11	1.0	10	11	2.3	
118-74-1	Hexachlorobenzene	~~U~~ UJ	11	1.0	10	11	2.0	CCH
87-68-3	Hexachlorobutadiene	U	11	1.0	10	11	2.6	
77-47-4	Hexachlorocyclopentadiene	U	11	1.0	10	11	1.7	
7297-45-2	2-Methylnaphthalene-D10		78%					
367-12-4	2,4-Dibromophenol		101%					
81103-79-9	Fluorene-d10		53%					
1718-51-1	Pyrene-D10		86%					

lw
1/31/09

10

KATAHDIN ANALYTICAL SERVICES
Report of Analytical Results

Client: CH2MHill
Project: TO-009 Lejeune
PO No:
Sample Date: 11/16/08
Received Date: 11/18/08
Extraction Date: 11/19/08
Analysis Date: 14-DEC-2008 03:37
Report Date: 12/16/2008
Matrix: SOIL
% Solids: 90.6

Lab ID: SB6649-14RA
Client ID: MR08-IS374D-08D
SDG: TO9-4
Extracted by: CB
Extraction Method: SW846 3550
Analyst: JCG
Analysis Method: SW846 M8270C
Lab Prep Batch: WG58249
Units: ug/Kgdrywt

CAS#	Compound	Flags	Results	DF	PQL	Adj.PQL	Adj.MDL	
91-20-3	Naphthalene	U	11	1.0	10	11	2.9	
91-57-6	2-Methylnaphthalene	~~U~~ UJ	11	1.0	10	11	2.4	CCH
86-73-7	Fluorene	U	11	1.0	10	11	3.5	
85-01-8	Phenanthrene	U	11	1.0	10	11	2.0	
206-44-0	Fluoranthene	U	11	1.0	10	11	2.0	
129-00-0	Pyrene	~~U~~ UJ	11	1.0	10	11	2.3	CCH
56-55-3	Benzo(a)anthracene	U	11	1.0	10	11	2.1	
205-99-2	Benzo(b)fluoranthene	U	11	1.0	10	11	2.6	
207-08-9	Benzo(k)fluoranthene	~~U~~ UJ	11	1.0	10	11	3.4	CCH
50-32-8	Benzo(a)pyrene	U	11	1.0	10	11	3.6	
193-39-5	Indeno(1,2,3-cd)pyrene	U	11	1.0	10	11	2.1	
53-70-3	Dibenzo(a,h)anthracene	U	11	1.0	10	11	2.0	
191-24-2	Benzo(g,h,i)perylene	U	11	1.0	10	11	2.2	
118-74-1	Hexachlorobenzene	U UJ	11	1.0	10	11	2.0	CCH
87-68-3	Hexachlorobutadiene	U	11	1.0	10	11	2.5	
77-47-4	Hexachlorocyclopentadiene	U	11	1.0	10	11	1.6	
7297-45-2	2-Methylnaphthalene-D10		64%					
367-12-4	2,4-Dibromophenol		122%					
81103-79-9	Fluorene-d10		62%					
1718-51-1	Pyrene-D10		102%					

lw
1/13/09

11

KATAHDIN ANALYTICAL SERVICES
Report of Analytical Results

Client: CH2MHill
Project: TO-009 Lejeune
PO No:
Sample Date: 11/16/08
Received Date: 11/18/08
Extraction Date: 11/19/08
Analysis Date: 11-DEC-2008 19:09
Report Date: 12/16/2008
Matrix: SOIL
% Solids: 84.6

Lab ID: SB6649-16
Client ID: MR08-IS375-08D
SDG: TO9-4
Extracted by: CB
Extraction Method: SW846 3550
Analyst: JLP
Analysis Method: SW846 M8270C
Lab Prep Batch: WG58249
Units: ug/Kgdrywt

CAS#	Compound	Flags	Results	DF	PQL	Adj.PQL	Adj.MDL	
91-20-3	Naphthalene	U	12	1.0	10	12	3.1	
91-57-6	2-Methylnaphthalene	~~U~~ UJ	12	1.0	10	12	2.6	CCH
86-73-7	Fluorene	U	12	1.0	10	12	3.8	
85-01-8	Phenanthrene	U	12	1.0	10	12	2.1	
206-44-0	Fluoranthene	U	12	1.0	10	12	2.1	
129-00-0	Pyrene	U	12	1.0	10	12	2.5	
56-55-3	Benzo(a)anthracene	~~U~~ UJ	12	1.0	10	12	2.2	CCH
205-99-2	Benzo(b)fluoranthene	~~U~~ UJ	12	1.0	10	12	2.8	CCH
207-08-9	Benzo(k)fluoranthene	U	12	1.0	10	12	3.7	
50-32-8	Benzo(a)pyrene	U	12	1.0	10	12	3.9	
193-39-5	Indeno(1,2,3-cd)pyrene	~~U~~ UJ	12	1.0	10	12	2.2	CCH
53-70-3	Dibenzo(a,h)anthracene	U	12	1.0	10	12	2.1	
191-24-2	Benzo(g,h,i)perylene	U	12	1.0	10	12	2.4	
118-74-1	Hexachlorobenzene	~~U~~ UJ	12	1.0	10	12	2.1	CCH
87-68-3	Hexachlorobutadiene	U	12	1.0	10	12	2.7	
77-47-4	Hexachlorocyclopentadiene	U	12	1.0	10	12	1.8	
7297-45-2	2-Methylnaphthalene-D10		72%					
367-12-4	2,4-Dibromophenol		110%					
81103-79-9	Fluorene-d10		63%					
1718-51-1	Pyrene-D10		78%					

lcs
1131/09

12

KATAHDIN ANALYTICAL SERVICES
Report of Analytical Results

Client: CH2MHill
Project: TO-009 Lejeune
PO No:
Sample Date: 11/16/08
Received Date: 11/18/08
Extraction Date: 11/19/08
Analysis Date: 11-DEC-2008 19:53
Report Date: 12/16/2008
Matrix: SOIL
% Solids: 91.1

Lab ID: SB6649-18
Client ID: MR08-IS376-08D
SDG: TO9-4
Extracted by: CB
Extraction Method: SW846 3550
Analyst: JLP
Analysis Method: SW846 M8270C
Lab Prep Batch: WG58249
Units: ug/Kgdrywt

CAS#	Compound	Flags	Results	DF	PQL	Adj.PQL	Adj.MDL	
91-20-3	Naphthalene	U	11	1.0	10	11	2.8	
91-57-6	2-Methylnaphthalene	~~U~~ UJ	11	1.0	10	11	2.4	CCH
86-73-7	Fluorene	U	11	1.0	10	11	3.5	
85-01-8	Phenanthrene	U	11	1.0	10	11	2.0	
206-44-0	Fluoranthene	U	11	1.0	10	11	2.0	
129-00-0	Pyrene	U	11	1.0	10	11	2.3	
56-55-3	Benzo(a)anthracene	~~U~~ UJ	11	1.0	10	11	2.1	CCH
205-99-2	Benzo(b)fluoranthene	~~U~~ UJ	11	1.0	10	11	2.6	CCH
207-08-9	Benzo(k)fluoranthene	U	11	1.0	10	11	3.4	
50-32-8	Benzo(a)pyrene	U	11	1.0	10	11	3.6	
193-39-5	Indeno(1,2,3-cd)pyrene	~~U~~ UJ	11	1.0	10	11	2.1	CCH
53-70-3	Dibenzo(a,h)anthracene	U	11	1.0	10	11	2.0	
191-24-2	Benzo(g,h,i)perylene	U	11	1.0	10	11	2.2	
118-74-1	Hexachlorobenzene	~~U~~ UJ	11	1.0	10	11	2.0	CCH
87-68-3	Hexachlorobutadiene	U	11	1.0	10	11	2.5	
77-47-4	Hexachlorocyclopentadiene	U	11	1.0	10	11	1.6	
7297-45-2	2-Methylnaphthalene-D10		62%					
367-12-4	2,4-Dibromophenol		97%					
81103-79-9	Fluorene-d10		56%					
1718-51-1	Pyrene-D10		81%					

lw
1/13/09

13

KATAHDIN ANALYTICAL SERVICES
Report of Analytical Results

Client: CH2MHill
Project: TO-009 Lejeune
PO No:
Sample Date: 11/16/08
Received Date: 11/18/08
Extraction Date: 11/19/08
Analysis Date: 14-DEC-2008 04:18
Report Date: 12/16/2008
Matrix: SOIL
% Solids: 83.0

Lab ID: SB6649-20RA
Client ID: MR08-SS399-08D
SDG: TO9-4
Extracted by: CB
Extraction Method: SW846 3550
Analyst: JCG
Analysis Method: SW846 M8270C
Lab Prep Batch: WG58249
Units: ug/Kgdrywt

CAS#	Compound	Flags	Results	DF	PQL	Adj.PQL	Adj.MDL	
91-20-3	Naphthalene	U	12	1.0	10	12	3.1	
91-57-6	2-Methylnaphthalene	~~U~~ UJ	12	1.0	10	12	2.6	CCH
86-73-7	Fluorene	U	12	1.0	10	12	3.8	
85-01-8	Phenanthrene		92	1.0	10	12	2.2	
206-44-0	Fluoranthene	~~E~~	390 ~~370~~	1.0	10	12	2.2	R DL
129-00-0	Pyrene	~~E~~	340J ~~320~~ BK	1.0	10	12	2.5	R DL
56-55-3	Benzo(a)anthracene		120	1.0	10	12	2.3	
205-99-2	Benzo(b)fluoranthene		240	1.0	10	12	2.9	
207-08-9	Benzo(k)fluoranthene	J	140	1.0	10	12	3.7	CCH
50-32-8	Benzo(a)pyrene		180	1.0	10	12	4.0	
193-39-5	Indeno(1,2,3-cd)pyrene		140	1.0	10	12	2.3	
53-70-3	Dibenzo(a,h)anthracene		44	1.0	10	12	2.2	
191-24-2	Benzo(g,h,i)perylene		140	1.0	10	12	2.4	
118-74-1	Hexachlorobenzene	~~U~~ UJ	12	1.0	10	12	2.2	CCH
87-68-3	Hexachlorobutadiene	~~U~~ ↓	12	1.0	10	12	2.8	
77-47-4	Hexachlorocyclopentadiene	~~U~~ ↓	12	1.0	10	12	1.8	↓
7297-45-2	2-Methylnaphthalene-D10		81%					
367-12-4	2,4-Dibromophenol		147%					
81103-79-9	Fluorene-d10		65%					
1718-51-1	Pyrene-D10		93%					

LW
1/31/09

13DL

KATAHDIN ANALYTICAL SERVICES
Report of Analytical Results

Client: CH2MHill
Project: TO-009 Lejeune
PO No:
Sample Date: 11/16/08
Received Date: 11/18/08
Extraction Date: 11/19/08
Analysis Date: 14-DEC-2008 15:52
Report Date: 12/16/2008
Matrix: SOIL
% Solids: 83.0

Lab ID: SB6649-20DL
Client ID: MR08-SS399-08D
SDG: TO9-4
Extracted by: CB
Extraction Method: SW846 3550
Analyst: JLP
Analysis Method: SW846 M8270C
Lab Prep Batch: WG58249
Units: ug/Kgdrywt

Use original

CAS#	Compound	Flags	Results	DF	PQL	Adj.PQL	Adj.MDL	
91-20-3	Naphthalene	U	24	2.0	10	24	6.3	
91-57-6	2-Methylnaphthalene	U	24	2.0	10	24	5.3	
86-73-7	Fluorene	U	24	2.0	10	24	7.7	
85-01-8	Phenanthrene		110	2.0	10	24	4.3	
206-44-0	Fluoranthene		390	2.0	10	24	4.3	
129-00-0	Pyrene	J	340	2.0	10	24	5.1	BSH
56-55-3	Benzo(a)anthracene		140	2.0	10	24	4.6	
205-99-2	Benzo(b)fluoranthene	J	230	2.0	10	24	5.8	CCH
207-08-9	Benzo(k)fluoranthene	J	160	2.0	10	24	7.5	CCH
50-32-8	Benzo(a)pyrene		180	2.0	10	24	8.0	
193-39-5	Indeno(1,2,3-cd)pyrene		140	2.0	10	24	4.6	
53-70-3	Dibenzo(a,h)anthracene		42	2.0	10	24	4.3	
191-24-2	Benzo(g,h,i)perylene		150	2.0	10	24	4.8	
118-74-1	Hexachlorobenzene	~~U~~ UJ	24	2.0	10	24	4.3	CCH
87-68-3	Hexachlorobutadiene	U	24	2.0	10	24	5.5	
77-47-4	Hexachlorocyclopentadiene	~~U~~ UJ	24	2.0	10	24	3.6	CCH
7297-45-2	2-Methylnaphthalene-D10		83%					
367-12-4	2,4-Dibromophenol		*165%					
81103-79-9	Fluorene-d10		67%					
1718-51-1	Pyrene-D10		109%					

R DL

MW 12/31/09

14

KATAHDIN ANALYTICAL SERVICES
Report of Analytical Results

Client: CH2MHill
Project: TO-009 Lejeune
PO No:
Sample Date: 11/16/08
Received Date: 11/18/08
Extraction Date: 11/19/08
Analysis Date: 11-DEC-2008 21:20
Report Date: 12/16/2008
Matrix: SOIL
% Solids: 82.9

Lab ID: SB6649-22
Client ID: MR08-SS398-08D
SDG: TO9-4
Extracted by: CB
Extraction Method: SW846 3550
Analyst: JLP
Analysis Method: SW846 M8270C
Lab Prep Batch: WG58249
Units: ug/Kgdrywt

CAS#	Compound	Flags	Results	DF	PQL	Adj.PQL	Adj.MDL	
91-20-3	Naphthalene	U	12	1.0	10	12	3.1	
91-57-6	2-Methylnaphthalene	~~U~~ UJ	12	1.0	10	12	2.6	CCH
86-73-7	Fluorene	U	12	1.0	10	12	3.9	
85-01-8	Phenanthrene		84	1.0	10	12	2.2	
206-44-0	Fluoranthene		330	1.0	10	12	2.2	
129-00-0	Pyrene	J	220	1.0	10	12	2.5	BSH
56-55-3	Benzo(a)anthracene	J	110	1.0	10	12	2.3	CCH
205-99-2	Benzo(b)fluoranthene	J	140	1.0	10	12	2.9	CCH
207-08-9	Benzo(k)fluoranthene		160	1.0	10	12	3.7	
50-32-8	Benzo(a)pyrene		150	1.0	10	12	4.0	
193-39-5	Indeno(1,2,3-cd)pyrene	J	130	1.0	10	12	2.3	CCH
53-70-3	Dibenzo(a,h)anthracene		38	1.0	10	12	2.2	
191-24-2	Benzo(g,h,i)perylene		120	1.0	10	12	2.4	
118-74-1	Hexachlorobenzene	~~U~~ UJ	12	1.0	10	12	2.2	CCH
87-68-3	Hexachlorobutadiene	U	12	1.0	10	12	2.8	
77-47-4	Hexachlorocyclopentadiene	U	12	1.0	10	12	1.8	
7297-45-2	2-Methylnaphthalene-D10		72%					
367-12-4	2,4-Dibromophenol		129%					
81103-79-9	Fluorene-d10		59%					
1718-51-1	Pyrene-D10		67%					

RW
12/31/09

KATAHDIN ANALYTICAL SERVICES
Report of Analytical Results

Client: CH2MHill
Project: TO-009 Lejeune
PO No:
Sample Date: 11/16/08
Received Date: 11/18/08
Extraction Date: 11/19/08
Analysis Date: 14-DEC-2008 04:58
Report Date: 12/16/2008
Matrix: SOIL
% Solids: 88.2

Lab ID: SB6649-24RA
Client ID: MR08-SS397-08D
SDG: TO9-4
Extracted by: CB
Extraction Method: SW846 3550
Analyst: JCG
Analysis Method: SW846 M8270C
Lab Prep Batch: WG58249
Units: ug/Kgdrywt

CAS#	Compound	Flags	Results	DF	PQL	Adj.PQL	Adj.MDL	
91-20-3	Naphthalene	U	11	1.0	10	11	2.9	
91-57-6	2-Methylnaphthalene	~~U~~ UJ	11	1.0	10	11	2.5	CCH
86-73-7	Fluorene	U	11	1.0	10	11	3.6	
85-01-8	Phenanthrene		21	1.0	10	11	2.0	
206-44-0	Fluoranthene		110	1.0	10	11	2.0	
129-00-0	Pyrene	J	100	1.0	10	11	2.4	BSH
56-55-3	Benzo(a)anthracene		45	1.0	10	11	2.2	
205-99-2	Benzo(b)fluoranthene		83	1.0	10	11	2.7	
207-08-9	Benzo(k)fluoranthene	J	49	1.0	10	11	3.5	CCH
50-32-8	Benzo(a)pyrene		59	1.0	10	11	3.7	
193-39-5	Indeno(1,2,3-cd)pyrene		52	1.0	10	11	2.2	
53-70-3	Dibenzo(a,h)anthracene		18	1.0	10	11	2.0	
191-24-2	Benzo(g,h,i)perylene		52	1.0	10	11	2.3	
118-74-1	Hexachlorobenzene	U UJ	11	1.0	10	11	2.0	CCH
87-68-3	Hexachlorobutadiene	U	11	1.0	10	11	2.6	
77-47-4	Hexachlorocyclopentadiene	U	11	1.0	10	11	1.7	
7297-45-2	2-Methylnaphthalene-D10		82%					
367-12-4	2,4-Dibromophenol		*156%					
81103-79-9	Fluorene-d10		70%					
1718-51-1	Pyrene-D10		92%					

11/31/09

16

KATAHDIN ANALYTICAL SERVICES
Report of Analytical Results

Client: CH2MHill
Project: TO-009 Lejeune
PO No:
Sample Date: 11/16/08
Received Date: 11/18/08
Extraction Date: 11/19/08
Analysis Date: 14-DEC-2008 05:38
Report Date: 12/16/2008
Matrix: SOIL
% Solids: 86.6

Lab ID: SB6649-26RA
Client ID: MR08-SS396-08D
SDG: TO9-4
Extracted by: CB
Extraction Method: SW846 3550
Analyst: JCG
Analysis Method: SW846 M8270C
Lab Prep Batch: WG58249
Units: ug/Kgdrywt

CAS#	Compound	Flags	Results	DF	PQL	Adj.PQL	Adj.MDL	
91-20-3	Naphthalene	U	12	1.0	10	12	3.0	
91-57-6	2-Methylnaphthalene	~~U~~ UJ	12	1.0	10	12	2.5	CCH
86-73-7	Fluorene	U	12	1.0	10	12	3.7	
85-01-8	Phenanthrene		22	1.0	10	12	2.1	
206-44-0	Fluoranthene		130	1.0	10	12	2.1	
129-00-0	Pyrene	J	120	1.0	10	12	2.4	BSH
56-55-3	Benzo(a)anthracene		53	1.0	10	12	2.2	
205-99-2	Benzo(b)fluoranthene		110	1.0	10	12	2.8	
207-08-9	Benzo(k)fluoranthene	J	59	1.0	10	12	3.6	CCH
50-32-8	Benzo(a)pyrene		76	1.0	10	12	3.8	
193-39-5	Indeno(1,2,3-cd)pyrene		66	1.0	10	12	2.2	
53-70-3	Dibenzo(a,h)anthracene		22	1.0	10	12	2.1	
191-24-2	Benzo(g,h,i)perylene		67	1.0	10	12	2.3	
118-74-1	Hexachlorobenzene	~~U~~ UJ	12	1.0	10	12	2.1	CCH
87-68-3	Hexachlorobutadiene	~~U~~ ↓	12	1.0	10	12	2.6	
77-47-4	Hexachlorocyclopentadiene	~~U~~ ↓	12	1.0	10	12	1.7	↓
7297-45-2	2-Methylnaphthalene-D10		75%					
367-12-4	2,4-Dibromophenol		*153%					
81103-79-9	Fluorene-d10		67%					
1718-51-1	Pyrene-D10		94%					

lw 1/31/09

17

KATAHDIN ANALYTICAL SERVICES
Report of Analytical Results

Client: CH2MHill
Project: TO-009 Lejeune
PO No:
Sample Date: 11/17/08
Received Date: 11/20/08
Extraction Date: 11/21/08
Analysis Date: 13-DEC-2008 17:15
Report Date: 12/16/2008
Matrix: SOIL
% Solids: 95.4

Lab ID: SB6714-2
Client ID: MR08-IS377-08D
SDG: TO9-4
Extracted by: AC
Extraction Method: SW846 3550
Analyst: JCG
Analysis Method: SW846 M8270C
Lab Prep Batch: WG58344
Units: ug/Kgdrywt

CAS#	Compound	Flags	Results	DF	PQL	Adj.PQL	Adj.MDL	
91-20-3	Naphthalene	U	10	1.0	10	10	2.7	
91-57-6	2-Methylnaphthalene	U	10	1.0	10	10	2.3	
86-73-7	Fluorene	U	10	1.0	10	10	3.4	
85-01-8	Phenanthrene	U	10	1.0	10	10	1.9	
206-44-0	Fluoranthene	U	10	1.0	10	10	1.9	
129-00-0	Pyrene	~~U~~ UJ	10	1.0	10	10	2.2	CCH
56-55-3	Benzo(a)anthracene	U	10	1.0	10	10	2.0	
205-99-2	Benzo(b)fluoranthene	U	10	1.0	10	10	2.5	
207-08-9	Benzo(k)fluoranthene	U	10	1.0	10	10	3.2	
50-32-8	Benzo(a)pyrene	U	10	1.0	10	10	3.5	
193-39-5	Indeno(1,2,3-cd)pyrene	U	10	1.0	10	10	2.0	
53-70-3	Dibenzo(a,h)anthracene	U	10	1.0	10	10	1.9	
191-24-2	Benzo(g,h,i)perylene	U	10	1.0	10	10	2.1	
118-74-1	Hexachlorobenzene	~~U~~ UJ	10	1.0	10	10	1.9	CCH
87-68-3	Hexachlorobutadiene	~~U~~ ↓	10	1.0	10	10	2.4	↓
77-47-4	Hexachlorocyclopentadiene	~~U~~ ↓	10	1.0	10	10	1.6	
7297-45-2	2-Methylnaphthalene-D10		76%					
367-12-4	2,4-Dibromophenol		133%					
81103-79-9	Fluorene-d10		66%					
1718-51-1	Pyrene-D10		91%					

lcw
1/31/09

KATAHDIN ANALYTICAL SERVICES
Report of Analytical Results

Client: CH2MHill
Project: TO-009 Lejeune
PO No:
Sample Date: 11/17/08
Received Date: 11/20/08
Extraction Date: 11/21/08
Analysis Date: 13-DEC-2008 17:56
Report Date: 12/16/2008
Matrix: SOIL
% Solids: 95.5

Lab ID: SB6714-4
Client ID: MR08-IS377D-08D
SDG: TO9-4
Extracted by: AC
Extraction Method: SW846 3550
Analyst: JCG
Analysis Method: SW846 M8270C
Lab Prep Batch: WG58344
Units: ug/Kgdrywt

CAS#	Compound	Flags	Results	DF	PQL	Adj.PQL	Adj.MDL	
91-20-3	Naphthalene	U	10	1.0	10	10	2.7	
91-57-6	2-Methylnaphthalene	U	10	1.0	10	10	2.3	
86-73-7	Fluorene	U	10	1.0	10	10	3.4	
85-01-8	Phenanthrene	U	10	1.0	10	10	1.9	
206-44-0	Fluoranthene	U	10	1.0	10	10	1.9	
129-00-0	Pyrene	~~U~~ UJ	10	1.0	10	10	2.2	CCH
56-55-3	Benzo(a)anthracene	U	10	1.0	10	10	2.0	
205-99-2	Benzo(b)fluoranthene	U	10	1.0	10	10	2.5	
207-08-9	Benzo(k)fluoranthene	U	10	1.0	10	10	3.2	
50-32-8	Benzo(a)pyrene	U	10	1.0	10	10	3.4	
193-39-5	Indeno(1,2,3-cd)pyrene	U	10	1.0	10	10	2.0	
53-70-3	Dibenzo(a,h)anthracene	U	10	1.0	10	10	1.9	
191-24-2	Benzo(g,h,i)perylene	U	10	1.0	10	10	2.1	
118-74-1	Hexachlorobenzene	~~U~~ UJ	10	1.0	10	10	1.9	CCH
87-68-3	Hexachlorobutadiene	~~U~~ ↓	10	1.0	10	10	2.4	↓
77-47-4	Hexachlorocyclopentadiene	~~U~~ ↓	10	1.0	10	10	1.6	↓
7297-45-2	2-Methylnaphthalene-D10		74%					
367-12-4	2,4-Dibromophenol		126%					
81103-79-9	Fluorene-d10		60%					
1718-51-1	Pyrene-D10		92%					

LW
1/31/09

KATAHDIN ANALYTICAL SERVICES
Report of Analytical Results

Client: CH2MHill
Project: TO-009 Lejeune
PO No:
Sample Date: 11/17/08
Received Date: 11/20/08
Extraction Date: 11/21/08
Analysis Date: 13-DEC-2008 18:37
Report Date: 12/16/2008
Matrix: SOIL
% Solids: 88.4

Lab ID: SB6714-6
Client ID: MR08-IS397-08D
SDG: TO9-4
Extracted by: AC
Extraction Method: SW846 3550
Analyst: JCG
Analysis Method: SW846 M8270C
Lab Prep Batch: WG58344
Units: ug/Kgdrywt

CAS#	Compound	Flags	Results	DF	PQL	Adj.PQL	Adj.MDL	
91-20-3	Naphthalene	U	11	1.0	10	11	2.9	
91-57-6	2-Methylnaphthalene	U	11	1.0	10	11	2.5	
86-73-7	Fluorene	U	11	1.0	10	11	3.6	
85-01-8	Phenanthrene	U	11	1.0	10	11	2.0	
206-44-0	Fluoranthene	U	11	1.0	10	11	2.0	
129-00-0	Pyrene	~~U~~ UJ	11	1.0	10	11	2.4	CCH
56-55-3	Benzo(a)anthracene	U	11	1.0	10	11	2.1	
205-99-2	Benzo(b)fluoranthene	U	11	1.0	10	11	2.7	
207-08-9	Benzo(k)fluoranthene	U	11	1.0	10	11	3.5	
50-32-8	Benzo(a)pyrene	U	11	1.0	10	11	3.7	
193-39-5	Indeno(1,2,3-cd)pyrene	U	11	1.0	10	11	2.1	
53-70-3	Dibenzo(a,h)anthracene	U	11	1.0	10	11	2.0	
191-24-2	Benzo(g,h,i)perylene	U	11	1.0	10	11	2.3	
118-74-1	Hexachlorobenzene	~~U~~ UJ	11	1.0	10	11	2.0	CCH
87-68-3	Hexachlorobutadiene	~~U~~ ↓	11	1.0	10	11	2.6	
77-47-4	Hexachlorocyclopentadiene	~~U~~ ↓	11	1.0	10	11	1.7	↓
7297-45-2	2-Methylnaphthalene-D10		70%					
367-12-4	2,4-Dibromophenol		119%					
81103-79-9	Fluorene-d10		56%					
1718-51-1	Pyrene-D10		78%					

lw
1/31/09

KATAHDIN ANALYTICAL SERVICES
Report of Analytical Results

Client: CH2MHill
Project: TO-009 Lejeune
PO No:
Sample Date: 11/18/08
Received Date: 11/20/08
Extraction Date: 11/21/08
Analysis Date: 13-DEC-2008 19:18
Report Date: 12/16/2008
Matrix: SOIL
% Solids: 85.0

Lab ID: SB6714-8
Client ID: MR08-IS398-08D
SDG: TO9-4
Extracted by: AC
Extraction Method: SW846 3550
Analyst: JCG
Analysis Method: SW846 M8270C
Lab Prep Batch: WG58344
Units: ug/Kgdrywt

CAS#	Compound	Flags	Results	DF	PQL	Adj.PQL	Adj.MDL	
91-20-3	Naphthalene	U	12	1.0	10	12	3.0	
91-57-6	2-Methylnaphthalene	U	12	1.0	10	12	2.6	
86-73-7	Fluorene	U	12	1.0	10	12	3.8	
85-01-8	Phenanthrene	U	12	1.0	10	12	2.1	
206-44-0	Fluoranthene	J	3.6	1.0	10	12	2.1	
129-00-0	Pyrene	~~J~~ J	3.4	1.0	10	12	2.5	CLH
56-55-3	Benzo(a)anthracene	U	12	1.0	10	12	2.2	
205-99-2	Benzo(b)fluoranthene	U	12	1.0	10	12	2.8	
207-08-9	Benzo(k)fluoranthene	U	12	1.0	10	12	3.6	
50-32-8	Benzo(a)pyrene	U	12	1.0	10	12	3.9	
193-39-5	Indeno(1,2,3-cd)pyrene	U	12	1.0	10	12	2.2	
53-70-3	Dibenzo(a,h)anthracene	U	12	1.0	10	12	2.1	
191-24-2	Benzo(g,h,i)perylene	U	12	1.0	10	12	2.4	
118-74-1	Hexachlorobenzene	~~U~~ UJ	12	1.0	10	12	2.1	CLH
87-68-3	Hexachlorobutadiene	~~U~~ ↓	12	1.0	10	12	2.7	↓
77-47-4	Hexachlorocyclopentadiene	~~U~~ ↓	12	1.0	10	12	1.8	↓
7297-45-2	2-Methylnaphthalene-D10		77%					
367-12-4	2,4-Dibromophenol		127%					
81103-79-9	Fluorene-d10		62%					
1718-51-1	Pyrene-D10		81%					

lw
1/31/09

ENVIRONMENTAL
Data Services, Inc.

SEMIVOLATILE ORGANIC COMPOUNDS

USEPA Region IV - Level IV Review

Site: MCB Camp Lejeune, TO-09 SDG #: TO9-4

Client: CH2M HILL, Inc., Virginia Beach, Virginia Date: January 31, 2009

Laboratory: Katahdin Analytical Services, Scarborough, Maine Reviewer: Nancy Weaver

EDS ID	Client Sample ID	Laboratory Sample ID	Matrix
1	MR08-SS375-08D	SB6588-1	Soil
1MS	MR08-SS375-08DMS	SB6588-1MS	Soil
1MSD	MR08-SS375-08DMSD	SB6588-1MSD	Soil
2	MR08-SS374-08D	SB6588-3	Soil
3	MR08-SS374D-08D	SB6588-5	Soil
4	MR08-IS386-08D	SB6649-1	Soil
5	MR08-IS387-08D	SB6649-3	Soil
6	MR08-IS384-08D	SB6649-5	Soil
7	MR08-IS383-08D	SB6649-7	Soil
8	MR08-IS382-08D	SB6649-9	Soil
9	MR08-IS374-08D	SB6649-11	Soil
10	MR08-IS374D-08D	SB6649-13	Soil
11	MR08-IS375-08D	SB6649-15	Soil
12	MR08-IS376-08D	SB6649-17	Soil
13	MR08-SS399-08D	SB6649-19	Soil
14	MR08-SS398-08D	SB6649-21	Soil
15	MR08-SS397-08D	SB6649-23	Soil
16	MR08-SS396-08D	SB6649-25	Soil
17	MR08-IS377-08D	SB6714-1	Soil
18	MR08-IS377D-08D	SB6714-3	Soil
19	MR08-IS397-08D	SB6714-5	Soil
20	MR08-IS398-08D	SB6714-7	Soil

The USEPA "Contract Laboratory Program National Functional Guidelines for Organic Data Review," October 1999, and professional judgement were used in evaluating the data in this summary report.

Holding Times - All samples were extracted within 14 days for soil samples and analyzed within 40 days for all samples.

GC/MS Tuning - All of the DFTPP tunes in the initial and continuing calibrations met the percent relative abundance criteria.

Initial Calibration - The initial calibrations exhibited acceptable %RSD and mean RRF values.

Continuing Calibration - The continuing calibrations exhibited acceptable %D and RRF values except the following.

CCAL Date	Compound	%D/RRF	Qualifier	Affected Samples
12/05/08	4-Nitrophenol	26.27%	J/UJ	1-3
12/10/08	Nitrobenzene	33.54%	J/UJ	4-10
	4-Nitrophenol	29.90%	J/UJ	4-10
	Butylbenzylphthalate	38.45%	J/UJ	4-10
	bis (2-Ethylhexyl) phthalate	45.32%	J/UJ	4-10
	Di-n-octyl phthalate	56.23%	J/UJ	4-10
12/11/08 0810	Phenol	29.94%	J/UJ	11-16
	bis (2-Chloroethyl) ether	26.65%	J/UJ	11-16
	Nitrobenzene	49.68%	J/UJ	11-16
	4-Nitrophenol	31.37%	J/UJ	11-16
	Butylbenzylphthalate	43.68%	J/UJ	11-16
	bis (2-Ethylhexyl) phthalate	52.08%	J/UJ	11-16
	Di-n-octyl phthalate	64.25%	J/UJ	11-16
12/11/08 1801	Nitrobenzene	26.09%	J/UJ	17-20
	Butylbenzyl phthalate	32.95%	J/UJ	17-20
	bis (2-Ethylhexyl) phthalate	37.24%	J/UJ	Unless already qualified due to LCS
	Di-n-octyl phthalate	53.23%	J/UJ	17-20

Surrogates - All samples exhibited acceptable surrogate recoveries.

MS/MSD - The MS/MSD sample exhibited acceptable %R and RPD values.

Laboratory Control Sample - The LCS samples exhibited acceptable %R values except the following.

LCS ID	Compound	%R	Qualifier	Affected Samples
WG58343-LCS	Phenol	109%	None	All associated ND
	Nitrobenzene	118%	None	All associated ND
	Butylbenzylphthalate	131%	None	All associated ND
	bis (2-Ethylhexyl) phthalate	139%	J	17-19
	Di-n-octyl phthalate	143%	None	All associated ND

Internal Standard (IS) Area Performance - All internal standards met response and retention time (RT) criteria.

Method Blank - The method blanks were free of contamination.

Field, Equipment Blank - Field QC results are summarized below.

Blank ID	Compound	Conc. ug/L	Action Level ug/L	Qualifier	Affected Samples
MR08-EB111108-1	None - ND	-	-	-	-
MR08-EB111608-1	None - ND	-	-	-	-
MR08-FB111108	None - ND	-	-	-	-
MR08-FB112008	None - ND	-	-	-	-

Field Duplicates - Field duplicate results are summarized below.

Compound	MR08-SS374-08D ug/kg	MR08-SS374D-08D ug/kg	RPD	Qualifier
None	ND	ND	-	-

Compound	MR08-IS374-08D ug/kg	MR08-IS374D-08D ug/kg	RPD	Qualifier
bis (2-Ethylhexyl) phthalate	180	150	18%	None

Compound	MR08-IS377-08D ug/kg	MR08-IS377D-08D ug/kg	RPD	Qualifier
bis (2-Ethylhexyl) phthalate	460	200	79%	None

Tentatively Identified Compounds (TICs) - TICs were not reported.

Compound Quantitation - No discrepancies were identified.

KATAHDIN ANALYTICAL SERVICES
Report of Analytical Results

Client: CH2MHill
Project: TO-009 Lejeune
PO No:
Sample Date: 11/11/08
Received Date: 11/14/08
Extraction Date: 11/18/08
Analysis Date: 05-DEC-2008 21:17
Report Date: 12/13/2008
Matrix: SOIL
% Solids: 90.4

Lab ID: SB6588-1
Client ID: MR08-SS375-08D
SDG: TO9-4
Extracted by: AC
Extraction Method: SW846 3550
Analyst: EKC
Analysis Method: SW846 8270C
Lab Prep Batch: WG58204
Units: ug/Kgdrywt

CAS#	Compound	Flags	Results	DF	PQL	Adj.PQL	Adj.MDL
100-52-7	Benzaldehyde	U	550	1.0	500	550	130
108-95-2	Phenol	U	550	1.0	500	550	170
111-44-4	Bis(2-Chloroethyl)ether	U	360	1.0	330	360	90
95-57-8	2-Chlorophenol	U	550	1.0	500	550	180
95-48-7	2-Methylphenol	U	660	1.0	600	660	220
108-60-1	2,2'-Oxybis(1-chloropropane)	U	360	1.0	330	360	98
98-86-2	Acetophenone	U	660	1.0	600	660	200
621-64-7	N-Nitroso-di-n-propylamine	U	360	1.0	330	360	92
65794-96-9	3&4-Methylphenol	U	660	1.0	600	660	210
67-72-1	Hexachloroethane	U	360	1.0	330	360	110
98-95-3	Nitrobenzene	U	360	1.0	330	360	100
78-59-1	Isophorone	U	360	1.0	330	360	83
88-75-5	2-Nitrophenol	U	660	1.0	600	660	180
105-67-9	2,4-Dimethylphenol	U	550	1.0	500	550	180
111-91-1	Bis(2-Chloroethoxy)methane	U	360	1.0	330	360	110
120-83-2	2,4-Dichlorophenol	U	550	1.0	500	550	160
106-47-8	4-Chloroaniline	U	550	1.0	500	550	130
105-60-2	Caprolactam	U	550	1.0	500	550	160
59-50-7	4-Chloro-3-Methylphenol	U	550	1.0	500	550	180
88-06-2	2,4,6-Trichlorophenol	U	550	1.0	500	550	170
95-95-4	2,4,5-Trichlorophenol	U	550	1.0	500	550	170
91-58-7	2-Chloronaphthalene	U	360	1.0	330	360	96
92-52-4	1,1'-Biphenyl	U	360	1.0	330	360	81
88-74-4	2-Nitroaniline	U	550	1.0	500	550	83
131-11-3	Dimethyl Phthalate	U	360	1.0	330	360	86
606-20-2	2,6-Dinitrotoluene	U	360	1.0	330	360	87
208-96-8	Acenaphthylene	U	360	1.0	330	360	77
99-09-2	3-Nitroaniline	U	550	1.0	500	550	100
83-32-9	Acenaphthene	U	360	1.0	330	360	72
51-28-5	2,4-Dinitrophenol	U	1300	1.0	1200	1300	420
132-64-9	Dibenzofuran	U	360	1.0	330	360	87
100-02-7	4-Nitrophenol	~~U~~ UJ	1300	1.0	1200	1300	340 CCH
121-14-2	2,4-Dinitrotoluene	U	360	1.0	330	360	94
84-66-2	Diethylphthalate	U	360	1.0	330	360	88
7005-72-3	4-Chlorophenyl-phenylether	U	360	1.0	330	360	86
100-01-6	4-Nitroaniline	U	550	1.0	500	550	150
534-52-1	4,6-Dinitro-2-Methylphenol	U	1300	1.0	1200	1300	370
86-30-6	N-Nitrosodiphenylamine	U	730	1.0	660	730	240
101-55-3	4-Bromophenyl-phenylether	U	360	1.0	330	360	94
1912-24-9	Atrazine	U	360	1.0	330	360	100
87-86-5	Pentachlorophenol	U	910	1.0	820	910	260
120-12-7	Anthracene	U	360	1.0	330	360	93
86-74-8	Carbazole	U	550	1.0	500	550	120

LW
1/31/09

KATAHDIN ANALYTICAL SERVICES
Report of Analytical Results

Client: CH2MHill
Project: TO-009 Lejeune
PO No:
Sample Date: 11/11/08
Received Date: 11/14/08
Extraction Date: 11/18/08
Analysis Date: 05-DEC-2008 21:17
Report Date: 12/13/2008
Matrix: SOIL
% Solids: 90.4

Lab ID: SB6588-1
Client ID: MR08-SS375-08D
SDG: TO9-4
Extracted by: AC
Extraction Method: SW846 3550
Analyst: EKC
Analysis Method: SW846 8270C
Lab Prep Batch: WG58204
Units: ug/Kgdrywt

CAS#	Compound	Flags	Results	DF	PQL	Adj.PQL	Adj.MDL
84-74-2	Di-n-butylphthalate	U	360	1.0	330	360	110
85-68-7	Butylbenzylphthalate	U	360	1.0	330	360	100
91-94-1	3,3'-Dichlorobenzidine	U	550	1.0	500	550	130
218-01-9	Chrysene	U	360	1.0	330	360	100
117-81-7	bis(2-Ethylhexyl)phthalate	U	360	1.0	330	360	110
117-84-0	Di-n-octylphthalate	U	360	1.0	330	360	230
367-12-4	2-Fluorophenol		73%				
13127-88-3	Phenol-D6		81%				
4165-60-0	Nitrobenzene-D5		78%				
321-60-8	2-Fluorobiphenyl		79%				
118-79-6	2,4,6-Tribromophenol		79%				
1718-51-0	Terphenyl-D14		95%				

lw
1/31/09

2

KATAHDIN ANALYTICAL SERVICES
Report of Analytical Results

Client: CH2MHill
Project: TO-009 Lejeune
PO No:
Sample Date: 11/11/08
Received Date: 11/14/08
Extraction Date: 11/18/08
Analysis Date: 05-DEC-2008 21:59
Report Date: 12/13/2008
Matrix: SOIL
% Solids: 90.4

Lab ID: SB6588-3
Client ID: MR08-SS374-08D
SDG: TO9-4
Extracted by: AC
Extraction Method: SW846 3550
Analyst: EKC
Analysis Method: SW846 8270C
Lab Prep Batch: WG58204
Units: ug/Kgdrywt

CAS#	Compound	Flags	Results	DF	PQL	Adj.PQL	Adj.MDL	
100-52-7	Benzaldehyde	U	550	1.0	500	550	130	
108-95-2	Phenol	U	550	1.0	500	550	170	
111-44-4	Bis(2-Chloroethyl)ether	U	360	1.0	330	360	90	
95-57-8	2-Chlorophenol	U	550	1.0	500	550	180	
95-48-7	2-Methylphenol	U	660	1.0	600	660	220	
108-60-1	2,2'-Oxybis(1-chloropropane)	U	360	1.0	330	360	98	
98-86-2	Acetophenone	U	660	1.0	600	660	200	
621-64-7	N-Nitroso-di-n-propylamine	U	360	1.0	330	360	92	
65794-96-9	3&4-Methylphenol	U	660	1.0	600	660	210	
67-72-1	Hexachloroethane	U	360	1.0	330	360	110	
98-95-3	Nitrobenzene	U	360	1.0	330	360	100	
78-59-1	Isophorone	U	360	1.0	330	360	83	
88-75-5	2-Nitrophenol	U	660	1.0	600	660	180	
105-67-9	2,4-Dimethylphenol	U	550	1.0	500	550	180	
111-91-1	Bis(2-Chloroethoxy)methane	U	360	1.0	330	360	110	
120-83-2	2,4-Dichlorophenol	U	550	1.0	500	550	160	
106-47-8	4-Chloroaniline	U	550	1.0	500	550	130	
105-60-2	Caprolactam	U	550	1.0	500	550	160	
59-50-7	4-Chloro-3-Methylphenol	U	550	1.0	500	550	180	
88-06-2	2,4,6-Trichlorophenol	U	550	1.0	500	550	170	
95-95-4	2,4,5-Trichlorophenol	U	550	1.0	500	550	170	
91-58-7	2-Chloronaphthalene	U	360	1.0	330	360	96	
92-52-4	1,1'-Biphenyl	U	360	1.0	330	360	81	
88-74-4	2-Nitroaniline	U	550	1.0	500	550	83	
131-11-3	Dimethyl Phthalate	U	360	1.0	330	360	86	
606-20-2	2,6-Dinitrotoluene	U	360	1.0	330	360	87	
208-96-8	Acenaphthylene	U	360	1.0	330	360	77	
99-09-2	3-Nitroaniline	U	550	1.0	500	550	100	
83-32-9	Acenaphthene	U	360	1.0	330	360	72	
51-28-5	2,4-Dinitrophenol	U	1300	1.0	1200	1300	420	
132-64-9	Dibenzofuran	U	360	1.0	330	360	87	
100-02-7	4-Nitrophenol	~~U~~ UJ	1300	1.0	1200	1300	340	CCH
121-14-2	2,4-Dinitrotoluene	U	360	1.0	330	360	94	
84-66-2	Diethylphthalate	U	360	1.0	330	360	88	
7005-72-3	4-Chlorophenyl-phenylether	U	360	1.0	330	360	86	
100-01-6	4-Nitroaniline	U	550	1.0	500	550	150	
534-52-1	4,6-Dinitro-2-Methylphenol	U	1300	1.0	1200	1300	370	
86-30-6	N-Nitrosodiphenylamine	U	730	1.0	660	730	240	
101-55-3	4-Bromophenyl-phenylether	U	360	1.0	330	360	94	
1912-24-9	Atrazine	U	360	1.0	330	360	100	
87-86-5	Pentachlorophenol	U	910	1.0	820	910	260	
120-12-7	Anthracene	U	360	1.0	330	360	93	
86-74-8	Carbazole	U	550	1.0	500	550	120	

LW 1/31/09

2

KATAHDIN ANALYTICAL SERVICES
Report of Analytical Results

Client: CH2MHill
Project: TO-009 Lejeune
PO No:
Sample Date: 11/11/08
Received Date: 11/14/08
Extraction Date: 11/18/08
Analysis Date: 05-DEC-2008 21:59
Report Date: 12/13/2008
Matrix: SOIL
% Solids: 90.4

Lab ID: SB6588-3
Client ID: MR08-SS374-08D
SDG: TO9-4
Extracted by: AC
Extraction Method: SW846 3550
Analyst: EKC
Analysis Method: SW846 8270C
Lab Prep Batch: WG58204
Units: ug/Kgdrywt

CAS#	Compound	Flags	Results	DF	PQL	Adj.PQL	Adj.MDL
84-74-2	Di-n-butylphthalate	U	360	1.0	330	360	110
85-68-7	Butylbenzylphthalate	U	360	1.0	330	360	100
91-94-1	3,3'-Dichlorobenzidine	U	550	1.0	500	550	130
218-01-9	Chrysene	U	360	1.0	330	360	100
117-81-7	bis(2-Ethylhexyl)phthalate	U	360	1.0	330	360	110
117-84-0	Di-n-octylphthalate	U	360	1.0	330	360	230
367-12-4	2-Fluorophenol		67%				
13127-88-3	Phenol-D6		72%				
4165-60-0	Nitrobenzene-D5		68%				
321-60-8	2-Fluorobiphenyl		69%				
118-79-6	2,4,6-Tribromophenol		71%				
1718-51-0	Terphenyl-D14		78%				

lw 1131109

3

KATAHDIN ANALYTICAL SERVICES
Report of Analytical Results

Client: CH2MHill
Project: TO-009 Lejeune
PO No:
Sample Date: 11/11/08
Received Date: 11/14/08
Extraction Date: 11/18/08
Analysis Date: 05-DEC-2008 22:41
Report Date: 12/13/2008
Matrix: SOIL
% Solids: 89.8

Lab ID: SB6588-5
Client ID: MR08-SS374D-08D
SDG: TO9-4
Extracted by: AC
Extraction Method: SW846 3550
Analyst: EKC
Analysis Method: SW846 8270C
Lab Prep Batch: WG58204
Units: ug/Kgdrywt

CAS#	Compound	Flags	Results	DF	PQL	Adj.PQL	Adj.MDL	
100-52-7	Benzaldehyde	U	560	1.0	500	560	130	
108-95-2	Phenol	U	560	1.0	500	560	170	
111-44-4	Bis(2-Chloroethyl)ether	U	370	1.0	330	370	90	
95-57-8	2-Chlorophenol	U	560	1.0	500	560	180	
95-48-7	2-Methylphenol	U	670	1.0	600	670	220	
108-60-1	2,2'-Oxybis(1-chloropropane)	U	370	1.0	330	370	99	
98-86-2	Acetophenone	U	670	1.0	600	670	200	
621-64-7	N-Nitroso-di-n-propylamine	U	370	1.0	330	370	92	
65794-96-9	3&4-Methylphenol	U	670	1.0	600	670	210	
67-72-1	Hexachloroethane	U	370	1.0	330	370	110	
98-95-3	Nitrobenzene	U	370	1.0	330	370	100	
78-59-1	Isophorone	U	370	1.0	330	370	83	
88-75-5	2-Nitrophenol	U	670	1.0	600	670	180	
105-67-9	2,4-Dimethylphenol	U	560	1.0	500	560	180	
111-91-1	Bis(2-Chloroethoxy)methane	U	370	1.0	330	370	110	
120-83-2	2,4-Dichlorophenol	U	560	1.0	500	560	170	
106-47-8	4-Chloroaniline	U	560	1.0	500	560	130	
105-60-2	Caprolactam	U	560	1.0	500	560	160	
59-50-7	4-Chloro-3-Methylphenol	U	560	1.0	500	560	180	
88-06-2	2,4,6-Trichlorophenol	U	560	1.0	500	560	170	
95-95-4	2,4,5-Trichlorophenol	U	560	1.0	500	560	170	
91-58-7	2-Chloronaphthalene	U	370	1.0	330	370	97	
92-52-4	1,1'-Biphenyl	U	370	1.0	330	370	81	
88-74-4	2-Nitroaniline	U	560	1.0	500	560	83	
131-11-3	Dimethyl Phthalate	U	370	1.0	330	370	87	
606-20-2	2,6-Dinitrotoluene	U	370	1.0	330	370	88	
208-96-8	Acenaphthylene	U	370	1.0	330	370	78	
99-09-2	3-Nitroaniline	U	560	1.0	500	560	100	
83-32-9	Acenaphthene	U	370	1.0	330	370	72	
51-28-5	2,4-Dinitrophenol	U	1300	1.0	1200	1300	420	
132-64-9	Dibenzofuran	U	370	1.0	330	370	88	
100-02-7	4-Nitrophenol	~~U~~ UJ	1300	1.0	1200	1300	340	CCal
121-14-2	2,4-Dinitrotoluene	U	370	1.0	330	370	94	
84-66-2	Diethylphthalate	U	370	1.0	330	370	89	
7005-72-3	4-Chlorophenyl-phenylether	U	370	1.0	330	370	87	
100-01-6	4-Nitroaniline	U	560	1.0	500	560	150	
534-52-1	4,6-Dinitro-2-Methylphenol	U	1300	1.0	1200	1300	380	
86-30-6	N-Nitrosodiphenylamine	U	730	1.0	660	730	240	
101-55-3	4-Bromophenyl-phenylether	U	370	1.0	330	370	94	
1912-24-9	Atrazine	U	370	1.0	330	370	100	
87-86-5	Pentachlorophenol	U	910	1.0	820	910	260	
120-12-7	Anthracene	U	370	1.0	330	370	93	
86-74-8	Carbazole	U	560	1.0	500	560	120	

lw 1/31/09

KATAHDIN ANALYTICAL SERVICES
Report of Analytical Results

3

Client: CH2MHill
Project: TO-009 Lejeune
PO No:
Sample Date: 11/11/08
Received Date: 11/14/08
Extraction Date: 11/18/08
Analysis Date: 05-DEC-2008 22:41
Report Date: 12/13/2008
Matrix: SOIL
% Solids: 89.8

Lab ID: SB6588-5
Client ID: MR08-SS374D-08D
SDG: TO9-4
Extracted by: AC
Extraction Method: SW846 3550
Analyst: EKC
Analysis Method: SW846 8270C
Lab Prep Batch: WG58204
Units: ug/Kgdrywt

CAS#	Compound	Flags	Results	DF	PQL	Adj.PQL	Adj.MDL
84-74-2	Di-n-butylphthalate	U	370	1.0	330	370	110
85-68-7	Butylbenzylphthalate	U	370	1.0	330	370	100
91-94-1	3,3'-Dichlorobenzidine	U	560	1.0	500	560	130
218-01-9	Chrysene	U	370	1.0	330	370	100
117-81-7	bis(2-Ethylhexyl)phthalate	U	370	1.0	330	370	110
117-84-0	Di-n-octylphthalate	U	370	1.0	330	370	230
367-12-4	2-Fluorophenol		68%				
13127-88-3	Phenol-D6		74%				
4165-60-0	Nitrobenzene-D5		70%				
321-60-8	2-Fluorobiphenyl		72%				
118-79-6	2,4,6-Tribromophenol		76%				
1718-51-0	Terphenyl-D14		83%				

lw 11/31/09

4

KATAHDIN ANALYTICAL SERVICES
Report of Analytical Results

Client: CH2MHill
Project: TO-009 Lejeune
PO No:
Sample Date: 11/14/08
Received Date: 11/18/08
Extraction Date: 11/19/08
Analysis Date: 10-DEC-2008 16:12
Report Date: 12/15/2008
Matrix: SOIL
% Solids: 85.8

Lab ID: SB6649-1
Client ID: MR08-IS386-08D
SDG: TO9-4
Extracted by: CB
Extraction Method: SW846 3550
Analyst: JCG
Analysis Method: SW846 8270C
Lab Prep Batch: WG58248
Units: ug/Kgdrywt

CAS#	Compound	Flags	Results	DF	PQL	Adj.PQL	Adj.MDL	
100-52-7	Benzaldehyde	U	580	1.0	500	580	140	
108-95-2	Phenol	U	580	1.0	500	580	180	
111-44-4	Bis(2-Chloroethyl)ether	U	380	1.0	330	380	94	
95-57-8	2-Chlorophenol	U	580	1.0	500	580	190	
95-48-7	2-Methylphenol	U	700	1.0	600	700	230	
108-60-1	2,2'-Oxybis(1-chloropropane)	U	380	1.0	330	380	100	
98-86-2	Acetophenone	U	700	1.0	600	700	210	
621-64-7	N-Nitroso-di-n-propylamine	U	380	1.0	330	380	97	
65794-96-9	3&4-Methylphenol	U	700	1.0	600	700	220	
67-72-1	Hexachloroethane	U	380	1.0	330	380	110	
98-95-3	Nitrobenzene	~~U~~ UJ	380	1.0	330	380	110	CCH
78-59-1	Isophorone	U	380	1.0	330	380	87	
88-75-5	2-Nitrophenol	U	700	1.0	600	700	190	
105-67-9	2,4-Dimethylphenol	U	580	1.0	500	580	190	
111-91-1	Bis(2-Chloroethoxy)methane	U	380	1.0	330	380	110	
120-83-2	2,4-Dichlorophenol	U	580	1.0	500	580	170	
106-47-8	4-Chloroaniline	U	580	1.0	500	580	140	
105-60-2	Caprolactam	U	580	1.0	500	580	170	
59-50-7	4-Chloro-3-Methylphenol	U	580	1.0	500	580	190	
88-06-2	2,4,6-Trichlorophenol	U	580	1.0	500	580	180	
95-95-4	2,4,5-Trichlorophenol	U	580	1.0	500	580	180	
91-58-7	2-Chloronaphthalene	U	380	1.0	330	380	100	
92-52-4	1,1'-Biphenyl	U	380	1.0	330	380	85	
88-74-4	2-Nitroaniline	U	580	1.0	500	580	87	
131-11-3	Dimethyl Phthalate	U	380	1.0	330	380	91	
606-20-2	2,6-Dinitrotoluene	U	380	1.0	330	380	92	
208-96-8	Acenaphthylene	U	380	1.0	330	380	82	
99-09-2	3-Nitroaniline	U	580	1.0	500	580	110	
83-32-9	Acenaphthene	U	380	1.0	330	380	76	
51-28-5	2,4-Dinitrophenol	U	1400	1.0	1200	1400	440	
132-64-9	Dibenzofuran	U	380	1.0	330	380	92	
100-02-7	4-Nitrophenol	~~U~~ UJ	1400	1.0	1200	1400	360	CCH
121-14-2	2,4-Dinitrotoluene	U	380	1.0	330	380	99	
84-66-2	Diethylphthalate	U	380	1.0	330	380	93	
7005-72-3	4-Chlorophenyl-phenylether	U	380	1.0	330	380	91	
100-01-6	4-Nitroaniline	U	580	1.0	500	580	160	
534-52-1	4,6-Dinitro-2-Methylphenol	U	1400	1.0	1200	1400	390	
86-30-6	N-Nitrosodiphenylamine	U	770	1.0	660	770	260	
101-55-3	4-Bromophenyl-phenylether	U	380	1.0	330	380	99	
1912-24-9	Atrazine	U	380	1.0	330	380	110	
87-86-5	Pentachlorophenol	U	960	1.0	820	960	280	
120-12-7	Anthracene	U	380	1.0	330	380	98	
86-74-8	Carbazole	U	580	1.0	500	580	130	

AW
1/31/09

4

KATAHDIN ANALYTICAL SERVICES
Report of Analytical Results

Client: CH2MHill
Project: TO-009 Lejeune
PO No:
Sample Date: 11/14/08
Received Date: 11/18/08
Extraction Date: 11/19/08
Analysis Date: 10-DEC-2008 16:12
Report Date: 12/15/2008
Matrix: SOIL
% Solids: 85.8

Lab ID: SB6649-1
Client ID: MR08-IS386-08D
SDG: TO9-4
Extracted by: CB
Extraction Method: SW846 3550
Analyst: JCG
Analysis Method: SW846 8270C
Lab Prep Batch: WG58248
Units: ug/Kgdrywt

CAS#	Compound	Flags	Results	DF	PQL	Adj.PQL	Adj.MDL	
84-74-2	Di-n-butylphthalate	U	380	1.0	330	380	120	
85-68-7	Butylbenzylphthalate	~~U~~ UJ	380	1.0	330	380	110	CCH
91-94-1	3,3'-Dichlorobenzidine	U	580	1.0	500	580	130	
218-01-9	Chrysene	U	380	1.0	330	380	110	
117-81-7	bis(2-Ethylhexyl)phthalate	~~U~~ UJ	380	1.0	330	380	110	CCH
117-84-0	Di-n-octylphthalate	~~U~~ UJ	380	1.0	330	380	240	CCH
367-12-4	2-Fluorophenol		76%					
13127-88-3	Phenol-D6		83%					
4165-60-0	Nitrobenzene-D5		82%					
321-60-8	2-Fluorobiphenyl		82%					
118-79-6	2,4,6-Tribromophenol		73%					
1718-51-0	Terphenyl-D14		112%					

MW 1/31/09

5

KATAHDIN ANALYTICAL SERVICES
Report of Analytical Results

Client: CH2MHill
Project: TO-009 Lejeune
PO No:
Sample Date: 11/15/08
Received Date: 11/18/08
Extraction Date: 11/19/08
Analysis Date: 10-DEC-2008 16:54
Report Date: 12/15/2008
Matrix: SOIL
% Solids: 91.7

Lab ID: SB6649-3
Client ID: MR08-IS387-08D
SDG: TO9-4
Extracted by: CB
Extraction Method: SW846 3550
Analyst: JCG
Analysis Method: SW846 8270C
Lab Prep Batch: WG58248
Units: ug/Kgdrywt

CAS#	Compound	Flags	Results	DF	PQL	Adj.PQL	Adj.MDL	
100-52-7	Benzaldehyde	U	540	1.0	500	540	130	
108-95-2	Phenol	U	540	1.0	500	540	170	
111-44-4	Bis(2-Chloroethyl)ether	U	360	1.0	330	360	88	
95-57-8	2-Chlorophenol	U	540	1.0	500	540	180	
95-48-7	2-Methylphenol	U	650	1.0	600	650	220	
108-60-1	2,2'-Oxybis(1-chloropropane)	U	360	1.0	330	360	97	
98-86-2	Acetophenone	U	650	1.0	600	650	190	
621-64-7	N-Nitroso-di-n-propylamine	U	360	1.0	330	360	90	
65794-96-9	3&4-Methylphenol	U	650	1.0	600	650	200	
67-72-1	Hexachloroethane	U	360	1.0	330	360	100	
98-95-3	Nitrobenzene	~~U~~ UJ	360	1.0	330	360	99	CCH
78-59-1	Isophorone	U	360	1.0	330	360	82	
88-75-5	2-Nitrophenol	U	650	1.0	600	650	180	
105-67-9	2,4-Dimethylphenol	U	540	1.0	500	540	180	
111-91-1	Bis(2-Chloroethoxy)methane	U	360	1.0	330	360	100	
120-83-2	2,4-Dichlorophenol	U	540	1.0	500	540	160	
106-47-8	4-Chloroaniline	U	540	1.0	500	540	130	
105-60-2	Caprolactam	U	540	1.0	500	540	160	
59-50-7	4-Chloro-3-Methylphenol	U	540	1.0	500	540	180	
88-06-2	2,4,6-Trichlorophenol	U	540	1.0	500	540	170	
95-95-4	2,4,5-Trichlorophenol	U	540	1.0	500	540	170	
91-58-7	2-Chloronaphthalene	U	360	1.0	330	360	95	
92-52-4	1,1'-Biphenyl	U	360	1.0	330	360	80	
88-74-4	2-Nitroaniline	U	540	1.0	500	540	82	
131-11-3	Dimethyl Phthalate	U	360	1.0	330	360	85	
606-20-2	2,6-Dinitrotoluene	U	360	1.0	330	360	86	
208-96-8	Acenaphthylene	U	360	1.0	330	360	76	
99-09-2	3-Nitroaniline	U	540	1.0	500	540	100	
83-32-9	Acenaphthene	U	360	1.0	330	360	71	
51-28-5	2,4-Dinitrophenol	U	1300	1.0	1200	1300	410	
132-64-9	Dibenzofuran	U	360	1.0	330	360	86	
100-02-7	4-Nitrophenol	~~U~~ UJ	1300	1.0	1200	1300	340	CCH
121-14-2	2,4-Dinitrotoluene	U	360	1.0	330	360	93	
84-66-2	Diethylphthalate	U	360	1.0	330	360	87	
7005-72-3	4-Chlorophenyl-phenylether	U	360	1.0	330	360	85	
100-01-6	4-Nitroaniline	U	540	1.0	500	540	150	
534-52-1	4,6-Dinitro-2-Methylphenol	U	1300	1.0	1200	1300	370	
86-30-6	N-Nitrosodiphenylamine	U	720	1.0	660	720	240	
101-55-3	4-Bromophenyl-phenylether	U	360	1.0	330	360	93	
1912-24-9	Atrazine	U	360	1.0	330	360	99	
87-86-5	Pentachlorophenol	U	890	1.0	820	890	260	
120-12-7	Anthracene	U	360	1.0	330	360	92	
86-74-8	Carbazole	U	540	1.0	500	540	120	

hW
1/31/09

KATAHDIN ANALYTICAL SERVICES
Report of Analytical Results

Client: CH2MHill
Project: TO-009 Lejeune
PO No:
Sample Date: 11/15/08
Received Date: 11/18/08
Extraction Date: 11/19/08
Analysis Date: 10-DEC-2008 16:54
Report Date: 12/15/2008
Matrix: SOIL
% Solids: 91.7

Lab ID: SB6649-3
Client ID: MR08-IS387-08D
SDG: TO9-4
Extracted by: CB
Extraction Method: SW846 3550
Analyst: JCG
Analysis Method: SW846 8270C
Lab Prep Batch: WG58248
Units: ug/Kgdrywt

CAS#	Compound	Flags	Results	DF	PQL	Adj.PQL	Adj.MDL	
84-74-2	Di-n-butylphthalate	U	360	1.0	330	360	110	
85-68-7	Butylbenzylphthalate	~~U~~ UJ	360	1.0	330	360	100	CCH
91-94-1	3,3'-Dichlorobenzidine	U	540	1.0	500	540	120	
218-01-9	Chrysene	U	360	1.0	330	360	100	
117-81-7	bis(2-Ethylhexyl)phthalate	~~U~~ UJ	360	1.0	330	360	110	CCH
117-84-0	Di-n-octylphthalate	~~U~~ UJ	360	1.0	330	360	230	CCH
367-12-4	2-Fluorophenol		75%					
13127-88-3	Phenol-D6		80%					
4165-60-0	Nitrobenzene-D5		79%					
321-60-8	2-Fluorobiphenyl		80%					
118-79-6	2,4,6-Tribromophenol		74%					
1718-51-0	Terphenyl-D14		109%					

DW
1/31/09

6

KATAHDIN ANALYTICAL SERVICES
Report of Analytical Results

Client: CH2MHill
Project: TO-009 Lejeune
PO No:
Sample Date: 11/15/08
Received Date: 11/18/08
Extraction Date: 11/19/08
Analysis Date: 10-DEC-2008 17:36
Report Date: 12/15/2008
Matrix: SOIL
% Solids: 89.4

Lab ID: SB6649-5
Client ID: MR08-IS384-08D
SDG: TO9-4
Extracted by: CB
Extraction Method: SW846 3550
Analyst: JCG
Analysis Method: SW846 8270C
Lab Prep Batch: WG58248
Units: ug/Kgdrywt

CAS#	Compound	Flags	Results	DF	PQL	Adj.PQL	Adj.MDL
100-52-7	Benzaldehyde	U	560	1.0	500	560	130
108-95-2	Phenol	U	560	1.0	500	560	170
111-44-4	Bis(2-Chloroethyl)ether	U	370	1.0	330	370	91
95-57-8	2-Chlorophenol	U	560	1.0	500	560	180
95-48-7	2-Methylphenol	U	670	1.0	600	670	220
108-60-1	2,2'-Oxybis(1-chloropropane)	U	370	1.0	330	370	100
98-86-2	Acetophenone	U	670	1.0	600	670	200
621-64-7	N-Nitroso-di-n-propylamine	U	370	1.0	330	370	93
65794-96-9	3&4-Methylphenol	U	670	1.0	600	670	210
67-72-1	Hexachloroethane	U	370	1.0	330	370	110
98-95-3	Nitrobenzene	~~U~~ UJ	370	1.0	330	370	100 CCH
78-59-1	Isophorone	U	370	1.0	330	370	84
88-75-5	2-Nitrophenol	U	670	1.0	600	670	190
105-67-9	2,4-Dimethylphenol	U	560	1.0	500	560	180
111-91-1	Bis(2-Chloroethoxy)methane	U	370	1.0	330	370	110
120-83-2	2,4-Dichlorophenol	U	560	1.0	500	560	170
106-47-8	4-Chloroaniline	U	560	1.0	500	560	130
105-60-2	Caprolactam	U	560	1.0	500	560	160
59-50-7	4-Chloro-3-Methylphenol	U	560	1.0	500	560	180
88-06-2	2,4,6-Trichlorophenol	U	560	1.0	500	560	170
95-95-4	2,4,5-Trichlorophenol	U	560	1.0	500	560	170
91-58-7	2-Chloronaphthalene	U	370	1.0	330	370	97
92-52-4	1,1'-Biphenyl	U	370	1.0	330	370	82
88-74-4	2-Nitroaniline	U	560	1.0	500	560	84
131-11-3	Dimethyl Phthalate	U	370	1.0	330	370	87
606-20-2	2,6-Dinitrotoluene	U	370	1.0	330	370	88
208-96-8	Acenaphthylene	U	370	1.0	330	370	78
99-09-2	3-Nitroaniline	U	560	1.0	500	560	100
83-32-9	Acenaphthene	U	370	1.0	330	370	73
51-28-5	2,4-Dinitrophenol	U	1300	1.0	1200	1300	420
132-64-9	Dibenzofuran	U	370	1.0	330	370	88
100-02-7	4-Nitrophenol	~~U~~ UJ	1300	1.0	1200	1300	340 CCH
121-14-2	2,4-Dinitrotoluene	U	370	1.0	330	370	95
84-66-2	Diethylphthalate	U	370	1.0	330	370	90
7005-72-3	4-Chlorophenyl-phenylether	U	370	1.0	330	370	87
100-01-6	4-Nitroaniline	U	560	1.0	500	560	150
534-52-1	4,6-Dinitro-2-Methylphenol	U	1300	1.0	1200	1300	380
86-30-6	N-Nitrosodiphenylamine	U	740	1.0	660	740	240
101-55-3	4-Bromophenyl-phenylether	U	370	1.0	330	370	95
1912-24-9	Atrazine	U	370	1.0	330	370	100
87-86-5	Pentachlorophenol	U	920	1.0	820	920	260
120-12-7	Anthracene	U	370	1.0	330	370	94
86-74-8	Carbazole	U	560	1.0	500	560	120

fW 1/31/09

KATAHDIN ANALYTICAL SERVICES
Report of Analytical Results

Client: CH2MHill
Project: TO-009 Lejeune
PO No:
Sample Date: 11/15/08
Received Date: 11/18/08
Extraction Date: 11/19/08
Analysis Date: 10-DEC-2008 17:36
Report Date: 12/15/2008
Matrix: SOIL
% Solids: 89.4

Lab ID: SB6649-5
Client ID: MR08-IS384-08D
SDG: TO9-4
Extracted by: CB
Extraction Method: SW846 3550
Analyst: JCG
Analysis Method: SW846 8270C
Lab Prep Batch: WG58248
Units: ug/Kgdrywt

CAS#	Compound	Flags	Results	DF	PQL	Adj.PQL	Adj.MDL	
84-74-2	Di-n-butylphthalate	U	370	1.0	330	370	110	
85-68-7	Butylbenzylphthalate	~~U~~ UJ	370	1.0	330	370	100	CCH
91-94-1	3,3'-Dichlorobenzidine	U	560	1.0	500	560	130	
218-01-9	Chrysene	U	370	1.0	330	370	110	
117-81-7	bis(2-Ethylhexyl)phthalate	~~U~~ UJ	370	1.0	330	370	110	CCH
117-84-0	Di-n-octylphthalate	~~U~~ UJ	370	1.0	330	370	240	CCH
367-12-4	2-Fluorophenol		80%					
13127-88-3	Phenol-D6		86%					
4165-60-0	Nitrobenzene-D5		84%					
321-60-8	2-Fluorobiphenyl		82%					
118-79-6	2,4,6-Tribromophenol		82%					
1718-51-0	Terphenyl-D14		108%					

lw 1/13/09

7

KATAHDIN ANALYTICAL SERVICES
Report of Analytical Results

Client: CH2MHill
Project: TO-009 Lejeune
PO No:
Sample Date: 11/15/08
Received Date: 11/18/08
Extraction Date: 11/19/08
Analysis Date: 10-DEC-2008 18:18
Report Date: 12/15/2008
Matrix: SOIL
% Solids: 90.2

Lab ID: SB6649-7
Client ID: MR08-IS383-08D
SDG: TO9-4
Extracted by: CB
Extraction Method: SW846 3550
Analyst: JCG
Analysis Method: SW846 8270C
Lab Prep Batch: WG58248
Units: ug/Kgdrywt

CAS#	Compound	Flags	Results	DF	PQL	Adj.PQL	Adj.MDL	
100-52-7	Benzaldehyde	U	550	1.0	500	550	130	
108-95-2	Phenol	U	550	1.0	500	550	170	
111-44-4	Bis(2-Chloroethyl)ether	U	360	1.0	330	360	90	
95-57-8	2-Chlorophenol	U	550	1.0	500	550	180	
95-48-7	2-Methylphenol	U	660	1.0	600	660	220	
108-60-1	2,2'-Oxybis(1-chloropropane)	U	360	1.0	330	360	99	
98-86-2	Acetophenone	U	660	1.0	600	660	200	
621-64-7	N-Nitroso-di-n-propylamine	U	360	1.0	330	360	92	
65794-96-9	3&4-Methylphenol	U	660	1.0	600	660	210	
67-72-1	Hexachloroethane	U	360	1.0	330	360	110	
98-95-3	Nitrobenzene	~~U~~ UJ	360	1.0	330	360	100	CCH
78-59-1	Isophorone	U	360	1.0	330	360	83	
88-75-5	2-Nitrophenol	U	660	1.0	600	660	180	
105-67-9	2,4-Dimethylphenol	U	550	1.0	500	550	180	
111-91-1	Bis(2-Chloroethoxy)methane	U	360	1.0	330	360	110	
120-83-2	2,4-Dichlorophenol	U	550	1.0	500	550	170	
106-47-8	4-Chloroaniline	U	550	1.0	500	550	130	
105-60-2	Caprolactam	U	550	1.0	500	550	160	
59-50-7	4-Chloro-3-Methylphenol	U	550	1.0	500	550	180	
88-06-2	2,4,6-Trichlorophenol	U	550	1.0	500	550	170	
95-95-4	2,4,5-Trichlorophenol	U	550	1.0	500	550	170	
91-58-7	2-Chloronaphthalene	U	360	1.0	330	360	96	
92-52-4	1,1'-Biphenyl	U	360	1.0	330	360	81	
88-74-4	2-Nitroaniline	U	550	1.0	500	550	83	
131-11-3	Dimethyl Phthalate	U	360	1.0	330	360	86	
606-20-2	2,6-Dinitrotoluene	U	360	1.0	330	360	88	
208-96-8	Acenaphthylene	U	360	1.0	330	360	78	
99-09-2	3-Nitroaniline	U	550	1.0	500	550	100	
83-32-9	Acenaphthene	U	360	1.0	330	360	72	
51-28-5	2,4-Dinitrophenol	U	1300	1.0	1200	1300	420	
132-64-9	Dibenzofuran	U	360	1.0	330	360	88	
100-02-7	4-Nitrophenol	~~U~~ UJ	1300	1.0	1200	1300	340	CCH
121-14-2	2,4-Dinitrotoluene	U	360	1.0	330	360	94	
84-66-2	Diethylphthalate	U	360	1.0	330	360	89	
7005-72-3	4-Chlorophenyl-phenylether	U	360	1.0	330	360	86	
100-01-6	4-Nitroaniline	U	550	1.0	500	550	150	
534-52-1	4,6-Dinitro-2-Methylphenol	U	1300	1.0	1200	1300	370	
86-30-6	N-Nitrosodiphenylamine	U	730	1.0	660	730	240	
101-55-3	4-Bromophenyl-phenylether	U	360	1.0	330	360	94	
1912-24-9	Atrazine	U	360	1.0	330	360	100	
87-86-5	Pentachlorophenol	U	910	1.0	820	910	260	
120-12-7	Anthracene	U	360	1.0	330	360	93	
86-74-8	Carbazole	U	550	1.0	500	550	120	

lw
11/31/09

7

KATAHDIN ANALYTICAL SERVICES
Report of Analytical Results

Client: CH2MHill
Project: TO-009 Lejeune
PO No:
Sample Date: 11/15/08
Received Date: 11/18/08
Extraction Date: 11/19/08
Analysis Date: 10-DEC-2008 18:18
Report Date: 12/15/2008
Matrix: SOIL
% Solids: 90.2

Lab ID: SB6649-7
Client ID: MR08-IS383-08D
SDG: TO9-4
Extracted by: CB
Extraction Method: SW846 3550
Analyst: JCG
Analysis Method: SW846 8270C
Lab Prep Batch: WG58248
Units: ug/Kgdrywt

CAS#	Compound	Flags	Results	DF	PQL	Adj.PQL	Adj.MDL	
84-74-2	Di-n-butylphthalate	U	360	1.0	330	360	110	
85-68-7	Butylbenzylphthalate	~~U~~ UJ	360	1.0	330	360	100	CCH
91-94-1	3,3'-Dichlorobenzidine	U	550	1.0	500	550	130	
218-01-9	Chrysene	U	360	1.0	330	360	100	
117-81-7	bis(2-Ethylhexyl)phthalate	~~U~~ UJ	360	1.0	330	360	110	CCH
117-84-0	Di-n-octylphthalate	~~U~~ UJ	360	1.0	330	360	230	CCH
367-12-4	2-Fluorophenol		78%					
13127-88-3	Phenol-D6		85%					
4165-60-0	Nitrobenzene-D5		84%					
321-60-8	2-Fluorobiphenyl		82%					
118-79-6	2,4,6-Tribromophenol		81%					
1718-51-0	Terphenyl-D14		113%					

lw
11/31/09

8

KATAHDIN ANALYTICAL SERVICES
Report of Analytical Results

Client: CH2MHill
Project: TO-009 Lejeune
PO No:
Sample Date: 11/16/08
Received Date: 11/18/08
Extraction Date: 11/19/08
Analysis Date: 10-DEC-2008 19:00
Report Date: 12/15/2008
Matrix: SOIL
% Solids: 92.7

Lab ID: SB6649-9
Client ID: MR08-IS382-08D
SDG: TO9-4
Extracted by: CB
Extraction Method: SW846 3550
Analyst: JCG
Analysis Method: SW846 8270C
Lab Prep Batch: WG58248
Units: ug/Kgdrywt

CAS#	Compound	Flags	Results	DF	PQL	Adj.PQL	Adj.MDL	
100-52-7	Benzaldehyde	U	540	1.0	500	540	130	
108-95-2	Phenol	U	540	1.0	500	540	170	
111-44-4	Bis(2-Chloroethyl)ether	U	360	1.0	330	360	87	
95-57-8	2-Chlorophenol	U	540	1.0	500	540	180	
95-48-7	2-Methylphenol	U	650	1.0	600	650	220	
108-60-1	2,2'-Oxybis(1-chloropropane)	U	360	1.0	330	360	96	
98-86-2	Acetophenone	U	650	1.0	600	650	190	
621-64-7	N-Nitroso-di-n-propylamine	U	360	1.0	330	360	90	
65794-96-9	3&4-Methylphenol	U	650	1.0	600	650	200	
67-72-1	Hexachloroethane	U	360	1.0	330	360	100	
98-95-3	Nitrobenzene	~~U~~ UJ	360	1.0	330	360	98	CCH
78-59-1	Isophorone	U	360	1.0	330	360	81	
88-75-5	2-Nitrophenol	U	650	1.0	600	650	180	
105-67-9	2,4-Dimethylphenol	U	540	1.0	500	540	180	
111-91-1	Bis(2-Chloroethoxy)methane	U	360	1.0	330	360	100	
120-83-2	2,4-Dichlorophenol	U	540	1.0	500	540	160	
106-47-8	4-Chloroaniline	U	540	1.0	500	540	130	
105-60-2	Caprolactam	U	540	1.0	500	540	160	
59-50-7	4-Chloro-3-Methylphenol	U	540	1.0	500	540	180	
88-06-2	2,4,6-Trichlorophenol	U	540	1.0	500	540	170	
95-95-4	2,4,5-Trichlorophenol	U	540	1.0	500	540	170	
91-58-7	2-Chloronaphthalene	U	360	1.0	330	360	94	
92-52-4	1,1'-Biphenyl	U	360	1.0	330	360	79	
88-74-4	2-Nitroaniline	U	540	1.0	500	540	81	
131-11-3	Dimethyl Phthalate	U	360	1.0	330	360	84	
606-20-2	2,6-Dinitrotoluene	U	360	1.0	330	360	85	
208-96-8	Acenaphthylene	U	360	1.0	330	360	76	
99-09-2	3-Nitroaniline	U	540	1.0	500	540	100	
83-32-9	Acenaphthene	U	360	1.0	330	360	70	
51-28-5	2,4-Dinitrophenol	U	1300	1.0	1200	1300	410	
132-64-9	Dibenzofuran	U	360	1.0	330	360	85	
100-02-7	4-Nitrophenol	~~U~~ UJ	1300	1.0	1200	1300	330	CCH
121-14-2	2,4-Dinitrotoluene	U	360	1.0	330	360	92	
84-66-2	Diethylphthalate	U	360	1.0	330	360	86	
7005-72-3	4-Chlorophenyl-phenylether	U	360	1.0	330	360	84	
100-01-6	4-Nitroaniline	U	540	1.0	500	540	140	
534-52-1	4,6-Dinitro-2-Methylphenol	U	1300	1.0	1200	1300	360	
86-30-6	N-Nitrosodiphenylamine	U	710	1.0	660	710	240	
101-55-3	4-Bromophenyl-phenylether	U	360	1.0	330	360	92	
1912-24-9	Atrazine	U	360	1.0	330	360	98	
87-86-5	Pentachlorophenol	U	880	1.0	820	880	260	
120-12-7	Anthracene	U	360	1.0	330	360	91	
86-74-8	Carbazole	U	540	1.0	500	540	120	

MW
1/31/09

KATAHDIN ANALYTICAL SERVICES
Report of Analytical Results

Client: CH2MHill
Project: TO-009 Lejeune
PO No:
Sample Date: 11/16/08
Received Date: 11/18/08
Extraction Date: 11/19/08
Analysis Date: 10-DEC-2008 19:00
Report Date: 12/15/2008
Matrix: SOIL
% Solids: 92.7

Lab ID: SB6649-9
Client ID: MR08-IS382-08D
SDG: TO9-4
Extracted by: CB
Extraction Method: SW846 3550
Analyst: JCG
Analysis Method: SW846 8270C
Lab Prep Batch: WG58248
Units: ug/Kgdrywt

CAS#	Compound	Flags	Results	DF	PQL	Adj.PQL	Adj.MDL	
84-74-2	Di-n-butylphthalate	U	360	1.0	330	360	110	
85-68-7	Butylbenzylphthalate	~~U~~ UJ	360	1.0	330	360	100	CCH
91-94-1	3,3'-Dichlorobenzidine	U	540	1.0	500	540	120	
218-01-9	Chrysene	U	360	1.0	330	360	100	
117-81-7	bis(2-Ethylhexyl)phthalate	~~U~~ UJ	360	1.0	330	360	100	CCH
117-84-0	Di-n-octylphthalate	~~U~~ UJ	360	1.0	330	360	230	CCH
367-12-4	2-Fluorophenol		80%					
13127-88-3	Phenol-D6		86%					
4165-60-0	Nitrobenzene-D5		86%					
321-60-8	2-Fluorobiphenyl		86%					
118-79-6	2,4,6-Tribromophenol		80%					
1718-51-0	Terphenyl-D14		113%					

RW 1/31/09

9

KATAHDIN ANALYTICAL SERVICES
Report of Analytical Results

Client: CH2MHill
Project: TO-009 Lejeune
PO No:
Sample Date: 11/16/08
Received Date: 11/18/08
Extraction Date: 11/19/08
Analysis Date: 10-DEC-2008 19:43
Report Date: 12/15/2008
Matrix: SOIL
% Solids: 88.0

Lab ID: SB6649-11
Client ID: MR08-IS374-08D
SDG: TO9-4
Extracted by: CB
Extraction Method: SW846 3550
Analyst: JCG
Analysis Method: SW846 8270C
Lab Prep Batch: WG58248
Units: ug/Kgdrywt

CAS#	Compound	Flags	Results	DF	PQL	Adj.PQL	Adj.MDL	
100-52-7	Benzaldehyde	U	570	1.0	500	570	140	
108-95-2	Phenol	U	570	1.0	500	570	180	
111-44-4	Bis(2-Chloroethyl)ether	U	380	1.0	330	380	92	
95-57-8	2-Chlorophenol	U	570	1.0	500	570	190	
95-48-7	2-Methylphenol	U	680	1.0	600	680	230	
108-60-1	2,2'-Oxybis(1-chloropropane)	U	380	1.0	330	380	100	
98-86-2	Acetophenone	U	680	1.0	600	680	200	
621-64-7	N-Nitroso-di-n-propylamine	U	380	1.0	330	380	94	
65794-96-9	3&4-Methylphenol	U	680	1.0	600	680	210	
67-72-1	Hexachloroethane	U	380	1.0	330	380	110	
98-95-3	Nitrobenzene	~~U~~ UJ	380	1.0	330	380	100	CCH
78-59-1	Isophorone	U	380	1.0	330	380	85	
88-75-5	2-Nitrophenol	U	680	1.0	600	680	190	
105-67-9	2,4-Dimethylphenol	U	570	1.0	500	570	190	
111-91-1	Bis(2-Chloroethoxy)methane	U	380	1.0	330	380	110	
120-83-2	2,4-Dichlorophenol	U	570	1.0	500	570	170	
106-47-8	4-Chloroaniline	U	570	1.0	500	570	140	
105-60-2	Caprolactam	U	570	1.0	500	570	160	
59-50-7	4-Chloro-3-Methylphenol	U	570	1.0	500	570	190	
88-06-2	2,4,6-Trichlorophenol	U	570	1.0	500	570	180	
95-95-4	2,4,5-Trichlorophenol	U	570	1.0	500	570	180	
91-58-7	2-Chloronaphthalene	U	380	1.0	330	380	99	
92-52-4	1,1'-Biphenyl	U	380	1.0	330	380	83	
88-74-4	2-Nitroaniline	U	570	1.0	500	570	85	
131-11-3	Dimethyl Phthalate	U	380	1.0	330	380	89	
606-20-2	2,6-Dinitrotoluene	U	380	1.0	330	380	90	
208-96-8	Acenaphthylene	U	380	1.0	330	380	80	
99-09-2	3-Nitroaniline	U	570	1.0	500	570	110	
83-32-9	Acenaphthene	U	380	1.0	330	380	74	
51-28-5	2,4-Dinitrophenol	U	1400	1.0	1200	1400	430	
132-64-9	Dibenzofuran	U	380	1.0	330	380	90	
100-02-7	4-Nitrophenol	~~U~~ UJ	1400	1.0	1200	1400	350	CCH
121-14-2	2,4-Dinitrotoluene	U	380	1.0	330	380	97	
84-66-2	Diethylphthalate	U	380	1.0	330	380	91	
7005-72-3	4-Chlorophenyl-phenylether	U	380	1.0	330	380	89	
100-01-6	4-Nitroaniline	U	570	1.0	500	570	150	
534-52-1	4,6-Dinitro-2-Methylphenol	U	1400	1.0	1200	1400	380	
86-30-6	N-Nitrosodiphenylamine	U	750	1.0	660	750	250	
101-55-3	4-Bromophenyl-phenylether	U	380	1.0	330	380	97	
1912-24-9	Atrazine	U	380	1.0	330	380	100	
87-86-5	Pentachlorophenol	U	930	1.0	820	930	270	
120-12-7	Anthracene	U	380	1.0	330	380	95	
86-74-8	Carbazole	U	570	1.0	500	570	130	

LW 1/31/09

9

KATAHDIN ANALYTICAL SERVICES
Report of Analytical Results

Client: CH2MHill
Project: TO-009 Lejeune
PO No:
Sample Date: 11/16/08
Received Date: 11/18/08
Extraction Date: 11/19/08
Analysis Date: 10-DEC-2008 19:43
Report Date: 12/15/2008
Matrix: SOIL
% Solids: 88.0

Lab ID: SB6649-11
Client ID: MR08-IS374-08D
SDG: TO9-4
Extracted by: CB
Extraction Method: SW846 3550
Analyst: JCG
Analysis Method: SW846 8270C
Lab Prep Batch: WG58248
Units: ug/Kgdrywt

CAS#	Compound	Flags	Results	DF	PQL	Adj.PQL	Adj.MDL	
84-74-2	Di-n-butylphthalate	U	380	1.0	330	380	110	
85-68-7	Butylbenzylphthalate	~~U~~ UJ	380	1.0	330	380	100	CCH
91-94-1	3,3'-Dichlorobenzidine	U	570	1.0	500	570	130	
218-01-9	Chrysene	U	380	1.0	330	380	110	
117-81-7	bis(2-Ethylhexyl)phthalate	~~J~~ J	180	1.0	330	380	110	CCH
117-84-0	Di-n-octylphthalate	~~U~~ UJ	380	1.0	330	380	240	CCH
367-12-4	2-Fluorophenol		78%					
13127-88-3	Phenol-D6		84%					
4165-60-0	Nitrobenzene-D5		80%					
321-60-8	2-Fluorobiphenyl		83%					
118-79-6	2,4,6-Tribromophenol		81%					
1718-51-0	Terphenyl-D14		108%					

lw
1/3/09

10

KATAHDIN ANALYTICAL SERVICES
Report of Analytical Results

Client: CH2MHill
Project: TO-009 Lejeune
PO No:
Sample Date: 11/16/08
Received Date: 11/18/08
Extraction Date: 11/19/08
Analysis Date: 10-DEC-2008 20:25
Report Date: 12/15/2008
Matrix: SOIL
% Solids: 90.6

Lab ID: SB6649-13
Client ID: MR08-IS374D-08D
SDG: TO9-4
Extracted by: CB
Extraction Method: SW846 3550
Analyst: JCG
Analysis Method: SW846 8270C
Lab Prep Batch: WG58248
Units: ug/Kgdrywt

CAS#	Compound	Flags	Results	DF	PQL	Adj.PQL	Adj.MDL	
100-52-7	Benzaldehyde	U	550	1.0	500	550	130	
108-95-2	Phenol	U	550	1.0	500	550	170	
111-44-4	Bis(2-Chloroethyl)ether	U	360	1.0	330	360	89	
95-57-8	2-Chlorophenol	U	550	1.0	500	550	180	
95-48-7	2-Methylphenol	U	660	1.0	600	660	220	
108-60-1	2,2'-Oxybis(1-chloropropane)	U	360	1.0	330	360	98	
98-86-2	Acetophenone	U	660	1.0	600	660	200	
621-64-7	N-Nitroso-di-n-propylamine	U	360	1.0	330	360	92	
65794-96-9	3&4-Methylphenol	U	660	1.0	600	660	210	
67-72-1	Hexachloroethane	U	360	1.0	330	360	100	
98-95-3	Nitrobenzene	~~U~~ UJ	360	1.0	330	360	100	CLH
78-59-1	Isophorone	U	360	1.0	330	360	83	
88-75-5	2-Nitrophenol	U	660	1.0	600	660	180	
105-67-9	2,4-Dimethylphenol	U	550	1.0	500	550	180	
111-91-1	Bis(2-Chloroethoxy)methane	U	360	1.0	330	360	100	
120-83-2	2,4-Dichlorophenol	U	550	1.0	500	550	160	
106-47-8	4-Chloroaniline	U	550	1.0	500	550	130	
105-60-2	Caprolactam	U	550	1.0	500	550	160	
59-50-7	4-Chloro-3-Methylphenol	U	550	1.0	500	550	180	
88-06-2	2,4,6-Trichlorophenol	U	550	1.0	500	550	170	
95-95-4	2,4,5-Trichlorophenol	U	550	1.0	500	550	170	
91-58-7	2-Chloronaphthalene	U	360	1.0	330	360	96	
92-52-4	1,1'-Biphenyl	U	360	1.0	330	360	80	
88-74-4	2-Nitroaniline	U	550	1.0	500	550	83	
131-11-3	Dimethyl Phthalate	U	360	1.0	330	360	86	
606-20-2	2,6-Dinitrotoluene	U	360	1.0	330	360	87	
208-96-8	Acenaphthylene	U	360	1.0	330	360	77	
99-09-2	3-Nitroaniline	U	550	1.0	500	550	100	
83-32-9	Acenaphthene	U	360	1.0	330	360	72	
51-28-5	2,4-Dinitrophenol	U	1300	1.0	1200	1300	420	
132-64-9	Dibenzofuran	U	360	1.0	330	360	87	
100-02-7	4-Nitrophenol	~~U~~ UJ	1300	1.0	1200	1300	340	CLH
121-14-2	2,4-Dinitrotoluene	U	360	1.0	330	360	94	
84-66-2	Diethylphthalate	U	360	1.0	330	360	88	
7005-72-3	4-Chlorophenyl-phenylether	U	360	1.0	330	360	86	
100-01-6	4-Nitroaniline	U	550	1.0	500	550	150	
534-52-1	4,6-Dinitro-2-Methylphenol	U	1300	1.0	1200	1300	370	
86-30-6	N-Nitrosodiphenylamine	U	730	1.0	660	730	240	
101-55-3	4-Bromophenyl-phenylether	U	360	1.0	330	360	94	
1912-24-9	Atrazine	U	360	1.0	330	360	100	
87-86-5	Pentachlorophenol	U	900	1.0	820	900	260	
120-12-7	Anthracene	U	360	1.0	330	360	93	
86-74-8	Carbazole	U	550	1.0	500	550	120	

lW 1/31/09

10

KATAHDIN ANALYTICAL SERVICES
Report of Analytical Results

Client: CH2MHill
Project: TO-009 Lejeune
PO No:
Sample Date: 11/16/08
Received Date: 11/18/08
Extraction Date: 11/19/08
Analysis Date: 10-DEC-2008 20:25
Report Date: 12/15/2008
Matrix: SOIL
% Solids: 90.6

Lab ID: SB6649-13
Client ID: MR08-IS374D-08D
SDG: TO9-4
Extracted by: CB
Extraction Method: SW846 3550
Analyst: JCG
Analysis Method: SW846 8270C
Lab Prep Batch: WG58248
Units: ug/Kgdrywt

CAS#	Compound	Flags	Results	DF	PQL	Adj.PQL	Adj.MDL	
84-74-2	Di-n-butylphthalate	U	360	1.0	330	360	110	
85-68-7	Butylbenzylphthalate	~~U~~ UJ	360	1.0	330	360	100	CCH
91-94-1	3,3'-Dichlorobenzidine	U	550	1.0	500	550	120	
218-01-9	Chrysene	U	360	1.0	330	360	100	
117-81-7	bis(2-Ethylhexyl)phthalate	~~J~~ J	150	1.0	330	360	110	CCH
117-84-0	Di-n-octylphthalate	~~U~~ UJ	360	1.0	330	360	230	CCH
367-12-4	2-Fluorophenol		77%					
13127-88-3	Phenol-D6		80%					
4165-60-0	Nitrobenzene-D5		78%					
321-60-8	2-Fluorobiphenyl		76%					
118-79-6	2,4,6-Tribromophenol		77%					
1718-51-0	Terphenyl-D14		97%					

dlw
1/31/09

11

KATAHDIN ANALYTICAL SERVICES
Report of Analytical Results

Client: CH2MHill
Project: TO-009 Lejeune
PO No:
Sample Date: 11/16/08
Received Date: 11/18/08
Extraction Date: 11/19/08
Analysis Date: 11-DEC-2008 11:02
Report Date: 12/15/2008
Matrix: SOIL
% Solids: 84.6

Lab ID: SB6649-15
Client ID: MR08-IS375-08D
SDG: TO9-4
Extracted by: CB
Extraction Method: SW846 3550
Analyst: JLP
Analysis Method: SW846 8270C
Lab Prep Batch: WG58248
Units: ug/Kgdrywt

CAS#	Compound	Flags	Results	DF	PQL	Adj.PQL	Adj.MDL	
100-52-7	Benzaldehyde	U	590	1.0	500	590	140	
108-95-2	Phenol	~~U~~ UJ	590	1.0	500	590	180	CCH
111-44-4	Bis(2-Chloroethyl)ether	~~U~~ UJ	390	1.0	330	390	96	CCH
95-57-8	2-Chlorophenol	U	590	1.0	500	590	190	
95-48-7	2-Methylphenol	U	710	1.0	600	710	240	
108-60-1	2,2'-Oxybis(1-chloropropane)	U	390	1.0	330	390	100	
98-86-2	Acetophenone	U	710	1.0	600	710	210	
621-64-7	N-Nitroso-di-n-propylamine	U	390	1.0	330	390	98	
65794-96-9	3&4-Methylphenol	U	710	1.0	600	710	220	
67-72-1	Hexachloroethane	U	390	1.0	330	390	110	
98-95-3	Nitrobenzene	~~U~~ UJ	390	1.0	330	390	110	CCH
78-59-1	Isophorone	U	390	1.0	330	390	89	
88-75-5	2-Nitrophenol	U	710	1.0	600	710	200	
105-67-9	2,4-Dimethylphenol	U	590	1.0	500	590	200	
111-91-1	Bis(2-Chloroethoxy)methane	U	390	1.0	330	390	110	
120-83-2	2,4-Dichlorophenol	U	590	1.0	500	590	180	
106-47-8	4-Chloroaniline	U	590	1.0	500	590	140	
105-60-2	Caprolactam	U	590	1.0	500	590	170	
59-50-7	4-Chloro-3-Methylphenol	U	590	1.0	500	590	200	
88-06-2	2,4,6-Trichlorophenol	U	590	1.0	500	590	180	
95-95-4	2,4,5-Trichlorophenol	U	590	1.0	500	590	180	
91-58-7	2-Chloronaphthalene	U	390	1.0	330	390	100	
92-52-4	1,1'-Biphenyl	U	390	1.0	330	390	86	
88-74-4	2-Nitroaniline	U	590	1.0	500	590	89	
131-11-3	Dimethyl Phthalate	U	390	1.0	330	390	92	
606-20-2	2,6-Dinitrotoluene	U	390	1.0	330	390	93	
208-96-8	Acenaphthylene	U	390	1.0	330	390	83	
99-09-2	3-Nitroaniline	U	590	1.0	500	590	110	
83-32-9	Acenaphthene	U	390	1.0	330	390	77	
51-28-5	2,4-Dinitrophenol	U	1400	1.0	1200	1400	440	
132-64-9	Dibenzofuran	U	390	1.0	330	390	93	
100-02-7	4-Nitrophenol	~~U~~ UJ	1400	1.0	1200	1400	360	CCH
121-14-2	2,4-Dinitrotoluene	U	390	1.0	330	390	100	
84-66-2	Diethylphthalate	U	390	1.0	330	390	94	
7005-72-3	4-Chlorophenyl-phenylether	U	390	1.0	330	390	92	
100-01-6	4-Nitroaniline	U	590	1.0	500	590	160	
534-52-1	4,6-Dinitro-2-Methylphenol	U	1400	1.0	1200	1400	400	
86-30-6	N-Nitrosodiphenylamine	U	780	1.0	660	780	260	
101-55-3	4-Bromophenyl-phenylether	U	390	1.0	330	390	100	
1912-24-9	Atrazine	U	390	1.0	330	390	110	
87-86-5	Pentachlorophenol	U	970	1.0	820	970	280	
120-12-7	Anthracene	U	390	1.0	330	390	99	
86-74-8	Carbazole	U	590	1.0	500	590	130	

lw
1/31/09

11

KATAHDIN ANALYTICAL SERVICES
Report of Analytical Results

Client: CH2MHill
Project: TO-009 Lejeune
PO No:
Sample Date: 11/16/08
Received Date: 11/18/08
Extraction Date: 11/19/08
Analysis Date: 11-DEC-2008 11:02
Report Date: 12/15/2008
Matrix: SOIL
% Solids: 84.6

Lab ID: SB6649-15
Client ID: MR08-IS375-08D
SDG: TO9-4
Extracted by: CB
Extraction Method: SW846 3550
Analyst: JLP
Analysis Method: SW846 8270C
Lab Prep Batch: WG58248
Units: ug/Kgdrywt

CAS#	Compound	Flags	Results	DF	PQL	Adj.PQL	Adj.MDL	
84-74-2	Di-n-butylphthalate	U	390	1.0	330	390	120	
85-68-7	Butylbenzylphthalate	~~U~~ UJ	390	1.0	330	390	110	CCH
91-94-1	3,3'-Dichlorobenzidine	U	590	1.0	500	590	130	
218-01-9	Chrysene	U	390	1.0	330	390	110	
117-81-7	bis(2-Ethylhexyl)phthalate	~~U~~ UJ	390	1.0	330	390	120	CCH
117-84-0	Di-n-octylphthalate	~~U~~ UJ	390	1.0	330	390	250	CCH
367-12-4	2-Fluorophenol		80%					
13127-88-3	Phenol-D6		88%					
4165-60-0	Nitrobenzene-D5		88%					
321-60-8	2-Fluorobiphenyl		87%					
118-79-6	2,4,6-Tribromophenol		82%					
1718-51-0	Terphenyl-D14		120%					

LW
1/31/09

12

KATAHDIN ANALYTICAL SERVICES
Report of Analytical Results

Client: CH2MHill
Project: TO-009 Lejeune
PO No:
Sample Date: 11/16/08
Received Date: 11/18/08
Extraction Date: 11/19/08
Analysis Date: 11-DEC-2008 11:44
Report Date: 12/15/2008
Matrix: SOIL
% Solids: 91.1

Lab ID: SB6649-17
Client ID: MR08-IS376-08D
SDG: TO9-4
Extracted by: CB
Extraction Method: SW846 3550
Analyst: JLP
Analysis Method: SW846 8270C
Lab Prep Batch: WG58248
Units: ug/Kgdrywt

CAS#	Compound	Flags	Results	DF	PQL	Adj.PQL	Adj.MDL	
100-52-7	Benzaldehyde	U	550	1.0	500	550	130	
108-95-2	Phenol	~~U~~ UJ	550	1.0	500	550	170	CCH
111-44-4	Bis(2-Chloroethyl)ether	~~U~~ UJ	360	1.0	330	360	89	CCH
95-57-8	2-Chlorophenol	U	550	1.0	500	550	180	
95-48-7	2-Methylphenol	U	660	1.0	600	660	220	
108-60-1	2,2'-Oxybis(1-chloropropane)	U	360	1.0	330	360	98	
98-86-2	Acetophenone	U	660	1.0	600	660	200	
621-64-7	N-Nitroso-di-n-propylamine	U	360	1.0	330	360	91	
65794-96-9	3&4-Methylphenol	U	660	1.0	600	660	200	
67-72-1	Hexachloroethane	U	360	1.0	330	360	100	
98-95-3	Nitrobenzene	~~U~~ UJ,	360	1.0	330	360	100	CCH
78-59-1	Isophorone	U	360	1.0	330	360	82	
88-75-5	2-Nitrophenol	U	660	1.0	600	660	180	
105-67-9	2,4-Dimethylphenol	U	550	1.0	500	550	180	
111-91-1	Bis(2-Chloroethoxy)methane	U	360	1.0	330	360	100	
120-83-2	2,4-Dichlorophenol	U	550	1.0	500	550	160	
106-47-8	4-Chloroaniline	U	550	1.0	500	550	130	
105-60-2	Caprolactam	U	550	1.0	500	550	160	
59-50-7	4-Chloro-3-Methylphenol	U	550	1.0	500	550	180	
88-06-2	2,4,6-Trichlorophenol	U	550	1.0	500	550	170	
95-95-4	2,4,5-Trichlorophenol	U	550	1.0	500	550	170	
91-58-7	2-Chloronaphthalene	U	360	1.0	330	360	96	
92-52-4	1,1'-Biphenyl	U	360	1.0	330	360	80	
88-74-4	2-Nitroaniline	U	550	1.0	500	550	82	
131-11-3	Dimethyl Phthalate	U	360	1.0	330	360	86	
606-20-2	2,6-Dinitrotoluene	U	360	1.0	330	360	87	
208-96-8	Acenaphthylene	U	360	1.0	330	360	77	
99-09-2	3-Nitroaniline	U	550	1.0	500	550	100	
83-32-9	Acenaphthene	U	360	1.0	330	360	71	
51-28-5	2,4-Dinitrophenol	U	1300	1.0	1200	1300	410	
132-64-9	Dibenzofuran	U	360	1.0	330	360	87	
100-02-7	4-Nitrophenol	~~U~~ UJ	1300	1.0	1200	1300	340	CCH
121-14-2	2,4-Dinitrotoluene	U	360	1.0	330	360	93	
84-66-2	Diethylphthalate	U	360	1.0	330	360	88	
7005-72-3	4-Chlorophenyl-phenylether	U	360	1.0	330	360	86	
100-01-6	4-Nitroaniline	U	550	1.0	500	550	150	
534-52-1	4,6-Dinitro-2-Methylphenol	U	1300	1.0	1200	1300	370	
86-30-6	N-Nitrosodiphenylamine	U	720	1.0	660	720	240	
101-55-3	4-Bromophenyl-phenylether	U	360	1.0	330	360	93	
1912-24-9	Atrazine	U	360	1.0	330	360	100	
87-86-5	Pentachlorophenol	U	900	1.0	820	900	260	
120-12-7	Anthracene	U	360	1.0	330	360	92	
86-74-8	Carbazole	U	550	1.0	500	550	120	

lw
01/31/09

12

KATAHDIN ANALYTICAL SERVICES
Report of Analytical Results

Client: CH2MHill
Project: TO-009 Lejeune
PO No:
Sample Date: 11/16/08
Received Date: 11/18/08
Extraction Date: 11/19/08
Analysis Date: 11-DEC-2008 11:44
Report Date: 12/15/2008
Matrix: SOIL
% Solids: 91.1

Lab ID: SB6649-17
Client ID: MR08-IS376-08D
SDG: TO9-4
Extracted by: CB
Extraction Method: SW846 3550
Analyst: JLP
Analysis Method: SW846 8270C
Lab Prep Batch: WG58248
Units: ug/Kgdrywt

CAS#	Compound	Flags	Results	DF	PQL	Adj.PQL	Adj.MDL	
84-74-2	Di-n-butylphthalate	U	360	1.0	330	360	110	
85-68-7	Butylbenzylphthalate	~~U~~ UJ	360	1.0	330	360	100	CCH
91-94-1	3,3'-Dichlorobenzidine	U	550	1.0	500	550	120	
218-01-9	Chrysene	U	360	1.0	330	360	100	
117-81-7	bis(2-Ethylhexyl)phthalate	~~J~~ J	140	1.0	330	360	110	CCH
117-84-0	Di-n-octylphthalate	~~U~~ UJ	360	1.0	330	360	230	CCH
367-12-4	2-Fluorophenol		72%					
13127-88-3	Phenol-D6		76%					
4165-60-0	Nitrobenzene-D5		80%					
321-60-8	2-Fluorobiphenyl		74%					
118-79-6	2,4,6-Tribromophenol		66%					
1718-51-0	Terphenyl-D14		108%					

lw 1/3/09

13

KATAHDIN ANALYTICAL SERVICES
Report of Analytical Results

Client: CH2MHill
Project: TO-009 Lejeune
PO No:
Sample Date: 11/16/08
Received Date: 11/18/08
Extraction Date: 11/19/08
Analysis Date: 11-DEC-2008 13:08
Report Date: 12/15/2008
Matrix: SOIL
% Solids: 83.0

Lab ID: SB6649-19
Client ID: MR08-SS399-08D
SDG: TO9-4
Extracted by: CB
Extraction Method: SW846 3550
Analyst: JLP
Analysis Method: SW846 8270C
Lab Prep Batch: WG58248
Units: ug/Kgdrywt

CAS#	Compound	Flags	Results	DF	PQL	Adj.PQL	Adj.MDL	
100-52-7	Benzaldehyde	U	600	1.0	500	600	140	
108-95-2	Phenol	~~U~~ UJ	600	1.0	500	600	190	CCH
111-44-4	Bis(2-Chloroethyl)ether	~~U~~ UJ	400	1.0	330	400	98	CCH
95-57-8	2-Chlorophenol	U	600	1.0	500	600	200	
95-48-7	2-Methylphenol	U	720	1.0	600	720	240	
108-60-1	2,2'-Oxybis(1-chloropropane)	U	400	1.0	330	400	110	
98-86-2	Acetophenone	U	720	1.0	600	720	210	
621-64-7	N-Nitroso-di-n-propylamine	U	400	1.0	330	400	100	
65794-96-9	3&4-Methylphenol	U	720	1.0	600	720	220	
67-72-1	Hexachloroethane	U	400	1.0	330	400	120	
98-95-3	Nitrobenzene	~~U~~ UJ	400	1.0	330	400	110	CCH
78-59-1	Isophorone	U	400	1.0	330	400	90	
88-75-5	2-Nitrophenol	U	720	1.0	600	720	200	
105-67-9	2,4-Dimethylphenol	U	600	1.0	500	600	200	
111-91-1	Bis(2-Chloroethoxy)methane	U	400	1.0	330	400	120	
120-83-2	2,4-Dichlorophenol	U	600	1.0	500	600	180	
106-47-8	4-Chloroaniline	U	600	1.0	500	600	140	
105-60-2	Caprolactam	U	600	1.0	500	600	170	
59-50-7	4-Chloro-3-Methylphenol	U	600	1.0	500	600	200	
88-06-2	2,4,6-Trichlorophenol	U	600	1.0	500	600	190	
95-95-4	2,4,5-Trichlorophenol	U	600	1.0	500	600	190	
91-58-7	2-Chloronaphthalene	U	400	1.0	330	400	100	
92-52-4	1,1'-Biphenyl	U	400	1.0	330	400	88	
88-74-4	2-Nitroaniline	U	600	1.0	500	600	90	
131-11-3	Dimethyl Phthalate	U	400	1.0	330	400	94	
606-20-2	2,6-Dinitrotoluene	U	400	1.0	330	400	95	
208-96-8	Acenaphthylene	U	400	1.0	330	400	84	
99-09-2	3-Nitroaniline	U	600	1.0	500	600	110	
83-32-9	Acenaphthene	U	400	1.0	330	400	78	
51-28-5	2,4-Dinitrophenol	U	1400	1.0	1200	1400	450	
132-64-9	Dibenzofuran	U	400	1.0	330	400	95	
100-02-7	4-Nitrophenol	~~U~~ UJ	1400	1.0	1200	1400	370	CCH
121-14-2	2,4-Dinitrotoluene	U	400	1.0	330	400	100	
84-66-2	Diethylphthalate	U	400	1.0	330	400	96	
7005-72-3	4-Chlorophenyl-phenylether	U	400	1.0	330	400	94	
100-01-6	4-Nitroaniline	U	600	1.0	500	600	160	
534-52-1	4,6-Dinitro-2-Methylphenol	U	1400	1.0	1200	1400	410	
86-30-6	N-Nitrosodiphenylamine	U	800	1.0	660	800	260	
101-55-3	4-Bromophenyl-phenylether	U	400	1.0	330	400	100	
1912-24-9	Atrazine	U	400	1.0	330	400	110	
87-86-5	Pentachlorophenol	U	990	1.0	820	990	280	
120-12-7	Anthracene	U	400	1.0	330	400	100	
86-74-8	Carbazole	U	600	1.0	500	600	130	

QW 1/31/09

13

KATAHDIN ANALYTICAL SERVICES
Report of Analytical Results

Client: CH2MHill
Project: TO-009 Lejeune
PO No:
Sample Date: 11/16/08
Received Date: 11/18/08
Extraction Date: 11/19/08
Analysis Date: 11-DEC-2008 13:08
Report Date: 12/15/2008
Matrix: SOIL
% Solids: 83.0

Lab ID: SB6649-19
Client ID: MR08-SS399-08D
SDG: TO9-4
Extracted by: CB
Extraction Method: SW846 3550
Analyst: JLP
Analysis Method: SW846 8270C
Lab Prep Batch: WG58248
Units: ug/Kgdrywt

CAS#	Compound	Flags	Results	DF	PQL	Adj.PQL	Adj.MDL	
84-74-2	Di-n-butylphthalate	U	400	1.0	330	400	120	
85-68-7	Butylbenzylphthalate	~~U~~ UJ	400	1.0	330	400	110	CCH
91-94-1	3,3'-Dichlorobenzidine	U	600	1.0	500	600	140	
218-01-9	Chrysene	J	160	1.0	330	400	110	
117-81-7	bis(2-Ethylhexyl)phthalate	~~U~~ UJ	400	1.0	330	400	120	CCH
117-84-0	Di-n-octylphthalate	~~U~~ UJ	400	1.0	330	400	250	CCH
367-12-4	2-Fluorophenol		79%					
13127-88-3	Phenol-D6		86%					
4165-60-0	Nitrobenzene-D5		81%					
321-60-8	2-Fluorobiphenyl		86%					
118-79-6	2,4,6-Tribromophenol		98%					
1718-51-0	Terphenyl-D14		108%					

1/31/09

14

KATAHDIN ANALYTICAL SERVICES
Report of Analytical Results

Client: CH2MHill
Project: TO-009 Lejeune
PO No:
Sample Date: 11/16/08
Received Date: 11/18/08
Extraction Date: 11/19/08
Analysis Date: 11-DEC-2008 14:32
Report Date: 12/15/2008
Matrix: SOIL
% Solids: 82.9

Lab ID: SB6649-21
Client ID: MR08-SS398-08D
SDG: TO9-4
Extracted by: CB
Extraction Method: SW846 3550
Analyst: JLP
Analysis Method: SW846 8270C
Lab Prep Batch: WG58248
Units: ug/Kgdrywt

CAS#	Compound	Flags	Results	DF	PQL	Adj.PQL	Adj.MDL	
100-52-7	Benzaldehyde	U	600	1.0	500	600	140	
108-95-2	Phenol	~~U~~ UJ	600	1.0	500	600	190	CCH
111-44-4	Bis(2-Chloroethyl)ether	~~U~~ UJ	400	1.0	330	400	98	CCH
95-57-8	2-Chlorophenol	U	600	1.0	500	600	200	
95-48-7	2-Methylphenol	U	720	1.0	600	720	240	
108-60-1	2,2'-Oxybis(1-chloropropane)	U	400	1.0	330	400	110	
98-86-2	Acetophenone	U	720	1.0	600	720	210	
621-64-7	N-Nitroso-di-n-propylamine	U	400	1.0	330	400	100	
65794-96-9	3&4-Methylphenol	U	720	1.0	600	720	220	
67-72-1	Hexachloroethane	U	400	1.0	330	400	120	
98-95-3	Nitrobenzene	~~U~~ UJ	400	1.0	330	400	110	CCH
78-59-1	Isophorone	U	400	1.0	330	400	90	
88-75-5	2-Nitrophenol	U	720	1.0	600	720	200	
105-67-9	2,4-Dimethylphenol	U	600	1.0	500	600	200	
111-91-1	Bis(2-Chloroethoxy)methane	U	400	1.0	330	400	120	
120-83-2	2,4-Dichlorophenol	U	600	1.0	500	600	180	
106-47-8	4-Chloroaniline	U	600	1.0	500	600	140	
105-60-2	Caprolactam	U	600	1.0	500	600	170	
59-50-7	4-Chloro-3-Methylphenol	U	600	1.0	500	600	200	
88-06-2	2,4,6-Trichlorophenol	U	600	1.0	500	600	190	
95-95-4	2,4,5-Trichlorophenol	U	600	1.0	500	600	190	
91-58-7	2-Chloronaphthalene	U	400	1.0	330	400	100	
92-52-4	1,1'-Biphenyl	U	400	1.0	330	400	88	
88-74-4	2-Nitroaniline	U	600	1.0	500	600	90	
131-11-3	Dimethyl Phthalate	U	400	1.0	330	400	94	
606-20-2	2,6-Dinitrotoluene	U	400	1.0	330	400	95	
208-96-8	Acenaphthylene	U	400	1.0	330	400	84	
99-09-2	3-Nitroaniline	U	600	1.0	500	600	110	
83-32-9	Acenaphthene	U	400	1.0	330	400	78	
51-28-5	2,4-Dinitrophenol	U	1400	1.0	1200	1400	450	
132-64-9	Dibenzofuran	U	400	1.0	330	400	95	
100-02-7	4-Nitrophenol	~~U~~ UJ	1400	1.0	1200	1400	370	CCH
121-14-2	2,4-Dinitrotoluene	U	400	1.0	330	400	100	
84-66-2	Diethylphthalate	U	400	1.0	330	400	96	
7005-72-3	4-Chlorophenyl-phenylether	U	400	1.0	330	400	94	
100-01-6	4-Nitroaniline	U	600	1.0	500	600	160	
534-52-1	4,6-Dinitro-2-Methylphenol	U	1400	1.0	1200	1400	410	
86-30-6	N-Nitrosodiphenylamine	U	800	1.0	660	800	260	
101-55-3	4-Bromophenyl-phenylether	U	400	1.0	330	400	100	
1912-24-9	Atrazine	U	400	1.0	330	400	110	
87-86-5	Pentachlorophenol	U	990	1.0	820	990	290	
120-12-7	Anthracene	U	400	1.0	330	400	100	
86-74-8	Carbazole	U	600	1.0	500	600	130	

lw 1131/09

KATAHDIN ANALYTICAL SERVICES
Report of Analytical Results

14

Client: CH2MHill
Project: TO-009 Lejeune
PO No:
Sample Date: 11/16/08
Received Date: 11/18/08
Extraction Date: 11/19/08
Analysis Date: 11-DEC-2008 14:32
Report Date: 12/15/2008
Matrix: SOIL
% Solids: 82.9

Lab ID: SB6649-21
Client ID: MR08-SS398-08D
SDG: TO9-4
Extracted by: CB
Extraction Method: SW846 3550
Analyst: JLP
Analysis Method: SW846 8270C
Lab Prep Batch: WG58248
Units: ug/Kgdrywt

CAS#	Compound	Flags	Results	DF	PQL	Adj.PQL	Adj.MDL	
84-74-2	Di-n-butylphthalate	U	400	1.0	330	400	120	
85-68-7	Butylbenzylphthalate	~~U~~ UJ	400	1.0	330	400	110	CCH
91-94-1	3,3'-Dichlorobenzidine	U	600	1.0	500	600	140	
218-01-9	Chrysene		450	1.0	330	400	110	
117-81-7	bis(2-Ethylhexyl)phthalate	~~J~~ J	200	1.0	330	400	120	CCH
117-84-0	Di-n-octylphthalate	~~U~~ UJ	400	1.0	330	400	250	CCH
367-12-4	2-Fluorophenol		81%					
13127-88-3	Phenol-D6		87%					
4165-60-0	Nitrobenzene-D5		84%					
321-60-8	2-Fluorobiphenyl		88%					
118-79-6	2,4,6-Tribromophenol		98%					
1718-51-0	Terphenyl-D14		115%					

lcw
11/31/09

15

KATAHDIN ANALYTICAL SERVICES
Report of Analytical Results

Client: CH2MHill
Project: TO-009 Lejeune
PO No:
Sample Date: 11/16/08
Received Date: 11/18/08
Extraction Date: 11/19/08
Analysis Date: 11-DEC-2008 12:26
Report Date: 12/15/2008
Matrix: SOIL
% Solids: 88.2

Lab ID: SB6649-23
Client ID: MR08-SS397-08D
SDG: TO9-4
Extracted by: CB
Extraction Method: SW846 3550
Analyst: JLP
Analysis Method: SW846 8270C
Lab Prep Batch: WG58248
Units: ug/Kgdrywt

CAS#	Compound	Flags	Results	DF	PQL	Adj.PQL	Adj.MDL	
100-52-7	Benzaldehyde	U	570	1.0	500	570	140	
108-95-2	Phenol	~~U~~ UJ	570	1.0	500	570	180	CCH
111-44-4	Bis(2-Chloroethyl)ether	~~U~~ UJ	370	1.0	330	370	92	CCH
95-57-8	2-Chlorophenol	U	570	1.0	500	570	180	
95-48-7	2-Methylphenol	U	680	1.0	600	680	230	
108-60-1	2,2'-Oxybis(1-chloropropane)	U	370	1.0	330	370	100	
98-86-2	Acetophenone	U	680	1.0	600	680	200	
621-64-7	N-Nitroso-di-n-propylamine	U	370	1.0	330	370	94	
65794-96-9	3&4-Methylphenol	U	680	1.0	600	680	210	
67-72-1	Hexachloroethane	U	370	1.0	330	370	110	
98-95-3	Nitrobenzene	~~U~~ UJ	370	1.0	330	370	100	CCH
78-59-1	Isophorone	U	370	1.0	330	370	85	
88-75-5	2-Nitrophenol	U	680	1.0	600	680	190	
105-67-9	2,4-Dimethylphenol	U	570	1.0	500	570	190	
111-91-1	Bis(2-Chloroethoxy)methane	U	370	1.0	330	370	110	
120-83-2	2,4-Dichlorophenol	U	570	1.0	500	570	170	
106-47-8	4-Chloroaniline	U	570	1.0	500	570	130	
105-60-2	Caprolactam	U	570	1.0	500	570	160	
59-50-7	4-Chloro-3-Methylphenol	U	570	1.0	500	570	190	
88-06-2	2,4,6-Trichlorophenol	U	570	1.0	500	570	180	
95-95-4	2,4,5-Trichlorophenol	U	570	1.0	500	570	180	
91-58-7	2-Chloronaphthalene	U	370	1.0	330	370	98	
92-52-4	1,1'-Biphenyl	U	370	1.0	330	370	83	
88-74-4	2-Nitroaniline	U	570	1.0	500	570	85	
131-11-3	Dimethyl Phthalate	U	370	1.0	330	370	88	
606-20-2	2,6-Dinitrotoluene	U	370	1.0	330	370	90	
208-96-8	Acenaphthylene	U	370	1.0	330	370	79	
99-09-2	3-Nitroaniline	U	570	1.0	500	570	110	
83-32-9	Acenaphthene	U	370	1.0	330	370	74	
51-28-5	2,4-Dinitrophenol	U	1400	1.0	1200	1400	430	
132-64-9	Dibenzofuran	U	370	1.0	330	370	90	
100-02-7	4-Nitrophenol	~~U~~ UJ	1400	1.0	1200	1400	350	CCH
121-14-2	2,4-Dinitrotoluene	U	370	1.0	330	370	96	
84-66-2	Diethylphthalate	U	370	1.0	330	370	91	
7005-72-3	4-Chlorophenyl-phenylether	U	370	1.0	330	370	88	
100-01-6	4-Nitroaniline	U	570	1.0	500	570	150	
534-52-1	4,6-Dinitro-2-Methylphenol	U	1400	1.0	1200	1400	380	
86-30-6	N-Nitrosodiphenylamine	U	750	1.0	660	750	250	
101-55-3	4-Bromophenyl-phenylether	U	370	1.0	330	370	96	
1912-24-9	Atrazine	U	370	1.0	330	370	100	
87-86-5	Pentachlorophenol	U	930	1.0	820	930	270	
120-12-7	Anthracene	U	370	1.0	330	370	95	
86-74-8	Carbazole	U	570	1.0	500	570	120	

RW
1/31/09

15

KATAHDIN ANALYTICAL SERVICES
Report of Analytical Results

Client: CH2MHill
Project: TO-009 Lejeune
PO No:
Sample Date: 11/16/08
Received Date: 11/18/08
Extraction Date: 11/19/08
Analysis Date: 11-DEC-2008 12:26
Report Date: 12/15/2008
Matrix: SOIL
% Solids: 88.2

Lab ID: SB6649-23
Client ID: MR08-SS397-08D
SDG: TO9-4
Extracted by: CB
Extraction Method: SW846 3550
Analyst: JLP
Analysis Method: SW846 8270C
Lab Prep Batch: WG58248
Units: ug/Kgdrywt

CAS#	Compound	Flags	Results	DF	PQL	Adj.PQL	Adj.MDL	
84-74-2	Di-n-butylphthalate	U	370	1.0	330	370	110	
85-68-7	Butylbenzylphthalate	~~U~~ UJ	370	1.0	330	370	100	CCH
91-94-1	3,3'-Dichlorobenzidine	U	570	1.0	500	570	130	
218-01-9	Chrysene	U	370	1.0	330	370	110	
117-81-7	bis(2-Ethylhexyl)phthalate	~~U~~ UJ	370	1.0	330	370	110	CCH
117-84-0	Di-n-octylphthalate	~~U~~ UJ	370	1.0	330	370	240	CCH
367-12-4	2-Fluorophenol		79%					
13127-88-3	Phenol-D6		83%					
4165-60-0	Nitrobenzene-D5		86%					
321-60-8	2-Fluorobiphenyl		80%					
118-79-6	2,4,6-Tribromophenol		84%					
1718-51-0	Terphenyl-D14		96%					

lw 1/31/09

16

KATAHDIN ANALYTICAL SERVICES
Report of Analytical Results

Client: CH2MHill
Project: TO-009 Lejeune
PO No:
Sample Date: 11/16/08
Received Date: 11/18/08
Extraction Date: 11/19/08
Analysis Date: 11-DEC-2008 13:50
Report Date: 12/15/2008
Matrix: SOIL
% Solids: 86.6

Lab ID: SB6649-25
Client ID: MR08-SS396-08D
SDG: TO9-4
Extracted by: CB
Extraction Method: SW846 3550
Analyst: JLP
Analysis Method: SW846 8270C
Lab Prep Batch: WG58248
Units: ug/Kgdrywt

CAS#	Compound	Flags	Results	DF	PQL	Adj.PQL	Adj.MDL	
100-52-7	Benzaldehyde	U	580	1.0	500	580	140	
108-95-2	Phenol	~~U~~ UJ	580	1.0	500	580	180	CCH
111-44-4	Bis(2-Chloroethyl)ether	~~U~~ UJ	380	1.0	330	380	94	CCH
95-57-8	2-Chlorophenol	U	580	1.0	500	580	190	
95-48-7	2-Methylphenol	U	690	1.0	600	690	230	
108-60-1	2,2'-Oxybis(1-chloropropane)	U	380	1.0	330	380	100	
98-86-2	Acetophenone	U	690	1.0	600	690	200	
621-64-7	N-Nitroso-di-n-propylamine	U	380	1.0	330	380	96	
65794-96-9	3&4-Methylphenol	U	690	1.0	600	690	220	
67-72-1	Hexachloroethane	U	380	1.0	330	380	110	
98-95-3	Nitrobenzene	~~U~~ UJ	380	1.0	330	380	100	CCH
78-59-1	Isophorone	U	380	1.0	330	380	87	
88-75-5	2-Nitrophenol	U	690	1.0	600	690	190	
105-67-9	2,4-Dimethylphenol	U	580	1.0	500	580	190	
111-91-1	Bis(2-Chloroethoxy)methane	U	380	1.0	330	380	110	
120-83-2	2,4-Dichlorophenol	U	580	1.0	500	580	170	
106-47-8	4-Chloroaniline	U	580	1.0	500	580	140	
105-60-2	Caprolactam	U	580	1.0	500	580	170	
59-50-7	4-Chloro-3-Methylphenol	U	580	1.0	500	580	190	
88-06-2	2,4,6-Trichlorophenol	U	580	1.0	500	580	180	
95-95-4	2,4,5-Trichlorophenol	U	580	1.0	500	580	180	
91-58-7	2-Chloronaphthalene	U	380	1.0	330	380	100	
92-52-4	1,1'-Biphenyl	U	380	1.0	330	380	84	
88-74-4	2-Nitroaniline	U	580	1.0	500	580	87	
131-11-3	Dimethyl Phthalate	U	380	1.0	330	380	90	
606-20-2	2,6-Dinitrotoluene	U	380	1.0	330	380	91	
208-96-8	Acenaphthylene	U	380	1.0	330	380	81	
99-09-2	3-Nitroaniline	U	580	1.0	500	580	110	
83-32-9	Acenaphthene	U	380	1.0	330	380	75	
51-28-5	2,4-Dinitrophenol	U	1400	1.0	1200	1400	440	
132-64-9	Dibenzofuran	U	380	1.0	330	380	91	
100-02-7	4-Nitrophenol	~~U~~ UJ	1400	1.0	1200	1400	360	CCH
121-14-2	2,4-Dinitrotoluene	U	380	1.0	330	380	98	
84-66-2	Diethylphthalate	U	380	1.0	330	380	92	
7005-72-3	4-Chlorophenyl-phenylether	U	380	1.0	330	380	90	
100-01-6	4-Nitroaniline	U	580	1.0	500	580	150	
534-52-1	4,6-Dinitro-2-Methylphenol	U	1400	1.0	1200	1400	390	
86-30-6	N-Nitrosodiphenylamine	U	760	1.0	660	760	250	
101-55-3	4-Bromophenyl-phenylether	U	380	1.0	330	380	98	
1912-24-9	Atrazine	U	380	1.0	330	380	100	
87-86-5	Pentachlorophenol	U	950	1.0	820	950	270	
120-12-7	Anthracene	U	380	1.0	330	380	97	
86-74-8	Carbazole	U	580	1.0	500	580	130	

lw
1/31/09

16

KATAHDIN ANALYTICAL SERVICES
Report of Analytical Results

Client: CH2MHill
Project: TO-009 Lejeune
PO No:
Sample Date: 11/16/08
Received Date: 11/18/08
Extraction Date: 11/19/08
Analysis Date: 11-DEC-2008 13:50
Report Date: 12/15/2008
Matrix: SOIL
% Solids: 86.6

Lab ID: SB6649-25
Client ID: MR08-SS396-08D
SDG: TO9-4
Extracted by: CB
Extraction Method: SW846 3550
Analyst: JLP
Analysis Method: SW846 8270C
Lab Prep Batch: WG58248
Units: ug/Kgdrywt

CAS#	Compound	Flags	Results	DF	PQL	Adj.PQL	Adj.MDL	
84-74-2	Di-n-butylphthalate	U	380	1.0	330	380	120	
85-68-7	Butylbenzylphthalate	~~U~~ UJ	380	1.0	330	380	110	CCH
91-94-1	3,3'-Dichlorobenzidine	U	580	1.0	500	580	130	
218-01-9	Chrysene	U	380	1.0	330	380	110	
117-81-7	bis(2-Ethylhexyl)phthalate	~~U~~ UJ	380	1.0	330	380	110	CCH
117-84-0	Di-n-octylphthalate	~~U~~ UJ	380	1.0	330	380	240	CCH
367-12-4	2-Fluorophenol		82%					
13127-88-3	Phenol-D6		86%					
4165-60-0	Nitrobenzene-D5		83%					
321-60-8	2-Fluorobiphenyl		80%					
118-79-6	2,4,6-Tribromophenol		94%					
1718-51-0	Terphenyl-D14		112%					

QW
1/3/09

17

KATAHDIN ANALYTICAL SERVICES
Report of Analytical Results

Client: CH2MHill
Project: TO-009 Lejeune
PO No:
Sample Date: 11/17/08
Received Date: 11/20/08
Extraction Date: 11/21/08
Analysis Date: 11-DEC-2008 20:10
Report Date: 12/13/2008
Matrix: SOIL
% Solids: 95.4

Lab ID: SB6714-1
Client ID: MR08-IS377-08D
SDG: TO9-4
Extracted by: AC
Extraction Method: SW846 3550
Analyst: JCG
Analysis Method: SW846 8270C
Lab Prep Batch: WG58343
Units: ug/Kgdrywt

CAS#	Compound	Flags	Results	DF	PQL	Adj.PQL	Adj.MDL
100-52-7	Benzaldehyde	U	520	1.0	500	520	120
108-95-2	Phenol	U	520	1.0	500	520	160
111-44-4	Bis(2-Chloroethyl)ether	U	350	1.0	330	350	85
95-57-8	2-Chlorophenol	U	520	1.0	500	520	170
95-48-7	2-Methylphenol	U	630	1.0	600	630	210
108-60-1	2,2'-Oxybis(1-chloropropane)	U	350	1.0	330	350	93
98-86-2	Acetophenone	U	630	1.0	600	630	190
621-64-7	N-Nitroso-di-n-propylamine	U	350	1.0	330	350	87
65794-96-9	3&4-Methylphenol	U	630	1.0	600	630	200
67-72-1	Hexachloroethane	U	350	1.0	330	350	100
98-95-3	Nitrobenzene	~~U~~ UJ	350	1.0	330	350	95 CCH
78-59-1	Isophorone	U	350	1.0	330	350	79
88-75-5	2-Nitrophenol	U	630	1.0	600	630	180
105-67-9	2,4-Dimethylphenol	U	520	1.0	500	520	170
111-91-1	Bis(2-Chloroethoxy)methane	U	350	1.0	330	350	100
120-83-2	2,4-Dichlorophenol	U	520	1.0	500	520	160
106-47-8	4-Chloroaniline	U	520	1.0	500	520	120
105-60-2	Caprolactam	U	520	1.0	500	520	150
59-50-7	4-Chloro-3-Methylphenol	U	520	1.0	500	520	170
88-06-2	2,4,6-Trichlorophenol	U	520	1.0	500	520	160
95-95-4	2,4,5-Trichlorophenol	U	520	1.0	500	520	160
91-58-7	2-Chloronaphthalene	U	350	1.0	330	350	91
92-52-4	1,1'-Biphenyl	U	350	1.0	330	350	76
88-74-4	2-Nitroaniline	U	520	1.0	500	520	79
131-11-3	Dimethyl Phthalate	U	350	1.0	330	350	82
606-20-2	2,6-Dinitrotoluene	U	350	1.0	330	350	83
208-96-8	Acenaphthylene	U	350	1.0	330	350	73
99-09-2	3-Nitroaniline	U	520	1.0	500	520	98
83-32-9	Acenaphthene	U	350	1.0	330	350	68
51-28-5	2,4-Dinitrophenol	U	1200	1.0	1200	1200	400
132-64-9	Dibenzofuran	U	350	1.0	330	350	83
100-02-7	4-Nitrophenol	U	1200	1.0	1200	1200	320
121-14-2	2,4-Dinitrotoluene	U	350	1.0	330	350	89
84-66-2	Diethylphthalate	U	350	1.0	330	350	84
7005-72-3	4-Chlorophenyl-phenylether	U	350	1.0	330	350	82
100-01-6	4-Nitroaniline	U	520	1.0	500	520	140
534-52-1	4,6-Dinitro-2-Methylphenol	U	1200	1.0	1200	1200	350
86-30-6	N-Nitrosodiphenylamine	U	690	1.0	660	690	230
101-55-3	4-Bromophenyl-phenylether	U	350	1.0	330	350	89
1912-24-9	Atrazine	U	350	1.0	330	350	95
87-86-5	Pentachlorophenol	U	860	1.0	820	860	250
120-12-7	Anthracene	U	350	1.0	330	350	88
86-74-8	Carbazole	U	520	1.0	500	520	120

lew 12/31/09

KATAHDIN ANALYTICAL SERVICES
Report of Analytical Results

Client: CH2MHill
Project: TO-009 Lejeune
PO No:
Sample Date: 11/17/08
Received Date: 11/20/08
Extraction Date: 11/21/08
Analysis Date: 11-DEC-2008 20:10
Report Date: 12/13/2008
Matrix: SOIL
% Solids: 95.4

Lab ID: SB6714-1
Client ID: MR08-IS377-08D
SDG: TO9-4
Extracted by: AC
Extraction Method: SW846 3550
Analyst: JCG
Analysis Method: SW846 8270C
Lab Prep Batch: WG58343
Units: ug/Kgdrywt

CAS#	Compound	Flags	Results	DF	PQL	Adj.PQL	Adj.MDL	
84-74-2	Di-n-butylphthalate	U	350	1.0	330	350	100	
85-68-7	Butylbenzylphthalate	~~U~~ UJ	350	1.0	330	350	98	CCH
91-94-1	3,3'-Dichlorobenzidine	U	520	1.0	500	520	120	
218-01-9	Chrysene	U	350	1.0	330	350	100	
117-81-7	bis(2-Ethylhexyl)phthalate	J	460	1.0	330	350	100	BSH
117-84-0	Di-n-octylphthalate	~~U~~ UJ	350	1.0	330	350	220	CCH
367-12-4	2-Fluorophenol		77%					
13127-88-3	Phenol-D6		84%					
4165-60-0	Nitrobenzene-D5		84%					
321-60-8	2-Fluorobiphenyl		84%					
118-79-6	2,4,6-Tribromophenol		81%					
1718-51-0	Terphenyl-D14		112%					

lw
1/31/09

18

KATAHDIN ANALYTICAL SERVICES
Report of Analytical Results

Client: CH2MHill
Project: TO-009 Lejeune
PO No:
Sample Date: 11/17/08
Received Date: 11/20/08
Extraction Date: 11/21/08
Analysis Date: 11-DEC-2008 20:52
Report Date: 12/13/2008
Matrix: SOIL
% Solids: 95.5

Lab ID: SB6714-3
Client ID: MR08-IS377D-08D
SDG: TO9-4
Extracted by: AC
Extraction Method: SW846 3550
Analyst: JCG
Analysis Method: SW846 8270C
Lab Prep Batch: WG58343
Units: ug/Kgdrywt

CAS#	Compound	Flags	Results	DF	PQL	Adj.PQL	Adj.MDL
100-52-7	Benzaldehyde	U	520	1.0	500	520	120
108-95-2	Phenol	U	520	1.0	500	520	160
111-44-4	Bis(2-Chloroethyl)ether	U	340	1.0	330	340	85
95-57-8	2-Chlorophenol	U	520	1.0	500	520	170
95-48-7	2-Methylphenol	U	630	1.0	600	630	210
108-60-1	2,2'-Oxybis(1-chloropropane)	U	340	1.0	330	340	93
98-86-2	Acetophenone	U	630	1.0	600	630	190
621-64-7	N-Nitroso-di-n-propylamine	U	340	1.0	330	340	87
65794-96-9	3&4-Methylphenol	U	630	1.0	600	630	200
67-72-1	Hexachloroethane	U	340	1.0	330	340	100
98-95-3	Nitrobenzene	~~U~~ UJ	340	1.0	330	340	95 CCH
78-59-1	Isophorone	U	340	1.0	330	340	78
88-75-5	2-Nitrophenol	U	630	1.0	600	630	170
105-67-9	2,4-Dimethylphenol	U	520	1.0	500	520	170
111-91-1	Bis(2-Chloroethoxy)methane	U	340	1.0	330	340	100
120-83-2	2,4-Dichlorophenol	U	520	1.0	500	520	160
106-47-8	4-Chloroaniline	U	520	1.0	500	520	120
105-60-2	Caprolactam	U	520	1.0	500	520	150
59-50-7	4-Chloro-3-Methylphenol	U	520	1.0	500	520	170
88-06-2	2,4,6-Trichlorophenol	U	520	1.0	500	520	160
95-95-4	2,4,5-Trichlorophenol	U	520	1.0	500	520	160
91-58-7	2-Chloronaphthalene	U	340	1.0	330	340	91
92-52-4	1,1'-Biphenyl	U	340	1.0	330	340	76
88-74-4	2-Nitroaniline	U	520	1.0	500	520	78
131-11-3	Dimethyl Phthalate	U	340	1.0	330	340	82
606-20-2	2,6-Dinitrotoluene	U	340	1.0	330	340	83
208-96-8	Acenaphthylene	U	340	1.0	330	340	73
99-09-2	3-Nitroaniline	U	520	1.0	500	520	98
83-32-9	Acenaphthene	U	340	1.0	330	340	68
51-28-5	2,4-Dinitrophenol	U	1200	1.0	1200	1200	390
132-64-9	Dibenzofuran	U	340	1.0	330	340	83
100-02-7	4-Nitrophenol	U	1200	1.0	1200	1200	320
121-14-2	2,4-Dinitrotoluene	U	340	1.0	330	340	89
84-66-2	Diethylphthalate	U	340	1.0	330	340	84
7005-72-3	4-Chlorophenyl-phenylether	U	340	1.0	330	340	82
100-01-6	4-Nitroaniline	U	520	1.0	500	520	140
534-52-1	4,6-Dinitro-2-Methylphenol	U	1200	1.0	1200	1200	350
86-30-6	N-Nitrosodiphenylamine	U	690	1.0	660	690	230
101-55-3	4-Bromophenyl-phenylether	U	340	1.0	330	340	89
1912-24-9	Atrazine	U	340	1.0	330	340	95
87-86-5	Pentachlorophenol	U	860	1.0	820	860	250
120-12-7	Anthracene	U	340	1.0	330	340	88
86-74-8	Carbazole	U	520	1.0	500	520	120

RW 11/31/09

18

KATAHDIN ANALYTICAL SERVICES
Report of Analytical Results

Client: CH2MHill
Project: TO-009 Lejeune
PO No:
Sample Date: 11/17/08
Received Date: 11/20/08
Extraction Date: 11/21/08
Analysis Date: 11-DEC-2008 20:52
Report Date: 12/13/2008
Matrix: SOIL
% Solids: 95.5

Lab ID: SB6714-3
Client ID: MR08-IS377D-08D
SDG: TO9-4
Extracted by: AC
Extraction Method: SW846 3550
Analyst: JCG
Analysis Method: SW846 8270C
Lab Prep Batch: WG58343
Units: ug/Kgdrywt

CAS#	Compound	Flags	Results	DF	PQL	Adj.PQL	Adj.MDL	
84-74-2	Di-n-butylphthalate	U	340	1.0	330	340	100	
85-68-7	Butylbenzylphthalate	~~U~~ UJ	340	1.0	330	340	97	CCH
91-94-1	3,3'-Dichlorobenzidine	U	520	1.0	500	520	120	
218-01-9	Chrysene	U	340	1.0	330	340	99	
117-81-7	bis(2-Ethylhexyl)phthalate	~~U~~ J	200	1.0	330	340	100	BSH
117-84-0	Di-n-octylphthalate	~~U~~ UJ	340	1.0	330	340	220	CCH
367-12-4	2-Fluorophenol		70%					
13127-88-3	Phenol-D6		77%					
4165-60-0	Nitrobenzene-D5		74%					
321-60-8	2-Fluorobiphenyl		74%					
118-79-6	2,4,6-Tribromophenol		73%					
1718-51-0	Terphenyl-D14		113%					

LW
12/1/09

19

KATAHDIN ANALYTICAL SERVICES
Report of Analytical Results

Client: CH2MHill
Project: TO-009 Lejeune
PO No:
Sample Date: 11/17/08
Received Date: 11/20/08
Extraction Date: 11/21/08
Analysis Date: 11-DEC-2008 21:34
Report Date: 12/13/2008
Matrix: SOIL
% Solids: 88.4

Lab ID: SB6714-5
Client ID: MR08-IS397-08D
SDG: TO9-4
Extracted by: AC
Extraction Method: SW846 3550
Analyst: JCG
Analysis Method: SW846 8270C
Lab Prep Batch: WG58343
Units: ug/Kgdrywt

CAS#	Compound	Flags	Results	DF	PQL	Adj.PQL	Adj.MDL
100-52-7	Benzaldehyde	U	560	1.0	500	560	140
108-95-2	Phenol	U	560	1.0	500	560	180
111-44-4	Bis(2-Chloroethyl)ether	U	370	1.0	330	370	92
95-57-8	2-Chlorophenol	U	560	1.0	500	560	180
95-48-7	2-Methylphenol	U	680	1.0	600	680	230
108-60-1	2,2'-Oxybis(1-chloropropane)	U	370	1.0	330	370	100
98-86-2	Acetophenone	U	680	1.0	600	680	200
621-64-7	N-Nitroso-di-n-propylamine	U	370	1.0	330	370	94
65794-96-9	3&4-Methylphenol	U	680	1.0	600	680	210
67-72-1	Hexachloroethane	U	370	1.0	330	370	110
98-95-3	Nitrobenzene	~~U~~ UJ	370	1.0	330	370	100 CCH
78-59-1	Isophorone	U	370	1.0	330	370	85
88-75-5	2-Nitrophenol	U	680	1.0	600	680	190
105-67-9	2,4-Dimethylphenol	U	560	1.0	500	560	190
111-91-1	Bis(2-Chloroethoxy)methane	U	370	1.0	330	370	110
120-83-2	2,4-Dichlorophenol	U	560	1.0	500	560	170
106-47-8	4-Chloroaniline	U	560	1.0	500	560	130
105-60-2	Caprolactam	U	560	1.0	500	560	160
59-50-7	4-Chloro-3-Methylphenol	U	560	1.0	500	560	190
88-06-2	2,4,6-Trichlorophenol	U	560	1.0	500	560	180
95-95-4	2,4,5-Trichlorophenol	U	560	1.0	500	560	180
91-58-7	2-Chloronaphthalene	U	370	1.0	330	370	98
92-52-4	1,1'-Biphenyl	U	370	1.0	330	370	82
88-74-4	2-Nitroaniline	U	560	1.0	500	560	85
131-11-3	Dimethyl Phthalate	U	370	1.0	330	370	88
606-20-2	2,6-Dinitrotoluene	U	370	1.0	330	370	89
208-96-8	Acenaphthylene	U	370	1.0	330	370	79
99-09-2	3-Nitroaniline	U	560	1.0	500	560	110
83-32-9	Acenaphthene	U	370	1.0	330	370	74
51-28-5	2,4-Dinitrophenol	U	1400	1.0	1200	1400	430
132-64-9	Dibenzofuran	U	370	1.0	330	370	89
100-02-7	4-Nitrophenol	U	1400	1.0	1200	1400	350
121-14-2	2,4-Dinitrotoluene	U	370	1.0	330	370	96
84-66-2	Diethylphthalate	U	370	1.0	330	370	90
7005-72-3	4-Chlorophenyl-phenylether	U	370	1.0	330	370	88
100-01-6	4-Nitroaniline	U	560	1.0	500	560	150
534-52-1	4,6-Dinitro-2-Methylphenol	U	1400	1.0	1200	1400	380
86-30-6	N-Nitrosodiphenylamine	U	750	1.0	660	750	250
101-55-3	4-Bromophenyl-phenylether	U	370	1.0	330	370	96
1912-24-9	Atrazine	U	370	1.0	330	370	100
87-86-5	Pentachlorophenol	U	930	1.0	820	930	270
120-12-7	Anthracene	U	370	1.0	330	370	95
86-74-8	Carbazole	U	560	1.0	500	560	120

MW 1/31/09

KATAHDIN ANALYTICAL SERVICES
Report of Analytical Results

Client: CH2MHill
Project: TO-009 Lejeune
PO No:
Sample Date: 11/17/08
Received Date: 11/20/08
Extraction Date: 11/21/08
Analysis Date: 11-DEC-2008 21:34
Report Date: 12/13/2008
Matrix: SOIL
% Solids: 88.4

Lab ID: SB6714-5
Client ID: MR08-IS397-08D
SDG: TO9-4
Extracted by: AC
Extraction Method: SW846 3550
Analyst: JCG
Analysis Method: SW846 8270C
Lab Prep Batch: WG58343
Units: ug/Kgdrywt

CAS#	Compound	Flags	Results	DF	PQL	Adj.PQL	Adj.MDL	
84-74-2	Di-n-butylphthalate	U	370	1.0	330	370	110	
85-68-7	Butylbenzylphthalate	~~U~~ UJ	370	1.0	330	370	100	CCH
91-94-1	3,3'-Dichlorobenzidine	U	560	1.0	500	560	130	
218-01-9	Chrysene	U	370	1.0	330	370	110	
117-81-7	bis(2-Ethylhexyl)phthalate	J	750	1.0	330	370	110	BSH
117-84-0	Di-n-octylphthalate	~~U~~ UJ	370	1.0	330	370	240	CCH
367-12-4	2-Fluorophenol		72%					
13127-88-3	Phenol-D6		77%					
4165-60-0	Nitrobenzene-D5		75%					
321-60-8	2-Fluorobiphenyl		72%					
118-79-6	2,4,6-Tribromophenol		72%					
1718-51-0	Terphenyl-D14		103%					

QCW 12/31/09

20

KATAHDIN ANALYTICAL SERVICES
Report of Analytical Results

Client: CH2MHill
Project: TO-009 Lejeune
PO No:
Sample Date: 11/18/08
Received Date: 11/20/08
Extraction Date: 11/21/08
Analysis Date: 11-DEC-2008 22:15
Report Date: 12/13/2008
Matrix: SOIL
% Solids: 85.0

Lab ID: SB6714-7
Client ID: MR08-IS398-08D
SDG: TO9-4
Extracted by: AC
Extraction Method: SW846 3550
Analyst: JCG
Analysis Method: SW846 8270C
Lab Prep Batch: WG58343
Units: ug/Kgdrywt

CAS#	Compound	Flags	Results	DF	PQL	Adj.PQL	Adj.MDL
100-52-7	Benzaldehyde	U	590	1.0	500	590	140
108-95-2	Phenol	U	590	1.0	500	590	180
111-44-4	Bis(2-Chloroethyl)ether	U	390	1.0	330	390	95
95-57-8	2-Chlorophenol	U	590	1.0	500	590	190
95-48-7	2-Methylphenol	U	710	1.0	600	710	240
108-60-1	2,2'-Oxybis(1-chloropropane)	U	390	1.0	330	390	100
98-86-2	Acetophenone	U	710	1.0	600	710	210
621-64-7	N-Nitroso-di-n-propylamine	U	390	1.0	330	390	98
65794-96-9	3&4-Methylphenol	U	710	1.0	600	710	220
67-72-1	Hexachloroethane	U	390	1.0	330	390	110
98-95-3	Nitrobenzene	~~U~~ UJ	390	1.0	330	390	110 CCH
78-59-1	Isophorone	U	390	1.0	330	390	88
88-75-5	2-Nitrophenol	U	710	1.0	600	710	200
105-67-9	2,4-Dimethylphenol	U	590	1.0	500	590	190
111-91-1	Bis(2-Chloroethoxy)methane	U	390	1.0	330	390	110
120-83-2	2,4-Dichlorophenol	U	590	1.0	500	590	180
106-47-8	4-Chloroaniline	U	590	1.0	500	590	140
105-60-2	Caprolactam	U	590	1.0	500	590	170
59-50-7	4-Chloro-3-Methylphenol	U	590	1.0	500	590	200
88-06-2	2,4,6-Trichlorophenol	U	590	1.0	500	590	180
95-95-4	2,4,5-Trichlorophenol	U	590	1.0	500	590	180
91-58-7	2-Chloronaphthalene	U	390	1.0	330	390	100
92-52-4	1,1'-Biphenyl	U	390	1.0	330	390	86
88-74-4	2-Nitroaniline	U	590	1.0	500	590	88
131-11-3	Dimethyl Phthalate	U	390	1.0	330	390	92
606-20-2	2,6-Dinitrotoluene	U	390	1.0	330	390	93
208-96-8	Acenaphthylene	U	390	1.0	330	390	82
99-09-2	3-Nitroaniline	U	590	1.0	500	590	110
83-32-9	Acenaphthene	U	390	1.0	330	390	76
51-28-5	2,4-Dinitrophenol	U	1400	1.0	1200	1400	440
132-64-9	Dibenzofuran	U	390	1.0	330	390	93
100-02-7	4-Nitrophenol	U	1400	1.0	1200	1400	360
121-14-2	2,4-Dinitrotoluene	U	390	1.0	330	390	100
84-66-2	Diethylphthalate	U	390	1.0	330	390	94
7005-72-3	4-Chlorophenyl-phenylether	U	390	1.0	330	390	92
100-01-6	4-Nitroaniline	U	590	1.0	500	590	160
534-52-1	4,6-Dinitro-2-Methylphenol	U	1400	1.0	1200	1400	400
86-30-6	N-Nitrosodiphenylamine	U	780	1.0	660	780	260
101-55-3	4-Bromophenyl-phenylether	U	390	1.0	330	390	100
1912-24-9	Atrazine	U	390	1.0	330	390	110
87-86-5	Pentachlorophenol	U	960	1.0	820	960	280
120-12-7	Anthracene	U	390	1.0	330	390	99
86-74-8	Carbazole	U	590	1.0	500	590	130

lw 11/31/09

20

KATAHDIN ANALYTICAL SERVICES
Report of Analytical Results

Client: CH2MHill
Project: TO-009 Lejeune
PO No:
Sample Date: 11/18/08
Received Date: 11/20/08
Extraction Date: 11/21/08
Analysis Date: 11-DEC-2008 22:15
Report Date: 12/13/2008
Matrix: SOIL
% Solids: 85.0

Lab ID: SB6714-7
Client ID: MR08-IS398-08D
SDG: TO9-4
Extracted by: AC
Extraction Method: SW846 3550
Analyst: JCG
Analysis Method: SW846 8270C
Lab Prep Batch: WG58343
Units: ug/Kgdrywt

CAS#	Compound	Flags	Results	DF	PQL	Adj.PQL	Adj.MDL	
84-74-2	Di-n-butylphthalate	U	390	1.0	330	390	120	
85-68-7	Butylbenzylphthalate	~~U~~ UJ	390	1.0	330	390	110	CCH
91-94-1	3,3'-Dichlorobenzidine	U	590	1.0	500	590	130	
218-01-9	Chrysene	U	390	1.0	330	390	110	
117-81-7	bis(2-Ethylhexyl)phthalate	~~U~~ UJ	390	1.0	330	390	120	CCH
117-84-0	Di-n-octylphthalate	~~U~~ UJ	390	1.0	330	390	250	CCH
367-12-4	2-Fluorophenol		73%					
13127-88-3	Phenol-D6		88%					
4165-60-0	Nitrobenzene-D5		81%					
321-60-8	2-Fluorobiphenyl		84%					
118-79-6	2,4,6-Tribromophenol		72%					
1718-51-0	Terphenyl-D14		118%					

lw
1/3/09

ENVIRONMENTAL
Data Services, Inc.

POLYNUCLEAR AROMATIC COMPOUNDS BY 8270 SIM

USEPA Region IV - Level IV Review

Site: MCB Camp Lejeune, TO-09 SDG #: TO9-5

Client: CH2M HILL, Inc., Virginia Beach, Virginia Date: January 31, 2009

Laboratory: Katahdin Analytical Services, Scarborough, Maine Reviewer: Nancy Weaver

EDS ID	Client Sample ID	Laboratory Sample ID	Matrix
1	MR08-TW09-08D	SB6677-2	Water
2	MR08-TW01-08D	SB6677-4	Water
2MS	MR08-TW01-08DMS	SB6677-4MS	Water
2MSD	MR08-TW01-08DMSD	SB6677-4MSD	Water
3	MR08-TW02-08D	SB6712-2	Water
4	MR08-TW02D-08D	SB6712-4	Water
5	MR08-TW03-08D	SB6712-6	Water
6	MR08-TW03D-08D	SB6712-8	Water
7	MR08-EB111808	SB6712-10	Water
8	MR08-EB111908	SB6751-2	Water
9	MR08-TW26-08D	SB6751-4	Water
9MS	MR08-TW26-08DMS	SB6751-4MS	Water
9MSD	MR08-TW26-08DMSD	SB6751-4MSD	Water
10	MR08-FB112008	SB6751-6	Water
11	MR08-TW04-08D	SB6751-8	Water
12	MR08-TW19-08D	SB6751-10	Water
13	MR08-TW20-08D	SB6751-12	Water
14	MR08-TW25-08D	SB6751-14	Water
15	MR08-TW18-08D	SB6751-16	Water
16	MR08-TW24-08D	SB6790-2	Water
17	MR08-TW17-08D	SB6790-4	Water
18	MR08-TW17D-08D	SB6790-6	Water
19	MR08-TW15-08D	SB6790-8	Water
20	MR08-TW15D-08D	SB6790-10	Water

The USEPA "Contract Laboratory Program National Functional Guidelines for Organic Data Review," October 1999, and professional judgement were used in evaluating the data in this summary report.

Holding Times - All samples were extracted within 7 days for water samples and analyzed within 40 days for all samples.

GC/MS Tuning - All of the DFTPP tunes in the initial and continuing calibrations met the percent relative abundance criteria.

Initial Calibration - The initial calibrations exhibited acceptable %RSD and mean RRF values.

Continuing Calibration - The continuing calibrations exhibited acceptable %D and RRF values except the following.

CCAL Date	Compound	%D/RRF	Qualifier	Affected Samples
12/16/08	Benzo (b) fluoranthene	117.37%	J/UJ	3-15
	Benzo (k) fluoranthene	39.96%	J/UJ	3-15
	Hexachlorocyclopentadiene	72.16%	J/UJ	3-15

Surrogates - All samples exhibited acceptable surrogate recoveries.

MS/MSD - The MS/MSD sample exhibited acceptable %R and RPD values except the following.

MS/MSD Sample ID	Compound	MS/MSD %R/RPD	Qualifier
9	Pyrene	112%/Ok/Ok	None - ND

Laboratory Control Sample - The LCS samples exhibited acceptable %R values except the following.

LCS ID	Compound	%R	Qualifier	Affected Samples
WG58316-LCS	Naphthalene	198%	None	All ND
WG58494-LCS	Hexachlorocyclopentadiene	22%	None	Already qualified due to CCAL

Internal Standard (IS) Area Performance - All internal standards met response and retention time (RT) criteria.

Method Blank - The method blanks were free of contamination.

Field, Equipment Blank - Field QC results are summarized below.

Blank ID	Compound	Conc. ug/L	Action Level ug/L	Qualifier	Affected Samples
MR08-EB111708-1	None - ND	-	-	-	-
MR08-EB112008	None - ND	-	-	-	-

Field Duplicates - Field duplicate results are summarized below.

Compound	MR08-TW02-08D ug/L	MR08-TW02D-08D ug/L	RPD	Qualifier
None	ND	ND	-	-

Compound	MR08-TW03-08D ug/L	MR08-TW03D-08D ug/L	RPD	Qualifier
None	ND	ND	-	-

Compound	MR08-TW17-08D ug/L	MR08-TW17D-08D ug/L	RPD	Qualifier
None	ND	ND	-	-

Compound	MR08-TW15-08D ug/L	MR08-TW15D-08D ug/L	RPD	Qualifier
None	ND	ND	-	-

Tentatively Identified Compounds (TICs) - TICs were not reported.

Compound Quantitation - No discrepancies were identified.

KATAHDIN ANALYTICAL SERVICES
Report of Analytical Results

1

Client: CH2MHill
Project: TO-009 Lejeune
PO No:
Sample Date: 11/17/08
Received Date: 11/19/08
Extraction Date: 11/20/08
Analysis Date: 17-DEC-2008 20:20
Report Date: 12/18/2008
Matrix: WATER
% Solids: NA

Lab ID: SB6677-2
Client ID: MR08-TW09-08D
SDG: TO9-5
Extracted by: KF
Extraction Method: SW846 3510
Analyst: JCG
Analysis Method: SW846 M8270C
Lab Prep Batch: WG58316
Units: ug/L

CAS#	Compound	Flags	Results	DF	PQL	Adj.PQL	Adj.MDL
91-20-3	Naphthalene	U	0.26	1.0	0.25	0.26	0.066
91-57-6	2-Methylnaphthalene	U	0.26	1.0	0.25	0.26	0.079
86-73-7	Fluorene	U	0.26	1.0	0.25	0.26	0.063
85-01-8	Phenanthrene	U	0.26	1.0	0.25	0.26	0.052
206-44-0	Fluoranthene	U	0.26	1.0	0.25	0.26	0.075
129-00-0	Pyrene	U	0.26	1.0	0.25	0.26	0.061
56-55-3	Benzo(a)anthracene	U	0.26	1.0	0.25	0.26	0.047
205-99-2	Benzo(b)fluoranthene	U	0.28	1.0	0.27	0.28	0.092
207-08-9	Benzo(k)fluoranthene	U	0.26	1.0	0.25	0.26	0.050
50-32-8	Benzo(a)pyrene	U	0.26	1.0	0.25	0.26	0.068
193-39-5	Indeno(1,2,3-cd)pyrene	U	0.26	1.0	0.25	0.26	0.054
53-70-3	Dibenzo(a,h)anthracene	U	0.26	1.0	0.25	0.26	0.072
191-24-2	Benzo(g,h,i)perylene	U	0.26	1.0	0.25	0.26	0.067
118-74-1	Hexachlorobenzene	U	0.26	1.0	0.25	0.26	0.057
87-68-3	Hexachlorobutadiene	U	0.28	1.0	0.27	0.28	0.090
77-47-4	Hexachlorocyclopentadiene	J	0.18	1.0	0.25	0.26	0.069
7297-45-2	2-Methylnaphthalene-D10		60%				
367-12-4	2,4-Dibromophenol		77%				
81103-79-9	Fluorene-d10		60%				
1718-51-1	Pyrene-D10		109%				

lw
1/31/09

2

KATAHDIN ANALYTICAL SERVICES
Report of Analytical Results

Client: CH2MHill
Project: TO-009 Lejeune
PO No:
Sample Date: 11/17/08
Received Date: 11/19/08
Extraction Date: 11/20/08
Analysis Date: 17-DEC-2008 21:02
Report Date: 12/18/2008
Matrix: WATER
% Solids: NA

Lab ID: SB6677-4
Client ID: MR08-TW01-08D
SDG: TO9-5
Extracted by: KF
Extraction Method: SW846 3510
Analyst: JCG
Analysis Method: SW846 M8270C
Lab Prep Batch: WG58316
Units: ug/L

CAS#	Compound	Flags	Results	DF	PQL	Adj.PQL	Adj.MDL
91-20-3	Naphthalene	U	0.25	1.0	0.25	0.25	0.064
91-57-6	2-Methylnaphthalene	U	0.25	1.0	0.25	0.25	0.077
86-73-7	Fluorene	U	0.25	1.0	0.25	0.25	0.061
85-01-8	Phenanthrene	U	0.25	1.0	0.25	0.25	0.051
206-44-0	Fluoranthene	U	0.25	1.0	0.25	0.25	0.073
129-00-0	Pyrene	U	0.25	1.0	0.25	0.25	0.059
56-55-3	Benzo(a)anthracene	U	0.25	1.0	0.25	0.25	0.046
205-99-2	Benzo(b)fluoranthene	U	0.27	1.0	0.27	0.27	0.089
207-08-9	Benzo(k)fluoranthene	U	0.25	1.0	0.25	0.25	0.049
50-32-8	Benzo(a)pyrene	U	0.25	1.0	0.25	0.25	0.066
193-39-5	Indeno(1,2,3-cd)pyrene	U	0.25	1.0	0.25	0.25	0.052
53-70-3	Dibenzo(a,h)anthracene	U	0.25	1.0	0.25	0.25	0.070
191-24-2	Benzo(g,h,i)perylene	U	0.25	1.0	0.25	0.25	0.065
118-74-1	Hexachlorobenzene	U	0.25	1.0	0.25	0.25	0.055
87-68-3	Hexachlorobutadiene	U	0.27	1.0	0.27	0.27	0.087
77-47-4	Hexachlorocyclopentadiene	U	0.25	1.0	0.25	0.25	0.067
7297-45-2	2-Methylnaphthalene-D10		58%				
367-12-4	2,4-Dibromophenol		82%				
81103-79-9	Fluorene-d10		63%				
1718-51-1	Pyrene-D10		115%				

hw
1/31/19

3

KATAHDIN ANALYTICAL SERVICES
Report of Analytical Results

Client: CH2MHill
Project: TO-009 Lejeune
PO No:
Sample Date: 11/18/08
Received Date: 11/20/08
Extraction Date: 11/21/08
Analysis Date: 16-DEC-2008 16:15
Report Date: 12/18/2008
Matrix: WATER
% Solids: NA

Lab ID: SB6712-2
Client ID: MR08-TW02-08D
SDG: TO9-5
Extracted by: KF
Extraction Method: SW846 3510
Analyst: JCG
Analysis Method: SW846 M8270C
Lab Prep Batch: WG58356
Units: ug/L

CAS#	Compound	Flags	Results	DF	PQL	Adj.PQL	Adj.MDL	
91-20-3	Naphthalene	U	0.24	1.0	0.25	0.24	0.060	
91-57-6	2-Methylnaphthalene	U	0.24	1.0	0.25	0.24	0.073	
86-73-7	Fluorene	U	0.24	1.0	0.25	0.24	0.058	
85-01-8	Phenanthrene	U	0.24	1.0	0.25	0.24	0.048	
206-44-0	Fluoranthene	U	0.24	1.0	0.25	0.24	0.069	
129-00-0	Pyrene	U	0.24	1.0	0.25	0.24	0.056	
56-55-3	Benzo(a)anthracene	U	0.24	1.0	0.25	0.24	0.043	
205-99-2	Benzo(b)fluoranthene	~~U~~ UJ	0.25	1.0	0.27	0.25	0.084	CCH
207-08-9	Benzo(k)fluoranthene	~~U~~ UJ	0.24	1.0	0.25	0.24	0.046	CCH
50-32-8	Benzo(a)pyrene	U	0.24	1.0	0.25	0.24	0.062	
193-39-5	Indeno(1,2,3-cd)pyrene	U	0.24	1.0	0.25	0.24	0.049	
53-70-3	Dibenzo(a,h)anthracene	U	0.24	1.0	0.25	0.24	0.066	
191-24-2	Benzo(g,h,i)perylene	U	0.24	1.0	0.25	0.24	0.061	
118-74-1	Hexachlorobenzene	U	0.24	1.0	0.25	0.24	0.052	
87-68-3	Hexachlorobutadiene	U	0.25	1.0	0.27	0.25	0.082	
77-47-4	Hexachlorocyclopentadiene	~~U~~ UJ	0.24	1.0	0.25	0.24	0.063	CCH
7297-45-2	2-Methylnaphthalene-D10		48%					
367-12-4	2,4-Dibromophenol		72%					
81103-79-9	Fluorene-d10		50%					
1718-51-1	Pyrene-D10		93%					

LW 1/8/09

4

KATAHDIN ANALYTICAL SERVICES
Report of Analytical Results

Client: CH2MHill
Project: TO-009 Lejeune
PO No:
Sample Date: 11/18/08
Received Date: 11/20/08
Extraction Date: 11/21/08
Analysis Date: 16-DEC-2008 16:57
Report Date: 12/18/2008
Matrix: WATER
% Solids: NA

Lab ID: SB6712-4
Client ID: MR08-TW02D-08D
SDG: TO9-5
Extracted by: KF
Extraction Method: SW846 3510
Analyst: JCG
Analysis Method: SW846 M8270C
Lab Prep Batch: WG58356
Units: ug/L

CAS#	Compound	Flags	Results	DF	PQL	Adj.PQL	Adj.MDL	
91-20-3	Naphthalene	U	0.24	1.0	0.25	0.24	0.060	
91-57-6	2-Methylnaphthalene	U	0.24	1.0	0.25	0.24	0.073	
86-73-7	Fluorene	U	0.24	1.0	0.25	0.24	0.058	
85-01-8	Phenanthrene	U	0.24	1.0	0.25	0.24	0.048	
206-44-0	Fluoranthene	U	0.24	1.0	0.25	0.24	0.069	
129-00-0	Pyrene	U	0.24	1.0	0.25	0.24	0.056	
56-55-3	Benzo(a)anthracene	U	0.24	1.0	0.25	0.24	0.043	
205-99-2	Benzo(b)fluoranthene	~~U~~ UJ	0.25	1.0	0.27	0.25	0.084	CCH
207-08-9	Benzo(k)fluoranthene	~~U~~ UJ	0.24	1.0	0.25	0.24	0.046	CCH
50-32-8	Benzo(a)pyrene	U	0.24	1.0	0.25	0.24	0.062	
193-39-5	Indeno(1,2,3-cd)pyrene	U	0.24	1.0	0.25	0.24	0.049	
53-70-3	Dibenzo(a,h)anthracene	U	0.24	1.0	0.25	0.24	0.066	
191-24-2	Benzo(g,h,i)perylene	U	0.24	1.0	0.25	0.24	0.061	
118-74-1	Hexachlorobenzene	U	0.24	1.0	0.25	0.24	0.052	
87-68-3	Hexachlorobutadiene	U	0.25	1.0	0.27	0.25	0.082	
77-47-4	Hexachlorocyclopentadiene	~~U~~ UJ	0.24	1.0	0.25	0.24	0.063	CCH
7297-45-2	2-Methylnaphthalene-D10		47%					
367-12-4	2,4-Dibromophenol		73%					
81103-79-9	Fluorene-d10		56%					
1718-51-1	Pyrene-D10		87%					

AW 1/31/09

5

KATAHDIN ANALYTICAL SERVICES
Report of Analytical Results

Client: CH2MHill
Project: TO-009 Lejeune
PO No:
Sample Date: 11/18/08
Received Date: 11/20/08
Extraction Date: 11/21/08
Analysis Date: 16-DEC-2008 17:39
Report Date: 12/18/2008
Matrix: WATER
% Solids: NA

Lab ID: SB6712-6
Client ID: MR08-TW03-08D
SDG: TO9-5
Extracted by: KF
Extraction Method: SW846 3510
Analyst: JCG
Analysis Method: SW846 M8270C
Lab Prep Batch: WG58356
Units: ug/L

CAS#	Compound	Flags	Results	DF	PQL	Adj.PQL	Adj.MDL	
91-20-3	Naphthalene	U	0.26	1.0	0.25	0.26	0.067	
91-57-6	2-Methylnaphthalene	U	0.26	1.0	0.25	0.26	0.080	
86-73-7	Fluorene	U	0.26	1.0	0.25	0.26	0.064	
85-01-8	Phenanthrene	U	0.26	1.0	0.25	0.26	0.053	
206-44-0	Fluoranthene	U	0.26	1.0	0.25	0.26	0.076	
129-00-0	Pyrene	U	0.26	1.0	0.25	0.26	0.061	
56-55-3	Benzo(a)anthracene	U	0.26	1.0	0.25	0.26	0.048	
205-99-2	Benzo(b)fluoranthene	~~U~~ UJ	0.28	1.0	0.27	0.28	0.093	CCH
207-08-9	Benzo(k)fluoranthene	~~U~~ UJ	0.26	1.0	0.25	0.26	0.051	CCH
50-32-8	Benzo(a)pyrene	U	0.26	1.0	0.25	0.26	0.069	
193-39-5	Indeno(1,2,3-cd)pyrene	U	0.26	1.0	0.25	0.26	0.054	
53-70-3	Dibenzo(a,h)anthracene	U	0.26	1.0	0.25	0.26	0.073	
191-24-2	Benzo(g,h,i)perylene	U	0.26	1.0	0.25	0.26	0.068	
118-74-1	Hexachlorobenzene	U	0.26	1.0	0.25	0.26	0.057	
87-68-3	Hexachlorobutadiene	U	0.28	1.0	0.27	0.28	0.091	
77-47-4	Hexachlorocyclopentadiene	~~U~~ UJ	0.26	1.0	0.25	0.26	0.070	CCH
7297-45-2	2-Methylnaphthalene-D10		58%					
367-12-4	2,4-Dibromophenol		70%					
81103-79-9	Fluorene-d10		60%					
1718-51-1	Pyrene-D10		89%					

JW 11/31/09

6

KATAHDIN ANALYTICAL SERVICES
Report of Analytical Results

Client: CH2MHill
Project: TO-009 Lejeune
PO No:
Sample Date: 11/18/08
Received Date: 11/20/08
Extraction Date: 11/21/08
Analysis Date: 16-DEC-2008 18:22
Report Date: 12/18/2008
Matrix: WATER
% Solids: NA

Lab ID: SB6712-8
Client ID: MR08-TW03D-08D
SDG: TO9-5
Extracted by: KF
Extraction Method: SW846 3510
Analyst: JCG
Analysis Method: SW846 M8270C
Lab Prep Batch: WG58356
Units: ug/L

CAS#	Compound	Flags	Results	DF	PQL	Adj.PQL	Adj.MDL	
91-20-3	Naphthalene	U	0.27	1.0	0.25	0.27	0.069	
91-57-6	2-Methylnaphthalene	U	0.27	1.0	0.25	0.27	0.083	
86-73-7	Fluorene	U	0.27	1.0	0.25	0.27	0.066	
85-01-8	Phenanthrene	U	0.27	1.0	0.25	0.27	0.055	
206-44-0	Fluoranthene	U	0.27	1.0	0.25	0.27	0.078	
129-00-0	Pyrene	U	0.27	1.0	0.25	0.27	0.063	
56-55-3	Benzo(a)anthracene	U	0.27	1.0	0.25	0.27	0.049	
205-99-2	Benzo(b)fluoranthene	~~U~~ UJ	0.29	1.0	0.27	0.29	0.096	CCH
207-08-9	Benzo(k)fluoranthene	~~U~~ UJ	0.27	1.0	0.25	0.27	0.053	CCH
50-32-8	Benzo(a)pyrene	U	0.27	1.0	0.25	0.27	0.071	
193-39-5	Indeno(1,2,3-cd)pyrene	U	0.27	1.0	0.25	0.27	0.056	
53-70-3	Dibenzo(a,h)anthracene	U	0.27	1.0	0.25	0.27	0.075	
191-24-2	Benzo(g,h,i)perylene	U	0.27	1.0	0.25	0.27	0.070	
118-74-1	Hexachlorobenzene	U	0.27	1.0	0.25	0.27	0.059	
87-68-3	Hexachlorobutadiene	U	0.29	1.0	0.27	0.29	0.094	
77-47-4	Hexachlorocyclopentadiene	~~U~~ UJ	0.27	1.0	0.25	0.27	0.072	CCH
7297-45-2	2-Methylnaphthalene-D10		54%					
367-12-4	2,4-Dibromophenol		63%					
81103-79-9	Fluorene-d10		54%					
1718-51-1	Pyrene-D10		92%					

lw 1/31/09

7

KATAHDIN ANALYTICAL SERVICES
Report of Analytical Results

Client: CH2MHill
Project: TO-009 Lejeune
PO No:
Sample Date: 11/18/08
Received Date: 11/20/08
Extraction Date: 11/21/08
Analysis Date: 16-DEC-2008 19:04
Report Date: 12/18/2008
Matrix: WATER
% Solids: NA

Lab ID: SB6712-10
Client ID: MR08-EB111808
SDG: TO9-5
Extracted by: KF
Extraction Method: SW846 3510
Analyst: JCG
Analysis Method: SW846 M8270C
Lab Prep Batch: WG58356
Units: ug/L

CAS#	Compound	Flags	Results	DF	PQL	Adj.PQL	Adj.MDL	
91-20-3	Naphthalene	U	0.24	1.0	0.25	0.24	0.060	
91-57-6	2-Methylnaphthalene	U	0.24	1.0	0.25	0.24	0.073	
86-73-7	Fluorene	U	0.24	1.0	0.25	0.24	0.058	
85-01-8	Phenanthrene	U	0.24	1.0	0.25	0.24	0.048	
206-44-0	Fluoranthene	U	0.24	1.0	0.25	0.24	0.069	
129-00-0	Pyrene	U	0.24	1.0	0.25	0.24	0.056	
56-55-3	Benzo(a)anthracene	U	0.24	1.0	0.25	0.24	0.043	
205-99-2	Benzo(b)fluoranthene	~~U~~ UJ	0.25	1.0	0.27	0.25	0.084	CCH
207-08-9	Benzo(k)fluoranthene	~~U~~ UJ	0.24	1.0	0.25	0.24	0.046	CCH
50-32-8	Benzo(a)pyrene	U	0.24	1.0	0.25	0.24	0.062	
193-39-5	Indeno(1,2,3-cd)pyrene	U	0.24	1.0	0.25	0.24	0.049	
53-70-3	Dibenzo(a,h)anthracene	U	0.24	1.0	0.25	0.24	0.066	
191-24-2	Benzo(g,h,i)perylene	U	0.24	1.0	0.25	0.24	0.061	
118-74-1	Hexachlorobenzene	U	0.24	1.0	0.25	0.24	0.052	
87-68-3	Hexachlorobutadiene	U	0.25	1.0	0.27	0.25	0.082	
77-47-4	Hexachlorocyclopentadiene	~~U~~ UJ	0.24	1.0	0.25	0.24	0.063	CCH
7297-45-2	2-Methylnaphthalene-D10		50%					
367-12-4	2,4-Dibromophenol		70%					
81103-79-9	Fluorene-d10		55%					
1718-51-1	Pyrene-D10		85%					

1131/09

8

KATAHDIN ANALYTICAL SERVICES
Report of Analytical Results

Client: CH2MHill
Project: TO-009 Lejeune
PO No:
Sample Date: 11/19/08
Received Date: 11/21/08
Extraction Date: 11/25/08
Analysis Date: 16-DEC-2008 19:46
Report Date: 12/18/2008
Matrix: WATER
% Solids: NA

Lab ID: SB6751-2
Client ID: MR08-EB111908
SDG: TO9-5
Extracted by: CB
Extraction Method: SW846 3510
Analyst: JCG
Analysis Method: SW846 M8270C
Lab Prep Batch: WG58494
Units: ug/L

CAS#	Compound	Flags	Results	DF	PQL	Adj.PQL	Adj.MDL	
91-20-3	Naphthalene	U	0.25	1.0	0.25	0.25	0.063	
91-57-6	2-Methylnaphthalene	U	0.25	1.0	0.25	0.25	0.076	
86-73-7	Fluorene	U	0.25	1.0	0.25	0.25	0.060	
85-01-8	Phenanthrene	U	0.25	1.0	0.25	0.25	0.050	
206-44-0	Fluoranthene	U	0.25	1.0	0.25	0.25	0.072	
129-00-0	Pyrene	U	0.25	1.0	0.25	0.25	0.058	
56-55-3	Benzo(a)anthracene	U	0.25	1.0	0.25	0.25	0.046	
205-99-2	Benzo(b)fluoranthene	~~U~~ UJ	0.27	1.0	0.27	0.27	0.088	CCH
207-08-9	Benzo(k)fluoranthene	~~U~~ UJ	0.25	1.0	0.25	0.25	0.048	CCH
50-32-8	Benzo(a)pyrene	U	0.25	1.0	0.25	0.25	0.065	
193-39-5	Indeno(1,2,3-cd)pyrene	U	0.25	1.0	0.25	0.25	0.051	
53-70-3	Dibenzo(a,h)anthracene	U	0.25	1.0	0.25	0.25	0.069	
191-24-2	Benzo(g,h,i)perylene	U	0.25	1.0	0.25	0.25	0.064	
118-74-1	Hexachlorobenzene	U	0.25	1.0	0.25	0.25	0.054	
87-68-3	Hexachlorobutadiene	U	0.27	1.0	0.27	0.27	0.086	
77-47-4	Hexachlorocyclopentadiene	~~U~~ UJ	0.25	1.0	0.25	0.25	0.066	CCH
7297-45-2	2-Methylnaphthalene-D10		63%					
367-12-4	2,4-Dibromophenol		80%					
81103-79-9	Fluorene-d10		60%					
1718-51-1	Pyrene-D10		100%					

lw 1/31/09

9

KATAHDIN ANALYTICAL SERVICES
Report of Analytical Results

Client: CH2MHill
Project: TO-009 Lejeune
PO No:
Sample Date: 11/20/08
Received Date: 11/21/08
Extraction Date: 11/25/08
Analysis Date: 16-DEC-2008 20:28
Report Date: 12/18/2008
Matrix: WATER
% Solids: NA

Lab ID: SB6751-4
Client ID: MR08-TW26-08D
SDG: TO9-5
Extracted by: CB
Extraction Method: SW846 3510
Analyst: JCG
Analysis Method: SW846 M8270C
Lab Prep Batch: WG58494
Units: ug/L

CAS#	Compound	Flags	Results	DF	PQL	Adj.PQL	Adj.MDL	
91-20-3	Naphthalene	U	0.25	1.0	0.25	0.25	0.063	
91-57-6	2-Methylnaphthalene	U	0.25	1.0	0.25	0.25	0.076	
86-73-7	Fluorene	U	0.25	1.0	0.25	0.25	0.060	
85-01-8	Phenanthrene	U	0.25	1.0	0.25	0.25	0.050	
206-44-0	Fluoranthene	U	0.25	1.0	0.25	0.25	0.072	
129-00-0	Pyrene	U	0.25	1.0	0.25	0.25	0.058	
56-55-3	Benzo(a)anthracene	U	0.25	1.0	0.25	0.25	0.046	
205-99-2	Benzo(b)fluoranthene	~~U~~ UJ	0.27	1.0	0.27	0.27	0.088	CCH
207-08-9	Benzo(k)fluoranthene	~~U~~ UJ	0.25	1.0	0.25	0.25	0.048	CCH
50-32-8	Benzo(a)pyrene	U	0.25	1.0	0.25	0.25	0.065	
193-39-5	Indeno(1,2,3-cd)pyrene	U	0.25	1.0	0.25	0.25	0.051	
53-70-3	Dibenzo(a,h)anthracene	U	0.25	1.0	0.25	0.25	0.069	
191-24-2	Benzo(g,h,i)perylene	U	0.25	1.0	0.25	0.25	0.064	
118-74-1	Hexachlorobenzene	U	0.25	1.0	0.25	0.25	0.054	
87-68-3	Hexachlorobutadiene	U	0.27	1.0	0.27	0.27	0.086	
77-47-4	Hexachlorocyclopentadiene	~~U~~ UJ	0.25	1.0	0.25	0.25	0.066	CCH
7297-45-2	2-Methylnaphthalene-D10		61%					
367-12-4	2,4-Dibromophenol		73%					
81103-79-9	Fluorene-d10		58%					
1718-51-1	Pyrene-D10		105%					

1/31/09

KATAHDIN ANALYTICAL SERVICES
Report of Analytical Results

Client: CH2MHill
Project: TO-009 Lejeune
PO No:
Sample Date: 11/20/08
Received Date: 11/21/08
Extraction Date: 11/25/08
Analysis Date: 16-DEC-2008 21:10
Report Date: 12/18/2008
Matrix: WATER
% Solids: NA

Lab ID: SB6751-6
Client ID: MR08-FB112008
SDG: TO9-5
Extracted by: CB
Extraction Method: SW846 3510
Analyst: JCG
Analysis Method: SW846 M8270C
Lab Prep Batch: WG58494
Units: ug/L

CAS#	Compound	Flags	Results	DF	PQL	Adj.PQL	Adj.MDL	
91-20-3	Naphthalene	U	0.24	1.0	0.25	0.24	0.060	
91-57-6	2-Methylnaphthalene	U	0.24	1.0	0.25	0.24	0.073	
86-73-7	Fluorene	U	0.24	1.0	0.25	0.24	0.058	
85-01-8	Phenanthrene	U	0.24	1.0	0.25	0.24	0.048	
206-44-0	Fluoranthene	U	0.24	1.0	0.25	0.24	0.069	
129-00-0	Pyrene	U	0.24	1.0	0.25	0.24	0.056	
56-55-3	Benzo(a)anthracene	U	0.24	1.0	0.25	0.24	0.043	
205-99-2	Benzo(b)fluoranthene	~~U~~ UJ	0.25	1.0	0.27	0.25	0.084	CCH
207-08-9	Benzo(k)fluoranthene	~~U~~ UJ	0.24	1.0	0.25	0.24	0.046	CCH
50-32-8	Benzo(a)pyrene	U	0.24	1.0	0.25	0.24	0.062	
193-39-5	Indeno(1,2,3-cd)pyrene	U	0.24	1.0	0.25	0.24	0.049	
53-70-3	Dibenzo(a,h)anthracene	U	0.24	1.0	0.25	0.24	0.066	
191-24-2	Benzo(g,h,i)perylene	U	0.24	1.0	0.25	0.24	0.061	
118-74-1	Hexachlorobenzene	U	0.24	1.0	0.25	0.24	0.052	
87-68-3	Hexachlorobutadiene	U	0.25	1.0	0.27	0.25	0.082	
77-47-4	Hexachlorocyclopentadiene	~~U~~ UJ	0.24	1.0	0.25	0.24	0.063	CCH
7297-45-2	2-Methylnaphthalene-D10		60%					
367-12-4	2,4-Dibromophenol		74%					
81103-79-9	Fluorene-d10		61%					
1718-51-1	Pyrene-D10		100%					

lcw 11/31/09

11

KATAHDIN ANALYTICAL SERVICES
Report of Analytical Results

Client: CH2MHill
Project: TO-009 Lejeune
PO No:
Sample Date: 11/20/08
Received Date: 11/21/08
Extraction Date: 11/25/08
Analysis Date: 16-DEC-2008 21:52
Report Date: 12/18/2008
Matrix: WATER
% Solids: NA

Lab ID: SB6751-8
Client ID: MR08-TW04-08D
SDG: TO9-5
Extracted by: CB
Extraction Method: SW846 3510
Analyst: JCG
Analysis Method: SW846 M8270C
Lab Prep Batch: WG58494
Units: ug/L

CAS#	Compound	Flags	Results	DF	PQL	Adj.PQL	Adj.MDL	
91-20-3	Naphthalene	U	0.24	1.0	0.25	0.24	0.060	
91-57-6	2-Methylnaphthalene	U	0.24	1.0	0.25	0.24	0.073	
86-73-7	Fluorene	U	0.24	1.0	0.25	0.24	0.058	
85-01-8	Phenanthrene	U	0.24	1.0	0.25	0.24	0.048	
206-44-0	Fluoranthene	U	0.24	1.0	0.25	0.24	0.069	
129-00-0	Pyrene	U	0.24	1.0	0.25	0.24	0.056	
56-55-3	Benzo(a)anthracene	U	0.24	1.0	0.25	0.24	0.043	
205-99-2	Benzo(b)fluoranthene	~~U~~ UJ	0.25	1.0	0.27	0.25	0.084	CCH
207-08-9	Benzo(k)fluoranthene	~~U~~ UJ	0.24	1.0	0.25	0.24	0.046	CCH
50-32-8	Benzo(a)pyrene	U	0.24	1.0	0.25	0.24	0.062	
193-39-5	Indeno(1,2,3-cd)pyrene	U	0.24	1.0	0.25	0.24	0.049	
53-70-3	Dibenzo(a,h)anthracene	U	0.24	1.0	0.25	0.24	0.066	
191-24-2	Benzo(g,h,i)perylene	U	0.24	1.0	0.25	0.24	0.061	
118-74-1	Hexachlorobenzene	U	0.24	1.0	0.25	0.24	0.052	
87-68-3	Hexachlorobutadiene	U	0.25	1.0	0.27	0.25	0.082	
77-47-4	Hexachlorocyclopentadiene	~~U~~ UJ	0.24	1.0	0.25	0.24	0.063	CCH
7297-45-2	2-Methylnaphthalene-D10		54%					
367-12-4	2,4-Dibromophenol		63%					
81103-79-9	Fluorene-d10		62%					
1718-51-1	Pyrene-D10		91%					

hw 1/31/09

12

KATAHDIN ANALYTICAL SERVICES
Report of Analytical Results

Client: CH2MHill
Project: TO-009 Lejeune
PO No:
Sample Date: 11/20/08
Received Date: 11/21/08
Extraction Date: 11/25/08
Analysis Date: 16-DEC-2008 22:35
Report Date: 12/18/2008
Matrix: WATER
% Solids: NA

Lab ID: SB6751-10
Client ID: MR08-TW19-08D
SDG: TO9-5
Extracted by: CB
Extraction Method: SW846 3510
Analyst: JCG
Analysis Method: SW846 M8270C
Lab Prep Batch: WG58494
Units: ug/L

CAS#	Compound	Flags	Results	DF	PQL	Adj.PQL	Adj.MDL	
91-20-3	Naphthalene	U	0.24	1.0	0.25	0.24	0.060	
91-57-6	2-Methylnaphthalene	U	0.24	1.0	0.25	0.24	0.073	
86-73-7	Fluorene	U	0.24	1.0	0.25	0.24	0.058	
85-01-8	Phenanthrene	U	0.24	1.0	0.25	0.24	0.048	
206-44-0	Fluoranthene	U	0.24	1.0	0.25	0.24	0.069	
129-00-0	Pyrene	U	0.24	1.0	0.25	0.24	0.056	
56-55-3	Benzo(a)anthracene	U	0.24	1.0	0.25	0.24	0.043	
205-99-2	Benzo(b)fluoranthene	~~U~~ UJ	0.25	1.0	0.27	0.25	0.084	CCH
207-08-9	Benzo(k)fluoranthene	~~U~~ UJ	0.24	1.0	0.25	0.24	0.046	CCH
50-32-8	Benzo(a)pyrene	U	0.24	1.0	0.25	0.24	0.062	
193-39-5	Indeno(1,2,3-cd)pyrene	U	0.24	1.0	0.25	0.24	0.049	
53-70-3	Dibenzo(a,h)anthracene	U	0.24	1.0	0.25	0.24	0.066	
191-24-2	Benzo(g,h,i)perylene	U	0.24	1.0	0.25	0.24	0.061	
118-74-1	Hexachlorobenzene	U	0.24	1.0	0.25	0.24	0.052	
87-68-3	Hexachlorobutadiene	U	0.25	1.0	0.27	0.25	0.082	
77-47-4	Hexachlorocyclopentadiene	~~U~~ UJ	0.24	1.0	0.25	0.24	0.063	CCH
7297-45-2	2-Methylnaphthalene-D10		53%					
367-12-4	2,4-Dibromophenol		65%					
81103-79-9	Fluorene-d10		58%					
1718-51-1	Pyrene-D10		98%					

LW
1/31/09

13

KATAHDIN ANALYTICAL SERVICES
Report of Analytical Results

Client: CH2MHill
Project: TO-009 Lejeune
PO No:
Sample Date: 11/20/08
Received Date: 11/21/08
Extraction Date: 11/25/08
Analysis Date: 16-DEC-2008 23:17
Report Date: 12/18/2008
Matrix: WATER
% Solids: NA

Lab ID: SB6751-12
Client ID: MR08-TW20-08D
SDG: TO9-5
Extracted by: CB
Extraction Method: SW846 3510
Analyst: JCG
Analysis Method: SW846 M8270C
Lab Prep Batch: WG58494
Units: ug/L

CAS#	Compound	Flags	Results	DF	PQL	Adj.PQL	Adj.MDL	
91-20-3	Naphthalene	U	0.25	1.0	0.25	0.25	0.063	
91-57-6	2-Methylnaphthalene	U	0.25	1.0	0.25	0.25	0.076	
86-73-7	Fluorene	U	0.25	1.0	0.25	0.25	0.060	
85-01-8	Phenanthrene	U	0.25	1.0	0.25	0.25	0.050	
206-44-0	Fluoranthene	U	0.25	1.0	0.25	0.25	0.072	
129-00-0	Pyrene	U	0.25	1.0	0.25	0.25	0.058	
56-55-3	Benzo(a)anthracene	U	0.25	1.0	0.25	0.25	0.046	
205-99-2	Benzo(b)fluoranthene	~~U~~ UJ	0.27	1.0	0.27	0.27	0.088	CCH
207-08-9	Benzo(k)fluoranthene	~~U~~ UJ	0.25	1.0	0.25	0.25	0.048	CCH
50-32-8	Benzo(a)pyrene	U	0.25	1.0	0.25	0.25	0.065	
193-39-5	Indeno(1,2,3-cd)pyrene	U	0.25	1.0	0.25	0.25	0.051	
53-70-3	Dibenzo(a,h)anthracene	U	0.25	1.0	0.25	0.25	0.069	
191-24-2	Benzo(g,h,i)perylene	U	0.25	1.0	0.25	0.25	0.064	
118-74-1	Hexachlorobenzene	U	0.25	1.0	0.25	0.25	0.054	
87-68-3	Hexachlorobutadiene	U	0.27	1.0	0.27	0.27	0.086	
77-47-4	Hexachlorocyclopentadiene	~~U~~ UJ	0.25	1.0	0.25	0.25	0.066	CCH
7297-45-2	2-Methylnaphthalene-D10		63%					
367-12-4	2,4-Dibromophenol		81%					
81103-79-9	Fluorene-d10		65%					
1718-51-1	Pyrene-D10		101%					

lw 1/13/09

14

KATAHDIN ANALYTICAL SERVICES
Report of Analytical Results

Client: CH2MHill
Project: TO-009 Lejeune
PO No:
Sample Date: 11/20/08
Received Date: 11/21/08
Extraction Date: 11/25/08
Analysis Date: 16-DEC-2008 23:59
Report Date: 12/18/2008
Matrix: WATER
% Solids: NA

Lab ID: SB6751-14
Client ID: MR08-TW25-08D
SDG: TO9-5
Extracted by: CB
Extraction Method: SW846 3510
Analyst: JCG
Analysis Method: SW846 M8270C
Lab Prep Batch: WG58494
Units: ug/L

CAS#	Compound	Flags	Results	DF	PQL	Adj.PQL	Adj.MDL	
91-20-3	Naphthalene	U	0.24	1.0	0.25	0.24	0.062	
91-57-6	2-Methylnaphthalene	U	0.24	1.0	0.25	0.24	0.074	
86-73-7	Fluorene	U	0.24	1.0	0.25	0.24	0.059	
85-01-8	Phenanthrene	U	0.24	1.0	0.25	0.24	0.049	
206-44-0	Fluoranthene	U	0.24	1.0	0.25	0.24	0.070	
129-00-0	Pyrene	U	0.24	1.0	0.25	0.24	0.057	
56-55-3	Benzo(a)anthracene	U	0.24	1.0	0.25	0.24	0.044	
205-99-2	Benzo(b)fluoranthene	~~U~~ UJ	0.26	1.0	0.27	0.26	0.086	CCH
207-08-9	Benzo(k)fluoranthene	~~U~~ UJ	0.24	1.0	0.25	0.24	0.047	CCH
50-32-8	Benzo(a)pyrene	U	0.24	1.0	0.25	0.24	0.063	
193-39-5	Indeno(1,2,3-cd)pyrene	U	0.24	1.0	0.25	0.24	0.050	
53-70-3	Dibenzo(a,h)anthracene	U	0.24	1.0	0.25	0.24	0.067	
191-24-2	Benzo(g,h,i)perylene	U	0.24	1.0	0.25	0.24	0.062	
118-74-1	Hexachlorobenzene	U	0.24	1.0	0.25	0.24	0.053	
87-68-3	Hexachlorobutadiene	U	0.26	1.0	0.27	0.26	0.084	
77-47-4	Hexachlorocyclopentadiene	~~U~~ UJ	0.24	1.0	0.25	0.24	0.064	CCH
7297-45-2	2-Methylnaphthalene-D10		55%					
367-12-4	2,4-Dibromophenol		76%					
81103-79-9	Fluorene-d10		54%					
1718-51-1	Pyrene-D10		97%					

lw 11/31/09

KATAHDIN ANALYTICAL SERVICES
Report of Analytical Results

Client: CH2MHill
Project: TO-009 Lejeune
PO No:
Sample Date: 11/20/08
Received Date: 11/21/08
Extraction Date: 11/25/08
Analysis Date: 17-DEC-2008 00:41
Report Date: 12/18/2008
Matrix: WATER
% Solids: NA

Lab ID: SB6751-16
Client ID: MR08-TW18-08D
SDG: TO9-5
Extracted by: CB
Extraction Method: SW846 3510
Analyst: JCG
Analysis Method: SW846 M8270C
Lab Prep Batch: WG58494
Units: ug/L

CAS#	Compound	Flags	Results	DF	PQL	Adj.PQL	Adj.MDL	
91-20-3	Naphthalene	U	0.24	1.0	0.25	0.24	0.060	
91-57-6	2-Methylnaphthalene	U	0.24	1.0	0.25	0.24	0.073	
86-73-7	Fluorene	U	0.24	1.0	0.25	0.24	0.058	
85-01-8	Phenanthrene	U	0.24	1.0	0.25	0.24	0.048	
206-44-0	Fluoranthene	U	0.24	1.0	0.25	0.24	0.069	
129-00-0	Pyrene	U	0.24	1.0	0.25	0.24	0.056	
56-55-3	Benzo(a)anthracene	U	0.24	1.0	0.25	0.24	0.043	
205-99-2	Benzo(b)fluoranthene	~~U~~ UJ	0.25	1.0	0.27	0.25	0.084	CCH
207-08-9	Benzo(k)fluoranthene	~~U~~ UJ	0.24	1.0	0.25	0.24	0.046	CCH
50-32-8	Benzo(a)pyrene	U	0.24	1.0	0.25	0.24	0.062	
193-39-5	Indeno(1,2,3-cd)pyrene	U	0.24	1.0	0.25	0.24	0.049	
53-70-3	Dibenzo(a,h)anthracene	U	0.24	1.0	0.25	0.24	0.066	
191-24-2	Benzo(g,h,i)perylene	U	0.24	1.0	0.25	0.24	0.061	
118-74-1	Hexachlorobenzene	U	0.24	1.0	0.25	0.24	0.052	
87-68-3	Hexachlorobutadiene	U	0.25	1.0	0.27	0.25	0.082	
77-47-4	Hexachlorocyclopentadiene	~~U~~ UJ	0.24	1.0	0.25	0.24	0.063	CCH
7297-45-2	2-Methylnaphthalene-D10		56%					
367-12-4	2,4-Dibromophenol		67%					
81103-79-9	Fluorene-d10		58%					
1718-51-1	Pyrene-D10		90%					

lcw
11/31/09

KATAHDIN ANALYTICAL SERVICES
Report of Analytical Results

Client: CH2MHill
Project: TO-009 Lejeune
PO No:
Sample Date: 11/20/08
Received Date: 11/22/08
Extraction Date: 11/25/08
Analysis Date: 17-DEC-2008 21:44
Report Date: 12/18/2008
Matrix: WATER
% Solids: NA

Lab ID: SB6790-2
Client ID: MR08-TW24-08D
SDG: TO9-5
Extracted by: CB
Extraction Method: SW846 3510
Analyst: JCG
Analysis Method: SW846 M8270C
Lab Prep Batch: WG58494
Units: ug/L

CAS#	Compound	Flags	Results	DF	PQL	Adj.PQL	Adj.MDL
91-20-3	Naphthalene	U	0.24	1.0	0.25	0.24	0.060
91-57-6	2-Methylnaphthalene	U	0.24	1.0	0.25	0.24	0.073
86-73-7	Fluorene	U	0.24	1.0	0.25	0.24	0.058
85-01-8	Phenanthrene	U	0.24	1.0	0.25	0.24	0.048
206-44-0	Fluoranthene	U	0.24	1.0	0.25	0.24	0.069
129-00-0	Pyrene	U	0.24	1.0	0.25	0.24	0.056
56-55-3	Benzo(a)anthracene	U	0.24	1.0	0.25	0.24	0.043
205-99-2	Benzo(b)fluoranthene	U	0.25	1.0	0.27	0.25	0.084
207-08-9	Benzo(k)fluoranthene	U	0.24	1.0	0.25	0.24	0.046
50-32-8	Benzo(a)pyrene	U	0.24	1.0	0.25	0.24	0.062
193-39-5	Indeno(1,2,3-cd)pyrene	U	0.24	1.0	0.25	0.24	0.049
53-70-3	Dibenzo(a,h)anthracene	U	0.24	1.0	0.25	0.24	0.066
191-24-2	Benzo(g,h,i)perylene	U	0.24	1.0	0.25	0.24	0.061
118-74-1	Hexachlorobenzene	U	0.24	1.0	0.25	0.24	0.052
87-68-3	Hexachlorobutadiene	U	0.25	1.0	0.27	0.25	0.082
77-47-4	Hexachlorocyclopentadiene	U	0.24	1.0	0.25	0.24	0.063
7297-45-2	2-Methylnaphthalene-D10		60%				
367-12-4	2,4-Dibromophenol		76%				
81103-79-9	Fluorene-d10		60%				
1718-51-1	Pyrene-D10		114%				

lcW 1/31/09

17

KATAHDIN ANALYTICAL SERVICES
Report of Analytical Results

Client: CH2MHill
Project: TO-009 Lejeune
PO No:
Sample Date: 11/20/08
Received Date: 11/22/08
Extraction Date: 11/25/08
Analysis Date: 17-DEC-2008 22:27
Report Date: 12/18/2008
Matrix: WATER
% Solids: NA

Lab ID: SB6790-4
Client ID: MR08-TW17-08D
SDG: TO9-5
Extracted by: CB
Extraction Method: SW846 3510
Analyst: JCG
Analysis Method: SW846 M8270C
Lab Prep Batch: WG58494
Units: ug/L

CAS#	Compound	Flags	Results	DF	PQL	Adj.PQL	Adj.MDL
91-20-3	Naphthalene	U	0.24	1.0	0.25	0.24	0.063
91-57-6	2-Methylnaphthalene	U	0.24	1.0	0.25	0.24	0.075
86-73-7	Fluorene	U	0.24	1.0	0.25	0.24	0.060
85-01-8	Phenanthrene	U	0.24	1.0	0.25	0.24	0.050
206-44-0	Fluoranthene	U	0.24	1.0	0.25	0.24	0.072
129-00-0	Pyrene	U	0.24	1.0	0.25	0.24	0.058
56-55-3	Benzo(a)anthracene	U	0.24	1.0	0.25	0.24	0.045
205-99-2	Benzo(b)fluoranthene	U	0.26	1.0	0.27	0.26	0.087
207-08-9	Benzo(k)fluoranthene	U	0.24	1.0	0.25	0.24	0.048
50-32-8	Benzo(a)pyrene	U	0.24	1.0	0.25	0.24	0.065
193-39-5	Indeno(1,2,3-cd)pyrene	U	0.24	1.0	0.25	0.24	0.051
53-70-3	Dibenzo(a,h)anthracene	U	0.24	1.0	0.25	0.24	0.069
191-24-2	Benzo(g,h,i)perylene	U	0.24	1.0	0.25	0.24	0.064
118-74-1	Hexachlorobenzene	U	0.24	1.0	0.25	0.24	0.054
87-68-3	Hexachlorobutadiene	U	0.26	1.0	0.27	0.26	0.085
77-47-4	Hexachlorocyclopentadiene	U	0.24	1.0	0.25	0.24	0.066
7297-45-2	2-Methylnaphthalene-D10		65%				
367-12-4	2,4-Dibromophenol		86%				
81103-79-9	Fluorene-d10		65%				
1718-51-1	Pyrene-D10		114%				

hw
1/31/09

18

KATAHDIN ANALYTICAL SERVICES
Report of Analytical Results

Client: CH2MHill
Project: TO-009 Lejeune
PO No:
Sample Date: 11/20/08
Received Date: 11/22/08
Extraction Date: 11/25/08
Analysis Date: 17-DEC-2008 23:09
Report Date: 12/18/2008
Matrix: WATER
% Solids: NA

Lab ID: SB6790-6
Client ID: MR08-TW17D-08D
SDG: TO9-5
Extracted by: CB
Extraction Method: SW846 3510
Analyst: JCG
Analysis Method: SW846 M8270C
Lab Prep Batch: WG58494
Units: ug/L

CAS#	Compound	Flags	Results	DF	PQL	Adj.PQL	Adj.MDL
91-20-3	Naphthalene	U	0.25	1.0	0.25	0.25	0.064
91-57-6	2-Methylnaphthalene	U	0.25	1.0	0.25	0.25	0.077
86-73-7	Fluorene	U	0.25	1.0	0.25	0.25	0.061
85-01-8	Phenanthrene	U	0.25	1.0	0.25	0.25	0.051
206-44-0	Fluoranthene	U	0.25	1.0	0.25	0.25	0.073
129-00-0	Pyrene	U	0.25	1.0	0.25	0.25	0.059
56-55-3	Benzo(a)anthracene	U	0.25	1.0	0.25	0.25	0.046
205-99-2	Benzo(b)fluoranthene	U	0.27	1.0	0.27	0.27	0.089
207-08-9	Benzo(k)fluoranthene	U	0.25	1.0	0.25	0.25	0.049
50-32-8	Benzo(a)pyrene	U	0.25	1.0	0.25	0.25	0.066
193-39-5	Indeno(1,2,3-cd)pyrene	U	0.25	1.0	0.25	0.25	0.052
53-70-3	Dibenzo(a,h)anthracene	U	0.25	1.0	0.25	0.25	0.070
191-24-2	Benzo(g,h,i)perylene	U	0.25	1.0	0.25	0.25	0.065
118-74-1	Hexachlorobenzene	U	0.25	1.0	0.25	0.25	0.055
87-68-3	Hexachlorobutadiene	U	0.27	1.0	0.27	0.27	0.087
77-47-4	Hexachlorocyclopentadiene	U	0.25	1.0	0.25	0.25	0.067
7297-45-2	2-Methylnaphthalene-D10		69%				
367-12-4	2,4-Dibromophenol		94%				
81103-79-9	Fluorene-d10		69%				
1718-51-1	Pyrene-D10		117%				

MW 1/31/09

KATAHDIN ANALYTICAL SERVICES
Report of Analytical Results

Client: CH2MHill
Project: TO-009 Lejeune
PO No:
Sample Date: 11/21/08
Received Date: 11/22/08
Extraction Date: 11/25/08
Analysis Date: 17-DEC-2008 23:51
Report Date: 12/18/2008
Matrix: WATER
% Solids: NA

Lab ID: SB6790-8
Client ID: MR08-TW15-08D
SDG: TO9-5
Extracted by: CB
Extraction Method: SW846 3510
Analyst: JCG
Analysis Method: SW846 M8270C
Lab Prep Batch: WG58494
Units: ug/L

CAS#	Compound	Flags	Results	DF	PQL	Adj.PQL	Adj.MDL
91-20-3	Naphthalene	U	0.24	1.0	0.25	0.24	0.063
91-57-6	2-Methylnaphthalene	U	0.24	1.0	0.25	0.24	0.075
86-73-7	Fluorene	U	0.24	1.0	0.25	0.24	0.060
85-01-8	Phenanthrene	U	0.24	1.0	0.25	0.24	0.050
206-44-0	Fluoranthene	U	0.24	1.0	0.25	0.24	0.072
129-00-0	Pyrene	U	0.24	1.0	0.25	0.24	0.058
56-55-3	Benzo(a)anthracene	U	0.24	1.0	0.25	0.24	0.045
205-99-2	Benzo(b)fluoranthene	U	0.26	1.0	0.27	0.26	0.087
207-08-9	Benzo(k)fluoranthene	U	0.24	1.0	0.25	0.24	0.048
50-32-8	Benzo(a)pyrene	U	0.24	1.0	0.25	0.24	0.065
193-39-5	Indeno(1,2,3-cd)pyrene	U	0.24	1.0	0.25	0.24	0.051
53-70-3	Dibenzo(a,h)anthracene	U	0.24	1.0	0.25	0.24	0.069
191-24-2	Benzo(g,h,i)perylene	U	0.24	1.0	0.25	0.24	0.064
118-74-1	Hexachlorobenzene	U	0.24	1.0	0.25	0.24	0.054
87-68-3	Hexachlorobutadiene	U	0.26	1.0	0.27	0.26	0.085
77-47-4	Hexachlorocyclopentadiene	U	0.24	1.0	0.25	0.24	0.066
7297-45-2	2-Methylnaphthalene-D10		59%				
367-12-4	2,4-Dibromophenol		89%				
81103-79-9	Fluorene-d10		62%				
1718-51-1	Pyrene-D10		115%				

kw 1/31/09

KATAHDIN ANALYTICAL SERVICES
Report of Analytical Results

Client: CH2MHill
Project: TO-009 Lejeune
PO No:
Sample Date: 11/21/08
Received Date: 11/22/08
Extraction Date: 11/25/08
Analysis Date: 18-DEC-2008 00:33
Report Date: 12/18/2008
Matrix: WATER
% Solids: NA

Lab ID: SB6790-10
Client ID: MR08-TW15D-08D
SDG: TO9-5
Extracted by: CB
Extraction Method: SW846 3510
Analyst: JCG
Analysis Method: SW846 M8270C
Lab Prep Batch: WG58494
Units: ug/L

CAS#	Compound	Flags	Results	DF	PQL	Adj.PQL	Adj.MDL
91-20-3	Naphthalene	U	0.24	1.0	0.25	0.24	0.062
91-57-6	2-Methylnaphthalene	U	0.24	1.0	0.25	0.24	0.075
86-73-7	Fluorene	U	0.24	1.0	0.25	0.24	0.059
85-01-8	Phenanthrene	U	0.24	1.0	0.25	0.24	0.050
206-44-0	Fluoranthene	U	0.24	1.0	0.25	0.24	0.071
129-00-0	Pyrene	U	0.24	1.0	0.25	0.24	0.057
56-55-3	Benzo(a)anthracene	U	0.24	1.0	0.25	0.24	0.045
205-99-2	Benzo(b)fluoranthene	U	0.26	1.0	0.27	0.26	0.086
207-08-9	Benzo(k)fluoranthene	U	0.24	1.0	0.25	0.24	0.048
50-32-8	Benzo(a)pyrene	U	0.24	1.0	0.25	0.24	0.064
193-39-5	Indeno(1,2,3-cd)pyrene	U	0.24	1.0	0.25	0.24	0.050
53-70-3	Dibenzo(a,h)anthracene	U	0.24	1.0	0.25	0.24	0.068
191-24-2	Benzo(g,h,i)perylene	U	0.24	1.0	0.25	0.24	0.063
118-74-1	Hexachlorobenzene	U	0.24	1.0	0.25	0.24	0.053
87-68-3	Hexachlorobutadiene	U	0.26	1.0	0.27	0.26	0.084
77-47-4	Hexachlorocyclopentadiene	U	0.24	1.0	0.25	0.24	0.065
7297-45-2	2-Methylnaphthalene-D10		61%				
367-12-4	2,4-Dibromophenol		82%				
81103-79-9	Fluorene-d10		63%				
1718-51-1	Pyrene-D10		98%				

JW 1/31/09

ENVIRONMENTAL
Data Services, Inc.

SEMIVOLATILE ORGANIC COMPOUNDS

USEPA Region IV - Level IV Review

Site: MCB Camp Lejeune, TO-09 SDG #: TO9-5

Client: CH2M HILL, Inc., Virginia Beach, Virginia Date: January 31, 2009

Laboratory: Katahdin Analytical Services, Scarborough, Maine Reviewer: Nancy Weaver

EDS ID	Client Sample ID	Laboratory Sample ID	Matrix
1	MR08-TW09-08D	SB6677-1	Water
2	MR08-TW01-08D	SB6677-3	Water
2MS	MR08-TW01-08DMS	SB6677-3MS	Water
2MSD	MR08-TW01-08DMSD	SB6677-3MSD	Water
3	MR08-TW02-08D	SB6712-1	Water
4	MR08-TW02D-08D	SB6712-3	Water
5	MR08-TW03-08D	SB6712-5	Water
6	MR08-TW03D-08D	SB6712-7	Water
7	MR08-EB111808	SB6712-9	Water
8	MR08-EB111908	SB6751-1	Water
9	MR08-TW26-08D	SB6751-3	Water
9MS	MR08-TW26-08DMS	SB6751-3MS	Water
9MSD	MR08-TW26-08DMSD	SB6751-3MSD	Water
10	MR08-FB112008	SB6751-5	Water
11	MR08-TW04-08D	SB6751-7	Water
12	MR08-TW19-08D	SB6751-9	Water
13	MR08-TW20-08D	SB6751-11	Water
14	MR08-TW25-08D	SB6751-13	Water
15	MR08-TW18-08D	SB6751-15	Water
16	MR08-TW24-08D	SB6790-1	Water
17	MR08-TW17-08D	SB6790-3	Water
18	MR08-TW17D-08D	SB6790-5	Water
19	MR08-TW15-08D	SB6790-7	Water
20	MR08-TW15D-08D	SB6790-9	Water

The USEPA "Contract Laboratory Program National Functional Guidelines for Organic Data Review," October 1999, and professional judgement were used in evaluating the data in this summary report.

Holding Times - All samples were extracted within 7 days for water samples and analyzed within 40 days for all samples.

GC/MS Tuning - All of the DFTPP tunes in the initial and continuing calibrations met the percent relative abundance criteria.

Initial Calibration - The initial calibrations exhibited acceptable %RSD and mean RRF values.

Continuing Calibration - The continuing calibrations exhibited acceptable %D and RRF values except the following.

CCAL Date	Compound	%D/RRF	Qualifier	Affected Samples
12/11/08	Nitrobenzene	26.09%	J/UJ	1, 2, 8
	Butylbenzylphthalate	32.95%	J/UJ	1, 2, 8
	bis (2-Ethylhexyl) phthalate	37.24%	J/UJ	1, 2, 8
	Di-n-octyl phthalate	53.23%	J/UJ	1, 2, 8
12/13/08 1144	Butylbenzylphthalate	32.91%	J/UJ	9-20
	bis (2-Ethylhexyl) phthalate	39.53%	J/UJ	9-20
	Di-n-octyl phthalate	54.52%	J/UJ	9-20
12/13/08 2101	Butylbenzylphthalate	47.85%	J/UJ	3-7
	bis (2-Ethylhexyl) phthalate	57.98%	J/UJ	3-7
	Di-n-octyl phthalate	89.82%	J/UJ	3-7

Surrogates - All samples exhibited acceptable surrogate recoveries.

MS/MSD - The MS/MSD sample exhibited acceptable %R and RPD values except the following.

MS/MSD Sample ID	Compound	MS/MSD %R/RPD	Qualifier
2	Caprolactam	Ok/11%/72	J/UJ
	Butylbenzylphthalate	142%/144%/Ok	None - Already qualified due to CCAL
	bis (2-Ethylhexyl) phthalate	149%/151%/Ok	None - Already qualified due to CCAL
	Di-n-octyl phthalate	158%/157%/Ok	None - Already qualified due to CCAL
9	Caprolactam	Ok/Ok/39	None for RPD alone
	4-Nitrophenol	Ok/Ok/58	None for RPD alone
	Butylbenzylphthalate	143%/136%/Ok	None - All ND
	bis (2-Ethylhexyl) phthalate	157%/146%/Ok	None - All ND
	Di-n-octyl phthalate	160%/168%/Ok	None - All ND

Laboratory Control Sample - The LCS samples exhibited acceptable %R values except the following.

LCS ID	Compound	%R	Qualifier	Affected Samples
WG58355-LCS	Butylbenzylphthalate	129%	None	All associated ND

LCS ID	Compound	%R	Qualifier	Affected Samples
WG58355-LCS	bis (2-Ethylhexyl) phthalate	146%	None	All associated ND
	Di-n-octyl phthalate	153%	None	All associated ND
WG58493-LCS	Di-n-octyl phthalate	138%	None	All associated ND

Internal Standard (IS) Area Performance - All internal standards met response and retention time (RT) criteria.

Method Blank - The method blanks were free of contamination.

Field, Equipment Blank - Field QC results are summarized below.

Blank ID	Compound	Conc. ug/L	Action Level ug/L	Qualifier	Affected Samples
MR08-EB111708-1	None - ND	-	-	-	-
MR08-FB112008	None - ND	-	-	-	-

Field Duplicates - Field duplicate results are summarized below.

Compound	MR08-TW02-08D ug/L	MR08-TW02D-08D ug/L	RPD	Qualifier
None	ND	ND	-	-

Compound	MR08-TW03-08D ug/L	MR08-TW03D-08D ug/L	RPD	Qualifier
None	ND	ND	-	-

Compound	MR08-TW17-08D ug/L	MR08-TW17D-08D ug/L	RPD	Qualifier
None	ND	ND	-	-

Compound	MR08-TW15-08D ug/L	MR08-TW15D-08D ug/L	RPD	Qualifier
None	ND	ND	-	-

Tentatively Identified Compounds (TICs) - TICs were not reported.

Compound Quantitation - No discrepancies were identified.

KATAHDIN ANALYTICAL SERVICES
Report of Analytical Results

Client: CH2MHill
Project: TO-009 Lejeune
PO No:
Sample Date: 11/17/08
Received Date: 11/19/08
Extraction Date: 11/20/08
Analysis Date: 12-DEC-2008 00:21
Report Date: 12/15/2008
Matrix: WATER
% Solids: NA

Lab ID: SB6677-1
Client ID: MR08-TW09-08D
SDG: TO9-5
Extracted by: KF
Extraction Method: SW846 3510
Analyst: JCG
Analysis Method: SW846 8270C
Lab Prep Batch: WG58315
Units: ug/L

CAS#	Compound	Flags	Results	DF	PQL	Adj.PQL	Adj.MDL
100-52-7	Benzaldehyde	U	10	1.0	10	10	3
108-95-2	Phenol	U	10	1.0	10	10	2
111-44-4	Bis(2-Chloroethyl)ether	U	10	1.0	10	10	2
95-57-8	2-Chlorophenol	U	12	1.0	12	12	4
95-48-7	2-Methylphenol	U	12	1.0	12	12	4
108-60-1	2,2'-Oxybis(1-chloropropane)	U	10	1.0	10	10	2
98-86-2	Acetophenone	U	12	1.0	12	12	4
621-64-7	N-Nitroso-di-n-propylamine	U	10	1.0	10	10	2
65794-96-9	3&4-Methylphenol	U	10	1.0	10	10	3
67-72-1	Hexachloroethane	U	10	1.0	10	10	2
98-95-3	Nitrobenzene	~~U~~ UJ	10	1.0	10	10	2 CCH
78-59-1	Isophorone	U	10	1.0	10	10	2
88-75-5	2-Nitrophenol	U	10	1.0	10	10	4
105-67-9	2,4-Dimethylphenol	U	12	1.0	12	12	4
111-91-1	Bis(2-Chloroethoxy)methane	U	10	1.0	10	10	2
120-83-2	2,4-Dichlorophenol	U	12	1.0	12	12	4
106-47-8	4-Chloroaniline	U	10	1.0	10	10	2
105-60-2	Caprolactam	U	10	1.0	10	10	0.4
59-50-7	4-Chloro-3-Methylphenol	U	10	1.0	10	10	3
88-06-2	2,4,6-Trichlorophenol	U	10	1.0	10	10	3
95-95-4	2,4,5-Trichlorophenol	U	26	1.0	25	26	4
91-58-7	2-Chloronaphthalene	U	10	1.0	10	10	2
92-52-4	1,1'-Biphenyl	U	10	1.0	10	10	2
88-74-4	2-Nitroaniline	U	26	1.0	25	26	2
131-11-3	Dimethyl Phthalate	U	10	1.0	10	10	0.8
606-20-2	2,6-Dinitrotoluene	U	10	1.0	10	10	1
208-96-8	Acenaphthylene	U	10	1.0	10	10	2
99-09-2	3-Nitroaniline	U	26	1.0	25	26	1
83-32-9	Acenaphthene	U	10	1.0	10	10	2
51-28-5	2,4-Dinitrophenol	U	46	1.0	45	46	15
132-64-9	Dibenzofuran	U	10	1.0	10	10	2
100-02-7	4-Nitrophenol	U	26	1.0	25	26	6
121-14-2	2,4-Dinitrotoluene	U	10	1.0	10	10	1
84-66-2	Diethylphthalate	U	10	1.0	10	10	1
7005-72-3	4-Chlorophenyl-phenylether	U	10	1.0	10	10	1
100-01-6	4-Nitroaniline	U	26	1.0	25	26	2
534-52-1	4,6-Dinitro-2-Methylphenol	U	26	1.0	25	26	6
86-30-6	N-Nitrosodiphenylamine	U	10	1.0	10	10	2
101-55-3	4-Bromophenyl-phenylether	U	10	1.0	10	10	1
1912-24-9	Atrazine	U	10	1.0	10	10	2
87-86-5	Pentachlorophenol	U	26	1.0	25	26	8
120-12-7	Anthracene	U	10	1.0	10	10	1
86-74-8	Carbazole	U	10	1.0	10	10	1

RW 1/31/09

KATAHDIN ANALYTICAL SERVICES
Report of Analytical Results

Client: CH2MHill
Project: TO-009 Lejeune
PO No:
Sample Date: 11/17/08
Received Date: 11/19/08
Extraction Date: 11/20/08
Analysis Date: 12-DEC-2008 00:21
Report Date: 12/15/2008
Matrix: WATER
% Solids: NA

Lab ID: SB6677-1
Client ID: MR08-TW09-08D
SDG: TO9-5
Extracted by: KF
Extraction Method: SW846 3510
Analyst: JCG
Analysis Method: SW846 8270C
Lab Prep Batch: WG58315
Units: ug/L

CAS#	Compound	Flags	Results	DF	PQL	Adj.PQL	Adj.MDL
84-74-2	Di-n-butylphthalate	U	10	1.0	10	10	1
85-68-7	Butylbenzylphthalate	~~U~~ UJ	10	1.0	10	10	2 CCH
91-94-1	3,3'-Dichlorobenzidine	U	10	1.0	10	10	3
218-01-9	Chrysene	U	10	1.0	10	10	1
117-81-7	bis(2-Ethylhexyl)phthalate	~~U~~ UJ	10	1.0	10	10	2 CCH
117-84-0	Di-n-octylphthalate	~~U~~ UJ	10	1.0	10	10	2 CCH
367-12-4	2-Fluorophenol		40%				
13127-88-3	Phenol-D6		23%				
4165-60-0	Nitrobenzene-D5		75%				
321-60-8	2-Fluorobiphenyl		77%				
118-79-6	2,4,6-Tribromophenol		78%				
1718-51-0	Terphenyl-D14		128%				

LW 1/31/09

2

KATAHDIN ANALYTICAL SERVICES
Report of Analytical Results

Client: CH2MHill
Project: TO-009 Lejeune
PO No:
Sample Date: 11/17/08
Received Date: 11/19/08
Extraction Date: 11/20/08
Analysis Date: 12-DEC-2008 01:03
Report Date: 12/15/2008
Matrix: WATER
% Solids: NA

Lab ID: SB6677-3
Client ID: MR08-TW01-08D
SDG: TO9-5
Extracted by: KF
Extraction Method: SW846 3510
Analyst: JCG
Analysis Method: SW846 8270C
Lab Prep Batch: WG58315
Units: ug/L

CAS#	Compound	Flags	Results	DF	PQL	Adj.PQL	Adj.MDL	
100-52-7	Benzaldehyde	U	10	1.0	10	10	3	
108-95-2	Phenol	U	10	1.0	10	10	2	
111-44-4	Bis(2-Chloroethyl)ether	U	10	1.0	10	10	2	
95-57-8	2-Chlorophenol	U	12	1.0	12	12	3	
95-48-7	2-Methylphenol	U	12	1.0	12	12	4	
108-60-1	2,2'-Oxybis(1-chloropropane)	U	10	1.0	10	10	2	
98-86-2	Acetophenone	U	12	1.0	12	12	4	
621-64-7	N-Nitroso-di-n-propylamine	U	10	1.0	10	10	2	
65794-96-9	3&4-Methylphenol	U	10	1.0	10	10	3	
67-72-1	Hexachloroethane	U	10	1.0	10	10	2	
98-95-3	Nitrobenzene	~~U~~ UJ	10	1.0	10	10	2	CCH
78-59-1	Isophorone	U	10	1.0	10	10	2	
88-75-5	2-Nitrophenol	U	10	1.0	10	10	4	
105-67-9	2,4-Dimethylphenol	U	12	1.0	12	12	4	
111-91-1	Bis(2-Chloroethoxy)methane	U	10	1.0	10	10	2	
120-83-2	2,4-Dichlorophenol	U	12	1.0	12	12	4	
106-47-8	4-Chloroaniline	U	10	1.0	10	10	2	
105-60-2	Caprolactam	~~U~~ UJ	10	1.0	10	10	0.4	MSL
59-50-7	4-Chloro-3-Methylphenol	U	10	1.0	10	10	2	
88-06-2	2,4,6-Trichlorophenol	U	10	1.0	10	10	3	
95-95-4	2,4,5-Trichlorophenol	U	25	1.0	25	25	4	
91-58-7	2-Chloronaphthalene	U	10	1.0	10	10	2	
92-52-4	1,1'-Biphenyl	U	10	1.0	10	10	2	
88-74-4	2-Nitroaniline	U	25	1.0	25	25	2	
131-11-3	Dimethyl Phthalate	U	10	1.0	10	10	0.8	
606-20-2	2,6-Dinitrotoluene	U	10	1.0	10	10	1	
208-96-8	Acenaphthylene	U	10	1.0	10	10	2	
99-09-2	3-Nitroaniline	U	25	1.0	25	25	1	
83-32-9	Acenaphthene	U	10	1.0	10	10	2	
51-28-5	2,4-Dinitrophenol	U	45	1.0	45	45	15	
132-64-9	Dibenzofuran	U	10	1.0	10	10	1	
100-02-7	4-Nitrophenol	U	25	1.0	25	25	6	
121-14-2	2,4-Dinitrotoluene	U	10	1.0	10	10	1	
84-66-2	Diethylphthalate	U	10	1.0	10	10	1	
7005-72-3	4-Chlorophenyl-phenylether	U	10	1.0	10	10	1	
100-01-6	4-Nitroaniline	U	25	1.0	25	25	2	
534-52-1	4,6-Dinitro-2-Methylphenol	U	25	1.0	25	25	6	
86-30-6	N-Nitrosodiphenylamine	U	10	1.0	10	10	2	
101-55-3	4-Bromophenyl-phenylether	U	10	1.0	10	10	1	
1912-24-9	Atrazine	U	10	1.0	10	10	2	
87-86-5	Pentachlorophenol	U	25	1.0	25	25	8	
120-12-7	Anthracene	U	10	1.0	10	10	1	
86-74-8	Carbazole	U	10	1.0	10	10	1	

hw 4/31/09

2

KATAHDIN ANALYTICAL SERVICES
Report of Analytical Results

Client: CH2MHill
Project: TO-009 Lejeune
PO No:
Sample Date: 11/17/08
Received Date: 11/19/08
Extraction Date: 11/20/08
Analysis Date: 12-DEC-2008 01:03
Report Date: 12/15/2008
Matrix: WATER
% Solids: NA

Lab ID: SB6677-3
Client ID: MR08-TW01-08D
SDG: TO9-5
Extracted by: KF
Extraction Method: SW846 3510
Analyst: JCG
Analysis Method: SW846 8270C
Lab Prep Batch: WG58315
Units: ug/L

CAS#	Compound	Flags	Results	DF	PQL	Adj.PQL	Adj.MDL	
84-74-2	Di-n-butylphthalate	U	10	1.0	10	10	1	
85-68-7	Butylbenzylphthalate	~~U~~ UJ	10	1.0	10	10	2	CCH
91-94-1	3,3'-Dichlorobenzidine	U	10	1.0	10	10	3	
218-01-9	Chrysene	U	10	1.0	10	10	1	
117-81-7	bis(2-Ethylhexyl)phthalate	~~U~~ UJ	10	1.0	10	10	2	CCH
117-84-0	Di-n-octylphthalate	~~U~~ UJ	10	1.0	10	10	2	CCH
367-12-4	2-Fluorophenol		46%					
13127-88-3	Phenol-D6		28%					
4165-60-0	Nitrobenzene-D5		76%					
321-60-8	2-Fluorobiphenyl		77%					
118-79-6	2,4,6-Tribromophenol		88%					
1718-51-0	Terphenyl-D14		131%					

gW
1/31/09

3

KATAHDIN ANALYTICAL SERVICES
Report of Analytical Results

Client: CH2MHill
Project: TO-009 Lejeune
PO No:
Sample Date: 11/18/08
Received Date: 11/20/08
Extraction Date: 11/21/08
Analysis Date: 13-DEC-2008 21:45
Report Date: 12/15/2008
Matrix: WATER
% Solids: NA

Lab ID: SB6712-1
Client ID: MR08-TW02-08D
SDG: TO9-5
Extracted by: KF
Extraction Method: SW846 3510
Analyst: JCG
Analysis Method: SW846 8270C
Lab Prep Batch: WG58355
Units: ug/L

CAS#	Compound	Flags	Results	DF	PQL	Adj.PQL	Adj.MDL
100-52-7	Benzaldehyde	U	9	1.0	10	9	3
108-95-2	Phenol	U	9	1.0	10	9	2
111-44-4	Bis(2-Chloroethyl)ether	U	9	1.0	10	9	2
95-57-8	2-Chlorophenol	U	11	1.0	12	11	3
95-48-7	2-Methylphenol	U	11	1.0	12	11	4
108-60-1	2,2'-Oxybis(1-chloropropane)	U	9	1.0	10	9	2
98-86-2	Acetophenone	U	11	1.0	12	11	4
621-64-7	N-Nitroso-di-n-propylamine	U	9	1.0	10	9	2
65794-96-9	3&4-Methylphenol	U	9	1.0	10	9	2
67-72-1	Hexachloroethane	U	9	1.0	10	9	2
98-95-3	Nitrobenzene	U	9	1.0	10	9	2
78-59-1	Isophorone	U	9	1.0	10	9	2
88-75-5	2-Nitrophenol	U	9	1.0	10	9	3
105-67-9	2,4-Dimethylphenol	U	11	1.0	12	11	4
111-91-1	Bis(2-Chloroethoxy)methane	U	9	1.0	10	9	2
120-83-2	2,4-Dichlorophenol	U	11	1.0	12	11	4
106-47-8	4-Chloroaniline	U	9	1.0	10	9	2
105-60-2	Caprolactam	U	9	1.0	10	9	0.4
59-50-7	4-Chloro-3-Methylphenol	U	9	1.0	10	9	2
88-06-2	2,4,6-Trichlorophenol	U	9	1.0	10	9	3
95-95-4	2,4,5-Trichlorophenol	U	24	1.0	25	24	4
91-58-7	2-Chloronaphthalene	U	9	1.0	10	9	2
92-52-4	1,1'-Biphenyl	U	9	1.0	10	9	2
88-74-4	2-Nitroaniline	U	24	1.0	25	24	1
131-11-3	Dimethyl Phthalate	U	9	1.0	10	9	0.7
606-20-2	2,6-Dinitrotoluene	U	9	1.0	10	9	1.0
208-96-8	Acenaphthylene	U	9	1.0	10	9	2
99-09-2	3-Nitroaniline	U	24	1.0	25	24	1
83-32-9	Acenaphthene	U	9	1.0	10	9	2
51-28-5	2,4-Dinitrophenol	U	42	1.0	45	42	14
132-64-9	Dibenzofuran	U	9	1.0	10	9	1
100-02-7	4-Nitrophenol	U	24	1.0	25	24	5
121-14-2	2,4-Dinitrotoluene	U	9	1.0	10	9	1
84-66-2	Diethylphthalate	U	9	1.0	10	9	1
7005-72-3	4-Chlorophenyl-phenylether	U	9	1.0	10	9	1
100-01-6	4-Nitroaniline	U	24	1.0	25	24	2
534-52-1	4,6-Dinitro-2-Methylphenol	U	24	1.0	25	24	6
86-30-6	N-Nitrosodiphenylamine	U	9	1.0	10	9	2
101-55-3	4-Bromophenyl-phenylether	U	9	1.0	10	9	1
1912-24-9	Atrazine	U	9	1.0	10	9	2
87-86-5	Pentachlorophenol	U	24	1.0	25	24	7
120-12-7	Anthracene	U	9	1.0	10	9	1
86-74-8	Carbazole	U	9	1.0	10	9	1

NW 12/19/09

3

KATAHDIN ANALYTICAL SERVICES
Report of Analytical Results

Client: CH2MHill
Project: TO-009 Lejeune
PO No:
Sample Date: 11/18/08
Received Date: 11/20/08
Extraction Date: 11/21/08
Analysis Date: 13-DEC-2008 21:45
Report Date: 12/15/2008
Matrix: WATER
% Solids: NA

Lab ID: SB6712-1
Client ID: MR08-TW02-08D
SDG: TO9-5
Extracted by: KF
Extraction Method: SW846 3510
Analyst: JCG
Analysis Method: SW846 8270C
Lab Prep Batch: WG58355
Units: ug/L

CAS#	Compound	Flags	Results	DF	PQL	Adj.PQL	Adj.MDL	
84-74-2	Di-n-butylphthalate	U	9	1.0	10	9	1	
85-68-7	Butylbenzylphthalate	~~U~~ UJ	9	1.0	10	9	1	CCH
91-94-1	3,3'-Dichlorobenzidine	U	9	1.0	10	9	3	
218-01-9	Chrysene	U	9	1.0	10	9	1	
117-81-7	bis(2-Ethylhexyl)phthalate	~~U~~ UJ	9	1.0	10	9	2	CCH
117-84-0	Di-n-octylphthalate	~~U~~ UJ	9	1.0	10	9	2	CCH
367-12-4	2-Fluorophenol		31%					
13127-88-3	Phenol-D6		18%					
4165-60-0	Nitrobenzene-D5		58%					
321-60-8	2-Fluorobiphenyl		60%					
118-79-6	2,4,6-Tribromophenol		79%					
1718-51-0	Terphenyl-D14		130%					

LW
1/31/09

4

KATAHDIN ANALYTICAL SERVICES
Report of Analytical Results

Client: CH2MHill
Project: TO-009 Lejeune
PO No:
Sample Date: 11/18/08
Received Date: 11/20/08
Extraction Date: 11/21/08
Analysis Date: 13-DEC-2008 22:26
Report Date: 12/15/2008
Matrix: WATER
% Solids: NA

Lab ID: SB6712-3
Client ID: MR08-TW02D-08D
SDG: TO9-5
Extracted by: KF
Extraction Method: SW846 3510
Analyst: JCG
Analysis Method: SW846 8270C
Lab Prep Batch: WG58355
Units: ug/L

CAS#	Compound	Flags	Results	DF	PQL	Adj.PQL	Adj.MDL
100-52-7	Benzaldehyde	U	9	1.0	10	9	3
108-95-2	Phenol	U	9	1.0	10	9	2
111-44-4	Bis(2-Chloroethyl)ether	U	9	1.0	10	9	2
95-57-8	2-Chlorophenol	U	11	1.0	12	11	3
95-48-7	2-Methylphenol	U	11	1.0	12	11	4
108-60-1	2,2'-Oxybis(1-chloropropane)	U	9	1.0	10	9	2
98-86-2	Acetophenone	U	11	1.0	12	11	4
621-64-7	N-Nitroso-di-n-propylamine	U	9	1.0	10	9	2
65794-96-9	3&4-Methylphenol	U	9	1.0	10	9	2
67-72-1	Hexachloroethane	U	9	1.0	10	9	2
98-95-3	Nitrobenzene	U	9	1.0	10	9	2
78-59-1	Isophorone	U	9	1.0	10	9	2
88-75-5	2-Nitrophenol	U	9	1.0	10	9	3
105-67-9	2,4-Dimethylphenol	U	11	1.0	12	11	4
111-91-1	Bis(2-Chloroethoxy)methane	U	9	1.0	10	9	2
120-83-2	2,4-Dichlorophenol	U	11	1.0	12	11	4
106-47-8	4-Chloroaniline	U	9	1.0	10	9	2
105-60-2	Caprolactam	U	9	1.0	10	9	0.4
59-50-7	4-Chloro-3-Methylphenol	U	9	1.0	10	9	2
88-06-2	2,4,6-Trichlorophenol	U	9	1.0	10	9	3
95-95-4	2,4,5-Trichlorophenol	U	24	1.0	25	24	4
91-58-7	2-Chloronaphthalene	U	9	1.0	10	9	2
92-52-4	1,1'-Biphenyl	U	9	1.0	10	9	2
88-74-4	2-Nitroaniline	U	24	1.0	25	24	1
131-11-3	Dimethyl Phthalate	U	9	1.0	10	9	0.7
606-20-2	2,6-Dinitrotoluene	U	9	1.0	10	9	1.0
208-96-8	Acenaphthylene	U	9	1.0	10	9	2
99-09-2	3-Nitroaniline	U	24	1.0	25	24	1
83-32-9	Acenaphthene	U	9	1.0	10	9	2
51-28-5	2,4-Dinitrophenol	U	42	1.0	45	42	14
132-64-9	Dibenzofuran	U	9	1.0	10	9	1
100-02-7	4-Nitrophenol	U	24	1.0	25	24	5
121-14-2	2,4-Dinitrotoluene	U	9	1.0	10	9	1
84-66-2	Diethylphthalate	U	9	1.0	10	9	1
7005-72-3	4-Chlorophenyl-phenylether	U	9	1.0	10	9	1
100-01-6	4-Nitroaniline	U	24	1.0	25	24	2
534-52-1	4,6-Dinitro-2-Methylphenol	U	24	1.0	25	24	6
86-30-6	N-Nitrosodiphenylamine	U	9	1.0	10	9	2
101-55-3	4-Bromophenyl-phenylether	U	9	1.0	10	9	1
1912-24-9	Atrazine	U	9	1.0	10	9	2
87-86-5	Pentachlorophenol	U	24	1.0	25	24	7
120-12-7	Anthracene	U	9	1.0	10	9	1
86-74-8	Carbazole	U	9	1.0	10	9	1

LW 1/31/09

4

KATAHDIN ANALYTICAL SERVICES
Report of Analytical Results

Client: CH2MHill
Project: TO-009 Lejeune
PO No:
Sample Date: 11/18/08
Received Date: 11/20/08
Extraction Date: 11/21/08
Analysis Date: 13-DEC-2008 22:26
Report Date: 12/15/2008
Matrix: WATER
% Solids: NA

Lab ID: SB6712-3
Client ID: MR08-TW02D-08D
SDG: TO9-5
Extracted by: KF
Extraction Method: SW846 3510
Analyst: JCG
Analysis Method: SW846 8270C
Lab Prep Batch: WG58355
Units: ug/L

CAS#	Compound	Flags	Results	DF	PQL	Adj.PQL	Adj.MDL	
84-74-2	Di-n-butylphthalate	U	9	1.0	10	9	1	
85-68-7	Butylbenzylphthalate	~~U~~ UJ	9	1.0	10	9	1	CCH
91-94-1	3,3'-Dichlorobenzidine	U	9	1.0	10	9	3	
218-01-9	Chrysene	U	9	1.0	10	9	1	
117-81-7	bis(2-Ethylhexyl)phthalate	~~U~~ UJ	9	1.0	10	9	2	CCH
117-84-0	Di-n-octylphthalate	~~U~~ UJ	9	1.0	10	9	2	CCH
367-12-4	2-Fluorophenol		30%					
13127-88-3	Phenol-D6		18%					
4165-60-0	Nitrobenzene-D5		49%					
321-60-8	2-Fluorobiphenyl		58%					
118-79-6	2,4,6-Tribromophenol		80%					
1718-51-0	Terphenyl-D14		124%					

lw
1/31/09

5

KATAHDIN ANALYTICAL SERVICES
Report of Analytical Results

Client: CH2MHill
Project: TO-009 Lejeune
PO No:
Sample Date: 11/18/08
Received Date: 11/20/08
Extraction Date: 11/21/08
Analysis Date: 13-DEC-2008 23:08
Report Date: 12/15/2008
Matrix: WATER
% Solids: NA

Lab ID: SB6712-5
Client ID: MR08-TW03-08D
SDG: TO9-5
Extracted by: KF
Extraction Method: SW846 3510
Analyst: JCG
Analysis Method: SW846 8270C
Lab Prep Batch: WG58355
Units: ug/L

CAS#	Compound	Flags	Results	DF	PQL	Adj.PQL	Adj.MDL
100-52-7	Benzaldehyde	U	10	1.0	10	10	3
108-95-2	Phenol	U	10	1.0	10	10	2
111-44-4	Bis(2-Chloroethyl)ether	U	10	1.0	10	10	2
95-57-8	2-Chlorophenol	U	12	1.0	12	12	4
95-48-7	2-Methylphenol	U	12	1.0	12	12	4
108-60-1	2,2'-Oxybis(1-chloropropane)	U	10	1.0	10	10	2
98-86-2	Acetophenone	U	12	1.0	12	12	4
621-64-7	N-Nitroso-di-n-propylamine	U	10	1.0	10	10	2
65794-96-9	3&4-Methylphenol	U	10	1.0	10	10	3
67-72-1	Hexachloroethane	U	10	1.0	10	10	2
98-95-3	Nitrobenzene	U	10	1.0	10	10	2
78-59-1	Isophorone	U	10	1.0	10	10	2
88-75-5	2-Nitrophenol	U	10	1.0	10	10	4
105-67-9	2,4-Dimethylphenol	U	12	1.0	12	12	4
111-91-1	Bis(2-Chloroethoxy)methane	U	10	1.0	10	10	2
120-83-2	2,4-Dichlorophenol	U	12	1.0	12	12	4
106-47-8	4-Chloroaniline	U	10	1.0	10	10	2
105-60-2	Caprolactam	U	10	1.0	10	10	0.4
59-50-7	4-Chloro-3-Methylphenol	U	10	1.0	10	10	3
88-06-2	2,4,6-Trichlorophenol	U	10	1.0	10	10	3
95-95-4	2,4,5-Trichlorophenol	U	26	1.0	25	26	4
91-58-7	2-Chloronaphthalene	U	10	1.0	10	10	2
92-52-4	1,1'-Biphenyl	U	10	1.0	10	10	2
88-74-4	2-Nitroaniline	U	26	1.0	25	26	2
131-11-3	Dimethyl Phthalate	U	10	1.0	10	10	0.8
606-20-2	2,6-Dinitrotoluene	U	10	1.0	10	10	1
208-96-8	Acenaphthylene	U	10	1.0	10	10	2
99-09-2	3-Nitroaniline	U	26	1.0	25	26	1
83-32-9	Acenaphthene	U	10	1.0	10	10	2
51-28-5	2,4-Dinitrophenol	U	47	1.0	45	47	16
132-64-9	Dibenzofuran	U	10	1.0	10	10	2
100-02-7	4-Nitrophenol	U	26	1.0	25	26	6
121-14-2	2,4-Dinitrotoluene	U	10	1.0	10	10	1
84-66-2	Diethylphthalate	U	10	1.0	10	10	1
7005-72-3	4-Chlorophenyl-phenylether	U	10	1.0	10	10	1
100-01-6	4-Nitroaniline	U	26	1.0	25	26	2
534-52-1	4,6-Dinitro-2-Methylphenol	U	26	1.0	25	26	6
86-30-6	N-Nitrosodiphenylamine	U	10	1.0	10	10	2
101-55-3	4-Bromophenyl-phenylether	U	10	1.0	10	10	1
1912-24-9	Atrazine	U	10	1.0	10	10	2
87-86-5	Pentachlorophenol	U	26	1.0	25	26	8
120-12-7	Anthracene	U	10	1.0	10	10	1
86-74-8	Carbazole	U	10	1.0	10	10	1

lw
1/3/09

5

KATAHDIN ANALYTICAL SERVICES
Report of Analytical Results

Client: CH2MHill
Project: TO-009 Lejeune
PO No:
Sample Date: 11/18/08
Received Date: 11/20/08
Extraction Date: 11/21/08
Analysis Date: 13-DEC-2008 23:08
Report Date: 12/15/2008
Matrix: WATER
% Solids: NA

Lab ID: SB6712-5
Client ID: MR08-TW03-08D
SDG: TO9-5
Extracted by: KF
Extraction Method: SW846 3510
Analyst: JCG
Analysis Method: SW846 8270C
Lab Prep Batch: WG58355
Units: ug/L

CAS#	Compound	Flags	Results	DF	PQL	Adj.PQL	Adj.MDL	
84-74-2	Di-n-butylphthalate	U	10	1.0	10	10	1	
85-68-7	Butylbenzylphthalate	~~U~~ UJ	10	1.0	10	10	2	CCH
91-94-1	3,3'-Dichlorobenzidine	U	10	1.0	10	10	3	
218-01-9	Chrysene	U	10	1.0	10	10	1	
117-81-7	bis(2-Ethylhexyl)phthalate	~~U~~ UJ	10	1.0	10	10	2	CCH
117-84-0	Di-n-octylphthalate	~~U~~ UJ	10	1.0	10	10	2	CCH
367-12-4	2-Fluorophenol		42%					
13127-88-3	Phenol-D6		23%					
4165-60-0	Nitrobenzene-D5		72%					
321-60-8	2-Fluorobiphenyl		79%					
118-79-6	2,4,6-Tribromophenol		88%					
1718-51-0	Terphenyl-D14		134%					

fw 1/31/09

6

KATAHDIN ANALYTICAL SERVICES
Report of Analytical Results

Client: CH2MHill
Project: TO-009 Lejeune
PO No:
Sample Date: 11/18/08
Received Date: 11/20/08
Extraction Date: 11/21/08
Analysis Date: 13-DEC-2008 23:49
Report Date: 12/15/2008
Matrix: WATER
% Solids: NA

Lab ID: SB6712-7
Client ID: MR08-TW03D-08D
SDG: TO9-5
Extracted by: KF
Extraction Method: SW846 3510
Analyst: JCG
Analysis Method: SW846 8270C
Lab Prep Batch: WG58355
Units: ug/L

CAS#	Compound	Flags	Results	DF	PQL	Adj.PQL	Adj.MDL
100-52-7	Benzaldehyde	U	11	1.0	10	11	3
108-95-2	Phenol	U	11	1.0	10	11	2
111-44-4	Bis(2-Chloroethyl)ether	U	11	1.0	10	11	2
95-57-8	2-Chlorophenol	U	13	1.0	12	13	4
95-48-7	2-Methylphenol	U	13	1.0	12	13	4
108-60-1	2,2'-Oxybis(1-chloropropane)	U	11	1.0	10	11	2
98-86-2	Acetophenone	U	13	1.0	12	13	4
621-64-7	N-Nitroso-di-n-propylamine	U	11	1.0	10	11	2
65794-96-9	3&4-Methylphenol	U	11	1.0	10	11	3
67-72-1	Hexachloroethane	U	11	1.0	10	11	2
98-95-3	Nitrobenzene	U	11	1.0	10	11	2
78-59-1	Isophorone	U	11	1.0	10	11	2
88-75-5	2-Nitrophenol	U	11	1.0	10	11	4
105-67-9	2,4-Dimethylphenol	U	13	1.0	12	13	4
111-91-1	Bis(2-Chloroethoxy)methane	U	11	1.0	10	11	3
120-83-2	2,4-Dichlorophenol	U	13	1.0	12	13	4
106-47-8	4-Chloroaniline	U	11	1.0	10	11	2
105-60-2	Caprolactam	U	11	1.0	10	11	0.4
59-50-7	4-Chloro-3-Methylphenol	U	11	1.0	10	11	3
88-06-2	2,4,6-Trichlorophenol	U	11	1.0	10	11	4
95-95-4	2,4,5-Trichlorophenol	U	27	1.0	25	27	4
91-58-7	2-Chloronaphthalene	U	11	1.0	10	11	2
92-52-4	1,1'-Biphenyl	U	11	1.0	10	11	2
88-74-4	2-Nitroaniline	U	27	1.0	25	27	2
131-11-3	Dimethyl Phthalate	U	11	1.0	10	11	0.8
606-20-2	2,6-Dinitrotoluene	U	11	1.0	10	11	1
208-96-8	Acenaphthylene	U	11	1.0	10	11	2
99-09-2	3-Nitroaniline	U	27	1.0	25	27	1
83-32-9	Acenaphthene	U	11	1.0	10	11	2
51-28-5	2,4-Dinitrophenol	U	48	1.0	45	48	16
132-64-9	Dibenzofuran	U	11	1.0	10	11	2
100-02-7	4-Nitrophenol	U	27	1.0	25	27	6
121-14-2	2,4-Dinitrotoluene	U	11	1.0	10	11	2
84-66-2	Diethylphthalate	U	11	1.0	10	11	1
7005-72-3	4-Chlorophenyl-phenylether	U	11	1.0	10	11	1
100-01-6	4-Nitroaniline	U	27	1.0	25	27	2
534-52-1	4,6-Dinitro-2-Methylphenol	U	27	1.0	25	27	6
86-30-6	N-Nitrosodiphenylamine	U	11	1.0	10	11	2
101-55-3	4-Bromophenyl-phenylether	U	11	1.0	10	11	1
1912-24-9	Atrazine	U	11	1.0	10	11	2
87-86-5	Pentachlorophenol	U	27	1.0	25	27	8
120-12-7	Anthracene	U	11	1.0	10	11	2
86-74-8	Carbazole	U	11	1.0	10	11	1

bW 1/31/09

6

KATAHDIN ANALYTICAL SERVICES
Report of Analytical Results

Client: CH2MHill
Project: TO-009 Lejeune
PO No:
Sample Date: 11/18/08
Received Date: 11/20/08
Extraction Date: 11/21/08
Analysis Date: 13-DEC-2008 23:49
Report Date: 12/15/2008
Matrix: WATER
% Solids: NA

Lab ID: SB6712-7
Client ID: MR08-TW03D-08D
SDG: TO9-5
Extracted by: KF
Extraction Method: SW846 3510
Analyst: JCG
Analysis Method: SW846 8270C
Lab Prep Batch: WG58355
Units: ug/L

CAS#	Compound	Flags	Results	DF	PQL	Adj.PQL	Adj.MDL	
84-74-2	Di-n-butylphthalate	U	11	1.0	10	11	1	
85-68-7	Butylbenzylphthalate	~~U~~ UJ	11	1.0	10	11	2	CCH
91-94-1	3,3'-Dichlorobenzidine	U	11	1.0	10	11	3	
218-01-9	Chrysene	U	11	1.0	10	11	1	
117-81-7	bis(2-Ethylhexyl)phthalate	~~U~~ UJ	11	1.0	10	11	2	CCH
117-84-0	Di-n-octylphthalate	~~U~~ UJ	11	1.0	10	11	2	CCH
367-12-4	2-Fluorophenol		41%					
13127-88-3	Phenol-D6		24%					
4165-60-0	Nitrobenzene-D5		56%					
321-60-8	2-Fluorobiphenyl		68%					
118-79-6	2,4,6-Tribromophenol		84%					
1718-51-0	Terphenyl-D14		133%					

LW 11/31/09

7

KATAHDIN ANALYTICAL SERVICES
Report of Analytical Results

Client: CH2MHill
Project: TO-009 Lejeune
PO No:
Sample Date: 11/18/08
Received Date: 11/20/08
Extraction Date: 11/21/08
Analysis Date: 14-DEC-2008 00:30
Report Date: 12/15/2008
Matrix: WATER
% Solids: NA

Lab ID: SB6712-9
Client ID: MR08-EB111808
SDG: TO9-5
Extracted by: KF
Extraction Method: SW846 3510
Analyst: JCG
Analysis Method: SW846 8270C
Lab Prep Batch: WG58355
Units: ug/L

CAS#	Compound	Flags	Results	DF	PQL	Adj.PQL	Adj.MDL
100-52-7	Benzaldehyde	U	9	1.0	10	9	3
108-95-2	Phenol	U	9	1.0	10	9	2
111-44-4	Bis(2-Chloroethyl)ether	U	9	1.0	10	9	2
95-57-8	2-Chlorophenol	U	11	1.0	12	11	3
95-48-7	2-Methylphenol	U	11	1.0	12	11	4
108-60-1	2,2'-Oxybis(1-chloropropane)	U	9	1.0	10	9	2
98-86-2	Acetophenone	U	11	1.0	12	11	4
621-64-7	N-Nitroso-di-n-propylamine	U	9	1.0	10	9	2
65794-96-9	3&4-Methylphenol	U	9	1.0	10	9	2
67-72-1	Hexachloroethane	U	9	1.0	10	9	2
98-95-3	Nitrobenzene	U	9	1.0	10	9	2
78-59-1	Isophorone	U	9	1.0	10	9	2
88-75-5	2-Nitrophenol	U	9	1.0	10	9	3
105-67-9	2,4-Dimethylphenol	U	11	1.0	12	11	4
111-91-1	Bis(2-Chloroethoxy)methane	U	9	1.0	10	9	2
120-83-2	2,4-Dichlorophenol	U	11	1.0	12	11	4
106-47-8	4-Chloroaniline	U	9	1.0	10	9	2
105-60-2	Caprolactam	U	9	1.0	10	9	0.4
59-50-7	4-Chloro-3-Methylphenol	U	9	1.0	10	9	2
88-06-2	2,4,6-Trichlorophenol	U	9	1.0	10	9	3
95-95-4	2,4,5-Trichlorophenol	U	24	1.0	25	24	4
91-58-7	2-Chloronaphthalene	U	9	1.0	10	9	2
92-52-4	1,1'-Biphenyl	U	9	1.0	10	9	2
88-74-4	2-Nitroaniline	U	24	1.0	25	24	1
131-11-3	Dimethyl Phthalate	U	9	1.0	10	9	0.7
606-20-2	2,6-Dinitrotoluene	U	9	1.0	10	9	1.0
208-96-8	Acenaphthylene	U	9	1.0	10	9	2
99-09-2	3-Nitroaniline	U	24	1.0	25	24	1
83-32-9	Acenaphthene	U	9	1.0	10	9	2
51-28-5	2,4-Dinitrophenol	U	42	1.0	45	42	14
132-64-9	Dibenzofuran	U	9	1.0	10	9	1
100-02-7	4-Nitrophenol	U	24	1.0	25	24	5
121-14-2	2,4-Dinitrotoluene	U	9	1.0	10	9	1
84-66-2	Diethylphthalate	U	9	1.0	10	9	1
7005-72-3	4-Chlorophenyl-phenylether	U	9	1.0	10	9	1
100-01-6	4-Nitroaniline	U	24	1.0	25	24	2
534-52-1	4,6-Dinitro-2-Methylphenol	U	24	1.0	25	24	6
86-30-6	N-Nitrosodiphenylamine	U	9	1.0	10	9	2
101-55-3	4-Bromophenyl-phenylether	U	9	1.0	10	9	1
1912-24-9	Atrazine	U	9	1.0	10	9	2
87-86-5	Pentachlorophenol	U	24	1.0	25	24	7
120-12-7	Anthracene	U	9	1.0	10	9	1
86-74-8	Carbazole	U	9	1.0	10	9	1

LW 1/31/09

7

KATAHDIN ANALYTICAL SERVICES
Report of Analytical Results

Client: CH2MHill
Project: TO-009 Lejeune
PO No:
Sample Date: 11/18/08
Received Date: 11/20/08
Extraction Date: 11/21/08
Analysis Date: 14-DEC-2008 00:30
Report Date: 12/15/2008
Matrix: WATER
% Solids: NA

Lab ID: SB6712-9
Client ID: MR08-EB111808
SDG: TO9-5
Extracted by: KF
Extraction Method: SW846 3510
Analyst: JCG
Analysis Method: SW846 8270C
Lab Prep Batch: WG58355
Units: ug/L

CAS#	Compound	Flags	Results	DF	PQL	Adj.PQL	Adj.MDL	
84-74-2	Di-n-butylphthalate	U	9	1.0	10	9	1	
85-68-7	Butylbenzylphthalate	~~U~~ UJ	9	1.0	10	9	1	CCH
91-94-1	3,3'-Dichlorobenzidine	U	9	1.0	10	9	3	
218-01-9	Chrysene	U	9	1.0	10	9	1	
117-81-7	bis(2-Ethylhexyl)phthalate	~~U~~ UJ	9	1.0	10	9	2	CCH
117-84-0	Di-n-octylphthalate	~~U~~ UJ	9	1.0	10	9	2	CCH
367-12-4	2-Fluorophenol		39%					
13127-88-3	Phenol-D6		22%					
4165-60-0	Nitrobenzene-D5		66%					
321-60-8	2-Fluorobiphenyl		69%					
118-79-6	2,4,6-Tribromophenol		83%					
1718-51-0	Terphenyl-D14		127%					

lw
1/31/09

8

KATAHDIN ANALYTICAL SERVICES
Report of Analytical Results

Client: CH2MHill
Project: TO-009 Lejeune
PO No:
Sample Date: 11/19/08
Received Date: 11/21/08
Extraction Date: 11/25/08
Analysis Date: 12-DEC-2008 03:08
Report Date: 12/15/2008
Matrix: WATER
% Solids: NA

Lab ID: SB6751-1
Client ID: MR08-EB111908
SDG: TO9-5
Extracted by: CB
Extraction Method: SW846 3510
Analyst: JCG
Analysis Method: SW846 8270C
Lab Prep Batch: WG58493
Units: ug/L

CAS#	Compound	Flags	Results	DF	PQL	Adj.PQL	Adj.MDL
100-52-7	Benzaldehyde	U	10	1.0	10	10	3
108-95-2	Phenol	U	10	1.0	10	10	2
111-44-4	Bis(2-Chloroethyl)ether	U	10	1.0	10	10	2
95-57-8	2-Chlorophenol	U	12	1.0	12	12	3
95-48-7	2-Methylphenol	U	12	1.0	12	12	4
108-60-1	2,2'-Oxybis(1-chloropropane)	U	10	1.0	10	10	2
98-86-2	Acetophenone	U	12	1.0	12	12	4
621-64-7	N-Nitroso-di-n-propylamine	U	10	1.0	10	10	2
65794-96-9	3&4-Methylphenol	U	10	1.0	10	10	3
67-72-1	Hexachloroethane	U	10	1.0	10	10	2
98-95-3	Nitrobenzene	~~U~~ UJ	10	1.0	10	10	2 CCH
78-59-1	Isophorone	U	10	1.0	10	10	2
88-75-5	2-Nitrophenol	U	10	1.0	10	10	4
105-67-9	2,4-Dimethylphenol	U	12	1.0	12	12	4
111-91-1	Bis(2-Chloroethoxy)methane	U	10	1.0	10	10	2
120-83-2	2,4-Dichlorophenol	U	12	1.0	12	12	4
106-47-8	4-Chloroaniline	U	10	1.0	10	10	2
105-60-2	Caprolactam	U	10	1.0	10	10	0.4
59-50-7	4-Chloro-3-Methylphenol	U	10	1.0	10	10	2
88-06-2	2,4,6-Trichlorophenol	U	10	1.0	10	10	3
95-95-4	2,4,5-Trichlorophenol	U	25	1.0	25	25	4
91-58-7	2-Chloronaphthalene	U	10	1.0	10	10	2
92-52-4	1,1'-Biphenyl	U	10	1.0	10	10	2
88-74-4	2-Nitroaniline	U	25	1.0	25	25	2
131-11-3	Dimethyl Phthalate	U	10	1.0	10	10	0.8
606-20-2	2,6-Dinitrotoluene	U	10	1.0	10	10	1
208-96-8	Acenaphthylene	U	10	1.0	10	10	2
99-09-2	3-Nitroaniline	U	25	1.0	25	25	1
83-32-9	Acenaphthene	U	10	1.0	10	10	2
51-28-5	2,4-Dinitrophenol	U	44	1.0	45	44	15
132-64-9	Dibenzofuran	U	10	1.0	10	10	1
100-02-7	4-Nitrophenol	U	25	1.0	25	25	6
121-14-2	2,4-Dinitrotoluene	U	10	1.0	10	10	1
84-66-2	Diethylphthalate	U	10	1.0	10	10	1
7005-72-3	4-Chlorophenyl-phenylether	U	10	1.0	10	10	1
100-01-6	4-Nitroaniline	U	25	1.0	25	25	2
534-52-1	4,6-Dinitro-2-Methylphenol	U	25	1.0	25	25	6
86-30-6	N-Nitrosodiphenylamine	U	10	1.0	10	10	2
101-55-3	4-Bromophenyl-phenylether	U	10	1.0	10	10	1
1912-24-9	Atrazine	U	10	1.0	10	10	2
87-86-5	Pentachlorophenol	U	25	1.0	25	25	8
120-12-7	Anthracene	U	10	1.0	10	10	1
86-74-8	Carbazole	U	10	1.0	10	10	1

JW 113109

8

KATAHDIN ANALYTICAL SERVICES
Report of Analytical Results

Client: CH2MHill
Project: TO-009 Lejeune
PO No:
Sample Date: 11/19/08
Received Date: 11/21/08
Extraction Date: 11/25/08
Analysis Date: 12-DEC-2008 03:08
Report Date: 12/15/2008
Matrix: WATER
% Solids: NA

Lab ID: SB6751-1
Client ID: MR08-EB111908
SDG: TO9-5
Extracted by: CB
Extraction Method: SW846 3510
Analyst: JCG
Analysis Method: SW846 8270C
Lab Prep Batch: WG58493
Units: ug/L

CAS#	Compound	Flags	Results	DF	PQL	Adj.PQL	Adj.MDL	
84-74-2	Di-n-butylphthalate	U	10	1.0	10	10	1	
85-68-7	Butylbenzylphthalate	~~U~~ UJ	10	1.0	10	10	1	CCH
91-94-1	3,3'-Dichlorobenzidine	U	10	1.0	10	10	3	
218-01-9	Chrysene	U	10	1.0	10	10	1	
117-81-7	bis(2-Ethylhexyl)phthalate	~~U~~ UJ	10	1.0	10	10	2	CCH
117-84-0	Di-n-octylphthalate	~~U~~ UJ	10	1.0	10	10	2	CCH
367-12-4	2-Fluorophenol		48%					
13127-88-3	Phenol-D6		32%					
4165-60-0	Nitrobenzene-D5		87%					
321-60-8	2-Fluorobiphenyl		87%					
118-79-6	2,4,6-Tribromophenol		84%					
1718-51-0	Terphenyl-D14		97%					

lW
1/31/09

9

KATAHDIN ANALYTICAL SERVICES
Report of Analytical Results

Client: CH2MHill
Project: TO-009 Lejeune
PO No:
Sample Date: 11/20/08
Received Date: 11/21/08
Extraction Date: 11/25/08
Analysis Date: 13-DEC-2008 12:26
Report Date: 12/15/2008
Matrix: WATER
% Solids: NA

Lab ID: SB6751-3
Client ID: MR08-TW26-08D
SDG: TO9-5
Extracted by: CB
Extraction Method: SW846 3510
Analyst: JCG
Analysis Method: SW846 8270C
Lab Prep Batch: WG58493
Units: ug/L

CAS#	Compound	Flags	Results	DF	PQL	Adj.PQL	Adj.MDL
100-52-7	Benzaldehyde	U	10	1.0	10	10	3
108-95-2	Phenol	U	10	1.0	10	10	2
111-44-4	Bis(2-Chloroethyl)ether	U	10	1.0	10	10	2
95-57-8	2-Chlorophenol	U	12	1.0	12	12	3
95-48-7	2-Methylphenol	U	12	1.0	12	12	4
108-60-1	2,2'-Oxybis(1-chloropropane)	U	10	1.0	10	10	2
98-86-2	Acetophenone	U	12	1.0	12	12	4
621-64-7	N-Nitroso-di-n-propylamine	U	10	1.0	10	10	2
65794-96-9	3&4-Methylphenol	U	10	1.0	10	10	3
67-72-1	Hexachloroethane	U	10	1.0	10	10	2
98-95-3	Nitrobenzene	U	10	1.0	10	10	2
78-59-1	Isophorone	U	10	1.0	10	10	2
88-75-5	2-Nitrophenol	U	10	1.0	10	10	4
105-67-9	2,4-Dimethylphenol	U	12	1.0	12	12	4
111-91-1	Bis(2-Chloroethoxy)methane	U	10	1.0	10	10	2
120-83-2	2,4-Dichlorophenol	U	12	1.0	12	12	4
106-47-8	4-Chloroaniline	U	10	1.0	10	10	2
105-60-2	Caprolactam	U	10	1.0	10	10	0.4
59-50-7	4-Chloro-3-Methylphenol	U	10	1.0	10	10	2
88-06-2	2,4,6-Trichlorophenol	U	10	1.0	10	10	3
95-95-4	2,4,5-Trichlorophenol	U	25	1.0	25	25	4
91-58-7	2-Chloronaphthalene	U	10	1.0	10	10	2
92-52-4	1,1'-Biphenyl	U	10	1.0	10	10	2
88-74-4	2-Nitroaniline	U	25	1.0	25	25	2
131-11-3	Dimethyl Phthalate	U	10	1.0	10	10	0.8
606-20-2	2,6-Dinitrotoluene	U	10	1.0	10	10	1
208-96-8	Acenaphthylene	U	10	1.0	10	10	2
99-09-2	3-Nitroaniline	U	25	1.0	25	25	1
83-32-9	Acenaphthene	U	10	1.0	10	10	2
51-28-5	2,4-Dinitrophenol	U	44	1.0	45	44	15
132-64-9	Dibenzofuran	U	10	1.0	10	10	1
100-02-7	4-Nitrophenol	U	25	1.0	25	25	6
121-14-2	2,4-Dinitrotoluene	U	10	1.0	10	10	1
84-66-2	Diethylphthalate	U	10	1.0	10	10	1
7005-72-3	4-Chlorophenyl-phenylether	U	10	1.0	10	10	1
100-01-6	4-Nitroaniline	U	25	1.0	25	25	2
534-52-1	4,6-Dinitro-2-Methylphenol	U	25	1.0	25	25	6
86-30-6	N-Nitrosodiphenylamine	U	10	1.0	10	10	2
101-55-3	4-Bromophenyl-phenylether	U	10	1.0	10	10	1
1912-24-9	Atrazine	U	10	1.0	10	10	2
87-86-5	Pentachlorophenol	U	25	1.0	25	25	8
120-12-7	Anthracene	U	10	1.0	10	10	1
86-74-8	Carbazole	U	10	1.0	10	10	1

LW
1/31/09

9

KATAHDIN ANALYTICAL SERVICES
Report of Analytical Results

Client: CH2MHill
Project: TO-009 Lejeune
PO No:
Sample Date: 11/20/08
Received Date: 11/21/08
Extraction Date: 11/25/08
Analysis Date: 13-DEC-2008 12:26
Report Date: 12/15/2008
Matrix: WATER
% Solids: NA

Lab ID: SB6751-3
Client ID: MR08-TW26-08D
SDG: TO9-5
Extracted by: CB
Extraction Method: SW846 3510
Analyst: JCG
Analysis Method: SW846 8270C
Lab Prep Batch: WG58493
Units: ug/L

CAS#	Compound	Flags	Results	DF	PQL	Adj.PQL	Adj.MDL
84-74-2	Di-n-butylphthalate	U	10	1.0	10	10	1
85-68-7	Butylbenzylphthalate	~~U~~ UJ	10	1.0	10	10	1 CCH
91-94-1	3,3'-Dichlorobenzidine	U	10	1.0	10	10	3
218-01-9	Chrysene	U	10	1.0	10	10	1
117-81-7	bis(2-Ethylhexyl)phthalate	~~U~~ UJ	10	1.0	10	10	2 CCH
117-84-0	Di-n-octylphthalate	~~U~~ UJ	10	1.0	10	10	2 CCH
367-12-4	2-Fluorophenol		44%				
13127-88-3	Phenol-D6		28%				
4165-60-0	Nitrobenzene-D5		75%				
321-60-8	2-Fluorobiphenyl		72%				
118-79-6	2,4,6-Tribromophenol		78%				
1718-51-0	Terphenyl-D14		125%				

LW 1/31/09

10

KATAHDIN ANALYTICAL SERVICES
Report of Analytical Results

Client: CH2MHill
Project: TO-009 Lejeune
PO No:
Sample Date: 11/20/08
Received Date: 11/21/08
Extraction Date: 11/25/08
Analysis Date: 13-DEC-2008 13:08
Report Date: 12/15/2008
Matrix: WATER
% Solids: NA

Lab ID: SB6751-5
Client ID: MR08-FB112008
SDG: TO9-5
Extracted by: CB
Extraction Method: SW846 3510
Analyst: JCG
Analysis Method: SW846 8270C
Lab Prep Batch: WG58493
Units: ug/L

CAS#	Compound	Flags	Results	DF	PQL	Adj.PQL	Adj.MDL
100-52-7	Benzaldehyde	U	9	1.0	10	9	3
108-95-2	Phenol	U	9	1.0	10	9	2
111-44-4	Bis(2-Chloroethyl)ether	U	9	1.0	10	9	2
95-57-8	2-Chlorophenol	U	11	1.0	12	11	3
95-48-7	2-Methylphenol	U	11	1.0	12	11	4
108-60-1	2,2'-Oxybis(1-chloropropane)	U	9	1.0	10	9	2
98-86-2	Acetophenone	U	11	1.0	12	11	4
621-64-7	N-Nitroso-di-n-propylamine	U	9	1.0	10	9	2
65794-96-9	3&4-Methylphenol	U	9	1.0	10	9	2
67-72-1	Hexachloroethane	U	9	1.0	10	9	2
98-95-3	Nitrobenzene	U	9	1.0	10	9	2
78-59-1	Isophorone	U	9	1.0	10	9	2
88-75-5	2-Nitrophenol	U	9	1.0	10	9	3
105-67-9	2,4-Dimethylphenol	U	11	1.0	12	11	4
111-91-1	Bis(2-Chloroethoxy)methane	U	9	1.0	10	9	2
120-83-2	2,4-Dichlorophenol	U	11	1.0	12	11	4
106-47-8	4-Chloroaniline	U	9	1.0	10	9	2
105-60-2	Caprolactam	U	9	1.0	10	9	0.4
59-50-7	4-Chloro-3-Methylphenol	U	9	1.0	10	9	2
88-06-2	2,4,6-Trichlorophenol	U	9	1.0	10	9	3
95-95-4	2,4,5-Trichlorophenol	U	24	1.0	25	24	4
91-58-7	2-Chloronaphthalene	U	9	1.0	10	9	2
92-52-4	1,1'-Biphenyl	U	9	1.0	10	9	2
88-74-4	2-Nitroaniline	U	24	1.0	25	24	1
131-11-3	Dimethyl Phthalate	U	9	1.0	10	9	0.7
606-20-2	2,6-Dinitrotoluene	U	9	1.0	10	9	1.0
208-96-8	Acenaphthylene	U	9	1.0	10	9	2
99-09-2	3-Nitroaniline	U	24	1.0	25	24	1
83-32-9	Acenaphthene	U	9	1.0	10	9	2
51-28-5	2,4-Dinitrophenol	U	42	1.0	45	42	14
132-64-9	Dibenzofuran	U	9	1.0	10	9	1
100-02-7	4-Nitrophenol	U	24	1.0	25	24	5
121-14-2	2,4-Dinitrotoluene	U	9	1.0	10	9	1
84-66-2	Diethylphthalate	U	9	1.0	10	9	1
7005-72-3	4-Chlorophenyl-phenylether	U	9	1.0	10	9	1
100-01-6	4-Nitroaniline	U	24	1.0	25	24	2
534-52-1	4,6-Dinitro-2-Methylphenol	U	24	1.0	25	24	6
86-30-6	N-Nitrosodiphenylamine	U	9	1.0	10	9	2
101-55-3	4-Bromophenyl-phenylether	U	9	1.0	10	9	1
1912-24-9	Atrazine	U	9	1.0	10	9	2
87-86-5	Pentachlorophenol	U	24	1.0	25	24	7
120-12-7	Anthracene	U	9	1.0	10	9	1
86-74-8	Carbazole	U	9	1.0	10	9	1

lw 1/31/09

10

KATAHDIN ANALYTICAL SERVICES
Report of Analytical Results

Client: CH2MHill
Project: TO-009 Lejeune
PO No:
Sample Date: 11/20/08
Received Date: 11/21/08
Extraction Date: 11/25/08
Analysis Date: 13-DEC-2008 13:08
Report Date: 12/15/2008
Matrix: WATER
% Solids: NA

Lab ID: SB6751-5
Client ID: MR08-FB112008
SDG: TO9-5
Extracted by: CB
Extraction Method: SW846 3510
Analyst: JCG
Analysis Method: SW846 8270C
Lab Prep Batch: WG58493
Units: ug/L

CAS#	Compound	Flags	Results	DF	PQL	Adj.PQL	Adj.MDL	
84-74-2	Di-n-butylphthalate	U	9	1.0	10	9	1	
85-68-7	Butylbenzylphthalate	~~U~~ UJ	9	1.0	10	9	1	CCH
91-94-1	3,3'-Dichlorobenzidine	U	9	1.0	10	9	3	
218-01-9	Chrysene	U	9	1.0	10	9	1	
117-81-7	bis(2-Ethylhexyl)phthalate	~~U~~ UJ	9	1.0	10	9	2	CCH
117-84-0	Di-n-octylphthalate	~~U~~ UJ	9	1.0	10	9	2	CCH
367-12-4	2-Fluorophenol		48%					
13127-88-3	Phenol-D6		28%					
4165-60-0	Nitrobenzene-D5		73%					
321-60-8	2-Fluorobiphenyl		73%					
118-79-6	2,4,6-Tribromophenol		75%					
1718-51-0	Terphenyl-D14		118%					

lw 1/31/09

KATAHDIN ANALYTICAL SERVICES
Report of Analytical Results

Client: CH2MHill
Project: TO-009 Lejeune
PO No:
Sample Date: 11/20/08
Received Date: 11/21/08
Extraction Date: 11/25/08
Analysis Date: 13-DEC-2008 13:50
Report Date: 12/15/2008
Matrix: WATER
% Solids: NA

Lab ID: SB6751-7
Client ID: MR08-TW04-08D
SDG: TO9-5
Extracted by: CB
Extraction Method: SW846 3510
Analyst: JCG
Analysis Method: SW846 8270C
Lab Prep Batch: WG58493
Units: ug/L

CAS#	Compound	Flags	Results	DF	PQL	Adj.PQL	Adj.MDL
100-52-7	Benzaldehyde	U	9	1.0	10	9	3
108-95-2	Phenol	U	9	1.0	10	9	2
111-44-4	Bis(2-Chloroethyl)ether	U	9	1.0	10	9	2
95-57-8	2-Chlorophenol	U	11	1.0	12	11	3
95-48-7	2-Methylphenol	U	11	1.0	12	11	4
108-60-1	2,2'-Oxybis(1-chloropropane)	U	9	1.0	10	9	2
98-86-2	Acetophenone	U	11	1.0	12	11	4
621-64-7	N-Nitroso-di-n-propylamine	U	9	1.0	10	9	2
65794-96-9	3&4-Methylphenol	U	9	1.0	10	9	2
67-72-1	Hexachloroethane	U	9	1.0	10	9	2
98-95-3	Nitrobenzene	U	9	1.0	10	9	2
78-59-1	Isophorone	U	9	1.0	10	9	2
88-75-5	2-Nitrophenol	U	9	1.0	10	9	3
105-67-9	2,4-Dimethylphenol	U	11	1.0	12	11	4
111-91-1	Bis(2-Chloroethoxy)methane	U	9	1.0	10	9	2
120-83-2	2,4-Dichlorophenol	U	11	1.0	12	11	4
106-47-8	4-Chloroaniline	U	9	1.0	10	9	2
105-60-2	Caprolactam	U	9	1.0	10	9	0.4
59-50-7	4-Chloro-3-Methylphenol	U	9	1.0	10	9	2
88-06-2	2,4,6-Trichlorophenol	U	9	1.0	10	9	3
95-95-4	2,4,5-Trichlorophenol	U	24	1.0	25	24	4
91-58-7	2-Chloronaphthalene	U	9	1.0	10	9	2
92-52-4	1,1'-Biphenyl	U	9	1.0	10	9	2
88-74-4	2-Nitroaniline	U	24	1.0	25	24	1
131-11-3	Dimethyl Phthalate	U	9	1.0	10	9	0.7
606-20-2	2,6-Dinitrotoluene	U	9	1.0	10	9	1.0
208-96-8	Acenaphthylene	U	9	1.0	10	9	2
99-09-2	3-Nitroaniline	U	24	1.0	25	24	1
83-32-9	Acenaphthene	U	9	1.0	10	9	2
51-28-5	2,4-Dinitrophenol	U	42	1.0	45	42	14
132-64-9	Dibenzofuran	U	9	1.0	10	9	1
100-02-7	4-Nitrophenol	U	24	1.0	25	24	5
121-14-2	2,4-Dinitrotoluene	U	9	1.0	10	9	1
84-66-2	Diethylphthalate	U	9	1.0	10	9	1
7005-72-3	4-Chlorophenyl-phenylether	U	9	1.0	10	9	1
100-01-6	4-Nitroaniline	U	24	1.0	25	24	2
534-52-1	4,6-Dinitro-2-Methylphenol	U	24	1.0	25	24	6
86-30-6	N-Nitrosodiphenylamine	U	9	1.0	10	9	2
101-55-3	4-Bromophenyl-phenylether	U	9	1.0	10	9	1
1912-24-9	Atrazine	U	9	1.0	10	9	2
87-86-5	Pentachlorophenol	U	24	1.0	25	24	7
120-12-7	Anthracene	U	9	1.0	10	9	1
86-74-8	Carbazole	U	9	1.0	10	9	1

lw 1/31/09

11

KATAHDIN ANALYTICAL SERVICES
Report of Analytical Results

Client: CH2MHill
Project: TO-009 Lejeune
PO No:
Sample Date: 11/20/08
Received Date: 11/21/08
Extraction Date: 11/25/08
Analysis Date: 13-DEC-2008 13:50
Report Date: 12/15/2008
Matrix: WATER
% Solids: NA

Lab ID: SB6751-7
Client ID: MR08-TW04-08D
SDG: TO9-5
Extracted by: CB
Extraction Method: SW846 3510
Analyst: JCG
Analysis Method: SW846 8270C
Lab Prep Batch: WG58493
Units: ug/L

CAS#	Compound	Flags	Results	DF	PQL	Adj.PQL	Adj.MDL	
84-74-2	Di-n-butylphthalate	U	9	1.0	10	9	1	
85-68-7	Butylbenzylphthalate	~~U~~ UJ	9	1.0	10	9	1	CCH
91-94-1	3,3'-Dichlorobenzidine	U	9	1.0	10	9	3	
218-01-9	Chrysene	U	9	1.0	10	9	1	
117-81-7	bis(2-Ethylhexyl)phthalate	~~U~~ UJ	9	1.0	10	9	2	CCH
117-84-0	Di-n-octylphthalate	~~U~~ UJ	9	1.0	10	9	2	CCH
367-12-4	2-Fluorophenol		32%					
13127-88-3	Phenol-D6		22%					
4165-60-0	Nitrobenzene-D5		76%					
321-60-8	2-Fluorobiphenyl		75%					
118-79-6	2,4,6-Tribromophenol		79%					
1718-51-0	Terphenyl-D14		116%					

lw 1/3/09

12

KATAHDIN ANALYTICAL SERVICES
Report of Analytical Results

Client: CH2MHill
Project: TO-009 Lejeune
PO No:
Sample Date: 11/20/08
Received Date: 11/21/08
Extraction Date: 11/25/08
Analysis Date: 13-DEC-2008 14:32
Report Date: 12/15/2008
Matrix: WATER
% Solids: NA

Lab ID: SB6751-9
Client ID: MR08-TW19-08D
SDG: TO9-5
Extracted by: CB
Extraction Method: SW846 3510
Analyst: JCG
Analysis Method: SW846 8270C
Lab Prep Batch: WG58493
Units: ug/L

CAS#	Compound	Flags	Results	DF	PQL	Adj.PQL	Adj.MDL
100-52-7	Benzaldehyde	U	9	1.0	10	9	3
108-95-2	Phenol	U	9	1.0	10	9	2
111-44-4	Bis(2-Chloroethyl)ether	U	9	1.0	10	9	2
95-57-8	2-Chlorophenol	U	11	1.0	12	11	3
95-48-7	2-Methylphenol	U	11	1.0	12	11	4
108-60-1	2,2'-Oxybis(1-chloropropane)	U	9	1.0	10	9	2
98-86-2	Acetophenone	U	11	1.0	12	11	4
621-64-7	N-Nitroso-di-n-propylamine	U	9	1.0	10	9	2
65794-96-9	3&4-Methylphenol	U	9	1.0	10	9	2
67-72-1	Hexachloroethane	U	9	1.0	10	9	2
98-95-3	Nitrobenzene	U	9	1.0	10	9	2
78-59-1	Isophorone	U	9	1.0	10	9	2
88-75-5	2-Nitrophenol	U	9	1.0	10	9	3
105-67-9	2,4-Dimethylphenol	U	11	1.0	12	11	4
111-91-1	Bis(2-Chloroethoxy)methane	U	9	1.0	10	9	2
120-83-2	2,4-Dichlorophenol	U	11	1.0	12	11	4
106-47-8	4-Chloroaniline	U	9	1.0	10	9	2
105-60-2	Caprolactam	U	9	1.0	10	9	0.4
59-50-7	4-Chloro-3-Methylphenol	U	9	1.0	10	9	2
88-06-2	2,4,6-Trichlorophenol	U	9	1.0	10	9	3
95-95-4	2,4,5-Trichlorophenol	U	24	1.0	25	24	4
91-58-7	2-Chloronaphthalene	U	9	1.0	10	9	2
92-52-4	1,1'-Biphenyl	U	9	1.0	10	9	2
88-74-4	2-Nitroaniline	U	24	1.0	25	24	1
131-11-3	Dimethyl Phthalate	U	9	1.0	10	9	0.7
606-20-2	2,6-Dinitrotoluene	U	9	1.0	10	9	1.0
208-96-8	Acenaphthylene	U	9	1.0	10	9	2
99-09-2	3-Nitroaniline	U	24	1.0	25	24	1
83-32-9	Acenaphthene	U	9	1.0	10	9	2
51-28-5	2,4-Dinitrophenol	U	42	1.0	45	42	14
132-64-9	Dibenzofuran	U	9	1.0	10	9	1
100-02-7	4-Nitrophenol	U	24	1.0	25	24	5
121-14-2	2,4-Dinitrotoluene	U	9	1.0	10	9	1
84-66-2	Diethylphthalate	U	9	1.0	10	9	1
7005-72-3	4-Chlorophenyl-phenylether	U	9	1.0	10	9	1
100-01-6	4-Nitroaniline	U	24	1.0	25	24	2
534-52-1	4,6-Dinitro-2-Methylphenol	U	24	1.0	25	24	6
86-30-6	N-Nitrosodiphenylamine	U	9	1.0	10	9	2
101-55-3	4-Bromophenyl-phenylether	U	9	1.0	10	9	1
1912-24-9	Atrazine	U	9	1.0	10	9	2
87-86-5	Pentachlorophenol	U	24	1.0	25	24	7
120-12-7	Anthracene	U	9	1.0	10	9	1
86-74-8	Carbazole	U	9	1.0	10	9	1

lw 1/31/09

12

KATAHDIN ANALYTICAL SERVICES
Report of Analytical Results

Client: CH2MHill
Project: TO-009 Lejeune
PO No:
Sample Date: 11/20/08
Received Date: 11/21/08
Extraction Date: 11/25/08
Analysis Date: 13-DEC-2008 14:32
Report Date: 12/15/2008
Matrix: WATER
% Solids: NA

Lab ID: SB6751-9
Client ID: MR08-TW19-08D
SDG: TO9-5
Extracted by: CB
Extraction Method: SW846 3510
Analyst: JCG
Analysis Method: SW846 8270C
Lab Prep Batch: WG58493
Units: ug/L

CAS#	Compound	Flags	Results	DF	PQL	Adj.PQL	Adj.MDL	
84-74-2	Di-n-butylphthalate	U	9	1.0	10	9	1	
85-68-7	Butylbenzylphthalate	~~U~~ UJ	9	1.0	10	9	1	CCH
91-94-1	3,3'-Dichlorobenzidine	U	9	1.0	10	9	3	
218-01-9	Chrysene	U	9	1.0	10	9	1	
117-81-7	bis(2-Ethylhexyl)phthalate	~~U~~ UJ	9	1.0	10	9	2	CCH
117-84-0	Di-n-octylphthalate	~~U~~ UJ	9	1.0	10	9	2	CCH
367-12-4	2-Fluorophenol		29%					
13127-88-3	Phenol-D6		18%					
4165-60-0	Nitrobenzene-D5		74%					
321-60-8	2-Fluorobiphenyl		72%					
118-79-6	2,4,6-Tribromophenol		69%					
1718-51-0	Terphenyl-D14		128%					

lcw 11/31/09

13

KATAHDIN ANALYTICAL SERVICES
Report of Analytical Results

Client: CH2MHill
Project: TO-009 Lejeune
PO No:
Sample Date: 11/20/08
Received Date: 11/21/08
Extraction Date: 11/25/08
Analysis Date: 13-DEC-2008 15:13
Report Date: 12/15/2008
Matrix: WATER
% Solids: NA

Lab ID: SB6751-11
Client ID: MR08-TW20-08D
SDG: TO9-5
Extracted by: CB
Extraction Method: SW846 3510
Analyst: JCG
Analysis Method: SW846 8270C
Lab Prep Batch: WG58493
Units: ug/L

CAS#	Compound	Flags	Results	DF	PQL	Adj.PQL	Adj.MDL
100-52-7	Benzaldehyde	U	10	1.0	10	10	3
108-95-2	Phenol	U	10	1.0	10	10	2
111-44-4	Bis(2-Chloroethyl)ether	U	10	1.0	10	10	2
95-57-8	2-Chlorophenol	U	12	1.0	12	12	3
95-48-7	2-Methylphenol	U	12	1.0	12	12	4
108-60-1	2,2'-Oxybis(1-chloropropane)	U	10	1.0	10	10	2
98-86-2	Acetophenone	U	12	1.0	12	12	4
621-64-7	N-Nitroso-di-n-propylamine	U	10	1.0	10	10	2
65794-96-9	3&4-Methylphenol	U	10	1.0	10	10	3
67-72-1	Hexachloroethane	U	10	1.0	10	10	2
98-95-3	Nitrobenzene	U	10	1.0	10	10	2
78-59-1	Isophorone	U	10	1.0	10	10	2
88-75-5	2-Nitrophenol	U	10	1.0	10	10	4
105-67-9	2,4-Dimethylphenol	U	12	1.0	12	12	4
111-91-1	Bis(2-Chloroethoxy)methane	U	10	1.0	10	10	2
120-83-2	2,4-Dichlorophenol	U	12	1.0	12	12	4
106-47-8	4-Chloroaniline	U	10	1.0	10	10	2
105-60-2	Caprolactam	U	10	1.0	10	10	0.4
59-50-7	4-Chloro-3-Methylphenol	U	10	1.0	10	10	2
88-06-2	2,4,6-Trichlorophenol	U	10	1.0	10	10	3
95-95-4	2,4,5-Trichlorophenol	U	25	1.0	25	25	4
91-58-7	2-Chloronaphthalene	U	10	1.0	10	10	2
92-52-4	1,1'-Biphenyl	U	10	1.0	10	10	2
88-74-4	2-Nitroaniline	U	25	1.0	25	25	2
131-11-3	Dimethyl Phthalate	U	10	1.0	10	10	0.8
606-20-2	2,6-Dinitrotoluene	U	10	1.0	10	10	1
208-96-8	Acenaphthylene	U	10	1.0	10	10	2
99-09-2	3-Nitroaniline	U	25	1.0	25	25	1
83-32-9	Acenaphthene	U	10	1.0	10	10	2
51-28-5	2,4-Dinitrophenol	U	44	1.0	45	44	15
132-64-9	Dibenzofuran	U	10	1.0	10	10	1
100-02-7	4-Nitrophenol	U	25	1.0	25	25	6
121-14-2	2,4-Dinitrotoluene	U	10	1.0	10	10	1
84-66-2	Diethylphthalate	U	10	1.0	10	10	1
7005-72-3	4-Chlorophenyl-phenylether	U	10	1.0	10	10	1
100-01-6	4-Nitroaniline	U	25	1.0	25	25	2
534-52-1	4,6-Dinitro-2-Methylphenol	U	25	1.0	25	25	6
86-30-6	N-Nitrosodiphenylamine	U	10	1.0	10	10	2
101-55-3	4-Bromophenyl-phenylether	U	10	1.0	10	10	1
1912-24-9	Atrazine	U	10	1.0	10	10	2
87-86-5	Pentachlorophenol	U	25	1.0	25	25	8
120-12-7	Anthracene	U	10	1.0	10	10	1
86-74-8	Carbazole	U	10	1.0	10	10	1

lw 1131109

13

KATAHDIN ANALYTICAL SERVICES
Report of Analytical Results

Client: CH2MHill
Project: TO-009 Lejeune
PO No:
Sample Date: 11/20/08
Received Date: 11/21/08
Extraction Date: 11/25/08
Analysis Date: 13-DEC-2008 15:13
Report Date: 12/15/2008
Matrix: WATER
% Solids: NA

Lab ID: SB6751-11
Client ID: MR08-TW20-08D
SDG: TO9-5
Extracted by: CB
Extraction Method: SW846 3510
Analyst: JCG
Analysis Method: SW846 8270C
Lab Prep Batch: WG58493
Units: ug/L

CAS#	Compound	Flags	Results	DF	PQL	Adj.PQL	Adj.MDL	
84-74-2	Di-n-butylphthalate	U	10	1.0	10	10	1	
85-68-7	Butylbenzylphthalate	~~U~~ UJ	10	1.0	10	10	1	CCH
91-94-1	3,3'-Dichlorobenzidine	U	10	1.0	10	10	3	
218-01-9	Chrysene	U	10	1.0	10	10	1	
117-81-7	bis(2-Ethylhexyl)phthalate	~~U~~ UJ	10	1.0	10	10	2	CCH
117-84-0	Di-n-octylphthalate	~~U~~ UJ	10	1.0	10	10	2	CCH
367-12-4	2-Fluorophenol		48%					
13127-88-3	Phenol-D6		32%					
4165-60-0	Nitrobenzene-D5		85%					
321-60-8	2-Fluorobiphenyl		85%					
118-79-6	2,4,6-Tribromophenol		83%					
1718-51-0	Terphenyl-D14		134%					

lcw 1/31/09

14

KATAHDIN ANALYTICAL SERVICES
Report of Analytical Results

Client: CH2MHill
Project: TO-009 Lejeune
PO No:
Sample Date: 11/20/08
Received Date: 11/21/08
Extraction Date: 11/25/08
Analysis Date: 13-DEC-2008 15:55
Report Date: 12/15/2008
Matrix: WATER
% Solids: NA

Lab ID: SB6751-13
Client ID: MR08-TW25-08D
SDG: TO9-5
Extracted by: CB
Extraction Method: SW846 3510
Analyst: JCG
Analysis Method: SW846 8270C
Lab Prep Batch: WG58493
Units: ug/L

CAS#	Compound	Flags	Results	DF	PQL	Adj.PQL	Adj.MDL
100-52-7	Benzaldehyde	U	10	1.0	10	10	3
108-95-2	Phenol	U	10	1.0	10	10	2
111-44-4	Bis(2-Chloroethyl)ether	U	10	1.0	10	10	2
95-57-8	2-Chlorophenol	U	12	1.0	12	12	3
95-48-7	2-Methylphenol	U	12	1.0	12	12	4
108-60-1	2,2'-Oxybis(1-chloropropane)	U	10	1.0	10	10	2
98-86-2	Acetophenone	U	12	1.0	12	12	4
621-64-7	N-Nitroso-di-n-propylamine	U	10	1.0	10	10	2
65794-96-9	3&4-Methylphenol	U	10	1.0	10	10	2
67-72-1	Hexachloroethane	U	10	1.0	10	10	2
98-95-3	Nitrobenzene	U	10	1.0	10	10	2
78-59-1	Isophorone	U	10	1.0	10	10	2
88-75-5	2-Nitrophenol	U	10	1.0	10	10	3
105-67-9	2,4-Dimethylphenol	U	12	1.0	12	12	4
111-91-1	Bis(2-Chloroethoxy)methane	U	10	1.0	10	10	2
120-83-2	2,4-Dichlorophenol	U	12	1.0	12	12	4
106-47-8	4-Chloroaniline	U	10	1.0	10	10	2
105-60-2	Caprolactam	U	10	1.0	10	10	0.4
59-50-7	4-Chloro-3-Methylphenol	U	10	1.0	10	10	2
88-06-2	2,4,6-Trichlorophenol	U	10	1.0	10	10	3
95-95-4	2,4,5-Trichlorophenol	U	24	1.0	25	24	4
91-58-7	2-Chloronaphthalene	U	10	1.0	10	10	2
92-52-4	1,1'-Biphenyl	U	10	1.0	10	10	2
88-74-4	2-Nitroaniline	U	24	1.0	25	24	1
131-11-3	Dimethyl Phthalate	U	10	1.0	10	10	0.8
606-20-2	2,6-Dinitrotoluene	U	10	1.0	10	10	1
208-96-8	Acenaphthylene	U	10	1.0	10	10	2
99-09-2	3-Nitroaniline	U	24	1.0	25	24	1
83-32-9	Acenaphthene	U	10	1.0	10	10	2
51-28-5	2,4-Dinitrophenol	U	43	1.0	45	43	14
132-64-9	Dibenzofuran	U	10	1.0	10	10	1
100-02-7	4-Nitrophenol	U	24	1.0	25	24	5
121-14-2	2,4-Dinitrotoluene	U	10	1.0	10	10	1
84-66-2	Diethylphthalate	U	10	1.0	10	10	1
7005-72-3	4-Chlorophenyl-phenylether	U	10	1.0	10	10	1
100-01-6	4-Nitroaniline	U	24	1.0	25	24	2
534-52-1	4,6-Dinitro-2-Methylphenol	U	24	1.0	25	24	6
86-30-6	N-Nitrosodiphenylamine	U	10	1.0	10	10	2
101-55-3	4-Bromophenyl-phenylether	U	10	1.0	10	10	1
1912-24-9	Atrazine	U	10	1.0	10	10	2
87-86-5	Pentachlorophenol	U	24	1.0	25	24	7
120-12-7	Anthracene	U	10	1.0	10	10	1
86-74-8	Carbazole	U	10	1.0	10	10	1

lW
1/31/09

Sample Data Summary A0000029

14

KATAHDIN ANALYTICAL SERVICES
Report of Analytical Results

Client: CH2MHill
Project: TO-009 Lejeune
PO No:
Sample Date: 11/20/08
Received Date: 11/21/08
Extraction Date: 11/25/08
Analysis Date: 13-DEC-2008 15:55
Report Date: 12/15/2008
Matrix: WATER
% Solids: NA

Lab ID: SB6751-13
Client ID: MR08-TW25-08D
SDG: TO9-5
Extracted by: CB
Extraction Method: SW846 3510
Analyst: JCG
Analysis Method: SW846 8270C
Lab Prep Batch: WG58493
Units: ug/L

CAS#	Compound	Flags	Results	DF	PQL	Adj.PQL	Adj.MDL	
84-74-2	Di-n-butylphthalate	U	10	1.0	10	10	1	
85-68-7	Butylbenzylphthalate	~~U~~ UJ	10	1.0	10	10	1	CCH
91-94-1	3,3'-Dichlorobenzidine	U	10	1.0	10	10	3	
218-01-9	Chrysene	U	10	1.0	10	10	1	
117-81-7	bis(2-Ethylhexyl)phthalate	~~U~~ UJ	10	1.0	10	10	2	CCH
117-84-0	Di-n-octylphthalate	~~U~~ UJ	10	1.0	10	10	2	CCH
367-12-4	2-Fluorophenol		46%					
13127-88-3	Phenol-D6		30%					
4165-60-0	Nitrobenzene-D5		75%					
321-60-8	2-Fluorobiphenyl		69%					
118-79-6	2,4,6-Tribromophenol		88%					
1718-51-0	Terphenyl-D14		127%					

kw 1/31/09

KATAHDIN ANALYTICAL SERVICES
Report of Analytical Results

Client: CH2MHill
Project: TO-009 Lejeune
PO No:
Sample Date: 11/20/08
Received Date: 11/21/08
Extraction Date: 11/25/08
Analysis Date: 13-DEC-2008 16:37
Report Date: 12/15/2008
Matrix: WATER
% Solids: NA

Lab ID: SB6751-15
Client ID: MR08-TW18-08D
SDG: TO9-5
Extracted by: CB
Extraction Method: SW846 3510
Analyst: JCG
Analysis Method: SW846 8270C
Lab Prep Batch: WG58493
Units: ug/L

CAS#	Compound	Flags	Results	DF	PQL	Adj.PQL	Adj.MDL
100-52-7	Benzaldehyde	U	9	1.0	10	9	3
108-95-2	Phenol	U	9	1.0	10	9	2
111-44-4	Bis(2-Chloroethyl)ether	U	9	1.0	10	9	2
95-57-8	2-Chlorophenol	U	11	1.0	12	11	3
95-48-7	2-Methylphenol	U	11	1.0	12	11	4
108-60-1	2,2'-Oxybis(1-chloropropane)	U	9	1.0	10	9	2
98-86-2	Acetophenone	U	11	1.0	12	11	4
621-64-7	N-Nitroso-di-n-propylamine	U	9	1.0	10	9	2
65794-96-9	3&4-Methylphenol	U	9	1.0	10	9	2
67-72-1	Hexachloroethane	U	9	1.0	10	9	2
98-95-3	Nitrobenzene	U	9	1.0	10	9	2
78-59-1	Isophorone	U	9	1.0	10	9	2
88-75-5	2-Nitrophenol	U	9	1.0	10	9	3
105-67-9	2,4-Dimethylphenol	U	11	1.0	12	11	4
111-91-1	Bis(2-Chloroethoxy)methane	U	9	1.0	10	9	2
120-83-2	2,4-Dichlorophenol	U	11	1.0	12	11	4
106-47-8	4-Chloroaniline	U	9	1.0	10	9	2
105-60-2	Caprolactam	U	9	1.0	10	9	0.4
59-50-7	4-Chloro-3-Methylphenol	U	9	1.0	10	9	2
88-06-2	2,4,6-Trichlorophenol	U	9	1.0	10	9	3
95-95-4	2,4,5-Trichlorophenol	U	24	1.0	25	24	4
91-58-7	2-Chloronaphthalene	U	9	1.0	10	9	2
92-52-4	1,1'-Biphenyl	U	9	1.0	10	9	2
88-74-4	2-Nitroaniline	U	24	1.0	25	24	1
131-11-3	Dimethyl Phthalate	U	9	1.0	10	9	0.7
606-20-2	2,6-Dinitrotoluene	U	9	1.0	10	9	1.0
208-96-8	Acenaphthylene	U	9	1.0	10	9	2
99-09-2	3-Nitroaniline	U	24	1.0	25	24	1
83-32-9	Acenaphthene	U	9	1.0	10	9	2
51-28-5	2,4-Dinitrophenol	U	42	1.0	45	42	14
132-64-9	Dibenzofuran	U	9	1.0	10	9	1
100-02-7	4-Nitrophenol	U	24	1.0	25	24	5
121-14-2	2,4-Dinitrotoluene	U	9	1.0	10	9	1
84-66-2	Diethylphthalate	U	9	1.0	10	9	1
7005-72-3	4-Chlorophenyl-phenylether	U	9	1.0	10	9	1
100-01-6	4-Nitroaniline	U	24	1.0	25	24	2
534-52-1	4,6-Dinitro-2-Methylphenol	U	24	1.0	25	24	6
86-30-6	N-Nitrosodiphenylamine	U	9	1.0	10	9	2
101-55-3	4-Bromophenyl-phenylether	U	9	1.0	10	9	1
1912-24-9	Atrazine	U	9	1.0	10	9	2
87-86-5	Pentachlorophenol	U	24	1.0	25	24	7
120-12-7	Anthracene	U	9	1.0	10	9	1
86-74-8	Carbazole	U	9	1.0	10	9	1

lw 1/31/19

15

KATAHDIN ANALYTICAL SERVICES
Report of Analytical Results

Client: CH2MHill
Project: TO-009 Lejeune
PO No:
Sample Date: 11/20/08
Received Date: 11/21/08
Extraction Date: 11/25/08
Analysis Date: 13-DEC-2008 16:37
Report Date: 12/15/2008
Matrix: WATER
% Solids: NA

Lab ID: SB6751-15
Client ID: MR08-TW18-08D
SDG: TO9-5
Extracted by: CB
Extraction Method: SW846 3510
Analyst: JCG
Analysis Method: SW846 8270C
Lab Prep Batch: WG58493
Units: ug/L

CAS#	Compound	Flags	Results	DF	PQL	Adj.PQL	Adj.MDL	
84-74-2	Di-n-butylphthalate	U	9	1.0	10	9	1	
85-68-7	Butylbenzylphthalate	~~U~~ UJ	9	1.0	10	9	1	CCH
91-94-1	3,3'-Dichlorobenzidine	U	9	1.0	10	9	3	
218-01-9	Chrysene	U	9	1.0	10	9	1	
117-81-7	bis(2-Ethylhexyl)phthalate	~~U~~ UJ	9	1.0	10	9	2	CCH
117-84-0	Di-n-octylphthalate	~~U~~ UJ	9	1.0	10	9	2	CCH
367-12-4	2-Fluorophenol		45%					
13127-88-3	Phenol-D6		31%					
4165-60-0	Nitrobenzene-D5		74%					
321-60-8	2-Fluorobiphenyl		73%					
118-79-6	2,4,6-Tribromophenol		80%					
1718-51-0	Terphenyl-D14		132%					

lw
1/31/09

16

KATAHDIN ANALYTICAL SERVICES
Report of Analytical Results

Client: CH2MHill
Project: TO-009 Lejeune
PO No:
Sample Date: 11/20/08
Received Date: 11/22/08
Extraction Date: 11/25/08
Analysis Date: 13-DEC-2008 17:19
Report Date: 12/15/2008
Matrix: WATER
% Solids: NA

Lab ID: SB6790-1
Client ID: MR08-TW24-08D
SDG: TO9-5
Extracted by: CB
Extraction Method: SW846 3510
Analyst: JCG
Analysis Method: SW846 8270C
Lab Prep Batch: WG58493
Units: ug/L

CAS#	Compound	Flags	Results	DF	PQL	Adj.PQL	Adj.MDL
100-52-7	Benzaldehyde	U	9	1.0	10	9	3
108-95-2	Phenol	U	9	1.0	10	9	2
111-44-4	Bis(2-Chloroethyl)ether	U	9	1.0	10	9	2
95-57-8	2-Chlorophenol	U	11	1.0	12	11	3
95-48-7	2-Methylphenol	U	11	1.0	12	11	4
108-60-1	2,2'-Oxybis(1-chloropropane)	U	9	1.0	10	9	2
98-86-2	Acetophenone	U	11	1.0	12	11	4
621-64-7	N-Nitroso-di-n-propylamine	U	9	1.0	10	9	2
65794-96-9	3&4-Methylphenol	U	9	1.0	10	9	2
67-72-1	Hexachloroethane	U	9	1.0	10	9	2
98-95-3	Nitrobenzene	U	9	1.0	10	9	2
78-59-1	Isophorone	U	9	1.0	10	9	2
88-75-5	2-Nitrophenol	U	9	1.0	10	9	3
105-67-9	2,4-Dimethylphenol	U	11	1.0	12	11	4
111-91-1	Bis(2-Chloroethoxy)methane	U	9	1.0	10	9	2
120-83-2	2,4-Dichlorophenol	U	11	1.0	12	11	4
106-47-8	4-Chloroaniline	U	9	1.0	10	9	2
105-60-2	Caprolactam	U	9	1.0	10	9	0.4
59-50-7	4-Chloro-3-Methylphenol	U	9	1.0	10	9	2
88-06-2	2,4,6-Trichlorophenol	U	9	1.0	10	9	3
95-95-4	2,4,5-Trichlorophenol	U	24	1.0	25	24	4
91-58-7	2-Chloronaphthalene	U	9	1.0	10	9	2
92-52-4	1,1'-Biphenyl	U	9	1.0	10	9	2
88-74-4	2-Nitroaniline	U	24	1.0	25	24	1
131-11-3	Dimethyl Phthalate	U	9	1.0	10	9	0.7
606-20-2	2,6-Dinitrotoluene	U	9	1.0	10	9	1.0
208-96-8	Acenaphthylene	U	9	1.0	10	9	2
99-09-2	3-Nitroaniline	U	24	1.0	25	24	1
83-32-9	Acenaphthene	U	9	1.0	10	9	2
51-28-5	2,4-Dinitrophenol	U	42	1.0	45	42	14
132-64-9	Dibenzofuran	U	9	1.0	10	9	1
100-02-7	4-Nitrophenol	U	24	1.0	25	24	5
121-14-2	2,4-Dinitrotoluene	U	9	1.0	10	9	1
84-66-2	Diethylphthalate	U	9	1.0	10	9	1
7005-72-3	4-Chlorophenyl-phenylether	U	9	1.0	10	9	1
100-01-6	4-Nitroaniline	U	24	1.0	25	24	2
534-52-1	4,6-Dinitro-2-Methylphenol	U	24	1.0	25	24	6
86-30-6	N-Nitrosodiphenylamine	U	9	1.0	10	9	2
101-55-3	4-Bromophenyl-phenylether	U	9	1.0	10	9	1
1912-24-9	Atrazine	U	9	1.0	10	9	2
87-86-5	Pentachlorophenol	U	24	1.0	25	24	7
120-12-7	Anthracene	U	9	1.0	10	9	1
86-74-8	Carbazole	U	9	1.0	10	9	1

lw 1/31/09

16

KATAHDIN ANALYTICAL SERVICES
Report of Analytical Results

Client: CH2MHill
Project: TO-009 Lejeune
PO No:
Sample Date: 11/20/08
Received Date: 11/22/08
Extraction Date: 11/25/08
Analysis Date: 13-DEC-2008 17:19
Report Date: 12/15/2008
Matrix: WATER
% Solids: NA

Lab ID: SB6790-1
Client ID: MR08-TW24-08D
SDG: TO9-5
Extracted by: CB
Extraction Method: SW846 3510
Analyst: JCG
Analysis Method: SW846 8270C
Lab Prep Batch: WG58493
Units: ug/L

CAS#	Compound	Flags	Results	DF	PQL	Adj.PQL	Adj.MDL	
84-74-2	Di-n-butylphthalate	U	9	1.0	10	9	1	
85-68-7	Butylbenzylphthalate	~~U~~ UJ	9	1.0	10	9	1	CCH
91-94-1	3,3'-Dichlorobenzidine	U	9	1.0	10	9	3	
218-01-9	Chrysene	U	9	1.0	10	9	1	
117-81-7	bis(2-Ethylhexyl)phthalate	~~U~~ UJ	9	1.0	10	9	2	CCH
117-84-0	Di-n-octylphthalate	~~U~~ UJ	9	1.0	10	9	2	CCH
367-12-4	2-Fluorophenol		39%					
13127-88-3	Phenol-D6		24%					
4165-60-0	Nitrobenzene-D5		78%					
321-60-8	2-Fluorobiphenyl		72%					
118-79-6	2,4,6-Tribromophenol		80%					
1718-51-0	Terphenyl-D14		135%					

lw 1/3/09

KATAHDIN ANALYTICAL SERVICES
Report of Analytical Results

Client: CH2MHill
Project: TO-009 Lejeune
PO No:
Sample Date: 11/20/08
Received Date: 11/22/08
Extraction Date: 11/25/08
Analysis Date: 13-DEC-2008 18:00
Report Date: 12/15/2008
Matrix: WATER
% Solids: NA

Lab ID: SB6790-3
Client ID: MR08-TW17-08D
SDG: TO9-5
Extracted by: CB
Extraction Method: SW846 3510
Analyst: JCG
Analysis Method: SW846 8270C
Lab Prep Batch: WG58493
Units: ug/L

CAS#	Compound	Flags	Results	DF	PQL	Adj.PQL	Adj.MDL
100-52-7	Benzaldehyde	U	10	1.0	10	10	3
108-95-2	Phenol	U	10	1.0	10	10	2
111-44-4	Bis(2-Chloroethyl)ether	U	10	1.0	10	10	2
95-57-8	2-Chlorophenol	U	12	1.0	12	12	3
95-48-7	2-Methylphenol	U	12	1.0	12	12	4
108-60-1	2,2'-Oxybis(1-chloropropane)	U	10	1.0	10	10	2
98-86-2	Acetophenone	U	12	1.0	12	12	4
621-64-7	N-Nitroso-di-n-propylamine	U	10	1.0	10	10	2
65794-96-9	3&4-Methylphenol	U	10	1.0	10	10	3
67-72-1	Hexachloroethane	U	10	1.0	10	10	2
98-95-3	Nitrobenzene	U	10	1.0	10	10	2
78-59-1	Isophorone	U	10	1.0	10	10	2
88-75-5	2-Nitrophenol	U	10	1.0	10	10	4
105-67-9	2,4-Dimethylphenol	U	12	1.0	12	12	4
111-91-1	Bis(2-Chloroethoxy)methane	U	10	1.0	10	10	2
120-83-2	2,4-Dichlorophenol	U	12	1.0	12	12	4
106-47-8	4-Chloroaniline	U	10	1.0	10	10	2
105-60-2	Caprolactam	U	10	1.0	10	10	0.4
59-50-7	4-Chloro-3-Methylphenol	U	10	1.0	10	10	2
88-06-2	2,4,6-Trichlorophenol	U	10	1.0	10	10	3
95-95-4	2,4,5-Trichlorophenol	U	24	1.0	25	24	4
91-58-7	2-Chloronaphthalene	U	10	1.0	10	10	2
92-52-4	1,1'-Biphenyl	U	10	1.0	10	10	2
88-74-4	2-Nitroaniline	U	24	1.0	25	24	2
131-11-3	Dimethyl Phthalate	U	10	1.0	10	10	0.8
606-20-2	2,6-Dinitrotoluene	U	10	1.0	10	10	1
208-96-8	Acenaphthylene	U	10	1.0	10	10	2
99-09-2	3-Nitroaniline	U	24	1.0	25	24	1
83-32-9	Acenaphthene	U	10	1.0	10	10	2
51-28-5	2,4-Dinitrophenol	U	44	1.0	45	44	15
132-64-9	Dibenzofuran	U	10	1.0	10	10	1
100-02-7	4-Nitrophenol	U	24	1.0	25	24	6
121-14-2	2,4-Dinitrotoluene	U	10	1.0	10	10	1
84-66-2	Diethylphthalate	U	10	1.0	10	10	1
7005-72-3	4-Chlorophenyl-phenylether	U	10	1.0	10	10	1
100-01-6	4-Nitroaniline	U	24	1.0	25	24	2
534-52-1	4,6-Dinitro-2-Methylphenol	U	24	1.0	25	24	6
86-30-6	N-Nitrosodiphenylamine	U	10	1.0	10	10	2
101-55-3	4-Bromophenyl-phenylether	U	10	1.0	10	10	1
1912-24-9	Atrazine	U	10	1.0	10	10	2
87-86-5	Pentachlorophenol	U	24	1.0	25	24	8
120-12-7	Anthracene	U	10	1.0	10	10	1
86-74-8	Carbazole	U	10	1.0	10	10	1

MW 1/31/09

KATAHDIN ANALYTICAL SERVICES
Report of Analytical Results

Client: CH2MHill
Project: TO-009 Lejeune
PO No:
Sample Date: 11/20/08
Received Date: 11/22/08
Extraction Date: 11/25/08
Analysis Date: 13-DEC-2008 18:00
Report Date: 12/15/2008
Matrix: WATER
% Solids: NA

Lab ID: SB6790-3
Client ID: MR08-TW17-08D
SDG: TO9-5
Extracted by: CB
Extraction Method: SW846 3510
Analyst: JCG
Analysis Method: SW846 8270C
Lab Prep Batch: WG58493
Units: ug/L

CAS#	Compound	Flags	Results	DF	PQL	Adj.PQL	Adj.MDL	
84-74-2	Di-n-butylphthalate	U	10	1.0	10	10	1	
85-68-7	Butylbenzylphthalate	~~U~~ UJ	10	1.0	10	10	1	CCH
91-94-1	3,3'-Dichlorobenzidine	U	10	1.0	10	10	3	
218-01-9	Chrysene	U	10	1.0	10	10	1	
117-81-7	bis(2-Ethylhexyl)phthalate	~~U~~ UJ	10	1.0	10	10	2	CCH
117-84-0	Di-n-octylphthalate	~~U~~ UJ	10	1.0	10	10	2	CCH
367-12-4	2-Fluorophenol		52%					
13127-88-3	Phenol-D6		35%					
4165-60-0	Nitrobenzene-D5		77%					
321-60-8	2-Fluorobiphenyl		75%					
118-79-6	2,4,6-Tribromophenol		83%					
1718-51-0	Terphenyl-D14		127%					

lw 1/31/09

KATAHDIN ANALYTICAL SERVICES
Report of Analytical Results

Client: CH2MHill
Project: TO-009 Lejeune
PO No:
Sample Date: 11/20/08
Received Date: 11/22/08
Extraction Date: 11/25/08
Analysis Date: 13-DEC-2008 18:42
Report Date: 12/15/2008
Matrix: WATER
% Solids: NA

Lab ID: SB6790-5
Client ID: MR08-TW17D-08D
SDG: TO9-5
Extracted by: CB
Extraction Method: SW846 3510
Analyst: JCG
Analysis Method: SW846 8270C
Lab Prep Batch: WG58493
Units: ug/L

CAS#	Compound	Flags	Results	DF	PQL	Adj.PQL	Adj.MDL
100-52-7	Benzaldehyde	U	10	1.0	10	10	3
108-95-2	Phenol	U	10	1.0	10	10	2
111-44-4	Bis(2-Chloroethyl)ether	U	10	1.0	10	10	2
95-57-8	2-Chlorophenol	U	12	1.0	12	12	3
95-48-7	2-Methylphenol	U	12	1.0	12	12	4
108-60-1	2,2'-Oxybis(1-chloropropane)	U	10	1.0	10	10	2
98-86-2	Acetophenone	U	12	1.0	12	12	4
621-64-7	N-Nitroso-di-n-propylamine	U	10	1.0	10	10	2
65794-96-9	3&4-Methylphenol	U	10	1.0	10	10	3
67-72-1	Hexachloroethane	U	10	1.0	10	10	2
98-95-3	Nitrobenzene	U	10	1.0	10	10	2
78-59-1	Isophorone	U	10	1.0	10	10	2
88-75-5	2-Nitrophenol	U	10	1.0	10	10	4
105-67-9	2,4-Dimethylphenol	U	12	1.0	12	12	4
111-91-1	Bis(2-Chloroethoxy)methane	U	10	1.0	10	10	2
120-83-2	2,4-Dichlorophenol	U	12	1.0	12	12	4
106-47-8	4-Chloroaniline	U	10	1.0	10	10	2
105-60-2	Caprolactam	U	10	1.0	10	10	0.4
59-50-7	4-Chloro-3-Methylphenol	U	10	1.0	10	10	2
88-06-2	2,4,6-Trichlorophenol	U	10	1.0	10	10	3
95-95-4	2,4,5-Trichlorophenol	U	25	1.0	25	25	4
91-58-7	2-Chloronaphthalene	U	10	1.0	10	10	2
92-52-4	1,1'-Biphenyl	U	10	1.0	10	10	2
88-74-4	2-Nitroaniline	U	25	1.0	25	25	2
131-11-3	Dimethyl Phthalate	U	10	1.0	10	10	0.8
606-20-2	2,6-Dinitrotoluene	U	10	1.0	10	10	1
208-96-8	Acenaphthylene	U	10	1.0	10	10	2
99-09-2	3-Nitroaniline	U	25	1.0	25	25	1
83-32-9	Acenaphthene	U	10	1.0	10	10	2
51-28-5	2,4-Dinitrophenol	U	45	1.0	45	45	15
132-64-9	Dibenzofuran	U	10	1.0	10	10	1
100-02-7	4-Nitrophenol	U	25	1.0	25	25	6
121-14-2	2,4-Dinitrotoluene	U	10	1.0	10	10	1
84-66-2	Diethylphthalate	U	10	1.0	10	10	1
7005-72-3	4-Chlorophenyl-phenylether	U	10	1.0	10	10	1
100-01-6	4-Nitroaniline	U	25	1.0	25	25	2
534-52-1	4,6-Dinitro-2-Methylphenol	U	25	1.0	25	25	6
86-30-6	N-Nitrosodiphenylamine	U	10	1.0	10	10	2
101-55-3	4-Bromophenyl-phenylether	U	10	1.0	10	10	1
1912-24-9	Atrazine	U	10	1.0	10	10	2
87-86-5	Pentachlorophenol	U	25	1.0	25	25	8
120-12-7	Anthracene	U	10	1.0	10	10	1
86-74-8	Carbazole	U	10	1.0	10	10	1

RW 12/31/09

KATAHDIN ANALYTICAL SERVICES
Report of Analytical Results

Client: CH2MHill
Project: TO-009 Lejeune
PO No:
Sample Date: 11/20/08
Received Date: 11/22/08
Extraction Date: 11/25/08
Analysis Date: 13-DEC-2008 18:42
Report Date: 12/15/2008
Matrix: WATER
% Solids: NA

Lab ID: SB6790-5
Client ID: MR08-TW17D-08D
SDG: TO9-5
Extracted by: CB
Extraction Method: SW846 3510
Analyst: JCG
Analysis Method: SW846 8270C
Lab Prep Batch: WG58493
Units: ug/L

CAS#	Compound	Flags	Results	DF	PQL	Adj.PQL	Adj.MDL	
84-74-2	Di-n-butylphthalate	U	10	1.0	10	10	1	
85-68-7	Butylbenzylphthalate	~~U~~ UJ	10	1.0	10	10	2	CCH
91-94-1	3,3'-Dichlorobenzidine	U	10	1.0	10	10	3	
218-01-9	Chrysene	U	10	1.0	10	10	1	
117-81-7	bis(2-Ethylhexyl)phthalate	~~U~~ UJ	10	1.0	10	10	2	CCH
117-84-0	Di-n-octylphthalate	~~U~~ UJ	10	1.0	10	10	2	CCH
367-12-4	2-Fluorophenol		53%					
13127-88-3	Phenol-D6		35%					
4165-60-0	Nitrobenzene-D5		86%					
321-60-8	2-Fluorobiphenyl		84%					
118-79-6	2,4,6-Tribromophenol		87%					
1718-51-0	Terphenyl-D14		126%					

lw
1/31/09

KATAHDIN ANALYTICAL SERVICES
Report of Analytical Results

Client: CH2MHill
Project: TO-009 Lejeune
PO No:
Sample Date: 11/21/08
Received Date: 11/22/08
Extraction Date: 11/25/08
Analysis Date: 13-DEC-2008 19:24
Report Date: 12/15/2008
Matrix: WATER
% Solids: NA

Lab ID: SB6790-7
Client ID: MR08-TW15-08D
SDG: TO9-5
Extracted by: CB
Extraction Method: SW846 3510
Analyst: JCG
Analysis Method: SW846 8270C
Lab Prep Batch: WG58493
Units: ug/L

CAS#	Compound	Flags	Results	DF	PQL	Adj.PQL	Adj.MDL
100-52-7	Benzaldehyde	U	10	1.0	10	10	3
108-95-2	Phenol	U	10	1.0	10	10	2
111-44-4	Bis(2-Chloroethyl)ether	U	10	1.0	10	10	2
95-57-8	2-Chlorophenol	U	12	1.0	12	12	3
95-48-7	2-Methylphenol	U	12	1.0	12	12	4
108-60-1	2,2'-Oxybis(1-chloropropane)	U	10	1.0	10	10	2
98-86-2	Acetophenone	U	12	1.0	12	12	4
621-64-7	N-Nitroso-di-n-propylamine	U	10	1.0	10	10	2
65794-96-9	3&4-Methylphenol	U	10	1.0	10	10	3
67-72-1	Hexachloroethane	U	10	1.0	10	10	2
98-95-3	Nitrobenzene	U	10	1.0	10	10	2
78-59-1	Isophorone	U	10	1.0	10	10	2
88-75-5	2-Nitrophenol	U	10	1.0	10	10	4
105-67-9	2,4-Dimethylphenol	U	12	1.0	12	12	4
111-91-1	Bis(2-Chloroethoxy)methane	U	10	1.0	10	10	2
120-83-2	2,4-Dichlorophenol	U	12	1.0	12	12	4
106-47-8	4-Chloroaniline	U	10	1.0	10	10	2
105-60-2	Caprolactam	U	10	1.0	10	10	0.4
59-50-7	4-Chloro-3-Methylphenol	U	10	1.0	10	10	2
88-06-2	2,4,6-Trichlorophenol	U	10	1.0	10	10	3
95-95-4	2,4,5-Trichlorophenol	U	24	1.0	25	24	4
91-58-7	2-Chloronaphthalene	U	10	1.0	10	10	2
92-52-4	1,1'-Biphenyl	U	10	1.0	10	10	2
88-74-4	2-Nitroaniline	U	24	1.0	25	24	2
131-11-3	Dimethyl Phthalate	U	10	1.0	10	10	0.8
606-20-2	2,6-Dinitrotoluene	U	10	1.0	10	10	1
208-96-8	Acenaphthylene	U	10	1.0	10	10	2
99-09-2	3-Nitroaniline	U	24	1.0	25	24	1
83-32-9	Acenaphthene	U	10	1.0	10	10	2
51-28-5	2,4-Dinitrophenol	U	44	1.0	45	44	15
132-64-9	Dibenzofuran	U	10	1.0	10	10	1
100-02-7	4-Nitrophenol	U	24	1.0	25	24	6
121-14-2	2,4-Dinitrotoluene	U	10	1.0	10	10	1
84-66-2	Diethylphthalate	U	10	1.0	10	10	1
7005-72-3	4-Chlorophenyl-phenylether	U	10	1.0	10	10	1
100-01-6	4-Nitroaniline	U	24	1.0	25	24	2
534-52-1	4,6-Dinitro-2-Methylphenol	U	24	1.0	25	24	6
86-30-6	N-Nitrosodiphenylamine	U	10	1.0	10	10	2
101-55-3	4-Bromophenyl-phenylether	U	10	1.0	10	10	1
1912-24-9	Atrazine	U	10	1.0	10	10	2
87-86-5	Pentachlorophenol	U	24	1.0	25	24	8
120-12-7	Anthracene	U	10	1.0	10	10	1
86-74-8	Carbazole	U	10	1.0	10	10	1

lw 1/31/09

KATAHDIN ANALYTICAL SERVICES
Report of Analytical Results

Client: CH2MHill
Project: TO-009 Lejeune
PO No:
Sample Date: 11/21/08
Received Date: 11/22/08
Extraction Date: 11/25/08
Analysis Date: 13-DEC-2008 19:24
Report Date: 12/15/2008
Matrix: WATER
% Solids: NA

Lab ID: SB6790-7
Client ID: MR08-TW15-08D
SDG: TO9-5
Extracted by: CB
Extraction Method: SW846 3510
Analyst: JCG
Analysis Method: SW846 8270C
Lab Prep Batch: WG58493
Units: ug/L

CAS#	Compound	Flags	Results	DF	PQL	Adj.PQL	Adj.MDL	
84-74-2	Di-n-butylphthalate	U	10	1.0	10	10	1	
85-68-7	Butylbenzylphthalate	~~U~~ UJ	10	1.0	10	10	1	CCH
91-94-1	3,3'-Dichlorobenzidine	U	10	1.0	10	10	3	
218-01-9	Chrysene	U	10	1.0	10	10	1	
117-81-7	bis(2-Ethylhexyl)phthalate	~~U~~ UJ	10	1.0	10	10	2	CCH
117-84-0	Di-n-octylphthalate	~~U~~ UJ	10	1.0	10	10	2	CCH
367-12-4	2-Fluorophenol		42%					
13127-88-3	Phenol-D6		27%					
4165-60-0	Nitrobenzene-D5		66%					
321-60-8	2-Fluorobiphenyl		60%					
118-79-6	2,4,6-Tribromophenol		72%					
1718-51-0	Terphenyl-D14		122%					

MW
1/31/09

20

KATAHDIN ANALYTICAL SERVICES
Report of Analytical Results

Client: CH2MHill
Project: TO-009 Lejeune
PO No:
Sample Date: 11/21/08
Received Date: 11/22/08
Extraction Date: 11/25/08
Analysis Date: 13-DEC-2008 20:05
Report Date: 12/15/2008
Matrix: WATER
% Solids: NA

Lab ID: SB6790-9
Client ID: MR08-TW15D-08D
SDG: TO9-5
Extracted by: CB
Extraction Method: SW846 3510
Analyst: JCG
Analysis Method: SW846 8270C
Lab Prep Batch: WG58493
Units: ug/L

CAS#	Compound	Flags	Results	DF	PQL	Adj.PQL	Adj.MDL
100-52-7	Benzaldehyde	U	10	1.0	10	10	3
108-95-2	Phenol	U	10	1.0	10	10	2
111-44-4	Bis(2-Chloroethyl)ether	U	10	1.0	10	10	2
95-57-8	2-Chlorophenol	U	12	1.0	12	12	3
95-48-7	2-Methylphenol	U	12	1.0	12	12	4
108-60-1	2,2'-Oxybis(1-chloropropane)	U	10	1.0	10	10	2
98-86-2	Acetophenone	U	12	1.0	12	12	4
621-64-7	N-Nitroso-di-n-propylamine	U	10	1.0	10	10	2
65794-96-9	3&4-Methylphenol	U	10	1.0	10	10	3
67-72-1	Hexachloroethane	U	10	1.0	10	10	2
98-95-3	Nitrobenzene	U	10	1.0	10	10	2
78-59-1	Isophorone	U	10	1.0	10	10	2
88-75-5	2-Nitrophenol	U	10	1.0	10	10	4
105-67-9	2,4-Dimethylphenol	U	12	1.0	12	12	4
111-91-1	Bis(2-Chloroethoxy)methane	U	10	1.0	10	10	2
120-83-2	2,4-Dichlorophenol	U	12	1.0	12	12	4
106-47-8	4-Chloroaniline	U	10	1.0	10	10	2
105-60-2	Caprolactam	U	10	1.0	10	10	0.4
59-50-7	4-Chloro-3-Methylphenol	U	10	1.0	10	10	2
88-06-2	2,4,6-Trichlorophenol	U	10	1.0	10	10	3
95-95-4	2,4,5-Trichlorophenol	U	24	1.0	25	24	4
91-58-7	2-Chloronaphthalene	U	10	1.0	10	10	2
92-52-4	1,1'-Biphenyl	U	10	1.0	10	10	2
88-74-4	2-Nitroaniline	U	24	1.0	25	24	1
131-11-3	Dimethyl Phthalate	U	10	1.0	10	10	0.8
606-20-2	2,6-Dinitrotoluene	U	10	1.0	10	10	1
208-96-8	Acenaphthylene	U	10	1.0	10	10	2
99-09-2	3-Nitroaniline	U	24	1.0	25	24	1
83-32-9	Acenaphthene	U	10	1.0	10	10	2
51-28-5	2,4-Dinitrophenol	U	44	1.0	45	44	14
132-64-9	Dibenzofuran	U	10	1.0	10	10	1
100-02-7	4-Nitrophenol	U	24	1.0	25	24	6
121-14-2	2,4-Dinitrotoluene	U	10	1.0	10	10	1
84-66-2	Diethylphthalate	U	10	1.0	10	10	1
7005-72-3	4-Chlorophenyl-phenylether	U	10	1.0	10	10	1
100-01-6	4-Nitroaniline	U	24	1.0	25	24	2
534-52-1	4,6-Dinitro-2-Methylphenol	U	24	1.0	25	24	6
86-30-6	N-Nitrosodiphenylamine	U	10	1.0	10	10	2
101-55-3	4-Bromophenyl-phenylether	U	10	1.0	10	10	1
1912-24-9	Atrazine	U	10	1.0	10	10	2
87-86-5	Pentachlorophenol	U	24	1.0	25	24	7
120-12-7	Anthracene	U	10	1.0	10	10	1
86-74-8	Carbazole	U	10	1.0	10	10	1

lW 1/31/09

20

KATAHDIN ANALYTICAL SERVICES
Report of Analytical Results

Client: CH2MHill
Project: TO-009 Lejeune
PO No:
Sample Date: 11/21/08
Received Date: 11/22/08
Extraction Date: 11/25/08
Analysis Date: 13-DEC-2008 20:05
Report Date: 12/15/2008
Matrix: WATER
% Solids: NA

Lab ID: SB6790-9
Client ID: MR08-TW15D-08D
SDG: TO9-5
Extracted by: CB
Extraction Method: SW846 3510
Analyst: JCG
Analysis Method: SW846 8270C
Lab Prep Batch: WG58493
Units: ug/L

CAS#	Compound	Flags	Results	DF	PQL	Adj.PQL	Adj.MDL	
84-74-2	Di-n-butylphthalate	U	10	1.0	10	10	1	
85-68-7	Butylbenzylphthalate	~~U~~ UJ	10	1.0	10	10	1	CCH
91-94-1	3,3'-Dichlorobenzidine	U	10	1.0	10	10	3	
218-01-9	Chrysene	U	10	1.0	10	10	1	
117-81-7	bis(2-Ethylhexyl)phthalate	~~U~~ UJ	10	1.0	10	10	2	CCH
117-84-0	Di-n-octylphthalate	~~U~~ UJ	10	1.0	10	10	2	CCH
367-12-4	2-Fluorophenol		40%					
13127-88-3	Phenol-D6		27%					
4165-60-0	Nitrobenzene-D5		70%					
321-60-8	2-Fluorobiphenyl		68%					
118-79-6	2,4,6-Tribromophenol		72%					
1718-51-0	Terphenyl-D14		117%					

JCW
1/31/09

ENVIRONMENTAL
Data Services, Inc.

POLYNUCLEAR AROMATIC COMPOUNDS BY 8270 SIM

USEPA Region IV - Level IV Review

Site: MCB Camp Lejeune, TO-09 SDG #: TO9-6

Client: CH2M HILL, Inc., Virginia Beach, Virginia Date: February 1, 2009

Laboratory: Katahdin Analytical Services, Scarborough, Maine Reviewer: Nancy Weaver

EDS ID	Client Sample ID	Laboratory Sample ID	Matrix
1	MR08-IS398D-08D	SB6735-2	Soil
2	MR08-IS399-08D	SB6735-4	Soil
3	MR08-IS392-08D	SB6735-6	Soil
4	MR08-IS391-08D	SB6735-8	Soil
5	MR08-IS390-08D	SB6735-10	Soil
6	MR08-IS393-08D	SB6735-12	Soil
7	MR08-IS395-08D	SB6735-14	Soil
8	MR08-SS388-08D	SB6749-2	Soil
8DL	MR08-SS388-08DDL	SB6749-2DL	Soil
9	MR08-IS388-08D	SB6749-4RA	Soil
10	MR08-SS389-08D	SB6749-6	Soil
10MS	MR08-SS389-08DMS	SB6749-6MS	Soil
10MSD	MR08-SS389-08DMSD	SB6749-6MSD	Soil
10DL	MR08-SS389-08DDL	SB6749-6DL	Soil
11	MR08-IS389-08D	SB6749-8	Soil
12	MR08-IS389D-08D	SB6749-10	Soil
13	MR08-SS394-08D	SB6749-12	Soil
14	MR08-IS394-08D	SB6749-14	Soil
14MS	MR08-IS394-08DMS	SB6749-14MS	Soil
14MSD	MR08-IS394-08DMSD	SB6749-14MSD	Soil
15	MR08-IS396-08D	SB6749-16	Soil
16	MR08-SS395-08D	SB6749-18	Soil
16DL	MR08-SS395-08DDL	SB6749-18DL	Soil
17	MR08-SS395D-08D	SB6749-20	Soil
17DL	MR08-SS395D-08DDL	SB6749-20DL	Soil
18	MR08-SS393-08D	SB6749-22	Soil
19	MR08-SS392-08D	SB6749-24	Soil
20	MR08-SS391-08D	SB6749-26	Soil
20DL	MR08-SS391-08DDL	SB6749-26DL	Soil

The USEPA "Contract Laboratory Program National Functional Guidelines for Organic Data Review," October 1999, and professional judgement were used in evaluating the data in this summary report.

Holding Times - All samples were extracted within 14 days for soil samples and analyzed within 40 days for all samples.

GC/MS Tuning - All of the DFTPP tunes in the initial and continuing calibrations met the percent relative abundance criteria.

Initial Calibration - The initial calibrations exhibited acceptable %RSD and mean RRF values.

Continuing Calibration - The continuing calibrations exhibited acceptable %D and RRF values except the following.

CCAL Date	Compound	%D/RRF	Qualifier	Affected Samples
12/13/08 1222	Pyrene	40.59%	J/UJ	1-4
	Hexachlorobenzene	46.70%	J/UJ	1-4
	Hexachlorobutadiene	32.14%	J/UJ	1-4
	Hexachlorocyclopentadiene	107.33%	J/UJ	1-4
12/13/08 2328	2-Methylnaphthalene	44.05%	J/UJ	5, 7
	Pyrene	37.65%	J/UJ	5, 7
	Benzo (k) fluoranthene	35.53%	J/UJ	5, 7
	Hexachlorobenzene	49.75%	J/UJ	5, 7
	Hexachlorobutadiene	77.78%	J/UJ	5, 7
	Hexachlorocyclopentadiene	85.03%	J/UJ	5, 7
12/14/08	Pyrene	36.28%	J/UJ	6, 8, 10-14, 16-18, 20
	Benzo (b) fluoranthene	35.31%	J/UJ	6, 8, 10-14, 16-18, 20
	Benzo (k) fluoranthene	44.49%	J/UJ	6, 8, 10-14, 16-18, 20
	Hexachlorobenzene	40.71%	J/UJ	6, 8, 10-14, 16-18, 20
	Hexachlorocyclopentadiene	29.02%	J/UJ	6, 8, 10-14, 16-18, 20
12/15/08	2-Methylnaphthalene	39.66%	J/UJ	8DL, 9, 10DL, 15, 16DL, 17DL, 19, 20DL
	Phenanthrene	42.43%	J/UJ	8DL, 9, 10DL, 15, 16DL, 17DL, 19, 20DL
	Benzo (b) fluoranthene	41.16%	J/UJ	8DL, 9, 10DL, 15, 16DL, 17DL, 19, 20DL
	Hexachlorocyclopentadiene	52.06%	J/UJ	8DL, 9, 10DL, 15, 16DL, 17DL, 19, 20DL

Surrogates - All samples exhibited acceptable surrogate recoveries.

MS/MSD - The MS/MSD sample exhibited acceptable %R and RPD values except the following.

MS/MSD Sample ID	Compound	MS/MSD %R/RPD	Qualifier
10	Phenanthrene	37%/Ok/Ok	J/UJ
	Benzo (a) anthracene	4%/0%/Ok	J/R

MS/MSD Sample ID	Compound	MS/MSD %R/RPD	Qualifier
10	Benzo (b) fluoranthene	0%/23%/Ok	None - Already qualified due to CCAL
	Benzo (k) fluoranthene	2%/0%/Ok	None - Already qualified due to CCAL
	Benzo (a) pyrene	9%/0%/Ok	J/R
	Indeno (1,2,3-cd) pyrene	Ok/9%/Ok	J/R
14	2-Methylnaphthalene	49%/58%/Ok	None - Already qualified due to LCS

Laboratory Control Sample - The LCS samples exhibited acceptable %R values except the following.

LCS ID	Compound	%R	Qualifier	Affected Samples
WG58445-LCS	2-Methylnaphthalene	60%	J/UJ	6, 8, 10-14, 16-18, 20

Internal Standard (IS) Area Performance - All internal standards met response and retention time (RT) criteria.

Method Blank - The method blanks were free of contamination.

Field, Equipment Blank - Field QC results are summarized below.

Blank ID	Compound	Conc. ug/L	Action Level ug/L	Qualifier	Affected Samples
MR08-EB111908	None - ND	-	-	-	-
MR08-FB112008	None - ND	-	-	-	-

Field Duplicates - Field duplicate results are summarized below.

Compound	MR08-IS389-08D ug/kg	MR08-IS389D-08D ug/kg	RPD	Qualifier
Fluoranthene	3.5	3.8	8%	None
Pyrene	3.5	4.3	21%	None

Compound	MR08-SS395-08D ug/kg	MR08-SS395D-08D ug/kg	RPD	Qualifier
Phenanthrene	95	58	48%	None
Fluoranthene	550	350	44%	None
Pyrene	370	240	43%	None
Benzo (a) anthracene	170	110	43%	None
Benzo (b) fluoranthene	240	190	23%	None
Benzo (k) fluoranthene	230	150	42%	None
Benzo (a) pyrene	160	130	21%	None
Indeno (1,2,3-cd) pyrene	210	140	40%	None

Compound	MR08-SS395-08D ug/kg	MR08-SS395D-08D ug/kg	RPD	Qualifier
Dibenzo (a,h) anthracene	57	40	35%	None
Benzo (g,h,i) perylene	190	130	38%	None

Tentatively Identified Compounds (TICs) - TICs were not reported.

Compound Quantitation - Several samples exhibited high concentrations of target compounds and were flagged (E) by the laboratory. The laboratory diluted and reanalyzed these samples. The reviewer replaced the original results with the dilution results. The original Form Is should be used for reporting purposes.

KATAHDIN ANALYTICAL SERVICES
Report of Analytical Results

Client: CH2MHill
Project: TO-009 Lejeune
PO No:
Sample Date: 11/18/08
Received Date: 11/20/08
Extraction Date: 11/21/08
Analysis Date: 13-DEC-2008 19:59
Report Date: 12/16/2008
Matrix: SOIL
% Solids: 85.2

Lab ID: SB6735-2
Client ID: MR08-IS398D-08D
SDG: TO9-6
Extracted by: AC
Extraction Method: SW846 3550
Analyst: JCG
Analysis Method: SW846 M8270C
Lab Prep Batch: WG58344
Units: ug/Kgdrywt

CAS#	Compound	Flags	Results	DF	PQL	Adj.PQL	Adj.MDL	
91-20-3	Naphthalene	U	12	1.0	10	12	3.0	
91-57-6	2-Methylnaphthalene	U	12	1.0	10	12	2.6	
86-73-7	Fluorene	U	12	1.0	10	12	3.8	
85-01-8	Phenanthrene	U	12	1.0	10	12	2.1	
206-44-0	Fluoranthene	J	3.1	1.0	10	12	2.1	
129-00-0	Pyrene	~~J~~ J	3.1	1.0	10	12	2.5	CCH
56-55-3	Benzo(a)anthracene	U	12	1.0	10	12	2.2	
205-99-2	Benzo(b)fluoranthene	U	12	1.0	10	12	2.8	
207-08-9	Benzo(k)fluoranthene	U	12	1.0	10	12	3.6	
50-32-8	Benzo(a)pyrene	U	12	1.0	10	12	3.9	
193-39-5	Indeno(1,2,3-cd)pyrene	U	12	1.0	10	12	2.2	
53-70-3	Dibenzo(a,h)anthracene	U	12	1.0	10	12	2.1	
191-24-2	Benzo(g,h,i)perylene	U	12	1.0	10	12	2.3	
118-74-1	Hexachlorobenzene	~~U~~ UJ	12	1.0	10	12	2.1	CCH
87-68-3	Hexachlorobutadiene	~~U~~ ↓	12	1.0	10	12	2.7	↓
77-47-4	Hexachlorocyclopentadiene	~~U~~ ↓	12	1.0	10	12	1.8	
7297-45-2	2-Methylnaphthalene-D10		78%					
367-12-4	2,4-Dibromophenol		127%					
81103-79-9	Fluorene-d10		62%					
1718-51-1	Pyrene-D10		86%					

kw 2/1/09

2

KATAHDIN ANALYTICAL SERVICES
Report of Analytical Results

Client: CH2MHill
Project: TO-009 Lejeune
PO No:
Sample Date: 11/18/08
Received Date: 11/20/08
Extraction Date: 11/21/08
Analysis Date: 13-DEC-2008 20:40
Report Date: 12/16/2008
Matrix: SOIL
% Solids: 95.8

Lab ID: SB6735-4
Client ID: MR08-IS399-08D
SDG: TO9-6
Extracted by: AC
Extraction Method: SW846 3550
Analyst: JCG
Analysis Method: SW846 M8270C
Lab Prep Batch: WG58344
Units: ug/Kgdrywt

CAS#	Compound	Flags	Results	DF	PQL	Adj.PQL	Adj.MDL	
91-20-3	Naphthalene	U	10	1.0	10	10	2.7	
91-57-6	2-Methylnaphthalene	U	10	1.0	10	10	2.3	
86-73-7	Fluorene	U	10	1.0	10	10	3.3	
85-01-8	Phenanthrene	U	10	1.0	10	10	1.9	
206-44-0	Fluoranthene	U	10	1.0	10	10	1.9	
129-00-0	Pyrene	~~U~~ UJ	10	1.0	10	10	2.2	CCH
56-55-3	Benzo(a)anthracene	U	10	1.0	10	10	2.0	
205-99-2	Benzo(b)fluoranthene	U	10	1.0	10	10	2.5	
207-08-9	Benzo(k)fluoranthene	U	10	1.0	10	10	3.2	
50-32-8	Benzo(a)pyrene	U	10	1.0	10	10	3.4	
193-39-5	Indeno(1,2,3-cd)pyrene	U	10	1.0	10	10	2.0	
53-70-3	Dibenzo(a,h)anthracene	U	10	1.0	10	10	1.9	
191-24-2	Benzo(g,h,i)perylene	U	10	1.0	10	10	2.1	
118-74-1	Hexachlorobenzene	~~U~~ UJ	10	1.0	10	10	1.9	CCH
87-68-3	Hexachlorobutadiene	~~U~~ ↓	10	1.0	10	10	2.4	↓
77-47-4	Hexachlorocyclopentadiene	~~U~~ ↓	10	1.0	10	10	1.6	↓
7297-45-2	2-Methylnaphthalene-D10		68%					
367-12-4	2,4-Dibromophenol		125%					
81103-79-9	Fluorene-d10		61%					
1718-51-1	Pyrene-D10		91%					

RCJ
2/1/09

3

KATAHDIN ANALYTICAL SERVICES
Report of Analytical Results

Client: CH2MHill
Project: TO-009 Lejeune
PO No:
Sample Date: 11/18/08
Received Date: 11/20/08
Extraction Date: 11/21/08
Analysis Date: 13-DEC-2008 21:21
Report Date: 12/16/2008
Matrix: SOIL
% Solids: 57.3

Lab ID: SB6735-6
Client ID: MR08-IS392-08D
SDG: TO9-6
Extracted by: AC
Extraction Method: SW846 3550
Analyst: JCG
Analysis Method: SW846 M8270C
Lab Prep Batch: WG58344
Units: ug/Kgdrywt

CAS#	Compound	Flags	Results	DF	PQL	Adj.PQL	Adj.MDL	
91-20-3	Naphthalene	U	17	1.0	10	17	4.5	
91-57-6	2-Methylnaphthalene	U	17	1.0	10	17	3.8	
86-73-7	Fluorene	U	17	1.0	10	17	5.6	
85-01-8	Phenanthrene	U	17	1.0	10	17	3.1	
206-44-0	Fluoranthene	U	17	1.0	10	17	3.1	
129-00-0	Pyrene	~~U~~ UJ	17	1.0	10	17	3.7	CCH
56-55-3	Benzo(a)anthracene	U	17	1.0	10	17	3.3	
205-99-2	Benzo(b)fluoranthene	U	17	1.0	10	17	4.2	
207-08-9	Benzo(k)fluoranthene	U	17	1.0	10	17	5.4	
50-32-8	Benzo(a)pyrene	U	17	1.0	10	17	5.8	
193-39-5	Indeno(1,2,3-cd)pyrene	U	17	1.0	10	17	3.3	
53-70-3	Dibenzo(a,h)anthracene	U	17	1.0	10	17	3.1	
191-24-2	Benzo(g,h,i)perylene	U	17	1.0	10	17	3.5	
118-74-1	Hexachlorobenzene	U UJ	17	1.0	10	17	3.1	CCH
87-68-3	Hexachlorobutadiene	U ↓	17	1.0	10	17	4.0	↓
77-47-4	Hexachlorocyclopentadiene	U	17	1.0	10	17	2.6	
7297-45-2	2-Methylnaphthalene-D10		72%					
367-12-4	2,4-Dibromophenol		118%					
81103-79-9	Fluorene-d10		62%					
1718-51-1	Pyrene-D10		94%					

QW
2/1/09

4

KATAHDIN ANALYTICAL SERVICES
Report of Analytical Results

Client: CH2MHill
Project: TO-009 Lejeune
PO No:
Sample Date: 11/18/08
Received Date: 11/20/08
Extraction Date: 11/21/08
Analysis Date: 13-DEC-2008 22:02
Report Date: 12/16/2008
Matrix: SOIL
% Solids: 94.3

Lab ID: SB6735-8
Client ID: MR08-IS391-08D
SDG: TO9-6
Extracted by: AC
Extraction Method: SW846 3550
Analyst: JCG
Analysis Method: SW846 M8270C
Lab Prep Batch: WG58344
Units: ug/Kgdrywt

CAS#	Compound	Flags	Results	DF	PQL	Adj.PQL	Adj.MDL	
91-20-3	Naphthalene	U	11	1.0	10	11	2.8	
91-57-6	2-Methylnaphthalene	U	11	1.0	10	11	2.3	
86-73-7	Fluorene	U	11	1.0	10	11	3.4	
85-01-8	Phenanthrene	U	11	1.0	10	11	1.9	
206-44-0	Fluoranthene	J	6.3	1.0	10	11	1.9	
129-00-0	Pyrene	~~J~~ J	5.7	1.0	10	11	2.2	C CH
56-55-3	Benzo(a)anthracene	U	11	1.0	10	11	2.0	
205-99-2	Benzo(b)fluoranthene	J	3.5	1.0	10	11	2.5	
207-08-9	Benzo(k)fluoranthene	J	3.5	1.0	10	11	3.3	
50-32-8	Benzo(a)pyrene	U	11	1.0	10	11	3.5	
193-39-5	Indeno(1,2,3-cd)pyrene	J	2.8	1.0	10	11	2.0	
53-70-3	Dibenzo(a,h)anthracene	U	11	1.0	10	11	1.9	
191-24-2	Benzo(g,h,i)perylene	J	2.7	1.0	10	11	2.1	
118-74-1	Hexachlorobenzene	U UJ	11	1.0	10	11	1.9	C CH
87-68-3	Hexachlorobutadiene	U ↓	11	1.0	10	11	2.4	↓
77-47-4	Hexachlorocyclopentadiene	U ↓	11	1.0	10	11	1.6	
7297-45-2	2-Methylnaphthalene-D10		65%					
367-12-4	2,4-Dibromophenol		114%					
81103-79-9	Fluorene-d10		56%					
1718-51-1	Pyrene-D10		84%					

MW 2/1/09

5

KATAHDIN ANALYTICAL SERVICES
Report of Analytical Results

Client: CH2MHill
Project: TO-009 Lejeune
PO No:
Sample Date: 11/18/08
Received Date: 11/20/08
Extraction Date: 11/21/08
Analysis Date: 14-DEC-2008 06:19
Report Date: 12/16/2008
Matrix: SOIL
% Solids: 90.4

Lab ID: SB6735-10
Client ID: MR08-IS390-08D
SDG: TO9-6
Extracted by: AC
Extraction Method: SW846 3550
Analyst: JCG
Analysis Method: SW846 M8270C
Lab Prep Batch: WG58344
Units: ug/Kgdrywt

CAS#	Compound	Flags	Results	DF	PQL	Adj.PQL	Adj.MDL	
91-20-3	Naphthalene	U	11	1.0	10	11	2.9	
91-57-6	2-Methylnaphthalene	~~U~~ UJ	11	1.0	10	11	2.4	CCH
86-73-7	Fluorene	U	11	1.0	10	11	3.5	
85-01-8	Phenanthrene	U	11	1.0	10	11	2.0	
206-44-0	Fluoranthene	U	11	1.0	10	11	2.0	
129-00-0	Pyrene	~~U~~ UJ	11	1.0	10	11	2.3	CCH
56-55-3	Benzo(a)anthracene	U	11	1.0	10	11	2.1	
205-99-2	Benzo(b)fluoranthene	U	11	1.0	10	11	2.6	
207-08-9	Benzo(k)fluoranthene	~~U~~ UJ	11	1.0	10	11	3.4	CCH
50-32-8	Benzo(a)pyrene	U	11	1.0	10	11	3.6	
193-39-5	Indeno(1,2,3-cd)pyrene	U	11	1.0	10	11	2.1	
53-70-3	Dibenzo(a,h)anthracene	U	11	1.0	10	11	2.0	
191-24-2	Benzo(g,h,i)perylene	U	11	1.0	10	11	2.2	
118-74-1	Hexachlorobenzene	~~U~~ UJ	11	1.0	10	11	2.0	CCH
87-68-3	Hexachlorobutadiene	~~U~~ ↓	11	1.0	10	11	2.5	
77-47-4	Hexachlorocyclopentadiene	~~U~~ ↓	11	1.0	10	11	1.6	↓
7297-45-2	2-Methylnaphthalene-D10		75%					
367-12-4	2,4-Dibromophenol		143%					
81103-79-9	Fluorene-d10		71%					
1718-51-1	Pyrene-D10		101%					

MW
21.1.09

KATAHDIN ANALYTICAL SERVICES
Report of Analytical Results

6

Client: CH2MHill
Project: TO-009 Lejeune
PO No:
Sample Date: 11/18/08
Received Date: 11/20/08
Extraction Date: 11/21/08
Analysis Date: 14-DEC-2008 06:59
Report Date: 12/17/2008
Matrix: SOIL
% Solids: 94.9

Lab ID: SB6735-12
Client ID: MR08-IS393-08D
SDG: TO9-6
Extracted by: AC
Extraction Method: SW846 3550
Analyst: JCG
Analysis Method: SW846 M8270C
Lab Prep Batch: WG58344
Units: ug/Kgdrywt

CAS#	Compound	Flags	Results	DF	PQL	Adj.PQL	Adj.MDL	
91-20-3	Naphthalene	U	10	1.0	10	10	3	
91-57-6	2-Methylnaphthalene	~~U~~ UJ	10	1.0	10	10	2	BSL
86-73-7	Fluorene	U	10	1.0	10	10	3	
85-01-8	Phenanthrene	U	10	1.0	10	10	2	
206-44-0	Fluoranthene	J	4	1.0	10	10	2	
129-00-0	Pyrene	~~J~~ J	3	1.0	10	10	2	CCH
56-55-3	Benzo(a)anthracene	J	3	1.0	10	10	2	
205-99-2	Benzo(b)fluoranthene	~~U~~ UJ	10	1.0	10	10	2	CCH
207-08-9	Benzo(k)fluoranthene	~~U~~ UJ	10	1.0	10	10	3	CCH
50-32-8	Benzo(a)pyrene	U	10	1.0	10	10	3	
193-39-5	Indeno(1,2,3-cd)pyrene	J	2	1.0	10	10	2	
53-70-3	Dibenzo(a,h)anthracene	U	10	1.0	10	10	2	
191-24-2	Benzo(g,h,i)perylene	U	10	1.0	10	10	2	
118-74-1	Hexachlorobenzene	~~U~~ UJ	10	1.0	10	10	2	CCH
87-68-3	Hexachlorobutadiene	U	10	1.0	10	10	2	
77-47-4	Hexachlorocyclopentadiene	~~U~~ UJ	10	1.0	10	10	2	CCH
7297-45-2	2-Methylnaphthalene-D10		77%					
367-12-4	2,4-Dibromophenol		142%					
81103-79-9	Fluorene-d10		71%					
1718-51-1	Pyrene-D10		104%					

lw
2/1/09

7

KATAHDIN ANALYTICAL SERVICES
Report of Analytical Results

Client: CH2MHill
Project: TO-009 Lejeune
PO No:
Sample Date: 11/18/08
Received Date: 11/20/08
Extraction Date: 11/21/08
Analysis Date: 14-DEC-2008 07:40
Report Date: 12/16/2008
Matrix: SOIL
% Solids: 93.7

Lab ID: SB6735-14
Client ID: MR08-IS395-08D
SDG: TO9-6
Extracted by: AC
Extraction Method: SW846 3550
Analyst: JCG
Analysis Method: SW846 M8270C
Lab Prep Batch: WG58344
Units: ug/Kgdrywt

CAS#	Compound	Flags	Results	DF	PQL	Adj.PQL	Adj.MDL	
91-20-3	Naphthalene	U	11	1.0	10	11	2.8	
91-57-6	2-Methylnaphthalene	~~U~~ UJ	11	1.0	10	11	2.3	CCH
86-73-7	Fluorene	U	11	1.0	10	11	3.4	
85-01-8	Phenanthrene	U	11	1.0	10	11	1.9	
206-44-0	Fluoranthene	U	11	1.0	10	11	1.9	
129-00-0	Pyrene	~~U~~ UJ	11	1.0	10	11	2.2	CCH
56-55-3	Benzo(a)anthracene	U	11	1.0	10	11	2.0	
205-99-2	Benzo(b)fluoranthene	U	11	1.0	10	11	2.6	
207-08-9	Benzo(k)fluoranthene	~~U~~ UJ	11	1.0	10	11	3.3	CCH
50-32-8	Benzo(a)pyrene	U	11	1.0	10	11	3.5	
193-39-5	Indeno(1,2,3-cd)pyrene	U	11	1.0	10	11	2.0	
53-70-3	Dibenzo(a,h)anthracene	J	5.6	1.0	10	11	1.9	
191-24-2	Benzo(g,h,i)perylene	U	11	1.0	10	11	2.1	
118-74-1	Hexachlorobenzene	~~U~~ UJ	11	1.0	10	11	1.9	CCH
87-68-3	Hexachlorobutadiene	~~U~~ ↓	11	1.0	10	11	2.4	↓
77-47-4	Hexachlorocyclopentadiene	~~U~~ ↓	11	1.0	10	11	1.6	↓
7297-45-2	2-Methylnaphthalene-D10		73%					
367-12-4	2,4-Dibromophenol		117%					
81103-79-9	Fluorene-d10		67%					
1718-51-1	Pyrene-D10		92%					

lcw
2/1/09

8

KATAHDIN ANALYTICAL SERVICES
Report of Analytical Results

Client: CH2MHill
Project: TO-009 Lejeune
PO No:
Sample Date: 11/19/08
Received Date: 11/21/08
Extraction Date: 11/24/08
Analysis Date: 14-DEC-2008 23:24
Report Date: 12/16/2008
Matrix: SOIL
% Solids: 84.8

Lab ID: SB6749-2
Client ID: MR08-SS388-08D
SDG: TO9-6
Extracted by: AC
Extraction Method: SW846 3550
Analyst: JLP
Analysis Method: SW846 M8270C
Lab Prep Batch: WG58445
Units: ug/Kgdrywt

CAS#	Compound	Flags	Results	DF	PQL	Adj.PQL	Adj.MDL	
91-20-3	Naphthalene	U	12	1.0	10	12	3.1	
91-57-6	2-Methylnaphthalene	~~U~~ UJ	12	1.0	10	12	2.6	BSL
86-73-7	Fluorene	U	12	1.0	10	12	3.8	
85-01-8	Phenanthrene		90	1.0	10	12	2.1	
206-44-0	Fluoranthene	~~E~~ 550	~~440~~	1.0	10	12	2.1	R DL
129-00-0	Pyrene	~~E~~ 390	~~360~~	1.0	10	12	2.5	R DL
56-55-3	Benzo(a)anthracene		170	1.0	10	12	2.2	
205-99-2	Benzo(b)fluoranthene	~~E~~ 320J	~~430~~ CCH	1.0	10	12	2.8	R DL
207-08-9	Benzo(k)fluoranthene	J	110	1.0	10	12	3.6	CCH
50-32-8	Benzo(a)pyrene		180	1.0	10	12	3.9	
193-39-5	Indeno(1,2,3-cd)pyrene		210	1.0	10	12	2.2	
53-70-3	Dibenzo(a,h)anthracene		61	1.0	10	12	2.1	
191-24-2	Benzo(g,h,i)perylene		190	1.0	10	12	2.4	
118-74-1	Hexachlorobenzene	~~U~~ UJ	12	1.0	10	12	2.1	CCH
87-68-3	Hexachlorobutadiene	U	12	1.0	10	12	2.7	
77-47-4	Hexachlorocyclopentadiene	~~U~~ UJ	12	1.0	10	12	1.8	CCH
7297-45-2	2-Methylnaphthalene-D10		64%					
367-12-4	2,4-Dibromophenol		124%					
81103-79-9	Fluorene-d10		60%					
1718-51-1	Pyrene-D10		78%					

lw 2/1/09

8DL

KATAHDIN ANALYTICAL SERVICES
Report of Analytical Results

Client: CH2MHill
Project: TO-009 Lejeune
PO No:
Sample Date: 11/19/08
Received Date: 11/21/08
Extraction Date: 11/24/08
Analysis Date: 15-DEC-2008 14:28
Report Date: 12/16/2008
Matrix: SOIL
% Solids: 84.8

Lab ID: SB6749-2DL
Client ID: MR08-SS388-08D
SDG: TO9-6
Extracted by: AC
Extraction Method: SW846 3550
Analyst: JLP
Analysis Method: SW846 M8270C
Lab Prep Batch: WG58445
Units: ug/Kgdrywt

Use original

CAS#	Compound	Flags	Results	DF	PQL	Adj.PQL	Adj.MDL	
91-20-3	Naphthalene	U	59	5.0	10	59	15	
91-57-6	2-Methylnaphthalene	~~U~~ UJ	59	5.0	10	59	13	CCH
86-73-7	Fluorene	U	59	5.0	10	59	19	
85-01-8	Phenanthrene	J	78	5.0	10	59	11	CCH
206-44-0	Fluoranthene		550	5.0	10	59	11	
129-00-0	Pyrene		390	5.0	10	59	12	
56-55-3	Benzo(a)anthracene		130	5.0	10	59	11	
205-99-2	Benzo(b)fluoranthene	J	320	5.0	10	59	14	CCH
207-08-9	Benzo(k)fluoranthene		250	5.0	10	59	18	
50-32-8	Benzo(a)pyrene		230	5.0	10	59	19	
193-39-5	Indeno(1,2,3-cd)pyrene		250	5.0	10	59	11	
53-70-3	Dibenzo(a,h)anthracene		88	5.0	10	59	11	
191-24-2	Benzo(g,h,i)perylene		250	5.0	10	59	12	
118-74-1	Hexachlorobenzene	U	59	5.0	10	59	11	
87-68-3	Hexachlorobutadiene	U	59	5.0	10	59	14	
77-47-4	Hexachlorocyclopentadiene	~~U~~ UJ	59	5.0	10	59	8.8	CCH
7297-45-2	2-Methylnaphthalene-D10		74%					
367-12-4	2,4-Dibromophenol		95%					
81103-79-9	Fluorene-d10		68%					
1718-51-1	Pyrene-D10		80%					

WW 2/1/09

9

KATAHDIN ANALYTICAL SERVICES
Report of Analytical Results

Client: CH2MHill
Project: TO-009 Lejeune
PO No:
Sample Date: 11/19/08
Received Date: 11/21/08
Extraction Date: 11/24/08
Analysis Date: 15-DEC-2008 12:24
Report Date: 12/16/2008
Matrix: SOIL
% Solids: 92.0

Lab ID: SB6749-4RA
Client ID: MR08-IS388-08D
SDG: TO9-6
Extracted by: AC
Extraction Method: SW846 3550
Analyst: JLP
Analysis Method: SW846 M8270C
Lab Prep Batch: WG58445
Units: ug/Kgdrywt

CAS#	Compound	Flags	Results	DF	PQL	Adj.PQL	Adj.MDL	
91-20-3	Naphthalene	U	11	1.0	10	11	2.8	
91-57-6	2-Methylnaphthalene	~~U~~ UJ	11	1.0	10	11	2.4	CCH
86-73-7	Fluorene	U	11	1.0	10	11	3.5	
85-01-8	Phenanthrene	~~U~~ UJ	11	1.0	10	11	2.0	CCH
206-44-0	Fluoranthene	J	2.2	1.0	10	11	2.0	
129-00-0	Pyrene	U	11	1.0	10	11	2.3	
56-55-3	Benzo(a)anthracene	U	11	1.0	10	11	2.1	
205-99-2	Benzo(b)fluoranthene	~~U~~ UJ	11	1.0	10	11	2.6	CCH
207-08-9	Benzo(k)fluoranthene	U	11	1.0	10	11	3.4	
50-32-8	Benzo(a)pyrene	U	11	1.0	10	11	3.6	
193-39-5	Indeno(1,2,3-cd)pyrene	U	11	1.0	10	11	2.1	
53-70-3	Dibenzo(a,h)anthracene	U	11	1.0	10	11	2.0	
191-24-2	Benzo(g,h,i)perylene	U	11	1.0	10	11	2.2	
118-74-1	Hexachlorobenzene	U	11	1.0	10	11	2.0	
87-68-3	Hexachlorobutadiene	U	11	1.0	10	11	2.5	
77-47-4	Hexachlorocyclopentadiene	~~U~~ UJ	11	1.0	10	11	1.6	CCH
7297-45-2	2-Methylnaphthalene-D10		61%					
367-12-4	2,4-Dibromophenol		84%					
81103-79-9	Fluorene-d10		56%					
1718-51-1	Pyrene-D10		67%					

lw
2/11/09

10

KATAHDIN ANALYTICAL SERVICES
Report of Analytical Results

Client: CH2MHill
Project: TO-009 Lejeune
PO No:
Sample Date: 11/19/08
Received Date: 11/21/08
Extraction Date: 11/24/08
Analysis Date: 15-DEC-2008 00:05
Report Date: 12/16/2008
Matrix: SOIL
% Solids: 91.5

Lab ID: SB6749-6
Client ID: MR08-SS389-08D
SDG: TO9-6
Extracted by: AC
Extraction Method: SW846 3550
Analyst: JLP
Analysis Method: SW846 M8270C
Lab Prep Batch: WG58445
Units: ug/Kgdrywt

CAS#	Compound	Flags	Results	DF	PQL	Adj.PQL	Adj.MDL	
91-20-3	Naphthalene	U	11	1.0	10	11	2.8	
91-57-6	2-Methylnaphthalene	~~U~~ UJ	11	1.0	10	11	2.4	BSL
86-73-7	Fluorene	U	11	1.0	10	11	3.5	
85-01-8	Phenanthrene	J	140	1.0	10	11	2.0	MSL
206-44-0	Fluoranthene	~~E~~ 560	~~390~~	1.0	10	11	2.0	R DL
129-00-0	Pyrene	~~E~~ 500	~~490~~	1.0	10	11	2.3	R DL
56-55-3	Benzo(a)anthracene	J	130	1.0	10	11	2.1	MSL
205-99-2	Benzo(b)fluoranthene	J	110	1.0	10	11	2.6	CCH
207-08-9	Benzo(k)fluoranthene	J	99	1.0	10	11	3.4	CCH
50-32-8	Benzo(a)pyrene	J	66	1.0	10	11	3.6	MSL
193-39-5	Indeno(1,2,3-cd)pyrene	J	55	1.0	10	11	2.1	MSL
53-70-3	Dibenzo(a,h)anthracene	U	11	1.0	10	11	2.0	
191-24-2	Benzo(g,h,i)perylene		48	1.0	10	11	2.2	
118-74-1	Hexachlorobenzene	~~U~~ UJ	11	1.0	10	11	2.0	CCH
87-68-3	Hexachlorobutadiene	U	11	1.0	10	11	2.5	
77-47-4	Hexachlorocyclopentadiene	~~U~~ UJ	11	1.0	10	11	1.6	CCH
7297-45-2	2-Methylnaphthalene-D10		62%					
367-12-4	2,4-Dibromophenol		91%					
81103-79-9	Fluorene-d10		58%					
1718-51-1	Pyrene-D10		73%					

RW

10 DL

KATAHDIN ANALYTICAL SERVICES
Report of Analytical Results

Client: CH2MHill
Project: TO-009 Lejeune
PO No:
Sample Date: 11/19/08
Received Date: 11/21/08
Extraction Date: 11/24/08
Analysis Date: 15-DEC-2008 15:10
Report Date: 12/16/2008
Matrix: SOIL
% Solids: 91.5

Lab ID: SB6749-6DL
Client ID: MR08-SS389-08D
SDG: TO9-6
Extracted by: AC
Extraction Method: SW846 3550
Analyst: JLP
Analysis Method: SW846 M8270C
Lab Prep Batch: WG58445
Units: ug/Kgdrywt

Use original

CAS#	Compound	Flags	Results	DF	PQL	Adj.PQL	Adj.MDL	
91-20-3	Naphthalene	U	55	5.0	10	55	14	
91-57-6	2-Methylnaphthalene	~~U~~ UJ	55	5.0	10	55	12	CCH
86-73-7	Fluorene	U	55	5.0	10	55	17	
85-01-8	Phenanthrene	J	110	5.0	10	55	9.8	CCH
206-44-0	Fluoranthene		560	5.0	10	55	9.8	
129-00-0	Pyrene		500	5.0	10	55	11	
56-55-3	Benzo(a)anthracene		110	5.0	10	55	10	
205-99-2	Benzo(b)fluoranthene	J	100	5.0	10	55	13	CCH
207-08-9	Benzo(k)fluoranthene		120	5.0	10	55	17	
50-32-8	Benzo(a)pyrene		83	5.0	10	55	18	
193-39-5	Indeno(1,2,3-cd)pyrene		77	5.0	10	55	10	
53-70-3	Dibenzo(a,h)anthracene	U	55	5.0	10	55	9.8	
191-24-2	Benzo(g,h,i)perylene		84	5.0	10	55	11	
118-74-1	Hexachlorobenzene	U	55	5.0	10	55	9.8	
87-68-3	Hexachlorobutadiene	U	55	5.0	10	55	12	
77-47-4	Hexachlorocyclopentadiene	~~U~~ UJ	55	5.0	10	55	8.2	CCH
7297-45-2	2-Methylnaphthalene-D10		71%					
367-12-4	2,4-Dibromophenol		65%					
81103-79-9	Fluorene-d10		68%					
1718-51-1	Pyrene-D10		71%					

CCH 2/1/09

11

KATAHDIN ANALYTICAL SERVICES
Report of Analytical Results

Client: CH2MHill
Project: TO-009 Lejeune
PO No:
Sample Date: 11/19/08
Received Date: 11/21/08
Extraction Date: 11/24/08
Analysis Date: 14-DEC-2008 17:14
Report Date: 12/16/2008
Matrix: SOIL
% Solids: 91.8

Lab ID: SB6749-8
Client ID: MR08-IS389-08D
SDG: TO9-6
Extracted by: AC
Extraction Method: SW846 3550
Analyst: JLP
Analysis Method: SW846 M8270C
Lab Prep Batch: WG58445
Units: ug/Kgdrywt

CAS#	Compound	Flags	Results	DF	PQL	Adj.PQL	Adj.MDL	
91-20-3	Naphthalene	U	11	1.0	10	11	2.8	
91-57-6	2-Methylnaphthalene	~~U~~ UJ	11	1.0	10	11	2.4	BSL
86-73-7	Fluorene	U	11	1.0	10	11	3.5	
85-01-8	Phenanthrene	U	11	1.0	10	11	2.0	
206-44-0	Fluoranthene	J	3.5	1.0	10	11	2.0	
129-00-0	Pyrene	~~U~~ J	3.5	1.0	10	11	2.3	CCH
56-55-3	Benzo(a)anthracene	U	11	1.0	10	11	2.1	
205-99-2	Benzo(b)fluoranthene	~~U~~ UJ	11	1.0	10	11	2.6	CCH
207-08-9	Benzo(k)fluoranthene	~~U~~ UJ	11	1.0	10	11	3.4	CCH
50-32-8	Benzo(a)pyrene	U	11	1.0	10	11	3.6	
193-39-5	Indeno(1,2,3-cd)pyrene	U	11	1.0	10	11	2.1	
53-70-3	Dibenzo(a,h)anthracene	U	11	1.0	10	11	2.0	
191-24-2	Benzo(g,h,i)perylene	U	11	1.0	10	11	2.2	
118-74-1	Hexachlorobenzene	~~U~~ UJ	11	1.0	10	11	2.0	CCH
87-68-3	Hexachlorobutadiene	U	11	1.0	10	11	2.5	
77-47-4	Hexachlorocyclopentadiene	~~U~~ UJ	11	1.0	10	11	1.6	CCH
7297-45-2	2-Methylnaphthalene-D10		63%					
367-12-4	2,4-Dibromophenol		101%					
81103-79-9	Fluorene-d10		57%					
1718-51-1	Pyrene-D10		91%					

lw 2/1/09

12

KATAHDIN ANALYTICAL SERVICES
Report of Analytical Results

Client: CH2MHill
Project: TO-009 Lejeune
PO No:
Sample Date: 11/19/08
Received Date: 11/21/08
Extraction Date: 11/24/08
Analysis Date: 14-DEC-2008 17:55
Report Date: 12/16/2008
Matrix: SOIL
% Solids: 92.1

Lab ID: SB6749-10
Client ID: MR08-IS389D-08D
SDG: TO9-6
Extracted by: AC
Extraction Method: SW846 3550
Analyst: JLP
Analysis Method: SW846 M8270C
Lab Prep Batch: WG58445
Units: ug/Kgdrywt

CAS#	Compound	Flags	Results	DF	PQL	Adj.PQL	Adj.MDL	
91-20-3	Naphthalene	U	11	1.0	10	11	2.8	
91-57-6	2-Methylnaphthalene	~~U~~ UJ	11	1.0	10	11	2.4	BSL
86-73-7	Fluorene	U	11	1.0	10	11	3.5	
85-01-8	Phenanthrene	U	11	1.0	10	11	2.0	
206-44-0	Fluoranthene	J	3.8	1.0	10	11	2.0	
129-00-0	Pyrene	~~J~~ J	4.3	1.0	10	11	2.3	CCH
56-55-3	Benzo(a)anthracene	U	11	1.0	10	11	2.1	
205-99-2	Benzo(b)fluoranthene	~~U~~ UJ	11	1.0	10	11	2.6	CCH
207-08-9	Benzo(k)fluoranthene	~~U~~ UJ	11	1.0	10	11	3.4	CCH
50-32-8	Benzo(a)pyrene	U	11	1.0	10	11	3.6	
193-39-5	Indeno(1,2,3-cd)pyrene	U	11	1.0	10	11	2.1	
53-70-3	Dibenzo(a,h)anthracene	U	11	1.0	10	11	2.0	
191-24-2	Benzo(g,h,i)perylene	U	11	1.0	10	11	2.2	
118-74-1	Hexachlorobenzene	~~U~~ UJ	11	1.0	10	11	2.0	CCH
87-68-3	Hexachlorobutadiene	U	11	1.0	10	11	2.5	
77-47-4	Hexachlorocyclopentadiene	~~U~~ UJ	11	1.0	10	11	1.6	CCH
7297-45-2	2-Methylnaphthalene-D10		68%					
367-12-4	2,4-Dibromophenol		110%					
81103-79-9	Fluorene-d10		59%					
1718-51-1	Pyrene-D10		94%					

MW 2/11/09

13

KATAHDIN ANALYTICAL SERVICES
Report of Analytical Results

Client: CH2MHill
Project: TO-009 Lejeune
PO No:
Sample Date: 11/19/08
Received Date: 11/21/08
Extraction Date: 11/24/08
Analysis Date: 15-DEC-2008 00:47
Report Date: 12/16/2008
Matrix: SOIL
% Solids: 91.7

Lab ID: SB6749-12
Client ID: MR08-SS394-08D
SDG: TO9-6
Extracted by: AC
Extraction Method: SW846 3550
Analyst: JLP
Analysis Method: SW846 M8270C
Lab Prep Batch: WG58445
Units: ug/Kgdrywt

CAS#	Compound	Flags	Results	DF	PQL	Adj.PQL	Adj.MDL	
91-20-3	Naphthalene	U	11	1.0	10	11	2.8	
91-57-6	2-Methylnaphthalene	~~U~~ UJ	11	1.0	10	11	2.4	BSL
86-73-7	Fluorene	U	11	1.0	10	11	3.5	
85-01-8	Phenanthrene	J	7.5	1.0	10	11	2.0	
206-44-0	Fluoranthene		120	1.0	10	11	2.0	
129-00-0	Pyrene	J	250	1.0	10	11	2.3	CCH
56-55-3	Benzo(a)anthracene		46	1.0	10	11	2.1	
205-99-2	Benzo(b)fluoranthene	~~U~~ UJ	11	1.0	10	11	2.6	CCH
207-08-9	Benzo(k)fluoranthene	~~U~~ UJ	11	1.0	10	11	3.4	CCH
50-32-8	Benzo(a)pyrene		22	1.0	10	11	3.6	
193-39-5	Indeno(1,2,3-cd)pyrene	U	11	1.0	10	11	2.1	
53-70-3	Dibenzo(a,h)anthracene	U	11	1.0	10	11	2.0	
191-24-2	Benzo(g,h,i)perylene	U	11	1.0	10	11	2.2	
118-74-1	Hexachlorobenzene	~~U~~ UJ	11	1.0	10	11	2.0	CCH
87-68-3	Hexachlorobutadiene	U	11	1.0	10	11	2.5	
77-47-4	Hexachlorocyclopentadiene	~~U~~ UJ	11	1.0	10	11	1.6	CCH
7297-45-2	2-Methylnaphthalene-D10		64%					
367-12-4	2,4-Dibromophenol		118%					
81103-79-9	Fluorene-d10		61%					
1718-51-1	Pyrene-D10		81%					

DWJ 2/1/09

14

KATAHDIN ANALYTICAL SERVICES
Report of Analytical Results

Client: CH2MHill
Project: TO-009 Lejeune
PO No:
Sample Date: 11/19/08
Received Date: 11/21/08
Extraction Date: 11/24/08
Analysis Date: 14-DEC-2008 19:17
Report Date: 12/16/2008
Matrix: SOIL
% Solids: 93.1

Lab ID: SB6749-14
Client ID: MR08-IS394-08D
SDG: TO9-6
Extracted by: AC
Extraction Method: SW846 3550
Analyst: JLP
Analysis Method: SW846 M8270C
Lab Prep Batch: WG58445
Units: ug/Kgdrywt

CAS#	Compound	Flags	Results	DF	PQL	Adj.PQL	Adj.MDL	
91-20-3	Naphthalene	U	11	1.0	10	11	2.8	
91-57-6	2-Methylnaphthalene	~~U~~ UJ	11	1.0	10	11	2.4	BSL
86-73-7	Fluorene	U	11	1.0	10	11	3.4	
85-01-8	Phenanthrene	U	11	1.0	10	11	1.9	
206-44-0	Fluoranthene	U	11	1.0	10	11	1.9	
129-00-0	Pyrene	~~U~~ UJ	11	1.0	10	11	2.2	CCH
56-55-3	Benzo(a)anthracene	U	11	1.0	10	11	2.0	
205-99-2	Benzo(b)fluoranthene	~~U~~ UJ	11	1.0	10	11	2.6	CCH
207-08-9	Benzo(k)fluoranthene	~~U~~ UJ	11	1.0	10	11	3.3	CCH
50-32-8	Benzo(a)pyrene	U	11	1.0	10	11	3.5	
193-39-5	Indeno(1,2,3-cd)pyrene	U	11	1.0	10	11	2.0	
53-70-3	Dibenzo(a,h)anthracene	U	11	1.0	10	11	1.9	
191-24-2	Benzo(g,h,i)perylene	U	11	1.0	10	11	2.1	
118-74-1	Hexachlorobenzene	~~U~~ UJ	11	1.0	10	11	1.9	CCH
87-68-3	Hexachlorobutadiene	U	11	1.0	10	11	2.5	
77-47-4	Hexachlorocyclopentadiene	~~U~~ UJ	11	1.0	10	11	1.6	CCH
7297-45-2	2-Methylnaphthalene-D10		69%					
367-12-4	2,4-Dibromophenol		111%					
81103-79-9	Fluorene-d10		63%					
1718-51-1	Pyrene-D10		96%					

lcw 2/1/09

KATAHDIN ANALYTICAL SERVICES
Report of Analytical Results

Client: CH2MHill
Project: TO-009 Lejeune
PO No:
Sample Date: 11/19/08
Received Date: 11/21/08
Extraction Date: 11/24/08
Analysis Date: 15-DEC-2008 13:05
Report Date: 12/16/2008
Matrix: SOIL
% Solids: 90.6

Lab ID: SB6749-16RA
Client ID: MR08-IS396-08D
SDG: TO9-6
Extracted by: AC
Extraction Method: SW846 3550
Analyst: JLP
Analysis Method: SW846 M8270C
Lab Prep Batch: WG58445
Units: ug/Kgdrywt

CAS#	Compound	Flags	Results	DF	PQL	Adj.PQL	Adj.MDL	
91-20-3	Naphthalene	U	11	1.0	10	11	2.9	
91-57-6	2-Methylnaphthalene	~~U~~ UJ	11	1.0	10	11	2.4	CCH
86-73-7	Fluorene	U	11	1.0	10	11	3.5	
85-01-8	Phenanthrene	~~U~~ UJ	11	1.0	10	11	2.0	CCH
206-44-0	Fluoranthene	J	2.4	1.0	10	11	2.0	
129-00-0	Pyrene	U	11	1.0	10	11	2.3	
56-55-3	Benzo(a)anthracene	U	11	1.0	10	11	2.1	
205-99-2	Benzo(b)fluoranthene	~~U~~ UJ	11	1.0	10	11	2.6	CCH
207-08-9	Benzo(k)fluoranthene	U	11	1.0	10	11	3.4	
50-32-8	Benzo(a)pyrene	U	11	1.0	10	11	3.6	
193-39-5	Indeno(1,2,3-cd)pyrene	U	11	1.0	10	11	2.1	
53-70-3	Dibenzo(a,h)anthracene	U	11	1.0	10	11	2.0	
191-24-2	Benzo(g,h,i)perylene	U	11	1.0	10	11	2.2	
118-74-1	Hexachlorobenzene	U	11	1.0	10	11	2.0	
87-68-3	Hexachlorobutadiene	U	11	1.0	10	11	2.5	
77-47-4	Hexachlorocyclopentadiene	~~U~~ UJ	11	1.0	10	11	1.6	CCH
7297-45-2	2-Methylnaphthalene-D10		60%					
367-12-4	2,4-Dibromophenol		83%					
81103-79-9	Fluorene-d10		56%					
1718-51-1	Pyrene-D10		67%					

lw 2/1/09

16

KATAHDIN ANALYTICAL SERVICES
Report of Analytical Results

Client: CH2MHill
Project: TO-009 Lejeune
PO No:
Sample Date: 11/19/08
Received Date: 11/21/08
Extraction Date: 11/24/08
Analysis Date: 14-DEC-2008 20:39
Report Date: 12/16/2008
Matrix: SOIL
% Solids: 86.4

Lab ID: SB6749-18
Client ID: MR08-SS395-08D
SDG: TO9-6
Extracted by: AC
Extraction Method: SW846 3550
Analyst: JLP
Analysis Method: SW846 M8270C
Lab Prep Batch: WG58445
Units: ug/Kgdrywt

CAS#	Compound	Flags	Results	DF	PQL	Adj.PQL	Adj.MDL	
91-20-3	Naphthalene	U	12	1.0	10	12	3.0	
91-57-6	2-Methylnaphthalene	~~U~~ UJ	12	1.0	10	12	2.5	BSL
86-73-7	Fluorene	U	12	1.0	10	12	3.7	
85-01-8	Phenanthrene		95	1.0	10	12	2.1	
206-44-0	Fluoranthene	~~E~~ 550	~~480~~	1.0	10	12	2.1	R DL
129-00-0	Pyrene	~~E~~ 370	~~360~~	1.0	10	12	2.4	R DL
56-55-3	Benzo(a)anthracene		170	1.0	10	12	2.2	
205-99-2	Benzo(b)fluoranthene	~~E~~ 240J	~~320~~ CLH	1.0	10	12	2.8	R DL
207-08-9	Benzo(k)fluoranthene	J	230	1.0	10	12	3.6	CLH
50-32-8	Benzo(a)pyrene		160	1.0	10	12	3.8	
193-39-5	Indeno(1,2,3-cd)pyrene		210	1.0	10	12	2.2	
53-70-3	Dibenzo(a,h)anthracene		57	1.0	10	12	2.1	
191-24-2	Benzo(g,h,i)perylene		190	1.0	10	12	2.3	
118-74-1	Hexachlorobenzene	~~U~~ UJ	12	1.0	10	12	2.1	CLH
87-68-3	Hexachlorobutadiene	U	12	1.0	10	12	2.7	
77-47-4	Hexachlorocyclopentadiene	~~U~~ UJ	12	1.0	10	12	1.7	CLH
7297-45-2	2-Methylnaphthalene-D10		79%					
367-12-4	2,4-Dibromophenol		124%					
81103-79-9	Fluorene-d10		66%					
1718-51-1	Pyrene-D10		92%					

lw 2/1/09

16DL

KATAHDIN ANALYTICAL SERVICES
Report of Analytical Results

Client: CH2MHill
Project: TO-009 Lejeune
PO No:
Sample Date: 11/19/08
Received Date: 11/21/08
Extraction Date: 11/24/08
Analysis Date: 15-DEC-2008 15:51
Report Date: 12/16/2008
Matrix: SOIL
% Solids: 86.4

Lab ID: SB6749-18DL
Client ID: MR08-SS395-08D
SDG: TO9-6
Extracted by: AC
Extraction Method: SW846 3550
Analyst: JLP
Analysis Method: SW846 M8270C
Lab Prep Batch: WG58445
Units: ug/Kgdrywt

use original

CAS#	Compound	Flags	Results	DF	PQL	Adj.PQL	Adj.MDL	
91-20-3	Naphthalene	U	23	2.0	10	23	6.0	
91-57-6	2-Methylnaphthalene	~~U~~ UJ	23	2.0	10	23	5.1	CCH
86-73-7	Fluorene	U	23	2.0	10	23	7.4	
85-01-8	Phenanthrene	J	78	2.0	10	23	4.2	CCH
206-44-0	Fluoranthene		550	2.0	10	23	4.2	
129-00-0	Pyrene		370	2.0	10	23	4.8	
56-55-3	Benzo(a)anthracene		150	2.0	10	23	4.4	
205-99-2	Benzo(b)fluoranthene	J	240	2.0	10	23	5.6	CCH
207-08-9	Benzo(k)fluoranthene		270	2.0	10	23	7.2	
50-32-8	Benzo(a)pyrene		170	2.0	10	23	7.6	
193-39-5	Indeno(1,2,3-cd)pyrene		230	2.0	10	23	4.4	
53-70-3	Dibenzo(a,h)anthracene		90	2.0	10	23	4.2	
191-24-2	Benzo(g,h,i)perylene		210	2.0	10	23	4.6	
118-74-1	Hexachlorobenzene	~~U~~	23	2.0	10	23	4.2	
87-68-3	Hexachlorobutadiene	U	23	2.0	10	23	5.3	
77-47-4	Hexachlorocyclopentadiene	~~U~~ UJ	23	2.0	10	23	3.5	CCH
7297-45-2	2-Methylnaphthalene-D10		79%					
367-12-4	2,4-Dibromophenol		107%					
81103-79-9	Fluorene-d10		77%					
1718-51-1	Pyrene-D10		78%					

lw 2/11/09

KATAHDIN ANALYTICAL SERVICES
Report of Analytical Results

Client: CH2MHill
Project: TO-009 Lejeune
PO No:
Sample Date: 11/19/08
Received Date: 11/21/08
Extraction Date: 11/24/08
Analysis Date: 14-DEC-2008 21:20
Report Date: 12/16/2008
Matrix: SOIL
% Solids: 85.4

Lab ID: SB6749-20
Client ID: MR08-SS395D-08D
SDG: TO9-6
Extracted by: AC
Extraction Method: SW846 3550
Analyst: JLP
Analysis Method: SW846 M8270C
Lab Prep Batch: WG58445
Units: ug/Kgdrywt

CAS#	Compound	Flags	Results	DF	PQL	Adj.PQL	Adj.MDL	
91-20-3	Naphthalene	U	12	1.0	10	12	3.0	
91-57-6	2-Methylnaphthalene	~~U~~ UJ	12	1.0	10	12	2.6	BSL
86-73-7	Fluorene	U	12	1.0	10	12	3.7	
85-01-8	Phenanthrene		58	1.0	10	12	2.1	
206-44-0	Fluoranthene	~~E~~ 350	~~310~~	1.0	10	12	2.1	R PL
129-00-0	Pyrene	J	240	1.0	10	12	2.4	CCH
56-55-3	Benzo(a)anthracene		110	1.0	10	12	2.2	
205-99-2	Benzo(b)fluoranthene	J	190	1.0	10	12	2.8	CCH
207-08-9	Benzo(k)fluoranthene	J	150	1.0	10	12	3.6	CCH
50-32-8	Benzo(a)pyrene		130	1.0	10	12	3.9	
193-39-5	Indeno(1,2,3-cd)pyrene		140	1.0	10	12	2.2	
53-70-3	Dibenzo(a,h)anthracene		40	1.0	10	12	2.1	
191-24-2	Benzo(g,h,i)perylene		130	1.0	10	12	2.3	
118-74-1	Hexachlorobenzene	~~U~~ UJ	12	1.0	10	12	2.1	CCH
87-68-3	Hexachlorobutadiene	U	12	1.0	10	12	2.7	
77-47-4	Hexachlorocyclopentadiene	~~U~~ UJ	12	1.0	10	12	1.8	CCH
7297-45-2	2-Methylnaphthalene-D10		68%					
367-12-4	2,4-Dibromophenol		118%					
81103-79-9	Fluorene-d10		57%					
1718-51-1	Pyrene-D10		82%					

lwd 21.09

170L

KATAHDIN ANALYTICAL SERVICES
Report of Analytical Results

Client: CH2MHill
Project: TO-009 Lejeune
PO No:
Sample Date: 11/19/08
Received Date: 11/21/08
Extraction Date: 11/24/08
Analysis Date: 15-DEC-2008 16:33
Report Date: 12/16/2008
Matrix: SOIL
% Solids: 85.4

Lab ID: SB6749-20DL
Client ID: MR08-SS395D-08D
SDG: TO9-6
Extracted by: AC
Extraction Method: SW846 3550
Analyst: JLP
Analysis Method: SW846 M8270C
Lab Prep Batch: WG58445
Units: ug/Kgdrywt

Use original

CAS#	Compound	Flags	Results	DF	PQL	Adj.PQL	Adj.MDL	
91-20-3	Naphthalene	U	23	2.0	10	23	6.1	
91-57-6	2-Methylnaphthalene	~~U~~ UJ	23	2.0	10	23	5.2	CCU
86-73-7	Fluorene	U	23	2.0	10	23	7.5	
85-01-8	Phenanthrene	J	51	2.0	10	23	4.2	CCU
206-44-0	Fluoranthene		350	2.0	10	23	4.2	
129-00-0	Pyrene		240	2.0	10	23	4.9	
56-55-3	Benzo(a)anthracene		88	2.0	10	23	4.4	
205-99-2	Benzo(b)fluoranthene	J	140	2.0	10	23	5.6	CCU
207-08-9	Benzo(k)fluoranthene		200	2.0	10	23	7.3	
50-32-8	Benzo(a)pyrene		150	2.0	10	23	7.7	
193-39-5	Indeno(1,2,3-cd)pyrene		140	2.0	10	23	4.4	
53-70-3	Dibenzo(a,h)anthracene		64	2.0	10	23	4.2	
191-24-2	Benzo(g,h,i)perylene		140	2.0	10	23	4.7	
118-74-1	Hexachlorobenzene	U	23	2.0	10	23	4.2	
87-68-3	Hexachlorobutadiene	U	23	2.0	10	23	5.4	
77-47-4	Hexachlorocyclopentadiene	~~U~~ UJ	23	2.0	10	23	3.5	CCU
7297-45-2	2-Methylnaphthalene-D10		73%					
367-12-4	2,4-Dibromophenol		97%					
81103-79-9	Fluorene-d10		64%					
1718-51-1	Pyrene-D10		74%					

lw 2/1/09

KATAHDIN ANALYTICAL SERVICES
Report of Analytical Results

Client: CH2MHill
Project: TO-009 Lejeune
PO No:
Sample Date: 11/19/08
Received Date: 11/21/08
Extraction Date: 11/24/08
Analysis Date: 14-DEC-2008 19:58
Report Date: 12/16/2008
Matrix: SOIL
% Solids: 84.8

Lab ID: SB6749-22
Client ID: MR08-SS393-08D
SDG: TO9-6
Extracted by: AC
Extraction Method: SW846 3550
Analyst: JLP
Analysis Method: SW846 M8270C
Lab Prep Batch: WG58445
Units: ug/Kgdrywt

CAS#	Compound	Flags	Results	DF	PQL	Adj.PQL	Adj.MDL	
91-20-3	Naphthalene	U	12	1.0	10	12	3.1	
91-57-6	2-Methylnaphthalene	~~U~~ UJ	12	1.0	10	12	2.6	BSL
86-73-7	Fluorene	U	12	1.0	10	12	3.8	
85-01-8	Phenanthrene		36	1.0	10	12	2.1	
206-44-0	Fluoranthene		160	1.0	10	12	2.1	
129-00-0	Pyrene	J	130	1.0	10	12	2.5	CCH
56-55-3	Benzo(a)anthracene		52	1.0	10	12	2.2	
205-99-2	Benzo(b)fluoranthene	J	95	1.0	10	12	2.8	CCH
207-08-9	Benzo(k)fluoranthene	J	73	1.0	10	12	3.6	CCH
50-32-8	Benzo(a)pyrene		70	1.0	10	12	3.9	
193-39-5	Indeno(1,2,3-cd)pyrene		65	1.0	10	12	2.2	
53-70-3	Dibenzo(a,h)anthracene		22	1.0	10	12	2.1	
191-24-2	Benzo(g,h,i)perylene		63	1.0	10	12	2.4	
118-74-1	Hexachlorobenzene	~~U~~ UJ	12	1.0	10	12	2.1	CCH
87-68-3	Hexachlorobutadiene	U	12	1.0	10	12	2.7	
77-47-4	Hexachlorocyclopentadiene	~~U~~ UJ	12	1.0	10	12	1.8	CCH
7297-45-2	2-Methylnaphthalene-D10		73%					
367-12-4	2,4-Dibromophenol		129%					
81103-79-9	Fluorene-d10		65%					
1718-51-1	Pyrene-D10		94%					

MW 2/1/09

19

KATAHDIN ANALYTICAL SERVICES
Report of Analytical Results

Client: CH2MHill
Project: TO-009 Lejeune
PO No:
Sample Date: 11/19/08
Received Date: 11/21/08
Extraction Date: 11/24/08
Analysis Date: 15-DEC-2008 13:47
Report Date: 12/17/2008
Matrix: SOIL
% Solids: 83.5

Lab ID: SB6749-24RA
Client ID: MR08-SS392-08D
SDG: TO9-6
Extracted by: AC
Extraction Method: SW846 3550
Analyst: JLP
Analysis Method: SW846 M8270C
Lab Prep Batch: WG58445
Units: ug/Kgdrywt

CAS#	Compound	Flags	Results	DF	PQL	Adj.PQL	Adj.MDL	
91-20-3	Naphthalene	U	12	1.0	10	12	3	
91-57-6	2-Methylnaphthalene	~~U~~ UJ	12	1.0	10	12	3	CCH
86-73-7	Fluorene	U	12	1.0	10	12	4	
85-01-8	Phenanthrene	J	48	1.0	10	12	2	CCH
206-44-0	Fluoranthene		230	1.0	10	12	2	
129-00-0	Pyrene		160	1.0	10	12	2	
56-55-3	Benzo(a)anthracene		73	1.0	10	12	2	
205-99-2	Benzo(b)fluoranthene	J	140	1.0	10	12	3	CCH
207-08-9	Benzo(k)fluoranthene		110	1.0	10	12	4	
50-32-8	Benzo(a)pyrene		100	1.0	10	12	4	
193-39-5	Indeno(1,2,3-cd)pyrene		100	1.0	10	12	2	
53-70-3	Dibenzo(a,h)anthracene		34	1.0	10	12	2	
191-24-2	Benzo(g,h,i)perylene		97	1.0	10	12	2	
118-74-1	Hexachlorobenzene	U	12	1.0	10	12	2	
87-68-3	Hexachlorobutadiene	U	12	1.0	10	12	3	
77-47-4	Hexachlorocyclopentadiene	~~U~~ UJ	12	1.0	10	12	2	CCH
7297-45-2	2-Methylnaphthalene-D10		64%					
367-12-4	2,4-Dibromophenol		115%					
81103-79-9	Fluorene-d10		62%					
1718-51-1	Pyrene-D10		65%					

lw 2/11/09

2D

KATAHDIN ANALYTICAL SERVICES
Report of Analytical Results

Client: CH2MHill
Project: TO-009 Lejeune
PO No:
Sample Date: 11/19/08
Received Date: 11/21/08
Extraction Date: 11/24/08
Analysis Date: 14-DEC-2008 22:43
Report Date: 12/16/2008
Matrix: SOIL
% Solids: 86.3

Lab ID: SB6749-26
Client ID: MR08-SS391-08D
SDG: TO9-6
Extracted by: AC
Extraction Method: SW846 3550
Analyst: JLP
Analysis Method: SW846 M8270C
Lab Prep Batch: WG58445
Units: ug/Kgdrywt

CAS#	Compound	Flags	Results	DF	PQL	Adj.PQL	Adj.MDL	
91-20-3	Naphthalene	U	12	1.0	10	12	3.0	
91-57-6	2-Methylnaphthalene	~~U~~ UJ	12	1.0	10	12	2.5	BSL
86-73-7	Fluorene	U	12	1.0	10	12	3.7	
85-01-8	Phenanthrene		85	1.0	10	12	2.1	
206-44-0	Fluoranthene	~~E~~ 370	~~230~~	1.0	10	12	2.1	R DL
129-00-0	Pyrene	J	280	1.0	10	12	2.4	CCH
56-55-3	Benzo(a)anthracene		120	1.0	10	12	2.2	
205-99-2	Benzo(b)fluoranthene	J	290	1.0	10	12	2.8	CCH
207-08-9	Benzo(k)fluoranthene	J	140	1.0	10	12	3.6	CCH
50-32-8	Benzo(a)pyrene		160	1.0	10	12	3.8	
193-39-5	Indeno(1,2,3-cd)pyrene		150	1.0	10	12	2.2	
53-70-3	Dibenzo(a,h)anthracene		43	1.0	10	12	2.1	
191-24-2	Benzo(g,h,i)perylene		150	1.0	10	12	2.3	
118-74-1	Hexachlorobenzene	~~U~~ UJ	12	1.0	10	12	2.1	CCH
87-68-3	Hexachlorobutadiene	U	12	1.0	10	12	2.7	
77-47-4	Hexachlorocyclopentadiene	~~U~~ UJ	12	1.0	10	12	1.7	CCH
7297-45-2	2-Methylnaphthalene-D10		62%					
367-12-4	2,4-Dibromophenol		120%					
81103-79-9	Fluorene-d10		59%					
1718-51-1	Pyrene-D10		78%					

MW 2/1/09

20DL

KATAHDIN ANALYTICAL SERVICES
Report of Analytical Results

Client: CH2MHill
Project: TO-009 Lejeune
PO No:
Sample Date: 11/19/08
Received Date: 11/21/08
Extraction Date: 11/24/08
Analysis Date: 15-DEC-2008 17:14
Report Date: 12/16/2008
Matrix: SOIL
% Solids: 86.3

Lab ID: SB6749-26DL
Client ID: MR08-SS391-08D
SDG: TO9-6
Extracted by: AC
Extraction Method: SW846 3550
Analyst: JLP
Analysis Method: SW846 M8270C
Lab Prep Batch: WG58445
Units: ug/Kgdrywt

Use original

CAS#	Compound	Flags	Results	DF	PQL	Adj.PQL	Adj.MDL	
91-20-3	Naphthalene	U	23	2.0	10	23	6.0	
91-57-6	2-Methylnaphthalene	~~U~~ UJ	23	2.0	10	23	5.1	CCH
86-73-7	Fluorene	U	23	2.0	10	23	7.4	
85-01-8	Phenanthrene	J	74	2.0	10	23	4.2	CCH
206-44-0	Fluoranthene		370	2.0	10	23	4.2	
129-00-0	Pyrene		260	2.0	10	23	4.9	
56-55-3	Benzo(a)anthracene		120	2.0	10	23	4.4	
205-99-2	Benzo(b)fluoranthene	J	180	2.0	10	23	5.6	CCH
207-08-9	Benzo(k)fluoranthene		180	2.0	10	23	7.2	
50-32-8	Benzo(a)pyrene		150	2.0	10	23	7.6	
193-39-5	Indeno(1,2,3-cd)pyrene		160	2.0	10	23	4.4	
53-70-3	Dibenzo(a,h)anthracene		64	2.0	10	23	4.2	
191-24-2	Benzo(g,h,i)perylene		150	2.0	10	23	4.6	
118-74-1	Hexachlorobenzene	U	23	2.0	10	23	4.2	
87-68-3	Hexachlorobutadiene	U	23	2.0	10	23	5.3	
77-47-4	Hexachlorocyclopentadiene	~~U~~ UJ	23	2.0	10	23	3.5	CCH
7297-45-2	2-Methylnaphthalene-D10		67%					
367-12-4	2,4-Dibromophenol		97%					
81103-79-9	Fluorene-d10		59%					
1718-51-1	Pyrene-D10		68%					

dw 2/1/09

ENVIRONMENTAL
Data Services, Inc.

SEMIVOLATILE ORGANIC COMPOUNDS

USEPA Region IV - Level IV Review

Site: MCB Camp Lejeune, TO-09 SDG #: TO9-6

Client: CH2M HILL, Inc., Virginia Beach, Virginia Date: February 1, 2009

Laboratory: Katahdin Analytical Services, Scarborough, Maine Reviewer: Nancy Weaver

EDS ID	Client Sample ID	Laboratory Sample ID	Matrix
1	MR08-IS398D-08D	SB6735-1	Soil
2	MR08-IS399-08D	SB6735-3	Soil
3	MR08-IS392-08D	SB6735-5	Soil
4	MR08-IS391-08D	SB6735-7	Soil
5	MR08-IS390-08D	SB6735-9	Soil
6	MR08-IS393-08D	SB6735-11	Soil
7	MR08-IS395-08D	SB6735-13	Soil
8	MR08-SS388-08D	SB6749-1	Soil
9	MR08-IS388-08D	SB6749-3	Soil
10	MR08-SS389-08D	SB6749-5	Soil
10MS	MR08-SS389-08DMS	SB6749-5MS	Soil
10MSD	MR08-SS389-08DMSD	SB6749-5MSD	Soil
11	MR08-IS389-08D	SB6749-7	Soil
12	MR08-IS389D-08D	SB6749-9	Soil
13	MR08-SS394-08D	SB6749-11	Soil
14	MR08-IS394-08D	SB6749-13	Soil
14MS	MR08-IS394-08DMS	SB6749-13MS	Soil
14MSD	MR08-IS394-08DMSD	SB6749-13MSD	Soil
15	MR08-IS396-08D	SB6749-15	Soil
16	MR08-SS395-08D	SB6749-17	Soil
17	MR08-SS395D-08D	SB6749-19	Soil
18	MR08-SS393-08D	SB6749-21	Soil
19	MR08-SS392-08D	SB6749-23	Soil
20	MR08-SS391-08D	SB6749-25	Soil

The USEPA "Contract Laboratory Program National Functional Guidelines for Organic Data Review," October 1999, and professional judgement were used in evaluating the data in this summary report.

Holding Times - All samples were extracted within 14 days for soil samples and analyzed within 40 days for all samples.

GC/MS Tuning - All of the DFTPP tunes in the initial and continuing calibrations met the percent relative abundance criteria.

Initial Calibration - The initial calibrations exhibited acceptable %RSD and mean RRF values.

Continuing Calibration - The continuing calibrations exhibited acceptable %D and RRF values except the following.

CCAL Date	Compound	%D/RRF	Qualifier	Affected Samples
12/15/08	Nitrobenzene	26.26%	J/UJ	8-20
	4-Nitrophenol	34.51%	J/UJ	8-20

Surrogates - All samples exhibited acceptable surrogate recoveries except the following.

Sample ID	Surrogate	%R	Qualifier
10	S5-2,4,6-Tribromophenol	11%	None for 1 out per fraction

MS/MSD - The MS/MSD sample exhibited acceptable %R and RPD values except the following.

MS/MSD Sample ID	Compound	MS/MSD %R/RPD	Qualifier
10	Nitrobenzene	118%/109%/Ok	None - ND
	2,4-Dimethylphenol	37%/24%/Ok	J/UJ
	Chrysene	108%/Ok/Ok	J/UJ
14	Hexachloroethane	56%/58%/Ok	J/UJ
	2,4-Dimethylphenol	26%/20%/Ok	J/UJ

Laboratory Control Sample - The LCS samples exhibited acceptable %R values except the following.

LCS ID	Compound	%R	Qualifier	Affected Samples
WG658343-LCS	Phenol	109%	None	All ND
	Nitrobenzene	118%	None	All ND
	Butylbenzylphthalate	131%	None	All ND
	bis (2-Ethylhexyl) phthalate	139%	J	3, 6, 7
	Di-n-octyl phthalate	143%	None	All ND

Internal Standard (IS) Area Performance - All internal standards met response and retention time (RT) criteria.

Method Blank - The method blanks were free of contamination.

Field, Equipment Blank - Field QC results are summarized below.

Blank ID	Compound	Conc. ug/L	Action Level ug/L	Qualifier	Affected Samples
MR08-EB111908	None - ND	-	-	-	-
MR08-FB112008	None - ND	-	-	-	-

Field Duplicates - Field duplicate results are summarized below.

Compound	MR08-IS389-08D ug/kg	MR08-IS389D-08D ug/kg	RPD	Qualifier
bis (2-Ethylhexyl) phthalate	440	410	7%	None

Compound	MR08-SS395-08D ug/kg	MR08-SS395D-08D ug/kg	RPD	Qualifier
bis (2-Ethylhexyl) phthalate	250	150	50%	None

Tentatively Identified Compounds (TICs) - TICs were not reported.

Compound Quantitation - No discrepancies were identified.

KATAHDIN ANALYTICAL SERVICES
Report of Analytical Results

Client: CH2MHill
Project: TO-009 Lejeune
PO No:
Sample Date: 11/18/08
Received Date: 11/20/08
Extraction Date: 11/21/08
Analysis Date: 10-DEC-2008 17:47
Report Date: 12/16/2008
Matrix: SOIL
% Solids: 85.2

Lab ID: SB6735-1
Client ID: MR08-IS398D-08D
SDG: TO9-6
Extracted by: AC
Extraction Method: SW846 3550
Analyst: JCG
Analysis Method: SW846 8270C
Lab Prep Batch: WG58343
Units: ug/Kgdrywt

CAS#	Compound	Flags	Results	DF	PQL	Adj.PQL	Adj.MDL
100-52-7	Benzaldehyde	U	590	1.0	500	590	140
108-95-2	Phenol	U	590	1.0	500	590	180
111-44-4	Bis(2-Chloroethyl)ether	U	390	1.0	330	390	95
95-57-8	2-Chlorophenol	U	590	1.0	500	590	190
95-48-7	2-Methylphenol	U	700	1.0	600	700	230
108-60-1	2,2'-Oxybis(1-chloropropane)	U	390	1.0	330	390	100
98-86-2	Acetophenone	U	700	1.0	600	700	210
621-64-7	N-Nitroso-di-n-propylamine	U	390	1.0	330	390	97
65794-96-9	3&4-Methylphenol	U	700	1.0	600	700	220
67-72-1	Hexachloroethane	U	390	1.0	330	390	110
98-95-3	Nitrobenzene	U	390	1.0	330	390	110
78-59-1	Isophorone	U	390	1.0	330	390	88
88-75-5	2-Nitrophenol	U	700	1.0	600	700	200
105-67-9	2,4-Dimethylphenol	U	590	1.0	500	590	190
111-91-1	Bis(2-Chloroethoxy)methane	U	390	1.0	330	390	110
120-83-2	2,4-Dichlorophenol	U	590	1.0	500	590	180
106-47-8	4-Chloroaniline	U	590	1.0	500	590	140
105-60-2	Caprolactam	U	590	1.0	500	590	170
59-50-7	4-Chloro-3-Methylphenol	U	590	1.0	500	590	190
88-06-2	2,4,6-Trichlorophenol	U	590	1.0	500	590	180
95-95-4	2,4,5-Trichlorophenol	U	590	1.0	500	590	180
91-58-7	2-Chloronaphthalene	U	390	1.0	330	390	100
92-52-4	1,1'-Biphenyl	U	390	1.0	330	390	86
88-74-4	2-Nitroaniline	U	590	1.0	500	590	88
131-11-3	Dimethyl Phthalate	U	390	1.0	330	390	92
606-20-2	2,6-Dinitrotoluene	U	390	1.0	330	390	93
208-96-8	Acenaphthylene	U	390	1.0	330	390	82
99-09-2	3-Nitroaniline	U	590	1.0	500	590	110
83-32-9	Acenaphthene	U	390	1.0	330	390	76
51-28-5	2,4-Dinitrophenol	U	1400	1.0	1200	1400	440
132-64-9	Dibenzofuran	U	390	1.0	330	390	93
100-02-7	4-Nitrophenol	U	1400	1.0	1200	1400	360
121-14-2	2,4-Dinitrotoluene	U	390	1.0	330	390	100
84-66-2	Diethylphthalate	U	390	1.0	330	390	94
7005-72-3	4-Chlorophenyl-phenylether	U	390	1.0	330	390	92
100-01-6	4-Nitroaniline	U	590	1.0	500	590	160
534-52-1	4,6-Dinitro-2-Methylphenol	U	1400	1.0	1200	1400	400
86-30-6	N-Nitrosodiphenylamine	U	770	1.0	660	770	260
101-55-3	4-Bromophenyl-phenylether	U	390	1.0	330	390	100
1912-24-9	Atrazine	U	390	1.0	330	390	110
87-86-5	Pentachlorophenol	U	960	1.0	820	960	280
120-12-7	Anthracene	U	390	1.0	330	390	99
86-74-8	Carbazole	U	590	1.0	500	590	130

lw 2/1/09

KATAHDIN ANALYTICAL SERVICES
Report of Analytical Results

Client: CH2MHill
Project: TO-009 Lejeune
PO No:
Sample Date: 11/18/08
Received Date: 11/20/08
Extraction Date: 11/21/08
Analysis Date: 10-DEC-2008 17:47
Report Date: 12/16/2008
Matrix: SOIL
% Solids: 85.2

Lab ID: SB6735-1
Client ID: MR08-IS398D-08D
SDG: TO9-6
Extracted by: AC
Extraction Method: SW846 3550
Analyst: JCG
Analysis Method: SW846 8270C
Lab Prep Batch: WG58343
Units: ug/Kgdrywt

CAS#	Compound	Flags	Results	DF	PQL	Adj.PQL	Adj.MDL
84-74-2	Di-n-butylphthalate	U	390	1.0	330	390	120
85-68-7	Butylbenzylphthalate	U	390	1.0	330	390	110
91-94-1	3,3'-Dichlorobenzidine	U	590	1.0	500	590	130
218-01-9	Chrysene	U	390	1.0	330	390	110
117-81-7	bis(2-Ethylhexyl)phthalate	U	390	1.0	330	390	120
117-84-0	Di-n-octylphthalate	U	390	1.0	330	390	250
367-12-4	2-Fluorophenol		75%				
13127-88-3	Phenol-D6		74%				
4165-60-0	Nitrobenzene-D5		77%				
321-60-8	2-Fluorobiphenyl		82%				
118-79-6	2,4,6-Tribromophenol		67%				
1718-51-0	Terphenyl-D14		90%				

MW 2/1/09

2

KATAHDIN ANALYTICAL SERVICES
Report of Analytical Results

Client: CH2MHill
Project: TO-009 Lejeune
PO No:
Sample Date: 11/18/08
Received Date: 11/20/08
Extraction Date: 11/21/08
Analysis Date: 10-DEC-2008 18:31
Report Date: 12/16/2008
Matrix: SOIL
% Solids: 95.8

Lab ID: SB6735-3
Client ID: MR08-IS399-08D
SDG: TO9-6
Extracted by: AC
Extraction Method: SW846 3550
Analyst: JCG
Analysis Method: SW846 8270C
Lab Prep Batch: WG58343
Units: ug/Kgdrywt

CAS#	Compound	Flags	Results	DF	PQL	Adj.PQL	Adj.MDL
100-52-7	Benzaldehyde	U	520	1.0	500	520	120
108-95-2	Phenol	U	520	1.0	500	520	160
111-44-4	Bis(2-Chloroethyl)ether	U	340	1.0	330	340	84
95-57-8	2-Chlorophenol	U	520	1.0	500	520	170
95-48-7	2-Methylphenol	U	630	1.0	600	630	210
108-60-1	2,2'-Oxybis(1-chloropropane)	U	340	1.0	330	340	93
98-86-2	Acetophenone	U	630	1.0	600	630	180
621-64-7	N-Nitroso-di-n-propylamine	U	340	1.0	330	340	87
65794-96-9	3&4-Methylphenol	U	630	1.0	600	630	200
67-72-1	Hexachloroethane	U	340	1.0	330	340	100
98-95-3	Nitrobenzene	U	340	1.0	330	340	95
78-59-1	Isophorone	U	340	1.0	330	340	78
88-75-5	2-Nitrophenol	U	630	1.0	600	630	170
105-67-9	2,4-Dimethylphenol	U	520	1.0	500	520	170
111-91-1	Bis(2-Chloroethoxy)methane	U	340	1.0	330	340	100
120-83-2	2,4-Dichlorophenol	U	520	1.0	500	520	160
106-47-8	4-Chloroaniline	U	520	1.0	500	520	120
105-60-2	Caprolactam	U	520	1.0	500	520	150
59-50-7	4-Chloro-3-Methylphenol	U	520	1.0	500	520	170
88-06-2	2,4,6-Trichlorophenol	U	520	1.0	500	520	160
95-95-4	2,4,5-Trichlorophenol	U	520	1.0	500	520	160
91-58-7	2-Chloronaphthalene	U	340	1.0	330	340	91
92-52-4	1,1'-Biphenyl	U	340	1.0	330	340	76
88-74-4	2-Nitroaniline	U	520	1.0	500	520	78
131-11-3	Dimethyl Phthalate	U	340	1.0	330	340	81
606-20-2	2,6-Dinitrotoluene	U	340	1.0	330	340	82
208-96-8	Acenaphthylene	U	340	1.0	330	340	73
99-09-2	3-Nitroaniline	U	520	1.0	500	520	98
83-32-9	Acenaphthene	U	340	1.0	330	340	68
51-28-5	2,4-Dinitrophenol	U	1200	1.0	1200	1200	390
132-64-9	Dibenzofuran	U	340	1.0	330	340	82
100-02-7	4-Nitrophenol	U	1200	1.0	1200	1200	320
121-14-2	2,4-Dinitrotoluene	U	340	1.0	330	340	89
84-66-2	Diethylphthalate	U	340	1.0	330	340	83
7005-72-3	4-Chlorophenyl-phenylether	U	340	1.0	330	340	81
100-01-6	4-Nitroaniline	U	520	1.0	500	520	140
534-52-1	4,6-Dinitro-2-Methylphenol	U	1200	1.0	1200	1200	350
86-30-6	N-Nitrosodiphenylamine	U	690	1.0	660	690	230
101-55-3	4-Bromophenyl-phenylether	U	340	1.0	330	340	89
1912-24-9	Atrazine	U	340	1.0	330	340	95
87-86-5	Pentachlorophenol	U	860	1.0	820	860	250
120-12-7	Anthracene	U	340	1.0	330	340	88
86-74-8	Carbazole	U	520	1.0	500	520	120

fuw 2/11/09

KATAHDIN ANALYTICAL SERVICES
Report of Analytical Results

2

Client: CH2MHill
Project: TO-009 Lejeune
PO No:
Sample Date: 11/18/08
Received Date: 11/20/08
Extraction Date: 11/21/08
Analysis Date: 10-DEC-2008 18:31
Report Date: 12/16/2008
Matrix: SOIL
% Solids: 95.8

Lab ID: SB6735-3
Client ID: MR08-IS399-08D
SDG: TO9-6
Extracted by: AC
Extraction Method: SW846 3550
Analyst: JCG
Analysis Method: SW846 8270C
Lab Prep Batch: WG58343
Units: ug/Kgdrywt

CAS#	Compound	Flags	Results	DF	PQL	Adj.PQL	Adj.MDL
84-74-2	Di-n-butylphthalate	U	340	1.0	330	340	100
85-68-7	Butylbenzylphthalate	U	340	1.0	330	340	97
91-94-1	3,3'-Dichlorobenzidine	U	520	1.0	500	520	120
218-01-9	Chrysene	U	340	1.0	330	340	99
117-81-7	bis(2-Ethylhexyl)phthalate	U	340	1.0	330	340	100
117-84-0	Di-n-octylphthalate	U	340	1.0	330	340	220
367-12-4	2-Fluorophenol		74%				
13127-88-3	Phenol-D6		74%				
4165-60-0	Nitrobenzene-D5		77%				
321-60-8	2-Fluorobiphenyl		78%				
118-79-6	2,4,6-Tribromophenol		64%				
1718-51-0	Terphenyl-D14		99%				

RW 2/1/09

3

KATAHDIN ANALYTICAL SERVICES
Report of Analytical Results

Client: CH2MHill
Project: TO-009 Lejeune
PO No:
Sample Date: 11/18/08
Received Date: 11/20/08
Extraction Date: 11/21/08
Analysis Date: 10-DEC-2008 19:16
Report Date: 12/16/2008
Matrix: SOIL
% Solids: 57.3

Lab ID: SB6735-5
Client ID: MR08-IS392-08D
SDG: TO9-6
Extracted by: AC
Extraction Method: SW846 3550
Analyst: JCG
Analysis Method: SW846 8270C
Lab Prep Batch: WG58343
Units: ug/Kgdrywt

CAS#	Compound	Flags	Results	DF	PQL	Adj.PQL	Adj.MDL
100-52-7	Benzaldehyde	U	870	1.0	500	870	210
108-95-2	Phenol	U	870	1.0	500	870	270
111-44-4	Bis(2-Chloroethyl)ether	U	580	1.0	330	580	140
95-57-8	2-Chlorophenol	U	870	1.0	500	870	290
95-48-7	2-Methylphenol	U	1000	1.0	600	1000	350
108-60-1	2,2'-Oxybis(1-chloropropane)	U	580	1.0	330	580	160
98-86-2	Acetophenone	U	1000	1.0	600	1000	310
621-64-7	N-Nitroso-di-n-propylamine	U	580	1.0	330	580	140
65794-96-9	3&4-Methylphenol	U	1000	1.0	600	1000	330
67-72-1	Hexachloroethane	U	580	1.0	330	580	170
98-95-3	Nitrobenzene	U	580	1.0	330	580	160
78-59-1	Isophorone	U	580	1.0	330	580	130
88-75-5	2-Nitrophenol	U	1000	1.0	600	1000	290
105-67-9	2,4-Dimethylphenol	U	870	1.0	500	870	290
111-91-1	Bis(2-Chloroethoxy)methane	U	580	1.0	330	580	170
120-83-2	2,4-Dichlorophenol	U	870	1.0	500	870	260
106-47-8	4-Chloroaniline	U	870	1.0	500	870	210
105-60-2	Caprolactam	U	870	1.0	500	870	250
59-50-7	4-Chloro-3-Methylphenol	U	870	1.0	500	870	290
88-06-2	2,4,6-Trichlorophenol	U	870	1.0	500	870	270
95-95-4	2,4,5-Trichlorophenol	U	870	1.0	500	870	270
91-58-7	2-Chloronaphthalene	U	580	1.0	330	580	150
92-52-4	1,1'-Biphenyl	U	580	1.0	330	580	130
88-74-4	2-Nitroaniline	U	870	1.0	500	870	130
131-11-3	Dimethyl Phthalate	U	580	1.0	330	580	140
606-20-2	2,6-Dinitrotoluene	U	580	1.0	330	580	140
208-96-8	Acenaphthylene	U	580	1.0	330	580	120
99-09-2	3-Nitroaniline	U	870	1.0	500	870	160
83-32-9	Acenaphthene	U	580	1.0	330	580	110
51-28-5	2,4-Dinitrophenol	U	2100	1.0	1200	2100	660
132-64-9	Dibenzofuran	U	580	1.0	330	580	140
100-02-7	4-Nitrophenol	U	2100	1.0	1200	2100	540
121-14-2	2,4-Dinitrotoluene	U	580	1.0	330	580	150
84-66-2	Diethylphthalate	U	580	1.0	330	580	140
7005-72-3	4-Chlorophenyl-phenylether	U	580	1.0	330	580	140
100-01-6	4-Nitroaniline	U	870	1.0	500	870	230
534-52-1	4,6-Dinitro-2-Methylphenol	U	2100	1.0	1200	2100	590
86-30-6	N-Nitrosodiphenylamine	U	1200	1.0	660	1200	380
101-55-3	4-Bromophenyl-phenylether	U	580	1.0	330	580	150
1912-24-9	Atrazine	U	580	1.0	330	580	160
87-86-5	Pentachlorophenol	U	1400	1.0	820	1400	410
120-12-7	Anthracene	U	580	1.0	330	580	150
86-74-8	Carbazole	U	870	1.0	500	870	190

RCW 2/11/09

KATAHDIN ANALYTICAL SERVICES
Report of Analytical Results

3

Client: CH2MHill
Project: TO-009 Lejeune
PO No:
Sample Date: 11/18/08
Received Date: 11/20/08
Extraction Date: 11/21/08
Analysis Date: 10-DEC-2008 19:16
Report Date: 12/16/2008
Matrix: SOIL
% Solids: 57.3

Lab ID: SB6735-5
Client ID: MR08-IS392-08D
SDG: TO9-6
Extracted by: AC
Extraction Method: SW846 3550
Analyst: JCG
Analysis Method: SW846 8270C
Lab Prep Batch: WG58343
Units: ug/Kgdrywt

CAS#	Compound	Flags	Results	DF	PQL	Adj.PQL	Adj.MDL	
84-74-2	Di-n-butylphthalate	U	580	1.0	330	580	180	
85-68-7	Butylbenzylphthalate	U	580	1.0	330	580	160	
91-94-1	3,3'-Dichlorobenzidine	U	870	1.0	500	870	200	
218-01-9	Chrysene	U	580	1.0	330	580	160	
117-81-7	bis(2-Ethylhexyl)phthalate	J	730	1.0	330	580	170	BSH
117-84-0	Di-n-octylphthalate	U	580	1.0	330	580	370	
367-12-4	2-Fluorophenol		82%					
13127-88-3	Phenol-D6		80%					
4165-60-0	Nitrobenzene-D5		85%					
321-60-8	2-Fluorobiphenyl		89%					
118-79-6	2,4,6-Tribromophenol		73%					
1718-51-0	Terphenyl-D14		112%					

kew 2/11/09

4

KATAHDIN ANALYTICAL SERVICES
Report of Analytical Results

Client: CH2MHill
Project: TO-009 Lejeune
PO No:
Sample Date: 11/18/08
Received Date: 11/20/08
Extraction Date: 11/21/08
Analysis Date: 10-DEC-2008 20:00
Report Date: 12/16/2008
Matrix: SOIL
% Solids: 94.3

Lab ID: SB6735-7
Client ID: MR08-IS391-08D
SDG: TO9-6
Extracted by: AC
Extraction Method: SW846 3550
Analyst: JCG
Analysis Method: SW846 8270C
Lab Prep Batch: WG58343
Units: ug/Kgdrywt

CAS#	Compound	Flags	Results	DF	PQL	Adj.PQL	Adj.MDL
100-52-7	Benzaldehyde	U	530	1.0	500	530	130
108-95-2	Phenol	U	530	1.0	500	530	160
111-44-4	Bis(2-Chloroethyl)ether	U	350	1.0	330	350	86
95-57-8	2-Chlorophenol	U	530	1.0	500	530	170
95-48-7	2-Methylphenol	U	640	1.0	600	640	210
108-60-1	2,2'-Oxybis(1-chloropropane)	U	350	1.0	330	350	94
98-86-2	Acetophenone	U	640	1.0	600	640	190
621-64-7	N-Nitroso-di-n-propylamine	U	350	1.0	330	350	88
65794-96-9	3&4-Methylphenol	U	640	1.0	600	640	200
67-72-1	Hexachloroethane	U	350	1.0	330	350	100
98-95-3	Nitrobenzene	U	350	1.0	330	350	96
78-59-1	Isophorone	U	350	1.0	330	350	80
88-75-5	2-Nitrophenol	U	640	1.0	600	640	180
105-67-9	2,4-Dimethylphenol	U	530	1.0	500	530	170
111-91-1	Bis(2-Chloroethoxy)methane	U	350	1.0	330	350	100
120-83-2	2,4-Dichlorophenol	U	530	1.0	500	530	160
106-47-8	4-Chloroaniline	U	530	1.0	500	530	130
105-60-2	Caprolactam	U	530	1.0	500	530	150
59-50-7	4-Chloro-3-Methylphenol	U	530	1.0	500	530	180
88-06-2	2,4,6-Trichlorophenol	U	530	1.0	500	530	160
95-95-4	2,4,5-Trichlorophenol	U	530	1.0	500	530	160
91-58-7	2-Chloronaphthalene	U	350	1.0	330	350	92
92-52-4	1,1'-Biphenyl	U	350	1.0	330	350	77
88-74-4	2-Nitroaniline	U	530	1.0	500	530	80
131-11-3	Dimethyl Phthalate	U	350	1.0	330	350	83
606-20-2	2,6-Dinitrotoluene	U	350	1.0	330	350	84
208-96-8	Acenaphthylene	U	350	1.0	330	350	74
99-09-2	3-Nitroaniline	U	530	1.0	500	530	100
83-32-9	Acenaphthene	U	350	1.0	330	350	69
51-28-5	2,4-Dinitrophenol	U	1300	1.0	1200	1300	400
132-64-9	Dibenzofuran	U	350	1.0	330	350	84
100-02-7	4-Nitrophenol	U	1300	1.0	1200	1300	330
121-14-2	2,4-Dinitrotoluene	U	350	1.0	330	350	90
84-66-2	Diethylphthalate	U	350	1.0	330	350	85
7005-72-3	4-Chlorophenyl-phenylether	U	350	1.0	330	350	83
100-01-6	4-Nitroaniline	U	530	1.0	500	530	140
534-52-1	4,6-Dinitro-2-Methylphenol	U	1300	1.0	1200	1300	360
86-30-6	N-Nitrosodiphenylamine	U	700	1.0	660	700	230
101-55-3	4-Bromophenyl-phenylether	U	350	1.0	330	350	90
1912-24-9	Atrazine	U	350	1.0	330	350	96
87-86-5	Pentachlorophenol	U	870	1.0	820	870	250
120-12-7	Anthracene	U	350	1.0	330	350	89
86-74-8	Carbazole	U	530	1.0	500	530	120

lw 2/1/09

KATAHDIN ANALYTICAL SERVICES
Report of Analytical Results

4

Client: CH2MHill
Project: TO-009 Lejeune
PO No:
Sample Date: 11/18/08
Received Date: 11/20/08
Extraction Date: 11/21/08
Analysis Date: 10-DEC-2008 20:00
Report Date: 12/16/2008
Matrix: SOIL
% Solids: 94.3

Lab ID: SB6735-7
Client ID: MR08-IS391-08D
SDG: TO9-6
Extracted by: AC
Extraction Method: SW846 3550
Analyst: JCG
Analysis Method: SW846 8270C
Lab Prep Batch: WG58343
Units: ug/Kgdrywt

CAS#	Compound	Flags	Results	DF	PQL	Adj.PQL	Adj.MDL	
84-74-2	Di-n-butylphthalate	U	350	1.0	330	350	110	
85-68-7	Butylbenzylphthalate	U	350	1.0	330	350	98	
91-94-1	3,3'-Dichlorobenzidine	U	530	1.0	500	530	120	
218-01-9	Chrysene	U	350	1.0	330	350	100	
117-81-7	bis(2-Ethylhexyl)phthalate	J	640	1.0	330	350	100	BSH
117-84-0	Di-n-octylphthalate	U	350	1.0	330	350	220	
367-12-4	2-Fluorophenol		66%					
13127-88-3	Phenol-D6		66%					
4165-60-0	Nitrobenzene-D5		72%					
321-60-8	2-Fluorobiphenyl		72%					
118-79-6	2,4,6-Tribromophenol		50%					
1718-51-0	Terphenyl-D14		90%					

RW
2/1/09

5

KATAHDIN ANALYTICAL SERVICES
Report of Analytical Results

Client: CH2MHill
Project: TO-009 Lejeune
PO No:
Sample Date: 11/18/08
Received Date: 11/20/08
Extraction Date: 11/21/08
Analysis Date: 10-DEC-2008 20:45
Report Date: 12/16/2008
Matrix: SOIL
% Solids: 90.4

Lab ID: SB6735-9
Client ID: MR08-IS390-08D
SDG: TO9-6
Extracted by: AC
Extraction Method: SW846 3550
Analyst: JCG
Analysis Method: SW846 8270C
Lab Prep Batch: WG58343
Units: ug/Kgdrywt

CAS#	Compound	Flags	Results	DF	PQL	Adj.PQL	Adj.MDL
100-52-7	Benzaldehyde	U	550	1.0	500	550	130
108-95-2	Phenol	U	550	1.0	500	550	170
111-44-4	Bis(2-Chloroethyl)ether	U	360	1.0	330	360	90
95-57-8	2-Chlorophenol	U	550	1.0	500	550	180
95-48-7	2-Methylphenol	U	660	1.0	600	660	220
108-60-1	2,2'-Oxybis(1-chloropropane)	U	360	1.0	330	360	98
98-86-2	Acetophenone	U	660	1.0	600	660	200
621-64-7	N-Nitroso-di-n-propylamine	U	360	1.0	330	360	92
65794-96-9	3&4-Methylphenol	U	660	1.0	600	660	210
67-72-1	Hexachloroethane	U	360	1.0	330	360	110
98-95-3	Nitrobenzene	U	360	1.0	330	360	100
78-59-1	Isophorone	U	360	1.0	330	360	83
88-75-5	2-Nitrophenol	U	660	1.0	600	660	180
105-67-9	2,4-Dimethylphenol	U	550	1.0	500	550	180
111-91-1	Bis(2-Chloroethoxy)methane	U	360	1.0	330	360	110
120-83-2	2,4-Dichlorophenol	U	550	1.0	500	550	160
106-47-8	4-Chloroaniline	U	550	1.0	500	550	130
105-60-2	Caprolactam	U	550	1.0	500	550	160
59-50-7	4-Chloro-3-Methylphenol	U	550	1.0	500	550	180
88-06-2	2,4,6-Trichlorophenol	U	550	1.0	500	550	170
95-95-4	2,4,5-Trichlorophenol	U	550	1.0	500	550	170
91-58-7	2-Chloronaphthalene	U	360	1.0	330	360	96
92-52-4	1,1'-Biphenyl	U	360	1.0	330	360	81
88-74-4	2-Nitroaniline	U	550	1.0	500	550	83
131-11-3	Dimethyl Phthalate	U	360	1.0	330	360	86
606-20-2	2,6-Dinitrotoluene	U	360	1.0	330	360	87
208-96-8	Acenaphthylene	U	360	1.0	330	360	77
99-09-2	3-Nitroaniline	U	550	1.0	500	550	100
83-32-9	Acenaphthene	U	360	1.0	330	360	72
51-28-5	2,4-Dinitrophenol	U	1300	1.0	1200	1300	420
132-64-9	Dibenzofuran	U	360	1.0	330	360	87
100-02-7	4-Nitrophenol	U	1300	1.0	1200	1300	340
121-14-2	2,4-Dinitrotoluene	U	360	1.0	330	360	94
84-66-2	Diethylphthalate	U	360	1.0	330	360	88
7005-72-3	4-Chlorophenyl-phenylether	U	360	1.0	330	360	86
100-01-6	4-Nitroaniline	U	550	1.0	500	550	150
534-52-1	4,6-Dinitro-2-Methylphenol	U	1300	1.0	1200	1300	370
86-30-6	N-Nitrosodiphenylamine	U	730	1.0	660	730	240
101-55-3	4-Bromophenyl-phenylether	U	360	1.0	330	360	94
1912-24-9	Atrazine	U	360	1.0	330	360	100
87-86-5	Pentachlorophenol	U	910	1.0	820	910	260
120-12-7	Anthracene	U	360	1.0	330	360	93
86-74-8	Carbazole	U	550	1.0	500	550	120

AW 2/1/09

5

KATAHDIN ANALYTICAL SERVICES
Report of Analytical Results

Client: CH2MHill
Project: TO-009 Lejeune
PO No:
Sample Date: 11/18/08
Received Date: 11/20/08
Extraction Date: 11/21/08
Analysis Date: 10-DEC-2008 20:45
Report Date: 12/16/2008
Matrix: SOIL
% Solids: 90.4

Lab ID: SB6735-9
Client ID: MR08-IS390-08D
SDG: TO9-6
Extracted by: AC
Extraction Method: SW846 3550
Analyst: JCG
Analysis Method: SW846 8270C
Lab Prep Batch: WG58343
Units: ug/Kgdrywt

CAS#	Compound	Flags	Results	DF	PQL	Adj.PQL	Adj.MDL
84-74-2	Di-n-butylphthalate	U	360	1.0	330	360	110
85-68-7	Butylbenzylphthalate	U	360	1.0	330	360	100
91-94-1	3,3'-Dichlorobenzidine	U	550	1.0	500	550	130
218-01-9	Chrysene	U	360	1.0	330	360	100
117-81-7	bis(2-Ethylhexyl)phthalate	U	360	1.0	330	360	110
117-84-0	Di-n-octylphthalate	U	360	1.0	330	360	230
367-12-4	2-Fluorophenol		72%				
13127-88-3	Phenol-D6		72%				
4165-60-0	Nitrobenzene-D5		79%				
321-60-8	2-Fluorobiphenyl		82%				
118-79-6	2,4,6-Tribromophenol		56%				
1718-51-0	Terphenyl-D14		103%				

lw 2/11/09

6

KATAHDIN ANALYTICAL SERVICES
Report of Analytical Results

Client: CH2MHill
Project: TO-009 Lejeune
PO No:
Sample Date: 11/18/08
Received Date: 11/20/08
Extraction Date: 11/21/08
Analysis Date: 10-DEC-2008 21:29
Report Date: 12/16/2008
Matrix: SOIL
% Solids: 94.9

Lab ID: SB6735-11
Client ID: MR08-IS393-08D
SDG: TO9-6
Extracted by: AC
Extraction Method: SW846 3550
Analyst: JCG
Analysis Method: SW846 8270C
Lab Prep Batch: WG58343
Units: ug/Kgdrywt

CAS#	Compound	Flags	Results	DF	PQL	Adj.PQL	Adj.MDL
100-52-7	Benzaldehyde	U	530	1.0	500	530	130
108-95-2	Phenol	U	530	1.0	500	530	160
111-44-4	Bis(2-Chloroethyl)ether	U	350	1.0	330	350	85
95-57-8	2-Chlorophenol	U	530	1.0	500	530	170
95-48-7	2-Methylphenol	U	630	1.0	600	630	210
108-60-1	2,2'-Oxybis(1-chloropropane)	U	350	1.0	330	350	94
98-86-2	Acetophenone	U	630	1.0	600	630	190
621-64-7	N-Nitroso-di-n-propylamine	U	350	1.0	330	350	87
65794-96-9	3&4-Methylphenol	U	630	1.0	600	630	200
67-72-1	Hexachloroethane	U	350	1.0	330	350	100
98-95-3	Nitrobenzene	U	350	1.0	330	350	96
78-59-1	Isophorone	U	350	1.0	330	350	79
88-75-5	2-Nitrophenol	U	630	1.0	600	630	180
105-67-9	2,4-Dimethylphenol	U	530	1.0	500	530	170
111-91-1	Bis(2-Chloroethoxy)methane	U	350	1.0	330	350	100
120-83-2	2,4-Dichlorophenol	U	530	1.0	500	530	160
106-47-8	4-Chloroaniline	U	530	1.0	500	530	120
105-60-2	Caprolactam	U	530	1.0	500	530	150
59-50-7	4-Chloro-3-Methylphenol	U	530	1.0	500	530	170
88-06-2	2,4,6-Trichlorophenol	U	530	1.0	500	530	160
95-95-4	2,4,5-Trichlorophenol	U	530	1.0	500	530	160
91-58-7	2-Chloronaphthalene	U	350	1.0	330	350	92
92-52-4	1,1'-Biphenyl	U	350	1.0	330	350	77
88-74-4	2-Nitroaniline	U	530	1.0	500	530	79
131-11-3	Dimethyl Phthalate	U	350	1.0	330	350	82
606-20-2	2,6-Dinitrotoluene	U	350	1.0	330	350	83
208-96-8	Acenaphthylene	U	350	1.0	330	350	74
99-09-2	3-Nitroaniline	U	530	1.0	500	530	99
83-32-9	Acenaphthene	U	350	1.0	330	350	68
51-28-5	2,4-Dinitrophenol	U	1300	1.0	1200	1300	400
132-64-9	Dibenzofuran	U	350	1.0	330	350	83
100-02-7	4-Nitrophenol	U	1300	1.0	1200	1300	320
121-14-2	2,4-Dinitrotoluene	U	350	1.0	330	350	90
84-66-2	Diethylphthalate	U	350	1.0	330	350	84
7005-72-3	4-Chlorophenyl-phenylether	U	350	1.0	330	350	82
100-01-6	4-Nitroaniline	U	530	1.0	500	530	140
534-52-1	4,6-Dinitro-2-Methylphenol	U	1300	1.0	1200	1300	360
86-30-6	N-Nitrosodiphenylamine	U	700	1.0	660	700	230
101-55-3	4-Bromophenyl-phenylether	U	350	1.0	330	350	90
1912-24-9	Atrazine	U	350	1.0	330	350	96
87-86-5	Pentachlorophenol	U	860	1.0	820	860	250
120-12-7	Anthracene	U	350	1.0	330	350	88
86-74-8	Carbazole	U	530	1.0	500	530	120

lw
2/1/09

6

KATAHDIN ANALYTICAL SERVICES
Report of Analytical Results

Client: CH2MHill
Project: TO-009 Lejeune
PO No:
Sample Date: 11/18/08
Received Date: 11/20/08
Extraction Date: 11/21/08
Analysis Date: 10-DEC-2008 21:29
Report Date: 12/16/2008
Matrix: SOIL
% Solids: 94.9

Lab ID: SB6735-11
Client ID: MR08-IS393-08D
SDG: TO9-6
Extracted by: AC
Extraction Method: SW846 3550
Analyst: JCG
Analysis Method: SW846 8270C
Lab Prep Batch: WG58343
Units: ug/Kgdrywt

CAS#	Compound	Flags	Results	DF	PQL	Adj.PQL	Adj.MDL	
84-74-2	Di-n-butylphthalate	U	350	1.0	330	350	110	
85-68-7	Butylbenzylphthalate	U	350	1.0	330	350	98	
91-94-1	3,3'-Dichlorobenzidine	U	530	1.0	500	530	120	
218-01-9	Chrysene	U	350	1.0	330	350	100	
117-81-7	bis(2-Ethylhexyl)phthalate	~~J~~ J	220	1.0	330	350	100	BSH
117-84-0	Di-n-octylphthalate	U	350	1.0	330	350	220	
367-12-4	2-Fluorophenol		67%					
13127-88-3	Phenol-D6		68%					
4165-60-0	Nitrobenzene-D5		74%					
321-60-8	2-Fluorobiphenyl		75%					
118-79-6	2,4,6-Tribromophenol		54%					
1718-51-0	Terphenyl-D14		93%					

QW
2/1/09

7

KATAHDIN ANALYTICAL SERVICES
Report of Analytical Results

Client: CH2MHill
Project: TO-009 Lejeune
PO No:
Sample Date: 11/18/08
Received Date: 11/20/08
Extraction Date: 11/21/08
Analysis Date: 10-DEC-2008 22:13
Report Date: 12/16/2008
Matrix: SOIL
% Solids: 93.7

Lab ID: SB6735-13
Client ID: MR08-IS395-08D
SDG: TO9-6
Extracted by: AC
Extraction Method: SW846 3550
Analyst: JCG
Analysis Method: SW846 8270C
Lab Prep Batch: WG58343
Units: ug/Kgdrywt

CAS#	Compound	Flags	Results	DF	PQL	Adj.PQL	Adj.MDL
100-52-7	Benzaldehyde	U	530	1.0	500	530	130
108-95-2	Phenol	U	530	1.0	500	530	170
111-44-4	Bis(2-Chloroethyl)ether	U	350	1.0	330	350	86
95-57-8	2-Chlorophenol	U	530	1.0	500	530	180
95-48-7	2-Methylphenol	U	640	1.0	600	640	210
108-60-1	2,2'-Oxybis(1-chloropropane)	U	350	1.0	330	350	95
98-86-2	Acetophenone	U	640	1.0	600	640	190
621-64-7	N-Nitroso-di-n-propylamine	U	350	1.0	330	350	89
65794-96-9	3&4-Methylphenol	U	640	1.0	600	640	200
67-72-1	Hexachloroethane	U	350	1.0	330	350	100
98-95-3	Nitrobenzene	U	350	1.0	330	350	97
78-59-1	Isophorone	U	350	1.0	330	350	80
88-75-5	2-Nitrophenol	U	640	1.0	600	640	180
105-67-9	2,4-Dimethylphenol	U	530	1.0	500	530	180
111-91-1	Bis(2-Chloroethoxy)methane	U	350	1.0	330	350	100
120-83-2	2,4-Dichlorophenol	U	530	1.0	500	530	160
106-47-8	4-Chloroaniline	U	530	1.0	500	530	130
105-60-2	Caprolactam	U	530	1.0	500	530	150
59-50-7	4-Chloro-3-Methylphenol	U	530	1.0	500	530	180
88-06-2	2,4,6-Trichlorophenol	U	530	1.0	500	530	160
95-95-4	2,4,5-Trichlorophenol	U	530	1.0	500	530	160
91-58-7	2-Chloronaphthalene	U	350	1.0	330	350	93
92-52-4	1,1'-Biphenyl	U	350	1.0	330	350	78
88-74-4	2-Nitroaniline	U	530	1.0	500	530	80
131-11-3	Dimethyl Phthalate	U	350	1.0	330	350	83
606-20-2	2,6-Dinitrotoluene	U	350	1.0	330	350	84
208-96-8	Acenaphthylene	U	350	1.0	330	350	75
99-09-2	3-Nitroaniline	U	530	1.0	500	530	100
83-32-9	Acenaphthene	U	350	1.0	330	350	69
51-28-5	2,4-Dinitrophenol	U	1300	1.0	1200	1300	400
132-64-9	Dibenzofuran	U	350	1.0	330	350	84
100-02-7	4-Nitrophenol	U	1300	1.0	1200	1300	330
121-14-2	2,4-Dinitrotoluene	U	350	1.0	330	350	91
84-66-2	Diethylphthalate	U	350	1.0	330	350	85
7005-72-3	4-Chlorophenyl-phenylether	U	350	1.0	330	350	83
100-01-6	4-Nitroaniline	U	530	1.0	500	530	140
534-52-1	4,6-Dinitro-2-Methylphenol	U	1300	1.0	1200	1300	360
86-30-6	N-Nitrosodiphenylamine	U	700	1.0	660	700	230
101-55-3	4-Bromophenyl-phenylether	U	350	1.0	330	350	91
1912-24-9	Atrazine	U	350	1.0	330	350	97
87-86-5	Pentachlorophenol	U	880	1.0	820	880	250
120-12-7	Anthracene	U	350	1.0	330	350	90
86-74-8	Carbazole	U	530	1.0	500	530	120

lw 2/1/09

7

KATAHDIN ANALYTICAL SERVICES
Report of Analytical Results

Client: CH2MHill
Project: TO-009 Lejeune
PO No:
Sample Date: 11/18/08
Received Date: 11/20/08
Extraction Date: 11/21/08
Analysis Date: 10-DEC-2008 22:13
Report Date: 12/16/2008
Matrix: SOIL
% Solids: 93.7

Lab ID: SB6735-13
Client ID: MR08-IS395-08D
SDG: TO9-6
Extracted by: AC
Extraction Method: SW846 3550
Analyst: JCG
Analysis Method: SW846 8270C
Lab Prep Batch: WG58343
Units: ug/Kgdrywt

CAS#	Compound	Flags	Results	DF	PQL	Adj.PQL	Adj.MDL	
84-74-2	Di-n-butylphthalate	U	350	1.0	330	350	110	
85-68-7	Butylbenzylphthalate	U	350	1.0	330	350	99	
91-94-1	3,3'-Dichlorobenzidine	U	530	1.0	500	530	120	
218-01-9	Chrysene	U	350	1.0	330	350	100	
117-81-7	bis(2-Ethylhexyl)phthalate	J	620	1.0	330	350	100	BSH
117-84-0	Di-n-octylphthalate	U	350	1.0	330	350	220	
367-12-4	2-Fluorophenol		65%					
13127-88-3	Phenol-D6		66%					
4165-60-0	Nitrobenzene-D5		70%					
321-60-8	2-Fluorobiphenyl		74%					
118-79-6	2,4,6-Tribromophenol		55%					
1718-51-0	Terphenyl-D14		88%					

gw 2/1/09

8

KATAHDIN ANALYTICAL SERVICES
Report of Analytical Results

Client: CH2MHill
Project: TO-009 Lejeune
PO No:
Sample Date: 11/19/08
Received Date: 11/21/08
Extraction Date: 11/24/08
Analysis Date: 16-DEC-2008 01:39
Report Date: 12/16/2008
Matrix: SOIL
% Solids: 84.8

Lab ID: SB6749-1
Client ID: MR08-SS388-08D
SDG: TO9-6
Extracted by: AC
Extraction Method: SW846 3550
Analyst: JCG
Analysis Method: SW846 8270C
Lab Prep Batch: WG58444
Units: ug/Kgdrywt

CAS#	Compound	Flags	Results	DF	PQL	Adj.PQL	Adj.MDL	
100-52-7	Benzaldehyde	U	590	1.0	500	590	140	
108-95-2	Phenol	U	590	1.0	500	590	180	
111-44-4	Bis(2-Chloroethyl)ether	U	390	1.0	330	390	95	
95-57-8	2-Chlorophenol	U	590	1.0	500	590	190	
95-48-7	2-Methylphenol	U	710	1.0	600	710	240	
108-60-1	2,2'-Oxybis(1-chloropropane)	U	390	1.0	330	390	100	
98-86-2	Acetophenone	U	710	1.0	600	710	210	
621-64-7	N-Nitroso-di-n-propylamine	U	390	1.0	330	390	98	
65794-96-9	3&4-Methylphenol	U	710	1.0	600	710	220	
67-72-1	Hexachloroethane	U	390	1.0	330	390	110	
98-95-3	Nitrobenzene	~~U~~ UJ	390	1.0	330	390	110	CCH
78-59-1	Isophorone	U	390	1.0	330	390	88	
88-75-5	2-Nitrophenol	U	710	1.0	600	710	200	
105-67-9	2,4-Dimethylphenol	U	590	1.0	500	590	190	
111-91-1	Bis(2-Chloroethoxy)methane	U	390	1.0	330	390	110	
120-83-2	2,4-Dichlorophenol	U	590	1.0	500	590	180	
106-47-8	4-Chloroaniline	U	590	1.0	500	590	140	
105-60-2	Caprolactam	U	590	1.0	500	590	170	
59-50-7	4-Chloro-3-Methylphenol	U	590	1.0	500	590	200	
88-06-2	2,4,6-Trichlorophenol	U	590	1.0	500	590	180	
95-95-4	2,4,5-Trichlorophenol	U	590	1.0	500	590	180	
91-58-7	2-Chloronaphthalene	U	390	1.0	330	390	100	
92-52-4	1,1'-Biphenyl	U	390	1.0	330	390	86	
88-74-4	2-Nitroaniline	U	590	1.0	500	590	88	
131-11-3	Dimethyl Phthalate	U	390	1.0	330	390	92	
606-20-2	2,6-Dinitrotoluene	U	390	1.0	330	390	93	
208-96-8	Acenaphthylene	U	390	1.0	330	390	82	
99-09-2	3-Nitroaniline	U	590	1.0	500	590	110	
83-32-9	Acenaphthene	U	390	1.0	330	390	77	
51-28-5	2,4-Dinitrophenol	U	1400	1.0	1200	1400	440	
132-64-9	Dibenzofuran	U	390	1.0	330	390	93	
100-02-7	4-Nitrophenol	~~U~~ UJ	1400	1.0	1200	1400	360	CCH
121-14-2	2,4-Dinitrotoluene	U	390	1.0	330	390	100	
84-66-2	Diethylphthalate	U	390	1.0	330	390	94	
7005-72-3	4-Chlorophenyl-phenylether	U	390	1.0	330	390	92	
100-01-6	4-Nitroaniline	U	590	1.0	500	590	160	
534-52-1	4,6-Dinitro-2-Methylphenol	U	1400	1.0	1200	1400	400	
86-30-6	N-Nitrosodiphenylamine	U	780	1.0	660	780	260	
101-55-3	4-Bromophenyl-phenylether	U	390	1.0	330	390	100	
1912-24-9	Atrazine	U	390	1.0	330	390	110	
87-86-5	Pentachlorophenol	U	970	1.0	820	970	280	
120-12-7	Anthracene	U	390	1.0	330	390	99	
86-74-8	Carbazole	U	590	1.0	500	590	130	

lw 2/1/09

8

KATAHDIN ANALYTICAL SERVICES
Report of Analytical Results

Client: CH2MHill
Project: TO-009 Lejeune
PO No:
Sample Date: 11/19/08
Received Date: 11/21/08
Extraction Date: 11/24/08
Analysis Date: 16-DEC-2008 01:39
Report Date: 12/16/2008
Matrix: SOIL
% Solids: 84.8

Lab ID: SB6749-1
Client ID: MR08-SS388-08D
SDG: TO9-6
Extracted by: AC
Extraction Method: SW846 3550
Analyst: JCG
Analysis Method: SW846 8270C
Lab Prep Batch: WG58444
Units: ug/Kgdrywt

CAS#	Compound	Flags	Results	DF	PQL	Adj.PQL	Adj.MDL
84-74-2	Di-n-butylphthalate	U	390	1.0	330	390	120
85-68-7	Butylbenzylphthalate	U	390	1.0	330	390	110
91-94-1	3,3'-Dichlorobenzidine	U	590	1.0	500	590	130
218-01-9	Chrysene	J	230	1.0	330	390	110
117-81-7	bis(2-Ethylhexyl)phthalate	U	390	1.0	330	390	120
117-84-0	Di-n-octylphthalate	U	390	1.0	330	390	250
367-12-4	2-Fluorophenol		66%				
13127-88-3	Phenol-D6		75%				
4165-60-0	Nitrobenzene-D5		76%				
321-60-8	2-Fluorobiphenyl		75%				
118-79-6	2,4,6-Tribromophenol		68%				
1718-51-0	Terphenyl-D14		109%				

MW
2/1/09

9

KATAHDIN ANALYTICAL SERVICES
Report of Analytical Results

Client: CH2MHill
Project: TO-009 Lejeune
PO No:
Sample Date: 11/19/08
Received Date: 11/21/08
Extraction Date: 11/24/08
Analysis Date: 15-DEC-2008 20:42
Report Date: 12/16/2008
Matrix: SOIL
% Solids: 92.0

Lab ID: SB6749-3
Client ID: MR08-IS388-08D
SDG: TO9-6
Extracted by: AC
Extraction Method: SW846 3550
Analyst: JCG
Analysis Method: SW846 8270C
Lab Prep Batch: WG58444
Units: ug/Kgdrywt

CAS#	Compound	Flags	Results	DF	PQL	Adj.PQL	Adj.MDL	
100-52-7	Benzaldehyde	U	540	1.0	500	540	130	
108-95-2	Phenol	U	540	1.0	500	540	170	
111-44-4	Bis(2-Chloroethyl)ether	U	360	1.0	330	360	88	
95-57-8	2-Chlorophenol	U	540	1.0	500	540	180	
95-48-7	2-Methylphenol	U	650	1.0	600	650	220	
108-60-1	2,2'-Oxybis(1-chloropropane)	U	360	1.0	330	360	97	
98-86-2	Acetophenone	U	650	1.0	600	650	190	
621-64-7	N-Nitroso-di-n-propylamine	U	360	1.0	330	360	90	
65794-96-9	3&4-Methylphenol	U	650	1.0	600	650	200	
67-72-1	Hexachloroethane	U	360	1.0	330	360	100	
98-95-3	Nitrobenzene	~~U~~ UJ	360	1.0	330	360	99	CCH
78-59-1	Isophorone	U	360	1.0	330	360	81	
88-75-5	2-Nitrophenol	U	650	1.0	600	650	180	
105-67-9	2,4-Dimethylphenol	U	540	1.0	500	540	180	
111-91-1	Bis(2-Chloroethoxy)methane	U	360	1.0	330	360	100	
120-83-2	2,4-Dichlorophenol	U	540	1.0	500	540	160	
106-47-8	4-Chloroaniline	U	540	1.0	500	540	130	
105-60-2	Caprolactam	U	540	1.0	500	540	160	
59-50-7	4-Chloro-3-Methylphenol	U	540	1.0	500	540	180	
88-06-2	2,4,6-Trichlorophenol	U	540	1.0	500	540	170	
95-95-4	2,4,5-Trichlorophenol	U	540	1.0	500	540	170	
91-58-7	2-Chloronaphthalene	U	360	1.0	330	360	94	
92-52-4	1,1'-Biphenyl	U	360	1.0	330	360	79	
88-74-4	2-Nitroaniline	U	540	1.0	500	540	81	
131-11-3	Dimethyl Phthalate	U	360	1.0	330	360	85	
606-20-2	2,6-Dinitrotoluene	U	360	1.0	330	360	86	
208-96-8	Acenaphthylene	U	360	1.0	330	360	76	
99-09-2	3-Nitroaniline	U	540	1.0	500	540	100	
83-32-9	Acenaphthene	U	360	1.0	330	360	71	
51-28-5	2,4-Dinitrophenol	U	1300	1.0	1200	1300	410	
132-64-9	Dibenzofuran	U	360	1.0	330	360	86	
100-02-7	4-Nitrophenol	~~U~~ UJ	1300	1.0	1200	1300	340	CCH
121-14-2	2,4-Dinitrotoluene	U	360	1.0	330	360	92	
84-66-2	Diethylphthalate	U	360	1.0	330	360	87	
7005-72-3	4-Chlorophenyl-phenylether	U	360	1.0	330	360	85	
100-01-6	4-Nitroaniline	U	540	1.0	500	540	140	
534-52-1	4,6-Dinitro-2-Methylphenol	U	1300	1.0	1200	1300	370	
86-30-6	N-Nitrosodiphenylamine	U	720	1.0	660	720	240	
101-55-3	4-Bromophenyl-phenylether	U	360	1.0	330	360	92	
1912-24-9	Atrazine	U	360	1.0	330	360	99	
87-86-5	Pentachlorophenol	U	890	1.0	820	890	260	
120-12-7	Anthracene	U	360	1.0	330	360	91	
86-74-8	Carbazole	U	540	1.0	500	540	120	

MW 2/1/09

KATAHDIN ANALYTICAL SERVICES
Report of Analytical Results

Client: CH2MHill
Project: TO-009 Lejeune
PO No:
Sample Date: 11/19/08
Received Date: 11/21/08
Extraction Date: 11/24/08
Analysis Date: 15-DEC-2008 20:42
Report Date: 12/16/2008
Matrix: SOIL
% Solids: 92.0

Lab ID: SB6749-3
Client ID: MR08-IS388-08D
SDG: TO9-6
Extracted by: AC
Extraction Method: SW846 3550
Analyst: JCG
Analysis Method: SW846 8270C
Lab Prep Batch: WG58444
Units: ug/Kgdrywt

CAS#	Compound	Flags	Results	DF	PQL	Adj.PQL	Adj.MDL
84-74-2	Di-n-butylphthalate	U	360	1.0	330	360	110
85-68-7	Butylbenzylphthalate	U	360	1.0	330	360	100
91-94-1	3,3'-Dichlorobenzidine	U	540	1.0	500	540	120
218-01-9	Chrysene	U	360	1.0	330	360	100
117-81-7	bis(2-Ethylhexyl)phthalate		470	1.0	330	360	110
117-84-0	Di-n-octylphthalate	U	360	1.0	330	360	230
367-12-4	2-Fluorophenol		63%				
13127-88-3	Phenol-D6		76%				
4165-60-0	Nitrobenzene-D5		75%				
321-60-8	2-Fluorobiphenyl		72%				
118-79-6	2,4,6-Tribromophenol		59%				
1718-51-0	Terphenyl-D14		86%				

RW 2/1/09

10

KATAHDIN ANALYTICAL SERVICES
Report of Analytical Results

Client: CH2MHill
Project: TO-009 Lejeune
PO No:
Sample Date: 11/19/08
Received Date: 11/21/08
Extraction Date: 11/24/08
Analysis Date: 15-DEC-2008 23:31
Report Date: 12/16/2008
Matrix: SOIL
% Solids: 91.5

Lab ID: SB6749-5
Client ID: MR08-SS389-08D
SDG: TO9-6
Extracted by: AC
Extraction Method: SW846 3550
Analyst: JCG
Analysis Method: SW846 8270C
Lab Prep Batch: WG58444
Units: ug/Kgdrywt

CAS#	Compound	Flags	Results	DF	PQL	Adj.PQL	Adj.MDL	
100-52-7	Benzaldehyde	U	550	1.0	500	550	130	
108-95-2	Phenol	U	550	1.0	500	550	170	
111-44-4	Bis(2-Chloroethyl)ether	U	360	1.0	330	360	88	
95-57-8	2-Chlorophenol	U	550	1.0	500	550	180	
95-48-7	2-Methylphenol	U	660	1.0	600	660	220	
108-60-1	2,2'-Oxybis(1-chloropropane)	U	360	1.0	330	360	97	
98-86-2	Acetophenone	U	660	1.0	600	660	190	
621-64-7	N-Nitroso-di-n-propylamine	U	360	1.0	330	360	91	
65794-96-9	3&4-Methylphenol	U	660	1.0	600	660	200	
67-72-1	Hexachloroethane	U	360	1.0	330	360	100	
98-95-3	Nitrobenzene	~~U~~ UJ	360	1.0	330	360	99	CCH
78-59-1	Isophorone	U	360	1.0	330	360	82	
88-75-5	2-Nitrophenol	U	660	1.0	600	660	180	
105-67-9	2,4-Dimethylphenol	~~U~~ UJ	550	1.0	500	550	180	MSL
111-91-1	Bis(2-Chloroethoxy)methane	U	360	1.0	330	360	100	
120-83-2	2,4-Dichlorophenol	U	550	1.0	500	550	160	
106-47-8	4-Chloroaniline	U	550	1.0	500	550	130	
105-60-2	Caprolactam	U	550	1.0	500	550	160	
59-50-7	4-Chloro-3-Methylphenol	U	550	1.0	500	550	180	
88-06-2	2,4,6-Trichlorophenol	U	550	1.0	500	550	170	
95-95-4	2,4,5-Trichlorophenol	U	550	1.0	500	550	170	
91-58-7	2-Chloronaphthalene	U	360	1.0	330	360	95	
92-52-4	1,1'-Biphenyl	U	360	1.0	330	360	80	
88-74-4	2-Nitroaniline	U	550	1.0	500	550	82	
131-11-3	Dimethyl Phthalate	U	360	1.0	330	360	85	
606-20-2	2,6-Dinitrotoluene	U	360	1.0	330	360	86	
208-96-8	Acenaphthylene	U	360	1.0	330	360	76	
99-09-2	3-Nitroaniline	U	550	1.0	500	550	100	
83-32-9	Acenaphthene	U	360	1.0	330	360	71	
51-28-5	2,4-Dinitrophenol	U	1300	1.0	1200	1300	410	
132-64-9	Dibenzofuran	U	360	1.0	330	360	86	
100-02-7	4-Nitrophenol	~~U~~ UJ	1300	1.0	1200	1300	340	CCH
121-14-2	2,4-Dinitrotoluene	U	360	1.0	330	360	93	
84-66-2	Diethylphthalate	U	360	1.0	330	360	87	
7005-72-3	4-Chlorophenyl-phenylether	U	360	1.0	330	360	85	
100-01-6	4-Nitroaniline	U	550	1.0	500	550	150	
534-52-1	4,6-Dinitro-2-Methylphenol	U	1300	1.0	1200	1300	370	
86-30-6	N-Nitrosodiphenylamine	U	720	1.0	660	720	240	
101-55-3	4-Bromophenyl-phenylether	U	360	1.0	330	360	93	
1912-24-9	Atrazine	U	360	1.0	330	360	99	
87-86-5	Pentachlorophenol	U	900	1.0	820	900	260	
120-12-7	Anthracene	U	360	1.0	330	360	92	
86-74-8	Carbazole	U	550	1.0	500	550	120	

lw
2/1/09

10

KATAHDIN ANALYTICAL SERVICES
Report of Analytical Results

Client: CH2MHill
Project: TO-009 Lejeune
PO No:
Sample Date: 11/19/08
Received Date: 11/21/08
Extraction Date: 11/24/08
Analysis Date: 15-DEC-2008 23:31
Report Date: 12/16/2008
Matrix: SOIL
% Solids: 91.5

Lab ID: SB6749-5
Client ID: MR08-SS389-08D
SDG: TO9-6
Extracted by: AC
Extraction Method: SW846 3550
Analyst: JCG
Analysis Method: SW846 8270C
Lab Prep Batch: WG58444
Units: ug/Kgdrywt

CAS#	Compound	Flags	Results	DF	PQL	Adj.PQL	Adj.MDL	
84-74-2	Di-n-butylphthalate	U	360	1.0	330	360	110	
85-68-7	Butylbenzylphthalate	U	360	1.0	330	360	100	
91-94-1	3,3'-Dichlorobenzidine	U	550	1.0	500	550	120	
218-01-9	Chrysene	~~J~~ J	140	1.0	330	360	100	MSH
117-81-7	bis(2-Ethylhexyl)phthalate	J	200	1.0	330	360	110	
117-84-0	Di-n-octylphthalate	U	360	1.0	330	360	230	
367-12-4	2-Fluorophenol		38%					
13127-88-3	Phenol-D6		63%					
4165-60-0	Nitrobenzene-D5		77%					
321-60-8	2-Fluorobiphenyl		80%					
118-79-6	2,4,6-Tribromophenol		* 11%					
1718-51-0	Terphenyl-D14		97%					

Qcw 2/11/09

11

KATAHDIN ANALYTICAL SERVICES
Report of Analytical Results

Client: CH2MHill
Project: TO-009 Lejeune
PO No:
Sample Date: 11/19/08
Received Date: 11/21/08
Extraction Date: 11/24/08
Analysis Date: 15-DEC-2008 21:24
Report Date: 12/16/2008
Matrix: SOIL
% Solids: 91.8

Lab ID: SB6749-7
Client ID: MR08-IS389-08D
SDG: TO9-6
Extracted by: AC
Extraction Method: SW846 3550
Analyst: JCG
Analysis Method: SW846 8270C
Lab Prep Batch: WG58444
Units: ug/Kgdrywt

CAS#	Compound	Flags	Results	DF	PQL	Adj.PQL	Adj.MDL	
100-52-7	Benzaldehyde	U	540	1.0	500	540	130	
108-95-2	Phenol	U	540	1.0	500	540	170	
111-44-4	Bis(2-Chloroethyl)ether	U	360	1.0	330	360	88	
95-57-8	2-Chlorophenol	U	540	1.0	500	540	180	
95-48-7	2-Methylphenol	U	650	1.0	600	650	220	
108-60-1	2,2'-Oxybis(1-chloropropane)	U	360	1.0	330	360	97	
98-86-2	Acetophenone	U	650	1.0	600	650	190	
621-64-7	N-Nitroso-di-n-propylamine	U	360	1.0	330	360	90	
65794-96-9	3&4-Methylphenol	U	650	1.0	600	650	200	
67-72-1	Hexachloroethane	U	360	1.0	330	360	100	
98-95-3	Nitrobenzene	~~U~~ UJ	360	1.0	330	360	99	CCH
78-59-1	Isophorone	U	360	1.0	330	360	82	
88-75-5	2-Nitrophenol	U	650	1.0	600	650	180	
105-67-9	2,4-Dimethylphenol	U	540	1.0	500	540	180	
111-91-1	Bis(2-Chloroethoxy)methane	U	360	1.0	330	360	100	
120-83-2	2,4-Dichlorophenol	U	540	1.0	500	540	160	
106-47-8	4-Chloroaniline	U	540	1.0	500	540	130	
105-60-2	Caprolactam	U	540	1.0	500	540	160	
59-50-7	4-Chloro-3-Methylphenol	U	540	1.0	500	540	180	
88-06-2	2,4,6-Trichlorophenol	U	540	1.0	500	540	170	
95-95-4	2,4,5-Trichlorophenol	U	540	1.0	500	540	170	
91-58-7	2-Chloronaphthalene	U	360	1.0	330	360	95	
92-52-4	1,1'-Biphenyl	U	360	1.0	330	360	79	
88-74-4	2-Nitroaniline	U	540	1.0	500	540	82	
131-11-3	Dimethyl Phthalate	U	360	1.0	330	360	85	
606-20-2	2,6-Dinitrotoluene	U	360	1.0	330	360	86	
208-96-8	Acenaphthylene	U	360	1.0	330	360	76	
99-09-2	3-Nitroaniline	U	540	1.0	500	540	100	
83-32-9	Acenaphthene	U	360	1.0	330	360	71	
51-28-5	2,4-Dinitrophenol	U	1300	1.0	1200	1300	410	
132-64-9	Dibenzofuran	U	360	1.0	330	360	86	
100-02-7	4-Nitrophenol	~~U~~ UJ	1300	1.0	1200	1300	340	CCH
121-14-2	2,4-Dinitrotoluene	U	360	1.0	330	360	92	
84-66-2	Diethylphthalate	U	360	1.0	330	360	87	
7005-72-3	4-Chlorophenyl-phenylether	U	360	1.0	330	360	85	
100-01-6	4-Nitroaniline	U	540	1.0	500	540	140	
534-52-1	4,6-Dinitro-2-Methylphenol	U	1300	1.0	1200	1300	370	
86-30-6	N-Nitrosodiphenylamine	U	720	1.0	660	720	240	
101-55-3	4-Bromophenyl-phenylether	U	360	1.0	330	360	92	
1912-24-9	Atrazine	U	360	1.0	330	360	99	
87-86-5	Pentachlorophenol	U	890	1.0	820	890	260	
120-12-7	Anthracene	U	360	1.0	330	360	91	
86-74-8	Carbazole	U	540	1.0	500	540	120	

LW 2/1/09

11

KATAHDIN ANALYTICAL SERVICES
Report of Analytical Results

Client: CH2MHill
Project: TO-009 Lejeune
PO No:
Sample Date: 11/19/08
Received Date: 11/21/08
Extraction Date: 11/24/08
Analysis Date: 15-DEC-2008 21:24
Report Date: 12/16/2008
Matrix: SOIL
% Solids: 91.8

Lab ID: SB6749-7
Client ID: MR08-IS389-08D
SDG: TO9-6
Extracted by: AC
Extraction Method: SW846 3550
Analyst: JCG
Analysis Method: SW846 8270C
Lab Prep Batch: WG58444
Units: ug/Kgdrywt

CAS#	Compound	Flags	Results	DF	PQL	Adj.PQL	Adj.MDL
84-74-2	Di-n-butylphthalate	U	360	1.0	330	360	110
85-68-7	Butylbenzylphthalate	U	360	1.0	330	360	100
91-94-1	3,3'-Dichlorobenzidine	U	540	1.0	500	540	120
218-01-9	Chrysene	U	360	1.0	330	360	100
117-81-7	bis(2-Ethylhexyl)phthalate		440	1.0	330	360	110
117-84-0	Di-n-octylphthalate	U	360	1.0	330	360	230
367-12-4	2-Fluorophenol		72%				
13127-88-3	Phenol-D6		90%				
4165-60-0	Nitrobenzene-D5		91%				
321-60-8	2-Fluorobiphenyl		88%				
118-79-6	2,4,6-Tribromophenol		66%				
1718-51-0	Terphenyl-D14		104%				

MW 2/1/09

12

KATAHDIN ANALYTICAL SERVICES
Report of Analytical Results

Client: CH2MHill
Project: TO-009 Lejeune
PO No:
Sample Date: 11/19/08
Received Date: 11/21/08
Extraction Date: 11/24/08
Analysis Date: 16-DEC-2008 05:11
Report Date: 12/16/2008
Matrix: SOIL
% Solids: 92.1

Lab ID: SB6749-9
Client ID: MR08-IS389D-08D
SDG: TO9-6
Extracted by: AC
Extraction Method: SW846 3550
Analyst: JCG
Analysis Method: SW846 8270C
Lab Prep Batch: WG58444
Units: ug/Kgdrywt

CAS#	Compound	Flags	Results	DF	PQL	Adj.PQL	Adj.MDL	
100-52-7	Benzaldehyde	U	540	1.0	500	540	130	
108-95-2	Phenol	U	540	1.0	500	540	170	
111-44-4	Bis(2-Chloroethyl)ether	U	360	1.0	330	360	88	
95-57-8	2-Chlorophenol	U	540	1.0	500	540	180	
95-48-7	2-Methylphenol	U	650	1.0	600	650	220	
108-60-1	2,2'-Oxybis(1-chloropropane)	U	360	1.0	330	360	97	
98-86-2	Acetophenone	U	650	1.0	600	650	190	
621-64-7	N-Nitroso-di-n-propylamine	U	360	1.0	330	360	90	
65794-96-9	3&4-Methylphenol	U	650	1.0	600	650	200	
67-72-1	Hexachloroethane	U	360	1.0	330	360	100	
98-95-3	Nitrobenzene	U UJ	360	1.0	330	360	99	CCH
78-59-1	Isophorone	U	360	1.0	330	360	81	
88-75-5	2-Nitrophenol	U	650	1.0	600	650	180	
105-67-9	2,4-Dimethylphenol	U	540	1.0	500	540	180	
111-91-1	Bis(2-Chloroethoxy)methane	U	360	1.0	330	360	100	
120-83-2	2,4-Dichlorophenol	U	540	1.0	500	540	160	
106-47-8	4-Chloroaniline	U	540	1.0	500	540	130	
105-60-2	Caprolactam	U	540	1.0	500	540	160	
59-50-7	4-Chloro-3-Methylphenol	U	540	1.0	500	540	180	
88-06-2	2,4,6-Trichlorophenol	U	540	1.0	500	540	170	
95-95-4	2,4,5-Trichlorophenol	U	540	1.0	500	540	170	
91-58-7	2-Chloronaphthalene	U	360	1.0	330	360	94	
92-52-4	1,1'-Biphenyl	U	360	1.0	330	360	79	
88-74-4	2-Nitroaniline	U	540	1.0	500	540	81	
131-11-3	Dimethyl Phthalate	U	360	1.0	330	360	85	
606-20-2	2,6-Dinitrotoluene	U	360	1.0	330	360	86	
208-96-8	Acenaphthylene	U	360	1.0	330	360	76	
99-09-2	3-Nitroaniline	U	540	1.0	500	540	100	
83-32-9	Acenaphthene	U	360	1.0	330	360	70	
51-28-5	2,4-Dinitrophenol	U	1300	1.0	1200	1300	410	
132-64-9	Dibenzofuran	U	360	1.0	330	360	86	
100-02-7	4-Nitrophenol	U UJ	1300	1.0	1200	1300	340	CCH
121-14-2	2,4-Dinitrotoluene	U	360	1.0	330	360	92	
84-66-2	Diethylphthalate	U	360	1.0	330	360	87	
7005-72-3	4-Chlorophenyl-phenylether	U	360	1.0	330	360	85	
100-01-6	4-Nitroaniline	U	540	1.0	500	540	140	
534-52-1	4,6-Dinitro-2-Methylphenol	U	1300	1.0	1200	1300	370	
86-30-6	N-Nitrosodiphenylamine	U	720	1.0	660	720	240	
101-55-3	4-Bromophenyl-phenylether	U	360	1.0	330	360	92	
1912-24-9	Atrazine	U	360	1.0	330	360	99	
87-86-5	Pentachlorophenol	U	890	1.0	820	890	260	
120-12-7	Anthracene	U	360	1.0	330	360	91	
86-74-8	Carbazole	U	540	1.0	500	540	120	

MW 2/1/09

KATAHDIN ANALYTICAL SERVICES
Report of Analytical Results

12

Client: CH2MHill
Project: TO-009 Lejeune
PO No:
Sample Date: 11/19/08
Received Date: 11/21/08
Extraction Date: 11/24/08
Analysis Date: 16-DEC-2008 05:11
Report Date: 12/16/2008
Matrix: SOIL
% Solids: 92.1

Lab ID: SB6749-9
Client ID: MR08-IS389D-08D
SDG: TO9-6
Extracted by: AC
Extraction Method: SW846 3550
Analyst: JCG
Analysis Method: SW846 8270C
Lab Prep Batch: WG58444
Units: ug/Kgdrywt

CAS#	Compound	Flags	Results	DF	PQL	Adj.PQL	Adj.MDL
84-74-2	Di-n-butylphthalate	U	360	1.0	330	360	110
85-68-7	Butylbenzylphthalate	U	360	1.0	330	360	100
91-94-1	3,3'-Dichlorobenzidine	U	540	1.0	500	540	120
218-01-9	Chrysene	U	360	1.0	330	360	100
117-81-7	bis(2-Ethylhexyl)phthalate		410	1.0	330	360	110
117-84-0	Di-n-octylphthalate	U	360	1.0	330	360	230
367-12-4	2-Fluorophenol		70%				
13127-88-3	Phenol-D6		88%				
4165-60-0	Nitrobenzene-D5		77%				
321-60-8	2-Fluorobiphenyl		85%				
118-79-6	2,4,6-Tribromophenol		60%				
1718-51-0	Terphenyl-D14		110%				

lw
2/11/09

13

KATAHDIN ANALYTICAL SERVICES
Report of Analytical Results

Client: CH2MHill
Project: TO-009 Lejeune
PO No:
Sample Date: 11/19/08
Received Date: 11/21/08
Extraction Date: 11/24/08
Analysis Date: 16-DEC-2008 00:14
Report Date: 12/16/2008
Matrix: SOIL
% Solids: 91.7

Lab ID: SB6749-11
Client ID: MR08-SS394-08D
SDG: TO9-6
Extracted by: AC
Extraction Method: SW846 3550
Analyst: JCG
Analysis Method: SW846 8270C
Lab Prep Batch: WG58444
Units: ug/Kgdrywt

CAS#	Compound	Flags	Results	DF	PQL	Adj.PQL	Adj.MDL
100-52-7	Benzaldehyde	U	540	1.0	500	540	130
108-95-2	Phenol	U	540	1.0	500	540	170
111-44-4	Bis(2-Chloroethyl)ether	U	360	1.0	330	360	88
95-57-8	2-Chlorophenol	U	540	1.0	500	540	180
95-48-7	2-Methylphenol	U	650	1.0	600	650	220
108-60-1	2,2'-Oxybis(1-chloropropane)	U	360	1.0	330	360	97
98-86-2	Acetophenone	U	650	1.0	600	650	190
621-64-7	N-Nitroso-di-n-propylamine	U	360	1.0	330	360	90
65794-96-9	3&4-Methylphenol	U	650	1.0	600	650	200
67-72-1	Hexachloroethane	U	360	1.0	330	360	100
98-95-3	Nitrobenzene	~~U~~ UJ	360	1.0	330	360	99 CCH
78-59-1	Isophorone	U	360	1.0	330	360	82
88-75-5	2-Nitrophenol	U	650	1.0	600	650	180
105-67-9	2,4-Dimethylphenol	U	540	1.0	500	540	180
111-91-1	Bis(2-Chloroethoxy)methane	U	360	1.0	330	360	100
120-83-2	2,4-Dichlorophenol	U	540	1.0	500	540	160
106-47-8	4-Chloroaniline	U	540	1.0	500	540	130
105-60-2	Caprolactam	U	540	1.0	500	540	160
59-50-7	4-Chloro-3-Methylphenol	U	540	1.0	500	540	180
88-06-2	2,4,6-Trichlorophenol	U	540	1.0	500	540	170
95-95-4	2,4,5-Trichlorophenol	U	540	1.0	500	540	170
91-58-7	2-Chloronaphthalene	U	360	1.0	330	360	95
92-52-4	1,1'-Biphenyl	U	360	1.0	330	360	80
88-74-4	2-Nitroaniline	U	540	1.0	500	540	82
131-11-3	Dimethyl Phthalate	U	360	1.0	330	360	85
606-20-2	2,6-Dinitrotoluene	U	360	1.0	330	360	86
208-96-8	Acenaphthylene	U	360	1.0	330	360	76
99-09-2	3-Nitroaniline	U	540	1.0	500	540	100
83-32-9	Acenaphthene	U	360	1.0	330	360	71
51-28-5	2,4-Dinitrophenol	U	1300	1.0	1200	1300	410
132-64-9	Dibenzofuran	U	360	1.0	330	360	86
100-02-7	4-Nitrophenol	~~U~~ UJ	1300	1.0	1200	1300	340 CCH
121-14-2	2,4-Dinitrotoluene	U	360	1.0	330	360	93
84-66-2	Diethylphthalate	U	360	1.0	330	360	87
7005-72-3	4-Chlorophenyl-phenylether	U	360	1.0	330	360	85
100-01-6	4-Nitroaniline	U	540	1.0	500	540	150
534-52-1	4,6-Dinitro-2-Methylphenol	U	1300	1.0	1200	1300	370
86-30-6	N-Nitrosodiphenylamine	U	720	1.0	660	720	240
101-55-3	4-Bromophenyl-phenylether	U	360	1.0	330	360	93
1912-24-9	Atrazine	U	360	1.0	330	360	99
87-86-5	Pentachlorophenol	U	890	1.0	820	890	260
120-12-7	Anthracene	U	360	1.0	330	360	92
86-74-8	Carbazole	U	540	1.0	500	540	120

JCW 2/1/09

KATAHDIN ANALYTICAL SERVICES
Report of Analytical Results

Client: CH2MHill
Project: TO-009 Lejeune
PO No:
Sample Date: 11/19/08
Received Date: 11/21/08
Extraction Date: 11/24/08
Analysis Date: 16-DEC-2008 00:14
Report Date: 12/16/2008
Matrix: SOIL
% Solids: 91.7

Lab ID: SB6749-11
Client ID: MR08-SS394-08D
SDG: TO9-6
Extracted by: AC
Extraction Method: SW846 3550
Analyst: JCG
Analysis Method: SW846 8270C
Lab Prep Batch: WG58444
Units: ug/Kgdrywt

CAS#	Compound	Flags	Results	DF	PQL	Adj.PQL	Adj.MDL
84-74-2	Di-n-butylphthalate	U	360	1.0	330	360	110
85-68-7	Butylbenzylphthalate	U	360	1.0	330	360	100
91-94-1	3,3'-Dichlorobenzidine	U	540	1.0	500	540	120
218-01-9	Chrysene	U	360	1.0	330	360	100
117-81-7	bis(2-Ethylhexyl)phthalate	J	220	1.0	330	360	110
117-84-0	Di-n-octylphthalate	U	360	1.0	330	360	230
367-12-4	2-Fluorophenol		75%				
13127-88-3	Phenol-D6		90%				
4165-60-0	Nitrobenzene-D5		86%				
321-60-8	2-Fluorobiphenyl		84%				
118-79-6	2,4,6-Tribromophenol		68%				
1718-51-0	Terphenyl-D14		111%				

lw
2/11/09

14

KATAHDIN ANALYTICAL SERVICES
Report of Analytical Results

Client: CH2MHill
Project: TO-009 Lejeune
PO No:
Sample Date: 11/19/08
Received Date: 11/21/08
Extraction Date: 11/24/08
Analysis Date: 16-DEC-2008 03:46
Report Date: 12/16/2008
Matrix: SOIL
% Solids: 93.1

Lab ID: SB6749-13
Client ID: MR08-IS394-08D
SDG: TO9-6
Extracted by: AC
Extraction Method: SW846 3550
Analyst: JCG
Analysis Method: SW846 8270C
Lab Prep Batch: WG58444
Units: ug/Kgdrywt

CAS#	Compound	Flags	Results	DF	PQL	Adj.PQL	Adj.MDL	
100-52-7	Benzaldehyde	U	540	1.0	500	540	130	
108-95-2	Phenol	U	540	1.0	500	540	170	
111-44-4	Bis(2-Chloroethyl)ether	U	350	1.0	330	350	87	
95-57-8	2-Chlorophenol	U	540	1.0	500	540	180	
95-48-7	2-Methylphenol	U	640	1.0	600	640	210	
108-60-1	2,2'-Oxybis(1-chloropropane)	U	350	1.0	330	350	96	
98-86-2	Acetophenone	U	640	1.0	600	640	190	
621-64-7	N-Nitroso-di-n-propylamine	U	350	1.0	330	350	89	
65794-96-9	3&4-Methylphenol	U	640	1.0	600	640	200	
67-72-1	Hexachloroethane	~~U~~ UJ	350	1.0	330	350	100	MSL
98-95-3	Nitrobenzene	~~U~~ UJ	350	1.0	330	350	98	CCH
78-59-1	Isophorone	U	350	1.0	330	350	80	
88-75-5	2-Nitrophenol	U	640	1.0	600	640	180	
105-67-9	2,4-Dimethylphenol	~~U~~ UJ	540	1.0	500	540	180	MSL
111-91-1	Bis(2-Chloroethoxy)methane	U	350	1.0	330	350	100	
120-83-2	2,4-Dichlorophenol	U	540	1.0	500	540	160	
106-47-8	4-Chloroaniline	U	540	1.0	500	540	130	
105-60-2	Caprolactam	U	540	1.0	500	540	150	
59-50-7	4-Chloro-3-Methylphenol	U	540	1.0	500	540	180	
88-06-2	2,4,6-Trichlorophenol	U	540	1.0	500	540	170	
95-95-4	2,4,5-Trichlorophenol	U	540	1.0	500	540	170	
91-58-7	2-Chloronaphthalene	U	350	1.0	330	350	93	
92-52-4	1,1'-Biphenyl	U	350	1.0	330	350	78	
88-74-4	2-Nitroaniline	U	540	1.0	500	540	80	
131-11-3	Dimethyl Phthalate	U	350	1.0	330	350	84	
606-20-2	2,6-Dinitrotoluene	U	350	1.0	330	350	85	
208-96-8	Acenaphthylene	U	350	1.0	330	350	75	
99-09-2	3-Nitroaniline	U	540	1.0	500	540	100	
83-32-9	Acenaphthene	U	350	1.0	330	350	70	
51-28-5	2,4-Dinitrophenol	U	1300	1.0	1200	1300	400	
132-64-9	Dibenzofuran	U	350	1.0	330	350	85	
100-02-7	4-Nitrophenol	~~U~~ UJ	1300	1.0	1200	1300	330	CCH
121-14-2	2,4-Dinitrotoluene	U	350	1.0	330	350	91	
84-66-2	Diethylphthalate	U	350	1.0	330	350	86	
7005-72-3	4-Chlorophenyl-phenylether	U	350	1.0	330	350	84	
100-01-6	4-Nitroaniline	U	540	1.0	500	540	140	
534-52-1	4,6-Dinitro-2-Methylphenol	U	1300	1.0	1200	1300	360	
86-30-6	N-Nitrosodiphenylamine	U	710	1.0	660	710	240	
101-55-3	4-Bromophenyl-phenylether	U	350	1.0	330	350	91	
1912-24-9	Atrazine	U	350	1.0	330	350	98	
87-86-5	Pentachlorophenol	U	880	1.0	820	880	250	
120-12-7	Anthracene	U	350	1.0	330	350	90	
86-74-8	Carbazole	U	540	1.0	500	540	120	

LW 2/11/09

KATAHDIN ANALYTICAL SERVICES
Report of Analytical Results

Client: CH2MHill
Project: TO-009 Lejeune
PO No:
Sample Date: 11/19/08
Received Date: 11/21/08
Extraction Date: 11/24/08
Analysis Date: 16-DEC-2008 03:46
Report Date: 12/16/2008
Matrix: SOIL
% Solids: 93.1

Lab ID: SB6749-13
Client ID: MR08-IS394-08D
SDG: TO9-6
Extracted by: AC
Extraction Method: SW846 3550
Analyst: JCG
Analysis Method: SW846 8270C
Lab Prep Batch: WG58444
Units: ug/Kgdrywt

CAS#	Compound	Flags	Results	DF	PQL	Adj.PQL	Adj.MDL
84-74-2	Di-n-butylphthalate	U	350	1.0	330	350	110
85-68-7	Butylbenzylphthalate	U	350	1.0	330	350	100
91-94-1	3,3'-Dichlorobenzidine	U	540	1.0	500	540	120
218-01-9	Chrysene	U	350	1.0	330	350	100
117-81-7	bis(2-Ethylhexyl)phthalate	J	240	1.0	330	350	100
117-84-0	Di-n-octylphthalate	U	350	1.0	330	350	230
367-12-4	2-Fluorophenol		65%				
13127-88-3	Phenol-D6		79%				
4165-60-0	Nitrobenzene-D5		83%				
321-60-8	2-Fluorobiphenyl		87%				
118-79-6	2,4,6-Tribromophenol		53%				
1718-51-0	Terphenyl-D14		116%				

lw
2/6/09

15

KATAHDIN ANALYTICAL SERVICES
Report of Analytical Results

Client: CH2MHill
Project: TO-009 Lejeune
PO No:
Sample Date: 11/19/08
Received Date: 11/21/08
Extraction Date: 11/24/08
Analysis Date: 16-DEC-2008 04:29
Report Date: 12/16/2008
Matrix: SOIL
% Solids: 90.6

Lab ID: SB6749-15
Client ID: MR08-IS396-08D
SDG: TO9-6
Extracted by: AC
Extraction Method: SW846 3550
Analyst: JCG
Analysis Method: SW846 8270C
Lab Prep Batch: WG58444
Units: ug/Kgdrywt

CAS#	Compound	Flags	Results	DF	PQL	Adj.PQL	Adj.MDL	
100-52-7	Benzaldehyde	U	550	1.0	500	550	130	
108-95-2	Phenol	U	550	1.0	500	550	170	
111-44-4	Bis(2-Chloroethyl)ether	U	360	1.0	330	360	89	
95-57-8	2-Chlorophenol	U	550	1.0	500	550	180	
95-48-7	2-Methylphenol	U	660	1.0	600	660	220	
108-60-1	2,2'-Oxybis(1-chloropropane)	U	360	1.0	330	360	98	
98-86-2	Acetophenone	U	660	1.0	600	660	200	
621-64-7	N-Nitroso-di-n-propylamine	U	360	1.0	330	360	92	
65794-96-9	3&4-Methylphenol	U	660	1.0	600	660	210	
67-72-1	Hexachloroethane	U	360	1.0	330	360	100	
98-95-3	Nitrobenzene	~~U~~ UJ	360	1.0	330	360	100	CCH
78-59-1	Isophorone	U	360	1.0	330	360	83	
88-75-5	2-Nitrophenol	U	660	1.0	600	660	180	
105-67-9	2,4-Dimethylphenol	U	550	1.0	500	550	180	
111-91-1	Bis(2-Chloroethoxy)methane	U	360	1.0	330	360	100	
120-83-2	2,4-Dichlorophenol	U	550	1.0	500	550	160	
106-47-8	4-Chloroaniline	U	550	1.0	500	550	130	
105-60-2	Caprolactam	U	550	1.0	500	550	160	
59-50-7	4-Chloro-3-Methylphenol	U	550	1.0	500	550	180	
88-06-2	2,4,6-Trichlorophenol	U	550	1.0	500	550	170	
95-95-4	2,4,5-Trichlorophenol	U	550	1.0	500	550	170	
91-58-7	2-Chloronaphthalene	U	360	1.0	330	360	96	
92-52-4	1,1'-Biphenyl	U	360	1.0	330	360	80	
88-74-4	2-Nitroaniline	U	550	1.0	500	550	83	
131-11-3	Dimethyl Phthalate	U	360	1.0	330	360	86	
606-20-2	2,6-Dinitrotoluene	U	360	1.0	330	360	87	
208-96-8	Acenaphthylene	U	360	1.0	330	360	77	
99-09-2	3-Nitroaniline	U	550	1.0	500	550	100	
83-32-9	Acenaphthene	U	360	1.0	330	360	72	
51-28-5	2,4-Dinitrophenol	U	1300	1.0	1200	1300	420	
132-64-9	Dibenzofuran	U	360	1.0	330	360	87	
100-02-7	4-Nitrophenol	~~U~~ UJ	1300	1.0	1200	1300	340	CCH
121-14-2	2,4-Dinitrotoluene	U	360	1.0	330	360	94	
84-66-2	Diethylphthalate	U	360	1.0	330	360	88	
7005-72-3	4-Chlorophenyl-phenylether	U	360	1.0	330	360	86	
100-01-6	4-Nitroaniline	U	550	1.0	500	550	150	
534-52-1	4,6-Dinitro-2-Methylphenol	U	1300	1.0	1200	1300	370	
86-30-6	N-Nitrosodiphenylamine	U	730	1.0	660	730	240	
101-55-3	4-Bromophenyl-phenylether	U	360	1.0	330	360	94	
1912-24-9	Atrazine	U	360	1.0	330	360	100	
87-86-5	Pentachlorophenol	U	900	1.0	820	900	260	
120-12-7	Anthracene	U	360	1.0	330	360	93	
86-74-8	Carbazole	U	550	1.0	500	550	120	

RW 2/11/09

15

KATAHDIN ANALYTICAL SERVICES
Report of Analytical Results

Client: CH2MHill
Project: TO-009 Lejeune
PO No:
Sample Date: 11/19/08
Received Date: 11/21/08
Extraction Date: 11/24/08
Analysis Date: 16-DEC-2008 04:29
Report Date: 12/16/2008
Matrix: SOIL
% Solids: 90.6

Lab ID: SB6749-15
Client ID: MR08-IS396-08D
SDG: TO9-6
Extracted by: AC
Extraction Method: SW846 3550
Analyst: JCG
Analysis Method: SW846 8270C
Lab Prep Batch: WG58444
Units: ug/Kgdrywt

CAS#	Compound	Flags	Results	DF	PQL	Adj.PQL	Adj.MDL
84-74-2	Di-n-butylphthalate	U	360	1.0	330	360	110
85-68-7	Butylbenzylphthalate	U	360	1.0	330	360	100
91-94-1	3,3'-Dichlorobenzidine	U	550	1.0	500	550	120
218-01-9	Chrysene	U	360	1.0	330	360	100
117-81-7	bis(2-Ethylhexyl)phthalate	U	360	1.0	330	360	110
117-84-0	Di-n-octylphthalate	U	360	1.0	330	360	230
367-12-4	2-Fluorophenol		67%				
13127-88-3	Phenol-D6		74%				
4165-60-0	Nitrobenzene-D5		75%				
321-60-8	2-Fluorobiphenyl		77%				
118-79-6	2,4,6-Tribromophenol		60%				
1718-51-0	Terphenyl-D14		114%				

lw 2/11/09

16

KATAHDIN ANALYTICAL SERVICES
Report of Analytical Results

Client: CH2MHill
Project: TO-009 Lejeune
PO No:
Sample Date: 11/19/08
Received Date: 11/21/08
Extraction Date: 11/24/08
Analysis Date: 16-DEC-2008 02:21
Report Date: 12/16/2008
Matrix: SOIL
% Solids: 86.4

Lab ID: SB6749-17
Client ID: MR08-SS395-08D
SDG: TO9-6
Extracted by: AC
Extraction Method: SW846 3550
Analyst: JCG
Analysis Method: SW846 8270C
Lab Prep Batch: WG58444
Units: ug/Kgdrywt

CAS#	Compound	Flags	Results	DF	PQL	Adj.PQL	Adj.MDL	
100-52-7	Benzaldehyde	U	580	1.0	500	580	140	
108-95-2	Phenol	U	580	1.0	500	580	180	
111-44-4	Bis(2-Chloroethyl)ether	U	380	1.0	330	380	94	
95-57-8	2-Chlorophenol	U	580	1.0	500	580	190	
95-48-7	2-Methylphenol	U	690	1.0	600	690	230	
108-60-1	2,2'-Oxybis(1-chloropropane)	U	380	1.0	330	380	100	
98-86-2	Acetophenone	U	690	1.0	600	690	200	
621-64-7	N-Nitroso-di-n-propylamine	U	380	1.0	330	380	96	
65794-96-9	3&4-Methylphenol	U	690	1.0	600	690	220	
67-72-1	Hexachloroethane	U	380	1.0	330	380	110	
98-95-3	Nitrobenzene	~~U~~ UJ	380	1.0	330	380	100	CCH
78-59-1	Isophorone	U	380	1.0	330	380	87	
88-75-5	2-Nitrophenol	U	690	1.0	600	690	190	
105-67-9	2,4-Dimethylphenol	U	580	1.0	500	580	190	
111-91-1	Bis(2-Chloroethoxy)methane	U	380	1.0	330	380	110	
120-83-2	2,4-Dichlorophenol	U	580	1.0	500	580	170	
106-47-8	4-Chloroaniline	U	580	1.0	500	580	140	
105-60-2	Caprolactam	U	580	1.0	500	580	170	
59-50-7	4-Chloro-3-Methylphenol	U	580	1.0	500	580	190	
88-06-2	2,4,6-Trichlorophenol	U	580	1.0	500	580	180	
95-95-4	2,4,5-Trichlorophenol	U	580	1.0	500	580	180	
91-58-7	2-Chloronaphthalene	U	380	1.0	330	380	100	
92-52-4	1,1'-Biphenyl	U	380	1.0	330	380	84	
88-74-4	2-Nitroaniline	U	580	1.0	500	580	87	
131-11-3	Dimethyl Phthalate	U	380	1.0	330	380	90	
606-20-2	2,6-Dinitrotoluene	U	380	1.0	330	380	91	
208-96-8	Acenaphthylene	U	380	1.0	330	380	81	
99-09-2	3-Nitroaniline	U	580	1.0	500	580	110	
83-32-9	Acenaphthene	U	380	1.0	330	380	75	
51-28-5	2,4-Dinitrophenol	U	1400	1.0	1200	1400	440	
132-64-9	Dibenzofuran	U	380	1.0	330	380	91	
100-02-7	4-Nitrophenol	~~U~~ UJ	1400	1.0	1200	1400	360	CCH
121-14-2	2,4-Dinitrotoluene	U	380	1.0	330	380	98	
84-66-2	Diethylphthalate	U	380	1.0	330	380	92	
7005-72-3	4-Chlorophenyl-phenylether	U	380	1.0	330	380	90	
100-01-6	4-Nitroaniline	U	580	1.0	500	580	160	
534-52-1	4,6-Dinitro-2-Methylphenol	U	1400	1.0	1200	1400	390	
86-30-6	N-Nitrosodiphenylamine	U	760	1.0	660	760	250	
101-55-3	4-Bromophenyl-phenylether	U	380	1.0	330	380	98	
1912-24-9	Atrazine	U	380	1.0	330	380	100	
87-86-5	Pentachlorophenol	U	950	1.0	820	950	270	
120-12-7	Anthracene	U	380	1.0	330	380	97	
86-74-8	Carbazole	U	580	1.0	500	580	130	

kw 2/11/09

KATAHDIN ANALYTICAL SERVICES
Report of Analytical Results

16

Client: CH2MHill
Project: TO-009 Lejeune
PO No:
Sample Date: 11/19/08
Received Date: 11/21/08
Extraction Date: 11/24/08
Analysis Date: 16-DEC-2008 02:21
Report Date: 12/16/2008
Matrix: SOIL
% Solids: 86.4

Lab ID: SB6749-17
Client ID: MR08-SS395-08D
SDG: TO9-6
Extracted by: AC
Extraction Method: SW846 3550
Analyst: JCG
Analysis Method: SW846 8270C
Lab Prep Batch: WG58444
Units: ug/Kgdrywt

CAS#	Compound	Flags	Results	DF	PQL	Adj.PQL	Adj.MDL
84-74-2	Di-n-butylphthalate	U	380	1.0	330	380	120
85-68-7	Butylbenzylphthalate	U	380	1.0	330	380	110
91-94-1	3,3'-Dichlorobenzidine	U	580	1.0	500	580	130
218-01-9	Chrysene	J	250	1.0	330	380	110
117-81-7	bis(2-Ethylhexyl)phthalate	U	380	1.0	330	380	110
117-84-0	Di-n-octylphthalate	U	380	1.0	330	380	240
367-12-4	2-Fluorophenol		65%				
13127-88-3	Phenol-D6		83%				
4165-60-0	Nitrobenzene-D5		89%				
321-60-8	2-Fluorobiphenyl		88%				
118-79-6	2,4,6-Tribromophenol		45%				
1718-51-0	Terphenyl-D14		118%				

JLW 2/11/09

17

KATAHDIN ANALYTICAL SERVICES
Report of Analytical Results

Client: CH2MHill
Project: TO-009 Lejeune
PO No:
Sample Date: 11/19/08
Received Date: 11/21/08
Extraction Date: 11/24/08
Analysis Date: 16-DEC-2008 03:04
Report Date: 12/16/2008
Matrix: SOIL
% Solids: 85.4

Lab ID: SB6749-19
Client ID: MR08-SS395D-08D
SDG: TO9-6
Extracted by: AC
Extraction Method: SW846 3550
Analyst: JCG
Analysis Method: SW846 8270C
Lab Prep Batch: WG58444
Units: ug/Kgdrywt

CAS#	Compound	Flags	Results	DF	PQL	Adj.PQL	Adj.MDL	
100-52-7	Benzaldehyde	U	580	1.0	500	580	140	
108-95-2	Phenol	U	580	1.0	500	580	180	
111-44-4	Bis(2-Chloroethyl)ether	U	390	1.0	330	390	95	
95-57-8	2-Chlorophenol	U	580	1.0	500	580	190	
95-48-7	2-Methylphenol	U	700	1.0	600	700	230	
108-60-1	2,2'-Oxybis(1-chloropropane)	U	390	1.0	330	390	100	
98-86-2	Acetophenone	U	700	1.0	600	700	210	
621-64-7	N-Nitroso-di-n-propylamine	U	390	1.0	330	390	97	
65794-96-9	3&4-Methylphenol	U	700	1.0	600	700	220	
67-72-1	Hexachloroethane	U	390	1.0	330	390	110	
98-95-3	Nitrobenzene	~~U~~ UJ	390	1.0	330	390	110	CCH
78-59-1	Isophorone	U	390	1.0	330	390	88	
88-75-5	2-Nitrophenol	U	700	1.0	600	700	200	
105-67-9	2,4-Dimethylphenol	U	580	1.0	500	580	190	
111-91-1	Bis(2-Chloroethoxy)methane	U	390	1.0	330	390	110	
120-83-2	2,4-Dichlorophenol	U	580	1.0	500	580	180	
106-47-8	4-Chloroaniline	U	580	1.0	500	580	140	
105-60-2	Caprolactam	U	580	1.0	500	580	170	
59-50-7	4-Chloro-3-Methylphenol	U	580	1.0	500	580	190	
88-06-2	2,4,6-Trichlorophenol	U	580	1.0	500	580	180	
95-95-4	2,4,5-Trichlorophenol	U	580	1.0	500	580	180	
91-58-7	2-Chloronaphthalene	U	390	1.0	330	390	100	
92-52-4	1,1'-Biphenyl	U	390	1.0	330	390	85	
88-74-4	2-Nitroaniline	U	580	1.0	500	580	88	
131-11-3	Dimethyl Phthalate	U	390	1.0	330	390	91	
606-20-2	2,6-Dinitrotoluene	U	390	1.0	330	390	92	
208-96-8	Acenaphthylene	U	390	1.0	330	390	82	
99-09-2	3-Nitroaniline	U	580	1.0	500	580	110	
83-32-9	Acenaphthene	U	390	1.0	330	390	76	
51-28-5	2,4-Dinitrophenol	U	1400	1.0	1200	1400	440	
132-64-9	Dibenzofuran	U	390	1.0	330	390	92	
100-02-7	4-Nitrophenol	~~U~~ UJ	1400	1.0	1200	1400	360	CCH
121-14-2	2,4-Dinitrotoluene	U	390	1.0	330	390	100	
84-66-2	Diethylphthalate	U	390	1.0	330	390	94	
7005-72-3	4-Chlorophenyl-phenylether	U	390	1.0	330	390	91	
100-01-6	4-Nitroaniline	U	580	1.0	500	580	160	
534-52-1	4,6-Dinitro-2-Methylphenol	U	1400	1.0	1200	1400	390	
86-30-6	N-Nitrosodiphenylamine	U	770	1.0	660	770	260	
101-55-3	4-Bromophenyl-phenylether	U	390	1.0	330	390	100	
1912-24-9	Atrazine	U	390	1.0	330	390	110	
87-86-5	Pentachlorophenol	U	960	1.0	820	960	280	
120-12-7	Anthracene	U	390	1.0	330	390	98	
86-74-8	Carbazole	U	580	1.0	500	580	130	

MW 2/11/09

17

KATAHDIN ANALYTICAL SERVICES
Report of Analytical Results

Client: CH2MHill
Project: TO-009 Lejeune
PO No:
Sample Date: 11/19/08
Received Date: 11/21/08
Extraction Date: 11/24/08
Analysis Date: 16-DEC-2008 03:04
Report Date: 12/16/2008
Matrix: SOIL
% Solids: 85.4

Lab ID: SB6749-19
Client ID: MR08-SS395D-08D
SDG: TO9-6
Extracted by: AC
Extraction Method: SW846 3550
Analyst: JCG
Analysis Method: SW846 8270C
Lab Prep Batch: WG58444
Units: ug/Kgdrywt

CAS#	Compound	Flags	Results	DF	PQL	Adj.PQL	Adj.MDL
84-74-2	Di-n-butylphthalate	U	390	1.0	330	390	120
85-68-7	Butylbenzylphthalate	U	390	1.0	330	390	110
91-94-1	3,3'-Dichlorobenzidine	U	580	1.0	500	580	130
218-01-9	Chrysene	J	150	1.0	330	390	110
117-81-7	bis(2-Ethylhexyl)phthalate	U	390	1.0	330	390	110
117-84-0	Di-n-octylphthalate	U	390	1.0	330	390	250
367-12-4	2-Fluorophenol		78%				
13127-88-3	Phenol-D6		90%				
4165-60-0	Nitrobenzene-D5		80%				
321-60-8	2-Fluorobiphenyl		82%				
118-79-6	2,4,6-Tribromophenol		81%				
1718-51-0	Terphenyl-D14		112%				

lw 2/1/09

18

KATAHDIN ANALYTICAL SERVICES
Report of Analytical Results

Client: CH2MHill
Project: TO-009 Lejeune
PO No:
Sample Date: 11/19/08
Received Date: 11/21/08
Extraction Date: 11/24/08
Analysis Date: 15-DEC-2008 22:07
Report Date: 12/16/2008
Matrix: SOIL
% Solids: 84.8

Lab ID: SB6749-21
Client ID: MR08-SS393-08D
SDG: TO9-6
Extracted by: AC
Extraction Method: SW846 3550
Analyst: JCG
Analysis Method: SW846 8270C
Lab Prep Batch: WG58444
Units: ug/Kgdrywt

CAS#	Compound	Flags	Results	DF	PQL	Adj.PQL	Adj.MDL	
100-52-7	Benzaldehyde	U	590	1.0	500	590	140	
108-95-2	Phenol	U	590	1.0	500	590	180	
111-44-4	Bis(2-Chloroethyl)ether	U	390	1.0	330	390	96	
95-57-8	2-Chlorophenol	U	590	1.0	500	590	190	
95-48-7	2-Methylphenol	U	710	1.0	600	710	240	
108-60-1	2,2'-Oxybis(1-chloropropane)	U	390	1.0	330	390	100	
98-86-2	Acetophenone	U	710	1.0	600	710	210	
621-64-7	N-Nitroso-di-n-propylamine	U	390	1.0	330	390	98	
65794-96-9	3&4-Methylphenol	U	710	1.0	600	710	220	
67-72-1	Hexachloroethane	U	390	1.0	330	390	110	
98-95-3	Nitrobenzene	~~U~~ UJ	390	1.0	330	390	110	CCH
78-59-1	Isophorone	U	390	1.0	330	390	88	
88-75-5	2-Nitrophenol	U	710	1.0	600	710	200	
105-67-9	2,4-Dimethylphenol	U	590	1.0	500	590	190	
111-91-1	Bis(2-Chloroethoxy)methane	U	390	1.0	330	390	110	
120-83-2	2,4-Dichlorophenol	U	590	1.0	500	590	180	
106-47-8	4-Chloroaniline	U	590	1.0	500	590	140	
105-60-2	Caprolactam	U	590	1.0	500	590	170	
59-50-7	4-Chloro-3-Methylphenol	U	590	1.0	500	590	200	
88-06-2	2,4,6-Trichlorophenol	U	590	1.0	500	590	180	
95-95-4	2,4,5-Trichlorophenol	U	590	1.0	500	590	180	
91-58-7	2-Chloronaphthalene	U	390	1.0	330	390	100	
92-52-4	1,1'-Biphenyl	U	390	1.0	330	390	86	
88-74-4	2-Nitroaniline	U	590	1.0	500	590	88	
131-11-3	Dimethyl Phthalate	U	390	1.0	330	390	92	
606-20-2	2,6-Dinitrotoluene	U	390	1.0	330	390	93	
208-96-8	Acenaphthylene	U	390	1.0	330	390	82	
99-09-2	3-Nitroaniline	U	590	1.0	500	590	110	
83-32-9	Acenaphthene	U	390	1.0	330	390	77	
51-28-5	2,4-Dinitrophenol	U	1400	1.0	1200	1400	440	
132-64-9	Dibenzofuran	U	390	1.0	330	390	93	
100-02-7	4-Nitrophenol	~~U~~ UJ	1400	1.0	1200	1400	360	CCH
121-14-2	2,4-Dinitrotoluene	U	390	1.0	330	390	100	
84-66-2	Diethylphthalate	U	390	1.0	330	390	94	
7005-72-3	4-Chlorophenyl-phenylether	U	390	1.0	330	390	92	
100-01-6	4-Nitroaniline	U	590	1.0	500	590	160	
534-52-1	4,6-Dinitro-2-Methylphenol	U	1400	1.0	1200	1400	400	
86-30-6	N-Nitrosodiphenylamine	U	780	1.0	660	780	260	
101-55-3	4-Bromophenyl-phenylether	U	390	1.0	330	390	100	
1912-24-9	Atrazine	U	390	1.0	330	390	110	
87-86-5	Pentachlorophenol	U	970	1.0	820	970	280	
120-12-7	Anthracene	U	390	1.0	330	390	99	
86-74-8	Carbazole	U	590	1.0	500	590	130	

CCH 2/1/09

KATAHDIN ANALYTICAL SERVICES
Report of Analytical Results

18

Client: CH2MHill
Project: TO-009 Lejeune
PO No:
Sample Date: 11/19/08
Received Date: 11/21/08
Extraction Date: 11/24/08
Analysis Date: 15-DEC-2008 22:07
Report Date: 12/16/2008
Matrix: SOIL
% Solids: 84.8

Lab ID: SB6749-21
Client ID: MR08-SS393-08D
SDG: TO9-6
Extracted by: AC
Extraction Method: SW846 3550
Analyst: JCG
Analysis Method: SW846 8270C
Lab Prep Batch: WG58444
Units: ug/Kgdrywt

CAS#	Compound	Flags	Results	DF	PQL	Adj.PQL	Adj.MDL
84-74-2	Di-n-butylphthalate	U	390	1.0	330	390	120
85-68-7	Butylbenzylphthalate	U	390	1.0	330	390	110
91-94-1	3,3'-Dichlorobenzidine	U	590	1.0	500	590	130
218-01-9	Chrysene	U	390	1.0	330	390	110
117-81-7	bis(2-Ethylhexyl)phthalate	U	390	1.0	330	390	120
117-84-0	Di-n-octylphthalate	U	390	1.0	330	390	250
367-12-4	2-Fluorophenol		84%				
13127-88-3	Phenol-D6		91%				
4165-60-0	Nitrobenzene-D5		91%				
321-60-8	2-Fluorobiphenyl		90%				
118-79-6	2,4,6-Tribromophenol		96%				
1718-51-0	Terphenyl-D14		110%				

lew
2/1/09

19

KATAHDIN ANALYTICAL SERVICES
Report of Analytical Results

Client: CH2MHill
Project: TO-009 Lejeune
PO No:
Sample Date: 11/19/08
Received Date: 11/21/08
Extraction Date: 11/24/08
Analysis Date: 15-DEC-2008 22:49
Report Date: 12/16/2008
Matrix: SOIL
% Solids: 83.5

Lab ID: SB6749-23
Client ID: MR08-SS392-08D
SDG: TO9-6
Extracted by: AC
Extraction Method: SW846 3550
Analyst: JCG
Analysis Method: SW846 8270C
Lab Prep Batch: WG58444
Units: ug/Kgdrywt

CAS#	Compound	Flags	Results	DF	PQL	Adj.PQL	Adj.MDL	
100-52-7	Benzaldehyde	U	600	1.0	500	600	140	
108-95-2	Phenol	U	600	1.0	500	600	190	
111-44-4	Bis(2-Chloroethyl)ether	U	400	1.0	330	400	97	
95-57-8	2-Chlorophenol	U	600	1.0	500	600	200	
95-48-7	2-Methylphenol	U	720	1.0	600	720	240	
108-60-1	2,2'-Oxybis(1-chloropropane)	U	400	1.0	330	400	110	
98-86-2	Acetophenone	U	720	1.0	600	720	210	
621-64-7	N-Nitroso-di-n-propylamine	U	400	1.0	330	400	99	
65794-96-9	3&4-Methylphenol	U	720	1.0	600	720	220	
67-72-1	Hexachloroethane	U	400	1.0	330	400	110	
98-95-3	Nitrobenzene	~~U~~ UJ	400	1.0	330	400	110	CCH
78-59-1	Isophorone	U	400	1.0	330	400	90	
88-75-5	2-Nitrophenol	U	720	1.0	600	720	200	
105-67-9	2,4-Dimethylphenol	U	600	1.0	500	600	200	
111-91-1	Bis(2-Chloroethoxy)methane	U	400	1.0	330	400	110	
120-83-2	2,4-Dichlorophenol	U	600	1.0	500	600	180	
106-47-8	4-Chloroaniline	U	600	1.0	500	600	140	
105-60-2	Caprolactam	U	600	1.0	500	600	170	
59-50-7	4-Chloro-3-Methylphenol	U	600	1.0	500	600	200	
88-06-2	2,4,6-Trichlorophenol	U	600	1.0	500	600	180	
95-95-4	2,4,5-Trichlorophenol	U	600	1.0	500	600	180	
91-58-7	2-Chloronaphthalene	U	400	1.0	330	400	100	
92-52-4	1,1'-Biphenyl	U	400	1.0	330	400	87	
88-74-4	2-Nitroaniline	U	600	1.0	500	600	90	
131-11-3	Dimethyl Phthalate	U	400	1.0	330	400	93	
606-20-2	2,6-Dinitrotoluene	U	400	1.0	330	400	94	
208-96-8	Acenaphthylene	U	400	1.0	330	400	84	
99-09-2	3-Nitroaniline	U	600	1.0	500	600	110	
83-32-9	Acenaphthene	U	400	1.0	330	400	78	
51-28-5	2,4-Dinitrophenol	U	1400	1.0	1200	1400	450	
132-64-9	Dibenzofuran	U	400	1.0	330	400	94	
100-02-7	4-Nitrophenol	~~U~~ UJ	1400	1.0	1200	1400	370	CCH
121-14-2	2,4-Dinitrotoluene	U	400	1.0	330	400	100	
84-66-2	Diethylphthalate	U	400	1.0	330	400	96	
7005-72-3	4-Chlorophenyl-phenylether	U	400	1.0	330	400	93	
100-01-6	4-Nitroaniline	U	600	1.0	500	600	160	
534-52-1	4,6-Dinitro-2-Methylphenol	U	1400	1.0	1200	1400	400	
86-30-6	N-Nitrosodiphenylamine	U	790	1.0	660	790	260	
101-55-3	4-Bromophenyl-phenylether	U	400	1.0	330	400	100	
1912-24-9	Atrazine	U	400	1.0	330	400	110	
87-86-5	Pentachlorophenol	U	980	1.0	820	980	280	
120-12-7	Anthracene	U	400	1.0	330	400	100	
86-74-8	Carbazole	U	600	1.0	500	600	130	

MW 2/11/09

KATAHDIN ANALYTICAL SERVICES
Report of Analytical Results

Client: CH2MHill
Project: TO-009 Lejeune
PO No:
Sample Date: 11/19/08
Received Date: 11/21/08
Extraction Date: 11/24/08
Analysis Date: 15-DEC-2008 22:49
Report Date: 12/16/2008
Matrix: SOIL
% Solids: 83.5

Lab ID: SB6749-23
Client ID: MR08-SS392-08D
SDG: TO9-6
Extracted by: AC
Extraction Method: SW846 3550
Analyst: JCG
Analysis Method: SW846 8270C
Lab Prep Batch: WG58444
Units: ug/Kgdrywt

CAS#	Compound	Flags	Results	DF	PQL	Adj.PQL	Adj.MDL
84-74-2	Di-n-butylphthalate	U	400	1.0	330	400	120
85-68-7	Butylbenzylphthalate	U	400	1.0	330	400	110
91-94-1	3,3'-Dichlorobenzidine	U	600	1.0	500	600	140
218-01-9	Chrysene	J	120	1.0	330	400	110
117-81-7	bis(2-Ethylhexyl)phthalate	U	400	1.0	330	400	120
117-84-0	Di-n-octylphthalate	U	400	1.0	330	400	250
367-12-4	2-Fluorophenol		74%				
13127-88-3	Phenol-D6		83%				
4165-60-0	Nitrobenzene-D5		82%				
321-60-8	2-Fluorobiphenyl		81%				
118-79-6	2,4,6-Tribromophenol		82%				
1718-51-0	Terphenyl-D14		102%				

LW 2/1/09

20

KATAHDIN ANALYTICAL SERVICES
Report of Analytical Results

Client: CH2MHill
Project: TO-009 Lejeune
PO No:
Sample Date: 11/19/08
Received Date: 11/21/08
Extraction Date: 11/24/08
Analysis Date: 16-DEC-2008 00:56
Report Date: 12/16/2008
Matrix: SOIL
% Solids: 86.3

Lab ID: SB6749-25
Client ID: MR08-SS391-08D
SDG: TO9-6
Extracted by: AC
Extraction Method: SW846 3550
Analyst: JCG
Analysis Method: SW846 8270C
Lab Prep Batch: WG58444
Units: ug/Kgdrywt

CAS#	Compound	Flags	Results	DF	PQL	Adj.PQL	Adj.MDL	
100-52-7	Benzaldehyde	U	580	1.0	500	580	140	
108-95-2	Phenol	U	580	1.0	500	580	180	
111-44-4	Bis(2-Chloroethyl)ether	U	380	1.0	330	380	94	
95-57-8	2-Chlorophenol	U	580	1.0	500	580	190	
95-48-7	2-Methylphenol	U	700	1.0	600	700	230	
108-60-1	2,2'-Oxybis(1-chloropropane)	U	380	1.0	330	380	100	
98-86-2	Acetophenone	U	700	1.0	600	700	210	
621-64-7	N-Nitroso-di-n-propylamine	U	380	1.0	330	380	96	
65794-96-9	3&4-Methylphenol	U	700	1.0	600	700	220	
67-72-1	Hexachloroethane	U	380	1.0	330	380	110	
98-95-3	Nitrobenzene	~~U~~ UJ	380	1.0	330	380	100	C4
78-59-1	Isophorone	U	380	1.0	330	380	87	
88-75-5	2-Nitrophenol	U	700	1.0	600	700	190	
105-67-9	2,4-Dimethylphenol	U	580	1.0	500	580	190	
111-91-1	Bis(2-Chloroethoxy)methane	U	380	1.0	330	380	110	
120-83-2	2,4-Dichlorophenol	U	580	1.0	500	580	170	
106-47-8	4-Chloroaniline	U	580	1.0	500	580	140	
105-60-2	Caprolactam	U	580	1.0	500	580	170	
59-50-7	4-Chloro-3-Methylphenol	U	580	1.0	500	580	190	
88-06-2	2,4,6-Trichlorophenol	U	580	1.0	500	580	180	
95-95-4	2,4,5-Trichlorophenol	U	580	1.0	500	580	180	
91-58-7	2-Chloronaphthalene	U	380	1.0	330	380	100	
92-52-4	1,1'-Biphenyl	U	380	1.0	330	380	85	
88-74-4	2-Nitroaniline	U	580	1.0	500	580	87	
131-11-3	Dimethyl Phthalate	U	380	1.0	330	380	90	
606-20-2	2,6-Dinitrotoluene	U	380	1.0	330	380	92	
208-96-8	Acenaphthylene	U	380	1.0	330	380	81	
99-09-2	3-Nitroaniline	U	580	1.0	500	580	110	
83-32-9	Acenaphthene	U	380	1.0	330	380	75	
51-28-5	2,4-Dinitrophenol	U	1400	1.0	1200	1400	440	
132-64-9	Dibenzofuran	U	380	1.0	330	380	92	
100-02-7	4-Nitrophenol	~~U~~ UJ	1400	1.0	1200	1400	360	C4
121-14-2	2,4-Dinitrotoluene	U	380	1.0	330	380	98	
84-66-2	Diethylphthalate	U	380	1.0	330	380	93	
7005-72-3	4-Chlorophenyl-phenylether	U	380	1.0	330	380	90	
100-01-6	4-Nitroaniline	U	580	1.0	500	580	160	
534-52-1	4,6-Dinitro-2-Methylphenol	U	1400	1.0	1200	1400	390	
86-30-6	N-Nitrosodiphenylamine	U	760	1.0	660	760	250	
101-55-3	4-Bromophenyl-phenylether	U	380	1.0	330	380	98	
1912-24-9	Atrazine	U	380	1.0	330	380	100	
87-86-5	Pentachlorophenol	U	950	1.0	820	950	270	
120-12-7	Anthracene	U	380	1.0	330	380	97	
86-74-8	Carbazole	U	580	1.0	500	580	130	

JW 2/11/09

KATAHDIN ANALYTICAL SERVICES
Report of Analytical Results

20

Client: CH2MHill
Project: TO-009 Lejeune
PO No:
Sample Date: 11/19/08
Received Date: 11/21/08
Extraction Date: 11/24/08
Analysis Date: 16-DEC-2008 00:56
Report Date: 12/16/2008
Matrix: SOIL
% Solids: 86.3

Lab ID: SB6749-25
Client ID: MR08-SS391-08D
SDG: TO9-6
Extracted by: AC
Extraction Method: SW846 3550
Analyst: JCG
Analysis Method: SW846 8270C
Lab Prep Batch: WG58444
Units: ug/Kgdrywt

CAS#	Compound	Flags	Results	DF	PQL	Adj.PQL	Adj.MDL
84-74-2	Di-n-butylphthalate	U	380	1.0	330	380	120
85-68-7	Butylbenzylphthalate	U	380	1.0	330	380	110
91-94-1	3,3'-Dichlorobenzidine	U	580	1.0	500	580	130
218-01-9	Chrysene	J	180	1.0	330	380	110
117-81-7	bis(2-Ethylhexyl)phthalate	U	380	1.0	330	380	110
117-84-0	Di-n-octylphthalate	U	380	1.0	330	380	240
367-12-4	2-Fluorophenol		71%				
13127-88-3	Phenol-D6		75%				
4165-60-0	Nitrobenzene-D5		73%				
321-60-8	2-Fluorobiphenyl		74%				
118-79-6	2,4,6-Tribromophenol		77%				
1718-51-0	Terphenyl-D14		102%				

RW
2/1/09

ENVIRONMENTAL
Data Services, Inc.

POLYNUCLEAR AROMATIC COMPOUNDS BY 8270 SIM

USEPA Region IV - Level IV Review

Site: MCB Camp Lejeune, TO-09 SDG #: TO9-7

Client: CH2M HILL, Inc., Virginia Beach, Virginia Date: February 1, 2009

Laboratory: Katahdin Analytical Services, Scarborough, Maine Reviewer: Nancy Weaver

EDS ID	Client Sample ID	Laboratory Sample ID	Matrix
1	MR08-SS391D-08D	SB6750-2	Soil
1DL	MR08-SS391D-08DDL	SB6750-2DL	Soil
2	MR08-SS390-08D	SB6750-4	Soil
2DL	MR08-SS390-08DDL	SB6750-4DL	Soil

The USEPA "Contract Laboratory Program National Functional Guidelines for Organic Data Review," October 1999, and professional judgement were used in evaluating the data in this summary report.

Holding Times - All samples were extracted within 14 days for soil samples and analyzed within 40 days for all samples.

GC/MS Tuning - All of the DFTPP tunes in the initial and continuing calibrations met the percent relative abundance criteria.

Initial Calibration - The initial calibrations exhibited acceptable %RSD and mean RRF values.

Continuing Calibration - The continuing calibrations exhibited acceptable %D and RRF values except the following.

CCAL Date	Compound	%D/RRF	Qualifier	Affected Samples
12/15/08	Naphthalene	29.81%	J/UJ	1, 2
	Fluoranthene	25.79%	J/UJ	1, 2
12/16/08	Benzo (b) fluoranthene	117.37%	J/UJ	1DL, 2DL
	Benzo (k) fluoranthene	39.96%	J/UJ	1DL, 2DL
	Hexachlorocyclopentadiene	72.16%	J/UJ	1DL, 2DL

Surrogates - All samples exhibited acceptable surrogate recoveries.

MS/MSD - A MS/MSD sample was not analyzed.

Laboratory Control Sample - The LCS samples exhibited acceptable %R values.

Internal Standard (IS) Area Performance - All internal standards met response and retention time (RT) criteria.

Method Blank - The method blanks were free of contamination.

Field, Equipment Blank - Field QC results are summarized below.

Blank ID	Compound	Conc. ug/L	Action Level ug/L	Qualifier	Affected Samples
MR08-EB111908	None - ND	-	-	-	-
MR08-FB112008	None - ND	-	-	-	-

Field Duplicates - Field duplicate samples were not included in this data package.

Tentatively Identified Compounds (TICs) - TICs were not reported.

Compound Quantitation - Both samples exhibited high concentrations of target compounds and were flagged (E) by the laboratory. The laboratory diluted and reanalyzed these samples. The reviewer replaced the original results with the dilution results. The original Form Is should be used for reporting purposes.

KATAHDIN ANALYTICAL SERVICES
Report of Analytical Results

Client: CH2MHill
Project: TO-009 Lejeune
PO No:
Sample Date: 11/19/08
Received Date: 11/21/08
Extraction Date: 11/24/08
Analysis Date: 15-DEC-2008 19:01
Report Date: 12/16/2008
Matrix: SOIL
% Solids: 87.2

Lab ID: SB6750-2
Client ID: MR08-SS391D-08D
SDG: TO9-7
Extracted by: AC
Extraction Method: SW846 3550
Analyst: JCG
Analysis Method: SW846 M8270C
Lab Prep Batch: WG58445
Units: ug/Kgdrywt

CAS#	Compound	Flags	Results	DF	PQL	Adj.PQL	Adj.MDL	
91-20-3	Naphthalene	~~J~~ UJ	11	1.0	10	11	3.0	CCH
91-57-6	2-Methylnaphthalene	J	3.4	1.0	10	11	2.5	
86-73-7	Fluorene	U	11	1.0	10	11	3.7	
85-01-8	Phenanthrene		100	1.0	10	11	2.1	
206-44-0	Fluoranthene	J	260	1.0	10	11	2.1	CCH
129-00-0	Pyrene	~~E~~ 360	~~330~~ R	1.0	10	11	2.4	DL
56-55-3	Benzo(a)anthracene		120	1.0	10	11	2.2	
205-99-2	Benzo(b)fluoranthene		300	1.0	10	11	2.8	
207-08-9	Benzo(k)fluoranthene		180	1.0	10	11	3.6	
50-32-8	Benzo(a)pyrene		150	1.0	10	11	3.8	
193-39-5	Indeno(1,2,3-cd)pyrene		120	1.0	10	11	2.2	
53-70-3	Dibenzo(a,h)anthracene		37	1.0	10	11	2.1	
191-24-2	Benzo(g,h,i)perylene		120	1.0	10	11	2.3	
118-74-1	Hexachlorobenzene	U	11	1.0	10	11	2.1	
87-68-3	Hexachlorobutadiene	U	11	1.0	10	11	2.6	
77-47-4	Hexachlorocyclopentadiene	U	11	1.0	10	11	1.7	
7297-45-2	2-Methylnaphthalene-D10		80%					
367-12-4	2,4-Dibromophenol		73%					
81103-79-9	Fluorene-d10		62%					
1718-51-1	Pyrene-D10		97%					

MW 2/1/09

1 DL

KATAHDIN ANALYTICAL SERVICES
Report of Analytical Results

Client: CH2MHill
Project: TO-009 Lejeune
PO No:
Sample Date: 11/19/08
Received Date: 11/21/08
Extraction Date: 11/24/08
Analysis Date: 16-DEC-2008 14:51
Report Date: 12/16/2008
Matrix: SOIL
% Solids: 87.2

Lab ID: SB6750-2DL
Client ID: MR08-SS391D-08D
SDG: TO9-7
Extracted by: AC
Extraction Method: SW846 3550
Analyst: JCG
Analysis Method: SW846 M8270C
Lab Prep Batch: WG58445
Units: ug/Kgdrywt

Use original

CAS#	Compound	Flags	Results	DF	PQL	Adj.PQL	Adj.MDL	
91-20-3	Naphthalene	U	23	2.0	10	23	6.0	
91-57-6	2-Methylnaphthalene	U	23	2.0	10	23	5.0	
86-73-7	Fluorene	U	23	2.0	10	23	7.3	
85-01-8	Phenanthrene		100	2.0	10	23	4.1	
206-44-0	Fluoranthene		260	2.0	10	23	4.1	
129-00-0	Pyrene		360	2.0	10	23	4.8	
56-55-3	Benzo(a)anthracene		120	2.0	10	23	4.4	
205-99-2	Benzo(b)fluoranthene	J	320	2.0	10	23	5.5	CCH
207-08-9	Benzo(k)fluoranthene	J	160	2.0	10	23	7.1	CCH
50-32-8	Benzo(a)pyrene		150	2.0	10	23	7.6	
193-39-5	Indeno(1,2,3-cd)pyrene		120	2.0	10	23	4.4	
53-70-3	Dibenzo(a,h)anthracene		38	2.0	10	23	4.1	
191-24-2	Benzo(g,h,i)perylene		130	2.0	10	23	4.6	
118-74-1	Hexachlorobenzene	U	23	2.0	10	23	4.1	
87-68-3	Hexachlorobutadiene	U	23	2.0	10	23	5.3	
77-47-4	Hexachlorocyclopentadiene	~~U~~ UJ	23	2.0	10	23	3.4	CCH
7297-45-2	2-Methylnaphthalene-D10		65%					
367-12-4	2,4-Dibromophenol		77%					
81103-79-9	Fluorene-d10		66%					
1718-51-1	Pyrene-D10		99%					

JW 2/1/09

2

KATAHDIN ANALYTICAL SERVICES
Report of Analytical Results

Client: CH2MHill
Project: TO-009 Lejeune
PO No:
Sample Date: 11/19/08
Received Date: 11/21/08
Extraction Date: 11/24/08
Analysis Date: 15-DEC-2008 19:44
Report Date: 12/16/2008
Matrix: SOIL
% Solids: 81.1

Lab ID: SB6750-4
Client ID: MR08-SS390-08D
SDG: TO9-7
Extracted by: AC
Extraction Method: SW846 3550
Analyst: JCG
Analysis Method: SW846 M8270C
Lab Prep Batch: WG58445
Units: ug/Kgdrywt

CAS#	Compound	Flags	Results	DF	PQL	Adj.PQL	Adj.MDL
91-20-3	Naphthalene	~~U~~ UJ	12	1.0	10	12	3.2 CCH
91-57-6	2-Methylnaphthalene	U	12	1.0	10	12	2.7
86-73-7	Fluorene	U	12	1.0	10	12	3.9
85-01-8	Phenanthrene		130	1.0	10	12	2.2
206-44-0	Fluoranthene	~~E~~	520 ~~400~~	1.0	10	12	2.2 R DL
129-00-0	Pyrene	~~E~~	530 ~~620~~	1.0	10	12	2.6 R DL
56-55-3	Benzo(a)anthracene		230	1.0	10	12	2.3
205-99-2	Benzo(b)fluoranthene	~~E~~ 760 J	~~550~~ CCH	1.0	10	12	3.0 R DL
207-08-9	Benzo(k)fluoranthene		300	1.0	10	12	3.8
50-32-8	Benzo(a)pyrene		290	1.0	10	12	4.1
193-39-5	Indeno(1,2,3-cd)pyrene		220	1.0	10	12	2.3
53-70-3	Dibenzo(a,h)anthracene		65	1.0	10	12	2.2
191-24-2	Benzo(g,h,i)perylene		220	1.0	10	12	2.5
118-74-1	Hexachlorobenzene	U	12	1.0	10	12	2.2
87-68-3	Hexachlorobutadiene	U	12	1.0	10	12	2.8
77-47-4	Hexachlorocyclopentadiene	U	12	1.0	10	12	1.8
7297-45-2	2-Methylnaphthalene-D10		74%				
367-12-4	2,4-Dibromophenol		84%				
81103-79-9	Fluorene-d10		58%				
1718-51-1	Pyrene-D10		103%				

MW 2/1/09

2 DL

KATAHDIN ANALYTICAL SERVICES
Report of Analytical Results

Client: CH2MHill
Project: TO-009 Lejeune
PO No:
Sample Date: 11/19/08
Received Date: 11/21/08
Extraction Date: 11/24/08
Analysis Date: 16-DEC-2008 15:33
Report Date: 12/16/2008
Matrix: SOIL
% Solids: 81.1

Lab ID: SB6750-4DL
Client ID: MR08-SS390-08D
SDG: TO9-7
Extracted by: AC
Extraction Method: SW846 3550
Analyst: JCG
Analysis Method: SW846 M8270C
Lab Prep Batch: WG58445
Units: ug/Kgdrywt

use original

CAS#	Compound	Flags	Results	DF	PQL	Adj.PQL	Adj.MDL	
91-20-3	Naphthalene	U	49	4.0	10	49	13	
91-57-6	2-Methylnaphthalene	U	49	4.0	10	49	11	
86-73-7	Fluorene	U	49	4.0	10	49	16	
85-01-8	Phenanthrene		120	4.0	10	49	8.9	
206-44-0	Fluoranthene		520	4.0	10	49	8.9	
129-00-0	Pyrene		530	4.0	10	49	10	
56-55-3	Benzo(a)anthracene		240	4.0	10	49	9.4	
205-99-2	Benzo(b)fluoranthene	J	760	4.0	10	49	12	CCH
207-08-9	Benzo(k)fluoranthene	J	190	4.0	10	49	15	CCH
50-32-8	Benzo(a)pyrene		300	4.0	10	49	16	
193-39-5	Indeno(1,2,3-cd)pyrene		200	4.0	10	49	9.4	
53-70-3	Dibenzo(a,h)anthracene		67	4.0	10	49	8.9	
191-24-2	Benzo(g,h,i)perylene		220	4.0	10	49	9.9	
118-74-1	Hexachlorobenzene	U	49	4.0	10	49	8.9	
87-68-3	Hexachlorobutadiene	U	49	4.0	10	49	11	
77-47-4	Hexachlorocyclopentadiene	~~U~~ UJ	49	4.0	10	49	7.4	CCH
7297-45-2	2-Methylnaphthalene-D10		68%					
367-12-4	2,4-Dibromophenol		76%					
81103-79-9	Fluorene-d10		59%					
1718-51-1	Pyrene-D10		80%					

RW 2/1/09

ENVIRONMENTAL
Data Services, Inc.

SEMIVOLATILE ORGANIC COMPOUNDS

USEPA Region IV - Level IV Review

Site: MCB Camp Lejeune, TO-09 SDG #: TO9-7

Client: CH2M HILL, Inc., Virginia Beach, Virginia Date: February 1, 2009

Laboratory: Katahdin Analytical Services, Scarborough, Maine Reviewer: Nancy Weaver

EDS ID	Client Sample ID	Laboratory Sample ID	Matrix
1	MR08-SS391D-08D	SB6750-1	Soil
2	MR08-SS390-08D	SB6750-3	Soil

The USEPA "Contract Laboratory Program National Functional Guidelines for Organic Data Review," October 1999, and professional judgement were used in evaluating the data in this summary report.

Holding Times - All samples were extracted within 14 days for soil samples and analyzed within 40 days for all samples.

GC/MS Tuning - All of the DFTPP tunes in the initial and continuing calibrations met the percent relative abundance criteria.

Initial Calibration - The initial calibrations exhibited acceptable %RSD and mean RRF values.

Continuing Calibration - The continuing calibrations exhibited acceptable %D and RRF values except the following.

CCAL Date	Compound	%D/RRF	Qualifier	Affected Samples
12/16/08	Nitrobenzene	26.24%	J/UJ	1, 2
	4-Nitrophenol	41.42%	J/UJ	1, 2

Surrogates - All samples exhibited acceptable surrogate recoveries.

MS/MSD - A MS/MSD sample was not analyzed.

Laboratory Control Sample - The LCS samples exhibited acceptable %R values.

Internal Standard (IS) Area Performance - All internal standards met response and retention time (RT) criteria.

Method Blank - The method blanks were free of contamination.

Field, Equipment Blank - Field QC results are summarized below.

Blank ID	Compound	Conc. ug/L	Action Level ug/L	Qualifier	Affected Samples
MR08-EB111908	None - ND	-	-	-	-
MR08-FB112008	None - ND	-	-	-	-

Field Duplicates - Field duplicate samples were not included in this data package.

Tentatively Identified Compounds (TICs) - TICs were not reported.

Compound Quantitation - No discrepancies were identified.

KATAHDIN ANALYTICAL SERVICES
Report of Analytical Results

Client: CH2MHill
Project: TO-009 Lejeune
PO No:
Sample Date: 11/19/08
Received Date: 11/21/08
Extraction Date: 11/24/08
Analysis Date: 16-DEC-2008 11:32
Report Date: 12/16/2008
Matrix: SOIL
% Solids: 87.2

Lab ID: SB6750-1
Client ID: MR08-SS391D-08D
SDG: TO9-7
Extracted by: AC
Extraction Method: SW846 3550
Analyst: JLP
Analysis Method: SW846 8270C
Lab Prep Batch: WG58444
Units: ug/Kgdrywt

CAS#	Compound	Flags	Results	DF	PQL	Adj.PQL	Adj.MDL	
100-52-7	Benzaldehyde	U	570	1.0	500	570	140	
108-95-2	Phenol	U	570	1.0	500	570	180	
111-44-4	Bis(2-Chloroethyl)ether	U	380	1.0	330	380	93	
95-57-8	2-Chlorophenol	U	570	1.0	500	570	190	
95-48-7	2-Methylphenol	U	690	1.0	600	690	230	
108-60-1	2,2'-Oxybis(1-chloropropane)	U	380	1.0	330	380	100	
98-86-2	Acetophenone	U	690	1.0	600	690	200	
621-64-7	N-Nitroso-di-n-propylamine	U	380	1.0	330	380	95	
65794-96-9	3&4-Methylphenol	U	690	1.0	600	690	210	
67-72-1	Hexachloroethane	U	380	1.0	330	380	110	
98-95-3	Nitrobenzene	~~U~~ UJ	380	1.0	330	380	100	CCH
78-59-1	Isophorone	U	380	1.0	330	380	86	
88-75-5	2-Nitrophenol	U	690	1.0	600	690	190	
105-67-9	2,4-Dimethylphenol	U	570	1.0	500	570	190	
111-91-1	Bis(2-Chloroethoxy)methane	U	380	1.0	330	380	110	
120-83-2	2,4-Dichlorophenol	U	570	1.0	500	570	170	
106-47-8	4-Chloroaniline	U	570	1.0	500	570	140	
105-60-2	Caprolactam	U	570	1.0	500	570	160	
59-50-7	4-Chloro-3-Methylphenol	U	570	1.0	500	570	190	
88-06-2	2,4,6-Trichlorophenol	U	570	1.0	500	570	180	
95-95-4	2,4,5-Trichlorophenol	U	570	1.0	500	570	180	
91-58-7	2-Chloronaphthalene	U	380	1.0	330	380	100	
92-52-4	1,1'-Biphenyl	U	380	1.0	330	380	84	
88-74-4	2-Nitroaniline	U	570	1.0	500	570	86	
131-11-3	Dimethyl Phthalate	U	380	1.0	330	380	89	
606-20-2	2,6-Dinitrotoluene	U	380	1.0	330	380	91	
208-96-8	Acenaphthylene	U	380	1.0	330	380	80	
99-09-2	3-Nitroaniline	U	570	1.0	500	570	110	
83-32-9	Acenaphthene	U	380	1.0	330	380	74	
51-28-5	2,4-Dinitrophenol	U	1400	1.0	1200	1400	430	
132-64-9	Dibenzofuran	U	380	1.0	330	380	91	
100-02-7	4-Nitrophenol	~~U~~ UJ	1400	1.0	1200	1400	350	CCH
121-14-2	2,4-Dinitrotoluene	U	380	1.0	330	380	98	
84-66-2	Diethylphthalate	U	380	1.0	330	380	92	
7005-72-3	4-Chlorophenyl-phenylether	U	380	1.0	330	380	89	
100-01-6	4-Nitroaniline	U	570	1.0	500	570	150	
534-52-1	4,6-Dinitro-2-Methylphenol	U	1400	1.0	1200	1400	390	
86-30-6	N-Nitrosodiphenylamine	U	760	1.0	660	760	250	
101-55-3	4-Bromophenyl-phenylether	U	380	1.0	330	380	98	
1912-24-9	Atrazine	U	380	1.0	330	380	100	
87-86-5	Pentachlorophenol	U	940	1.0	820	940	270	
120-12-7	Anthracene	U	380	1.0	330	380	96	
86-74-8	Carbazole	U	570	1.0	500	570	130	

lw 2/1/09

KATAHDIN ANALYTICAL SERVICES
Report of Analytical Results

Client: CH2MHill
Project: TO-009 Lejeune
PO No:
Sample Date: 11/19/08
Received Date: 11/21/08
Extraction Date: 11/24/08
Analysis Date: 16-DEC-2008 11:32
Report Date: 12/16/2008
Matrix: SOIL
% Solids: 87.2

Lab ID: SB6750-1
Client ID: MR08-SS391D-08D
SDG: TO9-7
Extracted by: AC
Extraction Method: SW846 3550
Analyst: JLP
Analysis Method: SW846 8270C
Lab Prep Batch: WG58444
Units: ug/Kgdrywt

CAS#	Compound	Flags	Results	DF	PQL	Adj.PQL	Adj.MDL
84-74-2	Di-n-butylphthalate	U	380	1.0	330	380	120
85-68-7	Butylbenzylphthalate	U	380	1.0	330	380	110
91-94-1	3,3'-Dichlorobenzidine	U	570	1.0	500	570	130
218-01-9	Chrysene	J	170	1.0	330	380	110
117-81-7	bis(2-Ethylhexyl)phthalate	U	380	1.0	330	380	110
117-84-0	Di-n-octylphthalate	U	380	1.0	330	380	240
367-12-4	2-Fluorophenol		79%				
13127-88-3	Phenol-D6		85%				
4165-60-0	Nitrobenzene-D5		83%				
321-60-8	2-Fluorobiphenyl		80%				
118-79-6	2,4,6-Tribromophenol		85%				
1718-51-0	Terphenyl-D14		101%				

AW 2/11/09

2

KATAHDIN ANALYTICAL SERVICES
Report of Analytical Results

Client: CH2MHill
Project: TO-009 Lejeune
PO No:
Sample Date: 11/19/08
Received Date: 11/21/08
Extraction Date: 11/24/08
Analysis Date: 16-DEC-2008 12:15
Report Date: 12/16/2008
Matrix: SOIL
% Solids: 81.1

Lab ID: SB6750-3
Client ID: MR08-SS390-08D
SDG: TO9-7
Extracted by: AC
Extraction Method: SW846 3550
Analyst: JLP
Analysis Method: SW846 8270C
Lab Prep Batch: WG58444
Units: ug/Kgdrywt

CAS#	Compound	Flags	Results	DF	PQL	Adj.PQL	Adj.MDL	
100-52-7	Benzaldehyde	U	620	1.0	500	620	150	
108-95-2	Phenol	U	620	1.0	500	620	190	
111-44-4	Bis(2-Chloroethyl)ether	U	410	1.0	330	410	100	
95-57-8	2-Chlorophenol	U	620	1.0	500	620	200	
95-48-7	2-Methylphenol	U	740	1.0	600	740	250	
108-60-1	2,2'-Oxybis(1-chloropropane)	U	410	1.0	330	410	110	
98-86-2	Acetophenone	U	740	1.0	600	740	220	
621-64-7	N-Nitroso-di-n-propylamine	U	410	1.0	330	410	100	
65794-96-9	3&4-Methylphenol	U	740	1.0	600	740	230	
67-72-1	Hexachloroethane	U	410	1.0	330	410	120	
98-95-3	Nitrobenzene	~~U~~ UJ	410	1.0	330	410	110	CCH
78-59-1	Isophorone	U	410	1.0	330	410	92	
88-75-5	2-Nitrophenol	U	740	1.0	600	740	200	
105-67-9	2,4-Dimethylphenol	U	620	1.0	500	620	200	
111-91-1	Bis(2-Chloroethoxy)methane	U	410	1.0	330	410	120	
120-83-2	2,4-Dichlorophenol	U	620	1.0	500	620	180	
106-47-8	4-Chloroaniline	U	620	1.0	500	620	150	
105-60-2	Caprolactam	U	620	1.0	500	620	180	
59-50-7	4-Chloro-3-Methylphenol	U	620	1.0	500	620	200	
88-06-2	2,4,6-Trichlorophenol	U	620	1.0	500	620	190	
95-95-4	2,4,5-Trichlorophenol	U	620	1.0	500	620	190	
91-58-7	2-Chloronaphthalene	U	410	1.0	330	410	110	
92-52-4	1,1'-Biphenyl	U	410	1.0	330	410	90	
88-74-4	2-Nitroaniline	U	620	1.0	500	620	92	
131-11-3	Dimethyl Phthalate	U	410	1.0	330	410	96	
606-20-2	2,6-Dinitrotoluene	U	410	1.0	330	410	97	
208-96-8	Acenaphthylene	U	410	1.0	330	410	86	
99-09-2	3-Nitroaniline	U	620	1.0	500	620	120	
83-32-9	Acenaphthene	U	410	1.0	330	410	80	
51-28-5	2,4-Dinitrophenol	U	1500	1.0	1200	1500	460	
132-64-9	Dibenzofuran	U	410	1.0	330	410	97	
100-02-7	4-Nitrophenol	~~U~~ UJ	1500	1.0	1200	1500	380	CCH
121-14-2	2,4-Dinitrotoluene	U	410	1.0	330	410	100	
84-66-2	Diethylphthalate	U	410	1.0	330	410	99	
7005-72-3	4-Chlorophenyl-phenylether	U	410	1.0	330	410	96	
100-01-6	4-Nitroaniline	U	620	1.0	500	620	160	
534-52-1	4,6-Dinitro-2-Methylphenol	U	1500	1.0	1200	1500	420	
86-30-6	N-Nitrosodiphenylamine	U	810	1.0	660	810	270	
101-55-3	4-Bromophenyl-phenylether	U	410	1.0	330	410	100	
1912-24-9	Atrazine	U	410	1.0	330	410	110	
87-86-5	Pentachlorophenol	U	1000	1.0	820	1000	290	
120-12-7	Anthracene	U	410	1.0	330	410	100	
86-74-8	Carbazole	U	620	1.0	500	620	140	

hW 2/1/09

KATAHDIN ANALYTICAL SERVICES
Report of Analytical Results

2

Client: CH2MHill
Project: TO-009 Lejeune
PO No:
Sample Date: 11/19/08
Received Date: 11/21/08
Extraction Date: 11/24/08
Analysis Date: 16-DEC-2008 12:15
Report Date: 12/16/2008
Matrix: SOIL
% Solids: 81.1

Lab ID: SB6750-3
Client ID: MR08-SS390-08D
SDG: TO9-7
Extracted by: AC
Extraction Method: SW846 3550
Analyst: JLP
Analysis Method: SW846 8270C
Lab Prep Batch: WG58444
Units: ug/Kgdrywt

CAS#	Compound	Flags	Results	DF	PQL	Adj.PQL	Adj.MDL
84-74-2	Di-n-butylphthalate	U	410	1.0	330	410	120
85-68-7	Butylbenzylphthalate	U	410	1.0	330	410	110
91-94-1	3,3'-Dichlorobenzidine	U	620	1.0	500	620	140
218-01-9	Chrysene	J	320	1.0	330	410	120
117-81-7	bis(2-Ethylhexyl)phthalate	U	410	1.0	330	410	120
117-84-0	Di-n-octylphthalate	U	410	1.0	330	410	260
367-12-4	2-Fluorophenol		72%				
13127-88-3	Phenol-D6		75%				
4165-60-0	Nitrobenzene-D5		72%				
321-60-8	2-Fluorobiphenyl		74%				
118-79-6	2,4,6-Tribromophenol		77%				
1718-51-0	Terphenyl-D14		92%				

hw 2/1/09

ENVIRONMENTAL
Data Services, Inc.

POLYNUCLEAR AROMATIC COMPOUNDS BY 8270 SIM

USEPA Region IV - Level IV Review

Site: MCB Camp Lejeune, TO-09 SDG #: TO9-8

Client: CH2M HILL, Inc., Virginia Beach, Virginia Date: February 2, 2009

Laboratory: Katahdin Analytical Services, Scarborough, Maine Reviewer: Nancy Weaver

EDS ID	Client Sample ID	Laboratory Sample ID	Matrix
1	MR08-TW16-08D	SB6791-2	Water
2	MR08-TW21-08D	SB6791-4	Water
3	MR08-TW22-08D	SB6791-6	Water
4	MR08-TW23-08D	SB6791-8	Water

The USEPA "Contract Laboratory Program National Functional Guidelines for Organic Data Review," October 1999, and professional judgement were used in evaluating the data in this summary report.

Holding Times - All samples were extracted within 7 days for water samples and analyzed within 40 days for all samples.

GC/MS Tuning - All of the DFTPP tunes in the initial and continuing calibrations met the percent relative abundance criteria.

Initial Calibration - The initial calibrations exhibited acceptable %RSD and mean RRF values.

Continuing Calibration - The continuing calibrations exhibited acceptable %D and RRF values except the following.

CCAL Date	Compound	%D/RRF	Qualifier	Affected Samples
12/15/08	Naphthalene	29.81%	J/UJ	All samples
	Fluoranthene	25.79%	J/UJ	All samples

Surrogates - All samples exhibited acceptable surrogate recoveries.

MS/MSD - A MS/MSD sample was not analyzed.

Laboratory Control Sample - The LCS samples exhibited acceptable %R values except the following.

LCS ID	Compound	%R	Qualifier	Affected Samples
WG58494-LCS	Hexachlorocyclopentadiene	22%	J/UJ	All samples

Internal Standard (IS) Area Performance - All internal standards met response and retention time (RT) criteria.

Method Blank - The method blanks were free of contamination.

Field, Equipment Blank - Field QC results are summarized below.

Blank ID	Compound	Conc. ug/L	Action Level ug/L	Qualifier	Affected Samples
MR08-EB111708-1	None - ND	-	-	-	-
MR08-FB112008	None - ND	-	-	-	-

Field Duplicates - Field duplicate samples were not included in this data package.

Tentatively Identified Compounds (TICs) - TICs were not reported.

Compound Quantitation - No discrepancies were identified.

KATAHDIN ANALYTICAL SERVICES
Report of Analytical Results

Client: CH2MHill
Project: TO-009 Lejeune
PO No:
Sample Date: 11/21/08
Received Date: 11/22/08
Extraction Date: 11/25/08
Analysis Date: 15-DEC-2008 21:54
Report Date: 12/16/2008
Matrix: WATER
% Solids: NA

Lab ID: SB6791-2
Client ID: MR08-TW16-08D
SDG: TO9-8
Extracted by: CB
Extraction Method: SW846 3510
Analyst: JCG
Analysis Method: SW846 M8270C
Lab Prep Batch: WG58494
Units: ug/L

CAS#	Compound	Flags	Results	DF	PQL	Adj.PQL	Adj.MDL	
91-20-3	Naphthalene	~~U~~ UJ	0.24	1.0	0.25	0.24	0.060	CCH
91-57-6	2-Methylnaphthalene	U	0.24	1.0	0.25	0.24	0.073	
86-73-7	Fluorene	U	0.24	1.0	0.25	0.24	0.058	
85-01-8	Phenanthrene	U	0.24	1.0	0.25	0.24	0.048	
206-44-0	Fluoranthene	~~U~~ UJ	0.24	1.0	0.25	0.24	0.069	CCH
129-00-0	Pyrene	U	0.24	1.0	0.25	0.24	0.056	
56-55-3	Benzo(a)anthracene	U	0.24	1.0	0.25	0.24	0.043	
205-99-2	Benzo(b)fluoranthene	U	0.25	1.0	0.27	0.25	0.084	
207-08-9	Benzo(k)fluoranthene	U	0.24	1.0	0.25	0.24	0.046	
50-32-8	Benzo(a)pyrene	U	0.24	1.0	0.25	0.24	0.062	
193-39-5	Indeno(1,2,3-cd)pyrene	U	0.24	1.0	0.25	0.24	0.049	
53-70-3	Dibenzo(a,h)anthracene	U	0.24	1.0	0.25	0.24	0.066	
191-24-2	Benzo(g,h,i)perylene	U	0.24	1.0	0.25	0.24	0.061	
118-74-1	Hexachlorobenzene	U	0.24	1.0	0.25	0.24	0.052	
87-68-3	Hexachlorobutadiene	U	0.25	1.0	0.27	0.25	0.082	
77-47-4	Hexachlorocyclopentadiene	~~U~~ UJ	0.24	1.0	0.25	0.24	0.063	BSL
7297-45-2	2-Methylnaphthalene-D10		66%					
367-12-4	2,4-Dibromophenol		75%					
81103-79-9	Fluorene-d10		60%					
1718-51-1	Pyrene-D10		103%					

lw
2/1/09

KATAHDIN ANALYTICAL SERVICES
Report of Analytical Results

2

Client: CH2MHill
Project: TO-009 Lejeune
PO No:
Sample Date: 11/21/08
Received Date: 11/22/08
Extraction Date: 11/25/08
Analysis Date: 15-DEC-2008 22:37
Report Date: 12/16/2008
Matrix: WATER
% Solids: NA

Lab ID: SB6791-4
Client ID: MR08-TW21-08D
SDG: TO9-8
Extracted by: CB
Extraction Method: SW846 3510
Analyst: JCG
Analysis Method: SW846 M8270C
Lab Prep Batch: WG58494
Units: ug/L

CAS#	Compound	Flags	Results	DF	PQL	Adj.PQL	Adj.MDL	
91-20-3	Naphthalene	~~U~~ UJ	0.24	1.0	0.25	0.24	0.061	CCH
91-57-6	2-Methylnaphthalene	U	0.24	1.0	0.25	0.24	0.073	
86-73-7	Fluorene	U	0.24	1.0	0.25	0.24	0.058	
85-01-8	Phenanthrene	U	0.24	1.0	0.25	0.24	0.048	
206-44-0	Fluoranthene	~~U~~ UJ	0.24	1.0	0.25	0.24	0.070	CCH
129-00-0	Pyrene	U	0.24	1.0	0.25	0.24	0.056	
56-55-3	Benzo(a)anthracene	U	0.24	1.0	0.25	0.24	0.044	
205-99-2	Benzo(b)fluoranthene	U	0.26	1.0	0.27	0.26	0.085	
207-08-9	Benzo(k)fluoranthene	U	0.24	1.0	0.25	0.24	0.047	
50-32-8	Benzo(a)pyrene	U	0.24	1.0	0.25	0.24	0.063	
193-39-5	Indeno(1,2,3-cd)pyrene	U	0.24	1.0	0.25	0.24	0.050	
53-70-3	Dibenzo(a,h)anthracene	U	0.24	1.0	0.25	0.24	0.067	
191-24-2	Benzo(g,h,i)perylene	U	0.24	1.0	0.25	0.24	0.062	
118-74-1	Hexachlorobenzene	U	0.24	1.0	0.25	0.24	0.052	
87-68-3	Hexachlorobutadiene	U	0.26	1.0	0.27	0.26	0.083	
77-47-4	Hexachlorocyclopentadiene	~~U~~ UJ	0.24	1.0	0.25	0.24	0.064	BSL
7297-45-2	2-Methylnaphthalene-D10		53%					
367-12-4	2,4-Dibromophenol		82%					
81103-79-9	Fluorene-d10		61%					
1718-51-1	Pyrene-D10		97%					

LW 2/1/09

KATAHDIN ANALYTICAL SERVICES
Report of Analytical Results

3

Client: CH2MHill
Project: TO-009 Lejeune
PO No: -
Sample Date: 11/21/08
Received Date: 11/22/08
Extraction Date: 11/25/08
Analysis Date: 15-DEC-2008 23:21
Report Date: 12/16/2008
Matrix: WATER
% Solids: NA

Lab ID: SB6791-6
Client ID: MR08-TW22-08D
SDG: TO9-8
Extracted by: CB
Extraction Method: SW846 3510
Analyst: JCG
Analysis Method: SW846 M8270C
Lab Prep Batch: WG58494
Units: ug/L

CAS#	Compound	Flags	Results	DF	PQL	Adj.PQL	Adj.MDL	
91-20-3	Naphthalene	~~U~~ UJ	0.26	1.0	0.25	0.26	0.067	CCH
91-57-6	2-Methylnaphthalene	U	0.26	1.0	0.25	0.26	0.081	
86-73-7	Fluorene	U	0.26	1.0	0.25	0.26	0.064	
85-01-8	Phenanthrene	U	0.26	1.0	0.25	0.26	0.054	
206-44-0	Fluoranthene	~~U~~ UJ	0.26	1.0	0.25	0.26	0.077	CCH
129-00-0	Pyrene	U	0.26	1.0	0.25	0.26	0.062	
56-55-3	Benzo(a)anthracene	U	0.26	1.0	0.25	0.26	0.048	
205-99-2	Benzo(b)fluoranthene	U	0.28	1.0	0.27	0.28	0.094	
207-08-9	Benzo(k)fluoranthene	U	0.26	1.0	0.25	0.26	0.052	
50-32-8	Benzo(a)pyrene	U	0.26	1.0	0.25	0.26	0.069	
193-39-5	Indeno(1,2,3-cd)pyrene	U	0.26	1.0	0.25	0.26	0.055	
53-70-3	Dibenzo(a,h)anthracene	U	0.26	1.0	0.25	0.26	0.074	
191-24-2	Benzo(g,h,i)perylene	U	0.26	1.0	0.25	0.26	0.068	
118-74-1	Hexachlorobenzene	U	0.26	1.0	0.25	0.26	0.058	
87-68-3	Hexachlorobutadiene	U	0.28	1.0	0.27	0.28	0.092	
77-47-4	Hexachlorocyclopentadiene	~~U~~ UJ	0.26	1.0	0.25	0.26	0.070	BSL
7297-45-2	2-Methylnaphthalene-D10		58%					
367-12-4	2,4-Dibromophenol		75%					
81103-79-9	Fluorene-d10		57%					
1718-51-1	Pyrene-D10		108%					

LW 2/1/09

KATAHDIN ANALYTICAL SERVICES
Report of Analytical Results

4

Client: CH2MHill
Project: TO-009 Lejeune
PO No:
Sample Date: 11/21/08
Received Date: 11/22/08
Extraction Date: 11/25/08
Analysis Date: 16-DEC-2008 01:30
Report Date: 12/16/2008
Matrix: WATER
% Solids: NA

Lab ID: SB6791-8
Client ID: MR08-TW23-08D
SDG: TO9-8
Extracted by: CB
Extraction Method: SW846 3510
Analyst: JCG
Analysis Method: SW846 M8270C
Lab Prep Batch: WG58494
Units: ug/L

CAS#	Compound	Flags	Results	DF	PQL	Adj.PQL	Adj.MDL	
91-20-3	Naphthalene	~~U~~ UJ	0.25	1.0	0.25	0.25	0.063	CCH
91-57-6	2-Methylnaphthalene	U	0.25	1.0	0.25	0.25	0.076	
86-73-7	Fluorene	U	0.25	1.0	0.25	0.25	0.060	
85-01-8	Phenanthrene	U	0.25	1.0	0.25	0.25	0.050	
206-44-0	Fluoranthene	~~U~~ UJ	0.25	1.0	0.25	0.25	0.072	CCH
129-00-0	Pyrene	U	0.25	1.0	0.25	0.25	0.058	
56-55-3	Benzo(a)anthracene	U	0.25	1.0	0.25	0.25	0.046	
205-99-2	Benzo(b)fluoranthene	U	0.27	1.0	0.27	0.27	0.088	
207-08-9	Benzo(k)fluoranthene	U	0.25	1.0	0.25	0.25	0.048	
50-32-8	Benzo(a)pyrene	U	0.25	1.0	0.25	0.25	0.065	
193-39-5	Indeno(1,2,3-cd)pyrene	U	0.25	1.0	0.25	0.25	0.051	
53-70-3	Dibenzo(a,h)anthracene	U	0.25	1.0	0.25	0.25	0.069	
191-24-2	Benzo(g,h,i)perylene	U	0.25	1.0	0.25	0.25	0.064	
118-74-1	Hexachlorobenzene	U	0.25	1.0	0.25	0.25	0.054	
87-68-3	Hexachlorobutadiene	U	0.27	1.0	0.27	0.27	0.086	
77-47-4	Hexachlorocyclopentadiene	~~U~~ UJ	0.25	1.0	0.25	0.25	0.066	BSL
7297-45-2	2-Methylnaphthalene-D10		56%					
367-12-4	2,4-Dibromophenol		66%					
81103-79-9	Fluorene-d10		56%					
1718-51-1	Pyrene-D10		98%					

RW 2/1/09

ENVIRONMENTAL
Data Services, Inc.

SEMIVOLATILE ORGANIC COMPOUNDS
USEPA Region IV - Level IV Review

Site: MCB Camp Lejeune, TO-09 SDG #: TO9-8

Client: CH2M HILL, Inc., Virginia Beach, Virginia Date: February 2, 2009

Laboratory: Katahdin Analytical Services, Scarborough, Maine Reviewer: Nancy Weaver

EDS ID	Client Sample ID	Laboratory Sample ID	Matrix
1	MR08-TW16-08D	SB6791-1	Water
2	MR08-TW21-08D	SB6791-3	Water
3	MR08-TW22-08D	SB6791-5	Water
4	MR08-TW23-08D	SB6791-7	Water

The USEPA "Contract Laboratory Program National Functional Guidelines for Organic Data Review," October 1999, and professional judgement were used in evaluating the data in this summary report.

Holding Times - All samples were extracted within 7 days for water samples and analyzed within 40 days for all samples.

GC/MS Tuning - All of the DFTPP tunes in the initial and continuing calibrations met the percent relative abundance criteria.

Initial Calibration - The initial calibrations exhibited acceptable %RSD and mean RRF values.

Continuing Calibration - The continuing calibrations exhibited acceptable %D and RRF values except the following.

CCAL Date	Compound	%D/RRF	Qualifier	Affected Samples
12/16/08	Nitrobenzene	26.24%	J/UJ	All samples
	4-Nitrophenol	41.47%	J/UJ	All samples

Surrogates - All samples exhibited acceptable surrogate recoveries.

MS/MSD - A MS/MSD sample was not analyzed.

Laboratory Control Sample - The LCS samples exhibited acceptable %R values except the following.

LCS ID	Compound	%R	Qualifier	Affected Samples
WG58493-LCS	Di-n-octylphthalate	138%	None	All ND

Internal Standard (IS) Area Performance - All internal standards met response and retention time (RT) criteria.

Method Blank - The method blanks were free of contamination.

Field, Equipment Blank - Field QC results are summarized below.

Blank ID	Compound	Conc. ug/L	Action Level ug/L	Qualifier	Affected Samples
MR08-EB111708-1	None - ND	-	-	-	-
MR08-FB112008	None - ND	-	-	-	-

Field Duplicates - Field duplicate samples were not included in this data package.

Tentatively Identified Compounds (TICs) - TICs were not reported.

Compound Quantitation - No discrepancies were identified.

KATAHDIN ANALYTICAL SERVICES
Report of Analytical Results

Client: CH2MHill
Project: TO-009 Lejeune
PO No:
Sample Date: 11/21/08
Received Date: 11/22/08
Extraction Date: 11/25/08
Analysis Date: 16-DEC-2008 12:57
Report Date: 12/16/2008
Matrix: WATER
% Solids: NA

Lab ID: SB6791-1
Client ID: MR08-TW16-08D
SDG: TO9-8
Extracted by: CB
Extraction Method: SW846 3510
Analyst: JLP
Analysis Method: SW846 8270C
Lab Prep Batch: WG58493
Units: ug/L

CAS#	Compound	Flags	Results	DF	PQL	Adj.PQL	Adj.MDL	
100-52-7	Benzaldehyde	U	9	1.0	10	9	3	
108-95-2	Phenol	U	9	1.0	10	9	2	
111-44-4	Bis(2-Chloroethyl)ether	U	9	1.0	10	9	2	
95-57-8	2-Chlorophenol	U	11	1.0	12	11	3	
95-48-7	2-Methylphenol	U	11	1.0	12	11	4	
108-60-1	2,2'-Oxybis(1-chloropropane)	U	9	1.0	10	9	2	
98-86-2	Acetophenone	U	11	1.0	12	11	4	
621-64-7	N-Nitroso-di-n-propylamine	U	9	1.0	10	9	2	
65794-96-9	3&4-Methylphenol	U	9	1.0	10	9	2	
67-72-1	Hexachloroethane	U	9	1.0	10	9	2	
98-95-3	Nitrobenzene	~~U~~ UJ	9	1.0	10	9	2	CCH
78-59-1	Isophorone	U	9	1.0	10	9	2	
88-75-5	2-Nitrophenol	U	9	1.0	10	9	3	
105-67-9	2,4-Dimethylphenol	U	11	1.0	12	11	4	
111-91-1	Bis(2-Chloroethoxy)methane	U	9	1.0	10	9	2	
120-83-2	2,4-Dichlorophenol	U	11	1.0	12	11	4	
106-47-8	4-Chloroaniline	U	9	1.0	10	9	2	
105-60-2	Caprolactam	U	9	1.0	10	9	0.4	
59-50-7	4-Chloro-3-Methylphenol	U	9	1.0	10	9	2	
88-06-2	2,4,6-Trichlorophenol	U	9	1.0	10	9	3	
95-95-4	2,4,5-Trichlorophenol	U	24	1.0	25	24	4	
91-58-7	2-Chloronaphthalene	U	9	1.0	10	9	2	
92-52-4	1,1'-Biphenyl	U	9	1.0	10	9	2	
88-74-4	2-Nitroaniline	U	24	1.0	25	24	1	
131-11-3	Dimethyl Phthalate	U	9	1.0	10	9	0.7	
606-20-2	2,6-Dinitrotoluene	U	9	1.0	10	9	1.0	
208-96-8	Acenaphthylene	U	9	1.0	10	9	2	
99-09-2	3-Nitroaniline	U	24	1.0	25	24	1	
83-32-9	Acenaphthene	U	9	1.0	10	9	2	
51-28-5	2,4-Dinitrophenol	U	42	1.0	45	42	14	
132-64-9	Dibenzofuran	U	9	1.0	10	9	1	
100-02-7	4-Nitrophenol	~~U~~ UJ	24	1.0	25	24	5	CCH
121-14-2	2,4-Dinitrotoluene	U	9	1.0	10	9	1	
84-66-2	Diethylphthalate	U	9	1.0	10	9	1	
7005-72-3	4-Chlorophenyl-phenylether	U	9	1.0	10	9	1	
100-01-6	4-Nitroaniline	U	24	1.0	25	24	2	
534-52-1	4,6-Dinitro-2-Methylphenol	U	24	1.0	25	24	6	
86-30-6	N-Nitrosodiphenylamine	U	9	1.0	10	9	2	
101-55-3	4-Bromophenyl-phenylether	U	9	1.0	10	9	1	
1912-24-9	Atrazine	U	9	1.0	10	9	2	
87-86-5	Pentachlorophenol	U	24	1.0	25	24	7	
120-12-7	Anthracene	U	9	1.0	10	9	1	
86-74-8	Carbazole	U	9	1.0	10	9	1	

kw
2/1/09

KATAHDIN ANALYTICAL SERVICES
Report of Analytical Results

Client: CH2MHill
Project: TO-009 Lejeune
PO No:
Sample Date: 11/21/08
Received Date: 11/22/08
Extraction Date: 11/25/08
Analysis Date: 16-DEC-2008 12:57
Report Date: 12/16/2008
Matrix: WATER
% Solids: NA

Lab ID: SB6791-1
Client ID: MR08-TW16-08D
SDG: TO9-8
Extracted by: CB
Extraction Method: SW846 3510
Analyst: JLP
Analysis Method: SW846 8270C
Lab Prep Batch: WG58493
Units: ug/L

CAS#	Compound	Flags	Results	DF	PQL	Adj.PQL	Adj.MDL
84-74-2	Di-n-butylphthalate	U	9	1.0	10	9	1
85-68-7	Butylbenzylphthalate	U	9	1.0	10	9	1
91-94-1	3,3'-Dichlorobenzidine	U	9	1.0	10	9	3
218-01-9	Chrysene	U	9	1.0	10	9	1
117-81-7	bis(2-Ethylhexyl)phthalate	U	9	1.0	10	9	2
117-84-0	Di-n-octylphthalate	U	9	1.0	10	9	2
367-12-4	2-Fluorophenol		41%				
13127-88-3	Phenol-D6		28%				
4165-60-0	Nitrobenzene-D5		78%				
321-60-8	2-Fluorobiphenyl		78%				
118-79-6	2,4,6-Tribromophenol		86%				
1718-51-0	Terphenyl-D14		109%				

LW 2/1/09

2

KATAHDIN ANALYTICAL SERVICES
Report of Analytical Results

Client: CH2MHill
Project: TO-009 Lejeune
PO No:
Sample Date: 11/21/08
Received Date: 11/22/08
Extraction Date: 11/25/08
Analysis Date: 16-DEC-2008 13:40
Report Date: 12/16/2008
Matrix: WATER
% Solids: NA

Lab ID: SB6791-3
Client ID: MR08-TW21-08D
SDG: TO9-8
Extracted by: CB
Extraction Method: SW846 3510
Analyst: JLP
Analysis Method: SW846 8270C
Lab Prep Batch: WG58493
Units: ug/L

CAS#	Compound	Flags	Results	DF	PQL	Adj.PQL	Adj.MDL	
100-52-7	Benzaldehyde	U	10	1.0	10	10	3	
108-95-2	Phenol	U	10	1.0	10	10	2	
111-44-4	Bis(2-Chloroethyl)ether	U	10	1.0	10	10	2	
95-57-8	2-Chlorophenol	U	11	1.0	12	11	3	
95-48-7	2-Methylphenol	U	11	1.0	12	11	4	
108-60-1	2,2'-Oxybis(1-chloropropane)	U	10	1.0	10	10	2	
98-86-2	Acetophenone	U	11	1.0	12	11	4	
621-64-7	N-Nitroso-di-n-propylamine	U	10	1.0	10	10	2	
65794-96-9	3&4-Methylphenol	U	10	1.0	10	10	2	
67-72-1	Hexachloroethane	U	10	1.0	10	10	2	
98-95-3	Nitrobenzene	~~U~~ UJ	10	1.0	10	10	2	CCH
78-59-1	Isophorone	U	10	1.0	10	10	2	
88-75-5	2-Nitrophenol	U	10	1.0	10	10	3	
105-67-9	2,4-Dimethylphenol	U	11	1.0	12	11	4	
111-91-1	Bis(2-Chloroethoxy)methane	U	10	1.0	10	10	2	
120-83-2	2,4-Dichlorophenol	U	11	1.0	12	11	4	
106-47-8	4-Chloroaniline	U	10	1.0	10	10	2	
105-60-2	Caprolactam	U	10	1.0	10	10	0.4	
59-50-7	4-Chloro-3-Methylphenol	U	10	1.0	10	10	2	
88-06-2	2,4,6-Trichlorophenol	U	10	1.0	10	10	3	
95-95-4	2,4,5-Trichlorophenol	U	24	1.0	25	24	4	
91-58-7	2-Chloronaphthalene	U	10	1.0	10	10	2	
92-52-4	1,1'-Biphenyl	U	10	1.0	10	10	2	
88-74-4	2-Nitroaniline	U	24	1.0	25	24	1	
131-11-3	Dimethyl Phthalate	U	10	1.0	10	10	0.8	
606-20-2	2,6-Dinitrotoluene	U	10	1.0	10	10	1	
208-96-8	Acenaphthylene	U	10	1.0	10	10	2	
99-09-2	3-Nitroaniline	U	24	1.0	25	24	1	
83-32-9	Acenaphthene	U	10	1.0	10	10	2	
51-28-5	2,4-Dinitrophenol	U	43	1.0	45	43	14	
132-64-9	Dibenzofuran	U	10	1.0	10	10	1	
100-02-7	4-Nitrophenol	~~U~~ UJ	24	1.0	25	24	5	CCH
121-14-2	2,4-Dinitrotoluene	U	10	1.0	10	10	1	
84-66-2	Diethylphthalate	U	10	1.0	10	10	1	
7005-72-3	4-Chlorophenyl-phenylether	U	10	1.0	10	10	1	
100-01-6	4-Nitroaniline	U	24	1.0	25	24	2	
534-52-1	4,6-Dinitro-2-Methylphenol	U	24	1.0	25	24	6	
86-30-6	N-Nitrosodiphenylamine	U	10	1.0	10	10	2	
101-55-3	4-Bromophenyl-phenylether	U	10	1.0	10	10	1	
1912-24-9	Atrazine	U	10	1.0	10	10	2	
87-86-5	Pentachlorophenol	U	24	1.0	25	24	7	
120-12-7	Anthracene	U	10	1.0	10	10	1	
86-74-8	Carbazole	U	10	1.0	10	10	1	

hw
2/1/09

KATAHDIN ANALYTICAL SERVICES
Report of Analytical Results

2

Client: CH2MHill
Project: TO-009 Lejeune
PO No:
Sample Date: 11/21/08
Received Date: 11/22/08
Extraction Date: 11/25/08
Analysis Date: 16-DEC-2008 13:40
Report Date: 12/16/2008
Matrix: WATER
% Solids: NA

Lab ID: SB6791-3
Client ID: MR08-TW21-08D
SDG: TO9-8
Extracted by: CB
Extraction Method: SW846 3510
Analyst: JLP
Analysis Method: SW846 8270C
Lab Prep Batch: WG58493
Units: ug/L

CAS#	Compound	Flags	Results	DF	PQL	Adj.PQL	Adj.MDL
84-74-2	Di-n-butylphthalate	U	10	1.0	10	10	1
85-68-7	Butylbenzylphthalate	U	10	1.0	10	10	1
91-94-1	3,3'-Dichlorobenzidine	U	10	1.0	10	10	3
218-01-9	Chrysene	U	10	1.0	10	10	1
117-81-7	bis(2-Ethylhexyl)phthalate	U	10	1.0	10	10	2
117-84-0	Di-n-octylphthalate	U	10	1.0	10	10	2
367-12-4	2-Fluorophenol		45%				
13127-88-3	Phenol-D6		28%				
4165-60-0	Nitrobenzene-D5		74%				
321-60-8	2-Fluorobiphenyl		75%				
118-79-6	2,4,6-Tribromophenol		95%				
1718-51-0	Terphenyl-D14		106%				

MW 2/11/09

3

KATAHDIN ANALYTICAL SERVICES
Report of Analytical Results

Client: CH2MHill
Project: TO-009 Lejeune
PO No:
Sample Date: 11/21/08
Received Date: 11/22/08
Extraction Date: 11/25/08
Analysis Date: 16-DEC-2008 14:22
Report Date: 12/16/2008
Matrix: WATER
% Solids: NA

Lab ID: SB6791-5
Client ID: MR08-TW22-08D
SDG: TO9-8
Extracted by: CB
Extraction Method: SW846 3510
Analyst: JLP
Analysis Method: SW846 8270C
Lab Prep Batch: WG58493
Units: ug/L

CAS#	Compound	Flags	Results	DF	PQL	Adj.PQL	Adj.MDL	
100-52-7	Benzaldehyde	U	10	1.0	10	10	3	
108-95-2	Phenol	U	10	1.0	10	10	2	
111-44-4	Bis(2-Chloroethyl)ether	U	10	1.0	10	10	2	
95-57-8	2-Chlorophenol	U	13	1.0	12	13	4	
95-48-7	2-Methylphenol	U	13	1.0	12	13	4	
108-60-1	2,2'-Oxybis(1-chloropropane)	U	10	1.0	10	10	2	
98-86-2	Acetophenone	U	13	1.0	12	13	4	
621-64-7	N-Nitroso-di-n-propylamine	U	10	1.0	10	10	2	
65794-96-9	3&4-Methylphenol	U	10	1.0	10	10	3	
67-72-1	Hexachloroethane	U	10	1.0	10	10	2	
98-95-3	Nitrobenzene	~~U~~ UJ	10	1.0	10	10	2	CCH
78-59-1	Isophorone	U	10	1.0	10	10	2	
88-75-5	2-Nitrophenol	U	10	1.0	10	10	4	
105-67-9	2,4-Dimethylphenol	U	13	1.0	12	13	4	
111-91-1	Bis(2-Chloroethoxy)methane	U	10	1.0	10	10	2	
120-83-2	2,4-Dichlorophenol	U	13	1.0	12	13	4	
106-47-8	4-Chloroaniline	U	10	1.0	10	10	2	
105-60-2	Caprolactam	U	10	1.0	10	10	0.4	
59-50-7	4-Chloro-3-Methylphenol	U	10	1.0	10	10	3	
88-06-2	2,4,6-Trichlorophenol	U	10	1.0	10	10	3	
95-95-4	2,4,5-Trichlorophenol	U	26	1.0	25	26	4	
91-58-7	2-Chloronaphthalene	U	10	1.0	10	10	2	
92-52-4	1,1'-Biphenyl	U	10	1.0	10	10	2	
88-74-4	2-Nitroaniline	U	26	1.0	25	26	2	
131-11-3	Dimethyl Phthalate	U	10	1.0	10	10	0.8	
606-20-2	2,6-Dinitrotoluene	U	10	1.0	10	10	1	
208-96-8	Acenaphthylene	U	10	1.0	10	10	2	
99-09-2	3-Nitroaniline	U	26	1.0	25	26	1	
83-32-9	Acenaphthene	U	10	1.0	10	10	2	
51-28-5	2,4-Dinitrophenol	U	47	1.0	45	47	16	
132-64-9	Dibenzofuran	U	10	1.0	10	10	2	
100-02-7	4-Nitrophenol	~~U~~ UJ	26	1.0	25	26	6	CCH
121-14-2	2,4-Dinitrotoluene	U	10	1.0	10	10	1	
84-66-2	Diethylphthalate	U	10	1.0	10	10	1	
7005-72-3	4-Chlorophenyl-phenylether	U	10	1.0	10	10	1	
100-01-6	4-Nitroaniline	U	26	1.0	25	26	2	
534-52-1	4,6-Dinitro-2-Methylphenol	U	26	1.0	25	26	6	
86-30-6	N-Nitrosodiphenylamine	U	10	1.0	10	10	2	
101-55-3	4-Bromophenyl-phenylether	U	10	1.0	10	10	1	
1912-24-9	Atrazine	U	10	1.0	10	10	2	
87-86-5	Pentachlorophenol	U	26	1.0	25	26	8	
120-12-7	Anthracene	U	10	1.0	10	10	1	
86-74-8	Carbazole	U	10	1.0	10	10	1	

LCW 2/1/09

3

KATAHDIN ANALYTICAL SERVICES
Report of Analytical Results

Client: CH2MHill
Project: TO-009 Lejeune
PO No:
Sample Date: 11/21/08
Received Date: 11/22/08
Extraction Date: 11/25/08
Analysis Date: 16-DEC-2008 14:22
Report Date: 12/16/2008
Matrix: WATER
% Solids: NA

Lab ID: SB6791-5
Client ID: MR08-TW22-08D
SDG: TO9-8
Extracted by: CB
Extraction Method: SW846 3510
Analyst: JLP
Analysis Method: SW846 8270C
Lab Prep Batch: WG58493
Units: ug/L

CAS#	Compound	Flags	Results	DF	PQL	Adj.PQL	Adj.MDL
84-74-2	Di-n-butylphthalate	U	10	1.0	10	10	1
85-68-7	Butylbenzylphthalate	U	10	1.0	10	10	2
91-94-1	3,3'-Dichlorobenzidine	U	10	1.0	10	10	3
218-01-9	Chrysene	U	10	1.0	10	10	1
117-81-7	bis(2-Ethylhexyl)phthalate	U	10	1.0	10	10	2
117-84-0	Di-n-octylphthalate	U	10	1.0	10	10	2
367-12-4	2-Fluorophenol		42%				
13127-88-3	Phenol-D6		26%				
4165-60-0	Nitrobenzene-D5		73%				
321-60-8	2-Fluorobiphenyl		71%				
118-79-6	2,4,6-Tribromophenol		90%				
1718-51-0	Terphenyl-D14		115%				

MW
2/1/09

4

KATAHDIN ANALYTICAL SERVICES
Report of Analytical Results

Client: CH2MHill
Project: TO-009 Lejeune
PO No:
Sample Date: 11/21/08
Received Date: 11/22/08
Extraction Date: 11/25/08
Analysis Date: 16-DEC-2008 15:05
Report Date: 12/16/2008
Matrix: WATER
% Solids: NA

Lab ID: SB6791-7
Client ID: MR08-TW23-08D
SDG: TO9-8
Extracted by: CB
Extraction Method: SW846 3510
Analyst: JLP
Analysis Method: SW846 8270C
Lab Prep Batch: WG58493
Units: ug/L

CAS#	Compound	Flags	Results	DF	PQL	Adj.PQL	Adj.MDL	
100-52-7	Benzaldehyde	U	10	1.0	10	10	3	
108-95-2	Phenol	U	10	1.0	10	10	2	
111-44-4	Bis(2-Chloroethyl)ether	U	10	1.0	10	10	2	
95-57-8	2-Chlorophenol	U	12	1.0	12	12	3	
95-48-7	2-Methylphenol	U	12	1.0	12	12	4	
108-60-1	2,2'-Oxybis(1-chloropropane)	U	10	1.0	10	10	2	
98-86-2	Acetophenone	U	12	1.0	12	12	4	
621-64-7	N-Nitroso-di-n-propylamine	U	10	1.0	10	10	2	
65794-96-9	3&4-Methylphenol	U	10	1.0	10	10	3	
67-72-1	Hexachloroethane	U	10	1.0	10	10	2	
98-95-3	Nitrobenzene	~~U~~ UJ	10	1.0	10	10	2	CCH
78-59-1	Isophorone	U	10	1.0	10	10	2	
88-75-5	2-Nitrophenol	U	10	1.0	10	10	4	
105-67-9	2,4-Dimethylphenol	U	12	1.0	12	12	4	
111-91-1	Bis(2-Chloroethoxy)methane	U	10	1.0	10	10	2	
120-83-2	2,4-Dichlorophenol	U	12	1.0	12	12	4	
106-47-8	4-Chloroaniline	U	10	1.0	10	10	2	
105-60-2	Caprolactam	U	10	1.0	10	10	0.4	
59-50-7	4-Chloro-3-Methylphenol	U	10	1.0	10	10	2	
88-06-2	2,4,6-Trichlorophenol	U	10	1.0	10	10	3	
95-95-4	2,4,5-Trichlorophenol	U	25	1.0	25	25	4	
91-58-7	2-Chloronaphthalene	U	10	1.0	10	10	2	
92-52-4	1,1'-Biphenyl	U	10	1.0	10	10	2	
88-74-4	2-Nitroaniline	U	25	1.0	25	25	2	
131-11-3	Dimethyl Phthalate	U	10	1.0	10	10	0.8	
606-20-2	2,6-Dinitrotoluene	U	10	1.0	10	10	1	
208-96-8	Acenaphthylene	U	10	1.0	10	10	2	
99-09-2	3-Nitroaniline	U	25	1.0	25	25	1	
83-32-9	Acenaphthene	U	10	1.0	10	10	2	
51-28-5	2,4-Dinitrophenol	U	44	1.0	45	44	15	
132-64-9	Dibenzofuran	U	10	1.0	10	10	1	
100-02-7	4-Nitrophenol	~~U~~ UJ	25	1.0	25	25	6	CCH
121-14-2	2,4-Dinitrotoluene	U	10	1.0	10	10	1	
84-66-2	Diethylphthalate	U	10	1.0	10	10	1	
7005-72-3	4-Chlorophenyl-phenylether	U	10	1.0	10	10	1	
100-01-6	4-Nitroaniline	U	25	1.0	25	25	2	
534-52-1	4,6-Dinitro-2-Methylphenol	U	25	1.0	25	25	6	
86-30-6	N-Nitrosodiphenylamine	U	10	1.0	10	10	2	
101-55-3	4-Bromophenyl-phenylether	U	10	1.0	10	10	1	
1912-24-9	Atrazine	U	10	1.0	10	10	2	
87-86-5	Pentachlorophenol	U	25	1.0	25	25	8	
120-12-7	Anthracene	U	10	1.0	10	10	1	
86-74-8	Carbazole	U	10	1.0	10	10	1	

lcw 2/1/09

KATAHDIN ANALYTICAL SERVICES
Report of Analytical Results

Client: CH2MHill
Project: TO-009 Lejeune
PO No:
Sample Date: 11/21/08
Received Date: 11/22/08
Extraction Date: 11/25/08
Analysis Date: 16-DEC-2008 15:05
Report Date: 12/16/2008
Matrix: WATER
% Solids: NA

Lab ID: SB6791-7
Client ID: MR08-TW23-08D
SDG: TO9-8
Extracted by: CB
Extraction Method: SW846 3510
Analyst: JLP
Analysis Method: SW846 8270C
Lab Prep Batch: WG58493
Units: ug/L

CAS#	Compound	Flags	Results	DF	PQL	Adj.PQL	Adj.MDL
84-74-2	Di-n-butylphthalate	U	10	1.0	10	10	1
85-68-7	Butylbenzylphthalate	U	10	1.0	10	10	1
91-94-1	3,3'-Dichlorobenzidine	U	10	1.0	10	10	3
218-01-9	Chrysene	U	10	1.0	10	10	1
117-81-7	bis(2-Ethylhexyl)phthalate	U	10	1.0	10	10	2
117-84-0	Di-n-octylphthalate	U	10	1.0	10	10	2
367-12-4	2-Fluorophenol		35%				
13127-88-3	Phenol-D6		22%				
4165-60-0	Nitrobenzene-D5		69%				
321-60-8	2-Fluorobiphenyl		70%				
118-79-6	2,4,6-Tribromophenol		71%				
1718-51-0	Terphenyl-D14		106%				

dw 2/1/09

ENVIRONMENTAL
Data Services, Inc.

EXPLOSIVES, PETN & NITROGLYCERIN

USEPA Region IV - Level IV Review

Site: MCB Camp Lejeune, TO-09 SDG #: L08120059

Client: CH2M HILL, Inc., Virginia Beach, Virginia Date: March 9, 2009

Laboratory: Microbac Laboratories, Inc., Marietta, Ohio Reviewer: Linda Sulkowski

EDS ID	Client Sample ID	Laboratory Sample ID	Matrix
1	MR08-SS051-08D	L08120059-01	Soil
2	MR08-IS051-5-6-08D	L08120059-02	Soil
3	MR08-SS050-08D	L08120059-03	Soil
4	MR08-IS050-5-6-08D	L08120059-04	Soil
5	MR08-SS052-08D	L08120059-05	Soil
6	MR08-IS052-5-6-08D	L08120059-06	Soil
7	MR08-SS053-08D	L08120059-07	Soil
8	MR08-IS053-5-6-08D	L08120059-08	Soil
9	MR08-SS054-08D	L08120059-09	Soil
9RE	MR08-SS054-08DRE	L08120059-09RE	Soil
10	MR08-IS054-6-7-08D	L08120059-10	Soil
11	MR08-SS055-08D	L08120059-11	Soil
12	MR08-IS055-4-5-08D	L08120059-12	Soil
13	MR08-EB-120208-IS	L08120059-13	Water
14	MR08-EB-120208-2S	L08120059-14	Water

The USEPA "Contract Laboratory Program National Functional Guidelines for Organic Data Review," October 1999, and professional judgement were used in evaluating the data in this summary report.

Holding Times - All samples were extracted within 7 days for water samples, 14 days for soil samples and analyzed within 40 days.

Initial Calibration - The initial calibrations exhibited acceptable %RSD and/or correlation coefficient values.

Calibration Verification - The continuing calibrations exhibited acceptable %D values except the following.

CCAL Date	Compound	%D	Qualifier	Affected Samples
12/10/08	4-Amino-2,6-Dinitrotoluene	28.1%	J/UJ	9RE, 10-12

Surrogates - All samples exhibited acceptable surrogate recoveries except for sample 9. The sample was reextracted and analyzed within holding time. The reextraction was reported.

MS/MSD - A MS/MSD sample was not analyzed.

Laboratory Control Sample - The LCS/LCSD samples exhibited acceptable %R and RPD values.

Method Blank - The method blanks were free of contamination.

Field and Equipment Blank - Field QC results are summarized below.

Blank ID	Compound	Conc. ug/L	Action Level ug/L	Qualifier	Affected Samples
MR08-EB-120208-IS	None - ND	-	-	-	-
MR08-EB-120208-SS	None - ND	-	-	-	-
MR08-FB01120608	None - ND	-	-	-	-

Field Duplicates - Field duplicate samples were not included in this data package.

Compound Identification - Retention times were acceptable and no further action was taken.

Compound Quantitation - EDS sample ID # 9 exhibited low surrogate percent recoveries and was reanalyzed with acceptable results. The reanalysis should be used for reporting purposes.

Report Number: L08120059

Report Date : January 5, 2009

Sample Number: L08120059-01
Client ID: MR08-SS051-08D
Matrix: Soil
Workgroup Number: WG289947
Collect Date: 12/02/2008 10:25
Sample Tag: 01

PrePrep Method: NONE
Prep Method: METHOD
Analytical Method: 8330MOD
Analyst: ECL
Dilution: 1
Units: mg/kg

Instrument: HPLC5
Prep Date: 12/07/2008 10:00
Cal Date: 12/01/2008 20:11
Run Date: 12/09/2008 15:38
File ID: 5L003119.F

Analyte	CAS. Number	Result	Qual	RL	MDL
1,3,5-Trinitrobenzene	99-35-4		U	0.298	0.0994
1,3-Dinitrobenzene	99-65-0		U	0.298	0.0994
2,4,6-Trinitrotoluene	118-96-7		U	0.298	0.0994
2,4-Dinitrotoluene	121-14-2		U	0.298	0.0994
2,6-Dinitrotoluene	606-20-2		U	0.298	0.0994
2-Amino-4,6-dinitrotoluene	35572-78-2		U	0.298	0.0994
2-Nitrotoluene	88-72-2		U	0.298	0.0994
3-Nitrotoluene	99-08-1		U	0.298	0.0994
4-Nitrotoluene	99-99-0		U	0.298	0.0994
4-Amino-2,6-dinitrotoluene	19406-51-0		U	0.298	0.0994
HMX	2691-41-0		U	0.298	0.0994
Nitrobenzene	98-95-3		U	0.298	0.0994
RDX	121-82-4		U	0.298	0.0994
Tetryl	479-45-8		U	0.298	0.0994
Nitroglycerin	55-63-0		U	0.298	0.0994

Surrogate	% Recovery	Lower	Upper	Qual
1,2-Dinitrobenzene	58.0	50	150	

U Undetected; the analyte was analyzed for, but not detected.

Microbac

15 lw 3/9/09

Sample Number: L08120059-01
Client ID: MR08-SS051-08D
Matrix: Soil
Workgroup Number: WG289947
Collect Date: 12/02/2008 10:25
Sample Tag: 02

PrePrep Method: NONE
Prep Method: METHOD
Analytical Method: 8330MOD
Analyst: ECL
Dilution: 1
Units: mg/kg

Instrument: HPLC5
Prep Date: 12/07/2008 10:00
Cal Date: 12/01/2008 20:11
Run Date: 12/12/2008 15:18
File ID: 5L003212.F

Analyte	CAS. Number	Result	Qual	RL	MDL
PETN	78-11-5		U	0.298	0.0994

U Undetected; the analyte was analyzed for, but not detected.

Microbac®

16 OW 3/9/09

2

Sample Number: L08120059-02
Client ID: MR08-IS051-5-6-08D
Matrix: Soil
Workgroup Number: WG289947
Collect Date: 12/02/2008 10:50
Sample Tag: 01

PrePrep Method: NONE
Prep Method: METHOD
Analytical Method: 8330MOD
Analyst: ECL
Dilution: 1
Units: mg/kg

Instrument: HPLC5
Prep Date: 12/07/2008 10:00
Cal Date: 12/01/2008 20:11
Run Date: 12/09/2008 16:16
File ID: 5L003120.F

Analyte	CAS. Number	Result	Qual	RL	MDL
1,3,5-Trinitrobenzene	99-35-4		U	0.296	0.0985
1,3-Dinitrobenzene	99-65-0		U	0.296	0.0985
2,4,6-Trinitrotoluene	118-96-7		U	0.296	0.0985
2,4-Dinitrotoluene	121-14-2		U	0.296	0.0985
2,6-Dinitrotoluene	606-20-2		U	0.296	0.0985
2-Amino-4,6-dinitrotoluene	35572-78-2		U	0.296	0.0985
2-Nitrotoluene	88-72-2		U	0.296	0.0985
3-Nitrotoluene	99-08-1		U	0.296	0.0985
4-Nitrotoluene	99-99-0		U	0.296	0.0985
4-Amino-2,6-dinitrotoluene	19406-51-0		U	0.296	0.0985
HMX	2691-41-0		U	0.296	0.0985
Nitrobenzene	98-95-3		U	0.296	0.0985
RDX	121-82-4		U	0.296	0.0985
Tetryl	479-45-8		U	0.296	0.0985
Nitroglycerin	55-63-0		U	0.296	0.0985

Surrogate	% Recovery	Lower	Upper	Qual
1,2-Dinitrobenzene	62.1	50	150	

U Undetected; the analyte was analyzed for, but not detected.

Microbac

17 lw 3/9/09

2

Sample Number: L08120059-02
Client ID: MR08-IS051-5-6-08D
Matrix: Soil
Workgroup Number: WG289947
Collect Date: 12/02/2008 10:50
Sample Tag: 02

PrePrep Method: NONE
Prep Method: METHOD
Analytical Method: 8330MOD
Analyst: ECL
Dilution: 1
Units: mg/kg

Instrument: HPLC5
Prep Date: 12/07/2008 10:00
Cal Date: 12/01/2008 20:11
Run Date: 12/12/2008 15:31
File ID: 5L003213.F

Analyte	CAS. Number	Result	Qual	RL	MDL
PETN	78-11-5		U	0.296	0.0985

U Undetected; the analyte was analyzed for, but not detected.

Microbac

18 MW 3/9/09

3

Sample Number: L08120059-03
Client ID: MR08-SS050-08D
Matrix: Soil
Workgroup Number: WG289947
Collect Date: 12/02/2008 11:25
Sample Tag: 01

PrePrep Method: NONE
Prep Method: METHOD
Analytical Method: 8330MOD
Analyst: ECL
Dilution: 1
Units: mg/kg

Instrument: HPLC5
Prep Date: 12/07/2008 10:00
Cal Date: 12/01/2008 20:11
Run Date: 12/09/2008 16:54
File ID: 5L003121.F

Analyte	CAS. Number	Result	Qual	RL	MDL
1,3,5-Trinitrobenzene	99-35-4		U	0.297	0.0989
1,3-Dinitrobenzene	99-65-0		U	0.297	0.0989
2,4,6-Trinitrotoluene	118-96-7		U	0.297	0.0989
2,4-Dinitrotoluene	121-14-2		U	0.297	0.0989
2,6-Dinitrotoluene	606-20-2		U	0.297	0.0989
2-Amino-4,6-dinitrotoluene	35572-78-2		U	0.297	0.0989
2-Nitrotoluene	88-72-2		U	0.297	0.0989
3-Nitrotoluene	99-08-1		U	0.297	0.0989
4-Nitrotoluene	99-99-0		U	0.297	0.0989
4-Amino-2,6-dinitrotoluene	19406-51-0		U	0.297	0.0989
HMX	2691-41-0		U	0.297	0.0989
Nitrobenzene	98-95-3		U	0.297	0.0989
RDX	121-82-4		U	0.297	0.0989
Tetryl	479-45-8		U	0.297	0.0989
Nitroglycerin	55-63-0		U	0.297	0.0989

Surrogate	% Recovery	Lower	Upper	Qual
1,2-Dinitrobenzene	57.8	50	150	

U Undetected; the analyte was analyzed for, but not detected.

Microbac

19 DW 3/9/09

3

Sample Number: L08120059-03
Client ID: MR08-SS050-08D
Matrix: Soil
Workgroup Number: WG289947
Collect Date: 12/02/2008 11:25
Sample Tag: 02

PrePrep Method: NONE
Prep Method: METHOD
Analytical Method: 8330MOD
Analyst: ECL
Dilution: 1
Units: mg/kg

Instrument: HPLC5
Prep Date: 12/07/2008 10:00
Cal Date: 12/01/2008 20:11
Run Date: 12/12/2008 15:45
File ID: 5L003214.F

Analyte	CAS. Number	Result	Qual	RL	MDL
PETN	78-11-5		U	0.297	0.0989

U Undetected; the analyte was analyzed for, but not detected.

Microbac

 Rev 3/9/09

4

Sample Number: L08120059-04
Client ID: MR08-IS050-5-6-08D
Matrix: Soil
Workgroup Number: WG289947
Collect Date: 12/02/2008 11:50
Sample Tag: 01

PrePrep Method: NONE
Prep Method: METHOD
Analytical Method: 8330MOD
Analyst: ECL
Dilution: 1
Units: mg/kg

Instrument: HPLC5
Prep Date: 12/07/2008 10:00
Cal Date: 12/01/2008 20:11
Run Date: 12/09/2008 17:32
File ID: 5L003122.F

Analyte	CAS. Number	Result	Qual	RL	MDL
1,3,5-Trinitrobenzene	99-35-4		U	0.293	0.0978
1,3-Dinitrobenzene	99-65-0		U	0.293	0.0978
2,4,6-Trinitrotoluene	118-96-7		U	0.293	0.0978
2,4-Dinitrotoluene	121-14-2		U	0.293	0.0978
2,6-Dinitrotoluene	606-20-2		U	0.293	0.0978
2-Amino-4,6-dinitrotoluene	35572-78-2		U	0.293	0.0978
2-Nitrotoluene	88-72-2		U	0.293	0.0978
3-Nitrotoluene	99-08-1		U	0.293	0.0978
4-Nitrotoluene	99-99-0		U	0.293	0.0978
4-Amino-2,6-dinitrotoluene	19406-51-0		U	0.293	0.0978
HMX	2691-41-0		U	0.293	0.0978
Nitrobenzene	98-95-3		U	0.293	0.0978
RDX	121-82-4		U	0.293	0.0978
Tetryl	479-45-8		U	0.293	0.0978
Nitroglycerin	55-63-0		U	0.293	0.0978

Surrogate	% Recovery	Lower	Upper	Qual
1,2-Dinitrobenzene	58.4	50	150	

U Undetected; the analyte was analyzed for, but not detected.

Microbac

 MW 3/9/09

4

Sample Number: L08120059-04
Client ID: MR08-IS050-5-6-08D
Matrix: Soil
Workgroup Number: WG289947
Collect Date: 12/02/2008 11:50
Sample Tag: 02

PrePrep Method: NONE
Prep Method: METHOD
Analytical Method: 8330MOD
Analyst: ECL
Dilution: 1
Units: mg/kg

Instrument: HPLC5
Prep Date: 12/07/2008 10:00
Cal Date: 12/01/2008 20:11
Run Date: 12/12/2008 15:58
File ID: 5L003215.F

Analyte	CAS. Number	Result	Qual	RL	MDL
PETN	78-11-5		U	0.293	0.0978

U Undetected; the analyte was analyzed for, but not detected.

Microbac

21 lw 3/9/09

5

Sample Number: L08120059-05
Client ID: MR08-SS052-08D
Matrix: Soil
Workgroup Number: WG289947
Collect Date: 12/02/2008 13:20
Sample Tag: 01

PrePrep Method: NONE
Prep Method: METHOD
Analytical Method: 8330MOD
Analyst: ECL
Dilution: 1
Units: mg/kg

Instrument: HPLC5
Prep Date: 12/07/2008 10:00
Cal Date: 12/01/2008 20:11
Run Date: 12/09/2008 18:11
File ID: 5L003123.F

Analyte	CAS. Number	Result	Qual	RL	MDL
1,3,5-Trinitrobenzene	99-35-4		U	0.293	0.0976
1,3-Dinitrobenzene	99-65-0		U	0.293	0.0976
2,4,6-Trinitrotoluene	118-96-7		U	0.293	0.0976
2,4-Dinitrotoluene	121-14-2		U	0.293	0.0976
2,6-Dinitrotoluene	606-20-2		U	0.293	0.0976
2-Amino-4,6-dinitrotoluene	35572-78-2		U	0.293	0.0976
2-Nitrotoluene	88-72-2		U	0.293	0.0976
3-Nitrotoluene	99-08-1		U	0.293	0.0976
4-Nitrotoluene	99-99-0		U	0.293	0.0976
4-Amino-2,6-dinitrotoluene	19406-51-0		U	0.293	0.0976
HMX	2691-41-0		U	0.293	0.0976
Nitrobenzene	98-95-3		U	0.293	0.0976
RDX	121-82-4		U	0.293	0.0976
Tetryl	479-45-8		U	0.293	0.0976
Nitroglycerin	55-63-0		U	0.293	0.0976

Surrogate	% Recovery	Lower	Upper	Qual
1,2-Dinitrobenzene	50.4	50	150	

U Undetected; the analyte was analyzed for, but not detected.

Microbac

24 lw 3/9/09

5

Sample Number: L08120059-05
Client ID: MR08-SS052-08D
Matrix: Soil
Workgroup Number: WG289947
Collect Date: 12/02/2008 13:20
Sample Tag: 02

PrePrep Method: NONE
Prep Method: METHOD
Analytical Method: 8330MOD
Analyst: ECL
Dilution: 1
Units: mg/kg

Instrument: HPLC5
Prep Date: 12/07/2008 10:00
Cal Date: 12/01/2008 20:11
Run Date: 12/12/2008 16:11
File ID: 5L003216.F

Analyte	CAS. Number	Result	Qual	RL	MDL
PETN	78-11-5		U	0.293	0.0976

U Undetected; the analyte was analyzed for, but not detected.

Microbac

23 DLW 3/9/09

6

Sample Number: L08120059-06
Client ID: MR08-IS052-5-6-08D
Matrix: Soil
Workgroup Number: WG289947
Collect Date: 12/02/2008 13:45
Sample Tag: 01

PrePrep Method: NONE
Prep Method: METHOD
Analytical Method: 8330MOD
Analyst: ECL
Dilution: 1
Units: mg/kg

Instrument: HPLC5
Prep Date: 12/07/2008 10:00
Cal Date: 12/01/2008 20:11
Run Date: 12/09/2008 18:49
File ID: 5L003124.F

Analyte	CAS. Number	Result	Qual	RL	MDL
1,3,5-Trinitrobenzene	99-35-4		U	0.296	0.0985
1,3-Dinitrobenzene	99-65-0		U	0.296	0.0985
2,4,6-Trinitrotoluene	118-96-7		U	0.296	0.0985
2,4-Dinitrotoluene	121-14-2		U	0.296	0.0985
2,6-Dinitrotoluene	606-20-2		U	0.296	0.0985
2-Amino-4,6-dinitrotoluene	35572-78-2		U	0.296	0.0985
2-Nitrotoluene	88-72-2		U	0.296	0.0985
3-Nitrotoluene	99-08-1		U	0.296	0.0985
4-Nitrotoluene	99-99-0		U	0.296	0.0985
4-Amino-2,6-dinitrotoluene	19406-51-0		U	0.296	0.0985
HMX	2691-41-0		U	0.296	0.0985
Nitrobenzene	98-95-3		U	0.296	0.0985
RDX	121-82-4		U	0.296	0.0985
Tetryl	479-45-8		U	0.296	0.0985
Nitroglycerin	55-63-0		U	0.296	0.0985

Surrogate	% Recovery	Lower	Upper	Qual
1,2-Dinitrobenzene	54.6	50	150	

U Undetected; the analyte was analyzed for, but not detected.

Microbac

26 MW 3/9/09

6

Sample Number: L08120059-06
Client ID: MR08-IS052-5-6-08D
Matrix: Soil
Workgroup Number: WG289947
Collect Date: 12/02/2008 13:45
Sample Tag: 02

PrePrep Method: NONE
Prep Method: METHOD
Analytical Method: 8330MOD
Analyst: ECL
Dilution: 1
Units: mg/kg

Instrument: HPLC5
Prep Date: 12/07/2008 10:00
Cal Date: 12/01/2008 20:11
Run Date: 12/12/2008 16:24
File ID: 5L003217.F

Analyte	CAS. Number	Result	Qual	RL	MDL
PETN	78-11-5		U	0.296	0.0985

U Undetected; the analyte was analyzed for, but not detected.

Microbac

25 LW 3/9/09

7

Sample Number: L08120059-07
Client ID: MR08-SS053-08D
Matrix: Soil
Workgroup Number: WG289947
Collect Date: 12/02/2008 14:05
Sample Tag: 01

PrePrep Method: NONE
Prep Method: METHOD
Analytical Method: 8330MOD
Analyst: ECL
Dilution: 1
Units: mg/kg

Instrument: HPLC5
Prep Date: 12/07/2008 10:00
Cal Date: 12/01/2008 20:11
Run Date: 12/09/2008 19:27
File ID: 5L003125.F

Analyte	CAS. Number	Result	Qual	RL	MDL
1,3,5-Trinitrobenzene	99-35-4		U	0.297	0.0989
1,3-Dinitrobenzene	99-65-0		U	0.297	0.0989
2,4,6-Trinitrotoluene	118-96-7		U	0.297	0.0989
2,4-Dinitrotoluene	121-14-2		U	0.297	0.0989
2,6-Dinitrotoluene	606-20-2		U	0.297	0.0989
2-Amino-4,6-dinitrotoluene	35572-78-2		U	0.297	0.0989
2-Nitrotoluene	88-72-2		U	0.297	0.0989
3-Nitrotoluene	99-08-1		U	0.297	0.0989
4-Nitrotoluene	99-99-0		U	0.297	0.0989
4-Amino-2,6-dinitrotoluene	19406-51-0		U	0.297	0.0989
HMX	2691-41-0		U	0.297	0.0989
Nitrobenzene	98-95-3		U	0.297	0.0989
RDX	121-82-4		U	0.297	0.0989
Tetryl	479-45-8		U	0.297	0.0989
Nitroglycerin	55-63-0		U	0.297	0.0989

Surrogate	% Recovery	Lower	Upper	Qual
1,2-Dinitrobenzene	55.6	50	150	

U Undetected; the analyte was analyzed for, but not detected.

Microbac

lw 3/9/09

7

Sample Number: L08120059-07
Client ID: MR08-SS053-08D
Matrix: Soil
Workgroup Number: WG289947
Collect Date: 12/02/2008 14:05
Sample Tag: 02

PrePrep Method: NONE
Prep Method: METHOD
Analytical Method: 8330MOD
Analyst: ECL
Dilution: 1
Units: mg/kg

Instrument: HPLC5
Prep Date: 12/07/2008 10:00
Cal Date: 12/01/2008 20:11
Run Date: 12/12/2008 16:37
File ID: 5L003218.F

Analyte	CAS. Number	Result	Qual	RL	MDL
PETN	78-11-5		U	0.297	0.0989

U Undetected; the analyte was analyzed for, but not detected.

Microbac

AW 3/9/09

8

Sample Number: L08120059-08
Client ID: MR08-IS053-5-6-08D
Matrix: Soil
Workgroup Number: WG289947
Collect Date: 12/02/2008 14:15
Sample Tag: 01

PrePrep Method: NONE
Prep Method: METHOD
Analytical Method: 8330MOD
Analyst: ECL
Dilution: 1
Units: mg/kg

Instrument: HPLC5
Prep Date: 12/07/2008 10:00
Cal Date: 12/01/2008 20:11
Run Date: 12/09/2008 20:05
File ID: 5L003126.F

Analyte	CAS. Number	Result	Qual	RL	MDL
1,3,5-Trinitrobenzene	99-35-4		U	0.300	0.0999
1,3-Dinitrobenzene	99-65-0		U	0.300	0.0999
2,4,6-Trinitrotoluene	118-96-7		U	0.300	0.0999
2,4-Dinitrotoluene	121-14-2		U	0.300	0.0999
2,6-Dinitrotoluene	606-20-2		U	0.300	0.0999
2-Amino-4,6-dinitrotoluene	35572-78-2		U	0.300	0.0999
2-Nitrotoluene	88-72-2		U	0.300	0.0999
3-Nitrotoluene	99-08-1		U	0.300	0.0999
4-Nitrotoluene	99-99-0		U	0.300	0.0999
4-Amino-2,6-dinitrotoluene	19406-51-0		U	0.300	0.0999
HMX	2691-41-0		U	0.300	0.0999
Nitrobenzene	98-95-3		U	0.300	0.0999
RDX	121-82-4		U	0.300	0.0999
Tetryl	479-45-8		U	0.300	0.0999
Nitroglycerin	55-63-0		U	0.300	0.0999

Surrogate	% Recovery	Lower	Upper	Qual
1,2-Dinitrobenzene	59.6	50	150	

U Undetected; the analyte was analyzed for, but not detected.

Microbac

lw 3/9/09

8

Sample Number: L08120059-08
Client ID: MR08-IS053-5-6-08D
Matrix: Soil
Workgroup Number: WG289947
Collect Date: 12/02/2008 14:15
Sample Tag: 02

PrePrep Method: NONE
Prep Method: METHOD
Analytical Method: 8330MOD
Analyst: ECL
Dilution: 1
Units: mg/kg

Instrument: HPLC5
Prep Date: 12/07/2008 10:00
Cal Date: 12/01/2008 20:11
Run Date: 12/12/2008 16:50
File ID: 5L003219.F

Analyte	CAS. Number	Result	Qual	RL	MDL
PETN	78-11-5		U	0.300	0.0999

U Undetected; the analyte was analyzed for, but not detected.

Microbac

 MW 3/9/09

9

Sample Number: L08120059-09
Client ID: MR08-SS054-08D
Matrix: Soil
Workgroup Number: WG289947
Collect Date: 12/02/2008 15:10
Sample Tag: 01

PrePrep Method: NONE
Prep Method: METHOD
Analytical Method: 8330MOD
Analyst: ECL
Dilution: 1
Units: mg/kg

Instrument: HPLC5
Prep Date: 12/07/2008 10:00
Cal Date: 12/01/2008 20:11
Run Date: 12/09/2008 22:18
File ID: 5L003130.F

Analyte	CAS. Number	Result	Qual	RL	MDL
1,3,5-Trinitrobenzene	99-35-4		UJ UJ	0.298	0.0992
1,3-Dinitrobenzene	99-65-0		UJ	0.298	0.0992
2,4,6-Trinitrotoluene	118-96-7		UJ	0.298	0.0992
2,4-Dinitrotoluene	121-14-2		UJ	0.298	0.0992
2,6-Dinitrotoluene	606-20-2		UJ	0.298	0.0992
2-Amino-4,6-dinitrotoluene	35572-78-2		UJ	0.298	0.0992
2-Nitrotoluene	88-72-2		UJ	0.298	0.0992
3-Nitrotoluene	99-08-1		UJ	0.298	0.0992
4-Nitrotoluene	99-99-0		UJ	0.298	0.0992
4-Amino-2,6-dinitrotoluene	19406-51-0		~~U~~ UJ	0.298	0.0992
HMX	2691-41-0		UJ	0.298	0.0992
Nitrobenzene	98-95-3		UJ	0.298	0.0992
RDX	121-82-4		UJ	0.298	0.0992
Tetryl	479-45-8		UJ	0.298	0.0992
Nitroglycerin	55-63-0		UJ	0.298	0.0992

SSL

Surrogate	% Recovery	Lower	Upper	Qual
1,2-Dinitrobenzene	43.7	50	150	*

Q One or more quality control criteria failed. See narrative.
* Surrogate or spike compound out of range
UJ Undetected; the analyte was analyzed for, but not detected.

R

Don't Report

Microbac

31 [illegible] 3/9/09

9

Sample Number: L08120059-09
Client ID: MR08-SS054-08D
Matrix: Soil
Workgroup Number: WG290381
Collect Date: 12/02/2008 15:10
Sample Tag: 02

PrePrep Method: NONE
Prep Method: METHOD
Analytical Method: 8330MOD
Analyst: ECL
Dilution: 1
Units: mg/kg

Instrument: HPLC5
Prep Date: 12/11/2008 08:00
Cal Date: 12/01/2008 20:11
Run Date: 12/12/2008 17:30
File ID: 5L003222.F

Analyte	CAS. Number	Result	Qual	RL	MDL
PETN	78-11-5		U	0.292	0.0974

U Undetected; the analyte was analyzed for, but not detected.

R RE
Don't Report

Microbac

34 LW 3/9/09

9R

Sample Number: L08120059-09
Client ID: MR08-SS054-08D
Matrix: Soil
Workgroup Number: WG290381
Collect Date: 12/02/2008 15:10
Sample Tag: RE01

PrePrep Method: NONE
Prep Method: METHOD
Analytical Method: 8330MOD
Analyst: JWR
Dilution: 1
Units: mg/kg

Instrument: HPLC4
Prep Date: 12/11/2008 08:00
Cal Date: 12/16/2008 17:34
Run Date: 12/16/2008 20:44
File ID: 4L014651.F

Analyte	CAS. Number	Result	Qual	RL	MDL	
1,3,5-Trinitrobenzene	99-35-4		U	0.292	0.0974	
1,3-Dinitrobenzene	99-65-0		U	0.292	0.0974	
2,4,6-Trinitrotoluene	118-96-7		U	0.292	0.0974	
2,4-Dinitrotoluene	121-14-2		U	0.292	0.0974	
2,6-Dinitrotoluene	606-20-2		U	0.292	0.0974	
2-Amino-4,6-dinitrotoluene	35572-78-2		U	0.292	0.0974	
2-Nitrotoluene	88-72-2		U	0.292	0.0974	
3-Nitrotoluene	99-08-1		U	0.292	0.0974	
4-Nitrotoluene	99-99-0		U	0.292	0.0974	
4-Amino-2,6-dinitrotoluene	19406-51-0		~~U~~ UJ	0.292	0.0974	CCH
HMX	2691-41-0		U	0.292	0.0974	
Nitrobenzene	98-95-3		U	0.292	0.0974	
RDX	121-82-4		U	0.292	0.0974	
Tetryl	479-45-8		U	0.292	0.0974	
Nitroglycerin	55-63-0		U	0.292	0.0974	

Surrogate	% Recovery	Lower	Upper	Qual
1,2-Dinitrobenzene	87.1	50	150	

U Undetected; the analyte was analyzed for, but not detected.

Microbac

32 KW 3/9/09

9RE

Sample Number: L08120059-09
Client ID: MR08-SS054-08D
Matrix: Soil
Workgroup Number: WG290381
Collect Date: 12/02/2008 15:10
Sample Tag: RE02

PrePrep Method: NONE
Prep Method: METHOD
Analytical Method: 8330MOD
Analyst: ECL
Dilution: 1
Units: mg/kg

Instrument: HPLC5
Prep Date: 12/11/2008 08:00
Cal Date: 12/16/2008 16:51
Run Date: 12/24/2008 10:40
File ID: 5L003511.F

Analyte	CAS. Number	Result	Qual	RL	MDL
PETN	78-11-5		U	0.292	0.0974

U Undetected; the analyte was analyzed for, but not detected.

Microbac

33 lw 3/9/09

10

Sample Number: L08120059-10
Client ID: MR08-IS054-6-7-08D
Matrix: Soil
Workgroup Number: WG289947
Collect Date: 12/02/2008 15:30
Sample Tag: 01

PrePrep Method: NONE
Prep Method: METHOD
Analytical Method: 8330MOD
Analyst: ECL
Dilution: 1
Units: mg/kg

Instrument: HPLC5
Prep Date: 12/07/2008 10:00
Cal Date: 12/01/2008 20:11
Run Date: 12/09/2008 22:56
File ID: 5L003131.F

Analyte	CAS. Number	Result	Qual	RL	MDL
1,3,5-Trinitrobenzene	99-35-4		U	0.298	0.0993
1,3-Dinitrobenzene	99-65-0		U	0.298	0.0993
2,4,6-Trinitrotoluene	118-96-7		U	0.298	0.0993
2,4-Dinitrotoluene	121-14-2		U	0.298	0.0993
2,6-Dinitrotoluene	606-20-2		U	0.298	0.0993
2-Amino-4,6-dinitrotoluene	35572-78-2		U	0.298	0.0993
2-Nitrotoluene	88-72-2		U	0.298	0.0993
3-Nitrotoluene	99-08-1		U	0.298	0.0993
4-Nitrotoluene	99-99-0		U	0.298	0.0993
4-Amino-2,6-dinitrotoluene	19406-51-0		~~U~~ UJ	0.298	0.0993
HMX	2691-41-0		U	0.298	0.0993
Nitrobenzene	98-95-3		U	0.298	0.0993
RDX	121-82-4		U	0.298	0.0993
Tetryl	479-45-8		U	0.298	0.0993
Nitroglycerin	55-63-0		U	0.298	0.0993

CCH

Surrogate	% Recovery	Lower	Upper	Qual
1,2-Dinitrobenzene	57.0	50	150	

U Undetected; the analyte was analyzed for, but not detected.
Q One or more quality control criteria failed. See narrative.

Microbac

35 AW 3/9/09

10

Sample Number: L08120059-10
Client ID: MR08-IS054-6-7-08D
Matrix: Soil
Workgroup Number: WG289947
Collect Date: 12/02/2008 15:30
Sample Tag: 02

PrePrep Method: NONE
Prep Method: METHOD
Analytical Method: 8330MOD
Analyst: ECL
Dilution: 1
Units: mg/kg

Instrument: HPLC5
Prep Date: 12/07/2008 10:00
Cal Date: 12/01/2008 20:11
Run Date: 12/12/2008 17:43
File ID: 5L003223.F

Analyte	CAS. Number	Result	Qual	RL	MDL
PETN	78-11-5		U	0.298	0.0993

U Undetected; the analyte was analyzed for, but not detected.

Microbac

MW 3/9/09

11

Sample Number: L08120059-11
Client ID: MR08-SS055-08D
Matrix: Soil
Workgroup Number: WG289947
Collect Date: 12/02/2008 15:55
Sample Tag: 01

PrePrep Method: NONE
Prep Method: METHOD
Analytical Method: 8330MOD
Analyst: ECL
Dilution: 1
Units: mg/kg

Instrument: HPLC5
Prep Date: 12/07/2008 10:00
Cal Date: 12/01/2008 20:11
Run Date: 12/09/2008 23:34
File ID: 5L003132.F

Analyte	CAS. Number	Result	Qual	RL	MDL
1,3,5-Trinitrobenzene	99-35-4		U	0.297	0.0990
1,3-Dinitrobenzene	99-65-0		U	0.297	0.0990
2,4,6-Trinitrotoluene	118-96-7		U	0.297	0.0990
2,4-Dinitrotoluene	121-14-2		U	0.297	0.0990
2,6-Dinitrotoluene	606-20-2		U	0.297	0.0990
2-Amino-4,6-dinitrotoluene	35572-78-2		U	0.297	0.0990
2-Nitrotoluene	88-72-2		U	0.297	0.0990
3-Nitrotoluene	99-08-1		U	0.297	0.0990
4-Nitrotoluene	99-99-0		U	0.297	0.0990
4-Amino-2,6-dinitrotoluene	19406-51-0		~~Q~~ UJ	0.297	0.0990 CCH
HMX	2691-41-0		U	0.297	0.0990
Nitrobenzene	98-95-3		U	0.297	0.0990
RDX	121-82-4		U	0.297	0.0990
Tetryl	479-45-8		U	0.297	0.0990
Nitroglycerin	55-63-0		U	0.297	0.0990

Surrogate	% Recovery	Lower	Upper	Qual
1,2-Dinitrobenzene	52.3	50	150	

U Undetected; the analyte was analyzed for, but not detected.
Q One or more quality control criteria failed. See narrative.

Microbac

37 DW 3/9/09

11

Sample Number: L08120059-11
Client ID: MR08-SS055-08D
Matrix: Soil
Workgroup Number: WG289947
Collect Date: 12/02/2008 15:55
Sample Tag: 02

PrePrep Method: NONE
Prep Method: METHOD
Analytical Method: 8330MOD
Analyst: ECL
Dilution: 1
Units: mg/kg

Instrument: HPLC5
Prep Date: 12/07/2008 10:00
Cal Date: 12/01/2008 20:11
Run Date: 12/12/2008 17:56
File ID: 5L003224.F

Analyte	CAS. Number	Result	Qual	RL	MDL
PETN	78-11-5		U	0.297	0.0990

U Undetected; the analyte was analyzed for, but not detected.

Microbac

 MW 3/9/09

12

Sample Number: L08120059-12
Client ID: MR08-IS055-4-5-08D
Matrix: Soil
Workgroup Number: WG289947
Collect Date: 12/02/2008 16:15
Sample Tag: 01

PrePrep Method: NONE
Prep Method: METHOD
Analytical Method: 8330MOD
Analyst: ECL
Dilution: 1
Units: mg/kg

Instrument: HPLC5
Prep Date: 12/07/2008 10:00
Cal Date: 12/01/2008 20:11
Run Date: 12/10/2008 00:12
File ID: 5L003133.F

Analyte	CAS. Number	Result	Qual	RL	MDL
1,3,5-Trinitrobenzene	99-35-4		U	0.296	0.0986
1,3-Dinitrobenzene	99-65-0		U	0.296	0.0986
2,4,6-Trinitrotoluene	118-96-7		U	0.296	0.0986
2,4-Dinitrotoluene	121-14-2		U	0.296	0.0986
2,6-Dinitrotoluene	606-20-2		U	0.296	0.0986
2-Amino-4,6-dinitrotoluene	35572-78-2		U	0.296	0.0986
2-Nitrotoluene	88-72-2		U	0.296	0.0986
3-Nitrotoluene	99-08-1		U	0.296	0.0986
4-Nitrotoluene	99-99-0		U	0.296	0.0986
4-Amino-2,6-dinitrotoluene	19406-51-0		~~U~~ UJ	0.296	0.0986 CCH
HMX	2691-41-0		U	0.296	0.0986
Nitrobenzene	98-95-3		U	0.296	0.0986
RDX	121-82-4		U	0.296	0.0986
Tetryl	479-45-8		U	0.296	0.0986
Nitroglycerin	55-63-0		U	0.296	0.0986

Surrogate	% Recovery	Lower	Upper	Qual
1,2-Dinitrobenzene	55.3	50	150	

U Undetected; the analyte was analyzed for, but not detected.
Q One or more quality control criteria failed. See narrative.

Microbac

39 MW 3/9/09

12

Sample Number: L08120059-12
Client ID: MR08-IS055-4-5-08D
Matrix: Soil
Workgroup Number: WG289947
Collect Date: 12/02/2008 16:15
Sample Tag: 02

PrePrep Method: NONE
Prep Method: METHOD
Analytical Method: 8330MOD
Analyst: ECL
Dilution: 1
Units: mg/kg

Instrument: HPLC5
Prep Date: 12/07/2008 10:00
Cal Date: 12/01/2008 20:11
Run Date: 12/12/2008 18:09
File ID: 5L003225.F

Analyte	CAS. Number	Result	Qual	RL	MDL
PETN	78-11-5		U	0.296	0.0986

U Undetected; the analyte was analyzed for, but not detected.

Microbac

40 fdw 3/9/09

13

Sample Number: L08120059-13
Client ID: MR08-EB-120208-IS
Matrix: Water
Workgroup Number: WG290129
Collect Date: 12/02/2008 00:01
Sample Tag: 01

PrePrep Method: NONE
Prep Method: 3535
Analytical Method: 8330MOD
Analyst: ECL
Dilution: 1
Units: ug/L

Instrument: HPLC5
Prep Date: 12/09/2008 08:00
Cal Date: 12/01/2008 20:11
Run Date: 12/10/2008 16:26
File ID: 5L003149.F

Analyte	CAS. Number	Result	Qual	RL	MDL
1,3,5-Trinitrobenzene	99-35-4		U	1.00	0.250
1,3-Dinitrobenzene	99-65-0		U	1.00	0.250
2,4,6-Trinitrotoluene	118-96-7		U	1.00	0.250
2,4-Dinitrotoluene	121-14-2		U	1.00	0.250
2,6-Dinitrotoluene	606-20-2		U	1.00	0.250
2-Amino-4,6-dinitrotoluene	35572-78-2		U	1.00	0.250
2-Nitrotoluene	88-72-2		U	1.00	0.250
3-Nitrotoluene	99-08-1		U	1.00	0.250
4-Nitrotoluene	99-99-0		U	1.00	0.250
4-Amino-2,6-dinitrotoluene	19406-51-0		U	1.00	0.250
HMX	2691-41-0		U	1.00	0.250
Nitrobenzene	98-95-3		U	1.00	0.250
RDX	121-82-4		U	1.00	0.250
Tetryl	479-45-8		U	1.00	0.250
Nitroglycerin	55-63-0		U	1.00	0.250

Surrogate	% Recovery	Lower	Upper	Qual
1,2-Dinitrobenzene	72.9	50	150	

U Undetected; the analyte was analyzed for, but not detected.

Microbac

41/MD
3/9/09

13

Sample Number: L08120059-13
Client ID: MR08-EB-120208-IS
Matrix: Water
Workgroup Number: WG290129
Collect Date: 12/02/2008 00:01
Sample Tag: 02

PrePrep Method: NONE
Prep Method: 3535
Analytical Method: 8330MOD
Analyst: ECL
Dilution: 1
Units: ug/L

Instrument: HPLC5
Prep Date: 12/09/2008 08:00
Cal Date: 12/01/2008 20:11
Run Date: 12/13/2008 01:23
File ID: 5L003258.F

Analyte	CAS. Number	Result	Qual	RL	MDL
PETN	78-11-5		U	1.00	0.250

U Undetected; the analyte was analyzed for, but not detected.

Microbac

42 KW 3/9/09

14

Sample Number: L08120059-14
Client ID: MR08-EB-120208-SS
Matrix: Water
Workgroup Number: WG290129
Collect Date: 12/02/2008 00:01
Sample Tag: 01

PrePrep Method: NONE
Prep Method: 3535
Analytical Method: 8330MOD
Analyst: ECL
Dilution: 1
Units: ug/L

Instrument: HPLC5
Prep Date: 12/09/2008 08:00
Cal Date: 12/01/2008 20:11
Run Date: 12/10/2008 17:04
File ID: 5L003150.F

Analyte	CAS. Number	Result	Qual	RL	MDL
1,3,5-Trinitrobenzene	99-35-4		U	1.00	0.250
1,3-Dinitrobenzene	99-65-0		U	1.00	0.250
2,4,6-Trinitrotoluene	118-96-7		U	1.00	0.250
2,4-Dinitrotoluene	121-14-2		U	1.00	0.250
2,6-Dinitrotoluene	606-20-2		U	1.00	0.250
2-Amino-4,6-dinitrotoluene	35572-78-2		U	1.00	0.250
2-Nitrotoluene	88-72-2		U	1.00	0.250
3-Nitrotoluene	99-08-1		U	1.00	0.250
4-Nitrotoluene	99-99-0		U	1.00	0.250
4-Amino-2,6-dinitrotoluene	19406-51-0		U	1.00	0.250
HMX	2691-41-0		U	1.00	0.250
Nitrobenzene	98-95-3		U	1.00	0.250
RDX	121-82-4		U	1.00	0.250
Tetryl	479-45-8		U	1.00	0.250
Nitroglycerin	55-63-0		U	1.00	0.250

Surrogate	% Recovery	Lower	Upper	Qual
1,2-Dinitrobenzene	73.8	50	150	

U Undetected; the analyte was analyzed for, but not detected.

Microbac

43 lw 3/9/09

14

Sample Number: L08120059-14
Client ID: MR08-EB-120208-SS
Matrix: Water
Workgroup Number: WG290129
Collect Date: 12/02/2008 00:01
Sample Tag: 02

PrePrep Method: NONE
Prep Method: 3535
Analytical Method: 8330MOD
Analyst: ECL
Dilution: 1
Units: ug/L

Instrument: HPLC5
Prep Date: 12/09/2008 08:00
Cal Date: 12/01/2008 20:11
Run Date: 12/13/2008 01:37
File ID: 5L003259.F

Analyte	CAS. Number	Result	Qual	RL	MDL
PETN	78-11-5		U	1.00	0.250

U Undetected; the analyte was analyzed for, but not detected.

Microbac

44 DW 3/9/09

ENVIRONMENTAL
Data Services, Inc.

METALS

USEPA Region IV - Level IV Review

Site: MCB Camp Lejeune, TO-09 SDG #: L08120059

Client: CH2M HILL, Inc., Virginia Beach, Virginia Date: March 9, 2009

Laboratory: Microbac Laboratories, Inc., Marietta, Ohio Reviewer: Nancy Weaver

EDS ID	Client Sample ID	Laboratory Sample ID	Matrix
1	MR08-SS051-08D	L08120059-01	Soil
2	MR08-IS051-5-6-08D	L08120059-02	Soil
3	MR08-SS050-08D	L08120059-03	Soil
4	MR08-IS050-5-6-08D	L08120059-04	Soil
5	MR08-SS052-08D	L08120059-05	Soil
6	MR08-IS052-5-6-08D	L08120059-06	Soil
7	MR08-SS053-08D	L08120059-07	Soil
8	MR08-IS053-5-6-08D	L08120059-08	Soil
9	MR08-SS054-08D	L08120059-09	Soil
10	MR08-IS054-6-7-08D	L08120059-10	Soil
11	MR08-SS055-08D	L08120059-11	Soil
12	MR08-IS055-4-5-08D	L08120059-12	Soil
13	MR08-EB-120208-IS	L08120059-13	Water
14	MR08-EB-120208-SS	L08120059-14	Water

The USEPA "Contract Laboratory Program National Functional Guidelines for Inorganic Data Review," October 2004, and professional judgement were used in evaluating the data in this summary report.

Holding Times - All samples were prepared and analyzed within 28 days for mercury and 180 days for all other metals.

Calibration - The ICV and CCV %R values were acceptable.

Method and Calibration Blanks - The method blanks and continuing calibration blanks exhibited contamination for several compounds, however, all sample results are non-detect or greater than 5X the blank concentration.

Field and Equipment Blank - Field QC results are summarized below.

Blank ID	Compound	Conc. ug/L	Action Level ug/L	Qualifier	Affected Samples
MR08-EB-120208-IS	None - ND	-	-	-	-
MR08-EB-120208-SS	None - ND	-	-	-	-
MR08-FB01120608	None - ND	-	-	-	-

ICP Interference Check Sample - All %R values were acceptable.

MS/MSD - The MS/MSD sample exhibited acceptable %R and RPD values except the following.

MS/MSD Sample ID	Compound	MS/MSD %R/RPD	Qualifier	Affected Samples
Reference	Barium	126%/193%/Ok	None	All ND
	Chromium	75.1%/76%/Ok	J/UJ	13, 14
	Copper	46%/49.5%/Ok	J/UJ	13, 14
	Zinc	65.3%/76.3%/Ok	J/UJ	13, 14
Reference	Barium	70.6%/Ok/Ok	J/UJ	1-12
Reference	Selenium	72.6%/Ok/Ok	J/UJ	1-12

LCS - The LCS samples exhibited acceptable %R values.

ICP Serial Dilution - The ICP serial dilution sample exhibited acceptable %D values.

Field Duplicates - Field duplicate samples were not included in this data package.

Compound Quantitation - No discrepancies were identified.

Report Number: L08120059

Report Date : January 5, 2009

1

Sample Number:	L08120059-01	PrePrep Method:	NONE	Instrument:	IRIS-ICP
Client ID:	MR08-SS051-08D	Prep Method:	3051	Prep Date:	12/09/2008 13:25
Matrix:	Soil	Analytical Method:	6010B	Cal Date:	12/11/2008 10:40
Workgroup Number:	WG290185	Analyst:	KHR	Run Date:	12/11/2008 15:39
Collect Date:	12/02/2008 10:25	Dilution:	1	File ID:	IR.121108.153900
Sample Tag:	01	Units:	mg/kg	Percent Solid:	58.6

Analyte	CAS. Number	Result	Qual	RL	MDL
Silver, Total	7440-22-4		U	1.25	0.312
Barium, Total	7440-39-3	26.1 J		0.624	0.125
Cadmium, Total	7440-43-9	0.144	J	0.249	0.0624
Chromium, Total	7440-47-3	3.76		1.25	0.150
Copper, Total	7440-50-8	7.00		2.49	0.624
Antimony, Total	7440-36-0	1.25	J	2.49	0.624
Zinc, Total	7440-66-6	19.8		2.49	0.624

MSL

U Undetected; the analyte was analyzed for, but not detected.
J Estimated ; the analyte concentration was less than the low standard (LOQ)

Microbac

392 lw 3/9/09

Report Number: L08120059
Report Date : January 5, 2009

Sample Number: L08120059-01
Client ID: MR08-SS051-08D
Matrix: Soil
Workgroup Number: WG289639
Collect Date: 12/02/2008 10:25
Sample Tag: 01

PrePrep Method: NONE
Prep Method: 3051
Analytical Method: 6020
Analyst: JYH
Dilution: 1
Units: mg/kg

Instrument: ELAN-ICP
Prep Date: 12/04/2008 07:57
Cal Date: 12/04/2008 11:09
Run Date: 12/04/2008 19:19
File ID: EL.120408.191930
Percent Solid: 58.6

Analyte	CAS. Number	Result	Qual	RL	MDL
Arsenic, Total	7440-38-2	2.27		0.504	0.126
Lead, Total	7439-92-1	40.9		0.671	0.168
Selenium, Total	7782-49-2	0.692 J		0.671	0.168

MSL

Microbac

1433 lw 3/9/09

Report Number: L08120059

Report Date : January 5, 2009

Sample Number:	L08120059-01	PrePrep Method:	NONE	Instrument:	HYDRA
Client ID:	MR08-SS051-08D	Prep Method:	7471A	Prep Date:	12/04/2008 08:22
Matrix:	Soil	Analytical Method:	7471A	Cal Date:	12/05/2008 08:27
Workgroup Number:	WG289667	Analyst:	ADC	Run Date:	12/05/2008 10:40
Collect Date:	12/02/2008 10:25	Dilution:	1	File ID:	HY.120508.104000
Sample Tag:	01	Units:	mg/kg	Percent Solid:	58.6

Analyte	CAS. Number	Result	Qual	RL	MDL
Mercury, Total	7439-97-6	0.0655	J	0.168	0.0335

J Estimated ; the analyte concentration was less than the low standard (LOQ)

Microbac

1887 lw 3/9/09

2

Sample Number: L08120059-02
Client ID: MR08-IS051-5-6-08D
Matrix: Soil
Workgroup Number: WG290185
Collect Date: 12/02/2008 10:50
Sample Tag: 01

PrePrep Method: NONE
Prep Method: 3051
Analytical Method: 6010B
Analyst: KHR
Dilution: 1
Units: mg/kg

Instrument: IRIS-ICP
Prep Date: 12/09/2008 13:25
Cal Date: 12/11/2008 10:40
Run Date: 12/11/2008 16:15
File ID: IR.121108.161500
Percent Solid: 84.7

Analyte	CAS. Number	Result	Qual	RL	MDL
Silver, Total	7440-22-4	0.238	J	0.797	0.199
Barium, Total	7440-39-3	2.78 J		0.398	0.0797
Cadmium, Total	7440-43-9		U	0.159	0.0398
Chromium, Total	7440-47-3	3.02		0.797	0.0956
Copper, Total	7440-50-8	0.456	J	1.59	0.398
Antimony, Total	7440-36-0		U	1.59	0.398
Zinc, Total	7440-66-6	0.573	J	1.59	0.398

MSL

U Undetected; the analyte was analyzed for, but not detected.
J Estimated ; the analyte concentration was less than the low standard (LOQ)

Microbac

393 DW 3/9/09

2

Sample Number: L08120059-02
Client ID: MR08-IS051-5-6-08D
Matrix: Soil
Workgroup Number: WG289639
Collect Date: 12/02/2008 10:50
Sample Tag: 01

PrePrep Method: NONE
Prep Method: 3051
Analytical Method: 6020
Analyst: JYH
Dilution: 1
Units: mg/kg

Instrument: ELAN-ICP
Prep Date: 12/04/2008 07:57
Cal Date: 12/04/2008 11:09
Run Date: 12/04/2008 19:24
File ID: EL.120408.192455
Percent Solid: 84.7

Analyte	CAS. Number	Result	Qual	RL	MDL
Arsenic, Total	7440-38-2	1.29		0.354	0.0886
Lead, Total	7439-92-1	1.84		0.472	0.118
Selenium, Total	7782-49-2	U J		0.472	0.118

MSL

U Undetected; the analyte was analyzed for, but not detected.

Microbac

1434 lw
3/9/09

2

Sample Number: L08120059-02
Client ID: MR08-IS051-5-6-08D
Matrix: Soil
Workgroup Number: WG289667
Collect Date: 12/02/2008 10:50
Sample Tag: 01

PrePrep Method: NONE
Prep Method: 7471A
Analytical Method: 7471A
Analyst: ADC
Dilution: 1
Units: mg/kg

Instrument: HYDRA
Prep Date: 12/04/2008 08:22
Cal Date: 12/05/2008 08:27
Run Date: 12/05/2008 08:47
File ID: HY.120508.084710
Percent Solid: 84.7

Analyte	CAS. Number	Result	Qual	RL	MDL
Mercury, Total	7439-97-6		U	0.113	0.0225

U Undetected; the analyte was analyzed for, but not detected.

Microbac

1888 MW 3/9/09

3

Sample Number: L08120059-03
Client ID: MR08-SS050-08D
Matrix: Soil
Workgroup Number: WG290185
Collect Date: 12/02/2008 11:25
Sample Tag: 01

PrePrep Method: NONE
Prep Method: 3051
Analytical Method: 6010B
Analyst: KHR
Dilution: 1
Units: mg/kg

Instrument: IRIS-ICP
Prep Date: 12/09/2008 13:26
Cal Date: 12/11/2008 10:40
Run Date: 12/11/2008 16:21
File ID: IR.121108.162100
Percent Solid: 82.6

Analyte	CAS. Number	Result	Qual	RL	MDL
Silver, Total	7440-22-4	1.28		0.932	0.233
Barium, Total	7440-39-3	16.9 J		0.466	0.0932
Cadmium, Total	7440-43-9	0.518		0.186	0.0466
Chromium, Total	7440-47-3	10.4		0.932	0.112
Copper, Total	7440-50-8	19.6		1.86	0.466
Antimony, Total	7440-36-0	1.38	J	1.86	0.466
Zinc, Total	7440-66-6	52.2		1.86	0.466

MSL

J Estimated ; the analyte concentration was less than the low standard (LOQ)

Microbac

 kw 3/9/09

3

Sample Number: L08120059-03
Client ID: MR08-SS050-08D
Matrix: Soil
Workgroup Number: WG289639
Collect Date: 12/02/2008 11:25
Sample Tag: 01

PrePrep Method: NONE
Prep Method: 3051
Analytical Method: 6020
Analyst: JYH
Dilution: 1
Units: mg/kg

Instrument: ELAN-ICP
Prep Date: 12/04/2008 07:57
Cal Date: 12/04/2008 11:09
Run Date: 12/04/2008 19:41
File ID: EL.120408.194106
Percent Solid: 82.6

Analyte	CAS. Number	Result	Qual	RL	MDL	
Arsenic, Total	7440-38-2	1.43		0.350	0.0875	
Selenium, Total	7782-49-2	0.340 J	J	0.467	0.117	NSL

J Estimated ; the analyte concentration was less than the low standard (LOQ)

Microbac

1435 lw 3/9/09

3

Sample Number:	L08120059-03	PrePrep Method:	NONE	Instrument:	HYDRA
Client ID:	MR08-SS050-08D	Prep Method:	7471A	Prep Date:	12/04/2008 08:22
Matrix:	Soil	Analytical Method:	7471A	Cal Date:	12/05/2008 08:27
Workgroup Number:	WG289667	Analyst:	ADC	Run Date:	12/05/2008 08:49
Collect Date:	12/02/2008 11:25	Dilution:	1	File ID:	HY.120508.084902
Sample Tag:	01	Units:	mg/kg	Percent Solid:	82.6

Analyte	CAS. Number	Result	Qual	RL	MDL
Mercury, Total	7439-97-6	0.263		0.118	0.0237

Microbac

1889 LW 3/9/09

3

Sample Number: L08120059-03
Client ID: MR08-SS050-08D
Matrix: Soil
Workgroup Number: WG289639
Collect Date: 12/02/2008 11:25
Sample Tag: DL01

PrePrep Method: NONE
Prep Method: 3051
Analytical Method: 6020
Analyst: JYH
Dilution: 50
Units: mg/kg

Instrument: ELAN-ICP
Prep Date: 12/04/2008 07:57
Cal Date: 12/04/2008 11:09
Run Date: 12/04/2008 21:30
File ID: EL.120408.213014
Percent Solid: 82.6

Analyte	CAS. Number	Result	Qual	RL	MDL
Lead, Total	7439-92-1	81.3		23.3	5.83

Microbac

1436 MW 3/9/09

4

Sample Number: L08120059-04
Client ID: MR08-IS050-5-6-08D
Matrix: Soil
Workgroup Number: WG290185
Collect Date: 12/02/2008 11:50
Sample Tag: 01

PrePrep Method: NONE
Prep Method: 3051
Analytical Method: 6010B
Analyst: KHR
Dilution: 1
Units: mg/kg

Instrument: IRIS-ICP
Prep Date: 12/09/2008 13:27
Cal Date: 12/11/2008 10:40
Run Date: 12/11/2008 16:28
File ID: IR.121108.162800
Percent Solid: 83.3

Analyte	CAS. Number	Result	Qual	RL	MDL
Silver, Total	7440-22-4	0.274	J	0.894	0.224
Barium, Total	7440-39-3	11.5 J		0.447	0.0894
Cadmium, Total	7440-43-9		U	0.179	0.0447
Chromium, Total	7440-47-3	5.79		0.894	0.107
Copper, Total	7440-50-8	1.37	J	1.79	0.447
Antimony, Total	7440-36-0		U	1.79	0.447
Zinc, Total	7440-66-6	0.931	J	1.79	0.447

MSL

U Undetected; the analyte was analyzed for, but not detected.
J Estimated ; the analyte concentration was less than the low standard (LOQ)

Microbac

395 LW 3/9/09

4

Sample Number: L08120059-04
Client ID: MR08-IS050-5-6-08D
Matrix: Soil
Workgroup Number: WG289639
Collect Date: 12/02/2008 11:50
Sample Tag: 01

PrePrep Method: NONE
Prep Method: 3051
Analytical Method: 6020
Analyst: JYH
Dilution: 1
Units: mg/kg

Instrument: ELAN-ICP
Prep Date: 12/04/2008 07:57
Cal Date: 12/04/2008 11:09
Run Date: 12/04/2008 19:46
File ID: EL.120408.194628
Percent Solid: 83.3

Analyte	CAS. Number	Result	Qual	RL	MDL
Arsenic, Total	7440-38-2	0.122	J	0.356	0.0891
Lead, Total	7439-92-1	7.53		0.475	0.119
Selenium, Total	7782-49-2	0.418 J	J	0.475	0.119

MSL

J Estimated ; the analyte concentration was less than the low standard (LOQ)

Microbac

1437 3/19/09

4

Sample Number: L08120059-04
Client ID: MR08-IS050-5-6-08D
Matrix: Soil
Workgroup Number: WG289667
Collect Date: 12/02/2008 11:50
Sample Tag: 01

PrePrep Method: NONE
Prep Method: 7471A
Analytical Method: 7471A
Analyst: ADC
Dilution: 1
Units: mg/kg

Instrument: HYDRA
Prep Date: 12/04/2008 08:22
Cal Date: 12/05/2008 08:27
Run Date: 12/05/2008 08:50
File ID: HY.120508.085046
Percent Solid: 83.3

Analyte	CAS. Number	Result	Qual	RL	MDL
Mercury, Total	7439-97-6	0.0441	J	0.118	0.0236

J Estimated ; the analyte concentration was less than the low standard (LOQ)

Microbac

1890 lw 3/9/09

5

Sample Number: L08120059-05
Client ID: MR08-SS052-08D
Matrix: Soil
Workgroup Number: WG290185
Collect Date: 12/02/2008 13:20
Sample Tag: 01

PrePrep Method: NONE
Prep Method: 3051
Analytical Method: 6010B
Analyst: KHR
Dilution: 1
Units: mg/kg

Instrument: IRIS-ICP
Prep Date: 12/09/2008 13:28
Cal Date: 12/11/2008 10:40
Run Date: 12/11/2008 16:34
File ID: IR.121108.163400
Percent Solid: 72.7

Analyte	CAS. Number	Result	Qual	RL	MDL
Silver, Total	7440-22-4		U	1.04	0.261
Barium, Total	7440-39-3	33.4 J		0.521	0.104
Cadmium, Total	7440-43-9	0.274		0.209	0.0521
Chromium, Total	7440-47-3	2.39		1.04	0.125
Copper, Total	7440-50-8	2.70		2.09	0.521
Antimony, Total	7440-36-0	0.643	J	2.09	0.521
Zinc, Total	7440-66-6	22.2		2.09	0.521

MSL

U Undetected; the analyte was analyzed for, but not detected.
J Estimated ; the analyte concentration was less than the low standard (LOQ)

Microbac

lw 3/9/09

5

Sample Number: L08120059-05
Client ID: MR08-SS052-08D
Matrix: Soil
Workgroup Number: WG289639
Collect Date: 12/02/2008 13:20
Sample Tag: 01

PrePrep Method: NONE
Prep Method: 3051
Analytical Method: 6020
Analyst: JYH
Dilution: 1
Units: mg/kg

Instrument: ELAN-ICP
Prep Date: 12/04/2008 07:57
Cal Date: 12/04/2008 11:09
Run Date: 12/04/2008 20:03
File ID: EL.120408.200314
Percent Solid: 72.7

Analyte	CAS. Number	Result	Qual	RL	MDL
Arsenic, Total	7440-38-2	8.79		0.413	0.103
Lead, Total	7439-92-1	35.2		0.550	0.138
Selenium, Total	7782-49-2	0.432 J	~~J~~	0.550	0.138

MSL

J Estimated ; the analyte concentration was less than the low standard (LOQ)

Microbac

1438 lw 3/9/09

5

Sample Number: L08120059-05
Client ID: MR08-SS052-08D
Matrix: Soil
Workgroup Number: WG289667
Collect Date: 12/02/2008 13:20
Sample Tag: 01

PrePrep Method: NONE
Prep Method: 7471A
Analytical Method: 7471A
Analyst: ADC
Dilution: 1
Units: mg/kg

Instrument: HYDRA
Prep Date: 12/04/2008 08:22
Cal Date: 12/05/2008 08:27
Run Date: 12/05/2008 08:52
File ID: HY.120508.085249
Percent Solid: 72.7

Analyte	CAS. Number	Result	Qual	RL	MDL
Mercury, Total	7439-97-6	0.0629	J	0.128	0.0256

J Estimated ; the analyte concentration was less than the low standard (LOQ)

Microbac

 fw 3/9/09

6

Sample Number: L08120059-06
Client ID: MR08-IS052-5-6-08D
Matrix: Soil
Workgroup Number: WG290185
Collect Date: 12/02/2008 13:45
Sample Tag: 01

PrePrep Method: NONE
Prep Method: 3051
Analytical Method: 6010B
Analyst: KHR
Dilution: 1
Units: mg/kg

Instrument: IRIS-ICP
Prep Date: 12/09/2008 13:29
Cal Date: 12/11/2008 10:40
Run Date: 12/11/2008 16:40
File ID: IR.121108.164000
Percent Solid: 85.6

Analyte	CAS. Number	Result	Qual	RL	MDL
Silver, Total	7440-22-4		U	0.878	0.220
Barium, Total	7440-39-3	3.15 J		0.439	0.0878
Cadmium, Total	7440-43-9		U	0.176	0.0439
Chromium, Total	7440-47-3	4.21		0.878	0.105
Copper, Total	7440-50-8	0.471	J	1.76	0.439
Antimony, Total	7440-36-0		U	1.76	0.439
Zinc, Total	7440-66-6	0.642	J	1.76	0.439

MSL

U Undetected; the analyte was analyzed for, but not detected.
J Estimated ; the analyte concentration was less than the low standard (LOQ)

Microbac

397 MW 3/9/09

6

Sample Number: L08120059-06
Client ID: MR08-IS052-5-6-08D
Matrix: Soil
Workgroup Number: WG289639
Collect Date: 12/02/2008 13:45
Sample Tag: 01

PrePrep Method: NONE
Prep Method: 3051
Analytical Method: 6020
Analyst: JYH
Dilution: 1
Units: mg/kg

Instrument: ELAN-ICP
Prep Date: 12/04/2008 07:57
Cal Date: 12/04/2008 11:09
Run Date: 12/04/2008 20:08
File ID: EL.120408.200837
Percent Solid: 85.6

Analyte	CAS. Number	Result	Qual	RL	MDL
Arsenic, Total	7440-38-2	1.87		0.343	0.0857
Lead, Total	7439-92-1	3.86		0.457	0.114
Selenium, Total	7782-49-2	~~U~~	~~U~~	0.457	0.114

MSL

U Undetected; the analyte was analyzed for, but not detected.

Microbac

1439 319109

6

Sample Number:	L08120059-06	PrePrep Method:	NONE	Instrument:	HYDRA
Client ID:	MR08-IS052-5-6-08D	Prep Method:	7471A	Prep Date:	12/04/2008 08:22
Matrix:	Soil	Analytical Method:	7471A	Cal Date:	12/05/2008 08:27
Workgroup Number:	WG289667	Analyst:	ADC	Run Date:	12/05/2008 09:01
Collect Date:	12/02/2008 13:45	Dilution:	1	File ID:	HY.120508.090146
Sample Tag:	01	Units:	mg/kg	Percent Solid:	85.6

Analyte	CAS. Number	Result	Qual	RL	MDL
Mercury, Total	7439-97-6		U	0.114	0.0227

U Undetected; the analyte was analyzed for, but not detected.

Microbac

1892 luv 3/9/09

7

Sample Number: L08120059-07
Client ID: MR08-SS053-08D
Matrix: Soil
Workgroup Number: WG290185
Collect Date: 12/02/2008 14:05
Sample Tag: 01

PrePrep Method: NONE
Prep Method: 3051
Analytical Method: 6010B
Analyst: KHR
Dilution: 1
Units: mg/kg

Instrument: IRIS-ICP
Prep Date: 12/09/2008 13:29
Cal Date: 12/11/2008 10:40
Run Date: 12/11/2008 16:46
File ID: IR.121108.164600
Percent Solid: 81.7

Analyte	CAS. Number	Result	Qual	RL	MDL
Silver, Total	7440-22-4		U	0.894	0.223
Barium, Total	7440-39-3	16.8 J		0.447	0.0894 MSL
Cadmium, Total	7440-43-9	0.101	J	0.179	0.0447
Chromium, Total	7440-47-3	1.52		0.894	0.107
Copper, Total	7440-50-8	1.94		1.79	0.447
Antimony, Total	7440-36-0		U	1.79	0.447
Zinc, Total	7440-66-6	5.75		1.79	0.447

U Undetected; the analyte was analyzed for, but not detected.
J Estimated ; the analyte concentration was less than the low standard (LOQ)

Microbac

 3/9/09

7

Sample Number: L08120059-07
Client ID: MR08-SS053-08D
Matrix: Soil
Workgroup Number: WG289639
Collect Date: 12/02/2008 14:05
Sample Tag: 01

PrePrep Method: NONE
Prep Method: 3051
Analytical Method: 6020
Analyst: JYH
Dilution: 1
Units: mg/kg

Instrument: ELAN-ICP
Prep Date: 12/04/2008 07:57
Cal Date: 12/04/2008 11:09
Run Date: 12/04/2008 20:24
File ID: EL.120408.202449
Percent Solid: 81.7

Analyte	CAS. Number	Result	Qual	RL	MDL
Arsenic, Total	7440-38-2	10.6		0.352	0.0879
Lead, Total	7439-92-1	21.3		0.469	0.117
Selenium, Total	7782-49-2	0.284 J	~~J~~	0.469	0.117

MSL

J Estimated ; the analyte concentration was less than the low standard (LOQ)

Microbac

1440 lw 3/9/09

7

Sample Number:	L08120059-07	PrePrep Method:	NONE	Instrument:	HYDRA
Client ID:	MR08-SS053-08D	Prep Method:	7471A	Prep Date:	12/04/2008 08:22
Matrix:	Soil	Analytical Method:	7471A	Cal Date:	12/05/2008 08:27
Workgroup Number:	WG289667	Analyst:	ADC	Run Date:	12/05/2008 09:03
Collect Date:	12/02/2008 14:05	Dilution:	1	File ID:	HY.120508.090340
Sample Tag:	01	Units:	mg/kg	Percent Solid:	81.7

Analyte	CAS. Number	Result	Qual	RL	MDL
Mercury, Total	7439-97-6	0.0402	J	0.113	0.0226

J Estimated ; the analyte concentration was less than the low standard (LOQ)

Microbac

1893 [illegible] 3/9/09

8

Sample Number: L08120059-08
Client ID: MR08-IS053-5-6-08D
Matrix: Soil
Workgroup Number: WG290185
Collect Date: 12/02/2008 14:15
Sample Tag: 01

PrePrep Method: NONE
Prep Method: 3051
Analytical Method: 6010B
Analyst: KHR
Dilution: 1
Units: mg/kg

Instrument: IRIS-ICP
Prep Date: 12/09/2008 13:30
Cal Date: 12/11/2008 10:40
Run Date: 12/11/2008 16:52
File ID: IR.121108.165200
Percent Solid: 85.1

Analyte	CAS. Number	Result	Qual	RL	MDL
Silver, Total	7440-22-4		U	0.880	0.220
Barium, Total	7440-39-3	4.14 J		0.440	0.0880 MSL
Cadmium, Total	7440-43-9		U	0.176	0.0440
Chromium, Total	7440-47-3	5.09		0.880	0.106
Copper, Total	7440-50-8	0.527	J	1.76	0.440
Antimony, Total	7440-36-0		U	1.76	0.440
Zinc, Total	7440-66-6	1.48	J	1.76	0.440

U Undetected; the analyte was analyzed for, but not detected.
J Estimated ; the analyte concentration was less than the low standard (LOQ)

Microbac

 lw 3/9/09

8

Sample Number: L08120059-08
Client ID: MR08-IS053-5-6-08D
Matrix: Soil
Workgroup Number: WG289639
Collect Date: 12/02/2008 14:15
Sample Tag: 01

PrePrep Method: NONE
Prep Method: 3051
Analytical Method: 6020
Analyst: JYH
Dilution: 1
Units: mg/kg

Instrument: ELAN-ICP
Prep Date: 12/04/2008 07:57
Cal Date: 12/04/2008 11:09
Run Date: 12/04/2008 20:30
File ID: EL.120408.203014
Percent Solid: 85.1

Analyte	CAS. Number	Result	Qual	RL	MDL
Arsenic, Total	7440-38-2	0.259	J	0.338	0.0845
Lead, Total	7439-92-1	2.38		0.451	0.113
Selenium, Total	7782-49-2	UJ	~~J~~	0.451	0.113

MSL

U Undetected; the analyte was analyzed for, but not detected.
J Estimated ; the analyte concentration was less than the low standard (LOQ)

Microbac

1441 lw 3/9/09

8

Sample Number: L08120059-08
Client ID: MR08-IS053-5-6-08D
Matrix: Soil
Workgroup Number: WG289667
Collect Date: 12/02/2008 14:15
Sample Tag: 01

PrePrep Method: NONE
Prep Method: 7471A
Analytical Method: 7471A
Analyst: ADC
Dilution: 1
Units: mg/kg

Instrument: HYDRA
Prep Date: 12/04/2008 08:22
Cal Date: 12/05/2008 08:27
Run Date: 12/05/2008 09:05
File ID: HY.120508.090533
Percent Solid: 85.1

Analyte	CAS. Number	Result	Qual	RL	MDL
Mercury, Total	7439-97-6		U	0.110	0.0221

U Undetected; the analyte was analyzed for, but not detected.

Microbac

LW
3/9/09

9

Sample Number: L08120059-09
Client ID: MR08-SS054-08D
Matrix: Soil
Workgroup Number: WG290185
Collect Date: 12/02/2008 15:10
Sample Tag: 01

PrePrep Method: NONE
Prep Method: 3051
Analytical Method: 6010B
Analyst: KHR
Dilution: 1
Units: mg/kg

Instrument: IRIS-ICP
Prep Date: 12/09/2008 13:31
Cal Date: 12/11/2008 10:40
Run Date: 12/11/2008 16:58
File ID: IR.121108.165800
Percent Solid: 63.6

Analyte	CAS. Number	Result	Qual	RL	MDL
Silver, Total	7440-22-4		U	1.19	0.297
Barium, Total	7440-39-3	34.7 J		0.594	0.119
Cadmium, Total	7440-43-9	0.112	J	0.238	0.0594
Chromium, Total	7440-47-3	3.74		1.19	0.143
Copper, Total	7440-50-8	4.71		2.38	0.594
Antimony, Total	7440-36-0	1.28	J	2.38	0.594
Zinc, Total	7440-66-6	14.5		2.38	0.594

MQ

U Undetected; the analyte was analyzed for, but not detected.
J Estimated ; the analyte concentration was less than the low standard (LOQ)

Microbac

400 MW
3/9/09

9

Sample Number: L08120059-09
Client ID: MR08-SS054-08D
Matrix: Soil
Workgroup Number: WG289639
Collect Date: 12/02/2008 15:10
Sample Tag: 01

PrePrep Method: NONE
Prep Method: 3051
Analytical Method: 6020
Analyst: JYH
Dilution: 1
Units: mg/kg

Instrument: ELAN-ICP
Prep Date: 12/04/2008 07:57
Cal Date: 12/04/2008 11:09
Run Date: 12/04/2008 20:35
File ID: EL.120408.203538
Percent Solid: 63.6

Analyte	CAS. Number	Result	Qual	RL	MDL
Arsenic, Total	7440-38-2	15.3		0.464	0.116
Lead, Total	7439-92-1	49.9		0.619	0.155
Selenium, Total	7782-49-2	1.87 J		0.619	0.155

MSL

Microbac

1442 lw 3/9/09

9

Sample Number: L08120059-09
Client ID: MR08-SS054-08D
Matrix: Soil
Workgroup Number: WG289667
Collect Date: 12/02/2008 15:10
Sample Tag: 01

PrePrep Method: NONE
Prep Method: 7471A
Analytical Method: 7471A
Analyst: ADC
Dilution: 1
Units: mg/kg

Instrument: HYDRA
Prep Date: 12/04/2008 08:22
Cal Date: 12/05/2008 08:27
Run Date: 12/05/2008 09:07
File ID: HY.120508.090727
Percent Solid: 63.6

Analyte	CAS. Number	Result	Qual	RL	MDL
Mercury, Total	7439-97-6	0.102	J	0.157	0.0314

J Estimated ; the analyte concentration was less than the low standard (LOQ)

Microbac

1895 LW 3/9/09

10

Sample Number: L08120059-10
Client ID: MR08-IS054-6-7-08D
Matrix: Soil
Workgroup Number: WG290185
Collect Date: 12/02/2008 15:30
Sample Tag: 01

PrePrep Method: NONE
Prep Method: 3051
Analytical Method: 6010B
Analyst: KHR
Dilution: 1
Units: mg/kg

Instrument: IRIS-ICP
Prep Date: 12/09/2008 13:31
Cal Date: 12/11/2008 10:40
Run Date: 12/11/2008 17:04
File ID: IR.121108.170400
Percent Solid: 85.0

Analyte	CAS. Number	Result	Qual	RL	MDL
Silver, Total	7440-22-4		U	0.861	0.215
Barium, Total	7440-39-3	3.94 J		0.431	0.0861
Cadmium, Total	7440-43-9		U	0.172	0.0431
Chromium, Total	7440-47-3	4.00		0.861	0.103
Copper, Total	7440-50-8	0.624	J	1.72	0.431
Antimony, Total	7440-36-0		U	1.72	0.431
Zinc, Total	7440-66-6	1.71	J	1.72	0.431

MSL

U Undetected; the analyte was analyzed for, but not detected.
J Estimated ; the analyte concentration was less than the low standard (LOQ)

Microbac

401 lw
3/9/09

10

Sample Number: L08120059-10
Client ID: MR08-IS054-6-7-08D
Matrix: Soil
Workgroup Number: WG289639
Collect Date: 12/02/2008 15:30
Sample Tag: 01

PrePrep Method: NONE
Prep Method: 3051
Analytical Method: 6020
Analyst: JYH
Dilution: 1
Units: mg/kg

Instrument: ELAN-ICP
Prep Date: 12/04/2008 07:57
Cal Date: 12/04/2008 11:09
Run Date: 12/04/2008 20:41
File ID: EL.120408.204104
Percent Solid: 85.0

Analyte	CAS. Number	Result	Qual	RL	MDL
Arsenic, Total	7440-38-2	0.154	J	0.343	0.0856
Lead, Total	7439-92-1	2.17		0.457	0.114
Selenium, Total	7782-49-2	0.243 J	~~J~~	0.457	0.114

MSL

J Estimated ; the analyte concentration was less than the low standard (LOQ)

Microbac

1443 lw 3/9/09

10

Sample Number:	L08120059-10	PrePrep Method:	NONE	Instrument:	HYDRA
Client ID:	MR08-IS054-6-7-08D	Prep Method:	7471A	Prep Date:	12/04/2008 08:22
Matrix:	Soil	Analytical Method:	7471A	Cal Date:	12/05/2008 08:27
Workgroup Number:	WG289667	Analyst:	ADC	Run Date:	12/05/2008 09:09
Collect Date:	12/02/2008 15:30	Dilution:	1	File ID:	HY.120508.090921
Sample Tag:	01	Units:	mg/kg	Percent Solid:	85.0

Analyte	CAS. Number	Result	Qual	RL	MDL
Mercury, Total	7439-97-6		U	0.115	0.0229

U Undetected; the analyte was analyzed for, but not detected.

Microbac

1896 DW 3/9/09

11

Sample Number: L08120059-11
Client ID: MR08-SS055-08D
Matrix: Soil
Workgroup Number: WG290185
Collect Date: 12/02/2008 15:55
Sample Tag: 01

PrePrep Method: NONE
Prep Method: 3051
Analytical Method: 6010B
Analyst: KHR
Dilution: 1
Units: mg/kg

Instrument: IRIS-ICP
Prep Date: 12/09/2008 13:32
Cal Date: 12/11/2008 10:40
Run Date: 12/11/2008 17:10
File ID: IR.121108.171000
Percent Solid: 61.6

Analyte	CAS. Number	Result	Qual	RL	MDL
Silver, Total	7440-22-4	0.360	J	1.23	0.307
Barium, Total	7440-39-3	46.4 J		0.614	0.123
Cadmium, Total	7440-43-9	0.302		0.246	0.0614
Chromium, Total	7440-47-3	3.89		1.23	0.147
Copper, Total	7440-50-8	5.09		2.46	0.614
Antimony, Total	7440-36-0	1.33	J	2.46	0.614
Zinc, Total	7440-66-6	14.1		2.46	0.614

MSL

J Estimated ; the analyte concentration was less than the low standard (LOQ)

Microbac

402 MW 3/9/09

11

Sample Number: L08120059-11
Client ID: MR08-SS055-08D
Matrix: Soil
Workgroup Number: WG289639
Collect Date: 12/02/2008 15:55
Sample Tag: 01

PrePrep Method: NONE
Prep Method: 3051
Analytical Method: 6020
Analyst: JYH
Dilution: 1
Units: mg/kg

Instrument: ELAN-ICP
Prep Date: 12/04/2008 07:57
Cal Date: 12/04/2008 11:09
Run Date: 12/04/2008 20:46
File ID: EL.120408.204629
Percent Solid: 61.6

Analyte	CAS. Number	Result	Qual	RL	MDL
Arsenic, Total	7440-38-2	15.5		0.475	0.119
Lead, Total	7439-92-1	38.6		0.634	0.158
Selenium, Total	7782-49-2	1.61 J		0.634	0.158

MSL

Microbac

1444 MW 3/9/09

11

Sample Number: L08120059-11
Client ID: MR08-SS055-08D
Matrix: Soil
Workgroup Number: WG289667
Collect Date: 12/02/2008 15:55
Sample Tag: 01

PrePrep Method: NONE
Prep Method: 7471A
Analytical Method: 7471A
Analyst: ADC
Dilution: 1
Units: mg/kg

Instrument: HYDRA
Prep Date: 12/04/2008 08:22
Cal Date: 12/05/2008 08:27
Run Date: 12/05/2008 09:11
File ID: HY.120508.091105
Percent Solid: 61.6

Analyte	CAS. Number	Result	Qual	RL	MDL
Mercury, Total	7439-97-6	0.187		0.162	0.0325

Microbac

1897 JW 3/9/09

12

Sample Number: L08120059-12
Client ID: MR08-IS055-4-5-08D
Matrix: Soil
Workgroup Number: WG290470
Collect Date: 12/02/2008 16:15
Sample Tag: 01

PrePrep Method: NONE
Prep Method: 3051
Analytical Method: 6010B
Analyst: KHR
Dilution: 1
Units: mg/kg

Instrument: IRIS-ICP
Prep Date: 12/11/2008 11:36
Cal Date: 12/15/2008 11:44
Run Date: 12/15/2008 12:58
File ID: IR.121508.125800
Percent Solid: 84.6

Analyte	CAS. Number	Result	Qual	RL	MDL
Silver, Total	7440-22-4		U	0.841	0.210
Barium, Total	7440-39-3	2.38 J		0.420	0.0841
Cadmium, Total	7440-43-9		U	0.168	0.0420
Chromium, Total	7440-47-3	2.07		0.841	0.101
Copper, Total	7440-50-8	1.09	J	1.68	0.420
Antimony, Total	7440-36-0		U	1.68	0.420
Zinc, Total	7440-66-6	1.31	J	1.68	0.420

MSL

U Undetected; the analyte was analyzed for, but not detected.
J Estimated ; the analyte concentration was less than the low standard (LOQ)

Microbac

403 MW 3/9/09

12

Sample Number: L08120059-12
Client ID: MR08-IS055-4-5-08D
Matrix: Soil
Workgroup Number: WG289639
Collect Date: 12/02/2008 16:15
Sample Tag: 01

PrePrep Method: NONE
Prep Method: 3051
Analytical Method: 6020
Analyst: JYH
Dilution: 1
Units: mg/kg

Instrument: ELAN-ICP
Prep Date: 12/04/2008 07:57
Cal Date: 12/04/2008 11:09
Run Date: 12/04/2008 20:51
File ID: EL.120408.205154
Percent Solid: 84.6

Analyte	CAS. Number	Result	Qual	RL	MDL
Arsenic, Total	7440-38-2		U	0.355	0.0886
Lead, Total	7439-92-1	3.63		0.473	0.118
Selenium, Total	7782-49-2	0.245 J	~~J~~	0.473	0.118

MSL

U Undetected; the analyte was analyzed for, but not detected.
J Estimated ; the analyte concentration was less than the low standard (LOQ)

Microbac

1445 LW
3/9/09

12

Sample Number: L08120059-12
Client ID: MR08-IS055-4-5-08D
Matrix: Soil
Workgroup Number: WG289667
Collect Date: 12/02/2008 16:15
Sample Tag: 01

PrePrep Method: NONE
Prep Method: 7471A
Analytical Method: 7471A
Analyst: ADC
Dilution: 1
Units: mg/kg

Instrument: HYDRA
Prep Date: 12/04/2008 08:22
Cal Date: 12/05/2008 08:27
Run Date: 12/05/2008 09:13
File ID: HY.120508.091306
Percent Solid: 84.6

Analyte	CAS. Number	Result	Qual	RL	MDL
Mercury, Total	7439-97-6		U	0.118	0.0235

U Undetected; the analyte was analyzed for, but not detected.

Microbac

1898 lw 3/9/09

13

Sample Number: L08120059-13
Client ID: MR08-EB-120208-IS
Matrix: Water
Workgroup Number: WG289679
Collect Date: 12/02/2008 00:01
Sample Tag: 01

PrePrep Method: NONE
Prep Method: 3005A
Analytical Method: 6010B
Analyst: ED
Dilution: 1
Units: ug/L

Instrument: PE-ICP2
Prep Date: 12/04/2008 07:36
Cal Date: 12/09/2008 09:52
Run Date: 12/09/2008 16:15
File ID: P2.120908.161554

Analyte	CAS. Number	Result	Qual	RL	MDL	
Barium, Total	7440-39-3		~~U~~	10.0	2.50	
Chromium, Total	7440-47-3		UJ ~~U~~	10.0	2.50	MSL
Copper, Total	7440-50-8		UJ ~~U~~	20.0	5.00	MSL
Silver, Total	7440-22-4		U	6.00	2.00	
Zinc, Total	7440-66-6		UJ ~~U~~	20.0	5.00	MSL

U Undetected; the analyte was analyzed for, but not detected.

Microbac

lw 3/9/09

13

Sample Number: L08120059-13
Client ID: MR08-EB-120208-IS
Matrix: Water
Workgroup Number: WG289679
Collect Date: 12/02/2008 00:01
Sample Tag: 02

PrePrep Method: NONE
Prep Method: 3005A
Analytical Method: 6010B
Analyst: ED
Dilution: 1
Units: ug/L

Instrument: PE-ICP2
Prep Date: 12/04/2008 07:36
Cal Date: 12/10/2008 10:15
Run Date: 12/10/2008 21:19
File ID: P2.121008.211934

Analyte	CAS. Number	Result	Qual	RL	MDL
Cadmium, Total	7440-43-9		U	1.00	0.250

U Undetected; the analyte was analyzed for, but not detected.

Microbac

405 MW 3/9/09

13

Sample Number: L08120059-13
Client ID: MR08-EB-120208-IS
Matrix: Water
Workgroup Number: WG289597
Collect Date: 12/02/2008 00:01
Sample Tag: 01

PrePrep Method: NONE
Prep Method: 3015
Analytical Method: 6020
Analyst: JYH
Dilution: 1
Units: ug/L

Instrument: ELAN-ICP
Prep Date: 12/04/2008 07:18
Cal Date: 12/04/2008 11:09
Run Date: 12/04/2008 16:05
File ID: EL.120408.160519

Analyte	CAS. Number	Result	Qual	RL	MDL
Arsenic, Total	7440-38-2		U	1.00	0.250
Lead, Total	7439-92-1		U	1.00	0.250
Antimony, Total	7440-36-0		U	1.00	0.250
Selenium, Total	7782-49-2		U	2.00	0.500

U Undetected; the analyte was analyzed for, but not detected.

Microbac

1446 MW 3/9/09

13

Sample Number: L08120059-13
Client ID: MR08-EB-120208-IS
Matrix: Water
Workgroup Number: WG289753
Collect Date: 12/02/2008 00:01
Sample Tag: 01

PrePrep Method: NONE
Prep Method: 7470A
Analytical Method: 7470A
Analyst: ADC
Dilution: 1
Units: ug/L

Instrument: HYDRA
Prep Date: 12/05/2008 09:41
Cal Date: 12/05/2008 15:08
Run Date: 12/05/2008 15:32
File ID: HY.120508.153239

Analyte	CAS. Number	Result	Qual	RL	MDL
Mercury	7439-97-6		U	0.400	0.100

U Undetected; the analyte was analyzed for, but not detected.

Microbac

1899 MW 3/9/09

14

Sample Number: L08120059-14
Client ID: MR08-EB-120208-SS
Matrix: Water
Workgroup Number: WG289679
Collect Date: 12/02/2008 00:01
Sample Tag: 01

PrePrep Method: NONE
Prep Method: 3005A
Analytical Method: 6010B
Analyst: ED
Dilution: 1
Units: ug/L

Instrument: PE-ICP2
Prep Date: 12/04/2008 07:36
Cal Date: 12/09/2008 09:52
Run Date: 12/09/2008 16:34
File ID: P2.120908.163447

Analyte	CAS. Number	Result	Qual	RL	MDL	
Barium, Total	7440-39-3		U	10.0	2.50	
Chromium, Total	7440-47-3		UJ ~~U~~	10.0	2.50	MSL
Copper, Total	7440-50-8		UJ ~~U~~	20.0	5.00	MSL
Silver, Total	7440-22-4		U	6.00	2.00	
Zinc, Total	7440-66-6		UJ ~~U~~	20.0	5.00	MSL

U Undetected; the analyte was analyzed for, but not detected.

Microbac

 AW 3/9/09

14

Sample Number: L08120059-14
Client ID: MR08-EB-120208-SS
Matrix: Water
Workgroup Number: WG289679
Collect Date: 12/02/2008 00:01
Sample Tag: 02

PrePrep Method: NONE
Prep Method: 3005A
Analytical Method: 6010B
Analyst: ED
Dilution: 1
Units: ug/L

Instrument: PE-ICP2
Prep Date: 12/04/2008 07:36
Cal Date: 12/10/2008 10:15
Run Date: 12/10/2008 21:25
File ID: P2.121008.212549

Analyte	CAS. Number	Result	Qual	RL	MDL
Cadmium, Total	7440-43-9		U	1.00	0.250

U Undetected; the analyte was analyzed for, but not detected.

Microbac

407 lw
3/9/09

14

Sample Number: L08120059-14
Client ID: MR08-EB-120208-SS
Matrix: Water
Workgroup Number: WG289597
Collect Date: 12/02/2008 00:01
Sample Tag: 01

PrePrep Method: NONE
Prep Method: 3015
Analytical Method: 6020
Analyst: JYH
Dilution: 1
Units: ug/L

Instrument: ELAN-ICP
Prep Date: 12/04/2008 07:18
Cal Date: 12/04/2008 11:09
Run Date: 12/04/2008 16:10
File ID: EL.120408.161042

Analyte	CAS. Number	Result	Qual	RL	MDL
Arsenic, Total	7440-38-2		U	1.00	0.250
Lead, Total	7439-92-1		U	1.00	0.250
Antimony, Total	7440-36-0		U	1.00	0.250
Selenium, Total	7782-49-2		U	2.00	0.500

U Undetected; the analyte was analyzed for, but not detected.

Microbac

1447 RW
3/9/09

14

Sample Number: L08120059-14
Client ID: MR08-EB-120208-SS
Matrix: Water
Workgroup Number: WG289753
Collect Date: 12/02/2008 00:01
Sample Tag: 01

PrePrep Method: NONE
Prep Method: 7470A
Analytical Method: 7470A
Analyst: ADC
Dilution: 1
Units: ug/L

Instrument: HYDRA
Prep Date: 12/05/2008 09:41
Cal Date: 12/05/2008 15:08
Run Date: 12/05/2008 15:34
File ID: HY.120508.153433

Analyte	CAS. Number	Result	Qual	RL	MDL
Mercury	7439-97-6		U	0.400	0.100

U Undetected; the analyte was analyzed for, but not detected.

Microbac

1900 lw 3/9/09

ENVIRONMENTAL
Data Services, Inc.

EXPLOSIVES, PETN & NITROGLYCERIN

USEPA Region IV - Level IV Review

Site: MCB Camp Lejeune, TO-09 SDG #: L08120129

Client: CH2M HILL, Inc., Virginia Beach, Virginia Date: March 9, 2009

Laboratory: Microbac Laboratories, Inc., Marietta, Ohio Reviewer: Linda Sulkowski

EDS ID	Client Sample ID	Laboratory Sample ID	Matrix
1	MR08-SS067-08D	L08120129-01	Soil
2	MR08-IS067-6-7-08D	L08120129-02	Soil
3	MR08-SS068-08D	L08120129-03	Soil
3MS	MR08-SS068-08DMS	L08120129-04MS	Soil
3MSD	MR08-SS068-08DMSD	L08120129-05MSD	Soil
4	MR08-IS068-8-9-08D	L08120129-06	Soil
4MS	MR08-IS068-8-9-08DMS	L08120129-07MS	Soil
4MSD	MR08-IS068-8-9-08DMSD	L08120129-08MSD	Soil
5	MR08-SS069-08D	L08120129-09	Soil
6	MR08-IS069-8-9-08D	L08120129-10	Soil
7	MR08-SS069-08D	L08120129-11	Soil
8	MR08-SS069D-08D	L08120129-12	Soil
9	MR08-IS069-6-7-08D	L08120129-13	Soil
10	MR08-IS069D-6-7-08D	L08120129-14	Soil
11	MR08-SS070-08D	L08120129-15	Soil
12	MR08-IS070-8-9-08D	L08120129-16	Soil
13	MR08-SS071-08D	L08120129-17	Soil
14	MR08-IS071-6-7-08D	L08120129-18	Soil
15	MR08-SS072-08D	L08120129-19	Soil
16	MR08-IS072-6-7-08D	L08120129-20	Soil
17	MR08-SS073-08D	L08120129-21	Soil
18	MR08-IS073-6-7-08D	L08120129-22	Soil
19	MR08-EB01120308-SS	L08120129-23	Water
20	MR08-EB01120308-IS	L08120129-24	Water

The USEPA "Contract Laboratory Program National Functional Guidelines for Organic Data Review," October 1999, and professional judgement were used in evaluating the data in this summary report.

Holding Times - All samples were extracted within 7 days for water samples, 14 days for soil samples and analyzed within 40 days.

Initial Calibration - The initial calibrations exhibited acceptable %RSD and/or correlation coefficient values.

Calibration Verification - The continuing calibrations exhibited acceptable %D values except the following.

CCAL Date	Compound	%D	Qualifier	Affected Samples
12/10/08	4-Amino-2,6-dinitrotoluene	28.1%	J/UJ	1, 2

Surrogates - All samples exhibited acceptable surrogate recoveries except the following.

Sample ID	Surrogate	%R	Qualifier
4	1,2-Dinitrobenzene	34.5%	J/UJ
5	1,2-Dinitrobenzene	43.3%	J/UJ
6	1,2-Dinitrobenzene	22.6%	J/UJ
7	1,2-Dinitrobenzene	31.7%	J/UJ
8	1,2-Dinitrobenzene	31.1%	J/UJ
12	1,2-Dinitrobenzene	35.1%	J/UJ
13	1,2-Dinitrobenzene	33.9%	J/UJ
14	1,2-Dinitrobenzene	22.2%	J/UJ
15	1,2-Dinitrobenzene	21.9%	J/UJ
16	1,2-Dinitrobenzene	27.0%	J/UJ

MS/MSD - The MS/MSD sample exhibited acceptable %R and RPD values except the following.

MS/MSD Sample ID	Compound	MS/MSD %R/RPD	Qualifier
3	1,3-Dinitrobenzene	73.4%/Ok/Ok	J/UJ
	2,4-Dinitrotoluene	62.5%/70.6%/Ok	J/UJ
	2-Amino-4,6-dinitrotoluene	68.8%/76.4%/Ok	J/UJ
	3-Nitrotoluene	68.1%/Ok/31.6	J/UJ
	4-Amino-2,6-dinitrotoluene	77.9%/78.4%/Ok	J/UJ
4	1,3,5-Trinitrobenzene	55.8%/49.9%/Ok	None - Already qualified due to surrogates
	1,3-Dinitrobenzene	56.4%/49.3%/Ok	None - Already qualified due to surrogates
	2,4,6-Trinitrotoluene	38.7%/34.2%/Ok	None - Already qualified due to surrogates
	2,4-Dinitrotoluene	42.9%/37.1%/Ok	None - Already qualified due to surrogates
	2,6-Dinitrotoluene	75.8%/69.8%/Ok	None - Already qualified due to surrogates
	2-Amino-4,6-dinitrotoluene	47.3%/41.2%/Ok	None - Already qualified due to surrogates
	2-Nitrotoluene	66.3%/59.4%/Ok	None - Already qualified due to surrogates

MS/MSD Sample ID	Compound	MS/MSD %R/RPD	Qualifier
4	3-Nitrotoluene	72.7%/69.7%/Ok	None - Already qualified due to surrogates
	4-Nitrotoluene	74.4%/63.7%/Ok	None - Already qualified due to surrogates
	4-Amino-2,6-dinitrotoluene	43.7%/42.7%/Ok	None - Already qualified due to surrogates
	HMX	44.2%/37.4%/Ok	None - Already qualified due to surrogates
	Nitrobenzene	55.6%/47.6%/Ok	None - Already qualified due to surrogates
	RDX	60.4%/49.4%/Ok	None - Already qualified due to surrogates
	Nitroglycerin	Ok/45.8%/40	None - Already qualified due to surrogates

Laboratory Control Sample - The LCS/LCSD samples exhibited acceptable %R and RPD values.

Method Blank - The method blanks were free of contamination.

Field and Equipment Blank - Field QC results are summarized below.

Blank ID	Compound	Conc. ug/L	Action Level ug/L	Qualifier	Affected Samples
MR08-EB01120308-SS	None - ND	-	-	-	-
MR08-EB01120308-IS	None - ND	-	-	-	-
MR08-FB01120608	None - ND	-	-	-	-

Field Duplicates - Field duplicate results are summarized below.

Compound	MR08-SS069-08D mg/kg	MR08-SS069D-08D mg/kg	RPD	Qualifier
None	ND	ND	-	-

Compound	MR08-IS069-6-7-08D mg/kg	MR08-IS069D-6-7-08D mg/kg	RPD	Qualifier
None	ND	ND	-	-

Compound Identification - Retention times were acceptable and no further action was taken.

Compound Quantitation - No discrepancies were identified.

Report Number: L08120129

Report Date : January 5, 2009

1

Sample Number: L08120129-01
Client ID: MR08-SS067-08D
Matrix: Soil
Workgroup Number: WG289947
Collect Date: 12/03/2008 08:30
Sample Tag: 01

PrePrep Method: NONE
Prep Method: METHOD
Analytical Method: 8330MOD
Analyst: ECL
Dilution: 1
Units: mg/kg

Instrument: HPLC5
Prep Date: 12/07/2008 10:00
Cal Date: 12/01/2008 20:11
Run Date: 12/10/2008 00:50
File ID: 5L003134.F

Analyte	CAS. Number	Result	Qual	RL	MDL
1,3,5-Trinitrobenzene	99-35-4		U	0.291	0.0971
1,3-Dinitrobenzene	99-65-0		U	0.291	0.0971
2,4,6-Trinitrotoluene	118-96-7		U	0.291	0.0971
2,4-Dinitrotoluene	121-14-2		U	0.291	0.0971
2,6-Dinitrotoluene	606-20-2		U	0.291	0.0971
2-Amino-4,6-dinitrotoluene	35572-78-2		U	0.291	0.0971
2-Nitrotoluene	88-72-2		U	0.291	0.0971
3-Nitrotoluene	99-08-1		U	0.291	0.0971
4-Nitrotoluene	99-99-0		U	0.291	0.0971
4-Amino-2,6-dinitrotoluene	19406-51-0		UJ	0.291	0.0971
HMX	2691-41-0		U	0.291	0.0971
Nitrobenzene	98-95-3		U	0.291	0.0971
RDX	121-82-4		U	0.291	0.0971
Tetryl	479-45-8		U	0.291	0.0971
Nitroglycerin	55-63-0		U	0.291	0.0971

CCH

Surrogate	% Recovery	Lower	Upper	Qual
1,2-Dinitrobenzene	55.0	50	150	

U Undetected; the analyte was analyzed for, but not detected.
Q One or more quality control criteria failed. See narrative.

Microbac

15 lew 3/9/09

Sample Number: L08120129-01
Client ID: MR08-SS067-08D
Matrix: Soil
Workgroup Number: WG289947
Collect Date: 12/03/2008 08:30
Sample Tag: 02

PrePrep Method: NONE
Prep Method: METHOD
Analytical Method: 8330MOD
Analyst: ECL
Dilution: 1
Units: mg/kg

Instrument: HPLC5
Prep Date: 12/07/2008 10:00
Cal Date: 12/01/2008 20:11
Run Date: 12/12/2008 18:22
File ID: 5L003226.F

Analyte	CAS. Number	Result	Qual	RL	MDL
PETN	78-11-5		U	0.291	0.0971

U Undetected; the analyte was analyzed for, but not detected.

Microbac

16 lw 3/9/09

2

Sample Number: L08120129-02
Client ID: MR08-IS067-6-7-08D
Matrix: Soil
Workgroup Number: WG289947
Collect Date: 12/03/2008 08:55
Sample Tag: 01

PrePrep Method: NONE
Prep Method: METHOD
Analytical Method: 8330MOD
Analyst: ECL
Dilution: 1
Units: mg/kg

Instrument: HPLC5
Prep Date: 12/07/2008 10:00
Cal Date: 12/01/2008 20:11
Run Date: 12/10/2008 01:28
File ID: 5L003135.F

Analyte	CAS. Number	Result	Qual	RL	MDL
1,3,5-Trinitrobenzene	99-35-4		U	0.292	0.0975
1,3-Dinitrobenzene	99-65-0		U	0.292	0.0975
2,4,6-Trinitrotoluene	118-96-7		U	0.292	0.0975
2,4-Dinitrotoluene	121-14-2		U	0.292	0.0975
2,6-Dinitrotoluene	606-20-2		U	0.292	0.0975
2-Amino-4,6-dinitrotoluene	35572-78-2		U	0.292	0.0975
2-Nitrotoluene	88-72-2		U	0.292	0.0975
3-Nitrotoluene	99-08-1		U	0.292	0.0975
4-Nitrotoluene	99-99-0		U	0.292	0.0975
4-Amino-2,6-dinitrotoluene	19406-51-0	UJ	~~Q~~	0.292	0.0975
HMX	2691-41-0		U	0.292	0.0975
Nitrobenzene	98-95-3		U	0.292	0.0975
RDX	121-82-4		U	0.292	0.0975
Tetryl	479-45-8		U	0.292	0.0975
Nitroglycerin	55-63-0		U	0.292	0.0975

CCH

Surrogate	% Recovery	Lower	Upper	Qual
1,2-Dinitrobenzene	56.8	50	150	

U Undetected; the analyte was analyzed for, but not detected.
Q One or more quality control criteria failed. See narrative.

Microbac

18 fcw 3/9/09

2

Sample Number: L08120129-02
Client ID: MR08-IS067-6-7-08D
Matrix: Soil
Workgroup Number: WG289947
Collect Date: 12/03/2008 08:55
Sample Tag: 02

PrePrep Method: NONE
Prep Method: METHOD
Analytical Method: 8330MOD
Analyst: ECL
Dilution: 1
Units: mg/kg

Instrument: HPLC5
Prep Date: 12/07/2008 10:00
Cal Date: 12/01/2008 20:11
Run Date: 12/12/2008 18:35
File ID: 5L003227.F

Analyte	CAS. Number	Result	Qual	RL	MDL
PETN	78-11-5		U	0.292	0.0975

U Undetected; the analyte was analyzed for, but not detected.

Microbac

17 lew 3/9/09

3

Sample Number: L08120129-03
Client ID: MR08-SS068-08D
Matrix: Soil
Workgroup Number: WG289947
Collect Date: 12/03/2008 09:35
Sample Tag: 01

PrePrep Method: NONE
Prep Method: METHOD
Analytical Method: 8330MOD
Analyst: ECL
Dilution: 1
Units: mg/kg

Instrument: HPLC5
Prep Date: 12/07/2008 10:00
Cal Date: 12/01/2008 20:11
Run Date: 12/10/2008 02:07
File ID: 5L003136.F

Analyte	CAS. Number	Result	Qual	RL	MDL	
1,3,5-Trinitrobenzene	99-35-4		U	0.297	0.0990	
1,3-Dinitrobenzene	99-65-0	UJ	~~U~~	0.297	0.0990	MSL
2,4,6-Trinitrotoluene	118-96-7		U	0.297	0.0990	
2,4-Dinitrotoluene	121-14-2	UJ	~~U~~	0.297	0.0990	MSL
2,6-Dinitrotoluene	606-20-2		U	0.297	0.0990	
2-Amino-4,6-dinitrotoluene	35572-78-2	UJ	~~U~~	0.297	0.0990	MSL
2-Nitrotoluene	88-72-2		U	0.297	0.0990	
3-Nitrotoluene	99-08-1	UJ	~~U~~	0.297	0.0990	MSL
4-Nitrotoluene	99-99-0		U	0.297	0.0990	
4-Amino-2,6-dinitrotoluene	19406-51-0	UJ	~~Q~~	0.297	0.0990	MSL
HMX	2691-41-0		U	0.297	0.0990	
Nitrobenzene	98-95-3		U	0.297	0.0990	
RDX	121-82-4		U	0.297	0.0990	
Tetryl	479-45-8		U	0.297	0.0990	
Nitroglycerin	55-63-0		U	0.297	0.0990	

Surrogate	% Recovery	Lower	Upper	Qual
1,2-Dinitrobenzene	52.0	50	150	

U Undetected; the analyte was analyzed for, but not detected.
Q One or more quality control criteria failed. See narrative.
UJ Undetected; the analyte was analyzed for, but not detected.

Microbac

20 LW 3/9/09

3

Sample Number: L08120129-03
Client ID: MR08-SS068-08D
Matrix: Soil
Workgroup Number: WG289947
Collect Date: 12/03/2008 09:35
Sample Tag: 02

PrePrep Method: NONE
Prep Method: METHOD
Analytical Method: 8330MOD
Analyst: ECL
Dilution: 1
Units: mg/kg

Instrument: HPLC5
Prep Date: 12/07/2008 10:00
Cal Date: 12/01/2008 20:11
Run Date: 12/12/2008 18:49
File ID: 5L003228.F

Analyte	CAS. Number	Result	Qual	RL	MDL
PETN	78-11-5		U	0.297	0.0990

U Undetected; the analyte was analyzed for, but not detected.

Microbac

lw 3/9/09

4

Sample Number: L08120129-06
Client ID: MR08-IS068-8-9-08D
Matrix: Soil
Workgroup Number: WG289948
Collect Date: 12/03/2008 10:15
Sample Tag: 01

PrePrep Method: NONE
Prep Method: METHOD
Analytical Method: 8330MOD
Analyst: ECL
Dilution: 1
Units: mg/kg

Instrument: HPLC5
Prep Date: 12/08/2008 09:00
Cal Date: 12/01/2008 20:11
Run Date: 12/11/2008 15:29
File ID: 5L003176.F

SSL

Analyte	CAS. Number	Result	Qual	RL	MDL
1,3,5-Trinitrobenzene	99-35-4		~~U~~ UJ	0.295	0.0983
1,3-Dinitrobenzene	99-65-0		~~U~~ UJ	0.295	0.0983
2,4,6-Trinitrotoluene	118-96-7		~~U~~ UJ	0.295	0.0983
2,4-Dinitrotoluene	121-14-2		~~U~~ UJ	0.295	0.0983
2,6-Dinitrotoluene	606-20-2		~~U~~ UJ	0.295	0.0983
2-Amino-4,6-dinitrotoluene	35572-78-2		~~U~~ UJ	0.295	0.0983
2-Nitrotoluene	88-72-2		~~U~~ UJ	0.295	0.0983
3-Nitrotoluene	99-08-1		~~U~~ UJ	0.295	0.0983
4-Nitrotoluene	99-99-0		~~U~~ UJ	0.295	0.0983
4-Amino-2,6-dinitrotoluene	19406-51-0		~~U~~ UJ	0.295	0.0983
HMX	2691-41-0		~~U~~ UJ	0.295	0.0983
Nitrobenzene	98-95-3		~~U~~ UJ	0.295	0.0983
RDX	121-82-4		~~U~~ UJ	0.295	0.0983
Tetryl	479-45-8		~~U~~ UJ	0.295	0.0983
Nitroglycerin	55-63-0		~~U~~ UJ	0.295	0.0983

SSL

Surrogate	% Recovery	Lower	Upper	Qual
1,2-Dinitrobenzene	34.5	50	150	*

U Undetected; the analyte was analyzed for, but not detected.
* Surrogate or spike compound out of range
UJ Undetected; the analyte was analyzed for, but not detected.

Microbac

23 lew 3/9/09

4

Sample Number: L08120129-06
Client ID: MR08-IS068-8-9-08D
Matrix: Soil
Workgroup Number: WG289948
Collect Date: 12/03/2008 10:15
Sample Tag: 02

PrePrep Method: NONE
Prep Method: METHOD
Analytical Method: 8330MOD
Analyst: ECL
Dilution: 1
Units: mg/kg

Instrument: HPLC5
Prep Date: 12/08/2008 09:00
Cal Date: 12/01/2008 20:11
Run Date: 12/12/2008 19:28
File ID: 5L003231.F

Analyte	CAS. Number	Result	Qual	RL	MDL
PETN	78-11-5		U	0.295	0.0983

U Undetected; the analyte was analyzed for, but not detected.

Microbac

24 MW 3/9/09

5

Sample Number: L08120129-09
Client ID: MR08-SS069-08D
Matrix: Soil
Workgroup Number: WG289948
Collect Date: 12/03/2008 11:20
Sample Tag: 01

PrePrep Method: NONE
Prep Method: METHOD
Analytical Method: 8330MOD
Analyst: ECL
Dilution: 1
Units: mg/kg

Instrument: HPLC5
Prep Date: 12/08/2008 09:00
Cal Date: 12/01/2008 20:11
Run Date: 12/11/2008 17:23
File ID: 5L003179.F

Analyte	CAS. Number	Result	Qual	RL	MDL
1,3,5-Trinitrobenzene	99-35-4		UJ	0.300	0.100
1,3-Dinitrobenzene	99-65-0		UJ	0.300	0.100
2,4,6-Trinitrotoluene	118-96-7		UJ	0.300	0.100
2,4-Dinitrotoluene	121-14-2		UJ	0.300	0.100
2,6-Dinitrotoluene	606-20-2		UJ	0.300	0.100
2-Amino-4,6-dinitrotoluene	35572-78-2		UJ	0.300	0.100
2-Nitrotoluene	88-72-2		UJ	0.300	0.100
3-Nitrotoluene	99-08-1		UJ	0.300	0.100
4-Nitrotoluene	99-99-0		UJ	0.300	0.100
4-Amino-2,6-dinitrotoluene	19406-51-0		UJ	0.300	0.100
HMX	2691-41-0		UJ	0.300	0.100
Nitrobenzene	98-95-3		UJ	0.300	0.100
RDX	121-82-4		UJ	0.300	0.100
Tetryl	479-45-8		UJ	0.300	0.100
Nitroglycerin	55-63-0		UJ	0.300	0.100

SGL

Surrogate	% Recovery	Lower	Upper	Qual
1,2-Dinitrobenzene	43.3	50	150	*

* Surrogate or spike compound out of range
UJ Undetected; the analyte was analyzed for, but not detected.

Microbac

28 lw
319109

5

Sample Number: L08120129-09
Client ID: MR08-SS069-08D
Matrix: Soil
Workgroup Number: WG289948
Collect Date: 12/03/2008 11:20
Sample Tag: 02

PrePrep Method: NONE
Prep Method: METHOD
Analytical Method: 8330MOD
Analyst: ECL
Dilution: 1
Units: mg/kg

Instrument: HPLC5
Prep Date: 12/08/2008 09:00
Cal Date: 12/01/2008 20:11
Run Date: 12/12/2008 20:08
File ID: 5L003234.F

Analyte	CAS. Number	Result	Qual	RL	MDL
PETN	78-11-5		U	0.300	0.100

U Undetected; the analyte was analyzed for, but not detected.

Microbac

 RW 3/9/09

6

Sample Number: L08120129-10
Client ID: MR08-SS069D-08D
Matrix: Soil
Workgroup Number: WG289948
Collect Date: 12/03/2008 11:30
Sample Tag: 01

PrePrep Method: NONE
Prep Method: METHOD
Analytical Method: 8330MOD
Analyst: ECL
Dilution: 1
Units: mg/kg

Instrument: HPLC5
Prep Date: 12/08/2008 09:00
Cal Date: 12/01/2008 20:11
Run Date: 12/11/2008 18:01
File ID: 5L003180.F

Analyte	CAS. Number	Result	Qual	RL	MDL
1,3,5-Trinitrobenzene	99-35-4		~~UJ~~ UJ	0.296	0.0987
1,3-Dinitrobenzene	99-65-0		UJ	0.296	0.0987
2,4,6-Trinitrotoluene	118-96-7		UJ	0.296	0.0987
2,4-Dinitrotoluene	121-14-2		UJ	0.296	0.0987
2,6-Dinitrotoluene	606-20-2		UJ	0.296	0.0987
2-Amino-4,6-dinitrotoluene	35572-78-2		UJ	0.296	0.0987
2-Nitrotoluene	88-72-2		UJ	0.296	0.0987
3-Nitrotoluene	99-08-1		UJ	0.296	0.0987
4-Nitrotoluene	99-99-0		UJ	0.296	0.0987
4-Amino-2,6-dinitrotoluene	19406-51-0		UJ	0.296	0.0987
HMX	2691-41-0		UJ	0.296	0.0987
Nitrobenzene	98-95-3		UJ	0.296	0.0987
RDX	121-82-4		UJ	0.296	0.0987
Tetryl	479-45-8		UJ	0.296	0.0987
Nitroglycerin	55-63-0		UJ	0.296	0.0987

SSL

Surrogate	% Recovery	Lower	Upper	Qual
1,2-Dinitrobenzene	22.6	50	150	*

U Undetected; the analyte was analyzed for, but not detected.
* Surrogate or spike compound out of range
UJ Undetected; the analyte was analyzed for, but not detected.

Microbac

30 [illegible] 3/9/09

6

Sample Number: L08120129-10
Client ID: MR08-SS069D-08D
Matrix: Soil
Workgroup Number: WG289948
Collect Date: 12/03/2008 11:30
Sample Tag: 02

PrePrep Method: NONE
Prep Method: METHOD
Analytical Method: 8330MOD
Analyst: ECL
Dilution: 1
Units: mg/kg

Instrument: HPLC5
Prep Date: 12/08/2008 09:00
Cal Date: 12/01/2008 20:11
Run Date: 12/12/2008 20:21
File ID: 5L003235.F

Analyte	CAS. Number	Result	Qual	RL	MDL
PETN	78-11-5		U	0.296	0.0987

U Undetected; the analyte was analyzed for, but not detected.

Microbac

29 lw 3/9/09

7

Sample Number: L08120129-11
Client ID: MR08-IS069-6-7-08D
Matrix: Soil
Workgroup Number: WG289948
Collect Date: 12/03/2008 11:55
Sample Tag: 01

PrePrep Method: NONE
Prep Method: METHOD
Analytical Method: 8330MOD
Analyst: ECL
Dilution: 1
Units: mg/kg

Instrument: HPLC5
Prep Date: 12/08/2008 09:00
Cal Date: 12/01/2008 20:11
Run Date: 12/11/2008 18:40
File ID: 5L003181.F

Analyte	CAS. Number	Result	Qual	RL	MDL
1,3,5-Trinitrobenzene	99-35-4		UJ UJ	0.300	0.0999
1,3-Dinitrobenzene	99-65-0		UJ	0.300	0.0999
2,4,6-Trinitrotoluene	118-96-7		UJ	0.300	0.0999
2,4-Dinitrotoluene	121-14-2		UJ	0.300	0.0999
2,6-Dinitrotoluene	606-20-2		UJ	0.300	0.0999
2-Amino-4,6-dinitrotoluene	35572-78-2		UJ	0.300	0.0999
2-Nitrotoluene	88-72-2		UJ	0.300	0.0999
3-Nitrotoluene	99-08-1		UJ	0.300	0.0999
4-Nitrotoluene	99-99-0		UJ	0.300	0.0999
4-Amino-2,6-dinitrotoluene	19406-51-0		UJ	0.300	0.0999
HMX	2691-41-0		UJ	0.300	0.0999
Nitrobenzene	98-95-3		UJ	0.300	0.0999
RDX	121-82-4		UJ	0.300	0.0999
Tetryl	479-45-8		UJ	0.300	0.0999
Nitroglycerin	55-63-0		UJ	0.300	0.0999

SSL

Surrogate	% Recovery	Lower	Upper	Qual
1,2-Dinitrobenzene	31.7	50	150	*

* Surrogate or spike compound out of range
UJ Undetected; the analyte was analyzed for, but not detected.

Microbac

31 hw 3/9/09

7

Sample Number: L08120129-11
Client ID: MR08-IS069-6-7-08D
Matrix: Soil
Workgroup Number: WG289948
Collect Date: 12/03/2008 11:55
Sample Tag: 02

PrePrep Method: NONE
Prep Method: METHOD
Analytical Method: 8330MOD
Analyst: ECL
Dilution: 1
Units: mg/kg

Instrument: HPLC5
Prep Date: 12/08/2008 09:00
Cal Date: 12/01/2008 20:11
Run Date: 12/12/2008 20:34
File ID: 5L003236.F

Analyte	CAS. Number	Result	Qual	RL	MDL
PETN	78-11-5		U	0.300	0.0999

U Undetected; the analyte was analyzed for, but not detected.

Microbac

32 LW
3/9/09

8

Sample Number: L08120129-12
Client ID: MR08-IS069D-6-7-08D
Matrix: Soil
Workgroup Number: WG289948
Collect Date: 12/03/2008 12:05
Sample Tag: 01

PrePrep Method: NONE
Prep Method: METHOD
Analytical Method: 8330MOD
Analyst: ECL
Dilution: 1
Units: mg/kg

Instrument: HPLC5
Prep Date: 12/08/2008 09:00
Cal Date: 12/01/2008 20:11
Run Date: 12/11/2008 19:18
File ID: 5L003182.F

Analyte	CAS. Number	Result	Qual	RL	MDL
1,3,5-Trinitrobenzene	99-35-4		~~UJ~~ UJ	0.294	0.0979
1,3-Dinitrobenzene	99-65-0		~~UJ~~	0.294	0.0979
2,4,6-Trinitrotoluene	118-96-7		~~UJ~~	0.294	0.0979
2,4-Dinitrotoluene	121-14-2		~~UJ~~	0.294	0.0979
2,6-Dinitrotoluene	606-20-2		~~UJ~~	0.294	0.0979
2-Amino-4,6-dinitrotoluene	35572-78-2		~~UJ~~	0.294	0.0979
2-Nitrotoluene	88-72-2		~~UJ~~	0.294	0.0979
3-Nitrotoluene	99-08-1		~~UJ~~	0.294	0.0979
4-Nitrotoluene	99-99-0		~~UJ~~	0.294	0.0979
4-Amino-2,6-dinitrotoluene	19406-51-0		~~UJ~~	0.294	0.0979
HMX	2691-41-0		~~UJ~~	0.294	0.0979
Nitrobenzene	98-95-3		~~UJ~~	0.294	0.0979
RDX	121-82-4		~~UJ~~	0.294	0.0979
Tetryl	479-45-8		~~UJ~~	0.294	0.0979
Nitroglycerin	55-63-0		~~UJ~~	0.294	0.0979

SSL

Surrogate	% Recovery	Lower	Upper	Qual
1,2-Dinitrobenzene	31.1	50	150	*

* Surrogate or spike compound out of range
UJ Undetected; the analyte was analyzed for, but not detected.

Microbac

34 lew 3/9/09

8

Sample Number: L08120129-12
Client ID: MR08-IS069D-6-7-08D
Matrix: Soil
Workgroup Number: WG289948
Collect Date: 12/03/2008 12:05
Sample Tag: 02

PrePrep Method: NONE
Prep Method: METHOD
Analytical Method: 8330MOD
Analyst: ECL
Dilution: 1
Units: mg/kg

Instrument: HPLC5
Prep Date: 12/08/2008 09:00
Cal Date: 12/01/2008 20:11
Run Date: 12/12/2008 20:47
File ID: 5L003237.F

Analyte	CAS. Number	Result	Qual	RL	MDL
PETN	78-11-5		U	0.294	0.0979

U Undetected; the analyte was analyzed for, but not detected.

Microbac

33 lw 3/9/09

9

Sample Number: L08120129-13
Client ID: MR08-SS070-08D
Matrix: Soil
Workgroup Number: WG289948
Collect Date: 12/03/2008 13:50
Sample Tag: 01

PrePrep Method: NONE
Prep Method: METHOD
Analytical Method: 8330MOD
Analyst: ECL
Dilution: 1
Units: mg/kg

Instrument: HPLC5
Prep Date: 12/08/2008 09:00
Cal Date: 12/01/2008 20:11
Run Date: 12/11/2008 19:56
File ID: 5L003183.F

Analyte	CAS. Number	Result	Qual	RL	MDL
1,3,5-Trinitrobenzene	99-35-4		U	0.296	0.0988
1,3-Dinitrobenzene	99-65-0		U	0.296	0.0988
2,4,6-Trinitrotoluene	118-96-7		U	0.296	0.0988
2,4-Dinitrotoluene	121-14-2		U	0.296	0.0988
2,6-Dinitrotoluene	606-20-2		U	0.296	0.0988
2-Amino-4,6-dinitrotoluene	35572-78-2		U	0.296	0.0988
2-Nitrotoluene	88-72-2		U	0.296	0.0988
3-Nitrotoluene	99-08-1		U	0.296	0.0988
4-Nitrotoluene	99-99-0		U	0.296	0.0988
4-Amino-2,6-dinitrotoluene	19406-51-0		U	0.296	0.0988
HMX	2691-41-0		U	0.296	0.0988
Nitrobenzene	98-95-3		U	0.296	0.0988
RDX	121-82-4		U	0.296	0.0988
Tetryl	479-45-8		U	0.296	0.0988
Nitroglycerin	55-63-0		U	0.296	0.0988

Surrogate	% Recovery	Lower	Upper	Qual
1,2-Dinitrobenzene	55.6	50	150	

U Undetected; the analyte was analyzed for, but not detected.

Microbac®

35 LW 3/9/09

9

Sample Number: L08120129-13
Client ID: MR08-SS070-08D
Matrix: Soil
Workgroup Number: WG289948
Collect Date: 12/03/2008 13:50
Sample Tag: 02

PrePrep Method: NONE
Prep Method: METHOD
Analytical Method: 8330MOD
Analyst: ECL
Dilution: 1
Units: mg/kg

Instrument: HPLC5
Prep Date: 12/08/2008 09:00
Cal Date: 12/01/2008 20:11
Run Date: 12/12/2008 21:00
File ID: 5L003238.F

Analyte	CAS. Number	Result	Qual	RL	MDL
PETN	78-11-5		U	0.296	0.0988

U Undetected; the analyte was analyzed for, but not detected.

Microbac

36 MW 3/9/09

10

Sample Number: L08120129-14
Client ID: MR08-IS070-8-9-08D
Matrix: Soil
Workgroup Number: WG289948
Collect Date: 12/03/2008 14:20
Sample Tag: 01

PrePrep Method: NONE
Prep Method: METHOD
Analytical Method: 8330MOD
Analyst: ECL
Dilution: 1
Units: mg/kg

Instrument: HPLC5
Prep Date: 12/08/2008 09:00
Cal Date: 12/01/2008 20:11
Run Date: 12/11/2008 22:08
File ID: 5L003187.F

Analyte	CAS. Number	Result	Qual	RL	MDL
1,3,5-Trinitrobenzene	99-35-4		U	0.299	0.0997
1,3-Dinitrobenzene	99-65-0		U	0.299	0.0997
2,4,6-Trinitrotoluene	118-96-7		U	0.299	0.0997
2,4-Dinitrotoluene	121-14-2		U	0.299	0.0997
2,6-Dinitrotoluene	606-20-2		U	0.299	0.0997
2-Amino-4,6-dinitrotoluene	35572-78-2		U	0.299	0.0997
2-Nitrotoluene	88-72-2		U	0.299	0.0997
3-Nitrotoluene	99-08-1		U	0.299	0.0997
4-Nitrotoluene	99-99-0		U	0.299	0.0997
4-Amino-2,6-dinitrotoluene	19406-51-0		U	0.299	0.0997
HMX	2691-41-0		U	0.299	0.0997
Nitrobenzene	98-95-3		U	0.299	0.0997
RDX	121-82-4		U	0.299	0.0997
Tetryl	479-45-8		U	0.299	0.0997
Nitroglycerin	55-63-0		U	0.299	0.0997

Surrogate	% Recovery	Lower	Upper	Qual
1,2-Dinitrobenzene	50.1	50	150	

U Undetected; the analyte was analyzed for, but not detected.

Microbac

32 LW
3/9/09

10

Sample Number: L08120129-14
Client ID: MR08-IS070-8-9-08D
Matrix: Soil
Workgroup Number: WG289948
Collect Date: 12/03/2008 14:20
Sample Tag: 02

PrePrep Method: NONE
Prep Method: METHOD
Analytical Method: 8330MOD
Analyst: ECL
Dilution: 1
Units: mg/kg

Instrument: HPLC5
Prep Date: 12/08/2008 09:00
Cal Date: 12/01/2008 20:11
Run Date: 12/12/2008 21:13
File ID: 5L003239.F

Analyte	CAS. Number	Result	Qual	RL	MDL
PETN	78-11-5		U	0.299	0.0997

U Undetected; the analyte was analyzed for, but not detected.

Microbac

38 lee 3/9/09

11

Sample Number: L08120129-15
Client ID: MR08-SS071-08D
Matrix: Soil
Workgroup Number: WG289948
Collect Date: 12/03/2008 14:35
Sample Tag: 01

PrePrep Method: NONE
Prep Method: METHOD
Analytical Method: 8330MOD
Analyst: ECL
Dilution: 1
Units: mg/kg

Instrument: HPLC5
Prep Date: 12/08/2008 09:00
Cal Date: 12/01/2008 20:11
Run Date: 12/11/2008 22:47
File ID: 5L003188.F

Analyte	CAS. Number	Result	Qual	RL	MDL
1,3,5-Trinitrobenzene	99-35-4		U	0.294	0.0981
1,3-Dinitrobenzene	99-65-0		U	0.294	0.0981
2,4,6-Trinitrotoluene	118-96-7		U	0.294	0.0981
2,4-Dinitrotoluene	121-14-2		U	0.294	0.0981
2,6-Dinitrotoluene	606-20-2		U	0.294	0.0981
2-Amino-4,6-dinitrotoluene	35572-78-2		U	0.294	0.0981
2-Nitrotoluene	88-72-2		U	0.294	0.0981
3-Nitrotoluene	99-08-1		U	0.294	0.0981
4-Nitrotoluene	99-99-0		U	0.294	0.0981
4-Amino-2,6-dinitrotoluene	19406-51-0		U	0.294	0.0981
HMX	2691-41-0		U	0.294	0.0981
Nitrobenzene	98-95-3		U	0.294	0.0981
RDX	121-82-4		U	0.294	0.0981
Tetryl	479-45-8		U	0.294	0.0981
Nitroglycerin	55-63-0		U	0.294	0.0981

Surrogate	% Recovery	Lower	Upper	Qual
1,2-Dinitrobenzene	51.4	50	150	

U Undetected; the analyte was analyzed for, but not detected.

Microbac

 LEW 3/9/09

11

Sample Number: L08120129-15
Client ID: MR08-SS071-08D
Matrix: Soil
Workgroup Number: WG289948
Collect Date: 12/03/2008 14:35
Sample Tag: 02

PrePrep Method: NONE
Prep Method: METHOD
Analytical Method: 8330MOD
Analyst: ECL
Dilution: 1
Units: mg/kg

Instrument: HPLC5
Prep Date: 12/08/2008 09:00
Cal Date: 12/01/2008 20:11
Run Date: 12/12/2008 21:27
File ID: 5L003240.F

Analyte	CAS. Number	Result	Qual	RL	MDL
PETN	78-11-5		U	0.294	0.0981

U Undetected; the analyte was analyzed for, but not detected.

Microbac

39 LW 3/9/09

12

Sample Number: L08120129-16
Client ID: MR08-IS071-6-7-08D
Matrix: Soil
Workgroup Number: WG289948
Collect Date: 12/03/2008 14:50
Sample Tag: 01

PrePrep Method: NONE
Prep Method: METHOD
Analytical Method: 8330MOD
Analyst: ECL
Dilution: 1
Units: mg/kg

Instrument: HPLC5
Prep Date: 12/08/2008 09:00
Cal Date: 12/01/2008 20:11
Run Date: 12/11/2008 23:25
File ID: 5L003189.F

Analyte	CAS. Number	Result	Qual	RL	MDL
1,3,5-Trinitrobenzene	99-35-4		~~UJ~~ UJ	0.290	0.0968
1,3-Dinitrobenzene	99-65-0		UJ	0.290	0.0968
2,4,6-Trinitrotoluene	118-96-7		UJ	0.290	0.0968
2,4-Dinitrotoluene	121-14-2		UJ	0.290	0.0968
2,6-Dinitrotoluene	606-20-2		UJ	0.290	0.0968
2-Amino-4,6-dinitrotoluene	35572-78-2		UJ	0.290	0.0968
2-Nitrotoluene	88-72-2		UJ	0.290	0.0968
3-Nitrotoluene	99-08-1		UJ	0.290	0.0968
4-Nitrotoluene	99-99-0		UJ	0.290	0.0968
4-Amino-2,6-dinitrotoluene	19406-51-0		UJ	0.290	0.0968
HMX	2691-41-0		UJ	0.290	0.0968
Nitrobenzene	98-95-3		UJ	0.290	0.0968
RDX	121-82-4		UJ	0.290	0.0968
Tetryl	479-45-8		UJ	0.290	0.0968
Nitroglycerin	55-63-0		UJ	0.290	0.0968

SSL

Surrogate	% Recovery	Lower	Upper	Qual
1,2-Dinitrobenzene	35.1	50	150	*

* Surrogate or spike compound out of range
UJ Undetected; the analyte was analyzed for, but not detected.

Microbac

42 lew 3/9/09

12

Sample Number: L08120129-16
Client ID: MR08-IS071-6-7-08D
Matrix: Soil
Workgroup Number: WG289948
Collect Date: 12/03/2008 14:50
Sample Tag: 02

PrePrep Method: NONE
Prep Method: METHOD
Analytical Method: 8330MOD
Analyst: ECL
Dilution: 1
Units: mg/kg

Instrument: HPLC5
Prep Date: 12/08/2008 09:00
Cal Date: 12/01/2008 20:11
Run Date: 12/12/2008 21:40
File ID: 5L003241.F

Analyte	CAS. Number	Result	Qual	RL	MDL
PETN	78-11-5		U	0.290	0.0968

U Undetected; the analyte was analyzed for, but not detected.

Microbac

41 RCW 3/9/09

13

Sample Number: L08120129-17
Client ID: MR08-SS072-08D
Matrix: Soil
Workgroup Number: WG289948
Collect Date: 12/03/2008 15:05
Sample Tag: 01

PrePrep Method: NONE
Prep Method: METHOD
Analytical Method: 8330MOD
Analyst: ECL
Dilution: 1
Units: mg/kg

Instrument: HPLC5
Prep Date: 12/08/2008 09:00
Cal Date: 12/01/2008 20:11
Run Date: 12/12/2008 00:03
File ID: 5L003190.F

SSL

Analyte	CAS. Number	Result	Qual	RL	MDL
1,3,5-Trinitrobenzene	99-35-4		~~UJ~~ UJ	0.299	0.0995
1,3-Dinitrobenzene	99-65-0		UJ	0.299	0.0995
2,4,6-Trinitrotoluene	118-96-7		UJ	0.299	0.0995
2,4-Dinitrotoluene	121-14-2		UJ	0.299	0.0995
2,6-Dinitrotoluene	606-20-2		UJ	0.299	0.0995
2-Amino-4,6-dinitrotoluene	35572-78-2		UJ	0.299	0.0995
2-Nitrotoluene	88-72-2		UJ	0.299	0.0995
3-Nitrotoluene	99-08-1		UJ	0.299	0.0995
4-Nitrotoluene	99-99-0		UJ	0.299	0.0995
4-Amino-2,6-dinitrotoluene	19406-51-0		UJ	0.299	0.0995
HMX	2691-41-0		UJ	0.299	0.0995
Nitrobenzene	98-95-3		UJ	0.299	0.0995
RDX	121-82-4		UJ	0.299	0.0995
Tetryl	479-45-8		UJ	0.299	0.0995
Nitroglycerin	55-63-0		U	0.299	0.0995

Surrogate	% Recovery	Lower	Upper	Qual
1,2-Dinitrobenzene	33.9	50	150	*

U Undetected; the analyte was analyzed for, but not detected.
* Surrogate or spike compound out of range
UJ Undetected; the analyte was analyzed for, but not detected.

Microbac

43 RW 3/9/09

13

Sample Number: L08120129-17
Client ID: MR08-SS072-08D
Matrix: Soil
Workgroup Number: WG289948
Collect Date: 12/03/2008 15:05
Sample Tag: 02

PrePrep Method: NONE
Prep Method: METHOD
Analytical Method: 8330MOD
Analyst: ECL
Dilution: 1
Units: mg/kg

Instrument: HPLC5
Prep Date: 12/08/2008 09:00
Cal Date: 12/01/2008 20:11
Run Date: 12/12/2008 21:53
File ID: 5L003242.F

Analyte	CAS. Number	Result	Qual	RL	MDL
PETN	78-11-5		U	0.299	0.0995

U Undetected; the analyte was analyzed for, but not detected.

Microbac

44 lew 3/9/09

14

Sample Number: L08120129-18
Client ID: MR08-IS072-6-7-08D
Matrix: Soil
Workgroup Number: WG289948
Collect Date: 12/03/2008 15:25
Sample Tag: 01

PrePrep Method: NONE
Prep Method: METHOD
Analytical Method: 8330MOD
Analyst: ECL
Dilution: 1
Units: mg/kg

Instrument: HPLC5
Prep Date: 12/08/2008 09:00
Cal Date: 12/01/2008 20:11
Run Date: 12/12/2008 00:41
File ID: 5L003191.F

Analyte	CAS. Number	Result	Qual	RL	MDL
1,3,5-Trinitrobenzene	99-35-4		~~UJ~~ UJ	0.299	0.0997
1,3-Dinitrobenzene	99-65-0		UJ	0.299	0.0997
2,4,6-Trinitrotoluene	118-96-7		UJ	0.299	0.0997
2,4-Dinitrotoluene	121-14-2		UJ	0.299	0.0997
2,6-Dinitrotoluene	606-20-2		UJ	0.299	0.0997
2-Amino-4,6-dinitrotoluene	35572-78-2		UJ	0.299	0.0997
2-Nitrotoluene	88-72-2		UJ	0.299	0.0997
3-Nitrotoluene	99-08-1		UJ	0.299	0.0997
4-Nitrotoluene	99-99-0		UJ	0.299	0.0997
4-Amino-2,6-dinitrotoluene	19406-51-0		UJ	0.299	0.0997
HMX	2691-41-0		UJ	0.299	0.0997
Nitrobenzene	98-95-3		UJ	0.299	0.0997
RDX	121-82-4		UJ	0.299	0.0997
Tetryl	479-45-8		UJ	0.299	0.0997
Nitroglycerin	55-63-0		UJ	0.299	0.0997

SSL

Surrogate	% Recovery	Lower	Upper	Qual
1,2-Dinitrobenzene	22.2	50	150	*

U Undetected; the analyte was analyzed for, but not detected.
* Surrogate or spike compound out of range
UJ Undetected; the analyte was analyzed for, but not detected.

Microbac

45 lw 3 19 09

14

Sample Number: L08120129-18
Client ID: MR08-IS072-6-7-08D
Matrix: Soil
Workgroup Number: WG289948
Collect Date: 12/03/2008 15:25
Sample Tag: 02

PrePrep Method: NONE
Prep Method: METHOD
Analytical Method: 8330MOD
Analyst: ECL
Dilution: 1
Units: mg/kg

Instrument: HPLC5
Prep Date: 12/08/2008 09:00
Cal Date: 12/01/2008 20:11
Run Date: 12/12/2008 22:06
File ID: 5L003243.F

Analyte	CAS. Number	Result	Qual	RL	MDL
PETN	78-11-5		U	0.299	0.0997

U Undetected; the analyte was analyzed for, but not detected.

Microbac

46 RW 3/9/09

15

Sample Number: L08120129-19
Client ID: MR08-SS073-08D
Matrix: Soil
Workgroup Number: WG289948
Collect Date: 12/03/2008 15:40
Sample Tag: 01

PrePrep Method: NONE
Prep Method: METHOD
Analytical Method: 8330MOD
Analyst: ECL
Dilution: 1
Units: mg/kg

Instrument: HPLC5
Prep Date: 12/08/2008 09:00
Cal Date: 12/01/2008 20:11
Run Date: 12/12/2008 01:19
File ID: 5L003192.F

Analyte	CAS. Number	Result	Qual	RL	MDL
1,3,5-Trinitrobenzene	99-35-4		UJ	0.300	0.100
1,3-Dinitrobenzene	99-65-0		UJ	0.300	0.100
2,4,6-Trinitrotoluene	118-96-7		UJ	0.300	0.100
2,4-Dinitrotoluene	121-14-2		UJ	0.300	0.100
2,6-Dinitrotoluene	606-20-2		UJ	0.300	0.100
2-Amino-4,6-dinitrotoluene	35572-78-2		UJ	0.300	0.100
2-Nitrotoluene	88-72-2		UJ	0.300	0.100
3-Nitrotoluene	99-08-1		UJ	0.300	0.100
4-Nitrotoluene	99-99-0		UJ	0.300	0.100
4-Amino-2,6-dinitrotoluene	19406-51-0		UJ	0.300	0.100
HMX	2691-41-0		UJ	0.300	0.100
Nitrobenzene	98-95-3		UJ	0.300	0.100
RDX	121-82-4		UJ	0.300	0.100
Tetryl	479-45-8		UJ	0.300	0.100
Nitroglycerin	55-63-0		UJ	0.300	0.100

UJ

SSL

Surrogate	% Recovery	Lower	Upper	Qual
1,2-Dinitrobenzene	21.9	50	150	*

* Surrogate or spike compound out of range
UJ Undetected; the analyte was analyzed for, but not detected.

Microbac

48 fee 3/9/09

15

Sample Number: L08120129-19
Client ID: MR08-SS073-08D
Matrix: Soil
Workgroup Number: WG289948
Collect Date: 12/03/2008 15:40
Sample Tag: 02

PrePrep Method: NONE
Prep Method: METHOD
Analytical Method: 8330MOD
Analyst: ECL
Dilution: 1
Units: mg/kg

Instrument: HPLC5
Prep Date: 12/08/2008 09:00
Cal Date: 12/01/2008 20:11
Run Date: 12/12/2008 22:45
File ID: 5L003246.F

Analyte	CAS. Number	Result	Qual	RL	MDL
PETN	78-11-5		U	0.300	0.100

U Undetected; the analyte was analyzed for, but not detected.

Microbac

47 UW 3/9/09

16

Sample Number: L08120129-20
Client ID: MR08-IS073-6-7-08D
Matrix: Soil
Workgroup Number: WG289948
Collect Date: 12/03/2008 16:00
Sample Tag: 01

PrePrep Method: NONE
Prep Method: METHOD
Analytical Method: 8330MOD
Analyst: ECL
Dilution: 1
Units: mg/kg

Instrument: HPLC5
Prep Date: 12/08/2008 09:00
Cal Date: 12/01/2008 20:11
Run Date: 12/12/2008 01:57
File ID: 5L003193.F

Analyte	CAS. Number	Result	Qual	RL	MDL
1,3,5-Trinitrobenzene	99-35-4		~~UJ~~ UJ	0.299	0.0996
1,3-Dinitrobenzene	99-65-0		UJ	0.299	0.0996
2,4,6-Trinitrotoluene	118-96-7		UJ	0.299	0.0996
2,4-Dinitrotoluene	121-14-2		UJ	0.299	0.0996
2,6-Dinitrotoluene	606-20-2		UJ	0.299	0.0996
2-Amino-4,6-dinitrotoluene	35572-78-2		UJ	0.299	0.0996
2-Nitrotoluene	88-72-2		UJ	0.299	0.0996
3-Nitrotoluene	99-08-1		UJ	0.299	0.0996
4-Nitrotoluene	99-99-0		UJ	0.299	0.0996
4-Amino-2,6-dinitrotoluene	19406-51-0		UJ	0.299	0.0996
HMX	2691-41-0		UJ	0.299	0.0996
Nitrobenzene	98-95-3		UJ	0.299	0.0996
RDX	121-82-4		UJ	0.299	0.0996
Tetryl	479-45-8		UJ	0.299	0.0996
Nitroglycerin	55-63-0		UJ	0.299	0.0996

SSL

Surrogate	% Recovery	Lower	Upper	Qual
1,2-Dinitrobenzene	27.0	50	150	*

* Surrogate or spike compound out of range
UJ Undetected; the analyte was analyzed for, but not detected.

Microbac

50 RW 3/9/09

16

Sample Number: L08120129-20
Client ID: MR08-IS073-6-7-08D
Matrix: Soil
Workgroup Number: WG289948
Collect Date: 12/03/2008 16:00
Sample Tag: 02

PrePrep Method: NONE
Prep Method: METHOD
Analytical Method: 8330MOD
Analyst: ECL
Dilution: 1
Units: mg/kg

Instrument: HPLC5
Prep Date: 12/08/2008 09:00
Cal Date: 12/01/2008 20:11
Run Date: 12/12/2008 22:59
File ID: 5L003247.F

Analyte	CAS. Number	Result	Qual	RL	MDL
PETN	78-11-5		U	0.299	0.0996

U Undetected; the analyte was analyzed for, but not detected.

Microbac

 DW 3/9/09

17

Sample Number: L08120129-21
Client ID: MR08-EB01120380-SS
Matrix: Water
Workgroup Number: WG290129
Collect Date: 12/03/2008 13:00
Sample Tag: 01

PrePrep Method: NONE
Prep Method: 3535
Analytical Method: 8330MOD
Analyst: ECL
Dilution: 1
Units: ug/L

Instrument: HPLC5
Prep Date: 12/09/2008 08:00
Cal Date: 12/01/2008 20:11
Run Date: 12/10/2008 20:15
File ID: 5L003155.F

Analyte	CAS. Number	Result	Qual	RL	MDL
1,3,5-Trinitrobenzene	99-35-4		U	1.00	0.250
1,3-Dinitrobenzene	99-65-0		U	1.00	0.250
2,4,6-Trinitrotoluene	118-96-7		U	1.00	0.250
2,4-Dinitrotoluene	121-14-2		U	1.00	0.250
2,6-Dinitrotoluene	606-20-2		U	1.00	0.250
2-Amino-4,6-dinitrotoluene	35572-78-2		U	1.00	0.250
2-Nitrotoluene	88-72-2		U	1.00	0.250
3-Nitrotoluene	99-08-1		U	1.00	0.250
4-Nitrotoluene	99-99-0		U	1.00	0.250
4-Amino-2,6-dinitrotoluene	19406-51-0		U	1.00	0.250
HMX	2691-41-0		U	1.00	0.250
Nitrobenzene	98-95-3		U	1.00	0.250
RDX	121-82-4		U	1.00	0.250
Tetryl	479-45-8		U	1.00	0.250
Nitroglycerin	55-63-0		U	1.00	0.250

Surrogate	% Recovery	Lower	Upper	Qual
1,2-Dinitrobenzene	80.2	50	150	

U Undetected; the analyte was analyzed for, but not detected.

Microbac

51 MW 3/9/09

17

Sample Number: L08120129-21
Client ID: MR08-EB01120380-SS
Matrix: Water
Workgroup Number: WG290129
Collect Date: 12/03/2008 13:00
Sample Tag: 02

PrePrep Method: NONE
Prep Method: 3535
Analytical Method: 8330MOD
Analyst: ECL
Dilution: 1
Units: ug/L

Instrument: HPLC5
Prep Date: 12/09/2008 08:00
Cal Date: 12/01/2008 20:11
Run Date: 12/13/2008 01:50
File ID: 5L003260.F

Analyte	CAS. Number	Result	Qual	RL	MDL
PETN	78-11-5		U	1.00	0.250

U Undetected; the analyte was analyzed for, but not detected.

Microbac

MW 3/9/09

18

Sample Number: L08120129-22
Client ID: MR08-EB01120380-IS
Matrix: Water
Workgroup Number: WG290129
Collect Date: 12/03/2008 13:30
Sample Tag: 01

PrePrep Method: NONE
Prep Method: 3535
Analytical Method: 8330MOD
Analyst: ECL
Dilution: 1
Units: ug/L

Instrument: HPLC5
Prep Date: 12/09/2008 08:00
Cal Date: 12/01/2008 20:11
Run Date: 12/10/2008 20:53
File ID: 5L003156.F

Analyte	CAS. Number	Result	Qual	RL	MDL
1,3,5-Trinitrobenzene	99-35-4		U	1.00	0.250
1,3-Dinitrobenzene	99-65-0		U	1.00	0.250
2,4,6-Trinitrotoluene	118-96-7		U	1.00	0.250
2,4-Dinitrotoluene	121-14-2		U	1.00	0.250
2,6-Dinitrotoluene	606-20-2		U	1.00	0.250
2-Amino-4,6-dinitrotoluene	35572-78-2		U	1.00	0.250
2-Nitrotoluene	88-72-2		U	1.00	0.250
3-Nitrotoluene	99-08-1		U	1.00	0.250
4-Nitrotoluene	99-99-0		U	1.00	0.250
4-Amino-2,6-dinitrotoluene	19406-51-0		U	1.00	0.250
HMX	2691-41-0		U	1.00	0.250
Nitrobenzene	98-95-3		U	1.00	0.250
RDX	121-82-4		U	1.00	0.250
Tetryl	479-45-8		U	1.00	0.250
Nitroglycerin	55-63-0		U	1.00	0.250

Surrogate	% Recovery	Lower	Upper	Qual
1,2-Dinitrobenzene	69.7	50	150	

U Undetected; the analyte was analyzed for, but not detected.

Microbac

54 MW 3/9/09

18

Sample Number: L08120129-22
Client ID: MR08-EB01120380-IS
Matrix: Water
Workgroup Number: WG290129
Collect Date: 12/03/2008 13:30
Sample Tag: 02

PrePrep Method: NONE
Prep Method: 3535
Analytical Method: 8330MOD
Analyst: ECL
Dilution: 1
Units: ug/L

Instrument: HPLC5
Prep Date: 12/09/2008 08:00
Cal Date: 12/01/2008 20:11
Run Date: 12/13/2008 02:03
File ID: 5L003261.F

Analyte	CAS. Number	Result	Qual	RL	MDL
PETN	78-11-5		U	1.00	0.250

U Undetected; the analyte was analyzed for, but not detected.

Microbac

lw 3/9/09

ENVIRONMENTAL
Data Services, Inc.

METALS

USEPA Region IV - Level IV Review

Site: MCB Camp Lejeune, TO-09 SDG #: L08120129

Client: CH2M HILL, Inc., Virginia Beach, Virginia Date: March 9, 2009

Laboratory: Microbac Laboratories, Inc., Marietta, Ohio Reviewer: Nancy Weaver

EDS ID	Client Sample ID	Laboratory Sample ID	Matrix
1	MR08-SS067-08D	L08120129-01	Soil
2	MR08-IS067-6-7-08D	L08120129-02	Soil
3	MR08-SS068-08D	L08120129-03	Soil
4MS	MR08-SS068-08DMS	L08120129-04MS	Soil
5MSD	MR08-SS068-08DMSD	L08120129-05MSD	Soil
6	MR08-IS068-8-9-08D	L08120129-06	Soil
7MS	MR08-IS068-8-9-08DMS	L08120129-07MS	Soil
8MSD	MR08-IS068-8-9-08DMSD	L08120129-08MSD	Soil
9	MR08-SS069-08D	L08120129-09	Soil
10	MR08-SS069D-08D	L08120129-10	Soil
11	MR08-IS069-6-7-08D	L08120129-11	Soil
12	MR08-IS069D-6-7-08D	L08120129-12	Soil
13	MR08-SS070-08D	L08120129-13	Soil
14	MR08-IS070-8-9-08D	L08120129-14	Soil
15	MR08-SS071-08D	L08120129-15	Soil
16	MR08-IS071-6-7-08D	L08120129-16	Soil
17	MR08-SS072-08D	L08120129-17	Soil
18	MR08-IS072-6-7-08D	L08120129-18	Soil
19	MR08-SS073-08D	L08120129-19	Soil
20	MR08-IS073-6-7-08D	L08120129-20	Soil
21	MR08-EB01120308-SS	L08120129-21	Soil
22	MR08-EB01120308-IS	L08120129-22	Soil

The USEPA "Contract Laboratory Program National Functional Guidelines for Inorganic Data Review," October 2004, and professional judgement were used in evaluating the data in this summary report.

Holding Times - All samples were prepared and analyzed within 28 days for mercury and 180 days for all other metals.

Calibration - The ICV and CCV %R values were acceptable.

Method and Calibration Blanks - The method blanks and continuing calibration blanks exhibited contamination for several compounds, however, all sample results are non-detect or greater than 5X the blank concentration.

Field and Equipment Blank - Field QC results are summarized below.

Blank ID	Compound	Conc. ug/L	Action Level ug/L	Qualifier	Affected Samples
MR08-EB01120380-SS	None - ND	-	-	-	-
MR08-EB01120380-IS	None - ND	-	-	-	-
MR08-FB011206008	None - ND	-	-	-	-

ICP Interference Check Sample - All %R values were acceptable.

MS/MSD - The MS/MSD sample exhibited acceptable %R and RPD values except the following.

MS/MSD Sample ID	Compound	MS/MSD %R/RPD	Qualifier	Affected Samples
3	Arsenic	-157%/-200%/Ok	J/R	See #6
	Selenium	7%/7%/Ok	J/R	See #6
	Lead	-249%/6%/Ok	J/R	See #6
6	Barium	Ok/199%/43	J	1-20
	Chromium	158%/214%/26	J	1-20
	Zinc	Ok/122%/Ok	J	1-20
	Arsenic	7%/8%/Ok	J/R	1-20
	Lead	9%/11%/Ok	J/R	1-20
	Selenium	7%/7%/Ok	J/R	1-20

LCS - The LCS samples exhibited acceptable %R values.

ICP Serial Dilution - The ICP serial dilution sample exhibited acceptable %D values.

Field Duplicates - Field duplicate results are summarized below.

Compound	MR08-SS069-08D mg/kg	MR08-SS069D-08D mg/kg	RPD	Qualifier
Antimony	1.10	1.37	22%	None
Arsenic	8.71	1.57	139%	None - already qualified
Barium	36.1	39.5	9%	None
Cadmium	0.162	0.177	9%	None
Chromium	5.36	5.78	8%	None
Copper	3.76	5.03	29%	None

Compound	MR08-SS069-08D mg/kg	MR08-SS069D-08D mg/kg	RPD	Qualifier
Lead	40.2	48.4	19%	None
Mercury	0.154	0.188	20%	None
Selenium	1.82	2.07	13%	None
Silver	0.320	1.20 U	NC	None
Zinc	10.2	11.2	9%	None

Compound	MR08-IS069-6-7-08D mg/kg	MR08-IS069D-6-7-08D mg/kg	RPD	Qualifier
Barium	12.5	16.4	27%	None
Chromium	7.34	19.4	90%	None
Copper	3.62	3.48	4%	None
Antimony	1.94 U	0.610	NC	None
Zinc	4.51	8.97	66%	None
Arsenic	0.121	0.0984	21%	None
Lead	7.14	6.85	4%	None
Selenium	0.512	0.552	8%	None

Compound Quantitation - No discrepancies were identified.

Report Number: L08120129

Report Date : January 5, 2009

Sample Number: L08120129-01
Client ID: MR08-SS067-08D
Matrix: Soil
Workgroup Number: WG290470
Collect Date: 12/03/2008 08:30
Sample Tag: 01

PrePrep Method: NONE
Prep Method: 3051
Analytical Method: 6010B
Analyst: KHR
Dilution: 1
Units: mg/kg

Instrument: IRIS-ICP
Prep Date: 12/11/2008 11:37
Cal Date: 12/15/2008 11:44
Run Date: 12/15/2008 13:04
File ID: IR.121508.130400
Percent Solid: 73.5

Analyte	CAS. Number	Result	Qual	RL	MDL	
Silver, Total	7440-22-4		U	1.05	0.261	
Barium, Total	7440-39-3	20.8 J		0.523	0.105	MSH
Cadmium, Total	7440-43-9	0.191	J	0.209	0.0523	
Chromium, Total	7440-47-3	4.49 J		1.05	0.125	MSH
Copper, Total	7440-50-8	2.59		2.09	0.523	
Antimony, Total	7440-36-0	0.896	J	2.09	0.523	
Zinc, Total	7440-66-6	8.96 J		2.09	0.523	MSH

U Undetected; the analyte was analyzed for, but not detected.
J Estimated ; the analyte concentration was less than the low standard (LOQ)

Microbac

335 MW 3/9/09

Report Number: L08120129

Report Date : January 5, 2009

Sample Number:	L08120129-01	PrePrep Method:	NONE	Instrument:	ELAN-ICP
Client ID:	MR08-SS067-08D	Prep Method:	3051	Prep Date:	12/08/2008 11:10
Matrix:	Soil	Analytical Method:	6020	Cal Date:	12/09/2008 10:49
Workgroup Number:	WG289975	Analyst:	JYH	Run Date:	12/09/2008 15:49
Collect Date:	12/03/2008 08:30	Dilution:	1	File ID:	EL.120908.154901
Sample Tag:	01	Units:	mg/kg	Percent Solid:	73.5

Analyte	CAS. Number	Result	Qual	RL	MDL
Arsenic, Total	7440-38-2	1.33 J		0.393	0.0982
Lead, Total	7439-92-1	21.8		0.523	0.131
Selenium, Total	7782-49-2	1.22		0.523	0.131

MSL

Microbac

1219 LCW 3/9/09

Report Number: L08120129

Report Date : January 5, 2009

Sample Number: L08120129-01
Client ID: MR08-SS067-08D
Matrix: Soil
Workgroup Number: WG290279
Collect Date: 12/03/2008 08:30
Sample Tag: 01

PrePrep Method: NONE
Prep Method: 7471A
Analytical Method: 7471A
Analyst: ADC
Dilution: 1
Units: mg/kg

Instrument: HYDRA
Prep Date: 12/10/2008 12:19
Cal Date: 12/11/2008 15:35
Run Date: 12/11/2008 16:02
File ID: HY.121108.160254
Percent Solid: 73.5

Analyte	CAS. Number	Result	Qual	RL	MDL
Mercury, Total	7439-97-6	0.0746	J	0.132	0.0263

J Estimated ; the analyte concentration was less than the low standard (LOQ)

Microbac

2095 LW 3/9/09

2

Sample Number: L08120129-02
Client ID: MR08-IS067-6-7-08D
Matrix: Soil
Workgroup Number: WG290470
Collect Date: 12/03/2008 08:55
Sample Tag: 01

PrePrep Method: NONE
Prep Method: 3051
Analytical Method: 6010B
Analyst: KHR
Dilution: 1
Units: mg/kg

Instrument: IRIS-ICP
Prep Date: 12/11/2008 11:38
Cal Date: 12/15/2008 11:44
Run Date: 12/15/2008 13:28
File ID: IR.121508.132800
Percent Solid: 95.0

Analyte	CAS. Number	Result	Qual	RL	MDL	
Silver, Total	7440-22-4		U	0.788	0.197	
Barium, Total	7440-39-3	5.37 J		0.394	0.0788	MSH
Cadmium, Total	7440-43-9		U	0.158	0.0394	
Chromium, Total	7440-47-3	2.10 J		0.788	0.0946	MSH
Copper, Total	7440-50-8	0.602	J	1.58	0.394	
Antimony, Total	7440-36-0		U	1.58	0.394	
Zinc, Total	7440-66-6	0.668 J	~~J~~	1.58	0.394	MSH

U Undetected; the analyte was analyzed for, but not detected.
J Estimated ; the analyte concentration was less than the low standard (LOQ)

Microbac

336 fw 3/9/09

2

Sample Number: L08120129-02
Client ID: MR08-IS067-6-7-08D
Matrix: Soil
Workgroup Number: WG289975
Collect Date: 12/03/2008 08:55
Sample Tag: 01

PrePrep Method: NONE
Prep Method: 3051
Analytical Method: 6020
Analyst: JYH
Dilution: 1
Units: mg/kg

Instrument: ELAN-ICP
Prep Date: 12/08/2008 11:10
Cal Date: 12/09/2008 10:49
Run Date: 12/09/2008 15:54
File ID: EL.120908.155424
Percent Solid: 95.0

Analyte	CAS. Number	Result	Qual	RL	MDL
Arsenic, Total	7440-38-2	R	U	0.310	0.0774
Lead, Total	7439-92-1	1.49 J		0.413	0.103
Selenium, Total	7782-49-2	R	U	0.413	0.103

µSL

U Undetected; the analyte was analyzed for, but not detected.

Microbac

1220 fw 3/9/09

2

Sample Number:	L08120129-02	PrePrep Method:	NONE	Instrument:	HYDRA
Client ID:	MR08-IS067-6-7-08D	Prep Method:	7471A	Prep Date:	12/10/2008 12:19
Matrix:	Soil	Analytical Method:	7471A	Cal Date:	12/11/2008 15:35
Workgroup Number:	WG290279	Analyst:	ADC	Run Date:	12/11/2008 16:07
Collect Date:	12/03/2008 08:55	Dilution:	1	File ID:	HY.121108.160710
Sample Tag:	01	Units:	mg/kg	Percent Solid:	95.0

Analyte	CAS. Number	Result	Qual	RL	MDL
Mercury, Total	7439-97-6		U	0.105	0.0211

U Undetected; the analyte was analyzed for, but not detected.

Microbac

2096 LLL 3/9/09

3

Sample Number: L08120129-03
Client ID: MR08-SS068-08D
Matrix: Soil
Workgroup Number: WG290470
Collect Date: 12/03/2008 09:35
Sample Tag: 01

PrePrep Method: NONE
Prep Method: 3051
Analytical Method: 6010B
Analyst: KHR
Dilution: 1
Units: mg/kg

Instrument: IRIS-ICP
Prep Date: 12/11/2008 11:39
Cal Date: 12/15/2008 11:44
Run Date: 12/15/2008 13:34
File ID: IR.121508.133400
Percent Solid: 51.8

Analyte	CAS. Number	Result	Qual	RL	MDL	
Silver, Total	7440-22-4		U	1.46	0.365	
Barium, Total	7440-39-3	67.2 J		0.730	0.146	MSH
Cadmium, Total	7440-43-9	0.219	J	0.292	0.0730	
Chromium, Total	7440-47-3	10.7 J		1.46	0.175	MSH
Copper, Total	7440-50-8	6.09		2.92	0.730	
Antimony, Total	7440-36-0	2.62	J	2.92	0.730	
Zinc, Total	7440-66-6	13.6 J		2.92	0.730	MSH

U Undetected; the analyte was analyzed for, but not detected.
J Estimated ; the analyte concentration was less than the low standard (LOQ)

Microbac

 QW 3/9/09

3

Sample Number: L08120129-03
Client ID: MR08-SS068-08D
Matrix: Soil
Workgroup Number: WG289975
Collect Date: 12/03/2008 09:35
Sample Tag: DL01

PrePrep Method: NONE
Prep Method: 3051
Analytical Method: 6020
Analyst: JYH
Dilution: 10
Units: mg/kg

Instrument: ELAN-ICP
Prep Date: 12/08/2008 11:10
Cal Date: 12/09/2008 10:49
Run Date: 12/09/2008 17:55
File ID: EL.120908.175547
Percent Solid: 51.8

Analyte	CAS. Number	Result	Qual	RL	MDL
Lead, Total	7439-92-1	72.7 J		7.53	1.88

MSL

Microbac

1221 lw 3/9/09

3

Sample Number: L08120129-03
Client ID: MR08-SS068-08D
Matrix: Soil
Workgroup Number: WG289975
Collect Date: 12/03/2008 09:35
Sample Tag: 01

PrePrep Method: NONE
Prep Method: 3051
Analytical Method: 6020
Analyst: JYH
Dilution: 1
Units: mg/kg

Instrument: ELAN-ICP
Prep Date: 12/08/2008 11:10
Cal Date: 12/09/2008 10:49
Run Date: 12/09/2008 15:32
File ID: EL.120908.153255
Percent Solid: 51.8

Analyte	CAS. Number	Result	Qual	RL	MDL	
Arsenic, Total	7440-38-2	16.7 J		0.565	0.141	MSL
Selenium, Total	7782-49-2	5.25 J		0.753	0.188	MSL

Microbac

1222 fw 3/9/09

3

Sample Number:	L08120129-03	PrePrep Method:	NONE	Instrument:	HYDRA
Client ID:	MR08-SS068-08D	Prep Method:	7471A	Prep Date:	12/10/2008 12:19
Matrix:	Soil	Analytical Method:	7471A	Cal Date:	12/11/2008 15:35
Workgroup Number:	WG290279	Analyst:	ADC	Run Date:	12/11/2008 16:10
Collect Date:	12/03/2008 09:35	Dilution:	1	File ID:	HY.121108.161015
Sample Tag:	01	Units:	mg/kg	Percent Solid:	51.8

Analyte	CAS. Number	Result	Qual	RL	MDL
Mercury, Total	7439-97-6	0.281		0.191	0.0381

Microbac

2097 LW 3/9/09

6

Sample Number: L08120129-06
Client ID: MR08-IS068-8-9-08D
Matrix: Soil
Workgroup Number: WG290597
Collect Date: 12/03/2008 10:15
Sample Tag: 01

PrePrep Method: NONE
Prep Method: 3051
Analytical Method: 6010B
Analyst: KHR
Dilution: 1
Units: mg/kg

Instrument: IRIS-ICP
Prep Date: 12/11/2008 12:05
Cal Date: 12/16/2008 10:51
Run Date: 12/16/2008 18:37
File ID: IR.121608.183700
Percent Solid: 81.4

Analyte	CAS. Number	Result	Qual	RL	MDL	
Silver, Total	7440-22-4		U	0.912	0.228	
Barium, Total	7440-39-3	5.69 J		0.456	0.0912	MSH
Cadmium, Total	7440-43-9		U	0.182	0.0456	
Chromium, Total	7440-47-3	3.11 J		0.912	0.109	MSH
Copper, Total	7440-50-8	0.936	J	1.82	0.456	
Antimony, Total	7440-36-0		U	1.82	0.456	
Zinc, Total	7440-66-6	1.57 J	~~J~~	1.82	0.456	MSH

U Undetected; the analyte was analyzed for, but not detected.
J Estimated ; the analyte concentration was less than the low standard (LOQ)

Microbac

fcw 3/9/09

6

Sample Number: L08120129-06
Client ID: MR08-IS068-8-9-08D
Matrix: Soil
Workgroup Number: WG289975
Collect Date: 12/03/2008 10:15
Sample Tag: 01

PrePrep Method: NONE
Prep Method: 3051
Analytical Method: 6020
Analyst: JYH
Dilution: 1
Units: mg/kg

Instrument: ELAN-ICP
Prep Date: 12/08/2008 11:10
Cal Date: 12/09/2008 10:49
Run Date: 12/09/2008 16:10
File ID: EL.120908.161034
Percent Solid: 81.4

Analyte	CAS. Number	Result	Qual	RL	MDL
Arsenic, Total	7440-38-2	0.384 J		0.356	0.0891
Lead, Total	7439-92-1	3.27		0.475	0.119
Selenium, Total	7782-49-2	0.177	J	0.475	0.119

MSL

J Estimated ; the analyte concentration was less than the low standard (LOQ)

Microbac

1227 QW 3/9/09

6

Sample Number: L08120129-06
Client ID: MR08-IS068-8-9-08D
Matrix: Soil
Workgroup Number: WG290279
Collect Date: 12/03/2008 10:15
Sample Tag: 01

PrePrep Method: NONE
Prep Method: 7471A
Analytical Method: 7471A
Analyst: ADC
Dilution: 1
Units: mg/kg

Instrument: HYDRA
Prep Date: 12/10/2008 12:19
Cal Date: 12/11/2008 15:35
Run Date: 12/11/2008 16:16
File ID: HY.121108.161647
Percent Solid: 81.4

Analyte	CAS. Number	Result	Qual	RL	MDL
Mercury, Total	7439-97-6		U	0.115	0.0230

U Undetected; the analyte was analyzed for, but not detected.

Microbac

2100 LW 3/9/09

9

Sample Number: L08120129-09
Client ID: MR08-SS069-08D
Matrix: Soil
Workgroup Number: WG290470
Collect Date: 12/03/2008 11:20
Sample Tag: 01

PrePrep Method: NONE
Prep Method: 3051
Analytical Method: 6010B
Analyst: KHR
Dilution: 1
Units: mg/kg

Instrument: IRIS-ICP
Prep Date: 12/11/2008 11:42
Cal Date: 12/16/2008 10:51
Run Date: 12/16/2008 11:35
File ID: IR.121608.113500
Percent Solid: 64.1

Analyte	CAS. Number	Result	Qual	RL	MDL	
Silver, Total	7440-22-4	0.320	J	1.17	0.292	
Barium, Total	7440-39-3	36.1 J		0.584	0.117	MSH
Cadmium, Total	7440-43-9	0.162	J	0.234	0.0584	
Chromium, Total	7440-47-3	5.36 J		1.17	0.140	MSH
Copper, Total	7440-50-8	3.76		2.34	0.584	
Antimony, Total	7440-36-0	1.10	J	2.34	0.584	
Zinc, Total	7440-66-6	10.2 J		2.34	0.584	MSH

J Estimated ; the analyte concentration was less than the low standard (LOQ)

Microbac

MW 3/9/09

9

Sample Number: L08120129-09
Client ID: MR08-SS069-08D
Matrix: Soil
Workgroup Number: WG289975
Collect Date: 12/03/2008 11:20
Sample Tag: 01

PrePrep Method: NONE
Prep Method: 3051
Analytical Method: 6020
Analyst: JYH
Dilution: 1
Units: mg/kg

Instrument: ELAN-ICP
Prep Date: 12/08/2008 11:10
Cal Date: 12/09/2008 10:49
Run Date: 12/09/2008 16:39
File ID: EL.120908.163948
Percent Solid: 64.1

Analyte	CAS. Number	Result	Qual	RL	MDL
Arsenic, Total	7440-38-2	8.71 J		0.468	0.117
Lead, Total	7439-92-1	40.2		0.624	0.156
Selenium, Total	7782-49-2	1.82		0.624	0.156

MSL

Microbac

1230 lw 3/9/09

9

Sample Number: L08120129-09
Client ID: MR08-SS069-08D
Matrix: Soil
Workgroup Number: WG290279
Collect Date: 12/03/2008 11:20
Sample Tag: 01

PrePrep Method: NONE
Prep Method: 7471A
Analytical Method: 7471A
Analyst: ADC
Dilution: 1
Units: mg/kg

Instrument: HYDRA
Prep Date: 12/10/2008 12:19
Cal Date: 12/11/2008 15:35
Run Date: 12/11/2008 16:25
File ID: HY.121108.162535
Percent Solid: 64.1

Analyte	CAS. Number	Result	Qual	RL	MDL
Mercury, Total	7439-97-6	0.154		0.149	0.0298

Microbac

2103 QW 3/9/09

10

Sample Number: L08120129-10
Client ID: MR08-SS069D-08D
Matrix: Soil
Workgroup Number: WG290470
Collect Date: 12/03/2008 11:30
Sample Tag: 01

PrePrep Method: NONE
Prep Method: 3051
Analytical Method: 6010B
Analyst: KHR
Dilution: 1
Units: mg/kg

Instrument: IRIS-ICP
Prep Date: 12/11/2008 11:43
Cal Date: 12/16/2008 10:51
Run Date: 12/16/2008 11:41
File ID: IR.121608.114100
Percent Solid: 62.3

Analyte	CAS. Number	Result	Qual	RL	MDL	
Silver, Total	7440-22-4		U	1.20	0.299	
Barium, Total	7440-39-3	39.5 J		0.598	0.120	MSH
Cadmium, Total	7440-43-9	0.177	J	0.239	0.0598	
Chromium, Total	7440-47-3	5.78 J		1.20	0.143	MSH
Copper, Total	7440-50-8	5.03		2.39	0.598	
Antimony, Total	7440-36-0	1.37	J	2.39	0.598	
Zinc, Total	7440-66-6	11.2 J		2.39	0.598	MSH

U Undetected; the analyte was analyzed for, but not detected.
J Estimated ; the analyte concentration was less than the low standard (LOQ)

Microbac

344 MW 3/9/09

10

Sample Number: L08120129-10
Client ID: MR08-SS069D-08D
Matrix: Soil
Workgroup Number: WG289975
Collect Date: 12/03/2008 11:30
Sample Tag: 01

PrePrep Method: NONE
Prep Method: 3051
Analytical Method: 6020
Analyst: JYH
Dilution: 1
Units: mg/kg

Instrument: ELAN-ICP
Prep Date: 12/08/2008 11:10
Cal Date: 12/09/2008 10:49
Run Date: 12/09/2008 16:45
File ID: EL.120908.164509
Percent Solid: 62.3

Analyte	CAS. Number	Result	Qual	RL	MDL
Arsenic, Total	7440-38-2	1.57 J		0.474	0.118
Lead, Total	7439-92-1	48.4		0.631	0.158
Selenium, Total	7782-49-2	2.07		0.631	0.158

MSL

Microbac

1231 MW 3/9/09

10

Sample Number: L08120129-10
Client ID: MR08-SS069D-08D
Matrix: Soil
Workgroup Number: WG290279
Collect Date: 12/03/2008 11:30
Sample Tag: 01

PrePrep Method: NONE
Prep Method: 7471A
Analytical Method: 7471A
Analyst: ADC
Dilution: 1
Units: mg/kg

Instrument: HYDRA
Prep Date: 12/10/2008 12:19
Cal Date: 12/11/2008 15:35
Run Date: 12/11/2008 16:27
File ID: HY.121108.162748
Percent Solid: 62.3

Analyte	CAS. Number	Result	Qual	RL	MDL
Mercury, Total	7439-97-6	0.188		0.155	0.0310

Microbac

2104 lw 3/9/09

11

Sample Number: L08120129-11
Client ID: MR08-IS069-6-7-08D
Matrix: Soil
Workgroup Number: WG290470
Collect Date: 12/03/2008 11:55
Sample Tag: 01

PrePrep Method: NONE
Prep Method: 3051
Analytical Method: 6010B
Analyst: KHR
Dilution: 1
Units: mg/kg

Instrument: IRIS-ICP
Prep Date: 12/11/2008 11:44
Cal Date: 12/15/2008 11:44
Run Date: 12/15/2008 14:17
File ID: IR.121508.141700
Percent Solid: 78.8

Analyte	CAS. Number	Result	Qual	RL	MDL	
Silver, Total	7440-22-4		U	0.969	0.242	
Barium, Total	7440-39-3	12.5 J		0.485	0.0969	MSH
Cadmium, Total	7440-43-9		U	0.194	0.0485	
Chromium, Total	7440-47-3	7.34 J		0.969	0.116	MSH
Copper, Total	7440-50-8	3.62		1.94	0.485	
Antimony, Total	7440-36-0		U	1.94	0.485	
Zinc, Total	7440-66-6	4.51 J		1.94	0.485	MSH

U Undetected; the analyte was analyzed for, but not detected.

Microbac

345 MW 3/9/09

11

Sample Number: L08120129-11
Client ID: MR08-IS069-6-7-08D
Matrix: Soil
Workgroup Number: WG289975
Collect Date: 12/03/2008 11:55
Sample Tag: 01

PrePrep Method: NONE
Prep Method: 3051
Analytical Method: 6020
Analyst: JYH
Dilution: 1
Units: mg/kg

Instrument: ELAN-ICP
Prep Date: 12/08/2008 11:10
Cal Date: 12/09/2008 10:49
Run Date: 12/09/2008 16:50
File ID: EL.120908.165031
Percent Solid: 78.8

Analyte	CAS. Number	Result	Qual	RL	MDL
Arsenic, Total	7440-38-2	0.121 J	J	0.373	0.0933
Lead, Total	7439-92-1	7.14		0.497	0.124
Selenium, Total	7782-49-2	0.512		0.497	0.124

MSL

J Estimated ; the analyte concentration was less than the low standard (LOQ)

Microbac

1232 JW 3/9/09

11

Sample Number: L08120129-11
Client ID: MR08-IS069-6-7-08D
Matrix: Soil
Workgroup Number: WG290279
Collect Date: 12/03/2008 11:55
Sample Tag: 01

PrePrep Method: NONE
Prep Method: 7471A
Analytical Method: 7471A
Analyst: ADC
Dilution: 1
Units: mg/kg

Instrument: HYDRA
Prep Date: 12/10/2008 12:19
Cal Date: 12/11/2008 15:35
Run Date: 12/11/2008 16:30
File ID: HY.121108.163016
Percent Solid: 78.8

Analyte	CAS. Number	Result	Qual	RL	MDL
Mercury, Total	7439-97-6		U	0.123	0.0245

U Undetected; the analyte was analyzed for, but not detected.

Microbac

2105 lw 3/9/09

12

Sample Number: L08120129-12
Client ID: MR08-IS069D-6-7-08D
Matrix: Soil
Workgroup Number: WG290597
Collect Date: 12/03/2008 12:05
Sample Tag: 01

PrePrep Method: NONE
Prep Method: 3051
Analytical Method: 6010B
Analyst: KHR
Dilution: 1
Units: mg/kg

Instrument: IRIS-ICP
Prep Date: 12/11/2008 12:08
Cal Date: 12/16/2008 10:51
Run Date: 12/16/2008 19:07
File ID: IR.121608.190700
Percent Solid: 78.9

Analyte	CAS. Number	Result	Qual	RL	MDL	
Silver, Total	7440-22-4		U	0.975	0.244	
Barium, Total	7440-39-3	16.4 J		0.488	0.0975	MSH
Cadmium, Total	7440-43-9		U	0.195	0.0488	
Chromium, Total	7440-47-3	19.4 J		0.975	0.117	MSH
Copper, Total	7440-50-8	3.48		1.95	0.488	
Antimony, Total	7440-36-0	0.610	J	1.95	0.488	
Zinc, Total	7440-66-6	8.97 J		1.95	0.488	MSH

U Undetected; the analyte was analyzed for, but not detected.
J Estimated ; the analyte concentration was less than the low standard (LOQ)

Microbac

346 lw 3/9/09

12

Sample Number: L08120129-12
Client ID: MR08-IS069D-6-7-08D
Matrix: Soil
Workgroup Number: WG289975
Collect Date: 12/03/2008 12:05
Sample Tag: 01

PrePrep Method: NONE
Prep Method: 3051
Analytical Method: 6020
Analyst: JYH
Dilution: 1
Units: mg/kg

Instrument: ELAN-ICP
Prep Date: 12/08/2008 11:10
Cal Date: 12/09/2008 10:49
Run Date: 12/09/2008 16:55
File ID: EL.120908.165553
Percent Solid: 78.9

Analyte	CAS. Number	Result	Qual	RL	MDL
Arsenic, Total	7440-38-2	0.0984 J	J	0.371	0.0927
Lead, Total	7439-92-1	6.85		0.494	0.124
Selenium, Total	7782-49-2	0.552		0.494	0.124

MSL

J Estimated ; the analyte concentration was less than the low standard (LOQ)

Microbac

1233 LW 3/9/09

12

Sample Number: L08120129-12
Client ID: MR08-IS069D-6-7-08D
Matrix: Soil
Workgroup Number: WG290279
Collect Date: 12/03/2008 12:05
Sample Tag: 01

PrePrep Method: NONE
Prep Method: 7471A
Analytical Method: 7471A
Analyst: ADC
Dilution: 1
Units: mg/kg

Instrument: HYDRA
Prep Date: 12/10/2008 12:19
Cal Date: 12/11/2008 15:35
Run Date: 12/11/2008 16:31
File ID: HY.121108.163159
Percent Solid: 78.9

Analyte	CAS. Number	Result	Qual	RL	MDL
Mercury, Total	7439-97-6		U	0.124	0.0248

U Undetected; the analyte was analyzed for, but not detected.

Microbac

2106 Qw 3/9/09

13

Sample Number: L08120129-13
Client ID: MR08-SS070-08D
Matrix: Soil
Workgroup Number: WG290597
Collect Date: 12/03/2008 13:50
Sample Tag: 01

PrePrep Method: NONE
Prep Method: 3051
Analytical Method: 6010B
Analyst: KHR
Dilution: 1
Units: mg/kg

Instrument: IRIS-ICP
Prep Date: 12/11/2008 12:09
Cal Date: 12/16/2008 10:51
Run Date: 12/16/2008 19:32
File ID: IR.121608.193200
Percent Solid: 80.4

Analyte	CAS. Number	Result	Qual	RL	MDL	
Silver, Total	7440-22-4		U	0.943	0.236	
Barium, Total	7440-39-3	13.0 J		0.471	0.0943	MSH
Cadmium, Total	7440-43-9	0.110	J	0.189	0.0471	
Chromium, Total	7440-47-3	2.98 J		0.943	0.113	MSH
Copper, Total	7440-50-8	1.42	J	1.89	0.471	
Antimony, Total	7440-36-0	0.607	J	1.89	0.471	
Zinc, Total	7440-66-6	8.66 J		1.89	0.471	MSH

U Undetected; the analyte was analyzed for, but not detected.
J Estimated ; the analyte concentration was less than the low standard (LOQ)

Microbac

347 lw 3/9/09

13

Sample Number: L08120129-13
Client ID: MR08-SS070-08D
Matrix: Soil
Workgroup Number: WG289975
Collect Date: 12/03/2008 13:50
Sample Tag: 01

PrePrep Method: NONE
Prep Method: 3051
Analytical Method: 6020
Analyst: JYH
Dilution: 1
Units: mg/kg

Instrument: ELAN-ICP
Prep Date: 12/08/2008 11:10
Cal Date: 12/09/2008 10:49
Run Date: 12/09/2008 17:01
File ID: EL.120908.170115
Percent Solid: 80.4

Analyte	CAS. Number	Result	Qual	RL	MDL
Arsenic, Total	7440-38-2	7.96 J		0.365	0.0913
Lead, Total	7439-92-1	15.6		0.487	0.122
Selenium, Total	7782-49-2	0.348	~~J~~	0.487	0.122

MSL

J Estimated ; the analyte concentration was less than the low standard (LOQ)

Microbac

1234 RW 3/9/09

13

Sample Number:	L08120129-13	PrePrep Method:	NONE	Instrument:	HYDRA
Client ID:	MR08-SS070-08D	Prep Method:	7471A	Prep Date:	12/10/2008 12:19
Matrix:	Soil	Analytical Method:	7471A	Cal Date:	12/11/2008 15:35
Workgroup Number:	WG290279	Analyst:	ADC	Run Date:	12/11/2008 16:34
Collect Date:	12/03/2008 13:50	Dilution:	1	File ID:	HY.121108.163406
Sample Tag:	01	Units:	mg/kg	Percent Solid:	80.4

Analyte	CAS. Number	Result	Qual	RL	MDL
Mercury, Total	7439-97-6	0.0556	J	0.123	0.0247

J Estimated ; the analyte concentration was less than the low standard (LOQ)

Microbac

2107 MW 3/9/09

14

Sample Number: L08120129-14
Client ID: MR08-IS070-8-9-08D
Matrix: Soil
Workgroup Number: WG290597
Collect Date: 12/03/2008 14:20
Sample Tag: 01

PrePrep Method: NONE
Prep Method: 3051
Analytical Method: 6010B
Analyst: KHR
Dilution: 1
Units: mg/kg

Instrument: IRIS-ICP
Prep Date: 12/11/2008 12:10
Cal Date: 12/16/2008 10:51
Run Date: 12/16/2008 19:38
File ID: IR.121608.193800
Percent Solid: 84.0

Analyte	CAS. Number	Result	Qual	RL	MDL	
Silver, Total	7440-22-4		U	0.897	0.224	
Barium, Total	7440-39-3	10.9 J		0.449	0.0897	MSH
Cadmium, Total	7440-43-9		U	0.179	0.0449	
Chromium, Total	7440-47-3	14.7 J		0.897	0.108	MSH
Copper, Total	7440-50-8	1.52	J	1.79	0.449	
Antimony, Total	7440-36-0		U	1.79	0.449	
Zinc, Total	7440-66-6	3.43 J		1.79	0.449	MSH

U Undetected; the analyte was analyzed for, but not detected.
J Estimated ; the analyte concentration was less than the low standard (LOQ)

Microbac

348 lew 3/9/09

14

Sample Number: L08120129-14
Client ID: MR08-IS070-8-9-08D
Matrix: Soil
Workgroup Number: WG289975
Collect Date: 12/03/2008 14:20
Sample Tag: 01

PrePrep Method: NONE
Prep Method: 3051
Analytical Method: 6020
Analyst: JYH
Dilution: 1
Units: mg/kg

Instrument: ELAN-ICP
Prep Date: 12/08/2008 11:10
Cal Date: 12/09/2008 10:49
Run Date: 12/09/2008 17:06
File ID: EL.120908.170638
Percent Solid: 84.0

Analyte	CAS. Number	Result	Qual	RL	MDL
Arsenic, Total	7440-38-2	0.164 J	~~J~~	0.353	0.0884
Lead, Total	7439-92-1	5.32 J		0.471	0.118
Selenium, Total	7782-49-2	R	~~U~~	0.471	0.118

MSL

U Undetected; the analyte was analyzed for, but not detected.
J Estimated ; the analyte concentration was less than the low standard (LOQ)

Microbac

1235 lw 3/9/09

14

Sample Number: L08120129-14
Client ID: MR08-IS070-8-9-08D
Matrix: Soil
Workgroup Number: WG290279
Collect Date: 12/03/2008 14:20
Sample Tag: 01

PrePrep Method: NONE
Prep Method: 7471A
Analytical Method: 7471A
Analyst: ADC
Dilution: 1
Units: mg/kg

Instrument: HYDRA
Prep Date: 12/10/2008 12:19
Cal Date: 12/11/2008 15:35
Run Date: 12/11/2008 16:35
File ID: HY.121108.163553
Percent Solid: 84.0

Analyte	CAS. Number	Result	Qual	RL	MDL
Mercury, Total	7439-97-6		U	0.118	0.0235

U Undetected; the analyte was analyzed for, but not detected.

Microbac

2108 lw 3/9/09

15

Sample Number: L08120129-15
Client ID: MR08-SS071-08D
Matrix: Soil
Workgroup Number: WG290597
Collect Date: 12/03/2008 14:35
Sample Tag: 01

PrePrep Method: NONE
Prep Method: 3051
Analytical Method: 6010B
Analyst: KHR
Dilution: 1
Units: mg/kg

Instrument: IRIS-ICP
Prep Date: 12/11/2008 12:10
Cal Date: 12/16/2008 10:51
Run Date: 12/16/2008 19:44
File ID: IR.121608.194400
Percent Solid: 81.8

Analyte	CAS. Number	Result	Qual	RL	MDL	
Silver, Total	7440-22-4	0.287	J	0.898	0.224	
Barium, Total	7440-39-3	9.72 J		0.449	0.0898	MSH
Cadmium, Total	7440-43-9	0.0795	J	0.180	0.0449	
Chromium, Total	7440-47-3	2.28 J		0.898	0.108	MSH
Copper, Total	7440-50-8	1.68	J	1.80	0.449	
Antimony, Total	7440-36-0	0.626	J	1.80	0.449	
Zinc, Total	7440-66-6	6.15 J		1.80	0.449	MSH

J Estimated ; the analyte concentration was less than the low standard (LOQ)

Microbac

349 LW 3/9/09

15

Sample Number: L08120129-15
Client ID: MR08-SS071-08D
Matrix: Soil
Workgroup Number: WG289975
Collect Date: 12/03/2008 14:35
Sample Tag: 01

PrePrep Method: NONE
Prep Method: 3051
Analytical Method: 6020
Analyst: JYH
Dilution: 1
Units: mg/kg

Instrument: ELAN-ICP
Prep Date: 12/08/2008 11:10
Cal Date: 12/09/2008 10:49
Run Date: 12/09/2008 17:12
File ID: EL.120908.171201
Percent Solid: 81.8

Analyte	CAS. Number	Result	Qual	RL	MDL
Arsenic, Total	7440-38-2	0.411 J		0.366	0.0915
Lead, Total	7439-92-1	17.4		0.488	0.122
Selenium, Total	7782-49-2	0.283	J	0.488	0.122

MSL

J Estimated ; the analyte concentration was less than the low standard (LOQ)

Microbac

BW 3/9/09

15

Sample Number:	L08120129-15	PrePrep Method:	NONE	Instrument:	HYDRA
Client ID:	MR08-SS071-08D	Prep Method:	7471A	Prep Date:	12/10/2008 12:19
Matrix:	Soil	Analytical Method:	7471A	Cal Date:	12/11/2008 15:35
Workgroup Number:	WG290279	Analyst:	ADC	Run Date:	12/11/2008 16:37
Collect Date:	12/03/2008 14:35	Dilution:	1	File ID:	HY.121108.163748
Sample Tag:	01	Units:	mg/kg	Percent Solid:	81.8

Analyte	CAS. Number	Result	Qual	RL	MDL
Mercury, Total	7439-97-6	0.0364	J	0.119	0.0238

J Estimated ; the analyte concentration was less than the low standard (LOQ)

Microbac

2109 MW 3/9/09

16

Sample Number: L08120129-16
Client ID: MR08-IS071-6-7-08D
Matrix: Soil
Workgroup Number: WG290597
Collect Date: 12/03/2008 14:50
Sample Tag: 01

PrePrep Method: NONE
Prep Method: 3051
Analytical Method: 6010B
Analyst: KHR
Dilution: 1
Units: mg/kg

Instrument: IRIS-ICP
Prep Date: 12/11/2008 12:10
Cal Date: 12/16/2008 10:51
Run Date: 12/16/2008 19:50
File ID: IR.121608.195000
Percent Solid: 90.1

Analyte	CAS. Number	Result	Qual	RL	MDL	
Silver, Total	7440-22-4		U	0.836	0.209	
Barium, Total	7440-39-3	3.34 J		0.418	0.0836	MSH
Cadmium, Total	7440-43-9		U	0.167	0.0418	
Chromium, Total	7440-47-3	2.77 J		0.836	0.100	MSH
Copper, Total	7440-50-8	1.05	J	1.67	0.418	
Antimony, Total	7440-36-0	0.434	J	1.67	0.418	
Zinc, Total	7440-66-6	1.16 J	~~J~~	1.67	0.418	MSH

U Undetected; the analyte was analyzed for, but not detected.
J Estimated ; the analyte concentration was less than the low standard (LOQ)

Microbac

350 LW 3/9/09

16

Sample Number: L08120129-16
Client ID: MR08-IS071-6-7-08D
Matrix: Soil
Workgroup Number: WG289975
Collect Date: 12/03/2008 14:50
Sample Tag: 01

PrePrep Method: NONE
Prep Method: 3051
Analytical Method: 6020
Analyst: JYH
Dilution: 1
Units: mg/kg

Instrument: ELAN-ICP
Prep Date: 12/08/2008 11:10
Cal Date: 12/09/2008 10:49
Run Date: 12/09/2008 17:17
File ID: EL.120908.171724
Percent Solid: 90.1

Analyte	CAS. Number	Result	Qual	RL	MDL
Arsenic, Total	7440-38-2	0.159 J	J	0.329	0.0822
Lead, Total	7439-92-1	1.48		0.439	0.110
Selenium, Total	7782-49-2	0.174	J	0.439	0.110

MSL

J Estimated ; the analyte concentration was less than the low standard (LOQ)

Microbac

1237 LW 3/9/09

16

Sample Number: L08120129-16
Client ID: MR08-IS071-6-7-08D
Matrix: Soil
Workgroup Number: WG290279
Collect Date: 12/03/2008 14:50
Sample Tag: 01

PrePrep Method: NONE
Prep Method: 7471A
Analytical Method: 7471A
Analyst: ADC
Dilution: 1
Units: mg/kg

Instrument: HYDRA
Prep Date: 12/10/2008 12:19
Cal Date: 12/11/2008 15:35
Run Date: 12/11/2008 16:39
File ID: HY.121108.163929
Percent Solid: 90.1

Analyte	CAS. Number	Result	Qual	RL	MDL
Mercury, Total	7439-97-6		U	0.106	0.0213

U Undetected; the analyte was analyzed for, but not detected.

Microbac

2110 QW 3/9/09

17

Sample Number: L08120129-17
Client ID: MR08-SS072-08D
Matrix: Soil
Workgroup Number: WG290597
Collect Date: 12/03/2008 15:05
Sample Tag: 01

PrePrep Method: NONE
Prep Method: 3051
Analytical Method: 6010B
Analyst: KHR
Dilution: 1
Units: mg/kg

Instrument: IRIS-ICP
Prep Date: 12/11/2008 12:11
Cal Date: 12/16/2008 10:51
Run Date: 12/16/2008 19:56
File ID: IR.121608.195600
Percent Solid: 81.2

Analyte	CAS. Number	Result	Qual	RL	MDL	
Silver, Total	7440-22-4		U	0.929	0.232	
Barium, Total	7440-39-3	12.8 J		0.465	0.0929	MSH
Cadmium, Total	7440-43-9	0.0618	J	0.186	0.0465	
Chromium, Total	7440-47-3	2.21 J		0.929	0.111	MSH
Copper, Total	7440-50-8	1.87		1.86	0.465	
Antimony, Total	7440-36-0	0.515	J	1.86	0.465	
Zinc, Total	7440-66-6	7.95 J		1.86	0.465	MSH

U Undetected; the analyte was analyzed for, but not detected.
J Estimated ; the analyte concentration was less than the low standard (LOQ)

Microbac

RW 3/9/09

17

Sample Number: L08120129-17
Client ID: MR08-SS072-08D
Matrix: Soil
Workgroup Number: WG289975
Collect Date: 12/03/2008 15:05
Sample Tag: 01

PrePrep Method: NONE
Prep Method: 3051
Analytical Method: 6020
Analyst: JYH
Dilution: 1
Units: mg/kg

Instrument: ELAN-ICP
Prep Date: 12/08/2008 11:10
Cal Date: 12/09/2008 10:49
Run Date: 12/09/2008 17:34
File ID: EL.120908.173411
Percent Solid: 81.2

Analyte	CAS. Number	Result	Qual	RL	MDL
Arsenic, Total	7440-38-2	0.354 J	J	0.368	0.0920
Lead, Total	7439-92-1	12.7		0.491	0.123
Selenium, Total	7782-49-2	0.364	J	0.491	0.123

MSL

J Estimated ; the analyte concentration was less than the low standard (LOQ)

Microbac

1238 lew 3/9/09

17

Sample Number: L08120129-17
Client ID: MR08-SS072-08D
Matrix: Soil
Workgroup Number: WG290279
Collect Date: 12/03/2008 15:05
Sample Tag: 01

PrePrep Method: NONE
Prep Method: 7471A
Analytical Method: 7471A
Analyst: ADC
Dilution: 1
Units: mg/kg

Instrument: HYDRA
Prep Date: 12/10/2008 12:19
Cal Date: 12/11/2008 15:35
Run Date: 12/11/2008 16:42
File ID: HY.121108.164201
Percent Solid: 81.2

Analyte	CAS. Number	Result	Qual	RL	MDL
Mercury, Total	7439-97-6	0.0311	J	0.116	0.0232

J Estimated ; the analyte concentration was less than the low standard (LOQ)

Microbac

2111 lw 3/9/09

18

Sample Number: L08120129-18
Client ID: MR08-IS072-6-7-08D
Matrix: Soil
Workgroup Number: WG290597
Collect Date: 12/03/2008 15:25
Sample Tag: 01

PrePrep Method: NONE
Prep Method: 3051
Analytical Method: 6010B
Analyst: KHR
Dilution: 1
Units: mg/kg

Instrument: IRIS-ICP
Prep Date: 12/11/2008 12:12
Cal Date: 12/16/2008 10:51
Run Date: 12/16/2008 20:14
File ID: IR.121608.201400
Percent Solid: 90.6

Analyte	CAS. Number	Result	Qual	RL	MDL	
Silver, Total	7440-22-4		U	0.811	0.203	
Barium, Total	7440-39-3	6.01 J		0.406	0.0811	MSH
Cadmium, Total	7440-43-9		U	0.162	0.0406	
Chromium, Total	7440-47-3	2.30 J		0.811	0.0973	MSH
Copper, Total	7440-50-8	0.671	J	1.62	0.406	
Antimony, Total	7440-36-0		U	1.62	0.406	
Zinc, Total	7440-66-6	0.907 J	~~J~~	1.62	0.406	MSH

U Undetected; the analyte was analyzed for, but not detected.
J Estimated ; the analyte concentration was less than the low standard (LOQ)

Microbac

352 LW 3/9/09

18

Sample Number: L08120129-18
Client ID: MR08-IS072-6-7-08D
Matrix: Soil
Workgroup Number: WG289975
Collect Date: 12/03/2008 15:25
Sample Tag: 01

PrePrep Method: NONE
Prep Method: 3051
Analytical Method: 6020
Analyst: JYH
Dilution: 1
Units: mg/kg

Instrument: ELAN-ICP
Prep Date: 12/08/2008 11:10
Cal Date: 12/09/2008 10:49
Run Date: 12/09/2008 17:39
File ID: EL.120908.173935
Percent Solid: 90.6

Analyte	CAS. Number	Result	Qual	RL	MDL
Arsenic, Total	7440-38-2	R	~~U~~	0.319	0.0798
Lead, Total	7439-92-1	2.31 J		0.425	0.106
Selenium, Total	7782-49-2	R	~~U~~	0.425	0.106

MSL

U Undetected; the analyte was analyzed for, but not detected.

Microbac

1239 LW 3/9/09

18

Sample Number: L08120129-18
Client ID: MR08-IS072-6-7-08D
Matrix: Soil
Workgroup Number: WG290279
Collect Date: 12/03/2008 15:25
Sample Tag: 01

PrePrep Method: NONE
Prep Method: 7471A
Analytical Method: 7471A
Analyst: ADC
Dilution: 1
Units: mg/kg

Instrument: HYDRA
Prep Date: 12/10/2008 12:19
Cal Date: 12/11/2008 15:35
Run Date: 12/11/2008 16:48
File ID: HY.121108.164811
Percent Solid: 90.6

Analyte	CAS. Number	Result	Qual	RL	MDL
Mercury, Total	7439-97-6		U	0.106	0.0212

U Undetected; the analyte was analyzed for, but not detected.

Microbac

2112 llw 3/9/09

19

Sample Number: L08120129-19
Client ID: MR08-SS073-08D
Matrix: Soil
Workgroup Number: WG290597
Collect Date: 12/03/2008 15:40
Sample Tag: 01

PrePrep Method: NONE
Prep Method: 3051
Analytical Method: 6010B
Analyst: KHR
Dilution: 1
Units: mg/kg

Instrument: IRIS-ICP
Prep Date: 12/11/2008 12:12
Cal Date: 12/16/2008 10:51
Run Date: 12/16/2008 20:21
File ID: IR.121608.202100
Percent Solid: 80.5

Analyte	CAS. Number	Result	Qual	RL	MDL	
Silver, Total	7440-22-4	0.252	J	0.933	0.233	
Barium, Total	7440-39-3	13.8 J		0.466	0.0933	MSH
Cadmium, Total	7440-43-9	0.186	J	0.187	0.0466	
Chromium, Total	7440-47-3	3.41 J		0.933	0.112	MSH
Copper, Total	7440-50-8	2.41		1.87	0.466	
Antimony, Total	7440-36-0	0.950	J	1.87	0.466	
Zinc, Total	7440-66-6	19.5 J		1.87	0.466	MSH

J Estimated ; the analyte concentration was less than the low standard (LOQ)

Microbac

353 MW 3/9/09

19

Sample Number: L08120129-19
Client ID: MR08-SS073-08D
Matrix: Soil
Workgroup Number: WG289975
Collect Date: 12/03/2008 15:40
Sample Tag: 01

PrePrep Method: NONE
Prep Method: 3051
Analytical Method: 6020
Analyst: JYH
Dilution: 1
Units: mg/kg

Instrument: ELAN-ICP
Prep Date: 12/08/2008 11:10
Cal Date: 12/09/2008 10:49
Run Date: 12/09/2008 17:44
File ID: EL.120908.174459
Percent Solid: 80.5

Analyte	CAS. Number	Result	Qual	RL	MDL
Arsenic, Total	7440-38-2	0.602 J		0.371	0.0928
Lead, Total	7439-92-1	37.5		0.495	0.124
Selenium, Total	7782-49-2	0.427	J	0.495	0.124

MSL

J Estimated ; the analyte concentration was less than the low standard (LOQ)

Microbac

1240 MW 3/9/09

19

Sample Number:	L08120129-19	PrePrep Method:	NONE	Instrument:	HYDRA
Client ID:	MR08-SS073-08D	Prep Method:	7471A	Prep Date:	12/10/2008 12:19
Matrix:	Soil	Analytical Method:	7471A	Cal Date:	12/11/2008 15:35
Workgroup Number:	WG290279	Analyst:	ADC	Run Date:	12/11/2008 16:49
Collect Date:	12/03/2008 15:40	Dilution:	1	File ID:	HY.121108.164956
Sample Tag:	01	Units:	mg/kg	Percent Solid:	80.5

Analyte	CAS. Number	Result	Qual	RL	MDL
Mercury, Total	7439-97-6	0.0883	J	0.118	0.0237

J Estimated ; the analyte concentration was less than the low standard (LOQ)

Microbac

2113 LAW 3/9/09

20

Sample Number: L08120129-20
Client ID: MR08-IS073-6-7-08D
Matrix: Soil
Workgroup Number: WG290597
Collect Date: 12/03/2008 16:00
Sample Tag: 01

PrePrep Method: NONE
Prep Method: 3051
Analytical Method: 6010B
Analyst: KHR
Dilution: 1
Units: mg/kg

Instrument: IRIS-ICP
Prep Date: 12/11/2008 12:13
Cal Date: 12/16/2008 10:51
Run Date: 12/16/2008 20:27
File ID: IR.121608.202700
Percent Solid: 91.7

Analyte	CAS. Number	Result	Qual	RL	MDL	
Silver, Total	7440-22-4		U	0.780	0.195	
Barium, Total	7440-39-3	5.34 J		0.390	0.0780	MSH
Cadmium, Total	7440-43-9		U	0.156	0.0390	
Chromium, Total	7440-47-3	3.17 J		0.780	0.0936	MSH
Copper, Total	7440-50-8		U	1.56	0.390	
Antimony, Total	7440-36-0		U	1.56	0.390	
Zinc, Total	7440-66-6	0.558 J	~~J~~	1.56	0.390	MSH

U Undetected; the analyte was analyzed for, but not detected.
J Estimated ; the analyte concentration was less than the low standard (LOQ)

Microbac

 LW 3/9/09

20

Sample Number: L08120129-20
Client ID: MR08-IS073-6-7-08D
Matrix: Soil
Workgroup Number: WG289975
Collect Date: 12/03/2008 16:00
Sample Tag: 01

PrePrep Method: NONE
Prep Method: 3051
Analytical Method: 6020
Analyst: JYH
Dilution: 1
Units: mg/kg

Instrument: ELAN-ICP
Prep Date: 12/08/2008 11:10
Cal Date: 12/09/2008 10:49
Run Date: 12/09/2008 17:50
File ID: EL.120908.175024
Percent Solid: 91.7

Analyte	CAS. Number	Result	Qual	RL	MDL
Arsenic, Total	7440-38-2	R	~~U~~	0.319	0.0797
Lead, Total	7439-92-1	2.88 J		0.425	0.106
Selenium, Total	7782-49-2	R	~~U~~	0.425	0.106

MSL

U Undetected; the analyte was analyzed for, but not detected.

Microbac

1241 LW 3/9/09

20

Sample Number:	L08120129-20	PrePrep Method:	NONE	Instrument:	HYDRA
Client ID:	MR08-IS073-6-7-08D	Prep Method:	7471A	Prep Date:	12/10/2008 12:19
Matrix:	Soil	Analytical Method:	7471A	Cal Date:	12/11/2008 15:35
Workgroup Number:	WG290279	Analyst:	ADC	Run Date:	12/11/2008 16:51
Collect Date:	12/03/2008 16:00	Dilution:	1	File ID:	HY.121108.165151
Sample Tag:	01	Units:	mg/kg	Percent Solid:	91.7

Analyte	CAS. Number	Result	Qual	RL	MDL
Mercury, Total	7439-97-6		U	0.102	0.0204

U Undetected; the analyte was analyzed for, but not detected.

Microbac

2114 MW 3/9/09

21

Sample Number: L08120129-21
Client ID: MR08-EB01120380-SS
Matrix: Water
Workgroup Number: WG289955
Collect Date: 12/03/2008 13:00
Sample Tag: 01

PrePrep Method: NONE
Prep Method: 3005A
Analytical Method: 6010B
Analyst: ED
Dilution: 1
Units: ug/L

Instrument: PE-ICP2
Prep Date: 12/08/2008 09:27
Cal Date: 12/10/2008 10:15
Run Date: 12/10/2008 23:05
File ID: P2.121008.230558

Analyte	CAS. Number	Result	Qual	RL	MDL
Barium, Total	7440-39-3		U	10.0	2.50
Cadmium, Total	7440-43-9		U	1.00	0.250
Chromium, Total	7440-47-3		U	10.0	2.50
Copper, Total	7440-50-8		U	20.0	5.00
Silver, Total	7440-22-4		U	6.00	2.00
Zinc, Total	7440-66-6		U	20.0	5.00

U Undetected; the analyte was analyzed for, but not detected.

Microbac

355 LW 3/9/09

21

Sample Number: L08120129-21
Client ID: MR08-EB01120380-SS
Matrix: Water
Workgroup Number: WG289976
Collect Date: 12/03/2008 13:00
Sample Tag: 01

PrePrep Method: NONE
Prep Method: 3015
Analytical Method: 6020
Analyst: JYH
Dilution: 1
Units: ug/L

Instrument: ELAN-ICP
Prep Date: 12/08/2008 10:04
Cal Date: 12/17/2008 09:38
Run Date: 12/17/2008 13:41
File ID: EL.121708.134111

Analyte	CAS. Number	Result	Qual	RL	MDL
Arsenic, Total	7440-38-2		U	1.00	0.250
Lead, Total	7439-92-1		U	1.00	0.250
Antimony, Total	7440-36-0		U	1.00	0.250
Selenium, Total	7782-49-2		U	2.00	0.500

U Undetected; the analyte was analyzed for, but not detected.

Microbac

1242 lw 3/9/09

21

Sample Number: L08120129-21
Client ID: MR08-EB01120380-SS
Matrix: Water
Workgroup Number: WG290139
Collect Date: 12/03/2008 13:00
Sample Tag: 01

PrePrep Method: NONE
Prep Method: 7470A
Analytical Method: 7470A
Analyst: ADC
Dilution: 1
Units: ug/L

Instrument: HYDRA
Prep Date: 12/10/2008 09:36
Cal Date: 12/11/2008 13:19
Run Date: 12/11/2008 15:10
File ID: HY.121108.151046

Analyte	CAS. Number	Result	Qual	RL	MDL
Mercury	7439-97-6		U	0.400	0.100

U Undetected; the analyte was analyzed for, but not detected.

Microbac

2115 MW 3/9/09

22

Sample Number: L08120129-22
Client ID: MR08-EB01120380-IS
Matrix: Water
Workgroup Number: WG289955
Collect Date: 12/03/2008 13:30
Sample Tag: 01

PrePrep Method: NONE
Prep Method: 3005A
Analytical Method: 6010B
Analyst: ED
Dilution: 1
Units: ug/L

Instrument: PE-ICP2
Prep Date: 12/08/2008 09:27
Cal Date: 12/10/2008 10:15
Run Date: 12/10/2008 23:12
File ID: P2.121008.231213

Analyte	CAS. Number	Result	Qual	RL	MDL
Barium, Total	7440-39-3		U	10.0	2.50
Cadmium, Total	7440-43-9		U	1.00	0.250
Chromium, Total	7440-47-3		U	10.0	2.50
Copper, Total	7440-50-8		U	20.0	5.00
Silver, Total	7440-22-4		U	6.00	2.00
Zinc, Total	7440-66-6		U	20.0	5.00

U Undetected; the analyte was analyzed for, but not detected.

Microbac

 3/9/09

22

Sample Number: L08120129-22
Client ID: MR08-EB01120380-IS
Matrix: Water
Workgroup Number: WG289976
Collect Date: 12/03/2008 13:30
Sample Tag: 01

PrePrep Method: NONE
Prep Method: 3015
Analytical Method: 6020
Analyst: JYH
Dilution: 1
Units: ug/L

Instrument: ELAN-ICP
Prep Date: 12/08/2008 10:04
Cal Date: 12/17/2008 09:38
Run Date: 12/17/2008 13:46
File ID: EL.121708.134634

Analyte	CAS. Number	Result	Qual	RL	MDL
Arsenic, Total	7440-38-2		U	1.00	0.250
Lead, Total	7439-92-1		U	1.00	0.250
Antimony, Total	7440-36-0		U	1.00	0.250
Selenium, Total	7782-49-2		U	2.00	0.500

U Undetected; the analyte was analyzed for, but not detected.

Microbac

1243 MW 3/9/09

22

Sample Number: L08120129-22
Client ID: MR08-EB01120380-IS
Matrix: Water
Workgroup Number: WG290139
Collect Date: 12/03/2008 13:30
Sample Tag: 01

PrePrep Method: NONE
Prep Method: 7470A
Analytical Method: 7470A
Analyst: ADC
Dilution: 1
Units: ug/L

Instrument: HYDRA
Prep Date: 12/10/2008 09:36
Cal Date: 12/11/2008 13:19
Run Date: 12/11/2008 15:12
File ID: HY.121108.151230

Analyte	CAS. Number	Result	Qual	RL	MDL
Mercury	7439-97-6		U	0.400	0.100

U Undetected; the analyte was analyzed for, but not detected.

Microbac

2116 LW 3/9/09

ENVIRONMENTAL
Data Services, Inc.

EXPLOSIVES, PETN & NITROGLYCERIN

USEPA Region IV - Level IV Review

Site: MCB Camp Lejeune, TO-09 SDG #: L08120162

Client: CH2M HILL, Inc., Virginia Beach, Virginia Date: March 9, 2009

Laboratory: Microbac Laboratories, Inc., Marietta, Ohio Reviewer: Linda Sulkowski

EDS ID	Client Sample ID	Laboratory Sample ID	Matrix
1	MR08-SS074-08D	L08120162-01	Soil
2	MR08-IS074-7-8-08D	L08120162-02	Soil
3	MR08-SS075-08D	L08120162-03	Soil
4	MR08-IS075-6-7-08D	L08120162-04	Soil
5	MR08-SS076-08D	L08120162-05	Soil
6	MR08-IS076-6-7-08D	L08120162-06	Soil
7	MR08-SS077-08D	L08120162-07	Soil
8	MR08-IS077-6-7-08D	L08120162-08	Soil
9	MR08-SS078-08D	L08120162-09	Soil
10	MR08-IS078-6-7-08D	L08120162-10	Soil
11	MR08-SS079-08D	L08120162-11	Soil
12	MR08-SS079D-08D	L08120162-12	Soil
13	MR08-IS079-6-7-08D	L08120162-13	Soil
14	MR08-IS079D-6-7-08D	L08120162-14	Soil
15	MR08-SS097-08D	L08120162-15	Soil
16	MR08-IS097-6-7-08D	L08120162-16	Soil
17	MR08-SS096-08D	L08120162-17	Soil
18	MR08-IS096-6-7-08D	L08120162-18	Soil
19	MR08-SS095-08D	L08120162-19	Soil
20	MR08-IS095-6-7-08D	L08120162-20	Soil
21	MR08-SS094-08D	L08120162-21	Soil
22	MR08-IS094-5-6-08D	L08120162-22	Soil
23	MR08-SS092-08D	L08120162-23	Soil
24	MR08-IS092-4-5-08D	L08120162-24	Soil
25	MR08-EB01120408-SS	L08120162-25	Water
26	MR08-EB01120408-IS	L08120162-26	Water

The USEPA "Contract Laboratory Program National Functional Guidelines for Organic Data Review," October 1999, and professional judgement were used in evaluating the data in this summary report.

Holding Times - All samples were extracted within 7 days for water samples, 14 days for soil samples and analyzed within 40 days.

Initial Calibration - The initial calibrations exhibited acceptable %RSD and/or correlation coefficient values.

Calibration Verification - The continuing calibrations exhibited acceptable %D values except the following.

CCAL Date	Compound	%D	Qualifier	Affected Samples
12/16/08	2,4,6-Trinitrotoluene	24.7%	J/UJ	7-13
	Tetryl	23.8%	J/UJ	7-13

Surrogates - All samples exhibited acceptable surrogate recoveries except the following.

Sample ID	Surrogate	%R	Qualifier
1	1,2-Dinitrobenzene	26.3%	J/UJ
2	1,2-Dinitrobenzene	26.6%	J/UJ
4	1,2-Dinitrobenzene	46.1%	J/UJ
5	1,2-Dinitrobenzene	42.9%	J/UJ
6	1,2-Dinitrobenzene	36.1%	J/UJ

MS/MSD - A MS/MSD sample was not analyzed.

Laboratory Control Sample - The LCS samples exhibited acceptable %R values except the following.

LCS ID	Compound	%R	Qualifier	Affected Samples
WG289929-03	2,4-Dinitrotoluene	78.40%	J/UJ	7-23

Method Blank - The method blanks were free of contamination.

Field and Equipment Blank - Field QC results are summarized below.

Blank ID	Compound	Conc. ug/L	Action Level ug/L	Qualifier	Affected Samples
MR08-EB01120408-SS	None - ND	-	-	-	-
MR08-EB01120408-IS	None - ND	-	-	-	-
MR08-FB01120608	None - ND	-	-	-	-

Field Duplicates - Field duplicate results are summarized below.

Compound	MR08-SS079-08D mg/kg	MR08-SS079D-08D mg/kg	RPD	Qualifier
None	ND	ND	-	-

Compound	MR08-IS079-6-7-08D mg/kg	MR08-IS079D-6-7-08D mg/kg	RPD	Qualifier
None	ND	ND	-	-

Compound Identification - Retention times were acceptable and no further action was taken.

Compound Quantitation - No discrepancies were identified.

1

Sample Number: L08120162-01
Client ID: MR08-SS074-08D
Matrix: Soil
Workgroup Number: WG289948
Collect Date: 12/04/2008 08:45
Sample Tag: 01

PrePrep Method: NONE
Prep Method: METHOD
Analytical Method: 8330MOD
Analyst: ECL
Dilution: 1
Units: mg/kg

Instrument: HPLC5
Prep Date: 12/08/2008 09:00
Cal Date: 12/01/2008 20:11
Run Date: 12/12/2008 02:36
File ID: 5L003194.F

Analyte	CAS. Number	Result	Qual	RL	MDL
1,3,5-Trinitrobenzene	99-35-4		~~UJ~~ UJ	0.299	0.0995
1,3-Dinitrobenzene	99-65-0		~~UJ~~	0.299	0.0995
2,4,6-Trinitrotoluene	118-96-7		~~UJ~~	0.299	0.0995
2,4-Dinitrotoluene	121-14-2		~~UJ~~	0.299	0.0995
2,6-Dinitrotoluene	606-20-2		~~UJ~~	0.299	0.0995
2-Amino-4,6-dinitrotoluene	35572-78-2		~~UJ~~	0.299	0.0995
2-Nitrotoluene	88-72-2		~~UJ~~	0.299	0.0995
3-Nitrotoluene	99-08-1		~~UJ~~	0.299	0.0995
4-Nitrotoluene	99-99-0		~~UJ~~	0.299	0.0995
4-Amino-2,6-dinitrotoluene	19406-51-0		~~UJ~~	0.299	0.0995
HMX	2691-41-0		~~UJ~~	0.299	0.0995
Nitrobenzene	98-95-3		~~UJ~~	0.299	0.0995
RDX	121-82-4		~~UJ~~	0.299	0.0995
Tetryl	479-45-8		~~UJ~~	0.299	0.0995
Nitroglycerin	55-63-0		~~UJ~~	0.299	0.0995

SSL

Surrogate	% Recovery	Lower	Upper	Qual
1,2-Dinitrobenzene	26.3	50	150	*

* Surrogate or spike compound out of range
UJ Undetected; the analyte was analyzed for, but not detected.

Microbac

16 LLJ 3/9/09

Report Number: L08120162

Report Date : January 6, 2009

Sample Number: L08120162-01
Client ID: MR08-SS074-08D
Matrix: Soil
Workgroup Number: WG289948
Collect Date: 12/04/2008 08:45
Sample Tag: 02

PrePrep Method: NONE
Prep Method: METHOD
Analytical Method: 8330MOD
Analyst: ECL
Dilution: 1
Units: mg/kg

Instrument: HPLC5
Prep Date: 12/08/2008 09:00
Cal Date: 12/01/2008 20:11
Run Date: 12/12/2008 23:12
File ID: 5L003248.F

Analyte	CAS. Number	Result	Qual	RL	MDL
PETN	78-11-5		U	0.299	0.0995

U Undetected; the analyte was analyzed for, but not detected.

Microbac

15 MW 3/9/09

2

Sample Number: L08120162-02
Client ID: MR08-IS074-7-8-08D
Matrix: Soil
Workgroup Number: WG289948
Collect Date: 12/04/2008 09:05
Sample Tag: 01

PrePrep Method: NONE
Prep Method: METHOD
Analytical Method: 8330MOD
Analyst: ECL
Dilution: 1
Units: mg/kg

Instrument: HPLC5
Prep Date: 12/08/2008 09:00
Cal Date: 12/01/2008 20:11
Run Date: 12/12/2008 03:14
File ID: 5L003195.F

Analyte	CAS. Number	Result	Qual	RL	MDL
1,3,5-Trinitrobenzene	99-35-4		UJ	0.295	0.0984
1,3-Dinitrobenzene	99-65-0		UJ	0.295	0.0984
2,4,6-Trinitrotoluene	118-96-7		UJ	0.295	0.0984
2,4-Dinitrotoluene	121-14-2		UJ	0.295	0.0984
2,6-Dinitrotoluene	606-20-2		UJ	0.295	0.0984
2-Amino-4,6-dinitrotoluene	35572-78-2		UJ	0.295	0.0984
2-Nitrotoluene	88-72-2		UJ	0.295	0.0984
3-Nitrotoluene	99-08-1		UJ	0.295	0.0984
4-Nitrotoluene	99-99-0		UJ	0.295	0.0984
4-Amino-2,6-dinitrotoluene	19406-51-0		UJ	0.295	0.0984
HMX	2691-41-0		UJ	0.295	0.0984
Nitrobenzene	98-95-3		UJ	0.295	0.0984
RDX	121-82-4		UJ	0.295	0.0984
Tetryl	479-45-8		UJ	0.295	0.0984
Nitroglycerin	55-63-0		UJ	0.295	0.0984

SSL

Surrogate	% Recovery	Lower	Upper	Qual
1,2-Dinitrobenzene	26.6	50	150	*

* Surrogate or spike compound out of range
UJ Undetected; the analyte was analyzed for, but not detected.

Microbac

17 lw 3/9/09

2

Sample Number: L08120162-02
Client ID: MR08-IS074-7-8-08D
Matrix: Soil
Workgroup Number: WG289948
Collect Date: 12/04/2008 09:05
Sample Tag: 02

PrePrep Method: NONE
Prep Method: METHOD
Analytical Method: 8330MOD
Analyst: ECL
Dilution: 1
Units: mg/kg

Instrument: HPLC5
Prep Date: 12/08/2008 09:00
Cal Date: 12/01/2008 20:11
Run Date: 12/12/2008 23:25
File ID: 5L003249.F

Analyte	CAS. Number	Result	Qual	RL	MDL
PETN	78-11-5		U	0.295	0.0984

U Undetected; the analyte was analyzed for, but not detected.

Microbac

18 fw 3/9/09

3

Sample Number: L08120162-03
Client ID: MR08-SS075-08D
Matrix: Soil
Workgroup Number: WG289948
Collect Date: 12/04/2008 09:20
Sample Tag: 01

PrePrep Method: NONE
Prep Method: METHOD
Analytical Method: 8330MOD
Analyst: ECL
Dilution: 1
Units: mg/kg

Instrument: HPLC5
Prep Date: 12/08/2008 09:00
Cal Date: 12/01/2008 20:11
Run Date: 12/12/2008 03:52
File ID: 5L003196.F

Analyte	CAS. Number	Result	Qual	RL	MDL
1,3,5-Trinitrobenzene	99-35-4		U	0.292	0.0975
1,3-Dinitrobenzene	99-65-0		U	0.292	0.0975
2,4,6-Trinitrotoluene	118-96-7		U	0.292	0.0975
2,4-Dinitrotoluene	121-14-2		U	0.292	0.0975
2,6-Dinitrotoluene	606-20-2		U	0.292	0.0975
2-Amino-4,6-dinitrotoluene	35572-78-2		U	0.292	0.0975
2-Nitrotoluene	88-72-2		U	0.292	0.0975
3-Nitrotoluene	99-08-1		U	0.292	0.0975
4-Nitrotoluene	99-99-0		U	0.292	0.0975
4-Amino-2,6-dinitrotoluene	19406-51-0		U	0.292	0.0975
HMX	2691-41-0		U	0.292	0.0975
Nitrobenzene	98-95-3		U	0.292	0.0975
RDX	121-82-4		U	0.292	0.0975
Tetryl	479-45-8		U	0.292	0.0975
Nitroglycerin	55-63-0		U	0.292	0.0975

Surrogate	% Recovery	Lower	Upper	Qual
1,2-Dinitrobenzene	58.6	50	150	

U Undetected; the analyte was analyzed for, but not detected.

Microbac

20 RW 3/9/09

3

Sample Number: L08120162-03
Client ID: MR08-SS075-08D
Matrix: Soil
Workgroup Number: WG289948
Collect Date: 12/04/2008 09:20
Sample Tag: 02

PrePrep Method: NONE
Prep Method: METHOD
Analytical Method: 8330MOD
Analyst: ECL
Dilution: 1
Units: mg/kg

Instrument: HPLC5
Prep Date: 12/08/2008 09:00
Cal Date: 12/01/2008 20:11
Run Date: 12/12/2008 23:38
File ID: 5L003250.F

Analyte	CAS. Number	Result	Qual	RL	MDL
PETN	78-11-5		U	0.292	0.0975

U Undetected; the analyte was analyzed for, but not detected.

Microbac

19 lcw 3/9/09

4

Sample Number: L08120162-04
Client ID: MR08-IS075-6-7-08D
Matrix: Soil
Workgroup Number: WG289948
Collect Date: 12/04/2008 09:35
Sample Tag: 01

PrePrep Method: NONE
Prep Method: METHOD
Analytical Method: 8330MOD
Analyst: ECL
Dilution: 1
Units: mg/kg

Instrument: HPLC5
Prep Date: 12/08/2008 09:00
Cal Date: 12/01/2008 20:11
Run Date: 12/12/2008 06:04
File ID: 5L003200.F

Analyte	CAS. Number	Result	Qual	RL	MDL
1,3,5-Trinitrobenzene	99-35-4		~~U~~ UJ	0.299	0.0997
1,3-Dinitrobenzene	99-65-0		~~U~~ UJ	0.299	0.0997
2,4,6-Trinitrotoluene	118-96-7		~~U~~ UJ	0.299	0.0997
2,4-Dinitrotoluene	121-14-2		~~U~~ UJ	0.299	0.0997
2,6-Dinitrotoluene	606-20-2		~~U~~ UJ	0.299	0.0997
2-Amino-4,6-dinitrotoluene	35572-78-2		~~U~~ UJ	0.299	0.0997
2-Nitrotoluene	88-72-2		~~U~~ UJ	0.299	0.0997
3-Nitrotoluene	99-08-1		~~U~~ UJ	0.299	0.0997
4-Nitrotoluene	99-99-0		~~U~~ UJ	0.299	0.0997
4-Amino-2,6-dinitrotoluene	19406-51-0		~~U~~ UJ	0.299	0.0997
HMX	2691-41-0		~~U~~ UJ	0.299	0.0997
Nitrobenzene	98-95-3		~~U~~ UJ	0.299	0.0997
RDX	121-82-4		~~U~~ UJ	0.299	0.0997
Tetryl	479-45-8		~~U~~ UJ	0.299	0.0997
Nitroglycerin	55-63-0		~~U~~ UJ	0.299	0.0997

SSL

Surrogate	% Recovery	Lower	Upper	Qual
1,2-Dinitrobenzene	46.1	50	150	*

* Surrogate or spike compound out of range
UJ Undetected; the analyte was analyzed for, but not detected.

Microbac

21 lew 3/9/09

4

Sample Number: L08120162-04
Client ID: MR08-IS075-6-7-08D
Matrix: Soil
Workgroup Number: WG289948
Collect Date: 12/04/2008 09:35
Sample Tag: 02

PrePrep Method: NONE
Prep Method: METHOD
Analytical Method: 8330MOD
Analyst: ECL
Dilution: 1
Units: mg/kg

Instrument: HPLC5
Prep Date: 12/08/2008 09:00
Cal Date: 12/01/2008 20:11
Run Date: 12/12/2008 23:51
File ID: 5L003251.F

Analyte	CAS. Number	Result	Qual	RL	MDL
PETN	78-11-5		U	0.299	0.0997

U Undetected; the analyte was analyzed for, but not detected.

Microbac

22 kw
3/9/09

5

Sample Number: L08120162-05
Client ID: MR08-SS076-08D
Matrix: Soil
Workgroup Number: WG289948
Collect Date: 12/04/2008 09:50
Sample Tag: 01

PrePrep Method: NONE
Prep Method: METHOD
Analytical Method: 8330MOD
Analyst: ECL
Dilution: 1
Units: mg/kg

Instrument: HPLC5
Prep Date: 12/08/2008 09:00
Cal Date: 12/01/2008 20:11
Run Date: 12/12/2008 06:43
File ID: 5L003201.F

Analyte	CAS. Number	Result	Qual	RL	MDL
1,3,5-Trinitrobenzene	99-35-4		~~UJ~~ UJ	0.300	0.0999
1,3-Dinitrobenzene	99-65-0		~~UJ~~	0.300	0.0999
2,4,6-Trinitrotoluene	118-96-7		~~UJ~~	0.300	0.0999
2,4-Dinitrotoluene	121-14-2		~~UJ~~	0.300	0.0999
2,6-Dinitrotoluene	606-20-2		~~UJ~~	0.300	0.0999
2-Amino-4,6-dinitrotoluene	35572-78-2		~~UJ~~	0.300	0.0999
2-Nitrotoluene	88-72-2		~~UJ~~	0.300	0.0999
3-Nitrotoluene	99-08-1		~~UJ~~	0.300	0.0999
4-Nitrotoluene	99-99-0		~~UJ~~	0.300	0.0999
4-Amino-2,6-dinitrotoluene	19406-51-0		~~UJ~~	0.300	0.0999
HMX	2691-41-0		~~UJ~~	0.300	0.0999
Nitrobenzene	98-95-3		~~UJ~~	0.300	0.0999
RDX	121-82-4		~~UJ~~	0.300	0.0999
Tetryl	479-45-8		~~UJ~~	0.300	0.0999
Nitroglycerin	55-63-0		~~UJ~~	0.300	0.0999

SSL

Surrogate	% Recovery	Lower	Upper	Qual
1,2-Dinitrobenzene	42.9	50	150	*

* Surrogate or spike compound out of range
UJ Undetected; the analyte was analyzed for, but not detected.

Microbac

23 [illegible] 3/9/09

5

Sample Number: L08120162-05
Client ID: MR08-SS076-08D
Matrix: Soil
Workgroup Number: WG289948
Collect Date: 12/04/2008 09:50
Sample Tag: 02

PrePrep Method: NONE
Prep Method: METHOD
Analytical Method: 8330MOD
Analyst: ECL
Dilution: 1
Units: mg/kg

Instrument: HPLC5
Prep Date: 12/08/2008 09:00
Cal Date: 12/01/2008 20:11
Run Date: 12/13/2008 00:04
File ID: 5L003252.F

Analyte	CAS. Number	Result	Qual	RL	MDL
PETN	78-11-5		U	0.300	0.0999

U Undetected; the analyte was analyzed for, but not detected.

Microbac

24 fw 3/9/09

6

Sample Number: L08120162-06
Client ID: MR08-IS076-6-7-08D
Matrix: Soil
Workgroup Number: WG289948
Collect Date: 12/04/2008 10:05
Sample Tag: 01

PrePrep Method: NONE
Prep Method: METHOD
Analytical Method: 8330MOD
Analyst: ECL
Dilution: 1
Units: mg/kg

Instrument: HPLC5
Prep Date: 12/08/2008 09:00
Cal Date: 12/01/2008 20:11
Run Date: 12/12/2008 07:21
File ID: 5L003202.F

Analyte	CAS. Number	Result	Qual	RL	MDL
1,3,5-Trinitrobenzene	99-35-4		~~UJ~~ UJ	0.300	0.100
1,3-Dinitrobenzene	99-65-0		UJ	0.300	0.100
2,4,6-Trinitrotoluene	118-96-7		UJ	0.300	0.100
2,4-Dinitrotoluene	121-14-2		UJ	0.300	0.100
2,6-Dinitrotoluene	606-20-2		UJ	0.300	0.100
2-Amino-4,6-dinitrotoluene	35572-78-2		UJ	0.300	0.100
2-Nitrotoluene	88-72-2		UJ	0.300	0.100
3-Nitrotoluene	99-08-1		UJ	0.300	0.100
4-Nitrotoluene	99-99-0		UJ	0.300	0.100
4-Amino-2,6-dinitrotoluene	19406-51-0		UJ	0.300	0.100
HMX	2691-41-0		UJ	0.300	0.100
Nitrobenzene	98-95-3		UJ	0.300	0.100
RDX	121-82-4		UJ	0.300	0.100
Tetryl	479-45-8		UJ	0.300	0.100
Nitroglycerin	55-63-0		UJ	0.300	0.100

SSL

Surrogate	% Recovery	Lower	Upper	Qual
1,2-Dinitrobenzene	36.1	50	150	*

* Surrogate or spike compound out of range
UJ Undetected; the analyte was analyzed for, but not detected.

Microbac

lw 3/9/09

6

Sample Number: L08120162-06
Client ID: MR08-IS076-6-7-08D
Matrix: Soil
Workgroup Number: WG289948
Collect Date: 12/04/2008 10:05
Sample Tag: 02

PrePrep Method: NONE
Prep Method: METHOD
Analytical Method: 8330MOD
Analyst: ECL
Dilution: 1
Units: mg/kg

Instrument: HPLC5
Prep Date: 12/08/2008 09:00
Cal Date: 12/01/2008 20:11
Run Date: 12/13/2008 00:18
File ID: 5L003253.F

Analyte	CAS. Number	Result	Qual	RL	MDL
PETN	78-11-5		U	0.300	0.100

U Undetected; the analyte was analyzed for, but not detected.

Microbac®

 LW 3/9/09

7

Sample Number: L08120162-07
Client ID: MR08-SS077-08D
Matrix: Soil
Workgroup Number: WG290380
Collect Date: 12/04/2008 10:20
Sample Tag: 01

PrePrep Method: NONE
Prep Method: METHOD
Analytical Method: 8330MOD
Analyst: ECL
Dilution: 1
Units: mg/kg

Instrument: HPLC5
Prep Date: 12/09/2008 10:00
Cal Date: 12/16/2008 16:51
Run Date: 12/16/2008 20:02
File ID: 5L003313.F

Analyte	CAS. Number	Result	Qual	RL	MDL	
1,3,5-Trinitrobenzene	99-35-4		U	0.299	0.0997	
1,3-Dinitrobenzene	99-65-0		U	0.299	0.0997	
2,4,6-Trinitrotoluene	118-96-7	UJ	~~Q~~	0.299	0.0997	CCH
2,4-Dinitrotoluene	121-14-2	UJ	~~Q~~	0.299	0.0997	BSL
2,6-Dinitrotoluene	606-20-2		U	0.299	0.0997	
2-Amino-4,6-dinitrotoluene	35572-78-2		U	0.299	0.0997	
2-Nitrotoluene	88-72-2		U	0.299	0.0997	
3-Nitrotoluene	99-08-1		U	0.299	0.0997	
4-Nitrotoluene	99-99-0		U	0.299	0.0997	
4-Amino-2,6-dinitrotoluene	19406-51-0		U	0.299	0.0997	
HMX	2691-41-0		U	0.299	0.0997	
Nitrobenzene	98-95-3		U	0.299	0.0997	
RDX	121-82-4		U	0.299	0.0997	
Tetryl	479-45-8	UJ	~~Q~~	0.299	0.0997	CCH
Nitroglycerin	55-63-0		U	0.299	0.0997	

Surrogate	% Recovery	Lower	Upper	Qual
1,2-Dinitrobenzene	80.0	50	150	

U Undetected; the analyte was analyzed for, but not detected.
Q One or more quality control criteria failed. See narrative.

Microbac

28 lw 3/9/09

7

Sample Number: L08120162-07
Client ID: MR08-SS077-08D
Matrix: Soil
Workgroup Number: WG290380
Collect Date: 12/04/2008 10:20
Sample Tag: 02

PrePrep Method: NONE
Prep Method: METHOD
Analytical Method: 8330MOD
Analyst: ECL
Dilution: 1
Units: mg/kg

Instrument: HPLC5
Prep Date: 12/09/2008 10:00
Cal Date: 12/16/2008 16:51
Run Date: 12/30/2008 05:44
File ID: 5L003694.F

Analyte	CAS. Number	Result	Qual	RL	MDL
PETN	78-11-5		U	0.299	0.0997

U Undetected; the analyte was analyzed for, but not detected.

Microbac

MW 3/9/09

8

Sample Number: L08120162-08
Client ID: MR08-IS077-6-7-08D
Matrix: Soil
Workgroup Number: WG290380
Collect Date: 12/04/2008 10:30
Sample Tag: 01

PrePrep Method: NONE
Prep Method: METHOD
Analytical Method: 8330MOD
Analyst: ECL
Dilution: 1
Units: mg/kg

Instrument: HPLC5
Prep Date: 12/09/2008 10:00
Cal Date: 12/16/2008 16:51
Run Date: 12/16/2008 20:40
File ID: 5L003314.F

Analyte	CAS. Number	Result	Qual	RL	MDL	
1,3,5-Trinitrobenzene	99-35-4		U	0.293	0.0977	
1,3-Dinitrobenzene	99-65-0		U	0.293	0.0977	
2,4,6-Trinitrotoluene	118-96-7		UJ ~~Q~~	0.293	0.0977	CCH
2,4-Dinitrotoluene	121-14-2		UJ ~~Q~~	0.293	0.0977	BSL
2,6-Dinitrotoluene	606-20-2		U	0.293	0.0977	
2-Amino-4,6-dinitrotoluene	35572-78-2		U	0.293	0.0977	
2-Nitrotoluene	88-72-2		U	0.293	0.0977	
3-Nitrotoluene	99-08-1		U	0.293	0.0977	
4-Nitrotoluene	99-99-0		U	0.293	0.0977	
4-Amino-2,6-dinitrotoluene	19406-51-0		U	0.293	0.0977	
HMX	2691-41-0		U	0.293	0.0977	
Nitrobenzene	98-95-3		U	0.293	0.0977	
RDX	121-82-4		U	0.293	0.0977	
Tetryl	479-45-8		UJ ~~Q~~	0.293	0.0977	CCH
Nitroglycerin	55-63-0		U	0.293	0.0977	

Surrogate	% Recovery	Lower	Upper	Qual
1,2-Dinitrobenzene	91.3	50	150	

U Undetected; the analyte was analyzed for, but not detected.
Q One or more quality control criteria failed. See narrative.

Microbac

DW 3/9/09

8

Sample Number: L08120162-08
Client ID: MR08-IS077-6-7-08D
Matrix: Soil
Workgroup Number: WG290380
Collect Date: 12/04/2008 10:30
Sample Tag: 02

PrePrep Method: NONE
Prep Method: METHOD
Analytical Method: 8330MOD
Analyst: ECL
Dilution: 1
Units: mg/kg

Instrument: HPLC5
Prep Date: 12/09/2008 10:00
Cal Date: 12/16/2008 16:51
Run Date: 12/30/2008 05:57
File ID: 5L003695.F

Analyte	CAS. Number	Result	Qual	RL	MDL
PETN	78-11-5		U	0.293	0.0977

U Undetected; the analyte was analyzed for, but not detected.

Microbac

QW 3/9/09

9

Sample Number: L08120162-09
Client ID: MR08-SS078-08D
Matrix: Soil
Workgroup Number: WG290380
Collect Date: 12/04/2008 10:45
Sample Tag: 01

PrePrep Method: NONE
Prep Method: METHOD
Analytical Method: 8330MOD
Analyst: ECL
Dilution: 1
Units: mg/kg

Instrument: HPLC5
Prep Date: 12/09/2008 10:00
Cal Date: 12/16/2008 16:51
Run Date: 12/16/2008 21:18
File ID: 5L003315.F

Analyte	CAS. Number	Result	Qual	RL	MDL	
1,3,5-Trinitrobenzene	99-35-4		U	0.296	0.0987	
1,3-Dinitrobenzene	99-65-0		U	0.296	0.0987	
2,4,6-Trinitrotoluene	118-96-7	UJ	~~Q~~	0.296	0.0987	CCH
2,4-Dinitrotoluene	121-14-2	UJ	~~Q~~	0.296	0.0987	BSL
2,6-Dinitrotoluene	606-20-2		U	0.296	0.0987	
2-Amino-4,6-dinitrotoluene	35572-78-2		U	0.296	0.0987	
2-Nitrotoluene	88-72-2		U	0.296	0.0987	
3-Nitrotoluene	99-08-1		U	0.296	0.0987	
4-Nitrotoluene	99-99-0		U	0.296	0.0987	
4-Amino-2,6-dinitrotoluene	19406-51-0		U	0.296	0.0987	
HMX	2691-41-0		U	0.296	0.0987	
Nitrobenzene	98-95-3		U	0.296	0.0987	
RDX	121-82-4		U	0.296	0.0987	
Tetryl	479-45-8	UJ	~~Q~~	0.296	0.0987	CCH
Nitroglycerin	55-63-0		U	0.296	0.0987	

Surrogate	% Recovery	Lower	Upper	Qual
1,2-Dinitrobenzene	68.1	50	150	

U Undetected; the analyte was analyzed for, but not detected.
Q One or more quality control criteria failed. See narrative.

Microbac

31 RW 3/9/09

9

Sample Number: L08120162-09
Client ID: MR08-SS078-08D
Matrix: Soil
Workgroup Number: WG290380
Collect Date: 12/04/2008 10:45
Sample Tag: 02

PrePrep Method: NONE
Prep Method: METHOD
Analytical Method: 8330MOD
Analyst: ECL
Dilution: 1
Units: mg/kg

Instrument: HPLC5
Prep Date: 12/09/2008 10:00
Cal Date: 12/16/2008 16:51
Run Date: 12/30/2008 06:11
File ID: 5L003696.F

Analyte	CAS. Number	Result	Qual	RL	MDL
PETN	78-11-5		U	0.296	0.0987

U Undetected; the analyte was analyzed for, but not detected.

Microbac

AW
3/9/09

10

Sample Number: L08120162-10
Client ID: MR08-IS078-6-7-08D
Matrix: Soil
Workgroup Number: WG290380
Collect Date: 12/04/2008 10:55
Sample Tag: 01

PrePrep Method: NONE
Prep Method: METHOD
Analytical Method: 8330MOD
Analyst: ECL
Dilution: 1
Units: mg/kg

Instrument: HPLC5
Prep Date: 12/09/2008 10:00
Cal Date: 12/16/2008 16:51
Run Date: 12/16/2008 21:56
File ID: 5L003316.F

Analyte	CAS. Number	Result	Qual	RL	MDL	
1,3,5-Trinitrobenzene	99-35-4		U	0.299	0.0995	
1,3-Dinitrobenzene	99-65-0		U	0.299	0.0995	
2,4,6-Trinitrotoluene	118-96-7	UJ	~~Q~~	0.299	0.0995	CCH
2,4-Dinitrotoluene	121-14-2	UJ	~~Q~~	0.299	0.0995	BSL
2,6-Dinitrotoluene	606-20-2		U	0.299	0.0995	
2-Amino-4,6-dinitrotoluene	35572-78-2		U	0.299	0.0995	
2-Nitrotoluene	88-72-2		U	0.299	0.0995	
3-Nitrotoluene	99-08-1		U	0.299	0.0995	
4-Nitrotoluene	99-99-0		U	0.299	0.0995	
4-Amino-2,6-dinitrotoluene	19406-51-0		U	0.299	0.0995	
HMX	2691-41-0		U	0.299	0.0995	
Nitrobenzene	98-95-3		U	0.299	0.0995	
RDX	121-82-4		U	0.299	0.0995	
Tetryl	479-45-8	UJ	~~Q~~	0.299	0.0995	CCH
Nitroglycerin	55-63-0		U	0.299	0.0995	

Surrogate	% Recovery	Lower	Upper	Qual
1,2-Dinitrobenzene	84.4	50	150	

U Undetected; the analyte was analyzed for, but not detected.
Q One or more quality control criteria failed. See narrative.

Microbac

34 LW 3/9/09

10

Sample Number: L08120162-10
Client ID: MR08-IS078-6-7-08D
Matrix: Soil
Workgroup Number: WG290380
Collect Date: 12/04/2008 10:55
Sample Tag: 02

PrePrep Method: NONE
Prep Method: METHOD
Analytical Method: 8330MOD
Analyst: ECL
Dilution: 1
Units: mg/kg

Instrument: HPLC5
Prep Date: 12/09/2008 10:00
Cal Date: 12/16/2008 16:51
Run Date: 12/30/2008 06:24
File ID: 5L003697.F

Analyte	CAS. Number	Result	Qual	RL	MDL
PETN	78-11-5		U	0.299	0.0995

U Undetected; the analyte was analyzed for, but not detected.

Microbac

33 lw 3/9/09

11

Sample Number: L08120162-11
Client ID: MR08-SS079-08D
Matrix: Soil
Workgroup Number: WG290380
Collect Date: 12/04/2008 11:20
Sample Tag: 01

PrePrep Method: NONE
Prep Method: METHOD
Analytical Method: 8330MOD
Analyst: ECL
Dilution: 1
Units: mg/kg

Instrument: HPLC5
Prep Date: 12/09/2008 10:00
Cal Date: 12/16/2008 16:51
Run Date: 12/16/2008 22:34
File ID: 5L003317.F

Analyte	CAS. Number	Result	Qual	RL	MDL	
1,3,5-Trinitrobenzene	99-35-4		U	0.300	0.0999	
1,3-Dinitrobenzene	99-65-0		U	0.300	0.0999	
2,4,6-Trinitrotoluene	118-96-7	UJ	~~Q~~	0.300	0.0999	CCH
2,4-Dinitrotoluene	121-14-2	UJ	~~Q~~	0.300	0.0999	BSL
2,6-Dinitrotoluene	606-20-2		U	0.300	0.0999	
2-Amino-4,6-dinitrotoluene	35572-78-2		U	0.300	0.0999	
2-Nitrotoluene	88-72-2		U	0.300	0.0999	
3-Nitrotoluene	99-08-1		U	0.300	0.0999	
4-Nitrotoluene	99-99-0		U	0.300	0.0999	
4-Amino-2,6-dinitrotoluene	19406-51-0		U	0.300	0.0999	
HMX	2691-41-0		U	0.300	0.0999	
Nitrobenzene	98-95-3		U	0.300	0.0999	
RDX	121-82-4		U	0.300	0.0999	
Tetryl	479-45-8	UJ	~~Q~~	0.300	0.0999	CCH
Nitroglycerin	55-63-0		U	0.300	0.0999	

Surrogate	% Recovery	Lower	Upper	Qual
1,2-Dinitrobenzene	75.3	50	150	

U Undetected; the analyte was analyzed for, but not detected.
Q One or more quality control criteria failed. See narrative.

Microbac

 LW 3/9/09

11

Sample Number: L08120162-11
Client ID: MR08-SS079-08D
Matrix: Soil
Workgroup Number: WG290380
Collect Date: 12/04/2008 11:20
Sample Tag: 02

PrePrep Method: NONE
Prep Method: METHOD
Analytical Method: 8330MOD
Analyst: ECL
Dilution: 1
Units: mg/kg

Instrument: HPLC5
Prep Date: 12/09/2008 10:00
Cal Date: 12/16/2008 16:51
Run Date: 12/30/2008 06:37
File ID: 5L003698.F

Analyte	CAS. Number	Result	Qual	RL	MDL
PETN	78-11-5		U	0.300	0.0999

U Undetected; the analyte was analyzed for, but not detected.

Microbac

lw 3/9/09

12

Sample Number: L08120162-12
Client ID: MR08-SS079D-08D
Matrix: Soil
Workgroup Number: WG290380
Collect Date: 12/04/2008 11:25
Sample Tag: 01

PrePrep Method: NONE
Prep Method: METHOD
Analytical Method: 8330MOD
Analyst: ECL
Dilution: 1
Units: mg/kg

Instrument: HPLC5
Prep Date: 12/09/2008 10:00
Cal Date: 12/16/2008 16:51
Run Date: 12/16/2008 23:13
File ID: 5L003318.F

Analyte	CAS. Number	Result	Qual	RL	MDL	
1,3,5-Trinitrobenzene	99-35-4		U	0.292	0.0974	
1,3-Dinitrobenzene	99-65-0		U	0.292	0.0974	
2,4,6-Trinitrotoluene	118-96-7	UJ	~~Q~~	0.292	0.0974	CCH
2,4-Dinitrotoluene	121-14-2	UJ	~~Q~~	0.292	0.0974	BSL
2,6-Dinitrotoluene	606-20-2		U	0.292	0.0974	
2-Amino-4,6-dinitrotoluene	35572-78-2		U	0.292	0.0974	
2-Nitrotoluene	88-72-2		U	0.292	0.0974	
3-Nitrotoluene	99-08-1		U	0.292	0.0974	
4-Nitrotoluene	99-99-0		U	0.292	0.0974	
4-Amino-2,6-dinitrotoluene	19406-51-0		U	0.292	0.0974	
HMX	2691-41-0		U	0.292	0.0974	
Nitrobenzene	98-95-3		U	0.292	0.0974	
RDX	121-82-4		U	0.292	0.0974	
Tetryl	479-45-8	UJ	~~Q~~	0.292	0.0974	CCH
Nitroglycerin	55-63-0		U	0.292	0.0974	

Surrogate	% Recovery	Lower	Upper	Qual
1,2-Dinitrobenzene	73.8	50	150	

U Undetected; the analyte was analyzed for, but not detected.
Q One or more quality control criteria failed. See narrative.

Microbac

lew
2/9/09

13

Sample Number: L08120162-13
Client ID: MR08-IS079-6-7-08D
Matrix: Soil
Workgroup Number: WG290380
Collect Date: 12/04/2008 11:45
Sample Tag: 01

PrePrep Method: NONE
Prep Method: METHOD
Analytical Method: 8330MOD
Analyst: ECL
Dilution: 1
Units: mg/kg

Instrument: HPLC5
Prep Date: 12/09/2008 10:00
Cal Date: 12/16/2008 16:51
Run Date: 12/16/2008 23:51
File ID: 5L003319.F

Analyte	CAS. Number	Result	Qual	RL	MDL	
1,3,5-Trinitrobenzene	99-35-4		U	0.300	0.100	
1,3-Dinitrobenzene	99-65-0		U	0.300	0.100	
2,4,6-Trinitrotoluene	118-96-7	UJ	~~Q~~	0.300	0.100	CCH
2,4-Dinitrotoluene	121-14-2	UJ	~~Q~~	0.300	0.100	BSL
2,6-Dinitrotoluene	606-20-2		U	0.300	0.100	
2-Amino-4,6-dinitrotoluene	35572-78-2		U	0.300	0.100	
2-Nitrotoluene	88-72-2		U	0.300	0.100	
3-Nitrotoluene	99-08-1		U	0.300	0.100	
4-Nitrotoluene	99-99-0		U	0.300	0.100	
4-Amino-2,6-dinitrotoluene	19406-51-0		U	0.300	0.100	
HMX	2691-41-0		U	0.300	0.100	
Nitrobenzene	98-95-3		U	0.300	0.100	
RDX	121-82-4		U	0.300	0.100	
Tetryl	479-45-8	UJ	~~Q~~	0.300	0.100	CCH
Nitroglycerin	55-63-0		U	0.300	0.100	

Surrogate	% Recovery	Lower	Upper	Qual
1,2-Dinitrobenzene	83.5	50	150	

U Undetected; the analyte was analyzed for, but not detected.
Q One or more quality control criteria failed. See narrative.

Microbac

39 LW 3/9/09

13

Sample Number: L08120162-13
Client ID: MR08-IS079-6-7-08D
Matrix: Soil
Workgroup Number: WG290380
Collect Date: 12/04/2008 11:45
Sample Tag: 02

PrePrep Method: NONE
Prep Method: METHOD
Analytical Method: 8330MOD
Analyst: ECL
Dilution: 1
Units: mg/kg

Instrument: HPLC5
Prep Date: 12/09/2008 10:00
Cal Date: 12/16/2008 16:51
Run Date: 12/30/2008 07:03
File ID: 5L003700.F

Analyte	CAS. Number	Result	Qual	RL	MDL
PETN	78-11-5		U	0.300	0.100

U Undetected; the analyte was analyzed for, but not detected.

Microbac

40 MW 3/9/09

Report Number: L08120162
Report Date : January 6, 2009

14

Sample Number: L08120162-14
Client ID: MR08-IS079D-6-7-08D
Matrix: Soil
Workgroup Number: WG290380
Collect Date: 12/04/2008 11:55
Sample Tag: 01

PrePrep Method: NONE
Prep Method: METHOD
Analytical Method: 8330MOD
Analyst: ECL
Dilution: 1
Units: mg/kg

Instrument: HPLC5
Prep Date: 12/09/2008 10:00
Cal Date: 12/16/2008 16:51
Run Date: 12/17/2008 02:03
File ID: 5L003323.F

Analyte	CAS. Number	Result	Qual	RL	MDL
1,3,5-Trinitrobenzene	99-35-4		U	0.291	0.0971
1,3-Dinitrobenzene	99-65-0		U	0.291	0.0971
2,4,6-Trinitrotoluene	118-96-7		~~Q~~ U	0.291	0.0971
2,4-Dinitrotoluene	121-14-2		~~Q~~ U	0.291	0.0971
2,6-Dinitrotoluene	606-20-2		U	0.291	0.0971
2-Amino-4,6-dinitrotoluene	35572-78-2		U	0.291	0.0971
2-Nitrotoluene	88-72-2		U	0.291	0.0971
3-Nitrotoluene	99-08-1		U	0.291	0.0971
4-Nitrotoluene	99-99-0		U	0.291	0.0971
4-Amino-2,6-dinitrotoluene	19406-51-0		U	0.291	0.0971
HMX	2691-41-0		U	0.291	0.0971
Nitrobenzene	98-95-3		U	0.291	0.0971
RDX	121-82-4		U	0.291	0.0971
Tetryl	479-45-8		~~Q~~ U	0.291	0.0971
Nitroglycerin	55-63-0		U	0.291	0.0971

Surrogate	% Recovery	Lower	Upper	Qual
1,2-Dinitrobenzene	93.1	50	150	

U Undetected; the analyte was analyzed for, but not detected.
Q One or more quality control criteria failed. See narrative.

BSL

Microbac

VS 3/19/09

Report Number: L08120162
Report Date : January 6, 2009

14

Sample Number: L08120162-14
Client ID: MR08-IS079D-6-7-08D
Matrix: Soil
Workgroup Number: WG290380
Collect Date: 12/04/2008 11:55
Sample Tag: 02

PrePrep Method: NONE
Prep Method: METHOD
Analytical Method: 8330MOD
Analyst: ECL
Dilution: 1
Units: mg/kg

Instrument: HPLC5
Prep Date: 12/09/2008 10:00
Cal Date: 12/16/2008 16:51
Run Date: 12/30/2008 07:43
File ID: 5L003703.F

Analyte	CAS. Number	Result	Qual	RL	MDL
PETN	78-11-5		U	0.291	0.0971

U Undetected; the analyte was analyzed for, but not detected.

Microbac

KB 3/19/09

Report Number: L08120162
Report Date : January 6, 2009

15

Sample Number: L08120162-15
Client ID: MR08-SS097-08D
Matrix: Soil
Workgroup Number: WG290380
Collect Date: 12/04/2008 13:40
Sample Tag: 01

PrePrep Method: NONE
Prep Method: METHOD
Analytical Method: 8330MOD
Analyst: ECL
Dilution: 1
Units: mg/kg

Instrument: HPLC5
Prep Date: 12/09/2008 10:00
Cal Date: 12/16/2008 16:51
Run Date: 12/17/2008 02:42
File ID: 5L003324.F

Analyte	CAS. Number	Result	Qual	RL	MDL
1,3,5-Trinitrobenzene	99-35-4		U	0.300	0.100
1,3-Dinitrobenzene	99-65-0		U	0.300	0.100
2,4,6-Trinitrotoluene	118-96-7		~~Q~~ U	0.300	0.100
2,4-Dinitrotoluene	121-14-2		~~Q~~ U	0.300	0.100
2,6-Dinitrotoluene	606-20-2		U	0.300	0.100
2-Amino-4,6-dinitrotoluene	35572-78-2		U	0.300	0.100
2-Nitrotoluene	88-72-2		U	0.300	0.100
3-Nitrotoluene	99-08-1		U	0.300	0.100
4-Nitrotoluene	99-99-0		U	0.300	0.100
4-Amino-2,6-dinitrotoluene	19406-51-0		U	0.300	0.100
HMX	2691-41-0		U	0.300	0.100
Nitrobenzene	98-95-3		U	0.300	0.100
RDX	121-82-4		U	0.300	0.100
Tetryl	479-45-8		U ~~Q~~	0.300	0.100
Nitroglycerin	55-63-0		U	0.300	0.100

Surrogate	% Recovery	Lower	Upper	Qual
1,2-Dinitrobenzene	79.8	50	150	

U Undetected; the analyte was analyzed for, but not detected.
Q One or more quality control criteria failed. See narrative.

BSL

Microbac

VS 3/19/09

Report Number: L08120162
Report Date : January 6, 2009

15

Sample Number: L08120162-15
Client ID: MR08-SS097-08D
Matrix: Soil
Workgroup Number: WG290380
Collect Date: 12/04/2008 13:40
Sample Tag: 02

PrePrep Method: NONE
Prep Method: METHOD
Analytical Method: 8330MOD
Analyst: ECL
Dilution: 1
Units: mg/kg

Instrument: HPLC5
Prep Date: 12/09/2008 10:00
Cal Date: 12/16/2008 16:51
Run Date: 12/30/2008 07:56
File ID: 5L003704.F

Analyte	CAS. Number	Result	Qual	RL	MDL
PETN	78-11-5		U	0.300	0.100

U Undetected; the analyte was analyzed for, but not detected.

Microbac

VS 3/9/09

Report Number: L08120162
Report Date : January 6, 2009

16

Sample Number: L08120162-16
Client ID: MR08-IS097-6-7-08D
Matrix: Soil
Workgroup Number: WG290380
Collect Date: 12/04/2008 13:50
Sample Tag: 01

PrePrep Method: NONE
Prep Method: METHOD
Analytical Method: 8330MOD
Analyst: ECL
Dilution: 1
Units: mg/kg

Instrument: HPLC5
Prep Date: 12/09/2008 10:00
Cal Date: 12/16/2008 16:51
Run Date: 12/17/2008 03:20
File ID: 5L003325.F

Analyte	CAS. Number	Result	Qual	RL	MDL
1,3,5-Trinitrobenzene	99-35-4		U	0.299	0.0998
1,3-Dinitrobenzene	99-65-0		U	0.299	0.0998
2,4,6-Trinitrotoluene	118-96-7		~~Q~~ UJ	0.299	0.0998
2,4-Dinitrotoluene	121-14-2		~~Q~~ UJ	0.299	0.0998
2,6-Dinitrotoluene	606-20-2		U	0.299	0.0998
2-Amino-4,6-dinitrotoluene	35572-78-2		U	0.299	0.0998
2-Nitrotoluene	88-72-2		U	0.299	0.0998
3-Nitrotoluene	99-08-1		U	0.299	0.0998
4-Nitrotoluene	99-99-0		U	0.299	0.0998
4-Amino-2,6-dinitrotoluene	19406-51-0		U	0.299	0.0998
HMX	2691-41-0		U	0.299	0.0998
Nitrobenzene	98-95-3		U	0.299	0.0998
RDX	121-82-4		U	0.299	0.0998
Tetryl	479-45-8		~~Q~~ U	0.299	0.0998
Nitroglycerin	55-63-0		U	0.299	0.0998

Surrogate	% Recovery	Lower	Upper	Qual
1,2-Dinitrobenzene	96.6	50	150	

U Undetected; the analyte was analyzed for, but not detected.
Q One or more quality control criteria failed. See narrative.

BSL

Microbac

LS 3/19/09

Report Number: L08120162
Report Date : January 6, 2009

16

Sample Number: L08120162-16
Client ID: MR08-IS097-6-7-08D
Matrix: Soil
Workgroup Number: WG290380
Collect Date: 12/04/2008 13:50
Sample Tag: 02

PrePrep Method: NONE
Prep Method: METHOD
Analytical Method: 8330MOD
Analyst: ECL
Dilution: 1
Units: mg/kg

Instrument: HPLC5
Prep Date: 12/09/2008 10:00
Cal Date: 12/16/2008 16:51
Run Date: 12/30/2008 08:09
File ID: 5L003705.F

Analyte	CAS. Number	Result	Qual	RL	MDL
PETN	78-11-5		U	0.299	0.0998

U Undetected; the analyte was analyzed for, but not detected.

Microbac

LS 3/19/09

Report Number: L08120162
Report Date : January 6, 2009

17

Sample Number: L08120162-17
Client ID: MR08-SS096-08D
Matrix: Soil
Workgroup Number: WG290380
Collect Date: 12/04/2008 14:05
Sample Tag: 01

PrePrep Method: NONE
Prep Method: METHOD
Analytical Method: 8330MOD
Analyst: ECL
Dilution: 1
Units: mg/kg

Instrument: HPLC5
Prep Date: 12/09/2008 10:00
Cal Date: 12/16/2008 16:51
Run Date: 12/17/2008 03:58
File ID: 5L003326.F

Analyte	CAS. Number	Result	Qual	RL	MDL
1,3,5-Trinitrobenzene	99-35-4		U	0.299	0.0996
1,3-Dinitrobenzene	99-65-0		U	0.299	0.0996
2,4,6-Trinitrotoluene	118-96-7		~~Q~~	0.299	0.0996
2,4-Dinitrotoluene	121-14-2		U ~~Q~~	0.299	0.0996
2,6-Dinitrotoluene	606-20-2		U	0.299	0.0996
2-Amino-4,6-dinitrotoluene	35572-78-2		U	0.299	0.0996
2-Nitrotoluene	88-72-2		U	0.299	0.0996
3-Nitrotoluene	99-08-1		U	0.299	0.0996
4-Nitrotoluene	99-99-0		U	0.299	0.0996
4-Amino-2,6-dinitrotoluene	19406-51-0		U	0.299	0.0996
HMX	2691-41-0		U	0.299	0.0996
Nitrobenzene	98-95-3		U	0.299	0.0996
RDX	121-82-4		U	0.299	0.0996
Tetryl	479-45-8		U ~~Q~~	0.299	0.0996
Nitroglycerin	55-63-0		U	0.299	0.0996

Surrogate	% Recovery	Lower	Upper	Qual
1,2-Dinitrobenzene	69.6	50	150	

U Undetected; the analyte was analyzed for, but not detected.
Q One or more quality control criteria failed. See narrative.

BSL

Microbac

LB 3/19/09

Report Number: L08120162
Report Date : January 6, 2009

17

Sample Number: L08120162-17
Client ID: MR08-SS096-08D
Matrix: Soil
Workgroup Number: WG290380
Collect Date: 12/04/2008 14:05
Sample Tag: 02

PrePrep Method: NONE
Prep Method: METHOD
Analytical Method: 8330MOD
Analyst: ECL
Dilution: 1
Units: mg/kg

Instrument: HPLC5
Prep Date: 12/09/2008 10:00
Cal Date: 12/16/2008 16:51
Run Date: 12/30/2008 08:22
File ID: 5L003706.F

Analyte	CAS. Number	Result	Qual	RL	MDL
PETN	78-11-5		U	0.299	0.0996

U Undetected; the analyte was analyzed for, but not detected.

Microbac

18 3/19/09

Report Number: L08120162
Report Date : January 6, 2009

18

Sample Number: L08120162-18
Client ID: MR08-IS096-6-7-08D
Matrix: Soil
Workgroup Number: WG290380
Collect Date: 12/04/2008 14:20
Sample Tag: 01

PrePrep Method: NONE
Prep Method: METHOD
Analytical Method: 8330MOD
Analyst: ECL
Dilution: 1
Units: mg/kg

Instrument: HPLC5
Prep Date: 12/09/2008 10:00
Cal Date: 12/16/2008 16:51
Run Date: 12/17/2008 04:36
File ID: 5L003327.F

Analyte	CAS. Number	Result	Qual	RL	MDL
1,3,5-Trinitrobenzene	99-35-4		U	0.292	0.0973
1,3-Dinitrobenzene	99-65-0		U	0.292	0.0973
2,4,6-Trinitrotoluene	118-96-7		~~Q~~	0.292	0.0973
2,4-Dinitrotoluene	121-14-2	U3	~~Q~~	0.292	0.0973
2,6-Dinitrotoluene	606-20-2		U	0.292	0.0973
2-Amino-4,6-dinitrotoluene	35572-78-2		U	0.292	0.0973
2-Nitrotoluene	88-72-2		U	0.292	0.0973
3-Nitrotoluene	99-08-1		U	0.292	0.0973
4-Nitrotoluene	99-99-0		U	0.292	0.0973
4-Amino-2,6-dinitrotoluene	19406-51-0		U	0.292	0.0973
HMX	2691-41-0		U	0.292	0.0973
Nitrobenzene	98-95-3		U	0.292	0.0973
RDX	121-82-4		U	0.292	0.0973
Tetryl	479-45-8	U	~~Q~~	0.292	0.0973
Nitroglycerin	55-63-0		U	0.292	0.0973

Surrogate	% Recovery	Lower	Upper	Qual
1,2-Dinitrobenzene	90.8	50	150	

U Undetected; the analyte was analyzed for, but not detected.
Q One or more quality control criteria failed. See narrative.

BSL

Microbac

VS 3/19/09

18

Report Number: L08120162
Report Date : January 6, 2009

Sample Number: L08120162-18
Client ID: MR08-IS096-6-7-08D
Matrix: Soil
Workgroup Number: WG290380
Collect Date: 12/04/2008 14:20
Sample Tag: 02

PrePrep Method: NONE
Prep Method: METHOD
Analytical Method: 8330MOD
Analyst: ECL
Dilution: 1
Units: mg/kg

Instrument: HPLC5
Prep Date: 12/09/2008 10:00
Cal Date: 12/16/2008 16:51
Run Date: 12/30/2008 08:36
File ID: 5L003707.F

Analyte	CAS. Number	Result	Qual	RL	MDL
PETN	78-11-5		U	0.292	0.0973

U Undetected; the analyte was analyzed for, but not detected.

Microbac

LS 3/19/09

Report Number: L08120162
Report Date : January 6, 2009

19

Sample Number: L08120162-19
Client ID: MR08-IS095-08D
Matrix: Soil
Workgroup Number: WG290380
Collect Date: 12/04/2008 14:55
Sample Tag: 01

PrePrep Method: NONE
Prep Method: METHOD
Analytical Method: 8330MOD
Analyst: ECL
Dilution: 1
Units: mg/kg

Instrument: HPLC5
Prep Date: 12/09/2008 10:00
Cal Date: 12/16/2008 16:51
Run Date: 12/17/2008 05:14
File ID: 5L003328.F

Analyte	CAS. Number	Result	Qual	RL	MDL
1,3,5-Trinitrobenzene	99-35-4		U	0.298	0.0994
1,3-Dinitrobenzene	99-65-0		U	0.298	0.0994
2,4,6-Trinitrotoluene	118-96-7		U ~~Q~~	0.298	0.0994
2,4-Dinitrotoluene	121-14-2		UJ ~~Q~~	0.298	0.0994
2,6-Dinitrotoluene	606-20-2		U	0.298	0.0994
2-Amino-4,6-dinitrotoluene	35572-78-2		U	0.298	0.0994
2-Nitrotoluene	88-72-2		U	0.298	0.0994
3-Nitrotoluene	99-08-1		U	0.298	0.0994
4-Nitrotoluene	99-99-0		U	0.298	0.0994
4-Amino-2,6-dinitrotoluene	19406-51-0		U	0.298	0.0994
HMX	2691-41-0		U	0.298	0.0994
Nitrobenzene	98-95-3		U	0.298	0.0994
RDX	121-82-4		U	0.298	0.0994
Tetryl	479-45-8		U ~~Q~~	0.298	0.0994
Nitroglycerin	55-63-0		U	0.298	0.0994

BSL

Surrogate	% Recovery	Lower	Upper	Qual
1,2-Dinitrobenzene	85.3	50	150	

U Undetected; the analyte was analyzed for, but not detected.
Q One or more quality control criteria failed. See narrative.

Microbac

LB 3/19/09

Report Number: L08120162
Report Date : January 6, 2009

19

Sample Number: L08120162-19
Client ID: MR08-IS095-08D
Matrix: Soil
Workgroup Number: WG290380
Collect Date: 12/04/2008 14:55
Sample Tag: 02

PrePrep Method: NONE
Prep Method: METHOD
Analytical Method: 8330MOD
Analyst: ECL
Dilution: 1
Units: mg/kg

Instrument: HPLC5
Prep Date: 12/09/2008 10:00
Cal Date: 12/16/2008 16:51
Run Date: 12/30/2008 08:49
File ID: 5L003708.F

Analyte	CAS. Number	Result	Qual	RL	MDL
PETN	78-11-5		U	0.298	0.0994

U Undetected; the analyte was analyzed for, but not detected.

Microbac

LS 3/19/09

Report Number: L08120162
Report Date : January 6, 2009

20

Sample Number: L08120162-20
Client ID: MR08-IS095-6-7-08D
Matrix: Soil
Workgroup Number: WG290380
Collect Date: 12/04/2008 14:45
Sample Tag: 01

PrePrep Method: NONE
Prep Method: METHOD
Analytical Method: 8330MOD
Analyst: ECL
Dilution: 1
Units: mg/kg

Instrument: HPLC5
Prep Date: 12/09/2008 10:00
Cal Date: 12/16/2008 16:51
Run Date: 12/17/2008 05:52
File ID: 5L003329.F

Analyte	CAS. Number	Result	Qual	RL	MDL
1,3,5-Trinitrobenzene	99-35-4		U	0.297	0.0990
1,3-Dinitrobenzene	99-65-0		U	0.297	0.0990
2,4,6-Trinitrotoluene	118-96-7		~~Q~~ U	0.297	0.0990
2,4-Dinitrotoluene	121-14-2		~~Q~~ U	0.297	0.0990
2,6-Dinitrotoluene	606-20-2		U	0.297	0.0990
2-Amino-4,6-dinitrotoluene	35572-78-2		U	0.297	0.0990
2-Nitrotoluene	88-72-2		U	0.297	0.0990
3-Nitrotoluene	99-08-1		U	0.297	0.0990
4-Nitrotoluene	99-99-0		U	0.297	0.0990
4-Amino-2,6-dinitrotoluene	19406-51-0		U	0.297	0.0990
HMX	2691-41-0		U	0.297	0.0990
Nitrobenzene	98-95-3		U	0.297	0.0990
RDX	121-82-4		U	0.297	0.0990
Tetryl	479-45-8		~~Q~~ U	0.297	0.0990
Nitroglycerin	55-63-0		U	0.297	0.0990

Surrogate	% Recovery	Lower	Upper	Qual
1,2-Dinitrobenzene	97.4	50	150	

U Undetected; the analyte was analyzed for, but not detected.
Q One or more quality control criteria failed. See narrative.

BSL

Microbac

LS 3/9/09

Report Number: L08120162
Report Date : January 6, 2009

20

Sample Number: L08120162-20
Client ID: MR08-IS095-6-7-08D
Matrix: Soil
Workgroup Number: WG290380
Collect Date: 12/04/2008 14:45
Sample Tag: 02

PrePrep Method: NONE
Prep Method: METHOD
Analytical Method: 8330MOD
Analyst: ECL
Dilution: 1
Units: mg/kg

Instrument: HPLC5
Prep Date: 12/09/2008 10:00
Cal Date: 12/16/2008 16:51
Run Date: 12/30/2008 09:02
File ID: 5L003709.F

Analyte	CAS. Number	Result	Qual	RL	MDL
PETN	78-11-5		U	0.297	0.0990

U Undetected; the analyte was analyzed for, but not detected.

Microbac

LS 3/19/09

Report Number: L08120162
Report Date : January 6, 2009

21

Sample Number: L08120162-21
Client ID: MR08-SS094-08D
Matrix: Soil
Workgroup Number: WG290380
Collect Date: 12/04/2008 15:05
Sample Tag: 01

PrePrep Method: NONE
Prep Method: METHOD
Analytical Method: 8330MOD
Analyst: ECL
Dilution: 1
Units: mg/kg

Instrument: HPLC5
Prep Date: 12/09/2008 10:00
Cal Date: 12/16/2008 16:51
Run Date: 12/17/2008 06:30
File ID: 5L003330.F

Analyte	CAS. Number	Result	Qual	RL	MDL
1,3,5-Trinitrobenzene	99-35-4		U	0.300	0.100
1,3-Dinitrobenzene	99-65-0		U	0.300	0.100
2,4,6-Trinitrotoluene	118-96-7	U	~~Q~~	0.300	0.100
2,4-Dinitrotoluene	121-14-2	UJ	~~Q~~	0.300	0.100
2,6-Dinitrotoluene	606-20-2		U	0.300	0.100
2-Amino-4,6-dinitrotoluene	35572-78-2		U	0.300	0.100
2-Nitrotoluene	88-72-2		U	0.300	0.100
3-Nitrotoluene	99-08-1		U	0.300	0.100
4-Nitrotoluene	99-99-0		U	0.300	0.100
4-Amino-2,6-dinitrotoluene	19406-51-0		U	0.300	0.100
HMX	2691-41-0		U	0.300	0.100
Nitrobenzene	98-95-3		U	0.300	0.100
RDX	121-82-4		U	0.300	0.100
Tetryl	479-45-8	U	~~Q~~	0.300	0.100
Nitroglycerin	55-63-0		U	0.300	0.100

BSL

Surrogate	% Recovery	Lower	Upper	Qual
1,2-Dinitrobenzene	90.5	50	150	

U Undetected; the analyte was analyzed for, but not detected.
Q One or more quality control criteria failed. See narrative.

Microbac

LS 3/19/09

Report Number: L08120162
Report Date : January 6, 2009

21

Sample Number: L08120162-21
Client ID: MR08-SS094-08D
Matrix: Soil
Workgroup Number: WG290380
Collect Date: 12/04/2008 15:05
Sample Tag: 02

PrePrep Method: NONE
Prep Method: METHOD
Analytical Method: 8330MOD
Analyst: ECL
Dilution: 1
Units: mg/kg

Instrument: HPLC5
Prep Date: 12/09/2008 10:00
Cal Date: 12/16/2008 16:51
Run Date: 12/30/2008 09:15
File ID: 5L003710.F

Analyte	CAS. Number	Result	Qual	RL	MDL
PETN	78-11-5		U	0.300	0.100

U Undetected; the analyte was analyzed for, but not detected.

Microbac

LS 3/19/09

Microbac Laboratories Inc.

Report Number: L08120162

Report Date : January 6, 2009

22

Sample Number: L08120162-22
Client ID: MR08-IS094-5-6-08D
Matrix: Soil
Workgroup Number: WG290380
Collect Date: 12/04/2008 15:15
Sample Tag: 01

PrePrep Method: NONE
Prep Method: METHOD
Analytical Method: 8330MOD
Analyst: ECL
Dilution: 1
Units: mg/kg

Instrument: HPLC5
Prep Date: 12/09/2008 10:00
Cal Date: 12/16/2008 16:51
Run Date: 12/17/2008 07:09
File ID: 5L003331.F

Analyte	CAS. Number	Result	Qual	RL	MDL
1,3,5-Trinitrobenzene	99-35-4		U	0.294	0.0981
1,3-Dinitrobenzene	99-65-0		U	0.294	0.0981
2,4,6-Trinitrotoluene	118-96-7		~~Q~~	0.294	0.0981
2,4-Dinitrotoluene	121-14-2	U4	~~Q~~	0.294	0.0981
2,6-Dinitrotoluene	606-20-2		U	0.294	0.0981
2-Amino-4,6-dinitrotoluene	35572-78-2		U	0.294	0.0981
2-Nitrotoluene	88-72-2		U	0.294	0.0981
3-Nitrotoluene	99-08-1		U	0.294	0.0981
4-Nitrotoluene	99-99-0		U	0.294	0.0981
4-Amino-2,6-dinitrotoluene	19406-51-0		U	0.294	0.0981
HMX	2691-41-0		U	0.294	0.0981
Nitrobenzene	98-95-3		U	0.294	0.0981
RDX	121-82-4		U	0.294	0.0981
Tetryl	479-45-8	U	~~Q~~	0.294	0.0981
Nitroglycerin	55-63-0		U	0.294	0.0981

Surrogate	% Recovery	Lower	Upper	Qual
1,2-Dinitrobenzene	89.6	50	150	

U Undetected; the analyte was analyzed for, but not detected.
Q One or more quality control criteria failed. See narrative.

BSL

Microbac

LS 3/19/09

Report Number: L08120162
Report Date : January 6, 2009

22

Sample Number: L08120162-22
Client ID: MR08-IS094-5-6-08D
Matrix: Soil
Workgroup Number: WG290380
Collect Date: 12/04/2008 15:15
Sample Tag: 02

PrePrep Method: NONE
Prep Method: METHOD
Analytical Method: 8330MOD
Analyst: ECL
Dilution: 1
Units: mg/kg

Instrument: HPLC5
Prep Date: 12/09/2008 10:00
Cal Date: 12/16/2008 16:51
Run Date: 12/30/2008 09:28
File ID: 5L003711.F

Analyte	CAS. Number	Result	Qual	RL	MDL
PETN	78-11-5		U	0.294	0.0981

U Undetected; the analyte was analyzed for, but not detected.

Microbac

2S 3/19/09

Report Number: L08120162
Report Date : January 6, 2009

23

Sample Number: L08120162-23
Client ID: MR08-SS092-08D
Matrix: Soil
Workgroup Number: WG290380
Collect Date: 12/04/2008 15:30
Sample Tag: 01

PrePrep Method: NONE
Prep Method: METHOD
Analytical Method: 8330MOD
Analyst: ECL
Dilution: 1
Units: mg/kg

Instrument: HPLC5
Prep Date: 12/09/2008 10:00
Cal Date: 12/16/2008 16:51
Run Date: 12/17/2008 07:47
File ID: 5L003332.F

Analyte	CAS. Number	Result	Qual	RL	MDL
1,3,5-Trinitrobenzene	99-35-4		U	0.300	0.0999
1,3-Dinitrobenzene	99-65-0		U	0.300	0.0999
2,4,6-Trinitrotoluene	118-96-7		~~Q~~ U	0.300	0.0999
2,4-Dinitrotoluene	121-14-2		~~Q~~ U	0.300	0.0999
2,6-Dinitrotoluene	606-20-2		U	0.300	0.0999
2-Amino-4,6-dinitrotoluene	35572-78-2		U	0.300	0.0999
2-Nitrotoluene	88-72-2		U	0.300	0.0999
3-Nitrotoluene	99-08-1		U	0.300	0.0999
4-Nitrotoluene	99-99-0		U	0.300	0.0999
4-Amino-2,6-dinitrotoluene	19406-51-0		U	0.300	0.0999
HMX	2691-41-0		U	0.300	0.0999
Nitrobenzene	98-95-3		U	0.300	0.0999
RDX	121-82-4		U	0.300	0.0999
Tetryl	479-45-8		~~Q~~ U	0.300	0.0999
Nitroglycerin	55-63-0		U	0.300	0.0999

BSL

Surrogate	% Recovery	Lower	Upper	Qual
1,2-Dinitrobenzene	91.2	50	150	

U Undetected; the analyte was analyzed for, but not detected.
Q One or more quality control criteria failed. See narrative.

Microbac

LS 3/19/09

Report Number: L08120162
Report Date : January 6, 2009

23

Sample Number: L08120162-23
Client ID: MR08-SS092-08D
Matrix: Soil
Workgroup Number: WG290380
Collect Date: 12/04/2008 15:30
Sample Tag: 02

PrePrep Method: NONE
Prep Method: METHOD
Analytical Method: 8330MOD
Analyst: ECL
Dilution: 1
Units: mg/kg

Instrument: HPLC5
Prep Date: 12/09/2008 10:00
Cal Date: 12/16/2008 16:51
Run Date: 12/30/2008 09:41
File ID: 5L003712.F

Analyte	CAS. Number	Result	Qual	RL	MDL
PETN	78-11-5		U	0.300	0.0999

U Undetected; the analyte was analyzed for, but not detected.

Microbac

3/19/09

Report Number: L08120162
Report Date : January 6, 2009

24

Sample Number: L08120162-24
Client ID: MR08-IS092-4-5-08D
Matrix: Soil
Workgroup Number: WG290380
Collect Date: 12/04/2008 15:45
Sample Tag: 01

PrePrep Method: NONE
Prep Method: METHOD
Analytical Method: 8330MOD
Analyst: ECL
Dilution: 1
Units: mg/kg

Instrument: HPLC5
Prep Date: 12/09/2008 10:00
Cal Date: 12/16/2008 16:51
Run Date: 12/17/2008 15:18
File ID: 5L003338.F

Analyte	CAS. Number	Result	Qual	RL	MDL
1,3,5-Trinitrobenzene	99-35-4		U	0.291	0.0969
1,3-Dinitrobenzene	99-65-0		U	0.291	0.0969
2,4,6-Trinitrotoluene	118-96-7		U	0.291	0.0969
2,4-Dinitrotoluene	121-14-2		U	0.291	0.0969
2,6-Dinitrotoluene	606-20-2		U	0.291	0.0969
2-Amino-4,6-dinitrotoluene	35572-78-2		U	0.291	0.0969
2-Nitrotoluene	88-72-2		U	0.291	0.0969
3-Nitrotoluene	99-08-1		U	0.291	0.0969
4-Nitrotoluene	99-99-0		U	0.291	0.0969
4-Amino-2,6-dinitrotoluene	19406-51-0		U	0.291	0.0969
HMX	2691-41-0		U	0.291	0.0969
Nitrobenzene	98-95-3		U	0.291	0.0969
RDX	121-82-4		U	0.291	0.0969
Tetryl	479-45-8		U	0.291	0.0969
Nitroglycerin	55-63-0		U	0.291	0.0969

Surrogate	% Recovery	Lower	Upper	Qual
1,2-Dinitrobenzene	89.1	50	150	

U Undetected; the analyte was analyzed for, but not detected.

Microbac

LS 3/19/09

Report Number: L08120162
Report Date : January 6, 2009

24

Sample Number: L08120162-24
Client ID: MR08-IS092-4-5-08D
Matrix: Soil
Workgroup Number: WG290380
Collect Date: 12/04/2008 15:45
Sample Tag: 02

PrePrep Method: NONE
Prep Method: METHOD
Analytical Method: 8330MOD
Analyst: ECL
Dilution: 1
Units: mg/kg

Instrument: HPLC5
Prep Date: 12/09/2008 10:00
Cal Date: 12/16/2008 16:51
Run Date: 12/30/2008 09:55
File ID: 5L003713.F

Analyte	CAS. Number	Result	Qual	RL	MDL
PETN	78-11-5		U	0.291	0.0969

U Undetected; the analyte was analyzed for, but not detected.

Microbac

LS 3/19/09

25

Sample Number: L08120162-25
Client ID: MR08-EB01120408-SS
Matrix: Water
Workgroup Number: WG290129
Collect Date: 12/04/2008 12:50
Sample Tag: 01

PrePrep Method: NONE
Prep Method: 3535
Analytical Method: 8330MOD
Analyst: ECL
Dilution: 1
Units: ug/L

Instrument: HPLC5
Prep Date: 12/09/2008 08:00
Cal Date: 12/01/2008 20:11
Run Date: 12/11/2008 01:38
File ID: 5L003164.F

Analyte	CAS. Number	Result	Qual	RL	MDL
1,3,5-Trinitrobenzene	99-35-4		U	1.00	0.250
1,3-Dinitrobenzene	99-65-0		U	1.00	0.250
2,4,6-Trinitrotoluene	118-96-7		U	1.00	0.250
2,4-Dinitrotoluene	121-14-2		U	1.00	0.250
2,6-Dinitrotoluene	606-20-2		U	1.00	0.250
2-Amino-4,6-dinitrotoluene	35572-78-2		U	1.00	0.250
2-Nitrotoluene	88-72-2		U	1.00	0.250
3-Nitrotoluene	99-08-1		U	1.00	0.250
4-Nitrotoluene	99-99-0		U	1.00	0.250
4-Amino-2,6-dinitrotoluene	19406-51-0		U	1.00	0.250
HMX	2691-41-0		U	1.00	0.250
Nitrobenzene	98-95-3		U	1.00	0.250
RDX	121-82-4		U	1.00	0.250
Tetryl	479-45-8		U	1.00	0.250
Nitroglycerin	55-63-0		U	1.00	0.250

Surrogate	% Recovery	Lower	Upper	Qual
1,2-Dinitrobenzene	69.3	50	150	

U Undetected; the analyte was analyzed for, but not detected.

Microbac

64 lw 3/9/09

25

Sample Number: L08120162-25
Client ID: MR08-EB01120408-SS
Matrix: Water
Workgroup Number: WG290129
Collect Date: 12/04/2008 12:50
Sample Tag: 02

PrePrep Method: NONE
Prep Method: 3535
Analytical Method: 8330MOD
Analyst: ECL
Dilution: 1
Units: ug/L

Instrument: HPLC5
Prep Date: 12/09/2008 08:00
Cal Date: 12/01/2008 20:11
Run Date: 12/13/2008 02:16
File ID: 5L003262.F

Analyte	CAS. Number	Result	Qual	RL	MDL
PETN	78-11-5		U	1.00	0.250

U Undetected; the analyte was analyzed for, but not detected.

Microbac

63 QW 3/9/09

26

Sample Number: L08120162-26
Client ID: MR08-EB01120408-IS
Matrix: Water
Workgroup Number: WG290129
Collect Date: 12/04/2008 13:30
Sample Tag: 01

PrePrep Method: NONE
Prep Method: 3535
Analytical Method: 8330MOD
Analyst: ECL
Dilution: 1
Units: ug/L

Instrument: HPLC5
Prep Date: 12/09/2008 08:00
Cal Date: 12/01/2008 20:11
Run Date: 12/11/2008 02:16
File ID: 5L003165.F

Analyte	CAS. Number	Result	Qual	RL	MDL
1,3,5-Trinitrobenzene	99-35-4		U	1.00	0.250
1,3-Dinitrobenzene	99-65-0		U	1.00	0.250
2,4,6-Trinitrotoluene	118-96-7		U	1.00	0.250
2,4-Dinitrotoluene	121-14-2		U	1.00	0.250
2,6-Dinitrotoluene	606-20-2		U	1.00	0.250
2-Amino-4,6-dinitrotoluene	35572-78-2		U	1.00	0.250
2-Nitrotoluene	88-72-2		U	1.00	0.250
3-Nitrotoluene	99-08-1		U	1.00	0.250
4-Nitrotoluene	99-99-0		U	1.00	0.250
4-Amino-2,6-dinitrotoluene	19406-51-0		U	1.00	0.250
HMX	2691-41-0		U	1.00	0.250
Nitrobenzene	98-95-3		U	1.00	0.250
RDX	121-82-4		U	1.00	0.250
Tetryl	479-45-8		U	1.00	0.250
Nitroglycerin	55-63-0		U	1.00	0.250

Surrogate	% Recovery	Lower	Upper	Qual
1,2-Dinitrobenzene	71.6	50	150	

U Undetected; the analyte was analyzed for, but not detected.

Microbac

65 3/9/09

26

Sample Number: L08120162-26
Client ID: MR08-EB01120408-IS
Matrix: Water
Workgroup Number: WG290129
Collect Date: 12/04/2008 13:30
Sample Tag: 02

PrePrep Method: NONE
Prep Method: 3535
Analytical Method: 8330MOD
Analyst: ECL
Dilution: 1
Units: ug/L

Instrument: HPLC5
Prep Date: 12/09/2008 08:00
Cal Date: 12/01/2008 20:11
Run Date: 12/13/2008 02:29
File ID: 5L003263.F

Analyte	CAS. Number	Result	Qual	RL	MDL
PETN	78-11-5		U	1.00	0.250

U Undetected; the analyte was analyzed for, but not detected.

Microbac

66 LW 3/9/09

ENVIRONMENTAL
Data Services, Inc.

METALS

USEPA Region IV - Level IV Review

Site: MCB Camp Lejeune, TO-09 SDG #: L08120162

Client: CH2M HILL, Inc., Virginia Beach, Virginia Date: March 9, 2009

Laboratory: Microbac Laboratories, Inc., Marietta, Ohio Reviewer: Nancy Weaver

EDS ID	Client Sample ID	Laboratory Sample ID	Matrix
1	MR08-SS074-08D	L08120162-01	Soil
2	MR08-IS074-7-8-08D	L08120162-02	Soil
3	MR08-SS075-08D	L08120162-03	Soil
4	MR08-IS075-6-7-08D	L08120162-04	Soil
5	MR08-SS076-08D	L08120162-05	Soil
6	MR08-IS076-6-7-08D	L08120162-06	Soil
7	MR08-SS077-08D	L08120162-07	Soil
8	MR08-IS077-6-7-08D	L08120162-08	Soil
9	MR08-SS078-08D	L08120162-09	Soil
10	MR08-IS078-6-7-08D	L08120162-10	Soil
11	MR08-SS079-08D	L08120162-11	Soil
12	MR08-SS079D-08D	L08120162-12	Soil
13	MR08-IS079-6-7-08D	L08120162-13	Soil
14	MR08-IS079D-6-7-08D	L08120162-14	Soil
15	MR08-SS097-08D	L08120162-15	Soil
16	MR08-IS097-6-7-08D	L08120162-16	Soil
17	MR08-SS096-08D	L08120162-17	Soil
18	MR08-IS096-6-7-08D	L08120162-18	Soil
19	MR08-SS095-08D	L08120162-19	Soil
20	MR08-IS095-6-7-08D	L08120162-20	Soil
21	MR08-SS094-08D	L08120162-21	Soil
22	MR08-IS094-5-6-08D	L08120162-22	Soil
23	MR08-SS092-08D	L08120162-23	Soil
24	MR08-IS092-4-5-08D	L08120162-24	Soil
25	MR08-EB01120408-SS	L08120162-25	Water
26	MR08-EB01120408-IS	L08120162-26	Water

The USEPA "Contract Laboratory Program National Functional Guidelines for Inorganic Data Review," October 2004, and professional judgement were used in evaluating the data in this summary report.

Holding Times - All samples were prepared and analyzed within 28 days for mercury and 180 days for all other metals.

Calibration - The ICV and CCV %R values were acceptable.

Method and Calibration Blanks - The method blanks and continuing calibration blanks exhibited contamination for several compounds, however, all sample results are non-detect or greater than 5X the blank concentration.

Field and Equipment Blank - Field QC results are summarized below.

Blank ID	Compound	Conc. ug/L	Action Level ug/L	Qualifier	Affected Samples
MR08-EB01120408-SS	None - ND	-	-	-	-
MR08-EB01120408-IS	None - ND	-	-	-	-
MR08-FB01120608	None - ND	-	-	-	-

ICP Interference Check Sample - All %R values were acceptable.

MS/MSD - The MS/MSD sample exhibited acceptable %R and RPD values except the following.

MS/MSD Sample ID	Compound	MS/MSD %R/RPD	Qualifier	Affected Samples
Reference (WG290597)	Barium	Ok/199%/43	J	1-10
	Chromium	158%/214%/26	J	1-10
Reference (WG290599)	Barium	212%/Ok/24	J	11-24
	Cadmium	72.6%/69.6%/Ok	J/UJ	11-24
	Zinc	Ok/158%/Ok	J/UJ	11-24
	Chromium	69.2%/52.1%/Ok	J/UJ	11-24
Reference (WG290288)	Lead	72.7%/71.8%/100	J/UJ	18-24

LCS - The LCS samples exhibited acceptable %R values.

ICP Serial Dilution - The ICP serial dilution sample exhibited acceptable %D values.

Field Duplicates - Field duplicate results are summarized below.

Compound	MR08-SS079-08D mg/kg	MR08-SS079D-08D mg/kg	RPD	Qualifier
Arsenic	0.223	0.175	24%	None
Barium	6.03	3.79	46%	None
Chromium	2.52	1.85	31%	None
Lead	3.82	2.95	26%	None
Mercury	0.0259	0.118 U	NC	None
Selenium	0.440	0.325	30%	None
Zinc	1.14	0.634	57%	None

Compound	MR08-IS079-6-7-08D mg/kg	MR08-IS079D-6-7-08D mg/kg	RPD	Qualifier
Arsenic	0.307 U	0.0846	NC	None
Barium	4.70	7.54	46%	None
Chromium	3.22	4.94	42%	None
Copper	1.60 U	0.680	NC	None
Lead	3.46	3.72	7%	None
Selenium	0.645	0.389	50%	None
Zinc	1.36	2.15	45%	None

Compound Quantitation - No discrepancies were identified.

Report Number: L08120162

Report Date : January 6, 2009

1

Sample Number:	L08120162-01	PrePrep Method:	NONE	Instrument:	IRIS-ICP
Client ID:	MR08-SS074-08D	Prep Method:	3051	Prep Date:	12/11/2008 12:14
Matrix:	Soil	Analytical Method:	6010B	Cal Date:	12/16/2008 10:51
Workgroup Number:	WG290597	Analyst:	KHR	Run Date:	12/16/2008 20:33
Collect Date:	12/04/2008 08:45	Dilution:	1	File ID:	IR.121608.203300
Sample Tag:	01	Units:	mg/kg	Percent Solid:	71.3

Analyte	CAS. Number	Result	Qual	RL	MDL	
Silver, Total	7440-22-4		U	1.06	0.265	
Barium, Total	7440-39-3	20.1 J		0.531	0.106	MSH
Cadmium, Total	7440-43-9	0.357		0.212	0.0531	
Chromium, Total	7440-47-3	4.84 J		1.06	0.127	MSH
Copper, Total	7440-50-8	4.65		2.12	0.531	
Antimony, Total	7440-36-0	1.60	J	2.12	0.531	
Zinc, Total	7440-66-6	33.4		2.12	0.531	

U Undetected; the analyte was analyzed for, but not detected.
J Estimated ; the analyte concentration was less than the low standard (LOQ)

Microbac

435 lw 3/9/09

Sample Number:	L08120162-01	PrePrep Method:	NONE	Instrument:	ELAN-ICP
Client ID:	MR08-SS074-08D	Prep Method:	3051	Prep Date:	12/10/2008 06:58
Matrix:	Soil	Analytical Method:	6020	Cal Date:	12/11/2008 10:44
Workgroup Number:	WG290219	Analyst:	JYH	Run Date:	12/11/2008 18:04
Collect Date:	12/04/2008 08:45	Dilution:	1	File ID:	EL.121108.180428
Sample Tag:	01	Units:	mg/kg	Percent Solid:	71.3

Analyte	CAS. Number	Result	Qual	RL	MDL
Arsenic, Total	7440-38-2	0.507		0.417	0.104
Selenium, Total	7782-49-2	0.481	J	0.556	0.139

J Estimated ; the analyte concentration was less than the low standard (LOQ)

Microbac

lw
3/9/09

Sample Number: L08120162-01
Client ID: MR08-SS074-08D
Matrix: Soil
Workgroup Number: WG290219
Collect Date: 12/04/2008 08:45
Sample Tag: DL01

PrePrep Method: NONE
Prep Method: 3051
Analytical Method: 6020
Analyst: JYH
Dilution: 10
Units: mg/kg

Instrument: ELAN-ICP
Prep Date: 12/10/2008 06:58
Cal Date: 12/12/2008 12:20
Run Date: 12/12/2008 13:27
File ID: EL.121208.132733
Percent Solid: 71.3

Analyte	CAS. Number	Result	Qual	RL	MDL
Lead, Total	7439-92-1	58.3		5.56	1.39

Microbac®

1608 MW 3/9/09

2

Sample Number: L08120162-02
Client ID: MR08-IS074-7-8-08D
Matrix: Soil
Workgroup Number: WG290597
Collect Date: 12/04/2008 09:05
Sample Tag: 01

PrePrep Method: NONE
Prep Method: 3051
Analytical Method: 6010B
Analyst: KHR
Dilution: 1
Units: mg/kg

Instrument: IRIS-ICP
Prep Date: 12/11/2008 12:14
Cal Date: 12/16/2008 10:51
Run Date: 12/16/2008 20:39
File ID: IR.121608.203900
Percent Solid: 95.0

Analyte	CAS. Number	Result	Qual	RL	MDL	
Silver, Total	7440-22-4		U	0.776	0.194	
Barium, Total	7440-39-3	2.16 J		0.388	0.0776	MSH
Cadmium, Total	7440-43-9		U	0.155	0.0388	
Chromium, Total	7440-47-3	1.50 J		0.776	0.0932	MSH
Copper, Total	7440-50-8		U	1.55	0.388	
Antimony, Total	7440-36-0		U	1.55	0.388	
Zinc, Total	7440-66-6	0.479	J	1.55	0.388	

U Undetected; the analyte was analyzed for, but not detected.
J Estimated ; the analyte concentration was less than the low standard (LOQ)

Microbac

436 lew
3/9/09

2

Sample Number: L08120162-02
Client ID: MR08-IS074-7-8-08D
Matrix: Soil
Workgroup Number: WG290219
Collect Date: 12/04/2008 09:05
Sample Tag: 01

PrePrep Method: NONE
Prep Method: 3051
Analytical Method: 6020
Analyst: JYH
Dilution: 1
Units: mg/kg

Instrument: ELAN-ICP
Prep Date: 12/10/2008 06:58
Cal Date: 12/11/2008 10:44
Run Date: 12/11/2008 18:20
File ID: EL.121108.182035
Percent Solid: 95.0

Analyte	CAS. Number	Result	Qual	RL	MDL
Arsenic, Total	7440-38-2		U	0.314	0.0784
Lead, Total	7439-92-1	1.56		0.418	0.105
Selenium, Total	7782-49-2		U	0.418	0.105

U Undetected; the analyte was analyzed for, but not detected.

Microbac

1609 lew 3/9/09

2

Sample Number:	L08120162-02	PrePrep Method:	NONE	Instrument:	HYDRA
Client ID:	MR08-IS074-7-8-08D	Prep Method:	7471A	Prep Date:	12/10/2008 13:10
Matrix:	Soil	Analytical Method:	7471A	Cal Date:	12/11/2008 15:35
Workgroup Number:	WG290282	Analyst:	ADC	Run Date:	12/11/2008 17:08
Collect Date:	12/04/2008 09:05	Dilution:	1	File ID:	HY.121108.170837
Sample Tag:	01	Units:	mg/kg	Percent Solid:	95.0

Analyte	CAS. Number	Result	Qual	RL	MDL
Mercury, Total	7439-97-6		U	0.0974	0.0195

U Undetected; the analyte was analyzed for, but not detected.

Microbac

2913 lw 3/9/09

3

Sample Number: L08120162-03
Client ID: MR08-SS075-08D
Matrix: Soil
Workgroup Number: WG290597
Collect Date: 12/04/2008 09:20
Sample Tag: 01

PrePrep Method: NONE
Prep Method: 3051
Analytical Method: 6010B
Analyst: KHR
Dilution: 1
Units: mg/kg

Instrument: IRIS-ICP
Prep Date: 12/11/2008 12:15
Cal Date: 12/16/2008 10:51
Run Date: 12/16/2008 20:45
File ID: IR.121608.204500
Percent Solid: 85.1

Analyte	CAS. Number	Result	Qual	RL	MDL	
Silver, Total	7440-22-4		U	0.889	0.222	
Barium, Total	7440-39-3	6.26 J		0.445	0.0889	MSH
Cadmium, Total	7440-43-9	0.0493	J	0.178	0.0445	
Chromium, Total	7440-47-3	2.65 J		0.889	0.107	MSH
Copper, Total	7440-50-8	1.20	J	1.78	0.445	
Antimony, Total	7440-36-0	0.484	J	1.78	0.445	
Zinc, Total	7440-66-6	8.11		1.78	0.445	

U Undetected; the analyte was analyzed for, but not detected.
J Estimated ; the analyte concentration was less than the low standard (LOQ)

Microbac

437 LW 3/9/09

3

Sample Number: L08120162-03
Client ID: MR08-SS075-08D
Matrix: Soil
Workgroup Number: WG290219
Collect Date: 12/04/2008 09:20
Sample Tag: 01

PrePrep Method: NONE
Prep Method: 3051
Analytical Method: 6020
Analyst: JYH
Dilution: 1
Units: mg/kg

Instrument: ELAN-ICP
Prep Date: 12/10/2008 06:58
Cal Date: 12/11/2008 10:44
Run Date: 12/11/2008 18:25
File ID: EL.121108.182558
Percent Solid: 85.1

Analyte	CAS. Number	Result	Qual	RL	MDL
Arsenic, Total	7440-38-2	0.384		0.342	0.0854
Lead, Total	7439-92-1	9.56		0.456	0.114
Selenium, Total	7782-49-2	0.277	J	0.456	0.114

J Estimated ; the analyte concentration was less than the low standard (LOQ)

Microbac

1610 lw 3/9/09

3

Sample Number:	L08120162-03	PrePrep Method:	NONE	Instrument:	HYDRA
Client ID:	MR08-SS075-08D	Prep Method:	7471A	Prep Date:	12/10/2008 13:12
Matrix:	Soil	Analytical Method:	7471A	Cal Date:	12/11/2008 15:35
Workgroup Number:	WG290282	Analyst:	ADC	Run Date:	12/11/2008 17:22
Collect Date:	12/04/2008 09:20	Dilution:	1	File ID:	HY.121108.172231
Sample Tag:	01	Units:	mg/kg	Percent Solid:	85.1

Analyte	CAS. Number	Result	Qual	RL	MDL
Mercury, Total	7439-97-6		U	0.110	0.0221

U Undetected; the analyte was analyzed for, but not detected.

Microbac

2914 lw 3/9/09

4

Sample Number: L08120162-04
Client ID: MR08-IS075-6-7-08D
Matrix: Soil
Workgroup Number: WG290597
Collect Date: 12/04/2008 09:35
Sample Tag: 01

PrePrep Method: NONE
Prep Method: 3051
Analytical Method: 6010B
Analyst: KHR
Dilution: 1
Units: mg/kg

Instrument: IRIS-ICP
Prep Date: 12/11/2008 12:15
Cal Date: 12/16/2008 10:51
Run Date: 12/16/2008 20:51
File ID: IR.121608.205100
Percent Solid: 88.9

Analyte	CAS. Number	Result	Qual	RL	MDL	
Silver, Total	7440-22-4		U	0.848	0.212	
Barium, Total	7440-39-3	5.41 J		0.424	0.0848	MSH
Cadmium, Total	7440-43-9		U	0.170	0.0424	
Chromium, Total	7440-47-3	3.67 J		0.848	0.102	MSH
Copper, Total	7440-50-8	0.859	J	1.70	0.424	
Antimony, Total	7440-36-0		U	1.70	0.424	
Zinc, Total	7440-66-6	1.33	J	1.70	0.424	

U Undetected; the analyte was analyzed for, but not detected.
J Estimated ; the analyte concentration was less than the low standard (LOQ)

Microbac

438 lw 3/9/09

4

Sample Number: L08120162-04
Client ID: MR08-IS075-6-7-08D
Matrix: Soil
Workgroup Number: WG290219
Collect Date: 12/04/2008 09:35
Sample Tag: 01

PrePrep Method: NONE
Prep Method: 3051
Analytical Method: 6020
Analyst: JYH
Dilution: 1
Units: mg/kg

Instrument: ELAN-ICP
Prep Date: 12/10/2008 06:58
Cal Date: 12/11/2008 10:44
Run Date: 12/11/2008 18:31
File ID: EL.121108.183121
Percent Solid: 88.9

Analyte	CAS. Number	Result	Qual	RL	MDL
Arsenic, Total	7440-38-2	0.115	J	0.325	0.0813
Lead, Total	7439-92-1	2.13		0.434	0.108
Selenium, Total	7782-49-2		U	0.434	0.108

U Undetected; the analyte was analyzed for, but not detected.
J Estimated ; the analyte concentration was less than the low standard (LOQ)

Microbac

1611 lw 3/9/09

4

Sample Number: L08120162-04
Client ID: MR08-IS075-6-7-08D
Matrix: Soil
Workgroup Number: WG290282
Collect Date: 12/04/2008 09:35
Sample Tag: 01

PrePrep Method: NONE
Prep Method: 7471A
Analytical Method: 7471A
Analyst: ADC
Dilution: 1
Units: mg/kg

Instrument: HYDRA
Prep Date: 12/10/2008 13:12
Cal Date: 12/11/2008 15:35
Run Date: 12/11/2008 17:24
File ID: HY.121108.172448
Percent Solid: 88.9

Analyte	CAS. Number	Result	Qual	RL	MDL
Mercury, Total	7439-97-6		U	0.110	0.0220

U Undetected; the analyte was analyzed for, but not detected.

Microbac

2915 MW 3/9/09

5

Sample Number: L08120162-05
Client ID: MR08-SS076-08D
Matrix: Soil
Workgroup Number: WG290597
Collect Date: 12/04/2008 09:50
Sample Tag: 01

PrePrep Method: NONE
Prep Method: 3051
Analytical Method: 6010B
Analyst: KHR
Dilution: 1
Units: mg/kg

Instrument: IRIS-ICP
Prep Date: 12/11/2008 12:16
Cal Date: 12/16/2008 10:51
Run Date: 12/16/2008 20:57
File ID: IR.121608.205700
Percent Solid: 84.6

Analyte	CAS. Number	Result	Qual	RL	MDL	
Silver, Total	7440-22-4	0.315	J	0.898	0.224	
Barium, Total	7440-39-3	10.5 J		0.449	0.0898	MSH
Cadmium, Total	7440-43-9	0.181		0.180	0.0449	
Chromium, Total	7440-47-3	3.48 J		0.898	0.108	MSH
Copper, Total	7440-50-8	11.8		1.80	0.449	
Antimony, Total	7440-36-0		U	1.80	0.449	
Zinc, Total	7440-66-6	14.9		1.80	0.449	

U Undetected; the analyte was analyzed for, but not detected.
J Estimated ; the analyte concentration was less than the low standard (LOQ)

Microbac

439 LW 3/9/09

5

Sample Number: L08120162-05
Client ID: MR08-SS076-08D
Matrix: Soil
Workgroup Number: WG290219
Collect Date: 12/04/2008 09:50
Sample Tag: 01

PrePrep Method: NONE
Prep Method: 3051
Analytical Method: 6020
Analyst: JYH
Dilution: 1
Units: mg/kg

Instrument: ELAN-ICP
Prep Date: 12/10/2008 06:58
Cal Date: 12/11/2008 10:44
Run Date: 12/11/2008 19:00
File ID: EL.121108.190036
Percent Solid: 84.6

Analyte	CAS. Number	Result	Qual	RL	MDL
Arsenic, Total	7440-38-2	0.448		0.354	0.0884
Lead, Total	7439-92-1	12.5		0.472	0.118
Selenium, Total	7782-49-2	0.251	J	0.472	0.118

J Estimated ; the analyte concentration was less than the low standard (LOQ)

Microbac

1612 lw 3/9/09

5

Sample Number: L08120162-05
Client ID: MR08-SS076-08D
Matrix: Soil
Workgroup Number: WG290282
Collect Date: 12/04/2008 09:50
Sample Tag: 01

PrePrep Method: NONE
Prep Method: 7471A
Analytical Method: 7471A
Analyst: ADC
Dilution: 1
Units: mg/kg

Instrument: HYDRA
Prep Date: 12/10/2008 13:13
Cal Date: 12/11/2008 15:35
Run Date: 12/11/2008 17:26
File ID: HY.121108.172631
Percent Solid: 84.6

Analyte	CAS. Number	Result	Qual	RL	MDL
Mercury, Total	7439-97-6	0.0282	J	0.117	0.0234

J Estimated ; the analyte concentration was less than the low standard (LOQ)

Microbac

2916 MW 3/9/09

6

Sample Number: L08120162-06
Client ID: MR08-IS076-6-7-08D
Matrix: Soil
Workgroup Number: WG290597
Collect Date: 12/04/2008 10:05
Sample Tag: 01

PrePrep Method: NONE
Prep Method: 3051
Analytical Method: 6010B
Analyst: KHR
Dilution: 1
Units: mg/kg

Instrument: IRIS-ICP
Prep Date: 12/11/2008 12:16
Cal Date: 12/16/2008 10:51
Run Date: 12/16/2008 21:03
File ID: IR.121608.210300
Percent Solid: 92.7

Analyte	CAS. Number	Result	Qual	RL	MDL	
Silver, Total	7440-22-4	0.248	J	0.798	0.200	
Barium, Total	7440-39-3	5.64 J		0.399	0.0798	MSH
Cadmium, Total	7440-43-9		U	0.160	0.0399	
Chromium, Total	7440-47-3	1.32 J		0.798	0.0958	MSH
Copper, Total	7440-50-8		U	1.60	0.399	
Antimony, Total	7440-36-0		U	1.60	0.399	
Zinc, Total	7440-66-6		U	1.60	0.399	

U Undetected; the analyte was analyzed for, but not detected.
J Estimated ; the analyte concentration was less than the low standard (LOQ)

Microbac

lw 3/9/09

6

Sample Number: L08120162-06
Client ID: MR08-IS076-6-7-08D
Matrix: Soil
Workgroup Number: WG290219
Collect Date: 12/04/2008 10:05
Sample Tag: 01

PrePrep Method: NONE
Prep Method: 3051
Analytical Method: 6020
Analyst: JYH
Dilution: 1
Units: mg/kg

Instrument: ELAN-ICP
Prep Date: 12/10/2008 06:58
Cal Date: 12/11/2008 10:44
Run Date: 12/11/2008 19:06
File ID: EL.121108.190601
Percent Solid: 92.7

Analyte	CAS. Number	Result	Qual	RL	MDL
Arsenic, Total	7440-38-2		U	0.319	0.0798
Lead, Total	7439-92-1	2.29		0.425	0.106
Selenium, Total	7782-49-2		U	0.425	0.106

U Undetected; the analyte was analyzed for, but not detected.

Microbac

1613 MW 3/9/09

6

Sample Number: L08120162-06
Client ID: MR08-IS076-6-7-08D
Matrix: Soil
Workgroup Number: WG290282
Collect Date: 12/04/2008 10:05
Sample Tag: 01

PrePrep Method: NONE
Prep Method: 7471A
Analytical Method: 7471A
Analyst: ADC
Dilution: 1
Units: mg/kg

Instrument: HYDRA
Prep Date: 12/10/2008 13:13
Cal Date: 12/11/2008 15:35
Run Date: 12/11/2008 17:31
File ID: HY.121108.173145
Percent Solid: 92.7

Analyte	CAS. Number	Result	Qual	RL	MDL
Mercury, Total	7439-97-6		U	0.106	0.0212

U Undetected; the analyte was analyzed for, but not detected.

Microbac

2917 NW 3/9/09

7

Sample Number: L08120162-07
Client ID: MR08-SS077-08D
Matrix: Soil
Workgroup Number: WG290597
Collect Date: 12/04/2008 10:20
Sample Tag: 01

PrePrep Method: NONE
Prep Method: 3051
Analytical Method: 6010B
Analyst: KHR
Dilution: 1
Units: mg/kg

Instrument: IRIS-ICP
Prep Date: 12/11/2008 12:17
Cal Date: 12/16/2008 10:51
Run Date: 12/16/2008 21:09
File ID: IR.121608.210900
Percent Solid: 85.7

Analyte	CAS. Number	Result	Qual	RL	MDL	
Silver, Total	7440-22-4	0.245	J	0.875	0.219	
Barium, Total	7440-39-3	9.46 J		0.437	0.0875	MSH
Cadmium, Total	7440-43-9	0.0927	J	0.175	0.0437	
Chromium, Total	7440-47-3	4.24 J		0.875	0.105	MSH
Copper, Total	7440-50-8	15.7		1.75	0.437	
Antimony, Total	7440-36-0		U	1.75	0.437	
Zinc, Total	7440-66-6	15.9		1.75	0.437	

U Undetected; the analyte was analyzed for, but not detected.
J Estimated ; the analyte concentration was less than the low standard (LOQ)

Microbac

441 LW 3/9/09

7

Sample Number: L08120162-07
Client ID: MR08-SS077-08D
Matrix: Soil
Workgroup Number: WG290219
Collect Date: 12/04/2008 10:20
Sample Tag: 01

PrePrep Method: NONE
Prep Method: 3051
Analytical Method: 6020
Analyst: JYH
Dilution: 1
Units: mg/kg

Instrument: ELAN-ICP
Prep Date: 12/10/2008 06:58
Cal Date: 12/11/2008 10:44
Run Date: 12/11/2008 19:11
File ID: EL.121108.191124
Percent Solid: 85.7

Analyte	CAS. Number	Result	Qual	RL	MDL
Arsenic, Total	7440-38-2	0.511		0.350	0.0875
Lead, Total	7439-92-1	12.1		0.467	0.117
Selenium, Total	7782-49-2	0.311	J	0.467	0.117

J Estimated ; the analyte concentration was less than the low standard (LOQ)

Microbac

1614 lw 3/9/09

7

Sample Number:	L08120162-07	PrePrep Method:	NONE	Instrument:	HYDRA
Client ID:	MR08-SS077-08D	Prep Method:	7471A	Prep Date:	12/10/2008 13:14
Matrix:	Soil	Analytical Method:	7471A	Cal Date:	12/11/2008 15:35
Workgroup Number:	WG290282	Analyst:	ADC	Run Date:	12/11/2008 17:33
Collect Date:	12/04/2008 10:20	Dilution:	1	File ID:	HY.121108.173328
Sample Tag:	01	Units:	mg/kg	Percent Solid:	85.7

Analyte	CAS. Number	Result	Qual	RL	MDL
Mercury, Total	7439-97-6	0.0356	J	0.113	0.0227

J Estimated ; the analyte concentration was less than the low standard (LOQ)

Microbac

2918 llw 3/9/09

8

Sample Number: L08120162-08
Client ID: MR08-IS077-6-7-08D
Matrix: Soil
Workgroup Number: WG290597
Collect Date: 12/04/2008 10:30
Sample Tag: 01

PrePrep Method: NONE
Prep Method: 3051
Analytical Method: 6010B
Analyst: KHR
Dilution: 1
Units: mg/kg

Instrument: IRIS-ICP
Prep Date: 12/11/2008 12:18
Cal Date: 12/16/2008 10:51
Run Date: 12/16/2008 21:28
File ID: IR.121608.212800
Percent Solid: 88.5

Analyte	CAS. Number	Result	Qual	RL	MDL
Silver, Total	7440-22-4		U	0.869	0.217
Barium, Total	7440-39-3	7.47 J		0.434	0.0869
Cadmium, Total	7440-43-9		U	0.174	0.0434
Copper, Total	7440-50-8	0.745	J	1.74	0.434
Antimony, Total	7440-36-0		U	1.74	0.434
Zinc, Total	7440-66-6	1.89		1.74	0.434

MSH

U Undetected; the analyte was analyzed for, but not detected.
J Estimated ; the analyte concentration was less than the low standard (LOQ)

Microbac

442 MW 3/9/09

8

Sample Number: L08120162-08
Client ID: MR08-IS077-6-7-08D
Matrix: Soil
Workgroup Number: WG290219
Collect Date: 12/04/2008 10:30
Sample Tag: 01

PrePrep Method: NONE
Prep Method: 3051
Analytical Method: 6020
Analyst: JYH
Dilution: 1
Units: mg/kg

Instrument: ELAN-ICP
Prep Date: 12/10/2008 06:58
Cal Date: 12/11/2008 10:44
Run Date: 12/11/2008 19:16
File ID: EL.121108.191646
Percent Solid: 88.5

Analyte	CAS. Number	Result	Qual	RL	MDL
Arsenic, Total	7440-38-2	0.168	J	0.331	0.0826
Lead, Total	7439-92-1	4.06		0.441	0.110
Selenium, Total	7782-49-2	0.153	J	0.441	0.110

J Estimated ; the analyte concentration was less than the low standard (LOQ)

Microbac

1615 LW 3/9/09

8

Sample Number: L08120162-08
Client ID: MR08-IS077-6-7-08D
Matrix: Soil
Workgroup Number: WG290282
Collect Date: 12/04/2008 10:30
Sample Tag: 01

PrePrep Method: NONE
Prep Method: 7471A
Analytical Method: 7471A
Analyst: ADC
Dilution: 1
Units: mg/kg

Instrument: HYDRA
Prep Date: 12/10/2008 13:14
Cal Date: 12/11/2008 15:35
Run Date: 12/11/2008 17:35
File ID: HY.121108.173556
Percent Solid: 88.5

Analyte	CAS. Number	Result	Qual	RL	MDL
Mercury, Total	7439-97-6		U	0.108	0.0216

U Undetected; the analyte was analyzed for, but not detected.

Microbac

2919 QW 3/9/09

8

Sample Number: L08120162-08
Client ID: MR08-IS077-6-7-08D
Matrix: Soil
Workgroup Number: WG290597
Collect Date: 12/04/2008 10:30
Sample Tag: 02

PrePrep Method: NONE
Prep Method: 3051
Analytical Method: 6010B
Analyst: KHR
Dilution: 1
Units: mg/kg

Instrument: IRIS-ICP
Prep Date: 12/11/2008 12:18
Cal Date: 12/18/2008 11:38
Run Date: 12/18/2008 12:22
File ID: IR.121808.122200
Percent Solid: 88.5

Analyte	CAS. Number	Result	Qual	RL	MDL
Chromium, Total	7440-47-3	4.22 J		0.869	0.104

MSH

Microbac

443 lw 3/9/09

9

Sample Number: L08120162-09
Client ID: MR08-SS078-08D
Matrix: Soil
Workgroup Number: WG290597
Collect Date: 12/04/2008 10:45
Sample Tag: 01

PrePrep Method: NONE
Prep Method: 3051
Analytical Method: 6010B
Analyst: KHR
Dilution: 1
Units: mg/kg

Instrument: IRIS-ICP
Prep Date: 12/11/2008 12:18
Cal Date: 12/16/2008 10:51
Run Date: 12/16/2008 21:34
File ID: IR.121608.213400
Percent Solid: 85.7

Analyte	CAS. Number	Result	Qual	RL	MDL
Silver, Total	7440-22-4		U	0.882	0.220
Barium, Total	7440-39-3	9.50 J		0.441	0.0882
Cadmium, Total	7440-43-9	0.112	J	0.176	0.0441
Copper, Total	7440-50-8	15.4		1.76	0.441
Antimony, Total	7440-36-0	0.514	J	1.76	0.441

MSH

U Undetected; the analyte was analyzed for, but not detected.
J Estimated ; the analyte concentration was less than the low standard (LOQ)

Microbac

 MW 3/9/09

9

Sample Number: L08120162-09
Client ID: MR08-SS078-08D
Matrix: Soil
Workgroup Number: WG290219
Collect Date: 12/04/2008 10:45
Sample Tag: 01

PrePrep Method: NONE
Prep Method: 3051
Analytical Method: 6020
Analyst: JYH
Dilution: 1
Units: mg/kg

Instrument: ELAN-ICP
Prep Date: 12/10/2008 06:58
Cal Date: 12/11/2008 10:44
Run Date: 12/11/2008 19:22
File ID: EL.121108.192208
Percent Solid: 85.7

Analyte	CAS. Number	Result	Qual	RL	MDL
Arsenic, Total	7440-38-2	0.360		0.345	0.0863
Lead, Total	7439-92-1	10.3		0.460	0.115
Selenium, Total	7782-49-2	0.338	J	0.460	0.115

J Estimated ; the analyte concentration was less than the low standard (LOQ)

Microbac®

1616 lw 3/9/09

9

Sample Number: L08120162-09
Client ID: MR08-SS078-08D
Matrix: Soil
Workgroup Number: WG290597
Collect Date: 12/04/2008 10:45
Sample Tag: DL01

PrePrep Method: NONE
Prep Method: 3051
Analytical Method: 6010B
Analyst: KHR
Dilution: 10
Units: mg/kg

Instrument: IRIS-ICP
Prep Date: 12/11/2008 12:18
Cal Date: 12/18/2008 11:38
Run Date: 12/18/2008 12:34
File ID: IR.121808.123400
Percent Solid: 85.7

Analyte	CAS. Number	Result	Qual	RL	MDL
Zinc, Total	7440-66-6	116		17.6	4.41

Microbac

445 LW 3/9/09

9

Sample Number: L08120162-09
Client ID: MR08-SS078-08D
Matrix: Soil
Workgroup Number: WG290597
Collect Date: 12/04/2008 10:45
Sample Tag: 02

PrePrep Method: NONE
Prep Method: 3051
Analytical Method: 6010B
Analyst: KHR
Dilution: 1
Units: mg/kg

Instrument: IRIS-ICP
Prep Date: 12/11/2008 12:18
Cal Date: 12/18/2008 11:38
Run Date: 12/18/2008 12:28
File ID: IR.121808.122800
Percent Solid: 85.7

Analyte	CAS. Number	Result	Qual	RL	MDL
Chromium, Total	7440-47-3	3.13 J		0.882	0.106

MSH

Microbac

446 RW 3/9/09

9

Sample Number: L08120162-09
Client ID: MR08-SS078-08D
Matrix: Soil
Workgroup Number: WG290282
Collect Date: 12/04/2008 10:45
Sample Tag: 01

PrePrep Method: NONE
Prep Method: 7471A
Analytical Method: 7471A
Analyst: ADC
Dilution: 1
Units: mg/kg

Instrument: HYDRA
Prep Date: 12/10/2008 13:15
Cal Date: 12/11/2008 15:35
Run Date: 12/11/2008 17:38
File ID: HY.121108.173809
Percent Solid: 85.7

Analyte	CAS. Number	Result	Qual	RL	MDL
Mercury, Total	7439-97-6		U	0.117	0.0233

U Undetected; the analyte was analyzed for, but not detected.

Microbac

2920 MW 3/9/09

10

Sample Number: L08120162-10
Client ID: MR08-IS078-6-7-08D
Matrix: Soil
Workgroup Number: WG290597
Collect Date: 12/04/2008 10:55
Sample Tag: 01

PrePrep Method: NONE
Prep Method: 3051
Analytical Method: 6010B
Analyst: KHR
Dilution: 1
Units: mg/kg

Instrument: IRIS-ICP
Prep Date: 12/11/2008 12:19
Cal Date: 12/16/2008 10:51
Run Date: 12/16/2008 21:40
File ID: IR.121608.214000
Percent Solid: 91.5

Analyte	CAS. Number	Result	Qual	RL	MDL
Silver, Total	7440-22-4		U	0.801	0.200
Barium, Total	7440-39-3	2.67 J		0.400	0.0801
Cadmium, Total	7440-43-9		U	0.160	0.0400
Copper, Total	7440-50-8	0.635	J	1.60	0.400
Antimony, Total	7440-36-0		U	1.60	0.400
Zinc, Total	7440-66-6	1.17	J	1.60	0.400

MSM

U Undetected; the analyte was analyzed for, but not detected.
J Estimated ; the analyte concentration was less than the low standard (LOQ)

Microbac

447 MW 3/9/09

10

Sample Number: L08120162-10
Client ID: MR08-IS078-6-7-08D
Matrix: Soil
Workgroup Number: WG290597
Collect Date: 12/04/2008 10:55
Sample Tag: 02

PrePrep Method: NONE
Prep Method: 3051
Analytical Method: 6010B
Analyst: KHR
Dilution: 1
Units: mg/kg

Instrument: IRIS-ICP
Prep Date: 12/11/2008 12:19
Cal Date: 12/18/2008 11:38
Run Date: 12/18/2008 12:40
File ID: IR.121808.124000
Percent Solid: 91.5

Analyte	CAS. Number	Result	Qual	RL	MDL
Chromium, Total	7440-47-3	3.38 J		0.801	0.0961

MSH

Microbac

448 leo 3/9/09

10

Sample Number: L08120162-10
Client ID: MR08-IS078-6-7-08D
Matrix: Soil
Workgroup Number: WG290219
Collect Date: 12/04/2008 10:55
Sample Tag: 01

PrePrep Method: NONE
Prep Method: 3051
Analytical Method: 6020
Analyst: JYH
Dilution: 1
Units: mg/kg

Instrument: ELAN-ICP
Prep Date: 12/10/2008 06:58
Cal Date: 12/11/2008 10:44
Run Date: 12/11/2008 19:27
File ID: EL.121108.192730
Percent Solid: 91.5

Analyte	CAS. Number	Result	Qual	RL	MDL
Arsenic, Total	7440-38-2		U	0.320	0.0800
Lead, Total	7439-92-1	2.11		0.427	0.107
Selenium, Total	7782-49-2	0.113	J	0.427	0.107

U Undetected; the analyte was analyzed for, but not detected.
J Estimated ; the analyte concentration was less than the low standard (LOQ)

Microbac

1617 [illegible] 3/9/09

10

Sample Number: L08120162-10
Client ID: MR08-IS078-6-7-08D
Matrix: Soil
Workgroup Number: WG290282
Collect Date: 12/04/2008 10:55
Sample Tag: 01

PrePrep Method: NONE
Prep Method: 7471A
Analytical Method: 7471A
Analyst: ADC
Dilution: 1
Units: mg/kg

Instrument: HYDRA
Prep Date: 12/10/2008 13:16
Cal Date: 12/11/2008 15:35
Run Date: 12/11/2008 17:40
File ID: HY.121108.174003
Percent Solid: 91.5

Analyte	CAS. Number	Result	Qual	RL	MDL
Mercury, Total	7439-97-6		U	0.101	0.0202

U Undetected; the analyte was analyzed for, but not detected.

Microbac

2921 lw 3/9/09

11

Sample Number: L08120162-11
Client ID: MR08-SS079-08D
Matrix: Soil
Workgroup Number: WG290599
Collect Date: 12/04/2008 11:20
Sample Tag: 01

PrePrep Method: NONE
Prep Method: 3051
Analytical Method: 6010B
Analyst: KHR
Dilution: 1
Units: mg/kg

Instrument: IRIS-ICP
Prep Date: 12/12/2008 10:50
Cal Date: 12/16/2008 10:51
Run Date: 12/16/2008 21:59
File ID: IR.121608.215900
Percent Solid: 86.3

Analyte	CAS. Number	Result	Qual	RL	MDL	
Silver, Total	7440-22-4		U	0.834	0.209	
Barium, Total	7440-39-3	6.03 J		0.417	0.0834	MSH
Cadmium, Total	7440-43-9	UJ	~~J~~	0.167	0.0417	MSL
Copper, Total	7440-50-8		U	1.67	0.417	
Antimony, Total	7440-36-0		U	1.67	0.417	
Zinc, Total	7440-66-6	1.14 J	~~J~~	1.67	0.417	MSL

U Undetected; the analyte was analyzed for, but not detected.
J Estimated ; the analyte concentration was less than the low standard (LOQ)

Microbac

449 MW 3/9/09

11

Sample Number: L08120162-11
Client ID: MR08-SS079-08D
Matrix: Soil
Workgroup Number: WG290599
Collect Date: 12/04/2008 11:20
Sample Tag: 02

PrePrep Method: NONE
Prep Method: 3051
Analytical Method: 6010B
Analyst: KHR
Dilution: 1
Units: mg/kg

Instrument: IRIS-ICP
Prep Date: 12/12/2008 10:50
Cal Date: 12/18/2008 11:38
Run Date: 12/18/2008 12:59
File ID: IR.121808.125900
Percent Solid: 86.3

Analyte	CAS. Number	Result	Qual	RL	MDL
Chromium, Total	7440-47-3	2.52 J		0.834	0.100

MSL

Microbac

450 kw 3/9/09

11

Sample Number: L08120162-11
Client ID: MR08-SS079-08D
Matrix: Soil
Workgroup Number: WG290219
Collect Date: 12/04/2008 11:20
Sample Tag: 01

PrePrep Method: NONE
Prep Method: 3051
Analytical Method: 6020
Analyst: JYH
Dilution: 1
Units: mg/kg

Instrument: ELAN-ICP
Prep Date: 12/10/2008 06:58
Cal Date: 12/11/2008 10:44
Run Date: 12/11/2008 19:32
File ID: EL.121108.193253
Percent Solid: 86.3

Analyte	CAS. Number	Result	Qual	RL	MDL
Arsenic, Total	7440-38-2	0.223	J	0.342	0.0854
Lead, Total	7439-92-1	3.82		0.455	0.114
Selenium, Total	7782-49-2	0.440	J	0.455	0.114

J Estimated ; the analyte concentration was less than the low standard (LOQ)

Microbac

1618 lw
3/9/09

11

Sample Number:	L08120162-11	PrePrep Method:	NONE	Instrument:	HYDRA
Client ID:	MR08-SS079-08D	Prep Method:	7471A	Prep Date:	12/10/2008 13:16
Matrix:	Soil	Analytical Method:	7471A	Cal Date:	12/11/2008 15:35
Workgroup Number:	WG290282	Analyst:	ADC	Run Date:	12/11/2008 17:41
Collect Date:	12/04/2008 11:20	Dilution:	1	File ID:	HY.121108.174148
Sample Tag:	01	Units:	mg/kg	Percent Solid:	86.3

Analyte	CAS. Number	Result	Qual	RL	MDL
Mercury, Total	7439-97-6	0.0259	J	0.114	0.0228

J Estimated ; the analyte concentration was less than the low standard (LOQ)

Microbac

2922 lw 3/9/09

12

Sample Number: L08120162-12
Client ID: MR08-SS079D-08D
Matrix: Soil
Workgroup Number: WG290599
Collect Date: 12/04/2008 11:25
Sample Tag: 01

PrePrep Method: NONE
Prep Method: 3051
Analytical Method: 6010B
Analyst: KHR
Dilution: 1
Units: mg/kg

Instrument: IRIS-ICP
Prep Date: 12/12/2008 10:50
Cal Date: 12/16/2008 10:51
Run Date: 12/16/2008 22:23
File ID: IR.121608.222300
Percent Solid: 81.2

Analyte	CAS. Number	Result	Qual	RL	MDL	
Silver, Total	7440-22-4		U	0.938	0.234	
Barium, Total	7440-39-3	3.79		0.469	0.0938	MSH
Cadmium, Total	7440-43-9	J	~~U~~	0.188	0.0469	MSL
Copper, Total	7440-50-8		U	1.88	0.469	
Antimony, Total	7440-36-0		U	1.88	0.469	
Zinc, Total	7440-66-6	0.634 J	~~J~~	1.88	0.469	MSL

U Undetected; the analyte was analyzed for, but not detected.
J Estimated ; the analyte concentration was less than the low standard (LOQ)

Microbac

451 lw 3/9/09

12

Sample Number: L08120162-12
Client ID: MR08-SS079D-08D
Matrix: Soil
Workgroup Number: WG290599
Collect Date: 12/04/2008 11:25
Sample Tag: 02

PrePrep Method: NONE
Prep Method: 3051
Analytical Method: 6010B
Analyst: KHR
Dilution: 1
Units: mg/kg

Instrument: IRIS-ICP
Prep Date: 12/12/2008 10:50
Cal Date: 12/18/2008 11:38
Run Date: 12/18/2008 13:05
File ID: IR.121808.130500
Percent Solid: 81.2

Analyte	CAS. Number	Result	Qual	RL	MDL
Chromium, Total	7440-47-3	1.85 J		0.938	0.113

MSL

Microbac

452 lw 3/9/09

12

Sample Number: L08120162-12
Client ID: MR08-SS079D-08D
Matrix: Soil
Workgroup Number: WG290219
Collect Date: 12/04/2008 11:25
Sample Tag: 01

PrePrep Method: NONE
Prep Method: 3051
Analytical Method: 6020
Analyst: JYH
Dilution: 1
Units: mg/kg

Instrument: ELAN-ICP
Prep Date: 12/10/2008 06:58
Cal Date: 12/11/2008 10:44
Run Date: 12/11/2008 19:38
File ID: EL.121108.193816
Percent Solid: 81.2

Analyte	CAS. Number	Result	Qual	RL	MDL
Arsenic, Total	7440-38-2	0.175	J	0.366	0.0916
Lead, Total	7439-92-1	2.95		0.489	0.122
Selenium, Total	7782-49-2	0.325	J	0.489	0.122

J Estimated ; the analyte concentration was less than the low standard (LOQ)

Microbac

1619 MW 3/9/09

12

Sample Number:	L08120162-12	PrePrep Method:	NONE	Instrument:	HYDRA
Client ID:	MR08-SS079D-08D	Prep Method:	7471A	Prep Date:	12/10/2008 13:16
Matrix:	Soil	Analytical Method:	7471A	Cal Date:	12/11/2008 15:35
Workgroup Number:	WG290282	Analyst:	ADC	Run Date:	12/11/2008 17:43
Collect Date:	12/04/2008 11:25	Dilution:	1	File ID:	HY.121108.174333
Sample Tag:	01	Units:	mg/kg	Percent Solid:	81.2

Analyte	CAS. Number	Result	Qual	RL	MDL
Mercury, Total	7439-97-6		U	0.118	0.0236

U Undetected; the analyte was analyzed for, but not detected.

Microbac

2923 JLW 3/9/09

13

Sample Number: L08120162-13
Client ID: MR08-IS079-6-7-08D
Matrix: Soil
Workgroup Number: WG290599
Collect Date: 12/04/2008 11:45
Sample Tag: 01

PrePrep Method: NONE
Prep Method: 3051
Analytical Method: 6010B
Analyst: KHR
Dilution: 1
Units: mg/kg

Instrument: IRIS-ICP
Prep Date: 12/12/2008 10:50
Cal Date: 12/16/2008 10:51
Run Date: 12/16/2008 22:41
File ID: IR.121608.224100
Percent Solid: 92.1

Analyte	CAS. Number	Result	Qual	RL	MDL	
Barium, Total	7440-39-3	4.70 J		0.399	0.0798	MSH
Cadmium, Total	7440-43-9	UJ	~~J~~	0.160	0.0399	MSL
Copper, Total	7440-50-8		U	1.60	0.399	
Antimony, Total	7440-36-0		U	1.60	0.399	
Zinc, Total	7440-66-6	1.36 J	~~J~~	1.60	0.399	MSL

U Undetected; the analyte was analyzed for, but not detected.
J Estimated ; the analyte concentration was less than the low standard (LOQ)

Microbac

453 LW 3/9/09

13

Sample Number: L08120162-13
Client ID: MR08-IS079-6-7-08D
Matrix: Soil
Workgroup Number: WG290599
Collect Date: 12/04/2008 11:45
Sample Tag: 02

PrePrep Method: NONE
Prep Method: 3051
Analytical Method: 6010B
Analyst: KHR
Dilution: 1
Units: mg/kg

Instrument: IRIS-ICP
Prep Date: 12/12/2008 10:50
Cal Date: 12/18/2008 11:38
Run Date: 12/18/2008 13:35
File ID: IR.121808.133500
Percent Solid: 92.1

Analyte	CAS. Number	Result	Qual	RL	MDL
Silver, Total	7440-22-4		U	0.798	0.200
Chromium, Total	7440-47-3	3.22 J		0.798	0.0958

MSL

U Undetected; the analyte was analyzed for, but not detected.

Microbac

454 MW 3/9/09

13

Sample Number: L08120162-13
Client ID: MR08-IS079-6-7-08D
Matrix: Soil
Workgroup Number: WG290219
Collect Date: 12/04/2008 11:45
Sample Tag: 01

PrePrep Method: NONE
Prep Method: 3051
Analytical Method: 6020
Analyst: JYH
Dilution: 1
Units: mg/kg

Instrument: ELAN-ICP
Prep Date: 12/10/2008 06:58
Cal Date: 12/11/2008 10:44
Run Date: 12/11/2008 19:43
File ID: EL.121108.194339
Percent Solid: 92.1

Analyte	CAS. Number	Result	Qual	RL	MDL
Arsenic, Total	7440-38-2		U	0.307	0.0769
Lead, Total	7439-92-1	3.46		0.410	0.102
Selenium, Total	7782-49-2	0.645		0.410	0.102

U Undetected; the analyte was analyzed for, but not detected.

Microbac

1620 [illegible]
3/9/09

13

Sample Number: L08120162-13
Client ID: MR08-IS079-6-7-08D
Matrix: Soil
Workgroup Number: WG290282
Collect Date: 12/04/2008 11:45
Sample Tag: 01

PrePrep Method: NONE
Prep Method: 7471A
Analytical Method: 7471A
Analyst: ADC
Dilution: 1
Units: mg/kg

Instrument: HYDRA
Prep Date: 12/10/2008 13:17
Cal Date: 12/11/2008 15:35
Run Date: 12/11/2008 17:45
File ID: HY.121108.174518
Percent Solid: 92.1

Analyte	CAS. Number	Result	Qual	RL	MDL
Mercury, Total	7439-97-6		U	0.107	0.0213

U Undetected; the analyte was analyzed for, but not detected.

Microbac

2924 MW 3/9/09

14

Sample Number: L08120162-14
Client ID: MR08-IS079D-6-7-08D
Matrix: Soil
Workgroup Number: WG290599
Collect Date: 12/04/2008 11:55
Sample Tag: 02

PrePrep Method: NONE
Prep Method: 3051
Analytical Method: 6010B
Analyst: KHR
Dilution: 1
Units: mg/kg

Instrument: IRIS-ICP
Prep Date: 12/12/2008 10:50
Cal Date: 12/18/2008 11:38
Run Date: 12/18/2008 13:41
File ID: IR.121808.134100
Percent Solid: 87.2

Analyte	CAS. Number	Result	Qual	RL	MDL
Silver, Total	7440-22-4		U	0.862	0.215
Chromium, Total	7440-47-3	4.94 J		0.862	0.103

MSL

U Undetected; the analyte was analyzed for, but not detected.

Microbac

RW
2/9/09

14

Sample Number: L08120162-14
Client ID: MR08-IS079D-6-7-08D
Matrix: Soil
Workgroup Number: WG290599
Collect Date: 12/04/2008 11:55
Sample Tag: 01

PrePrep Method: NONE
Prep Method: 3051
Analytical Method: 6010B
Analyst: KHR
Dilution: 1
Units: mg/kg

Instrument: IRIS-ICP
Prep Date: 12/12/2008 10:50
Cal Date: 12/16/2008 10:51
Run Date: 12/16/2008 22:48
File ID: IR.121608.224800
Percent Solid: 87.2

Analyte	CAS. Number	Result	Qual	RL	MDL	
Barium, Total	7440-39-3	7.54 J		0.431	0.0862	MSH
Cadmium, Total	7440-43-9	UJ	~~J~~	0.172	0.0431	MSL
Copper, Total	7440-50-8	0.680	J	1.72	0.431	
Antimony, Total	7440-36-0		U	1.72	0.431	
Zinc, Total	7440-66-6	2.15 J		1.72	0.431	MSL

U Undetected; the analyte was analyzed for, but not detected.
J Estimated ; the analyte concentration was less than the low standard (LOQ)

Microbac

456 lw 3/9/09

14

Sample Number: L08120162-14
Client ID: MR08-IS079D-6-7-08D
Matrix: Soil
Workgroup Number: WG290219
Collect Date: 12/04/2008 11:55
Sample Tag: 01

PrePrep Method: NONE
Prep Method: 3051
Analytical Method: 6020
Analyst: JYH
Dilution: 1
Units: mg/kg

Instrument: ELAN-ICP
Prep Date: 12/10/2008 06:58
Cal Date: 12/11/2008 10:44
Run Date: 12/11/2008 19:49
File ID: EL.121108.194903
Percent Solid: 87.2

Analyte	CAS. Number	Result	Qual	RL	MDL
Arsenic, Total	7440-38-2	0.0846	J	0.335	0.0836
Lead, Total	7439-92-1	3.72		0.446	0.112
Selenium, Total	7782-49-2	0.389	J	0.446	0.112

J Estimated ; the analyte concentration was less than the low standard (LOQ)

Microbac

1621 MW
3/9/09

14

Sample Number: L08120162-14
Client ID: MR08-IS079D-6-7-08D
Matrix: Soil
Workgroup Number: WG290282
Collect Date: 12/04/2008 11:55
Sample Tag: 01

PrePrep Method: NONE
Prep Method: 7471A
Analytical Method: 7471A
Analyst: ADC
Dilution: 1
Units: mg/kg

Instrument: HYDRA
Prep Date: 12/10/2008 13:17
Cal Date: 12/11/2008 15:35
Run Date: 12/11/2008 17:47
File ID: HY.121108.174701
Percent Solid: 87.2

Analyte	CAS. Number	Result	Qual	RL	MDL
Mercury, Total	7439-97-6		U	0.111	0.0223

U Undetected; the analyte was analyzed for, but not detected.

Microbac

2925 MD 3/9/09

15

Sample Number: L08120162-15
Client ID: MR08-SS097-08D
Matrix: Soil
Workgroup Number: WG290599
Collect Date: 12/04/2008 13:40
Sample Tag: 01

PrePrep Method: NONE
Prep Method: 3051
Analytical Method: 6010B
Analyst: KHR
Dilution: 1
Units: mg/kg

Instrument: IRIS-ICP
Prep Date: 12/12/2008 10:50
Cal Date: 12/16/2008 10:51
Run Date: 12/16/2008 22:54
File ID: IR.121608.225400
Percent Solid: 86.1

Analyte	CAS. Number	Result	Qual	RL	MDL	
Barium, Total	7440-39-3	12.5 J		0.433	0.0866	MSH
Cadmium, Total	7440-43-9	0.410 J		0.173	0.0433	MSL
Copper, Total	7440-50-8	3.37		1.73	0.433	
Antimony, Total	7440-36-0	1.23	J	1.73	0.433	
Zinc, Total	7440-66-6	30.0 J		1.73	0.433	MSL

J Estimated ; the analyte concentration was less than the low standard (LOQ)

Microbac

lw 3/9/09

15

Sample Number: L08120162-15
Client ID: MR08-SS097-08D
Matrix: Soil
Workgroup Number: WG290599
Collect Date: 12/04/2008 13:40
Sample Tag: 02

PrePrep Method: NONE
Prep Method: 3051
Analytical Method: 6010B
Analyst: KHR
Dilution: 1
Units: mg/kg

Instrument: IRIS-ICP
Prep Date: 12/12/2008 10:50
Cal Date: 12/18/2008 11:38
Run Date: 12/18/2008 13:47
File ID: IR.121808.134700
Percent Solid: 86.1

Analyte	CAS. Number	Result	Qual	RL	MDL
Silver, Total	7440-22-4		U	0.866	0.216
Chromium, Total	7440-47-3	7.15 J		0.866	0.104

MSL

U Undetected; the analyte was analyzed for, but not detected.

Microbac

458 MW 3/9/09

15

Sample Number: L08120162-15
Client ID: MR08-SS097-08D
Matrix: Soil
Workgroup Number: WG290219
Collect Date: 12/04/2008 13:40
Sample Tag: DL01

PrePrep Method: NONE
Prep Method: 3051
Analytical Method: 6020
Analyst: JYH
Dilution: 10
Units: mg/kg

Instrument: ELAN-ICP
Prep Date: 12/10/2008 06:58
Cal Date: 12/12/2008 12:20
Run Date: 12/12/2008 13:43
File ID: EL.121208.134337
Percent Solid: 86.1

Analyte	CAS. Number	Result	Qual	RL	MDL
Lead, Total	7439-92-1	54.2		4.61	1.15

Microbac

1622 dlw 3/9/09

15

Sample Number: L08120162-15
Client ID: MR08-SS097-08D
Matrix: Soil
Workgroup Number: WG290219
Collect Date: 12/04/2008 13:40
Sample Tag: 01

PrePrep Method: NONE
Prep Method: 3051
Analytical Method: 6020
Analyst: JYH
Dilution: 1
Units: mg/kg

Instrument: ELAN-ICP
Prep Date: 12/10/2008 06:58
Cal Date: 12/11/2008 10:44
Run Date: 12/11/2008 20:05
File ID: EL.121108.200550
Percent Solid: 86.1

Analyte	CAS. Number	Result	Qual	RL	MDL
Arsenic, Total	7440-38-2	0.535		0.346	0.0864
Selenium, Total	7782-49-2	0.363	J	0.461	0.115

J Estimated ; the analyte concentration was less than the low standard (LOQ)

Microbac

1623 MW 3/9/09

15

Sample Number: L08120162-15
Client ID: MR08-SS097-08D
Matrix: Soil
Workgroup Number: WG290282
Collect Date: 12/04/2008 13:40
Sample Tag: 01

PrePrep Method: NONE
Prep Method: 7471A
Analytical Method: 7471A
Analyst: ADC
Dilution: 1
Units: mg/kg

Instrument: HYDRA
Prep Date: 12/10/2008 13:20
Cal Date: 12/11/2008 15:35
Run Date: 12/11/2008 17:48
File ID: HY.121108.174845
Percent Solid: 86.1

Analyte	CAS. Number	Result	Qual	RL	MDL
Mercury, Total	7439-97-6	0.0318	J	0.114	0.0227

J Estimated ; the analyte concentration was less than the low standard (LOQ)

Microbac

2926 MW 3/9/09

16

Sample Number: L08120162-16
Client ID: MR08-IS097-6-7-08D
Matrix: Soil
Workgroup Number: WG290599
Collect Date: 12/04/2008 13:50
Sample Tag: 02

PrePrep Method: NONE
Prep Method: 3051
Analytical Method: 6010B
Analyst: KHR
Dilution: 1
Units: mg/kg

Instrument: IRIS-ICP
Prep Date: 12/12/2008 10:50
Cal Date: 12/18/2008 11:38
Run Date: 12/18/2008 13:54
File ID: IR.121808.135400
Percent Solid: 83.0

Analyte	CAS. Number	Result	Qual	RL	MDL
Silver, Total	7440-22-4		U	0.832	0.208
Chromium, Total	7440-47-3	5.50 J		0.832	0.0999

MSL

U Undetected; the analyte was analyzed for, but not detected.

Microbac

459 lew 3/9/09

16

Sample Number: L08120162-16
Client ID: MR08-IS097-6-7-08D
Matrix: Soil
Workgroup Number: WG290599
Collect Date: 12/04/2008 13:50
Sample Tag: 01

PrePrep Method: NONE
Prep Method: 3051
Analytical Method: 6010B
Analyst: KHR
Dilution: 1
Units: mg/kg

Instrument: IRIS-ICP
Prep Date: 12/12/2008 10:50
Cal Date: 12/16/2008 10:51
Run Date: 12/16/2008 23:00
File ID: IR.121608.230000
Percent Solid: 83.0

Analyte	CAS. Number	Result	Qual	RL	MDL	
Barium, Total	7440-39-3	4.18 J		0.416	0.0832	MSH
Cadmium, Total	7440-43-9	UJ	~~U~~	0.166	0.0416	MSL
Copper, Total	7440-50-8		U	1.66	0.416	
Antimony, Total	7440-36-0	0.512	J	1.66	0.416	
Zinc, Total	7440-66-6	1.64 J	~~J~~	1.66	0.416	MSL

U Undetected; the analyte was analyzed for, but not detected.
J Estimated ; the analyte concentration was less than the low standard (LOQ)

Microbac

460 LW 3/9/09

16

Sample Number: L08120162-16
Client ID: MR08-IS097-6-7-08D
Matrix: Soil
Workgroup Number: WG290219
Collect Date: 12/04/2008 13:50
Sample Tag: 01

PrePrep Method: NONE
Prep Method: 3051
Analytical Method: 6020
Analyst: JYH
Dilution: 1
Units: mg/kg

Instrument: ELAN-ICP
Prep Date: 12/10/2008 06:58
Cal Date: 12/11/2008 10:44
Run Date: 12/11/2008 20:11
File ID: EL.121108.201115
Percent Solid: 83.0

Analyte	CAS. Number	Result	Qual	RL	MDL
Arsenic, Total	7440-38-2	0.492		0.343	0.0857
Lead, Total	7439-92-1	2.69		0.457	0.114
Selenium, Total	7782-49-2		U	0.457	0.114

U Undetected; the analyte was analyzed for, but not detected.

Microbac

1624 AW 3/9/09

16

Sample Number: L08120162-16
Client ID: MR08-IS097-6-7-08D
Matrix: Soil
Workgroup Number: WG290282
Collect Date: 12/04/2008 13:50
Sample Tag: 01

PrePrep Method: NONE
Prep Method: 7471A
Analytical Method: 7471A
Analyst: ADC
Dilution: 1
Units: mg/kg

Instrument: HYDRA
Prep Date: 12/10/2008 13:21
Cal Date: 12/11/2008 15:35
Run Date: 12/11/2008 17:54
File ID: HY.121108.175425
Percent Solid: 83.0

Analyte	CAS. Number	Result	Qual	RL	MDL
Mercury, Total	7439-97-6		U	0.116	0.0232

U Undetected; the analyte was analyzed for, but not detected.

Microbac

2927 MW 3/9/09

17

Sample Number: L08120162-17
Client ID: MR08-SS096-08D
Matrix: Soil
Workgroup Number: WG290599
Collect Date: 12/04/2008 14:05
Sample Tag: 02

PrePrep Method: NONE
Prep Method: 3051
Analytical Method: 6010B
Analyst: KHR
Dilution: 1
Units: mg/kg

Instrument: IRIS-ICP
Prep Date: 12/12/2008 10:50
Cal Date: 12/18/2008 11:38
Run Date: 12/18/2008 14:00
File ID: IR.121808.140000
Percent Solid: 70.7

Analyte	CAS. Number	Result	Qual	RL	MDL
Silver, Total	7440-22-4		U	1.07	0.266
Chromium, Total	7440-47-3	11.5 J		1.07	0.128

MSL

U Undetected; the analyte was analyzed for, but not detected.

Microbac

461 lw
3/9/09

17

Sample Number: L08120162-17
Client ID: MR08-SS096-08D
Matrix: Soil
Workgroup Number: WG290599
Collect Date: 12/04/2008 14:05
Sample Tag: 01

PrePrep Method: NONE
Prep Method: 3051
Analytical Method: 6010B
Analyst: KHR
Dilution: 1
Units: mg/kg

Instrument: IRIS-ICP
Prep Date: 12/12/2008 10:50
Cal Date: 12/16/2008 10:51
Run Date: 12/16/2008 23:06
File ID: IR.121608.230600
Percent Solid: 70.7

Analyte	CAS. Number	Result	Qual	RL	MDL	
Barium, Total	7440-39-3	32.9 J		0.533	0.107	MSH
Cadmium, Total	7440-43-9	0.889 J		0.213	0.0533	MSL
Copper, Total	7440-50-8	7.72		2.13	0.533	
Antimony, Total	7440-36-0	10.7		2.13	0.533	
Zinc, Total	7440-66-6	72.5 J		2.13	0.533	MSL

Microbac

462 MW 3/9/09

17

Sample Number: L08120162-17
Client ID: MR08-SS096-08D
Matrix: Soil
Workgroup Number: WG290219
Collect Date: 12/04/2008 14:05
Sample Tag: 01

PrePrep Method: NONE
Prep Method: 3051
Analytical Method: 6020
Analyst: JYH
Dilution: 1
Units: mg/kg

Instrument: ELAN-ICP
Prep Date: 12/10/2008 06:58
Cal Date: 12/11/2008 10:44
Run Date: 12/11/2008 20:16
File ID: EL.121108.201640
Percent Solid: 70.7

Analyte	CAS. Number	Result	Qual	RL	MDL
Arsenic, Total	7440-38-2	1.23		0.417	0.104
Selenium, Total	7782-49-2	0.735		0.556	0.139

Microbac

1625 AW 3/9/09

17

Sample Number: L08120162-17
Client ID: MR08-SS096-08D
Matrix: Soil
Workgroup Number: WG290219
Collect Date: 12/04/2008 14:05
Sample Tag: DL01

PrePrep Method: NONE
Prep Method: 3051
Analytical Method: 6020
Analyst: JYH
Dilution: 10
Units: mg/kg

Instrument: ELAN-ICP
Prep Date: 12/10/2008 06:58
Cal Date: 12/12/2008 12:20
Run Date: 12/12/2008 13:48
File ID: EL.121208.134859
Percent Solid: 70.7

Analyte	CAS. Number	Result	Qual	RL	MDL
Lead, Total	7439-92-1	122		5.56	1.39

Microbac

1626 LW 3/9/09

17

Sample Number: L08120162-17
Client ID: MR08-SS096-08D
Matrix: Soil
Workgroup Number: WG290282
Collect Date: 12/04/2008 14:05
Sample Tag: 01

PrePrep Method: NONE
Prep Method: 7471A
Analytical Method: 7471A
Analyst: ADC
Dilution: 1
Units: mg/kg

Instrument: HYDRA
Prep Date: 12/10/2008 13:21
Cal Date: 12/11/2008 15:35
Run Date: 12/11/2008 17:56
File ID: HY.121108.175609
Percent Solid: 70.7

Analyte	CAS. Number	Result	Qual	RL	MDL
Mercury, Total	7439-97-6	0.0688	J	0.135	0.0270

J Estimated ; the analyte concentration was less than the low standard (LOQ)

Microbac

2928 DW 3/9/09

18

Sample Number: L08120162-18
Client ID: MR08-IS096-6-7-08D
Matrix: Soil
Workgroup Number: WG290599
Collect Date: 12/04/2008 14:20
Sample Tag: 01

PrePrep Method: NONE
Prep Method: 3051
Analytical Method: 6010B
Analyst: KHR
Dilution: 1
Units: mg/kg

Instrument: IRIS-ICP
Prep Date: 12/12/2008 10:50
Cal Date: 12/16/2008 10:51
Run Date: 12/16/2008 23:12
File ID: IR.121608.231200
Percent Solid: 90.9

Analyte	CAS. Number	Result	Qual	RL	MDL	
Barium, Total	7440-39-3	2.61 J		0.414	0.0827	MSH
Cadmium, Total	7440-43-9	UJ	~~J~~	0.165	0.0414	MSL
Copper, Total	7440-50-8		U	1.65	0.414	
Antimony, Total	7440-36-0		U	1.65	0.414	
Zinc, Total	7440-66-6	1.37 J	~~J~~	1.65	0.414	MSL

U Undetected; the analyte was analyzed for, but not detected.
J Estimated ; the analyte concentration was less than the low standard (LOQ)

Microbac

463 MW 3/9/09

18

Sample Number: L08120162-18
Client ID: MR08-IS096-6-7-08D
Matrix: Soil
Workgroup Number: WG290599
Collect Date: 12/04/2008 14:20
Sample Tag: 02

PrePrep Method: NONE
Prep Method: 3051
Analytical Method: 6010B
Analyst: KHR
Dilution: 1
Units: mg/kg

Instrument: IRIS-ICP
Prep Date: 12/12/2008 10:50
Cal Date: 12/18/2008 11:38
Run Date: 12/18/2008 14:06
File ID: IR.121808.140600
Percent Solid: 90.9

Analyte	CAS. Number	Result	Qual	RL	MDL
Silver, Total	7440-22-4		U	0.827	0.207
Chromium, Total	7440-47-3	4.60 J		0.827	0.0992

MSL

U Undetected; the analyte was analyzed for, but not detected.

Microbac

464 QW 3/9/09

18

Sample Number: L08120162-18
Client ID: MR08-IS096-6-7-08D
Matrix: Soil
Workgroup Number: WG290288
Collect Date: 12/04/2008 14:20
Sample Tag: 01

PrePrep Method: NONE
Prep Method: 3051
Analytical Method: 6020
Analyst: JYH
Dilution: 1
Units: mg/kg

Instrument: ELAN-ICP
Prep Date: 12/10/2008 08:22
Cal Date: 12/11/2008 10:44
Run Date: 12/11/2008 22:41
File ID: EL.121108.224130
Percent Solid: 90.9

Analyte	CAS. Number	Result	Qual	RL	MDL
Arsenic, Total	7440-38-2		U	0.327	0.0818
Lead, Total	7439-92-1	1.86 J		0.436	0.109
Selenium, Total	7782-49-2		U	0.436	0.109

MSL

U Undetected; the analyte was analyzed for, but not detected.

Microbac

1627 lw
3/9/09

18

Sample Number: L08120162-18
Client ID: MR08-IS096-6-7-08D
Matrix: Soil
Workgroup Number: WG290282
Collect Date: 12/04/2008 14:20
Sample Tag: 01

PrePrep Method: NONE
Prep Method: 7471A
Analytical Method: 7471A
Analyst: ADC
Dilution: 1
Units: mg/kg

Instrument: HYDRA
Prep Date: 12/10/2008 13:22
Cal Date: 12/11/2008 15:35
Run Date: 12/11/2008 17:57
File ID: HY.121108.175700
Percent Solid: 90.9

Analyte	CAS. Number	Result	Qual	RL	MDL
Mercury, Total	7439-97-6		U	0.103	0.0207

U Undetected; the analyte was analyzed for, but not detected.

Microbac

2929 LW 3/9/09

19

Sample Number: L08120162-19
Client ID: MR08-IS095-08D
Matrix: Soil
Workgroup Number: WG290599
Collect Date: 12/04/2008 14:55
Sample Tag: 01

PrePrep Method: NONE
Prep Method: 3051
Analytical Method: 6010B
Analyst: KHR
Dilution: 1
Units: mg/kg

Instrument: IRIS-ICP
Prep Date: 12/12/2008 10:50
Cal Date: 12/16/2008 10:51
Run Date: 12/16/2008 23:18
File ID: IR.121608.231800
Percent Solid: 75.6

Analyte	CAS. Number	Result	Qual	RL	MDL	
Barium, Total	7440-39-3	14.1 J		0.502	0.100	MSH
Cadmium, Total	7440-43-9	3.01 J		0.201	0.0502	MSL
Copper, Total	7440-50-8	2.94		2.01	0.502	
Antimony, Total	7440-36-0	1.90	J	2.01	0.502	
Zinc, Total	7440-66-6	24.2 J		2.01	0.502	MSL

J Estimated ; the analyte concentration was less than the low standard (LOQ)

Microbac

465 MW 3/9/09

19

Sample Number: L08120162-19
Client ID: MR08-IS095-08D
Matrix: Soil
Workgroup Number: WG290599
Collect Date: 12/04/2008 14:55
Sample Tag: 02

PrePrep Method: NONE
Prep Method: 3051
Analytical Method: 6010B
Analyst: KHR
Dilution: 1
Units: mg/kg

Instrument: IRIS-ICP
Prep Date: 12/12/2008 10:50
Cal Date: 12/18/2008 11:38
Run Date: 12/18/2008 14:12
File ID: IR.121808.141200
Percent Solid: 75.6

Analyte	CAS. Number	Result	Qual	RL	MDL
Silver, Total	7440-22-4		U	1.00	0.251
Chromium, Total	7440-47-3	5.10 J		1.00	0.121

MSL

U Undetected; the analyte was analyzed for, but not detected.

Microbac

466 fwd 3/9/09

19

Sample Number: L08120162-19
Client ID: MR08-IS095-08D
Matrix: Soil
Workgroup Number: WG290288
Collect Date: 12/04/2008 14:55
Sample Tag: 01

PrePrep Method: NONE
Prep Method: 3051
Analytical Method: 6020
Analyst: JYH
Dilution: 1
Units: mg/kg

Instrument: ELAN-ICP
Prep Date: 12/10/2008 08:22
Cal Date: 12/11/2008 10:44
Run Date: 12/11/2008 22:58
File ID: EL.121108.225819
Percent Solid: 75.6

Analyte	CAS. Number	Result	Qual	RL	MDL
Arsenic, Total	7440-38-2	0.740		0.397	0.0992
Selenium, Total	7782-49-2	0.709		0.529	0.132

Microbac

1628 lew
3/9/09

19

Sample Number: L08120162-19
Client ID: MR08-IS095-08D
Matrix: Soil
Workgroup Number: WG290288
Collect Date: 12/04/2008 14:55
Sample Tag: DL01

PrePrep Method: NONE
Prep Method: 3051
Analytical Method: 6020
Analyst: JYH
Dilution: 10
Units: mg/kg

Instrument: ELAN-ICP
Prep Date: 12/10/2008 08:22
Cal Date: 12/12/2008 12:20
Run Date: 12/12/2008 14:23
File ID: EL.121208.142334
Percent Solid: 75.6

Analyte	CAS. Number	Result	Qual	RL	MDL
Lead, Total	7439-92-1	60.0 J		5.29	1.32

MSL

Microbac

1629 fw 3/9/09

19

Sample Number: L08120162-19
Client ID: MR08-IS095-08D
Matrix: Soil
Workgroup Number: WG290282
Collect Date: 12/04/2008 14:55
Sample Tag: 01

PrePrep Method: NONE
Prep Method: 7471A
Analytical Method: 7471A
Analyst: ADC
Dilution: 1
Units: mg/kg

Instrument: HYDRA
Prep Date: 12/10/2008 13:22
Cal Date: 12/11/2008 15:35
Run Date: 12/11/2008 17:59
File ID: HY.121108.175903
Percent Solid: 75.6

Analyte	CAS. Number	Result	Qual	RL	MDL
Mercury, Total	7439-97-6	0.0343	J	0.127	0.0254

J Estimated ; the analyte concentration was less than the low standard (LOQ)

Microbac

2930 RW 3/9/09

20

Sample Number: L08120162-20
Client ID: MR08-IS095-6-7-08D
Matrix: Soil
Workgroup Number: WG290599
Collect Date: 12/04/2008 14:45
Sample Tag: 02

PrePrep Method: NONE
Prep Method: 3051
Analytical Method: 6010B
Analyst: KHR
Dilution: 1
Units: mg/kg

Instrument: IRIS-ICP
Prep Date: 12/12/2008 10:50
Cal Date: 12/18/2008 11:38
Run Date: 12/18/2008 14:18
File ID: IR.121808.141800
Percent Solid: 88.1

Analyte	CAS. Number	Result	Qual	RL	MDL
Silver, Total	7440-22-4		U	0.802	0.200
Chromium, Total	7440-47-3	3.51 J		0.802	0.0962

MSL

U Undetected; the analyte was analyzed for, but not detected.

Microbac

467 MW 3/9/09

20

Sample Number: L08120162-20
Client ID: MR08-IS095-6-7-08D
Matrix: Soil
Workgroup Number: WG290599
Collect Date: 12/04/2008 14:45
Sample Tag: 01

PrePrep Method: NONE
Prep Method: 3051
Analytical Method: 6010B
Analyst: KHR
Dilution: 1
Units: mg/kg

Instrument: IRIS-ICP
Prep Date: 12/12/2008 10:50
Cal Date: 12/16/2008 10:51
Run Date: 12/16/2008 23:24
File ID: IR.121608.232400
Percent Solid: 88.1

Analyte	CAS. Number	Result	Qual	RL	MDL	
Barium, Total	7440-39-3	2.15 J		0.401	0.0802	MSH
Cadmium, Total	7440-43-9	U-J	~~U~~	0.160	0.0401	MSL
Copper, Total	7440-50-8	0.449	J	1.60	0.401	
Antimony, Total	7440-36-0		U	1.60	0.401	
Zinc, Total	7440-66-6	1.12 J	~~J~~	1.60	0.401	MSL

U Undetected; the analyte was analyzed for, but not detected.
J Estimated ; the analyte concentration was less than the low standard (LOQ)

Microbac

468 MW 3/9/09

20

Sample Number: L08120162-20
Client ID: MR08-IS095-6-7-08D
Matrix: Soil
Workgroup Number: WG290288
Collect Date: 12/04/2008 14:45
Sample Tag: 01

PrePrep Method: NONE
Prep Method: 3051
Analytical Method: 6020
Analyst: JYH
Dilution: 1
Units: mg/kg

Instrument: ELAN-ICP
Prep Date: 12/10/2008 08:22
Cal Date: 12/11/2008 10:44
Run Date: 12/11/2008 23:03
File ID: EL.121108.230344
Percent Solid: 88.1

Analyte	CAS. Number	Result	Qual	RL	MDL
Arsenic, Total	7440-38-2		U	0.324	0.0810
Lead, Total	7439-92-1	2.26 J		0.432	0.108
Selenium, Total	7782-49-2		U	0.432	0.108

MSL

U Undetected; the analyte was analyzed for, but not detected.

Microbac

1630 fw 3/9/09

20

Sample Number: L08120162-20
Client ID: MR08-IS095-6-7-08D
Matrix: Soil
Workgroup Number: WG290282
Collect Date: 12/04/2008 14:45
Sample Tag: 01

PrePrep Method: NONE
Prep Method: 7471A
Analytical Method: 7471A
Analyst: ADC
Dilution: 1
Units: mg/kg

Instrument: HYDRA
Prep Date: 12/10/2008 13:23
Cal Date: 12/11/2008 15:35
Run Date: 12/11/2008 18:00
File ID: HY.121108.180050
Percent Solid: 88.1

Analyte	CAS. Number	Result	Qual	RL	MDL
Mercury, Total	7439-97-6		U	0.114	0.0227

U Undetected; the analyte was analyzed for, but not detected.

Microbac

2931 MW 3/9/09

21

Sample Number: L08120162-21
Client ID: MR08-SS094-08D
Matrix: Soil
Workgroup Number: WG290599
Collect Date: 12/04/2008 15:05
Sample Tag: 01

PrePrep Method: NONE
Prep Method: 3051
Analytical Method: 6010B
Analyst: KHR
Dilution: 1
Units: mg/kg

Instrument: IRIS-ICP
Prep Date: 12/12/2008 10:50
Cal Date: 12/16/2008 10:51
Run Date: 12/16/2008 23:30
File ID: IR.121608.233000
Percent Solid: 78.4

Analyte	CAS. Number	Result	Qual	RL	MDL	
Barium, Total	7440-39-3	45.0 J		0.465	0.0929	MSH
Cadmium, Total	7440-43-9	1.11 J		0.186	0.0465	MSL
Copper, Total	7440-50-8	7.48		1.86	0.465	
Antimony, Total	7440-36-0	2.40		1.86	0.465	
Zinc, Total	7440-66-6	45.1 J		1.86	0.465	MSL

Microbac

469 MW 3/9/09

21

Sample Number: L08120162-21
Client ID: MR08-SS094-08D
Matrix: Soil
Workgroup Number: WG290599
Collect Date: 12/04/2008 15:05
Sample Tag: 02

PrePrep Method: NONE
Prep Method: 3051
Analytical Method: 6010B
Analyst: KHR
Dilution: 1
Units: mg/kg

Instrument: IRIS-ICP
Prep Date: 12/12/2008 10:50
Cal Date: 12/18/2008 11:38
Run Date: 12/18/2008 14:24
File ID: IR.121808.142400
Percent Solid: 78.4

Analyte	CAS. Number	Result	Qual	RL	MDL
Silver, Total	7440-22-4	0.360	J	0.929	0.232
Chromium, Total	7440-47-3	11.3 J		0.929	0.112

MSL

J Estimated ; the analyte concentration was less than the low standard (LOQ)

Microbac

470 MW 3/9/09

21

Sample Number: L08120162-21
Client ID: MR08-SS094-08D
Matrix: Soil
Workgroup Number: WG290288
Collect Date: 12/04/2008 15:05
Sample Tag: DL01

PrePrep Method: NONE
Prep Method: 3051
Analytical Method: 6020
Analyst: JYH
Dilution: 10
Units: mg/kg

Instrument: ELAN-ICP
Prep Date: 12/10/2008 08:22
Cal Date: 12/12/2008 12:20
Run Date: 12/12/2008 14:28
File ID: EL.121208.142856
Percent Solid: 78.4

Analyte	CAS. Number	Result	Qual	RL	MDL
Lead, Total	7439-92-1	105 J		4.95	1.24

MSL

Microbac

1631 fw 3/9/09

21

Sample Number: L08120162-21
Client ID: MR08-SS094-08D
Matrix: Soil
Workgroup Number: WG290288
Collect Date: 12/04/2008 15:05
Sample Tag: 01

PrePrep Method: NONE
Prep Method: 3051
Analytical Method: 6020
Analyst: JYH
Dilution: 1
Units: mg/kg

Instrument: ELAN-ICP
Prep Date: 12/10/2008 08:22
Cal Date: 12/11/2008 10:44
Run Date: 12/11/2008 23:09
File ID: EL.121108.230910
Percent Solid: 78.4

Analyte	CAS. Number	Result	Qual	RL	MDL
Arsenic, Total	7440-38-2	1.10		0.372	0.0929
Selenium, Total	7782-49-2	1.15		0.495	0.124

Microbac

1632 LW 3/9/09

21

Sample Number: L08120162-21
Client ID: MR08-SS094-08D
Matrix: Soil
Workgroup Number: WG290409
Collect Date: 12/04/2008 15:05
Sample Tag: 01

PrePrep Method: NONE
Prep Method: 7471A
Analytical Method: 7471A
Analyst: ADC
Dilution: 1
Units: mg/kg

Instrument: HYDRA
Prep Date: 12/11/2008 10:10
Cal Date: 12/12/2008 15:06
Run Date: 12/12/2008 16:15
File ID: HY.121208.161534
Percent Solid: 78.4

Analyte	CAS. Number	Result	Qual	RL	MDL
Mercury, Total	7439-97-6	0.0995	J	0.119	0.0239

J Estimated ; the analyte concentration was less than the low standard (LOQ)

Microbac

2932 lw 3/9/09

22

Sample Number: L08120162-22
Client ID: MR08-IS094-5-6-08D
Matrix: Soil
Workgroup Number: WG290599
Collect Date: 12/04/2008 15:15
Sample Tag: 02

PrePrep Method: NONE
Prep Method: 3051
Analytical Method: 6010B
Analyst: KHR
Dilution: 1
Units: mg/kg

Instrument: IRIS-ICP
Prep Date: 12/12/2008 10:50
Cal Date: 12/18/2008 11:38
Run Date: 12/18/2008 14:30
File ID: IR.121808.143000
Percent Solid: 92.8

Analyte	CAS. Number	Result	Qual	RL	MDL
Silver, Total	7440-22-4		U	0.811	0.203
Chromium, Total	7440-47-3	6.97 J		0.811	0.0973

MSL

U Undetected; the analyte was analyzed for, but not detected.

Microbac

471 lw 3/9/09

22

Sample Number: L08120162-22
Client ID: MR08-IS094-5-6-08D
Matrix: Soil
Workgroup Number: WG290599
Collect Date: 12/04/2008 15:15
Sample Tag: 01

PrePrep Method: NONE
Prep Method: 3051
Analytical Method: 6010B
Analyst: KHR
Dilution: 1
Units: mg/kg

Instrument: IRIS-ICP
Prep Date: 12/12/2008 10:50
Cal Date: 12/16/2008 10:51
Run Date: 12/16/2008 23:36
File ID: IR.121608.233600
Percent Solid: 92.8

Analyte	CAS. Number	Result	Qual	RL	MDL	
Barium, Total	7440-39-3	5.52 J		0.406	0.0811	MSH
Cadmium, Total	7440-43-9	UJ	~~U~~	0.162	0.0406	MSL
Copper, Total	7440-50-8		U	1.62	0.406	
Antimony, Total	7440-36-0		U	1.62	0.406	
Zinc, Total	7440-66-6	1.84 J		1.62	0.406	MSL

U Undetected; the analyte was analyzed for, but not detected.

Microbac

472 lw 3/9/09

22

Sample Number: L08120162-22
Client ID: MR08-IS094-5-6-08D
Matrix: Soil
Workgroup Number: WG290288
Collect Date: 12/04/2008 15:15
Sample Tag: 01

PrePrep Method: NONE
Prep Method: 3051
Analytical Method: 6020
Analyst: JYH
Dilution: 1
Units: mg/kg

Instrument: ELAN-ICP
Prep Date: 12/10/2008 08:22
Cal Date: 12/11/2008 10:44
Run Date: 12/11/2008 23:14
File ID: EL.121108.231435
Percent Solid: 92.8

Analyte	CAS. Number	Result	Qual	RL	MDL
Arsenic, Total	7440-38-2	0.141	J	0.320	0.0799
Lead, Total	7439-92-1	3.75 J		0.426	0.107 MSL
Selenium, Total	7782-49-2	0.343	J	0.426	0.107

J Estimated ; the analyte concentration was less than the low standard (LOQ)

Microbac

163 LW 3/9/09

22

Sample Number: L08120162-22
Client ID: MR08-IS094-5-6-08D
Matrix: Soil
Workgroup Number: WG290409
Collect Date: 12/04/2008 15:15
Sample Tag: 01

PrePrep Method: NONE
Prep Method: 7471A
Analytical Method: 7471A
Analyst: ADC
Dilution: 1
Units: mg/kg

Instrument: HYDRA
Prep Date: 12/11/2008 10:10
Cal Date: 12/12/2008 15:06
Run Date: 12/12/2008 16:19
File ID: HY.121208.161911
Percent Solid: 92.8

Analyte	CAS. Number	Result	Qual	RL	MDL
Mercury, Total	7439-97-6		U	0.104	0.0209

U Undetected; the analyte was analyzed for, but not detected.

Microbac

2933 MW 3/9/09

23

Sample Number: L08120162-23
Client ID: MR08-SS092-08D
Matrix: Soil
Workgroup Number: WG290599
Collect Date: 12/04/2008 15:30
Sample Tag: 01

PrePrep Method: NONE
Prep Method: 3051
Analytical Method: 6010B
Analyst: KHR
Dilution: 1
Units: mg/kg

Instrument: IRIS-ICP
Prep Date: 12/12/2008 10:50
Cal Date: 12/16/2008 10:51
Run Date: 12/16/2008 23:55
File ID: IR.121608.235500
Percent Solid: 85.8

Analyte	CAS. Number	Result	Qual	RL	MDL	
Barium, Total	7440-39-3	14.8 J		0.439	0.0878	MSH
Cadmium, Total	7440-43-9	0.616 J		0.176	0.0439	MSL
Copper, Total	7440-50-8	3.78		1.76	0.439	
Antimony, Total	7440-36-0	2.09		1.76	0.439	
Zinc, Total	7440-66-6	42.7 J		1.76	0.439	MSL

Microbac

473 MW 3/9/09

23

Sample Number: L08120162-23
Client ID: MR08-SS092-08D
Matrix: Soil
Workgroup Number: WG290599
Collect Date: 12/04/2008 15:30
Sample Tag: 02

PrePrep Method: NONE
Prep Method: 3051
Analytical Method: 6010B
Analyst: KHR
Dilution: 1
Units: mg/kg

Instrument: IRIS-ICP
Prep Date: 12/12/2008 10:50
Cal Date: 12/18/2008 11:38
Run Date: 12/18/2008 14:48
File ID: IR.121808.144800
Percent Solid: 85.8

Analyte	CAS. Number	Result	Qual	RL	MDL
Silver, Total	7440-22-4	0.330	J	0.878	0.220
Chromium, Total	7440-47-3	13.4 J		0.878	0.105

MSL

J Estimated ; the analyte concentration was less than the low standard (LOQ)

Microbac

3/9/09

23

Sample Number: L08120162-23
Client ID: MR08-SS092-08D
Matrix: Soil
Workgroup Number: WG290288
Collect Date: 12/04/2008 15:30
Sample Tag: 01

PrePrep Method: NONE
Prep Method: 3051
Analytical Method: 6020
Analyst: JYH
Dilution: 1
Units: mg/kg

Instrument: ELAN-ICP
Prep Date: 12/10/2008 08:22
Cal Date: 12/11/2008 10:44
Run Date: 12/11/2008 23:19
File ID: EL.121108.231958
Percent Solid: 85.8

Analyte	CAS. Number	Result	Qual	RL	MDL
Arsenic, Total	7440-38-2	1.16		0.344	0.0861
Selenium, Total	7782-49-2	0.606		0.459	0.115

Microbac

1634 QW 3/9/09

23

Sample Number: L08120162-23
Client ID: MR08-SS092-08D
Matrix: Soil
Workgroup Number: WG290288
Collect Date: 12/04/2008 15:30
Sample Tag: DL01

PrePrep Method: NONE
Prep Method: 3051
Analytical Method: 6020
Analyst: JYH
Dilution: 10
Units: mg/kg

Instrument: ELAN-ICP
Prep Date: 12/10/2008 08:22
Cal Date: 12/12/2008 12:20
Run Date: 12/12/2008 14:34
File ID: EL.121208.143417
Percent Solid: 85.8

Analyte	CAS. Number	Result	Qual	RL	MDL
Lead, Total	7439-92-1	108 J		4.59	1.15

MSL

Microbac

1635 lw 3/9/09

23

Sample Number: L08120162-23
Client ID: MR08-SS092-08D
Matrix: Soil
Workgroup Number: WG290409
Collect Date: 12/04/2008 15:30
Sample Tag: 01

PrePrep Method: NONE
Prep Method: 7471A
Analytical Method: 7471A
Analyst: ADC
Dilution: 1
Units: mg/kg

Instrument: HYDRA
Prep Date: 12/11/2008 10:10
Cal Date: 12/12/2008 15:06
Run Date: 12/12/2008 16:20
File ID: HY.121208.162054
Percent Solid: 85.8

Analyte	CAS. Number	Result	Qual	RL	MDL
Mercury, Total	7439-97-6	0.0409	J	0.114	0.0228

J Estimated ; the analyte concentration was less than the low standard (LOQ)

Microbac

2934 LW 3/9/09

24

Sample Number: L08120162-24
Client ID: MR08-IS092-4-5-08D
Matrix: Soil
Workgroup Number: WG290599
Collect Date: 12/04/2008 15:45
Sample Tag: 02

PrePrep Method: NONE
Prep Method: 3051
Analytical Method: 6010B
Analyst: KHR
Dilution: 1
Units: mg/kg

Instrument: IRIS-ICP
Prep Date: 12/12/2008 10:50
Cal Date: 12/18/2008 11:38
Run Date: 12/18/2008 14:54
File ID: IR.121808.145400
Percent Solid: 85.3

Analyte	CAS. Number	Result	Qual	RL	MDL
Silver, Total	7440-22-4		U	0.824	0.206
Chromium, Total	7440-47-3	7.10 J		0.824	0.0989

MSL

U Undetected; the analyte was analyzed for, but not detected.

Microbac

475 lw 3/9/09

24

Sample Number: L08120162-24
Client ID: MR08-IS092-4-5-08D
Matrix: Soil
Workgroup Number: WG290599
Collect Date: 12/04/2008 15:45
Sample Tag: 01

PrePrep Method: NONE
Prep Method: 3051
Analytical Method: 6010B
Analyst: KHR
Dilution: 1
Units: mg/kg

Instrument: IRIS-ICP
Prep Date: 12/12/2008 10:50
Cal Date: 12/16/2008 10:51
Run Date: 12/17/2008 00:01
File ID: IR.121708.000100
Percent Solid: 85.3

Analyte	CAS. Number	Result	Qual	RL	MDL	
Barium, Total	7440-39-3	5.56 J		0.412	0.0824	MSH
Cadmium, Total	7440-43-9	UJ	~~U~~	0.165	0.0412	MSL
Copper, Total	7440-50-8		U	1.65	0.412	
Antimony, Total	7440-36-0	0.418	J	1.65	0.412	
Zinc, Total	7440-66-6	2.83 J		1.65	0.412	MSL

U Undetected; the analyte was analyzed for, but not detected.
J Estimated ; the analyte concentration was less than the low standard (LOQ)

Microbac

476 lwd 3/9/09

24

Sample Number: L08120162-24
Client ID: MR08-IS092-4-5-08D
Matrix: Soil
Workgroup Number: WG290288
Collect Date: 12/04/2008 15:45
Sample Tag: 01

PrePrep Method: NONE
Prep Method: 3051
Analytical Method: 6020
Analyst: JYH
Dilution: 1
Units: mg/kg

Instrument: ELAN-ICP
Prep Date: 12/10/2008 08:22
Cal Date: 12/11/2008 10:44
Run Date: 12/11/2008 23:25
File ID: EL.121108.232521
Percent Solid: 85.3

Analyte	CAS. Number	Result	Qual	RL	MDL
Arsenic, Total	7440-38-2	0.157	J	0.338	0.0846
Lead, Total	7439-92-1	3.91 J		0.451	0.113
Selenium, Total	7782-49-2	0.314	J	0.451	0.113

MSL

J Estimated ; the analyte concentration was less than the low standard (LOQ)

Microbac

1636 AW 3/9/09

24

Sample Number: L08120162-24
Client ID: MR08-IS092-4-5-08D
Matrix: Soil
Workgroup Number: WG290409
Collect Date: 12/04/2008 15:45
Sample Tag: 01

PrePrep Method: NONE
Prep Method: 7471A
Analytical Method: 7471A
Analyst: ADC
Dilution: 1
Units: mg/kg

Instrument: HYDRA
Prep Date: 12/11/2008 10:10
Cal Date: 12/12/2008 15:06
Run Date: 12/12/2008 16:23
File ID: HY.121208.162312
Percent Solid: 85.3

Analyte	CAS. Number	Result	Qual	RL	MDL
Mercury, Total	7439-97-6		U	0.113	0.0227

U Undetected; the analyte was analyzed for, but not detected.

Microbac

2935 lew 3/9/09

25

Sample Number: L08120162-25
Client ID: MR08-EB01120408-SS
Matrix: Water
Workgroup Number: WG289955
Collect Date: 12/04/2008 12:50
Sample Tag: 01

PrePrep Method: NONE
Prep Method: 3005A
Analytical Method: 6010B
Analyst: ED
Dilution: 1
Units: ug/L

Instrument: PE-ICP2
Prep Date: 12/08/2008 09:27
Cal Date: 12/10/2008 10:15
Run Date: 12/10/2008 23:49
File ID: P2.121008.234958

Analyte	CAS. Number	Result	Qual	RL	MDL
Barium, Total	7440-39-3		U	10.0	2.50
Cadmium, Total	7440-43-9		U	1.00	0.250
Chromium, Total	7440-47-3		U	10.0	2.50
Copper, Total	7440-50-8		U	20.0	5.00
Silver, Total	7440-22-4		U	6.00	2.00
Zinc, Total	7440-66-6		U	20.0	5.00

U Undetected; the analyte was analyzed for, but not detected.

Microbac

477 lw 3/9/09

25

Sample Number: L08120162-25
Client ID: MR08-EB01120408-SS
Matrix: Water
Workgroup Number: WG289976
Collect Date: 12/04/2008 12:50
Sample Tag: 01

PrePrep Method: NONE
Prep Method: 3015
Analytical Method: 6020
Analyst: JYH
Dilution: 1
Units: ug/L

Instrument: ELAN-ICP
Prep Date: 12/08/2008 10:04
Cal Date: 12/17/2008 09:38
Run Date: 12/17/2008 13:53
File ID: EL.121708.135338

Analyte	CAS. Number	Result	Qual	RL	MDL
Arsenic, Total	7440-38-2		U	1.00	0.250
Lead, Total	7439-92-1		U	1.00	0.250
Antimony, Total	7440-36-0		U	1.00	0.250
Selenium, Total	7782-49-2		U	2.00	0.500

U Undetected; the analyte was analyzed for, but not detected.

Microbac

1637 RW 3/9/09

25

Sample Number: L08120162-25
Client ID: MR08-EB01120408-SS
Matrix: Water
Workgroup Number: WG290139
Collect Date: 12/04/2008 12:50
Sample Tag: 01

PrePrep Method: NONE
Prep Method: 7470A
Analytical Method: 7470A
Analyst: ADC
Dilution: 1
Units: ug/L

Instrument: HYDRA
Prep Date: 12/10/2008 09:36
Cal Date: 12/11/2008 13:19
Run Date: 12/11/2008 15:18
File ID: HY.121108.151811

Analyte	CAS. Number	Result	Qual	RL	MDL
Mercury	7439-97-6		U	0.400	0.100

U Undetected; the analyte was analyzed for, but not detected.

Microbac

 lw 3/9/09

26

Sample Number: L08120162-26
Client ID: MR08-EB01120408-IS
Matrix: Water
Workgroup Number: WG289955
Collect Date: 12/04/2008 13:30
Sample Tag: 01

PrePrep Method: NONE
Prep Method: 3005A
Analytical Method: 6010B
Analyst: ED
Dilution: 1
Units: ug/L

Instrument: PE-ICP2
Prep Date: 12/08/2008 09:27
Cal Date: 12/10/2008 10:15
Run Date: 12/10/2008 23:56
File ID: P2.121008.235613

Analyte	CAS. Number	Result	Qual	RL	MDL
Barium, Total	7440-39-3		U	10.0	2.50
Cadmium, Total	7440-43-9		U	1.00	0.250
Chromium, Total	7440-47-3		U	10.0	2.50
Copper, Total	7440-50-8		U	20.0	5.00
Silver, Total	7440-22-4		U	6.00	2.00
Zinc, Total	7440-66-6		U	20.0	5.00

U Undetected; the analyte was analyzed for, but not detected.

Microbac

3/9/09

26

Sample Number: L08120162-26
Client ID: MR08-EB01120408-IS
Matrix: Water
Workgroup Number: WG289976
Collect Date: 12/04/2008 13:30
Sample Tag: 01

PrePrep Method: NONE
Prep Method: 3015
Analytical Method: 6020
Analyst: JYH
Dilution: 1
Units: ug/L

Instrument: ELAN-ICP
Prep Date: 12/08/2008 10:04
Cal Date: 12/17/2008 09:38
Run Date: 12/17/2008 13:59
File ID: EL.121708.135910

Analyte	CAS. Number	Result	Qual	RL	MDL
Arsenic, Total	7440-38-2		U	1.00	0.250
Lead, Total	7439-92-1		U	1.00	0.250
Antimony, Total	7440-36-0		U	1.00	0.250
Selenium, Total	7782-49-2		U	2.00	0.500

U Undetected; the analyte was analyzed for, but not detected.

Microbac

1638 MW 3/9/09

26

Sample Number: L08120162-26
Client ID: MR08-EB01120408-IS
Matrix: Water
Workgroup Number: WG290139
Collect Date: 12/04/2008 13:30
Sample Tag: 01

PrePrep Method: NONE
Prep Method: 7470A
Analytical Method: 7470A
Analyst: ADC
Dilution: 1
Units: ug/L

Instrument: HYDRA
Prep Date: 12/10/2008 09:36
Cal Date: 12/11/2008 13:19
Run Date: 12/11/2008 15:20
File ID: HY.121108.152005

Analyte	CAS. Number	Result	Qual	RL	MDL
Mercury	7439-97-6		U	0.400	0.100

U Undetected; the analyte was analyzed for, but not detected.

Microbac

JW
3/9/09

ENVIRONMENTAL
Data Services, Inc.

EXPLOSIVES, PETN & NITROGLYCERIN

USEPA Region IV - Level IV Review

Site: MCB Camp Lejeune, TO-09 SDG #: L08120205

Client: CH2M HILL, Inc., Virginia Beach, Virginia Date: March 10, 2009

Laboratory: Microbac Laboratories, Inc., Marietta, Ohio Reviewer: Linda Sulkowski

EDS ID	Client Sample ID	Laboratory Sample ID	Matrix
1	MR08-SS091-08D	L08120205-01	Soil
2	MR08-IS091-2-3-08D	L08120205-02	Soil
3	MR08-SS093-08D	L08120205-03	Soil
4	MR08-IS093-2-3-08D	L08120205-04	Soil
5	MR08-SS103-08D	L08120205-05	Soil
6	MR08-IS103-3-4-08D	L08120205-06	Soil
7	MR08-SS116-08D	L08120205-07	Soil
8	MR08-IS116-3-4-08D	L08120205-08	Soil
9	MR08-SS117-08D	L08120205-09	Soil
10	MR08-IS117-2-3-08D	L08120205-10	Soil
11	MR08-SS125-08D	L08120205-11	Soil
12	MR08-IS125-4-5-08D	L08120205-12	Soil
13	MR08-SS123-08D	L08120205-13	Soil
14	MR08-IS123-6-7-08D	L08120205-14	Soil
15	MR08-EB01120508-SS	L08120205-15	Water
16	MR08-EB01120508-IS	L08120205-16	Water

The USEPA "Contract Laboratory Program National Functional Guidelines for Organic Data Review," October 1999, and professional judgement were used in evaluating the data in this summary report.

Holding Times - All samples were extracted within 7 days for water samples, 14 days for soil samples and analyzed within 40 days.

Initial Calibration - The initial calibrations exhibited acceptable %RSD and/or correlation coefficient values.

Calibration Verification - The continuing calibrations exhibited acceptable %D values except the following.

CCAL Date	Compound	%D	Qualifier	Affected Samples
12/16/08	2,4,6-Trinitrotoluene	23.3%	J/UJ	1-6
	Tetryl	22.9%	J/UJ	1-6
12/17/08	Tetryl	27.5%	J/UJ	7-14

Surrogates - All samples exhibited acceptable surrogate recoveries.

MS/MSD - A MS/MSD sample was not analyzed.

Laboratory Control Sample - The LCS samples exhibited acceptable %R values.

Method Blank - The method blanks were free of contamination.

Field and Equipment Blank - Field QC results are summarized below.

Blank ID	Compound	Conc. ug/L	Action Level ug/L	Qualifier	Affected Samples
MR08-EB01120508-SS	None - ND	-	-	-	-
MR08-EB01120508-IS	None - ND	-	-	-	-
MR08-FB01120608	None - ND	-	-	-	-

Field Duplicates - Field duplicate samples were not included in this data package.

Compound Identification - Retention times were acceptable and no further action was taken.

Compound Quantitation - No discrepancies were identified.

Report Number: L08120205

Report Date : January 8, 2009

Sample Number: L08120205-01
Client ID: MR08-SS091-08D
Matrix: Soil
Workgroup Number: WG290381
Collect Date: 12/05/2008 08:35
Sample Tag: 01

PrePrep Method: NONE
Prep Method: METHOD
Analytical Method: 8330MOD
Analyst: JWR
Dilution: 1
Units: mg/kg

Instrument: HPLC4
Prep Date: 12/11/2008 08:00
Cal Date: 12/16/2008 17:34
Run Date: 12/16/2008 21:23
File ID: 4L014652.F

Analyte	CAS. Number	Result	Qual	RL	MDL	
1,3,5-Trinitrobenzene	99-35-4		U	0.299	0.0995	
1,3-Dinitrobenzene	99-65-0		U	0.299	0.0995	
2,4,6-Trinitrotoluene	118-96-7	UJ	~~U~~	0.299	0.0995	CCH
2,4-Dinitrotoluene	121-14-2		U	0.299	0.0995	
2,6-Dinitrotoluene	606-20-2		U	0.299	0.0995	
2-Amino-4,6-dinitrotoluene	35572-78-2		U	0.299	0.0995	
2-Nitrotoluene	88-72-2		U	0.299	0.0995	
3-Nitrotoluene	99-08-1		U	0.299	0.0995	
4-Nitrotoluene	99-99-0		U	0.299	0.0995	
4-Amino-2,6-dinitrotoluene	19406-51-0		U	0.299	0.0995	
HMX	2691-41-0		U	0.299	0.0995	
Nitrobenzene	98-95-3		U	0.299	0.0995	
RDX	121-82-4		U	0.299	0.0995	
Tetryl	479-45-8	UJ	~~U~~	0.299	0.0995	CCH
Nitroglycerin	55-63-0		U	0.299	0.0995	

Surrogate	% Recovery	Lower	Upper	Qual
1,2-Dinitrobenzene	73.7	50	150	

U Undetected; the analyte was analyzed for, but not detected.

Microbac

14 MW 3/10/09

Sample Number: L08120205-01
Client ID: MR08-SS091-08D
Matrix: Soil
Workgroup Number: WG290381
Collect Date: 12/05/2008 08:35
Sample Tag: 02

PrePrep Method: NONE
Prep Method: METHOD
Analytical Method: 8330MOD
Analyst: ECL
Dilution: 1
Units: mg/kg

Instrument: HPLC5
Prep Date: 12/11/2008 08:00
Cal Date: 12/16/2008 16:51
Run Date: 12/24/2008 10:53
File ID: 5L003512.F

Analyte	CAS. Number	Result	Qual	RL	MDL
PETN	78-11-5		U	0.299	0.0995

U Undetected; the analyte was analyzed for, but not detected.

Microbac

15 LW 3/10/09

2

Sample Number: L08120205-02
Client ID: MR08-IS091-2-3-08D
Matrix: Soil
Workgroup Number: WG290381
Collect Date: 12/05/2008 08:45
Sample Tag: 01

PrePrep Method: NONE
Prep Method: METHOD
Analytical Method: 8330MOD
Analyst: JWR
Dilution: 1
Units: mg/kg

Instrument: HPLC4
Prep Date: 12/11/2008 08:00
Cal Date: 12/16/2008 17:34
Run Date: 12/16/2008 22:01
File ID: 4L014653.F

Analyte	CAS. Number	Result	Qual	RL	MDL	
1,3,5-Trinitrobenzene	99-35-4		U	0.298	0.0992	
1,3-Dinitrobenzene	99-65-0		U	0.298	0.0992	
2,4,6-Trinitrotoluene	118-96-7	UJ	~~U~~	0.298	0.0992	CCH
2,4-Dinitrotoluene	121-14-2		U	0.298	0.0992	
2,6-Dinitrotoluene	606-20-2		U	0.298	0.0992	
2-Amino-4,6-dinitrotoluene	35572-78-2		U	0.298	0.0992	
2-Nitrotoluene	88-72-2		U	0.298	0.0992	
3-Nitrotoluene	99-08-1		U	0.298	0.0992	
4-Nitrotoluene	99-99-0		U	0.298	0.0992	
4-Amino-2,6-dinitrotoluene	19406-51-0		U	0.298	0.0992	
HMX	2691-41-0		U	0.298	0.0992	
Nitrobenzene	98-95-3		U	0.298	0.0992	
RDX	121-82-4		U	0.298	0.0992	
Tetryl	479-45-8	UJ	~~U~~	0.298	0.0992	CCH
Nitroglycerin	55-63-0		U	0.298	0.0992	

Surrogate	% Recovery	Lower	Upper	Qual
1,2-Dinitrobenzene	72.4	50	150	

U Undetected; the analyte was analyzed for, but not detected.

Microbac

17 lw 3/10/09

2

Sample Number: L08120205-02
Client ID: MR08-IS091-2-3-08D
Matrix: Soil
Workgroup Number: WG290381
Collect Date: 12/05/2008 08:45
Sample Tag: 02

PrePrep Method: NONE
Prep Method: METHOD
Analytical Method: 8330MOD
Analyst: ECL
Dilution: 1
Units: mg/kg

Instrument: HPLC5
Prep Date: 12/11/2008 08:00
Cal Date: 12/16/2008 16:51
Run Date: 12/24/2008 11:06
File ID: 5L003513.F

Analyte	CAS. Number	Result	Qual	RL	MDL
PETN	78-11-5		U	0.298	0.0992

U Undetected; the analyte was analyzed for, but not detected.

Microbac

16 MW 3/10/09

3

Sample Number: L08120205-03
Client ID: MR08-SS093-08D
Matrix: Soil
Workgroup Number: WG290381
Collect Date: 12/05/2008 09:25
Sample Tag: 01

PrePrep Method: NONE
Prep Method: METHOD
Analytical Method: 8330MOD
Analyst: JWR
Dilution: 1
Units: mg/kg

Instrument: HPLC4
Prep Date: 12/11/2008 08:00
Cal Date: 12/16/2008 17:34
Run Date: 12/16/2008 22:39
File ID: 4L014654.F

Analyte	CAS. Number	Result	Qual	RL	MDL	
1,3,5-Trinitrobenzene	99-35-4		U	0.299	0.0998	
1,3-Dinitrobenzene	99-65-0		U	0.299	0.0998	
2,4,6-Trinitrotoluene	118-96-7	UJ	~~U~~	0.299	0.0998	CCH
2,4-Dinitrotoluene	121-14-2		U	0.299	0.0998	
2,6-Dinitrotoluene	606-20-2		U	0.299	0.0998	
2-Amino-4,6-dinitrotoluene	35572-78-2		U	0.299	0.0998	
2-Nitrotoluene	88-72-2		U	0.299	0.0998	
3-Nitrotoluene	99-08-1		U	0.299	0.0998	
4-Nitrotoluene	99-99-0		U	0.299	0.0998	
4-Amino-2,6-dinitrotoluene	19406-51-0		U	0.299	0.0998	
HMX	2691-41-0		U	0.299	0.0998	
Nitrobenzene	98-95-3		U	0.299	0.0998	
RDX	121-82-4		U	0.299	0.0998	
Tetryl	479-45-8	UJ	~~U~~	0.299	0.0998	CCH
Nitroglycerin	55-63-0		U	0.299	0.0998	

Surrogate	% Recovery	Lower	Upper	Qual
1,2-Dinitrobenzene	83.4	50	150	

U Undetected; the analyte was analyzed for, but not detected.

Microbac

 lw 3/10/09

3

Sample Number: L08120205-03
Client ID: MR08-SS093-08D
Matrix: Soil
Workgroup Number: WG290381
Collect Date: 12/05/2008 09:25
Sample Tag: 02

PrePrep Method: NONE
Prep Method: METHOD
Analytical Method: 8330MOD
Analyst: ECL
Dilution: 1
Units: mg/kg

Instrument: HPLC5
Prep Date: 12/11/2008 08:00
Cal Date: 12/16/2008 16:51
Run Date: 12/24/2008 11:19
File ID: 5L003514.F

Analyte	CAS. Number	Result	Qual	RL	MDL
PETN	78-11-5		U	0.299	0.0998

U Undetected; the analyte was analyzed for, but not detected.

Microbac

LW
3/10/09

4

Sample Number: L08120205-04
Client ID: MR08-IS093-2-3-08D
Matrix: Soil
Workgroup Number: WG290381
Collect Date: 12/05/2008 09:50
Sample Tag: 01

PrePrep Method: NONE
Prep Method: METHOD
Analytical Method: 8330MOD
Analyst: JWR
Dilution: 1
Units: mg/kg

Instrument: HPLC4
Prep Date: 12/11/2008 08:00
Cal Date: 12/16/2008 17:34
Run Date: 12/16/2008 23:17
File ID: 4L014655.F

Analyte	CAS. Number	Result	Qual	RL	MDL	
1,3,5-Trinitrobenzene	99-35-4		U	0.297	0.0991	
1,3-Dinitrobenzene	99-65-0		U	0.297	0.0991	
2,4,6-Trinitrotoluene	118-96-7	UJ	~~U~~	0.297	0.0991	CCH
2,4-Dinitrotoluene	121-14-2		U	0.297	0.0991	
2,6-Dinitrotoluene	606-20-2		U	0.297	0.0991	
2-Amino-4,6-dinitrotoluene	35572-78-2		U	0.297	0.0991	
2-Nitrotoluene	88-72-2		U	0.297	0.0991	
3-Nitrotoluene	99-08-1		U	0.297	0.0991	
4-Nitrotoluene	99-99-0		U	0.297	0.0991	
4-Amino-2,6-dinitrotoluene	19406-51-0		U	0.297	0.0991	
HMX	2691-41-0		U	0.297	0.0991	
Nitrobenzene	98-95-3		U	0.297	0.0991	
RDX	121-82-4		U	0.297	0.0991	
Tetryl	479-45-8	UJ	~~U~~	0.297	0.0991	CCH
Nitroglycerin	55-63-0		U	0.297	0.0991	

Surrogate	% Recovery	Lower	Upper	Qual
1,2-Dinitrobenzene	77.8	50	150	

U Undetected; the analyte was analyzed for, but not detected.

Microbac

21 lw 3/10/09

4

Sample Number: L08120205-04
Client ID: MR08-IS093-2-3-08D
Matrix: Soil
Workgroup Number: WG290381
Collect Date: 12/05/2008 09:50
Sample Tag: 02

PrePrep Method: NONE
Prep Method: METHOD
Analytical Method: 8330MOD
Analyst: ECL
Dilution: 1
Units: mg/kg

Instrument: HPLC5
Prep Date: 12/11/2008 08:00
Cal Date: 12/16/2008 16:51
Run Date: 12/24/2008 11:32
File ID: 5L003515.F

Analyte	CAS. Number	Result	Qual	RL	MDL
PETN	78-11-5		U	0.297	0.0991

U Undetected; the analyte was analyzed for, but not detected.

Microbac

20 lw 3/10/09

5

Sample Number: L08120205-05
Client ID: MR08-SS103-08D
Matrix: Soil
Workgroup Number: WG290381
Collect Date: 12/05/2008 10:10
Sample Tag: 01

PrePrep Method: NONE
Prep Method: METHOD
Analytical Method: 8330MOD
Analyst: JWR
Dilution: 1
Units: mg/kg

Instrument: HPLC4
Prep Date: 12/11/2008 08:00
Cal Date: 12/16/2008 17:34
Run Date: 12/16/2008 23:55
File ID: 4L014656.F

Analyte	CAS. Number	Result	Qual	RL	MDL	
1,3,5-Trinitrobenzene	99-35-4		U	0.299	0.0997	
1,3-Dinitrobenzene	99-65-0		U	0.299	0.0997	
2,4,6-Trinitrotoluene	118-96-7	UJ	~~U~~	0.299	0.0997	CCH
2,4-Dinitrotoluene	121-14-2		U	0.299	0.0997	
2,6-Dinitrotoluene	606-20-2		U	0.299	0.0997	
2-Amino-4,6-dinitrotoluene	35572-78-2		U	0.299	0.0997	
2-Nitrotoluene	88-72-2		U	0.299	0.0997	
3-Nitrotoluene	99-08-1		U	0.299	0.0997	
4-Nitrotoluene	99-99-0		U	0.299	0.0997	
4-Amino-2,6-dinitrotoluene	19406-51-0		U	0.299	0.0997	
HMX	2691-41-0		U	0.299	0.0997	
Nitrobenzene	98-95-3		U	0.299	0.0997	
RDX	121-82-4		U	0.299	0.0997	
Tetryl	479-45-8	UJ	~~U~~	0.299	0.0997	CCH
Nitroglycerin	55-63-0		U	0.299	0.0997	

Surrogate	% Recovery	Lower	Upper	Qual
1,2-Dinitrobenzene	75.1	50	150	

U Undetected; the analyte was analyzed for, but not detected.

Microbac

22 MW 3/10/09

5

Sample Number: L08120205-05
Client ID: MR08-SS103-08D
Matrix: Soil
Workgroup Number: WG290381
Collect Date: 12/05/2008 10:10
Sample Tag: 02

PrePrep Method: NONE
Prep Method: METHOD
Analytical Method: 8330MOD
Analyst: ECL
Dilution: 1
Units: mg/kg

Instrument: HPLC5
Prep Date: 12/11/2008 08:00
Cal Date: 12/16/2008 16:51
Run Date: 12/24/2008 11:46
File ID: 5L003516.F

Analyte	CAS. Number	Result	Qual	RL	MDL
PETN	78-11-5		U	0.299	0.0997

U Undetected; the analyte was analyzed for, but not detected.

Microbac

23 LW 3/10/09

6

Sample Number: L08120205-06
Client ID: MR08-IS103-3-4-08D
Matrix: Soil
Workgroup Number: WG290381
Collect Date: 12/05/2008 10:30
Sample Tag: 01

PrePrep Method: NONE
Prep Method: METHOD
Analytical Method: 8330MOD
Analyst: JWR
Dilution: 1
Units: mg/kg

Instrument: HPLC4
Prep Date: 12/11/2008 08:00
Cal Date: 12/16/2008 17:34
Run Date: 12/17/2008 00:33
File ID: 4L014657.F

Analyte	CAS. Number	Result	Qual	RL	MDL	
1,3,5-Trinitrobenzene	99-35-4		U	0.293	0.0978	
1,3-Dinitrobenzene	99-65-0		U	0.293	0.0978	
2,4,6-Trinitrotoluene	118-96-7	UJ	~~U~~	0.293	0.0978	CCH
2,4-Dinitrotoluene	121-14-2		U	0.293	0.0978	
2,6-Dinitrotoluene	606-20-2		U	0.293	0.0978	
2-Amino-4,6-dinitrotoluene	35572-78-2		U	0.293	0.0978	
2-Nitrotoluene	88-72-2		U	0.293	0.0978	
3-Nitrotoluene	99-08-1		U	0.293	0.0978	
4-Nitrotoluene	99-99-0		U	0.293	0.0978	
4-Amino-2,6-dinitrotoluene	19406-51-0		U	0.293	0.0978	
HMX	2691-41-0		U	0.293	0.0978	
Nitrobenzene	98-95-3		U	0.293	0.0978	
RDX	121-82-4		U	0.293	0.0978	
Tetryl	479-45-8	UJ	~~U~~	0.293	0.0978	CCH
Nitroglycerin	55-63-0		U	0.293	0.0978	

Surrogate	% Recovery	Lower	Upper	Qual
1,2-Dinitrobenzene	84.7	50	150	

U Undetected; the analyte was analyzed for, but not detected.

Microbac

 QW 3/10/09

6

Sample Number: L08120205-06
Client ID: MR08-IS103-3-4-08D
Matrix: Soil
Workgroup Number: WG290381
Collect Date: 12/05/2008 10:30
Sample Tag: 02

PrePrep Method: NONE
Prep Method: METHOD
Analytical Method: 8330MOD
Analyst: ECL
Dilution: 1
Units: mg/kg

Instrument: HPLC5
Prep Date: 12/11/2008 08:00
Cal Date: 12/16/2008 16:51
Run Date: 12/24/2008 11:59
File ID: 5L003517.F

Analyte	CAS. Number	Result	Qual	RL	MDL
PETN	78-11-5		U	0.293	0.0978

U Undetected; the analyte was analyzed for, but not detected.

Microbac

MW 3/10/09

7

Sample Number: L08120205-07
Client ID: MR08-SS116-08D
Matrix: Soil
Workgroup Number: WG290381
Collect Date: 12/05/2008 11:00
Sample Tag: 01

PrePrep Method: NONE
Prep Method: METHOD
Analytical Method: 8330MOD
Analyst: JWR
Dilution: 1
Units: mg/kg

Instrument: HPLC4
Prep Date: 12/11/2008 08:00
Cal Date: 12/16/2008 17:34
Run Date: 12/17/2008 02:28
File ID: 4L014660.F

Analyte	CAS. Number	Result	Qual	RL	MDL
1,3,5-Trinitrobenzene	99-35-4		U	0.300	0.100
1,3-Dinitrobenzene	99-65-0		U	0.300	0.100
2,4,6-Trinitrotoluene	118-96-7		U	0.300	0.100
2,4-Dinitrotoluene	121-14-2		U	0.300	0.100
2,6-Dinitrotoluene	606-20-2		U	0.300	0.100
2-Amino-4,6-dinitrotoluene	35572-78-2		U	0.300	0.100
2-Nitrotoluene	88-72-2		U	0.300	0.100
3-Nitrotoluene	99-08-1		U	0.300	0.100
4-Nitrotoluene	99-99-0		U	0.300	0.100
4-Amino-2,6-dinitrotoluene	19406-51-0		U	0.300	0.100
HMX	2691-41-0		U	0.300	0.100
Nitrobenzene	98-95-3		U	0.300	0.100
RDX	121-82-4		U	0.300	0.100
Tetryl	479-45-8	UJ	~~Q~~	0.300	0.100
Nitroglycerin	55-63-0		U	0.300	0.100

Surrogate	% Recovery	Lower	Upper	Qual
1,2-Dinitrobenzene	76.8	50	150	

CCH

U Undetected; the analyte was analyzed for, but not detected.
Q One or more quality control criteria failed. See narrative.

Microbac

MW
3/10/09

7

Sample Number: L08120205-07
Client ID: MR08-SS116-08D
Matrix: Soil
Workgroup Number: WG290381
Collect Date: 12/05/2008 11:00
Sample Tag: 02

PrePrep Method: NONE
Prep Method: METHOD
Analytical Method: 8330MOD
Analyst: ECL
Dilution: 1
Units: mg/kg

Instrument: HPLC5
Prep Date: 12/11/2008 08:00
Cal Date: 12/16/2008 16:51
Run Date: 12/24/2008 12:12
File ID: 5L003518.F

Analyte	CAS. Number	Result	Qual	RL	MDL
PETN	78-11-5		U	0.300	0.100

U Undetected; the analyte was analyzed for, but not detected.

Microbac

27 AW
3/10/09

8

Sample Number: L08120205-08
Client ID: MR08-IS116-3-4-08D
Matrix: Soil
Workgroup Number: WG290381
Collect Date: 12/05/2008 11:15
Sample Tag: 01

PrePrep Method: NONE
Prep Method: METHOD
Analytical Method: 8330MOD
Analyst: JWR
Dilution: 1
Units: mg/kg

Instrument: HPLC4
Prep Date: 12/11/2008 08:00
Cal Date: 12/16/2008 17:34
Run Date: 12/17/2008 03:06
File ID: 4L014661.F

Analyte	CAS. Number	Result	Qual	RL	MDL
1,3,5-Trinitrobenzene	99-35-4		U	0.300	0.0999
1,3-Dinitrobenzene	99-65-0		U	0.300	0.0999
2,4,6-Trinitrotoluene	118-96-7		U	0.300	0.0999
2,4-Dinitrotoluene	121-14-2		U	0.300	0.0999
2,6-Dinitrotoluene	606-20-2		U	0.300	0.0999
2-Amino-4,6-dinitrotoluene	35572-78-2		U	0.300	0.0999
2-Nitrotoluene	88-72-2		U	0.300	0.0999
3-Nitrotoluene	99-08-1		U	0.300	0.0999
4-Nitrotoluene	99-99-0		U	0.300	0.0999
4-Amino-2,6-dinitrotoluene	19406-51-0		U	0.300	0.0999
HMX	2691-41-0		U	0.300	0.0999
Nitrobenzene	98-95-3		U	0.300	0.0999
RDX	121-82-4		U	0.300	0.0999
Tetryl	479-45-8	US	~~Q~~	0.300	0.0999
Nitroglycerin	55-63-0		U	0.300	0.0999

CCH

Surrogate	% Recovery	Lower	Upper	Qual
1,2-Dinitrobenzene	80.1	50	150	

U Undetected; the analyte was analyzed for, but not detected.
Q One or more quality control criteria failed. See narrative.

Microbac

29 MW 5/10/09

8

Sample Number: L08120205-08
Client ID: MR08-IS116-3-4-08D
Matrix: Soil
Workgroup Number: WG290381
Collect Date: 12/05/2008 11:15
Sample Tag: 02

PrePrep Method: NONE
Prep Method: METHOD
Analytical Method: 8330MOD
Analyst: ECL
Dilution: 1
Units: mg/kg

Instrument: HPLC5
Prep Date: 12/11/2008 08:00
Cal Date: 12/16/2008 16:51
Run Date: 12/24/2008 12:51
File ID: 5L003521.F

Analyte	CAS. Number	Result	Qual	RL	MDL
PETN	78-11-5		U	0.300	0.0999

U Undetected; the analyte was analyzed for, but not detected.

Microbac

lles
3/10/09

9

Sample Number: L08120205-09
Client ID: MR08-SS117-08D
Matrix: Soil
Workgroup Number: WG290381
Collect Date: 12/05/2008 13:00
Sample Tag: 01

PrePrep Method: NONE
Prep Method: METHOD
Analytical Method: 8330MOD
Analyst: JWR
Dilution: 1
Units: mg/kg

Instrument: HPLC4
Prep Date: 12/11/2008 08:00
Cal Date: 12/16/2008 17:34
Run Date: 12/17/2008 03:44
File ID: 4L014662.F

Analyte	CAS. Number	Result	Qual	RL	MDL
1,3,5-Trinitrobenzene	99-35-4		U	0.298	0.0994
1,3-Dinitrobenzene	99-65-0		U	0.298	0.0994
2,4,6-Trinitrotoluene	118-96-7		U	0.298	0.0994
2,4-Dinitrotoluene	121-14-2		U	0.298	0.0994
2,6-Dinitrotoluene	606-20-2		U	0.298	0.0994
2-Amino-4,6-dinitrotoluene	35572-78-2		U	0.298	0.0994
2-Nitrotoluene	88-72-2		U	0.298	0.0994
3-Nitrotoluene	99-08-1		U	0.298	0.0994
4-Nitrotoluene	99-99-0		U	0.298	0.0994
4-Amino-2,6-dinitrotoluene	19406-51-0		U	0.298	0.0994
HMX	2691-41-0		U	0.298	0.0994
Nitrobenzene	98-95-3		U	0.298	0.0994
RDX	121-82-4		U	0.298	0.0994
Tetryl	479-45-8	US	~~Q~~	0.298	0.0994
Nitroglycerin	55-63-0		U	0.298	0.0994

CCH

Surrogate	% Recovery	Lower	Upper	Qual
1,2-Dinitrobenzene	80.6	50	150	

U Undetected; the analyte was analyzed for, but not detected.
Q One or more quality control criteria failed. See narrative.

Microbac

31 HW
3/10/09

9

Sample Number: L08120205-09
Client ID: MR08-SS117-08D
Matrix: Soil
Workgroup Number: WG290381
Collect Date: 12/05/2008 13:00
Sample Tag: 02

PrePrep Method: NONE
Prep Method: METHOD
Analytical Method: 8330MOD
Analyst: ECL
Dilution: 1
Units: mg/kg

Instrument: HPLC5
Prep Date: 12/11/2008 08:00
Cal Date: 12/16/2008 16:51
Run Date: 12/24/2008 13:04
File ID: 5L003522.F

Analyte	CAS. Number	Result	Qual	RL	MDL
PETN	78-11-5		U	0.298	0.0994

U Undetected; the analyte was analyzed for, but not detected.

Microbac

aw
3/10/09

10

Sample Number: L08120205-10
Client ID: MR08-IS117-2-3-08D
Matrix: Soil
Workgroup Number: WG290381
Collect Date: 12/05/2008 13:20
Sample Tag: 01

PrePrep Method: NONE
Prep Method: METHOD
Analytical Method: 8330MOD
Analyst: JWR
Dilution: 1
Units: mg/kg

Instrument: HPLC4
Prep Date: 12/11/2008 08:00
Cal Date: 12/16/2008 17:34
Run Date: 12/17/2008 04:22
File ID: 4L014663.F

Analyte	CAS. Number	Result	Qual	RL	MDL
1,3,5-Trinitrobenzene	99-35-4		U	0.299	0.0998
1,3-Dinitrobenzene	99-65-0		U	0.299	0.0998
2,4,6-Trinitrotoluene	118-96-7		U	0.299	0.0998
2,4-Dinitrotoluene	121-14-2		U	0.299	0.0998
2,6-Dinitrotoluene	606-20-2		U	0.299	0.0998
2-Amino-4,6-dinitrotoluene	35572-78-2		U	0.299	0.0998
2-Nitrotoluene	88-72-2		U	0.299	0.0998
3-Nitrotoluene	99-08-1		U	0.299	0.0998
4-Nitrotoluene	99-99-0		U	0.299	0.0998
4-Amino-2,6-dinitrotoluene	19406-51-0		U	0.299	0.0998
HMX	2691-41-0		U	0.299	0.0998
Nitrobenzene	98-95-3		U	0.299	0.0998
RDX	121-82-4		U	0.299	0.0998
Tetryl	479-45-8	UJ	~~Q~~	0.299	0.0998
Nitroglycerin	55-63-0		U	0.299	0.0998

CCH

Surrogate	% Recovery	Lower	Upper	Qual
1,2-Dinitrobenzene	88.5	50	150	

U Undetected; the analyte was analyzed for, but not detected.
Q One or more quality control criteria failed. See narrative.

Microbac

32 LW 3/10/09

10

Sample Number: L08120205-10
Client ID: MR08-IS117-2-3-08D
Matrix: Soil
Workgroup Number: WG290381
Collect Date: 12/05/2008 13:20
Sample Tag: 02

PrePrep Method: NONE
Prep Method: METHOD
Analytical Method: 8330MOD
Analyst: ECL
Dilution: 1
Units: mg/kg

Instrument: HPLC5
Prep Date: 12/11/2008 08:00
Cal Date: 12/16/2008 16:51
Run Date: 12/24/2008 13:18
File ID: 5L003523.F

Analyte	CAS. Number	Result	Qual	RL	MDL
PETN	78-11-5		U	0.299	0.0998

U Undetected; the analyte was analyzed for, but not detected.

Microbac

33 MW 3/10/09

11

Sample Number: L08120205-11
Client ID: MR08-SS125-08D
Matrix: Soil
Workgroup Number: WG290381
Collect Date: 12/05/2008 13:35
Sample Tag: 01

PrePrep Method: NONE
Prep Method: METHOD
Analytical Method: 8330MOD
Analyst: JWR
Dilution: 1
Units: mg/kg

Instrument: HPLC4
Prep Date: 12/11/2008 08:00
Cal Date: 12/16/2008 17:34
Run Date: 12/17/2008 05:00
File ID: 4L014664.F

Analyte	CAS. Number	Result	Qual	RL	MDL
1,3,5-Trinitrobenzene	99-35-4		U	0.296	0.0987
1,3-Dinitrobenzene	99-65-0		U	0.296	0.0987
2,4,6-Trinitrotoluene	118-96-7		U	0.296	0.0987
2,4-Dinitrotoluene	121-14-2		U	0.296	0.0987
2,6-Dinitrotoluene	606-20-2		U	0.296	0.0987
2-Amino-4,6-dinitrotoluene	35572-78-2		U	0.296	0.0987
2-Nitrotoluene	88-72-2		U	0.296	0.0987
3-Nitrotoluene	99-08-1		U	0.296	0.0987
4-Nitrotoluene	99-99-0		U	0.296	0.0987
4-Amino-2,6-dinitrotoluene	19406-51-0		U	0.296	0.0987
HMX	2691-41-0		U	0.296	0.0987
Nitrobenzene	98-95-3		U	0.296	0.0987
RDX	121-82-4		U	0.296	0.0987
Tetryl	479-45-8	UJ	~~Q~~	0.296	0.0987
Nitroglycerin	55-63-0		U	0.296	0.0987

CCH

Surrogate	% Recovery	Lower	Upper	Qual
1,2-Dinitrobenzene	81.5	50	150	

U Undetected; the analyte was analyzed for, but not detected.
Q One or more quality control criteria failed. See narrative.

Microbac

DLW 3/10/09

11

Sample Number: L08120205-11
Client ID: MR08-SS125-08D
Matrix: Soil
Workgroup Number: WG290381
Collect Date: 12/05/2008 13:35
Sample Tag: 02

PrePrep Method: NONE
Prep Method: METHOD
Analytical Method: 8330MOD
Analyst: ECL
Dilution: 1
Units: mg/kg

Instrument: HPLC5
Prep Date: 12/11/2008 08:00
Cal Date: 12/16/2008 16:51
Run Date: 12/24/2008 13:31
File ID: 5L003524.F

Analyte	CAS. Number	Result	Qual	RL	MDL
PETN	78-11-5		U	0.296	0.0987

U Undetected; the analyte was analyzed for, but not detected.

Microbac

 MW 3/10/09

12

Sample Number: L08120205-12
Client ID: MR08-IS125-4-5-08D
Matrix: Soil
Workgroup Number: WG290381
Collect Date: 12/05/2008 13:50
Sample Tag: 01

PrePrep Method: NONE
Prep Method: METHOD
Analytical Method: 8330MOD
Analyst: JWR
Dilution: 1
Units: mg/kg

Instrument: HPLC4
Prep Date: 12/11/2008 08:00
Cal Date: 12/16/2008 17:34
Run Date: 12/17/2008 05:38
File ID: 4L014665.F

Analyte	CAS. Number	Result	Qual	RL	MDL
1,3,5-Trinitrobenzene	99-35-4		U	0.296	0.0988
1,3-Dinitrobenzene	99-65-0		U	0.296	0.0988
2,4,6-Trinitrotoluene	118-96-7		U	0.296	0.0988
2,4-Dinitrotoluene	121-14-2		U	0.296	0.0988
2,6-Dinitrotoluene	606-20-2		U	0.296	0.0988
2-Amino-4,6-dinitrotoluene	35572-78-2		U	0.296	0.0988
2-Nitrotoluene	88-72-2		U	0.296	0.0988
3-Nitrotoluene	99-08-1		U	0.296	0.0988
4-Nitrotoluene	99-99-0		U	0.296	0.0988
4-Amino-2,6-dinitrotoluene	19406-51-0		U	0.296	0.0988
HMX	2691-41-0		U	0.296	0.0988
Nitrobenzene	98-95-3		U	0.296	0.0988
RDX	121-82-4		U	0.296	0.0988
Tetryl	479-45-8	UJ	~~U~~	0.296	0.0988
Nitroglycerin	55-63-0		U	0.296	0.0988

CCil

Surrogate	% Recovery	Lower	Upper	Qual
1,2-Dinitrobenzene	80.2	50	150	

U Undetected; the analyte was analyzed for, but not detected.

Microbac

37 MW 3/10/09

12

Sample Number: L08120205-12
Client ID: MR08-IS125-4-5-08D
Matrix: Soil
Workgroup Number: WG290381
Collect Date: 12/05/2008 13:50
Sample Tag: 02

PrePrep Method: NONE
Prep Method: METHOD
Analytical Method: 8330MOD
Analyst: ECL
Dilution: 1
Units: mg/kg

Instrument: HPLC5
Prep Date: 12/11/2008 08:00
Cal Date: 12/16/2008 16:51
Run Date: 12/24/2008 13:44
File ID: 5L003525.F

Analyte	CAS. Number	Result	Qual	RL	MDL
PETN	78-11-5		U	0.296	0.0988

U Undetected; the analyte was analyzed for, but not detected.

Microbac

36 MW 3/10/09

13

Sample Number: L08120205-13
Client ID: MR08-SS123-08D
Matrix: Soil
Workgroup Number: WG290381
Collect Date: 12/05/2008 14:20
Sample Tag: 01

PrePrep Method: NONE
Prep Method: METHOD
Analytical Method: 8330MOD
Analyst: JWR
Dilution: 1
Units: mg/kg

Instrument: HPLC4
Prep Date: 12/11/2008 08:00
Cal Date: 12/16/2008 17:34
Run Date: 12/17/2008 06:17
File ID: 4L014666.F

Analyte	CAS. Number	Result	Qual	RL	MDL
1,3,5-Trinitrobenzene	99-35-4		U	0.299	0.0995
1,3-Dinitrobenzene	99-65-0		U	0.299	0.0995
2,4,6-Trinitrotoluene	118-96-7		U	0.299	0.0995
2,4-Dinitrotoluene	121-14-2		U	0.299	0.0995
2,6-Dinitrotoluene	606-20-2		U	0.299	0.0995
2-Amino-4,6-dinitrotoluene	35572-78-2		U	0.299	0.0995
2-Nitrotoluene	88-72-2		U	0.299	0.0995
3-Nitrotoluene	99-08-1		U	0.299	0.0995
4-Nitrotoluene	99-99-0		U	0.299	0.0995
4-Amino-2,6-dinitrotoluene	19406-51-0		U	0.299	0.0995
HMX	2691-41-0		U	0.299	0.0995
Nitrobenzene	98-95-3		U	0.299	0.0995
RDX	121-82-4		U	0.299	0.0995
Tetryl	479-45-8	UJ	~~Q~~	0.299	0.0995
Nitroglycerin	55-63-0		U	0.299	0.0995

Surrogate	% Recovery	Lower	Upper	Qual
1,2-Dinitrobenzene	81.2	50	150	

U Undetected; the analyte was analyzed for, but not detected.
Q One or more quality control criteria failed. See narrative.

CCH

Microbac

 MW 3/10/09

13

Sample Number: L08120205-13
Client ID: MR08-SS123-08D
Matrix: Soil
Workgroup Number: WG290381
Collect Date: 12/05/2008 14:20
Sample Tag: 02

PrePrep Method: NONE
Prep Method: METHOD
Analytical Method: 8330MOD
Analyst: ECL
Dilution: 1
Units: mg/kg

Instrument: HPLC5
Prep Date: 12/11/2008 08:00
Cal Date: 12/16/2008 16:51
Run Date: 12/24/2008 13:57
File ID: 5L003526.F

Analyte	CAS. Number	Result	Qual	RL	MDL
PETN	78-11-5		U	0.299	0.0995

U Undetected; the analyte was analyzed for, but not detected.

Microbac

38 MW 3/10/09

14

Sample Number: L08120205-14
Client ID: MR08-IS123-6-7-08D
Matrix: Soil
Workgroup Number: WG290381
Collect Date: 12/05/2008 14:30
Sample Tag: 01

PrePrep Method: NONE
Prep Method: METHOD
Analytical Method: 8330MOD
Analyst: JWR
Dilution: 1
Units: mg/kg

Instrument: HPLC4
Prep Date: 12/11/2008 08:00
Cal Date: 12/16/2008 17:34
Run Date: 12/17/2008 06:55
File ID: 4L014667.F

Analyte	CAS. Number	Result	Qual	RL	MDL
1,3,5-Trinitrobenzene	99-35-4		U	0.298	0.0992
1,3-Dinitrobenzene	99-65-0		U	0.298	0.0992
2,4,6-Trinitrotoluene	118-96-7		U	0.298	0.0992
2,4-Dinitrotoluene	121-14-2		U	0.298	0.0992
2,6-Dinitrotoluene	606-20-2		U	0.298	0.0992
2-Amino-4,6-dinitrotoluene	35572-78-2		U	0.298	0.0992
2-Nitrotoluene	88-72-2		U	0.298	0.0992
3-Nitrotoluene	99-08-1		U	0.298	0.0992
4-Nitrotoluene	99-99-0		U	0.298	0.0992
4-Amino-2,6-dinitrotoluene	19406-51-0		U	0.298	0.0992
HMX	2691-41-0		U	0.298	0.0992
Nitrobenzene	98-95-3		U	0.298	0.0992
RDX	121-82-4		U	0.298	0.0992
Tetryl	479-45-8	UJ	~~Q~~	0.298	0.0992
Nitroglycerin	55-63-0		U	0.298	0.0992

CCH

Surrogate	% Recovery	Lower	Upper	Qual
1,2-Dinitrobenzene	81.1	50	150	

U Undetected; the analyte was analyzed for, but not detected.
Q One or more quality control criteria failed. See narrative.

Microbac

JW 3/10/09

14

Sample Number: L08120205-14
Client ID: MR08-IS123-6-7-08D
Matrix: Soil
Workgroup Number: WG290381
Collect Date: 12/05/2008 14:30
Sample Tag: 02

PrePrep Method: NONE
Prep Method: METHOD
Analytical Method: 8330MOD
Analyst: ECL
Dilution: 1
Units: mg/kg

Instrument: HPLC5
Prep Date: 12/11/2008 08:00
Cal Date: 12/16/2008 16:51
Run Date: 12/24/2008 14:10
File ID: 5L003527.F

Analyte	CAS. Number	Result	Qual	RL	MDL
PETN	78-11-5		U	0.298	0.0992

U Undetected; the analyte was analyzed for, but not detected.

Microbac

41 MW 3/10/09

15

Sample Number: L08120205-15
Client ID: MR08-EB01120508-SS
Matrix: Water
Workgroup Number: WG290129
Collect Date: 12/05/2008 13:20
Sample Tag: 01

PrePrep Method: NONE
Prep Method: 3535
Analytical Method: 8330MOD
Analyst: ECL
Dilution: 1
Units: ug/L

Instrument: HPLC5
Prep Date: 12/09/2008 08:00
Cal Date: 12/01/2008 20:11
Run Date: 12/11/2008 02:54
File ID: 5L003166.F

Analyte	CAS. Number	Result	Qual	RL	MDL
1,3,5-Trinitrobenzene	99-35-4		U	1.00	0.250
1,3-Dinitrobenzene	99-65-0		U	1.00	0.250
2,4,6-Trinitrotoluene	118-96-7		U	1.00	0.250
2,4-Dinitrotoluene	121-14-2		U	1.00	0.250
2,6-Dinitrotoluene	606-20-2		U	1.00	0.250
2-Amino-4,6-dinitrotoluene	35572-78-2		U	1.00	0.250
2-Nitrotoluene	88-72-2		U	1.00	0.250
3-Nitrotoluene	99-08-1		U	1.00	0.250
4-Nitrotoluene	99-99-0		U	1.00	0.250
4-Amino-2,6-dinitrotoluene	19406-51-0		U	1.00	0.250
HMX	2691-41-0		U	1.00	0.250
Nitrobenzene	98-95-3		U	1.00	0.250
RDX	121-82-4		U	1.00	0.250
Tetryl	479-45-8		U	1.00	0.250
Nitroglycerin	55-63-0		U	1.00	0.250

Surrogate	% Recovery	Lower	Upper	Qual
1,2-Dinitrobenzene	72.4	50	150	

U Undetected; the analyte was analyzed for, but not detected.

Microbac

42 MW 3/10/09

15

Sample Number: L08120205-15
Client ID: MR08-EB01120508-SS
Matrix: Water
Workgroup Number: WG290129
Collect Date: 12/05/2008 13:20
Sample Tag: 02

PrePrep Method: NONE
Prep Method: 3535
Analytical Method: 8330MOD
Analyst: ECL
Dilution: 1
Units: ug/L

Instrument: HPLC5
Prep Date: 12/09/2008 08:00
Cal Date: 12/01/2008 20:11
Run Date: 12/13/2008 02:42
File ID: 5L003264.F

Analyte	CAS. Number	Result	Qual	RL	MDL
PETN	78-11-5		U	1.00	0.250

U Undetected; the analyte was analyzed for, but not detected.

Microbac

43 KW 3/10/09

16

Sample Number: L08120205-16
Client ID: MR08-EB01120508-IS
Matrix: Water
Workgroup Number: WG290129
Collect Date: 12/05/2008 14:00
Sample Tag: 01

PrePrep Method: NONE
Prep Method: 3535
Analytical Method: 8330MOD
Analyst: ECL
Dilution: 1
Units: ug/L

Instrument: HPLC5
Prep Date: 12/09/2008 08:00
Cal Date: 12/01/2008 20:11
Run Date: 12/11/2008 03:33
File ID: 5L003167.F

Analyte	CAS. Number	Result	Qual	RL	MDL
1,3,5-Trinitrobenzene	99-35-4		U	1.00	0.250
1,3-Dinitrobenzene	99-65-0		U	1.00	0.250
2,4,6-Trinitrotoluene	118-96-7		U	1.00	0.250
2,4-Dinitrotoluene	121-14-2		U	1.00	0.250
2,6-Dinitrotoluene	606-20-2		U	1.00	0.250
2-Amino-4,6-dinitrotoluene	35572-78-2		U	1.00	0.250
2-Nitrotoluene	88-72-2		U	1.00	0.250
3-Nitrotoluene	99-08-1		U	1.00	0.250
4-Nitrotoluene	99-99-0		U	1.00	0.250
4-Amino-2,6-dinitrotoluene	19406-51-0		U	1.00	0.250
HMX	2691-41-0		U	1.00	0.250
Nitrobenzene	98-95-3		U	1.00	0.250
RDX	121-82-4		U	1.00	0.250
Tetryl	479-45-8		U	1.00	0.250
Nitroglycerin	55-63-0		U	1.00	0.250

Surrogate	% Recovery	Lower	Upper	Qual
1,2-Dinitrobenzene	66.9	50	150	

U Undetected; the analyte was analyzed for, but not detected.

Microbac

 lw 3/10/09

16

Sample Number: L08120205-16
Client ID: MR08-EB01120508-IS
Matrix: Water
Workgroup Number: WG290129
Collect Date: 12/05/2008 14:00
Sample Tag: 02

PrePrep Method: NONE
Prep Method: 3535
Analytical Method: 8330MOD
Analyst: ECL
Dilution: 1
Units: ug/L

Instrument: HPLC5
Prep Date: 12/09/2008 08:00
Cal Date: 12/01/2008 20:11
Run Date: 12/13/2008 02:56
File ID: 5L003265.F

Analyte	CAS. Number	Result	Qual	RL	MDL
PETN	78-11-5		U	1.00	0.250

U Undetected; the analyte was analyzed for, but not detected.

Microbac

45 lw 3/10/09

ENVIRONMENTAL
Data Services, Inc.

METALS

USEPA Region IV - Level IV Review

Site: MCB Camp Lejeune, TO-09 SDG #: L08120205

Client: CH2M HILL, Inc., Virginia Beach, Virginia Date: March 9, 2009

Laboratory: Microbac Laboratories, Inc., Marietta, Ohio Reviewer: Nancy Weaver

EDS ID	Client Sample ID	Laboratory Sample ID	Matrix
1	MR08-SS091-08D	L08120205-01	Soil
2	MR08-IS091-2-3-08D	L08120205-02	Soil
3	MR08-SS093-08D	L08120205-03	Soil
4	MR08-IS093-2-3-08D	L08120205-04	Soil
5	MR08-SS103-08D	L08120205-05	Soil
6	MR08-IS103-3-4-08D	L08120205-06	Soil
7	MR08-SS116-08D	L08120205-07	Soil
8	MR08-IS116-3-4-08D	L08120205-08	Soil
9	MR08-SS117-08D	L08120205-09	Soil
10	MR08-IS117-2-3-08D	L08120205-10	Soil
11	MR08-SS125-08D	L08120205-11	Soil
12	MR08-IS125-4-5-08D	L08120205-12	Soil
13	MR08-SS123-08D	L08120205-13	Soil
14	MR08-IS123-6-7-08D	L08120205-14	Soil
15	MR08-EB01120508-SS	L08120205-15	Water
16	MR08-EB01120508-IS	L08120205-16	Water

The USEPA "Contract Laboratory Program National Functional Guidelines for Inorganic Data Review," October 2004, and professional judgement were used in evaluating the data in this summary report.

Holding Times - All samples were prepared and analyzed within 28 days for mercury and 180 days for all other metals.

Calibration - The ICV and CCV %R values were acceptable.

Method and Calibration Blanks - The method blanks and continuing calibration blanks exhibited contamination for several compounds, however, all sample results are non-detect or greater than 5X the blank concentration with the exception of the following:

Compound	Conc. ug/L	Action Level ug/L	Qualifier	Affected Samples
Silver	2.05	10.25	U	15, 16

Field and Equipment Blank - Field QC results are summarized below.

Blank ID	Compound	Conc. ug/L	Action Level ug/L	Qualifier	Affected Samples
MR08-EB01120508-SS	None - ND	-	-	-	-
MR08-EB01120508-IS	None - ND	-	-	-	-
MR08-FB01120608	None - ND	-	-	-	-

ICP Interference Check Sample - All %R values were acceptable.

MS/MSD - The MS/MSD sample exhibited acceptable %R and RPD values except the following.

MS/MSD Sample ID	Compound	MS/MSD %R/RPD	Qualifier	Affected Samples
Reference	Lead	62.3%/-19%/Ok	J/UJ	1-14

LCS - The LCS samples exhibited acceptable %R values.

ICP Serial Dilution - The ICP serial dilution sample exhibited acceptable %D values except the following.

ICP Sample ID	Compound	%D	Qualifier	Affected Samples
Reference	Chromium	16.60%	J	1-14
	Zinc	10.80%	J	1-14

Field Duplicates - Field duplicate samples were not included in this data package.

Compound Quantitation - No discrepancies were identified.

Sample Number: L08120205-01
Client ID: MR08-SS091-08D
Matrix: Soil
Workgroup Number: WG290848
Collect Date: 12/05/2008 08:35
Sample Tag: 01

PrePrep Method: NONE
Prep Method: 3051
Analytical Method: 6010B
Analyst: KHR
Dilution: 1
Units: mg/kg

Instrument: IRIS-ICP
Prep Date: 12/15/2008 14:01
Cal Date: 12/18/2008 11:38
Run Date: 12/18/2008 16:08
File ID: IR.121808.160800
Percent Solid: 75.9

Analyte	CAS. Number	Result	Qual	RL	MDL
Silver, Total	7440-22-4	0.362	J	0.933	0.233
Barium, Total	7440-39-3	15.5		0.466	0.0933
Cadmium, Total	7440-43-9	1.55		0.187	0.0466
Chromium, Total	7440-47-3	12.1 J		0.933	0.112
Copper, Total	7440-50-8	30.4		1.87	0.466
Antimony, Total	7440-36-0	5.15		1.87	0.466

SD

J Estimated ; the analyte concentration was less than the low standard (LOQ)

Microbac

 MW 3/9/09

Report Number: L08120205

Report Date : January 8, 2009

Sample Number:	L08120205-01	PrePrep Method:	NONE	Instrument:	IRIS-ICP
Client ID:	MR08-SS091-08D	Prep Method:	3051	Prep Date:	12/15/2008 14:01
Matrix:	Soil	Analytical Method:	6010B	Cal Date:	12/20/2008 10:22
Workgroup Number:	WG290848	Analyst:	KHR	Run Date:	12/20/2008 11:17
Collect Date:	12/05/2008 08:35	Dilution:	10	File ID:	IR.122008.111700
Sample Tag:	DL01	Units:	mg/kg	Percent Solid:	75.9

Analyte	CAS. Number	Result	Qual	RL	MDL
Zinc, Total	7440-66-6	454 J		18.7	4.66

SD

Microbac

372 lw 3/9/09

Report Number: L08120205

Report Date : January 8, 2009

Sample Number: L08120205-01
Client ID: MR08-SS091-08D
Matrix: Soil
Workgroup Number: WG290755
Collect Date: 12/05/2008 08:35
Sample Tag: 01

PrePrep Method: NONE
Prep Method: 3051
Analytical Method: 6020
Analyst: JYH
Dilution: 1
Units: mg/kg

Instrument: ELAN-ICP
Prep Date: 12/11/2008 11:30
Cal Date: 12/18/2008 10:46
Run Date: 12/18/2008 13:29
File ID: EL.121808.132941
Percent Solid: 75.9

Analyte	CAS. Number	Result	Qual	RL	MDL
Arsenic, Total	7440-38-2	2.85		0.396	0.0990
Selenium, Total	7782-49-2	0.889		0.528	0.132

Microbac

1144 LW
3/9/09

1

Sample Number:	L08120205-01	PrePrep Method:	NONE	Instrument:	ELAN-ICP
Client ID:	MR08-SS091-08D	Prep Method:	3051	Prep Date:	12/11/2008 11:30
Matrix:	Soil	Analytical Method:	6020	Cal Date:	12/18/2008 10:46
Workgroup Number:	WG290755	Analyst:	JYH	Run Date:	12/18/2008 15:30
Collect Date:	12/05/2008 08:35	Dilution:	10	File ID:	EL.121808.153046
Sample Tag:	DL01	Units:	mg/kg	Percent Solid:	75.9

Analyte	CAS. Number	Result	Qual	RL	MDL
Lead, Total	7439-92-1	87.3 J		5.28	1.32

MSL

Microbac

1145 fw 3/9/09

Report Number: L08120205
Report Date : January 8, 2009

Sample Number:	L08120205-01	PrePrep Method:	NONE	Instrument:	HYDRA
Client ID:	MR08-SS091-08D	Prep Method:	7471A	Prep Date:	12/11/2008 13:35
Matrix:	Soil	Analytical Method:	7471A	Cal Date:	12/12/2008 15:06
Workgroup Number:	WG290410	Analyst:	ADC	Run Date:	12/12/2008 17:08
Collect Date:	12/05/2008 08:35	Dilution:	1	File ID:	HY.121208.170805
Sample Tag:	01	Units:	mg/kg	Percent Solid:	75.9

Analyte	CAS. Number	Result	Qual	RL	MDL
Mercury, Total	7439-97-6	0.0878	J	0.132	0.0263

J Estimated ; the analyte concentration was less than the low standard (LOQ)

Microbac

2184 JW 3/9/09

2

Sample Number: L08120205-02
Client ID: MR08-IS091-2-3-08D
Matrix: Soil
Workgroup Number: WG290848
Collect Date: 12/05/2008 08:45
Sample Tag: 01

PrePrep Method: NONE
Prep Method: 3051
Analytical Method: 6010B
Analyst: KHR
Dilution: 1
Units: mg/kg

Instrument: IRIS-ICP
Prep Date: 12/15/2008 14:02
Cal Date: 12/18/2008 11:38
Run Date: 12/18/2008 16:14
File ID: IR.121808.161400
Percent Solid: 84.3

Analyte	CAS. Number	Result	Qual	RL	MDL	
Silver, Total	7440-22-4		U	0.864	0.216	
Barium, Total	7440-39-3	8.99		0.432	0.0864	
Cadmium, Total	7440-43-9		U	0.173	0.0432	
Chromium, Total	7440-47-3	4.98 J		0.864	0.104	SD
Copper, Total	7440-50-8	1.99		1.73	0.432	
Antimony, Total	7440-36-0	1.05	J	1.73	0.432	
Zinc, Total	7440-66-6	4.52 J		1.73	0.432	SD

U Undetected; the analyte was analyzed for, but not detected.
J Estimated ; the analyte concentration was less than the low standard (LOQ)

Microbac

374 JW 3/9/09

2

Sample Number: L08120205-02
Client ID: MR08-IS091-2-3-08D
Matrix: Soil
Workgroup Number: WG290755
Collect Date: 12/05/2008 08:45
Sample Tag: 01

PrePrep Method: NONE
Prep Method: 3051
Analytical Method: 6020
Analyst: JYH
Dilution: 1
Units: mg/kg

Instrument: ELAN-ICP
Prep Date: 12/11/2008 11:30
Cal Date: 12/18/2008 10:46
Run Date: 12/18/2008 13:45
File ID: EL.121808.134548
Percent Solid: 84.3

Analyte	CAS. Number	Result	Qual	RL	MDL
Arsenic, Total	7440-38-2	0.444		0.348	0.0871
Lead, Total	7439-92-1	11.9 J		0.464	0.116
Selenium, Total	7782-49-2	0.536		0.464	0.116

MSL

Microbac

1146 LW 3/9/09

2

Sample Number:	L08120205-02	PrePrep Method:	NONE	Instrument:	HYDRA
Client ID:	MR08-IS091-2-3-08D	Prep Method:	7471A	Prep Date:	12/11/2008 13:35
Matrix:	Soil	Analytical Method:	7471A	Cal Date:	12/12/2008 15:06
Workgroup Number:	WG290410	Analyst:	ADC	Run Date:	12/12/2008 17:09
Collect Date:	12/05/2008 08:45	Dilution:	1	File ID:	HY.121208.170948
Sample Tag:	01	Units:	mg/kg	Percent Solid:	84.3

Analyte	CAS. Number	Result	Qual	RL	MDL
Mercury, Total	7439-97-6	0.0274	J	0.112	0.0224

J Estimated ; the analyte concentration was less than the low standard (LOQ)

Microbac

2185 lew 3/9/09

3

Sample Number: L08120205-03
Client ID: MR08-SS093-08D
Matrix: Soil
Workgroup Number: WG290848
Collect Date: 12/05/2008 09:25
Sample Tag: 01

PrePrep Method: NONE
Prep Method: 3051
Analytical Method: 6010B
Analyst: KHR
Dilution: 1
Units: mg/kg

Instrument: IRIS-ICP
Prep Date: 12/15/2008 14:02
Cal Date: 12/18/2008 11:38
Run Date: 12/18/2008 16:20
File ID: IR.121808.162000
Percent Solid: 88.3

Analyte	CAS. Number	Result	Qual	RL	MDL	
Silver, Total	7440-22-4		U	0.768	0.192	
Barium, Total	7440-39-3	11.3		0.384	0.0768	
Cadmium, Total	7440-43-9	0.421		0.154	0.0384	
Chromium, Total	7440-47-3	8.73 J		0.768	0.0921	SD
Copper, Total	7440-50-8	3.67		1.54	0.384	
Antimony, Total	7440-36-0	0.541	J	1.54	0.384	

U Undetected; the analyte was analyzed for, but not detected.
J Estimated ; the analyte concentration was less than the low standard (LOQ)

Microbac®

375 JW 3/9/09

3

Sample Number: L08120205-03
Client ID: MR08-SS093-08D
Matrix: Soil
Workgroup Number: WG290848
Collect Date: 12/05/2008 09:25
Sample Tag: DL01

PrePrep Method: NONE
Prep Method: 3051
Analytical Method: 6010B
Analyst: KHR
Dilution: 10
Units: mg/kg

Instrument: IRIS-ICP
Prep Date: 12/15/2008 14:02
Cal Date: 12/20/2008 10:22
Run Date: 12/20/2008 11:24
File ID: IR.122008.112400
Percent Solid: 88.3

Analyte	CAS. Number	Result	Qual	RL	MDL	
Zinc, Total	7440-66-6	98.2 J		15.4	3.84	SD

Microbac

 QW 3/9/09

3

Sample Number: L08120205-03
Client ID: MR08-SS093-08D
Matrix: Soil
Workgroup Number: WG290755
Collect Date: 12/05/2008 09:25
Sample Tag: 01

PrePrep Method: NONE
Prep Method: 3051
Analytical Method: 6020
Analyst: JYH
Dilution: 1
Units: mg/kg

Instrument: ELAN-ICP
Prep Date: 12/11/2008 11:30
Cal Date: 12/18/2008 10:46
Run Date: 12/18/2008 13:51
File ID: EL.121808.135111
Percent Solid: 88.3

Analyte	CAS. Number	Result	Qual	RL	MDL
Arsenic, Total	7440-38-2	1.08		0.325	0.0812
Lead, Total	7439-92-1	13.0 J		0.433	0.108
Selenium, Total	7782-49-2	0.262	J	0.433	0.108

MSL

J Estimated ; the analyte concentration was less than the low standard (LOQ)

Microbac

1147 MW 3/9/09

3

Sample Number: L08120205-03
Client ID: MR08-SS093-08D
Matrix: Soil
Workgroup Number: WG290410
Collect Date: 12/05/2008 09:25
Sample Tag: 01

PrePrep Method: NONE
Prep Method: 7471A
Analytical Method: 7471A
Analyst: ADC
Dilution: 1
Units: mg/kg

Instrument: HYDRA
Prep Date: 12/11/2008 13:35
Cal Date: 12/12/2008 15:06
Run Date: 12/12/2008 17:11
File ID: HY.121208.171146
Percent Solid: 88.3

Analyte	CAS. Number	Result	Qual	RL	MDL
Mercury, Total	7439-97-6		U	0.108	0.0216

U Undetected; the analyte was analyzed for, but not detected.

Microbac

2186 LW 3/9/09

4

Sample Number: L08120205-04
Client ID: MR08-IS093-2-3-08D
Matrix: Soil
Workgroup Number: WG290848
Collect Date: 12/05/2008 09:50
Sample Tag: 01

PrePrep Method: NONE
Prep Method: 3051
Analytical Method: 6010B
Analyst: KHR
Dilution: 1
Units: mg/kg

Instrument: IRIS-ICP
Prep Date: 12/15/2008 14:03
Cal Date: 12/18/2008 11:38
Run Date: 12/18/2008 16:26
File ID: IR.121808.162600
Percent Solid: 88.4

Analyte	CAS. Number	Result	Qual	RL	MDL	
Silver, Total	7440-22-4		U	0.817	0.204	
Barium, Total	7440-39-3	10.9		0.408	0.0817	
Cadmium, Total	7440-43-9	0.0654	J	0.163	0.0408	
Chromium, Total	7440-47-3	6.28 J		0.817	0.0980	SD
Copper, Total	7440-50-8	1.55	J	1.63	0.408	
Antimony, Total	7440-36-0		U	1.63	0.408	
Zinc, Total	7440-66-6	16.2 J		1.63	0.408	SD

U Undetected; the analyte was analyzed for, but not detected.
J Estimated ; the analyte concentration was less than the low standard (LOQ)

Microbac

377 MW 3/9/09

4

Sample Number: L08120205-04
Client ID: MR08-IS093-2-3-08D
Matrix: Soil
Workgroup Number: WG290755
Collect Date: 12/05/2008 09:50
Sample Tag: 01

PrePrep Method: NONE
Prep Method: 3051
Analytical Method: 6020
Analyst: JYH
Dilution: 1
Units: mg/kg

Instrument: ELAN-ICP
Prep Date: 12/11/2008 11:30
Cal Date: 12/18/2008 10:46
Run Date: 12/18/2008 14:07
File ID: EL.121808.140722
Percent Solid: 88.4

Analyte	CAS. Number	Result	Qual	RL	MDL
Arsenic, Total	7440-38-2	0.959		0.326	0.0814
Lead, Total	7439-92-1	5.57 J		0.434	0.109
Selenium, Total	7782-49-2	0.202	J	0.434	0.109

MSL

J Estimated ; the analyte concentration was less than the low standard (LOQ)

Microbac

1148 lew 3/9/09

4

Sample Number: L08120205-04
Client ID: MR08-IS093-2-3-08D
Matrix: Soil
Workgroup Number: WG290410
Collect Date: 12/05/2008 09:50
Sample Tag: 01

PrePrep Method: NONE
Prep Method: 7471A
Analytical Method: 7471A
Analyst: ADC
Dilution: 1
Units: mg/kg

Instrument: HYDRA
Prep Date: 12/11/2008 13:35
Cal Date: 12/12/2008 15:06
Run Date: 12/12/2008 17:22
File ID: HY.121208.172233
Percent Solid: 88.4

Analyte	CAS. Number	Result	Qual	RL	MDL
Mercury, Total	7439-97-6		U	0.106	0.0212

U Undetected; the analyte was analyzed for, but not detected.

Microbac

2187 lw 3/9/09

5

Sample Number: L08120205-05
Client ID: MR08-SS103-08D
Matrix: Soil
Workgroup Number: WG290848
Collect Date: 12/05/2008 10:10
Sample Tag: 01

PrePrep Method: NONE
Prep Method: 3051
Analytical Method: 6010B
Analyst: KHR
Dilution: 1
Units: mg/kg

Instrument: IRIS-ICP
Prep Date: 12/15/2008 14:03
Cal Date: 12/18/2008 11:38
Run Date: 12/18/2008 16:32
File ID: IR.121808.163200
Percent Solid: 87.2

Analyte	CAS. Number	Result	Qual	RL	MDL	
Silver, Total	7440-22-4		U	0.788	0.197	
Barium, Total	7440-39-3	2.96		0.394	0.0788	
Cadmium, Total	7440-43-9		U	0.158	0.0394	
Chromium, Total	7440-47-3	3.53 J		0.788	0.0946	SD
Copper, Total	7440-50-8		U	1.58	0.394	
Antimony, Total	7440-36-0		U	1.58	0.394	
Zinc, Total	7440-66-6	1.79 J		1.58	0.394	SD

U Undetected; the analyte was analyzed for, but not detected.

Microbac

378 lw 3/9/09

5

Sample Number: L08120205-05
Client ID: MR08-SS103-08D
Matrix: Soil
Workgroup Number: WG290755
Collect Date: 12/05/2008 10:10
Sample Tag: 01

PrePrep Method: NONE
Prep Method: 3051
Analytical Method: 6020
Analyst: JYH
Dilution: 1
Units: mg/kg

Instrument: ELAN-ICP
Prep Date: 12/11/2008 11:30
Cal Date: 12/18/2008 10:46
Run Date: 12/18/2008 14:24
File ID: EL.121808.142407
Percent Solid: 87.2

Analyte	CAS. Number	Result	Qual	RL	MDL
Arsenic, Total	7440-38-2	0.250	J	0.338	0.0844
Lead, Total	7439-92-1	2.85 J		0.450	0.113
Selenium, Total	7782-49-2	0.305	J	0.450	0.113

MSL

J Estimated ; the analyte concentration was less than the low standard (LOQ)

Microbac

1149 lev 3/9/09

5

Sample Number: L08120205-05
Client ID: MR08-SS103-08D
Matrix: Soil
Workgroup Number: WG290410
Collect Date: 12/05/2008 10:10
Sample Tag: 01

PrePrep Method: NONE
Prep Method: 7471A
Analytical Method: 7471A
Analyst: ADC
Dilution: 1
Units: mg/kg

Instrument: HYDRA
Prep Date: 12/11/2008 13:35
Cal Date: 12/12/2008 15:06
Run Date: 12/12/2008 17:24
File ID: HY.121208.172428
Percent Solid: 87.2

Analyte	CAS. Number	Result	Qual	RL	MDL
Mercury, Total	7439-97-6		U	0.106	0.0212

U Undetected; the analyte was analyzed for, but not detected.

Microbac

2188 lw 3/9/09

6

Sample Number: L08120205-06
Client ID: MR08-IS103-3-4-08D
Matrix: Soil
Workgroup Number: WG290848
Collect Date: 12/05/2008 10:30
Sample Tag: 01

PrePrep Method: NONE
Prep Method: 3051
Analytical Method: 6010B
Analyst: KHR
Dilution: 1
Units: mg/kg

Instrument: IRIS-ICP
Prep Date: 12/15/2008 14:04
Cal Date: 12/18/2008 11:38
Run Date: 12/18/2008 16:38
File ID: IR.121808.163800
Percent Solid: 86.6

Analyte	CAS. Number	Result	Qual	RL	MDL	
Silver, Total	7440-22-4		U	0.829	0.207	
Barium, Total	7440-39-3	4.93		0.414	0.0829	
Cadmium, Total	7440-43-9		U	0.166	0.0414	
Chromium, Total	7440-47-3	3.78 J		0.829	0.0995	SD
Copper, Total	7440-50-8		U	1.66	0.414	
Antimony, Total	7440-36-0		U	1.66	0.414	
Zinc, Total	7440-66-6	0.833 J	~~J~~	1.66	0.414	SD

U Undetected; the analyte was analyzed for, but not detected.
J Estimated ; the analyte concentration was less than the low standard (LOQ)

Microbac

379 LW 3/9/09

6

Sample Number: L08120205-06
Client ID: MR08-IS103-3-4-08D
Matrix: Soil
Workgroup Number: WG290755
Collect Date: 12/05/2008 10:30
Sample Tag: 01

PrePrep Method: NONE
Prep Method: 3051
Analytical Method: 6020
Analyst: JYH
Dilution: 1
Units: mg/kg

Instrument: ELAN-ICP
Prep Date: 12/11/2008 11:30
Cal Date: 12/18/2008 10:46
Run Date: 12/18/2008 14:29
File ID: EL.121808.142928
Percent Solid: 86.6

Analyte	CAS. Number	Result	Qual	RL	MDL
Arsenic, Total	7440-38-2	0.348		0.321	0.0803
Lead, Total	7439-92-1	4.28 J		0.428	0.107
Selenium, Total	7782-49-2		U	0.428	0.107

MSL

U Undetected; the analyte was analyzed for, but not detected.

Microbac

1150 RLW 3/9/09

6

Sample Number: L08120205-06
Client ID: MR08-IS103-3-4-08D
Matrix: Soil
Workgroup Number: WG290410
Collect Date: 12/05/2008 10:30
Sample Tag: 01

PrePrep Method: NONE
Prep Method: 7471A
Analytical Method: 7471A
Analyst: ADC
Dilution: 1
Units: mg/kg

Instrument: HYDRA
Prep Date: 12/11/2008 13:35
Cal Date: 12/12/2008 15:06
Run Date: 12/12/2008 17:26
File ID: HY.121208.172614
Percent Solid: 86.6

Analyte	CAS. Number	Result	Qual	RL	MDL
Mercury, Total	7439-97-6		U	0.112	0.0224

U Undetected; the analyte was analyzed for, but not detected.

Microbac

2189 LW 3/9/09

7

Sample Number: L08120205-07
Client ID: MR08-SS116-08D
Matrix: Soil
Workgroup Number: WG290848
Collect Date: 12/05/2008 11:00
Sample Tag: 01

PrePrep Method: NONE
Prep Method: 3051
Analytical Method: 6010B
Analyst: KHR
Dilution: 1
Units: mg/kg

Instrument: IRIS-ICP
Prep Date: 12/15/2008 14:04
Cal Date: 12/18/2008 11:38
Run Date: 12/18/2008 16:44
File ID: IR.121808.164400
Percent Solid: 88.6

Analyte	CAS. Number	Result	Qual	RL	MDL	
Silver, Total	7440-22-4		U	0.834	0.208	
Barium, Total	7440-39-3	6.25		0.417	0.0834	
Cadmium, Total	7440-43-9	0.0500	J	0.167	0.0417	
Chromium, Total	7440-47-3	2.30 J		0.834	0.100	SD
Copper, Total	7440-50-8		U	1.67	0.417	
Antimony, Total	7440-36-0		U	1.67	0.417	
Zinc, Total	7440-66-6	2.37 J		1.67	0.417	SD

U Undetected; the analyte was analyzed for, but not detected.
J Estimated ; the analyte concentration was less than the low standard (LOQ)

Microbac

380 lw 3/9/09

7

Sample Number: L08120205-07
Client ID: MR08-SS116-08D
Matrix: Soil
Workgroup Number: WG290755
Collect Date: 12/05/2008 11:00
Sample Tag: 01

PrePrep Method: NONE
Prep Method: 3051
Analytical Method: 6020
Analyst: JYH
Dilution: 1
Units: mg/kg

Instrument: ELAN-ICP
Prep Date: 12/11/2008 11:30
Cal Date: 12/18/2008 10:46
Run Date: 12/18/2008 14:34
File ID: EL.121808.143449
Percent Solid: 88.6

Analyte	CAS. Number	Result	Qual	RL	MDL
Arsenic, Total	7440-38-2	0.251	J	0.331	0.0827
Lead, Total	7439-92-1	3.93 J		0.441	0.110
Selenium, Total	7782-49-2	0.271	J	0.441	0.110

MSL

J Estimated ; the analyte concentration was less than the low standard (LOQ)

Microbac

1151 KW 3/9/09

7

Sample Number: L08120205-07
Client ID: MR08-SS116-08D
Matrix: Soil
Workgroup Number: WG290410
Collect Date: 12/05/2008 11:00
Sample Tag: 01

PrePrep Method: NONE
Prep Method: 7471A
Analytical Method: 7471A
Analyst: ADC
Dilution: 1
Units: mg/kg

Instrument: HYDRA
Prep Date: 12/11/2008 13:35
Cal Date: 12/12/2008 15:06
Run Date: 12/12/2008 17:27
File ID: HY.121208.172759
Percent Solid: 88.6

Analyte	CAS. Number	Result	Qual	RL	MDL
Mercury, Total	7439-97-6		U	0.108	0.0216

U Undetected; the analyte was analyzed for, but not detected.

Microbac®

2190 lw 3/9/09

8

Sample Number: L08120205-08
Client ID: MR08-IS116-3-4-08D
Matrix: Soil
Workgroup Number: WG290848
Collect Date: 12/05/2008 11:15
Sample Tag: 01

PrePrep Method: NONE
Prep Method: 3051
Analytical Method: 6010B
Analyst: KHR
Dilution: 1
Units: mg/kg

Instrument: IRIS-ICP
Prep Date: 12/15/2008 14:05
Cal Date: 12/18/2008 11:38
Run Date: 12/18/2008 16:50
File ID: IR.121808.165000
Percent Solid: 87.0

Analyte	CAS. Number	Result	Qual	RL	MDL	
Silver, Total	7440-22-4		U	0.876	0.219	
Barium, Total	7440-39-3	6.71		0.438	0.0876	
Cadmium, Total	7440-43-9		U	0.175	0.0438	
Chromium, Total	7440-47-3	9.28 J		0.876	0.105	SD
Copper, Total	7440-50-8		U	1.75	0.438	
Antimony, Total	7440-36-0		U	1.75	0.438	
Zinc, Total	7440-66-6	2.09 J		1.75	0.438	SD

U Undetected; the analyte was analyzed for, but not detected.

Microbac

381 lw 3/9/09

8

Sample Number: L08120205-08
Client ID: MR08-IS116-3-4-08D
Matrix: Soil
Workgroup Number: WG290755
Collect Date: 12/05/2008 11:15
Sample Tag: 01

PrePrep Method: NONE
Prep Method: 3051
Analytical Method: 6020
Analyst: JYH
Dilution: 1
Units: mg/kg

Instrument: ELAN-ICP
Prep Date: 12/11/2008 11:30
Cal Date: 12/18/2008 10:46
Run Date: 12/18/2008 14:40
File ID: EL.121808.144011
Percent Solid: 87.0

Analyte	CAS. Number	Result	Qual	RL	MDL
Arsenic, Total	7440-38-2	0.587		0.343	0.0857
Lead, Total	7439-92-1	4.74 J		0.457	0.114
Selenium, Total	7782-49-2	0.185	J	0.457	0.114

MSL

J Estimated ; the analyte concentration was less than the low standard (LOQ)

Microbac

1152 LW 3/9/09

8

Sample Number: L08120205-08
Client ID: MR08-IS116-3-4-08D
Matrix: Soil
Workgroup Number: WG290410
Collect Date: 12/05/2008 11:15
Sample Tag: 01

PrePrep Method: NONE
Prep Method: 7471A
Analytical Method: 7471A
Analyst: ADC
Dilution: 1
Units: mg/kg

Instrument: HYDRA
Prep Date: 12/11/2008 13:35
Cal Date: 12/12/2008 15:06
Run Date: 12/12/2008 17:29
File ID: HY.121208.172946
Percent Solid: 87.0

Analyte	CAS. Number	Result	Qual	RL	MDL
Mercury, Total	7439-97-6		U	0.115	0.0229

U Undetected; the analyte was analyzed for, but not detected.

Microbac

2191 lw 3/9/09

9

Sample Number: L08120205-09
Client ID: MR08-SS117-08D
Matrix: Soil
Workgroup Number: WG290848
Collect Date: 12/05/2008 13:00
Sample Tag: 01

PrePrep Method: NONE
Prep Method: 3051
Analytical Method: 6010B
Analyst: KHR
Dilution: 1
Units: mg/kg

Instrument: IRIS-ICP
Prep Date: 12/15/2008 14:05
Cal Date: 12/18/2008 11:38
Run Date: 12/18/2008 16:56
File ID: IR.121808.165600
Percent Solid: 91.2

Analyte	CAS. Number	Result	Qual	RL	MDL	
Silver, Total	7440-22-4		U	0.808	0.202	
Barium, Total	7440-39-3	11.3		0.404	0.0808	
Cadmium, Total	7440-43-9	0.252		0.162	0.0404	
Chromium, Total	7440-47-3	9.39 J		0.808	0.0970	SD
Copper, Total	7440-50-8	1.63		1.62	0.404	
Antimony, Total	7440-36-0	1.57	J	1.62	0.404	
Zinc, Total	7440-66-6	11.2 J		1.62	0.404	SD

U Undetected; the analyte was analyzed for, but not detected.
J Estimated ; the analyte concentration was less than the low standard (LOQ)

Microbac

382 LW 3/9/09

9

Sample Number: L08120205-09
Client ID: MR08-SS117-08D
Matrix: Soil
Workgroup Number: WG290755
Collect Date: 12/05/2008 13:00
Sample Tag: 01

PrePrep Method: NONE
Prep Method: 3051
Analytical Method: 6020
Analyst: JYH
Dilution: 1
Units: mg/kg

Instrument: ELAN-ICP
Prep Date: 12/11/2008 11:30
Cal Date: 12/18/2008 10:46
Run Date: 12/18/2008 14:45
File ID: EL.121808.144533
Percent Solid: 91.2

Analyte	CAS. Number	Result	Qual	RL	MDL
Arsenic, Total	7440-38-2	0.697		0.323	0.0808
Lead, Total	7439-92-1	16.8 J		0.431	0.108
Selenium, Total	7782-49-2	0.477		0.431	0.108

MSL

Microbac

1153 MW 3/9/09

9

Sample Number:	L08120205-09	PrePrep Method:	NONE	Instrument:	HYDRA
Client ID:	MR08-SS117-08D	Prep Method:	7471A	Prep Date:	12/11/2008 13:35
Matrix:	Soil	Analytical Method:	7471A	Cal Date:	12/12/2008 15:06
Workgroup Number:	WG290410	Analyst:	ADC	Run Date:	12/12/2008 17:31
Collect Date:	12/05/2008 13:00	Dilution:	1	File ID:	HY.121208.173159
Sample Tag:	01	Units:	mg/kg	Percent Solid:	91.2

Analyte	CAS. Number	Result	Qual	RL	MDL
Mercury, Total	7439-97-6		U	0.103	0.0206

U Undetected; the analyte was analyzed for, but not detected.

Microbac

2192 LLW 3/9/09

10

Sample Number: L08120205-10
Client ID: MR08-IS117-2-3-08D
Matrix: Soil
Workgroup Number: WG290848
Collect Date: 12/05/2008 13:20
Sample Tag: 01

PrePrep Method: NONE
Prep Method: 3051
Analytical Method: 6010B
Analyst: KHR
Dilution: 1
Units: mg/kg

Instrument: IRIS-ICP
Prep Date: 12/15/2008 14:06
Cal Date: 12/18/2008 11:38
Run Date: 12/18/2008 17:15
File ID: IR.121808.171500
Percent Solid: 89.0

Analyte	CAS. Number	Result	Qual	RL	MDL	
Silver, Total	7440-22-4		U	0.855	0.214	
Barium, Total	7440-39-3	4.04		0.428	0.0855	
Cadmium, Total	7440-43-9		U	0.171	0.0428	
Chromium, Total	7440-47-3	4.54 J		0.855	0.103	SD
Copper, Total	7440-50-8		U	1.71	0.428	
Antimony, Total	7440-36-0		U	1.71	0.428	
Zinc, Total	7440-66-6	0.999 J	J	1.71	0.428	SD

U Undetected; the analyte was analyzed for, but not detected.
J Estimated ; the analyte concentration was less than the low standard (LOQ)

Microbac

383 LW 3/9/09

10

Sample Number: L08120205-10
Client ID: MR08-IS117-2-3-08D
Matrix: Soil
Workgroup Number: WG290755
Collect Date: 12/05/2008 13:20
Sample Tag: 01

PrePrep Method: NONE
Prep Method: 3051
Analytical Method: 6020
Analyst: JYH
Dilution: 1
Units: mg/kg

Instrument: ELAN-ICP
Prep Date: 12/11/2008 11:30
Cal Date: 12/18/2008 10:46
Run Date: 12/18/2008 14:50
File ID: EL.121808.145055
Percent Solid: 89.0

Analyte	CAS. Number	Result	Qual	RL	MDL
Arsenic, Total	7440-38-2	0.447		0.328	0.0821
Lead, Total	7439-92-1	3.47 J		0.438	0.109
Selenium, Total	7782-49-2	0.299	J	0.438	0.109

MSL

J Estimated ; the analyte concentration was less than the low standard (LOQ)

Microbac

1154 LLW 3/9/09

10

Sample Number: L08120205-10
Client ID: MR08-IS117-2-3-08D
Matrix: Soil
Workgroup Number: WG290410
Collect Date: 12/05/2008 13:20
Sample Tag: 01

PrePrep Method: NONE
Prep Method: 7471A
Analytical Method: 7471A
Analyst: ADC
Dilution: 1
Units: mg/kg

Instrument: HYDRA
Prep Date: 12/11/2008 13:35
Cal Date: 12/12/2008 15:06
Run Date: 12/12/2008 17:33
File ID: HY.121208.173343
Percent Solid: 89.0

Analyte	CAS. Number	Result	Qual	RL	MDL
Mercury, Total	7439-97-6		U	0.112	0.0223

U Undetected; the analyte was analyzed for, but not detected.

Microbac

2193 JEW 3/9/09

11

Sample Number: L08120205-11
Client ID: MR08-SS125-08D
Matrix: Soil
Workgroup Number: WG290848
Collect Date: 12/05/2008 13:35
Sample Tag: 01

PrePrep Method: NONE
Prep Method: 3051
Analytical Method: 6010B
Analyst: KHR
Dilution: 1
Units: mg/kg

Instrument: IRIS-ICP
Prep Date: 12/15/2008 14:06
Cal Date: 12/18/2008 11:38
Run Date: 12/18/2008 17:21
File ID: IR.121808.172100
Percent Solid: 89.1

Analyte	CAS. Number	Result	Qual	RL	MDL	
Silver, Total	7440-22-4	0.339	J	0.854	0.214	
Barium, Total	7440-39-3	15.5		0.427	0.0854	
Cadmium, Total	7440-43-9	0.164	J	0.171	0.0427	
Chromium, Total	7440-47-3	14.2 J		0.854	0.103	SD
Copper, Total	7440-50-8	2.23		1.71	0.427	
Antimony, Total	7440-36-0	1.51	J	1.71	0.427	
Zinc, Total	7440-66-6	12.6 J		1.71	0.427	SD

J Estimated ; the analyte concentration was less than the low standard (LOQ)

Microbac

384 LW 3/9/09

11

Sample Number: L08120205-11
Client ID: MR08-SS125-08D
Matrix: Soil
Workgroup Number: WG290755
Collect Date: 12/05/2008 13:35
Sample Tag: 01

PrePrep Method: NONE
Prep Method: 3051
Analytical Method: 6020
Analyst: JYH
Dilution: 1
Units: mg/kg

Instrument: ELAN-ICP
Prep Date: 12/11/2008 11:30
Cal Date: 12/18/2008 10:46
Run Date: 12/18/2008 14:56
File ID: EL.121808.145618
Percent Solid: 89.1

Analyte	CAS. Number	Result	Qual	RL	MDL
Arsenic, Total	7440-38-2	1.21		0.332	0.0830
Lead, Total	7439-92-1	27.4 J		0.443	0.111
Selenium, Total	7782-49-2	0.412	J	0.443	0.111

MSL

J Estimated ; the analyte concentration was less than the low standard (LOQ)

Microbac

1155 lew 3/9/09

11

Sample Number:	L08120205-11	PrePrep Method:	NONE	Instrument:	HYDRA
Client ID:	MR08-SS125-08D	Prep Method:	7471A	Prep Date:	12/11/2008 13:35
Matrix:	Soil	Analytical Method:	7471A	Cal Date:	12/12/2008 15:06
Workgroup Number:	WG290410	Analyst:	ADC	Run Date:	12/12/2008 17:40
Collect Date:	12/05/2008 13:35	Dilution:	1	File ID:	HY.121208.174011
Sample Tag:	01	Units:	mg/kg	Percent Solid:	89.1

Analyte	CAS. Number	Result	Qual	RL	MDL
Mercury, Total	7439-97-6		U	0.110	0.0220

U Undetected; the analyte was analyzed for, but not detected.

Microbac

2194 MW
3/9/09

12

Sample Number: L08120205-12
Client ID: MR08-IS125-4-5-08D
Matrix: Soil
Workgroup Number: WG290848
Collect Date: 12/05/2008 13:50
Sample Tag: 01

PrePrep Method: NONE
Prep Method: 3051
Analytical Method: 6010B
Analyst: KHR
Dilution: 1
Units: mg/kg

Instrument: IRIS-ICP
Prep Date: 12/15/2008 14:07
Cal Date: 12/18/2008 11:38
Run Date: 12/18/2008 17:27
File ID: IR.121808.172700
Percent Solid: 86.5

Analyte	CAS. Number	Result	Qual	RL	MDL	
Silver, Total	7440-22-4		U	0.826	0.206	
Barium, Total	7440-39-3	1.56		0.413	0.0826	
Cadmium, Total	7440-43-9		U	0.165	0.0413	
Chromium, Total	7440-47-3	2.24 J		0.826	0.0991	SD
Copper, Total	7440-50-8		U	1.65	0.413	
Antimony, Total	7440-36-0		U	1.65	0.413	
Zinc, Total	7440-66-6	0.603 J	J	1.65	0.413	SD

U Undetected; the analyte was analyzed for, but not detected.
J Estimated ; the analyte concentration was less than the low standard (LOQ)

Microbac

385 LW 3/9/09

12

Sample Number: L08120205-12
Client ID: MR08-IS125-4-5-08D
Matrix: Soil
Workgroup Number: WG290755
Collect Date: 12/05/2008 13:50
Sample Tag: 01

PrePrep Method: NONE
Prep Method: 3051
Analytical Method: 6020
Analyst: JYH
Dilution: 1
Units: mg/kg

Instrument: ELAN-ICP
Prep Date: 12/11/2008 11:30
Cal Date: 12/18/2008 10:46
Run Date: 12/18/2008 15:01
File ID: EL.121808.150141
Percent Solid: 86.5

Analyte	CAS. Number	Result	Qual	RL	MDL
Arsenic, Total	7440-38-2		U	0.344	0.0859
Lead, Total	7439-92-1	2.02 J		0.458	0.115
Selenium, Total	7782-49-2		U	0.458	0.115

MSL

U Undetected; the analyte was analyzed for, but not detected.

Microbac

1156 MW 3/9/09

12

Sample Number: L08120205-12
Client ID: MR08-IS125-4-5-08D
Matrix: Soil
Workgroup Number: WG290410
Collect Date: 12/05/2008 13:50
Sample Tag: 01

PrePrep Method: NONE
Prep Method: 7471A
Analytical Method: 7471A
Analyst: ADC
Dilution: 1
Units: mg/kg

Instrument: HYDRA
Prep Date: 12/11/2008 13:35
Cal Date: 12/12/2008 15:06
Run Date: 12/12/2008 17:41
File ID: HY.121208.174156
Percent Solid: 86.5

Analyte	CAS. Number	Result	Qual	RL	MDL
Mercury, Total	7439-97-6		U	0.108	0.0215

U Undetected; the analyte was analyzed for, but not detected.

Microbac

2195 AW 3/9/09

13

Sample Number: L08120205-13
Client ID: MR08-SS123-08D
Matrix: Soil
Workgroup Number: WG290848
Collect Date: 12/05/2008 14:20
Sample Tag: 01

PrePrep Method: NONE
Prep Method: 3051
Analytical Method: 6010B
Analyst: KHR
Dilution: 1
Units: mg/kg

Instrument: IRIS-ICP
Prep Date: 12/15/2008 14:07
Cal Date: 12/18/2008 11:38
Run Date: 12/18/2008 17:33
File ID: IR.121808.173300
Percent Solid: 93.2

Analyte	CAS. Number	Result	Qual	RL	MDL	
Silver, Total	7440-22-4		U	0.799	0.200	
Barium, Total	7440-39-3	6.89		0.399	0.0799	
Cadmium, Total	7440-43-9	0.190		0.160	0.0399	
Chromium, Total	7440-47-3	6.41 J		0.799	0.0958	SD
Copper, Total	7440-50-8	1.31	J	1.60	0.399	
Antimony, Total	7440-36-0		U	1.60	0.399	
Zinc, Total	7440-66-6	5.79 J		1.60	0.399	SD

U Undetected; the analyte was analyzed for, but not detected.
J Estimated ; the analyte concentration was less than the low standard (LOQ)

Microbac

386 MW 3/9/09

13

Sample Number: L08120205-13
Client ID: MR08-SS123-08D
Matrix: Soil
Workgroup Number: WG290755
Collect Date: 12/05/2008 14:20
Sample Tag: 01

PrePrep Method: NONE
Prep Method: 3051
Analytical Method: 6020
Analyst: JYH
Dilution: 1
Units: mg/kg

Instrument: ELAN-ICP
Prep Date: 12/11/2008 11:30
Cal Date: 12/18/2008 10:46
Run Date: 12/18/2008 15:07
File ID: EL.121808.150704
Percent Solid: 93.2

Analyte	CAS. Number	Result	Qual	RL	MDL
Arsenic, Total	7440-38-2	0.434		0.314	0.0786
Lead, Total	7439-92-1	4.29 J		0.419	0.105
Selenium, Total	7782-49-2	0.250	J	0.419	0.105

MSL

J Estimated ; the analyte concentration was less than the low standard (LOQ)

Microbac

1157 LW 3/9/09

13

Sample Number: L08120205-13
Client ID: MR08-SS123-08D
Matrix: Soil
Workgroup Number: WG290410
Collect Date: 12/05/2008 14:20
Sample Tag: 01

PrePrep Method: NONE
Prep Method: 7471A
Analytical Method: 7471A
Analyst: ADC
Dilution: 1
Units: mg/kg

Instrument: HYDRA
Prep Date: 12/11/2008 13:35
Cal Date: 12/12/2008 15:06
Run Date: 12/12/2008 17:43
File ID: HY.121208.174354
Percent Solid: 93.2

Analyte	CAS. Number	Result	Qual	RL	MDL
Mercury, Total	7439-97-6		U	0.105	0.0210

U Undetected; the analyte was analyzed for, but not detected.

Microbac

2196 lw 3/9/09

14

Sample Number: L08120205-14
Client ID: MR08-IS123-6-7-08D
Matrix: Soil
Workgroup Number: WG290848
Collect Date: 12/05/2008 14:30
Sample Tag: 01

PrePrep Method: NONE
Prep Method: 3051
Analytical Method: 6010B
Analyst: KHR
Dilution: 1
Units: mg/kg

Instrument: IRIS-ICP
Prep Date: 12/15/2008 14:08
Cal Date: 12/18/2008 11:38
Run Date: 12/18/2008 17:39
File ID: IR.121808.173900
Percent Solid: 88.5

Analyte	CAS. Number	Result	Qual	RL	MDL	
Silver, Total	7440-22-4		U	0.808	0.202	
Barium, Total	7440-39-3	5.98		0.404	0.0808	
Cadmium, Total	7440-43-9		U	0.162	0.0404	
Chromium, Total	7440-47-3	5.25 J		0.808	0.0969	SD
Copper, Total	7440-50-8		U	1.62	0.404	
Antimony, Total	7440-36-0		U	1.62	0.404	
Zinc, Total	7440-66-6	0.733 J	J	1.62	0.404	SD

U Undetected; the analyte was analyzed for, but not detected.
J Estimated ; the analyte concentration was less than the low standard (LOQ)

Microbac

387 lw 3/9/09

14

Sample Number: L08120205-14
Client ID: MR08-IS123-6-7-08D
Matrix: Soil
Workgroup Number: WG290755
Collect Date: 12/05/2008 14:30
Sample Tag: 01

PrePrep Method: NONE
Prep Method: 3051
Analytical Method: 6020
Analyst: JYH
Dilution: 1
Units: mg/kg

Instrument: ELAN-ICP
Prep Date: 12/11/2008 11:30
Cal Date: 12/18/2008 10:46
Run Date: 12/18/2008 15:12
File ID: EL.121808.151228
Percent Solid: 88.5

Analyte	CAS. Number	Result	Qual	RL	MDL	
Arsenic, Total	7440-38-2	0.444		0.336	0.0839	
Lead, Total	7439-92-1	5.23 J		0.447	0.112	MSL
Selenium, Total	7782-49-2		U	0.447	0.112	

U Undetected; the analyte was analyzed for, but not detected.

Microbac

1158 LW 3/9/09

14

Sample Number: L08120205-14
Client ID: MR08-IS123-6-7-08D
Matrix: Soil
Workgroup Number: WG290410
Collect Date: 12/05/2008 14:30
Sample Tag: 01

PrePrep Method: NONE
Prep Method: 7471A
Analytical Method: 7471A
Analyst: ADC
Dilution: 1
Units: mg/kg

Instrument: HYDRA
Prep Date: 12/11/2008 13:35
Cal Date: 12/12/2008 15:06
Run Date: 12/12/2008 17:45
File ID: HY.121208.174540
Percent Solid: 88.5

Analyte	CAS. Number	Result	Qual	RL	MDL
Mercury, Total	7439-97-6		U	0.113	0.0225

U Undetected; the analyte was analyzed for, but not detected.

Microbac

2197 lw 3/9/09

15

Sample Number: L08120205-15
Client ID: MR08-EB01120508-SS
Matrix: Water
Workgroup Number: WG290030
Collect Date: 12/05/2008 13:20
Sample Tag: 01

PrePrep Method: NONE
Prep Method: 3005A
Analytical Method: 6010B
Analyst: SLP
Dilution: 1
Units: ug/L

Instrument: PE-ICP2
Prep Date: 12/09/2008 09:16
Cal Date: 12/12/2008 09:23
Run Date: 12/12/2008 16:00
File ID: P2.121208.160005

Analyte	CAS. Number	Result	Qual	RL	MDL
Barium, Total	7440-39-3		U	10.0	2.50
Cadmium, Total	7440-43-9		U	1.00	0.250
Chromium, Total	7440-47-3		U	10.0	2.50
Copper, Total	7440-50-8		U	20.0	5.00
Silver, Total	7440-22-4	~~2.51~~ 6.00	~~J~~ U	6.00	2.00
Zinc, Total	7440-66-6		U	20.0	5.00

BL

U Undetected; the analyte was analyzed for, but not detected.
J Estimated ; the analyte concentration was less than the low standard (LOQ)

Microbac

 lw 3/9/09

15

Sample Number: L08120205-15
Client ID: MR08-EB01120508-SS
Matrix: Water
Workgroup Number: WG290255
Collect Date: 12/05/2008 13:20
Sample Tag: 02

PrePrep Method: NONE
Prep Method: 3015
Analytical Method: 6020
Analyst: JYH
Dilution: 1
Units: ug/L

Instrument: ELAN-ICP
Prep Date: 12/11/2008 08:30
Cal Date: 12/18/2008 10:46
Run Date: 12/19/2008 00:09
File ID: EL.121908.000942

Analyte	CAS. Number	Result	Qual	RL	MDL
Antimony, Total	7440-36-0		U	1.00	0.250

U Undetected; the analyte was analyzed for, but not detected.

Microbac

1159 lew 3/9/09

15

Sample Number: L08120205-15
Client ID: MR08-EB01120508-SS
Matrix: Water
Workgroup Number: WG290255
Collect Date: 12/05/2008 13:20
Sample Tag: 01

PrePrep Method: NONE
Prep Method: 3015
Analytical Method: 6020
Analyst: JYH
Dilution: 1
Units: ug/L

Instrument: ELAN-ICP
Prep Date: 12/11/2008 08:30
Cal Date: 12/11/2008 10:44
Run Date: 12/11/2008 16:05
File ID: EL.121108.160522

Analyte	CAS. Number	Result	Qual	RL	MDL
Arsenic, Total	7440-38-2		U	1.00	0.250
Lead, Total	7439-92-1		U	1.00	0.250
Selenium, Total	7782-49-2		U	2.00	0.500

U Undetected; the analyte was analyzed for, but not detected.

Microbac

1160 DW 3/9/09

15

Sample Number: L08120205-15
Client ID: MR08-EB01120508-SS
Matrix: Water
Workgroup Number: WG290137
Collect Date: 12/05/2008 13:20
Sample Tag: 01

PrePrep Method: NONE
Prep Method: 7470A
Analytical Method: 7470A
Analyst: ADC
Dilution: 1
Units: ug/L

Instrument: HYDRA
Prep Date: 12/10/2008 09:32
Cal Date: 12/11/2008 13:19
Run Date: 12/11/2008 14:23
File ID: HY.121108.142348

Analyte	CAS. Number	Result	Qual	RL	MDL
Mercury	7439-97-6		U	0.400	0.100

U Undetected; the analyte was analyzed for, but not detected.

Microbac

2198 lw 3/9/09

16

Sample Number: L08120205-16
Client ID: MR08-EB01120508-IS
Matrix: Water
Workgroup Number: WG290030
Collect Date: 12/05/2008 14:00
Sample Tag: 01

PrePrep Method: NONE
Prep Method: 3005A
Analytical Method: 6010B
Analyst: SLP
Dilution: 1
Units: ug/L

Instrument: PE-ICP2
Prep Date: 12/09/2008 09:16
Cal Date: 12/12/2008 09:23
Run Date: 12/12/2008 16:06
File ID: P2.121208.160625

Analyte	CAS. Number	Result	Qual	RL	MDL
Barium, Total	7440-39-3		U	10.0	2.50
Cadmium, Total	7440-43-9		U	1.00	0.250
Chromium, Total	7440-47-3		U	10.0	2.50
Copper, Total	7440-50-8		U	20.0	5.00
Silver, Total	7440-22-4	~~2.50~~ 6.00	~~J~~ U	6.00	2.00
Zinc, Total	7440-66-6		U	20.0	5.00

BL

U Undetected; the analyte was analyzed for, but not detected.
J Estimated ; the analyte concentration was less than the low standard (LOQ)

Microbac

389 LW 3/9/09

16

Sample Number: L08120205-16
Client ID: MR08-EB01120508-IS
Matrix: Water
Workgroup Number: WG290255
Collect Date: 12/05/2008 14:00
Sample Tag: 01

PrePrep Method: NONE
Prep Method: 3015
Analytical Method: 6020
Analyst: JYH
Dilution: 1
Units: ug/L

Instrument: ELAN-ICP
Prep Date: 12/11/2008 08:30
Cal Date: 12/11/2008 10:44
Run Date: 12/11/2008 16:10
File ID: EL.121108.161045

Analyte	CAS. Number	Result	Qual	RL	MDL
Arsenic, Total	7440-38-2		U	1.00	0.250
Lead, Total	7439-92-1		U	1.00	0.250
Selenium, Total	7782-49-2		U	2.00	0.500

U Undetected; the analyte was analyzed for, but not detected.

Microbac

1161 3/9/09

16

Sample Number: L08120205-16
Client ID: MR08-EB01120508-IS
Matrix: Water
Workgroup Number: WG290255
Collect Date: 12/05/2008 14:00
Sample Tag: 02

PrePrep Method: NONE
Prep Method: 3015
Analytical Method: 6020
Analyst: JYH
Dilution: 1
Units: ug/L

Instrument: ELAN-ICP
Prep Date: 12/11/2008 08:30
Cal Date: 12/18/2008 10:46
Run Date: 12/19/2008 00:15
File ID: EL.121908.001506

Analyte	CAS. Number	Result	Qual	RL	MDL
Antimony, Total	7440-36-0		U	1.00	0.250

U Undetected; the analyte was analyzed for, but not detected.

Microbac

1162 MW 3/9/09

16

Sample Number: L08120205-16
Client ID: MR08-EB01120508-IS
Matrix: Water
Workgroup Number: WG290137
Collect Date: 12/05/2008 14:00
Sample Tag: 01

PrePrep Method: NONE
Prep Method: 7470A
Analytical Method: 7470A
Analyst: ADC
Dilution: 1
Units: ug/L

Instrument: HYDRA
Prep Date: 12/10/2008 09:32
Cal Date: 12/11/2008 13:19
Run Date: 12/11/2008 14:25
File ID: HY.121108.142531

Analyte	CAS. Number	Result	Qual	RL	MDL
Mercury	7439-97-6		U	0.400	0.100

U Undetected; the analyte was analyzed for, but not detected.

Microbac

2199 lw 3/9/09

ENVIRONMENTAL
Data Services, Inc.

EXPLOSIVES, PETN & NITROGLYCERIN

USEPA Region IV - Level IV Review

Site: MCB Camp Lejeune, TO-09 SDG #: L08120261

Client: CH2M HILL, Inc., Virginia Beach, Virginia Date: March 10, 2009

Laboratory: Microbac Laboratories, Inc., Marietta, Ohio Reviewer: Linda Sulkowski

EDS ID	Client Sample ID	Laboratory Sample ID	Matrix
1	MR08-SS019-08D	L08120261-01	Soil
2	MR08-SS019D-08D	L08120261-02	Soil
3	MR08-SS104-08D	L08120261-03	Soil
3MS	MR08-SS104-08DMS	L08120261-04MS	Soil
3MSD	MR08-SS104-08DMSD	L08120261-05MSD	Soil
4	MR08-SS105-08D	L08120261-06	Soil
5	MR08-SS106-08D	L08120261-07	Soil
6	MR08-IS104-1-2-08D	L08120261-08	Soil
6MS	MR08-IS104-1-2-08DMS	L08120261-09MS	Soil
6MSD	MR08-IS104-1-2-08DMSD	L08120261-10MSD	Soil
7	MR08-IS105-2-3-08D	L08120261-11	Soil
8	MR08-IS106-2-3-08D	L08120261-12	Soil
9	MR08-SS087-08D	L08120261-13	Soil
10	MR08-IS087-2-3-08D	L08120261-14	Soil
11	MR08-SS086-08D	L08120261-15	Soil
11MS	MR08-SS086-08DMS	L08120261-16MS	Soil
11MSD	MR08-SS086-08DMSMSD	L08120261-17MSD	Soil
12	MR08-IS086-2-3-08D	L08120261-18	Soil
12MS	MR08-IS086-2-3-08DMS	L08120261-19MS	Soil
12MSD	MR08-IS086-2-3-08DMSD	L08120261-20MSD	Soil
13	MR08-EB01120808-SS	L08120261-21	Water
14	MR08-EB01120808-IS	L08120261-22	Water

The USEPA "Contract Laboratory Program National Functional Guidelines for Organic Data Review," October 1999, and professional judgement were used in evaluating the data in this summary report.

Holding Times - All samples were extracted within 7 days for water samples, 14 days for soil samples and analyzed within 40 days.

Initial Calibration - The initial calibrations exhibited acceptable %RSD and/or correlation coefficient values.

Calibration Verification - The continuing calibrations exhibited acceptable %D values except the following.

CCAL Date	Compound	%D	Qualifier	Affected Samples
12/18/08	Tetryl	35.15%	J/UJ	1, 3

Surrogates - All samples exhibited acceptable surrogate recoveries.

MS/MSD - The MS/MSD sample exhibited acceptable %R and RPD values except the following.

MS/MSD Sample ID	Compound	MS/MSD %R/RPD	Qualifier
3	1,3-Dinitrobenzene	Ok/77.4%/Ok	J/UJ
	2,4-Dinitrotoluene	79.0%/75.5%/Ok	J/UJ
6	2,6-Dinitrotoluene	Ok/135%/Ok	J/UJ
	2-Amino-4,6-dinitrotoluene	74.1%/62.7%/Ok	J/UJ
	RDX	Ok/40.3%/43.9	J/UJ
12	1,3-Dinitrobenzene	77.7%/Ok/Ok	J/UJ
	2,4-Dinitrotoluene	78.5%/Ok/Ok	J/UJ
	2-Amino-4,6-dinitrotoluene	79.6%/Ok/Ok	J/UJ
	4-Amino-2,6-dinitrotoluene	79.4%/Ok.Ok	J/UJ

Laboratory Control Sample - The LCS/LCSD samples exhibited acceptable %R and/or RPD values.

Method Blank - The method blanks were free of contamination.

Field and Equipment Blank - Field QC results are summarized below.

Blank ID	Compound	Conc. ug/L	Action Level ug/L	Qualifier	Affected Samples
MR08-EB01120808-SS	None - ND	-	-	-	-
MR08-EB01120808-IS	None - ND	-	-	-	-
MR08-FB01120608	None - ND	-	-	-	-

Field Duplicates - Field duplicate samples were not included in this data package.

Compound Identification - Retention times were acceptable and no further action was taken.

Compound Quantitation - No discrepancies were identified.

Report Number: L08120261

Report Date : January 8, 2009

Sample Number: L08120261-01
Client ID: MR08-SS109-08D
Matrix: Soil
Workgroup Number: WG290759
Collect Date: 12/08/2008 08:45
Sample Tag: 01

PrePrep Method: NONE
Prep Method: METHOD
Analytical Method: 8330MOD
Analyst: ECL
Dilution: 1
Units: mg/kg

Instrument: HPLC5
Prep Date: 12/14/2008 09:00
Cal Date: 12/16/2008 16:51
Run Date: 12/18/2008 04:39
File ID: 5L003359.F

Analyte	CAS. Number	Result	Qual	RL	MDL
1,3,5-Trinitrobenzene	99-35-4		U	0.294	0.0979
1,3-Dinitrobenzene	99-65-0		U	0.294	0.0979
2,4,6-Trinitrotoluene	118-96-7		U ~~Q~~	0.294	0.0979
2,4-Dinitrotoluene	121-14-2		U	0.294	0.0979
2,6-Dinitrotoluene	606-20-2		U	0.294	0.0979
2-Amino-4,6-dinitrotoluene	35572-78-2		U	0.294	0.0979
2-Nitrotoluene	88-72-2		U	0.294	0.0979
3-Nitrotoluene	99-08-1		U	0.294	0.0979
4-Nitrotoluene	99-99-0		U	0.294	0.0979
4-Amino-2,6-dinitrotoluene	19406-51-0		U	0.294	0.0979
HMX	2691-41-0		U	0.294	0.0979
Nitrobenzene	98-95-3		U	0.294	0.0979
RDX	121-82-4		U	0.294	0.0979
Tetryl	479-45-8	US	~~Q~~	0.294	0.0979
Nitroglycerin	55-63-0		U	0.294	0.0979

CCH

Surrogate	% Recovery	Lower	Upper	Qual
1,2-Dinitrobenzene	87.3	50	150	

U Undetected; the analyte was analyzed for, but not detected.
Q One or more quality control criteria failed. See narrative.

Microbac

Sample Number: L08120261-01
Client ID: MR08-SS109-08D
Matrix: Soil
Workgroup Number: WG290759
Collect Date: 12/08/2008 08:45
Sample Tag: 02

PrePrep Method: NONE
Prep Method: METHOD
Analytical Method: 8330MOD
Analyst: ECL
Dilution: 1
Units: mg/kg

Instrument: HPLC5
Prep Date: 12/14/2008 09:00
Cal Date: 12/16/2008 16:51
Run Date: 12/24/2008 18:20
File ID: 5L003546.F

Analyte	CAS. Number	Result	Qual	RL	MDL
PETN	78-11-5		U	0.294	0.0979

U Undetected; the analyte was analyzed for, but not detected.

Microbac

2

Sample Number: L08120261-02
Client ID: MR08-SS109D-08D
Matrix: Soil
Workgroup Number: WG290759
Collect Date: 12/08/2008 09:00
Sample Tag: 01

PrePrep Method: NONE
Prep Method: METHOD
Analytical Method: 8330MOD
Analyst: ECL
Dilution: 1
Units: mg/kg

Instrument: HPLC5
Prep Date: 12/14/2008 09:00
Cal Date: 12/16/2008 16:51
Run Date: 12/18/2008 10:50
File ID: 5L003364.F

Analyte	CAS. Number	Result	Qual	RL	MDL
1,3,5-Trinitrobenzene	99-35-4		U	0.292	0.0973
1,3-Dinitrobenzene	99-65-0		U	0.292	0.0973
2,4,6-Trinitrotoluene	118-96-7		~~Q~~ U	0.292	0.0973
2,4-Dinitrotoluene	121-14-2		U	0.292	0.0973
2,6-Dinitrotoluene	606-20-2		U	0.292	0.0973
2-Amino-4,6-dinitrotoluene	35572-78-2		U	0.292	0.0973
2-Nitrotoluene	88-72-2		U	0.292	0.0973
3-Nitrotoluene	99-08-1		U	0.292	0.0973
4-Nitrotoluene	99-99-0		U	0.292	0.0973
4-Amino-2,6-dinitrotoluene	19406-51-0		U	0.292	0.0973
HMX	2691-41-0		U	0.292	0.0973
Nitrobenzene	98-95-3		U	0.292	0.0973
RDX	121-82-4		U	0.292	0.0973
Tetryl	479-45-8		~~Q~~ U	0.292	0.0973
Nitroglycerin	55-63-0		U	0.292	0.0973

Surrogate	% Recovery	Lower	Upper	Qual
1,2-Dinitrobenzene	90.3	50	150	

U Undetected; the analyte was analyzed for, but not detected.
Q One or more quality control criteria failed. See narrative.

Microbac®

2

Sample Number: L08120261-02
Client ID: MR08-SS109D-08D
Matrix: Soil
Workgroup Number: WG290759
Collect Date: 12/08/2008 09:00
Sample Tag: 02

PrePrep Method: NONE
Prep Method: METHOD
Analytical Method: 8330MOD
Analyst: ECL
Dilution: 1
Units: mg/kg

Instrument: HPLC5
Prep Date: 12/14/2008 09:00
Cal Date: 12/16/2008 16:51
Run Date: 12/24/2008 18:34
File ID: 5L003547.F

Analyte	CAS. Number	Result	Qual	RL	MDL
PETN	78-11-5		U	0.292	0.0973

U Undetected; the analyte was analyzed for, but not detected.

Microbac

3

Sample Number: L08120261-03
Client ID: MR08-SS104-08D
Matrix: Soil
Workgroup Number: WG290759
Collect Date: 12/08/2008 10:00
Sample Tag: 01

PrePrep Method: NONE
Prep Method: METHOD
Analytical Method: 8330MOD
Analyst: ECL
Dilution: 1
Units: mg/kg

Instrument: HPLC5
Prep Date: 12/14/2008 09:00
Cal Date: 12/16/2008 16:51
Run Date: 12/18/2008 02:45
File ID: 5L003356.F

Analyte	CAS. Number	Result	Qual	RL	MDL	
1,3,5-Trinitrobenzene	99-35-4		U	0.295	0.0982	
1,3-Dinitrobenzene	99-65-0	UJ	~~UJ~~	0.295	0.0982	MSL
2,4,6-Trinitrotoluene	118-96-7		U ~~Q~~	0.295	0.0982	
2,4-Dinitrotoluene	121-14-2	UJ	~~UJ~~	0.295	0.0982	MSL
2,6-Dinitrotoluene	606-20-2		U	0.295	0.0982	
2-Amino-4,6-dinitrotoluene	35572-78-2		U	0.295	0.0982	
2-Nitrotoluene	88-72-2		U	0.295	0.0982	
3-Nitrotoluene	99-08-1		U	0.295	0.0982	
4-Nitrotoluene	99-99-0		U	0.295	0.0982	
4-Amino-2,6-dinitrotoluene	19406-51-0		U	0.295	0.0982	
HMX	2691-41-0		U	0.295	0.0982	
Nitrobenzene	98-95-3		U	0.295	0.0982	
RDX	121-82-4		U	0.295	0.0982	
Tetryl	479-45-8	UJ	~~Q~~	0.295	0.0982	CCH
Nitroglycerin	55-63-0		U	0.295	0.0982	

Surrogate	% Recovery	Lower	Upper	Qual
1,2-Dinitrobenzene	85.6	50	150	

U Undetected; the analyte was analyzed for, but not detected.
Q One or more quality control criteria failed. See narrative.
UJ Undetected; the analyte was analyzed for, but not detected.

Microbac

3

Sample Number: L08120261-03
Client ID: MR08-SS104-08D
Matrix: Soil
Workgroup Number: WG290759
Collect Date: 12/08/2008 10:00
Sample Tag: 02

PrePrep Method: NONE
Prep Method: METHOD
Analytical Method: 8330MOD
Analyst: ECL
Dilution: 1
Units: mg/kg

Instrument: HPLC5
Prep Date: 12/14/2008 09:00
Cal Date: 12/16/2008 16:51
Run Date: 12/24/2008 18:47
File ID: 5L003548.F

Analyte	CAS. Number	Result	Qual	RL	MDL
PETN	78-11-5		U	0.295	0.0982

U Undetected; the analyte was analyzed for, but not detected.

Microbac

4

Sample Number: L08120261-06
Client ID: MR08-SS105-08D
Matrix: Soil
Workgroup Number: WG290865
Collect Date: 12/08/2008 11:00
Sample Tag: 01

PrePrep Method: NONE
Prep Method: METHOD
Analytical Method: 8330MOD
Analyst: ECL
Dilution: 1
Units: mg/kg

Instrument: HPLC5
Prep Date: 12/16/2008 08:00
Cal Date: 12/16/2008 16:51
Run Date: 12/19/2008 00:12
File ID: 5L003385.F

Analyte	CAS. Number	Result	Qual	RL	MDL
1,3,5-Trinitrobenzene	99-35-4		U	0.300	0.0999
1,3-Dinitrobenzene	99-65-0		U	0.300	0.0999
2,4,6-Trinitrotoluene	118-96-7		~~Q~~ U	0.300	0.0999
2,4-Dinitrotoluene	121-14-2		U	0.300	0.0999
2,6-Dinitrotoluene	606-20-2		U	0.300	0.0999
2-Amino-4,6-dinitrotoluene	35572-78-2		U	0.300	0.0999
2-Nitrotoluene	88-72-2		U	0.300	0.0999
3-Nitrotoluene	99-08-1		U	0.300	0.0999
4-Nitrotoluene	99-99-0		U	0.300	0.0999
4-Amino-2,6-dinitrotoluene	19406-51-0		U	0.300	0.0999
HMX	2691-41-0		U	0.300	0.0999
Nitrobenzene	98-95-3		U	0.300	0.0999
RDX	121-82-4		U	0.300	0.0999
Tetryl	479-45-8		~~Q~~ U	0.300	0.0999
Nitroglycerin	55-63-0		U	0.300	0.0999

Surrogate	% Recovery	Lower	Upper	Qual
1,2-Dinitrobenzene	97.0	50	150	

U Undetected; the analyte was analyzed for, but not detected.
Q One or more quality control criteria failed. See narrative.

Microbac

4

Sample Number: L08120261-06
Client ID: MR08-SS105-08D
Matrix: Soil
Workgroup Number: WG290865
Collect Date: 12/08/2008 11:00
Sample Tag: 02

PrePrep Method: NONE
Prep Method: METHOD
Analytical Method: 8330MOD
Analyst: ECL
Dilution: 1
Units: mg/kg

Instrument: HPLC5
Prep Date: 12/16/2008 08:00
Cal Date: 12/16/2008 16:51
Run Date: 12/24/2008 23:50
File ID: 5L003571.F

Analyte	CAS. Number	Result	Qual	RL	MDL
PETN	78-11-5		U	0.300	0.0999

U Undetected; the analyte was analyzed for, but not detected.

Microbac

5

Sample Number: L08120261-07
Client ID: MR08-SS106-08D
Matrix: Soil
Workgroup Number: WG290865
Collect Date: 12/08/2008 11:30
Sample Tag: 01

PrePrep Method: NONE
Prep Method: METHOD
Analytical Method: 8330MOD
Analyst: ECL
Dilution: 1
Units: mg/kg

Instrument: HPLC5
Prep Date: 12/16/2008 08:00
Cal Date: 12/16/2008 16:51
Run Date: 12/19/2008 02:06
File ID: 5L003388.F

Analyte	CAS. Number	Result	Qual	RL	MDL
1,3,5-Trinitrobenzene	99-35-4		U	0.291	0.0971
1,3-Dinitrobenzene	99-65-0		U	0.291	0.0971
2,4,6-Trinitrotoluene	118-96-7		~~Q~~ U	0.291	0.0971
2,4-Dinitrotoluene	121-14-2		U	0.291	0.0971
2,6-Dinitrotoluene	606-20-2		U	0.291	0.0971
2-Amino-4,6-dinitrotoluene	35572-78-2		U	0.291	0.0971
2-Nitrotoluene	88-72-2		U	0.291	0.0971
3-Nitrotoluene	99-08-1		U	0.291	0.0971
4-Nitrotoluene	99-99-0		U	0.291	0.0971
4-Amino-2,6-dinitrotoluene	19406-51-0		U	0.291	0.0971
HMX	2691-41-0		U	0.291	0.0971
Nitrobenzene	98-95-3		U	0.291	0.0971
RDX	121-82-4		U	0.291	0.0971
Tetryl	479-45-8		~~Q~~ U	0.291	0.0971
Nitroglycerin	55-63-0		U	0.291	0.0971

Surrogate	% Recovery	Lower	Upper	Qual
1,2-Dinitrobenzene	91.5	50	150	

U Undetected; the analyte was analyzed for, but not detected.
Q One or more quality control criteria failed. See narrative.

Microbac

5

Sample Number: L08120261-07
Client ID: MR08-SS106-08D
Matrix: Soil
Workgroup Number: WG290865
Collect Date: 12/08/2008 11:30
Sample Tag: 02

PrePrep Method: NONE
Prep Method: METHOD
Analytical Method: 8330MOD
Analyst: ECL
Dilution: 1
Units: mg/kg

Instrument: HPLC5
Prep Date: 12/16/2008 08:00
Cal Date: 12/16/2008 16:51
Run Date: 12/25/2008 00:03
File ID: 5L003572.F

Analyte	CAS. Number	Result	Qual	RL	MDL
PETN	78-11-5		U	0.291	0.0971

U Undetected; the analyte was analyzed for, but not detected.

Microbac

6

Sample Number: L08120261-08
Client ID: MR08-IS104-1-2-08D
Matrix: Soil
Workgroup Number: WG290865
Collect Date: 12/08/2008 12:20
Sample Tag: 01

PrePrep Method: NONE
Prep Method: METHOD
Analytical Method: 8330MOD
Analyst: ECL
Dilution: 1
Units: mg/kg

Instrument: HPLC5
Prep Date: 12/16/2008 08:00
Cal Date: 12/16/2008 16:51
Run Date: 12/19/2008 02:44
File ID: 5L003389.F

Analyte	CAS. Number	Result	Qual	RL	MDL	
1,3,5-Trinitrobenzene	99-35-4		U	0.298	0.0994	
1,3-Dinitrobenzene	99-65-0		U	0.298	0.0994	
2,4,6-Trinitrotoluene	118-96-7		~~Q~~ UL	0.298	0.0994	
2,4-Dinitrotoluene	121-14-2		U	0.298	0.0994	
2,6-Dinitrotoluene	606-20-2	UJ	~~U~~	0.298	0.0994	MSL
2-Amino-4,6-dinitrotoluene	35572-78-2	UJ	~~UJ~~	0.298	0.0994	MSL
2-Nitrotoluene	88-72-2		U	0.298	0.0994	
3-Nitrotoluene	99-08-1		U	0.298	0.0994	
4-Nitrotoluene	99-99-0		U	0.298	0.0994	
4-Amino-2,6-dinitrotoluene	19406-51-0		U	0.298	0.0994	
HMX	2691-41-0		U	0.298	0.0994	
Nitrobenzene	98-95-3		U	0.298	0.0994	
RDX	121-82-4	UJ	~~UJ~~	0.298	0.0994	MSL
Tetryl	479-45-8		~~Q~~ UL	0.298	0.0994	
Nitroglycerin	55-63-0		U	0.298	0.0994	

Surrogate	% Recovery	Lower	Upper	Qual
1,2-Dinitrobenzene	93.7	50	150	

U Undetected; the analyte was analyzed for, but not detected.
Q One or more quality control criteria failed. See narrative.
UJ Undetected; the analyte was analyzed for, but not detected.

Microbac

6

Sample Number: L08120261-08
Client ID: MR08-IS104-1-2-08D
Matrix: Soil
Workgroup Number: WG290865
Collect Date: 12/08/2008 12:20
Sample Tag: 02

PrePrep Method: NONE
Prep Method: METHOD
Analytical Method: 8330MOD
Analyst: ECL
Dilution: 1
Units: mg/kg

Instrument: HPLC5
Prep Date: 12/16/2008 08:00
Cal Date: 12/16/2008 16:51
Run Date: 12/25/2008 00:16
File ID: 5L003573.F

Analyte	CAS. Number	Result	Qual	RL	MDL
PETN	78-11-5		U	0.298	0.0994

U Undetected; the analyte was analyzed for, but not detected.

Microbac

7

Sample Number: L08120261-11
Client ID: MR08-IS105-2-3-08D
Matrix: Soil
Workgroup Number: WG290865
Collect Date: 12/08/2008 12:55
Sample Tag: 01

PrePrep Method: NONE
Prep Method: METHOD
Analytical Method: 8330MOD
Analyst: ECL
Dilution: 1
Units: mg/kg

Instrument: HPLC5
Prep Date: 12/16/2008 08:00
Cal Date: 12/16/2008 16:51
Run Date: 12/19/2008 04:39
File ID: 5L003392.F

Analyte	CAS. Number	Result	Qual	RL	MDL
1,3,5-Trinitrobenzene	99-35-4		U	0.292	0.0975
1,3-Dinitrobenzene	99-65-0		U	0.292	0.0975
2,4,6-Trinitrotoluene	118-96-7		U ~~Q~~	0.292	0.0975
2,4-Dinitrotoluene	121-14-2		U	0.292	0.0975
2,6-Dinitrotoluene	606-20-2		U	0.292	0.0975
2-Amino-4,6-dinitrotoluene	35572-78-2		U	0.292	0.0975
2-Nitrotoluene	88-72-2		U	0.292	0.0975
3-Nitrotoluene	99-08-1		U	0.292	0.0975
4-Nitrotoluene	99-99-0		U	0.292	0.0975
4-Amino-2,6-dinitrotoluene	19406-51-0		U	0.292	0.0975
HMX	2691-41-0		U	0.292	0.0975
Nitrobenzene	98-95-3		U	0.292	0.0975
RDX	121-82-4		U	0.292	0.0975
Tetryl	479-45-8		U ~~Q~~	0.292	0.0975
Nitroglycerin	55-63-0		U	0.292	0.0975

Surrogate	% Recovery	Lower	Upper	Qual
1,2-Dinitrobenzene	92.4	50	150	

U Undetected; the analyte was analyzed for, but not detected.
Q One or more quality control criteria failed. See narrative.

Microbac

7

Sample Number: L08120261-11
Client ID: MR08-IS105-2-3-08D
Matrix: Soil
Workgroup Number: WG290865
Collect Date: 12/08/2008 12:55
Sample Tag: 02

PrePrep Method: NONE
Prep Method: METHOD
Analytical Method: 8330MOD
Analyst: ECL
Dilution: 1
Units: mg/kg

Instrument: HPLC5
Prep Date: 12/16/2008 08:00
Cal Date: 12/16/2008 16:51
Run Date: 12/25/2008 00:29
File ID: 5L003574.F

Analyte	CAS. Number	Result	Qual	RL	MDL
PETN	78-11-5		U	0.292	0.0975

U Undetected; the analyte was analyzed for, but not detected.

Microbac

8

Sample Number: L08120261-12
Client ID: MR08-IS106-2-3-08D
Matrix: Soil
Workgroup Number: WG290865
Collect Date: 12/08/2008 13:30
Sample Tag: 01

PrePrep Method: NONE
Prep Method: METHOD
Analytical Method: 8330MOD
Analyst: ECL
Dilution: 1
Units: mg/kg

Instrument: HPLC5
Prep Date: 12/16/2008 08:00
Cal Date: 12/16/2008 16:51
Run Date: 12/19/2008 05:17
File ID: 5L003393.F

Analyte	CAS. Number	Result	Qual	RL	MDL
1,3,5-Trinitrobenzene	99-35-4		U	0.295	0.0984
1,3-Dinitrobenzene	99-65-0		U	0.295	0.0984
2,4,6-Trinitrotoluene	118-96-7		U ~~Q~~	0.295	0.0984
2,4-Dinitrotoluene	121-14-2		U	0.295	0.0984
2,6-Dinitrotoluene	606-20-2		U	0.295	0.0984
2-Amino-4,6-dinitrotoluene	35572-78-2		U	0.295	0.0984
2-Nitrotoluene	88-72-2		U	0.295	0.0984
3-Nitrotoluene	99-08-1		U	0.295	0.0984
4-Nitrotoluene	99-99-0		U	0.295	0.0984
4-Amino-2,6-dinitrotoluene	19406-51-0		U	0.295	0.0984
HMX	2691-41-0		U	0.295	0.0984
Nitrobenzene	98-95-3		U	0.295	0.0984
RDX	121-82-4		U	0.295	0.0984
Tetryl	479-45-8		U ~~Q~~	0.295	0.0984
Nitroglycerin	55-63-0		U	0.295	0.0984

Surrogate	% Recovery	Lower	Upper	Qual
1,2-Dinitrobenzene	96.4	50	150	

U Undetected; the analyte was analyzed for, but not detected.
Q One or more quality control criteria failed. See narrative.

Microbac

8

Sample Number: L08120261-12
Client ID: MR08-IS106-2-3-08D
Matrix: Soil
Workgroup Number: WG290865
Collect Date: 12/08/2008 13:30
Sample Tag: 02

PrePrep Method: NONE
Prep Method: METHOD
Analytical Method: 8330MOD
Analyst: ECL
Dilution: 1
Units: mg/kg

Instrument: HPLC5
Prep Date: 12/16/2008 08:00
Cal Date: 12/16/2008 16:51
Run Date: 12/25/2008 00:42
File ID: 5L003575.F

Analyte	CAS. Number	Result	Qual	RL	MDL
PETN	78-11-5		U	0.295	0.0984

U Undetected; the analyte was analyzed for, but not detected.

Microbac

9

Sample Number: L08120261-13
Client ID: MR08-SS087-08D
Matrix: Soil
Workgroup Number: WG290865
Collect Date: 12/08/2008 14:20
Sample Tag: 01

PrePrep Method: NONE
Prep Method: METHOD
Analytical Method: 8330MOD
Analyst: ECL
Dilution: 1
Units: mg/kg

Instrument: HPLC5
Prep Date: 12/16/2008 08:00
Cal Date: 12/16/2008 16:51
Run Date: 12/19/2008 05:55
File ID: 5L003394.F

Analyte	CAS. Number	Result	Qual	RL	MDL
1,3,5-Trinitrobenzene	99-35-4		U	0.299	0.0998
1,3-Dinitrobenzene	99-65-0		U	0.299	0.0998
2,4,6-Trinitrotoluene	118-96-7		U ~~Q~~	0.299	0.0998
2,4-Dinitrotoluene	121-14-2		U	0.299	0.0998
2,6-Dinitrotoluene	606-20-2		U	0.299	0.0998
2-Amino-4,6-dinitrotoluene	35572-78-2		U	0.299	0.0998
2-Nitrotoluene	88-72-2		U	0.299	0.0998
3-Nitrotoluene	99-08-1		U	0.299	0.0998
4-Nitrotoluene	99-99-0		U	0.299	0.0998
4-Amino-2,6-dinitrotoluene	19406-51-0		U	0.299	0.0998
HMX	2691-41-0		U	0.299	0.0998
Nitrobenzene	98-95-3		U	0.299	0.0998
RDX	121-82-4		U	0.299	0.0998
Tetryl	479-45-8		U ~~Q~~	0.299	0.0998
Nitroglycerin	55-63-0		U	0.299	0.0998

Surrogate	% Recovery	Lower	Upper	Qual
1,2-Dinitrobenzene	93.5	50	150	

U Undetected; the analyte was analyzed for, but not detected.
Q One or more quality control criteria failed. See narrative.

Microbac

9

Sample Number: L08120261-13
Client ID: MR08-SS087-08D
Matrix: Soil
Workgroup Number: WG290865
Collect Date: 12/08/2008 14:20
Sample Tag: 02

PrePrep Method: NONE
Prep Method: METHOD
Analytical Method: 8330MOD
Analyst: ECL
Dilution: 1
Units: mg/kg

Instrument: HPLC5
Prep Date: 12/16/2008 08:00
Cal Date: 12/16/2008 16:51
Run Date: 12/25/2008 00:55
File ID: 5L003576.F

Analyte	CAS. Number	Result	Qual	RL	MDL
PETN	78-11-5		U	0.299	0.0998

U Undetected; the analyte was analyzed for, but not detected.

Microbac

10

Sample Number: L08120261-14
Client ID: MR08-IS087-2-3-08D
Matrix: Soil
Workgroup Number: WG290865
Collect Date: 12/08/2008 14:45
Sample Tag: 01

PrePrep Method: NONE
Prep Method: METHOD
Analytical Method: 8330MOD
Analyst: ECL
Dilution: 1
Units: mg/kg

Instrument: HPLC5
Prep Date: 12/16/2008 08:00
Cal Date: 12/16/2008 16:51
Run Date: 12/19/2008 06:33
File ID: 5L003395.F

Analyte	CAS. Number	Result	Qual	RL	MDL
1,3,5-Trinitrobenzene	99-35-4		U	0.295	0.0982
1,3-Dinitrobenzene	99-65-0		U	0.295	0.0982
2,4,6-Trinitrotoluene	118-96-7		U ~~Q~~	0.295	0.0982
2,4-Dinitrotoluene	121-14-2		U	0.295	0.0982
2,6-Dinitrotoluene	606-20-2		U	0.295	0.0982
2-Amino-4,6-dinitrotoluene	35572-78-2		U	0.295	0.0982
2-Nitrotoluene	88-72-2		U	0.295	0.0982
3-Nitrotoluene	99-08-1		U	0.295	0.0982
4-Nitrotoluene	99-99-0		U	0.295	0.0982
4-Amino-2,6-dinitrotoluene	19406-51-0		U	0.295	0.0982
HMX	2691-41-0		U	0.295	0.0982
Nitrobenzene	98-95-3		U	0.295	0.0982
RDX	121-82-4		U	0.295	0.0982
Tetryl	479-45-8		U ~~Q~~	0.295	0.0982
Nitroglycerin	55-63-0		U	0.295	0.0982

Surrogate	% Recovery	Lower	Upper	Qual
1,2-Dinitrobenzene	90.7	50	150	

U Undetected; the analyte was analyzed for, but not detected.
Q One or more quality control criteria failed. See narrative.

10

Sample Number: L08120261-14
Client ID: MR08-IS087-2-3-08D
Matrix: Soil
Workgroup Number: WG290865
Collect Date: 12/08/2008 14:45
Sample Tag: 02

PrePrep Method: NONE
Prep Method: METHOD
Analytical Method: 8330MOD
Analyst: ECL
Dilution: 1
Units: mg/kg

Instrument: HPLC5
Prep Date: 12/16/2008 08:00
Cal Date: 12/16/2008 16:51
Run Date: 12/25/2008 01:08
File ID: 5L003577.F

Analyte	CAS. Number	Result	Qual	RL	MDL
PETN	78-11-5		U	0.295	0.0982

U Undetected; the analyte was analyzed for, but not detected.

Microbac

11

Sample Number: L08120261-15
Client ID: MR08-SS086-08D
Matrix: Soil
Workgroup Number: WG290865
Collect Date: 12/08/2008 15:15
Sample Tag: 01

PrePrep Method: NONE
Prep Method: METHOD
Analytical Method: 8330MOD
Analyst: ECL
Dilution: 1
Units: mg/kg

Instrument: HPLC5
Prep Date: 12/16/2008 08:00
Cal Date: 12/16/2008 16:51
Run Date: 12/19/2008 12:23
File ID: 5L003403.F

Analyte	CAS. Number	Result	Qual	RL	MDL
1,3,5-Trinitrobenzene	99-35-4		U	0.300	0.100
1,3-Dinitrobenzene	99-65-0		U	0.300	0.100
2,4,6-Trinitrotoluene	118-96-7		U ~~Q~~	0.300	0.100
2,4-Dinitrotoluene	121-14-2		U	0.300	0.100
2,6-Dinitrotoluene	606-20-2		U	0.300	0.100
2-Amino-4,6-dinitrotoluene	35572-78-2		U	0.300	0.100
2-Nitrotoluene	88-72-2		U	0.300	0.100
3-Nitrotoluene	99-08-1		U	0.300	0.100
4-Nitrotoluene	99-99-0		U	0.300	0.100
4-Amino-2,6-dinitrotoluene	19406-51-0		U	0.300	0.100
HMX	2691-41-0		U	0.300	0.100
Nitrobenzene	98-95-3		U	0.300	0.100
RDX	121-82-4		U	0.300	0.100
Tetryl	479-45-8		U ~~Q~~	0.300	0.100
Nitroglycerin	55-63-0		U	0.300	0.100

Surrogate	% Recovery	Lower	Upper	Qual
1,2-Dinitrobenzene	93.3	50	150	

U Undetected; the analyte was analyzed for, but not detected.
Q One or more quality control criteria failed. See narrative.

Microbac

Sample Number: L08120261-15
Client ID: MR08-SS086-08D
Matrix: Soil
Workgroup Number: WG290865
Collect Date: 12/08/2008 15:15
Sample Tag: 02

PrePrep Method: NONE
Prep Method: METHOD
Analytical Method: 8330MOD
Analyst: ECL
Dilution: 1
Units: mg/kg

Instrument: HPLC5
Prep Date: 12/16/2008 08:00
Cal Date: 12/16/2008 16:51
Run Date: 12/25/2008 01:22
File ID: 5L003578.F

Analyte	CAS. Number	Result	Qual	RL	MDL
PETN	78-11-5		U	0.300	0.100

U Undetected; the analyte was analyzed for, but not detected.

Microbac

12

Sample Number: L08120261-18
Client ID: MR08-IS086-2-3-08D
Matrix: Soil
Workgroup Number: WG290866
Collect Date: 12/08/2008 15:30
Sample Tag: 01

PrePrep Method: NONE
Prep Method: METHOD
Analytical Method: 8330MOD
Analyst: ECL
Dilution: 1
Units: mg/kg

Instrument: HPLC5
Prep Date: 12/17/2008 08:00
Cal Date: 12/16/2008 16:51
Run Date: 12/19/2008 20:39
File ID: 5L003416.F

Analyte	CAS. Number	Result	Qual	RL	MDL	
1,3,5-Trinitrobenzene	99-35-4		U	0.299	0.0998	
1,3-Dinitrobenzene	99-65-0	UJ	~~UQ~~	0.299	0.0998	MSL
2,4,6-Trinitrotoluene	118-96-7	U	~~Q~~	0.299	0.0998	
2,4-Dinitrotoluene	121-14-2	UJ	~~UQ~~	0.299	0.0998	MSL
2,6-Dinitrotoluene	606-20-2		U	0.299	0.0998	
2-Amino-4,6-dinitrotoluene	35572-78-2	UJ	~~UQ~~	0.299	0.0998	MSL
2-Nitrotoluene	88-72-2		U	0.299	0.0998	
3-Nitrotoluene	99-08-1		U	0.299	0.0998	
4-Nitrotoluene	99-99-0		U	0.299	0.0998	
4-Amino-2,6-dinitrotoluene	19406-51-0	UJ	~~UQ~~	0.299	0.0998	MSL
HMX	2691-41-0		U	0.299	0.0998	
Nitrobenzene	98-95-3		U	0.299	0.0998	
RDX	121-82-4		U	0.299	0.0998	
Tetryl	479-45-8	U	~~Q~~	0.299	0.0998	
Nitroglycerin	55-63-0		U	0.299	0.0998	

Surrogate	% Recovery	Lower	Upper	Qual
1,2-Dinitrobenzene	94.0	50	150	

U Undetected; the analyte was analyzed for, but not detected.
Q One or more quality control criteria failed. See narrative.
UJ Undetected; the analyte was analyzed for, but not detected.

12

Sample Number: L08120261-18
Client ID: MR08-IS086-2-3-08D
Matrix: Soil
Workgroup Number: WG290866
Collect Date: 12/08/2008 15:30
Sample Tag: 02

PrePrep Method: NONE
Prep Method: METHOD
Analytical Method: 8330MOD
Analyst: ECL
Dilution: 1
Units: mg/kg

Instrument: HPLC5
Prep Date: 12/17/2008 08:00
Cal Date: 12/16/2008 16:51
Run Date: 12/25/2008 04:39
File ID: 5L003593.F

Analyte	CAS. Number	Result	Qual	RL	MDL
PETN	78-11-5		U	0.299	0.0998

U Undetected; the analyte was analyzed for, but not detected.

Microbac

13

Sample Number: L08120261-21
Client ID: MR08-EB01120808-SS
Matrix: Water
Workgroup Number: WG290758
Collect Date: 12/08/2008 14:00
Sample Tag: 01

PrePrep Method: NONE
Prep Method: 3535
Analytical Method: 8330MOD
Analyst: ECL
Dilution: 1
Units: ug/L

Instrument: HPLC5
Prep Date: 12/12/2008 08:00
Cal Date: 12/16/2008 16:51
Run Date: 12/17/2008 17:50
File ID: 5L003342.F

Analyte	CAS. Number	Result	Qual	RL	MDL
1,3,5-Trinitrobenzene	99-35-4		U	1.00	0.250
1,3-Dinitrobenzene	99-65-0		U	1.00	0.250
2,4,6-Trinitrotoluene	118-96-7		U ~~Q~~	1.00	0.250
2,4-Dinitrotoluene	121-14-2		U	1.00	0.250
2,6-Dinitrotoluene	606-20-2		U	1.00	0.250
2-Amino-4,6-dinitrotoluene	35572-78-2		U	1.00	0.250
2-Nitrotoluene	88-72-2		U	1.00	0.250
3-Nitrotoluene	99-08-1		U	1.00	0.250
4-Nitrotoluene	99-99-0		U	1.00	0.250
4-Amino-2,6-dinitrotoluene	19406-51-0		U	1.00	0.250
HMX	2691-41-0		U	1.00	0.250
Nitrobenzene	98-95-3		U	1.00	0.250
RDX	121-82-4		U	1.00	0.250
Tetryl	479-45-8		U ~~Q~~	1.00	0.250
Nitroglycerin	55-63-0		U	1.00	0.250

Surrogate	% Recovery	Lower	Upper	Qual
1,2-Dinitrobenzene	83.6	50	150	

U Undetected; the analyte was analyzed for, but not detected.
Q One or more quality control criteria failed. See narrative.

Microbac

14

Sample Number: L08120261-22
Client ID: MR08-EB01120808-IS
Matrix: Water
Workgroup Number: WG290758
Collect Date: 12/08/2008 14:30
Sample Tag: 01

PrePrep Method: NONE
Prep Method: 3535
Analytical Method: 8330MOD
Analyst: ECL
Dilution: 1
Units: ug/L

Instrument: HPLC5
Prep Date: 12/12/2008 08:00
Cal Date: 12/16/2008 16:51
Run Date: 12/17/2008 18:29
File ID: 5L003343.F

Analyte	CAS. Number	Result	Qual	RL	MDL
1,3,5-Trinitrobenzene	99-35-4		U	1.00	0.250
1,3-Dinitrobenzene	99-65-0		U	1.00	0.250
2,4,6-Trinitrotoluene	118-96-7		U ~~Q~~	1.00	0.250
2,4-Dinitrotoluene	121-14-2		U	1.00	0.250
2,6-Dinitrotoluene	606-20-2		U	1.00	0.250
2-Amino-4,6-dinitrotoluene	35572-78-2		U	1.00	0.250
2-Nitrotoluene	88-72-2		U	1.00	0.250
3-Nitrotoluene	99-08-1		U	1.00	0.250
4-Nitrotoluene	99-99-0		U	1.00	0.250
4-Amino-2,6-dinitrotoluene	19406-51-0		U	1.00	0.250
HMX	2691-41-0		U	1.00	0.250
Nitrobenzene	98-95-3		U	1.00	0.250
RDX	121-82-4		U	1.00	0.250
Tetryl	479-45-8		U ~~Q~~	1.00	0.250
Nitroglycerin	55-63-0		U	1.00	0.250

Surrogate	% Recovery	Lower	Upper	Qual
1,2-Dinitrobenzene	90.3	50	150	

U Undetected; the analyte was analyzed for, but not detected.
Q One or more quality control criteria failed. See narrative.

Microbac

14

Sample Number: L08120261-22
Client ID: MR08-EB01120808-IS
Matrix: Water
Workgroup Number: WG290758
Collect Date: 12/08/2008 14:30
Sample Tag: 02

PrePrep Method: NONE
Prep Method: 3535
Analytical Method: 8330MOD
Analyst: ECL
Dilution: 1
Units: ug/L

Instrument: HPLC5
Prep Date: 12/12/2008 08:00
Cal Date: 12/16/2008 16:51
Run Date: 12/24/2008 15:29
File ID: 5L003533.F

Analyte	CAS. Number	Result	Qual	RL	MDL
PETN	78-11-5		U	1.00	0.250

U Undetected; the analyte was analyzed for, but not detected.

Microbac

ENVIRONMENTAL
Data Services, Inc.

METALS

USEPA Region IV - Level IV Review

Site: MCB Camp Lejeune, TO-09 SDG #: L08120261

Client: CH2M HILL, Inc., Virginia Beach, Virginia Date: March 9, 2009

Laboratory: Microbac Laboratories, Inc., Marietta, Ohio Reviewer: Nancy Weaver

EDS ID	Client Sample ID	Laboratory Sample ID	Matrix
1	MR08-SS109-08D	L08120261-01	Soil
2	MR08-SS109D-08D	L08120261-02	Soil
3	MR08-SS104-08D	L08120261-03	Soil
4MS	MR08-SS104-08DMS	L08120261-04MS	Soil
5MSD	MR08-SS104-08DMSD	L08120261-05MSD	Soil
6	MR08-SS105-08D	L08120261-06	Soil
7	MR08-SS106-08D	L08120261-07	Soil
8	MR08-IS104-1-2-08D	L08120261-08	Soil
9MS	MR08-IS104-1-2-08DMS	L08120261-09MS	Soil
10MSD	MR08-IS104-1-2-08DMSD	L08120261-10MSD	Soil
11	MR08-IS105-2-3-08D	L08120261-11	Soil
12	MR08-IS106-2-3-08D	L08120261-12	Soil
13	MR08-SS087-08D	L08120261-13	Soil
14	MR08-IS087-2-3-08D	L08120261-14	Soil
15	MR08-SS086-08D	L08120261-15	Soil
16MS	MR08-SS086-08DMS	L08120261-16MS	Soil
17MSD	MR08-SS086-08DMSMSD	L08120261-17MSD	Soil
18	MR08-IS086-2-3-08D	L08120261-18	Soil
19MS	MR08-IS086-2-3-08DMS	L08120261-19MS	Soil
20MSD	MR08-IS086-2-3-08DMSD	L08120261-20MSD	Soil
21	MR08-EB01120808-SS	L08120261-21	Water
22	MR08-EB01120808-IS	L08120261-22	Water

The USEPA "Contract Laboratory Program National Functional Guidelines for Inorganic Data Review," October 2004, and professional judgement were used in evaluating the data in this summary report.

Holding Times - All samples were prepared and analyzed within 28 days for mercury and 180 days for all other metals.

Calibration - The ICV and CCV %R values were acceptable.

Method and Calibration Blanks - The method blanks and continuing calibration blanks exhibited contamination for several compounds, however, all sample results are non-detect or greater than 5X the blank concentration

Field and Equipment Blank - Field QC results are summarized below.

Blank ID	Compound	Conc. ug/L	Action Level ug/L	Qualifier	Affected Samples
MR08-EB01120808-IS	None - ND	-	-	-	-
MR08-EB01120808-SS	None - ND	-	-	-	-
MR08-FB01120608	None - ND	-	-	-	-

ICP Interference Check Sample - All %R values were acceptable.

MS/MSD - The MS/MSD sample exhibited acceptable %R and RPD values except the following.

MS/MSD Sample ID	Compound	MS/MSD %R/RPD	Qualifier	Affected Samples
3	Zinc	Ok/53.5%/Ok	None	Already qualified due to SD
	Lead	72.7%/718%/100	J/UJ	1-3, 6-8, 11-15
8	Chromium	72.8%/Ok/27.5%	None	Already qualified due to SD
15	Chromium	67.9%/Ok/20.9	None	Already qualified due to SD

LCS - The LCS samples exhibited acceptable %R values.

ICP Serial Dilution - The ICP serial dilution sample exhibited acceptable %D values except the following.

ICP Sample ID	Compound	%D	Qualifier	Affected Samples
1	Chromium	16.60%	J	1-6
	Zinc	10.80%	J	1-6
7	Chromium	22.40%	J	7-17
	Zinc	10.40%	J	7-17

Field Duplicates - Field duplicate results are summarized below.

Compound	MR08-SS109-08D mg/kg	MR08-SS109D-08D mg/kg	RPD	Qualifier
Antimony	0.680	0.592	14%	None
Arsenic	2.64	3.47	27%	None
Barium	6.72	5.55	19%	None
Cadmium	0.549	0.557	1%	None

Compound	MR08-SS109-08D mg/kg	MR08-SS109D-08D mg/kg	RPD	Qualifier
Chromium	5.99	5.83	3%	None
Copper	2.12	2.05	3%	None
Lead	3.78	3.65	3%	None
Mercury	0.103 U	0.0257	NC	None
Selenium	0.411	0.495	19%	None
Silver	0.269	0.376	33%	None
Zinc	20.0	21.0	5%	None

Compound Quantitation - No discrepancies were identified.

Report Number: L08120261

Report Date : January 8, 2009

Sample Number: L08120261-01
Client ID: MR08-SS109-08D
Matrix: Soil
Workgroup Number: WG290848
Collect Date: 12/08/2008 08:45
Sample Tag: 01

PrePrep Method: NONE
Prep Method: 3051
Analytical Method: 6010B
Analyst: KHR
Dilution: 1
Units: mg/kg

Instrument: IRIS-ICP
Prep Date: 12/15/2008 14:08
Cal Date: 12/18/2008 11:38
Run Date: 12/18/2008 17:45
File ID: IR.121808.174500
Percent Solid: 94.9

Analyte	CAS. Number	Result	Qual	RL	MDL	
Silver, Total	7440-22-4	0.269	J	0.734	0.183	
Barium, Total	7440-39-3	6.72		0.367	0.0734	
Cadmium, Total	7440-43-9	0.549		0.147	0.0367	
Chromium, Total	7440-47-3	5.99 J		0.734	0.0880	SD
Copper, Total	7440-50-8	2.12		1.47	0.367	
Antimony, Total	7440-36-0	0.680	J	1.47	0.367	
Zinc, Total	7440-66-6	20.0 J		1.47	0.367	SD

J Estimated ; the analyte concentration was less than the low standard (LOQ)

Microbac

356 lw 3/9/09

Report Number: L08120261
Report Date : January 8, 2009

1

Sample Number: L08120261-01
Client ID: MR08-SS109-08D
Matrix: Soil
Workgroup Number: WG290288
Collect Date: 12/08/2008 08:45
Sample Tag: 01

PrePrep Method: NONE
Prep Method: 3051
Analytical Method: 6020
Analyst: JYH
Dilution: 1
Units: mg/kg

Instrument: ELAN-ICP
Prep Date: 12/10/2008 08:22
Cal Date: 12/11/2008 10:44
Run Date: 12/11/2008 21:19
File ID: EL.121108.211953
Percent Solid: 94.9

Analyte	CAS. Number	Result	Qual	RL	MDL
Arsenic, Total	7440-38-2	2.64		0.296	0.0741
Lead, Total	7439-92-1	3.78 J		0.395	0.0988
Selenium, Total	7782-49-2	0.411		0.395	0.0988

MSL

Microbac

1164 AW 3/9/09

Report Number: L08120261

Report Date : January 8, 2009

Sample Number:	L08120261-01	PrePrep Method:	NONE	Instrument:	HYDRA
Client ID:	MR08-SS109-08D	Prep Method:	7471A	Prep Date:	12/11/2008 12:49
Matrix:	Soil	Analytical Method:	7471A	Cal Date:	12/12/2008 15:06
Workgroup Number:	WG290413	Analyst:	ADC	Run Date:	12/12/2008 15:20
Collect Date:	12/08/2008 08:45	Dilution:	1	File ID:	HY.121208.152003
Sample Tag:	01	Units:	mg/kg	Percent Solid:	94.9

Analyte	CAS. Number	Result	Qual	RL	MDL
Mercury, Total	7439-97-6		U	0.103	0.0207

U Undetected; the analyte was analyzed for, but not detected.

Microbac

2454 3/9/09

2

Sample Number: L08120261-02
Client ID: MR08-SS109D-08D
Matrix: Soil
Workgroup Number: WG290848
Collect Date: 12/08/2008 09:00
Sample Tag: 01

PrePrep Method: NONE
Prep Method: 3051
Analytical Method: 6010B
Analyst: KHR
Dilution: 1
Units: mg/kg

Instrument: IRIS-ICP
Prep Date: 12/15/2008 14:09
Cal Date: 12/18/2008 11:38
Run Date: 12/18/2008 18:10
File ID: IR.121808.181000
Percent Solid: 94.8

Analyte	CAS. Number	Result	Qual	RL	MDL	
Silver, Total	7440-22-4	0.376	J	0.704	0.176	
Barium, Total	7440-39-3	5.55		0.352	0.0704	
Cadmium, Total	7440-43-9	0.557		0.141	0.0352	
Chromium, Total	7440-47-3	5.83 J		0.704	0.0845	SD
Copper, Total	7440-50-8	2.05		1.41	0.352	
Antimony, Total	7440-36-0	0.592	J	1.41	0.352	
Zinc, Total	7440-66-6	21.0 J		1.41	0.352	SD

J Estimated ; the analyte concentration was less than the low standard (LOQ)

Microbac

357 kw 3/9/09

2

Sample Number: L08120261-02
Client ID: MR08-SS109D-08D
Matrix: Soil
Workgroup Number: WG290288
Collect Date: 12/08/2008 09:00
Sample Tag: 01

PrePrep Method: NONE
Prep Method: 3051
Analytical Method: 6020
Analyst: JYH
Dilution: 1
Units: mg/kg

Instrument: ELAN-ICP
Prep Date: 12/10/2008 08:22
Cal Date: 12/11/2008 10:44
Run Date: 12/11/2008 21:25
File ID: EL.121108.212517
Percent Solid: 94.8

Analyte	CAS. Number	Result	Qual	RL	MDL
Arsenic, Total	7440-38-2	3.47		0.316	0.0790
Lead, Total	7439-92-1	3.65 J		0.421	0.105
Selenium, Total	7782-49-2	0.495		0.421	0.105

MSL

Microbac

1165 lw 3/9/09

2

Sample Number:	L08120261-02	PrePrep Method:	NONE	Instrument:	HYDRA
Client ID:	MR08-SS109D-08D	Prep Method:	7471A	Prep Date:	12/11/2008 12:49
Matrix:	Soil	Analytical Method:	7471A	Cal Date:	12/12/2008 15:06
Workgroup Number:	WG290413	Analyst:	ADC	Run Date:	12/12/2008 15:21
Collect Date:	12/08/2008 09:00	Dilution:	1	File ID:	HY.121208.152149
Sample Tag:	01	Units:	mg/kg	Percent Solid:	94.8

Analyte	CAS. Number	Result	Qual	RL	MDL
Mercury, Total	7439-97-6	0.0257	J	0.104	0.0208

J Estimated ; the analyte concentration was less than the low standard (LOQ)

Microbac

2455 QCJ 3/9/09

3

Sample Number: L08120261-03
Client ID: MR08-SS104-08D
Matrix: Soil
Workgroup Number: WG290848
Collect Date: 12/08/2008 10:00
Sample Tag: 01

PrePrep Method: NONE
Prep Method: 3051
Analytical Method: 6010B
Analyst: KHR
Dilution: 1
Units: mg/kg

Instrument: IRIS-ICP
Prep Date: 12/15/2008 14:10
Cal Date: 12/18/2008 11:38
Run Date: 12/18/2008 18:28
File ID: IR.121808.182800
Percent Solid: 86.1

Analyte	CAS. Number	Result	Qual	RL	MDL	
Silver, Total	7440-22-4		U	0.876	0.219	
Barium, Total	7440-39-3	9.41		0.438	0.0876	
Cadmium, Total	7440-43-9	0.322		0.175	0.0438	
Chromium, Total	7440-47-3	6.41 J		0.876	0.105	SD
Copper, Total	7440-50-8	42.6		1.75	0.438	
Antimony, Total	7440-36-0	0.777	J	1.75	0.438	
Zinc, Total	7440-66-6	65.9 J		1.75	0.438	SD

U Undetected; the analyte was analyzed for, but not detected.
J Estimated ; the analyte concentration was less than the low standard (LOQ)

Microbac

 kw 3/9/09

3

Sample Number: L08120261-03
Client ID: MR08-SS104-08D
Matrix: Soil
Workgroup Number: WG290288
Collect Date: 12/08/2008 10:00
Sample Tag: 01

PrePrep Method: NONE
Prep Method: 3051
Analytical Method: 6020
Analyst: JYH
Dilution: 1
Units: mg/kg

Instrument: ELAN-ICP
Prep Date: 12/10/2008 08:22
Cal Date: 12/11/2008 10:44
Run Date: 12/11/2008 21:02
File ID: EL.121108.210201
Percent Solid: 86.1

Analyte	CAS. Number	Result	Qual	RL	MDL
Arsenic, Total	7440-38-2	0.522		0.334	0.0834
Selenium, Total	7782-49-2	0.486		0.445	0.111

Microbac

1166 AW 3/9/09

3

Sample Number:	L08120261-03	PrePrep Method:	NONE	Instrument:	ELAN-ICP
Client ID:	MR08-SS104-08D	Prep Method:	3051	Prep Date:	12/10/2008 08:22
Matrix:	Soil	Analytical Method:	6020	Cal Date:	12/12/2008 12:20
Workgroup Number:	WG290288	Analyst:	JYH	Run Date:	12/12/2008 13:54
Collect Date:	12/08/2008 10:00	Dilution:	10	File ID:	EL.121208.135422
Sample Tag:	DL01	Units:	mg/kg	Percent Solid:	86.1

Analyte	CAS. Number	Result	Qual	RL	MDL
Lead, Total	7439-92-1	27.5 J		4.45	1.11

MSL

Microbac

1167 LW 3/9/09

3

Sample Number: L08120261-03
Client ID: MR08-SS104-08D
Matrix: Soil
Workgroup Number: WG290413
Collect Date: 12/08/2008 10:00
Sample Tag: 01

PrePrep Method: NONE
Prep Method: 7471A
Analytical Method: 7471A
Analyst: ADC
Dilution: 1
Units: mg/kg

Instrument: HYDRA
Prep Date: 12/11/2008 12:49
Cal Date: 12/12/2008 15:06
Run Date: 12/12/2008 15:23
File ID: HY.121208.152331
Percent Solid: 86.1

Analyte	CAS. Number	Result	Qual	RL	MDL
Mercury, Total	7439-97-6	0.0265	J	0.109	0.0219

J Estimated ; the analyte concentration was less than the low standard (LOQ)

Microbac

2456 MW 3/9/09

6

Sample Number: L08120261-06
Client ID: MR08-SS105-08D
Matrix: Soil
Workgroup Number: WG290848
Collect Date: 12/08/2008 11:00
Sample Tag: 01

PrePrep Method: NONE
Prep Method: 3051
Analytical Method: 6010B
Analyst: KHR
Dilution: 1
Units: mg/kg

Instrument: IRIS-ICP
Prep Date: 12/15/2008 14:12
Cal Date: 12/18/2008 11:38
Run Date: 12/18/2008 18:46
File ID: IR.121808.184600
Percent Solid: 94.2

Analyte	CAS. Number	Result	Qual	RL	MDL	
Silver, Total	7440-22-4	0.352	J	0.721	0.180	
Barium, Total	7440-39-3	7.60		0.361	0.0721	
Cadmium, Total	7440-43-9	0.757		0.144	0.0361	
Chromium, Total	7440-47-3	6.85 J		0.721	0.0866	SD
Copper, Total	7440-50-8	5.21		1.44	0.361	
Antimony, Total	7440-36-0	1.14	J	1.44	0.361	
Zinc, Total	7440-66-6	47.0 J		1.44	0.361	SD

J Estimated ; the analyte concentration was less than the low standard (LOQ)

Microbac

361 RW 3/9/09

6

Sample Number:	L08120261-06	PrePrep Method:	NONE	Instrument:	ELAN-ICP
Client ID:	MR08-SS105-08D	Prep Method:	3051	Prep Date:	12/10/2008 08:22
Matrix:	Soil	Analytical Method:	6020	Cal Date:	12/11/2008 10:44
Workgroup Number:	WG290288	Analyst:	JYH	Run Date:	12/11/2008 21:52
Collect Date:	12/08/2008 11:00	Dilution:	1	File ID:	EL.121108.215256
Sample Tag:	01	Units:	mg/kg	Percent Solid:	94.2

Analyte	CAS. Number	Result	Qual	RL	MDL
Arsenic, Total	7440-38-2	4.04		0.315	0.0786
Lead, Total	7439-92-1	14.2 J		0.419	0.105
Selenium, Total	7782-49-2	0.391	J	0.419	0.105

MSL

J Estimated ; the analyte concentration was less than the low standard (LOQ)

Microbac

1172 LW 3/9/09

6

Sample Number:	L08120261-06	PrePrep Method:	NONE	Instrument:	HYDRA
Client ID:	MR08-SS105-08D	Prep Method:	7471A	Prep Date:	12/11/2008 12:49
Matrix:	Soil	Analytical Method:	7471A	Cal Date:	12/12/2008 15:06
Workgroup Number:	WG290413	Analyst:	ADC	Run Date:	12/12/2008 15:31
Collect Date:	12/08/2008 11:00	Dilution:	1	File ID:	HY.121208.153125
Sample Tag:	01	Units:	mg/kg	Percent Solid:	94.2

Analyte	CAS. Number	Result	Qual	RL	MDL
Mercury, Total	7439-97-6		U	0.100	0.0201

U Undetected; the analyte was analyzed for, but not detected.

Microbac

2459 kw 3/9/09

7

Sample Number: L08120261-07
Client ID: MR08-SS106-08D
Matrix: Soil
Workgroup Number: WG290853
Collect Date: 12/08/2008 11:30
Sample Tag: 01

PrePrep Method: NONE
Prep Method: 3051
Analytical Method: 6010B
Analyst: KHR
Dilution: 1
Units: mg/kg

Instrument: IRIS-ICP
Prep Date: 12/16/2008 09:40
Cal Date: 12/18/2008 11:38
Run Date: 12/18/2008 19:17
File ID: IR.121808.191700
Percent Solid: 93.4

Analyte	CAS. Number	Result	Qual	RL	MDL
Silver, Total	7440-22-4	0.265	J	0.799	0.200
Barium, Total	7440-39-3	3.79		0.400	0.0799
Cadmium, Total	7440-43-9	0.748		0.160	0.0400
Copper, Total	7440-50-8	2.27		1.60	0.400
Antimony, Total	7440-36-0	0.646	J	1.60	0.400
Zinc, Total	7440-66-6	33.5 J		1.60	0.400

SD

J Estimated ; the analyte concentration was less than the low standard (LOQ)

Microbac

362 lw 3/9/09

7

Sample Number: L08120261-07
Client ID: MR08-SS106-08D
Matrix: Soil
Workgroup Number: WG290853
Collect Date: 12/08/2008 11:30
Sample Tag: DL01

PrePrep Method: NONE
Prep Method: 3051
Analytical Method: 6010B
Analyst: KHR
Dilution: 5
Units: mg/kg

Instrument: IRIS-ICP
Prep Date: 12/16/2008 09:40
Cal Date: 12/20/2008 10:22
Run Date: 12/20/2008 11:30
File ID: IR.122008.113000
Percent Solid: 93.4

Analyte	CAS. Number	Result	Qual	RL	MDL
Chromium, Total	7440-47-3	6.08 J		4.00	0.480

SD

Microbac

363 LW 3/9/09

7

Sample Number: L08120261-07
Client ID: MR08-SS106-08D
Matrix: Soil
Workgroup Number: WG290288
Collect Date: 12/08/2008 11:30
Sample Tag: 01

PrePrep Method: NONE
Prep Method: 3051
Analytical Method: 6020
Analyst: JYH
Dilution: 1
Units: mg/kg

Instrument: ELAN-ICP
Prep Date: 12/10/2008 08:22
Cal Date: 12/11/2008 10:44
Run Date: 12/11/2008 21:58
File ID: EL.121108.215820
Percent Solid: 93.4

Analyte	CAS. Number	Result	Qual	RL	MDL
Arsenic, Total	7440-38-2	4.37		0.313	0.0781
Lead, Total	7439-92-1	3.37 J		0.417	0.104
Selenium, Total	7782-49-2	0.461		0.417	0.104

MSL

Microbac

1173 MW 3/9/09

7

Sample Number:	L08120261-07	PrePrep Method:	NONE	Instrument:	HYDRA
Client ID:	MR08-SS106-08D	Prep Method:	7471A	Prep Date:	12/11/2008 12:49
Matrix:	Soil	Analytical Method:	7471A	Cal Date:	12/12/2008 15:06
Workgroup Number:	WG290413	Analyst:	ADC	Run Date:	12/12/2008 15:33
Collect Date:	12/08/2008 11:30	Dilution:	1	File ID:	HY.121208.153309
Sample Tag:	01	Units:	mg/kg	Percent Solid:	93.4

Analyte	CAS. Number	Result	Qual	RL	MDL
Mercury, Total	7439-97-6		U	0.106	0.0212

U Undetected; the analyte was analyzed for, but not detected.

Microbac

2460 MW 3/9/09

8

Sample Number: L08120261-08
Client ID: MR08-IS104-1-2-08D
Matrix: Soil
Workgroup Number: WG290853
Collect Date: 12/08/2008 12:20
Sample Tag: 01

PrePrep Method: NONE
Prep Method: 3051
Analytical Method: 6010B
Analyst: KHR
Dilution: 1
Units: mg/kg

Instrument: IRIS-ICP
Prep Date: 12/16/2008 09:41
Cal Date: 12/18/2008 11:38
Run Date: 12/18/2008 19:54
File ID: IR.121808.195400
Percent Solid: 85.8

Analyte	CAS. Number	Result	Qual	RL	MDL	
Silver, Total	7440-22-4		U	0.880	0.220	
Barium, Total	7440-39-3	3.09		0.440	0.0880	
Cadmium, Total	7440-43-9		U	0.176	0.0440	
Chromium, Total	7440-47-3	3.94 J		0.880	0.106	SD
Copper, Total	7440-50-8		U	1.76	0.440	
Antimony, Total	7440-36-0		U	1.76	0.440	
Zinc, Total	7440-66-6	1.66 J	J	1.76	0.440	SD

U Undetected; the analyte was analyzed for, but not detected.
J Estimated ; the analyte concentration was less than the low standard (LOQ)

Microbac

364 CW 3/9/09

8

Sample Number: L08120261-08
Client ID: MR08-IS104-1-2-08D
Matrix: Soil
Workgroup Number: WG290288
Collect Date: 12/08/2008 12:20
Sample Tag: 01

PrePrep Method: NONE
Prep Method: 3051
Analytical Method: 6020
Analyst: JYH
Dilution: 1
Units: mg/kg

Instrument: ELAN-ICP
Prep Date: 12/10/2008 08:22
Cal Date: 12/11/2008 10:44
Run Date: 12/11/2008 22:03
File ID: EL.121108.220342
Percent Solid: 85.8

Analyte	CAS. Number	Result	Qual	RL	MDL
Arsenic, Total	7440-38-2	0.225	J	0.343	0.0857
Lead, Total	7439-92-1	2.51 J		0.457	0.114
Selenium, Total	7782-49-2	0.514		0.457	0.114

MSL

J Estimated ; the analyte concentration was less than the low standard (LOQ)

Microbac

1174 3/9/09

8

Sample Number: L08120261-08
Client ID: MR08-IS104-1-2-08D
Matrix: Soil
Workgroup Number: WG290413
Collect Date: 12/08/2008 12:20
Sample Tag: 01

PrePrep Method: NONE
Prep Method: 7471A
Analytical Method: 7471A
Analyst: ADC
Dilution: 1
Units: mg/kg

Instrument: HYDRA
Prep Date: 12/11/2008 12:49
Cal Date: 12/12/2008 15:06
Run Date: 12/12/2008 15:39
File ID: HY.121208.153929
Percent Solid: 85.8

Analyte	CAS. Number	Result	Qual	RL	MDL
Mercury, Total	7439-97-6		U	0.115	0.0230

U Undetected; the analyte was analyzed for, but not detected.

Microbac

2461 RW 3/9/09

11

Sample Number: L08120261-11
Client ID: MR08-IS105-2-3-08D
Matrix: Soil
Workgroup Number: WG290853
Collect Date: 12/08/2008 12:55
Sample Tag: 01

PrePrep Method: NONE
Prep Method: 3051
Analytical Method: 6010B
Analyst: KHR
Dilution: 1
Units: mg/kg

Instrument: IRIS-ICP
Prep Date: 12/16/2008 09:44
Cal Date: 12/18/2008 11:38
Run Date: 12/18/2008 20:13
File ID: IR.121808.201300
Percent Solid: 91.0

Analyte	CAS. Number	Result	Qual	RL	MDL	
Silver, Total	7440-22-4		U	0.833	0.208	
Barium, Total	7440-39-3	4.65		0.417	0.0833	
Cadmium, Total	7440-43-9		U	0.167	0.0417	
Chromium, Total	7440-47-3	4.79 J		0.833	0.100	SD
Copper, Total	7440-50-8		U	1.67	0.417	
Antimony, Total	7440-36-0		U	1.67	0.417	
Zinc, Total	7440-66-6	1.63 J	~~U~~	1.67	0.417	SD

U Undetected; the analyte was analyzed for, but not detected.
J Estimated ; the analyte concentration was less than the low standard (LOQ)

Microbac

 3/9/09

11

Sample Number: L08120261-11
Client ID: MR08-IS105-2-3-08D
Matrix: Soil
Workgroup Number: WG290288
Collect Date: 12/08/2008 12:55
Sample Tag: 01

PrePrep Method: NONE
Prep Method: 3051
Analytical Method: 6020
Analyst: JYH
Dilution: 1
Units: mg/kg

Instrument: ELAN-ICP
Prep Date: 12/10/2008 08:22
Cal Date: 12/11/2008 10:44
Run Date: 12/11/2008 22:19
File ID: EL.121108.221952
Percent Solid: 91.0

Analyte	CAS. Number	Result	Qual	RL	MDL
Arsenic, Total	7440-38-2	0.328		0.323	0.0807
Lead, Total	7439-92-1	3.80 J		0.430	0.108
Selenium, Total	7782-49-2	0.242	J	0.430	0.108

MSL

J Estimated ; the analyte concentration was less than the low standard (LOQ)

Microbac

1177 MW 3/9/09

11

Sample Number: L08120261-11
Client ID: MR08-IS105-2-3-08D
Matrix: Soil
Workgroup Number: WG290413
Collect Date: 12/08/2008 12:55
Sample Tag: 01

PrePrep Method: NONE
Prep Method: 7471A
Analytical Method: 7471A
Analyst: ADC
Dilution: 1
Units: mg/kg

Instrument: HYDRA
Prep Date: 12/11/2008 12:49
Cal Date: 12/12/2008 15:06
Run Date: 12/12/2008 15:45
File ID: HY.121208.154521
Percent Solid: 91.0

Analyte	CAS. Number	Result	Qual	RL	MDL
Mercury, Total	7439-97-6		U	0.103	0.0206

U Undetected; the analyte was analyzed for, but not detected.

Microbac

2464 lew 3/9/09

12

Sample Number: L08120261-12
Client ID: MR08-IS106-2-3-08D
Matrix: Soil
Workgroup Number: WG290853
Collect Date: 12/08/2008 13:30
Sample Tag: 01

PrePrep Method: NONE
Prep Method: 3051
Analytical Method: 6010B
Analyst: KHR
Dilution: 1
Units: mg/kg

Instrument: IRIS-ICP
Prep Date: 12/16/2008 09:44
Cal Date: 12/18/2008 11:38
Run Date: 12/18/2008 20:19
File ID: IR.121808.201900
Percent Solid: 86.5

Analyte	CAS. Number	Result	Qual	RL	MDL	
Silver, Total	7440-22-4		U	0.861	0.215	
Barium, Total	7440-39-3	5.51		0.431	0.0861	
Cadmium, Total	7440-43-9		U	0.172	0.0431	
Chromium, Total	7440-47-3	2.78 J		0.861	0.103	SD
Copper, Total	7440-50-8		U	1.72	0.431	
Antimony, Total	7440-36-0		U	1.72	0.431	
Zinc, Total	7440-66-6	2.04 J		1.72	0.431	SD

U Undetected; the analyte was analyzed for, but not detected.

Microbac

368 LW 3/9/09

12

Sample Number: L08120261-12
Client ID: MR08-IS106-2-3-08D
Matrix: Soil
Workgroup Number: WG290288
Collect Date: 12/08/2008 13:30
Sample Tag: 01

PrePrep Method: NONE
Prep Method: 3051
Analytical Method: 6020
Analyst: JYH
Dilution: 1
Units: mg/kg

Instrument: ELAN-ICP
Prep Date: 12/10/2008 08:22
Cal Date: 12/11/2008 10:44
Run Date: 12/11/2008 22:25
File ID: EL.121108.222516
Percent Solid: 86.5

Analyte	CAS. Number	Result	Qual	RL	MDL
Arsenic, Total	7440-38-2	0.511		0.337	0.0842
Lead, Total	7439-92-1	3.93 J		0.449	0.112
Selenium, Total	7782-49-2	0.457		0.449	0.112

MSL

Microbac

1178 LW 3/9/09

12

Sample Number:	L08120261-12	PrePrep Method:	NONE	Instrument:	HYDRA
Client ID:	MR08-IS106-2-3-08D	Prep Method:	7471A	Prep Date:	12/11/2008 12:49
Matrix:	Soil	Analytical Method:	7471A	Cal Date:	12/12/2008 15:06
Workgroup Number:	WG290413	Analyst:	ADC	Run Date:	12/12/2008 15:47
Collect Date:	12/08/2008 13:30	Dilution:	1	File ID:	HY.121208.154703
Sample Tag:	01	Units:	mg/kg	Percent Solid:	86.5

Analyte	CAS. Number	Result	Qual	RL	MDL
Mercury, Total	7439-97-6		U	0.114	0.0227

U Undetected; the analyte was analyzed for, but not detected.

Microbac

2465 LW 3/9/09

13

Sample Number: L08120261-13
Client ID: MR08-SS087-08D
Matrix: Soil
Workgroup Number: WG290853
Collect Date: 12/08/2008 14:20
Sample Tag: 01

PrePrep Method: NONE
Prep Method: 3051
Analytical Method: 6010B
Analyst: KHR
Dilution: 1
Units: mg/kg

Instrument: IRIS-ICP
Prep Date: 12/16/2008 09:45
Cal Date: 12/18/2008 11:38
Run Date: 12/18/2008 20:25
File ID: IR.121808.202500
Percent Solid: 92.4

Analyte	CAS. Number	Result	Qual	RL	MDL	
Silver, Total	7440-22-4	0.308	J	0.810	0.203	
Barium, Total	7440-39-3	4.08		0.405	0.0810	
Cadmium, Total	7440-43-9	0.721		0.162	0.0405	
Chromium, Total	7440-47-3	4.82 J		0.810	0.0972	SD
Copper, Total	7440-50-8	1.84		1.62	0.405	
Antimony, Total	7440-36-0	0.477	J	1.62	0.405	
Zinc, Total	7440-66-6	28.5 J		1.62	0.405	SD

J Estimated ; the analyte concentration was less than the low standard (LOQ)

Microbac

369 lw 3/9/09

13

Sample Number: L08120261-13
Client ID: MR08-SS087-08D
Matrix: Soil
Workgroup Number: WG290288
Collect Date: 12/08/2008 14:20
Sample Tag: 01

PrePrep Method: NONE
Prep Method: 3051
Analytical Method: 6020
Analyst: JYH
Dilution: 1
Units: mg/kg

Instrument: ELAN-ICP
Prep Date: 12/10/2008 08:22
Cal Date: 12/11/2008 10:44
Run Date: 12/11/2008 22:30
File ID: EL.121108.223040
Percent Solid: 92.4

Analyte	CAS. Number	Result	Qual	RL	MDL
Arsenic, Total	7440-38-2	4.84		0.304	0.0761
Lead, Total	7439-92-1	1.57 J		0.406	0.101 MSL
Selenium, Total	7782-49-2	0.313	J	0.406	0.101

J Estimated ; the analyte concentration was less than the low standard (LOQ)

Microbac

1179 RW 3/9/09

13

Sample Number:	L08120261-13	PrePrep Method:	NONE	Instrument:	HYDRA
Client ID:	MR08-SS087-08D	Prep Method:	7471A	Prep Date:	12/11/2008 12:49
Matrix:	Soil	Analytical Method:	7471A	Cal Date:	12/12/2008 15:06
Workgroup Number:	WG290413	Analyst:	ADC	Run Date:	12/12/2008 15:49
Collect Date:	12/08/2008 14:20	Dilution:	1	File ID:	HY.121208.154910
Sample Tag:	01	Units:	mg/kg	Percent Solid:	92.4

Analyte	CAS. Number	Result	Qual	RL	MDL
Mercury, Total	7439-97-6		U	0.102	0.0203

U Undetected; the analyte was analyzed for, but not detected.

Microbac

2466 JW 3/9/09

14

Sample Number: L08120261-14
Client ID: MR08-IS087-2-3-08D
Matrix: Soil
Workgroup Number: WG290853
Collect Date: 12/08/2008 14:45
Sample Tag: 01

PrePrep Method: NONE
Prep Method: 3051
Analytical Method: 6010B
Analyst: KHR
Dilution: 1
Units: mg/kg

Instrument: IRIS-ICP
Prep Date: 12/16/2008 09:45
Cal Date: 12/18/2008 11:38
Run Date: 12/18/2008 20:31
File ID: IR.121808.203100
Percent Solid: 87.3

Analyte	CAS. Number	Result	Qual	RL	MDL	
Silver, Total	7440-22-4	0.263	J	0.817	0.204	
Barium, Total	7440-39-3	5.57		0.408	0.0817	
Cadmium, Total	7440-43-9	0.0727	J	0.163	0.0408	
Chromium, Total	7440-47-3	3.57 J		0.817	0.0980	SD
Copper, Total	7440-50-8	0.771	J	1.63	0.408	
Antimony, Total	7440-36-0	0.788	J	1.63	0.408	
Zinc, Total	7440-66-6	3.81 J		1.63	0.408	SD

J Estimated ; the analyte concentration was less than the low standard (LOQ)

Microbac

370 LW 3/9/09

14

Sample Number: L08120261-14
Client ID: MR08-IS087-2-3-08D
Matrix: Soil
Workgroup Number: WG290288
Collect Date: 12/08/2008 14:45
Sample Tag: 01

PrePrep Method: NONE
Prep Method: 3051
Analytical Method: 6020
Analyst: JYH
Dilution: 1
Units: mg/kg

Instrument: ELAN-ICP
Prep Date: 12/10/2008 08:22
Cal Date: 12/11/2008 10:44
Run Date: 12/11/2008 22:36
File ID: EL.121108.223605
Percent Solid: 87.3

Analyte	CAS. Number	Result	Qual	RL	MDL
Arsenic, Total	7440-38-2	0.954		0.329	0.0823
Lead, Total	7439-92-1	3.86 J		0.439	0.110
Selenium, Total	7782-49-2	0.672		0.439	0.110

MSL

Microbac

1180 RW 3/9/09

14

Sample Number: L08120261-14
Client ID: MR08-IS087-2-3-08D
Matrix: Soil
Workgroup Number: WG290413
Collect Date: 12/08/2008 14:45
Sample Tag: 01

PrePrep Method: NONE
Prep Method: 7471A
Analytical Method: 7471A
Analyst: ADC
Dilution: 1
Units: mg/kg

Instrument: HYDRA
Prep Date: 12/11/2008 12:49
Cal Date: 12/12/2008 15:06
Run Date: 12/12/2008 15:50
File ID: HY.121208.155052
Percent Solid: 87.3

Analyte	CAS. Number	Result	Qual	RL	MDL
Mercury, Total	7439-97-6		U	0.111	0.0221

U Undetected; the analyte was analyzed for, but not detected.

Microbac

246 DW 3/9/09

15

Sample Number: L08120261-15
Client ID: MR08-SS086-08D
Matrix: Soil
Workgroup Number: WG290853
Collect Date: 12/08/2008 15:15
Sample Tag: 01

PrePrep Method: NONE
Prep Method: 3051
Analytical Method: 6010B
Analyst: KHR
Dilution: 1
Units: mg/kg

Instrument: IRIS-ICP
Prep Date: 12/16/2008 09:46
Cal Date: 12/18/2008 11:38
Run Date: 12/18/2008 20:37
File ID: IR.121808.203700
Percent Solid: 91.1

Analyte	CAS. Number	Result	Qual	RL	MDL	
Silver, Total	7440-22-4	0.359	J	0.802	0.201	
Barium, Total	7440-39-3	5.22		0.401	0.0802	
Cadmium, Total	7440-43-9	0.985		0.160	0.0401	
Chromium, Total	7440-47-3	5.29 J		0.802	0.0963	SD
Copper, Total	7440-50-8	2.79		1.60	0.401	
Antimony, Total	7440-36-0	0.692	J	1.60	0.401	
Zinc, Total	7440-66-6	26.7 J		1.60	0.401	SD

J Estimated ; the analyte concentration was less than the low standard (LOQ)

Microbac

371 hw 3/9/09

15

Sample Number: L08120261-15
Client ID: MR08-SS086-08D
Matrix: Soil
Workgroup Number: WG290291
Collect Date: 12/08/2008 15:15
Sample Tag: 01

PrePrep Method: NONE
Prep Method: 3051
Analytical Method: 6020
Analyst: JYH
Dilution: 1
Units: mg/kg

Instrument: ELAN-ICP
Prep Date: 12/10/2008 11:27
Cal Date: 12/18/2008 10:46
Run Date: 12/18/2008 18:20
File ID: EL.121808.182007
Percent Solid: 91.1

Analyte	CAS. Number	Result	Qual	RL	MDL
Arsenic, Total	7440-38-2	6.94		0.327	0.0817
Lead, Total	7439-92-1	2.22 J		0.436	0.109
Selenium, Total	7782-49-2	0.293	J	0.436	0.109

MSL

J Estimated ; the analyte concentration was less than the low standard (LOQ)

Microbac

1181 lw 3/9/09

15

Sample Number: L08120261-15
Client ID: MR08-SS086-08D
Matrix: Soil
Workgroup Number: WG290413
Collect Date: 12/08/2008 15:15
Sample Tag: 01

PrePrep Method: NONE
Prep Method: 7471A
Analytical Method: 7471A
Analyst: ADC
Dilution: 1
Units: mg/kg

Instrument: HYDRA
Prep Date: 12/11/2008 12:49
Cal Date: 12/12/2008 15:06
Run Date: 12/12/2008 15:52
File ID: HY.121208.155238
Percent Solid: 91.1

Analyte	CAS. Number	Result	Qual	RL	MDL
Mercury, Total	7439-97-6		U	0.110	0.0219

U Undetected; the analyte was analyzed for, but not detected.

Microbac®

2468 MW 3/9/09

18

Sample Number: L08120261-18
Client ID: MR08-IS086-2-3-08D
Matrix: Soil
Workgroup Number: WG290856
Collect Date: 12/08/2008 15:30
Sample Tag: 01

PrePrep Method: NONE
Prep Method: 3051
Analytical Method: 6010B
Analyst: KHR
Dilution: 1
Units: mg/kg

Instrument: IRIS-ICP
Prep Date: 12/16/2008 09:57
Cal Date: 12/18/2008 11:38
Run Date: 12/18/2008 22:40
File ID: IR.121808.224000
Percent Solid: 90.4

Analyte	CAS. Number	Result	Qual	RL	MDL
Silver, Total	7440-22-4		U	0.833	0.208
Barium, Total	7440-39-3	6.33		0.417	0.0833
Cadmium, Total	7440-43-9		U	0.167	0.0417
Chromium, Total	7440-47-3	4.67		0.833	0.100
Copper, Total	7440-50-8		U	1.67	0.417
Antimony, Total	7440-36-0		U	1.67	0.417
Zinc, Total	7440-66-6	1.39	J	1.67	0.417

U Undetected; the analyte was analyzed for, but not detected.
J Estimated ; the analyte concentration was less than the low standard (LOQ)

Microbac

374 MW 3/9/09

18

Sample Number: L08120261-18
Client ID: MR08-IS086-2-3-08D
Matrix: Soil
Workgroup Number: WG290291
Collect Date: 12/08/2008 15:30
Sample Tag: 01

PrePrep Method: NONE
Prep Method: 3051
Analytical Method: 6020
Analyst: JYH
Dilution: 1
Units: mg/kg

Instrument: ELAN-ICP
Prep Date: 12/10/2008 11:27
Cal Date: 12/18/2008 10:46
Run Date: 12/18/2008 18:58
File ID: EL.121808.185830
Percent Solid: 90.4

Analyte	CAS. Number	Result	Qual	RL	MDL
Arsenic, Total	7440-38-2	0.566		0.330	0.0824
Lead, Total	7439-92-1	3.32		0.440	0.110
Selenium, Total	7782-49-2	0.723		0.440	0.110

Microbac

1184 QW 3/9/09

18

Sample Number: L08120261-18
Client ID: MR08-IS086-2-3-08D
Matrix: Soil
Workgroup Number: WG290413
Collect Date: 12/08/2008 15:30
Sample Tag: 01

PrePrep Method: NONE
Prep Method: 7471A
Analytical Method: 7471A
Analyst: ADC
Dilution: 1
Units: mg/kg

Instrument: HYDRA
Prep Date: 12/11/2008 12:49
Cal Date: 12/12/2008 15:06
Run Date: 12/12/2008 16:01
File ID: HY.121208.160147
Percent Solid: 90.4

Analyte	CAS. Number	Result	Qual	RL	MDL
Mercury, Total	7439-97-6		U	0.108	0.0217

U Undetected; the analyte was analyzed for, but not detected.

Microbac

2471 lw 3/9/09

21

Sample Number: L08120261-21
Client ID: MR08-EB01120808-SS
Matrix: Water
Workgroup Number: WG290587
Collect Date: 12/08/2008 14:00
Sample Tag: 01

PrePrep Method: NONE
Prep Method: 3005A
Analytical Method: 6010B
Analyst: ED
Dilution: 1
Units: ug/L

Instrument: PE-ICP2
Prep Date: 12/11/2008 09:34
Cal Date: 12/16/2008 13:31
Run Date: 12/16/2008 16:51
File ID: P2.121608.165148

Analyte	CAS. Number	Result	Qual	RL	MDL
Barium, Total	7440-39-3		U	10.0	2.50
Cadmium, Total	7440-43-9		U	1.00	0.250
Chromium, Total	7440-47-3		U	10.0	2.50
Copper, Total	7440-50-8		U	20.0	5.00
Silver, Total	7440-22-4		U	6.00	2.00
Zinc, Total	7440-66-6		U	20.0	5.00

U Undetected; the analyte was analyzed for, but not detected.

Microbac

377 lw 3/9/09

21

Sample Number: L08120261-21
Client ID: MR08-EB01120808-SS
Matrix: Water
Workgroup Number: WG290255
Collect Date: 12/08/2008 14:00
Sample Tag: 01

PrePrep Method: NONE
Prep Method: 3015
Analytical Method: 6020
Analyst: JYH
Dilution: 1
Units: ug/L

Instrument: ELAN-ICP
Prep Date: 12/11/2008 08:30
Cal Date: 12/11/2008 10:44
Run Date: 12/11/2008 16:30
File ID: EL.121108.163011

Analyte	CAS. Number	Result	Qual	RL	MDL
Arsenic, Total	7440-38-2		U	1.00	0.250
Lead, Total	7439-92-1		U	1.00	0.250
Selenium, Total	7782-49-2		U	2.00	0.500

U Undetected; the analyte was analyzed for, but not detected.

Microbac

 3/9/09

21

Sample Number: L08120261-21
Client ID: MR08-EB01120808-SS
Matrix: Water
Workgroup Number: WG290255
Collect Date: 12/08/2008 14:00
Sample Tag: 02

PrePrep Method: NONE
Prep Method: 3015
Analytical Method: 6020
Analyst: JYH
Dilution: 1
Units: ug/L

Instrument: ELAN-ICP
Prep Date: 12/11/2008 08:30
Cal Date: 12/18/2008 10:46
Run Date: 12/19/2008 00:42
File ID: EL.121908.004243

Analyte	CAS. Number	Result	Qual	RL	MDL
Antimony, Total	7440-36-0		U	1.00	0.250

U Undetected; the analyte was analyzed for, but not detected.

Microbac

1188 lw 3/9/09

21

Sample Number: L08120261-21
Client ID: MR08-EB01120808-SS
Matrix: Water
Workgroup Number: WG290493
Collect Date: 12/08/2008 14:00
Sample Tag: 01

PrePrep Method: NONE
Prep Method: 7470A
Analytical Method: 7470A
Analyst: ADC
Dilution: 1
Units: ug/L

Instrument: HYDRA
Prep Date: 12/12/2008 09:34
Cal Date: 12/15/2008 10:06
Run Date: 12/15/2008 10:40
File ID: HY.121508.104047

Analyte	CAS. Number	Result	Qual	RL	MDL
Mercury	7439-97-6		U	0.400	0.100

U Undetected; the analyte was analyzed for, but not detected.

Microbac

2474 JW 3/9/09

22

Sample Number: L08120261-22
Client ID: MR08-EB01120808-IS
Matrix: Water
Workgroup Number: WG290587
Collect Date: 12/08/2008 14:30
Sample Tag: 01

PrePrep Method: NONE
Prep Method: 3005A
Analytical Method: 6010B
Analyst: ED
Dilution: 1
Units: ug/L

Instrument: PE-ICP2
Prep Date: 12/11/2008 09:34
Cal Date: 12/16/2008 13:31
Run Date: 12/16/2008 16:58
File ID: P2.121608.165802

Analyte	CAS. Number	Result	Qual	RL	MDL
Barium, Total	7440-39-3		U	10.0	2.50
Cadmium, Total	7440-43-9		U	1.00	0.250
Chromium, Total	7440-47-3		U	10.0	2.50
Copper, Total	7440-50-8		U	20.0	5.00
Silver, Total	7440-22-4		U	6.00	2.00
Zinc, Total	7440-66-6		U	20.0	5.00

U Undetected; the analyte was analyzed for, but not detected.

Microbac

378 MW 3/9/09

22

Sample Number: L08120261-22
Client ID: MR08-EB01120808-IS
Matrix: Water
Workgroup Number: WG290255
Collect Date: 12/08/2008 14:30
Sample Tag: 02

PrePrep Method: NONE
Prep Method: 3015
Analytical Method: 6020
Analyst: JYH
Dilution: 1
Units: ug/L

Instrument: ELAN-ICP
Prep Date: 12/11/2008 08:30
Cal Date: 12/18/2008 10:46
Run Date: 12/19/2008 00:48
File ID: EL.121908.004808

Analyte	CAS. Number	Result	Qual	RL	MDL
Antimony, Total	7440-36-0		U	1.00	0.250

U Undetected; the analyte was analyzed for, but not detected.

Microbac

 MW 3/9/09

22

Sample Number: L08120261-22
Client ID: MR08-EB01120808-IS
Matrix: Water
Workgroup Number: WG290255
Collect Date: 12/08/2008 14:30
Sample Tag: 01

PrePrep Method: NONE
Prep Method: 3015
Analytical Method: 6020
Analyst: JYH
Dilution: 1
Units: ug/L

Instrument: ELAN-ICP
Prep Date: 12/11/2008 08:30
Cal Date: 12/11/2008 10:44
Run Date: 12/11/2008 16:35
File ID: EL.121108.163532

Analyte	CAS. Number	Result	Qual	RL	MDL
Arsenic, Total	7440-38-2		U	1.00	0.250
Lead, Total	7439-92-1		U	1.00	0.250
Selenium, Total	7782-49-2		U	2.00	0.500

U Undetected; the analyte was analyzed for, but not detected.

Microbac

lus 3/9/09

22

Sample Number: L08120261-22
Client ID: MR08-EB01120808-IS
Matrix: Water
Workgroup Number: WG290493
Collect Date: 12/08/2008 14:30
Sample Tag: 01

PrePrep Method: NONE
Prep Method: 7470A
Analytical Method: 7470A
Analyst: ADC
Dilution: 1
Units: ug/L

Instrument: HYDRA
Prep Date: 12/12/2008 09:34
Cal Date: 12/15/2008 10:06
Run Date: 12/15/2008 10:43
File ID: HY.121508.104312

Analyte	CAS. Number	Result	Qual	RL	MDL
Mercury	7439-97-6		U	0.400	0.100

U Undetected; the analyte was analyzed for, but not detected.

Microbac

2475 JW 3/9/09

ENVIRONMENTAL
Data Services, Inc.

EXPLOSIVES, PETN & NITROGLYCERIN

USEPA Region IV - Level IV Review

Site: MCB Camp Lejeune, TO-09 SDG #: L08120263

Client: CH2M HILL, Inc., Virginia Beach, Virginia Date: March 10, 2009

Laboratory: Microbac Laboratories, Inc., Marietta, Ohio Reviewer: Linda Sulkowski

EDS ID	Client Sample ID	Laboratory Sample ID	Matrix
1	MR08-SS056-08D	L08120263-01	Soil
2	MR08-IS056-2-3-08D	L08120263-02	Soil
3	MR08-SS057-08D	L08120263-03	Soil
4	MR08-IS057-2-3-08D	L08120263-04	Soil
5	MR08-SS058-08D	L08120263-05	Soil
6	MR08-IS058-2-3-08D	L08120263-06	Soil
7	MR08-SS059-08D	L08120263-07	Soil
8	MR08-SS059D-08D	L08120263-08	Soil
9	MR08-IS059-3-4-08D	L08120263-09	Soil
10	MR08-IS059D-3-4-08D	L08120263-10	Soil
11	MR08-SS060-08D	L08120263-11	Soil
12	MR08-IS060-2-3-08D	L08120263-12	Soil
13	MR08-SS061-08D	L08120263-13	Soil
14	MR08-IS061-2-3-08D	L08120263-14	Soil
15	MR08-SS062-08D	L08120263-15	Soil
16	MR08-IS062-2-3-08D	L08120263-16	Soil
17	MR08-SS063-08D	L08120263-17	Soil
18	MR08-IS063-2-3-08D	L08120263-18	Soil
19	MR08-SS064-08D	L08120263-19	Soil
20	MR08-IS064-2-3-08D	L08120263-20	Soil
21	MR08-SS065-08D	L08120263-21	Soil
22	MR08-IS065-1-2-08D	L08120263-22	Soil
23	MR08-SS066-08D	L08120263-23	Soil
24	MR08-IS066-2-3-08D	L08120263-24	Soil
25	MR08-EB01120608-SS	L08120263-25	Water
26	MR08-EB01120608-IS	L08120263-26	Water
27	MR08-FB01120608	L08120263-27	Water

The USEPA "Contract Laboratory Program National Functional Guidelines for Organic Data Review," October 1999, and professional judgement were used in evaluating the data in this summary report.

Holding Times - All samples were extracted within 7 days for water samples, 14 days for soil samples and analyzed within 40 days.

Initial Calibration - The initial calibrations exhibited acceptable %RSD and/or correlation coefficient values.

Calibration Verification - The continuing calibrations exhibited acceptable %D values.

Surrogates - All samples exhibited acceptable surrogate recoveries.

MS/MSD - A MS/MSD sample was not analyzed.

Laboratory Control Sample - The LCS samples exhibited acceptable %R values.

Method Blank - The method blanks were free of contamination.

Field and Equipment Blank - Field QC results are summarized below.

Blank ID	Compound	Conc. ug/L	Action Level ug/L	Qualifier	Affected Samples
MR08-EB01120608-SS	None - ND	-	-	-	-
MR08-EB01120608-IS	None - ND	-	-	-	-
MR08-FB01120608	None - ND	-	-	-	-

Field Duplicates - Field duplicate results are summarized below.

Compound	MR08-SS059-08D mg/kg	MR08-SS059D-08D mg/kg	RPD	Qualifier
None	ND	ND	-	-

Compound	MR08-IS059-3-4-08D mg/kg	MR08-IS059D-3-4-08D mg/kg	RPD	Qualifier
None	ND	ND	-	-

Compound Identification - Retention times were acceptable and no further action was taken.

Compound Quantitation - No discrepancies were identified.

Report Number: L08120263
Report Date : January 8, 2009

Sample Number: L08120263-01
Client ID: MR08-SS056- 08D
Matrix: Soil
Workgroup Number: WG290759
Collect Date: 12/06/2008 08:30
Sample Tag: 01

PrePrep Method: NONE
Prep Method: METHOD
Analytical Method: 8330MOD
Analyst: ECL
Dilution: 1
Units: mg/kg

Instrument: HPLC5
Prep Date: 12/14/2008 09:00
Cal Date: 12/16/2008 16:51
Run Date: 12/18/2008 11:29
File ID: 5L003365.F

Analyte	CAS. Number	Result	Qual	RL	MDL
1,3,5-Trinitrobenzene	99-35-4		U	0.300	0.0999
1,3-Dinitrobenzene	99-65-0		U	0.300	0.0999
2,4,6-Trinitrotoluene	118-96-7	U	~~Q~~	0.300	0.0999
2,4-Dinitrotoluene	121-14-2		U	0.300	0.0999
2,6-Dinitrotoluene	606-20-2		U	0.300	0.0999
2-Amino-4,6-dinitrotoluene	35572-78-2		U	0.300	0.0999
2-Nitrotoluene	88-72-2		U	0.300	0.0999
3-Nitrotoluene	99-08-1		U	0.300	0.0999
4-Nitrotoluene	99-99-0		U	0.300	0.0999
4-Amino-2,6-dinitrotoluene	19406-51-0		U	0.300	0.0999
HMX	2691-41-0		U	0.300	0.0999
Nitrobenzene	98-95-3		U	0.300	0.0999
RDX	121-82-4		U	0.300	0.0999
Tetryl	479-45-8	U	~~Q~~	0.300	0.0999
Nitroglycerin	55-63-0		U	0.300	0.0999

Surrogate	% Recovery	Lower	Upper	Qual
1,2-Dinitrobenzene	84.8	50	150	

U Undetected; the analyte was analyzed for, but not detected.
Q One or more quality control criteria failed. See narrative.

Microbac

14 lw 3/10/09

Sample Number: L08120263-01
Client ID: MR08-SS056- 08D
Matrix: Soil
Workgroup Number: WG290759
Collect Date: 12/06/2008 08:30
Sample Tag: 02

PrePrep Method: NONE
Prep Method: METHOD
Analytical Method: 8330MOD
Analyst: ECL
Dilution: 1
Units: mg/kg

Instrument: HPLC5
Prep Date: 12/14/2008 09:00
Cal Date: 12/16/2008 16:51
Run Date: 12/24/2008 19:00
File ID: 5L003549.F

Analyte	CAS. Number	Result	Qual	RL	MDL
PETN	78-11-5		U	0.300	0.0999

U Undetected; the analyte was analyzed for, but not detected.

Microbac

15 JW 3/10/09

2

Sample Number: L08120263-02
Client ID: MR08-IS056-2-3- 08D
Matrix: Soil
Workgroup Number: WG290759
Collect Date: 12/06/2008 08:45
Sample Tag: 01

PrePrep Method: NONE
Prep Method: METHOD
Analytical Method: 8330MOD
Analyst: ECL
Dilution: 1
Units: mg/kg

Instrument: HPLC5
Prep Date: 12/14/2008 09:00
Cal Date: 12/16/2008 16:51
Run Date: 12/18/2008 12:07
File ID: 5L003366.F

Analyte	CAS. Number	Result	Qual	RL	MDL
1,3,5-Trinitrobenzene	99-35-4		U	0.298	0.0993
1,3-Dinitrobenzene	99-65-0		U	0.298	0.0993
2,4,6-Trinitrotoluene	118-96-7		U ~~Q~~	0.298	0.0993
2,4-Dinitrotoluene	121-14-2		U	0.298	0.0993
2,6-Dinitrotoluene	606-20-2		U	0.298	0.0993
2-Amino-4,6-dinitrotoluene	35572-78-2		U	0.298	0.0993
2-Nitrotoluene	88-72-2		U	0.298	0.0993
3-Nitrotoluene	99-08-1		U	0.298	0.0993
4-Nitrotoluene	99-99-0		U	0.298	0.0993
4-Amino-2,6-dinitrotoluene	19406-51-0		U	0.298	0.0993
HMX	2691-41-0		U	0.298	0.0993
Nitrobenzene	98-95-3		U	0.298	0.0993
RDX	121-82-4		U	0.298	0.0993
Tetryl	479-45-8		U ~~Q~~	0.298	0.0993
Nitroglycerin	55-63-0		U	0.298	0.0993

Surrogate	% Recovery	Lower	Upper	Qual
1,2-Dinitrobenzene	89.1	50	150	

U Undetected; the analyte was analyzed for, but not detected.
Q One or more quality control criteria failed. See narrative.

Microbac

 DW 3/10/09

2

Sample Number: L08120263-02
Client ID: MR08-IS056-2-3- 08D
Matrix: Soil
Workgroup Number: WG290759
Collect Date: 12/06/2008 08:45
Sample Tag: 02

PrePrep Method: NONE
Prep Method: METHOD
Analytical Method: 8330MOD
Analyst: ECL
Dilution: 1
Units: mg/kg

Instrument: HPLC5
Prep Date: 12/14/2008 09:00
Cal Date: 12/16/2008 16:51
Run Date: 12/24/2008 19:13
File ID: 5L003550.F

Analyte	CAS. Number	Result	Qual	RL	MDL
PETN	78-11-5		U	0.298	0.0993

U Undetected; the analyte was analyzed for, but not detected.

Microbac

17 lw 3/10/09

3

Sample Number: L08120263-03
Client ID: MR08-SS057- 08D
Matrix: Soil
Workgroup Number: WG290759
Collect Date: 12/06/2008 09:25
Sample Tag: 01

PrePrep Method: NONE
Prep Method: METHOD
Analytical Method: 8330MOD
Analyst: ECL
Dilution: 1
Units: mg/kg

Instrument: HPLC5
Prep Date: 12/14/2008 09:00
Cal Date: 12/16/2008 16:51
Run Date: 12/18/2008 12:45
File ID: 5L003367.F

Analyte	CAS. Number	Result	Qual	RL	MDL
1,3,5-Trinitrobenzene	99-35-4		U	0.298	0.0994
1,3-Dinitrobenzene	99-65-0		U	0.298	0.0994
2,4,6-Trinitrotoluene	118-96-7	U	~~Q~~	0.298	0.0994
2,4-Dinitrotoluene	121-14-2		U	0.298	0.0994
2,6-Dinitrotoluene	606-20-2		U	0.298	0.0994
2-Amino-4,6-dinitrotoluene	35572-78-2		U	0.298	0.0994
2-Nitrotoluene	88-72-2		U	0.298	0.0994
3-Nitrotoluene	99-08-1		U	0.298	0.0994
4-Nitrotoluene	99-99-0		U	0.298	0.0994
4-Amino-2,6-dinitrotoluene	19406-51-0		U	0.298	0.0994
HMX	2691-41-0		U	0.298	0.0994
Nitrobenzene	98-95-3		U	0.298	0.0994
RDX	121-82-4		U	0.298	0.0994
Tetryl	479-45-8	U	~~Q~~	0.298	0.0994
Nitroglycerin	55-63-0		U	0.298	0.0994

Surrogate	% Recovery	Lower	Upper	Qual
1,2-Dinitrobenzene	88.3	50	150	

U Undetected; the analyte was analyzed for, but not detected.
Q One or more quality control criteria failed. See narrative.

Microbac

19 MW 3/10/09

3

Sample Number: L08120263-03
Client ID: MR08-SS057- 08D
Matrix: Soil
Workgroup Number: WG290759
Collect Date: 12/06/2008 09:25
Sample Tag: 02

PrePrep Method: NONE
Prep Method: METHOD
Analytical Method: 8330MOD
Analyst: ECL
Dilution: 1
Units: mg/kg

Instrument: HPLC5
Prep Date: 12/14/2008 09:00
Cal Date: 12/16/2008 16:51
Run Date: 12/24/2008 19:26
File ID: 5L003551.F

Analyte	CAS. Number	Result	Qual	RL	MDL
PETN	78-11-5		U	0.298	0.0994

U Undetected; the analyte was analyzed for, but not detected.

Microbac

18 lw
21.0109

4

Sample Number: L08120263-04
Client ID: MR08-IS57-2-3- 08D
Matrix: Soil
Workgroup Number: WG290759
Collect Date: 12/06/2008 09:40
Sample Tag: 01

PrePrep Method: NONE
Prep Method: METHOD
Analytical Method: 8330MOD
Analyst: ECL
Dilution: 1
Units: mg/kg

Instrument: HPLC5
Prep Date: 12/14/2008 09:00
Cal Date: 12/16/2008 16:51
Run Date: 12/18/2008 13:23
File ID: 5L003368.F

Analyte	CAS. Number	Result	Qual	RL	MDL
1,3,5-Trinitrobenzene	99-35-4		U	0.296	0.0988
1,3-Dinitrobenzene	99-65-0		U	0.296	0.0988
2,4,6-Trinitrotoluene	118-96-7		U ~~Q~~	0.296	0.0988
2,4-Dinitrotoluene	121-14-2		U	0.296	0.0988
2,6-Dinitrotoluene	606-20-2		U	0.296	0.0988
2-Amino-4,6-dinitrotoluene	35572-78-2		U	0.296	0.0988
2-Nitrotoluene	88-72-2		U	0.296	0.0988
3-Nitrotoluene	99-08-1		U	0.296	0.0988
4-Nitrotoluene	99-99-0		U	0.296	0.0988
4-Amino-2,6-dinitrotoluene	19406-51-0		U	0.296	0.0988
HMX	2691-41-0		U	0.296	0.0988
Nitrobenzene	98-95-3		U	0.296	0.0988
RDX	121-82-4		U	0.296	0.0988
Tetryl	479-45-8		U ~~Q~~	0.296	0.0988
Nitroglycerin	55-63-0		U	0.296	0.0988

Surrogate	% Recovery	Lower	Upper	Qual
1,2-Dinitrobenzene	87.1	50	150	

U Undetected; the analyte was analyzed for, but not detected.
Q One or more quality control criteria failed. See narrative.

Microbac

21 lw 3/10/09

4

Sample Number: L08120263-04
Client ID: MR08-IS57-2-3- 08D
Matrix: Soil
Workgroup Number: WG290759
Collect Date: 12/06/2008 09:40
Sample Tag: 02

PrePrep Method: NONE
Prep Method: METHOD
Analytical Method: 8330MOD
Analyst: ECL
Dilution: 1
Units: mg/kg

Instrument: HPLC5
Prep Date: 12/14/2008 09:00
Cal Date: 12/16/2008 16:51
Run Date: 12/24/2008 19:39
File ID: 5L003552.F

Analyte	CAS. Number	Result	Qual	RL	MDL
PETN	78-11-5		U	0.296	0.0988

U Undetected; the analyte was analyzed for, but not detected.

Microbac

20 MW
3/10/09

5

Sample Number: L08120263-05
Client ID: MR08-SS058- 08D
Matrix: Soil
Workgroup Number: WG290759
Collect Date: 12/06/2008 10:05
Sample Tag: 01

PrePrep Method: NONE
Prep Method: METHOD
Analytical Method: 8330MOD
Analyst: ECL
Dilution: 1
Units: mg/kg

Instrument: HPLC5
Prep Date: 12/14/2008 09:00
Cal Date: 12/16/2008 16:51
Run Date: 12/18/2008 14:01
File ID: 5L003369.F

Analyte	CAS. Number	Result	Qual	RL	MDL
1,3,5-Trinitrobenzene	99-35-4		U	0.299	0.0998
1,3-Dinitrobenzene	99-65-0		U	0.299	0.0998
2,4,6-Trinitrotoluene	118-96-7	U	~~Q~~	0.299	0.0998
2,4-Dinitrotoluene	121-14-2		U	0.299	0.0998
2,6-Dinitrotoluene	606-20-2		U	0.299	0.0998
2-Amino-4,6-dinitrotoluene	35572-78-2		U	0.299	0.0998
2-Nitrotoluene	88-72-2		U	0.299	0.0998
3-Nitrotoluene	99-08-1		U	0.299	0.0998
4-Nitrotoluene	99-99-0		U	0.299	0.0998
4-Amino-2,6-dinitrotoluene	19406-51-0		U	0.299	0.0998
HMX	2691-41-0		U	0.299	0.0998
Nitrobenzene	98-95-3		U	0.299	0.0998
RDX	121-82-4		U	0.299	0.0998
Tetryl	479-45-8	U	~~Q~~	0.299	0.0998
Nitroglycerin	55-63-0		U	0.299	0.0998

Surrogate	% Recovery	Lower	Upper	Qual
1,2-Dinitrobenzene	95.0	50	150	

U Undetected; the analyte was analyzed for, but not detected.
Q One or more quality control criteria failed. See narrative.

Microbac

23 lcW
3/10/09

5

Sample Number: L08120263-05
Client ID: MR08-SS058- 08D
Matrix: Soil
Workgroup Number: WG290759
Collect Date: 12/06/2008 10:05
Sample Tag: 02

PrePrep Method: NONE
Prep Method: METHOD
Analytical Method: 8330MOD
Analyst: ECL
Dilution: 1
Units: mg/kg

Instrument: HPLC5
Prep Date: 12/14/2008 09:00
Cal Date: 12/16/2008 16:51
Run Date: 12/24/2008 19:53
File ID: 5L003553.F

Analyte	CAS. Number	Result	Qual	RL	MDL
PETN	78-11-5		U	0.299	0.0998

U Undetected; the analyte was analyzed for, but not detected.

Microbac

22 lw 3/10/09

6

Sample Number: L08120263-06
Client ID: MR08-IS058-2-3- 08D
Matrix: Soil
Workgroup Number: WG290759
Collect Date: 12/06/2008 10:20
Sample Tag: 01

PrePrep Method: NONE
Prep Method: METHOD
Analytical Method: 8330MOD
Analyst: ECL
Dilution: 1
Units: mg/kg

Instrument: HPLC5
Prep Date: 12/14/2008 09:00
Cal Date: 12/16/2008 16:51
Run Date: 12/18/2008 14:39
File ID: 5L003370.F

Analyte	CAS. Number	Result	Qual	RL	MDL
1,3,5-Trinitrobenzene	99-35-4		U	0.300	0.100
1,3-Dinitrobenzene	99-65-0		U	0.300	0.100
2,4,6-Trinitrotoluene	118-96-7	U	~~Q~~	0.300	0.100
2,4-Dinitrotoluene	121-14-2		U	0.300	0.100
2,6-Dinitrotoluene	606-20-2		U	0.300	0.100
2-Amino-4,6-dinitrotoluene	35572-78-2		U	0.300	0.100
2-Nitrotoluene	88-72-2		U	0.300	0.100
3-Nitrotoluene	99-08-1		U	0.300	0.100
4-Nitrotoluene	99-99-0		U	0.300	0.100
4-Amino-2,6-dinitrotoluene	19406-51-0		U	0.300	0.100
HMX	2691-41-0		U	0.300	0.100
Nitrobenzene	98-95-3		U	0.300	0.100
RDX	121-82-4		U	0.300	0.100
Tetryl	479-45-8	U	~~Q~~	0.300	0.100
Nitroglycerin	55-63-0		U	0.300	0.100

Surrogate	% Recovery	Lower	Upper	Qual
1,2-Dinitrobenzene	88.0	50	150	

U Undetected; the analyte was analyzed for, but not detected.
Q One or more quality control criteria failed. See narrative.

Microbac

24 DW 3/10/09

6

Sample Number: L08120263-06
Client ID: MR08-IS058-2-3- 08D
Matrix: Soil
Workgroup Number: WG290759
Collect Date: 12/06/2008 10:20
Sample Tag: 02

PrePrep Method: NONE
Prep Method: METHOD
Analytical Method: 8330MOD
Analyst: ECL
Dilution: 1
Units: mg/kg

Instrument: HPLC5
Prep Date: 12/14/2008 09:00
Cal Date: 12/16/2008 16:51
Run Date: 12/24/2008 20:06
File ID: 5L003554.F

Analyte	CAS. Number	Result	Qual	RL	MDL
PETN	78-11-5		U	0.300	0.100

U Undetected; the analyte was analyzed for, but not detected.

Microbac

25 MW
3/10/09

7

Sample Number: L08120263-07
Client ID: MR08-SS059- 08D
Matrix: Soil
Workgroup Number: WG290759
Collect Date: 12/06/2008 10:40
Sample Tag: 01

PrePrep Method: NONE
Prep Method: METHOD
Analytical Method: 8330MOD
Analyst: ECL
Dilution: 1
Units: mg/kg

Instrument: HPLC5
Prep Date: 12/14/2008 09:00
Cal Date: 12/16/2008 16:51
Run Date: 12/18/2008 15:18
File ID: 5L003371.F

Analyte	CAS. Number	Result	Qual	RL	MDL
1,3,5-Trinitrobenzene	99-35-4		U	0.291	0.0971
1,3-Dinitrobenzene	99-65-0		U	0.291	0.0971
2,4,6-Trinitrotoluene	118-96-7	U	~~Q~~	0.291	0.0971
2,4-Dinitrotoluene	121-14-2		U	0.291	0.0971
2,6-Dinitrotoluene	606-20-2		U	0.291	0.0971
2-Amino-4,6-dinitrotoluene	35572-78-2		U	0.291	0.0971
2-Nitrotoluene	88-72-2		U	0.291	0.0971
3-Nitrotoluene	99-08-1		U	0.291	0.0971
4-Nitrotoluene	99-99-0		U	0.291	0.0971
4-Amino-2,6-dinitrotoluene	19406-51-0		U	0.291	0.0971
HMX	2691-41-0		U	0.291	0.0971
Nitrobenzene	98-95-3		U	0.291	0.0971
RDX	121-82-4		U	0.291	0.0971
Tetryl	479-45-8	U	~~Q~~	0.291	0.0971
Nitroglycerin	55-63-0		U	0.291	0.0971

Surrogate	% Recovery	Lower	Upper	Qual
1,2-Dinitrobenzene	89.4	50	150	

U Undetected; the analyte was analyzed for, but not detected.
Q One or more quality control criteria failed. See narrative.

Microbac

26 LW 3/10/09

7

Sample Number: L08120263-07
Client ID: MR08-SS059- 08D
Matrix: Soil
Workgroup Number: WG290759
Collect Date: 12/06/2008 10:40
Sample Tag: 02

PrePrep Method: NONE
Prep Method: METHOD
Analytical Method: 8330MOD
Analyst: ECL
Dilution: 1
Units: mg/kg

Instrument: HPLC5
Prep Date: 12/14/2008 09:00
Cal Date: 12/16/2008 16:51
Run Date: 12/24/2008 20:45
File ID: 5L003557.F

Analyte	CAS. Number	Result	Qual	RL	MDL
PETN	78-11-5		U	0.291	0.0971

U Undetected; the analyte was analyzed for, but not detected.

Microbac

27 [illegible] 3/10/09

8

Sample Number: L08120263-08
Client ID: MR08-SS059D- 08D
Matrix: Soil
Workgroup Number: WG290759
Collect Date: 12/06/2008 10:45
Sample Tag: 01

PrePrep Method: NONE
Prep Method: METHOD
Analytical Method: 8330MOD
Analyst: ECL
Dilution: 1
Units: mg/kg

Instrument: HPLC5
Prep Date: 12/14/2008 09:00
Cal Date: 12/16/2008 16:51
Run Date: 12/18/2008 15:56
File ID: 5L003372.F

Analyte	CAS. Number	Result	Qual	RL	MDL
1,3,5-Trinitrobenzene	99-35-4		U	0.295	0.0983
1,3-Dinitrobenzene	99-65-0		U	0.295	0.0983
2,4,6-Trinitrotoluene	118-96-7	U	~~Q~~	0.295	0.0983
2,4-Dinitrotoluene	121-14-2		U	0.295	0.0983
2,6-Dinitrotoluene	606-20-2		U	0.295	0.0983
2-Amino-4,6-dinitrotoluene	35572-78-2		U	0.295	0.0983
2-Nitrotoluene	88-72-2		U	0.295	0.0983
3-Nitrotoluene	99-08-1		U	0.295	0.0983
4-Nitrotoluene	99-99-0		U	0.295	0.0983
4-Amino-2,6-dinitrotoluene	19406-51-0		U	0.295	0.0983
HMX	2691-41-0		U	0.295	0.0983
Nitrobenzene	98-95-3		U	0.295	0.0983
RDX	121-82-4		U	0.295	0.0983
Tetryl	479-45-8	U	~~Q~~	0.295	0.0983
Nitroglycerin	55-63-0		U	0.295	0.0983

Surrogate	% Recovery	Lower	Upper	Qual
1,2-Dinitrobenzene	89.8	50	150	

U Undetected; the analyte was analyzed for, but not detected.
Q One or more quality control criteria failed. See narrative.

Microbac

29 MW 3/10/09

8

Sample Number: L08120263-08
Client ID: MR08-SS059D- 08D
Matrix: Soil
Workgroup Number: WG290759
Collect Date: 12/06/2008 10:45
Sample Tag: 02

PrePrep Method: NONE
Prep Method: METHOD
Analytical Method: 8330MOD
Analyst: ECL
Dilution: 1
Units: mg/kg

Instrument: HPLC5
Prep Date: 12/14/2008 09:00
Cal Date: 12/16/2008 16:51
Run Date: 12/24/2008 20:58
File ID: 5L003558.F

Analyte	CAS. Number	Result	Qual	RL	MDL
PETN	78-11-5		U	0.295	0.0983

U Undetected; the analyte was analyzed for, but not detected.

Microbac

28 lw 3/10/09

9

Sample Number: L08120263-09
Client ID: MR08-IS059-3-4- 08D
Matrix: Soil
Workgroup Number: WG290759
Collect Date: 12/06/2008 10:50
Sample Tag: 01

PrePrep Method: NONE
Prep Method: METHOD
Analytical Method: 8330MOD
Analyst: ECL
Dilution: 1
Units: mg/kg

Instrument: HPLC5
Prep Date: 12/14/2008 09:00
Cal Date: 12/16/2008 16:51
Run Date: 12/18/2008 16:34
File ID: 5L003373.F

Analyte	CAS. Number	Result	Qual	RL	MDL
1,3,5-Trinitrobenzene	99-35-4		U	0.291	0.0970
1,3-Dinitrobenzene	99-65-0		U	0.291	0.0970
2,4,6-Trinitrotoluene	118-96-7		U ~~Q~~	0.291	0.0970
2,4-Dinitrotoluene	121-14-2		U	0.291	0.0970
2,6-Dinitrotoluene	606-20-2		U	0.291	0.0970
2-Amino-4,6-dinitrotoluene	35572-78-2		U	0.291	0.0970
2-Nitrotoluene	88-72-2		U	0.291	0.0970
3-Nitrotoluene	99-08-1		U	0.291	0.0970
4-Nitrotoluene	99-99-0		U	0.291	0.0970
4-Amino-2,6-dinitrotoluene	19406-51-0		U	0.291	0.0970
HMX	2691-41-0		U	0.291	0.0970
Nitrobenzene	98-95-3		U	0.291	0.0970
RDX	121-82-4		U	0.291	0.0970
Tetryl	479-45-8		U ~~Q~~	0.291	0.0970
Nitroglycerin	55-63-0		U	0.291	0.0970

Surrogate	% Recovery	Lower	Upper	Qual
1,2-Dinitrobenzene	96.5	50	150	

U Undetected; the analyte was analyzed for, but not detected.
Q One or more quality control criteria failed. See narrative.

Microbac

30 lew 3/10/09

9

Sample Number: L08120263-09
Client ID: MR08-IS059-3-4- 08D
Matrix: Soil
Workgroup Number: WG290759
Collect Date: 12/06/2008 10:50
Sample Tag: 02

PrePrep Method: NONE
Prep Method: METHOD
Analytical Method: 8330MOD
Analyst: ECL
Dilution: 1
Units: mg/kg

Instrument: HPLC5
Prep Date: 12/14/2008 09:00
Cal Date: 12/16/2008 16:51
Run Date: 12/24/2008 21:12
File ID: 5L003559.F

Analyte	CAS. Number	Result	Qual	RL	MDL
PETN	78-11-5		U	0.291	0.0970

U Undetected; the analyte was analyzed for, but not detected.

Microbac

lew
3/10/09

10

Sample Number: L08120263-10
Client ID: MR08-IS059D-3-4- 08D
Matrix: Soil
Workgroup Number: WG290759
Collect Date: 12/06/2008 11:00
Sample Tag: 01

PrePrep Method: NONE
Prep Method: METHOD
Analytical Method: 8330MOD
Analyst: ECL
Dilution: 1
Units: mg/kg

Instrument: HPLC5
Prep Date: 12/14/2008 09:00
Cal Date: 12/16/2008 16:51
Run Date: 12/18/2008 18:28
File ID: 5L003376.F

Analyte	CAS. Number	Result	Qual	RL	MDL
1,3,5-Trinitrobenzene	99-35-4		U	0.299	0.0997
1,3-Dinitrobenzene	99-65-0		U	0.299	0.0997
2,4,6-Trinitrotoluene	118-96-7	U	~~Q~~	0.299	0.0997
2,4-Dinitrotoluene	121-14-2		U	0.299	0.0997
2,6-Dinitrotoluene	606-20-2		U	0.299	0.0997
2-Amino-4,6-dinitrotoluene	35572-78-2		U	0.299	0.0997
2-Nitrotoluene	88-72-2		U	0.299	0.0997
3-Nitrotoluene	99-08-1		U	0.299	0.0997
4-Nitrotoluene	99-99-0		U	0.299	0.0997
4-Amino-2,6-dinitrotoluene	19406-51-0		U	0.299	0.0997
HMX	2691-41-0		U	0.299	0.0997
Nitrobenzene	98-95-3		U	0.299	0.0997
RDX	121-82-4		U	0.299	0.0997
Tetryl	479-45-8	U	~~Q~~	0.299	0.0997
Nitroglycerin	55-63-0		U	0.299	0.0997

Surrogate	% Recovery	Lower	Upper	Qual
1,2-Dinitrobenzene	99.3	50	150	

U Undetected; the analyte was analyzed for, but not detected.
Q One or more quality control criteria failed. See narrative.

Microbac

32 lew 3/10/09

10

Sample Number: L08120263-10
Client ID: MR08-IS059D-3-4- 08D
Matrix: Soil
Workgroup Number: WG290759
Collect Date: 12/06/2008 11:00
Sample Tag: 02

PrePrep Method: NONE
Prep Method: METHOD
Analytical Method: 8330MOD
Analyst: ECL
Dilution: 1
Units: mg/kg

Instrument: HPLC5
Prep Date: 12/14/2008 09:00
Cal Date: 12/16/2008 16:51
Run Date: 12/24/2008 21:25
File ID: 5L003560.F

Analyte	CAS. Number	Result	Qual	RL	MDL
PETN	78-11-5		U	0.299	0.0997

U Undetected; the analyte was analyzed for, but not detected.

Microbac

MW 3/10/09

11

Sample Number: L08120263-11
Client ID: MR08-SS060- 08D
Matrix: Soil
Workgroup Number: WG290759
Collect Date: 12/06/2008 11:20
Sample Tag: 01

PrePrep Method: NONE
Prep Method: METHOD
Analytical Method: 8330MOD
Analyst: ECL
Dilution: 1
Units: mg/kg

Instrument: HPLC5
Prep Date: 12/14/2008 09:00
Cal Date: 12/16/2008 16:51
Run Date: 12/18/2008 19:06
File ID: 5L003377.F

Analyte	CAS. Number	Result	Qual	RL	MDL
1,3,5-Trinitrobenzene	99-35-4		U	0.298	0.0994
1,3-Dinitrobenzene	99-65-0		U	0.298	0.0994
2,4,6-Trinitrotoluene	118-96-7	U	~~Q~~	0.298	0.0994
2,4-Dinitrotoluene	121-14-2		U	0.298	0.0994
2,6-Dinitrotoluene	606-20-2		U	0.298	0.0994
2-Amino-4,6-dinitrotoluene	35572-78-2		U	0.298	0.0994
2-Nitrotoluene	88-72-2		U	0.298	0.0994
3-Nitrotoluene	99-08-1		U	0.298	0.0994
4-Nitrotoluene	99-99-0		U	0.298	0.0994
4-Amino-2,6-dinitrotoluene	19406-51-0		U	0.298	0.0994
HMX	2691-41-0		U	0.298	0.0994
Nitrobenzene	98-95-3		U	0.298	0.0994
RDX	121-82-4		U	0.298	0.0994
Tetryl	479-45-8	U	~~Q~~	0.298	0.0994
Nitroglycerin	55-63-0		U	0.298	0.0994

Surrogate	% Recovery	Lower	Upper	Qual
1,2-Dinitrobenzene	93.5	50	150	

U Undetected; the analyte was analyzed for, but not detected.
Q One or more quality control criteria failed. See narrative.

Microbac

AW
3/10/09

11

Sample Number: L08120263-11
Client ID: MR08-SS060- 08D
Matrix: Soil
Workgroup Number: WG290759
Collect Date: 12/06/2008 11:20
Sample Tag: 02

PrePrep Method: NONE
Prep Method: METHOD
Analytical Method: 8330MOD
Analyst: ECL
Dilution: 1
Units: mg/kg

Instrument: HPLC5
Prep Date: 12/14/2008 09:00
Cal Date: 12/16/2008 16:51
Run Date: 12/24/2008 21:38
File ID: 5L003561.F

Analyte	CAS. Number	Result	Qual	RL	MDL
PETN	78-11-5		U	0.298	0.0994

U Undetected; the analyte was analyzed for, but not detected.

Microbac

35 LW 3/10/09

12

Sample Number: L08120263-12
Client ID: MR08-IS060-2-3- 08D
Matrix: Soil
Workgroup Number: WG290759
Collect Date: 12/06/2008 12:45
Sample Tag: 01

PrePrep Method: NONE
Prep Method: METHOD
Analytical Method: 8330MOD
Analyst: ECL
Dilution: 1
Units: mg/kg

Instrument: HPLC5
Prep Date: 12/14/2008 09:00
Cal Date: 12/16/2008 16:51
Run Date: 12/18/2008 19:45
File ID: 5L003378.F

Analyte	CAS. Number	Result	Qual	RL	MDL
1,3,5-Trinitrobenzene	99-35-4		U	0.294	0.0978
1,3-Dinitrobenzene	99-65-0		U	0.294	0.0978
2,4,6-Trinitrotoluene	118-96-7	U	~~Q~~	0.294	0.0978
2,4-Dinitrotoluene	121-14-2		U	0.294	0.0978
2,6-Dinitrotoluene	606-20-2		U	0.294	0.0978
2-Amino-4,6-dinitrotoluene	35572-78-2		U	0.294	0.0978
2-Nitrotoluene	88-72-2		U	0.294	0.0978
3-Nitrotoluene	99-08-1		U	0.294	0.0978
4-Nitrotoluene	99-99-0		U	0.294	0.0978
4-Amino-2,6-dinitrotoluene	19406-51-0		U	0.294	0.0978
HMX	2691-41-0		U	0.294	0.0978
Nitrobenzene	98-95-3		U	0.294	0.0978
RDX	121-82-4		U	0.294	0.0978
Tetryl	479-45-8	U	~~Q~~	0.294	0.0978
Nitroglycerin	55-63-0		U	0.294	0.0978

Surrogate	% Recovery	Lower	Upper	Qual
1,2-Dinitrobenzene	93.0	50	150	

U Undetected; the analyte was analyzed for, but not detected.
Q One or more quality control criteria failed. See narrative.

Microbac

37 MW 3/10/09

12

Sample Number: L08120263-12
Client ID: MR08-IS060-2-3- 08D
Matrix: Soil
Workgroup Number: WG290759
Collect Date: 12/06/2008 12:45
Sample Tag: 02

PrePrep Method: NONE
Prep Method: METHOD
Analytical Method: 8330MOD
Analyst: ECL
Dilution: 1
Units: mg/kg

Instrument: HPLC5
Prep Date: 12/14/2008 09:00
Cal Date: 12/16/2008 16:51
Run Date: 12/24/2008 21:51
File ID: 5L003562.F

Analyte	CAS. Number	Result	Qual	RL	MDL
PETN	78-11-5		U	0.294	0.0978

U Undetected; the analyte was analyzed for, but not detected.

Microbac

36 lw 3/10/09

13

Sample Number: L08120263-13
Client ID: MR08-SS061- 08D
Matrix: Soil
Workgroup Number: WG290759
Collect Date: 12/06/2008 13:20
Sample Tag: 01

PrePrep Method: NONE
Prep Method: METHOD
Analytical Method: 8330MOD
Analyst: ECL
Dilution: 1
Units: mg/kg

Instrument: HPLC5
Prep Date: 12/14/2008 09:00
Cal Date: 12/16/2008 16:51
Run Date: 12/18/2008 20:23
File ID: 5L003379.F

Analyte	CAS. Number	Result	Qual	RL	MDL
1,3,5-Trinitrobenzene	99-35-4		U	0.296	0.0985
1,3-Dinitrobenzene	99-65-0		U	0.296	0.0985
2,4,6-Trinitrotoluene	118-96-7		U ~~Q~~	0.296	0.0985
2,4-Dinitrotoluene	121-14-2		U	0.296	0.0985
2,6-Dinitrotoluene	606-20-2		U	0.296	0.0985
2-Amino-4,6-dinitrotoluene	35572-78-2		U	0.296	0.0985
2-Nitrotoluene	88-72-2		U	0.296	0.0985
3-Nitrotoluene	99-08-1		U	0.296	0.0985
4-Nitrotoluene	99-99-0		U	0.296	0.0985
4-Amino-2,6-dinitrotoluene	19406-51-0		U	0.296	0.0985
HMX	2691-41-0		U	0.296	0.0985
Nitrobenzene	98-95-3		U	0.296	0.0985
RDX	121-82-4		U	0.296	0.0985
Tetryl	479-45-8		U ~~Q~~	0.296	0.0985
Nitroglycerin	55-63-0		U	0.296	0.0985

Surrogate	% Recovery	Lower	Upper	Qual
1,2-Dinitrobenzene	86.1	50	150	

U Undetected; the analyte was analyzed for, but not detected.
Q One or more quality control criteria failed. See narrative.

Microbac

39 DW 3/10/09

13

Sample Number: L08120263-13
Client ID: MR08-SS061- 08D
Matrix: Soil
Workgroup Number: WG290759
Collect Date: 12/06/2008 13:20
Sample Tag: 02

PrePrep Method: NONE
Prep Method: METHOD
Analytical Method: 8330MOD
Analyst: ECL
Dilution: 1
Units: mg/kg

Instrument: HPLC5
Prep Date: 12/14/2008 09:00
Cal Date: 12/16/2008 16:51
Run Date: 12/24/2008 22:04
File ID: 5L003563.F

Analyte	CAS. Number	Result	Qual	RL	MDL
PETN	78-11-5		U	0.296	0.0985

U Undetected; the analyte was analyzed for, but not detected.

Microbac

 lcw 3/10/09

14

Sample Number: L08120263-14
Client ID: MR08-IS061-2-3- 08D
Matrix: Soil
Workgroup Number: WG290759
Collect Date: 12/06/2008 13:30
Sample Tag: 01

PrePrep Method: NONE
Prep Method: METHOD
Analytical Method: 8330MOD
Analyst: ECL
Dilution: 1
Units: mg/kg

Instrument: HPLC5
Prep Date: 12/14/2008 09:00
Cal Date: 12/16/2008 16:51
Run Date: 12/18/2008 21:01
File ID: 5L003380.F

Analyte	CAS. Number	Result	Qual	RL	MDL
1,3,5-Trinitrobenzene	99-35-4		U	0.294	0.0981
1,3-Dinitrobenzene	99-65-0		U	0.294	0.0981
2,4,6-Trinitrotoluene	118-96-7	U	~~Q~~	0.294	0.0981
2,4-Dinitrotoluene	121-14-2		U	0.294	0.0981
2,6-Dinitrotoluene	606-20-2		U	0.294	0.0981
2-Amino-4,6-dinitrotoluene	35572-78-2		U	0.294	0.0981
2-Nitrotoluene	88-72-2		U	0.294	0.0981
3-Nitrotoluene	99-08-1		U	0.294	0.0981
4-Nitrotoluene	99-99-0		U	0.294	0.0981
4-Amino-2,6-dinitrotoluene	19406-51-0		U	0.294	0.0981
HMX	2691-41-0		U	0.294	0.0981
Nitrobenzene	98-95-3		U	0.294	0.0981
RDX	121-82-4		U	0.294	0.0981
Tetryl	479-45-8	U	~~Q~~	0.294	0.0981
Nitroglycerin	55-63-0		U	0.294	0.0981

Surrogate	% Recovery	Lower	Upper	Qual
1,2-Dinitrobenzene	93.4	50	150	

U Undetected; the analyte was analyzed for, but not detected.
Q One or more quality control criteria failed. See narrative.

Microbac

41 [illegible] 3/10/09

14

Sample Number: L08120263-14
Client ID: MR08-IS061-2-3- 08D
Matrix: Soil
Workgroup Number: WG290759
Collect Date: 12/06/2008 13:30
Sample Tag: 02

PrePrep Method: NONE
Prep Method: METHOD
Analytical Method: 8330MOD
Analyst: ECL
Dilution: 1
Units: mg/kg

Instrument: HPLC5
Prep Date: 12/14/2008 09:00
Cal Date: 12/16/2008 16:51
Run Date: 12/24/2008 22:17
File ID: 5L003564.F

Analyte	CAS. Number	Result	Qual	RL	MDL
PETN	78-11-5		U	0.294	0.0981

U Undetected; the analyte was analyzed for, but not detected.

Microbac

40 lw 3/10/09

15

Sample Number: L08120263-15
Client ID: MR08-SS062- 08D
Matrix: Soil
Workgroup Number: WG290759
Collect Date: 12/06/2008 14:00
Sample Tag: 01

PrePrep Method: NONE
Prep Method: METHOD
Analytical Method: 8330MOD
Analyst: ECL
Dilution: 1
Units: mg/kg

Instrument: HPLC5
Prep Date: 12/14/2008 09:00
Cal Date: 12/16/2008 16:51
Run Date: 12/18/2008 21:39
File ID: 5L003381.F

Analyte	CAS. Number	Result	Qual	RL	MDL
1,3,5-Trinitrobenzene	99-35-4		U	0.296	0.0987
1,3-Dinitrobenzene	99-65-0		U	0.296	0.0987
2,4,6-Trinitrotoluene	118-96-7	U	~~Q~~	0.296	0.0987
2,4-Dinitrotoluene	121-14-2		U	0.296	0.0987
2,6-Dinitrotoluene	606-20-2		U	0.296	0.0987
2-Amino-4,6-dinitrotoluene	35572-78-2		U	0.296	0.0987
2-Nitrotoluene	88-72-2		U	0.296	0.0987
3-Nitrotoluene	99-08-1		U	0.296	0.0987
4-Nitrotoluene	99-99-0		U	0.296	0.0987
4-Amino-2,6-dinitrotoluene	19406-51-0		U	0.296	0.0987
HMX	2691-41-0		U	0.296	0.0987
Nitrobenzene	98-95-3		U	0.296	0.0987
RDX	121-82-4		U	0.296	0.0987
Tetryl	479-45-8	U	~~Q~~	0.296	0.0987
Nitroglycerin	55-63-0		U	0.296	0.0987

Surrogate	% Recovery	Lower	Upper	Qual
1,2-Dinitrobenzene	88.9	50	150	

U Undetected; the analyte was analyzed for, but not detected.
Q One or more quality control criteria failed. See narrative.

Microbac

43

15

Sample Number: L08120263-15
Client ID: MR08-SS062- 08D
Matrix: Soil
Workgroup Number: WG290759
Collect Date: 12/06/2008 14:00
Sample Tag: 02

PrePrep Method: NONE
Prep Method: METHOD
Analytical Method: 8330MOD
Analyst: ECL
Dilution: 1
Units: mg/kg

Instrument: HPLC5
Prep Date: 12/14/2008 09:00
Cal Date: 12/16/2008 16:51
Run Date: 12/24/2008 22:31
File ID: 5L003565.F

Analyte	CAS. Number	Result	Qual	RL	MDL
PETN	78-11-5		U	0.296	0.0987

U Undetected; the analyte was analyzed for, but not detected.

Microbac

42 lw
3/10/09

16

Sample Number: L08120263-16
Client ID: MR08-IS062-2-3- 08D
Matrix: Soil
Workgroup Number: WG290759
Collect Date: 12/06/2008 14:15
Sample Tag: 01

PrePrep Method: NONE
Prep Method: METHOD
Analytical Method: 8330MOD
Analyst: ECL
Dilution: 1
Units: mg/kg

Instrument: HPLC5
Prep Date: 12/14/2008 09:00
Cal Date: 12/16/2008 16:51
Run Date: 12/18/2008 22:17
File ID: 5L003382.F

Analyte	CAS. Number	Result	Qual	RL	MDL
1,3,5-Trinitrobenzene	99-35-4		U	0.294	0.0981
1,3-Dinitrobenzene	99-65-0		U	0.294	0.0981
2,4,6-Trinitrotoluene	118-96-7	U	~~Q~~	0.294	0.0981
2,4-Dinitrotoluene	121-14-2		U	0.294	0.0981
2,6-Dinitrotoluene	606-20-2		U	0.294	0.0981
2-Amino-4,6-dinitrotoluene	35572-78-2		U	0.294	0.0981
2-Nitrotoluene	88-72-2		U	0.294	0.0981
3-Nitrotoluene	99-08-1		U	0.294	0.0981
4-Nitrotoluene	99-99-0		U	0.294	0.0981
4-Amino-2,6-dinitrotoluene	19406-51-0		U	0.294	0.0981
HMX	2691-41-0		U	0.294	0.0981
Nitrobenzene	98-95-3		U	0.294	0.0981
RDX	121-82-4		U	0.294	0.0981
Tetryl	479-45-8	U	~~Q~~	0.294	0.0981
Nitroglycerin	55-63-0		U	0.294	0.0981

Surrogate	% Recovery	Lower	Upper	Qual
1,2-Dinitrobenzene	94.4	50	150	

U Undetected; the analyte was analyzed for, but not detected.
Q One or more quality control criteria failed. See narrative.

Microbac

44 lw 3/10/09

16

Sample Number: L08120263-16
Client ID: MR08-IS062-2-3- 08D
Matrix: Soil
Workgroup Number: WG290759
Collect Date: 12/06/2008 14:15
Sample Tag: 02

PrePrep Method: NONE
Prep Method: METHOD
Analytical Method: 8330MOD
Analyst: ECL
Dilution: 1
Units: mg/kg

Instrument: HPLC5
Prep Date: 12/14/2008 09:00
Cal Date: 12/16/2008 16:51
Run Date: 12/24/2008 22:44
File ID: 5L003566.F

Analyte	CAS. Number	Result	Qual	RL	MDL
PETN	78-11-5		U	0.294	0.0981

U Undetected; the analyte was analyzed for, but not detected.

Microbac

45 Rew 3/10/09

17

Sample Number: L08120263-17
Client ID: MR08-SS063- 08D
Matrix: Soil
Workgroup Number: WG290865
Collect Date: 12/06/2008 14:45
Sample Tag: 01

PrePrep Method: NONE
Prep Method: METHOD
Analytical Method: 8330MOD
Analyst: ECL
Dilution: 1
Units: mg/kg

Instrument: HPLC5
Prep Date: 12/16/2008 08:00
Cal Date: 12/16/2008 16:51
Run Date: 12/19/2008 07:12
File ID: 5L003396.F

Analyte	CAS. Number	Result	Qual	RL	MDL
1,3,5-Trinitrobenzene	99-35-4		U	0.299	0.0997
1,3-Dinitrobenzene	99-65-0		U	0.299	0.0997
2,4,6-Trinitrotoluene	118-96-7	U	~~Q~~	0.299	0.0997
2,4-Dinitrotoluene	121-14-2		U	0.299	0.0997
2,6-Dinitrotoluene	606-20-2		U	0.299	0.0997
2-Amino-4,6-dinitrotoluene	35572-78-2		U	0.299	0.0997
2-Nitrotoluene	88-72-2		U	0.299	0.0997
3-Nitrotoluene	99-08-1		U	0.299	0.0997
4-Nitrotoluene	99-99-0		U	0.299	0.0997
4-Amino-2,6-dinitrotoluene	19406-51-0		U	0.299	0.0997
HMX	2691-41-0		U	0.299	0.0997
Nitrobenzene	98-95-3		U	0.299	0.0997
RDX	121-82-4		U	0.299	0.0997
Tetryl	479-45-8	U	~~Q~~	0.299	0.0997
Nitroglycerin	55-63-0		U	0.299	0.0997

Surrogate	% Recovery	Lower	Upper	Qual
1,2-Dinitrobenzene	105	50	150	

U Undetected; the analyte was analyzed for, but not detected.
Q One or more quality control criteria failed. See narrative.

Microbac

47 LW 3/10/09

17

Sample Number: L08120263-17
Client ID: MR08-SS063- 08D
Matrix: Soil
Workgroup Number: WG290865
Collect Date: 12/06/2008 14:45
Sample Tag: 02

PrePrep Method: NONE
Prep Method: METHOD
Analytical Method: 8330MOD
Analyst: ECL
Dilution: 1
Units: mg/kg

Instrument: HPLC5
Prep Date: 12/16/2008 08:00
Cal Date: 12/16/2008 16:51
Run Date: 12/25/2008 02:01
File ID: 5L003581.F

Analyte	CAS. Number	Result	Qual	RL	MDL
PETN	78-11-5		U	0.299	0.0997

U Undetected; the analyte was analyzed for, but not detected.

Microbac

46 lw 3/10/09

18

Sample Number: L08120263-18
Client ID: MR08-IS063-2-3-08D
Matrix: Soil
Workgroup Number: WG290865
Collect Date: 12/06/2008 14:55
Sample Tag: 01

PrePrep Method: NONE
Prep Method: METHOD
Analytical Method: 8330MOD
Analyst: ECL
Dilution: 1
Units: mg/kg

Instrument: HPLC5
Prep Date: 12/16/2008 08:00
Cal Date: 12/16/2008 16:51
Run Date: 12/19/2008 07:50
File ID: 5L003397.F

Analyte	CAS. Number	Result	Qual	RL	MDL
1,3,5-Trinitrobenzene	99-35-4		U	0.297	0.0991
1,3-Dinitrobenzene	99-65-0		U	0.297	0.0991
2,4,6-Trinitrotoluene	118-96-7	U	~~Q~~	0.297	0.0991
2,4-Dinitrotoluene	121-14-2		U	0.297	0.0991
2,6-Dinitrotoluene	606-20-2		U	0.297	0.0991
2-Amino-4,6-dinitrotoluene	35572-78-2		U	0.297	0.0991
2-Nitrotoluene	88-72-2		U	0.297	0.0991
3-Nitrotoluene	99-08-1		U	0.297	0.0991
4-Nitrotoluene	99-99-0		U	0.297	0.0991
4-Amino-2,6-dinitrotoluene	19406-51-0		U	0.297	0.0991
HMX	2691-41-0		U	0.297	0.0991
Nitrobenzene	98-95-3		U	0.297	0.0991
RDX	121-82-4		U	0.297	0.0991
Tetryl	479-45-8	U	~~Q~~	0.297	0.0991
Nitroglycerin	55-63-0		U	0.297	0.0991

Surrogate	% Recovery	Lower	Upper	Qual
1,2-Dinitrobenzene	94.3	50	150	

U Undetected; the analyte was analyzed for, but not detected.
Q One or more quality control criteria failed. See narrative.

Microbac®

49 [illegible]
3/10/09

18

Sample Number: L08120263-18
Client ID: MR08-IS063-2-3-08D
Matrix: Soil
Workgroup Number: WG290865
Collect Date: 12/06/2008 14:55
Sample Tag: 02

PrePrep Method: NONE
Prep Method: METHOD
Analytical Method: 8330MOD
Analyst: ECL
Dilution: 1
Units: mg/kg

Instrument: HPLC5
Prep Date: 12/16/2008 08:00
Cal Date: 12/16/2008 16:51
Run Date: 12/25/2008 02:14
File ID: 5L003582.F

Analyte	CAS. Number	Result	Qual	RL	MDL
PETN	78-11-5		U	0.297	0.0991

U Undetected; the analyte was analyzed for, but not detected.

Microbac

48 lcw 3/10/09

19

Sample Number: L08120263-19
Client ID: MR08-SS064- 08D
Matrix: Soil
Workgroup Number: WG290865
Collect Date: 12/06/2008 15:05
Sample Tag: 01

PrePrep Method: NONE
Prep Method: METHOD
Analytical Method: 8330MOD
Analyst: ECL
Dilution: 1
Units: mg/kg

Instrument: HPLC5
Prep Date: 12/16/2008 08:00
Cal Date: 12/16/2008 16:51
Run Date: 12/19/2008 14:17
File ID: 5L003406.F

Analyte	CAS. Number	Result	Qual	RL	MDL
1,3,5-Trinitrobenzene	99-35-4		U	0.300	0.0999
1,3-Dinitrobenzene	99-65-0		U	0.300	0.0999
2,4,6-Trinitrotoluene	118-96-7		U ~~Q~~	0.300	0.0999
2,4-Dinitrotoluene	121-14-2		U	0.300	0.0999
2,6-Dinitrotoluene	606-20-2		U	0.300	0.0999
2-Amino-4,6-dinitrotoluene	35572-78-2		U	0.300	0.0999
2-Nitrotoluene	88-72-2		U	0.300	0.0999
3-Nitrotoluene	99-08-1		U	0.300	0.0999
4-Nitrotoluene	99-99-0		U	0.300	0.0999
4-Amino-2,6-dinitrotoluene	19406-51-0		U	0.300	0.0999
HMX	2691-41-0		U	0.300	0.0999
Nitrobenzene	98-95-3		U	0.300	0.0999
RDX	121-82-4		U	0.300	0.0999
Tetryl	479-45-8		U ~~Q~~	0.300	0.0999
Nitroglycerin	55-63-0		U	0.300	0.0999

Surrogate	% Recovery	Lower	Upper	Qual
1,2-Dinitrobenzene	90.4	50	150	

U Undetected; the analyte was analyzed for, but not detected.
Q One or more quality control criteria failed. See narrative.

Microbac

50 LW 3/10/09

19

Sample Number: L08120263-19
Client ID: MR08-SS064- 08D
Matrix: Soil
Workgroup Number: WG290865
Collect Date: 12/06/2008 15:05
Sample Tag: 02

PrePrep Method: NONE
Prep Method: METHOD
Analytical Method: 8330MOD
Analyst: ECL
Dilution: 1
Units: mg/kg

Instrument: HPLC5
Prep Date: 12/16/2008 08:00
Cal Date: 12/16/2008 16:51
Run Date: 12/25/2008 02:27
File ID: 5L003583.F

Analyte	CAS. Number	Result	Qual	RL	MDL
PETN	78-11-5		U	0.300	0.0999

U Undetected; the analyte was analyzed for, but not detected.

Microbac

51 LW
3/10/09

20

Sample Number: L08120263-20
Client ID: MR08-IS064-2-3- 08D
Matrix: Soil
Workgroup Number: WG290865
Collect Date: 12/06/2008 15:25
Sample Tag: 01

PrePrep Method: NONE
Prep Method: METHOD
Analytical Method: 8330MOD
Analyst: ECL
Dilution: 1
Units: mg/kg

Instrument: HPLC5
Prep Date: 12/16/2008 08:00
Cal Date: 12/16/2008 16:51
Run Date: 12/19/2008 14:55
File ID: 5L003407.F

Analyte	CAS. Number	Result	Qual	RL	MDL
1,3,5-Trinitrobenzene	99-35-4		U	0.292	0.0972
1,3-Dinitrobenzene	99-65-0		U	0.292	0.0972
2,4,6-Trinitrotoluene	118-96-7		U ~~Q~~	0.292	0.0972
2,4-Dinitrotoluene	121-14-2		U	0.292	0.0972
2,6-Dinitrotoluene	606-20-2		U	0.292	0.0972
2-Amino-4,6-dinitrotoluene	35572-78-2		U	0.292	0.0972
2-Nitrotoluene	88-72-2		U	0.292	0.0972
3-Nitrotoluene	99-08-1		U	0.292	0.0972
4-Nitrotoluene	99-99-0		U	0.292	0.0972
4-Amino-2,6-dinitrotoluene	19406-51-0		U	0.292	0.0972
HMX	2691-41-0		U	0.292	0.0972
Nitrobenzene	98-95-3		U	0.292	0.0972
RDX	121-82-4		U	0.292	0.0972
Tetryl	479-45-8		U ~~Q~~	0.292	0.0972
Nitroglycerin	55-63-0		U	0.292	0.0972

Surrogate	% Recovery	Lower	Upper	Qual
1,2-Dinitrobenzene	88.1	50	150	

U Undetected; the analyte was analyzed for, but not detected.
Q One or more quality control criteria failed. See narrative.

Microbac

52 KW 3/10/09

20

Sample Number: L08120263-20
Client ID: MR08-IS064-2-3- 08D
Matrix: Soil
Workgroup Number: WG290865
Collect Date: 12/06/2008 15:25
Sample Tag: 02

PrePrep Method: NONE
Prep Method: METHOD
Analytical Method: 8330MOD
Analyst: ECL
Dilution: 1
Units: mg/kg

Instrument: HPLC5
Prep Date: 12/16/2008 08:00
Cal Date: 12/16/2008 16:51
Run Date: 12/25/2008 02:41
File ID: 5L003584.F

Analyte	CAS. Number	Result	Qual	RL	MDL
PETN	78-11-5		U	0.292	0.0972

U Undetected; the analyte was analyzed for, but not detected.

Microbac

 fw 3/10/09

21

Sample Number: L08120263-21
Client ID: MR08-SS065- 08D
Matrix: Soil
Workgroup Number: WG290865
Collect Date: 12/06/2008 15:35
Sample Tag: 01

PrePrep Method: NONE
Prep Method: METHOD
Analytical Method: 8330MOD
Analyst: ECL
Dilution: 1
Units: mg/kg

Instrument: HPLC5
Prep Date: 12/16/2008 08:00
Cal Date: 12/16/2008 16:51
Run Date: 12/19/2008 15:33
File ID: 5L003408.F

Analyte	CAS. Number	Result	Qual	RL	MDL
1,3,5-Trinitrobenzene	99-35-4		U	0.299	0.0995
1,3-Dinitrobenzene	99-65-0		U	0.299	0.0995
2,4,6-Trinitrotoluene	118-96-7		U ~~Q~~	0.299	0.0995
2,4-Dinitrotoluene	121-14-2		U	0.299	0.0995
2,6-Dinitrotoluene	606-20-2		U	0.299	0.0995
2-Amino-4,6-dinitrotoluene	35572-78-2		U	0.299	0.0995
2-Nitrotoluene	88-72-2		U	0.299	0.0995
3-Nitrotoluene	99-08-1		U	0.299	0.0995
4-Nitrotoluene	99-99-0		U	0.299	0.0995
4-Amino-2,6-dinitrotoluene	19406-51-0		U	0.299	0.0995
HMX	2691-41-0		U	0.299	0.0995
Nitrobenzene	98-95-3		U	0.299	0.0995
RDX	121-82-4		U	0.299	0.0995
Tetryl	479-45-8		U ~~Q~~	0.299	0.0995
Nitroglycerin	55-63-0		U	0.299	0.0995

Surrogate	% Recovery	Lower	Upper	Qual
1,2-Dinitrobenzene	92.9	50	150	

U Undetected; the analyte was analyzed for, but not detected.
Q One or more quality control criteria failed. See narrative.

Microbac

55 MW 3/10/09

21

Sample Number: L08120263-21
Client ID: MR08-SS065- 08D
Matrix: Soil
Workgroup Number: WG290865
Collect Date: 12/06/2008 15:35
Sample Tag: 02

PrePrep Method: NONE
Prep Method: METHOD
Analytical Method: 8330MOD
Analyst: ECL
Dilution: 1
Units: mg/kg

Instrument: HPLC5
Prep Date: 12/16/2008 08:00
Cal Date: 12/16/2008 16:51
Run Date: 12/25/2008 02:54
File ID: 5L003585.F

Analyte	CAS. Number	Result	Qual	RL	MDL
PETN	78-11-5		U	0.299	0.0995

U Undetected; the analyte was analyzed for, but not detected.

Microbac

54 LW 3/10/09

22

Sample Number: L08120263-22
Client ID: MR08-IS065-1-2- 08D
Matrix: Soil
Workgroup Number: WG290865
Collect Date: 12/06/2008 15:45
Sample Tag: 01

PrePrep Method: NONE
Prep Method: METHOD
Analytical Method: 8330MOD
Analyst: ECL
Dilution: 1
Units: mg/kg

Instrument: HPLC5
Prep Date: 12/16/2008 08:00
Cal Date: 12/16/2008 16:51
Run Date: 12/19/2008 16:12
File ID: 5L003409.F

Analyte	CAS. Number	Result	Qual	RL	MDL
1,3,5-Trinitrobenzene	99-35-4		U	0.297	0.0990
1,3-Dinitrobenzene	99-65-0		U	0.297	0.0990
2,4,6-Trinitrotoluene	118-96-7	U	~~Q~~	0.297	0.0990
2,4-Dinitrotoluene	121-14-2		U	0.297	0.0990
2,6-Dinitrotoluene	606-20-2		U	0.297	0.0990
2-Amino-4,6-dinitrotoluene	35572-78-2		U	0.297	0.0990
2-Nitrotoluene	88-72-2		U	0.297	0.0990
3-Nitrotoluene	99-08-1		U	0.297	0.0990
4-Nitrotoluene	99-99-0		U	0.297	0.0990
4-Amino-2,6-dinitrotoluene	19406-51-0		U	0.297	0.0990
HMX	2691-41-0		U	0.297	0.0990
Nitrobenzene	98-95-3		U	0.297	0.0990
RDX	121-82-4		U	0.297	0.0990
Tetryl	479-45-8	U	~~Q~~	0.297	0.0990
Nitroglycerin	55-63-0		U	0.297	0.0990

Surrogate	% Recovery	Lower	Upper	Qual
1,2-Dinitrobenzene	87.1	50	150	

U Undetected; the analyte was analyzed for, but not detected.
Q One or more quality control criteria failed. See narrative.

Microbac

56 kw 3/10/09

22

Sample Number: L08120263-22
Client ID: MR08-IS065-1-2- 08D
Matrix: Soil
Workgroup Number: WG290865
Collect Date: 12/06/2008 15:45
Sample Tag: 02

PrePrep Method: NONE
Prep Method: METHOD
Analytical Method: 8330MOD
Analyst: ECL
Dilution: 1
Units: mg/kg

Instrument: HPLC5
Prep Date: 12/16/2008 08:00
Cal Date: 12/16/2008 16:51
Run Date: 12/25/2008 03:07
File ID: 5L003586.F

Analyte	CAS. Number	Result	Qual	RL	MDL
PETN	78-11-5		U	0.297	0.0990

U Undetected; the analyte was analyzed for, but not detected.

Microbac

57 lw 3/10/09

23

Sample Number: L08120263-23
Client ID: MR08-SS066- 08D
Matrix: Soil
Workgroup Number: WG290865
Collect Date: 12/06/2008 16:05
Sample Tag: 01

PrePrep Method: NONE
Prep Method: METHOD
Analytical Method: 8330MOD
Analyst: ECL
Dilution: 1
Units: mg/kg

Instrument: HPLC5
Prep Date: 12/16/2008 08:00
Cal Date: 12/16/2008 16:51
Run Date: 12/19/2008 16:50
File ID: 5L003410.F

Analyte	CAS. Number	Result	Qual	RL	MDL
1,3,5-Trinitrobenzene	99-35-4		U	0.298	0.0993
1,3-Dinitrobenzene	99-65-0		U	0.298	0.0993
2,4,6-Trinitrotoluene	118-96-7	U	~~Q~~	0.298	0.0993
2,4-Dinitrotoluene	121-14-2		U	0.298	0.0993
2,6-Dinitrotoluene	606-20-2		U	0.298	0.0993
2-Amino-4,6-dinitrotoluene	35572-78-2		U	0.298	0.0993
2-Nitrotoluene	88-72-2		U	0.298	0.0993
3-Nitrotoluene	99-08-1		U	0.298	0.0993
4-Nitrotoluene	99-99-0		U	0.298	0.0993
4-Amino-2,6-dinitrotoluene	19406-51-0		U	0.298	0.0993
HMX	2691-41-0		U	0.298	0.0993
Nitrobenzene	98-95-3		U	0.298	0.0993
RDX	121-82-4		U	0.298	0.0993
Tetryl	479-45-8	U	~~Q~~	0.298	0.0993
Nitroglycerin	55-63-0		U	0.298	0.0993

Surrogate	% Recovery	Lower	Upper	Qual
1,2-Dinitrobenzene	88.8	50	150	

U Undetected; the analyte was analyzed for, but not detected.
Q One or more quality control criteria failed. See narrative.

Microbac

 MW 3/10/09

23

Sample Number: L08120263-23
Client ID: MR08-SS066- 08D
Matrix: Soil
Workgroup Number: WG290865
Collect Date: 12/06/2008 16:05
Sample Tag: 02

PrePrep Method: NONE
Prep Method: METHOD
Analytical Method: 8330MOD
Analyst: ECL
Dilution: 1
Units: mg/kg

Instrument: HPLC5
Prep Date: 12/16/2008 08:00
Cal Date: 12/16/2008 16:51
Run Date: 12/25/2008 03:20
File ID: 5L003587.F

Analyte	CAS. Number	Result	Qual	RL	MDL
PETN	78-11-5		U	0.298	0.0993

U Undetected; the analyte was analyzed for, but not detected.

Microbac

58 MW 3/10/09

24

Sample Number: L08120263-24
Client ID: MR08-IS066-2-3-08D
Matrix: Soil
Workgroup Number: WG290865
Collect Date: 12/06/2008 16:25
Sample Tag: 01

PrePrep Method: NONE
Prep Method: METHOD
Analytical Method: 8330MOD
Analyst: ECL
Dilution: 1
Units: mg/kg

Instrument: HPLC5
Prep Date: 12/16/2008 08:00
Cal Date: 12/16/2008 16:51
Run Date: 12/19/2008 17:28
File ID: 5L003411.F

Analyte	CAS. Number	Result	Qual	RL	MDL
1,3,5-Trinitrobenzene	99-35-4		U	0.297	0.0991
1,3-Dinitrobenzene	99-65-0		U	0.297	0.0991
2,4,6-Trinitrotoluene	118-96-7	U	~~Q~~	0.297	0.0991
2,4-Dinitrotoluene	121-14-2		U	0.297	0.0991
2,6-Dinitrotoluene	606-20-2		U	0.297	0.0991
2-Amino-4,6-dinitrotoluene	35572-78-2		U	0.297	0.0991
2-Nitrotoluene	88-72-2		U	0.297	0.0991
3-Nitrotoluene	99-08-1		U	0.297	0.0991
4-Nitrotoluene	99-99-0		U	0.297	0.0991
4-Amino-2,6-dinitrotoluene	19406-51-0		U	0.297	0.0991
HMX	2691-41-0		U	0.297	0.0991
Nitrobenzene	98-95-3		U	0.297	0.0991
RDX	121-82-4		U	0.297	0.0991
Tetryl	479-45-8	U	~~Q~~	0.297	0.0991
Nitroglycerin	55-63-0		U	0.297	0.0991

Surrogate	% Recovery	Lower	Upper	Qual
1,2-Dinitrobenzene	96.1	50	150	

U Undetected; the analyte was analyzed for, but not detected.
Q One or more quality control criteria failed. See narrative.

Microbac

61 MW 3/10/09

24

Sample Number: L08120263-24
Client ID: MR08-IS066-2-3-08D
Matrix: Soil
Workgroup Number: WG290865
Collect Date: 12/06/2008 16:25
Sample Tag: 02

PrePrep Method: NONE
Prep Method: METHOD
Analytical Method: 8330MOD
Analyst: ECL
Dilution: 1
Units: mg/kg

Instrument: HPLC5
Prep Date: 12/16/2008 08:00
Cal Date: 12/16/2008 16:51
Run Date: 12/25/2008 03:33
File ID: 5L003588.F

Analyte	CAS. Number	Result	Qual	RL	MDL
PETN	78-11-5		U	0.297	0.0991

U Undetected; the analyte was analyzed for, but not detected.

Microbac

lcw
3/10/09

25

Sample Number: L08120263-25
Client ID: MR08-EB01120608-SS
Matrix: Water
Workgroup Number: WG290758
Collect Date: 12/06/2008 13:00
Sample Tag: 01

PrePrep Method: NONE
Prep Method: 3535
Analytical Method: 8330MOD
Analyst: ECL
Dilution: 1
Units: ug/L

Instrument: HPLC5
Prep Date: 12/12/2008 08:00
Cal Date: 12/16/2008 16:51
Run Date: 12/17/2008 19:07
File ID: 5L003344.F

Analyte	CAS. Number	Result	Qual	RL	MDL
1,3,5-Trinitrobenzene	99-35-4		U	1.00	0.250
1,3-Dinitrobenzene	99-65-0		U	1.00	0.250
2,4,6-Trinitrotoluene	118-96-7	U	~~Q~~	1.00	0.250
2,4-Dinitrotoluene	121-14-2		U	1.00	0.250
2,6-Dinitrotoluene	606-20-2		U	1.00	0.250
2-Amino-4,6-dinitrotoluene	35572-78-2		U	1.00	0.250
2-Nitrotoluene	88-72-2		U	1.00	0.250
3-Nitrotoluene	99-08-1		U	1.00	0.250
4-Nitrotoluene	99-99-0		U	1.00	0.250
4-Amino-2,6-dinitrotoluene	19406-51-0		U	1.00	0.250
HMX	2691-41-0		U	1.00	0.250
Nitrobenzene	98-95-3		U	1.00	0.250
RDX	121-82-4		U	1.00	0.250
Tetryl	479-45-8	U	~~Q~~	1.00	0.250
Nitroglycerin	55-63-0		U	1.00	0.250

Surrogate	% Recovery	Lower	Upper	Qual
1,2-Dinitrobenzene	90.9	50	150	

U Undetected; the analyte was analyzed for, but not detected.
Q One or more quality control criteria failed. See narrative.

Microbac

62 LW 3/10/09

25

Sample Number: L08120263-25
Client ID: MR08-EB01120608-SS
Matrix: Water
Workgroup Number: WG290758
Collect Date: 12/06/2008 13:00
Sample Tag: 02

PrePrep Method: NONE
Prep Method: 3535
Analytical Method: 8330MOD
Analyst: ECL
Dilution: 1
Units: ug/L

Instrument: HPLC5
Prep Date: 12/12/2008 08:00
Cal Date: 12/16/2008 16:51
Run Date: 12/24/2008 15:42
File ID: 5L003534.F

Analyte	CAS. Number	Result	Qual	RL	MDL
PETN	78-11-5		U	1.00	0.250

U Undetected; the analyte was analyzed for, but not detected.

Microbac

63 lew 31 10 09

24

Sample Number: L08120263-26
Client ID: MR08-EB01120608-IS
Matrix: Water
Workgroup Number: WG290758
Collect Date: 12/06/2008 13:30
Sample Tag: 01

PrePrep Method: NONE
Prep Method: 3535
Analytical Method: 8330MOD
Analyst: ECL
Dilution: 1
Units: ug/L

Instrument: HPLC5
Prep Date: 12/12/2008 08:00
Cal Date: 12/16/2008 16:51
Run Date: 12/17/2008 19:45
File ID: 5L003345.F

Analyte	CAS. Number	Result	Qual	RL	MDL
1,3,5-Trinitrobenzene	99-35-4		U	1.00	0.250
1,3-Dinitrobenzene	99-65-0		U	1.00	0.250
2,4,6-Trinitrotoluene	118-96-7	U	~~Q~~	1.00	0.250
2,4-Dinitrotoluene	121-14-2		U	1.00	0.250
2,6-Dinitrotoluene	606-20-2		U	1.00	0.250
2-Amino-4,6-dinitrotoluene	35572-78-2		U	1.00	0.250
2-Nitrotoluene	88-72-2		U	1.00	0.250
3-Nitrotoluene	99-08-1		U	1.00	0.250
4-Nitrotoluene	99-99-0		U	1.00	0.250
4-Amino-2,6-dinitrotoluene	19406-51-0		U	1.00	0.250
HMX	2691-41-0		U	1.00	0.250
Nitrobenzene	98-95-3		U	1.00	0.250
RDX	121-82-4		U	1.00	0.250
Tetryl	479-45-8	U	~~Q~~	1.00	0.250
Nitroglycerin	55-63-0		U	1.00	0.250

Surrogate	% Recovery	Lower	Upper	Qual
1,2-Dinitrobenzene	91.3	50	150	

U Undetected; the analyte was analyzed for, but not detected.
Q One or more quality control criteria failed. See narrative.

Microbac

CW
3/10/09

26

Sample Number: L08120263-26
Client ID: MR08-EB01120608-IS
Matrix: Water
Workgroup Number: WG290758
Collect Date: 12/06/2008 13:30
Sample Tag: 02

PrePrep Method: NONE
Prep Method: 3535
Analytical Method: 8330MOD
Analyst: ECL
Dilution: 1
Units: ug/L

Instrument: HPLC5
Prep Date: 12/12/2008 08:00
Cal Date: 12/16/2008 16:51
Run Date: 12/24/2008 15:56
File ID: 5L003535.F

Analyte	CAS. Number	Result	Qual	RL	MDL
PETN	78-11-5		U	1.00	0.250

U Undetected; the analyte was analyzed for, but not detected.

Microbac

64 PW 3/10/09

27

Sample Number: L08120263-27
Client ID: MR08-FB01120608
Matrix: Water
Workgroup Number: WG290758
Collect Date: 12/06/2008 15:20
Sample Tag: 01

PrePrep Method: NONE
Prep Method: 3535
Analytical Method: 8330MOD
Analyst: ECL
Dilution: 1
Units: ug/L

Instrument: HPLC5
Prep Date: 12/12/2008 08:00
Cal Date: 12/16/2008 16:51
Run Date: 12/17/2008 20:23
File ID: 5L003346.F

Analyte	CAS. Number	Result	Qual	RL	MDL
1,3,5-Trinitrobenzene	99-35-4		U	1.00	0.250
1,3-Dinitrobenzene	99-65-0		U	1.00	0.250
2,4,6-Trinitrotoluene	118-96-7		U ~~Q~~	1.00	0.250
2,4-Dinitrotoluene	121-14-2		U	1.00	0.250
2,6-Dinitrotoluene	606-20-2		U	1.00	0.250
2-Amino-4,6-dinitrotoluene	35572-78-2		U	1.00	0.250
2-Nitrotoluene	88-72-2		U	1.00	0.250
3-Nitrotoluene	99-08-1		U	1.00	0.250
4-Nitrotoluene	99-99-0		U	1.00	0.250
4-Amino-2,6-dinitrotoluene	19406-51-0		U	1.00	0.250
HMX	2691-41-0		U	1.00	0.250
Nitrobenzene	98-95-3		U	1.00	0.250
RDX	121-82-4		U	1.00	0.250
Tetryl	479-45-8		U ~~Q~~	1.00	0.250
Nitroglycerin	55-63-0		U	1.00	0.250

Surrogate	% Recovery	Lower	Upper	Qual
1,2-Dinitrobenzene	84.8	50	150	

U Undetected; the analyte was analyzed for, but not detected.
Q One or more quality control criteria failed. See narrative.

Microbac

67 MW 3/10/09

27

Sample Number: L08120263-27
Client ID: MR08-FB01120608
Matrix: Water
Workgroup Number: WG290758
Collect Date: 12/06/2008 15:20
Sample Tag: 02

PrePrep Method: NONE
Prep Method: 3535
Analytical Method: 8330MOD
Analyst: ECL
Dilution: 1
Units: ug/L

Instrument: HPLC5
Prep Date: 12/12/2008 08:00
Cal Date: 12/16/2008 16:51
Run Date: 12/24/2008 16:09
File ID: 5L003536.F

Analyte	CAS. Number	Result	Qual	RL	MDL
PETN	78-11-5		U	1.00	0.250

U Undetected; the analyte was analyzed for, but not detected.

Microbac

HW
3/10/09

ENVIRONMENTAL
Data Services, Inc.

METALS

USEPA Region IV - Level IV Review

Site: MCB Camp Lejeune, TO-09 SDG #: L08120263

Client: CH2M HILL, Inc., Virginia Beach, Virginia Date: March 10, 2009

Laboratory: Microbac Laboratories, Inc., Marietta, Ohio Reviewer: Nancy Weaver

EDS ID	Client Sample ID	Laboratory Sample ID	Matrix
1	MR08-SS056-08D	L08120263-01	Soil
2	MR08-IS056-2-3-08D	L08120263-02	Soil
3	MR08-SS057-08D	L08120263-03	Soil
4	MR08-IS057-2-3-08D	L08120263-04	Soil
5	MR08-SS058-08D	L08120263-05	Soil
6	MR08-IS058-2-3-08D	L08120263-06	Soil
7	MR08-SS059-08D	L08120263-07	Soil
8	MR08-SS059D-08D	L08120263-08	Soil
9	MR08-IS059-3-4-08D	L08120263-09	Soil
10	MR08-IS059D-3-4-08D	L08120263-10	Soil
11	MR08-SS060-08D	L08120263-11	Soil
12	MR08-IS060-2-3-08D	L08120263-12	Soil
13	MR08-SS061-08D	L08120263-13	Soil
14	MR08-IS061-2-3-08D	L08120263-14	Soil
15	MR08-SS062-08D	L08120263-15	Soil
16	MR08-IS062-2-3-08D	L08120263-16	Soil
17	MR08-SS063-08D	L08120263-17	Soil
18	MR08-IS063-2-3-08D	L08120263-18	Soil
19	MR08-SS064-08D	L08120263-19	Soil
20	MR08-IS064-2-3-08D	L08120263-20	Soil
21	MR08-SS065-08D	L08120263-21	Soil
22	MR08-IS065-1-2-08D	L08120263-22	Soil
23	MR08-SS066-08D	L08120263-23	Soil
24	MR08-IS066-2-3-08D	L08120263-24	Soil
25	MR08-EB01120608-SS	L08120263-25	Water
26	MR08-EB01120608-IS	L08120263-26	Water
27	MR08-FB01120608	L08120263-27	Water

The USEPA "Contract Laboratory Program National Functional Guidelines for Inorganic Data Review," October 2004, and professional judgement were used in evaluating the data in this summary report.

Holding Times - All samples were prepared and analyzed within 28 days for mercury and 180 days for all other metals.

Calibration - The ICV and CCV %R values were acceptable.

Method and Calibration Blanks - The method blanks and continuing calibration blanks exhibited contamination for several compounds, however, all sample results are non-detect or greater than 5X the blank concentration.

Field and Equipment Blank - Field QC results are summarized below.

Blank ID	Compound	Conc. ug/L	Action Level ug/L	Qualifier	Affected Samples
MR08-EB01120608-SS	None - ND	-	-	-	-
MR08-EB01120608-IS	None - ND	-	-	-	-
MR08-FB01120608	None - ND	-	-	-	-

ICP Interference Check Sample - All %R values were acceptable.

MS/MSD - The MS/MSD sample exhibited acceptable %R and RPD values except the following.

MS/MSD Sample ID	Compound	MS/MSD %R/RPD	Qualifier	Affected Samples
Reference	Chromium	72.8%/Ok/27.5	None	Already qualified due to SD

LCS - The LCS samples exhibited acceptable %R values.

ICP Serial Dilution - The ICP serial dilution sample exhibited acceptable %D values except the following.

ICP Sample ID	Compound	%D	Qualifier	Affected Samples
Reference	Chromium	22.40%	J	1
	Zinc	10.40%	J	1

Field Duplicates - Field duplicate results are summarized below.

Compound	MR08-SS059-08D mg/kg	MR08-SS059D-08D mg/kg	RPD	Qualifier
Antimony	0.499	0.435	14%	None
Arsenic	1.15	0.980	16%	None

Compound	MR08-SS059-08D mg/kg	MR08-SS059D-08D mg/kg	RPD	Qualifier
Barium	39.5	36.7	7%	None
Cadmium	0.452	0.413	9%	None
Chromium	8.02	7.41	8%	None
Copper	7.53	6.41	16%	None
Lead	14.5	11.9	20%	None
Mercury	0.224	0.209	7%	None
Selenium	0.301	0.295	2%	None
Silver	2.13	1.97	8%	None
Zinc	40.5	37.3	8%	None

Compound	MR08-IS059-3-4-08D mg/kg	MR08-IS059D-3-4-08D mg/kg	RPD	Qualifier
Arsenic	0.217	1.21	139%	None
Barium	5.05	13.0	88%	None
Cadmium	1.72 U	0.0630	NC	None
Calcium	6.56	4.98	27%	None
Copper	1.72 U	1.53	NC	None
Lead	7.12	4.87	38%	None
Mercury	0.106 U	0.0304	NC	None
Selenium	0.128	0.280	75%	None
Silver	0.861 U	0.256	NC	None
Zinc	1.49	12.4	157%	J

Compound Quantitation - No discrepancies were identified.

Report Number: L08120263

Report Date : January 8, 2009

Sample Number: L08120263-01
Client ID: MR08-SS056- 08D
Matrix: Soil
Workgroup Number: WG290853
Collect Date: 12/06/2008 08:30
Sample Tag: DL01

PrePrep Method: NONE
Prep Method: 3051
Analytical Method: 6010B
Analyst: KHR
Dilution: 10
Units: mg/kg

Instrument: IRIS-ICP
Prep Date: 12/16/2008 09:48
Cal Date: 12/20/2008 10:22
Run Date: 12/20/2008 11:42
File ID: IR.122008.114200
Percent Solid: 73.1

Analyte	CAS. Number	Result	Qual	RL	MDL	
Silver, Total	7440-22-4	108		10.5	2.63	
Barium, Total	7440-39-3	910		5.25	1.05	
Cadmium, Total	7440-43-9	11.3		2.10	0.525	
Chromium, Total	7440-47-3	147 J		10.5	1.26	SD
Copper, Total	7440-50-8	184		21.0	5.25	
Zinc, Total	7440-66-6	886 J		21.0	5.25	SD

Microbac

 lw 3/10/09

Sample Number: L08120263-01
Client ID: MR08-SS056- 08D
Matrix: Soil
Workgroup Number: WG290853
Collect Date: 12/06/2008 08:30
Sample Tag: 01

PrePrep Method: NONE
Prep Method: 3051
Analytical Method: 6010B
Analyst: KHR
Dilution: 1
Units: mg/kg

Instrument: IRIS-ICP
Prep Date: 12/16/2008 09:48
Cal Date: 12/18/2008 11:38
Run Date: 12/18/2008 21:08
File ID: IR.121808.210800
Percent Solid: 73.1

Analyte	CAS. Number	Result	Qual	RL	MDL
Antimony, Total	7440-36-0	7.59		2.10	0.525

Microbac

400 hw 3/10/09

Report Number: L08120263

Report Date : January 8, 2009

Sample Number:	L08120263-01	PrePrep Method:	NONE	Instrument:	ELAN-ICP
Client ID:	MR08-SS056- 08D	Prep Method:	3051	Prep Date:	12/10/2008 11:27
Matrix:	Soil	Analytical Method:	6020	Cal Date:	12/18/2008 10:46
Workgroup Number:	WG290291	Analyst:	JYH	Run Date:	12/18/2008 19:14
Collect Date:	12/06/2008 08:30	Dilution:	1	File ID:	EL.121808.191439
Sample Tag:	01	Units:	mg/kg	Percent Solid:	73.1

Analyte	CAS. Number	Result	Qual	RL	MDL
Arsenic, Total	7440-38-2	7.92		0.410	0.103
Selenium, Total	7782-49-2	2.39		0.547	0.137

Microbac

1533 DW 3/10/09

1

Sample Number: L08120263-01
Client ID: MR08-SS056- 08D
Matrix: Soil
Workgroup Number: WG290291
Collect Date: 12/06/2008 08:30
Sample Tag: DL01

PrePrep Method: NONE
Prep Method: 3051
Analytical Method: 6020
Analyst: JYH
Dilution: 25
Units: mg/kg

Instrument: ELAN-ICP
Prep Date: 12/10/2008 11:27
Cal Date: 12/19/2008 11:58
Run Date: 12/19/2008 15:49
File ID: EL.121908.154905
Percent Solid: 73.1

Analyte	CAS. Number	Result	Qual	RL	MDL
Lead, Total	7439-92-1	224		13.7	3.42

Microbac

1534 DW 3/10/09

Report Number: L08120263

Report Date : January 8, 2009

Sample Number:	L08120263-01	PrePrep Method:	NONE	Instrument:	HYDRA
Client ID:	MR08-SS056- 08D	Prep Method:	7471A	Prep Date:	12/12/2008 10:09
Matrix:	Soil	Analytical Method:	7471A	Cal Date:	12/16/2008 10:13
Workgroup Number:	WG290528	Analyst:	ADC	Run Date:	12/16/2008 10:33
Collect Date:	12/06/2008 08:30	Dilution:	20	File ID:	HY.121608.103352
Sample Tag:	DL01	Units:	mg/kg	Percent Solid:	73.1

Analyte	CAS. Number	Result	Qual	RL	MDL
Mercury, Total	7439-97-6	9.22		2.66	0.532

Microbac

3577 lw 3/10/09

2

Sample Number: L08120263-02
Client ID: MR08-IS056-2-3- 08D
Matrix: Soil
Workgroup Number: WG290856
Collect Date: 12/06/2008 08:45
Sample Tag: 01

PrePrep Method: NONE
Prep Method: 3051
Analytical Method: 6010B
Analyst: KHR
Dilution: 1
Units: mg/kg

Instrument: IRIS-ICP
Prep Date: 12/16/2008 10:01
Cal Date: 12/18/2008 11:38
Run Date: 12/18/2008 22:59
File ID: IR.121808.225900
Percent Solid: 90.6

Analyte	CAS. Number	Result	Qual	RL	MDL
Silver, Total	7440-22-4	25.6		0.836	0.209
Cadmium, Total	7440-43-9	2.56		0.167	0.0418
Chromium, Total	7440-47-3	35.3		0.836	0.100
Antimony, Total	7440-36-0	3.22		1.67	0.418

Microbac

401 LW 3/10/09

2

Sample Number: L08120263-02
Client ID: MR08-IS056-2-3- 08D
Matrix: Soil
Workgroup Number: WG290856
Collect Date: 12/06/2008 08:45
Sample Tag: DL01

PrePrep Method: NONE
Prep Method: 3051
Analytical Method: 6010B
Analyst: KHR
Dilution: 10
Units: mg/kg

Instrument: IRIS-ICP
Prep Date: 12/16/2008 10:01
Cal Date: 12/20/2008 10:22
Run Date: 12/20/2008 11:05
File ID: IR.122008.110500
Percent Solid: 90.6

Analyte	CAS. Number	Result	Qual	RL	MDL
Barium, Total	7440-39-3	231		4.18	0.836
Copper, Total	7440-50-8	46.9		16.7	4.18
Zinc, Total	7440-66-6	240		16.7	4.18

Microbac

402 AW 3/10/09

2

Sample Number: L08120263-02
Client ID: MR08-IS056-2-3- 08D
Matrix: Soil
Workgroup Number: WG290291
Collect Date: 12/06/2008 08:45
Sample Tag: 01

PrePrep Method: NONE
Prep Method: 3051
Analytical Method: 6020
Analyst: JYH
Dilution: 1
Units: mg/kg

Instrument: ELAN-ICP
Prep Date: 12/10/2008 11:27
Cal Date: 12/18/2008 10:46
Run Date: 12/18/2008 19:20
File ID: EL.121808.192002
Percent Solid: 90.6

Analyte	CAS. Number	Result	Qual	RL	MDL
Arsenic, Total	7440-38-2	0.930		0.330	0.0825
Selenium, Total	7782-49-2	0.982		0.440	0.110

Microbac

1535 LW 3/10/09

2

Sample Number:	L08120263-02	PrePrep Method:	NONE	Instrument:	ELAN-ICP
Client ID:	MR08-IS056-2-3- 08D	Prep Method:	3051	Prep Date:	12/10/2008 11:27
Matrix:	Soil	Analytical Method:	6020	Cal Date:	12/19/2008 11:58
Workgroup Number:	WG290291	Analyst:	JYH	Run Date:	12/19/2008 12:55
Collect Date:	12/06/2008 08:45	Dilution:	5	File ID:	EL.121908.125550
Sample Tag:	DL01	Units:	mg/kg	Percent Solid:	90.6

Analyte	CAS. Number	Result	Qual	RL	MDL
Lead, Total	7439-92-1	64.8		2.20	0.550

Microbac

1536 JW 3/10/09

2

Sample Number: L08120263-02
Client ID: MR08-IS056-2-3- 08D
Matrix: Soil
Workgroup Number: WG290528
Collect Date: 12/06/2008 08:45
Sample Tag: DL01

PrePrep Method: NONE
Prep Method: 7471A
Analytical Method: 7471A
Analyst: ADC
Dilution: 2
Units: mg/kg

Instrument: HYDRA
Prep Date: 12/12/2008 10:09
Cal Date: 12/16/2008 10:13
Run Date: 12/16/2008 10:40
File ID: HY.121608.104038
Percent Solid: 90.6

Analyte	CAS. Number	Result	Qual	RL	MDL
Mercury, Total	7439-97-6	1.13		0.218	0.0437

Microbac

3578 lw 3/10/09

3

Sample Number: L08120263-03
Client ID: MR08-SS057- 08D
Matrix: Soil
Workgroup Number: WG290856
Collect Date: 12/06/2008 09:25
Sample Tag: 01

PrePrep Method: NONE
Prep Method: 3051
Analytical Method: 6010B
Analyst: KHR
Dilution: 1
Units: mg/kg

Instrument: IRIS-ICP
Prep Date: 12/16/2008 10:02
Cal Date: 12/18/2008 11:38
Run Date: 12/18/2008 23:35
File ID: IR.121808.233500
Percent Solid: 63.8

Analyte	CAS. Number	Result	Qual	RL	MDL
Silver, Total	7440-22-4	0.925	J	1.21	0.301
Barium, Total	7440-39-3	22.9		0.603	0.121
Cadmium, Total	7440-43-9	0.236	J	0.241	0.0603
Chromium, Total	7440-47-3	13.4		1.21	0.145
Copper, Total	7440-50-8	4.51		2.41	0.603
Antimony, Total	7440-36-0		U	2.41	0.603
Zinc, Total	7440-66-6	18.4		2.41	0.603

U Undetected; the analyte was analyzed for, but not detected.
J Estimated ; the analyte concentration was less than the low standard (LOQ)

Microbac

403 RW 3/10/09

3

Sample Number: L08120263-03
Client ID: MR08-SS057- 08D
Matrix: Soil
Workgroup Number: WG290291
Collect Date: 12/06/2008 09:25
Sample Tag: 01

PrePrep Method: NONE
Prep Method: 3051
Analytical Method: 6020
Analyst: JYH
Dilution: 1
Units: mg/kg

Instrument: ELAN-ICP
Prep Date: 12/10/2008 11:27
Cal Date: 12/18/2008 10:46
Run Date: 12/18/2008 19:25
File ID: EL.121808.192526
Percent Solid: 63.8

Analyte	CAS. Number	Result	Qual	RL	MDL
Arsenic, Total	7440-38-2	1.65		0.469	0.117
Lead, Total	7439-92-1	13.7		0.626	0.156
Selenium, Total	7782-49-2	0.412	J	0.626	0.156

J Estimated ; the analyte concentration was less than the low standard (LOQ)

Microbac

1537 JW 3/10/09

3

Sample Number:	L08120263-03	PrePrep Method:	NONE	Instrument:	HYDRA
Client ID:	MR08-SS057- 08D	Prep Method:	7471A	Prep Date:	12/12/2008 10:09
Matrix:	Soil	Analytical Method:	7471A	Cal Date:	12/16/2008 10:13
Workgroup Number:	WG290528	Analyst:	ADC	Run Date:	12/16/2008 10:42
Collect Date:	12/06/2008 09:25	Dilution:	1	File ID:	HY.121608.104235
Sample Tag:	01	Units:	mg/kg	Percent Solid:	63.8

Analyte	CAS. Number	Result	Qual	RL	MDL
Mercury, Total	7439-97-6	0.0918	J	0.145	0.0289

J Estimated ; the analyte concentration was less than the low standard (LOQ)

Microbac

3579 fuw 3/10/09

4

Sample Number: L08120263-04
Client ID: MR08-IS57-2-3- 08D
Matrix: Soil
Workgroup Number: WG290856
Collect Date: 12/06/2008 09:40
Sample Tag: 01

PrePrep Method: NONE
Prep Method: 3051
Analytical Method: 6010B
Analyst: KHR
Dilution: 1
Units: mg/kg

Instrument: IRIS-ICP
Prep Date: 12/16/2008 10:05
Cal Date: 12/18/2008 11:38
Run Date: 12/18/2008 23:42
File ID: IR.121808.234200
Percent Solid: 89.9

Analyte	CAS. Number	Result	Qual	RL	MDL
Silver, Total	7440-22-4		U	0.848	0.212
Barium, Total	7440-39-3	9.81		0.424	0.0848
Cadmium, Total	7440-43-9		U	0.170	0.0424
Chromium, Total	7440-47-3	8.04		0.848	0.102
Copper, Total	7440-50-8	1.28	J	1.70	0.424
Antimony, Total	7440-36-0		U	1.70	0.424
Zinc, Total	7440-66-6	2.74		1.70	0.424

U Undetected; the analyte was analyzed for, but not detected.
J Estimated ; the analyte concentration was less than the low standard (LOQ)

Microbac

404 RW 3/10/09

4

Sample Number: L08120263-04
Client ID: MR08-IS57-2-3- 08D
Matrix: Soil
Workgroup Number: WG290291
Collect Date: 12/06/2008 09:40
Sample Tag: 01

PrePrep Method: NONE
Prep Method: 3051
Analytical Method: 6020
Analyst: JYH
Dilution: 1
Units: mg/kg

Instrument: ELAN-ICP
Prep Date: 12/10/2008 11:27
Cal Date: 12/18/2008 10:46
Run Date: 12/18/2008 19:30
File ID: EL.121808.193051
Percent Solid: 89.9

Analyte	CAS. Number	Result	Qual	RL	MDL
Arsenic, Total	7440-38-2	0.530		0.332	0.0829
Lead, Total	7439-92-1	3.15		0.442	0.111
Selenium, Total	7782-49-2		U	0.442	0.111

U Undetected; the analyte was analyzed for, but not detected.

Microbac

1538 fw 3/10/09

4

Sample Number: L08120263-04
Client ID: MR08-IS57-2-3~ 08D
Matrix: Soil
Workgroup Number: WG290528
Collect Date: 12/06/2008 09:40
Sample Tag: 01

PrePrep Method: NONE
Prep Method: 7471A
Analytical Method: 7471A
Analyst: ADC
Dilution: 1
Units: mg/kg

Instrument: HYDRA
Prep Date: 12/12/2008 10:09
Cal Date: 12/16/2008 10:13
Run Date: 12/16/2008 10:44
File ID: HY.121608.104423
Percent Solid: 89.9

Analyte	CAS. Number	Result	Qual	RL	MDL
Mercury, Total	7439-97-6		U	0.111	0.0222

U Undetected; the analyte was analyzed for, but not detected.

Microbac

3580 lew 3/10/09

5

Sample Number: L08120263-05
Client ID: MR08-SS058- 08D
Matrix: Soil
Workgroup Number: WG290856
Collect Date: 12/06/2008 10:05
Sample Tag: 01

PrePrep Method: NONE
Prep Method: 3051
Analytical Method: 6010B
Analyst: KHR
Dilution: 1
Units: mg/kg

Instrument: IRIS-ICP
Prep Date: 12/16/2008 10:05
Cal Date: 12/18/2008 11:38
Run Date: 12/18/2008 23:48
File ID: IR.121808.234800
Percent Solid: 80.3

Analyte	CAS. Number	Result	Qual	RL	MDL
Silver, Total	7440-22-4	0.952		0.931	0.233
Barium, Total	7440-39-3	22.1		0.466	0.0931
Cadmium, Total	7440-43-9	0.397		0.186	0.0466
Chromium, Total	7440-47-3	9.16		0.931	0.112
Copper, Total	7440-50-8	4.67		1.86	0.466
Antimony, Total	7440-36-0	0.535	J	1.86	0.466
Zinc, Total	7440-66-6	24.8		1.86	0.466

J Estimated ; the analyte concentration was less than the low standard (LOQ)

Microbac

405 LW 3/10/09

5

Sample Number: L08120263-05
Client ID: MR08-SS058- 08D
Matrix: Soil
Workgroup Number: WG290291
Collect Date: 12/06/2008 10:05
Sample Tag: 01

PrePrep Method: NONE
Prep Method: 3051
Analytical Method: 6020
Analyst: JYH
Dilution: 1
Units: mg/kg

Instrument: ELAN-ICP
Prep Date: 12/10/2008 11:27
Cal Date: 12/18/2008 10:46
Run Date: 12/18/2008 19:36
File ID: EL.121808.193615
Percent Solid: 80.3

Analyte	CAS. Number	Result	Qual	RL	MDL
Arsenic, Total	7440-38-2	1.78		0.374	0.0934
Lead, Total	7439-92-1	23.9		0.498	0.125
Selenium, Total	7782-49-2	0.236	J	0.498	0.125

J Estimated ; the analyte concentration was less than the low standard (LOQ)

Microbac

1539 QW 3/10/09

5

Sample Number: L08120263-05
Client ID: MR08-SS058- 08D
Matrix: Soil
Workgroup Number: WG290528
Collect Date: 12/06/2008 10:05
Sample Tag: 01

PrePrep Method: NONE
Prep Method: 7471A
Analytical Method: 7471A
Analyst: ADC
Dilution: 1
Units: mg/kg

Instrument: HYDRA
Prep Date: 12/12/2008 10:09
Cal Date: 12/16/2008 10:16
Run Date: 12/16/2008 10:46
File ID: HY.121608.104616
Percent Solid: 80.3

Analyte	CAS. Number	Result	Qual	RL	MDL
Mercury, Total	7439-97-6	0.202		0.117	0.0234

Microbac

3581 lw 3/10/09

6

Sample Number: L08120263-06
Client ID: MR08-IS058-2-3- 08D
Matrix: Soil
Workgroup Number: WG290856
Collect Date: 12/06/2008 10:20
Sample Tag: 01

PrePrep Method: NONE
Prep Method: 3051
Analytical Method: 6010B
Analyst: KHR
Dilution: 1
Units: mg/kg

Instrument: IRIS-ICP
Prep Date: 12/16/2008 10:06
Cal Date: 12/18/2008 11:38
Run Date: 12/18/2008 23:54
File ID: IR.121808.235400
Percent Solid: 97.4

Analyte	CAS. Number	Result	Qual	RL	MDL
Silver, Total	7440-22-4		U	0.770	0.193
Barium, Total	7440-39-3	5.60		0.385	0.0770
Cadmium, Total	7440-43-9		U	0.154	0.0385
Chromium, Total	7440-47-3	8.39		0.770	0.0924
Copper, Total	7440-50-8		U	1.54	0.385
Antimony, Total	7440-36-0		U	1.54	0.385
Zinc, Total	7440-66-6	1.88		1.54	0.385

U Undetected; the analyte was analyzed for, but not detected.

Microbac

406 MW 3/10/09

6

Sample Number: L08120263-06
Client ID: MR08-IS058-2-3- 08D
Matrix: Soil
Workgroup Number: WG290291
Collect Date: 12/06/2008 10:20
Sample Tag: 01

PrePrep Method: NONE
Prep Method: 3051
Analytical Method: 6020
Analyst: JYH
Dilution: 1
Units: mg/kg

Instrument: ELAN-ICP
Prep Date: 12/10/2008 11:27
Cal Date: 12/18/2008 10:46
Run Date: 12/18/2008 19:41
File ID: EL.121808.194140
Percent Solid: 97.4

Analyte	CAS. Number	Result	Qual	RL	MDL
Arsenic, Total	7440-38-2	0.474		0.305	0.0762
Lead, Total	7439-92-1	3.24		0.407	0.102
Selenium, Total	7782-49-2	0.172	J	0.407	0.102

J Estimated ; the analyte concentration was less than the low standard (LOQ)

Microbac

1540 MW 3/10/09

6

Sample Number: L08120263-06
Client ID: MR08-IS058-2-3- 08D
Matrix: Soil
Workgroup Number: WG290528
Collect Date: 12/06/2008 10:20
Sample Tag: 01

PrePrep Method: NONE
Prep Method: 7471A
Analytical Method: 7471A
Analyst: ADC
Dilution: 1
Units: mg/kg

Instrument: HYDRA
Prep Date: 12/12/2008 10:09
Cal Date: 12/16/2008 10:16
Run Date: 12/16/2008 10:48
File ID: HY.121608.104803
Percent Solid: 97.4

Analyte	CAS. Number	Result	Qual	RL	MDL
Mercury, Total	7439-97-6	0.0200	J	0.0986	0.0197

J Estimated ; the analyte concentration was less than the low standard (LOQ)

Microbac

3582 lw 3/10/09

7

Sample Number: L08120263-07
Client ID: MR08-SS059- 08D
Matrix: Soil
Workgroup Number: WG290856
Collect Date: 12/06/2008 10:40
Sample Tag: 01

PrePrep Method: NONE
Prep Method: 3051
Analytical Method: 6010B
Analyst: KHR
Dilution: 1
Units: mg/kg

Instrument: IRIS-ICP
Prep Date: 12/16/2008 10:07
Cal Date: 12/18/2008 11:38
Run Date: 12/19/2008 00:00
File ID: IR.121908.000000
Percent Solid: 85.6

Analyte	CAS. Number	Result	Qual	RL	MDL
Silver, Total	7440-22-4	2.13		0.810	0.203
Barium, Total	7440-39-3	39.5		0.405	0.0810
Cadmium, Total	7440-43-9	0.452		0.162	0.0405
Chromium, Total	7440-47-3	8.02		0.810	0.0972
Copper, Total	7440-50-8	7.53		1.62	0.405
Antimony, Total	7440-36-0	0.499	J	1.62	0.405
Zinc, Total	7440-66-6	40.5		1.62	0.405

J Estimated ; the analyte concentration was less than the low standard (LOQ)

Microbac

407 MW 3/10/09

7

Sample Number: L08120263-07
Client ID: MR08-SS059- 08D
Matrix: Soil
Workgroup Number: WG290291
Collect Date: 12/06/2008 10:40
Sample Tag: 01

PrePrep Method: NONE
Prep Method: 3051
Analytical Method: 6020
Analyst: JYH
Dilution: 1
Units: mg/kg

Instrument: ELAN-ICP
Prep Date: 12/10/2008 11:27
Cal Date: 12/18/2008 10:46
Run Date: 12/18/2008 19:47
File ID: EL.121808.194706
Percent Solid: 85.6

Analyte	CAS. Number	Result	Qual	RL	MDL
Arsenic, Total	7440-38-2	1.15		0.348	0.0871
Lead, Total	7439-92-1	14.5		0.464	0.116
Selenium, Total	7782-49-2	0.301	J	0.464	0.116

J Estimated ; the analyte concentration was less than the low standard (LOQ)

Microbac

1541 fw 3/10/09

7

Sample Number: L08120263-07
Client ID: MR08-SS059- 08D
Matrix: Soil
Workgroup Number: WG290528
Collect Date: 12/06/2008 10:40
Sample Tag: 01

PrePrep Method: NONE
Prep Method: 7471A
Analytical Method: 7471A
Analyst: ADC
Dilution: 1
Units: mg/kg

Instrument: HYDRA
Prep Date: 12/12/2008 10:09
Cal Date: 12/16/2008 10:16
Run Date: 12/16/2008 10:55
File ID: HY.121608.105530
Percent Solid: 85.6

Analyte	CAS. Number	Result	Qual	RL	MDL
Mercury, Total	7439-97-6	0.224		0.110	0.0219

Microbac

3583 lw 3/10/09

8

Sample Number: L08120263-08
Client ID: MR08-SS059D- 08D
Matrix: Soil
Workgroup Number: WG290856
Collect Date: 12/06/2008 10:45
Sample Tag: 01

PrePrep Method: NONE
Prep Method: 3051
Analytical Method: 6010B
Analyst: KHR
Dilution: 1
Units: mg/kg

Instrument: IRIS-ICP
Prep Date: 12/16/2008 10:08
Cal Date: 12/18/2008 11:38
Run Date: 12/19/2008 00:06
File ID: IR.121908.000600
Percent Solid: 94.1

Analyte	CAS. Number	Result	Qual	RL	MDL
Silver, Total	7440-22-4	1.97		0.814	0.203
Barium, Total	7440-39-3	36.7		0.407	0.0814
Cadmium, Total	7440-43-9	0.413		0.163	0.0407
Chromium, Total	7440-47-3	7.41		0.814	0.0976
Copper, Total	7440-50-8	6.41		1.63	0.407
Antimony, Total	7440-36-0	0.435	J	1.63	0.407
Zinc, Total	7440-66-6	37.3		1.63	0.407

J Estimated ; the analyte concentration was less than the low standard (LOQ)

Microbac

408 lw 3/10/09

8

Sample Number: L08120263-08
Client ID: MR08-SS059D- 08D
Matrix: Soil
Workgroup Number: WG290291
Collect Date: 12/06/2008 10:45
Sample Tag: 01

PrePrep Method: NONE
Prep Method: 3051
Analytical Method: 6020
Analyst: JYH
Dilution: 1
Units: mg/kg

Instrument: ELAN-ICP
Prep Date: 12/10/2008 11:27
Cal Date: 12/18/2008 10:46
Run Date: 12/18/2008 20:03
File ID: EL.121808.200354
Percent Solid: 94.1

Analyte	CAS. Number	Result	Qual	RL	MDL
Arsenic, Total	7440-38-2	0.980		0.316	0.0789
Lead, Total	7439-92-1	11.9		0.421	0.105
Selenium, Total	7782-49-2	0.295	J	0.421	0.105

J Estimated ; the analyte concentration was less than the low standard (LOQ)

Microbac

1542 LW 3/10/09

8

Sample Number: L08120263-08
Client ID: MR08-SS059D- 08D
Matrix: Soil
Workgroup Number: WG290528
Collect Date: 12/06/2008 10:45
Sample Tag: 01

PrePrep Method: NONE
Prep Method: 7471A
Analytical Method: 7471A
Analyst: ADC
Dilution: 1
Units: mg/kg

Instrument: HYDRA
Prep Date: 12/12/2008 10:09
Cal Date: 12/16/2008 10:16
Run Date: 12/16/2008 10:57
File ID: HY.121608.105717
Percent Solid: 94.1

Analyte	CAS. Number	Result	Qual	RL	MDL
Mercury, Total	7439-97-6	0.209		0.101	0.0201

Microbac

3584 JEW 3/10/09

9

Sample Number: L08120263-09
Client ID: MR08-IS059-3-4- 08D
Matrix: Soil
Workgroup Number: WG290856
Collect Date: 12/06/2008 10:50
Sample Tag: 01

PrePrep Method: NONE
Prep Method: 3051
Analytical Method: 6010B
Analyst: KHR
Dilution: 1
Units: mg/kg

Instrument: IRIS-ICP
Prep Date: 12/16/2008 10:09
Cal Date: 12/18/2008 11:38
Run Date: 12/19/2008 00:12
File ID: IR.121908.001200
Percent Solid: 87.6

Analyte	CAS. Number	Result	Qual	RL	MDL
Silver, Total	7440-22-4		U	0.861	0.215
Barium, Total	7440-39-3	5.05		0.430	0.0861
Cadmium, Total	7440-43-9		U	0.172	0.0430
Chromium, Total	7440-47-3	6.56		0.861	0.103
Copper, Total	7440-50-8		U	1.72	0.430
Antimony, Total	7440-36-0		U	1.72	0.430
Zinc, Total	7440-66-6	1.49 J	J	1.72	0.430

FD

U Undetected; the analyte was analyzed for, but not detected.
J Estimated ; the analyte concentration was less than the low standard (LOQ)

Microbac

409 lw 3/10/09

9

Sample Number: L08120263-09
Client ID: MR08-IS059-3-4- 08D
Matrix: Soil
Workgroup Number: WG290291
Collect Date: 12/06/2008 10:50
Sample Tag: 01

PrePrep Method: NONE
Prep Method: 3051
Analytical Method: 6020
Analyst: JYH
Dilution: 1
Units: mg/kg

Instrument: ELAN-ICP
Prep Date: 12/10/2008 11:27
Cal Date: 12/18/2008 10:46
Run Date: 12/18/2008 20:09
File ID: EL.121808.200918
Percent Solid: 87.6

Analyte	CAS. Number	Result	Qual	RL	MDL
Arsenic, Total	7440-38-2	0.217	J	0.342	0.0856
Lead, Total	7439-92-1	7.12		0.457	0.114
Selenium, Total	7782-49-2	0.128	J	0.457	0.114

J Estimated ; the analyte concentration was less than the low standard (LOQ)

Microbac

1543 lw 3/10/09

9

Sample Number: L08120263-09
Client ID: MR08-IS059-3-4- 08D
Matrix: Soil
Workgroup Number: WG290528
Collect Date: 12/06/2008 10:50
Sample Tag: 01

PrePrep Method: NONE
Prep Method: 7471A
Analytical Method: 7471A
Analyst: ADC
Dilution: 1
Units: mg/kg

Instrument: HYDRA
Prep Date: 12/12/2008 10:09
Cal Date: 12/16/2008 10:16
Run Date: 12/16/2008 10:59
File ID: HY.121608.105921
Percent Solid: 87.6

Analyte	CAS. Number	Result	Qual	RL	MDL
Mercury, Total	7439-97-6		U	0.106	0.0213

U Undetected; the analyte was analyzed for, but not detected.

Microbac

3585 MW 3/10/09

10

Sample Number: L08120263-10
Client ID: MR08-IS059D-3-4- 08D
Matrix: Soil
Workgroup Number: WG290856
Collect Date: 12/06/2008 11:00
Sample Tag: 01

PrePrep Method: NONE
Prep Method: 3051
Analytical Method: 6010B
Analyst: KHR
Dilution: 1
Units: mg/kg

Instrument: IRIS-ICP
Prep Date: 12/16/2008 10:09
Cal Date: 12/18/2008 11:38
Run Date: 12/19/2008 00:18
File ID: IR.121908.001800
Percent Solid: 92.0

Analyte	CAS. Number	Result	Qual	RL	MDL
Silver, Total	7440-22-4	0.256	J	0.813	0.203
Barium, Total	7440-39-3	13.0		0.407	0.0813
Cadmium, Total	7440-43-9	0.0630	J	0.163	0.0407
Chromium, Total	7440-47-3	4.98		0.813	0.0976
Copper, Total	7440-50-8	1.53	J	1.63	0.407
Antimony, Total	7440-36-0		U	1.63	0.407
Zinc, Total	7440-66-6	12.4 J		1.63	0.407

FD

U Undetected; the analyte was analyzed for, but not detected.
J Estimated ; the analyte concentration was less than the low standard (LOQ)

Microbac

410 MW 3/10/09

10

Sample Number: L08120263-10
Client ID: MR08-IS059D-3-4- 08D
Matrix: Soil
Workgroup Number: WG290291
Collect Date: 12/06/2008 11:00
Sample Tag: 01

PrePrep Method: NONE
Prep Method: 3051
Analytical Method: 6020
Analyst: JYH
Dilution: 1
Units: mg/kg

Instrument: ELAN-ICP
Prep Date: 12/10/2008 11:27
Cal Date: 12/18/2008 10:46
Run Date: 12/18/2008 20:14
File ID: EL.121808.201440
Percent Solid: 92.0

Analyte	CAS. Number	Result	Qual	RL	MDL
Arsenic, Total	7440-38-2	1.21		0.324	0.0809
Lead, Total	7439-92-1	4.87		0.431	0.108
Selenium, Total	7782-49-2	0.280	J	0.431	0.108

J Estimated ; the analyte concentration was less than the low standard (LOQ)

Microbac

1544 DW 3/10/09

10

Sample Number: L08120263-10
Client ID: MR08-IS059D-3-4- 08D
Matrix: Soil
Workgroup Number: WG290528
Collect Date: 12/06/2008 11:00
Sample Tag: 01

PrePrep Method: NONE
Prep Method: 7471A
Analytical Method: 7471A
Analyst: ADC
Dilution: 1
Units: mg/kg

Instrument: HYDRA
Prep Date: 12/12/2008 10:09
Cal Date: 12/16/2008 10:16
Run Date: 12/16/2008 11:01
File ID: HY.121608.110104
Percent Solid: 92.0

Analyte	CAS. Number	Result	Qual	RL	MDL
Mercury, Total	7439-97-6	0.0304	J	0.105	0.0211

J Estimated ; the analyte concentration was less than the low standard (LOQ)

Microbac

3586 lw 3/10/09

11

Sample Number: L08120263-11
Client ID: MR08-SS060- 08D
Matrix: Soil
Workgroup Number: WG290856
Collect Date: 12/06/2008 11:20
Sample Tag: 01

PrePrep Method: NONE
Prep Method: 3051
Analytical Method: 6010B
Analyst: KHR
Dilution: 1
Units: mg/kg

Instrument: IRIS-ICP
Prep Date: 12/16/2008 10:12
Cal Date: 12/18/2008 11:38
Run Date: 12/19/2008 00:37
File ID: IR.121908.003700
Percent Solid: 81.5

Analyte	CAS. Number	Result	Qual	RL	MDL
Silver, Total	7440-22-4		U	0.933	0.233
Barium, Total	7440-39-3	16.5		0.466	0.0933
Cadmium, Total	7440-43-9	0.188		0.187	0.0466
Chromium, Total	7440-47-3	9.73		0.933	0.112
Copper, Total	7440-50-8	4.73		1.87	0.466
Antimony, Total	7440-36-0	0.627	J	1.87	0.466
Zinc, Total	7440-66-6	8.88		1.87	0.466

U Undetected; the analyte was analyzed for, but not detected.
J Estimated ; the analyte concentration was less than the low standard (LOQ)

Microbac

411 LW 3/10/09

11

Sample Number: L08120263-11
Client ID: MR08-SS060- 08D
Matrix: Soil
Workgroup Number: WG290291
Collect Date: 12/06/2008 11:20
Sample Tag: 01

PrePrep Method: NONE
Prep Method: 3051
Analytical Method: 6020
Analyst: JYH
Dilution: 1
Units: mg/kg

Instrument: ELAN-ICP
Prep Date: 12/10/2008 11:27
Cal Date: 12/18/2008 10:46
Run Date: 12/18/2008 20:20
File ID: EL.121808.202003
Percent Solid: 81.5

Analyte	CAS. Number	Result	Qual	RL	MDL
Arsenic, Total	7440-38-2	2.44		0.366	0.0915
Lead, Total	7439-92-1	15.7		0.488	0.122
Selenium, Total	7782-49-2	0.390	J	0.488	0.122

J Estimated ; the analyte concentration was less than the low standard (LOQ)

Microbac

1545 lew 3/10/09

11

Sample Number: L08120263-11
Client ID: MR08-SS060- 08D
Matrix: Soil
Workgroup Number: WG290528
Collect Date: 12/06/2008 11:20
Sample Tag: 01

PrePrep Method: NONE
Prep Method: 7471A
Analytical Method: 7471A
Analyst: ADC
Dilution: 1
Units: mg/kg

Instrument: HYDRA
Prep Date: 12/12/2008 10:09
Cal Date: 12/16/2008 10:16
Run Date: 12/16/2008 11:02
File ID: HY.121608.110256
Percent Solid: 81.5

Analyte	CAS. Number	Result	Qual	RL	MDL
Mercury, Total	7439-97-6	0.0359	J	0.115	0.0229

J Estimated ; the analyte concentration was less than the low standard (LOQ)

Microbac

3587 lew 3/10/09

12

Sample Number: L08120263-12
Client ID: MR08-IS060-2-3- 08D
Matrix: Soil
Workgroup Number: WG290856
Collect Date: 12/06/2008 12:45
Sample Tag: 01

PrePrep Method: NONE
Prep Method: 3051
Analytical Method: 6010B
Analyst: KHR
Dilution: 1
Units: mg/kg

Instrument: IRIS-ICP
Prep Date: 12/16/2008 10:12
Cal Date: 12/18/2008 11:38
Run Date: 12/19/2008 00:43
File ID: IR.121908.004300
Percent Solid: 89.3

Analyte	CAS. Number	Result	Qual	RL	MDL
Silver, Total	7440-22-4		U	0.771	0.193
Barium, Total	7440-39-3	8.06		0.385	0.0771
Cadmium, Total	7440-43-9		U	0.154	0.0385
Chromium, Total	7440-47-3	7.63		0.771	0.0925
Copper, Total	7440-50-8		U	1.54	0.385
Antimony, Total	7440-36-0		U	1.54	0.385
Zinc, Total	7440-66-6	2.42		1.54	0.385

U Undetected; the analyte was analyzed for, but not detected.

Microbac

412 kw 3/10/09

12

Sample Number: L08120263-12
Client ID: MR08-IS060-2-3- 08D
Matrix: Soil
Workgroup Number: WG290291
Collect Date: 12/06/2008 12:45
Sample Tag: 01

PrePrep Method: NONE
Prep Method: 3051
Analytical Method: 6020
Analyst: JYH
Dilution: 1
Units: mg/kg

Instrument: ELAN-ICP
Prep Date: 12/10/2008 11:27
Cal Date: 12/18/2008 10:46
Run Date: 12/18/2008 20:25
File ID: EL.121808.202527
Percent Solid: 89.3

Analyte	CAS. Number	Result	Qual	RL	MDL
Arsenic, Total	7440-38-2	0.140	J	0.335	0.0837
Lead, Total	7439-92-1	3.79		0.446	0.112
Selenium, Total	7782-49-2		U	0.446	0.112

U Undetected; the analyte was analyzed for, but not detected.
J Estimated ; the analyte concentration was less than the low standard (LOQ)

Microbac

1546 lw 3/10/09

12

Sample Number: L08120263-12
Client ID: MR08-IS060-2-3- 08D
Matrix: Soil
Workgroup Number: WG290528
Collect Date: 12/06/2008 12:45
Sample Tag: 01

PrePrep Method: NONE
Prep Method: 7471A
Analytical Method: 7471A
Analyst: ADC
Dilution: 1
Units: mg/kg

Instrument: HYDRA
Prep Date: 12/12/2008 10:09
Cal Date: 12/16/2008 10:16
Run Date: 12/16/2008 11:04
File ID: HY.121608.110442
Percent Solid: 89.3

Analyte	CAS. Number	Result	Qual	RL	MDL
Mercury, Total	7439-97-6		U	0.108	0.0217

U Undetected; the analyte was analyzed for, but not detected.

Microbac

3588 lw 3/10/09

13

Sample Number: L08120263-13
Client ID: MR08-SS061- 08D
Matrix: Soil
Workgroup Number: WG290856
Collect Date: 12/06/2008 13:20
Sample Tag: 01

PrePrep Method: NONE
Prep Method: 3051
Analytical Method: 6010B
Analyst: KHR
Dilution: 1
Units: mg/kg

Instrument: IRIS-ICP
Prep Date: 12/16/2008 10:13
Cal Date: 12/18/2008 11:38
Run Date: 12/19/2008 00:49
File ID: IR.121908.004900
Percent Solid: 76.2

Analyte	CAS. Number	Result	Qual	RL	MDL
Silver, Total	7440-22-4	1.40		0.991	0.248
Barium, Total	7440-39-3	33.2		0.496	0.0991
Cadmium, Total	7440-43-9	0.375		0.198	0.0496
Chromium, Total	7440-47-3	12.9		0.991	0.119
Copper, Total	7440-50-8	8.40		1.98	0.496
Antimony, Total	7440-36-0		U	1.98	0.496
Zinc, Total	7440-66-6	47.4		1.98	0.496

U Undetected; the analyte was analyzed for, but not detected.

Microbac

413 DW 3/10/09

13

Sample Number: L08120263-13
Client ID: MR08-SS061- 08D
Matrix: Soil
Workgroup Number: WG290291
Collect Date: 12/06/2008 13:20
Sample Tag: 01

PrePrep Method: NONE
Prep Method: 3051
Analytical Method: 6020
Analyst: JYH
Dilution: 1
Units: mg/kg

Instrument: ELAN-ICP
Prep Date: 12/10/2008 11:27
Cal Date: 12/18/2008 10:46
Run Date: 12/18/2008 20:30
File ID: EL.121808.203050
Percent Solid: 76.2

Analyte	CAS. Number	Result	Qual	RL	MDL
Arsenic, Total	7440-38-2	3.77		0.391	0.0979
Lead, Total	7439-92-1	18.5		0.522	0.130
Selenium, Total	7782-49-2	0.647		0.522	0.130

Microbac

1547 LW 3/10/09

13

Sample Number: L08120263-13
Client ID: MR08-SS061- 08D
Matrix: Soil
Workgroup Number: WG290528
Collect Date: 12/06/2008 13:20
Sample Tag: 01

PrePrep Method: NONE
Prep Method: 7471A
Analytical Method: 7471A
Analyst: ADC
Dilution: 1
Units: mg/kg

Instrument: HYDRA
Prep Date: 12/12/2008 10:09
Cal Date: 12/16/2008 10:16
Run Date: 12/16/2008 11:06
File ID: HY.121608.110628
Percent Solid: 76.2

Analyte	CAS. Number	Result	Qual	RL	MDL
Mercury, Total	7439-97-6	0.203		0.124	0.0248

Microbac

3589 lew 3/10/09

14

Sample Number: L08120263-14
Client ID: MR08-IS061-2-3- 08D
Matrix: Soil
Workgroup Number: WG290856
Collect Date: 12/06/2008 13:30
Sample Tag: 01

PrePrep Method: NONE
Prep Method: 3051
Analytical Method: 6010B
Analyst: KHR
Dilution: 1
Units: mg/kg

Instrument: IRIS-ICP
Prep Date: 12/16/2008 10:14
Cal Date: 12/18/2008 11:38
Run Date: 12/19/2008 00:55
File ID: IR.121908.005500
Percent Solid: 86.3

Analyte	CAS. Number	Result	Qual	RL	MDL
Silver, Total	7440-22-4		U	0.829	0.207
Barium, Total	7440-39-3	8.34		0.414	0.0829
Cadmium, Total	7440-43-9	0.0576	J	0.166	0.0414
Chromium, Total	7440-47-3	9.16		0.829	0.0995
Copper, Total	7440-50-8		U	1.66	0.414
Antimony, Total	7440-36-0		U	1.66	0.414
Zinc, Total	7440-66-6	1.32	J	1.66	0.414

U Undetected; the analyte was analyzed for, but not detected.
J Estimated ; the analyte concentration was less than the low standard (LOQ)

Microbac

414 LW 3/10/09

14

Sample Number:	L08120263-14	PrePrep Method:	NONE	Instrument:	ELAN-ICP
Client ID:	MR08-IS061-2-3- 08D	Prep Method:	3051	Prep Date:	12/10/2008 11:27
Matrix:	Soil	Analytical Method:	6020	Cal Date:	12/18/2008 10:46
Workgroup Number:	WG290291	Analyst:	JYH	Run Date:	12/18/2008 20:36
Collect Date:	12/06/2008 13:30	Dilution:	1	File ID:	EL.121808.203614
Sample Tag:	01	Units:	mg/kg	Percent Solid:	86.3

Analyte	CAS. Number	Result	Qual	RL	MDL
Arsenic, Total	7440-38-2	0.501		0.347	0.0867
Lead, Total	7439-92-1	4.74		0.462	0.116
Selenium, Total	7782-49-2	0.285	J	0.462	0.116

J Estimated ; the analyte concentration was less than the low standard (LOQ)

Microbac

1548 LW 3/10/09

14

Sample Number:	L08120263-14	PrePrep Method:	NONE	Instrument:	HYDRA
Client ID:	MR08-IS061-2-3- 08D	Prep Method:	7471A	Prep Date:	12/12/2008 10:09
Matrix:	Soil	Analytical Method:	7471A	Cal Date:	12/16/2008 10:16
Workgroup Number:	WG290528	Analyst:	ADC	Run Date:	12/16/2008 11:08
Collect Date:	12/06/2008 13:30	Dilution:	1	File ID:	HY.121608.110834
Sample Tag:	01	Units:	mg/kg	Percent Solid:	86.3

Analyte	CAS. Number	Result	Qual	RL	MDL
Mercury, Total	7439-97-6		U	0.113	0.0225

U Undetected; the analyte was analyzed for, but not detected.

Microbac

3590 lew 3/10/09

15

Sample Number: L08120263-15
Client ID: MR08-SS062- 08D
Matrix: Soil
Workgroup Number: WG290856
Collect Date: 12/06/2008 14:00
Sample Tag: 01

PrePrep Method: NONE
Prep Method: 3051
Analytical Method: 6010B
Analyst: KHR
Dilution: 1
Units: mg/kg

Instrument: IRIS-ICP
Prep Date: 12/16/2008 10:15
Cal Date: 12/18/2008 11:38
Run Date: 12/19/2008 01:01
File ID: IR.121908.010100
Percent Solid: 87.0

Analyte	CAS. Number	Result	Qual	RL	MDL
Silver, Total	7440-22-4		U	0.857	0.214
Barium, Total	7440-39-3	11.0		0.429	0.0857
Cadmium, Total	7440-43-9	0.0592	J	0.171	0.0429
Chromium, Total	7440-47-3	5.33		0.857	0.103
Copper, Total	7440-50-8	2.18		1.71	0.429
Antimony, Total	7440-36-0		U	1.71	0.429
Zinc, Total	7440-66-6	5.98		1.71	0.429

U Undetected; the analyte was analyzed for, but not detected.
J Estimated ; the analyte concentration was less than the low standard (LOQ)

Microbac

415 LW 3/10/09

15

Sample Number: L08120263-15
Client ID: MR08-SS062- 08D
Matrix: Soil
Workgroup Number: WG290291
Collect Date: 12/06/2008 14:00
Sample Tag: 01

PrePrep Method: NONE
Prep Method: 3051
Analytical Method: 6020
Analyst: JYH
Dilution: 1
Units: mg/kg

Instrument: ELAN-ICP
Prep Date: 12/10/2008 11:27
Cal Date: 12/18/2008 10:46
Run Date: 12/18/2008 20:41
File ID: EL.121808.204138
Percent Solid: 87.0

Analyte	CAS. Number	Result	Qual	RL	MDL
Arsenic, Total	7440-38-2	1.11		0.344	0.0861
Lead, Total	7439-92-1	7.77		0.459	0.115
Selenium, Total	7782-49-2	0.396	J	0.459	0.115

J Estimated ; the analyte concentration was less than the low standard (LOQ)

Microbac

1549 GW 3/10/09

15

Sample Number:	L08120263-15	PrePrep Method:	NONE	Instrument:	HYDRA
Client ID:	MR08-SS062- 08D	Prep Method:	7471A	Prep Date:	12/12/2008 10:09
Matrix:	Soil	Analytical Method:	7471A	Cal Date:	12/16/2008 10:16
Workgroup Number:	WG290528	Analyst:	ADC	Run Date:	12/16/2008 11:10
Collect Date:	12/06/2008 14:00	Dilution:	1	File ID:	HY.121608.111017
Sample Tag:	01	Units:	mg/kg	Percent Solid:	87.0

Analyte	CAS. Number	Result	Qual	RL	MDL
Mercury, Total	7439-97-6		U	0.107	0.0213

U Undetected; the analyte was analyzed for, but not detected.

Microbac

3591 RW 3/10/09

16

Sample Number: L08120263-16
Client ID: MR08-IS062-2-3- 08D
Matrix: Soil
Workgroup Number: WG290856
Collect Date: 12/06/2008 14:15
Sample Tag: 01

PrePrep Method: NONE
Prep Method: 3051
Analytical Method: 6010B
Analyst: KHR
Dilution: 1
Units: mg/kg

Instrument: IRIS-ICP
Prep Date: 12/16/2008 10:16
Cal Date: 12/18/2008 11:38
Run Date: 12/19/2008 01:07
File ID: IR.121908.010700
Percent Solid: 88.0

Analyte	CAS. Number	Result	Qual	RL	MDL
Silver, Total	7440-22-4		U	0.852	0.213
Barium, Total	7440-39-3	7.03		0.426	0.0852
Cadmium, Total	7440-43-9		U	0.170	0.0426
Chromium, Total	7440-47-3	7.85		0.852	0.102
Copper, Total	7440-50-8		U	1.70	0.426
Antimony, Total	7440-36-0		U	1.70	0.426
Zinc, Total	7440-66-6	2.38		1.70	0.426

U Undetected; the analyte was analyzed for, but not detected.

Microbac

416 lw 3/10/09

16

Sample Number: L08120263-16
Client ID: MR08-IS062-2-3- 08D
Matrix: Soil
Workgroup Number: WG290291
Collect Date: 12/06/2008 14:15
Sample Tag: 01

PrePrep Method: NONE
Prep Method: 3051
Analytical Method: 6020
Analyst: JYH
Dilution: 1
Units: mg/kg

Instrument: ELAN-ICP
Prep Date: 12/10/2008 11:27
Cal Date: 12/18/2008 10:46
Run Date: 12/18/2008 20:47
File ID: EL.121808.204703
Percent Solid: 88.0

Analyte	CAS. Number	Result	Qual	RL	MDL
Arsenic, Total	7440-38-2	0.459		0.339	0.0847
Lead, Total	7439-92-1	3.92		0.452	0.113
Selenium, Total	7782-49-2	0.225	J	0.452	0.113

J Estimated ; the analyte concentration was less than the low standard (LOQ)

Microbac

1550 AW 3/10/09

16

Sample Number: L08120263-16
Client ID: MR08-IS062-2-3- 08D
Matrix: Soil
Workgroup Number: WG290528
Collect Date: 12/06/2008 14:15
Sample Tag: 01

PrePrep Method: NONE
Prep Method: 7471A
Analytical Method: 7471A
Analyst: ADC
Dilution: 1
Units: mg/kg

Instrument: HYDRA
Prep Date: 12/12/2008 10:09
Cal Date: 12/16/2008 10:16
Run Date: 12/16/2008 11:12
File ID: HY.121608.111220
Percent Solid: 88.0

Analyte	CAS. Number	Result	Qual	RL	MDL
Mercury, Total	7439-97-6		U	0.112	0.0223

U Undetected; the analyte was analyzed for, but not detected.

Microbac

Rev
3592 3/10/09

17

Sample Number: L08120263-17
Client ID: MR08-SS063- 08D
Matrix: Soil
Workgroup Number: WG290856
Collect Date: 12/06/2008 14:45
Sample Tag: 01

PrePrep Method: NONE
Prep Method: 3051
Analytical Method: 6010B
Analyst: KHR
Dilution: 1
Units: mg/kg

Instrument: IRIS-ICP
Prep Date: 12/16/2008 10:17
Cal Date: 12/18/2008 11:38
Run Date: 12/19/2008 01:14
File ID: IR.121908.011400
Percent Solid: 88.1

Analyte	CAS. Number	Result	Qual	RL	MDL
Silver, Total	7440-22-4		U	0.813	0.203
Barium, Total	7440-39-3	5.99		0.406	0.0813
Cadmium, Total	7440-43-9		U	0.163	0.0406
Chromium, Total	7440-47-3	9.01		0.813	0.0976
Copper, Total	7440-50-8	1.06	J	1.63	0.406
Antimony, Total	7440-36-0		U	1.63	0.406
Zinc, Total	7440-66-6	3.95		1.63	0.406

U Undetected; the analyte was analyzed for, but not detected.
J Estimated ; the analyte concentration was less than the low standard (LOQ)

Microbac

417 3/10/09

17

Sample Number: L08120263-17
Client ID: MR08-SS063- 08D
Matrix: Soil
Workgroup Number: WG290603
Collect Date: 12/06/2008 14:45
Sample Tag: 01

PrePrep Method: NONE
Prep Method: 3051
Analytical Method: 6020
Analyst: JYH
Dilution: 1
Units: mg/kg

Instrument: ELAN-ICP
Prep Date: 12/12/2008 13:35
Cal Date: 12/17/2008 09:38
Run Date: 12/17/2008 18:13
File ID: EL.121708.181339
Percent Solid: 88.1

Analyte	CAS. Number	Result	Qual	RL	MDL
Arsenic, Total	7440-38-2	0.625		0.338	0.0846
Lead, Total	7439-92-1	3.73		0.451	0.113
Selenium, Total	7782-49-2	0.307	J	0.451	0.113

J Estimated ; the analyte concentration was less than the low standard (LOQ)

Microbac

1551 lew 3/10/09

17

Sample Number: L08120263-17
Client ID: MR08-SS063- 08D
Matrix: Soil
Workgroup Number: WG290528
Collect Date: 12/06/2008 14:45
Sample Tag: 01

PrePrep Method: NONE
Prep Method: 7471A
Analytical Method: 7471A
Analyst: ADC
Dilution: 1
Units: mg/kg

Instrument: HYDRA
Prep Date: 12/12/2008 10:09
Cal Date: 12/16/2008 10:16
Run Date: 12/16/2008 11:16
File ID: HY.121608.111642
Percent Solid: 88.1

Analyte	CAS. Number	Result	Qual	RL	MDL
Mercury, Total	7439-97-6	0.0335	J	0.109	0.0218

J Estimated ; the analyte concentration was less than the low standard (LOQ)

Microbac

3593 lw 3/10/09

18

Sample Number: L08120263-18
Client ID: MR08-IS063-2-3-08D
Matrix: Soil
Workgroup Number: WG290856
Collect Date: 12/06/2008 14:55
Sample Tag: 01

PrePrep Method: NONE
Prep Method: 3051
Analytical Method: 6010B
Analyst: KHR
Dilution: 1
Units: mg/kg

Instrument: IRIS-ICP
Prep Date: 12/16/2008 10:17
Cal Date: 12/18/2008 11:38
Run Date: 12/19/2008 01:20
File ID: IR.121908.012000
Percent Solid: 88.6

Analyte	CAS. Number	Result	Qual	RL	MDL
Silver, Total	7440-22-4		U	0.807	0.202
Barium, Total	7440-39-3	6.14		0.403	0.0807
Cadmium, Total	7440-43-9		U	0.161	0.0403
Chromium, Total	7440-47-3	6.62		0.807	0.0968
Copper, Total	7440-50-8		U	1.61	0.403
Antimony, Total	7440-36-0		U	1.61	0.403
Zinc, Total	7440-66-6	1.56	J	1.61	0.403

U Undetected; the analyte was analyzed for, but not detected.
J Estimated ; the analyte concentration was less than the low standard (LOQ)

Microbac

418 LW 3/10/09

18

Sample Number: L08120263-18
Client ID: MR08-IS063-2-3-08D
Matrix: Soil
Workgroup Number: WG290603
Collect Date: 12/06/2008 14:55
Sample Tag: 02

PrePrep Method: NONE
Prep Method: 3051
Analytical Method: 6020
Analyst: JYH
Dilution: 1
Units: mg/kg

Instrument: ELAN-ICP
Prep Date: 12/12/2008 13:35
Cal Date: 12/18/2008 10:46
Run Date: 12/18/2008 11:37
File ID: EL.121808.113721
Percent Solid: 88.6

Analyte	CAS. Number	Result	Qual	RL	MDL
Arsenic, Total	7440-38-2	0.108	J	0.337	0.0842
Lead, Total	7439-92-1	3.36		0.449	0.112
Selenium, Total	7782-49-2		U	0.449	0.112

U Undetected; the analyte was analyzed for, but not detected.
J Estimated ; the analyte concentration was less than the low standard (LOQ)

Microbac

1552 3/10/09

18

Sample Number: L08120263-18
Client ID: MR08-IS063-2-3-08D
Matrix: Soil
Workgroup Number: WG290528
Collect Date: 12/06/2008 14:55
Sample Tag: 01

PrePrep Method: NONE
Prep Method: 7471A
Analytical Method: 7471A
Analyst: ADC
Dilution: 1
Units: mg/kg

Instrument: HYDRA
Prep Date: 12/12/2008 10:09
Cal Date: 12/16/2008 10:16
Run Date: 12/16/2008 11:18
File ID: HY.121608.111828
Percent Solid: 88.6

Analyte	CAS. Number	Result	Qual	RL	MDL
Mercury, Total	7439-97-6		U	0.107	0.0214

U Undetected; the analyte was analyzed for, but not detected.

Microbac

3594 lew 3/10/09

19

Sample Number: L08120263-19
Client ID: MR08-SS064- 08D
Matrix: Soil
Workgroup Number: WG290856
Collect Date: 12/06/2008 15:05
Sample Tag: 01

PrePrep Method: NONE
Prep Method: 3051
Analytical Method: 6010B
Analyst: KHR
Dilution: 1
Units: mg/kg

Instrument: IRIS-ICP
Prep Date: 12/16/2008 10:18
Cal Date: 12/18/2008 11:38
Run Date: 12/19/2008 01:26
File ID: IR.121908.012600
Percent Solid: 87.6

Analyte	CAS. Number	Result	Qual	RL	MDL
Silver, Total	7440-22-4		U	0.832	0.208
Barium, Total	7440-39-3	8.55		0.416	0.0832
Cadmium, Total	7440-43-9		U	0.166	0.0416
Chromium, Total	7440-47-3	4.83		0.832	0.0999
Copper, Total	7440-50-8	3.39		1.66	0.416
Antimony, Total	7440-36-0		U	1.66	0.416
Zinc, Total	7440-66-6	5.72		1.66	0.416

U Undetected; the analyte was analyzed for, but not detected.

Microbac

LW 3/10/09

19

Sample Number: L08120263-19
Client ID: MR08-SS064- 08D
Matrix: Soil
Workgroup Number: WG290603
Collect Date: 12/06/2008 15:05
Sample Tag: 01

PrePrep Method: NONE
Prep Method: 3051
Analytical Method: 6020
Analyst: JYH
Dilution: 1
Units: mg/kg

Instrument: ELAN-ICP
Prep Date: 12/12/2008 13:35
Cal Date: 12/17/2008 09:38
Run Date: 12/17/2008 19:04
File ID: EL.121708.190433
Percent Solid: 87.6

Analyte	CAS. Number	Result	Qual	RL	MDL
Arsenic, Total	7440-38-2	1.22		0.339	0.0848
Lead, Total	7439-92-1	10.9		0.452	0.113
Selenium, Total	7782-49-2	0.346	J	0.452	0.113

J Estimated ; the analyte concentration was less than the low standard (LOQ)

Microbac

1553 MW 3/10/09

19

Sample Number:	L08120263-19	PrePrep Method:	NONE	Instrument:	HYDRA
Client ID:	MR08-SS064- 08D	Prep Method:	7471A	Prep Date:	12/12/2008 10:09
Matrix:	Soil	Analytical Method:	7471A	Cal Date:	12/16/2008 10:16
Workgroup Number:	WG290528	Analyst:	ADC	Run Date:	12/16/2008 11:20
Collect Date:	12/06/2008 15:05	Dilution:	1	File ID:	HY.121608.112011
Sample Tag:	01	Units:	mg/kg	Percent Solid:	87.6

Analyte	CAS. Number	Result	Qual	RL	MDL
Mercury, Total	7439-97-6		U	0.113	0.0225

U Undetected; the analyte was analyzed for, but not detected.

Microbac

3595 lew 3/10/09

20

Sample Number: L08120263-20
Client ID: MR08-IS064-2-3- 08D
Matrix: Soil
Workgroup Number: WG290856
Collect Date: 12/06/2008 15:25
Sample Tag: 01

PrePrep Method: NONE
Prep Method: 3051
Analytical Method: 6010B
Analyst: KHR
Dilution: 1
Units: mg/kg

Instrument: IRIS-ICP
Prep Date: 12/16/2008 10:18
Cal Date: 12/18/2008 11:38
Run Date: 12/19/2008 01:32
File ID: IR.121908.013200
Percent Solid: 90.3

Analyte	CAS. Number	Result	Qual	RL	MDL
Silver, Total	7440-22-4		U	0.849	0.212
Barium, Total	7440-39-3	7.18		0.424	0.0849
Cadmium, Total	7440-43-9		U	0.170	0.0424
Chromium, Total	7440-47-3	7.99		0.849	0.102
Copper, Total	7440-50-8		U	1.70	0.424
Antimony, Total	7440-36-0		U	1.70	0.424
Zinc, Total	7440-66-6	1.95		1.70	0.424

U Undetected; the analyte was analyzed for, but not detected.

Microbac

420 MW 3/10/09

20

Sample Number: L08120263-20
Client ID: MR08-IS064-2-3- 08D
Matrix: Soil
Workgroup Number: WG290603
Collect Date: 12/06/2008 15:25
Sample Tag: 01

PrePrep Method: NONE
Prep Method: 3051
Analytical Method: 6020
Analyst: JYH
Dilution: 1
Units: mg/kg

Instrument: ELAN-ICP
Prep Date: 12/12/2008 13:35
Cal Date: 12/17/2008 09:38
Run Date: 12/17/2008 19:09
File ID: EL.121708.190957
Percent Solid: 90.3

Analyte	CAS. Number	Result	Qual	RL	MDL
Arsenic, Total	7440-38-2	0.417		0.328	0.0821
Lead, Total	7439-92-1	3.52		0.438	0.109
Selenium, Total	7782-49-2		U	0.438	0.109

U Undetected; the analyte was analyzed for, but not detected.

Microbac

1554 lw 3/10/09

20

Sample Number: L08120263-20
Client ID: MR08-IS064-2-3- 08D
Matrix: Soil
Workgroup Number: WG290530
Collect Date: 12/06/2008 15:25
Sample Tag: 01

PrePrep Method: NONE
Prep Method: 7471A
Analytical Method: 7471A
Analyst: ADC
Dilution: 1
Units: mg/kg

Instrument: HYDRA
Prep Date: 12/12/2008 12:45
Cal Date: 12/16/2008 10:16
Run Date: 12/16/2008 11:38
File ID: HY.121608.113842
Percent Solid: 90.3

Analyte	CAS. Number	Result	Qual	RL	MDL
Mercury, Total	7439-97-6		U	0.107	0.0214

U Undetected; the analyte was analyzed for, but not detected.

Microbac

3596 JEW 3/10/09

21

Sample Number: L08120263-21
Client ID: MR08-SS065- 08D
Matrix: Soil
Workgroup Number: WG290978
Collect Date: 12/06/2008 15:35
Sample Tag: 01

PrePrep Method: NONE
Prep Method: 3051
Analytical Method: 6010B
Analyst: KHR
Dilution: 1
Units: mg/kg

Instrument: IRIS-ICP
Prep Date: 12/16/2008 10:30
Cal Date: 12/19/2008 10:46
Run Date: 12/19/2008 13:25
File ID: IR.121908.132500
Percent Solid: 77.2

Analyte	CAS. Number	Result	Qual	RL	MDL
Silver, Total	7440-22-4		U	0.995	0.249
Barium, Total	7440-39-3	16.2		0.498	0.0995
Cadmium, Total	7440-43-9	0.398		0.199	0.0498
Chromium, Total	7440-47-3	21.6		0.995	0.119
Copper, Total	7440-50-8	10.2		1.99	0.498
Antimony, Total	7440-36-0	0.714	J	1.99	0.498
Zinc, Total	7440-66-6	66.2		1.99	0.498

U Undetected; the analyte was analyzed for, but not detected.
J Estimated ; the analyte concentration was less than the low standard (LOQ)

Microbac

421 MW 3/10/09

21

Sample Number: L08120263-21
Client ID: MR08-SS065- 08D
Matrix: Soil
Workgroup Number: WG290603
Collect Date: 12/06/2008 15:35
Sample Tag: 01

PrePrep Method: NONE
Prep Method: 3051
Analytical Method: 6020
Analyst: JYH
Dilution: 1
Units: mg/kg

Instrument: ELAN-ICP
Prep Date: 12/12/2008 13:35
Cal Date: 12/17/2008 09:38
Run Date: 12/17/2008 19:15
File ID: EL.121708.191520
Percent Solid: 77.2

Analyte	CAS. Number	Result	Qual	RL	MDL
Arsenic, Total	7440-38-2	1.80		0.387	0.0967
Lead, Total	7439-92-1	19.2		0.516	0.129
Selenium, Total	7782-49-2	0.968		0.516	0.129

Microbac

1555 LW 3/18/09

21

Sample Number:	L08120263-21	PrePrep Method:	NONE	Instrument:	HYDRA
Client ID:	MR08-SS065- 08D	Prep Method:	7471A	Prep Date:	12/12/2008 12:45
Matrix:	Soil	Analytical Method:	7471A	Cal Date:	12/16/2008 10:16
Workgroup Number:	WG290530	Analyst:	ADC	Run Date:	12/16/2008 11:46
Collect Date:	12/06/2008 15:35	Dilution:	1	File ID:	HY.121608.114623
Sample Tag:	01	Units:	mg/kg	Percent Solid:	77.2

Analyte	CAS. Number	Result	Qual	RL	MDL
Mercury, Total	7439-97-6	0.0632	J	0.127	0.0254

J Estimated ; the analyte concentration was less than the low standard (LOQ)

Microbac

3597 fw 3/10/09

22

Sample Number: L08120263-22
Client ID: MR08-IS065-1-2- 08D
Matrix: Soil
Workgroup Number: WG290978
Collect Date: 12/06/2008 15:45
Sample Tag: 01

PrePrep Method: NONE
Prep Method: 3051
Analytical Method: 6010B
Analyst: KHR
Dilution: 1
Units: mg/kg

Instrument: IRIS-ICP
Prep Date: 12/16/2008 10:30
Cal Date: 12/19/2008 10:46
Run Date: 12/19/2008 14:02
File ID: IR.121908.140200
Percent Solid: 84.0

Analyte	CAS. Number	Result	Qual	RL	MDL
Silver, Total	7440-22-4		U	0.862	0.216
Barium, Total	7440-39-3	5.86		0.431	0.0862
Cadmium, Total	7440-43-9		U	0.172	0.0431
Chromium, Total	7440-47-3	5.74		0.862	0.103
Copper, Total	7440-50-8	0.498	J	1.72	0.431
Antimony, Total	7440-36-0		U	1.72	0.431
Zinc, Total	7440-66-6	1.10	J	1.72	0.431

U Undetected; the analyte was analyzed for, but not detected.
J Estimated ; the analyte concentration was less than the low standard (LOQ)

Microbac

 RW 3/10/09

22

Sample Number: L08120263-22
Client ID: MR08-IS065-1-2- 08D
Matrix: Soil
Workgroup Number: WG290603
Collect Date: 12/06/2008 15:45
Sample Tag: 01

PrePrep Method: NONE
Prep Method: 3051
Analytical Method: 6020
Analyst: JYH
Dilution: 1
Units: mg/kg

Instrument: ELAN-ICP
Prep Date: 12/12/2008 13:35
Cal Date: 12/17/2008 09:38
Run Date: 12/17/2008 19:20
File ID: EL.121708.192043
Percent Solid: 84.0

Analyte	CAS. Number	Result	Qual	RL	MDL
Arsenic, Total	7440-38-2	0.461		0.348	0.0869
Lead, Total	7439-92-1	3.16		0.463	0.116
Selenium, Total	7782-49-2	0.335	J	0.463	0.116

J Estimated ; the analyte concentration was less than the low standard (LOQ)

Microbac

1556 lew 3/10/09

22

Sample Number: L08120263-22
Client ID: MR08-IS065-1-2- 08D
Matrix: Soil
Workgroup Number: WG290530
Collect Date: 12/06/2008 15:45
Sample Tag: 01

PrePrep Method: NONE
Prep Method: 7471A
Analytical Method: 7471A
Analyst: ADC
Dilution: 1
Units: mg/kg

Instrument: HYDRA
Prep Date: 12/12/2008 12:45
Cal Date: 12/16/2008 10:16
Run Date: 12/16/2008 11:48
File ID: HY.121608.114816
Percent Solid: 84.0

Analyte	CAS. Number	Result	Qual	RL	MDL
Mercury, Total	7439-97-6		U	0.117	0.0234

U Undetected; the analyte was analyzed for, but not detected.

Microbac

3598 JW 3/10/09

23

Sample Number: L08120263-23
Client ID: MR08-SS066- 08D
Matrix: Soil
Workgroup Number: WG290978
Collect Date: 12/06/2008 16:05
Sample Tag: 01

PrePrep Method: NONE
Prep Method: 3051
Analytical Method: 6010B
Analyst: KHR
Dilution: 1
Units: mg/kg

Instrument: IRIS-ICP
Prep Date: 12/16/2008 10:31
Cal Date: 12/19/2008 10:46
Run Date: 12/19/2008 14:08
File ID: IR.121908.140800
Percent Solid: 84.1

Analyte	CAS. Number	Result	Qual	RL	MDL
Silver, Total	7440-22-4		U	0.853	0.213
Barium, Total	7440-39-3	8.86		0.427	0.0853
Cadmium, Total	7440-43-9	0.0793	J	0.171	0.0427
Chromium, Total	7440-47-3	4.56		0.853	0.102
Copper, Total	7440-50-8	1.53	J	1.71	0.427
Antimony, Total	7440-36-0		U	1.71	0.427
Zinc, Total	7440-66-6	15.9		1.71	0.427

U Undetected; the analyte was analyzed for, but not detected.
J Estimated ; the analyte concentration was less than the low standard (LOQ)

Microbac

423 JW 3/10/09

23

Sample Number: L08120263-23
Client ID: MR08-SS066- 08D
Matrix: Soil
Workgroup Number: WG290603
Collect Date: 12/06/2008 16:05
Sample Tag: 01

PrePrep Method: NONE
Prep Method: 3051
Analytical Method: 6020
Analyst: JYH
Dilution: 1
Units: mg/kg

Instrument: ELAN-ICP
Prep Date: 12/12/2008 13:35
Cal Date: 12/17/2008 09:38
Run Date: 12/17/2008 19:26
File ID: EL.121708.192606
Percent Solid: 84.1

Analyte	CAS. Number	Result	Qual	RL	MDL
Arsenic, Total	7440-38-2	1.49		0.344	0.0861
Lead, Total	7439-92-1	8.01		0.459	0.115
Selenium, Total	7782-49-2	0.443	J	0.459	0.115

J Estimated ; the analyte concentration was less than the low standard (LOQ)

Microbac

1557 LW 3/10/09

23

Sample Number: L08120263-23
Client ID: MR08-SS066- 08D
Matrix: Soil
Workgroup Number: WG290530
Collect Date: 12/06/2008 16:05
Sample Tag: 01

PrePrep Method: NONE
Prep Method: 7471A
Analytical Method: 7471A
Analyst: ADC
Dilution: 1
Units: mg/kg

Instrument: HYDRA
Prep Date: 12/12/2008 12:45
Cal Date: 12/16/2008 10:16
Run Date: 12/16/2008 11:50
File ID: HY.121608.115001
Percent Solid: 84.1

Analyte	CAS. Number	Result	Qual	RL	MDL
Mercury, Total	7439-97-6	0.0289	J	0.112	0.0224

J Estimated ; the analyte concentration was less than the low standard (LOQ)

Microbac

3599 MW 3/10/09

24

Sample Number: L08120263-24
Client ID: MR08-IS066-2-3-08D
Matrix: Soil
Workgroup Number: WG290978
Collect Date: 12/06/2008 16:25
Sample Tag: 01

PrePrep Method: NONE
Prep Method: 3051
Analytical Method: 6010B
Analyst: KHR
Dilution: 1
Units: mg/kg

Instrument: IRIS-ICP
Prep Date: 12/16/2008 10:32
Cal Date: 12/19/2008 10:46
Run Date: 12/19/2008 14:14
File ID: IR.121908.141400
Percent Solid: 67.3

Analyte	CAS. Number	Result	Qual	RL	MDL
Silver, Total	7440-22-4		U	1.10	0.274
Barium, Total	7440-39-3	25.3		0.549	0.110
Cadmium, Total	7440-43-9		U	0.219	0.0549
Chromium, Total	7440-47-3	11.6		1.10	0.132
Copper, Total	7440-50-8	0.603	J	2.19	0.549
Antimony, Total	7440-36-0		U	2.19	0.549
Zinc, Total	7440-66-6	11.3		2.19	0.549

U Undetected; the analyte was analyzed for, but not detected.
J Estimated ; the analyte concentration was less than the low standard (LOQ)

Microbac

424 lw 3/10/09

24

Sample Number: L08120263-24
Client ID: MR08-IS066-2-3-08D
Matrix: Soil
Workgroup Number: WG290603
Collect Date: 12/06/2008 16:25
Sample Tag: 01

PrePrep Method: NONE
Prep Method: 3051
Analytical Method: 6020
Analyst: JYH
Dilution: 1
Units: mg/kg

Instrument: ELAN-ICP
Prep Date: 12/12/2008 13:35
Cal Date: 12/17/2008 09:38
Run Date: 12/17/2008 19:31
File ID: EL.121708.193130
Percent Solid: 67.3

Analyte	CAS. Number	Result	Qual	RL	MDL
Arsenic, Total	7440-38-2	0.917		0.434	0.109
Lead, Total	7439-92-1	11.2		0.579	0.145
Selenium, Total	7782-49-2	2.35		0.579	0.145

Microbac

1558 LW 3/10/09

24

Sample Number: L08120263-24
Client ID: MR08-IS066-2-3-08D
Matrix: Soil
Workgroup Number: WG290530
Collect Date: 12/06/2008 16:25
Sample Tag: 01

PrePrep Method: NONE
Prep Method: 7471A
Analytical Method: 7471A
Analyst: ADC
Dilution: 1
Units: mg/kg

Instrument: HYDRA
Prep Date: 12/12/2008 12:45
Cal Date: 12/16/2008 10:16
Run Date: 12/16/2008 11:52
File ID: HY.121608.115206
Percent Solid: 67.3

Analyte	CAS. Number	Result	Qual	RL	MDL
Mercury, Total	7439-97-6	0.0706	J	0.148	0.0296

J Estimated ; the analyte concentration was less than the low standard (LOQ)

Microbac

3600 3/10/09

25

Sample Number: L08120263-25
Client ID: MR08-EB01120608-SS
Matrix: Water
Workgroup Number: WG290587
Collect Date: 12/06/2008 13:00
Sample Tag: 01

PrePrep Method: NONE
Prep Method: 3005A
Analytical Method: 6010B
Analyst: ED
Dilution: 1
Units: ug/L

Instrument: PE-ICP2
Prep Date: 12/11/2008 09:34
Cal Date: 12/16/2008 13:31
Run Date: 12/16/2008 17:04
File ID: P2.121608.170418

Analyte	CAS. Number	Result	Qual	RL	MDL
Barium, Total	7440-39-3		U	10.0	2.50
Cadmium, Total	7440-43-9		U	1.00	0.250
Chromium, Total	7440-47-3		U	10.0	2.50
Copper, Total	7440-50-8		U	20.0	5.00
Silver, Total	7440-22-4		U	6.00	2.00
Zinc, Total	7440-66-6		U	20.0	5.00

U Undetected; the analyte was analyzed for, but not detected.

Microbac

 lw 3/10/09

25

Sample Number: L08120263-25
Client ID: MR08-EB01120608-SS
Matrix: Water
Workgroup Number: WG290255
Collect Date: 12/06/2008 13:00
Sample Tag: 01

PrePrep Method: NONE
Prep Method: 3015
Analytical Method: 6020
Analyst: JYH
Dilution: 1
Units: ug/L

Instrument: ELAN-ICP
Prep Date: 12/11/2008 08:30
Cal Date: 12/11/2008 10:44
Run Date: 12/11/2008 16:40
File ID: EL.121108.164053

Analyte	CAS. Number	Result	Qual	RL	MDL
Arsenic, Total	7440-38-2		U	1.00	0.250
Lead, Total	7439-92-1		U	1.00	0.250
Selenium, Total	7782-49-2		U	2.00	0.500

U Undetected; the analyte was analyzed for, but not detected.

Microbac

1559 MW 3/10/09

25

Sample Number: L08120263-25
Client ID: MR08-EB01120608-SS
Matrix: Water
Workgroup Number: WG290255
Collect Date: 12/06/2008 13:00
Sample Tag: 02

PrePrep Method: NONE
Prep Method: 3015
Analytical Method: 6020
Analyst: JYH
Dilution: 1
Units: ug/L

Instrument: ELAN-ICP
Prep Date: 12/11/2008 08:30
Cal Date: 12/18/2008 10:46
Run Date: 12/19/2008 00:53
File ID: EL.121908.005334

Analyte	CAS. Number	Result	Qual	RL	MDL
Antimony, Total	7440-36-0		U	1.00	0.250

U Undetected; the analyte was analyzed for, but not detected.

Microbac

1560 JW 3/10/09

25

Sample Number: L08120263-25
Client ID: MR08-EB01120608-SS
Matrix: Water
Workgroup Number: WG290493
Collect Date: 12/06/2008 13:00
Sample Tag: 01

PrePrep Method: NONE
Prep Method: 7470A
Analytical Method: 7470A
Analyst: ADC
Dilution: 1
Units: ug/L

Instrument: HYDRA
Prep Date: 12/12/2008 09:34
Cal Date: 12/15/2008 10:06
Run Date: 12/15/2008 10:44
File ID: HY.121508.104455

Analyte	CAS. Number	Result	Qual	RL	MDL
Mercury	7439-97-6		U	0.400	0.100

U Undetected; the analyte was analyzed for, but not detected.

Microbac

3601 lw 3/10/09

26

Sample Number: L08120263-26
Client ID: MR08-EB01120608-IS
Matrix: Water
Workgroup Number: WG290587
Collect Date: 12/06/2008 13:30
Sample Tag: 01

PrePrep Method: NONE
Prep Method: 3005A
Analytical Method: 6010B
Analyst: ED
Dilution: 1
Units: ug/L

Instrument: PE-ICP2
Prep Date: 12/11/2008 09:34
Cal Date: 12/16/2008 13:31
Run Date: 12/16/2008 17:10
File ID: P2.121608.171030

Analyte	CAS. Number	Result	Qual	RL	MDL
Barium, Total	7440-39-3		U	10.0	2.50
Cadmium, Total	7440-43-9		U	1.00	0.250
Chromium, Total	7440-47-3		U	10.0	2.50
Copper, Total	7440-50-8		U	20.0	5.00
Silver, Total	7440-22-4		U	6.00	2.00
Zinc, Total	7440-66-6		U	20.0	5.00

U Undetected; the analyte was analyzed for, but not detected.

Microbac

 kw 3/10/09

26

Sample Number: L08120263-26
Client ID: MR08-EB01120608-IS
Matrix: Water
Workgroup Number: WG290255
Collect Date: 12/06/2008 13:30
Sample Tag: 01

PrePrep Method: NONE
Prep Method: 3015
Analytical Method: 6020
Analyst: JYH
Dilution: 1
Units: ug/L

Instrument: ELAN-ICP
Prep Date: 12/11/2008 08:30
Cal Date: 12/11/2008 10:44
Run Date: 12/11/2008 16:46
File ID: EL.121108.164615

Analyte	CAS. Number	Result	Qual	RL	MDL
Arsenic, Total	7440-38-2		U	1.00	0.250
Lead, Total	7439-92-1		U	1.00	0.250
Selenium, Total	7782-49-2		U	2.00	0.500

U Undetected; the analyte was analyzed for, but not detected.

Microbac

1561 lew 3/10/09

26

Sample Number: L08120263-26
Client ID: MR08-EB01120608-IS
Matrix: Water
Workgroup Number: WG290255
Collect Date: 12/06/2008 13:30
Sample Tag: 02

PrePrep Method: NONE
Prep Method: 3015
Analytical Method: 6020
Analyst: JYH
Dilution: 1
Units: ug/L

Instrument: ELAN-ICP
Prep Date: 12/11/2008 08:30
Cal Date: 12/18/2008 10:46
Run Date: 12/19/2008 00:59
File ID: EL.121908.005900

Analyte	CAS. Number	Result	Qual	RL	MDL
Antimony, Total	7440-36-0		U	1.00	0.250

U Undetected; the analyte was analyzed for, but not detected.

Microbac

1562 LW 3/10/09

26

Sample Number: L08120263-26
Client ID: MR08-EB01120608-IS
Matrix: Water
Workgroup Number: WG290493
Collect Date: 12/06/2008 13:30
Sample Tag: 01

PrePrep Method: NONE
Prep Method: 7470A
Analytical Method: 7470A
Analyst: ADC
Dilution: 1
Units: ug/L

Instrument: HYDRA
Prep Date: 12/12/2008 09:34
Cal Date: 12/15/2008 10:06
Run Date: 12/15/2008 10:47
File ID: HY.121508.104707

Analyte	CAS. Number	Result	Qual	RL	MDL
Mercury	7439-97-6		U	0.400	0.100

U Undetected; the analyte was analyzed for, but not detected.

Microbac

3602 fw 3/10/09

27

Sample Number: L08120263-27
Client ID: MR08-FB01120608
Matrix: Water
Workgroup Number: WG290587
Collect Date: 12/06/2008 15:20
Sample Tag: 01

PrePrep Method: NONE
Prep Method: 3005A
Analytical Method: 6010B
Analyst: ED
Dilution: 1
Units: ug/L

Instrument: PE-ICP2
Prep Date: 12/11/2008 09:34
Cal Date: 12/16/2008 13:31
Run Date: 12/16/2008 17:16
File ID: P2.121608.171649

Analyte	CAS. Number	Result	Qual	RL	MDL
Barium, Total	7440-39-3		U	10.0	2.50
Cadmium, Total	7440-43-9		U	1.00	0.250
Chromium, Total	7440-47-3		U	10.0	2.50
Copper, Total	7440-50-8		U	20.0	5.00
Silver, Total	7440-22-4		U	6.00	2.00
Zinc, Total	7440-66-6		U	20.0	5.00

U Undetected; the analyte was analyzed for, but not detected.

Microbac

MW
3/10/09

27

Sample Number: L08120263-27
Client ID: MR08-FB01120608
Matrix: Water
Workgroup Number: WG290255
Collect Date: 12/06/2008 15:20
Sample Tag: 01

PrePrep Method: NONE
Prep Method: 3015
Analytical Method: 6020
Analyst: JYH
Dilution: 1
Units: ug/L

Instrument: ELAN-ICP
Prep Date: 12/11/2008 08:30
Cal Date: 12/11/2008 10:44
Run Date: 12/11/2008 16:51
File ID: EL.121108.165137

Analyte	CAS. Number	Result	Qual	RL	MDL
Arsenic, Total	7440-38-2		U	1.00	0.250
Lead, Total	7439-92-1		U	1.00	0.250
Selenium, Total	7782-49-2		U	2.00	0.500

U Undetected; the analyte was analyzed for, but not detected.

Microbac

1563 lew 3/10/09

27

Sample Number: L08120263-27
Client ID: MR08-FB01120608
Matrix: Water
Workgroup Number: WG290255
Collect Date: 12/06/2008 15:20
Sample Tag: 02

PrePrep Method: NONE
Prep Method: 3015
Analytical Method: 6020
Analyst: JYH
Dilution: 1
Units: ug/L

Instrument: ELAN-ICP
Prep Date: 12/11/2008 08:30
Cal Date: 12/18/2008 10:46
Run Date: 12/19/2008 01:04
File ID: EL.121908.010426

Analyte	CAS. Number	Result	Qual	RL	MDL
Antimony, Total	7440-36-0		U	1.00	0.250

U Undetected; the analyte was analyzed for, but not detected.

Microbac

1564 3/10/09

27

Sample Number: L08120263-27
Client ID: MR08-FB01120608
Matrix: Water
Workgroup Number: WG290493
Collect Date: 12/06/2008 15:20
Sample Tag: 01

PrePrep Method: NONE
Prep Method: 7470A
Analytical Method: 7470A
Analyst: ADC
Dilution: 1
Units: ug/L

Instrument: HYDRA
Prep Date: 12/12/2008 09:34
Cal Date: 12/15/2008 10:06
Run Date: 12/15/2008 10:49
File ID: HY.121508.104942

Analyte	CAS. Number	Result	Qual	RL	MDL
Mercury	7439-97-6		U	0.400	0.100

U Undetected; the analyte was analyzed for, but not detected.

Microbac

3603 lw 3/10/09

ENVIRONMENTAL
Data Services, Inc.

EXPLOSIVES, PETN & NITROGLYCERIN

USEPA Region IV - Level IV Review

Site: MCB Camp Lejeune, TO-09 SDG #: L08120265

Client: CH2M HILL, Inc., Virginia Beach, Virginia Date: March 10, 2009

Laboratory: Microbac Laboratories, Inc., Marietta, Ohio Reviewer: Linda Sulkowski

EDS ID	Client Sample ID	Laboratory Sample ID	Matrix
1	MR08-SS080-08D	L08120265-01	Soil
2	MR08-IS080-5-6-08D	L08120265-02	Soil
3	MR08-SS081-08D	L08120265-03	Soil
4	MR08-IS081-6-7-08D	L08120265-04	Soil
5	MR08-SS082-08D	L08120265-05	Soil
6	MR08-IS082-5-6-08D	L08120265-06	Soil
7	MR08-SS083-08D	L08120265-07	Soil
8	MR08-IS083-6-7-08D	L08120265-08	Soil
9	MR08-SS084-08D	L08120265-09	Soil
10	MR08-IS084-4-5-08D	L08120265-10	Soil
11	MR08-SS085-08D	L08120265-11	Soil
12	MR08-IS085-1-2-08D	L08120265-12	Soil
13	MR08-SS107-098D	L08120265-13	Soil
14	MR08-IS107-2-3-08D	L08120265-14	Soil
15	MR08-SS108-08D	L08120265-15	Soil
16	MR08-IS108-2-3-08D	L08120265-16	Soil
17	MR08-IS109-2-3-08D	L08120265-17	Soil
18	MR08-IS109D-2-3-08D	L08120265-18	Soil
19	MR08-EB01120708-SS	L08120265-19	Water
20	MR08-EB01120708-IS	L08120265-20	Water

The USEPA "Contract Laboratory Program National Functional Guidelines for Organic Data Review," October 1999, and professional judgement were used in evaluating the data in this summary report.

Holding Times - All samples were extracted within 7 days for water samples, 14 days for soil samples and analyzed within 40 days.

Initial Calibration - The initial calibrations exhibited acceptable %RSD and/or correlation coefficient values.

Calibration Verification - The continuing calibrations exhibited acceptable %D values except the following.

CCAL Date	Compound	%D	Qualifier	Affected Samples
12/18/08	Tetryl	35.5%	J/UJ	19, 20
12/20/08	Tetryl	24.0%	J/UJ	6-15
12/20/08	Tetryl	26.9%	J/UJ	16-18

Surrogates - All samples exhibited acceptable surrogate recoveries.

MS/MSD - A MS/MSD sample was not analyzed.

Laboratory Control Sample - The LCS samples exhibited acceptable %R values.

Method Blank - The method blanks were free of contamination.

Field and Equipment Blank - Field QC results are summarized below.

Blank ID	Compound	Conc. ug/L	Action Level ug/L	Qualifier	Affected Samples
MR08-EB01120708-SS	None - ND	-	-	-	-
MR08-EB01120708-IS	None - ND	-	-	-	-
MR08-FB01120608	None - ND	-	-	-	-

Field Duplicates - Field duplicate results are summarized below.

Compound	MR08-IS109-2-3-08D mg/kg	MR08-IS109D-2-3-08D mg/kg	RPD	Qualifier
None	ND	ND	-	-

Compound Identification - Retention times were acceptable and no further action was taken.

Compound Quantitation - No discrepancies were identified.

Report Number: L08120265

Report Date : January 8, 2009

Sample Number: L08120265-01
Client ID: MR08-SS080 -08D
Matrix: Soil
Workgroup Number: WG290866
Collect Date: 12/07/2008 08:20
Sample Tag: 01

PrePrep Method: NONE
Prep Method: METHOD
Analytical Method: 8330MOD
Analyst: ECL
Dilution: 1
Units: mg/kg

Instrument: HPLC5
Prep Date: 12/17/2008 08:00
Cal Date: 12/16/2008 16:51
Run Date: 12/19/2008 22:33
File ID: 5L003419.F

Analyte	CAS. Number	Result	Qual	RL	MDL
1,3,5-Trinitrobenzene	99-35-4		U	0.295	0.0984
1,3-Dinitrobenzene	99-65-0		U	0.295	0.0984
2,4,6-Trinitrotoluene	118-96-7	U	~~Q~~	0.295	0.0984
2,4-Dinitrotoluene	121-14-2		U	0.295	0.0984
2,6-Dinitrotoluene	606-20-2		U	0.295	0.0984
2-Amino-4,6-dinitrotoluene	35572-78-2		U	0.295	0.0984
2-Nitrotoluene	88-72-2		U	0.295	0.0984
3-Nitrotoluene	99-08-1		U	0.295	0.0984
4-Nitrotoluene	99-99-0		U	0.295	0.0984
4-Amino-2,6-dinitrotoluene	19406-51-0		U	0.295	0.0984
HMX	2691-41-0		U	0.295	0.0984
Nitrobenzene	98-95-3		U	0.295	0.0984
RDX	121-82-4		U	0.295	0.0984
Tetryl	479-45-8	U	~~Q~~	0.295	0.0984
Nitroglycerin	55-63-0		U	0.295	0.0984

Surrogate	% Recovery	Lower	Upper	Qual
1,2-Dinitrobenzene	88.4	50	150	

U Undetected; the analyte was analyzed for, but not detected.
Q One or more quality control criteria failed. See narrative.

Microbac

14 lw 3/10/09

Sample Number: L08120265-01
Client ID: MR08-SS080 -08D
Matrix: Soil
Workgroup Number: WG290866
Collect Date: 12/07/2008 08:20
Sample Tag: 02

PrePrep Method: NONE
Prep Method: METHOD
Analytical Method: 8330MOD
Analyst: ECL
Dilution: 1
Units: mg/kg

Instrument: HPLC5
Prep Date: 12/17/2008 08:00
Cal Date: 12/16/2008 16:51
Run Date: 12/25/2008 04:52
File ID: 5L003594.F

Analyte	CAS. Number	Result	Qual	RL	MDL
PETN	78-11-5		U	0.295	0.0984

U Undetected; the analyte was analyzed for, but not detected.

Microbac

15 DW 3/10/09

2

Sample Number: L08120265-02
Client ID: MR08-IS080-5-6-08D
Matrix: Soil
Workgroup Number: WG290866
Collect Date: 12/07/2008 08:40
Sample Tag: 01

PrePrep Method: NONE
Prep Method: METHOD
Analytical Method: 8330MOD
Analyst: ECL
Dilution: 1
Units: mg/kg

Instrument: HPLC5
Prep Date: 12/17/2008 08:00
Cal Date: 12/16/2008 16:51
Run Date: 12/19/2008 23:11
File ID: 5L003420.F

Analyte	CAS. Number	Result	Qual	RL	MDL
1,3,5-Trinitrobenzene	99-35-4		U	0.299	0.0998
1,3-Dinitrobenzene	99-65-0		U	0.299	0.0998
2,4,6-Trinitrotoluene	118-96-7	U	~~Q~~	0.299	0.0998
2,4-Dinitrotoluene	121-14-2		U	0.299	0.0998
2,6-Dinitrotoluene	606-20-2		U	0.299	0.0998
2-Amino-4,6-dinitrotoluene	35572-78-2		U	0.299	0.0998
2-Nitrotoluene	88-72-2		U	0.299	0.0998
3-Nitrotoluene	99-08-1		U	0.299	0.0998
4-Nitrotoluene	99-99-0		U	0.299	0.0998
4-Amino-2,6-dinitrotoluene	19406-51-0		U	0.299	0.0998
HMX	2691-41-0		U	0.299	0.0998
Nitrobenzene	98-95-3		U	0.299	0.0998
RDX	121-82-4		U	0.299	0.0998
Tetryl	479-45-8	U	~~Q~~	0.299	0.0998
Nitroglycerin	55-63-0		U	0.299	0.0998

Surrogate	% Recovery	Lower	Upper	Qual
1,2-Dinitrobenzene	96.5	50	150	

U Undetected; the analyte was analyzed for, but not detected.
Q One or more quality control criteria failed. See narrative.

Microbac

16 DLW 3/10/09

2

Sample Number: L08120265-02
Client ID: MR08-IS080-5-6-08D
Matrix: Soil
Workgroup Number: WG290866
Collect Date: 12/07/2008 08:40
Sample Tag: 02

PrePrep Method: NONE
Prep Method: METHOD
Analytical Method: 8330MOD
Analyst: ECL
Dilution: 1
Units: mg/kg

Instrument: HPLC5
Prep Date: 12/17/2008 08:00
Cal Date: 12/16/2008 16:51
Run Date: 12/25/2008 05:06
File ID: 5L003595.F

Analyte	CAS. Number	Result	Qual	RL	MDL
PETN	78-11-5		U	0.299	0.0998

U Undetected; the analyte was analyzed for, but not detected.

Microbac

17 MW 3/10/09

3

Sample Number: L08120265-03
Client ID: MR08-SS081 -08D
Matrix: Soil
Workgroup Number: WG290866
Collect Date: 12/07/2008 09:00
Sample Tag: 01

PrePrep Method: NONE
Prep Method: METHOD
Analytical Method: 8330MOD
Analyst: ECL
Dilution: 1
Units: mg/kg

Instrument: HPLC5
Prep Date: 12/17/2008 08:00
Cal Date: 12/16/2008 16:51
Run Date: 12/19/2008 23:49
File ID: 5L003421.F

Analyte	CAS. Number	Result	Qual	RL	MDL
1,3,5-Trinitrobenzene	99-35-4		U	0.295	0.0983
1,3-Dinitrobenzene	99-65-0		U	0.295	0.0983
2,4,6-Trinitrotoluene	118-96-7	U	~~Q~~	0.295	0.0983
2,4-Dinitrotoluene	121-14-2		U	0.295	0.0983
2,6-Dinitrotoluene	606-20-2		U	0.295	0.0983
2-Amino-4,6-dinitrotoluene	35572-78-2		U	0.295	0.0983
2-Nitrotoluene	88-72-2		U	0.295	0.0983
3-Nitrotoluene	99-08-1		U	0.295	0.0983
4-Nitrotoluene	99-99-0		U	0.295	0.0983
4-Amino-2,6-dinitrotoluene	19406-51-0		U	0.295	0.0983
HMX	2691-41-0		U	0.295	0.0983
Nitrobenzene	98-95-3		U	0.295	0.0983
RDX	121-82-4		U	0.295	0.0983
Tetryl	479-45-8	U	~~Q~~	0.295	0.0983
Nitroglycerin	55-63-0		U	0.295	0.0983

Surrogate	% Recovery	Lower	Upper	Qual
1,2-Dinitrobenzene	80.8	50	150	

U Undetected; the analyte was analyzed for, but not detected.
Q One or more quality control criteria failed. See narrative.

Microbac

18 MW 3/10/09

3

Sample Number: L08120265-03
Client ID: MR08-SS081 -08D
Matrix: Soil
Workgroup Number: WG290866
Collect Date: 12/07/2008 09:00
Sample Tag: 02

PrePrep Method: NONE
Prep Method: METHOD
Analytical Method: 8330MOD
Analyst: ECL
Dilution: 1
Units: mg/kg

Instrument: HPLC5
Prep Date: 12/17/2008 08:00
Cal Date: 12/16/2008 16:51
Run Date: 12/25/2008 05:19
File ID: 5L003596.F

Analyte	CAS. Number	Result	Qual	RL	MDL
PETN	78-11-5		U	0.295	0.0983

U Undetected; the analyte was analyzed for, but not detected.

Microbac

19 lw 3/10/09

4

Sample Number: L08120265-04
Client ID: MR08-IS081-6-7-08D
Matrix: Soil
Workgroup Number: WG290866
Collect Date: 12/07/2008 09:20
Sample Tag: 01

PrePrep Method: NONE
Prep Method: METHOD
Analytical Method: 8330MOD
Analyst: ECL
Dilution: 1
Units: mg/kg

Instrument: HPLC5
Prep Date: 12/17/2008 08:00
Cal Date: 12/16/2008 16:51
Run Date: 12/20/2008 00:28
File ID: 5L003422.F

Analyte	CAS. Number	Result	Qual	RL	MDL
1,3,5-Trinitrobenzene	99-35-4		U	0.294	0.0980
1,3-Dinitrobenzene	99-65-0		U	0.294	0.0980
2,4,6-Trinitrotoluene	118-96-7	U	~~Q~~	0.294	0.0980
2,4-Dinitrotoluene	121-14-2		U	0.294	0.0980
2,6-Dinitrotoluene	606-20-2		U	0.294	0.0980
2-Amino-4,6-dinitrotoluene	35572-78-2		U	0.294	0.0980
2-Nitrotoluene	88-72-2		U	0.294	0.0980
3-Nitrotoluene	99-08-1		U	0.294	0.0980
4-Nitrotoluene	99-99-0		U	0.294	0.0980
4-Amino-2,6-dinitrotoluene	19406-51-0		U	0.294	0.0980
HMX	2691-41-0		U	0.294	0.0980
Nitrobenzene	98-95-3		U	0.294	0.0980
RDX	121-82-4		U	0.294	0.0980
Tetryl	479-45-8	U	~~Q~~	0.294	0.0980
Nitroglycerin	55-63-0		U	0.294	0.0980

Surrogate	% Recovery	Lower	Upper	Qual
1,2-Dinitrobenzene	92.6	50	150	

U Undetected; the analyte was analyzed for, but not detected.
Q One or more quality control criteria failed. See narrative.

Microbac

20 KW 3/10/09

4

Sample Number: L08120265-04
Client ID: MR08-IS081-6-7-08D
Matrix: Soil
Workgroup Number: WG290866
Collect Date: 12/07/2008 09:20
Sample Tag: 02

PrePrep Method: NONE
Prep Method: METHOD
Analytical Method: 8330MOD
Analyst: ECL
Dilution: 1
Units: mg/kg

Instrument: HPLC5
Prep Date: 12/17/2008 08:00
Cal Date: 12/16/2008 16:51
Run Date: 12/25/2008 05:32
File ID: 5L003597.F

Analyte	CAS. Number	Result	Qual	RL	MDL
PETN	78-11-5		U	0.294	0.0980

U Undetected; the analyte was analyzed for, but not detected.

Microbac

21 lw 3/10/09

5

Sample Number: L08120265-05
Client ID: MR08-SS082 -08D
Matrix: Soil
Workgroup Number: WG290866
Collect Date: 12/07/2008 09:35
Sample Tag: 01

PrePrep Method: NONE
Prep Method: METHOD
Analytical Method: 8330MOD
Analyst: ECL
Dilution: 1
Units: mg/kg

Instrument: HPLC5
Prep Date: 12/17/2008 08:00
Cal Date: 12/16/2008 16:51
Run Date: 12/20/2008 01:06
File ID: 5L003423.F

Analyte	CAS. Number	Result	Qual	RL	MDL
1,3,5-Trinitrobenzene	99-35-4		U	0.297	0.0990
1,3-Dinitrobenzene	99-65-0		U	0.297	0.0990
2,4,6-Trinitrotoluene	118-96-7	U	~~Q~~	0.297	0.0990
2,4-Dinitrotoluene	121-14-2		U	0.297	0.0990
2,6-Dinitrotoluene	606-20-2		U	0.297	0.0990
2-Amino-4,6-dinitrotoluene	35572-78-2		U	0.297	0.0990
2-Nitrotoluene	88-72-2		U	0.297	0.0990
3-Nitrotoluene	99-08-1		U	0.297	0.0990
4-Nitrotoluene	99-99-0		U	0.297	0.0990
4-Amino-2,6-dinitrotoluene	19406-51-0		U	0.297	0.0990
HMX	2691-41-0		U	0.297	0.0990
Nitrobenzene	98-95-3		U	0.297	0.0990
RDX	121-82-4		U	0.297	0.0990
Tetryl	479-45-8	U	~~Q~~	0.297	0.0990
Nitroglycerin	55-63-0		U	0.297	0.0990

Surrogate	% Recovery	Lower	Upper	Qual
1,2-Dinitrobenzene	86.8	50	150	

U Undetected; the analyte was analyzed for, but not detected.
Q One or more quality control criteria failed. See narrative.

Microbac

22 RW 3/10/09

5

Sample Number: L08120265-05
Client ID: MR08-SS082 -08D
Matrix: Soil
Workgroup Number: WG290866
Collect Date: 12/07/2008 09:35
Sample Tag: 02

PrePrep Method: NONE
Prep Method: METHOD
Analytical Method: 8330MOD
Analyst: ECL
Dilution: 1
Units: mg/kg

Instrument: HPLC5
Prep Date: 12/17/2008 08:00
Cal Date: 12/16/2008 16:51
Run Date: 12/25/2008 05:45
File ID: 5L003598.F

Analyte	CAS. Number	Result	Qual	RL	MDL
PETN	78-11-5		U	0.297	0.0990

U Undetected; the analyte was analyzed for, but not detected.

Microbac

23 lw 3/10/09

6

Sample Number: L08120265-06
Client ID: MR08-IS082-5-6 -08D
Matrix: Soil
Workgroup Number: WG290866
Collect Date: 12/07/2008 09:50
Sample Tag: 01

PrePrep Method: NONE
Prep Method: METHOD
Analytical Method: 8330MOD
Analyst: ECL
Dilution: 1
Units: mg/kg

Instrument: HPLC5
Prep Date: 12/17/2008 08:00
Cal Date: 12/16/2008 16:51
Run Date: 12/20/2008 03:00
File ID: 5L003426.F

Analyte	CAS. Number	Result	Qual	RL	MDL
1,3,5-Trinitrobenzene	99-35-4		U	0.299	0.0997
1,3-Dinitrobenzene	99-65-0		U	0.299	0.0997
2,4,6-Trinitrotoluene	118-96-7	U	~~Q~~	0.299	0.0997
2,4-Dinitrotoluene	121-14-2		U	0.299	0.0997
2,6-Dinitrotoluene	606-20-2		U	0.299	0.0997
2-Amino-4,6-dinitrotoluene	35572-78-2		U	0.299	0.0997
2-Nitrotoluene	88-72-2		U	0.299	0.0997
3-Nitrotoluene	99-08-1		U	0.299	0.0997
4-Nitrotoluene	99-99-0		U	0.299	0.0997
4-Amino-2,6-dinitrotoluene	19406-51-0		U	0.299	0.0997
HMX	2691-41-0		U	0.299	0.0997
Nitrobenzene	98-95-3		U	0.299	0.0997
RDX	121-82-4		U	0.299	0.0997
Tetryl	479-45-8	UJ	~~Q~~	0.299	0.0997
Nitroglycerin	55-63-0		U	0.299	0.0997

CCH

Surrogate	% Recovery	Lower	Upper	Qual
1,2-Dinitrobenzene	94.5	50	150	

U Undetected; the analyte was analyzed for, but not detected.
Q One or more quality control criteria failed. See narrative.

Microbac

25 lw 3/10/09

6

Sample Number: L08120265-06
Client ID: MR08-IS082-5-6 -08D
Matrix: Soil
Workgroup Number: WG290866
Collect Date: 12/07/2008 09:50
Sample Tag: 02

PrePrep Method: NONE
Prep Method: METHOD
Analytical Method: 8330MOD
Analyst: ECL
Dilution: 1
Units: mg/kg

Instrument: HPLC5
Prep Date: 12/17/2008 08:00
Cal Date: 12/16/2008 16:51
Run Date: 12/25/2008 05:58
File ID: 5L003599.F

Analyte	CAS. Number	Result	Qual	RL	MDL
PETN	78-11-5		U	0.299	0.0997

U Undetected; the analyte was analyzed for, but not detected.

Microbac

24 MW 3/10/09

7

Sample Number: L08120265-07
Client ID: MR08-SS083 -08D
Matrix: Soil
Workgroup Number: WG290866
Collect Date: 12/07/2008 10:20
Sample Tag: 01

PrePrep Method: NONE
Prep Method: METHOD
Analytical Method: 8330MOD
Analyst: ECL
Dilution: 1
Units: mg/kg

Instrument: HPLC5
Prep Date: 12/17/2008 08:00
Cal Date: 12/16/2008 16:51
Run Date: 12/20/2008 03:38
File ID: 5L003427.F

Analyte	CAS. Number	Result	Qual	RL	MDL
1,3,5-Trinitrobenzene	99-35-4		U	0.299	0.0995
1,3-Dinitrobenzene	99-65-0		U	0.299	0.0995
2,4,6-Trinitrotoluene	118-96-7	U	~~Q~~	0.299	0.0995
2,4-Dinitrotoluene	121-14-2		U	0.299	0.0995
2,6-Dinitrotoluene	606-20-2		U	0.299	0.0995
2-Amino-4,6-dinitrotoluene	35572-78-2		U	0.299	0.0995
2-Nitrotoluene	88-72-2		U	0.299	0.0995
3-Nitrotoluene	99-08-1		U	0.299	0.0995
4-Nitrotoluene	99-99-0		U	0.299	0.0995
4-Amino-2,6-dinitrotoluene	19406-51-0		U	0.299	0.0995
HMX	2691-41-0		U	0.299	0.0995
Nitrobenzene	98-95-3		U	0.299	0.0995
RDX	121-82-4		U	0.299	0.0995
Tetryl	479-45-8	UJ	~~Q~~	0.299	0.0995
Nitroglycerin	55-63-0		U	0.299	0.0995

CCH

Surrogate	% Recovery	Lower	Upper	Qual
1,2-Dinitrobenzene	87.8	50	150	

U Undetected; the analyte was analyzed for, but not detected.
Q One or more quality control criteria failed. See narrative.

Microbac

lw 3/10/09

7

Sample Number: L08120265-07
Client ID: MR08-SS083 -08D
Matrix: Soil
Workgroup Number: WG290866
Collect Date: 12/07/2008 10:20
Sample Tag: 02

PrePrep Method: NONE
Prep Method: METHOD
Analytical Method: 8330MOD
Analyst: ECL
Dilution: 1
Units: mg/kg

Instrument: HPLC5
Prep Date: 12/17/2008 08:00
Cal Date: 12/16/2008 16:51
Run Date: 12/25/2008 06:11
File ID: 5L003600.F

Analyte	CAS. Number	Result	Qual	RL	MDL
PETN	78-11-5		U	0.299	0.0995

U Undetected; the analyte was analyzed for, but not detected.

Microbac®

27 lw 3/10/09

8

Sample Number: L08120265-08
Client ID: MR08-IS083-6-7 -08D
Matrix: Soil
Workgroup Number: WG290866
Collect Date: 12/07/2008 10:30
Sample Tag: 01

PrePrep Method: NONE
Prep Method: METHOD
Analytical Method: 8330MOD
Analyst: ECL
Dilution: 1
Units: mg/kg

Instrument: HPLC5
Prep Date: 12/17/2008 08:00
Cal Date: 12/16/2008 16:51
Run Date: 12/20/2008 04:17
File ID: 5L003428.F

Analyte	CAS. Number	Result	Qual	RL	MDL
1,3,5-Trinitrobenzene	99-35-4		U	0.295	0.0983
1,3-Dinitrobenzene	99-65-0		U	0.295	0.0983
2,4,6-Trinitrotoluene	118-96-7	U	~~Q~~	0.295	0.0983
2,4-Dinitrotoluene	121-14-2		U	0.295	0.0983
2,6-Dinitrotoluene	606-20-2		U	0.295	0.0983
2-Amino-4,6-dinitrotoluene	35572-78-2		U	0.295	0.0983
2-Nitrotoluene	88-72-2		U	0.295	0.0983
3-Nitrotoluene	99-08-1		U	0.295	0.0983
4-Nitrotoluene	99-99-0		U	0.295	0.0983
4-Amino-2,6-dinitrotoluene	19406-51-0		U	0.295	0.0983
HMX	2691-41-0		U	0.295	0.0983
Nitrobenzene	98-95-3		U	0.295	0.0983
RDX	121-82-4		U	0.295	0.0983
Tetryl	479-45-8	UJ	~~Q~~	0.295	0.0983
Nitroglycerin	55-63-0		U	0.295	0.0983

CCH

Surrogate	% Recovery	Lower	Upper	Qual
1,2-Dinitrobenzene	90.2	50	150	

U Undetected; the analyte was analyzed for, but not detected.
Q One or more quality control criteria failed. See narrative.

Microbac

DW
3/10/09

8

Sample Number: L08120265-08
Client ID: MR08-IS083-6-7 -08D
Matrix: Soil
Workgroup Number: WG290866
Collect Date: 12/07/2008 10:30
Sample Tag: 02

PrePrep Method: NONE
Prep Method: METHOD
Analytical Method: 8330MOD
Analyst: ECL
Dilution: 1
Units: mg/kg

Instrument: HPLC5
Prep Date: 12/17/2008 08:00
Cal Date: 12/16/2008 16:51
Run Date: 12/25/2008 06:25
File ID: 5L003601.F

Analyte	CAS. Number	Result	Qual	RL	MDL
PETN	78-11-5		U	0.295	0.0983

U Undetected; the analyte was analyzed for, but not detected.

Microbac

 RW 3/10/09

9

Sample Number: L08120265-09
Client ID: MR08-SS084 -08D
Matrix: Soil
Workgroup Number: WG290866
Collect Date: 12/07/2008 10:30
Sample Tag: 01

PrePrep Method: NONE
Prep Method: METHOD
Analytical Method: 8330MOD
Analyst: ECL
Dilution: 1
Units: mg/kg

Instrument: HPLC5
Prep Date: 12/17/2008 08:00
Cal Date: 12/16/2008 16:51
Run Date: 12/20/2008 04:55
File ID: 5L003429.F

Analyte	CAS. Number	Result	Qual	RL	MDL
1,3,5-Trinitrobenzene	99-35-4		U	0.295	0.0982
1,3-Dinitrobenzene	99-65-0		U	0.295	0.0982
2,4,6-Trinitrotoluene	118-96-7	U	~~Q~~	0.295	0.0982
2,4-Dinitrotoluene	121-14-2		U	0.295	0.0982
2,6-Dinitrotoluene	606-20-2		U	0.295	0.0982
2-Amino-4,6-dinitrotoluene	35572-78-2		U	0.295	0.0982
2-Nitrotoluene	88-72-2		U	0.295	0.0982
3-Nitrotoluene	99-08-1		U	0.295	0.0982
4-Nitrotoluene	99-99-0		U	0.295	0.0982
4-Amino-2,6-dinitrotoluene	19406-51-0		U	0.295	0.0982
HMX	2691-41-0		U	0.295	0.0982
Nitrobenzene	98-95-3		U	0.295	0.0982
RDX	121-82-4		U	0.295	0.0982
Tetryl	479-45-8	US	~~Q~~	0.295	0.0982
Nitroglycerin	55-63-0		U	0.295	0.0982

CCH

Surrogate	% Recovery	Lower	Upper	Qual
1,2-Dinitrobenzene	83.8	50	150	

U Undetected; the analyte was analyzed for, but not detected.
Q One or more quality control criteria failed. See narrative.

Microbac

31 LW 3/10/09

9

Sample Number: L08120265-09
Client ID: MR08-SS084 -08D
Matrix: Soil
Workgroup Number: WG290866
Collect Date: 12/07/2008 10:30
Sample Tag: 02

PrePrep Method: NONE
Prep Method: METHOD
Analytical Method: 8330MOD
Analyst: ECL
Dilution: 1
Units: mg/kg

Instrument: HPLC5
Prep Date: 12/17/2008 08:00
Cal Date: 12/16/2008 16:51
Run Date: 12/25/2008 06:38
File ID: 5L003602.F

Analyte	CAS. Number	Result	Qual	RL	MDL
PETN	78-11-5		U	0.295	0.0982

U Undetected; the analyte was analyzed for, but not detected.

Microbac

 lw 3/10/09

10

Sample Number: L08120265-10
Client ID: MR08-IS084-4-5 -08D
Matrix: Soil
Workgroup Number: WG290866
Collect Date: 12/07/2008 11:00
Sample Tag: 01

PrePrep Method: NONE
Prep Method: METHOD
Analytical Method: 8330MOD
Analyst: ECL
Dilution: 1
Units: mg/kg

Instrument: HPLC5
Prep Date: 12/17/2008 08:00
Cal Date: 12/16/2008 16:51
Run Date: 12/20/2008 05:33
File ID: 5L003430.F

Analyte	CAS. Number	Result	Qual	RL	MDL
1,3,5-Trinitrobenzene	99-35-4		U	0.300	0.0999
1,3-Dinitrobenzene	99-65-0		U	0.300	0.0999
2,4,6-Trinitrotoluene	118-96-7	U	~~Q~~	0.300	0.0999
2,4-Dinitrotoluene	121-14-2		U	0.300	0.0999
2,6-Dinitrotoluene	606-20-2		U	0.300	0.0999
2-Amino-4,6-dinitrotoluene	35572-78-2		U	0.300	0.0999
2-Nitrotoluene	88-72-2		U	0.300	0.0999
3-Nitrotoluene	99-08-1		U	0.300	0.0999
4-Nitrotoluene	99-99-0		U	0.300	0.0999
4-Amino-2,6-dinitrotoluene	19406-51-0		U	0.300	0.0999
HMX	2691-41-0		U	0.300	0.0999
Nitrobenzene	98-95-3		U	0.300	0.0999
RDX	121-82-4		U	0.300	0.0999
Tetryl	479-45-8	UJ	~~Q~~	0.300	0.0999
Nitroglycerin	55-63-0		U	0.300	0.0999

CCH

Surrogate	% Recovery	Lower	Upper	Qual
1,2-Dinitrobenzene	99.5	50	150	

U Undetected; the analyte was analyzed for, but not detected.
Q One or more quality control criteria failed. See narrative.

Microbac

32 LW 3/10/09

10

Sample Number: L08120265-10
Client ID: MR08-IS084-4-5 -08D
Matrix: Soil
Workgroup Number: WG290866
Collect Date: 12/07/2008 11:00
Sample Tag: 02

PrePrep Method: NONE
Prep Method: METHOD
Analytical Method: 8330MOD
Analyst: ECL
Dilution: 1
Units: mg/kg

Instrument: HPLC5
Prep Date: 12/17/2008 08:00
Cal Date: 12/16/2008 16:51
Run Date: 12/25/2008 07:17
File ID: 5L003605.F

Analyte	CAS. Number	Result	Qual	RL	MDL
PETN	78-11-5		U	0.300	0.0999

U Undetected; the analyte was analyzed for, but not detected.

Microbac

 LW 3/10/09

11

Sample Number: L08120265-11
Client ID: MR08-SS085 -08D
Matrix: Soil
Workgroup Number: WG290866
Collect Date: 12/07/2008 11:25
Sample Tag: 01

PrePrep Method: NONE
Prep Method: METHOD
Analytical Method: 8330MOD
Analyst: ECL
Dilution: 1
Units: mg/kg

Instrument: HPLC5
Prep Date: 12/17/2008 08:00
Cal Date: 12/16/2008 16:51
Run Date: 12/20/2008 06:11
File ID: 5L003431.F

Analyte	CAS. Number	Result	Qual	RL	MDL
1,3,5-Trinitrobenzene	99-35-4		U	0.296	0.0986
1,3-Dinitrobenzene	99-65-0		U	0.296	0.0986
2,4,6-Trinitrotoluene	118-96-7		U ~~Q~~	0.296	0.0986
2,4-Dinitrotoluene	121-14-2		U	0.296	0.0986
2,6-Dinitrotoluene	606-20-2		U	0.296	0.0986
2-Amino-4,6-dinitrotoluene	35572-78-2		U	0.296	0.0986
2-Nitrotoluene	88-72-2		U	0.296	0.0986
3-Nitrotoluene	99-08-1		U	0.296	0.0986
4-Nitrotoluene	99-99-0		U	0.296	0.0986
4-Amino-2,6-dinitrotoluene	19406-51-0		U	0.296	0.0986
HMX	2691-41-0		U	0.296	0.0986
Nitrobenzene	98-95-3		U	0.296	0.0986
RDX	121-82-4		U	0.296	0.0986
Tetryl	479-45-8		UJ ~~Q~~	0.296	0.0986
Nitroglycerin	55-63-0		U	0.296	0.0986

CCH

Surrogate	% Recovery	Lower	Upper	Qual
1,2-Dinitrobenzene	89.5	50	150	

U Undetected; the analyte was analyzed for, but not detected.
Q One or more quality control criteria failed. See narrative.

Microbac

34 LW 3/10/09

11

Sample Number: L08120265-11
Client ID: MR08-SS085 -08D
Matrix: Soil
Workgroup Number: WG290866
Collect Date: 12/07/2008 11:25
Sample Tag: 02

PrePrep Method: NONE
Prep Method: METHOD
Analytical Method: 8330MOD
Analyst: ECL
Dilution: 1
Units: mg/kg

Instrument: HPLC5
Prep Date: 12/17/2008 08:00
Cal Date: 12/16/2008 16:51
Run Date: 12/25/2008 07:30
File ID: 5L003606.F

Analyte	CAS. Number	Result	Qual	RL	MDL
PETN	78-11-5		U	0.296	0.0986

U Undetected; the analyte was analyzed for, but not detected.

Microbac

35 LW 3/10/09

12

Sample Number: L08120265-12
Client ID: MR08-IS085-1-2 -08D
Matrix: Soil
Workgroup Number: WG290866
Collect Date: 12/07/2008 11:45
Sample Tag: 01

PrePrep Method: NONE
Prep Method: METHOD
Analytical Method: 8330MOD
Analyst: ECL
Dilution: 1
Units: mg/kg

Instrument: HPLC5
Prep Date: 12/17/2008 08:00
Cal Date: 12/16/2008 16:51
Run Date: 12/20/2008 06:49
File ID: 5L003432.F

Analyte	CAS. Number	Result	Qual	RL	MDL
1,3,5-Trinitrobenzene	99-35-4		U	0.294	0.0978
1,3-Dinitrobenzene	99-65-0		U	0.294	0.0978
2,4,6-Trinitrotoluene	118-96-7		U ~~Q~~	0.294	0.0978
2,4-Dinitrotoluene	121-14-2		U	0.294	0.0978
2,6-Dinitrotoluene	606-20-2		U	0.294	0.0978
2-Amino-4,6-dinitrotoluene	35572-78-2		U	0.294	0.0978
2-Nitrotoluene	88-72-2		U	0.294	0.0978
3-Nitrotoluene	99-08-1		U	0.294	0.0978
4-Nitrotoluene	99-99-0		U	0.294	0.0978
4-Amino-2,6-dinitrotoluene	19406-51-0		U	0.294	0.0978
HMX	2691-41-0		U	0.294	0.0978
Nitrobenzene	98-95-3		U	0.294	0.0978
RDX	121-82-4		U	0.294	0.0978
Tetryl	479-45-8		U ~~Q~~	0.294	0.0978
Nitroglycerin	55-63-0		U	0.294	0.0978

CEH

Surrogate	% Recovery	Lower	Upper	Qual
1,2-Dinitrobenzene	90.5	50	150	

U Undetected; the analyte was analyzed for, but not detected.
Q One or more quality control criteria failed. See narrative.

Microbac

36 LW 3/10/09

12

Sample Number:	L08120265-12	PrePrep Method:	NONE	Instrument:	HPLC5
Client ID:	MR08-IS085-1-2 -08D	Prep Method:	METHOD	Prep Date:	12/17/2008 08:00
Matrix:	Soil	Analytical Method:	8330MOD	Cal Date:	12/16/2008 16:51
Workgroup Number:	WG290866	Analyst:	ECL	Run Date:	12/25/2008 07:44
Collect Date:	12/07/2008 11:45	Dilution:	1	File ID:	5L003607.F
Sample Tag:	02	Units:	mg/kg		

Analyte	CAS. Number	Result	Qual	RL	MDL
PETN	78-11-5		U	0.294	0.0978

U Undetected; the analyte was analyzed for, but not detected.

Microbac

37 lw 3/10/09

13

Sample Number: L08120265-13
Client ID: MR08-SS107 -08D
Matrix: Soil
Workgroup Number: WG290866
Collect Date: 12/07/2008 14:15
Sample Tag: 01

PrePrep Method: NONE
Prep Method: METHOD
Analytical Method: 8330MOD
Analyst: ECL
Dilution: 1
Units: mg/kg

Instrument: HPLC5
Prep Date: 12/17/2008 08:00
Cal Date: 12/16/2008 16:51
Run Date: 12/20/2008 07:27
File ID: 5L003433.F

Analyte	CAS. Number	Result	Qual	RL	MDL
1,3,5-Trinitrobenzene	99-35-4		U	0.300	0.0999
1,3-Dinitrobenzene	99-65-0		U	0.300	0.0999
2,4,6-Trinitrotoluene	118-96-7	U	~~Q~~	0.300	0.0999
2,4-Dinitrotoluene	121-14-2		U	0.300	0.0999
2,6-Dinitrotoluene	606-20-2		U	0.300	0.0999
2-Amino-4,6-dinitrotoluene	35572-78-2		U	0.300	0.0999
2-Nitrotoluene	88-72-2		U	0.300	0.0999
3-Nitrotoluene	99-08-1		U	0.300	0.0999
4-Nitrotoluene	99-99-0		U	0.300	0.0999
4-Amino-2,6-dinitrotoluene	19406-51-0		U	0.300	0.0999
HMX	2691-41-0		U	0.300	0.0999
Nitrobenzene	98-95-3		U	0.300	0.0999
RDX	121-82-4		U	0.300	0.0999
Tetryl	479-45-8	UJ	~~Q~~	0.300	0.0999
Nitroglycerin	55-63-0		U	0.300	0.0999

CCH

Surrogate	% Recovery	Lower	Upper	Qual
1,2-Dinitrobenzene	93.4	50	150	

U Undetected; the analyte was analyzed for, but not detected.
Q One or more quality control criteria failed. See narrative.

Microbac

39 MW 3/10/09

13

Sample Number: L08120265-13
Client ID: MR08-SS107 -08D
Matrix: Soil
Workgroup Number: WG290866
Collect Date: 12/07/2008 14:15
Sample Tag: 02

PrePrep Method: NONE
Prep Method: METHOD
Analytical Method: 8330MOD
Analyst: ECL
Dilution: 1
Units: mg/kg

Instrument: HPLC5
Prep Date: 12/17/2008 08:00
Cal Date: 12/16/2008 16:51
Run Date: 12/25/2008 07:57
File ID: 5L003608.F

Analyte	CAS. Number	Result	Qual	RL	MDL
PETN	78-11-5		U	0.300	0.0999

U Undetected; the analyte was analyzed for, but not detected.

Microbac

38 MW 3/10/09

14

Sample Number: L08120265-14
Client ID: MR08-IS107-2-3 -08D
Matrix: Soil
Workgroup Number: WG290866
Collect Date: 12/07/2008 15:00
Sample Tag: 01

PrePrep Method: NONE
Prep Method: METHOD
Analytical Method: 8330MOD
Analyst: ECL
Dilution: 1
Units: mg/kg

Instrument: HPLC5
Prep Date: 12/17/2008 08:00
Cal Date: 12/16/2008 16:51
Run Date: 12/20/2008 08:05
File ID: 5L003434.F

Analyte	CAS. Number	Result	Qual	RL	MDL
1,3,5-Trinitrobenzene	99-35-4		U	0.296	0.0987
1,3-Dinitrobenzene	99-65-0		U	0.296	0.0987
2,4,6-Trinitrotoluene	118-96-7	U	~~Q~~	0.296	0.0987
2,4-Dinitrotoluene	121-14-2		U	0.296	0.0987
2,6-Dinitrotoluene	606-20-2		U	0.296	0.0987
2-Amino-4,6-dinitrotoluene	35572-78-2		U	0.296	0.0987
2-Nitrotoluene	88-72-2		U	0.296	0.0987
3-Nitrotoluene	99-08-1		U	0.296	0.0987
4-Nitrotoluene	99-99-0		U	0.296	0.0987
4-Amino-2,6-dinitrotoluene	19406-51-0		U	0.296	0.0987
HMX	2691-41-0		U	0.296	0.0987
Nitrobenzene	98-95-3		U	0.296	0.0987
RDX	121-82-4		U	0.296	0.0987
Tetryl	479-45-8	UJ	~~Q~~	0.296	0.0987
Nitroglycerin	55-63-0		U	0.296	0.0987

CCH

Surrogate	% Recovery	Lower	Upper	Qual
1,2-Dinitrobenzene	94.2	50	150	

U Undetected; the analyte was analyzed for, but not detected.
Q One or more quality control criteria failed. See narrative.

Microbac

40 AW 3/10/09

14

Sample Number: L08120265-14
Client ID: MR08-IS107-2-3 -08D
Matrix: Soil
Workgroup Number: WG290866
Collect Date: 12/07/2008 15:00
Sample Tag: 02

PrePrep Method: NONE
Prep Method: METHOD
Analytical Method: 8330MOD
Analyst: ECL
Dilution: 1
Units: mg/kg

Instrument: HPLC5
Prep Date: 12/17/2008 08:00
Cal Date: 12/16/2008 16:51
Run Date: 12/25/2008 08:10
File ID: 5L003609.F

Analyte	CAS. Number	Result	Qual	RL	MDL
PETN	78-11-5		U	0.296	0.0987

U Undetected; the analyte was analyzed for, but not detected.

Microbac

41 MW 3/10/09

15

Sample Number: L08120265-15
Client ID: MR08-SS108 -08D
Matrix: Soil
Workgroup Number: WG290866
Collect Date: 12/07/2008 15:45
Sample Tag: 01

PrePrep Method: NONE
Prep Method: METHOD
Analytical Method: 8330MOD
Analyst: ECL
Dilution: 1
Units: mg/kg

Instrument: HPLC5
Prep Date: 12/17/2008 08:00
Cal Date: 12/16/2008 16:51
Run Date: 12/20/2008 08:44
File ID: 5L003435.F

Analyte	CAS. Number	Result	Qual	RL	MDL
1,3,5-Trinitrobenzene	99-35-4		U	0.299	0.0997
1,3-Dinitrobenzene	99-65-0		U	0.299	0.0997
2,4,6-Trinitrotoluene	118-96-7	U	~~Q~~	0.299	0.0997
2,4-Dinitrotoluene	121-14-2		U	0.299	0.0997
2,6-Dinitrotoluene	606-20-2		U	0.299	0.0997
2-Amino-4,6-dinitrotoluene	35572-78-2		U	0.299	0.0997
2-Nitrotoluene	88-72-2		U	0.299	0.0997
3-Nitrotoluene	99-08-1		U	0.299	0.0997
4-Nitrotoluene	99-99-0		U	0.299	0.0997
4-Amino-2,6-dinitrotoluene	19406-51-0		U	0.299	0.0997
HMX	2691-41-0		U	0.299	0.0997
Nitrobenzene	98-95-3		U	0.299	0.0997
RDX	121-82-4		U	0.299	0.0997
Tetryl	479-45-8	UJ	~~Q~~	0.299	0.0997
Nitroglycerin	55-63-0		U	0.299	0.0997

CCH

Surrogate	% Recovery	Lower	Upper	Qual
1,2-Dinitrobenzene	94.1	50	150	

U Undetected; the analyte was analyzed for, but not detected.
Q One or more quality control criteria failed. See narrative.

Microbac

43 GW 3/10/09

15

Sample Number: L08120265-15
Client ID: MR08-SS108 -08D
Matrix: Soil
Workgroup Number: WG290866
Collect Date: 12/07/2008 15:45
Sample Tag: 02

PrePrep Method: NONE
Prep Method: METHOD
Analytical Method: 8330MOD
Analyst: ECL
Dilution: 1
Units: mg/kg

Instrument: HPLC5
Prep Date: 12/17/2008 08:00
Cal Date: 12/16/2008 16:51
Run Date: 12/25/2008 08:23
File ID: 5L003610.F

Analyte	CAS. Number	Result	Qual	RL	MDL
PETN	78-11-5		U	0.299	0.0997

U Undetected; the analyte was analyzed for, but not detected.

Microbac

42 lw 31.0/09

16

Sample Number: L08120265-16
Client ID: MR08-IS108-2-3 -08D
Matrix: Soil
Workgroup Number: WG290866
Collect Date: 12/07/2008 15:55
Sample Tag: 01

PrePrep Method: NONE
Prep Method: METHOD
Analytical Method: 8330MOD
Analyst: ECL
Dilution: 1
Units: mg/kg

Instrument: HPLC5
Prep Date: 12/17/2008 08:00
Cal Date: 12/16/2008 16:51
Run Date: 12/20/2008 10:38
File ID: 5L003438.F

Analyte	CAS. Number	Result	Qual	RL	MDL
1,3,5-Trinitrobenzene	99-35-4		U	0.292	0.0975
1,3-Dinitrobenzene	99-65-0		U	0.292	0.0975
2,4,6-Trinitrotoluene	118-96-7	U	~~Q~~	0.292	0.0975
2,4-Dinitrotoluene	121-14-2		U	0.292	0.0975
2,6-Dinitrotoluene	606-20-2		U	0.292	0.0975
2-Amino-4,6-dinitrotoluene	35572-78-2		U	0.292	0.0975
2-Nitrotoluene	88-72-2		U	0.292	0.0975
3-Nitrotoluene	99-08-1		U	0.292	0.0975
4-Nitrotoluene	99-99-0		U	0.292	0.0975
4-Amino-2,6-dinitrotoluene	19406-51-0		U	0.292	0.0975
HMX	2691-41-0		U	0.292	0.0975
Nitrobenzene	98-95-3		U	0.292	0.0975
RDX	121-82-4		U	0.292	0.0975
Tetryl	479-45-8	UJ	~~Q~~	0.292	0.0975
Nitroglycerin	55-63-0		U	0.292	0.0975

CCH

Surrogate	% Recovery	Lower	Upper	Qual
1,2-Dinitrobenzene	92.3	50	150	

U Undetected; the analyte was analyzed for, but not detected.
Q One or more quality control criteria failed. See narrative.

Microbac

QW
3/10/09

16

Sample Number: L08120265-16
Client ID: MR08-IS108-2-3 -08D
Matrix: Soil
Workgroup Number: WG290866
Collect Date: 12/07/2008 15:55
Sample Tag: 02

PrePrep Method: NONE
Prep Method: METHOD
Analytical Method: 8330MOD
Analyst: ECL
Dilution: 1
Units: mg/kg

Instrument: HPLC5
Prep Date: 12/17/2008 08:00
Cal Date: 12/16/2008 16:51
Run Date: 12/25/2008 08:36
File ID: 5L003611.F

Analyte	CAS. Number	Result	Qual	RL	MDL
PETN	78-11-5		U	0.292	0.0975

U Undetected; the analyte was analyzed for, but not detected.

Microbac

44 MEO 3/10/09

17

Sample Number: L08120265-17
Client ID: MR08-IS109-2-3 -08D
Matrix: Soil
Workgroup Number: WG290866
Collect Date: 12/07/2008 16:30
Sample Tag: 01

PrePrep Method: NONE
Prep Method: METHOD
Analytical Method: 8330MOD
Analyst: ECL
Dilution: 1
Units: mg/kg

Instrument: HPLC5
Prep Date: 12/17/2008 08:00
Cal Date: 12/16/2008 16:51
Run Date: 12/20/2008 11:16
File ID: 5L003439.F

Analyte	CAS. Number	Result	Qual	RL	MDL
1,3,5-Trinitrobenzene	99-35-4		U	0.299	0.0998
1,3-Dinitrobenzene	99-65-0		U	0.299	0.0998
2,4,6-Trinitrotoluene	118-96-7	U	~~Q~~	0.299	0.0998
2,4-Dinitrotoluene	121-14-2		U	0.299	0.0998
2,6-Dinitrotoluene	606-20-2		U	0.299	0.0998
2-Amino-4,6-dinitrotoluene	35572-78-2		U	0.299	0.0998
2-Nitrotoluene	88-72-2		U	0.299	0.0998
3-Nitrotoluene	99-08-1		U	0.299	0.0998
4-Nitrotoluene	99-99-0		U	0.299	0.0998
4-Amino-2,6-dinitrotoluene	19406-51-0		U	0.299	0.0998
HMX	2691-41-0		U	0.299	0.0998
Nitrobenzene	98-95-3		U	0.299	0.0998
RDX	121-82-4		U	0.299	0.0998
Tetryl	479-45-8	UJ	~~Q~~	0.299	0.0998
Nitroglycerin	55-63-0		U	0.299	0.0998

CCH

Surrogate	% Recovery	Lower	Upper	Qual
1,2-Dinitrobenzene	91.7	50	150	

U Undetected; the analyte was analyzed for, but not detected.
Q One or more quality control criteria failed. See narrative.

Microbac

MJ 3/10/09

17

Sample Number: L08120265-17
Client ID: MR08-IS109-2-3 -08D
Matrix: Soil
Workgroup Number: WG290866
Collect Date: 12/07/2008 16:30
Sample Tag: 02

PrePrep Method: NONE
Prep Method: METHOD
Analytical Method: 8330MOD
Analyst: ECL
Dilution: 1
Units: mg/kg

Instrument: HPLC5
Prep Date: 12/17/2008 08:00
Cal Date: 12/16/2008 16:51
Run Date: 12/25/2008 08:50
File ID: 5L003612.F

Analyte	CAS. Number	Result	Qual	RL	MDL
PETN	78-11-5		U	0.299	0.0998

U Undetected; the analyte was analyzed for, but not detected.

Microbac

47 lw 3/10/09

18

Sample Number: L08120265-18
Client ID: MR08-IS109D-2-3 -08D
Matrix: Soil
Workgroup Number: WG290866
Collect Date: 12/07/2008 16:45
Sample Tag: 01

PrePrep Method: NONE
Prep Method: METHOD
Analytical Method: 8330MOD
Analyst: ECL
Dilution: 1
Units: mg/kg

Instrument: HPLC5
Prep Date: 12/17/2008 08:00
Cal Date: 12/16/2008 16:51
Run Date: 12/20/2008 11:54
File ID: 5L003440.F

Analyte	CAS. Number	Result	Qual	RL	MDL
1,3,5-Trinitrobenzene	99-35-4		U	0.299	0.0998
1,3-Dinitrobenzene	99-65-0		U	0.299	0.0998
2,4,6-Trinitrotoluene	118-96-7	U	~~Q~~	0.299	0.0998
2,4-Dinitrotoluene	121-14-2		U	0.299	0.0998
2,6-Dinitrotoluene	606-20-2		U	0.299	0.0998
2-Amino-4,6-dinitrotoluene	35572-78-2		U	0.299	0.0998
2-Nitrotoluene	88-72-2		U	0.299	0.0998
3-Nitrotoluene	99-08-1		U	0.299	0.0998
4-Nitrotoluene	99-99-0		U	0.299	0.0998
4-Amino-2,6-dinitrotoluene	19406-51-0		U	0.299	0.0998
HMX	2691-41-0		U	0.299	0.0998
Nitrobenzene	98-95-3		U	0.299	0.0998
RDX	121-82-4		U	0.299	0.0998
Tetryl	479-45-8	US	~~Q~~	0.299	0.0998
Nitroglycerin	55-63-0		U	0.299	0.0998

CCH

Surrogate	% Recovery	Lower	Upper	Qual
1,2-Dinitrobenzene	89.5	50	150	

U Undetected; the analyte was analyzed for, but not detected.
Q One or more quality control criteria failed. See narrative.

Microbac

48 kw 3/10/09

18

Sample Number: L08120265-18
Client ID: MR08-IS109D-2-3 -08D
Matrix: Soil
Workgroup Number: WG290866
Collect Date: 12/07/2008 16:45
Sample Tag: 02

PrePrep Method: NONE
Prep Method: METHOD
Analytical Method: 8330MOD
Analyst: ECL
Dilution: 1
Units: mg/kg

Instrument: HPLC5
Prep Date: 12/17/2008 08:00
Cal Date: 12/16/2008 16:51
Run Date: 12/25/2008 09:03
File ID: 5L003613.F

Analyte	CAS. Number	Result	Qual	RL	MDL
PETN	78-11-5		U	0.299	0.0998

U Undetected; the analyte was analyzed for, but not detected.

Microbac

AW
3/10/09

Report Number: L08120265
Report Date : January 8, 2009

19

Sample Number: L08120265-19
Client ID: MR08-EB01120708-SS
Matrix: Water
Workgroup Number: WG290758
Collect Date: 12/07/2008 15:00
Sample Tag: 01

PrePrep Method: NONE
Prep Method: 3535
Analytical Method: 8330MOD
Analyst: ECL
Dilution: 1
Units: ug/L

Instrument: HPLC5
Prep Date: 12/12/2008 08:00
Cal Date: 12/16/2008 16:51
Run Date: 12/17/2008 21:01
File ID: 5L003347.F

Analyte	CAS. Number	Result	Qual	RL	MDL
1,3,5-Trinitrobenzene	99-35-4		U	1.00	0.250
1,3-Dinitrobenzene	99-65-0		U	1.00	0.250
2,4,6-Trinitrotoluene	118-96-7		U ~~Q~~	1.00	0.250
2,4-Dinitrotoluene	121-14-2		U	1.00	0.250
2,6-Dinitrotoluene	606-20-2		U	1.00	0.250
2-Amino-4,6-dinitrotoluene	35572-78-2		U	1.00	0.250
2-Nitrotoluene	88-72-2		U	1.00	0.250
3-Nitrotoluene	99-08-1		U	1.00	0.250
4-Nitrotoluene	99-99-0		U	1.00	0.250
4-Amino-2,6-dinitrotoluene	19406-51-0		U	1.00	0.250
HMX	2691-41-0		U	1.00	0.250
Nitrobenzene	98-95-3		U	1.00	0.250
RDX	121-82-4		U	1.00	0.250
Tetryl	479-45-8		U ~~Q~~	1.00	0.250
Nitroglycerin	55-63-0		U	1.00	0.250

Surrogate	% Recovery	Lower	Upper	Qual
1,2-Dinitrobenzene	86.7	50	150	

U Undetected; the analyte was analyzed for, but not detected.
Q One or more quality control criteria failed. See narrative.

Microbac

LW 7/10/09

19

Sample Number: L08120265-19
Client ID: MR08-EB01120708-SS
Matrix: Water
Workgroup Number: WG290758
Collect Date: 12/07/2008 15:00
Sample Tag: 02

PrePrep Method: NONE
Prep Method: 3535
Analytical Method: 8330MOD
Analyst: ECL
Dilution: 1
Units: ug/L

Instrument: HPLC5
Prep Date: 12/12/2008 08:00
Cal Date: 12/16/2008 16:51
Run Date: 12/24/2008 16:22
File ID: 5L003537.F

Analyte	CAS. Number	Result	Qual	RL	MDL
PETN	78-11-5		U	1.00	0.250

U Undetected; the analyte was analyzed for, but not detected.

Microbac

lw 3/10/09

21

Sample Number: L08120265-20
Client ID: MR08-EB01120708-IS
Matrix: Water
Workgroup Number: WG290758
Collect Date: 12/07/2008 15:30
Sample Tag: 01

PrePrep Method: NONE
Prep Method: 3535
Analytical Method: 8330MOD
Analyst: ECL
Dilution: 1
Units: ug/L

Instrument: HPLC5
Prep Date: 12/12/2008 08:00
Cal Date: 12/16/2008 16:51
Run Date: 12/17/2008 22:56
File ID: 5L003350.F

Analyte	CAS. Number	Result	Qual	RL	MDL
1,3,5-Trinitrobenzene	99-35-4		U	1.00	0.250
1,3-Dinitrobenzene	99-65-0		U	1.00	0.250
2,4,6-Trinitrotoluene	118-96-7		~~Q~~ U	1.00	0.250
2,4-Dinitrotoluene	121-14-2		U	1.00	0.250
2,6-Dinitrotoluene	606-20-2		U	1.00	0.250
2-Amino-4,6-dinitrotoluene	35572-78-2		U	1.00	0.250
2-Nitrotoluene	88-72-2		U	1.00	0.250
3-Nitrotoluene	99-08-1		U	1.00	0.250
4-Nitrotoluene	99-99-0		U	1.00	0.250
4-Amino-2,6-dinitrotoluene	19406-51-0		U	1.00	0.250
HMX	2691-41-0		U	1.00	0.250
Nitrobenzene	98-95-3		U	1.00	0.250
RDX	121-82-4		U	1.00	0.250
Tetryl	479-45-8	UJ	~~Q~~	1.00	0.250
Nitroglycerin	55-63-0		U	1.00	0.250

CCH

Surrogate	% Recovery	Lower	Upper	Qual
1,2-Dinitrobenzene	95.1	50	150	

U Undetected; the analyte was analyzed for, but not detected.
Q One or more quality control criteria failed. See narrative.

Microbac

53 JEW 3/10/09

2.

Sample Number: L08120265-20
Client ID: MR08-EB01120708-IS
Matrix: Water
Workgroup Number: WG290758
Collect Date: 12/07/2008 15:30
Sample Tag: 02

PrePrep Method: NONE
Prep Method: 3535
Analytical Method: 8330MOD
Analyst: ECL
Dilution: 1
Units: ug/L

Instrument: HPLC5
Prep Date: 12/12/2008 08:00
Cal Date: 12/16/2008 16:51
Run Date: 12/24/2008 16:35
File ID: 5L003538.F

Analyte	CAS. Number	Result	Qual	RL	MDL
PETN	78-11-5		U	1.00	0.250

U Undetected; the analyte was analyzed for, but not detected.

Microbac

52 MM 3/10/09

ENVIRONMENTAL
Data Services, Inc.

METALS

USEPA Region IV - Level IV Review

Site: MCB Camp Lejeune, TO-09 SDG #: L08120265

Client: CH2M HILL, Inc., Virginia Beach, Virginia Date: March 10, 2009

Laboratory: Microbac Laboratories, Inc., Marietta, Ohio Reviewer: Nancy Weaver

EDS ID	Client Sample ID	Laboratory Sample ID	Matrix
1	MR08-SS080-08D	L08120265-01	Soil
2	MR08-IS080-5-6-08D	L08120265-02	Soil
3	MR08-SS081-08D	L08120265-03	Soil
4	MR08-IS081-6-7-08D	L08120265-04	Soil
5	MR08-SS082-08D	L08120265-05	Soil
6	MR08-IS082-5-6-08D	L08120265-06	Soil
7	MR08-SS083-08D	L08120265-07	Soil
8	MR08-IS083-6-7-08D	L08120265-08	Soil
9	MR08-SS084-08D	L08120265-09	Soil
10	MR08-IS084-4-5-08D	L08120265-10	Soil
11	MR08-SS085-08D	L08120265-11	Soil
12	MR08-IS085-1-2-08D	L08120265-12	Soil
13	MR08-SS107-08D	L08120265-13	Soil
14	MR08-IS107-2-3-08D	L08120265-14	Soil
15	MR08-SS108-08D	L08120265-15	Soil
16	MR08-IS108-2-3-08D	L08120265-16	Soil
17	MR08-IS109-2-3-08D	L08120265-17	Soil
18	MR08-IS109D-2-3-08D	L08120265-18	Soil
19	MR08-EB01120708-SS	L08120265-19	Water
20	MR08-EB01120708-IS	L08120265-20	Water

The USEPA "Contract Laboratory Program National Functional Guidelines for Inorganic Data Review," October 2004, and professional judgement were used in evaluating the data in this summary report.

Holding Times - All samples were prepared and analyzed within 28 days for mercury and 180 days for all other metals.

Calibration - The ICV and CCV %R values were acceptable.

Method and Calibration Blanks - The method blanks were free of contamination.

Field and Equipment Blank - Field QC results are summarized below.

Blank ID	Compound	Conc. ug/L	Action Level mg/kg	Qualifier	Affected Samples
MR08-EB01120708-SS	Selenium	0.513	10.26	U	1, 3, 5, 7, 9, 11, 13, 15
MR08-EB01120708-IS	None - ND	-	-	-	-
MR08-FB01120608	None - ND	-	-	-	-

ICP Interference Check Sample - All %R values were acceptable.

MS/MSD - The MS/MSD sample exhibited acceptable %R and RPD values except the following.

MS/MSD Sample ID	Compound	MS/MSD %R/RPD	Qualifier	Affected Samples
Reference (WG290853)	Chromium	72.8%/Ok/27.5%	None	Already qualified due to SD
Reference (WG290980)	Selenium	70.0%/67.3%/Ok	J/UJ	12-18

LCS - The LCS samples exhibited acceptable %R values.

ICP Serial Dilution - The ICP serial dilution sample exhibited acceptable %D values except the following.

ICP Sample ID	Compound	%D	Qualifier	Affected Samples
WG290853	Chromium	22.40%	J	10-18
	Zinc	10.40%	J	10-18

Field Duplicates - Field duplicate results are summarized below.

Compound	MR08-IS109-2-3-08D mg/kg	MR08-IS109D-2-3-08D mg/kg	RPD	Qualifier
Silver	0.292	0.887 U	NC	None
Barium	6.05	6.38	5%	None
Cadmium	0.148	0.177 U	NC	None
Chromium	5.44	5.08	7%	None
Copper	0.540	1.77 U	NC	None
Zinc	5.35	3.32	47%	None
Arsenic	0.587	0.384	42%	None
Lead	3.99	3.75	6%	None
Selenium	0.449	0.459	2%	None

Compound Quantitation - No discrepancies were identified.

Report Number: L08120265

Report Date : January 8, 2009

Sample Number: L08120265-01
Client ID: MR08-SS080 -08D
Matrix: Soil
Workgroup Number: WG290978
Collect Date: 12/07/2008 08:20
Sample Tag: 01

PrePrep Method: NONE
Prep Method: 3051
Analytical Method: 6010B
Analyst: KHR
Dilution: 1
Units: mg/kg

Instrument: IRIS-ICP
Prep Date: 12/16/2008 10:32
Cal Date: 12/19/2008 10:46
Run Date: 12/19/2008 14:20
File ID: IR.121908.142000
Percent Solid: 69.3

Analyte	CAS. Number	Result	Qual	RL	MDL
Silver, Total	7440-22-4		U	1.10	0.276
Barium, Total	7440-39-3	19.6		0.551	0.110
Cadmium, Total	7440-43-9	0.192	J	0.221	0.0551
Chromium, Total	7440-47-3	4.63		1.10	0.132
Copper, Total	7440-50-8	3.83		2.21	0.551
Antimony, Total	7440-36-0	1.93	J	2.21	0.551
Zinc, Total	7440-66-6	17.3		2.21	0.551

U Undetected; the analyte was analyzed for, but not detected.
J Estimated ; the analyte concentration was less than the low standard (LOQ)

Microbac

313 lw 3/10/09

Report Number: L08120265

Report Date : January 8, 2009

Sample Number: L08120265-01
Client ID: MR08-SS080 -08D
Matrix: Soil
Workgroup Number: WG290603
Collect Date: 12/07/2008 08:20
Sample Tag: 01

PrePrep Method: NONE
Prep Method: 3051
Analytical Method: 6020
Analyst: JYH
Dilution: 1
Units: mg/kg

Instrument: ELAN-ICP
Prep Date: 12/12/2008 13:35
Cal Date: 12/17/2008 09:38
Run Date: 12/17/2008 19:36
File ID: EL.121708.193654
Percent Solid: 69.3

Analyte	CAS. Number	Result	Qual	RL	MDL
Arsenic, Total	7440-38-2	7.98		0.432	0.108
Lead, Total	7439-92-1	38.0		0.576	0.144
Selenium, Total	7782-49-2	1.30 u		0.576	0.144

BL

Microbac

1413 LW 3/10/09

Report Number: L08120265

Report Date : January 8, 2009

Sample Number:	L08120265-01	PrePrep Method:	NONE	Instrument:	HYDRA
Client ID:	MR08-SS080 -08D	Prep Method:	7471A	Prep Date:	12/12/2008 12:45
Matrix:	Soil	Analytical Method:	7471A	Cal Date:	12/16/2008 10:16
Workgroup Number:	WG290530	Analyst:	ADC	Run Date:	12/16/2008 11:58
Collect Date:	12/07/2008 08:20	Dilution:	1	File ID:	HY.121608.115814
Sample Tag:	01	Units:	mg/kg	Percent Solid:	69.3

Analyte	CAS. Number	Result	Qual	RL	MDL
Mercury, Total	7439-97-6	0.0805	J	0.144	0.0288

J Estimated ; the analyte concentration was less than the low standard (LOQ)

Microbac

3439 dlw 3/10/09

2

Sample Number: L08120265-02
Client ID: MR08-IS080-5-6-08D
Matrix: Soil
Workgroup Number: WG290978
Collect Date: 12/07/2008 08:40
Sample Tag: 01

PrePrep Method: NONE
Prep Method: 3051
Analytical Method: 6010B
Analyst: KHR
Dilution: 1
Units: mg/kg

Instrument: IRIS-ICP
Prep Date: 12/16/2008 10:33
Cal Date: 12/19/2008 10:46
Run Date: 12/19/2008 14:26
File ID: IR.121908.142600
Percent Solid: 77.9

Analyte	CAS. Number	Result	Qual	RL	MDL
Silver, Total	7440-22-4		U	0.973	0.243
Barium, Total	7440-39-3	2.04		0.487	0.0973
Cadmium, Total	7440-43-9		U	0.195	0.0487
Chromium, Total	7440-47-3	3.63		0.973	0.117
Copper, Total	7440-50-8	1.31	J	1.95	0.487
Antimony, Total	7440-36-0		U	1.95	0.487
Zinc, Total	7440-66-6	0.611	J	1.95	0.487

U Undetected; the analyte was analyzed for, but not detected.
J Estimated ; the analyte concentration was less than the low standard (LOQ)

Microbac

314 lw 3/10/09

2

Sample Number: L08120265-02
Client ID: MR08-IS080-5-6-08D
Matrix: Soil
Workgroup Number: WG290603
Collect Date: 12/07/2008 08:40
Sample Tag: 01

PrePrep Method: NONE
Prep Method: 3051
Analytical Method: 6020
Analyst: JYH
Dilution: 1
Units: mg/kg

Instrument: ELAN-ICP
Prep Date: 12/12/2008 13:35
Cal Date: 12/17/2008 09:38
Run Date: 12/17/2008 19:42
File ID: EL.121708.194218
Percent Solid: 77.9

Analyte	CAS. Number	Result	Qual	RL	MDL
Arsenic, Total	7440-38-2		U	0.371	0.0928
Lead, Total	7439-92-1	3.45		0.495	0.124
Selenium, Total	7782-49-2	1.55		0.495	0.124

U Undetected; the analyte was analyzed for, but not detected.

Microbac

1414 MW 3/10/09

2

Sample Number: L08120265-02
Client ID: MR08-IS080-5-6-08D
Matrix: Soil
Workgroup Number: WG290530
Collect Date: 12/07/2008 08:40
Sample Tag: 01

PrePrep Method: NONE
Prep Method: 7471A
Analytical Method: 7471A
Analyst: ADC
Dilution: 1
Units: mg/kg

Instrument: HYDRA
Prep Date: 12/12/2008 12:45
Cal Date: 12/16/2008 10:16
Run Date: 12/16/2008 12:02
File ID: HY.121608.120204
Percent Solid: 77.9

Analyte	CAS. Number	Result	Qual	RL	MDL
Mercury, Total	7439-97-6		U	0.124	0.0247

U Undetected; the analyte was analyzed for, but not detected.

Microbac

3440 fee 3/10/09

3

Sample Number: L08120265-03
Client ID: MR08-SS081 -08D
Matrix: Soil
Workgroup Number: WG290978
Collect Date: 12/07/2008 09:00
Sample Tag: 01

PrePrep Method: NONE
Prep Method: 3051
Analytical Method: 6010B
Analyst: KHR
Dilution: 1
Units: mg/kg

Instrument: IRIS-ICP
Prep Date: 12/16/2008 10:33
Cal Date: 12/19/2008 10:46
Run Date: 12/19/2008 14:32
File ID: IR.121908.143200
Percent Solid: 75.6

Analyte	CAS. Number	Result	Qual	RL	MDL
Silver, Total	7440-22-4		U	1.01	0.251
Barium, Total	7440-39-3	32.4		0.503	0.101
Cadmium, Total	7440-43-9	0.268		0.201	0.0503
Chromium, Total	7440-47-3	4.32		1.01	0.121
Copper, Total	7440-50-8	6.21		2.01	0.503
Antimony, Total	7440-36-0	1.40	J	2.01	0.503
Zinc, Total	7440-66-6	22.3		2.01	0.503

U Undetected; the analyte was analyzed for, but not detected.
J Estimated ; the analyte concentration was less than the low standard (LOQ)

Microbac

lw 3/10/09

3

Sample Number: L08120265-03
Client ID: MR08-SS081 -08D
Matrix: Soil
Workgroup Number: WG290603
Collect Date: 12/07/2008 09:00
Sample Tag: 01

PrePrep Method: NONE
Prep Method: 3051
Analytical Method: 6020
Analyst: JYH
Dilution: 1
Units: mg/kg

Instrument: ELAN-ICP
Prep Date: 12/12/2008 13:35
Cal Date: 12/17/2008 09:38
Run Date: 12/17/2008 19:47
File ID: EL.121708.194743
Percent Solid: 75.6

Analyte	CAS. Number	Result	Qual	RL	MDL
Arsenic, Total	7440-38-2	1.31		0.391	0.0978
Selenium, Total	7782-49-2	0.947 u		0.522	0.130

BL

Microbac

1415 lew 3/10/09

3

Sample Number: L08120265-03
Client ID: MR08-SS081 -08D
Matrix: Soil
Workgroup Number: WG290603
Collect Date: 12/07/2008 09:00
Sample Tag: DL01

PrePrep Method: NONE
Prep Method: 3051
Analytical Method: 6020
Analyst: JYH
Dilution: 10
Units: mg/kg

Instrument: ELAN-ICP
Prep Date: 12/12/2008 13:35
Cal Date:
Run Date: 12/18/2008 11:54
File ID: EL.121808.115448
Percent Solid: 75.6

Analyte	CAS. Number	Result	Qual	RL	MDL
Lead, Total	7439-92-1	58.7		5.22	1.30

Microbac

1416 3/10/09

3

Sample Number: L08120265-03
Client ID: MR08-SS081 -08D
Matrix: Soil
Workgroup Number: WG290530
Collect Date: 12/07/2008 09:00
Sample Tag: 01

PrePrep Method: NONE
Prep Method: 7471A
Analytical Method: 7471A
Analyst: ADC
Dilution: 1
Units: mg/kg

Instrument: HYDRA
Prep Date: 12/12/2008 12:45
Cal Date: 12/16/2008 10:16
Run Date: 12/16/2008 12:03
File ID: HY.121608.120349
Percent Solid: 75.6

Analyte	CAS. Number	Result	Qual	RL	MDL
Mercury, Total	7439-97-6	0.0802	J	0.128	0.0256

J Estimated ; the analyte concentration was less than the low standard (LOQ)

Microbac

3441 Qee 3/10/09

4

Sample Number: L08120265-04
Client ID: MR08-IS081-6-7-08D
Matrix: Soil
Workgroup Number: WG290978
Collect Date: 12/07/2008 09:20
Sample Tag: 01

PrePrep Method: NONE
Prep Method: 3051
Analytical Method: 6010B
Analyst: KHR
Dilution: 1
Units: mg/kg

Instrument: IRIS-ICP
Prep Date: 12/16/2008 10:34
Cal Date: 12/19/2008 10:46
Run Date: 12/19/2008 14:39
File ID: IR.121908.143900
Percent Solid: 85.5

Analyte	CAS. Number	Result	Qual	RL	MDL
Silver, Total	7440-22-4		U	0.894	0.223
Barium, Total	7440-39-3	13.1		0.447	0.0894
Cadmium, Total	7440-43-9		U	0.179	0.0447
Chromium, Total	7440-47-3	4.29		0.894	0.107
Copper, Total	7440-50-8		U	1.79	0.447
Antimony, Total	7440-36-0		U	1.79	0.447
Zinc, Total	7440-66-6	3.40		1.79	0.447

U Undetected; the analyte was analyzed for, but not detected.

Microbac

DW 3/10/09

4

Sample Number: L08120265-04
Client ID: MR08-IS081-6-7-08D
Matrix: Soil
Workgroup Number: WG290603
Collect Date: 12/07/2008 09:20
Sample Tag: 01

PrePrep Method: NONE
Prep Method: 3051
Analytical Method: 6020
Analyst: JYH
Dilution: 1
Units: mg/kg

Instrument: ELAN-ICP
Prep Date: 12/12/2008 13:35
Cal Date: 12/17/2008 09:38
Run Date: 12/17/2008 20:04
File ID: EL.121708.200431
Percent Solid: 85.5

Analyte	CAS. Number	Result	Qual	RL	MDL
Arsenic, Total	7440-38-2	0.282	J	0.328	0.0819
Lead, Total	7439-92-1	4.21		0.437	0.109
Selenium, Total	7782-49-2	0.219	J	0.437	0.109

J Estimated ; the analyte concentration was less than the low standard (LOQ)

Microbac

1417 lw 3/10/09

4

Sample Number: L08120265-04
Client ID: MR08-IS081-6-7-08D
Matrix: Soil
Workgroup Number: WG290530
Collect Date: 12/07/2008 09:20
Sample Tag: 01

PrePrep Method: NONE
Prep Method: 7471A
Analytical Method: 7471A
Analyst: ADC
Dilution: 1
Units: mg/kg

Instrument: HYDRA
Prep Date: 12/12/2008 12:45
Cal Date: 12/16/2008 10:16
Run Date: 12/16/2008 12:05
File ID: HY.121608.120533
Percent Solid: 85.5

Analyte	CAS. Number	Result	Qual	RL	MDL
Mercury, Total	7439-97-6	0.0261	J	0.111	0.0222

J Estimated ; the analyte concentration was less than the low standard (LOQ)

Microbac

3442 lee 3/10/09

5

Sample Number: L08120265-05
Client ID: MR08-SS082 -08D
Matrix: Soil
Workgroup Number: WG290978
Collect Date: 12/07/2008 09:35
Sample Tag: 01

PrePrep Method: NONE
Prep Method: 3051
Analytical Method: 6010B
Analyst: KHR
Dilution: 1
Units: mg/kg

Instrument: IRIS-ICP
Prep Date: 12/16/2008 10:35
Cal Date: 12/19/2008 10:46
Run Date: 12/19/2008 14:45
File ID: IR.121908.144500
Percent Solid: 87.9

Analyte	CAS. Number	Result	Qual	RL	MDL
Silver, Total	7440-22-4		U	0.845	0.211
Barium, Total	7440-39-3	8.75		0.423	0.0845
Cadmium, Total	7440-43-9	0.100	J	0.169	0.0423
Chromium, Total	7440-47-3	3.35		0.845	0.101
Copper, Total	7440-50-8	3.96		1.69	0.423
Antimony, Total	7440-36-0	0.722	J	1.69	0.423
Zinc, Total	7440-66-6	11.5		1.69	0.423

U Undetected; the analyte was analyzed for, but not detected.
J Estimated ; the analyte concentration was less than the low standard (LOQ)

Microbac

317 lw 3/10/09

5

Sample Number: L08120265-05
Client ID: MR08-SS082 -08D
Matrix: Soil
Workgroup Number: WG290603
Collect Date: 12/07/2008 09:35
Sample Tag: 01

PrePrep Method: NONE
Prep Method: 3051
Analytical Method: 6020
Analyst: JYH
Dilution: 1
Units: mg/kg

Instrument: ELAN-ICP
Prep Date: 12/12/2008 13:35
Cal Date: 12/17/2008 09:38
Run Date: 12/17/2008 20:09
File ID: EL.121708.200956
Percent Solid: 87.9

Analyte	CAS. Number	Result	Qual	RL	MDL
Arsenic, Total	7440-38-2	2.65		0.338	0.0844
Lead, Total	7439-92-1	10.8		0.450	0.113
Selenium, Total	7782-49-2	0.490 u		0.450	0.113 BL

Microbac

1418 JCW 3/10/09

5

Sample Number: L08120265-05
Client ID: MR08-SS082 -08D
Matrix: Soil
Workgroup Number: WG290530
Collect Date: 12/07/2008 09:35
Sample Tag: 01

PrePrep Method: NONE
Prep Method: 7471A
Analytical Method: 7471A
Analyst: ADC
Dilution: 1
Units: mg/kg

Instrument: HYDRA
Prep Date: 12/12/2008 12:45
Cal Date: 12/16/2008 10:16
Run Date: 12/16/2008 12:07
File ID: HY.121608.120717
Percent Solid: 87.9

Analyte	CAS. Number	Result	Qual	RL	MDL
Mercury, Total	7439-97-6		U	0.107	0.0213

U Undetected; the analyte was analyzed for, but not detected.

Microbac

3443 3/10/09

6

Sample Number: L08120265-06
Client ID: MR08-IS082-5-6 -08D
Matrix: Soil
Workgroup Number: WG290978
Collect Date: 12/07/2008 09:50
Sample Tag: 01

PrePrep Method: NONE
Prep Method: 3051
Analytical Method: 6010B
Analyst: KHR
Dilution: 1
Units: mg/kg

Instrument: IRIS-ICP
Prep Date: 12/16/2008 10:35
Cal Date: 12/19/2008 10:46
Run Date: 12/19/2008 14:51
File ID: IR.121908.145100
Percent Solid: 89.0

Analyte	CAS. Number	Result	Qual	RL	MDL
Silver, Total	7440-22-4		U	0.767	0.192
Barium, Total	7440-39-3	0.519		0.383	0.0767
Cadmium, Total	7440-43-9		U	0.153	0.0383
Chromium, Total	7440-47-3	1.23		0.767	0.0920
Copper, Total	7440-50-8	0.608	J	1.53	0.383
Antimony, Total	7440-36-0		U	1.53	0.383
Zinc, Total	7440-66-6	0.781	J	1.53	0.383

U Undetected; the analyte was analyzed for, but not detected.
J Estimated ; the analyte concentration was less than the low standard (LOQ)

Microbac

 lw 3/10/09

6

Sample Number: L08120265-06
Client ID: MR08-IS082-5-6 -08D
Matrix: Soil
Workgroup Number: WG290603
Collect Date: 12/07/2008 09:50
Sample Tag: 01

PrePrep Method: NONE
Prep Method: 3051
Analytical Method: 6020
Analyst: JYH
Dilution: 1
Units: mg/kg

Instrument: ELAN-ICP
Prep Date: 12/12/2008 13:35
Cal Date: 12/17/2008 09:38
Run Date: 12/17/2008 20:15
File ID: EL.121708.201522
Percent Solid: 89.0

Analyte	CAS. Number	Result	Qual	RL	MDL
Arsenic, Total	7440-38-2		U	0.329	0.0823
Lead, Total	7439-92-1	1.00		0.439	0.110
Selenium, Total	7782-49-2		U	0.439	0.110

U Undetected; the analyte was analyzed for, but not detected.

Microbac

1419 RW 3/10/09

6

Sample Number: L08120265-06
Client ID: MR08-IS082-5-6 -08D
Matrix: Soil
Workgroup Number: WG290530
Collect Date: 12/07/2008 09:50
Sample Tag: 01

PrePrep Method: NONE
Prep Method: 7471A
Analytical Method: 7471A
Analyst: ADC
Dilution: 1
Units: mg/kg

Instrument: HYDRA
Prep Date: 12/12/2008 12:45
Cal Date: 12/16/2008 10:16
Run Date: 12/16/2008 12:09
File ID: HY.121608.120901
Percent Solid: 89.0

Analyte	CAS. Number	Result	Qual	RL	MDL
Mercury, Total	7439-97-6		U	0.109	0.0218

U Undetected; the analyte was analyzed for, but not detected.

Microbac

3444 JW 3/10/09

7

Sample Number: L08120265-07
Client ID: MR08-SS083 -08D
Matrix: Soil
Workgroup Number: WG290978
Collect Date: 12/07/2008 10:20
Sample Tag: 01

PrePrep Method: NONE
Prep Method: 3051
Analytical Method: 6010B
Analyst: KHR
Dilution: 1
Units: mg/kg

Instrument: IRIS-ICP
Prep Date: 12/16/2008 10:36
Cal Date: 12/19/2008 10:46
Run Date: 12/19/2008 15:09
File ID: IR.121908.150900
Percent Solid: 88.1

Analyte	CAS. Number	Result	Qual	RL	MDL
Silver, Total	7440-22-4	0.254	J	0.868	0.217
Barium, Total	7440-39-3	10.8		0.434	0.0868
Cadmium, Total	7440-43-9	0.0925	J	0.174	0.0434
Chromium, Total	7440-47-3	4.41		0.868	0.104
Copper, Total	7440-50-8	26.3		1.74	0.434
Antimony, Total	7440-36-0	0.535	J	1.74	0.434
Zinc, Total	7440-66-6	7.05		1.74	0.434

J Estimated ; the analyte concentration was less than the low standard (LOQ)

Microbac

kw 3/10/09

7

Sample Number: L08120265-07
Client ID: MR08-SS083 -08D
Matrix: Soil
Workgroup Number: WG290603
Collect Date: 12/07/2008 10:20
Sample Tag: 01

PrePrep Method: NONE
Prep Method: 3051
Analytical Method: 6020
Analyst: JYH
Dilution: 1
Units: mg/kg

Instrument: ELAN-ICP
Prep Date: 12/12/2008 13:35
Cal Date: 12/17/2008 09:38
Run Date: 12/17/2008 20:20
File ID: EL.121708.202048
Percent Solid: 88.1

Analyte	CAS. Number	Result	Qual	RL	MDL
Arsenic, Total	7440-38-2	0.877		0.332	0.0830
Lead, Total	7439-92-1	23.1		0.443	0.111
Selenium, Total	7782-49-2	0.487 u		0.443	0.111

BL

Microbac

1420 lcw 3/10/09

7

Sample Number: L08120265-07
Client ID: MR08-SS083 -08D
Matrix: Soil
Workgroup Number: WG290530
Collect Date: 12/07/2008 10:20
Sample Tag: 01

PrePrep Method: NONE
Prep Method: 7471A
Analytical Method: 7471A
Analyst: ADC
Dilution: 1
Units: mg/kg

Instrument: HYDRA
Prep Date: 12/12/2008 12:45
Cal Date: 12/16/2008 10:16
Run Date: 12/16/2008 12:10
File ID: HY.121608.121044
Percent Solid: 88.1

Analyte	CAS. Number	Result	Qual	RL	MDL
Mercury, Total	7439-97-6	0.0261	J	0.108	0.0217

J Estimated ; the analyte concentration was less than the low standard (LOQ)

Microbac

3445 JEW 3/10/09

8

Sample Number: L08120265-08
Client ID: MR08-IS083-6-7 -08D
Matrix: Soil
Workgroup Number: WG290978
Collect Date: 12/07/2008 10:30
Sample Tag: 01

PrePrep Method: NONE
Prep Method: 3051
Analytical Method: 6010B
Analyst: KHR
Dilution: 1
Units: mg/kg

Instrument: IRIS-ICP
Prep Date: 12/16/2008 10:36
Cal Date: 12/19/2008 10:46
Run Date: 12/19/2008 15:15
File ID: IR.121908.151500
Percent Solid: 87.8

Analyte	CAS. Number	Result	Qual	RL	MDL
Silver, Total	7440-22-4		U	0.762	0.190
Barium, Total	7440-39-3	3.44		0.381	0.0762
Cadmium, Total	7440-43-9		U	0.152	0.0381
Chromium, Total	7440-47-3	3.61		0.762	0.0914
Copper, Total	7440-50-8		U	1.52	0.381
Antimony, Total	7440-36-0		U	1.52	0.381
Zinc, Total	7440-66-6	0.649	J	1.52	0.381

U Undetected; the analyte was analyzed for, but not detected.
J Estimated ; the analyte concentration was less than the low standard (LOQ)

Microbac

320

lw 3/10/09

8

Sample Number: L08120265-08
Client ID: MR08-IS083-6-7 -08D
Matrix: Soil
Workgroup Number: WG290603
Collect Date: 12/07/2008 10:30
Sample Tag: 01

PrePrep Method: NONE
Prep Method: 3051
Analytical Method: 6020
Analyst: JYH
Dilution: 1
Units: mg/kg

Instrument: ELAN-ICP
Prep Date: 12/12/2008 13:35
Cal Date: 12/17/2008 09:38
Run Date: 12/17/2008 20:26
File ID: EL.121708.202612
Percent Solid: 87.8

Analyte	CAS. Number	Result	Qual	RL	MDL
Arsenic, Total	7440-38-2	0.166	J	0.341	0.0852
Lead, Total	7439-92-1	1.60		0.454	0.114
Selenium, Total	7782-49-2	0.481		0.454	0.114

J Estimated ; the analyte concentration was less than the low standard (LOQ)

Microbac

1421

lw 3/10/09

8

Sample Number: L08120265-08
Client ID: MR08-IS083-6-7 -08D
Matrix: Soil
Workgroup Number: WG290530
Collect Date: 12/07/2008 10:30
Sample Tag: 01

PrePrep Method: NONE
Prep Method: 7471A
Analytical Method: 7471A
Analyst: ADC
Dilution: 1
Units: mg/kg

Instrument: HYDRA
Prep Date: 12/12/2008 12:45
Cal Date: 12/16/2008 10:16
Run Date: 12/16/2008 12:12
File ID: HY.121608.121239
Percent Solid: 87.8

Analyte	CAS. Number	Result	Qual	RL	MDL
Mercury, Total	7439-97-6		U	0.113	0.0227

U Undetected; the analyte was analyzed for, but not detected.

Microbac

3446 AW 3/10/09

9

Sample Number: L08120265-09
Client ID: MR08-SS084 -08D
Matrix: Soil
Workgroup Number: WG290978
Collect Date: 12/07/2008 10:30
Sample Tag: 01

PrePrep Method: NONE
Prep Method: 3051
Analytical Method: 6010B
Analyst: KHR
Dilution: 1
Units: mg/kg

Instrument: IRIS-ICP
Prep Date: 12/16/2008 10:36
Cal Date: 12/19/2008 10:46
Run Date: 12/19/2008 15:21
File ID: IR.121908.152100
Percent Solid: 89.1

Analyte	CAS. Number	Result	Qual	RL	MDL
Silver, Total	7440-22-4		U	0.803	0.201
Barium, Total	7440-39-3	16.1		0.402	0.0803
Cadmium, Total	7440-43-9	0.112	J	0.161	0.0402
Chromium, Total	7440-47-3	5.44		0.803	0.0964
Copper, Total	7440-50-8	5.71		1.61	0.402
Antimony, Total	7440-36-0		U	1.61	0.402
Zinc, Total	7440-66-6	3.80		1.61	0.402

U Undetected; the analyte was analyzed for, but not detected.
J Estimated ; the analyte concentration was less than the low standard (LOQ)

Microbac

321 JW 3/10/09

9

Sample Number: L08120265-09
Client ID: MR08-SS084 -08D
Matrix: Soil
Workgroup Number: WG290603
Collect Date: 12/07/2008 10:30
Sample Tag: 01

PrePrep Method: NONE
Prep Method: 3051
Analytical Method: 6020
Analyst: JYH
Dilution: 1
Units: mg/kg

Instrument: ELAN-ICP
Prep Date: 12/12/2008 13:35
Cal Date: 12/17/2008 09:38
Run Date: 12/17/2008 20:31
File ID: EL.121708.203135
Percent Solid: 89.1

Analyte	CAS. Number	Result	Qual	RL	MDL
Arsenic, Total	7440-38-2	2.80		0.335	0.0837
Lead, Total	7439-92-1	15.3		0.446	0.112
Selenium, Total	7782-49-2	0.515 u		0.446	0.112

BL

Microbac

1422 fw 3/10/09

9

Sample Number:	L08120265-09	PrePrep Method:	NONE	Instrument:	HYDRA
Client ID:	MR08-SS084 -08D	Prep Method:	7471A	Prep Date:	12/12/2008 12:45
Matrix:	Soil	Analytical Method:	7471A	Cal Date:	12/16/2008 10:16
Workgroup Number:	WG290530	Analyst:	ADC	Run Date:	12/16/2008 12:14
Collect Date:	12/07/2008 10:30	Dilution:	1	File ID:	HY.121608.121422
Sample Tag:	01	Units:	mg/kg	Percent Solid:	89.1

Analyte	CAS. Number	Result	Qual	RL	MDL
Mercury, Total	7439-97-6	0.0249	J	0.105	0.0210

J Estimated ; the analyte concentration was less than the low standard (LOQ)

Microbac

3447 lew 3/10/09

10

Sample Number: L08120265-10
Client ID: MR08-IS084-4-5 -08D
Matrix: Soil
Workgroup Number: WG290853
Collect Date: 12/07/2008 11:00
Sample Tag: 01

PrePrep Method: NONE
Prep Method: 3051
Analytical Method: 6010B
Analyst: KHR
Dilution: 1
Units: mg/kg

Instrument: IRIS-ICP
Prep Date: 12/16/2008 10:50
Cal Date: 12/18/2008 11:38
Run Date: 12/18/2008 21:14
File ID: IR.121808.211400
Percent Solid: 87.6

Analyte	CAS. Number	Result	Qual	RL	MDL	
Silver, Total	7440-22-4		U	0.812	0.203	
Barium, Total	7440-39-3	6.97		0.406	0.0812	
Cadmium, Total	7440-43-9		U	0.162	0.0406	
Chromium, Total	7440-47-3	5.03 J		0.812	0.0974	SD
Copper, Total	7440-50-8	0.715	J	1.62	0.406	
Antimony, Total	7440-36-0		U	1.62	0.406	
Zinc, Total	7440-66-6	1.74 J		1.62	0.406	SD

U Undetected; the analyte was analyzed for, but not detected.
J Estimated ; the analyte concentration was less than the low standard (LOQ)

Microbac

JEW 3/10/09

10

Sample Number: L08120265-10
Client ID: MR08-IS084-4-5 -08D
Matrix: Soil
Workgroup Number: WG290603
Collect Date: 12/07/2008 11:00
Sample Tag: 01

PrePrep Method: NONE
Prep Method: 3051
Analytical Method: 6020
Analyst: JYH
Dilution: 1
Units: mg/kg

Instrument: ELAN-ICP
Prep Date: 12/12/2008 13:35
Cal Date: 12/17/2008 09:38
Run Date: 12/17/2008 20:36
File ID: EL.121708.203658
Percent Solid: 87.6

Analyte	CAS. Number	Result	Qual	RL	MDL
Arsenic, Total	7440-38-2	0.123	J	0.343	0.0856
Lead, Total	7439-92-1	1.76		0.457	0.114
Selenium, Total	7782-49-2		U	0.457	0.114

U Undetected; the analyte was analyzed for, but not detected.
J Estimated ; the analyte concentration was less than the low standard (LOQ)

Microbac

1423 lw 3/10/09

10

Sample Number: L08120265-10
Client ID: MR08-IS084-4-5 -08D
Matrix: Soil
Workgroup Number: WG290530
Collect Date: 12/07/2008 11:00
Sample Tag: 01

PrePrep Method: NONE
Prep Method: 7471A
Analytical Method: 7471A
Analyst: ADC
Dilution: 1
Units: mg/kg

Instrument: HYDRA
Prep Date: 12/12/2008 12:45
Cal Date: 12/16/2008 10:16
Run Date: 12/16/2008 12:19
File ID: HY.121608.121938
Percent Solid: 87.6

Analyte	CAS. Number	Result	Qual	RL	MDL
Mercury, Total	7439-97-6		U	0.105	0.0211

U Undetected; the analyte was analyzed for, but not detected.

Microbac

3448 MW 3/10/09

11

Sample Number: L08120265-11
Client ID: MR08-SS085 -08D
Matrix: Soil
Workgroup Number: WG290853
Collect Date: 12/07/2008 11:25
Sample Tag: 01

PrePrep Method: NONE
Prep Method: 3051
Analytical Method: 6010B
Analyst: KHR
Dilution: 1
Units: mg/kg

Instrument: IRIS-ICP
Prep Date: 12/16/2008 10:51
Cal Date: 12/18/2008 11:38
Run Date: 12/18/2008 21:20
File ID: IR.121808.212000
Percent Solid: 89.0

Analyte	CAS. Number	Result	Qual	RL	MDL	
Silver, Total	7440-22-4		U	0.854	0.214	
Barium, Total	7440-39-3	11.3		0.427	0.0854	
Cadmium, Total	7440-43-9	0.0803	J	0.171	0.0427	
Chromium, Total	7440-47-3	5.21 J		0.854	0.103	SD
Copper, Total	7440-50-8	3.86		1.71	0.427	
Antimony, Total	7440-36-0		U	1.71	0.427	
Zinc, Total	7440-66-6	7.86 J		1.71	0.427	SD

U Undetected; the analyte was analyzed for, but not detected.
J Estimated ; the analyte concentration was less than the low standard (LOQ)

Microbac

lw 3/10/09

11

Sample Number: L08120265-11
Client ID: MR08-SS085 -08D
Matrix: Soil
Workgroup Number: WG290603
Collect Date: 12/07/2008 11:25
Sample Tag: 01

PrePrep Method: NONE
Prep Method: 3051
Analytical Method: 6020
Analyst: JYH
Dilution: 1
Units: mg/kg

Instrument: ELAN-ICP
Prep Date: 12/12/2008 13:35
Cal Date: 12/17/2008 09:38
Run Date: 12/17/2008 20:42
File ID: EL.121708.204222
Percent Solid: 89.0

Analyte	CAS. Number	Result	Qual	RL	MDL
Arsenic, Total	7440-38-2	6.32		0.329	0.0823
Lead, Total	7439-92-1	11.8		0.439	0.110
Selenium, Total	7782-49-2	0.439 ~~0.372~~	U J	0.439	0.110

BL

J Estimated ; the analyte concentration was less than the low standard (LOQ)

Microbac

lew 3/10/09

11

Sample Number: L08120265-11
Client ID: MR08-SS085 -08D
Matrix: Soil
Workgroup Number: WG290530
Collect Date: 12/07/2008 11:25
Sample Tag: 01

PrePrep Method: NONE
Prep Method: 7471A
Analytical Method: 7471A
Analyst: ADC
Dilution: 1
Units: mg/kg

Instrument: HYDRA
Prep Date: 12/12/2008 12:45
Cal Date: 12/16/2008 10:16
Run Date: 12/16/2008 12:22
File ID: HY.121608.122224
Percent Solid: 89.0

Analyte	CAS. Number	Result	Qual	RL	MDL
Mercury, Total	7439-97-6		U	0.109	0.0219

U Undetected; the analyte was analyzed for, but not detected.

Microbac

3449 New 3/10/09

12

Sample Number: L08120265-12
Client ID: MR08-IS085-1-2 -08D
Matrix: Soil
Workgroup Number: WG290853
Collect Date: 12/07/2008 11:45
Sample Tag: 01

PrePrep Method: NONE
Prep Method: 3051
Analytical Method: 6010B
Analyst: KHR
Dilution: 1
Units: mg/kg

Instrument: IRIS-ICP
Prep Date: 12/16/2008 10:51
Cal Date: 12/18/2008 11:38
Run Date: 12/18/2008 21:27
File ID: IR.121808.212700
Percent Solid: 86.4

Analyte	CAS. Number	Result	Qual	RL	MDL	
Silver, Total	7440-22-4		U	0.835	0.209	
Barium, Total	7440-39-3	5.34		0.418	0.0835	
Cadmium, Total	7440-43-9		U	0.167	0.0418	
Chromium, Total	7440-47-3	5.16 J		0.835	0.100	SD
Copper, Total	7440-50-8		U	1.67	0.418	
Antimony, Total	7440-36-0		U	1.67	0.418	
Zinc, Total	7440-66-6	0.943 J	~~J~~	1.67	0.418	SD

U Undetected; the analyte was analyzed for, but not detected.
J Estimated ; the analyte concentration was less than the low standard (LOQ)

Microbac

324 MW 3/10/09

12

Sample Number: L08120265-12
Client ID: MR08-IS085-1-2 -08D
Matrix: Soil
Workgroup Number: WG290980
Collect Date: 12/07/2008 11:45
Sample Tag: 01

PrePrep Method: NONE
Prep Method: 3051
Analytical Method: 6020
Analyst: JYH
Dilution: 1
Units: mg/kg

Instrument: ELAN-ICP
Prep Date: 12/15/2008 06:41
Cal Date: 12/19/2008 11:58
Run Date: 12/19/2008 13:12
File ID: EL.121908.131252
Percent Solid: 86.4

Analyte	CAS. Number	Result	Qual	RL	MDL
Arsenic, Total	7440-38-2	0.410		0.336	0.0839
Lead, Total	7439-92-1	3.60		0.447	0.112
Selenium, Total	7782-49-2	0.281 J	J	0.447	0.112

MSL

J Estimated ; the analyte concentration was less than the low standard (LOQ)

Microbac

1425 lew 3/10/09

12

Sample Number: L08120265-12
Client ID: MR08-IS085-1-2 -08D
Matrix: Soil
Workgroup Number: WG290530
Collect Date: 12/07/2008 11:45
Sample Tag: 01

PrePrep Method: NONE
Prep Method: 7471A
Analytical Method: 7471A
Analyst: ADC
Dilution: 1
Units: mg/kg

Instrument: HYDRA
Prep Date: 12/12/2008 12:45
Cal Date: 12/16/2008 10:16
Run Date: 12/16/2008 12:24
File ID: HY.121608.122409
Percent Solid: 86.4

Analyte	CAS. Number	Result	Qual	RL	MDL
Mercury, Total	7439-97-6		U	0.109	0.0218

U Undetected; the analyte was analyzed for, but not detected.

Microbac

MW 3/10/09

3450

13

Sample Number: L08120265-13
Client ID: MR08-SS107 -08D
Matrix: Soil
Workgroup Number: WG290853
Collect Date: 12/07/2008 14:15
Sample Tag: 01

PrePrep Method: NONE
Prep Method: 3051
Analytical Method: 6010B
Analyst: KHR
Dilution: 1
Units: mg/kg

Instrument: IRIS-ICP
Prep Date: 12/16/2008 10:52
Cal Date: 12/18/2008 11:38
Run Date: 12/18/2008 21:33
File ID: IR.121808.213300
Percent Solid: 91.9

Analyte	CAS. Number	Result	Qual	RL	MDL	
Silver, Total	7440-22-4	0.357	J	0.784	0.196	
Barium, Total	7440-39-3	10.4		0.392	0.0784	
Cadmium, Total	7440-43-9	1.38		0.157	0.0392	
Chromium, Total	7440-47-3	4.87 J		0.784	0.0941	SD
Copper, Total	7440-50-8	2.17		1.57	0.392	
Antimony, Total	7440-36-0	0.681	J	1.57	0.392	
Zinc, Total	7440-66-6	28.4 J		1.57	0.392	SD

J Estimated ; the analyte concentration was less than the low standard (LOQ)

Microbac

 lew 3/10/09

13

Sample Number: L08120265-13
Client ID: MR08-SS107 -08D
Matrix: Soil
Workgroup Number: WG290980
Collect Date: 12/07/2008 14:15
Sample Tag: 01

PrePrep Method: NONE
Prep Method: 3051
Analytical Method: 6020
Analyst: JYH
Dilution: 1
Units: mg/kg

Instrument: ELAN-ICP
Prep Date: 12/15/2008 06:41
Cal Date: 12/19/2008 11:58
Run Date: 12/19/2008 13:29
File ID: EL.121908.132958
Percent Solid: 91.9

Analyte	CAS. Number	Result	Qual	RL	MDL
Arsenic, Total	7440-38-2	6.75		0.323	0.0808
Lead, Total	7439-92-1	1.82		0.431	0.108
Selenium, Total	7782-49-2	~~0.214~~ 0.431	~~J~~ UJ	0.431	0.108

MSL, BL

J Estimated ; the analyte concentration was less than the low standard (LOQ)

Microbac

1426

lew 3/10/09

13

Sample Number: L08120265-13
Client ID: MR08-SS107 -08D
Matrix: Soil
Workgroup Number: WG290530
Collect Date: 12/07/2008 14:15
Sample Tag: 01

PrePrep Method: NONE
Prep Method: 7471A
Analytical Method: 7471A
Analyst: ADC
Dilution: 1
Units: mg/kg

Instrument: HYDRA
Prep Date: 12/12/2008 12:45
Cal Date: 12/16/2008 10:16
Run Date: 12/16/2008 12:26
File ID: HY.121608.122642
Percent Solid: 91.9

Analyte	CAS. Number	Result	Qual	RL	MDL
Mercury, Total	7439-97-6		U	0.105	0.0209

U Undetected; the analyte was analyzed for, but not detected.

Microbac

3451 LW 3/10/09

14

Sample Number: L08120265-14
Client ID: MR08-IS107-2-3 -08D
Matrix: Soil
Workgroup Number: WG290853
Collect Date: 12/07/2008 15:00
Sample Tag: 01

PrePrep Method: NONE
Prep Method: 3051
Analytical Method: 6010B
Analyst: KHR
Dilution: 1
Units: mg/kg

Instrument: IRIS-ICP
Prep Date: 12/16/2008 10:52
Cal Date: 12/18/2008 11:38
Run Date: 12/18/2008 21:39
File ID: IR.121808.213900
Percent Solid: 88.0

Analyte	CAS. Number	Result	Qual	RL	MDL	
Silver, Total	7440-22-4		U	0.853	0.213	
Barium, Total	7440-39-3	3.72		0.426	0.0853	
Cadmium, Total	7440-43-9		U	0.171	0.0426	
Chromium, Total	7440-47-3	4.57 J		0.853	0.102	SD
Copper, Total	7440-50-8		U	1.71	0.426	
Antimony, Total	7440-36-0		U	1.71	0.426	
Zinc, Total	7440-66-6	0.841 J	~~J~~	1.71	0.426	SD

U Undetected; the analyte was analyzed for, but not detected.
J Estimated ; the analyte concentration was less than the low standard (LOQ)

Microbac

lew 3/10/09

14

Sample Number: L08120265-14
Client ID: MR08-IS107-2-3 -08D
Matrix: Soil
Workgroup Number: WG290980
Collect Date: 12/07/2008 15:00
Sample Tag: 01

PrePrep Method: NONE
Prep Method: 3051
Analytical Method: 6020
Analyst: JYH
Dilution: 1
Units: mg/kg

Instrument: ELAN-ICP
Prep Date: 12/15/2008 06:41
Cal Date: 12/19/2008 11:58
Run Date: 12/19/2008 13:58
File ID: EL.121908.135829
Percent Solid: 88.0

Analyte	CAS. Number	Result	Qual	RL	MDL
Arsenic, Total	7440-38-2	0.187	J	0.341	0.0852
Lead, Total	7439-92-1	2.49		0.455	0.114
Selenium, Total	7782-49-2	0.284 J		0.455	0.114

MSL

J Estimated ; the analyte concentration was less than the low standard (LOQ)

Microbac

1427 few 3/10/09

14

Sample Number: L08120265-14
Client ID: MR08-IS107-2-3 -08D
Matrix: Soil
Workgroup Number: WG290530
Collect Date: 12/07/2008 15:00
Sample Tag: 01

PrePrep Method: NONE
Prep Method: 7471A
Analytical Method: 7471A
Analyst: ADC
Dilution: 1
Units: mg/kg

Instrument: HYDRA
Prep Date: 12/12/2008 12:45
Cal Date: 12/16/2008 10:16
Run Date: 12/16/2008 12:28
File ID: HY.121608.122826
Percent Solid: 88.0

Analyte	CAS. Number	Result	Qual	RL	MDL
Mercury, Total	7439-97-6		U	0.110	0.0219

U Undetected; the analyte was analyzed for, but not detected.

Microbac

3452 lcw 3/10/09

15

Sample Number: L08120265-15
Client ID: MR08-SS108 -08D
Matrix: Soil
Workgroup Number: WG290853
Collect Date: 12/07/2008 15:45
Sample Tag: 01

PrePrep Method: NONE
Prep Method: 3051
Analytical Method: 6010B
Analyst: KHR
Dilution: 1
Units: mg/kg

Instrument: IRIS-ICP
Prep Date: 12/16/2008 10:52
Cal Date: 12/18/2008 11:38
Run Date: 12/18/2008 21:45
File ID: IR.121808.214500
Percent Solid: 93.6

Analyte	CAS. Number	Result	Qual	RL	MDL	
Silver, Total	7440-22-4		U	0.739	0.185	
Barium, Total	7440-39-3	6.31		0.369	0.0739	
Cadmium, Total	7440-43-9	0.415		0.148	0.0369	
Chromium, Total	7440-47-3	4.23 J		0.739	0.0886	SD
Copper, Total	7440-50-8	2.06		1.48	0.369	
Antimony, Total	7440-36-0	0.589	J	1.48	0.369	
Zinc, Total	7440-66-6	15.0 J		1.48	0.369	SD

U Undetected; the analyte was analyzed for, but not detected.
J Estimated ; the analyte concentration was less than the low standard (LOQ)

Microbac

fw 3/10/09

15

Sample Number: L08120265-15
Client ID: MR08-SS108 -08D
Matrix: Soil
Workgroup Number: WG290980
Collect Date: 12/07/2008 15:45
Sample Tag: 01

PrePrep Method: NONE
Prep Method: 3051
Analytical Method: 6020
Analyst: JYH
Dilution: 1
Units: mg/kg

Instrument: ELAN-ICP
Prep Date: 12/15/2008 06:41
Cal Date: 12/19/2008 11:58
Run Date: 12/19/2008 14:04
File ID: EL.121908.140413
Percent Solid: 93.6

Analyte	CAS. Number	Result	Qual	RL	MDL
Arsenic, Total	7440-38-2	2.31		0.297	0.0743
Lead, Total	7439-92-1	6.49		0.396	0.0991
Selenium, Total	7782-49-2	0.396 ~~0.356~~ UJ	J	0.396	0.0991

MSL, BC

J Estimated ; the analyte concentration was less than the low standard (LOQ)

Microbac

lw 3/10/09

15

Sample Number: L08120265-15
Client ID: MR08-SS108 -08D
Matrix: Soil
Workgroup Number: WG290530
Collect Date: 12/07/2008 15:45
Sample Tag: 01

PrePrep Method: NONE
Prep Method: 7471A
Analytical Method: 7471A
Analyst: ADC
Dilution: 1
Units: mg/kg

Instrument: HYDRA
Prep Date: 12/12/2008 12:45
Cal Date: 12/16/2008 10:16
Run Date: 12/16/2008 12:30
File ID: HY.121608.123012
Percent Solid: 93.6

Analyte	CAS. Number	Result	Qual	RL	MDL
Mercury, Total	7439-97-6		U	0.106	0.0212

U Undetected; the analyte was analyzed for, but not detected.

Microbac

3453 lew 3/10/09

16

Sample Number: L08120265-16
Client ID: MR08-IS108-2-3 -08D
Matrix: Soil
Workgroup Number: WG290853
Collect Date: 12/07/2008 15:55
Sample Tag: 01

PrePrep Method: NONE
Prep Method: 3051
Analytical Method: 6010B
Analyst: KHR
Dilution: 1
Units: mg/kg

Instrument: IRIS-ICP
Prep Date: 12/16/2008 10:53
Cal Date: 12/18/2008 11:38
Run Date: 12/18/2008 21:51
File ID: IR.121808.215100
Percent Solid: 86.4

Analyte	CAS. Number	Result	Qual	RL	MDL	
Silver, Total	7440-22-4		U	0.867	0.217	
Barium, Total	7440-39-3	9.31		0.434	0.0867	
Cadmium, Total	7440-43-9		U	0.173	0.0434	
Chromium, Total	7440-47-3	2.93 J		0.867	0.104	SD
Copper, Total	7440-50-8	0.734	J	1.73	0.434	
Antimony, Total	7440-36-0		U	1.73	0.434	
Zinc, Total	7440-66-6	1.76 J		1.73	0.434	SD

U Undetected; the analyte was analyzed for, but not detected.
J Estimated ; the analyte concentration was less than the low standard (LOQ)

Microbac

fw 3/10/09

16

Sample Number: L08120265-16
Client ID: MR08-IS108-2-3 -08D
Matrix: Soil
Workgroup Number: WG290980
Collect Date: 12/07/2008 15:55
Sample Tag: 01

PrePrep Method: NONE
Prep Method: 3051
Analytical Method: 6020
Analyst: JYH
Dilution: 1
Units: mg/kg

Instrument: ELAN-ICP
Prep Date: 12/15/2008 06:41
Cal Date: 12/19/2008 11:58
Run Date: 12/19/2008 14:09
File ID: EL.121908.140955
Percent Solid: 86.4

Analyte	CAS. Number	Result	Qual	RL	MDL
Arsenic, Total	7440-38-2	0.454		0.342	0.0856
Lead, Total	7439-92-1	3.75		0.457	0.114
Selenium, Total	7782-49-2	0.994 J		0.457	0.114

MSL

Microbac

RCW 3/10/09

16

Sample Number: L08120265-16
Client ID: MR08-IS108-2-3 -08D
Matrix: Soil
Workgroup Number: WG290529
Collect Date: 12/07/2008 15:55
Sample Tag: 01

PrePrep Method: NONE
Prep Method: 7471A
Analytical Method: 7471A
Analyst: ADC
Dilution: 1
Units: mg/kg

Instrument: HYDRA
Prep Date: 12/12/2008 13:49
Cal Date: 12/16/2008 10:16
Run Date: 12/16/2008 13:02
File ID: HY.121608.130208
Percent Solid: 86.4

Analyte	CAS. Number	Result	Qual	RL	MDL
Mercury, Total	7439-97-6		U	0.114	0.0228

U Undetected; the analyte was analyzed for, but not detected.

Microbac

3454 MW 3/10/09

17

Sample Number: L08120265-17
Client ID: MR08-IS109-2-3 -08D
Matrix: Soil
Workgroup Number: WG290853
Collect Date: 12/07/2008 16:30
Sample Tag: 01

PrePrep Method: NONE
Prep Method: 3051
Analytical Method: 6010B
Analyst: KHR
Dilution: 1
Units: mg/kg

Instrument: IRIS-ICP
Prep Date: 12/16/2008 10:54
Cal Date: 12/18/2008 11:38
Run Date: 12/18/2008 22:10
File ID: IR.121808.221000
Percent Solid: 88.4

Analyte	CAS. Number	Result	Qual	RL	MDL	
Silver, Total	7440-22-4	0.292	J	0.807	0.202	
Barium, Total	7440-39-3	6.05		0.404	0.0807	
Cadmium, Total	7440-43-9	0.148	J	0.161	0.0404	
Chromium, Total	7440-47-3	5.44 J		0.807	0.0969	SD
Copper, Total	7440-50-8	0.540	J	1.61	0.404	
Antimony, Total	7440-36-0		U	1.61	0.404	
Zinc, Total	7440-66-6	5.35 J		1.61	0.404	SD

U Undetected; the analyte was analyzed for, but not detected.
J Estimated ; the analyte concentration was less than the low standard (LOQ)

Microbac

lew 3/10/09

17

Sample Number: L08120265-17
Client ID: MR08-IS109-2-3 -08D
Matrix: Soil
Workgroup Number: WG290980
Collect Date: 12/07/2008 16:30
Sample Tag: 01

PrePrep Method: NONE
Prep Method: 3051
Analytical Method: 6020
Analyst: JYH
Dilution: 1
Units: mg/kg

Instrument: ELAN-ICP
Prep Date: 12/15/2008 06:41
Cal Date: 12/19/2008 11:58
Run Date: 12/19/2008 14:15
File ID: EL.121908.141535
Percent Solid: 88.4

Analyte	CAS. Number	Result	Qual	RL	MDL
Arsenic, Total	7440-38-2	0.587		0.322	0.0805
Lead, Total	7439-92-1	3.99		0.429	0.107
Selenium, Total	7782-49-2	0.449 J		0.429	0.107

MSL

Microbac

1430 MW 3/10/09

17

Sample Number: L08120265-17
Client ID: MR08-IS109-2-3 -08D
Matrix: Soil
Workgroup Number: WG290529
Collect Date: 12/07/2008 16:30
Sample Tag: 01

PrePrep Method: NONE
Prep Method: 7471A
Analytical Method: 7471A
Analyst: ADC
Dilution: 1
Units: mg/kg

Instrument: HYDRA
Prep Date: 12/12/2008 13:49
Cal Date: 12/16/2008 10:16
Run Date: 12/16/2008 13:06
File ID: HY.121608.130622
Percent Solid: 88.4

Analyte	CAS. Number	Result	Qual	RL	MDL
Mercury, Total	7439-97-6		U	0.105	0.0210

U Undetected; the analyte was analyzed for, but not detected.

Microbac

3455 3/10/09

18

Sample Number: L08120265-18
Client ID: MR08-IS109D-2-3 -08D
Matrix: Soil
Workgroup Number: WG290853
Collect Date: 12/07/2008 16:45
Sample Tag: 01

PrePrep Method: NONE
Prep Method: 3051
Analytical Method: 6010B
Analyst: KHR
Dilution: 1
Units: mg/kg

Instrument: IRIS-ICP
Prep Date: 12/16/2008 10:55
Cal Date: 12/18/2008 11:38
Run Date: 12/18/2008 22:16
File ID: IR.121808.221600
Percent Solid: 84.4

Analyte	CAS. Number	Result	Qual	RL	MDL	
Silver, Total	7440-22-4		U	0.887	0.222	
Barium, Total	7440-39-3	6.38		0.444	0.0887	
Cadmium, Total	7440-43-9		U	0.177	0.0444	
Chromium, Total	7440-47-3	5.08 J		0.887	0.106	SD
Copper, Total	7440-50-8		U	1.77	0.444	
Antimony, Total	7440-36-0		U	1.77	0.444	
Zinc, Total	7440-66-6	3.32 J		1.77	0.444	SD

U Undetected; the analyte was analyzed for, but not detected.

Microbac

330 lw 3/10/09

18

Sample Number: L08120265-18
Client ID: MR08-IS109D-2-3 -08D
Matrix: Soil
Workgroup Number: WG290980
Collect Date: 12/07/2008 16:45
Sample Tag: 01

PrePrep Method: NONE
Prep Method: 3051
Analytical Method: 6020
Analyst: JYH
Dilution: 1
Units: mg/kg

Instrument: ELAN-ICP
Prep Date: 12/15/2008 06:41
Cal Date: 12/19/2008 11:58
Run Date: 12/19/2008 14:21
File ID: EL.121908.142116
Percent Solid: 84.4

Analyte	CAS. Number	Result	Qual	RL	MDL
Arsenic, Total	7440-38-2	0.384		0.352	0.0879
Lead, Total	7439-92-1	3.75		0.469	0.117
Selenium, Total	7782-49-2	0.459 J	✓	0.469	0.117

MSL

J Estimated ; the analyte concentration was less than the low standard (LOQ)

Microbac

1431

lw 3/10/09

18

Sample Number: L08120265-18
Client ID: MR08-IS109D-2-3 -08D
Matrix: Soil
Workgroup Number: WG290529
Collect Date: 12/07/2008 16:45
Sample Tag: 01

PrePrep Method: NONE
Prep Method: 7471A
Analytical Method: 7471A
Analyst: ADC
Dilution: 1
Units: mg/kg

Instrument: HYDRA
Prep Date: 12/12/2008 13:49
Cal Date: 12/16/2008 10:16
Run Date: 12/16/2008 13:08
File ID: HY.121608.130815
Percent Solid: 84.4

Analyte	CAS. Number	Result	Qual	RL	MDL
Mercury, Total	7439-97-6		U	0.118	0.0236

U Undetected; the analyte was analyzed for, but not detected.

Microbac

3456 3/10/09

19

Sample Number: L08120265-19
Client ID: MR08-EB01120708-SS
Matrix: Water
Workgroup Number: WG290587
Collect Date: 12/07/2008 15:00
Sample Tag: 01

PrePrep Method: NONE
Prep Method: 3005A
Analytical Method: 6010B
Analyst: ED
Dilution: 1
Units: ug/L

Instrument: PE-ICP2
Prep Date: 12/11/2008 09:34
Cal Date: 12/16/2008 13:31
Run Date: 12/16/2008 17:23
File ID: P2.121608.172307

Analyte	CAS. Number	Result	Qual	RL	MDL
Barium, Total	7440-39-3		U	10.0	2.50
Cadmium, Total	7440-43-9		U	1.00	0.250
Chromium, Total	7440-47-3		U	10.0	2.50
Copper, Total	7440-50-8		U	20.0	5.00
Silver, Total	7440-22-4		U	6.00	2.00
Zinc, Total	7440-66-6		U	20.0	5.00

U Undetected; the analyte was analyzed for, but not detected.

Microbac

331 lew 3/10/09

19

Sample Number: L08120265-19
Client ID: MR08-EB01120708-SS
Matrix: Water
Workgroup Number: WG290255
Collect Date: 12/07/2008 15:00
Sample Tag: 01

PrePrep Method: NONE
Prep Method: 3015
Analytical Method: 6020
Analyst: JYH
Dilution: 1
Units: ug/L

Instrument: ELAN-ICP
Prep Date: 12/11/2008 08:30
Cal Date: 12/11/2008 10:44
Run Date: 12/11/2008 16:56
File ID: EL.121108.165659

Analyte	CAS. Number	Result	Qual	RL	MDL
Arsenic, Total	7440-38-2		U	1.00	0.250
Lead, Total	7439-92-1		U	1.00	0.250
Selenium, Total	7782-49-2	0.513	J	2.00	0.500

U Undetected; the analyte was analyzed for, but not detected.
J Estimated ; the analyte concentration was less than the low standard (LOQ)

Microbac

lee 3/10/09

19

Sample Number: L08120265-19
Client ID: MR08-EB01120708-SS
Matrix: Water
Workgroup Number: WG290255
Collect Date: 12/07/2008 15:00
Sample Tag: 02

PrePrep Method: NONE
Prep Method: 3015
Analytical Method: 6020
Analyst: JYH
Dilution: 1
Units: ug/L

Instrument: ELAN-ICP
Prep Date: 12/11/2008 08:30
Cal Date: 12/18/2008 10:46
Run Date: 12/19/2008 01:09
File ID: EL.121908.010953

Analyte	CAS. Number	Result	Qual	RL	MDL
Antimony, Total	7440-36-0		U	1.00	0.250

U Undetected; the analyte was analyzed for, but not detected.

Microbac

1433

fw 3/10/09

19

Sample Number: L08120265-19
Client ID: MR08-EB01120708-SS
Matrix: Water
Workgroup Number: WG290493
Collect Date: 12/07/2008 15:00
Sample Tag: 01

PrePrep Method: NONE
Prep Method: 7470A
Analytical Method: 7470A
Analyst: ADC
Dilution: 1
Units: ug/L

Instrument: HYDRA
Prep Date: 12/12/2008 09:34
Cal Date: 12/15/2008 10:06
Run Date: 12/15/2008 10:51
File ID: HY.121508.105124

Analyte	CAS. Number	Result	Qual	RL	MDL
Mercury	7439-97-6		U	0.400	0.100

U Undetected; the analyte was analyzed for, but not detected.

Microbac

3457 MW 3/18/09

20

Sample Number: L08120265-20
Client ID: MR08-EB01120708-IS
Matrix: Water
Workgroup Number: WG290587
Collect Date: 12/07/2008 15:30
Sample Tag: 01

PrePrep Method: NONE
Prep Method: 3005A
Analytical Method: 6010B
Analyst: ED
Dilution: 1
Units: ug/L

Instrument: PE-ICP2
Prep Date: 12/11/2008 09:34
Cal Date: 12/16/2008 13:31
Run Date: 12/16/2008 17:41
File ID: P2.121608.174159

Analyte	CAS. Number	Result	Qual	RL	MDL
Barium, Total	7440-39-3		U	10.0	2.50
Cadmium, Total	7440-43-9		U	1.00	0.250
Chromium, Total	7440-47-3		U	10.0	2.50
Copper, Total	7440-50-8		U	20.0	5.00
Silver, Total	7440-22-4		U	6.00	2.00
Zinc, Total	7440-66-6		U	20.0	5.00

U Undetected; the analyte was analyzed for, but not detected.

Microbac

lw 3/10/09

20

Sample Number: L08120265-20
Client ID: MR08-EB01120708-IS
Matrix: Water
Workgroup Number: WG290255
Collect Date: 12/07/2008 15:30
Sample Tag: 01

PrePrep Method: NONE
Prep Method: 3015
Analytical Method: 6020
Analyst: JYH
Dilution: 1
Units: ug/L

Instrument: ELAN-ICP
Prep Date: 12/11/2008 08:30
Cal Date: 12/11/2008 10:44
Run Date: 12/11/2008 17:13
File ID: EL.121108.171344

Analyte	CAS. Number	Result	Qual	RL	MDL
Arsenic, Total	7440-38-2		U	1.00	0.250
Lead, Total	7439-92-1		U	1.00	0.250
Selenium, Total	7782-49-2		U	2.00	0.500

U Undetected; the analyte was analyzed for, but not detected.

Microbac

1434 lew 3/10/09

20

Sample Number: L08120265-20
Client ID: MR08-EB01120708-IS
Matrix: Water
Workgroup Number: WG290255
Collect Date: 12/07/2008 15:30
Sample Tag: 02

PrePrep Method: NONE
Prep Method: 3015
Analytical Method: 6020
Analyst: JYH
Dilution: 1
Units: ug/L

Instrument: ELAN-ICP
Prep Date: 12/11/2008 08:30
Cal Date: 12/18/2008 10:46
Run Date: 12/19/2008 01:15
File ID: EL.121908.011520

Analyte	CAS. Number	Result	Qual	RL	MDL
Antimony, Total	7440-36-0		U	1.00	0.250

U Undetected; the analyte was analyzed for, but not detected.

Microbac

1435 lew 3/10/09

20

Sample Number: L08120265-20
Client ID: MR08-EB01120708-IS
Matrix: Water
Workgroup Number: WG290493
Collect Date: 12/07/2008 15:30
Sample Tag: 01

PrePrep Method: NONE
Prep Method: 7470A
Analytical Method: 7470A
Analyst: ADC
Dilution: 1
Units: ug/L

Instrument: HYDRA
Prep Date: 12/12/2008 09:34
Cal Date: 12/15/2008 10:06
Run Date: 12/15/2008 10:53
File ID: HY.121508.105308

Analyte	CAS. Number	Result	Qual	RL	MDL
Mercury	7439-97-6		U	0.400	0.100

U Undetected; the analyte was analyzed for, but not detected.

Microbac

3458 fcw 3/10/09

ENVIRONMENTAL
Data Services, Inc.

EXPLOSIVES, PETN & NITROGLYCERIN

USEPA Region IV - Level IV Review

Site: MCB Camp Lejeune, TO-09 SDG #: L08120321

Client: CH2M HILL, Inc., Virginia Beach, Virginia Date: March 10, 2009

Laboratory: Microbac Laboratories, Inc., Marietta, Ohio Reviewer: Linda Sulkowski

EDS ID	Client Sample ID	Laboratory Sample ID	Matrix
1	MR08-SS088-08D	L08120321-01	Soil
2	MR08-IS088-2-3-08D	L08120321-02	Soil
3	MR08-SS089-08D	L08120321-03	Soil
4	MR08-SS089D-08D	L08120321-04	Soil
5	MR08-IS089-2-3-08D	L08120321-05	Soil
6	MR08-IS089D-2-3-08D	L08120321-06	Soil
7	MR08-SS090-08D	L08120321-07	Soil
8	MR08-IS090-2-3-08D	L08120321-08	Soil
9	MR08-SS115-08D	L08120321-09	Soil
10	MR08-IS115-2-3-08D	L08120321-10	Soil
11	MR08-SS114-08D	L08120321-11	Soil
12	MR08-IS114-2-3-08D	L08120321-12	Soil
13	MR08-SS113-08D	L08120321-13	Soil
14	MR08-IS113-2-3-08D	L08120321-14	Soil
15	MR08-SS129-08D	L08120321-15	Soil
16	MR08-SS129D-08D	L08120321-16	Soil
17	MR08-IS129-2-3-08D	L08120321-17	Soil
18	MR08-IS129D-2-3-08D	L08120321-18	Soil
19	MR08-SS128-08D	L08120321-19	Soil
20	MR08-IS128-08D	L08120321-20	Soil
21	MR08-EB01120908-SS	L08120321-21	Water
22	MR08-EB01120908-IS	L08120321-22	Water

The USEPA "Contract Laboratory Program National Functional Guidelines for Organic Data Review," October 1999, and professional judgement were used in evaluating the data in this summary report.

Holding Times - All samples were extracted within 7 days for water samples, 14 days for soil samples and analyzed within 40 days.

Initial Calibration - The initial calibrations exhibited acceptable %RSD and/or correlation coefficient values.

Calibration Verification - The continuing calibrations exhibited acceptable %D values except the following.

CCAL Date	Compound	%D	Qualifier	Affected Samples
12/18/08	Tetryl	35.5%	J/UJ	21, 22
12/20/08	Tetryl	30.8%	J/UJ	8-17
12/20/08	Tetryl	35.1%	J/UJ	18-20

Surrogates - All samples exhibited acceptable surrogate recoveries.

MS/MSD - A MS/MSD sample was not analyzed.

Laboratory Control Sample - The LCS samples exhibited acceptable %R values.

Method Blank - The method blanks were free of contamination.

Field and Equipment Blank - Field QC results are summarized below.

Blank ID	Compound	Conc. ug/L	Action Level ug/L	Qualifier	Affected Samples
MR08-EB01120908-SS	None - ND	-	-	-	-
MR08-EB01120908-IS	None - ND	-	-	-	-
MR08-FB01120608	None - ND	-	-	-	-

Field Duplicates - Field duplicate results are summarized below.

Compound	MR08-IS089-2-3-08D mg/kg	MR08-IS089D-2-3-08D mg/kg	RPD	Qualifier
None	ND	ND	-	-

Compound	MR08-SS089-08D mg/kg	MR08-SS089D-08D mg/kg	RPD	Qualifier
None	ND	ND	-	-

Compound	MR08-SS129-08D mg/kg	MR08-SS129D-08D mg/kg	RPD	Qualifier
None	ND	ND	-	-

Compound	MR08-IS129-2-3-08D mg/kg	MR08-IS129D-2-3-08D mg/kg	RPD	Qualifier
None	ND	ND	-	-

Compound Identification - Retention times were acceptable and no further action was taken.

Compound Quantitation - No discrepancies were identified.

Sample Number: L08120321-01
Client ID: MR08-SS088-08D
Matrix: Soil
Workgroup Number: WG290991
Collect Date: 12/09/2008 08:25
Sample Tag: 01

PrePrep Method: NONE
Prep Method: METHOD
Analytical Method: 8330MOD
Analyst: JWR
Dilution: 1
Units: mg/kg

Instrument: HPLC4
Prep Date: 12/18/2008 08:00
Cal Date: 12/16/2008 17:34
Run Date: 12/19/2008 13:20
File ID: 4L014717.F

Analyte	CAS. Number	Result	Qual	RL	MDL
1,3,5-Trinitrobenzene	99-35-4		U	0.297	0.0991
1,3-Dinitrobenzene	99-65-0		U	0.297	0.0991
2,4,6-Trinitrotoluene	118-96-7	U	~~Q~~	0.297	0.0991
2,4-Dinitrotoluene	121-14-2		U	0.297	0.0991
2,6-Dinitrotoluene	606-20-2		U	0.297	0.0991
2-Amino-4,6-dinitrotoluene	35572-78-2		U	0.297	0.0991
2-Nitrotoluene	88-72-2		U	0.297	0.0991
3-Nitrotoluene	99-08-1		U	0.297	0.0991
4-Nitrotoluene	99-99-0		U	0.297	0.0991
4-Amino-2,6-dinitrotoluene	19406-51-0		U	0.297	0.0991
HMX	2691-41-0		U	0.297	0.0991
Nitrobenzene	98-95-3		U	0.297	0.0991
RDX	121-82-4		U	0.297	0.0991
Tetryl	479-45-8	U	~~Q~~	0.297	0.0991
Nitroglycerin	55-63-0		U	0.297	0.0991

Surrogate	% Recovery	Lower	Upper	Qual
1,2-Dinitrobenzene	81.2	50	150	

U Undetected; the analyte was analyzed for, but not detected.
Q One or more quality control criteria failed. See narrative.

Microbac

LLW 3/10/09

Report Number: L08120321

Report Date : January 21, 2009

Sample Number: L08120321-01
Client ID: MR08-SS088-08D
Matrix: Soil
Workgroup Number: WG290991
Collect Date: 12/09/2008 08:25
Sample Tag: 02

PrePrep Method: NONE
Prep Method: METHOD
Analytical Method: 8330MOD
Analyst: ECL
Dilution: 1
Units: mg/kg

Instrument: HPLC5
Prep Date: 12/18/2008 08:00
Cal Date: 12/16/2008 16:51
Run Date: 12/29/2008 13:43
File ID: 5L003621.F

Analyte	CAS. Number	Result	Qual	RL	MDL
PETN	78-11-5		U	0.297	0.0991

U Undetected; the analyte was analyzed for, but not detected.

Microbac

lw
3/10/09

2

Sample Number: L08120321-02
Client ID: MR08-IS088-2-3-08D
Matrix: Soil
Workgroup Number: WG290991
Collect Date: 12/09/2008 08:50
Sample Tag: 01

PrePrep Method: NONE
Prep Method: METHOD
Analytical Method: 8330MOD
Analyst: JWR
Dilution: 1
Units: mg/kg

Instrument: HPLC4
Prep Date: 12/18/2008 08:00
Cal Date: 12/16/2008 17:34
Run Date: 12/19/2008 13:58
File ID: 4L014718.F

Analyte	CAS. Number	Result	Qual	RL	MDL
1,3,5-Trinitrobenzene	99-35-4		U	0.299	0.0998
1,3-Dinitrobenzene	99-65-0		U	0.299	0.0998
2,4,6-Trinitrotoluene	118-96-7		U ~~Q~~	0.299	0.0998
2,4-Dinitrotoluene	121-14-2		U	0.299	0.0998
2,6-Dinitrotoluene	606-20-2		U	0.299	0.0998
2-Amino-4,6-dinitrotoluene	35572-78-2		U	0.299	0.0998
2-Nitrotoluene	88-72-2		U	0.299	0.0998
3-Nitrotoluene	99-08-1		U	0.299	0.0998
4-Nitrotoluene	99-99-0		U	0.299	0.0998
4-Amino-2,6-dinitrotoluene	19406-51-0		U	0.299	0.0998
HMX	2691-41-0		U	0.299	0.0998
Nitrobenzene	98-95-3		U	0.299	0.0998
RDX	121-82-4		U	0.299	0.0998
Tetryl	479-45-8		U ~~Q~~	0.299	0.0998
Nitroglycerin	55-63-0		U	0.299	0.0998

Surrogate	% Recovery	Lower	Upper	Qual
1,2-Dinitrobenzene	88.6	50	150	

U Undetected; the analyte was analyzed for, but not detected.
Q One or more quality control criteria failed. See narrative.

Microbac

RW 3/10/09

2

Sample Number: L08120321-02
Client ID: MR08-IS088-2-3-08D
Matrix: Soil
Workgroup Number: WG290991
Collect Date: 12/09/2008 08:50
Sample Tag: 02

PrePrep Method: NONE
Prep Method: METHOD
Analytical Method: 8330MOD
Analyst: ECL
Dilution: 1
Units: mg/kg

Instrument: HPLC5
Prep Date: 12/18/2008 08:00
Cal Date: 12/16/2008 16:51
Run Date: 12/29/2008 13:56
File ID: 5L003622.F

Analyte	CAS. Number	Result	Qual	RL	MDL
PETN	78-11-5		U	0.299	0.0998

U Undetected; the analyte was analyzed for, but not detected.

Microbac

lw
3/10/09

3

Sample Number: L08120321-03
Client ID: MR08-SS089-08D
Matrix: Soil
Workgroup Number: WG290991
Collect Date: 12/09/2008 09:25
Sample Tag: 01

PrePrep Method: NONE
Prep Method: METHOD
Analytical Method: 8330MOD
Analyst: JWR
Dilution: 1
Units: mg/kg

Instrument: HPLC4
Prep Date: 12/18/2008 08:00
Cal Date: 12/16/2008 17:34
Run Date: 12/19/2008 14:36
File ID: 4L014719.F

Analyte	CAS. Number	Result	Qual	RL	MDL
1,3,5-Trinitrobenzene	99-35-4		U	0.299	0.0997
1,3-Dinitrobenzene	99-65-0		U	0.299	0.0997
2,4,6-Trinitrotoluene	118-96-7		U ~~Q~~	0.299	0.0997
2,4-Dinitrotoluene	121-14-2		U	0.299	0.0997
2,6-Dinitrotoluene	606-20-2		U	0.299	0.0997
2-Amino-4,6-dinitrotoluene	35572-78-2		U	0.299	0.0997
2-Nitrotoluene	88-72-2		U	0.299	0.0997
3-Nitrotoluene	99-08-1		U	0.299	0.0997
4-Nitrotoluene	99-99-0		U	0.299	0.0997
4-Amino-2,6-dinitrotoluene	19406-51-0		U	0.299	0.0997
HMX	2691-41-0		U	0.299	0.0997
Nitrobenzene	98-95-3		U	0.299	0.0997
RDX	121-82-4		U	0.299	0.0997
Tetryl	479-45-8		U ~~Q~~	0.299	0.0997
Nitroglycerin	55-63-0		U	0.299	0.0997

Surrogate	% Recovery	Lower	Upper	Qual
1,2-Dinitrobenzene	84.5	50	150	

U Undetected; the analyte was analyzed for, but not detected.
Q One or more quality control criteria failed. See narrative.

Microbac

UW
3/10/09

3

Sample Number: L08120321-03
Client ID: MR08-SS089-08D
Matrix: Soil
Workgroup Number: WG290991
Collect Date: 12/09/2008 09:25
Sample Tag: 02

PrePrep Method: NONE
Prep Method: METHOD
Analytical Method: 8330MOD
Analyst: ECL
Dilution: 1
Units: mg/kg

Instrument: HPLC5
Prep Date: 12/18/2008 08:00
Cal Date: 12/16/2008 16:51
Run Date: 12/29/2008 14:09
File ID: 5L003623.F

Analyte	CAS. Number	Result	Qual	RL	MDL
PETN	78-11-5		U	0.299	0.0997

U Undetected; the analyte was analyzed for, but not detected.

Microbac

lcw 3/10/09

4

Sample Number: L08120321-04
Client ID: MR08-SS089D-08D
Matrix: Soil
Workgroup Number: WG290991
Collect Date: 12/09/2008 09:35
Sample Tag: 01

PrePrep Method: NONE
Prep Method: METHOD
Analytical Method: 8330MOD
Analyst: JWR
Dilution: 1
Units: mg/kg

Instrument: HPLC4
Prep Date: 12/18/2008 08:00
Cal Date: 12/16/2008 17:34
Run Date: 12/19/2008 15:15
File ID: 4L014720.F

Analyte	CAS. Number	Result	Qual	RL	MDL
1,3,5-Trinitrobenzene	99-35-4		U	0.300	0.100
1,3-Dinitrobenzene	99-65-0		U	0.300	0.100
2,4,6-Trinitrotoluene	118-96-7		U ~~Q~~	0.300	0.100
2,4-Dinitrotoluene	121-14-2		U	0.300	0.100
2,6-Dinitrotoluene	606-20-2		U	0.300	0.100
2-Amino-4,6-dinitrotoluene	35572-78-2		U	0.300	0.100
2-Nitrotoluene	88-72-2		U	0.300	0.100
3-Nitrotoluene	99-08-1		U	0.300	0.100
4-Nitrotoluene	99-99-0		U	0.300	0.100
4-Amino-2,6-dinitrotoluene	19406-51-0		U	0.300	0.100
HMX	2691-41-0		U	0.300	0.100
Nitrobenzene	98-95-3		U	0.300	0.100
RDX	121-82-4		U	0.300	0.100
Tetryl	479-45-8		U ~~Q~~	0.300	0.100
Nitroglycerin	55-63-0		U	0.300	0.100

Surrogate	% Recovery	Lower	Upper	Qual
1,2-Dinitrobenzene	84.7	50	150	

U Undetected; the analyte was analyzed for, but not detected.
Q One or more quality control criteria failed. See narrative.

Microbac

MW 3/10/09

4

Sample Number: L08120321-04
Client ID: MR08-SS089D-08D
Matrix: Soil
Workgroup Number: WG290991
Collect Date: 12/09/2008 09:35
Sample Tag: 02

PrePrep Method: NONE
Prep Method: METHOD
Analytical Method: 8330MOD
Analyst: ECL
Dilution: 1
Units: mg/kg

Instrument: HPLC5
Prep Date: 12/18/2008 08:00
Cal Date: 12/16/2008 16:51
Run Date: 12/29/2008 14:23
File ID: 5L003624.F

Analyte	CAS. Number	Result	Qual	RL	MDL
PETN	78-11-5		U	0.300	0.100

U Undetected; the analyte was analyzed for, but not detected.

Microbac

lw
3/1/09

5

Sample Number: L08120321-05
Client ID: MR08-IS089-2-3-08D
Matrix: Soil
Workgroup Number: WG290991
Collect Date: 12/09/2008 09:50
Sample Tag: 01

PrePrep Method: NONE
Prep Method: METHOD
Analytical Method: 8330MOD
Analyst: JWR
Dilution: 1
Units: mg/kg

Instrument: HPLC4
Prep Date: 12/18/2008 08:00
Cal Date: 12/16/2008 17:34
Run Date: 12/19/2008 15:53
File ID: 4L014721.F

Analyte	CAS. Number	Result	Qual	RL	MDL
1,3,5-Trinitrobenzene	99-35-4		U	0.298	0.0993
1,3-Dinitrobenzene	99-65-0		U	0.298	0.0993
2,4,6-Trinitrotoluene	118-96-7		U ~~Q~~	0.298	0.0993
2,4-Dinitrotoluene	121-14-2		U	0.298	0.0993
2,6-Dinitrotoluene	606-20-2		U	0.298	0.0993
2-Amino-4,6-dinitrotoluene	35572-78-2		U	0.298	0.0993
2-Nitrotoluene	88-72-2		U	0.298	0.0993
3-Nitrotoluene	99-08-1		U	0.298	0.0993
4-Nitrotoluene	99-99-0		U	0.298	0.0993
4-Amino-2,6-dinitrotoluene	19406-51-0		U	0.298	0.0993
HMX	2691-41-0		U	0.298	0.0993
Nitrobenzene	98-95-3		U	0.298	0.0993
RDX	121-82-4		U	0.298	0.0993
Tetryl	479-45-8		U ~~Q~~	0.298	0.0993
Nitroglycerin	55-63-0		U	0.298	0.0993

Surrogate	% Recovery	Lower	Upper	Qual
1,2-Dinitrobenzene	84.6	50	150	

U Undetected; the analyte was analyzed for, but not detected.
Q One or more quality control criteria failed. See narrative.

Microbac

lw 3/10/09

5

Sample Number: L08120321-05
Client ID: MR08-IS089-2-3-08D
Matrix: Soil
Workgroup Number: WG290991
Collect Date: 12/09/2008 09:50
Sample Tag: 02

PrePrep Method: NONE
Prep Method: METHOD
Analytical Method: 8330MOD
Analyst: ECL
Dilution: 1
Units: mg/kg

Instrument: HPLC5
Prep Date: 12/18/2008 08:00
Cal Date: 12/16/2008 16:51
Run Date: 12/29/2008 14:36
File ID: 5L003625.F

Analyte	CAS. Number	Result	Qual	RL	MDL
PETN	78-11-5		U	0.298	0.0993

U Undetected; the analyte was analyzed for, but not detected.

Microbac

lew 3/10/09

6

Sample Number: L08120321-06
Client ID: MR08-IS089D-2-3-08D
Matrix: Soil
Workgroup Number: WG290991
Collect Date: 12/09/2008 10:00
Sample Tag: 01

PrePrep Method: NONE
Prep Method: METHOD
Analytical Method: 8330MOD
Analyst: JWR
Dilution: 1
Units: mg/kg

Instrument: HPLC4
Prep Date: 12/18/2008 08:00
Cal Date: 12/16/2008 17:34
Run Date: 12/19/2008 16:31
File ID: 4L014722.F

Analyte	CAS. Number	Result	Qual	RL	MDL
1,3,5-Trinitrobenzene	99-35-4		U	0.300	0.100
1,3-Dinitrobenzene	99-65-0		U	0.300	0.100
2,4,6-Trinitrotoluene	118-96-7		~~Q~~ U	0.300	0.100
2,4-Dinitrotoluene	121-14-2		U	0.300	0.100
2,6-Dinitrotoluene	606-20-2		U	0.300	0.100
2-Amino-4,6-dinitrotoluene	35572-78-2		U	0.300	0.100
2-Nitrotoluene	88-72-2		U	0.300	0.100
3-Nitrotoluene	99-08-1		U	0.300	0.100
4-Nitrotoluene	99-99-0		U	0.300	0.100
4-Amino-2,6-dinitrotoluene	19406-51-0		U	0.300	0.100
HMX	2691-41-0		U	0.300	0.100
Nitrobenzene	98-95-3		U	0.300	0.100
RDX	121-82-4		U	0.300	0.100
Tetryl	479-45-8		~~Q~~ U	0.300	0.100
Nitroglycerin	55-63-0		U	0.300	0.100

Surrogate	% Recovery	Lower	Upper	Qual
1,2-Dinitrobenzene	84.6	50	150	

U Undetected; the analyte was analyzed for, but not detected.
Q One or more quality control criteria failed. See narrative.

Microbac

JEW 3/10/09

6

Sample Number: L08120321-06
Client ID: MR08-IS089D-2-3-08D
Matrix: Soil
Workgroup Number: WG290991
Collect Date: 12/09/2008 10:00
Sample Tag: 02

PrePrep Method: NONE
Prep Method: METHOD
Analytical Method: 8330MOD
Analyst: ECL
Dilution: 1
Units: mg/kg

Instrument: HPLC5
Prep Date: 12/18/2008 08:00
Cal Date: 12/16/2008 16:51
Run Date: 12/29/2008 14:49
File ID: 5L003626.F

Analyte	CAS. Number	Result	Qual	RL	MDL
PETN	78-11-5		U	0.300	0.100

U Undetected; the analyte was analyzed for, but not detected.

Microbac

lew
3/10/09

7

Sample Number: L08120321-07
Client ID: MR08-SS090-08D
Matrix: Soil
Workgroup Number: WG290991
Collect Date: 12/09/2008 10:55
Sample Tag: 01

PrePrep Method: NONE
Prep Method: METHOD
Analytical Method: 8330MOD
Analyst: JWR
Dilution: 1
Units: mg/kg

Instrument: HPLC4
Prep Date: 12/18/2008 08:00
Cal Date: 12/16/2008 17:34
Run Date: 12/19/2008 17:09
File ID: 4L014723.F

Analyte	CAS. Number	Result	Qual	RL	MDL
1,3,5-Trinitrobenzene	99-35-4		U	0.294	0.0980
1,3-Dinitrobenzene	99-65-0		U	0.294	0.0980
2,4,6-Trinitrotoluene	118-96-7		U ~~Q~~	0.294	0.0980
2,4-Dinitrotoluene	121-14-2		U	0.294	0.0980
2,6-Dinitrotoluene	606-20-2		U	0.294	0.0980
2-Amino-4,6-dinitrotoluene	35572-78-2		U	0.294	0.0980
2-Nitrotoluene	88-72-2		U	0.294	0.0980
3-Nitrotoluene	99-08-1		U	0.294	0.0980
4-Nitrotoluene	99-99-0		U	0.294	0.0980
4-Amino-2,6-dinitrotoluene	19406-51-0		U	0.294	0.0980
HMX	2691-41-0		U	0.294	0.0980
Nitrobenzene	98-95-3		U	0.294	0.0980
RDX	121-82-4		U	0.294	0.0980
Tetryl	479-45-8		U ~~Q~~	0.294	0.0980
Nitroglycerin	55-63-0		U	0.294	0.0980

Surrogate	% Recovery	Lower	Upper	Qual
1,2-Dinitrobenzene	80.8	50	150	

U Undetected; the analyte was analyzed for, but not detected.
Q One or more quality control criteria failed. See narrative.

Microbac

KW
3/10/09

7

Sample Number: L08120321-07
Client ID: MR08-SS090-08D
Matrix: Soil
Workgroup Number: WG290991
Collect Date: 12/09/2008 10:55
Sample Tag: 02

PrePrep Method: NONE
Prep Method: METHOD
Analytical Method: 8330MOD
Analyst: ECL
Dilution: 1
Units: mg/kg

Instrument: HPLC5
Prep Date: 12/18/2008 08:00
Cal Date: 12/16/2008 16:51
Run Date: 12/29/2008 15:02
File ID: 5L003627.F

Analyte	CAS. Number	Result	Qual	RL	MDL
PETN	78-11-5		U	0.294	0.0980

U Undetected; the analyte was analyzed for, but not detected.

Microbac

RW
3/10/09

8

Sample Number: L08120321-08
Client ID: MR08-IS090-2-3-08D
Matrix: Soil
Workgroup Number: WG290991
Collect Date: 12/09/2008 11:05
Sample Tag: 01

PrePrep Method: NONE
Prep Method: METHOD
Analytical Method: 8330MOD
Analyst: JWR
Dilution: 1
Units: mg/kg

Instrument: HPLC4
Prep Date: 12/18/2008 08:00
Cal Date: 12/16/2008 17:34
Run Date: 12/19/2008 19:03
File ID: 4L014726.F

Analyte	CAS. Number	Result	Qual	RL	MDL
1,3,5-Trinitrobenzene	99-35-4		U	0.297	0.0991
1,3-Dinitrobenzene	99-65-0		U	0.297	0.0991
2,4,6-Trinitrotoluene	118-96-7	U	~~Q~~	0.297	0.0991
2,4-Dinitrotoluene	121-14-2		U	0.297	0.0991
2,6-Dinitrotoluene	606-20-2		U	0.297	0.0991
2-Amino-4,6-dinitrotoluene	35572-78-2		U	0.297	0.0991
2-Nitrotoluene	88-72-2		U	0.297	0.0991
3-Nitrotoluene	99-08-1		U	0.297	0.0991
4-Nitrotoluene	99-99-0		U	0.297	0.0991
4-Amino-2,6-dinitrotoluene	19406-51-0		U	0.297	0.0991
HMX	2691-41-0		U	0.297	0.0991
Nitrobenzene	98-95-3		U	0.297	0.0991
RDX	121-82-4		U	0.297	0.0991
Tetryl	479-45-8	UJ	~~Q~~	0.297	0.0991
Nitroglycerin	55-63-0		U	0.297	0.0991

CCH

Surrogate	% Recovery	Lower	Upper	Qual
1,2-Dinitrobenzene	81.1	50	150	

U Undetected; the analyte was analyzed for, but not detected.
Q One or more quality control criteria failed. See narrative.

Microbac

lew 3/10/09

8

Sample Number: L08120321-08
Client ID: MR08-IS090-2-3-08D
Matrix: Soil
Workgroup Number: WG290991
Collect Date: 12/09/2008 11:05
Sample Tag: 02

PrePrep Method: NONE
Prep Method: METHOD
Analytical Method: 8330MOD
Analyst: ECL
Dilution: 1
Units: mg/kg

Instrument: HPLC5
Prep Date: 12/18/2008 08:00
Cal Date: 12/16/2008 16:51
Run Date: 12/29/2008 15:15
File ID: 5L003628.F

Analyte	CAS. Number	Result	Qual	RL	MDL
PETN	78-11-5		U	0.297	0.0991

U Undetected; the analyte was analyzed for, but not detected.

Microbac

lew 3/10/09

9

Sample Number: L08120321-09
Client ID: MR08-SS115-08D
Matrix: Soil
Workgroup Number: WG290991
Collect Date: 12/09/2008 11:45
Sample Tag: 01

PrePrep Method: NONE
Prep Method: METHOD
Analytical Method: 8330MOD
Analyst: JWR
Dilution: 1
Units: mg/kg

Instrument: HPLC4
Prep Date: 12/18/2008 08:00
Cal Date: 12/16/2008 17:34
Run Date: 12/19/2008 19:41
File ID: 4L014727.F

Analyte	CAS. Number	Result	Qual	RL	MDL
1,3,5-Trinitrobenzene	99-35-4		U	0.298	0.0993
1,3-Dinitrobenzene	99-65-0		U	0.298	0.0993
2,4,6-Trinitrotoluene	118-96-7	U	~~Q~~	0.298	0.0993
2,4-Dinitrotoluene	121-14-2		U	0.298	0.0993
2,6-Dinitrotoluene	606-20-2		U	0.298	0.0993
2-Amino-4,6-dinitrotoluene	35572-78-2		U	0.298	0.0993
2-Nitrotoluene	88-72-2		U	0.298	0.0993
3-Nitrotoluene	99-08-1		U	0.298	0.0993
4-Nitrotoluene	99-99-0		U	0.298	0.0993
4-Amino-2,6-dinitrotoluene	19406-51-0		U	0.298	0.0993
HMX	2691-41-0		U	0.298	0.0993
Nitrobenzene	98-95-3		U	0.298	0.0993
RDX	121-82-4		U	0.298	0.0993
Tetryl	479-45-8	UJ	~~Q~~	0.298	0.0993
Nitroglycerin	55-63-0		U	0.298	0.0993

CCH

Surrogate	% Recovery	Lower	Upper	Qual
1,2-Dinitrobenzene	82.4	50	150	

U Undetected; the analyte was analyzed for, but not detected.
Q One or more quality control criteria failed. See narrative.

Microbac

LW 3/10/09

9

Sample Number: L08120321-09
Client ID: MR08-SS115-08D
Matrix: Soil
Workgroup Number: WG290991
Collect Date: 12/09/2008 11:45
Sample Tag: 02

PrePrep Method: NONE
Prep Method: METHOD
Analytical Method: 8330MOD
Analyst: ECL
Dilution: 1
Units: mg/kg

Instrument: HPLC5
Prep Date: 12/18/2008 08:00
Cal Date: 12/16/2008 16:51
Run Date: 12/29/2008 15:55
File ID: 5L003631.F

Analyte	CAS. Number	Result	Qual	RL	MDL
PETN	78-11-5		U	0.298	0.0993

U Undetected; the analyte was analyzed for, but not detected.

Microbac

lw 3/10/09

10

Sample Number: L08120321-10
Client ID: MR08-IS115-2-3-08D
Matrix: Soil
Workgroup Number: WG290991
Collect Date: 12/09/2008 12:00
Sample Tag: 01

PrePrep Method: NONE
Prep Method: METHOD
Analytical Method: 8330MOD
Analyst: JWR
Dilution: 1
Units: mg/kg

Instrument: HPLC4
Prep Date: 12/18/2008 08:00
Cal Date: 12/16/2008 17:34
Run Date: 12/19/2008 20:20
File ID: 4L014728.F

Analyte	CAS. Number	Result	Qual	RL	MDL
1,3,5-Trinitrobenzene	99-35-4		U	0.298	0.0994
1,3-Dinitrobenzene	99-65-0		U	0.298	0.0994
2,4,6-Trinitrotoluene	118-96-7		U ~~Q~~	0.298	0.0994
2,4-Dinitrotoluene	121-14-2		U	0.298	0.0994
2,6-Dinitrotoluene	606-20-2		U	0.298	0.0994
2-Amino-4,6-dinitrotoluene	35572-78-2		U	0.298	0.0994
2-Nitrotoluene	88-72-2		U	0.298	0.0994
3-Nitrotoluene	99-08-1		U	0.298	0.0994
4-Nitrotoluene	99-99-0		U	0.298	0.0994
4-Amino-2,6-dinitrotoluene	19406-51-0		U	0.298	0.0994
HMX	2691-41-0		U	0.298	0.0994
Nitrobenzene	98-95-3		U	0.298	0.0994
RDX	121-82-4		U	0.298	0.0994
Tetryl	479-45-8		UJ ~~Q~~	0.298	0.0994
Nitroglycerin	55-63-0		U	0.298	0.0994

CCH

Surrogate	% Recovery	Lower	Upper	Qual
1,2-Dinitrobenzene	83.8	50	150	

U Undetected; the analyte was analyzed for, but not detected.
Q One or more quality control criteria failed. See narrative.

Microbac

Rev 3/10/09

10

Sample Number: L08120321-10
Client ID: MR08-IS115-2-3-08D
Matrix: Soil
Workgroup Number: WG290991
Collect Date: 12/09/2008 12:00
Sample Tag: 02

PrePrep Method: NONE
Prep Method: METHOD
Analytical Method: 8330MOD
Analyst: ECL
Dilution: 1
Units: mg/kg

Instrument: HPLC5
Prep Date: 12/18/2008 08:00
Cal Date: 12/16/2008 16:51
Run Date: 12/29/2008 16:08
File ID: 5L003632.F

Analyte	CAS. Number	Result	Qual	RL	MDL
PETN	78-11-5		U	0.298	0.0994

U Undetected; the analyte was analyzed for, but not detected.

Microbac

lw 3/10/09

11

Sample Number: L08120321-11
Client ID: MR08-SS114-08D
Matrix: Soil
Workgroup Number: WG290991
Collect Date: 12/09/2008 13:15
Sample Tag: 01

PrePrep Method: NONE
Prep Method: METHOD
Analytical Method: 8330MOD
Analyst: JWR
Dilution: 1
Units: mg/kg

Instrument: HPLC4
Prep Date: 12/18/2008 08:00
Cal Date: 12/16/2008 17:34
Run Date: 12/19/2008 20:58
File ID: 4L014729.F

Analyte	CAS. Number	Result	Qual	RL	MDL
1,3,5-Trinitrobenzene	99-35-4		U	0.298	0.0992
1,3-Dinitrobenzene	99-65-0		U	0.298	0.0992
2,4,6-Trinitrotoluene	118-96-7		U ~~Q~~	0.298	0.0992
2,4-Dinitrotoluene	121-14-2		U	0.298	0.0992
2,6-Dinitrotoluene	606-20-2		U	0.298	0.0992
2-Amino-4,6-dinitrotoluene	35572-78-2		U	0.298	0.0992
2-Nitrotoluene	88-72-2		U	0.298	0.0992
3-Nitrotoluene	99-08-1		U	0.298	0.0992
4-Nitrotoluene	99-99-0		U	0.298	0.0992
4-Amino-2,6-dinitrotoluene	19406-51-0		U	0.298	0.0992
HMX	2691-41-0		U	0.298	0.0992
Nitrobenzene	98-95-3		U	0.298	0.0992
RDX	121-82-4		U	0.298	0.0992
Tetryl	479-45-8		UJ ~~Q~~	0.298	0.0992
Nitroglycerin	55-63-0		U	0.298	0.0992

CCH

Surrogate	% Recovery	Lower	Upper	Qual
1,2-Dinitrobenzene	85.3	50	150	

U Undetected; the analyte was analyzed for, but not detected.
Q One or more quality control criteria failed. See narrative.

Microbac

lw 3/10/09

11

Sample Number: L08120321-11
Client ID: MR08-SS114-08D
Matrix: Soil
Workgroup Number: WG290991
Collect Date: 12/09/2008 13:15
Sample Tag: 02

PrePrep Method: NONE
Prep Method: METHOD
Analytical Method: 8330MOD
Analyst: ECL
Dilution: 1
Units: mg/kg

Instrument: HPLC5
Prep Date: 12/18/2008 08:00
Cal Date: 12/16/2008 16:51
Run Date: 12/29/2008 16:21
File ID: 5L003633.F

Analyte	CAS. Number	Result	Qual	RL	MDL
PETN	78-11-5		U	0.298	0.0992

U Undetected; the analyte was analyzed for, but not detected.

Microbac

lw 3/10/09

12

Sample Number: L08120321-12
Client ID: MR08-IS114-2-3-08D
Matrix: Soil
Workgroup Number: WG290991
Collect Date: 12/09/2008 13:30
Sample Tag: 01

PrePrep Method: NONE
Prep Method: METHOD
Analytical Method: 8330MOD
Analyst: JWR
Dilution: 1
Units: mg/kg

Instrument: HPLC4
Prep Date: 12/18/2008 08:00
Cal Date: 12/16/2008 17:34
Run Date: 12/19/2008 21:36
File ID: 4L014730.F

Analyte	CAS. Number	Result	Qual	RL	MDL
1,3,5-Trinitrobenzene	99-35-4		U	0.299	0.0997
1,3-Dinitrobenzene	99-65-0		U	0.299	0.0997
2,4,6-Trinitrotoluene	118-96-7	U	~~Q~~	0.299	0.0997
2,4-Dinitrotoluene	121-14-2		U	0.299	0.0997
2,6-Dinitrotoluene	606-20-2		U	0.299	0.0997
2-Amino-4,6-dinitrotoluene	35572-78-2		U	0.299	0.0997
2-Nitrotoluene	88-72-2		U	0.299	0.0997
3-Nitrotoluene	99-08-1		U	0.299	0.0997
4-Nitrotoluene	99-99-0		U	0.299	0.0997
4-Amino-2,6-dinitrotoluene	19406-51-0		U	0.299	0.0997
HMX	2691-41-0		U	0.299	0.0997
Nitrobenzene	98-95-3		U	0.299	0.0997
RDX	121-82-4		U	0.299	0.0997
Tetryl	479-45-8	US	~~Q~~	0.299	0.0997
Nitroglycerin	55-63-0		U	0.299	0.0997

CCH

Surrogate	% Recovery	Lower	Upper	Qual
1,2-Dinitrobenzene	82.7	50	150	

U Undetected; the analyte was analyzed for, but not detected.
Q One or more quality control criteria failed. See narrative.

Microbac

RW 3/10/09

12

Sample Number: L08120321-12
Client ID: MR08-IS114-2-3-08D
Matrix: Soil
Workgroup Number: WG290991
Collect Date: 12/09/2008 13:30
Sample Tag: 02

PrePrep Method: NONE
Prep Method: METHOD
Analytical Method: 8330MOD
Analyst: ECL
Dilution: 1
Units: mg/kg

Instrument: HPLC5
Prep Date: 12/18/2008 08:00
Cal Date: 12/16/2008 16:51
Run Date: 12/29/2008 16:34
File ID: 5L003634.F

Analyte	CAS. Number	Result	Qual	RL	MDL
PETN	78-11-5		U	0.299	0.0997

U Undetected; the analyte was analyzed for, but not detected.

Microbac

GW 3/10/09

13

Sample Number: L08120321-13
Client ID: MR08-SS113-08D
Matrix: Soil
Workgroup Number: WG290991
Collect Date: 12/09/2008 13:40
Sample Tag: 01

PrePrep Method: NONE
Prep Method: METHOD
Analytical Method: 8330MOD
Analyst: JWR
Dilution: 1
Units: mg/kg

Instrument: HPLC4
Prep Date: 12/18/2008 08:00
Cal Date: 12/16/2008 17:34
Run Date: 12/19/2008 22:14
File ID: 4L014731.F

Analyte	CAS. Number	Result	Qual	RL	MDL
1,3,5-Trinitrobenzene	99-35-4		U	0.297	0.0991
1,3-Dinitrobenzene	99-65-0		U	0.297	0.0991
2,4,6-Trinitrotoluene	118-96-7		~~Q~~ U	0.297	0.0991
2,4-Dinitrotoluene	121-14-2		U	0.297	0.0991
2,6-Dinitrotoluene	606-20-2		U	0.297	0.0991
2-Amino-4,6-dinitrotoluene	35572-78-2		U	0.297	0.0991
2-Nitrotoluene	88-72-2		U	0.297	0.0991
3-Nitrotoluene	99-08-1		U	0.297	0.0991
4-Nitrotoluene	99-99-0		U	0.297	0.0991
4-Amino-2,6-dinitrotoluene	19406-51-0		U	0.297	0.0991
HMX	2691-41-0		U	0.297	0.0991
Nitrobenzene	98-95-3		U	0.297	0.0991
RDX	121-82-4		U	0.297	0.0991
Tetryl	479-45-8		~~Q~~ U	0.297	0.0991
Nitroglycerin	55-63-0		U	0.297	0.0991

CCH

Surrogate	% Recovery	Lower	Upper	Qual
1,2-Dinitrobenzene	82.5	50	150	

U Undetected; the analyte was analyzed for, but not detected.
Q One or more quality control criteria failed. See narrative.

Microbac

QW 3/10/09

13

Sample Number: L08120321-13
Client ID: MR08-SS113-08D
Matrix: Soil
Workgroup Number: WG290991
Collect Date: 12/09/2008 13:40
Sample Tag: 02

PrePrep Method: NONE
Prep Method: METHOD
Analytical Method: 8330MOD
Analyst: ECL
Dilution: 1
Units: mg/kg

Instrument: HPLC5
Prep Date: 12/18/2008 08:00
Cal Date: 12/16/2008 16:51
Run Date: 12/29/2008 16:47
File ID: 5L003635.F

Analyte	CAS. Number	Result	Qual	RL	MDL
PETN	78-11-5		U	0.297	0.0991

U Undetected; the analyte was analyzed for, but not detected.

Microbac

lw
3/10/09

14

Sample Number: L08120321-14
Client ID: MR08-IS113-2-3-08D
Matrix: Soil
Workgroup Number: WG290991
Collect Date: 12/09/2008 13:55
Sample Tag: 01

PrePrep Method: NONE
Prep Method: METHOD
Analytical Method: 8330MOD
Analyst: JWR
Dilution: 1
Units: mg/kg

Instrument: HPLC4
Prep Date: 12/18/2008 08:00
Cal Date: 12/16/2008 17:34
Run Date: 12/19/2008 22:52
File ID: 4L014732.F

Analyte	CAS. Number	Result	Qual	RL	MDL
1,3,5-Trinitrobenzene	99-35-4		U	0.299	0.0996
1,3-Dinitrobenzene	99-65-0		U	0.299	0.0996
2,4,6-Trinitrotoluene	118-96-7	U	~~Q~~	0.299	0.0996
2,4-Dinitrotoluene	121-14-2		U	0.299	0.0996
2,6-Dinitrotoluene	606-20-2		U	0.299	0.0996
2-Amino-4,6-dinitrotoluene	35572-78-2		U	0.299	0.0996
2-Nitrotoluene	88-72-2		U	0.299	0.0996
3-Nitrotoluene	99-08-1		U	0.299	0.0996
4-Nitrotoluene	99-99-0		U	0.299	0.0996
4-Amino-2,6-dinitrotoluene	19406-51-0		U	0.299	0.0996
HMX	2691-41-0		U	0.299	0.0996
Nitrobenzene	98-95-3		U	0.299	0.0996
RDX	121-82-4		U	0.299	0.0996
Tetryl	479-45-8	US	~~Q~~	0.299	0.0996
Nitroglycerin	55-63-0		U	0.299	0.0996

CCH

Surrogate	% Recovery	Lower	Upper	Qual
1,2-Dinitrobenzene	87.0	50	150	

U Undetected; the analyte was analyzed for, but not detected.
Q One or more quality control criteria failed. See narrative.

Microbac

RW
3/10/09

14

Sample Number: L08120321-14
Client ID: MR08-IS113-2-3-08D
Matrix: Soil
Workgroup Number: WG290991
Collect Date: 12/09/2008 13:55
Sample Tag: 02

PrePrep Method: NONE
Prep Method: METHOD
Analytical Method: 8330MOD
Analyst: ECL
Dilution: 1
Units: mg/kg

Instrument: HPLC5
Prep Date: 12/18/2008 08:00
Cal Date: 12/16/2008 16:51
Run Date: 12/29/2008 17:01
File ID: 5L003636.F

Analyte	CAS. Number	Result	Qual	RL	MDL
PETN	78-11-5		U	0.299	0.0996

U Undetected; the analyte was analyzed for, but not detected.

Microbac

AW
3/10/09

15

Sample Number: L08120321-15
Client ID: MR08-SS129-08D
Matrix: Soil
Workgroup Number: WG290991
Collect Date: 12/09/2008 14:30
Sample Tag: 01

PrePrep Method: NONE
Prep Method: METHOD
Analytical Method: 8330MOD
Analyst: JWR
Dilution: 1
Units: mg/kg

Instrument: HPLC4
Prep Date: 12/18/2008 08:00
Cal Date: 12/16/2008 17:34
Run Date: 12/19/2008 23:30
File ID: 4L014733.F

Analyte	CAS. Number	Result	Qual	RL	MDL
1,3,5-Trinitrobenzene	99-35-4		U	0.299	0.0997
1,3-Dinitrobenzene	99-65-0		U	0.299	0.0997
2,4,6-Trinitrotoluene	118-96-7	U	~~Q~~	0.299	0.0997
2,4-Dinitrotoluene	121-14-2		U	0.299	0.0997
2,6-Dinitrotoluene	606-20-2		U	0.299	0.0997
2-Amino-4,6-dinitrotoluene	35572-78-2		U	0.299	0.0997
2-Nitrotoluene	88-72-2		U	0.299	0.0997
3-Nitrotoluene	99-08-1		U	0.299	0.0997
4-Nitrotoluene	99-99-0		U	0.299	0.0997
4-Amino-2,6-dinitrotoluene	19406-51-0		U	0.299	0.0997
HMX	2691-41-0		U	0.299	0.0997
Nitrobenzene	98-95-3		U	0.299	0.0997
RDX	121-82-4		U	0.299	0.0997
Tetryl	479-45-8	UJ	~~Q~~	0.299	0.0997
Nitroglycerin	55-63-0		U	0.299	0.0997

CCH

Surrogate	% Recovery	Lower	Upper	Qual
1,2-Dinitrobenzene	82.8	50	150	

U Undetected; the analyte was analyzed for, but not detected.
Q One or more quality control criteria failed. See narrative.

Microbac

LW
3/10/09

15

Sample Number: L08120321-15
Client ID: MR08-SS129-08D
Matrix: Soil
Workgroup Number: WG290991
Collect Date: 12/09/2008 14:30
Sample Tag: 02

PrePrep Method: NONE
Prep Method: METHOD
Analytical Method: 8330MOD
Analyst: ECL
Dilution: 1
Units: mg/kg

Instrument: HPLC5
Prep Date: 12/18/2008 08:00
Cal Date: 12/16/2008 16:51
Run Date: 12/29/2008 17:14
File ID: 5L003637.F

Analyte	CAS. Number	Result	Qual	RL	MDL
PETN	78-11-5		U	0.299	0.0997

U Undetected; the analyte was analyzed for, but not detected.

Microbac

lw
3/10/09

16

Sample Number: L08120321-16
Client ID: MR08-SS129D-08D
Matrix: Soil
Workgroup Number: WG290991
Collect Date: 12/09/2008 14:40
Sample Tag: 01

PrePrep Method: NONE
Prep Method: METHOD
Analytical Method: 8330MOD
Analyst: JWR
Dilution: 1
Units: mg/kg

Instrument: HPLC4
Prep Date: 12/18/2008 08:00
Cal Date: 12/16/2008 17:34
Run Date: 12/20/2008 00:09
File ID: 4L014734.F

Analyte	CAS. Number	Result	Qual	RL	MDL
1,3,5-Trinitrobenzene	99-35-4		U	0.300	0.100
1,3-Dinitrobenzene	99-65-0		U	0.300	0.100
2,4,6-Trinitrotoluene	118-96-7	U	~~Q~~	0.300	0.100
2,4-Dinitrotoluene	121-14-2		U	0.300	0.100
2,6-Dinitrotoluene	606-20-2		U	0.300	0.100
2-Amino-4,6-dinitrotoluene	35572-78-2		U	0.300	0.100
2-Nitrotoluene	88-72-2		U	0.300	0.100
3-Nitrotoluene	99-08-1		U	0.300	0.100
4-Nitrotoluene	99-99-0		U	0.300	0.100
4-Amino-2,6-dinitrotoluene	19406-51-0		U	0.300	0.100
HMX	2691-41-0		U	0.300	0.100
Nitrobenzene	98-95-3		U	0.300	0.100
RDX	121-82-4		U	0.300	0.100
Tetryl	479-45-8	U3	~~Q~~	0.300	0.100
Nitroglycerin	55-63-0		U	0.300	0.100

CCH

Surrogate	% Recovery	Lower	Upper	Qual
1,2-Dinitrobenzene	85.9	50	150	

U Undetected; the analyte was analyzed for, but not detected.
Q One or more quality control criteria failed. See narrative.

Microbac

lew
3/10/09

16

Sample Number: L08120321-16
Client ID: MR08-SS129D-08D
Matrix: Soil
Workgroup Number: WG290991
Collect Date: 12/09/2008 14:40
Sample Tag: 02

PrePrep Method: NONE
Prep Method: METHOD
Analytical Method: 8330MOD
Analyst: ECL
Dilution: 1
Units: mg/kg

Instrument: HPLC5
Prep Date: 12/18/2008 08:00
Cal Date: 12/16/2008 16:51
Run Date: 12/29/2008 17:27
File ID: 5L003638.F

Analyte	CAS. Number	Result	Qual	RL	MDL
PETN	78-11-5		U	0.300	0.100

U Undetected; the analyte was analyzed for, but not detected.

Microbac

lw
3/10/09

17

Sample Number: L08120321-17
Client ID: MR08-IS129-2-3-08D
Matrix: Soil
Workgroup Number: WG290991
Collect Date: 12/09/2008 14:50
Sample Tag: 01

PrePrep Method: NONE
Prep Method: METHOD
Analytical Method: 8330MOD
Analyst: JWR
Dilution: 1
Units: mg/kg

Instrument: HPLC4
Prep Date: 12/18/2008 08:00
Cal Date: 12/16/2008 17:34
Run Date: 12/20/2008 00:47
File ID: 4L014735.F

Analyte	CAS. Number	Result	Qual	RL	MDL
1,3,5-Trinitrobenzene	99-35-4		U	0.298	0.0994
1,3-Dinitrobenzene	99-65-0		U	0.298	0.0994
2,4,6-Trinitrotoluene	118-96-7	U	~~Q~~	0.298	0.0994
2,4-Dinitrotoluene	121-14-2		U	0.298	0.0994
2,6-Dinitrotoluene	606-20-2		U	0.298	0.0994
2-Amino-4,6-dinitrotoluene	35572-78-2		U	0.298	0.0994
2-Nitrotoluene	88-72-2		U	0.298	0.0994
3-Nitrotoluene	99-08-1		U	0.298	0.0994
4-Nitrotoluene	99-99-0		U	0.298	0.0994
4-Amino-2,6-dinitrotoluene	19406-51-0		U	0.298	0.0994
HMX	2691-41-0		U	0.298	0.0994
Nitrobenzene	98-95-3		U	0.298	0.0994
RDX	121-82-4		U	0.298	0.0994
Tetryl	479-45-8	UJ	~~Q~~	0.298	0.0994
Nitroglycerin	55-63-0		U	0.298	0.0994

CCH

Surrogate	% Recovery	Lower	Upper	Qual
1,2-Dinitrobenzene	88.5	50	150	

U Undetected; the analyte was analyzed for, but not detected.
Q One or more quality control criteria failed. See narrative.

Microbac

MW 3/10/09

17

Sample Number: L08120321-17
Client ID: MR08-IS129-2-3-08D
Matrix: Soil
Workgroup Number: WG290991
Collect Date: 12/09/2008 14:50
Sample Tag: 02

PrePrep Method: NONE
Prep Method: METHOD
Analytical Method: 8330MOD
Analyst: ECL
Dilution: 1
Units: mg/kg

Instrument: HPLC5
Prep Date: 12/18/2008 08:00
Cal Date: 12/16/2008 16:51
Run Date: 12/29/2008 17:40
File ID: 5L003639.F

Analyte	CAS. Number	Result	Qual	RL	MDL
PETN	78-11-5		U	0.298	0.0994

U Undetected; the analyte was analyzed for, but not detected.

Microbac

lw
3/10/09

18

Sample Number: L08120321-18
Client ID: MR08-IS129D-2-3-08D
Matrix: Soil
Workgroup Number: WG290991
Collect Date: 12/09/2008 15:00
Sample Tag: 01

PrePrep Method: NONE
Prep Method: METHOD
Analytical Method: 8330MOD
Analyst: JWR
Dilution: 1
Units: mg/kg

Instrument: HPLC4
Prep Date: 12/18/2008 08:00
Cal Date: 12/16/2008 17:34
Run Date: 12/20/2008 02:41
File ID: 4L014738.F

Analyte	CAS. Number	Result	Qual	RL	MDL
1,3,5-Trinitrobenzene	99-35-4		U	0.298	0.0993
1,3-Dinitrobenzene	99-65-0		U	0.298	0.0993
2,4,6-Trinitrotoluene	118-96-7		U ~~Q~~	0.298	0.0993
2,4-Dinitrotoluene	121-14-2		U	0.298	0.0993
2,6-Dinitrotoluene	606-20-2		U	0.298	0.0993
2-Amino-4,6-dinitrotoluene	35572-78-2		U	0.298	0.0993
2-Nitrotoluene	88-72-2		U	0.298	0.0993
3-Nitrotoluene	99-08-1		U	0.298	0.0993
4-Nitrotoluene	99-99-0		U	0.298	0.0993
4-Amino-2,6-dinitrotoluene	19406-51-0		U	0.298	0.0993
HMX	2691-41-0		U	0.298	0.0993
Nitrobenzene	98-95-3		U	0.298	0.0993
RDX	121-82-4		U	0.298	0.0993
Tetryl	479-45-8		UJ ~~Q~~	0.298	0.0993
Nitroglycerin	55-63-0		U	0.298	0.0993

CCH

Surrogate	% Recovery	Lower	Upper	Qual
1,2-Dinitrobenzene	85.7	50	150	

U Undetected; the analyte was analyzed for, but not detected.
Q One or more quality control criteria failed. See narrative.

Microbac

RW
3/10/09

18

Sample Number: L08120321-18
Client ID: MR08-IS129D-2-3-08D
Matrix: Soil
Workgroup Number: WG290991
Collect Date: 12/09/2008 15:00
Sample Tag: 02

PrePrep Method: NONE
Prep Method: METHOD
Analytical Method: 8330MOD
Analyst: ECL
Dilution: 1
Units: mg/kg

Instrument: HPLC5
Prep Date: 12/18/2008 08:00
Cal Date: 12/16/2008 16:51
Run Date: 12/29/2008 17:53
File ID: 5L003640.F

Analyte	CAS. Number	Result	Qual	RL	MDL
PETN	78-11-5		U	0.298	0.0993

U Undetected; the analyte was analyzed for, but not detected.

Microbac

fw
3/10/09

19

Sample Number: L08120321-19
Client ID: MR08-SS128-08D
Matrix: Soil
Workgroup Number: WG290991
Collect Date: 12/09/2008 15:20
Sample Tag: 01

PrePrep Method: NONE
Prep Method: METHOD
Analytical Method: 8330MOD
Analyst: JWR
Dilution: 1
Units: mg/kg

Instrument: HPLC4
Prep Date: 12/18/2008 08:00
Cal Date: 12/16/2008 17:34
Run Date: 12/20/2008 03:19
File ID: 4L014739.F

Analyte	CAS. Number	Result	Qual	RL	MDL
1,3,5-Trinitrobenzene	99-35-4		U	0.299	0.0996
1,3-Dinitrobenzene	99-65-0		U	0.299	0.0996
2,4,6-Trinitrotoluene	118-96-7	U	~~Q~~	0.299	0.0996
2,4-Dinitrotoluene	121-14-2		U	0.299	0.0996
2,6-Dinitrotoluene	606-20-2		U	0.299	0.0996
2-Amino-4,6-dinitrotoluene	35572-78-2		U	0.299	0.0996
2-Nitrotoluene	88-72-2		U	0.299	0.0996
3-Nitrotoluene	99-08-1		U	0.299	0.0996
4-Nitrotoluene	99-99-0		U	0.299	0.0996
4-Amino-2,6-dinitrotoluene	19406-51-0		U	0.299	0.0996
HMX	2691-41-0		U	0.299	0.0996
Nitrobenzene	98-95-3		U	0.299	0.0996
RDX	121-82-4		U	0.299	0.0996
Tetryl	479-45-8	UJ	~~Q~~	0.299	0.0996
Nitroglycerin	55-63-0		U	0.299	0.0996

CCH

Surrogate	% Recovery	Lower	Upper	Qual
1,2-Dinitrobenzene	84.8	50	150	

U Undetected; the analyte was analyzed for, but not detected.
Q One or more quality control criteria failed. See narrative.

Microbac

lw 3/10/09

19

Sample Number: L08120321-19
Client ID: MR08-SS128-08D
Matrix: Soil
Workgroup Number: WG290991
Collect Date: 12/09/2008 15:20
Sample Tag: 02

PrePrep Method: NONE
Prep Method: METHOD
Analytical Method: 8330MOD
Analyst: ECL
Dilution: 1
Units: mg/kg

Instrument: HPLC5
Prep Date: 12/18/2008 08:00
Cal Date: 12/16/2008 16:51
Run Date: 12/29/2008 18:33
File ID: 5L003643.F

Analyte	CAS. Number	Result	Qual	RL	MDL
PETN	78-11-5		U	0.299	0.0996

U Undetected; the analyte was analyzed for, but not detected.

Microbac

lw 3/10/09

20

Sample Number: L08120321-20
Client ID: MR08-IS128-08D
Matrix: Soil
Workgroup Number: WG290991
Collect Date: 12/09/2008 15:40
Sample Tag: 01

PrePrep Method: NONE
Prep Method: METHOD
Analytical Method: 8330MOD
Analyst: JWR
Dilution: 1
Units: mg/kg

Instrument: HPLC4
Prep Date: 12/18/2008 08:00
Cal Date: 12/16/2008 17:34
Run Date: 12/20/2008 03:57
File ID: 4L014740.F

Analyte	CAS. Number	Result	Qual	RL	MDL
1,3,5-Trinitrobenzene	99-35-4		U	0.294	0.0981
1,3-Dinitrobenzene	99-65-0		U	0.294	0.0981
2,4,6-Trinitrotoluene	118-96-7	U	~~Q~~	0.294	0.0981
2,4-Dinitrotoluene	121-14-2		U	0.294	0.0981
2,6-Dinitrotoluene	606-20-2		U	0.294	0.0981
2-Amino-4,6-dinitrotoluene	35572-78-2		U	0.294	0.0981
2-Nitrotoluene	88-72-2		U	0.294	0.0981
3-Nitrotoluene	99-08-1		U	0.294	0.0981
4-Nitrotoluene	99-99-0		U	0.294	0.0981
4-Amino-2,6-dinitrotoluene	19406-51-0		U	0.294	0.0981
HMX	2691-41-0		U	0.294	0.0981
Nitrobenzene	98-95-3		U	0.294	0.0981
RDX	121-82-4		U	0.294	0.0981
Tetryl	479-45-8	UJ	~~Q~~	0.294	0.0981
Nitroglycerin	55-63-0		U	0.294	0.0981

CCH

Surrogate	% Recovery	Lower	Upper	Qual
1,2-Dinitrobenzene	88.1	50	150	

U Undetected; the analyte was analyzed for, but not detected.
Q One or more quality control criteria failed. See narrative.

Microbac

lw 3/10/09

20

Sample Number: L08120321-20
Client ID: MR08-IS128-08D
Matrix: Soil
Workgroup Number: WG290991
Collect Date: 12/09/2008 15:40
Sample Tag: 02

PrePrep Method: NONE
Prep Method: METHOD
Analytical Method: 8330MOD
Analyst: ECL
Dilution: 1
Units: mg/kg

Instrument: HPLC5
Prep Date: 12/18/2008 08:00
Cal Date: 12/16/2008 16:51
Run Date: 12/29/2008 18:46
File ID: 5L003644.F

Analyte	CAS. Number	Result	Qual	RL	MDL
PETN	78-11-5		U	0.294	0.0981

U Undetected; the analyte was analyzed for, but not detected.

Microbac

RW 3/10/09

21

Sample Number: L08120321-21
Client ID: MR08-EB01120908-SS
Matrix: Water
Workgroup Number: WG290758
Collect Date: 12/09/2008 09:30
Sample Tag: 01

PrePrep Method: NONE
Prep Method: 3535
Analytical Method: 8330MOD
Analyst: ECL
Dilution: 1
Units: ug/L

Instrument: HPLC5
Prep Date: 12/12/2008 08:00
Cal Date: 12/16/2008 16:51
Run Date: 12/17/2008 23:34
File ID: 5L003351.F

Analyte	CAS. Number	Result	Qual	RL	MDL
1,3,5-Trinitrobenzene	99-35-4		U	1.00	0.250
1,3-Dinitrobenzene	99-65-0		U	1.00	0.250
2,4,6-Trinitrotoluene	118-96-7	U	~~Q~~	1.00	0.250
2,4-Dinitrotoluene	121-14-2		U	1.00	0.250
2,6-Dinitrotoluene	606-20-2		U	1.00	0.250
2-Amino-4,6-dinitrotoluene	35572-78-2		U	1.00	0.250
2-Nitrotoluene	88-72-2		U	1.00	0.250
3-Nitrotoluene	99-08-1		U	1.00	0.250
4-Nitrotoluene	99-99-0		U	1.00	0.250
4-Amino-2,6-dinitrotoluene	19406-51-0		U	1.00	0.250
HMX	2691-41-0		U	1.00	0.250
Nitrobenzene	98-95-3		U	1.00	0.250
RDX	121-82-4		U	1.00	0.250
Tetryl	479-45-8	UJ	~~Q~~	1.00	0.250
Nitroglycerin	55-63-0		U	1.00	0.250

CCH

Surrogate	% Recovery	Lower	Upper	Qual
1,2-Dinitrobenzene	91.2	50	150	

U Undetected; the analyte was analyzed for, but not detected.
Q One or more quality control criteria failed. See narrative.

Microbac

lw 3/10/09

22

Sample Number: L08120321-22
Client ID: MR08-EB01120908-IS
Matrix: Water
Workgroup Number: WG290758
Collect Date: 12/09/2008 10:00
Sample Tag: 02

PrePrep Method: NONE
Prep Method: 3535
Analytical Method: 8330MOD
Analyst: ECL
Dilution: 1
Units: ug/L

Instrument: HPLC5
Prep Date: 12/12/2008 08:00
Cal Date: 12/16/2008 16:51
Run Date: 12/24/2008 17:02
File ID: 5L003540.F

Analyte	CAS. Number	Result	Qual	RL	MDL
PETN	78-11-5		U	1.00	0.250

U Undetected; the analyte was analyzed for, but not detected.

Microbac

AEW
3/10/09

ENVIRONMENTAL
Data Services, Inc.

METALS

USEPA Region IV - Level IV Review

Site: MCB Camp Lejeune, TO-09 SDG #: L08120321

Client: CH2M HILL, Inc., Virginia Beach, Virginia Date: March 10, 2009

Laboratory: Microbac Laboratories, Inc., Marietta, Ohio Reviewer: Nancy Weaver

EDS ID	Client Sample ID	Laboratory Sample ID	Matrix
1	MR08-SS088-08D	L08120321-01	Soil
2	MR08-IS088-2-3-08D	L08120321-02	Soil
3	MR08-SS089-08D	L08120321-03	Soil
4	MR08-SS089D-08D	L08120321-04	Soil
5	MR08-IS089-2-3-08D	L08120321-05	Soil
6	MR08-IS089D-2-3-08D	L08120321-06	Soil
7	MR08-SS090-08D	L08120321-07	Soil
8	MR08-IS090-2-3-08D	L08120321-08	Soil
9	MR08-SS115-08D	L08120321-09	Soil
10	MR08-IS115-2-3-08D	L08120321-10	Soil
11	MR08-SS114-08D	L08120321-11	Soil
12	MR08-IS114-2-3-08D	L08120321-12	Soil
13	MR08-SS113-08D	L08120321-13	Soil
14	MR08-IS113-2-3-08D	L08120321-14	Soil
15	MR08-SS129-08D	L08120321-15	Soil
16	MR08-SS129D-08D	L08120321-16	Soil
17	MR08-IS129-2-3-08D	L08120321-17	Soil
18	MR08-IS129D-2-3-08D	L08120321-18	Soil
19	MR08-SS128-08D	L08120321-19	Soil
20	MR08-IS128-08D	L08120321-20	Soil
21	MR08-EB01120908-SS	L08120321-21	Water
22	MR08-EB01120908-IS	L08120321-22	Water

The USEPA "Contract Laboratory Program National Functional Guidelines for Inorganic Data Review," October 2004, and professional judgement were used in evaluating the data in this summary report.

Holding Times - All samples were prepared and analyzed within 28 days for mercury and 180 days for all other metals.

Calibration - The ICV and CCV %R values were acceptable.

Method and Calibration Blanks - The method blank samples were free of contamination.

Field and Equipment Blank - Field QC results are summarized below.

Blank ID	Compound	Conc. ug/L	Action Level ug/L	Qualifier	Affected Samples
MR08-EB01120908-SS	None - ND	-	-	-	-
MR08-EB01120908-IS	None - ND	-	-	-	-
MR08-FB01120608	None - ND	-	-	-	-

ICP Interference Check Sample - All %R values were acceptable.

MS/MSD - The MS/MSD sample exhibited acceptable %R and RPD values except the following.

MS/MSD Sample ID	Compound	MS/MSD %R/RPD	Qualifier	Affected Samples
Reference (WG290981)	Barium	Ok/62.4%/Ok	J/UJ	2-20
	Chromium	Ok/70.6%/Ok	J/UJ	2-20
Reference (WG290853)	Chromium	72.8%/Ok/27.5	None	Already qualified due to SD
Reference (WG290980)	Selenium	70.0%/67.3%/Ok	J/UJ	1-12
Reference (WG291050)	Lead	Ok/52.2%/Ok	J	13-20

LCS - The LCS samples exhibited acceptable %R values.

ICP Serial Dilution - The ICP serial dilution sample exhibited acceptable %D values except the following.

ICP Sample ID	Compound	%D	Qualifier	Affected Samples
WG290853	Chromium	22.40%	J	1
	Zinc	10.40%	J	1

Field Duplicates - Field duplicate results are summarized below.

Compound	MR08-SS089-08D mg/kg	MR08-SS089D-08D mg/kg	RPD	Qualifier
Silver	0.378	0.347	9%	None
Barium	3.50	3.32	5%	None
Cadmium	0.825	0.923	11%	None

Compound	MR08-SS089-08D mg/kg	MR08-SS089D-08D mg/kg	RPD	Qualifier
Chromium	2.12	1.82	15%	None
Copper	3.17	3.81	18%	None
Antimony	1.70 U	0.653	NC	None
Zinc	28.4	28.6	1%	None
Arsenic	5.54	4.45	22%	None
Lead	2.62	2.77	6%	None
Selenium	0.317	0.248	24%	None

Compound	MR08-IS089-2-3-08D mg/kg	MR08-IS089D-2-3-08D mg/kg	RPD	Qualifier
Barium	2.99	3.21	7%	None
Chromium	3.08	3.10	1%	None
Zinc	0.483	0.477	1%	None
Arsenic	0.218	0.186	16%	None
Lead	3.55	3.57	1%	None
Selenium	0.205	0.410 U	NC	None

Compound	MR08-SS129-08D mg/kg	MR08-SS129D-08D mg/kg	RPD	Qualifier
Silver	0.295	0.796 U	NC	None
Barium	3.86	2.41	46%	None
Cadmium	0.193	0.159 U	NC	None
Chromium	3.50	2.45	35%	None
Copper	0.621	1.59 U	NC	None
Zinc	3.18	0.432	152%	None
Arsenic	6.17	0.256	184%	J
Lead	1.64	1.40	16%	None
Selenium	0.623	0.417 U	NC	None

Compound	MR08-IS129-2-3-08D mg/kg	MR08-IS129D-2-3-08D mg/kg	RPD	Qualifier
Barium	2.76	3.76	31%	None
Chromium	2.69	2.40	11%	None
Copper	0.543	0.496	9%	None
Zinc	0.432	1.61 U	NC	None
Arsenic	0.323	0.249	26%	None
Lead	1.72	1.45	17%	None
Selenium	0.135	0.120	12%	None

Compound Quantitation - No discrepancies were identified.

Report Number: L08120321

Report Date : January 21, 2009

1

Sample Number: L08120321-01
Client ID: MR08-SS088-08D
Matrix: Soil
Workgroup Number: WG290853
Collect Date: 12/09/2008 08:25
Sample Tag: 01

PrePrep Method: NONE
Prep Method: 3051
Analytical Method: 6010B
Analyst: KHR
Dilution: 1
Units: mg/kg

Instrument: IRIS-ICP
Prep Date: 12/16/2008 10:56
Cal Date: 12/18/2008 11:38
Run Date: 12/18/2008 22:22
File ID: IR.121808.222200
Percent Solid: 92.2

Analyte	CAS. Number	Result	Qual	RL	MDL	
Silver, Total	7440-22-4	0.321	J	0.785	0.196	
Barium, Total	7440-39-3	6.42		0.392	0.0785	
Cadmium, Total	7440-43-9	0.726		0.157	0.0392	
Chromium, Total	7440-47-3	4.39 J		0.785	0.0942	SD
Copper, Total	7440-50-8	2.47		1.57	0.392	
Antimony, Total	7440-36-0	0.603	J	1.57	0.392	
Zinc, Total	7440-66-6	30.9 J		1.57	0.392	SD

J Estimated ; the analyte concentration was less than the low standard (LOQ)

Microbac

lw 3/10/09

Report Number: L08120321

Report Date : **January 21, 2009**

Sample Number: **L08120321-01**
Client ID: **MR08-SS088-08D**
Matrix: **Soil**
Workgroup Number: **WG290980**
Collect Date: **12/09/2008 08:25**
Sample Tag: **01**

PrePrep Method: **NONE**
Prep Method: **3051**
Analytical Method: **6020**
Analyst: **JYH**
Dilution: **1**
Units: **mg/kg**

Instrument: **ELAN-ICP**
Prep Date: **12/15/2008 06:41**
Cal Date: **12/19/2008 11:58**
Run Date: **12/19/2008 14:26**
File ID: **EL.121908.142658**
Percent Solid: **92.2**

Analyte	CAS. Number	Result	Qual.	RL	MDL
Arsenic, Total	7440-38-2	5.17		0.322	0.0805
Lead, Total	7439-92-1	2.23		0.430	0.107
Selenium, Total	7782-49-2	0.325 J	J	0.430	0.107

MSL

J Estimated ; the analyte concentration was less than the low standard (LOQ)

Microbac®

lew
3/10/09

Report Number: L08120321

Report Date : January 21, 2009

Sample Number: L08120321-01
Client ID: MR08-SS088-08D
Matrix: Soil
Workgroup Number: WG290916
Collect Date: 12/09/2008 08:25
Sample Tag: 01

PrePrep Method: NONE
Prep Method: 7471A
Analytical Method: 7471A
Analyst: ADC
Dilution: 1
Units: mg/kg

Instrument: HYDRA
Prep Date: 12/15/2008 08:32
Cal Date: 12/18/2008 13:48
Run Date: 12/18/2008 14:02
File ID: HY.121808.140249
Percent Solid: 92.2

Analyte	CAS. Number	Result	Qual	RL	MDL
Mercury, Total	7439-97-6		U	0.101	0.0203

U Undetected; the analyte was analyzed for, but not detected.

Microbac

RW
3/10/09

2

Sample Number: L08120321-02
Client ID: MR08-IS088-2-3-08D
Matrix: Soil
Workgroup Number: WG290981
Collect Date: 12/09/2008 08:50
Sample Tag: 01

PrePrep Method: NONE
Prep Method: 3051
Analytical Method: 6010B
Analyst: KHR
Dilution: 1
Units: mg/kg

Instrument: IRIS-ICP
Prep Date: 12/17/2008 08:33
Cal Date: 12/19/2008 10:46
Run Date: 12/19/2008 16:47
File ID: IR.121908.164700
Percent Solid: 90.9

Analyte	CAS. Number	Result	Qual	RL	MDL	
Silver, Total	7440-22-4		U	0.842	0.211	
Barium, Total	7440-39-3	2.83 J		0.421	0.0842	MSL
Cadmium, Total	7440-43-9		U	0.168	0.0421	
Chromium, Total	7440-47-3	2.45 J		0.842	0.101	MSL
Copper, Total	7440-50-8		U	1.68	0.421	
Antimony, Total	7440-36-0		U	1.68	0.421	
Zinc, Total	7440-66-6	0.447	J	1.68	0.421	

U Undetected; the analyte was analyzed for, but not detected.
J Estimated ; the analyte concentration was less than the low standard (LOQ)

Microbac

LW
3/10/09

2

Sample Number: L08120321-02
Client ID: MR08-IS088-2-3-08D
Matrix: Soil
Workgroup Number: WG290980
Collect Date: 12/09/2008 08:50
Sample Tag: 01

PrePrep Method: NONE
Prep Method: 3051
Analytical Method: 6020
Analyst: JYH
Dilution: 1
Units: mg/kg

Instrument: ELAN-ICP
Prep Date: 12/15/2008 06:41
Cal Date: 12/19/2008 11:58
Run Date: 12/19/2008 14:32
File ID: EL.121908.143239
Percent Solid: 90.9

Analyte	CAS. Number	Result	Qual	RL	MDL
Arsenic, Total	7440-38-2	0.335		0.322	0.0806
Lead, Total	7439-92-1	2.54		0.430	0.107
Selenium, Total	7782-49-2	0.229 J	J	0.430	0.107

MSL

J Estimated ; the analyte concentration was less than the low standard (LOQ)

Microbac

lw 3/10/09

Sample Number: L08120321-02
Client ID: MR08-IS088-2-3-08D
Matrix: Soil
Workgroup Number: WG290916
Collect Date: 12/09/2008 08:50
Sample Tag: 01

PrePrep Method: NONE
Prep Method: 7471A
Analytical Method: 7471A
Analyst: ADC
Dilution: 1
Units: mg/kg

Instrument: HYDRA
Prep Date: 12/15/2008 08:32
Cal Date: 12/18/2008 13:48
Run Date: 12/18/2008 14:06
File ID: HY.121808.140651
Percent Solid: 90.9

Analyte	CAS. Number	Result	Qual	RL	MDL
Mercury, Total	7439-97-6		U	0.105	0.0210

U Undetected; the analyte was analyzed for, but not detected.

Microbac®

lw
3/10/09

3

Sample Number: L08120321-03
Client ID: MR08-SS089-08D
Matrix: Soil
Workgroup Number: WG290981
Collect Date: 12/09/2008 09:25
Sample Tag: 01

PrePrep Method: NONE
Prep Method: 3051
Analytical Method: 6010B
Analyst: KHR
Dilution: 1
Units: mg/kg

Instrument: IRIS-ICP
Prep Date: 12/17/2008 08:34
Cal Date: 12/19/2008 10:46
Run Date: 12/19/2008 17:11
File ID: IR.121908.171100
Percent Solid: 90.3

Analyte	CAS. Number	Result	Qual	RL	MDL	
Silver, Total	7440-22-4	0.378	J	0.848	0.212	
Barium, Total	7440-39-3	3.50 J		0.424	0.0848	MSL
Cadmium, Total	7440-43-9	0.825		0.170	0.0424	
Chromium, Total	7440-47-3	2.12 J		0.848	0.102	MSL
Copper, Total	7440-50-8	3.17		1.70	0.424	
Antimony, Total	7440-36-0		U	1.70	0.424	
Zinc, Total	7440-66-6	28.4		1.70	0.424	

U Undetected; the analyte was analyzed for, but not detected.
J Estimated ; the analyte concentration was less than the low standard (LOQ)

Microbac

JW
3/10/09

3

Sample Number: L08120321-03
Client ID: MR08-SS089-08D
Matrix: Soil
Workgroup Number: WG290980
Collect Date: 12/09/2008 09:25
Sample Tag: 01

PrePrep Method: NONE
Prep Method: 3051
Analytical Method: 6020
Analyst: JYH
Dilution: 1
Units: mg/kg

Instrument: ELAN-ICP
Prep Date: 12/15/2008 06:41
Cal Date: 12/19/2008 11:58
Run Date: 12/19/2008 14:38
File ID: EL.121908.143821
Percent Solid: 90.3

Analyte	CAS. Number	Result	Qual	RL	MDL	
Arsenic, Total	7440-38-2	5.54		0.332	0.0830	
Lead, Total	7439-92-1	2.62		0.443	0.111	
Selenium, Total	7782-49-2	0.317 J	J	0.443	0.111	MSL

J Estimated ; the analyte concentration was less than the low standard (LOQ)

Microbac

lw
3/10/09

3

Sample Number: L08120321-03
Client ID: MR08-SS089-08D
Matrix: Soil
Workgroup Number: WG290916
Collect Date: 12/09/2008 09:25
Sample Tag: 01

PrePrep Method: NONE
Prep Method: 7471A
Analytical Method: 7471A
Analyst: ADC
Dilution: 1
Units: mg/kg

Instrument: HYDRA
Prep Date: 12/15/2008 08:32
Cal Date: 12/18/2008 13:48
Run Date: 12/18/2008 14:08
File ID: HY.121808.140846
Percent Solid: 90.3

Analyte	CAS. Number	Result	Qual	RL	MDL
Mercury, Total	7439-97-6		U	0.108	0.0216

U Undetected; the analyte was analyzed for, but not detected.

Microbac

lw 2/10/09

4

Sample Number: L08120321-04
Client ID: MR08-SS089D-08D
Matrix: Soil
Workgroup Number: WG290981
Collect Date: 12/09/2008 09:35
Sample Tag: 01

PrePrep Method: NONE
Prep Method: 3051
Analytical Method: 6010B
Analyst: KHR
Dilution: 1
Units: mg/kg

Instrument: IRIS-ICP
Prep Date: 12/17/2008 08:35
Cal Date: 12/19/2008 10:46
Run Date: 12/19/2008 17:17
File ID: IR.121908.171700
Percent Solid: 91.2

Analyte	CAS. Number	Result	Qual	RL	MDL	
Silver, Total	7440-22-4	0.347	J	0.840	0.210	
Barium, Total	7440-39-3	3.32 J		0.420	0.0840	MSL
Cadmium, Total	7440-43-9	0.923		0.168	0.0420	
Chromium, Total	7440-47-3	1.82 J		0.840	0.101	MSL
Copper, Total	7440-50-8	3.81		1.68	0.420	
Antimony, Total	7440-36-0	0.653	J	1.68	0.420	
Zinc, Total	7440-66-6	28.6		1.68	0.420	

J Estimated ; the analyte concentration was less than the low standard (LOQ)

Microbac

QW
3/10/09

4

Sample Number: L08120321-04
Client ID: MR08-SS089D-08D
Matrix: Soil
Workgroup Number: WG290980
Collect Date: 12/09/2008 09:35
Sample Tag: 01

PrePrep Method: NONE
Prep Method: 3051
Analytical Method: 6020
Analyst: JYH
Dilution: 1
Units: mg/kg

Instrument: ELAN-ICP
Prep Date: 12/15/2008 06:41
Cal Date: 12/19/2008 11:58
Run Date: 12/19/2008 14:44
File ID: EL.121908.144404
Percent Solid: 91.2

Analyte	CAS. Number	Result	Qual	RL	MDL
Arsenic, Total	7440-38-2	4.45		0.300	0.0749
Lead, Total	7439-92-1	2.77		0.399	0.0999
Selenium, Total	7782-49-2	0.248 J	J	0.399	0.0999

MSL

J Estimated ; the analyte concentration was less than the low standard (LOQ)

Microbac

lcw
3/10/09

4

Sample Number: L08120321-04
Client ID: MR08-SS089D-08D
Matrix: Soil
Workgroup Number: WG290916
Collect Date: 12/09/2008 09:35
Sample Tag: 01

PrePrep Method: NONE
Prep Method: 7471A
Analytical Method: 7471A
Analyst: ADC
Dilution: 1
Units: mg/kg

Instrument: HYDRA
Prep Date: 12/15/2008 08:32
Cal Date: 12/18/2008 13:48
Run Date: 12/18/2008 14:10
File ID: HY.121808.141042
Percent Solid: 91.2

Analyte	CAS. Number	Result	Qual	RL	MDL
Mercury, Total	7439-97-6		U	0.106	0.0211

U Undetected; the analyte was analyzed for, but not detected.

Microbac

lw 3/10/09

5

Sample Number: L08120321-05
Client ID: MR08-IS089-2-3-08D
Matrix: Soil
Workgroup Number: WG290981
Collect Date: 12/09/2008 09:50
Sample Tag: 01

PrePrep Method: NONE
Prep Method: 3051
Analytical Method: 6010B
Analyst: KHR
Dilution: 1
Units: mg/kg

Instrument: IRIS-ICP
Prep Date: 12/17/2008 08:36
Cal Date: 12/19/2008 10:46
Run Date: 12/19/2008 17:36
File ID: IR.121908.173600
Percent Solid: 90.0

Analyte	CAS. Number	Result	Qual	RL	MDL	
Silver, Total	7440-22-4		U	0.821	0.205	
Barium, Total	7440-39-3	2.99 J		0.411	0.0821	MSL
Cadmium, Total	7440-43-9		U	0.164	0.0411	
Chromium, Total	7440-47-3	3.08 J		0.821	0.0986	MSL
Copper, Total	7440-50-8		U	1.64	0.411	
Antimony, Total	7440-36-0		U	1.64	0.411	
Zinc, Total	7440-66-6	0.483	J	1.64	0.411	

U Undetected; the analyte was analyzed for, but not detected.
J Estimated ; the analyte concentration was less than the low standard (LOQ)

Microbac

lw
3/10/09

5

Sample Number: L08120321-05
Client ID: MR08-IS089-2-3-08D
Matrix: Soil
Workgroup Number: WG290980
Collect Date: 12/09/2008 09:50
Sample Tag: 01

PrePrep Method: NONE
Prep Method: 3051
Analytical Method: 6020
Analyst: JYH
Dilution: 1
Units: mg/kg

Instrument: ELAN-ICP
Prep Date: 12/15/2008 06:41
Cal Date: 12/19/2008 11:58
Run Date: 12/19/2008 14:49
File ID: EL.121908.144946
Percent Solid: 90.0

Analyte	CAS. Number	Result	Qual	RL	MDL
Arsenic, Total	7440-38-2	0.218	J	0.327	0.0819
Lead, Total	7439-92-1	3.55		0.437	0.109
Selenium, Total	7782-49-2	0.205 J	J	0.437	0.109

MSL

J Estimated ; the analyte concentration was less than the low standard (LOQ)

Microbac

lw 3/10/09

5

Sample Number: L08120321-05
Client ID: MR08-IS089-2-3-08D
Matrix: Soil
Workgroup Number: WG290916
Collect Date: 12/09/2008 09:50
Sample Tag: 01

PrePrep Method: NONE
Prep Method: 7471A
Analytical Method: 7471A
Analyst: ADC
Dilution: 1
Units: mg/kg

Instrument: HYDRA
Prep Date: 12/15/2008 08:32
Cal Date: 12/18/2008 13:48
Run Date: 12/18/2008 14:12
File ID: HY.121808.141255
Percent Solid: 90.0

Analyte	CAS. Number	Result	Qual	RL	MDL
Mercury, Total	7439-97-6		U	0.107	0.0214

U Undetected; the analyte was analyzed for, but not detected.

Microbac

lw
3/10/09

6

Sample Number: L08120321-06
Client ID: MR08-IS089D-2-3-08D
Matrix: Soil
Workgroup Number: WG290981
Collect Date: 12/09/2008 10:00
Sample Tag: 01

PrePrep Method: NONE
Prep Method: 3051
Analytical Method: 6010B
Analyst: KHR
Dilution: 1
Units: mg/kg

Instrument: IRIS-ICP
Prep Date: 12/17/2008 08:37
Cal Date: 12/19/2008 10:46
Run Date: 12/19/2008 17:42
File ID: IR.121908.174200
Percent Solid: 89.3

Analyte	CAS. Number	Result	Qual	RL	MDL	
Silver, Total	7440-22-4		U	0.788	0.197	
Barium, Total	7440-39-3	3.21 J		0.394	0.0788	MSL
Cadmium, Total	7440-43-9		U	0.158	0.0394	
Chromium, Total	7440-47-3	3.10 J		0.788	0.0946	MSL
Copper, Total	7440-50-8		U	1.58	0.394	
Antimony, Total	7440-36-0		U	1.58	0.394	
Zinc, Total	7440-66-6	0.477	J	1.58	0.394	

U Undetected; the analyte was analyzed for, but not detected.
J Estimated ; the analyte concentration was less than the low standard (LOQ)

Microbac

lw
3/10/09

6

Sample Number: L08120321-06
Client ID: MR08-IS089D-2-3-08D
Matrix: Soil
Workgroup Number: WG290980
Collect Date: 12/09/2008 10:00
Sample Tag: 01

PrePrep Method: NONE
Prep Method: 3051
Analytical Method: 6020
Analyst: JYH
Dilution: 1
Units: mg/kg

Instrument: ELAN-ICP
Prep Date: 12/15/2008 06:41
Cal Date: 12/19/2008 11:58
Run Date: 12/19/2008 15:08
File ID: EL.121908.150843
Percent Solid: 89.3

Analyte	CAS. Number	Result	Qual	RL	MDL
Arsenic, Total	7440-38-2	0.186	J	0.308	0.0769
Lead, Total	7439-92-1	3.57		0.410	0.103
Selenium, Total	7782-49-2		~~J~~ U	0.410	0.103

MSL

U Undetected; the analyte was analyzed for, but not detected.
J Estimated ; the analyte concentration was less than the low standard (LOQ)

Microbac

LW 3/10/09

6

Sample Number: L08120321-06
Client ID: MR08-IS089D-2-3-08D
Matrix: Soil
Workgroup Number: WG290916
Collect Date: 12/09/2008 10:00
Sample Tag: 01

PrePrep Method: NONE
Prep Method: 7471A
Analytical Method: 7471A
Analyst: ADC
Dilution: 1
Units: mg/kg

Instrument: HYDRA
Prep Date: 12/15/2008 08:32
Cal Date: 12/18/2008 13:48
Run Date: 12/18/2008 14:14
File ID: HY.121808.141440
Percent Solid: 89.3

Analyte	CAS. Number	Result	Qual	RL	MDL
Mercury, Total	7439-97-6		U	0.106	0.0211

U Undetected; the analyte was analyzed for, but not detected.

Microbac®

lee 3/10/09

7

Sample Number: L08120321-07
Client ID: MR08-SS090-08D
Matrix: Soil
Workgroup Number: WG290981
Collect Date: 12/09/2008 10:55
Sample Tag: 01

PrePrep Method: NONE
Prep Method: 3051
Analytical Method: 6010B
Analyst: KHR
Dilution: 1
Units: mg/kg

Instrument: IRIS-ICP
Prep Date: 12/17/2008 08:38
Cal Date: 12/19/2008 10:46
Run Date: 12/19/2008 17:48
File ID: IR.121908.174800
Percent Solid: 92.1

Analyte	CAS. Number	Result	Qual	RL	MDL	
Silver, Total	7440-22-4	0.218	J	0.769	0.192	
Barium, Total	7440-39-3	5.87 J		0.384	0.0769	MSL
Cadmium, Total	7440-43-9	1.01		0.154	0.0384	
Chromium, Total	7440-47-3	2.92 J		0.769	0.0922	MSL
Copper, Total	7440-50-8	4.69		1.54	0.384	
Antimony, Total	7440-36-0	0.469	J	1.54	0.384	
Zinc, Total	7440-66-6	34.5		1.54	0.384	

J Estimated ; the analyte concentration was less than the low standard (LOQ)

Microbac

kw
3/10/09

7

Sample Number: L08120321-07
Client ID: MR08-SS090-08D
Matrix: Soil
Workgroup Number: WG290980
Collect Date: 12/09/2008 10:55
Sample Tag: 01

PrePrep Method: NONE
Prep Method: 3051
Analytical Method: 6020
Analyst: JYH
Dilution: 1
Units: mg/kg

Instrument: ELAN-ICP
Prep Date: 12/15/2008 06:41
Cal Date: 12/19/2008 11:58
Run Date: 12/19/2008 15:14
File ID: EL.121908.151426
Percent Solid: 92.1

Analyte	CAS. Number	Result	Qual	RL	MDL
Arsenic, Total	7440-38-2	4.61		0.323	0.0807
Lead, Total	7439-92-1	2.96		0.430	0.108
Selenium, Total	7782-49-2	0.288 J	J	0.430	0.108

MSL

J Estimated ; the analyte concentration was less than the low standard (LOQ)

Microbac

lcw 3/10/09

7

Sample Number: L08120321-07
Client ID: MR08-SS090-08D
Matrix: Soil
Workgroup Number: WG290916
Collect Date: 12/09/2008 10:55
Sample Tag: 01

PrePrep Method: NONE
Prep Method: 7471A
Analytical Method: 7471A
Analyst: ADC
Dilution: 1
Units: mg/kg

Instrument: HYDRA
Prep Date: 12/15/2008 08:32
Cal Date: 12/18/2008 13:48
Run Date: 12/18/2008 14:16
File ID: HY.121808.141627
Percent Solid: 92.1

Analyte	CAS. Number	Result	Qual	RL	MDL
Mercury, Total	7439-97-6		U	0.106	0.0212

U Undetected; the analyte was analyzed for, but not detected.

Microbac

bw
3/10/09

8

Sample Number: L08120321-08
Client ID: MR08-IS090-2-3-08D
Matrix: Soil
Workgroup Number: WG290981
Collect Date: 12/09/2008 11:05
Sample Tag: 01

PrePrep Method: NONE
Prep Method: 3051
Analytical Method: 6010B
Analyst: KHR
Dilution: 1
Units: mg/kg

Instrument: IRIS-ICP
Prep Date: 12/17/2008 08:39
Cal Date: 12/19/2008 10:46
Run Date: 12/19/2008 17:54
File ID: IR.121908.175400
Percent Solid: 91.6

Analyte	CAS. Number	Result	Qual	RL	MDL	
Silver, Total	7440-22-4	0.289	J	0.768	0.192	
Barium, Total	7440-39-3	3.88 J		0.384	0.0768	MSL
Cadmium, Total	7440-43-9	0.237		0.154	0.0384	
Chromium, Total	7440-47-3	5.53 J		0.768	0.0922	MSL
Copper, Total	7440-50-8	1.69		1.54	0.384	
Antimony, Total	7440-36-0		U	1.54	0.384	
Zinc, Total	7440-66-6	5.59		1.54	0.384	

U Undetected; the analyte was analyzed for, but not detected.
J Estimated ; the analyte concentration was less than the low standard (LOQ)

Microbac

3/10/09

8

Sample Number: L08120321-08
Client ID: MR08-IS090-2-3-08D
Matrix: Soil
Workgroup Number: WG290980
Collect Date: 12/09/2008 11:05
Sample Tag: 01

PrePrep Method: NONE
Prep Method: 3051
Analytical Method: 6020
Analyst: JYH
Dilution: 1
Units: mg/kg

Instrument: ELAN-ICP
Prep Date: 12/15/2008 06:41
Cal Date: 12/19/2008 11:58
Run Date: 12/19/2008 15:20
File ID: EL.121908.152010
Percent Solid: 91.6

Analyte	CAS. Number	Result	Qual	RL	MDL	
Arsenic, Total	7440-38-2	1.05		0.320	0.0800	
Lead, Total	7439-92-1	10.4		0.426	0.107	
Selenium, Total	7782-49-2	0.219 J	J	0.426	0.107	MSL

J Estimated ; the analyte concentration was less than the low standard (LOQ)

Microbac

lee 3/10/09

8

Sample Number: L08120321-08
Client ID: MR08-IS090-2-3-08D
Matrix: Soil
Workgroup Number: WG290916
Collect Date: 12/09/2008 11:05
Sample Tag: 01

PrePrep Method: NONE
Prep Method: 7471A
Analytical Method: 7471A
Analyst: ADC
Dilution: 1
Units: mg/kg

Instrument: HYDRA
Prep Date: 12/15/2008 08:32
Cal Date: 12/18/2008 13:48
Run Date: 12/18/2008 14:22
File ID: HY.121808.142231
Percent Solid: 91.6

Analyte	CAS. Number	Result	Qual	RL	MDL
Mercury, Total	7439-97-6		U	0.105	0.0211

U Undetected; the analyte was analyzed for, but not detected.

Microbac

lw 3/10/09

9

Sample Number: L08120321-09
Client ID: MR08-SS115-08D
Matrix: Soil
Workgroup Number: WG290981
Collect Date: 12/09/2008 11:45
Sample Tag: 01

PrePrep Method: NONE
Prep Method: 3051
Analytical Method: 6010B
Analyst: KHR
Dilution: 1
Units: mg/kg

Instrument: IRIS-ICP
Prep Date: 12/17/2008 08:39
Cal Date: 12/19/2008 10:46
Run Date: 12/19/2008 18:01
File ID: IR.121908.180100
Percent Solid: 93.9

Analyte	CAS. Number	Result	Qual	RL	MDL	
Silver, Total	7440-22-4	0.346	J	0.799	0.200	
Barium, Total	7440-39-3	4.67 J		0.400	0.0799	MSL
Cadmium, Total	7440-43-9	0.322		0.160	0.0400	
Chromium, Total	7440-47-3	4.42 J		0.799	0.0959	MSL
Copper, Total	7440-50-8	1.73		1.60	0.400	
Antimony, Total	7440-36-0		U	1.60	0.400	
Zinc, Total	7440-66-6	19.1		1.60	0.400	

U Undetected; the analyte was analyzed for, but not detected.
J Estimated ; the analyte concentration was less than the low standard (LOQ)

Microbac

lw
3/10/09

9

Sample Number: L08120321-09
Client ID: MR08-SS115-08D
Matrix: Soil
Workgroup Number: WG290980
Collect Date: 12/09/2008 11:45
Sample Tag: 01

PrePrep Method: NONE
Prep Method: 3051
Analytical Method: 6020
Analyst: JYH
Dilution: 1
Units: mg/kg

Instrument: ELAN-ICP
Prep Date: 12/15/2008 06:41
Cal Date: 12/19/2008 11:58
Run Date: 12/19/2008 15:25
File ID: EL.121908.152554
Percent Solid: 93.9

Analyte	CAS. Number	Result	Qual	RL	MDL
Arsenic, Total	7440-38-2	1.09		0.314	0.0786
Lead, Total	7439-92-1	16.0		0.419	0.105
Selenium, Total	7782-49-2	0.302 J	J	0.419	0.105

MSL

J Estimated ; the analyte concentration was less than the low standard (LOQ)

Microbac

lwo 3/10/09

9

Sample Number: L08120321-09
Client ID: MR08-SS115-08D
Matrix: Soil
Workgroup Number: WG290916
Collect Date: 12/09/2008 11:45
Sample Tag: 01

PrePrep Method: NONE
Prep Method: 7471A
Analytical Method: 7471A
Analyst: ADC
Dilution: 1
Units: mg/kg

Instrument: HYDRA
Prep Date: 12/15/2008 08:32
Cal Date: 12/18/2008 13:48
Run Date: 12/18/2008 14:24
File ID: HY.121808.142414
Percent Solid: 93.9

Analyte	CAS. Number	Result	Qual	RL	MDL
Mercury, Total	7439-97-6		U	0.104	0.0208

U Undetected; the analyte was analyzed for, but not detected.

Microbac

MW 3/10/09

10

Sample Number: L08120321-10
Client ID: MR08-IS115-2-3-08D
Matrix: Soil
Workgroup Number: WG290981
Collect Date: 12/09/2008 12:00
Sample Tag: 01

PrePrep Method: NONE
Prep Method: 3051
Analytical Method: 6010B
Analyst: KHR
Dilution: 1
Units: mg/kg

Instrument: IRIS-ICP
Prep Date: 12/17/2008 08:40
Cal Date: 12/19/2008 10:46
Run Date: 12/19/2008 18:07
File ID: IR.121908.180700
Percent Solid: 87.2

Analyte	CAS. Number	Result	Qual	RL	MDL	
Silver, Total	7440-22-4		U	0.851	0.213	
Barium, Total	7440-39-3	3.82 J		0.425	0.0851	MSC
Cadmium, Total	7440-43-9		U	0.170	0.0425	
Chromium, Total	7440-47-3	3.09 J		0.851	0.102	MSC
Copper, Total	7440-50-8		U	1.70	0.425	
Antimony, Total	7440-36-0		U	1.70	0.425	
Zinc, Total	7440-66-6	0.781	J	1.70	0.425	

U Undetected; the analyte was analyzed for, but not detected.
J Estimated ; the analyte concentration was less than the low standard (LOQ)

Microbac

lw
3/10/09

10

Sample Number: L08120321-10
Client ID: MR08-IS115-2-3-08D
Matrix: Soil
Workgroup Number: WG290980
Collect Date: 12/09/2008 12:00
Sample Tag: 01

PrePrep Method: NONE
Prep Method: 3051
Analytical Method: 6020
Analyst: JYH
Dilution: 1
Units: mg/kg

Instrument: ELAN-ICP
Prep Date: 12/15/2008 06:41
Cal Date: 12/19/2008 11:58
Run Date: 12/19/2008 15:31
File ID: EL.121908.153137
Percent Solid: 87.2

Analyte	CAS. Number	Result	Qual	RL	MDL
Arsenic, Total	7440-38-2	0.529		0.341	0.0852
Lead, Total	7439-92-1	2.97		0.454	0.114
Selenium, Total	7782-49-2	0.152 J	J	0.454	0.114

MSL

J Estimated ; the analyte concentration was less than the low standard (LOQ)

Microbac

lw 3/10/09

10

Sample Number: L08120321-10
Client ID: MR08-IS115-2-3-08D
Matrix: Soil
Workgroup Number: WG290916
Collect Date: 12/09/2008 12:00
Sample Tag: 01

PrePrep Method: NONE
Prep Method: 7471A
Analytical Method: 7471A
Analyst: ADC
Dilution: 1
Units: mg/kg

Instrument: HYDRA
Prep Date: 12/15/2008 08:32
Cal Date: 12/18/2008 13:48
Run Date: 12/18/2008 14:26
File ID: HY.121808.142600
Percent Solid: 87.2

Analyte	CAS. Number	Result	Qual	RL	MDL
Mercury, Total	7439-97-6		U	0.114	0.0229

U Undetected; the analyte was analyzed for, but not detected.

Microbac®

kw
3/10/09

11

Sample Number: L08120321-11
Client ID: MR08-SS114-08D
Matrix: Soil
Workgroup Number: WG290981
Collect Date: 12/09/2008 13:15
Sample Tag: 01

PrePrep Method: NONE
Prep Method: 3051
Analytical Method: 6010B
Analyst: KHR
Dilution: 1
Units: mg/kg

Instrument: IRIS-ICP
Prep Date: 12/17/2008 08:40
Cal Date: 12/19/2008 10:46
Run Date: 12/19/2008 18:13
File ID: IR.121908.181300
Percent Solid: 93.4

Analyte	CAS. Number	Result	Qual	RL	MDL	
Silver, Total	7440-22-4		U	0.785	0.196	
Barium, Total	7440-39-3	2.96 J		0.393	0.0785	MSL
Cadmium, Total	7440-43-9	0.143	J	0.157	0.0393	
Chromium, Total	7440-47-3	3.17 J		0.785	0.0942	MSL
Copper, Total	7440-50-8	0.873	J	1.57	0.393	
Antimony, Total	7440-36-0		U	1.57	0.393	
Zinc, Total	7440-66-6	2.82		1.57	0.393	

U Undetected; the analyte was analyzed for, but not detected.
J Estimated ; the analyte concentration was less than the low standard (LOQ)

Microbac

LW 31.d09

11

Sample Number: L08120321-11
Client ID: MR08-SS114-08D
Matrix: Soil
Workgroup Number: WG290980
Collect Date: 12/09/2008 13:15
Sample Tag: 01

PrePrep Method: NONE
Prep Method: 3051
Analytical Method: 6020
Analyst: JYH
Dilution: 1
Units: mg/kg

Instrument: ELAN-ICP
Prep Date: 12/15/2008 06:41
Cal Date: 12/19/2008 11:58
Run Date: 12/19/2008 15:37
File ID: EL.121908.153717
Percent Solid: 93.4

Analyte	CAS. Number	Result	Qual	RL	MDL
Arsenic, Total	7440-38-2	0.805		0.308	0.0771
Lead, Total	7439-92-1	3.02		0.411	0.103
Selenium, Total	7782-49-2	0.307 J	J	0.411	0.103

NSL

J Estimated ; the analyte concentration was less than the low standard (LOQ)

Microbac

lew 3/10/09

11

Sample Number: L08120321-11
Client ID: MR08-SS114-08D
Matrix: Soil
Workgroup Number: WG290916
Collect Date: 12/09/2008 13:15
Sample Tag: 01

PrePrep Method: NONE
Prep Method: 7471A
Analytical Method: 7471A
Analyst: ADC
Dilution: 1
Units: mg/kg

Instrument: HYDRA
Prep Date: 12/15/2008 08:32
Cal Date: 12/18/2008 13:48
Run Date: 12/18/2008 14:27
File ID: HY.121808.142745
Percent Solid: 93.4

Analyte	CAS. Number	Result	Qual	RL	MDL
Mercury, Total	7439-97-6		U	0.0996	0.0199

U Undetected; the analyte was analyzed for, but not detected.

Microbac

lew
3/10/09

12

Sample Number: L08120321-12
Client ID: MR08-IS114-2-3-08D
Matrix: Soil
Workgroup Number: WG290981
Collect Date: 12/09/2008 13:30
Sample Tag: 01

PrePrep Method: NONE
Prep Method: 3051
Analytical Method: 6010B
Analyst: KHR
Dilution: 1
Units: mg/kg

Instrument: IRIS-ICP
Prep Date: 12/17/2008 08:41
Cal Date: 12/19/2008 10:46
Run Date: 12/19/2008 18:19
File ID: IR.121908.181900
Percent Solid: 92.4

Analyte	CAS. Number	Result	Qual	RL	MDL	
Silver, Total	7440-22-4		U	0.821	0.205	
Barium, Total	7440-39-3	2.98 J		0.410	0.0821	MSL
Cadmium, Total	7440-43-9		U	0.164	0.0410	
Chromium, Total	7440-47-3	2.23 J		0.821	0.0985	MSL
Copper, Total	7440-50-8		U	1.64	0.410	
Antimony, Total	7440-36-0		U	1.64	0.410	
Zinc, Total	7440-66-6	0.711	J	1.64	0.410	

U Undetected; the analyte was analyzed for, but not detected.
J Estimated ; the analyte concentration was less than the low standard (LOQ)

Microbac

LW 3/10/09

12

Sample Number: L08120321-12
Client ID: MR08-IS114-2-3-08D
Matrix: Soil
Workgroup Number: WG290980
Collect Date: 12/09/2008 13:30
Sample Tag: 01

PrePrep Method: NONE
Prep Method: 3051
Analytical Method: 6020
Analyst: JYH
Dilution: 1
Units: mg/kg

Instrument: ELAN-ICP
Prep Date: 12/15/2008 06:41
Cal Date: 12/19/2008 11:58
Run Date: 12/19/2008 15:43
File ID: EL.121908.154324
Percent Solid: 92.4

Analyte	CAS. Number	Result	Qual	RL	MDL
Arsenic, Total	7440-38-2	0.311	J	0.323	0.0809
Lead, Total	7439-92-1	2.78		0.431	0.108
Selenium, Total	7782-49-2	~~U~~	~~J~~	0.431	0.108

MSL

U Undetected; the analyte was analyzed for, but not detected.
J Estimated ; the analyte concentration was less than the low standard (LOQ)

Microbac

gw 3/10/09

12

Sample Number: L08120321-12
Client ID: MR08-IS114-2-3-08D
Matrix: Soil
Workgroup Number: WG290916
Collect Date: 12/09/2008 13:30
Sample Tag: 01

PrePrep Method: NONE
Prep Method: 7471A
Analytical Method: 7471A
Analyst: ADC
Dilution: 1
Units: mg/kg

Instrument: HYDRA
Prep Date: 12/15/2008 08:32
Cal Date: 12/18/2008 13:48
Run Date: 12/18/2008 14:29
File ID: HY.121808.142942
Percent Solid: 92.4

Analyte	CAS. Number	Result	Qual	RL	MDL
Mercury, Total	7439-97-6		U	0.104	0.0208

U Undetected; the analyte was analyzed for, but not detected.

Microbac

LW
3/10/09

13

Sample Number: L08120321-13
Client ID: MR08-SS113-08D
Matrix: Soil
Workgroup Number: WG290981
Collect Date: 12/09/2008 13:40
Sample Tag: 01

PrePrep Method: NONE
Prep Method: 3051
Analytical Method: 6010B
Analyst: KHR
Dilution: 1
Units: mg/kg

Instrument: IRIS-ICP
Prep Date: 12/17/2008 08:42
Cal Date: 12/19/2008 10:46
Run Date: 12/19/2008 18:25
File ID: IR.121908.182500
Percent Solid: 92.9

Analyte	CAS. Number	Result	Qual	RL	MDL	
Silver, Total	7440-22-4	0.328	J	0.803	0.201	
Barium, Total	7440-39-3	5.04 J		0.402	0.0803	MSL
Cadmium, Total	7440-43-9	0.424		0.161	0.0402	
Chromium, Total	7440-47-3	5.48 J		0.803	0.0964	MSL
Copper, Total	7440-50-8	2.23		1.61	0.402	
Antimony, Total	7440-36-0	0.952	J	1.61	0.402	
Zinc, Total	7440-66-6	12.8		1.61	0.402	

J Estimated ; the analyte concentration was less than the low standard (LOQ)

Microbac

DW 3/10/09

13

Sample Number: L08120321-13
Client ID: MR08-SS113-08D
Matrix: Soil
Workgroup Number: WG291050
Collect Date: 12/09/2008 13:40
Sample Tag: 01

PrePrep Method: NONE
Prep Method: 3051
Analytical Method: 6020
Analyst: JYH
Dilution: 1
Units: mg/kg

Instrument: ELAN-ICP
Prep Date: 12/15/2008 07:44
Cal Date: 12/19/2008 11:58
Run Date: 12/19/2008 16:32
File ID: EL.121908.163253
Percent Solid: 92.9

Analyte	CAS. Number	Result	Qual	RL	MDL
Arsenic, Total	7440-38-2	1.19		0.303	0.0759
Lead, Total	7439-92-1	22.6 J		0.405	0.101
Selenium, Total	7782-49-2	0.465		0.405	0.101

MSL

Microbac

gew
3/10/09

13

Sample Number:	L08120321-13	PrePrep Method:	NONE	Instrument:	HYDRA
Client ID:	MR08-SS113-08D	Prep Method:	7471A	Prep Date:	12/15/2008 08:32
Matrix:	Soil	Analytical Method:	7471A	Cal Date:	12/18/2008 13:48
Workgroup Number:	WG290916	Analyst:	ADC	Run Date:	12/18/2008 14:31
Collect Date:	12/09/2008 13:40	Dilution:	1	File ID:	HY.121808.143146
Sample Tag:	01	Units:	mg/kg	Percent Solid:	92.9

Analyte	CAS. Number	Result	Qual	RL	MDL
Mercury, Total	7439-97-6		U	0.106	0.0211

U Undetected; the analyte was analyzed for, but not detected.

Microbac®

lcw
3/10/09

14

Sample Number: L08120321-14
Client ID: MR08-IS113-2-3-08D
Matrix: Soil
Workgroup Number: WG290981
Collect Date: 12/09/2008 13:55
Sample Tag: 01

PrePrep Method: NONE
Prep Method: 3051
Analytical Method: 6010B
Analyst: KHR
Dilution: 1
Units: mg/kg

Instrument: IRIS-ICP
Prep Date: 12/17/2008 08:42
Cal Date: 12/19/2008 10:46
Run Date: 12/19/2008 18:31
File ID: IR.121908.183100
Percent Solid: 87.9

Analyte	CAS. Number	Result	Qual	RL	MDL	
Silver, Total	7440-22-4		U	0.818	0.204	
Barium, Total	7440-39-3	3.09 J		0.409	0.0818	MSL
Cadmium, Total	7440-43-9		U	0.164	0.0409	
Chromium, Total	7440-47-3	3.46 J		0.818	0.0981	MSL
Copper, Total	7440-50-8		U	1.64	0.409	
Antimony, Total	7440-36-0		U	1.64	0.409	
Zinc, Total	7440-66-6		U	1.64	0.409	

U Undetected; the analyte was analyzed for, but not detected.

Microbac

GW 3/10/09

14

Sample Number: L08120321-14
Client ID: MR08-IS113-2-3-08D
Matrix: Soil
Workgroup Number: WG291050
Collect Date: 12/09/2008 13:55
Sample Tag: 01

PrePrep Method: NONE
Prep Method: 3051
Analytical Method: 6020
Analyst: JYH
Dilution: 1
Units: mg/kg

Instrument: ELAN-ICP
Prep Date: 12/15/2008 07:44
Cal Date: 12/19/2008 11:58
Run Date: 12/19/2008 16:50
File ID: EL.121908.165005
Percent Solid: 87.9

Analyte	CAS. Number	Result	Qual	RL	MDL
Arsenic, Total	7440-38-2	0.417		0.321	0.0802
Lead, Total	7439-92-1	2.51 J		0.428	0.107
Selenium, Total	7782-49-2		U	0.428	0.107

MSL

U Undetected; the analyte was analyzed for, but not detected.

Microbac

MW
3/10/09

14

Sample Number: L08120321-14
Client ID: MR08-IS113-2-3-08D
Matrix: Soil
Workgroup Number: WG290916
Collect Date: 12/09/2008 13:55
Sample Tag: 01

PrePrep Method: NONE
Prep Method: 7471A
Analytical Method: 7471A
Analyst: ADC
Dilution: 1
Units: mg/kg

Instrument: HYDRA
Prep Date: 12/15/2008 08:32
Cal Date: 12/18/2008 13:48
Run Date: 12/18/2008 14:33
File ID: HY.121808.143329
Percent Solid: 87.9

Analyte	CAS. Number	Result	Qual	RL	MDL
Mercury, Total	7439-97-6		U	0.113	0.0227

U Undetected; the analyte was analyzed for, but not detected.

Microbac

hw 3/10/09

15

Sample Number: L08120321-15
Client ID: MR08-SS129-08D
Matrix: Soil
Workgroup Number: WG290981
Collect Date: 12/09/2008 14:30
Sample Tag: 01

PrePrep Method: NONE
Prep Method: 3051
Analytical Method: 6010B
Analyst: KHR
Dilution: 1
Units: mg/kg

Instrument: IRIS-ICP
Prep Date: 12/17/2008 08:43
Cal Date: 12/19/2008 10:46
Run Date: 12/19/2008 18:49
File ID: IR.121908.184900
Percent Solid: 95.4

Analyte	CAS. Number	Result	Qual	RL	MDL	
Silver, Total	7440-22-4	0.295	J	0.796	0.199	
Barium, Total	7440-39-3	3.86 J		0.398	0.0796	MSL
Cadmium, Total	7440-43-9	0.193		0.159	0.0398	
Chromium, Total	7440-47-3	3.50 J		0.796	0.0955	MSL
Copper, Total	7440-50-8	0.621	J	1.59	0.398	
Antimony, Total	7440-36-0		U	1.59	0.398	
Zinc, Total	7440-66-6	3.18		1.59	0.398	

U Undetected; the analyte was analyzed for, but not detected.
J Estimated ; the analyte concentration was less than the low standard (LOQ)

Microbac

lw 3/10/09

15

Sample Number: L08120321-15
Client ID: MR08-SS129-08D
Matrix: Soil
Workgroup Number: WG291050
Collect Date: 12/09/2008 14:30
Sample Tag: 01

PrePrep Method: NONE
Prep Method: 3051
Analytical Method: 6020
Analyst: JYH
Dilution: 1
Units: mg/kg

Instrument: ELAN-ICP
Prep Date: 12/15/2008 07:44
Cal Date: 12/19/2008 11:58
Run Date: 12/19/2008 16:55
File ID: EL.121908.165547
Percent Solid: 95.4

Analyte	CAS. Number	Result	Qual	RL	MDL
Arsenic, Total	7440-38-2	6.17		0.314	0.0784
Lead, Total	7439-92-1	1.64 J		0.418	0.105
Selenium, Total	7782-49-2	0.623		0.418	0.105

FD
MSL

Microbac

MW
3/10/09

15

Sample Number: L08120321-15
Client ID: MR08-SS129-08D
Matrix: Soil
Workgroup Number: WG290916
Collect Date: 12/09/2008 14:30
Sample Tag: 01

PrePrep Method: NONE
Prep Method: 7471A
Analytical Method: 7471A
Analyst: ADC
Dilution: 1
Units: mg/kg

Instrument: HYDRA
Prep Date: 12/15/2008 08:32
Cal Date: 12/18/2008 13:48
Run Date: 12/18/2008 14:35
File ID: HY.121808.143514
Percent Solid: 95.4

Analyte	CAS. Number	Result	Qual	RL	MDL
Mercury, Total	7439-97-6		U	0.104	0.0207

U Undetected; the analyte was analyzed for, but not detected.

Microbac

MW 3/10/09

16

Sample Number: L08120321-16
Client ID: MR08-SS129D-08D
Matrix: Soil
Workgroup Number: WG290981
Collect Date: 12/09/2008 14:40
Sample Tag: 01

PrePrep Method: NONE
Prep Method: 3051
Analytical Method: 6010B
Analyst: KHR
Dilution: 1
Units: mg/kg

Instrument: IRIS-ICP
Prep Date: 12/17/2008 08:43
Cal Date: 12/19/2008 10:46
Run Date: 12/19/2008 18:56
File ID: IR.121908.185600
Percent Solid: 94.3

Analyte	CAS. Number	Result	Qual	RL	MDL	
Silver, Total	7440-22-4		U	0.796	0.199	
Barium, Total	7440-39-3	2.41 J		0.398	0.0796	MSL
Cadmium, Total	7440-43-9		U	0.159	0.0398	
Chromium, Total	7440-47-3	2.45 J		0.796	0.0955	MSL
Copper, Total	7440-50-8		U	1.59	0.398	
Antimony, Total	7440-36-0		U	1.59	0.398	
Zinc, Total	7440-66-6	0.432	J	1.59	0.398	

U Undetected; the analyte was analyzed for, but not detected.
J Estimated ; the analyte concentration was less than the low standard (LOQ)

Microbac

lew
3/10/09

16

Sample Number: L08120321-16
Client ID: MR08-SS129D-08D
Matrix: Soil
Workgroup Number: WG291050
Collect Date: 12/09/2008 14:40
Sample Tag: 01

PrePrep Method: NONE
Prep Method: 3051
Analytical Method: 6020
Analyst: JYH
Dilution: 1
Units: mg/kg

Instrument: ELAN-ICP
Prep Date: 12/15/2008 07:44
Cal Date: 12/19/2008 11:58
Run Date: 12/19/2008 17:24
File ID: EL.121908.172415
Percent Solid: 94.3

Analyte	CAS. Number	Result	Qual	RL	MDL
Arsenic, Total	7440-38-2	0.256 J	J	0.313	0.0781
Lead, Total	7439-92-1	1.40 J		0.417	0.104
Selenium, Total	7782-49-2		U	0.417	0.104

FD
MSL

U Undetected; the analyte was analyzed for, but not detected.
J Estimated ; the analyte concentration was less than the low standard (LOQ)

Microbac

lew
3/10/09

16

Sample Number: L08120321-16
Client ID: MR08-SS129D-08D
Matrix: Soil
Workgroup Number: WG290916
Collect Date: 12/09/2008 14:40
Sample Tag: 01

PrePrep Method: NONE
Prep Method: 7471A
Analytical Method: 7471A
Analyst: ADC
Dilution: 1
Units: mg/kg

Instrument: HYDRA
Prep Date: 12/15/2008 08:32
Cal Date: 12/18/2008 13:48
Run Date: 12/18/2008 14:37
File ID: HY.121808.143702
Percent Solid: 94.3

Analyte	CAS. Number	Result	Qual	RL	MDL
Mercury, Total	7439-97-6		U	0.106	0.0211

U Undetected; the analyte was analyzed for, but not detected.

Microbac

lew
3/10/09

17

Sample Number: L08120321-17
Client ID: MR08-IS129-2-3-08D
Matrix: Soil
Workgroup Number: WG290981
Collect Date: 12/09/2008 14:50
Sample Tag: 01

PrePrep Method: NONE
Prep Method: 3051
Analytical Method: 6010B
Analyst: KHR
Dilution: 1
Units: mg/kg

Instrument: IRIS-ICP
Prep Date: 12/17/2008 08:44
Cal Date: 12/19/2008 10:46
Run Date: 12/19/2008 19:02
File ID: IR.121908.190200
Percent Solid: 91.0

Analyte	CAS. Number	Result	Qual	RL	MDL	
Silver, Total	7440-22-4		U	0.835	0.209	
Barium, Total	7440-39-3	2.76 J		0.418	0.0835	MSL
Cadmium, Total	7440-43-9		U	0.167	0.0418	
Chromium, Total	7440-47-3	2.69 J		0.835	0.100	MSL
Copper, Total	7440-50-8	0.543	J	1.67	0.418	
Antimony, Total	7440-36-0		U	1.67	0.418	
Zinc, Total	7440-66-6	0.432	J	1.67	0.418	

U Undetected; the analyte was analyzed for, but not detected.
J Estimated ; the analyte concentration was less than the low standard (LOQ)

Microbac

lcw 3/10/09

17

Sample Number: L08120321-17
Client ID: MR08-IS129-2-3-08D
Matrix: Soil
Workgroup Number: WG291050
Collect Date: 12/09/2008 14:50
Sample Tag: 01

PrePrep Method: NONE
Prep Method: 3051
Analytical Method: 6020
Analyst: JYH
Dilution: 1
Units: mg/kg

Instrument: ELAN-ICP
Prep Date: 12/15/2008 07:44
Cal Date: 12/19/2008 11:58
Run Date: 12/19/2008 17:29
File ID: EL.121908.172957
Percent Solid: 91.0

Analyte	CAS. Number	Result	Qual	RL	MDL
Arsenic, Total	7440-38-2	0.323	J	0.326	0.0816
Lead, Total	7439-92-1	1.72 J		0.435	0.109 MSL
Selenium, Total	7782-49-2	0.135	J	0.435	0.109

J Estimated ; the analyte concentration was less than the low standard (LOQ)

Microbac

hw
3/10/09

17

Sample Number: L08120321-17
Client ID: MR08-IS129-2-3-08D
Matrix: Soil
Workgroup Number: WG290916
Collect Date: 12/09/2008 14:50
Sample Tag: 01

PrePrep Method: NONE
Prep Method: 7471A
Analytical Method: 7471A
Analyst: ADC
Dilution: 1
Units: mg/kg

Instrument: HYDRA
Prep Date: 12/15/2008 08:32
Cal Date: 12/18/2008 13:48
Run Date: 12/18/2008 14:38
File ID: HY.121808.143849
Percent Solid: 91.0

Analyte	CAS. Number	Result	Qual	RL	MDL
Mercury, Total	7439-97-6		U	0.102	0.0204

U Undetected; the analyte was analyzed for, but not detected.

Microbac

lew
3/10/09

18

Sample Number: L08120321-18
Client ID: MR08-IS129D-2-3-08D
Matrix: Soil
Workgroup Number: WG290981
Collect Date: 12/09/2008 15:00
Sample Tag: 01

PrePrep Method: NONE
Prep Method: 3051
Analytical Method: 6010B
Analyst: KHR
Dilution: 1
Units: mg/kg

Instrument: IRIS-ICP
Prep Date: 12/17/2008 08:44
Cal Date: 12/19/2008 10:46
Run Date: 12/19/2008 19:08
File ID: IR.121908.190800
Percent Solid: 93.5

Analyte	CAS. Number	Result	Qual	RL	MDL	
Silver, Total	7440-22-4		U	0.803	0.201	
Barium, Total	7440-39-3	3.76 J		0.402	0.0803	MSL
Cadmium, Total	7440-43-9		U	0.161	0.0402	
Chromium, Total	7440-47-3	2.40 J		0.803	0.0964	MSL
Copper, Total	7440-50-8	0.496	J	1.61	0.402	
Antimony, Total	7440-36-0		U	1.61	0.402	
Zinc, Total	7440-66-6		U	1.61	0.402	

U Undetected; the analyte was analyzed for, but not detected.
J Estimated ; the analyte concentration was less than the low standard (LOQ)

Microbac

lew
3/10/09

18

Sample Number: L08120321-18
Client ID: MR08-IS129D-2-3-08D
Matrix: Soil
Workgroup Number: WG291050
Collect Date: 12/09/2008 15:00
Sample Tag: 01

PrePrep Method: NONE
Prep Method: 3051
Analytical Method: 6020
Analyst: JYH
Dilution: 1
Units: mg/kg

Instrument: ELAN-ICP
Prep Date: 12/15/2008 07:44
Cal Date: 12/19/2008 11:58
Run Date: 12/19/2008 17:35
File ID: EL.121908.173540
Percent Solid: 93.5

Analyte	CAS. Number	Result	Qual	RL	MDL
Arsenic, Total	7440-38-2	0.249	J	0.302	0.0756
Lead, Total	7439-92-1	1.45 J		0.403	0.101
Selenium, Total	7782-49-2	0.120	J	0.403	0.101

MSL

J Estimated ; the analyte concentration was less than the low standard (LOQ)

Microbac

lew
3/10/09

18

Sample Number: L08120321-18
Client ID: MR08-IS129D-2-3-08D
Matrix: Soil
Workgroup Number: WG290916
Collect Date: 12/09/2008 15:00
Sample Tag: 01

PrePrep Method: NONE
Prep Method: 7471A
Analytical Method: 7471A
Analyst: ADC
Dilution: 1
Units: mg/kg

Instrument: HYDRA
Prep Date: 12/15/2008 08:32
Cal Date: 12/18/2008 13:48
Run Date: 12/18/2008 14:44
File ID: HY.121808.144437
Percent Solid: 93.5

Analyte	CAS. Number	Result	Qual	RL	MDL
Mercury, Total	7439-97-6		U	0.107	0.0214

U Undetected; the analyte was analyzed for, but not detected.

Microbac

MW 3/10/09

19

Sample Number: L08120321-19
Client ID: MR08-SS128-08D
Matrix: Soil
Workgroup Number: WG290981
Collect Date: 12/09/2008 15:20
Sample Tag: 01

PrePrep Method: NONE
Prep Method: 3051
Analytical Method: 6010B
Analyst: KHR
Dilution: 1
Units: mg/kg

Instrument: IRIS-ICP
Prep Date: 12/17/2008 08:45
Cal Date: 12/19/2008 10:46
Run Date: 12/19/2008 19:14
File ID: IR.121908.191400
Percent Solid: 95.0

Analyte	CAS. Number	Result	Qual	RL	MDL	
Silver, Total	7440-22-4	0.449	J	0.795	0.199	
Barium, Total	7440-39-3	4.15 J		0.398	0.0795	MSL
Cadmium, Total	7440-43-9	0.432		0.159	0.0398	
Chromium, Total	7440-47-3	4.92 J		0.795	0.0954	MSL
Copper, Total	7440-50-8	1.23	J	1.59	0.398	
Antimony, Total	7440-36-0		U	1.59	0.398	
Zinc, Total	7440-66-6	10.3		1.59	0.398	

U Undetected; the analyte was analyzed for, but not detected.
J Estimated ; the analyte concentration was less than the low standard (LOQ)

Microbac

lew
3/10/09

19

Sample Number: L08120321-19
Client ID: MR08-SS128-08D
Matrix: Soil
Workgroup Number: WG291050
Collect Date: 12/09/2008 15:20
Sample Tag: 01

PrePrep Method: NONE
Prep Method: 3051
Analytical Method: 6020
Analyst: JYH
Dilution: 1
Units: mg/kg

Instrument: ELAN-ICP
Prep Date: 12/15/2008 07:44
Cal Date: 12/19/2008 11:58
Run Date: 12/19/2008 17:41
File ID: EL.121908.174123
Percent Solid: 95.0

Analyte	CAS. Number	Result	Qual	RL	MDL
Arsenic, Total	7440-38-2	6.49		0.313	0.0781
Lead, Total	7439-92-1	1.13 J		0.417	0.104
Selenium, Total	7782-49-2	0.301	J	0.417	0.104

MSL

J Estimated ; the analyte concentration was less than the low standard (LOQ)

Microbac

LEO
3/10/09

19

Sample Number: L08120321-19
Client ID: MR08-SS128-08D
Matrix: Soil
Workgroup Number: WG290916
Collect Date: 12/09/2008 15:20
Sample Tag: 01

PrePrep Method: NONE
Prep Method: 7471A
Analytical Method: 7471A
Analyst: ADC
Dilution: 1
Units: mg/kg

Instrument: HYDRA
Prep Date: 12/15/2008 08:32
Cal Date: 12/18/2008 13:48
Run Date: 12/18/2008 14:46
File ID: HY.121808.144620
Percent Solid: 95.0

Analyte	CAS. Number	Result	Qual	RL	MDL
Mercury, Total	7439-97-6		U	0.104	0.0208

U Undetected; the analyte was analyzed for, but not detected.

Microbac

lw
3/10/09

20

Sample Number: L08120321-20
Client ID: MR08-IS128-08D
Matrix: Soil
Workgroup Number: WG290981
Collect Date: 12/09/2008 15:40
Sample Tag: 01

PrePrep Method: NONE
Prep Method: 3051
Analytical Method: 6010B
Analyst: KHR
Dilution: 1
Units: mg/kg

Instrument: IRIS-ICP
Prep Date: 12/17/2008 08:45
Cal Date: 12/19/2008 10:46
Run Date: 12/19/2008 19:20
File ID: IR.121908.192000
Percent Solid: 92.0

Analyte	CAS. Number	Result	Qual	RL	MDL	
Silver, Total	7440-22-4		U	0.787	0.197	
Barium, Total	7440-39-3	3.05 J		0.394	0.0787	MSL
Cadmium, Total	7440-43-9		U	0.157	0.0394	
Chromium, Total	7440-47-3	2.73 J		0.787	0.0945	MSL
Copper, Total	7440-50-8		U	1.57	0.394	
Antimony, Total	7440-36-0		U	1.57	0.394	
Zinc, Total	7440-66-6		U	1.57	0.394	

U Undetected; the analyte was analyzed for, but not detected.

Microbac

PW 3/10/09

20

Sample Number: L08120321-20
Client ID: MR08-IS128-08D
Matrix: Soil
Workgroup Number: WG291050
Collect Date: 12/09/2008 15:40
Sample Tag: 01

PrePrep Method: NONE
Prep Method: 3051
Analytical Method: 6020
Analyst: JYH
Dilution: 1
Units: mg/kg

Instrument: ELAN-ICP
Prep Date: 12/15/2008 07:44
Cal Date: 12/19/2008 11:58
Run Date: 12/19/2008 17:47
File ID: EL.121908.174706
Percent Solid: 92.0

Analyte	CAS. Number	Result	Qual	RL	MDL
Arsenic, Total	7440-38-2	0.0980	J	0.306	0.0766
Lead, Total	7439-92-1	1.34 J		0.409	0.102
Selenium, Total	7782-49-2		U	0.409	0.102

MSL

U Undetected; the analyte was analyzed for, but not detected.
J Estimated ; the analyte concentration was less than the low standard (LOQ)

Microbac

Chew 3/10/09

20

Sample Number: L08120321-20
Client ID: MR08-IS128-08D
Matrix: Soil
Workgroup Number: WG290916
Collect Date: 12/09/2008 15:40
Sample Tag: 01

PrePrep Method: NONE
Prep Method: 7471A
Analytical Method: 7471A
Analyst: ADC
Dilution: 1
Units: mg/kg

Instrument: HYDRA
Prep Date: 12/15/2008 08:32
Cal Date: 12/18/2008 13:48
Run Date: 12/18/2008 14:48
File ID: HY.121808.144814
Percent Solid: 92.0

Analyte	CAS. Number	Result	Qual	RL	MDL
Mercury, Total	7439-97-6		U	0.102	0.0204

U Undetected; the analyte was analyzed for, but not detected.

Microbac

hw
3/10/09

21

Sample Number: L08120321-21
Client ID: MR08-EB01120908-SS
Matrix: Water
Workgroup Number: WG290638
Collect Date: 12/09/2008 09:30
Sample Tag: 01

PrePrep Method: NONE
Prep Method: 3005A
Analytical Method: 6010B
Analyst: SLP
Dilution: 1
Units: ug/L

Instrument: PE-ICP2
Prep Date: 12/12/2008 09:16
Cal Date: 12/17/2008 14:17
Run Date: 12/17/2008 21:43
File ID: P2.121708.214306

Analyte	CAS. Number	Result	Qual	RL	MDL
Barium, Total	7440-39-3		U	10.0	2.50
Cadmium, Total	7440-43-9		U	1.00	0.250
Chromium, Total	7440-47-3		U	10.0	2.50
Copper, Total	7440-50-8		U	20.0	5.00
Silver, Total	7440-22-4		U	6.00	2.00
Zinc, Total	7440-66-6		U	20.0	5.00

U Undetected; the analyte was analyzed for, but not detected.

Microbac®

LW 3/10/09

21

Sample Number: L08120321-21
Client ID: MR08-EB01120908-SS
Matrix: Water
Workgroup Number: WG290893
Collect Date: 12/09/2008 09:30
Sample Tag: 01

PrePrep Method: NONE
Prep Method: 3015
Analytical Method: 6020
Analyst: JYH
Dilution: 1
Units: ug/L

Instrument: ELAN-ICP
Prep Date: 12/15/2008 11:17
Cal Date: 12/18/2008 10:46
Run Date: 12/18/2008 16:09
File ID: EL.121808.160941

Analyte	CAS. Number	Result	Qual	RL	MDL
Arsenic, Total	7440-38-2		U	1.00	0.250
Lead, Total	7439-92-1		U	1.00	0.250
Antimony, Total	7440-36-0		U	1.00	0.250
Selenium, Total	7782-49-2		U	2.00	0.500

U Undetected; the analyte was analyzed for, but not detected.

Microbac®

lew 3/10/09

21

Sample Number: L08120321-21
Client ID: MR08-EB01120908-SS
Matrix: Water
Workgroup Number: WG290493
Collect Date: 12/09/2008 09:30
Sample Tag: 01

PrePrep Method: NONE
Prep Method: 7470A
Analytical Method: 7470A
Analyst: ADC
Dilution: 1
Units: ug/L

Instrument: HYDRA
Prep Date: 12/12/2008 09:34
Cal Date: 12/15/2008 10:06
Run Date: 12/15/2008 11:09
File ID: HY.121508.110958

Analyte	CAS. Number	Result	Qual	RL	MDL
Mercury	7439-97-6		U	0.400	0.100

U Undetected; the analyte was analyzed for, but not detected.

Microbac

MW
3/10/09

22

Sample Number: L08120321-22
Client ID: MR08-EB01120908-IS
Matrix: Water
Workgroup Number: WG290638
Collect Date: 12/09/2008 10:00
Sample Tag: 01

PrePrep Method: NONE
Prep Method: 3005A
Analytical Method: 6010B
Analyst: SLP
Dilution: 1
Units: ug/L

Instrument: PE-ICP2
Prep Date: 12/12/2008 09:16
Cal Date: 12/17/2008 14:17
Run Date: 12/17/2008 21:49
File ID: P2.121708.214927

Analyte	CAS. Number	Result	Qual	RL	MDL
Barium, Total	7440-39-3		U	10.0	2.50
Cadmium, Total	7440-43-9		U	1.00	0.250
Chromium, Total	7440-47-3		U	10.0	2.50
Copper, Total	7440-50-8		U	20.0	5.00
Silver, Total	7440-22-4		U	6.00	2.00
Zinc, Total	7440-66-6		U	20.0	5.00

U Undetected; the analyte was analyzed for, but not detected.

Microbac

kw
3/10/09

22

Sample Number: L08120321-22
Client ID: MR08-EB01120908-IS
Matrix: Water
Workgroup Number: WG290893
Collect Date: 12/09/2008 10:00
Sample Tag: 01

PrePrep Method: NONE
Prep Method: 3015
Analytical Method: 6020
Analyst: JYH
Dilution: 1
Units: ug/L

Instrument: ELAN-ICP
Prep Date: 12/15/2008 11:17
Cal Date: 12/18/2008 10:46
Run Date: 12/18/2008 16:15
File ID: EL.121808.161502

Analyte	CAS. Number	Result	Qual	RL	MDL
Arsenic, Total	7440-38-2		U	1.00	0.250
Lead, Total	7439-92-1		U	1.00	0.250
Antimony, Total	7440-36-0		U	1.00	0.250
Selenium, Total	7782-49-2		U	2.00	0.500

U Undetected; the analyte was analyzed for, but not detected.

Microbac

lew
3/10/09

22

Sample Number: L08120321-22
Client ID: MR08-EB01120908-IS
Matrix: Water
Workgroup Number: WG290493
Collect Date: 12/09/2008 10:00
Sample Tag: 01

PrePrep Method: NONE
Prep Method: 7470A
Analytical Method: 7470A
Analyst: ADC
Dilution: 1
Units: ug/L

Instrument: HYDRA
Prep Date: 12/12/2008 09:34
Cal Date: 12/15/2008 10:06
Run Date: 12/15/2008 11:11
File ID: HY.121508.111156

Analyte	CAS. Number	Result	Qual	RL	MDL
Mercury	7439-97-6		U	0.400	0.100

U Undetected; the analyte was analyzed for, but not detected.

Microbac

kw
3/10/09

ENVIRONMENTAL
Data Services, Inc.

EXPLOSIVES, PETN & NITROGLYCERIN

USEPA Region IV - Level IV Review

Site: MCB Camp Lejeune, TO-09 SDG #: L08120355

Client: CH2M HILL, Inc., Virginia Beach, Virginia Date: March 10, 2009

Laboratory: Microbac Laboratories, Inc., Marietta, Ohio Reviewer: Linda Sulkowski

EDS ID	Client Sample ID	Laboratory Sample ID	Matrix
1	MR08-SS098-08D	L08120355-01	Soil
2	MR08-IS098-3-4-08D	L08120355-02	Soil
3	MR08-SS121-08D	L08120355-03	Soil
4	MR08-IS121-2-3-08D	L08120355-04	Soil
5	MR08-SS124-08D	L08120355-05	Soil
6	MR08-IS124-2-3-08D	L08120355-06	Soil
7	MR08-SS099-08D	L08120355-07	Soil
8	MR08-SS099D-08D	L08120355-08	Soil
9	MR08-IS099-2-3-08D	L08120355-09	Soil
10	MR08-IS099D-2-3-08D	L08120355-10	Soil
11	MR08-SS100-08D	L08120355-11	Soil
12	MR08-IS100-2-3-08D	L08120355-12	Soil
13	MR08-SS101-0D	L08120355-13	Soil
14	MR08-IS101-2-3-08D	L08120355-14	Soil
15	MR08-EB01121008-SS	L08120355-15	Water

The USEPA "Contract Laboratory Program National Functional Guidelines for Organic Data Review," October 1999, and professional judgement were used in evaluating the data in this summary report.

Holding Times - All samples were extracted within 7 days for water samples, 14 days for soil samples and analyzed within 40 days.

Initial Calibration - The initial calibrations exhibited acceptable %RSD and/or correlation coefficient values.

Calibration Verification - The continuing calibrations exhibited acceptable %D values except the following.

CCAL Date	Compound	%D	Qualifier	Affected Samples
12/18/08	Tetryl	35.5%	J/UJ	15

Surrogates - All samples exhibited acceptable surrogate recoveries.

MS/MSD - A MS/MSD sample was not analyzed.

Laboratory Control Sample - The LCS samples exhibited acceptable %R values.

Method Blank - The method blanks were free of contamination.

Field and Equipment Blank - Field QC results are summarized below.

Blank ID	Compound	Conc. ug/L	Action Level ug/L	Qualifier	Affected Samples
MR08-EB01121008-SS	None - ND	-	-	-	-
MR08-FB01120608	None - ND	-	-	-	-

Field Duplicates - Field duplicate results are summarized below.

Compound	MR08-SS099-08D mg/kg	MR08-SS099D-08D mg/kg	RPD	Qualifier
None	ND	ND	-	-

Compound	MR08-IS099-2-3-08D mg/kg	MR08-IS099D-2-3-08D mg/kg	RPD	Qualifier
None	ND	ND	-	-

Compound Identification - Retention times were acceptable and no further action was taken.

Compound Quantitation - No discrepancies were identified.

Sample Number: L08120355-01
Client ID: MR08-SS098-08D
Matrix: Soil
Workgroup Number: WG291224
Collect Date: 12/10/2008 08:35
Sample Tag: 01

PrePrep Method: NONE
Prep Method: METHOD
Analytical Method: 8330MOD
Analyst: ECL
Dilution: 1
Units: mg/kg

Instrument: HPLC5
Prep Date: 12/19/2008 08:00
Cal Date: 12/16/2008 16:51
Run Date: 12/22/2008 15:14
File ID: 5L003449.F

Analyte	CAS. Number	Result	Qual	RL	MDL
1,3,5-Trinitrobenzene	99-35-4		U	0.294	0.0980
1,3-Dinitrobenzene	99-65-0		U	0.294	0.0980
2,4,6-Trinitrotoluene	118-96-7		U ~~Q~~	0.294	0.0980
2,4-Dinitrotoluene	121-14-2		U	0.294	0.0980
2,6-Dinitrotoluene	606-20-2		U	0.294	0.0980
2-Amino-4,6-dinitrotoluene	35572-78-2		U	0.294	0.0980
2-Nitrotoluene	88-72-2		U	0.294	0.0980
3-Nitrotoluene	99-08-1		U	0.294	0.0980
4-Nitrotoluene	99-99-0		U	0.294	0.0980
4-Amino-2,6-dinitrotoluene	19406-51-0		U	0.294	0.0980
HMX	2691-41-0		U	0.294	0.0980
Nitrobenzene	98-95-3		U	0.294	0.0980
RDX	121-82-4		U	0.294	0.0980
Tetryl	479-45-8		U ~~Q~~	0.294	0.0980
Nitroglycerin	55-63-0		U	0.294	0.0980

Surrogate	% Recovery	Lower	Upper	Qual
1,2-Dinitrobenzene	81.0	50	150	

U Undetected; the analyte was analyzed for, but not detected.
Q One or more quality control criteria failed. See narrative.

Microbac

14 MW 3/10/09

Sample Number: L08120355-01
Client ID: MR08-SS098-08D
Matrix: Soil
Workgroup Number: WG291224
Collect Date: 12/10/2008 08:35
Sample Tag: 02

PrePrep Method: NONE
Prep Method: METHOD
Analytical Method: 8330MOD
Analyst: ECL
Dilution: 1
Units: mg/kg

Instrument: HPLC5
Prep Date: 12/19/2008 08:00
Cal Date: 12/16/2008 16:51
Run Date: 12/29/2008 19:25
File ID: 5L003647.F

Analyte	CAS. Number	Result	Qual	RL	MDL
PETN	78-11-5		U	0.294	0.0980

U Undetected; the analyte was analyzed for, but not detected.

Microbac

15 MW 3/10/09

2

Sample Number: L08120355-02
Client ID: MR08-IS098-3-4-08D
Matrix: Soil
Workgroup Number: WG291224
Collect Date: 12/10/2008 08:50
Sample Tag: 01

PrePrep Method: NONE
Prep Method: METHOD
Analytical Method: 8330MOD
Analyst: ECL
Dilution: 1
Units: mg/kg

Instrument: HPLC5
Prep Date: 12/19/2008 08:00
Cal Date: 12/16/2008 16:51
Run Date: 12/22/2008 15:52
File ID: 5L003450.F

Analyte	CAS. Number	Result	Qual	RL	MDL
1,3,5-Trinitrobenzene	99-35-4		U	0.299	0.0996
1,3-Dinitrobenzene	99-65-0		U	0.299	0.0996
2,4,6-Trinitrotoluene	118-96-7		~~Q~~ U	0.299	0.0996
2,4-Dinitrotoluene	121-14-2		U	0.299	0.0996
2,6-Dinitrotoluene	606-20-2		U	0.299	0.0996
2-Amino-4,6-dinitrotoluene	35572-78-2		U	0.299	0.0996
2-Nitrotoluene	88-72-2		U	0.299	0.0996
3-Nitrotoluene	99-08-1		U	0.299	0.0996
4-Nitrotoluene	99-99-0		U	0.299	0.0996
4-Amino-2,6-dinitrotoluene	19406-51-0		U	0.299	0.0996
HMX	2691-41-0		U	0.299	0.0996
Nitrobenzene	98-95-3		U	0.299	0.0996
RDX	121-82-4		U	0.299	0.0996
Tetryl	479-45-8		~~Q~~ U	0.299	0.0996
Nitroglycerin	55-63-0		U	0.299	0.0996

Surrogate	% Recovery	Lower	Upper	Qual
1,2-Dinitrobenzene	89.2	50	150	

U Undetected; the analyte was analyzed for, but not detected.
Q One or more quality control criteria failed. See narrative.

Microbac

16 JW 3/10/09

2

Sample Number: L08120355-02
Client ID: MR08-IS098-3-4-08D
Matrix: Soil
Workgroup Number: WG291224
Collect Date: 12/10/2008 08:50
Sample Tag: 02

PrePrep Method: NONE
Prep Method: METHOD
Analytical Method: 8330MOD
Analyst: ECL
Dilution: 1
Units: mg/kg

Instrument: HPLC5
Prep Date: 12/19/2008 08:00
Cal Date: 12/16/2008 16:51
Run Date: 12/29/2008 19:38
File ID: 5L003648.F

Analyte	CAS. Number	Result	Qual	RL	MDL
PETN	78-11-5		U	0.299	0.0996

U Undetected; the analyte was analyzed for, but not detected.

Microbac

17 KW
3/10/09

3

Sample Number: L08120355-03
Client ID: MR08-SS121-08D
Matrix: Soil
Workgroup Number: WG291224
Collect Date: 12/10/2008 09:10
Sample Tag: 01

PrePrep Method: NONE
Prep Method: METHOD
Analytical Method: 8330MOD
Analyst: ECL
Dilution: 1
Units: mg/kg

Instrument: HPLC5
Prep Date: 12/19/2008 08:00
Cal Date: 12/16/2008 16:51
Run Date: 12/22/2008 16:30
File ID: 5L003451.F

Analyte	CAS. Number	Result	Qual	RL	MDL
1,3,5-Trinitrobenzene	99-35-4		U	0.297	0.0990
1,3-Dinitrobenzene	99-65-0		U	0.297	0.0990
2,4,6-Trinitrotoluene	118-96-7		U ~~Q~~	0.297	0.0990
2,4-Dinitrotoluene	121-14-2		U	0.297	0.0990
2,6-Dinitrotoluene	606-20-2		U	0.297	0.0990
2-Amino-4,6-dinitrotoluene	35572-78-2		U	0.297	0.0990
2-Nitrotoluene	88-72-2		U	0.297	0.0990
3-Nitrotoluene	99-08-1		U	0.297	0.0990
4-Nitrotoluene	99-99-0		U	0.297	0.0990
4-Amino-2,6-dinitrotoluene	19406-51-0		U	0.297	0.0990
HMX	2691-41-0		U	0.297	0.0990
Nitrobenzene	98-95-3		U	0.297	0.0990
RDX	121-82-4		U	0.297	0.0990
Tetryl	479-45-8		U ~~Q~~	0.297	0.0990
Nitroglycerin	55-63-0		U	0.297	0.0990

Surrogate	% Recovery	Lower	Upper	Qual
1,2-Dinitrobenzene	87.6	50	150	

U Undetected; the analyte was analyzed for, but not detected.
Q One or more quality control criteria failed. See narrative.

Microbac

19 MW
3/10/09

3

Sample Number: L08120355-03
Client ID: MR08-SS121-08D
Matrix: Soil
Workgroup Number: WG291224
Collect Date: 12/10/2008 09:10
Sample Tag: 02

PrePrep Method: NONE
Prep Method: METHOD
Analytical Method: 8330MOD
Analyst: ECL
Dilution: 1
Units: mg/kg

Instrument: HPLC5
Prep Date: 12/19/2008 08:00
Cal Date: 12/16/2008 16:51
Run Date: 12/29/2008 19:52
File ID: 5L003649.F

Analyte	CAS. Number	Result	Qual	RL	MDL
PETN	78-11-5		U	0.297	0.0990

U Undetected; the analyte was analyzed for, but not detected.

Microbac

18 lw 3/10/09

4

Sample Number: L08120355-04
Client ID: MR08-IS121-2-3-08D
Matrix: Soil
Workgroup Number: WG291224
Collect Date: 12/10/2008 10:15
Sample Tag: 01

PrePrep Method: NONE
Prep Method: METHOD
Analytical Method: 8330MOD
Analyst: ECL
Dilution: 1
Units: mg/kg

Instrument: HPLC5
Prep Date: 12/19/2008 08:00
Cal Date: 12/16/2008 16:51
Run Date: 12/22/2008 17:09
File ID: 5L003452.F

Analyte	CAS. Number	Result	Qual	RL	MDL
1,3,5-Trinitrobenzene	99-35-4		U	0.300	0.100
1,3-Dinitrobenzene	99-65-0		U	0.300	0.100
2,4,6-Trinitrotoluene	118-96-7	U	~~Q~~	0.300	0.100
2,4-Dinitrotoluene	121-14-2		U	0.300	0.100
2,6-Dinitrotoluene	606-20-2		U	0.300	0.100
2-Amino-4,6-dinitrotoluene	35572-78-2		U	0.300	0.100
2-Nitrotoluene	88-72-2		U	0.300	0.100
3-Nitrotoluene	99-08-1		U	0.300	0.100
4-Nitrotoluene	99-99-0		U	0.300	0.100
4-Amino-2,6-dinitrotoluene	19406-51-0		U	0.300	0.100
HMX	2691-41-0		U	0.300	0.100
Nitrobenzene	98-95-3		U	0.300	0.100
RDX	121-82-4		U	0.300	0.100
Tetryl	479-45-8	U	~~Q~~	0.300	0.100
Nitroglycerin	55-63-0		U	0.300	0.100

Surrogate	% Recovery	Lower	Upper	Qual
1,2-Dinitrobenzene	88.6	50	150	

U Undetected; the analyte was analyzed for, but not detected.
Q One or more quality control criteria failed. See narrative.

Microbac

21 lw
3/10/09

4

Sample Number:	L08120355-04	PrePrep Method:	NONE	Instrument:	HPLC5
Client ID:	MR08-IS121-2-3-08D	Prep Method:	METHOD	Prep Date:	12/19/2008 08:00
Matrix:	Soil	Analytical Method:	8330MOD	Cal Date:	12/16/2008 16:51
Workgroup Number:	WG291224	Analyst:	ECL	Run Date:	12/29/2008 20:05
Collect Date:	12/10/2008 10:15	Dilution:	1	File ID:	5L003650.F
Sample Tag:	02	Units:	mg/kg		

Analyte	CAS. Number	Result	Qual	RL	MDL
PETN	78-11-5		U	0.300	0.100

U Undetected; the analyte was analyzed for, but not detected.

Microbac

20 lew
3/10/09

5

Sample Number: L08120355-05
Client ID: MR08-SS124-08D
Matrix: Soil
Workgroup Number: WG291224
Collect Date: 12/10/2008 10:35
Sample Tag: 01

PrePrep Method: NONE
Prep Method: METHOD
Analytical Method: 8330MOD
Analyst: ECL
Dilution: 1
Units: mg/kg

Instrument: HPLC5
Prep Date: 12/19/2008 08:00
Cal Date: 12/16/2008 16:51
Run Date: 12/22/2008 17:47
File ID: 5L003453.F

Analyte	CAS. Number	Result	Qual	RL	MDL
1,3,5-Trinitrobenzene	99-35-4		U	0.298	0.0992
1,3-Dinitrobenzene	99-65-0		U	0.298	0.0992
2,4,6-Trinitrotoluene	118-96-7	U	~~Q~~	0.298	0.0992
2,4-Dinitrotoluene	121-14-2		U	0.298	0.0992
2,6-Dinitrotoluene	606-20-2		U	0.298	0.0992
2-Amino-4,6-dinitrotoluene	35572-78-2		U	0.298	0.0992
2-Nitrotoluene	88-72-2		U	0.298	0.0992
3-Nitrotoluene	99-08-1		U	0.298	0.0992
4-Nitrotoluene	99-99-0		U	0.298	0.0992
4-Amino-2,6-dinitrotoluene	19406-51-0		U	0.298	0.0992
HMX	2691-41-0		U	0.298	0.0992
Nitrobenzene	98-95-3		U	0.298	0.0992
RDX	121-82-4		U	0.298	0.0992
Tetryl	479-45-8	U	~~Q~~	0.298	0.0992
Nitroglycerin	55-63-0		U	0.298	0.0992

Surrogate	% Recovery	Lower	Upper	Qual
1,2-Dinitrobenzene	89.0	50	150	

U Undetected; the analyte was analyzed for, but not detected.
Q One or more quality control criteria failed. See narrative.

Microbac

22 LW 3/16/09

5

Sample Number: L08120355-05
Client ID: MR08-SS124-08D
Matrix: Soil
Workgroup Number: WG291224
Collect Date: 12/10/2008 10:35
Sample Tag: 02

PrePrep Method: NONE
Prep Method: METHOD
Analytical Method: 8330MOD
Analyst: ECL
Dilution: 1
Units: mg/kg

Instrument: HPLC5
Prep Date: 12/19/2008 08:00
Cal Date: 12/16/2008 16:51
Run Date: 12/29/2008 20:18
File ID: 5L003651.F

Analyte	CAS. Number	Result	Qual	RL	MDL
PETN	78-11-5		U	0.298	0.0992

U Undetected; the analyte was analyzed for, but not detected.

Microbac

23 PW 3/10/09

6

Sample Number: L08120355-06
Client ID: MR08-IS124-2-3-08D
Matrix: Soil
Workgroup Number: WG291224
Collect Date: 12/10/2008 10:50
Sample Tag: 01

PrePrep Method: NONE
Prep Method: METHOD
Analytical Method: 8330MOD
Analyst: ECL
Dilution: 1
Units: mg/kg

Instrument: HPLC5
Prep Date: 12/19/2008 08:00
Cal Date: 12/16/2008 16:51
Run Date: 12/22/2008 18:25
File ID: 5L003454.F

Analyte	CAS. Number	Result	Qual	RL	MDL
1,3,5-Trinitrobenzene	99-35-4		U	0.294	0.0978
1,3-Dinitrobenzene	99-65-0		U	0.294	0.0978
2,4,6-Trinitrotoluene	118-96-7		U ~~Q~~	0.294	0.0978
2,4-Dinitrotoluene	121-14-2		U	0.294	0.0978
2,6-Dinitrotoluene	606-20-2		U	0.294	0.0978
2-Amino-4,6-dinitrotoluene	35572-78-2		U	0.294	0.0978
2-Nitrotoluene	88-72-2		U	0.294	0.0978
3-Nitrotoluene	99-08-1		U	0.294	0.0978
4-Nitrotoluene	99-99-0		U	0.294	0.0978
4-Amino-2,6-dinitrotoluene	19406-51-0		U	0.294	0.0978
HMX	2691-41-0		U	0.294	0.0978
Nitrobenzene	98-95-3		U	0.294	0.0978
RDX	121-82-4		U	0.294	0.0978
Tetryl	479-45-8		U ~~Q~~	0.294	0.0978
Nitroglycerin	55-63-0		U	0.294	0.0978

Surrogate	% Recovery	Lower	Upper	Qual
1,2-Dinitrobenzene	91.8	50	150	

U Undetected; the analyte was analyzed for, but not detected.
Q One or more quality control criteria failed. See narrative.

Microbac

25 lew 3/10/09

6

Sample Number: L08120355-06
Client ID: MR08-IS124-2-3-08D
Matrix: Soil
Workgroup Number: WG291224
Collect Date: 12/10/2008 10:50
Sample Tag: 02

PrePrep Method: NONE
Prep Method: METHOD
Analytical Method: 8330MOD
Analyst: ECL
Dilution: 1
Units: mg/kg

Instrument: HPLC5
Prep Date: 12/19/2008 08:00
Cal Date: 12/16/2008 16:51
Run Date: 12/29/2008 20:31
File ID: 5L003652.F

Analyte	CAS. Number	Result	Qual	RL	MDL
PETN	78-11-5		U	0.294	0.0978

U Undetected; the analyte was analyzed for, but not detected.

Microbac

24 lw 3/10/09

7

Sample Number: L08120355-07
Client ID: MR08-SS099-08D
Matrix: Soil
Workgroup Number: WG291224
Collect Date: 12/10/2008 11:25
Sample Tag: 01

PrePrep Method: NONE
Prep Method: METHOD
Analytical Method: 8330MOD
Analyst: ECL
Dilution: 1
Units: mg/kg

Instrument: HPLC5
Prep Date: 12/19/2008 08:00
Cal Date: 12/16/2008 16:51
Run Date: 12/22/2008 19:03
File ID: 5L003455.F

Analyte	CAS. Number	Result	Qual	RL	MDL
1,3,5-Trinitrobenzene	99-35-4		U	0.292	0.0975
1,3-Dinitrobenzene	99-65-0		U	0.292	0.0975
2,4,6-Trinitrotoluene	118-96-7		U ~~Q~~	0.292	0.0975
2,4-Dinitrotoluene	121-14-2		U	0.292	0.0975
2,6-Dinitrotoluene	606-20-2		U	0.292	0.0975
2-Amino-4,6-dinitrotoluene	35572-78-2		U	0.292	0.0975
2-Nitrotoluene	88-72-2		U	0.292	0.0975
3-Nitrotoluene	99-08-1		U	0.292	0.0975
4-Nitrotoluene	99-99-0		U	0.292	0.0975
4-Amino-2,6-dinitrotoluene	19406-51-0		U	0.292	0.0975
HMX	2691-41-0		U	0.292	0.0975
Nitrobenzene	98-95-3		U	0.292	0.0975
RDX	121-82-4		U	0.292	0.0975
Tetryl	479-45-8		U ~~Q~~	0.292	0.0975
Nitroglycerin	55-63-0		U	0.292	0.0975

Surrogate	% Recovery	Lower	Upper	Qual
1,2-Dinitrobenzene	89.8	50	150	

U Undetected; the analyte was analyzed for, but not detected.
Q One or more quality control criteria failed. See narrative.

Microbac

27 lw 3/10/09

7

Sample Number: L08120355-07
Client ID: MR08-SS099-08D
Matrix: Soil
Workgroup Number: WG291224
Collect Date: 12/10/2008 11:25
Sample Tag: 02

PrePrep Method: NONE
Prep Method: METHOD
Analytical Method: 8330MOD
Analyst: ECL
Dilution: 1
Units: mg/kg

Instrument: HPLC5
Prep Date: 12/19/2008 08:00
Cal Date: 12/16/2008 16:51
Run Date: 12/29/2008 21:11
File ID: 5L003655.F

Analyte	CAS. Number	Result	Qual	RL	MDL
PETN	78-11-5		U	0.292	0.0975

U Undetected; the analyte was analyzed for, but not detected.

Microbac

hw
3/10/09

8

Sample Number: L08120355-08
Client ID: MR08-SS099D-08D
Matrix: Soil
Workgroup Number: WG291224
Collect Date: 12/10/2008 11:35
Sample Tag: 01

PrePrep Method: NONE
Prep Method: METHOD
Analytical Method: 8330MOD
Analyst: ECL
Dilution: 1
Units: mg/kg

Instrument: HPLC5
Prep Date: 12/19/2008 08:00
Cal Date: 12/16/2008 16:51
Run Date: 12/22/2008 20:58
File ID: 5L003458.F

Analyte	CAS. Number	Result	Qual	RL	MDL
1,3,5-Trinitrobenzene	99-35-4		U	0.300	0.100
1,3-Dinitrobenzene	99-65-0		U	0.300	0.100
2,4,6-Trinitrotoluene	118-96-7		U ~~Q~~	0.300	0.100
2,4-Dinitrotoluene	121-14-2		U	0.300	0.100
2,6-Dinitrotoluene	606-20-2		U	0.300	0.100
2-Amino-4,6-dinitrotoluene	35572-78-2		U	0.300	0.100
2-Nitrotoluene	88-72-2		U	0.300	0.100
3-Nitrotoluene	99-08-1		U	0.300	0.100
4-Nitrotoluene	99-99-0		U	0.300	0.100
4-Amino-2,6-dinitrotoluene	19406-51-0		U	0.300	0.100
HMX	2691-41-0		U	0.300	0.100
Nitrobenzene	98-95-3		U	0.300	0.100
RDX	121-82-4		U	0.300	0.100
Tetryl	479-45-8		U ~~Q~~	0.300	0.100
Nitroglycerin	55-63-0		U	0.300	0.100

Surrogate	% Recovery	Lower	Upper	Qual
1,2-Dinitrobenzene	89.3	50	150	

U Undetected; the analyte was analyzed for, but not detected.
Q One or more quality control criteria failed. See narrative.

Microbac

 JLW 3/10/09

8

Sample Number: L08120355-08
Client ID: MR08-SS099D-08D
Matrix: Soil
Workgroup Number: WG291224
Collect Date: 12/10/2008 11:35
Sample Tag: 02

PrePrep Method: NONE
Prep Method: METHOD
Analytical Method: 8330MOD
Analyst: ECL
Dilution: 1
Units: mg/kg

Instrument: HPLC5
Prep Date: 12/19/2008 08:00
Cal Date: 12/16/2008 16:51
Run Date: 12/29/2008 21:24
File ID: 5L003656.F

Analyte	CAS. Number	Result	Qual	RL	MDL
PETN	78-11-5		U	0.300	0.100

U Undetected; the analyte was analyzed for, but not detected.

Microbac

 lw 3/10/09

9

Sample Number: L08120355-09
Client ID: MR08-IS099-2-3-08D
Matrix: Soil
Workgroup Number: WG291224
Collect Date: 12/10/2008 12:00
Sample Tag: 01

PrePrep Method: NONE
Prep Method: METHOD
Analytical Method: 8330MOD
Analyst: ECL
Dilution: 1
Units: mg/kg

Instrument: HPLC5
Prep Date: 12/19/2008 08:00
Cal Date: 12/16/2008 16:51
Run Date: 12/22/2008 21:36
File ID: 5L003459.F

Analyte	CAS. Number	Result	Qual	RL	MDL
1,3,5-Trinitrobenzene	99-35-4		U	0.296	0.0987
1,3-Dinitrobenzene	99-65-0		U	0.296	0.0987
2,4,6-Trinitrotoluene	118-96-7		U ~~Q~~	0.296	0.0987
2,4-Dinitrotoluene	121-14-2		U	0.296	0.0987
2,6-Dinitrotoluene	606-20-2		U	0.296	0.0987
2-Amino-4,6-dinitrotoluene	35572-78-2		U	0.296	0.0987
2-Nitrotoluene	88-72-2		U	0.296	0.0987
3-Nitrotoluene	99-08-1		U	0.296	0.0987
4-Nitrotoluene	99-99-0		U	0.296	0.0987
4-Amino-2,6-dinitrotoluene	19406-51-0		U	0.296	0.0987
HMX	2691-41-0		U	0.296	0.0987
Nitrobenzene	98-95-3		U	0.296	0.0987
RDX	121-82-4		U	0.296	0.0987
Tetryl	479-45-8		U ~~Q~~	0.296	0.0987
Nitroglycerin	55-63-0		U	0.296	0.0987

Surrogate	% Recovery	Lower	Upper	Qual
1,2-Dinitrobenzene	90.3	50	150	

U Undetected; the analyte was analyzed for, but not detected.
Q One or more quality control criteria failed. See narrative.

Microbac

31 JLW 3/10/09

9

Sample Number: L08120355-09
Client ID: MR08-IS099-2-3-08D
Matrix: Soil
Workgroup Number: WG291224
Collect Date: 12/10/2008 12:00
Sample Tag: 02

PrePrep Method: NONE
Prep Method: METHOD
Analytical Method: 8330MOD
Analyst: ECL
Dilution: 1
Units: mg/kg

Instrument: HPLC5
Prep Date: 12/19/2008 08:00
Cal Date: 12/16/2008 16:51
Run Date: 12/29/2008 21:37
File ID: 5L003657.F

Analyte	CAS. Number	Result	Qual	RL	MDL
PETN	78-11-5		U	0.296	0.0987

U Undetected; the analyte was analyzed for, but not detected.

Microbac

30 MW 3/10/09

10

Sample Number: L08120355-10
Client ID: MR08-IS099D-2-3-08D
Matrix: Soil
Workgroup Number: WG291224
Collect Date: 12/10/2008 12:25
Sample Tag: 01

PrePrep Method: NONE
Prep Method: METHOD
Analytical Method: 8330MOD
Analyst: ECL
Dilution: 1
Units: mg/kg

Instrument: HPLC5
Prep Date: 12/19/2008 08:00
Cal Date: 12/16/2008 16:51
Run Date: 12/22/2008 22:14
File ID: 5L003460.F

Analyte	CAS. Number	Result	Qual	RL	MDL
1,3,5-Trinitrobenzene	99-35-4		U	0.295	0.0984
1,3-Dinitrobenzene	99-65-0		U	0.295	0.0984
2,4,6-Trinitrotoluene	118-96-7	U	~~Q~~	0.295	0.0984
2,4-Dinitrotoluene	121-14-2		U	0.295	0.0984
2,6-Dinitrotoluene	606-20-2		U	0.295	0.0984
2-Amino-4,6-dinitrotoluene	35572-78-2		U	0.295	0.0984
2-Nitrotoluene	88-72-2		U	0.295	0.0984
3-Nitrotoluene	99-08-1		U	0.295	0.0984
4-Nitrotoluene	99-99-0		U	0.295	0.0984
4-Amino-2,6-dinitrotoluene	19406-51-0		U	0.295	0.0984
HMX	2691-41-0		U	0.295	0.0984
Nitrobenzene	98-95-3		U	0.295	0.0984
RDX	121-82-4		U	0.295	0.0984
Tetryl	479-45-8	U	~~Q~~	0.295	0.0984
Nitroglycerin	55-63-0		U	0.295	0.0984

Surrogate	% Recovery	Lower	Upper	Qual
1,2-Dinitrobenzene	84.8	50	150	

U Undetected; the analyte was analyzed for, but not detected.
Q One or more quality control criteria failed. See narrative.

Microbac

33 LW 3/10/09

10

Sample Number: L08120355-10
Client ID: MR08-IS099D-2-3-08D
Matrix: Soil
Workgroup Number: WG291224
Collect Date: 12/10/2008 12:25
Sample Tag: 02

PrePrep Method: NONE
Prep Method: METHOD
Analytical Method: 8330MOD
Analyst: ECL
Dilution: 1
Units: mg/kg

Instrument: HPLC5
Prep Date: 12/19/2008 08:00
Cal Date: 12/16/2008 16:51
Run Date: 12/29/2008 21:50
File ID: 5L003658.F

Analyte	CAS. Number	Result	Qual	RL	MDL
PETN	78-11-5		U	0.295	0.0984

U Undetected; the analyte was analyzed for, but not detected.

Microbac

32 RW 3/10/09

11

Sample Number: L08120355-11
Client ID: MR08-SS100-08D
Matrix: Soil
Workgroup Number: WG291224
Collect Date: 12/10/2008 13:15
Sample Tag: 01

PrePrep Method: NONE
Prep Method: METHOD
Analytical Method: 8330MOD
Analyst: ECL
Dilution: 1
Units: mg/kg

Instrument: HPLC5
Prep Date: 12/19/2008 08:00
Cal Date: 12/16/2008 16:51
Run Date: 12/22/2008 22:52
File ID: 5L003461.F

Analyte	CAS. Number	Result	Qual	RL	MDL
1,3,5-Trinitrobenzene	99-35-4		U	0.295	0.0984
1,3-Dinitrobenzene	99-65-0		U	0.295	0.0984
2,4,6-Trinitrotoluene	118-96-7	U	~~Q~~	0.295	0.0984
2,4-Dinitrotoluene	121-14-2		U	0.295	0.0984
2,6-Dinitrotoluene	606-20-2		U	0.295	0.0984
2-Amino-4,6-dinitrotoluene	35572-78-2		U	0.295	0.0984
2-Nitrotoluene	88-72-2		U	0.295	0.0984
3-Nitrotoluene	99-08-1		U	0.295	0.0984
4-Nitrotoluene	99-99-0		U	0.295	0.0984
4-Amino-2,6-dinitrotoluene	19406-51-0		U	0.295	0.0984
HMX	2691-41-0		U	0.295	0.0984
Nitrobenzene	98-95-3		U	0.295	0.0984
RDX	121-82-4		U	0.295	0.0984
Tetryl	479-45-8	U	~~Q~~	0.295	0.0984
Nitroglycerin	55-63-0		U	0.295	0.0984

Surrogate	% Recovery	Lower	Upper	Qual
1,2-Dinitrobenzene	89.9	50	150	

U Undetected; the analyte was analyzed for, but not detected.
Q One or more quality control criteria failed. See narrative.

Microbac

35 MW 3/10/09

11

Sample Number:	L08120355-11	PrePrep Method:	NONE	Instrument:	HPLC5
Client ID:	MR08-SS100-08D	Prep Method:	METHOD	Prep Date:	12/19/2008 08:00
Matrix:	Soil	Analytical Method:	8330MOD	Cal Date:	12/16/2008 16:51
Workgroup Number:	WG291224	Analyst:	ECL	Run Date:	12/29/2008 22:03
Collect Date:	12/10/2008 13:15	Dilution:	1	File ID:	5L003659.F
Sample Tag:	02	Units:	mg/kg		

Analyte	CAS. Number	Result	Qual	RL	MDL
PETN	78-11-5		U	0.295	0.0984

U Undetected; the analyte was analyzed for, but not detected.

Microbac

34 JW 3/10/09

12

Sample Number: L08120355-12
Client ID: MR08-IS100-2-3-08D
Matrix: Soil
Workgroup Number: WG291224
Collect Date: 12/10/2008 13:40
Sample Tag: 01

PrePrep Method: NONE
Prep Method: METHOD
Analytical Method: 8330MOD
Analyst: ECL
Dilution: 1
Units: mg/kg

Instrument: HPLC5
Prep Date: 12/19/2008 08:00
Cal Date: 12/16/2008 16:51
Run Date: 12/22/2008 23:30
File ID: 5L003462.F

Analyte	CAS. Number	Result	Qual	RL	MDL
1,3,5-Trinitrobenzene	99-35-4		U	0.299	0.0997
1,3-Dinitrobenzene	99-65-0		U	0.299	0.0997
2,4,6-Trinitrotoluene	118-96-7		U ~~Q~~	0.299	0.0997
2,4-Dinitrotoluene	121-14-2		U	0.299	0.0997
2,6-Dinitrotoluene	606-20-2		U	0.299	0.0997
2-Amino-4,6-dinitrotoluene	35572-78-2		U	0.299	0.0997
2-Nitrotoluene	88-72-2		U	0.299	0.0997
3-Nitrotoluene	99-08-1		U	0.299	0.0997
4-Nitrotoluene	99-99-0		U	0.299	0.0997
4-Amino-2,6-dinitrotoluene	19406-51-0		U	0.299	0.0997
HMX	2691-41-0		U	0.299	0.0997
Nitrobenzene	98-95-3		U	0.299	0.0997
RDX	121-82-4		U	0.299	0.0997
Tetryl	479-45-8		U ~~Q~~	0.299	0.0997
Nitroglycerin	55-63-0		U	0.299	0.0997

Surrogate	% Recovery	Lower	Upper	Qual
1,2-Dinitrobenzene	90.9	50	150	

U Undetected; the analyte was analyzed for, but not detected.
Q One or more quality control criteria failed. See narrative.

Microbac

37 MW 3/10/09

12

Sample Number: L08120355-12
Client ID: MR08-IS100-2-3-08D
Matrix: Soil
Workgroup Number: WG291224
Collect Date: 12/10/2008 13:40
Sample Tag: 02

PrePrep Method: NONE
Prep Method: METHOD
Analytical Method: 8330MOD
Analyst: ECL
Dilution: 1
Units: mg/kg

Instrument: HPLC5
Prep Date: 12/19/2008 08:00
Cal Date: 12/16/2008 16:51
Run Date: 12/29/2008 22:16
File ID: 5L003660.F

Analyte	CAS. Number	Result	Qual	RL	MDL
PETN	78-11-5		U	0.299	0.0997

U Undetected; the analyte was analyzed for, but not detected.

Microbac

kw
5/10/09

13

Sample Number: L08120355-13
Client ID: MR08-SS101-08D
Matrix: Soil
Workgroup Number: WG291224
Collect Date: 12/10/2008 14:10
Sample Tag: 01

PrePrep Method: NONE
Prep Method: METHOD
Analytical Method: 8330MOD
Analyst: ECL
Dilution: 1
Units: mg/kg

Instrument: HPLC5
Prep Date: 12/19/2008 08:00
Cal Date: 12/16/2008 16:51
Run Date: 12/23/2008 00:08
File ID: 5L003463.F

Analyte	CAS. Number	Result	Qual	RL	MDL
1,3,5-Trinitrobenzene	99-35-4		U	0.299	0.0998
1,3-Dinitrobenzene	99-65-0		U	0.299	0.0998
2,4,6-Trinitrotoluene	118-96-7		U ~~Q~~	0.299	0.0998
2,4-Dinitrotoluene	121-14-2		U	0.299	0.0998
2,6-Dinitrotoluene	606-20-2		U	0.299	0.0998
2-Amino-4,6-dinitrotoluene	35572-78-2		U	0.299	0.0998
2-Nitrotoluene	88-72-2		U	0.299	0.0998
3-Nitrotoluene	99-08-1		U	0.299	0.0998
4-Nitrotoluene	99-99-0		U	0.299	0.0998
4-Amino-2,6-dinitrotoluene	19406-51-0		U	0.299	0.0998
HMX	2691-41-0		U	0.299	0.0998
Nitrobenzene	98-95-3		U	0.299	0.0998
RDX	121-82-4		U	0.299	0.0998
Tetryl	479-45-8		U ~~Q~~	0.299	0.0998
Nitroglycerin	55-63-0		U	0.299	0.0998

Surrogate	% Recovery	Lower	Upper	Qual
1,2-Dinitrobenzene	91.5	50	150	

U Undetected; the analyte was analyzed for, but not detected.
Q One or more quality control criteria failed. See narrative.

Microbac

39 LW 3/10/09

13

Sample Number: L08120355-13
Client ID: MR08-SS101-08D
Matrix: Soil
Workgroup Number: WG291224
Collect Date: 12/10/2008 14:10
Sample Tag: 02

PrePrep Method: NONE
Prep Method: METHOD
Analytical Method: 8330MOD
Analyst: ECL
Dilution: 1
Units: mg/kg

Instrument: HPLC5
Prep Date: 12/19/2008 08:00
Cal Date: 12/16/2008 16:51
Run Date: 12/29/2008 22:30
File ID: 5L003661.F

Analyte	CAS. Number	Result	Qual	RL	MDL
PETN	78-11-5		U	0.299	0.0998

U Undetected; the analyte was analyzed for, but not detected.

Microbac

38 MW 3/10/09

14

Sample Number: L08120355-14
Client ID: MR08-IS101-2-3-08D
Matrix: Soil
Workgroup Number: WG291224
Collect Date: 12/10/2008 14:30
Sample Tag: 01

PrePrep Method: NONE
Prep Method: METHOD
Analytical Method: 8330MOD
Analyst: ECL
Dilution: 1
Units: mg/kg

Instrument: HPLC5
Prep Date: 12/19/2008 08:00
Cal Date: 12/16/2008 16:51
Run Date: 12/23/2008 00:47
File ID: 5L003464.F

Analyte	CAS. Number	Result	Qual	RL	MDL
1,3,5-Trinitrobenzene	99-35-4		U	0.299	0.0998
1,3-Dinitrobenzene	99-65-0		U	0.299	0.0998
2,4,6-Trinitrotoluene	118-96-7		U ~~Q~~	0.299	0.0998
2,4-Dinitrotoluene	121-14-2		U	0.299	0.0998
2,6-Dinitrotoluene	606-20-2		U	0.299	0.0998
2-Amino-4,6-dinitrotoluene	35572-78-2		U	0.299	0.0998
2-Nitrotoluene	88-72-2		U	0.299	0.0998
3-Nitrotoluene	99-08-1		U	0.299	0.0998
4-Nitrotoluene	99-99-0		U	0.299	0.0998
4-Amino-2,6-dinitrotoluene	19406-51-0		U	0.299	0.0998
HMX	2691-41-0		U	0.299	0.0998
Nitrobenzene	98-95-3		U	0.299	0.0998
RDX	121-82-4		U	0.299	0.0998
Tetryl	479-45-8		U ~~Q~~	0.299	0.0998
Nitroglycerin	55-63-0		U	0.299	0.0998

Surrogate	% Recovery	Lower	Upper	Qual
1,2-Dinitrobenzene	86.6	50	150	

U Undetected; the analyte was analyzed for, but not detected.
Q One or more quality control criteria failed. See narrative.

Microbac

41 MW 3/10/09

14

Sample Number: L08120355-14
Client ID: MR08-IS101-2-3-08D
Matrix: Soil
Workgroup Number: WG291224
Collect Date: 12/10/2008 14:30
Sample Tag: 02

PrePrep Method: NONE
Prep Method: METHOD
Analytical Method: 8330MOD
Analyst: ECL
Dilution: 1
Units: mg/kg

Instrument: HPLC5
Prep Date: 12/19/2008 08:00
Cal Date: 12/16/2008 16:51
Run Date: 12/29/2008 22:43
File ID: 5L003662.F

Analyte	CAS. Number	Result	Qual	RL	MDL
PETN	78-11-5		U	0.299	0.0998

U Undetected; the analyte was analyzed for, but not detected.

Microbac

40 llw 3/10/09

15

Sample Number: L08120355-15
Client ID: MR08-EB01121008-SS
Matrix: Water
Workgroup Number: WG290758
Collect Date: 12/10/2008 09:00
Sample Tag: 01

PrePrep Method: NONE
Prep Method: 3535
Analytical Method: 8330MOD
Analyst: ECL
Dilution: 1
Units: ug/L

Instrument: HPLC5
Prep Date: 12/12/2008 08:00
Cal Date: 12/16/2008 16:51
Run Date: 12/18/2008 00:50
File ID: 5L003353.F

Analyte	CAS. Number	Result	Qual	RL	MDL
1,3,5-Trinitrobenzene	99-35-4		U	1.00	0.250
1,3-Dinitrobenzene	99-65-0		U	1.00	0.250
2,4,6-Trinitrotoluene	118-96-7	U	~~Q~~	1.00	0.250
2,4-Dinitrotoluene	121-14-2		U	1.00	0.250
2,6-Dinitrotoluene	606-20-2		U	1.00	0.250
2-Amino-4,6-dinitrotoluene	35572-78-2		U	1.00	0.250
2-Nitrotoluene	88-72-2		U	1.00	0.250
3-Nitrotoluene	99-08-1		U	1.00	0.250
4-Nitrotoluene	99-99-0		U	1.00	0.250
4-Amino-2,6-dinitrotoluene	19406-51-0		U	1.00	0.250
HMX	2691-41-0		U	1.00	0.250
Nitrobenzene	98-95-3		U	1.00	0.250
RDX	121-82-4		U	1.00	0.250
Tetryl	479-45-8	U5	~~Q~~	1.00	0.250
Nitroglycerin	55-63-0		U	1.00	0.250

CCH

Surrogate	% Recovery	Lower	Upper	Qual
1,2-Dinitrobenzene	91.3	50	150	

U Undetected; the analyte was analyzed for, but not detected.
Q One or more quality control criteria failed. See narrative.

Microbac

42 MW 3/10/09

15

Sample Number: L08120355-15
Client ID: MR08-EB01121008-SS
Matrix: Water
Workgroup Number: WG290758
Collect Date: 12/10/2008 09:00
Sample Tag: 02

PrePrep Method: NONE
Prep Method: 3535
Analytical Method: 8330MOD
Analyst: ECL
Dilution: 1
Units: ug/L

Instrument: HPLC5
Prep Date: 12/12/2008 08:00
Cal Date: 12/16/2008 16:51
Run Date: 12/24/2008 17:15
File ID: 5L003541.F

Analyte	CAS. Number	Result	Qual	RL	MDL
PETN	78-11-5		U	1.00	0.250

U Undetected; the analyte was analyzed for, but not detected.

Microbac

lew 3/10/09

ENVIRONMENTAL
Data Services, Inc.

METALS

USEPA Region IV - Level IV Review

Site: MCB Camp Lejeune, TO-09 SDG #: L08120355

Client: CH2M HILL, Inc., Virginia Beach, Virginia Date: March 11, 2009

Laboratory: Microbac Laboratories, Inc., Marietta, Ohio Reviewer: Nancy Weaver

EDS ID	Client Sample ID	Laboratory Sample ID	Matrix
1	MR08-SS098-08D	L08120355-01	Soil
2	MR08-IS098-3-4-08D	L08120355-02	Soil
3	MR08-SS121-08D	L08120355-03	Soil
4	MR08-IS121-2-3-08D	L08120355-04	Soil
5	MR08-SS124-08D	L08120355-05	Soil
6	MR08-SS124-2-3-08D	L08120355-06	Soil
7	MR08-SS099-08D	L08120355-07	Soil
8	MR08-SS099D-08D	L08120355-08	Soil
9	MR08-IS099-2-3-08D	L08120355-09	Soil
10	MR08-IS099D-2-3-08D	L08120355-10	Soil
11	MR08-SS100-08D	L08120355-11	Soil
12	MR08-IS100-2-3-08D	L08120355-12	Soil
13	MR08-SS101-08D	L08120355-13	Soil
14	MR08-IS101-2-3-08D	L08120355-14	Soil
15	MR08-EB01121008-SS	L08120355-15	Water

The USEPA "Contract Laboratory Program National Functional Guidelines for Inorganic Data Review," October 2004, and professional judgement were used in evaluating the data in this summary report.

Holding Times - All samples were prepared and analyzed within 28 days for mercury and 180 days for all other metals.

Calibration - The ICV and CCV %R values were acceptable.

Method and Calibration Blanks - The method blanks were free of contamination.

Field and Equipment Blank - Field QC results are summarized below.

Blank ID	Compound	Conc. ug/L	Action Level ug/L	Qualifier	Affected Samples
MR08-EB01121008-SS	None - ND	-	-	-	-
MR08-FB01120608	None - ND	-	-	-	-

ICP Interference Check Sample - All %R values were acceptable.

MS/MSD - The MS/MSD sample exhibited acceptable %R and RPD values except the following.

MS/MSD Sample ID	Compound	MS/MSD %R/RPD	Qualifier	Affected Samples
Reference (WG290714)	Barium	135%/Ok/21.4%	J/UJ	1-7
	Chromium	167%/130%/Ok	J	1-7
Reference (WG291050)	Lead	Ok/52.2%/Ok	J/UJ	1-12
Reference (WG291051)	Selenium	70.7%/73.7%/Ok	J/UJ	13-14

LCS - The LCS samples exhibited acceptable %R values.

ICP Serial Dilution - The ICP serial dilution sample exhibited acceptable %D values.

Field Duplicates - Field duplicate results are summarized below.

Compound	MR08-SS099-08D mg/kg	MR08-SS099D-08D mg/kg	RPD	Qualifier
Silver	0.785 U	0.411	NC	None
Barium	4.43	7.54	52%	None
Cadmium	0.157 U	0.227	NC	None
Chromium	3.99	6.65	50%	None
Copper	0.825	1.49	57%	None
Antimony	1.13	0.958	16%	None
Zinc	3.20	8.44	90%	None
Arsenic	0.175	4.67	186%	None
Lead	2.47	21.4	159%	None - already qualified
Selenium	0.131	0.251	63%	None

Compound	MR08-IS099-2-3-08D mg/kg	MR08-IS099D-2-3-08D mg/kg	RPD	Qualifier
Barium	8.48	11.8	33%	None
Chromium	5.63	6.06	7%	None
Zinc	0.781	0.831	6%	None
Arsenic	0.391	0.417	6%	None
Lead	2.68	2.98	11%	None

Compound	MR08-IS099-2-3-08D mg/kg	MR08-IS099D-2-3-08D mg/kg	RPD	Qualifier
Selenium	0.448 U	0.124	NC	None

Compound Quantitation - No discrepancies were identified.

Report Number: L08120355

Report Date : January 13, 2009

Sample Number:	L08120355-01	PrePrep Method:	NONE	Instrument:	IRIS-ICP
Client ID:	MR08-SS098-08D	Prep Method:	3051	Prep Date:	12/15/2008 12:29
Matrix:	Soil	Analytical Method:	6010B	Cal Date:	12/17/2008 10:06
Workgroup Number:	WG290714	Analyst:	KHR	Run Date:	12/17/2008 13:34
Collect Date:	12/10/2008 08:35	Dilution:	1	File ID:	IR.121708.133400
Sample Tag:	01	Units:	mg/kg	Percent Solid:	89.5

Analyte	CAS. Number	Result	Qual	RL	MDL	
Silver, Total	7440-22-4		U	0.833	0.208	
Barium, Total	7440-39-3	16.3 J		0.416	0.0833	MSH
Cadmium, Total	7440-43-9		U	0.167	0.0416	
Chromium, Total	7440-47-3	5.56 J		0.833	0.0999	MSH
Copper, Total	7440-50-8		U	1.67	0.416	
Antimony, Total	7440-36-0		U	1.67	0.416	
Zinc, Total	7440-66-6	1.14	J	1.67	0.416	

U Undetected; the analyte was analyzed for, but not detected.
J Estimated ; the analyte concentration was less than the low standard (LOQ)

Microbac

276 lw 3/11/09

Report Number: L08120355

Report Date : January 13, 2009

Sample Number:	L08120355-01	PrePrep Method:	NONE	Instrument:	ELAN-ICP
Client ID:	MR08-SS098-08D	Prep Method:	3051	Prep Date:	12/15/2008 07:44
Matrix:	Soil	Analytical Method:	6020	Cal Date:	12/19/2008 11:58
Workgroup Number:	WG291050	Analyst:	JYH	Run Date:	12/19/2008 17:52
Collect Date:	12/10/2008 08:35	Dilution:	1	File ID:	EL.121908.175250
Sample Tag:	01	Units:	mg/kg	Percent Solid:	89.5

Analyte	CAS. Number	Result	Qual	RL	MDL
Arsenic, Total	7440-38-2	0.741		0.334	0.0834
Lead, Total	7439-92-1	3.57 J		0.445	0.111
Selenium, Total	7782-49-2	0.132	J	0.445	0.111

MSL

J Estimated ; the analyte concentration was less than the low standard (LOQ)

Microbac

1243 3/11/09

Report Number: L08120355

Report Date : January 13, 2009

Sample Number:	L08120355-01	PrePrep Method:	NONE	Instrument:	HYDRA
Client ID:	MR08-SS098-08D	Prep Method:	7471A	Prep Date:	12/12/2008 13:49
Matrix:	Soil	Analytical Method:	7471A	Cal Date:	12/16/2008 10:16
Workgroup Number:	WG290529	Analyst:	ADC	Run Date:	12/16/2008 13:10
Collect Date:	12/10/2008 08:35	Dilution:	1	File ID:	HY.121608.131010
Sample Tag:	01	Units:	mg/kg	Percent Solid:	89.5

Analyte	CAS. Number	Result	Qual	RL	MDL
Mercury, Total	7439-97-6		U	0.106	0.0212

U Undetected; the analyte was analyzed for, but not detected.

Microbac

LW
2445 3/11/09

2

Sample Number: L08120355-02
Client ID: MR08-IS098-3-4-08D
Matrix: Soil
Workgroup Number: WG290714
Collect Date: 12/10/2008 08:50
Sample Tag: 01

PrePrep Method: NONE
Prep Method: 3051
Analytical Method: 6010B
Analyst: KHR
Dilution: 1
Units: mg/kg

Instrument: IRIS-ICP
Prep Date: 12/15/2008 12:29
Cal Date: 12/17/2008 10:06
Run Date: 12/17/2008 13:40
File ID: IR.121708.134000
Percent Solid: 90.2

Analyte	CAS. Number	Result	Qual	RL	MDL	
Silver, Total	7440-22-4		U	0.783	0.196	
Barium, Total	7440-39-3	5.69 J		0.392	0.0783	MSH
Cadmium, Total	7440-43-9		U	0.157	0.0392	
Chromium, Total	7440-47-3	6.98 J		0.783	0.0940	MSH
Copper, Total	7440-50-8	0.449	J	1.57	0.392	
Antimony, Total	7440-36-0		U	1.57	0.392	
Zinc, Total	7440-66-6	1.24	J	1.57	0.392	

U Undetected; the analyte was analyzed for, but not detected.
J Estimated ; the analyte concentration was less than the low standard (LOQ)

Microbac

LW
2773 1/1/09

2

Sample Number: L08120355-02
Client ID: MR08-IS098-3-4-08D
Matrix: Soil
Workgroup Number: WG291050
Collect Date: 12/10/2008 08:50
Sample Tag: 01

PrePrep Method: NONE
Prep Method: 3051
Analytical Method: 6020
Analyst: JYH
Dilution: 1
Units: mg/kg

Instrument: ELAN-ICP
Prep Date: 12/15/2008 07:44
Cal Date: 12/19/2008 11:58
Run Date: 12/19/2008 17:58
File ID: EL.121908.175834
Percent Solid: 90.2

Analyte	CAS. Number	Result	Qual	RL	MDL
Arsenic, Total	7440-38-2	0.431		0.330	0.0825
Lead, Total	7439-92-1	1.80 J		0.440	0.110
Selenium, Total	7782-49-2	0.154	J	0.440	0.110

MSL

J Estimated ; the analyte concentration was less than the low standard (LOQ)

Microbac

kw 3/11/09

1244

2

Sample Number: L08120355-02
Client ID: MR08-IS098-3-4-08D
Matrix: Soil
Workgroup Number: WG290529
Collect Date: 12/10/2008 08:50
Sample Tag: 01

PrePrep Method: NONE
Prep Method: 7471A
Analytical Method: 7471A
Analyst: ADC
Dilution: 1
Units: mg/kg

Instrument: HYDRA
Prep Date: 12/12/2008 13:49
Cal Date: 12/16/2008 10:16
Run Date: 12/16/2008 13:12
File ID: HY.121608.131202
Percent Solid: 90.2

Analyte	CAS. Number	Result	Qual	RL	MDL
Mercury, Total	7439-97-6	0.0292	J	0.109	0.0218

J Estimated ; the analyte concentration was less than the low standard (LOQ)

Microbac

2446 JLW 3/11/09

3

Sample Number: L08120355-03
Client ID: MR08-SS121-08D
Matrix: Soil
Workgroup Number: WG290714
Collect Date: 12/10/2008 09:10
Sample Tag: 01

PrePrep Method: NONE
Prep Method: 3051
Analytical Method: 6010B
Analyst: KHR
Dilution: 1
Units: mg/kg

Instrument: IRIS-ICP
Prep Date: 12/15/2008 12:30
Cal Date: 12/17/2008 10:06
Run Date: 12/17/2008 13:46
File ID: IR.121708.134600
Percent Solid: 93.2

Analyte	CAS. Number	Result	Qual	RL	MDL	
Silver, Total	7440-22-4		U	0.821	0.205	
Barium, Total	7440-39-3	15.2 J		0.411	0.0821	MSH
Cadmium, Total	7440-43-9	0.428		0.164	0.0411	
Chromium, Total	7440-47-3	10.8 J		0.821	0.0986	MSH
Copper, Total	7440-50-8	3.52		1.64	0.411	
Antimony, Total	7440-36-0	3.57		1.64	0.411	
Zinc, Total	7440-66-6	26.1		1.64	0.411	

U Undetected; the analyte was analyzed for, but not detected.

Microbac

MW 3/11/09

3

Sample Number: L08120355-03
Client ID: MR08-SS121-08D
Matrix: Soil
Workgroup Number: WG291050
Collect Date: 12/10/2008 09:10
Sample Tag: 01

PrePrep Method: NONE
Prep Method: 3051
Analytical Method: 6020
Analyst: JYH
Dilution: 1
Units: mg/kg

Instrument: ELAN-ICP
Prep Date: 12/15/2008 07:44
Cal Date: 12/19/2008 11:58
Run Date: 12/19/2008 18:04
File ID: EL.121908.180419
Percent Solid: 93.2

Analyte	CAS. Number	Result	Qual	RL	MDL
Arsenic, Total	7440-38-2	1.14		0.321	0.0803
Selenium, Total	7782-49-2	0.545		0.428	0.107

Microbac

lew 3/4/09

1245

3

Sample Number: L08120355-03
Client ID: MR08-SS121-08D
Matrix: Soil
Workgroup Number: WG291050
Collect Date: 12/10/2008 09:10
Sample Tag: DL01

PrePrep Method: NONE
Prep Method: 3051
Analytical Method: 6020
Analyst: JYH
Dilution: 10
Units: mg/kg

Instrument: ELAN-ICP
Prep Date: 12/15/2008 07:44
Cal Date: 12/21/2008 12:13
Run Date: 12/21/2008 15:55
File ID: EL.122108.155551
Percent Solid: 93.2

Analyte	CAS. Number	Result	Qual	RL	MDL
Lead, Total	7439-92-1	45.3 J		4.28	1.07

MSL

Microbac

QW 3/4/09

3

Sample Number: L08120355-03
Client ID: MR08-SS121-08D
Matrix: Soil
Workgroup Number: WG290529
Collect Date: 12/10/2008 09:10
Sample Tag: 01

PrePrep Method: NONE
Prep Method: 7471A
Analytical Method: 7471A
Analyst: ADC
Dilution: 1
Units: mg/kg

Instrument: HYDRA
Prep Date: 12/12/2008 13:49
Cal Date: 12/16/2008 10:16
Run Date: 12/16/2008 13:15
File ID: HY.121608.131538
Percent Solid: 93.2

Analyte	CAS. Number	Result	Qual	RL	MDL
Mercury, Total	7439-97-6	0.0220	J	0.107	0.0215

J Estimated ; the analyte concentration was less than the low standard (LOQ)

Microbac

2447 DEW 3/11/09

4

Sample Number: L08120355-04
Client ID: MR08-IS121-2-3-08D
Matrix: Soil
Workgroup Number: WG290714
Collect Date: 12/10/2008 10:15
Sample Tag: 01

PrePrep Method: NONE
Prep Method: 3051
Analytical Method: 6010B
Analyst: KHR
Dilution: 1
Units: mg/kg

Instrument: IRIS-ICP
Prep Date: 12/15/2008 12:32
Cal Date: 12/17/2008 10:06
Run Date: 12/17/2008 13:52
File ID: IR.121708.135200
Percent Solid: 86.1

Analyte	CAS. Number	Result	Qual	RL	MDL	
Silver, Total	7440-22-4		U	0.873	0.218	
Barium, Total	7440-39-3	8.53 J		0.436	0.0873	MSH
Cadmium, Total	7440-43-9		U	0.175	0.0436	
Chromium, Total	7440-47-3	9.48 J		0.873	0.105	MSH
Copper, Total	7440-50-8	0.575	J	1.75	0.436	
Antimony, Total	7440-36-0		U	1.75	0.436	
Zinc, Total	7440-66-6	1.83		1.75	0.436	

U Undetected; the analyte was analyzed for, but not detected.
J Estimated ; the analyte concentration was less than the low standard (LOQ)

Microbac

lew 3/11/09

279

4

Sample Number: L08120355-04
Client ID: MR08-IS121-2-3-08D
Matrix: Soil
Workgroup Number: WG291050
Collect Date: 12/10/2008 10:15
Sample Tag: 01

PrePrep Method: NONE
Prep Method: 3051
Analytical Method: 6020
Analyst: JYH
Dilution: 1
Units: mg/kg

Instrument: ELAN-ICP
Prep Date: 12/15/2008 07:44
Cal Date: 12/19/2008 11:58
Run Date: 12/19/2008 18:10
File ID: EL.121908.181003
Percent Solid: 86.1

Analyte	CAS. Number	Result	Qual	RL	MDL
Arsenic, Total	7440-38-2	0.299	J	0.333	0.0833
Lead, Total	7439-92-1	2.58 J		0.444	0.111
Selenium, Total	7782-49-2		U	0.444	0.111

MSL

U Undetected; the analyte was analyzed for, but not detected.
J Estimated ; the analyte concentration was less than the low standard (LOQ)

Microbac

1247 MW 3/4/09

4

Sample Number: L08120355-04
Client ID: MR08-IS121-2-3-08D
Matrix: Soil
Workgroup Number: WG290529
Collect Date: 12/10/2008 10:15
Sample Tag: 01

PrePrep Method: NONE
Prep Method: 7471A
Analytical Method: 7471A
Analyst: ADC
Dilution: 1
Units: mg/kg

Instrument: HYDRA
Prep Date: 12/12/2008 13:49
Cal Date: 12/16/2008 10:16
Run Date: 12/16/2008 13:21
File ID: HY.121608.132110
Percent Solid: 86.1

Analyte	CAS. Number	Result	Qual	RL	MDL
Mercury, Total	7439-97-6		U	0.109	0.0218

U Undetected; the analyte was analyzed for, but not detected.

Microbac

2448 MW 3/11/09

5

Sample Number: L08120355-05
Client ID: MR08-SS124-08D
Matrix: Soil
Workgroup Number: WG290714
Collect Date: 12/10/2008 10:35
Sample Tag: 01

PrePrep Method: NONE
Prep Method: 3051
Analytical Method: 6010B
Analyst: KHR
Dilution: 1
Units: mg/kg

Instrument: IRIS-ICP
Prep Date: 12/15/2008 12:32
Cal Date: 12/17/2008 10:06
Run Date: 12/17/2008 13:58
File ID: IR.121708.135800
Percent Solid: 93.6

Analyte	CAS. Number	Result	Qual	RL	MDL	
Silver, Total	7440-22-4	0.372	J	0.817	0.204	
Barium, Total	7440-39-3	8.15 J		0.409	0.0817	MSH
Cadmium, Total	7440-43-9	0.353		0.163	0.0409	
Chromium, Total	7440-47-3	6.34 J		0.817	0.0981	MSH
Copper, Total	7440-50-8	1.89		1.63	0.409	
Antimony, Total	7440-36-0	1.26	J	1.63	0.409	
Zinc, Total	7440-66-6	12.0		1.63	0.409	

J Estimated ; the analyte concentration was less than the low standard (LOQ)

Microbac

lew
280 3/4/09

5

Sample Number: L08120355-05
Client ID: MR08-SS124-08D
Matrix: Soil
Workgroup Number: WG291050
Collect Date: 12/10/2008 10:35
Sample Tag: 01

PrePrep Method: NONE
Prep Method: 3051
Analytical Method: 6020
Analyst: JYH
Dilution: 1
Units: mg/kg

Instrument: ELAN-ICP
Prep Date: 12/15/2008 07:44
Cal Date: 12/19/2008 11:58
Run Date: 12/19/2008 18:15
File ID: EL.121908.181547
Percent Solid: 93.6

Analyte	CAS. Number	Result	Qual	RL	MDL
Arsenic, Total	7440-38-2	1.93		0.317	0.0793
Lead, Total	7439-92-1	22.3 J		0.423	0.106
Selenium, Total	7782-49-2	0.395	J	0.423	0.106

MSL

J Estimated ; the analyte concentration was less than the low standard (LOQ)

Microbac

1248

KW 3/11/09

5

Sample Number: L08120355-05
Client ID: MR08-SS124-08D
Matrix: Soil
Workgroup Number: WG290529
Collect Date: 12/10/2008 10:35
Sample Tag: 01

PrePrep Method: NONE
Prep Method: 7471A
Analytical Method: 7471A
Analyst: ADC
Dilution: 1
Units: mg/kg

Instrument: HYDRA
Prep Date: 12/12/2008 13:49
Cal Date: 12/16/2008 10:16
Run Date: 12/16/2008 13:23
File ID: HY.121608.132312
Percent Solid: 93.6

Analyte	CAS. Number	Result	Qual	RL	MDL
Mercury, Total	7439-97-6		U	0.105	0.0209

U Undetected; the analyte was analyzed for, but not detected.

Microbac

lew 3/11/09

2449

6

Sample Number: L08120355-06
Client ID: MR08-IS124-2-3-08D
Matrix: Soil
Workgroup Number: WG290714
Collect Date: 12/10/2008 10:50
Sample Tag: 01

PrePrep Method: NONE
Prep Method: 3051
Analytical Method: 6010B
Analyst: KHR
Dilution: 1
Units: mg/kg

Instrument: IRIS-ICP
Prep Date: 12/15/2008 12:33
Cal Date: 12/17/2008 10:06
Run Date: 12/17/2008 14:04
File ID: IR.121708.140400
Percent Solid: 90.9

Analyte	CAS. Number	Result	Qual	RL	MDL	
Silver, Total	7440-22-4		U	0.811	0.203	
Barium, Total	7440-39-3	14.7 J		0.405	0.0811	MSH
Cadmium, Total	7440-43-9		U	0.162	0.0405	
Chromium, Total	7440-47-3	5.30 J		0.811	0.0973	MSH
Copper, Total	7440-50-8	0.818	J	1.62	0.405	
Antimony, Total	7440-36-0		U	1.62	0.405	
Zinc, Total	7440-66-6	1.23	J	1.62	0.405	

U Undetected; the analyte was analyzed for, but not detected.
J Estimated ; the analyte concentration was less than the low standard (LOQ)

Microbac

LEW 3/11/09

6

Sample Number: L08120355-06
Client ID: MR08-IS124-2-3-08D
Matrix: Soil
Workgroup Number: WG291050
Collect Date: 12/10/2008 10:50
Sample Tag: 01

PrePrep Method: NONE
Prep Method: 3051
Analytical Method: 6020
Analyst: JYH
Dilution: 1
Units: mg/kg

Instrument: ELAN-ICP
Prep Date: 12/15/2008 07:44
Cal Date: 12/19/2008 11:58
Run Date: 12/19/2008 18:32
File ID: EL.121908.183251
Percent Solid: 90.9

Analyte	CAS. Number	Result	Qual	RL	MDL
Arsenic, Total	7440-38-2	0.333		0.326	0.0815
Lead, Total	7439-92-1	2.92 J		0.435	0.109
Selenium, Total	7782-49-2		U	0.435	0.109

MSL

U Undetected; the analyte was analyzed for, but not detected.

Microbac

1249 lew 3/11/09

6

Sample Number: L08120355-06
Client ID: MR08-IS124-2-3-08D
Matrix: Soil
Workgroup Number: WG290529
Collect Date: 12/10/2008 10:50
Sample Tag: 01

PrePrep Method: NONE
Prep Method: 7471A
Analytical Method: 7471A
Analyst: ADC
Dilution: 1
Units: mg/kg

Instrument: HYDRA
Prep Date: 12/12/2008 13:49
Cal Date: 12/16/2008 10:16
Run Date: 12/16/2008 13:25
File ID: HY.121608.132516
Percent Solid: 90.9

Analyte	CAS. Number	Result	Qual	RL	MDL
Mercury, Total	7439-97-6		U	0.107	0.0214

U Undetected; the analyte was analyzed for, but not detected.

Microbac

lew
2450 3/4/09

7

Sample Number: L08120355-07
Client ID: MR08-SS099-08D
Matrix: Soil
Workgroup Number: WG290714
Collect Date: 12/10/2008 11:25
Sample Tag: 01

PrePrep Method: NONE
Prep Method: 3051
Analytical Method: 6010B
Analyst: KHR
Dilution: 1
Units: mg/kg

Instrument: IRIS-ICP
Prep Date: 12/15/2008 12:34
Cal Date: 12/17/2008 10:06
Run Date: 12/17/2008 14:10
File ID: IR.121708.141000
Percent Solid: 93.8

Analyte	CAS. Number	Result	Qual	RL	MDL	
Silver, Total	7440-22-4		U	0.785	0.196	
Barium, Total	7440-39-3	4.43 J		0.392	0.0785	MSH
Cadmium, Total	7440-43-9		U	0.157	0.0392	
Chromium, Total	7440-47-3	3.99 J		0.785	0.0942	MSH
Copper, Total	7440-50-8	0.825	J	1.57	0.392	
Antimony, Total	7440-36-0	1.13	J	1.57	0.392	
Zinc, Total	7440-66-6	3.20		1.57	0.392	

U Undetected; the analyte was analyzed for, but not detected.
J Estimated ; the analyte concentration was less than the low standard (LOQ)

Microbac

lew 3/4/09

7

Sample Number: L08120355-07
Client ID: MR08-SS099-08D
Matrix: Soil
Workgroup Number: WG291050
Collect Date: 12/10/2008 11:25
Sample Tag: 01

PrePrep Method: NONE
Prep Method: 3051
Analytical Method: 6020
Analyst: JYH
Dilution: 1
Units: mg/kg

Instrument: ELAN-ICP
Prep Date: 12/15/2008 07:44
Cal Date: 12/19/2008 11:58
Run Date: 12/19/2008 18:38
File ID: EL.121908.183833
Percent Solid: 93.8

Analyte	CAS. Number	Result	Qual	RL	MDL	
Arsenic, Total	7440-38-2	0.175	J	0.304	0.0759	
Lead, Total	7439-92-1	2.47 J		0.405	0.101	MSL
Selenium, Total	7782-49-2	0.131	J	0.405	0.101	

J Estimated ; the analyte concentration was less than the low standard (LOQ)

Microbac

1250 LW 3/4/09

7

Sample Number: L08120355-07
Client ID: MR08-SS099-08D
Matrix: Soil
Workgroup Number: WG290529
Collect Date: 12/10/2008 11:25
Sample Tag: 01

PrePrep Method: NONE
Prep Method: 7471A
Analytical Method: 7471A
Analyst: ADC
Dilution: 1
Units: mg/kg

Instrument: HYDRA
Prep Date: 12/12/2008 13:49
Cal Date: 12/16/2008 10:16
Run Date: 12/16/2008 13:27
File ID: HY.121608.132702
Percent Solid: 93.8

Analyte	CAS. Number	Result	Qual	RL	MDL
Mercury, Total	7439-97-6		U	0.101	0.0202

U Undetected; the analyte was analyzed for, but not detected.

Microbac

2451 lew 3/4/09

8

Sample Number: L08120355-08
Client ID: MR08-SS099D-08D
Matrix: Soil
Workgroup Number: WG290978
Collect Date: 12/10/2008 11:35
Sample Tag: 01

PrePrep Method: NONE
Prep Method: 3051
Analytical Method: 6010B
Analyst: KHR
Dilution: 1
Units: mg/kg

Instrument: IRIS-ICP
Prep Date: 12/16/2008 10:37
Cal Date: 12/19/2008 10:46
Run Date: 12/19/2008 15:27
File ID: IR.121908.152700
Percent Solid: 95.0

Analyte	CAS. Number	Result	Qual	RL	MDL
Silver, Total	7440-22-4	0.411	J	0.795	0.199
Barium, Total	7440-39-3	7.54		0.398	0.0795
Cadmium, Total	7440-43-9	0.227		0.159	0.0398
Chromium, Total	7440-47-3	6.65		0.795	0.0954
Copper, Total	7440-50-8	1.49	J	1.59	0.398
Antimony, Total	7440-36-0	0.958	J	1.59	0.398
Zinc, Total	7440-66-6	8.44		1.59	0.398

J Estimated ; the analyte concentration was less than the low standard (LOQ)

Microbac

MW 3/4/09

283

8

Sample Number: L08120355-08
Client ID: MR08-SS099D-08D
Matrix: Soil
Workgroup Number: WG291050
Collect Date: 12/10/2008 11:35
Sample Tag: 01

PrePrep Method: NONE
Prep Method: 3051
Analytical Method: 6020
Analyst: JYH
Dilution: 1
Units: mg/kg

Instrument: ELAN-ICP
Prep Date: 12/15/2008 07:44
Cal Date: 12/19/2008 11:58
Run Date: 12/19/2008 18:44
File ID: EL.121908.184415
Percent Solid: 95.0

Analyte	CAS. Number	Result	Qual	RL	MDL
Arsenic, Total	7440-38-2	4.67		0.302	0.0756
Lead, Total	7439-92-1	21.4 J		0.403	0.101
Selenium, Total	7782-49-2	0.251	J	0.403	0.101

MSL

J Estimated ; the analyte concentration was less than the low standard (LOQ)

Microbac

1251 few 3/4/09

8

Sample Number: L08120355-08
Client ID: MR08-SS099D-08D
Matrix: Soil
Workgroup Number: WG290529
Collect Date: 12/10/2008 11:35
Sample Tag: 01

PrePrep Method: NONE
Prep Method: 7471A
Analytical Method: 7471A
Analyst: ADC
Dilution: 1
Units: mg/kg

Instrument: HYDRA
Prep Date: 12/12/2008 13:49
Cal Date: 12/16/2008 10:16
Run Date: 12/16/2008 13:28
File ID: HY.121608.132845
Percent Solid: 95.0

Analyte	CAS. Number	Result	Qual	RL	MDL
Mercury, Total	7439-97-6		U	0.103	0.0206

U Undetected; the analyte was analyzed for, but not detected.

Microbac

lew
2452 3/11/09

9

Sample Number: L08120355-09
Client ID: MR08-IS099-2-3-08D
Matrix: Soil
Workgroup Number: WG290978
Collect Date: 12/10/2008 12:00
Sample Tag: 01

PrePrep Method: NONE
Prep Method: 3051
Analytical Method: 6010B
Analyst: KHR
Dilution: 1
Units: mg/kg

Instrument: IRIS-ICP
Prep Date: 12/16/2008 10:37
Cal Date: 12/19/2008 10:46
Run Date: 12/19/2008 15:34
File ID: IR.121908.153400
Percent Solid: 88.5

Analyte	CAS. Number	Result	Qual	RL	MDL
Silver, Total	7440-22-4		U	0.860	0.215
Barium, Total	7440-39-3	8.48		0.430	0.0860
Cadmium, Total	7440-43-9		U	0.172	0.0430
Chromium, Total	7440-47-3	5.63		0.860	0.103
Copper, Total	7440-50-8		U	1.72	0.430
Antimony, Total	7440-36-0		U	1.72	0.430
Zinc, Total	7440-66-6	0.781	J	1.72	0.430

U Undetected; the analyte was analyzed for, but not detected.
J Estimated ; the analyte concentration was less than the low standard (LOQ)

Microbac

JeW 3/11/09

9

Sample Number: L08120355-09
Client ID: MR08-IS099-2-3-08D
Matrix: Soil
Workgroup Number: WG291050
Collect Date: 12/10/2008 12:00
Sample Tag: 01

PrePrep Method: NONE
Prep Method: 3051
Analytical Method: 6020
Analyst: JYH
Dilution: 1
Units: mg/kg

Instrument: ELAN-ICP
Prep Date: 12/15/2008 07:44
Cal Date: 12/19/2008 11:58
Run Date: 12/19/2008 18:49
File ID: EL.121908.184958
Percent Solid: 88.5

Analyte	CAS. Number	Result	Qual	RL	MDL
Arsenic, Total	7440-38-2	0.391		0.336	0.0839
Lead, Total	7439-92-1	2.68 J		0.448	0.112
Selenium, Total	7782-49-2		U	0.448	0.112

MSL

U Undetected; the analyte was analyzed for, but not detected.

Microbac

1252 3/11/09

9

Sample Number: L08120355-09
Client ID: MR08-IS099-2-3-08D
Matrix: Soil
Workgroup Number: WG290529
Collect Date: 12/10/2008 12:00
Sample Tag: 01

PrePrep Method: NONE
Prep Method: 7471A
Analytical Method: 7471A
Analyst: ADC
Dilution: 1
Units: mg/kg

Instrument: HYDRA
Prep Date: 12/12/2008 13:49
Cal Date: 12/16/2008 10:16
Run Date: 12/16/2008 13:30
File ID: HY.121608.133053
Percent Solid: 88.5

Analyte	CAS. Number	Result	Qual	RL	MDL
Mercury, Total	7439-97-6		U	0.112	0.0223

U Undetected; the analyte was analyzed for, but not detected.

Microbac

2453 lw 3/11/09

10

Sample Number: L08120355-10
Client ID: MR08-IS099D-2-3-08D
Matrix: Soil
Workgroup Number: WG290978
Collect Date: 12/10/2008 12:25
Sample Tag: 01

PrePrep Method: NONE
Prep Method: 3051
Analytical Method: 6010B
Analyst: KHR
Dilution: 1
Units: mg/kg

Instrument: IRIS-ICP
Prep Date: 12/16/2008 10:38
Cal Date: 12/19/2008 10:46
Run Date: 12/19/2008 15:40
File ID: IR.121908.154000
Percent Solid: 88.7

Analyte	CAS. Number	Result	Qual	RL	MDL
Silver, Total	7440-22-4		U	0.858	0.214
Barium, Total	7440-39-3	11.8		0.429	0.0858
Cadmium, Total	7440-43-9		U	0.172	0.0429
Chromium, Total	7440-47-3	6.06		0.858	0.103
Copper, Total	7440-50-8		U	1.72	0.429
Antimony, Total	7440-36-0		U	1.72	0.429
Zinc, Total	7440-66-6	0.831	J	1.72	0.429

U Undetected; the analyte was analyzed for, but not detected.
J Estimated ; the analyte concentration was less than the low standard (LOQ)

Microbac

MW
285 3/4/09

10

Sample Number: L08120355-10
Client ID: MR08-IS099D-2-3-08D
Matrix: Soil
Workgroup Number: WG291050
Collect Date: 12/10/2008 12:25
Sample Tag: 01

PrePrep Method: NONE
Prep Method: 3051
Analytical Method: 6020
Analyst: JYH
Dilution: 1
Units: mg/kg

Instrument: ELAN-ICP
Prep Date: 12/15/2008 07:44
Cal Date: 12/19/2008 11:58
Run Date: 12/19/2008 18:55
File ID: EL.121908.185541
Percent Solid: 88.7

Analyte	CAS. Number	Result	Qual	RL	MDL	
Arsenic, Total	7440-38-2	0.417		0.335	0.0838	
Lead, Total	7439-92-1	2.98 J		0.447	0.112	MSL
Selenium, Total	7782-49-2	0.124	J	0.447	0.112	

J Estimated ; the analyte concentration was less than the low standard (LOQ)

Microbac

lw 3/4/09

10

Sample Number: L08120355-10
Client ID: MR08-IS099D-2-3-08D
Matrix: Soil
Workgroup Number: WG290529
Collect Date: 12/10/2008 12:25
Sample Tag: 01

PrePrep Method: NONE
Prep Method: 7471A
Analytical Method: 7471A
Analyst: ADC
Dilution: 1
Units: mg/kg

Instrument: HYDRA
Prep Date: 12/12/2008 13:49
Cal Date: 12/16/2008 10:16
Run Date: 12/16/2008 13:32
File ID: HY.121608.133245
Percent Solid: 88.7

Analyte	CAS. Number	Result	Qual	RL	MDL
Mercury, Total	7439-97-6		U	0.109	0.0218

U Undetected; the analyte was analyzed for, but not detected.

Microbac

2454 3/11/09

11

Sample Number: L08120355-11
Client ID: MR08-SS100-08D
Matrix: Soil
Workgroup Number: WG290978
Collect Date: 12/10/2008 13:15
Sample Tag: 01

PrePrep Method: NONE
Prep Method: 3051
Analytical Method: 6010B
Analyst: KHR
Dilution: 1
Units: mg/kg

Instrument: IRIS-ICP
Prep Date: 12/16/2008 10:38
Cal Date: 12/19/2008 10:46
Run Date: 12/19/2008 15:46
File ID: IR.121908.154600
Percent Solid: 85.9

Analyte	CAS. Number	Result	Qual	RL	MDL
Silver, Total	7440-22-4		U	0.859	0.215
Barium, Total	7440-39-3	9.25		0.429	0.0859
Cadmium, Total	7440-43-9		U	0.172	0.0429
Chromium, Total	7440-47-3	7.86		0.859	0.103
Copper, Total	7440-50-8		U	1.72	0.429
Antimony, Total	7440-36-0		U	1.72	0.429
Zinc, Total	7440-66-6	0.833	J	1.72	0.429

U Undetected; the analyte was analyzed for, but not detected.
J Estimated ; the analyte concentration was less than the low standard (LOQ)

Microbac

lw
286 3/4/09

11

Sample Number:	L08120355-11	PrePrep Method:	NONE	Instrument:	ELAN-ICP
Client ID:	MR08-SS100-08D	Prep Method:	3051	Prep Date:	12/15/2008 07:44
Matrix:	Soil	Analytical Method:	6020	Cal Date:	12/19/2008 11:58
Workgroup Number:	WG291050	Analyst:	JYH	Run Date:	12/19/2008 19:01
Collect Date:	12/10/2008 13:15	Dilution:	1	File ID:	EL.121908.190124
Sample Tag:	01	Units:	mg/kg	Percent Solid:	85.9

Analyte	CAS. Number	Result	Qual	RL	MDL
Arsenic, Total	7440-38-2	0.900		0.329	0.0822
Lead, Total	7439-92-1	3.79 J		0.439	0.110
Selenium, Total	7782-49-2	0.219	J	0.439	0.110

MSL

J Estimated ; the analyte concentration was less than the low standard (LOQ)

Microbac

Lew 3/11/09

11

Sample Number: L08120355-11
Client ID: MR08-SS100-08D
Matrix: Soil
Workgroup Number: WG290529
Collect Date: 12/10/2008 13:15
Sample Tag: 01

PrePrep Method: NONE
Prep Method: 7471A
Analytical Method: 7471A
Analyst: ADC
Dilution: 1
Units: mg/kg

Instrument: HYDRA
Prep Date: 12/12/2008 13:49
Cal Date: 12/16/2008 10:16
Run Date: 12/16/2008 13:34
File ID: HY.121608.133429
Percent Solid: 85.9

Analyte	CAS. Number	Result	Qual	RL	MDL
Mercury, Total	7439-97-6	0.0355	J	0.115	0.0231

J Estimated ; the analyte concentration was less than the low standard (LOQ)

Microbac

2455 3/4/09

12

Sample Number: L08120355-12
Client ID: MR08-IS100-2-3-08D
Matrix: Soil
Workgroup Number: WG290978
Collect Date: 12/10/2008 13:40
Sample Tag: 01

PrePrep Method: NONE
Prep Method: 3051
Analytical Method: 6010B
Analyst: KHR
Dilution: 1
Units: mg/kg

Instrument: IRIS-ICP
Prep Date: 12/16/2008 10:39
Cal Date: 12/19/2008 10:46
Run Date: 12/19/2008 15:52
File ID: IR.121908.155200
Percent Solid: 86.8

Analyte	CAS. Number	Result	Qual	RL	MDL
Silver, Total	7440-22-4		U	0.801	0.200
Barium, Total	7440-39-3	6.33		0.401	0.0801
Cadmium, Total	7440-43-9		U	0.160	0.0401
Chromium, Total	7440-47-3	6.58		0.801	0.0962
Copper, Total	7440-50-8		U	1.60	0.401
Antimony, Total	7440-36-0		U	1.60	0.401
Zinc, Total	7440-66-6	0.638	J	1.60	0.401

U Undetected; the analyte was analyzed for, but not detected.
J Estimated ; the analyte concentration was less than the low standard (LOQ)

Microbac

lew
287 3/11/09

12

Sample Number: L08120355-12
Client ID: MR08-IS100-2-3-08D
Matrix: Soil
Workgroup Number: WG291050
Collect Date: 12/10/2008 13:40
Sample Tag: 01

PrePrep Method: NONE
Prep Method: 3051
Analytical Method: 6020
Analyst: JYH
Dilution: 1
Units: mg/kg

Instrument: ELAN-ICP
Prep Date: 12/15/2008 07:44
Cal Date: 12/19/2008 11:58
Run Date: 12/19/2008 19:07
File ID: EL.121908.190708
Percent Solid: 86.8

Analyte	CAS. Number	Result	Qual	RL	MDL
Arsenic, Total	7440-38-2	0.763		0.339	0.0848
Lead, Total	7439-92-1	3.86 J		0.452	0.113 MSL
Selenium, Total	7782-49-2	0.249	J	0.452	0.113

J Estimated ; the analyte concentration was less than the low standard (LOQ)

Microbac

GW
3/11/09

12

Sample Number: L08120355-12
Client ID: MR08-IS100-2-3-08D
Matrix: Soil
Workgroup Number: WG290529
Collect Date: 12/10/2008 13:40
Sample Tag: 01

PrePrep Method: NONE
Prep Method: 7471A
Analytical Method: 7471A
Analyst: ADC
Dilution: 1
Units: mg/kg

Instrument: HYDRA
Prep Date: 12/12/2008 13:49
Cal Date: 12/16/2008 10:16
Run Date: 12/16/2008 13:36
File ID: HY.121608.133654
Percent Solid: 86.8

Analyte	CAS. Number	Result	Qual	RL	MDL
Mercury, Total	7439-97-6		U	0.113	0.0225

U Undetected; the analyte was analyzed for, but not detected.

Microbac

2456 3/11/09

13

Sample Number: L08120355-13
Client ID: MR08-SS101-08D
Matrix: Soil
Workgroup Number: WG290978
Collect Date: 12/10/2008 14:10
Sample Tag: 01

PrePrep Method: NONE
Prep Method: 3051
Analytical Method: 6010B
Analyst: KHR
Dilution: 1
Units: mg/kg

Instrument: IRIS-ICP
Prep Date: 12/16/2008 10:39
Cal Date: 12/19/2008 10:46
Run Date: 12/19/2008 15:58
File ID: IR.121908.155800
Percent Solid: 91.6

Analyte	CAS. Number	Result	Qual	RL	MDL
Silver, Total	7440-22-4	0.386	J	0.805	0.201
Barium, Total	7440-39-3	8.22		0.403	0.0805
Cadmium, Total	7440-43-9	0.324		0.161	0.0403
Chromium, Total	7440-47-3	8.41		0.805	0.0966
Copper, Total	7440-50-8	1.31	J	1.61	0.403
Antimony, Total	7440-36-0	0.601	J	1.61	0.403
Zinc, Total	7440-66-6	8.68		1.61	0.403

J Estimated ; the analyte concentration was less than the low standard (LOQ)

Microbac

lew 3/4/09

13

Sample Number:	L08120355-13	PrePrep Method:	NONE	Instrument:	ELAN-ICP
Client ID:	MR08-SS101-08D	Prep Method:	3051	Prep Date:	12/17/2008 06:53
Matrix:	Soil	Analytical Method:	6020	Cal Date:	12/19/2008 11:58
Workgroup Number:	WG291051	Analyst:	JYH	Run Date:	12/19/2008 19:52
Collect Date:	12/10/2008 14:10	Dilution:	1	File ID:	EL.121908.195254
Sample Tag:	01	Units:	mg/kg	Percent Solid:	91.6

Analyte	CAS. Number	Result	Qual	RL	MDL	
Arsenic, Total	7440-38-2	0.946		0.327	0.0818	
Lead, Total	7439-92-1	9.22		0.436	0.109	
Selenium, Total	7782-49-2	0.354 J	J	0.436	0.109	MSL

J Estimated ; the analyte concentration was less than the low standard (LOQ)

Microbac

fcw 3/1/09

13

Sample Number:	L08120355-13	PrePrep Method:	NONE	Instrument:	HYDRA
Client ID:	MR08-SS101-08D	Prep Method:	7471A	Prep Date:	12/12/2008 13:49
Matrix:	Soil	Analytical Method:	7471A	Cal Date:	12/16/2008 10:16
Workgroup Number:	WG290529	Analyst:	ADC	Run Date:	12/16/2008 13:38
Collect Date:	12/10/2008 14:10	Dilution:	1	File ID:	HY.121608.133857
Sample Tag:	01	Units:	mg/kg	Percent Solid:	91.6

Analyte	CAS. Number	Result	Qual	RL	MDL
Mercury, Total	7439-97-6		U	0.105	0.0211

U Undetected; the analyte was analyzed for, but not detected.

Microbac

lew
2457 3/4/09

14

Sample Number: L08120355-14
Client ID: MR08-IS101-2-3-08D
Matrix: Soil
Workgroup Number: WG290978
Collect Date: 12/10/2008 14:30
Sample Tag: 01

PrePrep Method: NONE
Prep Method: 3051
Analytical Method: 6010B
Analyst: KHR
Dilution: 1
Units: mg/kg

Instrument: IRIS-ICP
Prep Date: 12/16/2008 10:40
Cal Date: 12/19/2008 10:46
Run Date: 12/19/2008 16:04
File ID: IR.121908.160400
Percent Solid: 90.4

Analyte	CAS. Number	Result	Qual	RL	MDL
Silver, Total	7440-22-4		U	0.810	0.203
Barium, Total	7440-39-3	2.75		0.405	0.0810
Cadmium, Total	7440-43-9		U	0.162	0.0405
Chromium, Total	7440-47-3	5.16		0.810	0.0972
Copper, Total	7440-50-8		U	1.62	0.405
Antimony, Total	7440-36-0		U	1.62	0.405
Zinc, Total	7440-66-6	0.589	J	1.62	0.405

U Undetected; the analyte was analyzed for, but not detected.
J Estimated ; the analyte concentration was less than the low standard (LOQ)

Microbac

lew 31 11/09

14

Sample Number: L08120355-14
Client ID: MR08-IS101-2-3-08D
Matrix: Soil
Workgroup Number: WG291051
Collect Date: 12/10/2008 14:30
Sample Tag: 01

PrePrep Method: NONE
Prep Method: 3051
Analytical Method: 6020
Analyst: JYH
Dilution: 1
Units: mg/kg

Instrument: ELAN-ICP
Prep Date: 12/17/2008 06:53
Cal Date: 12/19/2008 11:58
Run Date: 12/19/2008 19:58
File ID: EL.121908.195837
Percent Solid: 90.4

Analyte	CAS. Number	Result	Qual	RL	MDL	
Arsenic, Total	7440-38-2	0.600		0.307	0.0768	
Lead, Total	7439-92-1	3.55		0.410	0.102	
Selenium, Total	7782-49-2	0.240 J	J	0.410	0.102	MSL

J Estimated ; the analyte concentration was less than the low standard (LOQ)

Microbac

1257 3/11/09

14

Sample Number: L08120355-14
Client ID: MR08-IS101-2-3-08D
Matrix: Soil
Workgroup Number: WG290529
Collect Date: 12/10/2008 14:30
Sample Tag: 01

PrePrep Method: NONE
Prep Method: 7471A
Analytical Method: 7471A
Analyst: ADC
Dilution: 1
Units: mg/kg

Instrument: HYDRA
Prep Date: 12/12/2008 13:49
Cal Date: 12/16/2008 10:16
Run Date: 12/16/2008 13:44
File ID: HY.121608.134405
Percent Solid: 90.4

Analyte	CAS. Number	Result	Qual	RL	MDL
Mercury, Total	7439-97-6		U	0.108	0.0215

U Undetected; the analyte was analyzed for, but not detected.

Microbac

2458 lew 3/4/09

15

Sample Number: L08120355-15
Client ID: MR08-EB01121008-SS
Matrix: Water
Workgroup Number: WG290673
Collect Date: 12/10/2008 09:00
Sample Tag: 01

PrePrep Method: NONE
Prep Method: 3005A
Analytical Method: 6010B
Analyst: SLP
Dilution: 1
Units: ug/L

Instrument: PE-ICP2
Prep Date: 12/16/2008 08:04
Cal Date: 12/17/2008 14:17
Run Date: 12/17/2008 18:59
File ID: P2.121708.185942

Analyte	CAS. Number	Result	Qual	RL	MDL
Barium, Total	7440-39-3		U	10.0	2.50
Cadmium, Total	7440-43-9		U	1.00	0.250
Chromium, Total	7440-47-3		U	10.0	2.50
Copper, Total	7440-50-8		U	20.0	5.00
Silver, Total	7440-22-4		U	6.00	2.00
Zinc, Total	7440-66-6		U	20.0	5.00

U Undetected; the analyte was analyzed for, but not detected.

Microbac

JLW 3/4/09

15

Sample Number: L08120355-15
Client ID: MR08-EB01121008-SS
Matrix: Water
Workgroup Number: WG290893
Collect Date: 12/10/2008 09:00
Sample Tag: 01

PrePrep Method: NONE
Prep Method: 3015
Analytical Method: 6020
Analyst: JYH
Dilution: 1
Units: ug/L

Instrument: ELAN-ICP
Prep Date: 12/15/2008 11:17
Cal Date: 12/18/2008 10:46
Run Date: 12/18/2008 17:14
File ID: EL.121808.171454

Analyte	CAS. Number	Result	Qual	RL	MDL
Arsenic, Total	7440-38-2		U	1.00	0.250
Lead, Total	7439-92-1		U	1.00	0.250
Antimony, Total	7440-36-0		U	1.00	0.250
Selenium, Total	7782-49-2		U	2.00	0.500

U Undetected; the analyte was analyzed for, but not detected.

Microbac

1258 3/4/09

15

Sample Number: L08120355-15
Client ID: MR08-EB01121008-SS
Matrix: Water
Workgroup Number: WG290724
Collect Date: 12/10/2008 09:00
Sample Tag: 01

PrePrep Method: NONE
Prep Method: 7470A
Analytical Method: 7470A
Analyst: ADC
Dilution: 1
Units: ug/L

Instrument: HYDRA
Prep Date: 12/16/2008 08:16
Cal Date: 12/17/2008 09:53
Run Date: 12/17/2008 10:12
File ID: HY.121708.101222

Analyte	CAS. Number	Result	Qual	RL	MDL
Mercury	7439-97-6		U	0.400	0.100

U Undetected; the analyte was analyzed for, but not detected.

Microbac

RW 3/4/09

ENVIRONMENTAL
Data Services, Inc.

EXPLOSIVES, PETN & NITROGLYCERIN

USEPA Region IV - Level IV Review

Site: MCB Camp Lejeune, TO-09 SDG #: L08120489

Client: CH2M HILL, Inc., Virginia Beach, Virginia Date: March 10, 2009

Laboratory: Microbac Laboratories, Inc., Marietta, Ohio Reviewer: Linda Sulkowski

EDS ID	Client Sample ID	Laboratory Sample ID	Matrix
1	MR08-SS102-08D	L08120489-01	Soil
2	MR08-IS102-2-3-08D	L08120489-02	Soil
3	MR08-SS119-08D	L08120489-03	Soil
4	MR08-IS119-4.5-5.5-08D	L08120489-04	Soil
5	MR08-SS119D-08D	L08120489-05	Soil
6	MR08-IS119D-4.5-5.5-08D	L08120489-06	Soil
7	MR08-SS120-08D	L08120489-07	Soil
8	MR08-IS120-1.5-2.5-08D	L08120489-08	Soil
9	MR08-SS122-08D	L08120489-09	Soil
9MS	MR08-SS122-08DMS	L08120489-10MS	Soil
9MSD	MR08-SS122-08DMSD	L08120489-11MSD	Soil
10	MR08-IS122-6.5-8-08D	L08120489-12	Soil
10MS	MR08-IS122-6.5-8-08DMS	L08120489-13MS	Soil
10MSD	MR08-IS122-6.5-8-08DMSD	L08120489-14MSD	Soil
11	MR08-SS118-08D	L08120489-15	Soil
12	MR08-IS118-08D	L08120489-16	Soil
13	MR08-EB01-121508-SS	L08120489-17	Water
14	MR08-SS127-08D	L08120489-18	Soil
15	MR08-IS127-1.5-3-08D	L08120489-19	Soil
16	MR08-SS126-08D	L08120489-20	Soil
17	MR08-IS126-1.5-2.5-08D	L08120489-21	Soil

The USEPA "Contract Laboratory Program National Functional Guidelines for Organic Data Review," October 1999, and professional judgement were used in evaluating the data in this summary report.

Holding Times - All samples were extracted within 7 days for water samples, 14 days for soil samples and analyzed within 40 days.

Initial Calibration - The initial calibrations exhibited acceptable %RSD and/or correlation coefficient values.

Calibration Verification - The continuing calibrations exhibited acceptable %D values except the following.

CCAL Date	Compound	%D	Qualifier	Affected Samples
12/24/08	2,6-Dinitrotoluene	25.0%	J/UJ	9, 10-12, 14, 15
	Nitrobenzene	22.2%	J/UJ	9, 10-12, 14, 15
12/24/08	2,6-Dinitrotoluene	29.6%	J/UJ	16, 17
	Nitrobenzene	24.1%	J/UJ	16, 17

Surrogates - All samples exhibited acceptable surrogate recoveries.

MS/MSD - The MS/MSD sample exhibited acceptable %R and RPD values except the following.

MS/MSD Sample ID	Compound	MS/MSD %R/RPD	Qualifier
9	2,6-Dinitrotoluene	122%/133%/Ok	None - All ND
	2-Amino-4,6-dinitrotoluene	75.9%/73.1%/Ok	J/UJ
	Tetryl	Ok/Ok/38.7%	None for RPD alone
10	2,6-Dinitrotoluene	133%/128%/Ok	None - All ND
	2-Amino-4,6-dinitrotoluene	66.5%/70.7%/Ok	J/UJ

Laboratory Control Sample - The LCS samples exhibited acceptable %R values.

Method Blank - The method blanks were free of contamination.

Field and Equipment Blank - Field QC results are summarized below.

Blank ID	Compound	Conc. ug/L	Action Level ug/L	Qualifier	Affected Samples
MR08-EB01-121508-SS	None - ND	-	-	-	-
MR08-FB01120608	None - ND	-	-	-	-

Field Duplicates - Field duplicate results are summarized below.

Compound	MR08-IS119-4.5-5.5-08D mg/kg	MR08-IS119D-4.5-5.5-08D mg/kg	RPD	Qualifier
None	ND	ND	-	-

Compound	MR08-SS119-08D mg/kg	MR08-SS119D-08D mg/kg	RPD	Qualifier
None	ND	ND	-	-

Compound Identification - Retention times were acceptable and no further action was taken.

Compound Quantitation - No discrepancies were identified.

Report Number: L08120489

Report Date : January 16, 2009

Sample Number: L08120489-01
Client ID: MR08-SS102-08D
Matrix: Soil
Workgroup Number: WG291329
Collect Date: 12/15/2008 10:00
Sample Tag: 01

PrePrep Method: NONE
Prep Method: METHOD
Analytical Method: 8330MOD
Analyst: ECL
Dilution: 1
Units: mg/kg

Instrument: HPLC5
Prep Date: 12/22/2008 08:00
Cal Date: 12/16/2008 16:51
Run Date: 12/23/2008 12:43
File ID: 5L003480.F

Analyte	CAS. Number	Result	Qual	RL	MDL
1,3,5-Trinitrobenzene	99-35-4		U	0.298	0.0992
1,3-Dinitrobenzene	99-65-0		U	0.298	0.0992
2,4,6-Trinitrotoluene	118-96-7		U ~~Q~~	0.298	0.0992
2,4-Dinitrotoluene	121-14-2		U	0.298	0.0992
2,6-Dinitrotoluene	606-20-2		U	0.298	0.0992
2-Amino-4,6-dinitrotoluene	35572-78-2		U	0.298	0.0992
2-Nitrotoluene	88-72-2		U	0.298	0.0992
3-Nitrotoluene	99-08-1		U	0.298	0.0992
4-Nitrotoluene	99-99-0		U	0.298	0.0992
4-Amino-2,6-dinitrotoluene	19406-51-0		U	0.298	0.0992
HMX	2691-41-0		U	0.298	0.0992
Nitrobenzene	98-95-3		U	0.298	0.0992
RDX	121-82-4		U	0.298	0.0992
Tetryl	479-45-8		U ~~Q~~	0.298	0.0992
Nitroglycerin	55-63-0		U	0.298	0.0992

Surrogate	% Recovery	Lower	Upper	Qual
1,2-Dinitrobenzene	98.4	50	150	

U Undetected; the analyte was analyzed for, but not detected.
Q One or more quality control criteria failed. See narrative.

Microbac

14 lw 3/10/09

Sample Number: L08120489-01
Client ID: MR08-SS102-08D
Matrix: Soil
Workgroup Number: WG291329
Collect Date: 12/15/2008 10:00
Sample Tag: 02

PrePrep Method: NONE
Prep Method: METHOD
Analytical Method: 8330MOD
Analyst: ECL
Dilution: 1
Units: mg/kg

Instrument: HPLC5
Prep Date: 12/22/2008 08:00
Cal Date: 12/16/2008 16:51
Run Date: 12/30/2008 00:54
File ID: 5L003672.F

Analyte	CAS. Number	Result	Qual	RL	MDL
PETN	78-11-5		U	0.298	0.0992

U Undetected; the analyte was analyzed for, but not detected.

Microbac

15 lw 3/10/09

2

Sample Number: L08120489-02
Client ID: MR08-IS102-2-3-08D
Matrix: Soil
Workgroup Number: WG291329
Collect Date: 12/15/2008 10:15
Sample Tag: 01

PrePrep Method: NONE
Prep Method: METHOD
Analytical Method: 8330MOD
Analyst: ECL
Dilution: 1
Units: mg/kg

Instrument: HPLC5
Prep Date: 12/22/2008 08:00
Cal Date: 12/16/2008 16:51
Run Date: 12/23/2008 13:21
File ID: 5L003481.F

Analyte	CAS. Number	Result	Qual	RL	MDL
1,3,5-Trinitrobenzene	99-35-4		U	0.293	0.0977
1,3-Dinitrobenzene	99-65-0		U	0.293	0.0977
2,4,6-Trinitrotoluene	118-96-7	U	~~Q~~	0.293	0.0977
2,4-Dinitrotoluene	121-14-2		U	0.293	0.0977
2,6-Dinitrotoluene	606-20-2		U	0.293	0.0977
2-Amino-4,6-dinitrotoluene	35572-78-2		U	0.293	0.0977
2-Nitrotoluene	88-72-2		U	0.293	0.0977
3-Nitrotoluene	99-08-1		U	0.293	0.0977
4-Nitrotoluene	99-99-0		U	0.293	0.0977
4-Amino-2,6-dinitrotoluene	19406-51-0		U	0.293	0.0977
HMX	2691-41-0		U	0.293	0.0977
Nitrobenzene	98-95-3		U	0.293	0.0977
RDX	121-82-4		U	0.293	0.0977
Tetryl	479-45-8	U	~~Q~~	0.293	0.0977
Nitroglycerin	55-63-0		U	0.293	0.0977

Surrogate	% Recovery	Lower	Upper	Qual
1,2-Dinitrobenzene	88.4	50	150	

U Undetected; the analyte was analyzed for, but not detected.
Q One or more quality control criteria failed. See narrative.

Microbac

17 lw 3/10/09

2

Sample Number: L08120489-02
Client ID: MR08-IS102-2-3-08D
Matrix: Soil
Workgroup Number: WG291329
Collect Date: 12/15/2008 10:15
Sample Tag: 02

PrePrep Method: NONE
Prep Method: METHOD
Analytical Method: 8330MOD
Analyst: ECL
Dilution: 1
Units: mg/kg

Instrument: HPLC5
Prep Date: 12/22/2008 08:00
Cal Date: 12/16/2008 16:51
Run Date: 12/30/2008 01:08
File ID: 5L003673.F

Analyte	CAS. Number	Result	Qual	RL	MDL
PETN	78-11-5		U	0.293	0.0977

U Undetected; the analyte was analyzed for, but not detected.

Microbac

RW 3/10/09

3

Sample Number: L08120489-03
Client ID: MR08-SS119-08D
Matrix: Soil
Workgroup Number: WG291329
Collect Date: 12/15/2008 10:45
Sample Tag: 01

PrePrep Method: NONE
Prep Method: METHOD
Analytical Method: 8330MOD
Analyst: ECL
Dilution: 1
Units: mg/kg

Instrument: HPLC5
Prep Date: 12/22/2008 08:00
Cal Date: 12/16/2008 16:51
Run Date: 12/23/2008 13:59
File ID: 5L003482.F

Analyte	CAS. Number	Result	Qual	RL	MDL
1,3,5-Trinitrobenzene	99-35-4		U	0.294	0.0981
1,3-Dinitrobenzene	99-65-0		U	0.294	0.0981
2,4,6-Trinitrotoluene	118-96-7	U	~~Q~~	0.294	0.0981
2,4-Dinitrotoluene	121-14-2		U	0.294	0.0981
2,6-Dinitrotoluene	606-20-2		U	0.294	0.0981
2-Amino-4,6-dinitrotoluene	35572-78-2		U	0.294	0.0981
2-Nitrotoluene	88-72-2		U	0.294	0.0981
3-Nitrotoluene	99-08-1		U	0.294	0.0981
4-Nitrotoluene	99-99-0		U	0.294	0.0981
4-Amino-2,6-dinitrotoluene	19406-51-0		U	0.294	0.0981
HMX	2691-41-0		U	0.294	0.0981
Nitrobenzene	98-95-3		U	0.294	0.0981
RDX	121-82-4		U	0.294	0.0981
Tetryl	479-45-8	U	~~Q~~	0.294	0.0981
Nitroglycerin	55-63-0		U	0.294	0.0981

Surrogate	% Recovery	Lower	Upper	Qual
1,2-Dinitrobenzene	91.1	50	150	

U Undetected; the analyte was analyzed for, but not detected.
Q One or more quality control criteria failed. See narrative.

Microbac

DW 3/10/09

3

Sample Number: L08120489-03
Client ID: MR08-SS119-08D
Matrix: Soil
Workgroup Number: WG291329
Collect Date: 12/15/2008 10:45
Sample Tag: 02

PrePrep Method: NONE
Prep Method: METHOD
Analytical Method: 8330MOD
Analyst: ECL
Dilution: 1
Units: mg/kg

Instrument: HPLC5
Prep Date: 12/22/2008 08:00
Cal Date: 12/16/2008 16:51
Run Date: 12/30/2008 01:21
File ID: 5L003674.F

Analyte	CAS. Number	Result	Qual	RL	MDL
PETN	78-11-5		U	0.294	0.0981

U Undetected; the analyte was analyzed for, but not detected.

Microbac

18 LW 3/10/09

4

Sample Number: L08120489-04
Client ID: MR08-IS119-4.5-5.5-08D
Matrix: Soil
Workgroup Number: WG291329
Collect Date: 12/15/2008 12:35
Sample Tag: 01

PrePrep Method: NONE
Prep Method: METHOD
Analytical Method: 8330MOD
Analyst: ECL
Dilution: 1
Units: mg/kg

Instrument: HPLC5
Prep Date: 12/22/2008 08:00
Cal Date: 12/16/2008 16:51
Run Date: 12/23/2008 14:37
File ID: 5L003483.F

Analyte	CAS. Number	Result	Qual	RL	MDL
1,3,5-Trinitrobenzene	99-35-4		U	0.294	0.0980
1,3-Dinitrobenzene	99-65-0		U	0.294	0.0980
2,4,6-Trinitrotoluene	118-96-7	U	~~Q~~	0.294	0.0980
2,4-Dinitrotoluene	121-14-2		U	0.294	0.0980
2,6-Dinitrotoluene	606-20-2		U	0.294	0.0980
2-Amino-4,6-dinitrotoluene	35572-78-2		U	0.294	0.0980
2-Nitrotoluene	88-72-2		U	0.294	0.0980
3-Nitrotoluene	99-08-1		U	0.294	0.0980
4-Nitrotoluene	99-99-0		U	0.294	0.0980
4-Amino-2,6-dinitrotoluene	19406-51-0		U	0.294	0.0980
HMX	2691-41-0		U	0.294	0.0980
Nitrobenzene	98-95-3		U	0.294	0.0980
RDX	121-82-4		U	0.294	0.0980
Tetryl	479-45-8	U	~~Q~~	0.294	0.0980
Nitroglycerin	55-63-0		U	0.294	0.0980

Surrogate	% Recovery	Lower	Upper	Qual
1,2-Dinitrobenzene	88.0	50	150	

U Undetected; the analyte was analyzed for, but not detected.
Q One or more quality control criteria failed. See narrative.

Microbac

20 lw 3/10/09

4

Sample Number: L08120489-04
Client ID: MR08-IS119-4.5-5.5-08D
Matrix: Soil
Workgroup Number: WG291329
Collect Date: 12/15/2008 12:35
Sample Tag: 02

PrePrep Method: NONE
Prep Method: METHOD
Analytical Method: 8330MOD
Analyst: ECL
Dilution: 1
Units: mg/kg

Instrument: HPLC5
Prep Date: 12/22/2008 08:00
Cal Date: 12/16/2008 16:51
Run Date: 12/30/2008 01:34
File ID: 5L003675.F

Analyte	CAS. Number	Result	Qual	RL	MDL
PETN	78-11-5		U	0.294	0.0980

U Undetected; the analyte was analyzed for, but not detected.

Microbac

21 RW 3/10/09

5

Sample Number: L08120489-05
Client ID: MR08-SS119D-08D
Matrix: Soil
Workgroup Number: WG291329
Collect Date: 12/15/2008 10:45
Sample Tag: 01

PrePrep Method: NONE
Prep Method: METHOD
Analytical Method: 8330MOD
Analyst: ECL
Dilution: 1
Units: mg/kg

Instrument: HPLC5
Prep Date: 12/22/2008 08:00
Cal Date: 12/16/2008 16:51
Run Date: 12/23/2008 15:15
File ID: 5L003484.F

Analyte	CAS. Number	Result	Qual	RL	MDL
1,3,5-Trinitrobenzene	99-35-4		U	0.300	0.100
1,3-Dinitrobenzene	99-65-0		U	0.300	0.100
2,4,6-Trinitrotoluene	118-96-7		U ~~Q~~	0.300	0.100
2,4-Dinitrotoluene	121-14-2		U	0.300	0.100
2,6-Dinitrotoluene	606-20-2		U	0.300	0.100
2-Amino-4,6-dinitrotoluene	35572-78-2		U	0.300	0.100
2-Nitrotoluene	88-72-2		U	0.300	0.100
3-Nitrotoluene	99-08-1		U	0.300	0.100
4-Nitrotoluene	99-99-0		U	0.300	0.100
4-Amino-2,6-dinitrotoluene	19406-51-0		U	0.300	0.100
HMX	2691-41-0		U	0.300	0.100
Nitrobenzene	98-95-3		U	0.300	0.100
RDX	121-82-4		U	0.300	0.100
Tetryl	479-45-8		U ~~Q~~	0.300	0.100
Nitroglycerin	55-63-0		U	0.300	0.100

Surrogate	% Recovery	Lower	Upper	Qual
1,2-Dinitrobenzene	89.8	50	150	

U Undetected; the analyte was analyzed for, but not detected.
Q One or more quality control criteria failed. See narrative.

Microbac

23 lcw 3/10/09

5

Sample Number: L08120489-05
Client ID: MR08-SS119D-08D
Matrix: Soil
Workgroup Number: WG291329
Collect Date: 12/15/2008 10:45
Sample Tag: 02

PrePrep Method: NONE
Prep Method: METHOD
Analytical Method: 8330MOD
Analyst: ECL
Dilution: 1
Units: mg/kg

Instrument: HPLC5
Prep Date: 12/22/2008 08:00
Cal Date: 12/16/2008 16:51
Run Date: 12/30/2008 01:47
File ID: 5L003676.F

Analyte	CAS. Number	Result	Qual	RL	MDL
PETN	78-11-5		U	0.300	0.100

U Undetected; the analyte was analyzed for, but not detected.

Microbac

lw 3/10/09

6

Sample Number: L08120489-06
Client ID: MR08-IS119D-4.5-5.5-08D
Matrix: Soil
Workgroup Number: WG291329
Collect Date: 12/15/2008 12:35
Sample Tag: 01

PrePrep Method: NONE
Prep Method: METHOD
Analytical Method: 8330MOD
Analyst: ECL
Dilution: 1
Units: mg/kg

Instrument: HPLC5
Prep Date: 12/22/2008 08:00
Cal Date: 12/16/2008 16:51
Run Date: 12/23/2008 15:53
File ID: 5L003485.F

Analyte	CAS. Number	Result	Qual	RL	MDL
1,3,5-Trinitrobenzene	99-35-4		U	0.295	0.0982
1,3-Dinitrobenzene	99-65-0		U	0.295	0.0982
2,4,6-Trinitrotoluene	118-96-7		U ~~Q~~	0.295	0.0982
2,4-Dinitrotoluene	121-14-2		U	0.295	0.0982
2,6-Dinitrotoluene	606-20-2		U	0.295	0.0982
2-Amino-4,6-dinitrotoluene	35572-78-2		U	0.295	0.0982
2-Nitrotoluene	88-72-2		U	0.295	0.0982
3-Nitrotoluene	99-08-1		U	0.295	0.0982
4-Nitrotoluene	99-99-0		U	0.295	0.0982
4-Amino-2,6-dinitrotoluene	19406-51-0		U	0.295	0.0982
HMX	2691-41-0		U	0.295	0.0982
Nitrobenzene	98-95-3		U	0.295	0.0982
RDX	121-82-4		U	0.295	0.0982
Tetryl	479-45-8		U ~~Q~~	0.295	0.0982
Nitroglycerin	55-63-0		U	0.295	0.0982

Surrogate	% Recovery	Lower	Upper	Qual
1,2-Dinitrobenzene	93.5	50	150	

U Undetected; the analyte was analyzed for, but not detected.
Q One or more quality control criteria failed. See narrative.

Microbac

24 lw 3/10/09

6

Sample Number: L08120489-06
Client ID: MR08-IS119D-4.5-5.5-08D
Matrix: Soil
Workgroup Number: WG291329
Collect Date: 12/15/2008 12:35
Sample Tag: 02

PrePrep Method: NONE
Prep Method: METHOD
Analytical Method: 8330MOD
Analyst: ECL
Dilution: 1
Units: mg/kg

Instrument: HPLC5
Prep Date: 12/22/2008 08:00
Cal Date: 12/16/2008 16:51
Run Date: 12/30/2008 02:27
File ID: 5L003679.F

Analyte	CAS. Number	Result	Qual	RL	MDL
PETN	78-11-5		U	0.295	0.0982

U Undetected; the analyte was analyzed for, but not detected.

Microbac

lw
3/10/09

Sample Number: L08120489-07
Client ID: MR08-SS120-08D
Matrix: Soil
Workgroup Number: WG291329
Collect Date: 12/15/2008 13:40
Sample Tag: 01

PrePrep Method: NONE
Prep Method: METHOD
Analytical Method: 8330MOD
Analyst: ECL
Dilution: 1
Units: mg/kg

Instrument: HPLC5
Prep Date: 12/22/2008 08:00
Cal Date: 12/16/2008 16:51
Run Date: 12/23/2008 16:32
File ID: 5L003486.F

Analyte	CAS. Number	Result	Qual	RL	MDL
1,3,5-Trinitrobenzene	99-35-4		U	0.300	0.100
1,3-Dinitrobenzene	99-65-0		U	0.300	0.100
2,4,6-Trinitrotoluene	118-96-7		U ~~Q~~	0.300	0.100
2,4-Dinitrotoluene	121-14-2		U	0.300	0.100
2,6-Dinitrotoluene	606-20-2		U	0.300	0.100
2-Amino-4,6-dinitrotoluene	35572-78-2		U	0.300	0.100
2-Nitrotoluene	88-72-2		U	0.300	0.100
3-Nitrotoluene	99-08-1		U	0.300	0.100
4-Nitrotoluene	99-99-0		U	0.300	0.100
4-Amino-2,6-dinitrotoluene	19406-51-0		U	0.300	0.100
HMX	2691-41-0		U	0.300	0.100
Nitrobenzene	98-95-3		U	0.300	0.100
RDX	121-82-4		U	0.300	0.100
Tetryl	479-45-8		U ~~Q~~	0.300	0.100
Nitroglycerin	55-63-0		U	0.300	0.100

Surrogate	% Recovery	Lower	Upper	Qual
1,2-Dinitrobenzene	86.2	50	150	

U Undetected; the analyte was analyzed for, but not detected.
Q One or more quality control criteria failed. See narrative.

Microbac

27 DW 3/10/09

7

Sample Number: L08120489-07
Client ID: MR08-SS120-08D
Matrix: Soil
Workgroup Number: WG291329
Collect Date: 12/15/2008 13:40
Sample Tag: 02

PrePrep Method: NONE
Prep Method: METHOD
Analytical Method: 8330MOD
Analyst: ECL
Dilution: 1
Units: mg/kg

Instrument: HPLC5
Prep Date: 12/22/2008 08:00
Cal Date: 12/16/2008 16:51
Run Date: 12/30/2008 02:40
File ID: 5L003680.F

Analyte	CAS. Number	Result	Qual	RL	MDL
PETN	78-11-5		U	0.300	0.100

U Undetected; the analyte was analyzed for, but not detected.

Microbac

26 lw
3/10/09

8

Sample Number: L08120489-08
Client ID: MR08-IS120-1.5-2.5-08D
Matrix: Soil
Workgroup Number: WG291329
Collect Date: 12/15/2008 14:00
Sample Tag: 01

PrePrep Method: NONE
Prep Method: METHOD
Analytical Method: 8330MOD
Analyst: ECL
Dilution: 1
Units: mg/kg

Instrument: HPLC5
Prep Date: 12/22/2008 08:00
Cal Date: 12/16/2008 16:51
Run Date: 12/23/2008 17:10
File ID: 5L003487.F

Analyte	CAS. Number	Result	Qual	RL	MDL
1,3,5-Trinitrobenzene	99-35-4		U	0.297	0.0991
1,3-Dinitrobenzene	99-65-0		U	0.297	0.0991
2,4,6-Trinitrotoluene	118-96-7	U	~~Q~~	0.297	0.0991
2,4-Dinitrotoluene	121-14-2		U	0.297	0.0991
2,6-Dinitrotoluene	606-20-2		U	0.297	0.0991
2-Amino-4,6-dinitrotoluene	35572-78-2		U	0.297	0.0991
2-Nitrotoluene	88-72-2		U	0.297	0.0991
3-Nitrotoluene	99-08-1		U	0.297	0.0991
4-Nitrotoluene	99-99-0		U	0.297	0.0991
4-Amino-2,6-dinitrotoluene	19406-51-0		U	0.297	0.0991
HMX	2691-41-0		U	0.297	0.0991
Nitrobenzene	98-95-3		U	0.297	0.0991
RDX	121-82-4		U	0.297	0.0991
Tetryl	479-45-8	U	~~Q~~	0.297	0.0991
Nitroglycerin	55-63-0		U	0.297	0.0991

Surrogate	% Recovery	Lower	Upper	Qual
1,2-Dinitrobenzene	90.7	50	150	

U Undetected; the analyte was analyzed for, but not detected.
Q One or more quality control criteria failed. See narrative.

Microbac

29 LW 3/10/09

8

Sample Number: L08120489-08
Client ID: MR08-IS120-1.5-2.5-08D
Matrix: Soil
Workgroup Number: WG291329
Collect Date: 12/15/2008 14:00
Sample Tag: 02

PrePrep Method: NONE
Prep Method: METHOD
Analytical Method: 8330MOD
Analyst: ECL
Dilution: 1
Units: mg/kg

Instrument: HPLC5
Prep Date: 12/22/2008 08:00
Cal Date: 12/16/2008 16:51
Run Date: 12/30/2008 02:53
File ID: 5L003681.F

Analyte	CAS. Number	Result	Qual	RL	MDL
PETN	78-11-5		U	0.297	0.0991

U Undetected; the analyte was analyzed for, but not detected.

Microbac

RLW 3/10/09

9

Sample Number: L08120489-09
Client ID: MR08-SS122-08D
Matrix: Soil
Workgroup Number: WG291329
Collect Date: 12/15/2008 14:25
Sample Tag: 01

PrePrep Method: NONE
Prep Method: METHOD
Analytical Method: 8330MOD
Analyst: ECL
Dilution: 1
Units: mg/kg

Instrument: HPLC5
Prep Date: 12/22/2008 08:00
Cal Date: 12/16/2008 16:51
Run Date: 12/23/2008 19:04
File ID: 5L003490.F

Analyte	CAS. Number	Result	Qual	RL	MDL	
1,3,5-Trinitrobenzene	99-35-4		U	0.300	0.0999	
1,3-Dinitrobenzene	99-65-0		U	0.300	0.0999	
2,4,6-Trinitrotoluene	118-96-7		U ~~Q~~	0.300	0.0999	
2,4-Dinitrotoluene	121-14-2		U	0.300	0.0999	
2,6-Dinitrotoluene	606-20-2		UJ ~~UQ~~	0.300	0.0999	CCH
2-Amino-4,6-dinitrotoluene	35572-78-2		~~J~~ ~~J~~	0.300	0.0999	MSL
2-Nitrotoluene	88-72-2		U	0.300	0.0999	
3-Nitrotoluene	99-08-1		U	0.300	0.0999	
4-Nitrotoluene	99-99-0		U	0.300	0.0999	
4-Amino-2,6-dinitrotoluene	19406-51-0		U	0.300	0.0999	
HMX	2691-41-0		U	0.300	0.0999	
Nitrobenzene	98-95-3		UJ ~~Q~~	0.300	0.0999	CCH
RDX	121-82-4		U	0.300	0.0999	
Tetryl	479-45-8		U ~~Q~~	0.300	0.0999	
Nitroglycerin	55-63-0		U	0.300	0.0999	

Surrogate	% Recovery	Lower	Upper	Qual
1,2-Dinitrobenzene	94.6	50	150	

UQ Undetected; the analyte was analyzed for, but not detected.
U Undetected; the analyte was analyzed for, but not detected.
Q One or more quality control criteria failed. See narrative.
J Estimated concentration; sample matrix interference

Microbac

31 LW 3/10/09

9

Sample Number: L08120489-09
Client ID: MR08-SS122-08D
Matrix: Soil
Workgroup Number: WG291329
Collect Date: 12/15/2008 14:25
Sample Tag: 02

PrePrep Method: NONE
Prep Method: METHOD
Analytical Method: 8330MOD
Analyst: ECL
Dilution: 1
Units: mg/kg

Instrument: HPLC5
Prep Date: 12/22/2008 08:00
Cal Date: 12/16/2008 16:51
Run Date: 12/30/2008 03:06
File ID: 5L003682.F

Analyte	CAS. Number	Result	Qual	RL	MDL
PETN	78-11-5		U	0.300	0.0999

U Undetected; the analyte was analyzed for, but not detected.

Microbac®

30 lcw
3/10/09

10

Sample Number: L08120489-12
Client ID: MR08-IS122-6.5-8-08D
Matrix: Soil
Workgroup Number: WG291329
Collect Date: 12/15/2008 15:00
Sample Tag: 01

PrePrep Method: NONE
Prep Method: METHOD
Analytical Method: 8330MOD
Analyst: ECL
Dilution: 1
Units: mg/kg

Instrument: HPLC5
Prep Date: 12/22/2008 08:00
Cal Date: 12/16/2008 16:51
Run Date: 12/23/2008 20:59
File ID: 5L003493.F

Analyte	CAS. Number	Result	Qual	RL	MDL	
1,3,5-Trinitrobenzene	99-35-4		U	0.299	0.0995	
1,3-Dinitrobenzene	99-65-0		U	0.299	0.0995	
2,4,6-Trinitrotoluene	118-96-7	U	~~Q~~	0.299	0.0995	
2,4-Dinitrotoluene	121-14-2		U	0.299	0.0995	
2,6-Dinitrotoluene	606-20-2	UJ	~~Q~~	0.299	0.0995	CCH
2-Amino-4,6-dinitrotoluene	35572-78-2	J	~~J~~	0.299	0.0995	MSL
2-Nitrotoluene	88-72-2		U	0.299	0.0995	
3-Nitrotoluene	99-08-1		U	0.299	0.0995	
4-Nitrotoluene	99-99-0		U	0.299	0.0995	
4-Amino-2,6-dinitrotoluene	19406-51-0		U	0.299	0.0995	
HMX	2691-41-0		U	0.299	0.0995	
Nitrobenzene	98-95-3	UJ	~~Q~~	0.299	0.0995	CCH
RDX	121-82-4		U	0.299	0.0995	
Tetryl	479-45-8	U	~~Q~~	0.299	0.0995	
Nitroglycerin	55-63-0		U	0.299	0.0995	

Surrogate	% Recovery	Lower	Upper	Qual
1,2-Dinitrobenzene	89.3	50	150	

U Undetected; the analyte was analyzed for, but not detected.
Q One or more quality control criteria failed. See narrative.
J Estimated concentration; sample matrix interference

Microbac

35 DW 3/10/09

10

Sample Number: L08120489-12
Client ID: MR08-IS122-6.5-8-08D
Matrix: Soil
Workgroup Number: WG291329
Collect Date: 12/15/2008 15:00
Sample Tag: 02

PrePrep Method: NONE
Prep Method: METHOD
Analytical Method: 8330MOD
Analyst: ECL
Dilution: 1
Units: mg/kg

Instrument: HPLC5
Prep Date: 12/22/2008 08:00
Cal Date: 12/16/2008 16:51
Run Date: 12/30/2008 03:19
File ID: 5L003683.F

Analyte	CAS. Number	Result	Qual	RL	MDL
PETN	78-11-5		U	0.299	0.0995

U Undetected; the analyte was analyzed for, but not detected.

Microbac

34 LW 3/10/09

11

Sample Number: L08120489-15
Client ID: MR08-SS118-08D
Matrix: Soil
Workgroup Number: WG291329
Collect Date: 12/15/2008 15:50
Sample Tag: 01

PrePrep Method: NONE
Prep Method: METHOD
Analytical Method: 8330MOD
Analyst: ECL
Dilution: 1
Units: mg/kg

Instrument: HPLC5
Prep Date: 12/22/2008 08:00
Cal Date: 12/16/2008 16:51
Run Date: 12/23/2008 22:53
File ID: 5L003496.F

Analyte	CAS. Number	Result	Qual	RL	MDL	
1,3,5-Trinitrobenzene	99-35-4		U	0.293	0.0976	
1,3-Dinitrobenzene	99-65-0		U	0.293	0.0976	
2,4,6-Trinitrotoluene	118-96-7	U	~~Q~~	0.293	0.0976	
2,4-Dinitrotoluene	121-14-2		U	0.293	0.0976	
2,6-Dinitrotoluene	606-20-2	UJ	~~Q~~	0.293	0.0976	CCH
2-Amino-4,6-dinitrotoluene	35572-78-2		U	0.293	0.0976	
2-Nitrotoluene	88-72-2		U	0.293	0.0976	
3-Nitrotoluene	99-08-1		U	0.293	0.0976	
4-Nitrotoluene	99-99-0		U	0.293	0.0976	
4-Amino-2,6-dinitrotoluene	19406-51-0		U	0.293	0.0976	
HMX	2691-41-0		U	0.293	0.0976	
Nitrobenzene	98-95-3	UJ	~~Q~~	0.293	0.0976	CCH
RDX	121-82-4		U	0.293	0.0976	
Tetryl	479-45-8	U	~~Q~~	0.293	0.0976	
Nitroglycerin	55-63-0		U	0.293	0.0976	

Surrogate	% Recovery	Lower	Upper	Qual
1,2-Dinitrobenzene	90.8	50	150	

U Undetected; the analyte was analyzed for, but not detected.
Q One or more quality control criteria failed. See narrative.

Microbac®

38 MW
3/10/09

11

Sample Number: L08120489-15
Client ID: MR08-SS118-08D
Matrix: Soil
Workgroup Number: WG291329
Collect Date: 12/15/2008 15:50
Sample Tag: 02

PrePrep Method: NONE
Prep Method: METHOD
Analytical Method: 8330MOD
Analyst: ECL
Dilution: 1
Units: mg/kg

Instrument: HPLC5
Prep Date: 12/22/2008 08:00
Cal Date: 12/16/2008 16:51
Run Date: 12/30/2008 03:32
File ID: 5L003684.F

Analyte	CAS. Number	Result	Qual	RL	MDL
PETN	78-11-5		U	0.293	0.0976

U Undetected; the analyte was analyzed for, but not detected.

Microbac

AW
3/10/09

12

Sample Number: L08120489-16
Client ID: MR08-IS118-08D
Matrix: Soil
Workgroup Number: WG291329
Collect Date: 12/15/2008 16:00
Sample Tag: 01

PrePrep Method: NONE
Prep Method: METHOD
Analytical Method: 8330MOD
Analyst: ECL
Dilution: 1
Units: mg/kg

Instrument: HPLC5
Prep Date: 12/22/2008 08:00
Cal Date: 12/16/2008 16:51
Run Date: 12/23/2008 23:31
File ID: 5L003497.F

Analyte	CAS. Number	Result	Qual	RL	MDL	
1,3,5-Trinitrobenzene	99-35-4		U	0.297	0.0989	
1,3-Dinitrobenzene	99-65-0		U	0.297	0.0989	
2,4,6-Trinitrotoluene	118-96-7	U	~~Q~~	0.297	0.0989	
2,4-Dinitrotoluene	121-14-2		U	0.297	0.0989	
2,6-Dinitrotoluene	606-20-2	UJ	~~Q~~	0.297	0.0989	CCH
2-Amino-4,6-dinitrotoluene	35572-78-2		U	0.297	0.0989	
2-Nitrotoluene	88-72-2		U	0.297	0.0989	
3-Nitrotoluene	99-08-1		U	0.297	0.0989	
4-Nitrotoluene	99-99-0		U	0.297	0.0989	
4-Amino-2,6-dinitrotoluene	19406-51-0		U	0.297	0.0989	
HMX	2691-41-0		U	0.297	0.0989	
Nitrobenzene	98-95-3	UJ	~~Q~~	0.297	0.0989	CCH
RDX	121-82-4		U	0.297	0.0989	
Tetryl	479-45-8	U	~~Q~~	0.297	0.0989	
Nitroglycerin	55-63-0		U	0.297	0.0989	

Surrogate	% Recovery	Lower	Upper	Qual
1,2-Dinitrobenzene	82.3	50	150	

U Undetected; the analyte was analyzed for, but not detected.
Q One or more quality control criteria failed. See narrative.

Microbac

40 lw 3/10/09

12

Sample Number: L08120489-16
Client ID: MR08-IS118-08D
Matrix: Soil
Workgroup Number: WG291329
Collect Date: 12/15/2008 16:00
Sample Tag: 02

PrePrep Method: NONE
Prep Method: METHOD
Analytical Method: 8330MOD
Analyst: ECL
Dilution: 1
Units: mg/kg

Instrument: HPLC5
Prep Date: 12/22/2008 08:00
Cal Date: 12/16/2008 16:51
Run Date: 12/30/2008 03:46
File ID: 5L003685.F

Analyte	CAS. Number	Result	Qual	RL	MDL
PETN	78-11-5		U	0.297	0.0989

U Undetected; the analyte was analyzed for, but not detected.

Microbac

MW 3/10/09

Report Number: L08120489
Report Date : January 16, 2009

13

Sample Number: L08120489-17
Client ID: MR08-EB01-121508-SS
Matrix: Water
Workgroup Number: WG291225
Collect Date: 12/15/2008 08:00
Sample Tag: 01

PrePrep Method: NONE
Prep Method: 3535
Analytical Method: 8330MOD
Analyst: ECL
Dilution: 1
Units: ug/L

Instrument: HPLC5
Prep Date: 12/22/2008 08:45
Cal Date: 12/16/2008 16:51
Run Date: 12/23/2008 04:35
File ID: 5L003470.F

Analyte	CAS. Number	Result	Qual	RL	MDL
1,3,5-Trinitrobenzene	99-35-4		U	1.00	0.250
1,3-Dinitrobenzene	99-65-0		U	1.00	0.250
2,4,6-Trinitrotoluene	118-96-7		U ~~Q~~	1.00	0.250
2,4-Dinitrotoluene	121-14-2		U	1.00	0.250
2,6-Dinitrotoluene	606-20-2		U	1.00	0.250
2-Amino-4,6-dinitrotoluene	35572-78-2		U	1.00	0.250
2-Nitrotoluene	88-72-2		U	1.00	0.250
3-Nitrotoluene	99-08-1		U	1.00	0.250
4-Nitrotoluene	99-99-0		U	1.00	0.250
4-Amino-2,6-dinitrotoluene	19406-51-0		U	1.00	0.250
HMX	2691-41-0		U	1.00	0.250
Nitrobenzene	98-95-3		U	1.00	0.250
RDX	121-82-4		U	1.00	0.250
Tetryl	479-45-8		U ~~Q~~	1.00	0.250
Nitroglycerin	55-63-0		U	1.00	0.250

Surrogate	% Recovery	Lower	Upper	Qual
1,2-Dinitrobenzene	97.2	50	150	

U Undetected; the analyte was analyzed for, but not detected.
Q One or more quality control criteria failed. See narrative.

Microbac

42
LW
3/10/09

13

Sample Number: L08120489-17
Client ID: MR08-EB01-121508-SS
Matrix: Water
Workgroup Number: WG291225
Collect Date: 12/15/2008 08:00
Sample Tag: 02

PrePrep Method: NONE
Prep Method: 3535
Analytical Method: 8330MOD
Analyst: ECL
Dilution: 1
Units: ug/L

Instrument: HPLC5
Prep Date: 12/22/2008 08:45
Cal Date: 12/16/2008 16:51
Run Date: 12/29/2008 23:48
File ID: 5L003667.F

Analyte	CAS. Number	Result	Qual	RL	MDL
PETN	78-11-5		U	1.00	0.250

U Undetected; the analyte was analyzed for, but not detected.

Microbac

 RW 3/10/09

14

Sample Number: L08120489-18
Client ID: MR08-SS127-08D
Matrix: Soil
Workgroup Number: WG291329
Collect Date: 12/16/2008 08:50
Sample Tag: 01

PrePrep Method: NONE
Prep Method: METHOD
Analytical Method: 8330MOD
Analyst: ECL
Dilution: 1
Units: mg/kg

Instrument: HPLC5
Prep Date: 12/22/2008 08:00
Cal Date: 12/16/2008 16:51
Run Date: 12/24/2008 00:10
File ID: 5L003498.F

Analyte	CAS. Number	Result	Qual	RL	MDL	
1,3,5-Trinitrobenzene	99-35-4		U	0.300	0.0999	
1,3-Dinitrobenzene	99-65-0		U	0.300	0.0999	
2,4,6-Trinitrotoluene	118-96-7	U	~~Q~~	0.300	0.0999	
2,4-Dinitrotoluene	121-14-2		U	0.300	0.0999	
2,6-Dinitrotoluene	606-20-2	UJ	~~Q~~	0.300	0.0999	CCH
2-Amino-4,6-dinitrotoluene	35572-78-2		U	0.300	0.0999	
2-Nitrotoluene	88-72-2		U	0.300	0.0999	
3-Nitrotoluene	99-08-1		U	0.300	0.0999	
4-Nitrotoluene	99-99-0		U	0.300	0.0999	
4-Amino-2,6-dinitrotoluene	19406-51-0		U	0.300	0.0999	
HMX	2691-41-0		U	0.300	0.0999	
Nitrobenzene	98-95-3	UJ	~~Q~~	0.300	0.0999	CCH
RDX	121-82-4		U	0.300	0.0999	
Tetryl	479-45-8	U	~~Q~~	0.300	0.0999	
Nitroglycerin	55-63-0		U	0.300	0.0999	

Surrogate	% Recovery	Lower	Upper	Qual
1,2-Dinitrobenzene	85.4	50	150	

U Undetected; the analyte was analyzed for, but not detected.
Q One or more quality control criteria failed. See narrative.

Microbac

45 MW 3/10/09

14

Sample Number: L08120489-18
Client ID: MR08-SS127-08D
Matrix: Soil
Workgroup Number: WG291329
Collect Date: 12/16/2008 08:50
Sample Tag: 02

PrePrep Method: NONE
Prep Method: METHOD
Analytical Method: 8330MOD
Analyst: ECL
Dilution: 1
Units: mg/kg

Instrument: HPLC5
Prep Date: 12/22/2008 08:00
Cal Date: 12/16/2008 16:51
Run Date: 12/30/2008 03:59
File ID: 5L003686.F

Analyte	CAS. Number	Result	Qual	RL	MDL
PETN	78-11-5		U	0.300	0.0999

U Undetected; the analyte was analyzed for, but not detected.

Microbac

JW
3/10/09

15

Sample Number: L08120489-19
Client ID: MR08-IS127-1.5-3-08D
Matrix: Soil
Workgroup Number: WG291329
Collect Date: 12/16/2008 09:05
Sample Tag: 01

PrePrep Method: NONE
Prep Method: METHOD
Analytical Method: 8330MOD
Analyst: ECL
Dilution: 1
Units: mg/kg

Instrument: HPLC5
Prep Date: 12/22/2008 08:00
Cal Date: 12/16/2008 16:51
Run Date: 12/24/2008 00:48
File ID: 5L003499.F

Analyte	CAS. Number	Result	Qual	RL	MDL	
1,3,5-Trinitrobenzene	99-35-4		U	0.294	0.0980	
1,3-Dinitrobenzene	99-65-0		U	0.294	0.0980	
2,4,6-Trinitrotoluene	118-96-7	U	~~Q~~	0.294	0.0980	
2,4-Dinitrotoluene	121-14-2		U	0.294	0.0980	
2,6-Dinitrotoluene	606-20-2	UJ	~~Q~~	0.294	0.0980	CCH
2-Amino-4,6-dinitrotoluene	35572-78-2		U	0.294	0.0980	
2-Nitrotoluene	88-72-2		U	0.294	0.0980	
3-Nitrotoluene	99-08-1		U	0.294	0.0980	
4-Nitrotoluene	99-99-0		U	0.294	0.0980	
4-Amino-2,6-dinitrotoluene	19406-51-0		U	0.294	0.0980	
HMX	2691-41-0		U	0.294	0.0980	
Nitrobenzene	98-95-3	UJ	~~Q~~	0.294	0.0980	CCH
RDX	121-82-4		U	0.294	0.0980	
Tetryl	479-45-8	U	~~Q~~	0.294	0.0980	
Nitroglycerin	55-63-0		U	0.294	0.0980	

Surrogate	% Recovery	Lower	Upper	Qual
1,2-Dinitrobenzene	91.3	50	150	

U Undetected; the analyte was analyzed for, but not detected.
Q One or more quality control criteria failed. See narrative.

Microbac

47 QW 3/10/09

15

Sample Number: L08120489-19
Client ID: MR08-IS127-1.5-3-08D
Matrix: Soil
Workgroup Number: WG291329
Collect Date: 12/16/2008 09:05
Sample Tag: 02

PrePrep Method: NONE
Prep Method: METHOD
Analytical Method: 8330MOD
Analyst: ECL
Dilution: 1
Units: mg/kg

Instrument: HPLC5
Prep Date: 12/22/2008 08:00
Cal Date: 12/16/2008 16:51
Run Date: 12/30/2008 04:12
File ID: 5L003687.F

Analyte	CAS. Number	Result	Qual	RL	MDL
PETN	78-11-5		U	0.294	0.0980

U Undetected; the analyte was analyzed for, but not detected.

Microbac

3/10/09

16

Sample Number: L08120489-20
Client ID: MR08-SS126-08D
Matrix: Soil
Workgroup Number: WG291329
Collect Date: 12/16/2008 09:25
Sample Tag: 01

PrePrep Method: NONE
Prep Method: METHOD
Analytical Method: 8330MOD
Analyst: ECL
Dilution: 1
Units: mg/kg

Instrument: HPLC5
Prep Date: 12/22/2008 08:00
Cal Date: 12/16/2008 16:51
Run Date: 12/24/2008 02:42
File ID: 5L003502.F

Analyte	CAS. Number	Result	Qual	RL	MDL	
1,3,5-Trinitrobenzene	99-35-4		U	0.300	0.100	
1,3-Dinitrobenzene	99-65-0		U	0.300	0.100	
2,4,6-Trinitrotoluene	118-96-7	U	~~Q~~	0.300	0.100	
2,4-Dinitrotoluene	121-14-2		U	0.300	0.100	
2,6-Dinitrotoluene	606-20-2	UJ	~~Q~~	0.300	0.100	CCH
2-Amino-4,6-dinitrotoluene	35572-78-2		U	0.300	0.100	
2-Nitrotoluene	88-72-2		U	0.300	0.100	
3-Nitrotoluene	99-08-1		U	0.300	0.100	
4-Nitrotoluene	99-99-0		U	0.300	0.100	
4-Amino-2,6-dinitrotoluene	19406-51-0		U	0.300	0.100	
HMX	2691-41-0		U	0.300	0.100	
Nitrobenzene	98-95-3	UJ	~~Q~~	0.300	0.100	CCH
RDX	121-82-4		U	0.300	0.100	
Tetryl	479-45-8	U	~~Q~~	0.300	0.100	
Nitroglycerin	55-63-0		U	0.300	0.100	

Surrogate	% Recovery	Lower	Upper	Qual
1,2-Dinitrobenzene	92.9	50	150	

U Undetected; the analyte was analyzed for, but not detected.
Q One or more quality control criteria failed. See narrative.

Microbac

48 MW 3/10/09

17

Sample Number: L08120489-21
Client ID: MR08-IS126-1.5-2.5-08D
Matrix: Soil
Workgroup Number: WG291329
Collect Date: 12/16/2008 09:40
Sample Tag: 01

PrePrep Method: NONE
Prep Method: METHOD
Analytical Method: 8330MOD
Analyst: ECL
Dilution: 1
Units: mg/kg

Instrument: HPLC5
Prep Date: 12/22/2008 08:00
Cal Date: 12/16/2008 16:51
Run Date: 12/24/2008 03:20
File ID: 5L003503.F

Analyte	CAS. Number	Result	Qual	RL	MDL	
1,3,5-Trinitrobenzene	99-35-4		U	0.293	0.0976	
1,3-Dinitrobenzene	99-65-0		U	0.293	0.0976	
2,4,6-Trinitrotoluene	118-96-7	U	~~Q~~	0.293	0.0976	
2,4-Dinitrotoluene	121-14-2		U	0.293	0.0976	
2,6-Dinitrotoluene	606-20-2	UJ	~~Q~~	0.293	0.0976	CCH
2-Amino-4,6-dinitrotoluene	35572-78-2		U	0.293	0.0976	
2-Nitrotoluene	88-72-2		U	0.293	0.0976	
3-Nitrotoluene	99-08-1		U	0.293	0.0976	
4-Nitrotoluene	99-99-0		U	0.293	0.0976	
4-Amino-2,6-dinitrotoluene	19406-51-0		U	0.293	0.0976	
HMX	2691-41-0		U	0.293	0.0976	
Nitrobenzene	98-95-3	UJ	~~Q~~	0.293	0.0976	CCH
RDX	121-82-4		U	0.293	0.0976	
Tetryl	479-45-8	U	~~Q~~	0.293	0.0976	
Nitroglycerin	55-63-0		U	0.293	0.0976	

Surrogate	% Recovery	Lower	Upper	Qual
1,2-Dinitrobenzene	91.2	50	150	

U Undetected; the analyte was analyzed for, but not detected.
Q One or more quality control criteria failed. See narrative.

Microbac

50 lw 3/10/09

17

Sample Number: L08120489-21
Client ID: MR08-IS126-1.5-2.5-08D
Matrix: Soil
Workgroup Number: WG291329
Collect Date: 12/16/2008 09:40
Sample Tag: 02

PrePrep Method: NONE
Prep Method: METHOD
Analytical Method: 8330MOD
Analyst: ECL
Dilution: 1
Units: mg/kg

Instrument: HPLC5
Prep Date: 12/22/2008 08:00
Cal Date: 12/16/2008 16:51
Run Date: 12/30/2008 05:05
File ID: 5L003691.F

Analyte	CAS. Number	Result	Qual	RL	MDL
PETN	78-11-5		U	0.293	0.0976

U Undetected; the analyte was analyzed for, but not detected.

Microbac

51 MW 3/10/09

ENVIRONMENTAL
Data Services, Inc.

METALS

USEPA Region IV - Level IV Review

Site: MCB Camp Lejeune, TO-09 SDG #: L08120489

Client: CH2M HILL, Inc., Virginia Beach, Virginia Date: March 11, 2009

Laboratory: Microbac Laboratories, Inc., Marietta, Ohio Reviewer: Nancy Weaver

EDS ID	Client Sample ID	Laboratory Sample ID	Matrix
1	MR08-SS102-08D	L08120489-01	Soil
2	MR08-IS102-2-3-08D	L08120489-02	Soil
3	MR08-SS119-08D	L08120489-03	Soil
4	MR08-IS119-4.5-5.5-08D	L08120489-04	Soil
5	MR08-SS119D-08D	L08120489-05	Soil
6	MR08-IS119D-4.5-5.5-08D	L08120489-06	Soil
7	MR08-SS120-08D	L08120489-07	Soil
8	MR08-IS120-1.5-2.5-08D	L08120489-08	Soil
9	MR08-SS122-08D	L08120489-09	Soil
10MS	MR08-SS122-08DMS	L08120489-10MS	Soil
11MSD	MR08-SS122-08DMSD	L08120489-11MSD	Soil
12	MR08-IS122-6.5-8-08D	L08120489-12	Soil
13MS	MR08-IS122-6.5-8-08DMS	L08120489-13MS	Soil
14MSD	MR08-IS122-6.5-8-08DMSD	L08120489-14MSD	Soil
15	MR08-SS118-08D	L08120489-15	Soil
16	MR08-IS118-08D	L08120489-16	Soil
17	MR08-EB01-121508-SS	L08120489-17	Water
18	MR08-SS127-08D	L08120489-18	Soil
19	MR08-IS127-1.5-3-08D	L08120489-19	Soil
20	MR08-SS126-08D	L08120489-20	Soil
21	MR08-IS126-1.5-2.5-08D	L08120489-21	Soil

The USEPA "Contract Laboratory Program National Functional Guidelines for Inorganic Data Review," October 2004, and professional judgement were used in evaluating the data in this summary report.

Holding Times - All samples were prepared and analyzed within 28 days for mercury and 180 days for all other metals.

Calibration - The ICV and CCV %R values were acceptable.

Method and Calibration Blanks - The method blank contaminations are summarized below.

Compound	Conc. ug/L	Action Level ug/L	Qualifier	Affected Samples
Barium	4.71	23.55	U	17

Field and Equipment Blank - Field QC results are summarized below.

Blank ID	Compound	Conc. ug/L	Action Level mg/kg	Qualifier	Affected Samples
MR08-EB01-121508-SS	Chromium	2.68	53.60	U	1, 3, 5, 7, 9, 15, 18, 20
	Zinc	6.98	116.33	U	1, 3, 5, 7, 9, 15, 18, 20
MR08-FB01120608	None - ND	-	-	-	-

ICP Interference Check Sample - All %R values were acceptable.

MS/MSD - The MS/MSD sample exhibited acceptable %R and RPD values except the following.

MS/MSD Sample ID	Compound	MS/MSD %R/RPD	Qualifier	Affected Samples
9	Cadmium	70.4%/Ok/Ok	J/UJ	1-4, 9
	Lead	Ok/184%/Ok	J	1-9, 12, 15, 16, 18-21

LCS - The LCS samples exhibited acceptable %R values.

ICP Serial Dilution - The ICP serial dilution sample exhibited acceptable %D values.

Field Duplicates - Field duplicate results are summarized below.

Compound	MR08-SS119-08D mg/kg	MR08-SS119D-08D mg/kg	RPD	Qualifier
Antimony	0.779	1.29	49%	None
Arsenic	6.19	5.02	21%	None
Barium	6.32	9.63	42%	None
Cadmium	0.273	0.539	66%	None
Copper	6.59	4.93	29%	None
Lead	18.5	29.3	45%	None
Mercury	0.0330	0.102 U	NC	None
Selenium	0.477	0.461	3%	None
Silver	0.289	0.195	39%	None

Compound	MR08-IS119-4.5-5.5-08D mg/kg	MR08-IS119D-4.5-5.5-08D mg/kg	RPD	Qualifier
Arsenic	1.33	0.697	62%	None
Barium	2.31	6.17	91%	None
Chromium	3.61	5.50	41%	None
Copper	1.74 U	0.503	NC	None
Lead	2.20	2.54	14%	None
Selenium	0.454 U	0.156	NC	None
Zinc	0.791	0.759	4%	None

Compound Quantitation - No discrepancies were identified.

Report Number: L08120489

Report Date : January 16, 2009

Sample Number: L08120489-01
Client ID: MR08-SS102-08D
Matrix: Soil
Workgroup Number: WG291261
Collect Date: 12/15/2008 10:00
Sample Tag: 01

PrePrep Method: NONE
Prep Method: 3051
Analytical Method: 6010B
Analyst: KHR
Dilution: 1
Units: mg/kg

Instrument: IRIS-ICP
Prep Date: 12/19/2008 08:24
Cal Date: 12/23/2008 09:33
Run Date: 12/23/2008 18:35
File ID: IR.122308.183500
Percent Solid: 93.4

Analyte	CAS. Number	Result	Qual	RL	MDL	
Silver, Total	7440-22-4	0.307	J	0.792	0.198	
Barium, Total	7440-39-3	6.17		0.396	0.0792	
Cadmium, Total	7440-43-9	0.280 J		0.158	0.0396	MSL
Chromium, Total	7440-47-3	6.49 U		0.792	0.0950	BL
Copper, Total	7440-50-8	1.97		1.58	0.396	
Antimony, Total	7440-36-0	1.52	J	1.58	0.396	
Zinc, Total	7440-66-6	12.4 U		1.58	0.396	BL

J Estimated ; the analyte concentration was less than the low standard (LOQ)

Microbac

lw
307 3/11/09

Sample Number: L08120489-01
Client ID: MR08-SS102-08D
Matrix: Soil
Workgroup Number: WG291053
Collect Date: 12/15/2008 10:00
Sample Tag: 01

PrePrep Method: NONE
Prep Method: 3051
Analytical Method: 6020
Analyst: JYH
Dilution: 1
Units: mg/kg

Instrument: ELAN-ICP
Prep Date: 12/18/2008 07:14
Cal Date: 12/19/2008 11:58
Run Date: 12/19/2008 20:55
File ID: EL.121908.205552
Percent Solid: 93.4

Analyte	CAS. Number	Result	Qual	RL	MDL
Arsenic, Total	7440-38-2	5.41		0.311	0.0778
Lead, Total	7439-92-1	28.4 J		0.415	0.104
Selenium, Total	7782-49-2	0.415	J	0.415	0.104

MSH

J Estimated ; the analyte concentration was less than the low standard (LOQ)

Microbac

MW 3/4/09

Sample Number: L08120489-01
Client ID: MR08-SS102-08D
Matrix: Soil
Workgroup Number: WG291055
Collect Date: 12/15/2008 10:00
Sample Tag: 01

PrePrep Method: NONE
Prep Method: 7471A
Analytical Method: 7471A
Analyst: ADC
Dilution: 1
Units: mg/kg

Instrument: HYDRA
Prep Date: 12/18/2008 07:24
Cal Date: 12/19/2008 14:54
Run Date: 12/19/2008 15:30
File ID: HY.121908.153036
Percent Solid: 93.4

Analyte	CAS. Number	Result	Qual	RL	MDL
Mercury, Total	7439-97-6	0.0224	J	0.101	0.0203

J Estimated ; the analyte concentration was less than the low standard (LOQ)

Microbac

2423 lw 3/4/09

2

Sample Number: L08120489-02
Client ID: MR08-IS102-2-3-08D
Matrix: Soil
Workgroup Number: WG291261
Collect Date: 12/15/2008 10:15
Sample Tag: 01

PrePrep Method: NONE
Prep Method: 3051
Analytical Method: 6010B
Analyst: KHR
Dilution: 1
Units: mg/kg

Instrument: IRIS-ICP
Prep Date: 12/19/2008 08:25
Cal Date: 12/23/2008 09:33
Run Date: 12/23/2008 18:59
File ID: IR.122308.185900
Percent Solid: 88.2

Analyte	CAS. Number	Result	Qual	RL	MDL
Silver, Total	7440-22-4		U	0.854	0.213
Barium, Total	7440-39-3	2.27		0.427	0.0854
Cadmium, Total	7440-43-9	U1	~~B~~	0.171	0.0427
Chromium, Total	7440-47-3	2.26		0.854	0.102
Copper, Total	7440-50-8		U	1.71	0.427
Antimony, Total	7440-36-0		U	1.71	0.427
Zinc, Total	7440-66-6		U	1.71	0.427

MSL

U Undetected; the analyte was analyzed for, but not detected.

Microbac

lew
308 3/11/09

2

Sample Number: L08120489-02
Client ID: MR08-IS102-2-3-08D
Matrix: Soil
Workgroup Number: WG291053
Collect Date: 12/15/2008 10:15
Sample Tag: 01

PrePrep Method: NONE
Prep Method: 3051
Analytical Method: 6020
Analyst: JYH
Dilution: 1
Units: mg/kg

Instrument: ELAN-ICP
Prep Date: 12/18/2008 07:14
Cal Date: 12/19/2008 11:58
Run Date: 12/19/2008 21:01
File ID: EL.121908.210138
Percent Solid: 88.2

Analyte	CAS. Number	Result	Qual	RL	MDL
Arsenic, Total	7440-38-2	0.121	J	0.337	0.0842
Lead, Total	7439-92-1	2.73 J		0.449	0.112
Selenium, Total	7782-49-2	0.351	J	0.449	0.112

MSH

J Estimated ; the analyte concentration was less than the low standard (LOQ)

Microbac

JW 3/4/09

2

Sample Number:	L08120489-02	PrePrep Method:	NONE	Instrument:	HYDRA
Client ID:	MR08-IS102-2-3-08D	Prep Method:	7471A	Prep Date:	12/18/2008 07:24
Matrix:	Soil	Analytical Method:	7471A	Cal Date:	12/19/2008 14:54
Workgroup Number:	WG291055	Analyst:	ADC	Run Date:	12/19/2008 15:34
Collect Date:	12/15/2008 10:15	Dilution:	1	File ID:	HY.121908.153444
Sample Tag:	01	Units:	mg/kg	Percent Solid:	88.2

Analyte	CAS. Number	Result	Qual	RL	MDL
Mercury, Total	7439-97-6		U	0.110	0.0220

U Undetected; the analyte was analyzed for, but not detected.

Microbac

2424 lew 3/11/09

3

Sample Number: L08120489-03
Client ID: MR08-SS119-08D
Matrix: Soil
Workgroup Number: WG291261
Collect Date: 12/15/2008 10:45
Sample Tag: 01

PrePrep Method: NONE
Prep Method: 3051
Analytical Method: 6010B
Analyst: KHR
Dilution: 1
Units: mg/kg

Instrument: IRIS-ICP
Prep Date: 12/19/2008 08:25
Cal Date: 12/23/2008 09:33
Run Date: 12/23/2008 19:05
File ID: IR.122308.190500
Percent Solid: 92.8

Analyte	CAS. Number	Result	Qual	RL	MDL	
Silver, Total	7440-22-4	0.289	J	0.760	0.190	
Barium, Total	7440-39-3	6.32		0.380	0.0760	
Cadmium, Total	7440-43-9	0.273 J		0.152	0.0380	MSL
Chromium, Total	7440-47-3	4.73 U		0.760	0.0912	BL
Copper, Total	7440-50-8	6.59		1.52	0.380	
Antimony, Total	7440-36-0	0.779	J	1.52	0.380	
Zinc, Total	7440-66-6	12.6 U		1.52	0.380	BL

J Estimated ; the analyte concentration was less than the low standard (LOQ)

Microbac

309 lw 3/11/09

3

Sample Number: L08120489-03
Client ID: MR08-SS119-08D
Matrix: Soil
Workgroup Number: WG291053
Collect Date: 12/15/2008 10:45
Sample Tag: 01

PrePrep Method: NONE
Prep Method: 3051
Analytical Method: 6020
Analyst: JYH
Dilution: 1
Units: mg/kg

Instrument: ELAN-ICP
Prep Date: 12/18/2008 07:14
Cal Date: 12/19/2008 11:58
Run Date: 12/19/2008 21:07
File ID: EL.121908.210722
Percent Solid: 92.8

Analyte	CAS. Number	Result	Qual	RL	MDL
Arsenic, Total	7440-38-2	6.19		0.317	0.0792
Lead, Total	7439-92-1	18.5 J		0.422	0.106
Selenium, Total	7782-49-2	0.477		0.422	0.106

MSH

Microbac

lew
1/31/09

3

Sample Number:	L08120489-03	PrePrep Method:	NONE	Instrument:	HYDRA
Client ID:	MR08-SS119-08D	Prep Method:	7471A	Prep Date:	12/18/2008 07:24
Matrix:	Soil	Analytical Method:	7471A	Cal Date:	12/19/2008 14:54
Workgroup Number:	WG291055	Analyst:	ADC	Run Date:	12/19/2008 15:36
Collect Date:	12/15/2008 10:45	Dilution:	1	File ID:	HY.121908.153630
Sample Tag:	01	Units:	mg/kg	Percent Solid:	92.8

Analyte	CAS. Number	Result	Qual	RL	MDL
Mercury, Total	7439-97-6	0.0330	J	0.101	0.0202

J Estimated ; the analyte concentration was less than the low standard (LOQ)

Microbac

KW 3/4/09

2425

4

Sample Number: L08120489-04
Client ID: MR08-IS119-4.5-5.5-08D
Matrix: Soil
Workgroup Number: WG291261
Collect Date: 12/15/2008 12:35
Sample Tag: 01

PrePrep Method: NONE
Prep Method: 3051
Analytical Method: 6010B
Analyst: KHR
Dilution: 1
Units: mg/kg

Instrument: IRIS-ICP
Prep Date: 12/19/2008 08:26
Cal Date: 12/23/2008 09:33
Run Date: 12/23/2008 19:11
File ID: IR.122308.191100
Percent Solid: 87.3

Analyte	CAS. Number	Result	Qual	RL	MDL
Silver, Total	7440-22-4		U	0.871	0.218
Barium, Total	7440-39-3	2.31		0.436	0.0871
Cadmium, Total	7440-43-9		UJ	0.174	0.0436
Chromium, Total	7440-47-3	3.61		0.871	0.105
Copper, Total	7440-50-8		U	1.74	0.436
Antimony, Total	7440-36-0		U	1.74	0.436
Zinc, Total	7440-66-6	0.791	J	1.74	0.436

MSL

U Undetected; the analyte was analyzed for, but not detected.
J Estimated ; the analyte concentration was less than the low standard (LOQ)

Microbac

310 3/11/09

4

Sample Number: L08120489-04
Client ID: MR08-IS119-4.5-5.5-08D
Matrix: Soil
Workgroup Number: WG291053
Collect Date: 12/15/2008 12:35
Sample Tag: 01

PrePrep Method: NONE
Prep Method: 3051
Analytical Method: 6020
Analyst: JYH
Dilution: 1
Units: mg/kg

Instrument: ELAN-ICP
Prep Date: 12/18/2008 07:14
Cal Date: 12/22/2008 14:15
Run Date: 12/22/2008 18:26
File ID: EL.122208.182637
Percent Solid: 87.3

Analyte	CAS. Number	Result	Qual	RL	MDL
Arsenic, Total	7440-38-2	1.33		0.341	0.0852
Lead, Total	7439-92-1	2.20 J		0.454	0.114
Selenium, Total	7782-49-2		U	0.454	0.114

MSH

U Undetected; the analyte was analyzed for, but not detected.

Microbac

lew 3/11/09

4

Sample Number: L08120489-04
Client ID: MR08-IS119-4.5-5.5-08D
Matrix: Soil
Workgroup Number: WG291055
Collect Date: 12/15/2008 12:35
Sample Tag: 01

PrePrep Method: NONE
Prep Method: 7471A
Analytical Method: 7471A
Analyst: ADC
Dilution: 1
Units: mg/kg

Instrument: HYDRA
Prep Date: 12/18/2008 07:24
Cal Date: 12/19/2008 14:54
Run Date: 12/19/2008 15:39
File ID: HY.121908.153903
Percent Solid: 87.3

Analyte	CAS. Number	Result	Qual	RL	MDL
Mercury, Total	7439-97-6		U	0.110	0.0220

U Undetected; the analyte was analyzed for, but not detected.

Microbac

lew 3/4/09

2426

5

Sample Number: L08120489-05
Client ID: MR08-SS119D-08D
Matrix: Soil
Workgroup Number: WG291262
Collect Date: 12/15/2008 10:45
Sample Tag: 01

PrePrep Method: NONE
Prep Method: 3051
Analytical Method: 6010B
Analyst: KHR
Dilution: 1
Units: mg/kg

Instrument: IRIS-ICP
Prep Date: 12/19/2008 09:06
Cal Date: 12/23/2008 09:33
Run Date: 12/23/2008 10:29
File ID: IR.122308.102900
Percent Solid: 93.1

Analyte	CAS. Number	Result	Qual	RL	MDL	
Silver, Total	7440-22-4	0.195	J	0.767	0.192	
Barium, Total	7440-39-3	9.63		0.383	0.0767	
Cadmium, Total	7440-43-9	0.539		0.153	0.0383	
Chromium, Total	7440-47-3	6.41 U		0.767	0.0920	BL
Copper, Total	7440-50-8	4.93		1.53	0.383	
Antimony, Total	7440-36-0	1.29	J	1.53	0.383	
Zinc, Total	7440-66-6	18.7 U		1.53	0.383	BL

J Estimated ; the analyte concentration was less than the low standard (LOQ)

Microbac

311 JW 3/4/09

5

Sample Number: L08120489-05
Client ID: MR08-SS119D-08D
Matrix: Soil
Workgroup Number: WG291053
Collect Date: 12/15/2008 10:45
Sample Tag: 01

PrePrep Method: NONE
Prep Method: 3051
Analytical Method: 6020
Analyst: JYH
Dilution: 1
Units: mg/kg

Instrument: ELAN-ICP
Prep Date: 12/18/2008 07:14
Cal Date: 12/22/2008 14:15
Run Date: 12/22/2008 18:32
File ID: EL.122208.183249
Percent Solid: 93.1

Analyte	CAS. Number	Result	Qual	RL	MDL
Arsenic, Total	7440-38-2	5.02		0.315	0.0787
Lead, Total	7439-92-1	29.3 J		0.420	0.105
Selenium, Total	7782-49-2	0.461		0.420	0.105

MSH

Microbac

LW 3/11/09

5

Sample Number: L08120489-05
Client ID: MR08-SS119D-08D
Matrix: Soil
Workgroup Number: WG291055
Collect Date: 12/15/2008 10:45
Sample Tag: 01

PrePrep Method: NONE
Prep Method: 7471A
Analytical Method: 7471A
Analyst: ADC
Dilution: 1
Units: mg/kg

Instrument: HYDRA
Prep Date: 12/18/2008 07:24
Cal Date: 12/19/2008 14:54
Run Date: 12/19/2008 15:41
File ID: HY.121908.154142
Percent Solid: 93.1

Analyte	CAS. Number	Result	Qual	RL	MDL
Mercury, Total	7439-97-6		U	0.102	0.0204

U Undetected; the analyte was analyzed for, but not detected.

Microbac

2427 3/4/09

6

Sample Number: L08120489-06
Client ID: MR08-IS119D-4.5-5.5-08D
Matrix: Soil
Workgroup Number: WG291262
Collect Date: 12/15/2008 12:35
Sample Tag: 01

PrePrep Method: NONE
Prep Method: 3051
Analytical Method: 6010B
Analyst: KHR
Dilution: 1
Units: mg/kg

Instrument: IRIS-ICP
Prep Date: 12/19/2008 09:06
Cal Date: 12/23/2008 09:33
Run Date: 12/23/2008 12:11
File ID: IR.122308.121100
Percent Solid: 84.8

Analyte	CAS. Number	Result	Qual	RL	MDL
Silver, Total	7440-22-4		U	0.830	0.207
Barium, Total	7440-39-3	6.17		0.415	0.0830
Cadmium, Total	7440-43-9		U	0.166	0.0415
Chromium, Total	7440-47-3	5.50		0.830	0.0996
Copper, Total	7440-50-8	0.503	J	1.66	0.415
Antimony, Total	7440-36-0		U	1.66	0.415
Zinc, Total	7440-66-6	0.759	J	1.66	0.415

U Undetected; the analyte was analyzed for, but not detected.
J Estimated ; the analyte concentration was less than the low standard (LOQ)

Microbac

MW 3/11/09

312

6

Sample Number: L08120489-06
Client ID: MR08-IS119D-4.5-5.5-08D
Matrix: Soil
Workgroup Number: WG291053
Collect Date: 12/15/2008 12:35
Sample Tag: 01

PrePrep Method: NONE
Prep Method: 3051
Analytical Method: 6020
Analyst: JYH
Dilution: 1
Units: mg/kg

Instrument: ELAN-ICP
Prep Date: 12/18/2008 07:14
Cal Date: 12/22/2008 14:15
Run Date: 12/22/2008 18:39
File ID: EL.122208.183902
Percent Solid: 84.8

Analyte	CAS. Number	Result	Qual	RL	MDL
Arsenic, Total	7440-38-2	0.697		0.343	0.0859
Lead, Total	7439-92-1	2.54 J		0.458	0.114
Selenium, Total	7782-49-2	0.156	J	0.458	0.114

MSH

J Estimated ; the analyte concentration was less than the low standard (LOQ)

Microbac

MW 3/11/09

6

Sample Number: L08120489-06
Client ID: MR08-IS119D-4.5-5.5-08D
Matrix: Soil
Workgroup Number: WG291055
Collect Date: 12/15/2008 12:35
Sample Tag: 01

PrePrep Method: NONE
Prep Method: 7471A
Analytical Method: 7471A
Analyst: ADC
Dilution: 1
Units: mg/kg

Instrument: HYDRA
Prep Date: 12/18/2008 07:24
Cal Date: 12/19/2008 14:54
Run Date: 12/19/2008 15:47
File ID: HY.121908.154727
Percent Solid: 84.8

Analyte	CAS. Number	Result	Qual	RL	MDL
Mercury, Total	7439-97-6		U	0.114	0.0227

U Undetected; the analyte was analyzed for, but not detected.

Microbac

3/4/09

7

Sample Number: L08120489-07
Client ID: MR08-SS120-08D
Matrix: Soil
Workgroup Number: WG291262
Collect Date: 12/15/2008 13:40
Sample Tag: 01

PrePrep Method: NONE
Prep Method: 3051
Analytical Method: 6010B
Analyst: KHR
Dilution: 1
Units: mg/kg

Instrument: IRIS-ICP
Prep Date: 12/19/2008 09:06
Cal Date: 12/23/2008 09:33
Run Date: 12/23/2008 12:17
File ID: IR.122308.121700
Percent Solid: 93.4

Analyte	CAS. Number	Result	Qual	RL	MDL	
Silver, Total	7440-22-4	0.273	J	0.812	0.203	
Barium, Total	7440-39-3	10.6		0.406	0.0812	
Cadmium, Total	7440-43-9	0.297		0.162	0.0406	
Chromium, Total	7440-47-3	5.71 u		0.812	0.0974	BL
Copper, Total	7440-50-8	6.25		1.62	0.406	
Antimony, Total	7440-36-0	1.44	J	1.62	0.406	
Zinc, Total	7440-66-6	18.2 u		1.62	0.406	BL

J Estimated ; the analyte concentration was less than the low standard (LOQ)

Microbac

lw 3/11/09

7

Sample Number: L08120489-07
Client ID: MR08-SS120-08D
Matrix: Soil
Workgroup Number: WG291053
Collect Date: 12/15/2008 13:40
Sample Tag: 01

PrePrep Method: NONE
Prep Method: 3051
Analytical Method: 6020
Analyst: JYH
Dilution: 1
Units: mg/kg

Instrument: ELAN-ICP
Prep Date: 12/18/2008 07:14
Cal Date: 12/22/2008 14:15
Run Date: 12/22/2008 18:45
File ID: EL.122208.184515
Percent Solid: 93.4

Analyte	CAS. Number	Result	Qual	RL	MDL
Arsenic, Total	7440-38-2	0.596		0.314	0.0786
Lead, Total	7439-92-1	26.8 J		0.419	0.105
Selenium, Total	7782-49-2	0.494		0.419	0.105

MSH

Microbac

UW 3/4/09

7

Sample Number:	L08120489-07	PrePrep Method:	NONE	Instrument:	HYDRA
Client ID:	MR08-SS120-08D	Prep Method:	7471A	Prep Date:	12/18/2008 07:24
Matrix:	Soil	Analytical Method:	7471A	Cal Date:	12/19/2008 14:54
Workgroup Number:	WG291055	Analyst:	ADC	Run Date:	12/19/2008 15:49
Collect Date:	12/15/2008 13:40	Dilution:	1	File ID:	HY.121908.154912
Sample Tag:	01	Units:	mg/kg	Percent Solid:	93.4

Analyte	CAS. Number	Result	Qual	RL	MDL
Mercury, Total	7439-97-6	0.0239	J	0.106	0.0211

J Estimated ; the analyte concentration was less than the low standard (LOQ)

Microbac

2429

3/4/09

8

Sample Number: L08120489-08
Client ID: MR08-IS120-1.5-2.5-08D
Matrix: Soil
Workgroup Number: WG291262
Collect Date: 12/15/2008 14:00
Sample Tag: 01

PrePrep Method: NONE
Prep Method: 3051
Analytical Method: 6010B
Analyst: KHR
Dilution: 1
Units: mg/kg

Instrument: IRIS-ICP
Prep Date: 12/19/2008 09:07
Cal Date: 12/23/2008 09:33
Run Date: 12/23/2008 12:24
File ID: IR.122308.122400
Percent Solid: 89.1

Analyte	CAS. Number	Result	Qual	RL	MDL
Silver, Total	7440-22-4		U	0.818	0.204
Barium, Total	7440-39-3	8.28		0.409	0.0818
Cadmium, Total	7440-43-9		U	0.164	0.0409
Chromium, Total	7440-47-3	7.20		0.818	0.0981
Copper, Total	7440-50-8	0.646	J	1.64	0.409
Antimony, Total	7440-36-0		U	1.64	0.409
Zinc, Total	7440-66-6	1.46	J	1.64	0.409

U Undetected; the analyte was analyzed for, but not detected.
J Estimated ; the analyte concentration was less than the low standard (LOQ)

Microbac

314 MW 3/11/09

8

Sample Number: L08120489-08
Client ID: MR08-IS120-1.5-2.5-08D
Matrix: Soil
Workgroup Number: WG291053
Collect Date: 12/15/2008 14:00
Sample Tag: 01

PrePrep Method: NONE
Prep Method: 3051
Analytical Method: 6020
Analyst: JYH
Dilution: 1
Units: mg/kg

Instrument: ELAN-ICP
Prep Date: 12/18/2008 07:14
Cal Date: 12/22/2008 14:15
Run Date: 12/22/2008 18:51
File ID: EL.122208.185128
Percent Solid: 89.1

Analyte	CAS. Number	Result	Qual	RL	MDL
Arsenic, Total	7440-38-2	0.751		0.325	0.0814
Lead, Total	7439-92-1	4.29 J		0.434	0.108
Selenium, Total	7782-49-2	0.293	J	0.434	0.108

MSH

J Estimated ; the analyte concentration was less than the low standard (LOQ)

Microbac

MW 3/11/09

870

8

Sample Number:	L08120489-08	PrePrep Method:	NONE	Instrument:	HYDRA
Client ID:	MR08-IS120-1.5-2.5-08D	Prep Method:	7471A	Prep Date:	12/18/2008 07:24
Matrix:	Soil	Analytical Method:	7471A	Cal Date:	12/19/2008 14:54
Workgroup Number:	WG291055	Analyst:	ADC	Run Date:	12/19/2008 15:51
Collect Date:	12/15/2008 14:00	Dilution:	1	File ID:	HY.121908.155105
Sample Tag:	01	Units:	mg/kg	Percent Solid:	89.1

Analyte	CAS. Number	Result	Qual	RL	MDL
Mercury, Total	7439-97-6	0.0232	J	0.108	0.0216

J Estimated ; the analyte concentration was less than the low standard (LOQ)

Microbac

lew
2430 3/11/09

9

Sample Number: L08120489-09
Client ID: MR08-SS122-08D
Matrix: Soil
Workgroup Number: WG291261
Collect Date: 12/15/2008 14:25
Sample Tag: 01

PrePrep Method: NONE
Prep Method: 3051
Analytical Method: 6010B
Analyst: KHR
Dilution: 1
Units: mg/kg

Instrument: IRIS-ICP
Prep Date: 12/19/2008 08:27
Cal Date: 12/23/2008 09:33
Run Date: 12/23/2008 19:30
File ID: IR.122308.193000
Percent Solid: 91.4

Analyte	CAS. Number	Result	Qual	RL	MDL	
Silver, Total	7440-22-4	0.522	J	0.813	0.203	
Barium, Total	7440-39-3	12.1		0.406	0.0813	
Cadmium, Total	7440-43-9	0.432 J		0.163	0.0406	MSL
Chromium, Total	7440-47-3	8.46 U		0.813	0.0975	BL
Copper, Total	7440-50-8	2.84		1.63	0.406	
Antimony, Total	7440-36-0	1.31	J	1.63	0.406	
Zinc, Total	7440-66-6	18.9 U		1.63	0.406	BL

J Estimated ; the analyte concentration was less than the low standard (LOQ)

Microbac

 3/4/09

9

Sample Number: L08120489-09
Client ID: MR08-SS122-08D
Matrix: Soil
Workgroup Number: WG291053
Collect Date: 12/15/2008 14:25
Sample Tag: DL01

PrePrep Method: NONE
Prep Method: 3051
Analytical Method: 6020
Analyst: JYH
Dilution: 10
Units: mg/kg

Instrument: ELAN-ICP
Prep Date: 12/18/2008 07:14
Cal Date: 12/21/2008 12:13
Run Date: 12/21/2008 16:01
File ID: EL.122108.160133
Percent Solid: 91.4

Analyte	CAS. Number	Result	Qual	RL	MDL
Lead, Total	7439-92-1	33.2 J		4.34	1.09

MSH

Microbac

MW 3/11/09

871

9

Sample Number:	L08120489-09	PrePrep Method:	NONE	Instrument:	ELAN-ICP
Client ID:	MR08-SS122-08D	Prep Method:	3051	Prep Date:	12/18/2008 07:14
Matrix:	Soil	Analytical Method:	6020	Cal Date:	12/19/2008 11:58
Workgroup Number:	WG291053	Analyst:	JYH	Run Date:	12/19/2008 20:38
Collect Date:	12/15/2008 14:25	Dilution:	1	File ID:	EL.121908.203838
Sample Tag:	01	Units:	mg/kg	Percent Solid:	91.4

Analyte	CAS. Number	Result	Qual	RL	MDL
Arsenic, Total	7440-38-2	5.73		0.326	0.0814
Selenium, Total	7782-49-2	0.349	J	0.434	0.109

J Estimated ; the analyte concentration was less than the low standard (LOQ)

Microbac

lew 3/4/09

9

Sample Number: L08120489-09
Client ID: MR08-SS122-08D
Matrix: Soil
Workgroup Number: WG291055
Collect Date: 12/15/2008 14:25
Sample Tag: 01

PrePrep Method: NONE
Prep Method: 7471A
Analytical Method: 7471A
Analyst: ADC
Dilution: 1
Units: mg/kg

Instrument: HYDRA
Prep Date: 12/18/2008 07:24
Cal Date: 12/19/2008 14:54
Run Date: 12/19/2008 15:53
File ID: HY.121908.155318
Percent Solid: 91.4

Analyte	CAS. Number	Result	Qual	RL	MDL
Mercury, Total	7439-97-6		U	0.107	0.0215

U Undetected; the analyte was analyzed for, but not detected.

Microbac

gw
2431 3/11/09

12

Sample Number: L08120489-12
Client ID: MR08-IS122-6.5-8-08D
Matrix: Soil
Workgroup Number: WG291262
Collect Date: 12/15/2008 15:00
Sample Tag: 01

PrePrep Method: NONE
Prep Method: 3051
Analytical Method: 6010B
Analyst: KHR
Dilution: 1
Units: mg/kg

Instrument: IRIS-ICP
Prep Date: 12/19/2008 09:07
Cal Date: 12/23/2008 09:33
Run Date: 12/23/2008 11:15
File ID: IR.122308.111500
Percent Solid: 89.2

Analyte	CAS. Number	Result	Qual	RL	MDL
Silver, Total	7440-22-4		U	0.816	0.204
Barium, Total	7440-39-3	6.61		0.408	0.0816
Cadmium, Total	7440-43-9		U	0.163	0.0408
Chromium, Total	7440-47-3	5.76		0.816	0.0980
Copper, Total	7440-50-8	0.687	J	1.63	0.408
Antimony, Total	7440-36-0		U	1.63	0.408
Zinc, Total	7440-66-6	1.79		1.63	0.408

U Undetected; the analyte was analyzed for, but not detected.
J Estimated ; the analyte concentration was less than the low standard (LOQ)

Microbac

RW 3/4/09

12

Sample Number: L08120489-12
Client ID: MR08-IS122-6.5-8-08D
Matrix: Soil
Workgroup Number: WG291053
Collect Date: 12/15/2008 15:00
Sample Tag: 01

PrePrep Method: NONE
Prep Method: 3051
Analytical Method: 6020
Analyst: JYH
Dilution: 1
Units: mg/kg

Instrument: ELAN-ICP
Prep Date: 12/18/2008 07:14
Cal Date: 12/22/2008 14:15
Run Date: 12/22/2008 18:57
File ID: EL.122208.185742
Percent Solid: 89.2

Analyte	CAS. Number	Result	Qual	RL	MDL
Arsenic, Total	7440-38-2	0.150	J	0.336	0.0841
Lead, Total	7439-92-1	1.81 J		0.448	0.112
Selenium, Total	7782-49-2		U	0.448	0.112

MSH

U Undetected; the analyte was analyzed for, but not detected.
J Estimated ; the analyte concentration was less than the low standard (LOQ)

Microbac

877 MW 3/4/09

12

Sample Number: L08120489-12
Client ID: MR08-IS122-6.5-8-08D
Matrix: Soil
Workgroup Number: WG291055
Collect Date: 12/15/2008 15:00
Sample Tag: 01

PrePrep Method: NONE
Prep Method: 7471A
Analytical Method: 7471A
Analyst: ADC
Dilution: 1
Units: mg/kg

Instrument: HYDRA
Prep Date: 12/18/2008 07:24
Cal Date: 12/19/2008 14:54
Run Date: 12/19/2008 16:00
File ID: HY.121908.160023
Percent Solid: 89.2

Analyte	CAS. Number	Result	Qual	RL	MDL
Mercury, Total	7439-97-6		U	0.111	0.0221

U Undetected; the analyte was analyzed for, but not detected.

Microbac

2434

kew 3/4/09

15

Sample Number: L08120489-15
Client ID: MR08-SS118-08D
Matrix: Soil
Workgroup Number: WG291262
Collect Date: 12/15/2008 15:50
Sample Tag: 01

PrePrep Method: NONE
Prep Method: 3051
Analytical Method: 6010B
Analyst: KHR
Dilution: 1
Units: mg/kg

Instrument: IRIS-ICP
Prep Date: 12/19/2008 09:10
Cal Date: 12/23/2008 09:33
Run Date: 12/23/2008 12:30
File ID: IR.122308.123000
Percent Solid: 89.1

Analyte	CAS. Number	Result	Qual	RL	MDL	
Silver, Total	7440-22-4		U	0.836	0.209	
Barium, Total	7440-39-3	6.09		0.418	0.0836	
Cadmium, Total	7440-43-9	0.0957	J	0.167	0.0418	
Chromium, Total	7440-47-3	7.00 u		0.836	0.100	BL
Copper, Total	7440-50-8	3.25		1.67	0.418	
Antimony, Total	7440-36-0	0.676	J	1.67	0.418	
Zinc, Total	7440-66-6	6.97 u		1.67	0.418	BL

U Undetected; the analyte was analyzed for, but not detected.
J Estimated ; the analyte concentration was less than the low standard (LOQ)

Microbac

MW
321 3/4/09

15

Sample Number: L08120489-15
Client ID: MR08-SS118-08D
Matrix: Soil
Workgroup Number: WG291053
Collect Date: 12/15/2008 15:50
Sample Tag: 01

PrePrep Method: NONE
Prep Method: 3051
Analytical Method: 6020
Analyst: JYH
Dilution: 1
Units: mg/kg

Instrument: ELAN-ICP
Prep Date: 12/18/2008 07:14
Cal Date: 12/22/2008 14:15
Run Date: 12/22/2008 19:16
File ID: EL.122208.191619
Percent Solid: 89.1

Analyte	CAS. Number	Result	Qual	RL	MDL
Arsenic, Total	7440-38-2	5.31		0.326	0.0814
Lead, Total	7439-92-1	10.5 J		0.434	0.109
Selenium, Total	7782-49-2	0.195	J	0.434	0.109

MSH

J Estimated ; the analyte concentration was less than the low standard (LOQ)

Microbac

MW 3/11/09

15

Sample Number: L08120489-15
Client ID: MR08-SS118-08D
Matrix: Soil
Workgroup Number: WG291055
Collect Date: 12/15/2008 15:50
Sample Tag: 01

PrePrep Method: NONE
Prep Method: 7471A
Analytical Method: 7471A
Analyst: ADC
Dilution: 1
Units: mg/kg

Instrument: HYDRA
Prep Date: 12/18/2008 07:24
Cal Date: 12/19/2008 14:54
Run Date: 12/19/2008 16:05
File ID: HY.121908.160543
Percent Solid: 89.1

Analyte	CAS. Number	Result	Qual	RL	MDL
Mercury, Total	7439-97-6		U	0.112	0.0224

U Undetected; the analyte was analyzed for, but not detected.

Microbac

Jew 3/11/09

2437

16

Sample Number: L08120489-16
Client ID: MR08-IS118-08D
Matrix: Soil
Workgroup Number: WG291262
Collect Date: 12/15/2008 16:00
Sample Tag: 01

PrePrep Method: NONE
Prep Method: 3051
Analytical Method: 6010B
Analyst: KHR
Dilution: 1
Units: mg/kg

Instrument: IRIS-ICP
Prep Date: 12/19/2008 09:11
Cal Date: 12/23/2008 09:33
Run Date: 12/23/2008 12:36
File ID: IR.122308.123600
Percent Solid: 88.9

Analyte	CAS. Number	Result	Qual	RL	MDL
Silver, Total	7440-22-4		U	0.844	0.211
Barium, Total	7440-39-3	4.33		0.422	0.0844
Cadmium, Total	7440-43-9		U	0.169	0.0422
Chromium, Total	7440-47-3	4.73		0.844	0.101
Copper, Total	7440-50-8		U	1.69	0.422
Antimony, Total	7440-36-0		U	1.69	0.422
Zinc, Total	7440-66-6	1.10	J	1.69	0.422

U Undetected; the analyte was analyzed for, but not detected.
J Estimated ; the analyte concentration was less than the low standard (LOQ)

Microbac

322 Dew 3/4/09

16

Sample Number:	L08120489-16	PrePrep Method:	NONE	Instrument:	ELAN-ICP
Client ID:	MR08-IS118-08D	Prep Method:	3051	Prep Date:	12/18/2008 07:14
Matrix:	Soil	Analytical Method:	6020	Cal Date:	12/22/2008 14:15
Workgroup Number:	WG291053	Analyst:	JYH	Run Date:	12/22/2008 19:35
Collect Date:	12/15/2008 16:00	Dilution:	1	File ID:	EL.122208.193533
Sample Tag:	01	Units:	mg/kg	Percent Solid:	88.9

Analyte	CAS. Number	Result	Qual	RL	MDL
Arsenic, Total	7440-38-2	0.126	J	0.338	0.0844
Lead, Total	7439-92-1	2.15 J		0.450	0.113
Selenium, Total	7782-49-2		U	0.450	0.113

MSH

U Undetected; the analyte was analyzed for, but not detected.
J Estimated ; the analyte concentration was less than the low standard (LOQ)

Microbac

MW 3/4/09

16

Sample Number: L08120489-16
Client ID: MR08-IS118-08D
Matrix: Soil
Workgroup Number: WG291055
Collect Date: 12/15/2008 16:00
Sample Tag: 01

PrePrep Method: NONE
Prep Method: 7471A
Analytical Method: 7471A
Analyst: ADC
Dilution: 1
Units: mg/kg

Instrument: HYDRA
Prep Date: 12/18/2008 07:24
Cal Date: 12/19/2008 14:54
Run Date: 12/19/2008 16:11
File ID: HY.121908.161104
Percent Solid: 88.9

Analyte	CAS. Number	Result	Qual	RL	MDL
Mercury, Total	7439-97-6		U	0.108	0.0216

U Undetected; the analyte was analyzed for, but not detected.

Microbac

RW 3/4/09

17

Sample Number: L08120489-17
Client ID: MR08-EB01-121508-SS
Matrix: Water
Workgroup Number: WG290894
Collect Date: 12/15/2008 08:00
Sample Tag: 01

PrePrep Method: NONE
Prep Method: 3005A
Analytical Method: 6010B
Analyst: SLP
Dilution: 1
Units: ug/L

Instrument: PE-ICP2
Prep Date: 12/18/2008 06:57
Cal Date: 12/19/2008 10:14
Run Date: 12/19/2008 17:24
File ID: P2.121908.172455

Analyte	CAS. Number	Result	Qual	RL	MDL
Barium, Total	7440-39-3	10.0 ~~5.01~~	U	10.0	2.50
Cadmium, Total	7440-43-9		U	1.00	0.250
Chromium, Total	7440-47-3	2.68	J	10.0	2.50
Copper, Total	7440-50-8		U	20.0	5.00
Silver, Total	7440-22-4		U	6.00	2.00
Zinc, Total	7440-66-6	6.98	J	20.0	5.00

BL

U Undetected; the analyte was analyzed for, but not detected.
J Estimated ; the analyte concentration was less than the low standard (LOQ)

Microbac

MW 3/4/09

17

Sample Number: L08120489-17
Client ID: MR08-EB01-121508-SS
Matrix: Water
Workgroup Number: WG290884
Collect Date: 12/15/2008 08:00
Sample Tag: 01

PrePrep Method: NONE
Prep Method: 3015
Analytical Method: 6020
Analyst: JYH
Dilution: 1
Units: ug/L

Instrument: ELAN-ICP
Prep Date: 12/18/2008 06:29
Cal Date: 12/18/2008 10:46
Run Date: 12/18/2008 13:02
File ID: EL.121808.130213

Analyte	CAS. Number	Result	Qual	RL	MDL
Arsenic, Total	7440-38-2		U	1.00	0.250
Lead, Total	7439-92-1		U	1.00	0.250
Antimony, Total	7440-36-0		U	1.00	0.250
Selenium, Total	7782-49-2		U	2.00	0.500

U Undetected; the analyte was analyzed for, but not detected.

Microbac

MW 3/11/09

17

Sample Number: L08120489-17
Client ID: MR08-EB01-121508-SS
Matrix: Water
Workgroup Number: WG291216
Collect Date: 12/15/2008 08:00
Sample Tag: 01

PrePrep Method: NONE
Prep Method: 7470A
Analytical Method: 7470A
Analyst: ADC
Dilution: 1
Units: ug/L

Instrument: HYDRA
Prep Date: 12/19/2008 07:30
Cal Date: 12/22/2008 12:46
Run Date: 12/22/2008 13:16
File ID: HY.122208.131647

Analyte	CAS. Number	Result	Qual	RL	MDL
Mercury	7439-97-6		U	0.400	0.100

U Undetected; the analyte was analyzed for, but not detected.

Microbac

2439 JEW 3/11/09

18

Sample Number: L08120489-18
Client ID: MR08-SS127-08D
Matrix: Soil
Workgroup Number: WG291262
Collect Date: 12/16/2008 08:50
Sample Tag: 01

PrePrep Method: NONE
Prep Method: 3051
Analytical Method: 6010B
Analyst: KHR
Dilution: 1
Units: mg/kg

Instrument: IRIS-ICP
Prep Date: 12/19/2008 09:12
Cal Date: 12/23/2008 09:33
Run Date: 12/23/2008 12:42
File ID: IR.122308.124200
Percent Solid: 90.6

Analyte	CAS. Number	Result	Qual	RL	MDL	
Silver, Total	7440-22-4	0.278	J	0.796	0.199	
Barium, Total	7440-39-3	12.1		0.398	0.0796	
Cadmium, Total	7440-43-9	0.489		0.159	0.0398	
Chromium, Total	7440-47-3	11.8 u		0.796	0.0955	BL
Copper, Total	7440-50-8	2.71		1.59	0.398	
Antimony, Total	7440-36-0	2.04		1.59	0.398	
Zinc, Total	7440-66-6	21.2 u		1.59	0.398	BL

J Estimated ; the analyte concentration was less than the low standard (LOQ)

Microbac

324 3/4/09

18

Sample Number: L08120489-18
Client ID: MR08-SS127-08D
Matrix: Soil
Workgroup Number: WG291053
Collect Date: 12/16/2008 08:50
Sample Tag: DL01

PrePrep Method: NONE
Prep Method: 3051
Analytical Method: 6020
Analyst: JYH
Dilution: 10
Units: mg/kg

Instrument: ELAN-ICP
Prep Date: 12/18/2008 07:14
Cal Date: 12/21/2008 12:13
Run Date: 12/21/2008 16:30
File ID: EL.122108.163004
Percent Solid: 90.6

Analyte	CAS. Number	Result	Qual	RL	MDL
Lead, Total	7439-92-1	67.3 J		4.40	1.10

MSH

Microbac

MW 3/11/09

18

Sample Number: L08120489-18
Client ID: MR08-SS127-08D
Matrix: Soil
Workgroup Number: WG291053
Collect Date: 12/16/2008 08:50
Sample Tag: 01

PrePrep Method: NONE
Prep Method: 3051
Analytical Method: 6020
Analyst: JYH
Dilution: 1
Units: mg/kg

Instrument: ELAN-ICP
Prep Date: 12/18/2008 07:14
Cal Date: 12/22/2008 14:15
Run Date: 12/22/2008 19:41
File ID: EL.122208.194145
Percent Solid: 90.6

Analyte	CAS. Number	Result	Qual	RL	MDL
Arsenic, Total	7440-38-2	6.40		0.330	0.0825
Selenium, Total	7782-49-2	0.572		0.440	0.110

Microbac

884 3/11/09

18

Sample Number: L08120489-18
Client ID: MR08-SS127-08D
Matrix: Soil
Workgroup Number: WG291055
Collect Date: 12/16/2008 08:50
Sample Tag: 01

PrePrep Method: NONE
Prep Method: 7471A
Analytical Method: 7471A
Analyst: ADC
Dilution: 1
Units: mg/kg

Instrument: HYDRA
Prep Date: 12/18/2008 07:24
Cal Date: 12/19/2008 14:54
Run Date: 12/19/2008 16:13
File ID: HY.121908.161308
Percent Solid: 90.6

Analyte	CAS. Number	Result	Qual	RL	MDL
Mercury, Total	7439-97-6		U	0.106	0.0212

U Undetected; the analyte was analyzed for, but not detected.

Microbac

2440 lew 3/4/09

19

Sample Number: L08120489-19
Client ID: MR08-IS127-1.5-3-08D
Matrix: Soil
Workgroup Number: WG291262
Collect Date: 12/16/2008 09:05
Sample Tag: 01

PrePrep Method: NONE
Prep Method: 3051
Analytical Method: 6010B
Analyst: KHR
Dilution: 1
Units: mg/kg

Instrument: IRIS-ICP
Prep Date: 12/19/2008 09:12
Cal Date: 12/23/2008 09:33
Run Date: 12/23/2008 12:48
File ID: IR.122308.124800
Percent Solid: 86.3

Analyte	CAS. Number	Result	Qual	RL	MDL
Silver, Total	7440-22-4		U	0.884	0.221
Barium, Total	7440-39-3	9.83		0.442	0.0884
Cadmium, Total	7440-43-9	0.0791	J	0.177	0.0442
Chromium, Total	7440-47-3	2.92		0.884	0.106
Copper, Total	7440-50-8	0.554	J	1.77	0.442
Antimony, Total	7440-36-0		U	1.77	0.442
Zinc, Total	7440-66-6	1.95		1.77	0.442

U Undetected; the analyte was analyzed for, but not detected.
J Estimated ; the analyte concentration was less than the low standard (LOQ)

Microbac

 LW 2/11/09

19

Sample Number: L08120489-19
Client ID: MR08-IS127-1.5-3-08D
Matrix: Soil
Workgroup Number: WG291053
Collect Date: 12/16/2008 09:05
Sample Tag: DL01

PrePrep Method: NONE
Prep Method: 3051
Analytical Method: 6020
Analyst: JYH
Dilution: 10
Units: mg/kg

Instrument: ELAN-ICP
Prep Date: 12/18/2008 07:14
Cal Date: 12/21/2008 12:13
Run Date: 12/21/2008 16:35
File ID: EL.122108.163547
Percent Solid: 86.3

Analyte	CAS. Number	Result	Qual	RL	MDL
Lead, Total	7439-92-1	94.6 J		4.61	1.15

MSH

Microbac

lew 3/11/09

19

Sample Number: L08120489-19
Client ID: MR08-IS127-1.5-3-08D
Matrix: Soil
Workgroup Number: WG291053
Collect Date: 12/16/2008 09:05
Sample Tag: 01

PrePrep Method: NONE
Prep Method: 3051
Analytical Method: 6020
Analyst: JYH
Dilution: 1
Units: mg/kg

Instrument: ELAN-ICP
Prep Date: 12/18/2008 07:14
Cal Date: 12/22/2008 14:15
Run Date: 12/22/2008 19:47
File ID: EL.122208.194757
Percent Solid: 86.3

Analyte	CAS. Number	Result	Qual	RL	MDL
Arsenic, Total	7440-38-2	9.58		0.346	0.0864
Selenium, Total	7782-49-2	0.726		0.461	0.115

Microbac

lew 3/4/09

19

Sample Number: L08120489-19
Client ID: MR08-IS127-1.5-3-08D
Matrix: Soil
Workgroup Number: WG291055
Collect Date: 12/16/2008 09:05
Sample Tag: 01

PrePrep Method: NONE
Prep Method: 7471A
Analytical Method: 7471A
Analyst: ADC
Dilution: 1
Units: mg/kg

Instrument: HYDRA
Prep Date: 12/18/2008 07:24
Cal Date: 12/19/2008 14:54
Run Date: 12/19/2008 16:14
File ID: HY.121908.161457
Percent Solid: 86.3

Analyte	CAS. Number	Result	Qual	RL	MDL
Mercury, Total	7439-97-6		U	0.113	0.0225

U Undetected; the analyte was analyzed for, but not detected.

Microbac

MW 3/4/09

20

Sample Number: L08120489-20
Client ID: MR08-SS126-08D
Matrix: Soil
Workgroup Number: WG291262
Collect Date: 12/16/2008 09:25
Sample Tag: 01

PrePrep Method: NONE
Prep Method: 3051
Analytical Method: 6010B
Analyst: KHR
Dilution: 1
Units: mg/kg

Instrument: IRIS-ICP
Prep Date: 12/19/2008 09:13
Cal Date: 12/23/2008 09:33
Run Date: 12/23/2008 12:54
File ID: IR.122308.125400
Percent Solid: 93.9

Analyte	CAS. Number	Result	Qual	RL	MDL	
Silver, Total	7440-22-4	0.329	J	0.804	0.201	
Barium, Total	7440-39-3	14.6		0.402	0.0804	
Cadmium, Total	7440-43-9	0.537		0.161	0.0402	
Chromium, Total	7440-47-3	12.8 U		0.804	0.0965	BL
Copper, Total	7440-50-8	5.63		1.61	0.402	
Antimony, Total	7440-36-0	3.23		1.61	0.402	
Zinc, Total	7440-66-6	29.2 U		1.61	0.402	BL

J Estimated ; the analyte concentration was less than the low standard (LOQ)

Microbac

326 lgw 3/4/09

20

Sample Number: L08120489-20
Client ID: MR08-SS126-08D
Matrix: Soil
Workgroup Number: WG291053
Collect Date: 12/16/2008 09:25
Sample Tag: 01

PrePrep Method: NONE
Prep Method: 3051
Analytical Method: 6020
Analyst: JYH
Dilution: 1
Units: mg/kg

Instrument: ELAN-ICP
Prep Date: 12/18/2008 07:14
Cal Date: 12/22/2008 14:15
Run Date: 12/22/2008 19:54
File ID: EL.122208.195409
Percent Solid: 93.9

Analyte	CAS. Number	Result	Qual	RL	MDL
Arsenic, Total	7440-38-2	0.240	J	0.317	0.0794
Lead, Total	7439-92-1	8.79 J		0.423	0.106
Selenium, Total	7782-49-2	0.425		0.423	0.106

MSH

J Estimated ; the analyte concentration was less than the low standard (LOQ)

Microbac

lw 3/11/09

20

Sample Number:	L08120489-20	PrePrep Method:	NONE	Instrument:	HYDRA
Client ID:	MR08-SS126-08D	Prep Method:	7471A	Prep Date:	12/18/2008 07:24
Matrix:	Soil	Analytical Method:	7471A	Cal Date:	12/19/2008 14:54
Workgroup Number:	WG291055	Analyst:	ADC	Run Date:	12/19/2008 16:16
Collect Date:	12/16/2008 09:25	Dilution:	1	File ID:	HY.121908.161644
Sample Tag:	01	Units:	mg/kg	Percent Solid:	93.9

Analyte	CAS. Number	Result	Qual	RL	MDL
Mercury, Total	7439-97-6		U	0.106	0.0212

U Undetected; the analyte was analyzed for, but not detected.

Microbac

2442 hw 3/4/09

21

Sample Number: L08120489-21
Client ID: MR08-IS126-1.5-2.5-08D
Matrix: Soil
Workgroup Number: WG291262
Collect Date: 12/16/2008 09:40
Sample Tag: 01

PrePrep Method: NONE
Prep Method: 3051
Analytical Method: 6010B
Analyst: KHR
Dilution: 1
Units: mg/kg

Instrument: IRIS-ICP
Prep Date: 12/19/2008 09:14
Cal Date: 12/23/2008 09:33
Run Date: 12/23/2008 13:00
File ID: IR.122308.130000
Percent Solid: 87.0

Analyte	CAS. Number	Result	Qual	RL	MDL
Silver, Total	7440-22-4		U	0.861	0.215
Barium, Total	7440-39-3	10.3		0.431	0.0861
Cadmium, Total	7440-43-9	0.0930	J	0.172	0.0431
Chromium, Total	7440-47-3	6.82		0.861	0.103
Copper, Total	7440-50-8	0.694	J	1.72	0.431
Antimony, Total	7440-36-0	0.817	J	1.72	0.431
Zinc, Total	7440-66-6	3.81		1.72	0.431

U Undetected; the analyte was analyzed for, but not detected.
J Estimated ; the analyte concentration was less than the low standard (LOQ)

Microbac

hw 3/4/09

21

Sample Number: L08120489-21
Client ID: MR08-IS126-1.5-2.5-08D
Matrix: Soil
Workgroup Number: WG291053
Collect Date: 12/16/2008 09:40
Sample Tag: 01

PrePrep Method: NONE
Prep Method: 3051
Analytical Method: 6020
Analyst: JYH
Dilution: 1
Units: mg/kg

Instrument: ELAN-ICP
Prep Date: 12/18/2008 07:14
Cal Date: 12/22/2008 14:15
Run Date: 12/22/2008 20:00
File ID: EL.122208.200022
Percent Solid: 87.0

Analyte	CAS. Number	Result	Qual	RL	MDL
Arsenic, Total	7440-38-2	0.890		0.341	0.0852
Lead, Total	7439-92-1	13.2 J		0.454	0.114
Selenium, Total	7782-49-2	0.445	J	0.454	0.114

MSH

J Estimated ; the analyte concentration was less than the low standard (LOQ)

Microbac

888 Jlw 3/11/09

21

Sample Number:	L08120489-21	PrePrep Method:	NONE	Instrument:	HYDRA
Client ID:	MR08-IS126-1.5-2.5-08D	Prep Method:	7471A	Prep Date:	12/18/2008 07:24
Matrix:	Soil	Analytical Method:	7471A	Cal Date:	12/19/2008 14:54
Workgroup Number:	WG291055	Analyst:	ADC	Run Date:	12/19/2008 16:18
Collect Date:	12/16/2008 09:40	Dilution:	1	File ID:	HY.121908.161832
Sample Tag:	01	Units:	mg/kg	Percent Solid:	87.0

Analyte	CAS. Number	Result	Qual	RL	MDL
Mercury, Total	7439-97-6		U	0.115	0.0230

U Undetected; the analyte was analyzed for, but not detected.

Microbac

2443 MW 3/4/09

ENVIRONMENTAL
Data Services, Inc.

EXPLOSIVES, PETN & NITROGLYCERIN

USEPA Region IV - Level IV Review

Site: MCB Camp Lejeune, TO-09 SDG #: L08120576

Client: CH2M HILL, Inc., Virginia Beach, Virginia Date: March 10, 2009

Laboratory: Microbac Laboratories, Inc., Marietta, Ohio Reviewer: Linda Sulkowski

EDS ID	Client Sample ID	Laboratory Sample ID	Matrix
1	MR08-EB121708	L08120576-01	Water
2	MR08-EB011218208	L08120576-02	Water

The USEPA "Contract Laboratory Program National Functional Guidelines for Organic Data Review," October 1999, and professional judgement were used in evaluating the data in this summary report.

Holding Times - All samples were extracted within 7 days for water samples analyzed within 40 days.

Initial Calibration - The initial calibrations exhibited acceptable %RSD and/or correlation coefficient values.

Calibration Verification - The continuing calibrations exhibited acceptable %D values.

Surrogates - All samples exhibited acceptable surrogate recoveries.

MS/MSD - A MS/MSD sample was not analyzed.

Laboratory Control Sample - The LCS samples exhibited acceptable %R values.

Method Blank - The method blanks were free of contamination.

Field and Equipment Blank - Field QC results are summarized below.

Blank ID	Compound	Conc. ug/L	Action Level ug/L	Qualifier	Affected Samples
MR08-EB121708	None - ND	-	-	-	-
MR08-EB0112182008	None - ND	-	-	-	-
MR08-FB01120608	None - ND	-	-	-	-

Field Duplicates - Field duplicate samples were not included in this data package.

Compound Identification - Retention times were acceptable and no further action was taken.

Compound Quantitation - No discrepancies were identified.

Sample Number: L08120576-01
Client ID: MR08-EB121708
Matrix: Water
Workgroup Number: WG291225
Collect Date: 12/17/2008 07:34
Sample Tag: 01

PrePrep Method: NONE
Prep Method: 3535
Analytical Method: 8330MOD
Analyst: ECL
Dilution: 1
Units: ug/L

Instrument: HPLC5
Prep Date: 12/22/2008 08:45
Cal Date: 12/16/2008 16:51
Run Date: 12/23/2008 05:14
File ID: 5L003471.F

Analyte	CAS. Number	Result	Qual	RL	MDL
1,3,5-Trinitrobenzene	99-35-4		U	1.00	0.250
1,3-Dinitrobenzene	99-65-0		U	1.00	0.250
2,4,6-Trinitrotoluene	118-96-7		U ~~Q~~	1.00	0.250
2,4-Dinitrotoluene	121-14-2		U	1.00	0.250
2,6-Dinitrotoluene	606-20-2		U	1.00	0.250
2-Amino-4,6-dinitrotoluene	35572-78-2		U	1.00	0.250
2-Nitrotoluene	88-72-2		U	1.00	0.250
3-Nitrotoluene	99-08-1		U	1.00	0.250
4-Nitrotoluene	99-99-0		U	1.00	0.250
4-Amino-2,6-dinitrotoluene	19406-51-0		U	1.00	0.250
HMX	2691-41-0		U	1.00	0.250
Nitrobenzene	98-95-3		U	1.00	0.250
RDX	121-82-4		U	1.00	0.250
Tetryl	479-45-8		U ~~Q~~	1.00	0.250
Nitroglycerin	55-63-0		U	1.00	0.250

Surrogate	% Recovery	Lower	Upper	Qual
1,2-Dinitrobenzene	90.4	50	150	

U Undetected; the analyte was analyzed for, but not detected.
Q One or more quality control criteria failed. See narrative.

Microbac

14 MW 3/10/09

Report Number: L08120576

Report Date : January 16, 2009

Sample Number: L08120576-01
Client ID: MR08-EB121708
Matrix: Water
Workgroup Number: WG291225
Collect Date: 12/17/2008 07:34
Sample Tag: 02

PrePrep Method: NONE
Prep Method: 3535
Analytical Method: 8330MOD
Analyst: ECL
Dilution: 1
Units: ug/L

Instrument: HPLC5
Prep Date: 12/22/2008 08:45
Cal Date: 12/16/2008 16:51
Run Date: 12/30/2008 00:02
File ID: 5L003668.F

Analyte	CAS. Number	Result	Qual	RL	MDL
PETN	78-11-5		U	1.00	0.250

U Undetected; the analyte was analyzed for, but not detected.

Microbac

13 WW 3/10/09

2

Sample Number: L08120576-02
Client ID: MR08-EB0112182008
Matrix: Water
Workgroup Number: WG291225
Collect Date: 12/18/2008 07:22
Sample Tag: 01

PrePrep Method: NONE
Prep Method: 3535
Analytical Method: 8330MOD
Analyst: ECL
Dilution: 1
Units: ug/L

Instrument: HPLC5
Prep Date: 12/22/2008 08:45
Cal Date: 12/16/2008 16:51
Run Date: 12/23/2008 05:52
File ID: 5L003472.F

Analyte	CAS. Number	Result	Qual	RL	MDL
1,3,5-Trinitrobenzene	99-35-4		U	1.02	0.255
1,3-Dinitrobenzene	99-65-0		U	1.02	0.255
2,4,6-Trinitrotoluene	118-96-7		U ~~Q~~	1.02	0.255
2,4-Dinitrotoluene	121-14-2		U	1.02	0.255
2,6-Dinitrotoluene	606-20-2		U	1.02	0.255
2-Amino-4,6-dinitrotoluene	35572-78-2		U	1.02	0.255
2-Nitrotoluene	88-72-2		U	1.02	0.255
3-Nitrotoluene	99-08-1		U	1.02	0.255
4-Nitrotoluene	99-99-0		U	1.02	0.255
4-Amino-2,6-dinitrotoluene	19406-51-0		U	1.02	0.255
HMX	2691-41-0		U	1.02	0.255
Nitrobenzene	98-95-3		U	1.02	0.255
RDX	121-82-4		U	1.02	0.255
Tetryl	479-45-8		U ~~Q~~	1.02	0.255
Nitroglycerin	55-63-0		U	1.02	0.255

Surrogate	% Recovery	Lower	Upper	Qual
1,2-Dinitrobenzene	90.9	50	150	

U Undetected; the analyte was analyzed for, but not detected.
Q One or more quality control criteria failed. See narrative.

Microbac

MW 3/10/09

2

Sample Number: L08120576-02
Client ID: MR08-EB0112182008
Matrix: Water
Workgroup Number: WG291225
Collect Date: 12/18/2008 07:22
Sample Tag: 02

PrePrep Method: NONE
Prep Method: 3535
Analytical Method: 8330MOD
Analyst: ECL
Dilution: 1
Units: ug/L

Instrument: HPLC5
Prep Date: 12/22/2008 08:45
Cal Date: 12/16/2008 16:51
Run Date: 12/30/2008 00:15
File ID: 5L003669.F

Analyte	CAS. Number	Result	Qual	RL	MDL
PETN	78-11-5		U	1.02	0.255

U Undetected; the analyte was analyzed for, but not detected.

Microbac

LW 3/10/09

ENVIRONMENTAL
Data Services, Inc.

METALS

USEPA Region IV - Level IV Review

Site: MCB Camp Lejeune, TO-09 SDG #: L08120576

Client: CH2M HILL, Inc., Virginia Beach, Virginia Date: March 11, 2009

Laboratory: Microbac Laboratories, Inc., Marietta, Ohio Reviewer: Nancy Weaver

EDS ID	Client Sample ID	Laboratory Sample ID	Matrix
1	MR08-EB121708	L08120576-01	Water
2	MR08-EB0112182008	L08120576-02	Water

The USEPA "Contract Laboratory Program National Functional Guidelines for Inorganic Data Review," October 2004, and professional judgement were used in evaluating the data in this summary report.

Holding Times - All samples were prepared and analyzed within 28 days for mercury and 180 days for all other metals.

Calibration - The ICV and CCV %R values were acceptable.

Method and Calibration Blanks - The method blank contaminations were free of contamination.

Field and Equipment Blank - Field QC results are summarized below.

Blank ID	Compound	Conc. ug/L	Action Level ug/L	Qualifier	Affected Samples
MR08-EB121708	None - ND	-	-	-	-
MR08-EB0112182008	None - ND	-	-	-	-

ICP Interference Check Sample - All %R values were acceptable.

MS/MSD - The MS/MSD sample exhibited acceptable %R and RPD values.

LCS - The LCS samples exhibited acceptable %R values.

ICP Serial Dilution - The ICP serial dilution sample exhibited acceptable %D values.

Field Duplicates - Field duplicate samples were not included in this data package.

Compound Quantitation - No discrepancies were identified.

Report Number: L08120576

Report Date : January 16, 2009

Sample Number: L08120576-01
Client ID: MR08-EB121708
Matrix: Water
Workgroup Number: WG291208
Collect Date: 12/17/2008 07:34
Sample Tag: 01

PrePrep Method: NONE
Prep Method: 3005A
Analytical Method: 6010B
Analyst: SLP
Dilution: 1
Units: ug/L

Instrument: PE-ICP2
Prep Date: 12/22/2008 10:22
Cal Date: 12/22/2008 12:05
Run Date: 12/22/2008 13:40
File ID: P2.122208.134033

Analyte	CAS. Number	Result	Qual	RL	MDL
Barium, Total	7440-39-3		U	10.0	2.50
Cadmium, Total	7440-43-9		U	1.00	0.250
Chromium, Total	7440-47-3		U	10.0	2.50
Copper, Total	7440-50-8		U	20.0	5.00
Silver, Total	7440-22-4		U	6.00	2.00
Zinc, Total	7440-66-6		U	20.0	5.00

U Undetected; the analyte was analyzed for, but not detected.

Microbac

LW
117 3/11/09

Report Number: L08120576

Report Date : January 16, 2009

1

Sample Number: L08120576-01
Client ID: MR08-EB121708
Matrix: Water
Workgroup Number: WG291191
Collect Date: 12/17/2008 07:34
Sample Tag: 01

PrePrep Method: NONE
Prep Method: 3015
Analytical Method: 6020
Analyst: JYH
Dilution: 1
Units: ug/L

Instrument: ELAN-ICP
Prep Date: 12/22/2008 06:18
Cal Date: 12/22/2008 14:15
Run Date: 12/22/2008 18:01
File ID: EL.122208.180110

Analyte	CAS. Number	Result	Qual	RL	MDL
Arsenic, Total	7440-38-2		U	1.00	0.250
Lead, Total	7439-92-1		U	1.00	0.250
Antimony, Total	7440-36-0		U	1.00	0.250
Selenium, Total	7782-49-2		U	2.00	0.500

U Undetected; the analyte was analyzed for, but not detected.

Microbac

LW 3/11/09

258

Report Number: L08120576

Report Date : January 16, 2009

Sample Number: L08120576-01
Client ID: MR08-EB121708
Matrix: Water
Workgroup Number: WG291267
Collect Date: 12/17/2008 07:34
Sample Tag: 01

PrePrep Method: NONE
Prep Method: 7470A
Analytical Method: 7470A
Analyst: ADC
Dilution: 1
Units: ug/L

Instrument: HYDRA
Prep Date: 12/22/2008 07:23
Cal Date: 12/22/2008 15:14
Run Date: 12/22/2008 15:31
File ID: HY.122208.153154

Analyte	CAS. Number	Result	Qual	RL	MDL
Mercury	7439-97-6		U	0.400	0.100

U Undetected; the analyte was analyzed for, but not detected.

Microbac

473 3/11/09

2

Sample Number: L08120576-02
Client ID: MR08-EB0112182008
Matrix: Water
Workgroup Number: WG291208
Collect Date: 12/18/2008 07:22
Sample Tag: 01

PrePrep Method: NONE
Prep Method: 3005A
Analytical Method: 6010B
Analyst: SLP
Dilution: 1
Units: ug/L

Instrument: PE-ICP2
Prep Date: 12/22/2008 10:22
Cal Date: 12/22/2008 12:05
Run Date: 12/22/2008 13:46
File ID: P2.122208.134658

Analyte	CAS. Number	Result	Qual	RL	MDL
Barium, Total	7440-39-3		U	10.0	2.50
Cadmium, Total	7440-43-9		U	1.00	0.250
Chromium, Total	7440-47-3		U	10.0	2.50
Copper, Total	7440-50-8		U	20.0	5.00
Silver, Total	7440-22-4		U	6.00	2.00
Zinc, Total	7440-66-6		U	20.0	5.00

U Undetected; the analyte was analyzed for, but not detected.

Microbac

 LWO 3/11/09

2

Sample Number: L08120576-02
Client ID: MR08-EB0112182008
Matrix: Water
Workgroup Number: WG291191
Collect Date: 12/18/2008 07:22
Sample Tag: 01

PrePrep Method: NONE
Prep Method: 3015
Analytical Method: 6020
Analyst: JYH
Dilution: 1
Units: ug/L

Instrument: ELAN-ICP
Prep Date: 12/22/2008 06:18
Cal Date: 12/22/2008 14:15
Run Date: 12/22/2008 18:07
File ID: EL.122208.180722

Analyte	CAS. Number	Result	Qual	RL	MDL
Arsenic, Total	7440-38-2		U	1.00	0.250
Lead, Total	7439-92-1		U	1.00	0.250
Antimony, Total	7440-36-0		U	1.00	0.250
Selenium, Total	7782-49-2		U	2.00	0.500

U Undetected; the analyte was analyzed for, but not detected.

Microbac

Jew
3/4/09

2

Sample Number: L08120576-02
Client ID: MR08-EB0112182008
Matrix: Water
Workgroup Number: WG291267
Collect Date: 12/18/2008 07:22
Sample Tag: 01

PrePrep Method: NONE
Prep Method: 7470A
Analytical Method: 7470A
Analyst: ADC
Dilution: 1
Units: ug/L

Instrument: HYDRA
Prep Date: 12/22/2008 07:23
Cal Date: 12/22/2008 15:14
Run Date: 12/22/2008 15:35
File ID: HY.122208.153531

Analyte	CAS. Number	Result	Qual	RL	MDL
Mercury	7439-97-6		U	0.400	0.100

U Undetected; the analyte was analyzed for, but not detected.

Microbac

lew 3/4/09

474

ENVIRONMENTAL
Data Services, Inc.

EXPLOSIVES, PETN & NITROGLYCERIN

USEPA Region IV - Level IV Review

Site: MCB Camp Lejeune, TO-09 SDG #: L08120577

Client: CH2M HILL, Inc., Virginia Beach, Virginia Date: March 10, 2009

Laboratory: Microbac Laboratories, Inc., Marietta, Ohio Reviewer: Linda Sulkowski

EDS ID	Client Sample ID	Laboratory Sample ID	Matrix
1	MR08-SS130-08D	L08120577-01	Soil
2	MR08-IS130-1.5-3-08D	L08120577-02	Soil
3	MR08-SS132-08D	L08120577-03	Soil
4	MR08-IS132-08D	L08120577-04	Soil
5	MR08-SS131-08D	L08120577-05	Soil
6	MR08-SS111-08D	L08120577-06	Soil
7	MR08-SS112-08D	L08120577-07	Soil
8	MR08-SS133-08D	L08120577-08	Soil
9	MR08-IS133-08D	L08120577-09	Soil
10	MR08-SS110-08D	L08120577-10	Soil
11	MR08-IS110-08D	L08120577-11	Soil

The USEPA "Contract Laboratory Program National Functional Guidelines for Organic Data Review," October 1999, and professional judgement were used in evaluating the data in this summary report.

Holding Times - All samples were extracted within 14 days for soil samples and analyzed within 40 days.

Initial Calibration - The initial calibrations exhibited acceptable %RSD and/or correlation coefficient values.

Calibration Verification - The continuing calibrations exhibited acceptable %D values.

Surrogates - All samples exhibited acceptable surrogate recoveries.

MS/MSD - A MS/MSD sample was not analyzed.

Laboratory Control Sample - The LCS samples exhibited acceptable %R values except the following.

LCS ID	Compound	%R	Qualifier	Affected Samples
WG291461-03	2,4-Dinitrotoluene	74.5%	J/UJ	1-11

Method Blank - The method blanks were free of contamination.

Field and Equipment Blank - Field QC results are summarized below.

Blank ID	Compound	Conc. ug/L	Action Level ug/L	Qualifier	Affected Samples
MR08-FB01120608	None - ND	-	-	-	-

Field Duplicates - Field duplicate samples were not included in this data package.

Compound Identification - Retention times were acceptable and no further action was taken.

Compound Quantitation - No discrepancies were identified.

Report Number: L08120577

Report Date : January 16, 2009

Sample Number: L08120577-01
Client ID: MR08-SS130-08D
Matrix: Soil
Workgroup Number: WG291709
Collect Date: 12/16/2008 10:30
Sample Tag: 01

PrePrep Method: NONE
Prep Method: METHOD
Analytical Method: 8330MOD
Analyst: ECL
Dilution: 1
Units: mg/kg

Instrument: HPLC5
Prep Date: 12/29/2008 09:00
Cal Date: 12/16/2008 16:51
Run Date: 01/05/2009 13:37
File ID: 5L003721.F

Analyte	CAS. Number	Result	Qual	RL	MDL
1,3,5-Trinitrobenzene	99-35-4		U	0.296	0.0988
1,3-Dinitrobenzene	99-65-0		U	0.296	0.0988
2,4,6-Trinitrotoluene	118-96-7		U ~~Q~~	0.296	0.0988
2,4-Dinitrotoluene	121-14-2	UJ	~~Q~~	0.296	0.0988
2,6-Dinitrotoluene	606-20-2		U	0.296	0.0988
2-Amino-4,6-dinitrotoluene	35572-78-2		U	0.296	0.0988
2-Nitrotoluene	88-72-2		U	0.296	0.0988
3-Nitrotoluene	99-08-1		U	0.296	0.0988
4-Nitrotoluene	99-99-0		U	0.296	0.0988
4-Amino-2,6-dinitrotoluene	19406-51-0		U	0.296	0.0988
HMX	2691-41-0		U	0.296	0.0988
Nitrobenzene	98-95-3		U	0.296	0.0988
RDX	121-82-4		U	0.296	0.0988
Tetryl	479-45-8		U ~~Q~~	0.296	0.0988
Nitroglycerin	55-63-0		U	0.296	0.0988

BSL

Surrogate	% Recovery	Lower	Upper	Qual
1,2-Dinitrobenzene	85.9	50	150	

U Undetected; the analyte was analyzed for, but not detected.
Q One or more quality control criteria failed. See narrative.

Microbac

14 LW 3/10/09

Report Number: L08120577

Report Date : January 16, 2009

Sample Number: L08120577-01
Client ID: MR08-SS130-08D
Matrix: Soil
Workgroup Number: WG291709
Collect Date: 12/16/2008 10:30
Sample Tag: 02

PrePrep Method: NONE
Prep Method: METHOD
Analytical Method: 8330MOD
Analyst: ECL
Dilution: 1
Units: mg/kg

Instrument: HPLC5
Prep Date: 12/29/2008 09:00
Cal Date: 12/16/2008 16:51
Run Date: 01/06/2009 10:52
File ID: 5L003740.F

Analyte	CAS. Number	Result	Qual	RL	MDL
PETN	78-11-5		U	0.296	0.0988

U Undetected; the analyte was analyzed for, but not detected.

Microbac

13 RW 3/10/09

2

Sample Number: L08120577-02
Client ID: MR08-IS130-1.5-3-08D
Matrix: Soil
Workgroup Number: WG291709
Collect Date: 12/16/2008 10:45
Sample Tag: 01

PrePrep Method: NONE
Prep Method: METHOD
Analytical Method: 8330MOD
Analyst: ECL
Dilution: 1
Units: mg/kg

Instrument: HPLC5
Prep Date: 12/29/2008 09:00
Cal Date: 12/16/2008 16:51
Run Date: 01/05/2009 14:15
File ID: 5L003722.F

Analyte	CAS. Number	Result	Qual	RL	MDL
1,3,5-Trinitrobenzene	99-35-4		U	0.297	0.0991
1,3-Dinitrobenzene	99-65-0		U	0.297	0.0991
2,4,6-Trinitrotoluene	118-96-7	u	~~Q~~	0.297	0.0991
2,4-Dinitrotoluene	121-14-2	UJ	~~U~~	0.297	0.0991
2,6-Dinitrotoluene	606-20-2		U	0.297	0.0991
2-Amino-4,6-dinitrotoluene	35572-78-2		U	0.297	0.0991
2-Nitrotoluene	88-72-2		U	0.297	0.0991
3-Nitrotoluene	99-08-1		U	0.297	0.0991
4-Nitrotoluene	99-99-0		U	0.297	0.0991
4-Amino-2,6-dinitrotoluene	19406-51-0		U	0.297	0.0991
HMX	2691-41-0		U	0.297	0.0991
Nitrobenzene	98-95-3		U	0.297	0.0991
RDX	121-82-4		U	0.297	0.0991
Tetryl	479-45-8	u	~~Q~~	0.297	0.0991
Nitroglycerin	55-63-0		U	0.297	0.0991

BSL

Surrogate	% Recovery	Lower	Upper	Qual
1,2-Dinitrobenzene	85.9	50	150	

U Undetected; the analyte was analyzed for, but not detected.
Q One or more quality control criteria failed. See narrative.

Microbac

16 RW 3/10/09

2

Sample Number: L08120577-02
Client ID: MR08-IS130-1.5-3-08D
Matrix: Soil
Workgroup Number: WG291709
Collect Date: 12/16/2008 10:45
Sample Tag: 02

PrePrep Method: NONE
Prep Method: METHOD
Analytical Method: 8330MOD
Analyst: ECL
Dilution: 1
Units: mg/kg

Instrument: HPLC5
Prep Date: 12/29/2008 09:00
Cal Date: 12/16/2008 16:51
Run Date: 01/06/2009 11:06
File ID: 5L003741.F

Analyte	CAS. Number	Result	Qual	RL	MDL
PETN	78-11-5		U	0.297	0.0991

U Undetected; the analyte was analyzed for, but not detected.

Microbac

15 LW 3/10/09

3

Sample Number: L08120577-03
Client ID: MR08-SS132-08D
Matrix: Soil
Workgroup Number: WG291709
Collect Date: 12/16/2008 11:40
Sample Tag: 01

PrePrep Method: NONE
Prep Method: METHOD
Analytical Method: 8330MOD
Analyst: ECL
Dilution: 1
Units: mg/kg

Instrument: HPLC5
Prep Date: 12/29/2008 09:00
Cal Date: 12/16/2008 16:51
Run Date: 01/05/2009 14:53
File ID: 5L003723.F

Analyte	CAS. Number	Result	Qual	RL	MDL
1,3,5-Trinitrobenzene	99-35-4		U	0.300	0.0999
1,3-Dinitrobenzene	99-65-0		U	0.300	0.0999
2,4,6-Trinitrotoluene	118-96-7	U	~~Q~~	0.300	0.0999
2,4-Dinitrotoluene	121-14-2	UJ	~~U~~	0.300	0.0999
2,6-Dinitrotoluene	606-20-2		U	0.300	0.0999
2-Amino-4,6-dinitrotoluene	35572-78-2		U	0.300	0.0999
2-Nitrotoluene	88-72-2		U	0.300	0.0999
3-Nitrotoluene	99-08-1		U	0.300	0.0999
4-Nitrotoluene	99-99-0		U	0.300	0.0999
4-Amino-2,6-dinitrotoluene	19406-51-0		U	0.300	0.0999
HMX	2691-41-0		U	0.300	0.0999
Nitrobenzene	98-95-3		U	0.300	0.0999
RDX	121-82-4		U	0.300	0.0999
Tetryl	479-45-8	U	~~Q~~	0.300	0.0999
Nitroglycerin	55-63-0		U	0.300	0.0999

BSL

Surrogate	% Recovery	Lower	Upper	Qual
1,2-Dinitrobenzene	95.1	50	150	

U Undetected; the analyte was analyzed for, but not detected.
Q One or more quality control criteria failed. See narrative.

Microbac

18 LW 3/10/09

3

Sample Number: L08120577-03
Client ID: MR08-SS132-08D
Matrix: Soil
Workgroup Number: WG291709
Collect Date: 12/16/2008 11:40
Sample Tag: 02

PrePrep Method: NONE
Prep Method: METHOD
Analytical Method: 8330MOD
Analyst: ECL
Dilution: 1
Units: mg/kg

Instrument: HPLC5
Prep Date: 12/29/2008 09:00
Cal Date: 12/16/2008 16:51
Run Date: 01/06/2009 11:19
File ID: 5L003742.F

Analyte	CAS. Number	Result	Qual	RL	MDL
PETN	78-11-5		U	0.300	0.0999

U Undetected; the analyte was analyzed for, but not detected.

Microbac

12 lw
3/10/09

4

Sample Number: L08120577-04
Client ID: MR08-IS132-08D
Matrix: Soil
Workgroup Number: WG291709
Collect Date: 12/16/2008 11:50
Sample Tag: 01

PrePrep Method: NONE
Prep Method: METHOD
Analytical Method: 8330MOD
Analyst: ECL
Dilution: 1
Units: mg/kg

Instrument: HPLC5
Prep Date: 12/29/2008 09:00
Cal Date: 12/16/2008 16:51
Run Date: 01/05/2009 15:31
File ID: 5L003724.F

Analyte	CAS. Number	Result	Qual	RL	MDL
1,3,5-Trinitrobenzene	99-35-4		U	0.299	0.0996
1,3-Dinitrobenzene	99-65-0		U	0.299	0.0996
2,4,6-Trinitrotoluene	118-96-7		U ~~Q~~	0.299	0.0996
2,4-Dinitrotoluene	121-14-2		UJ ~~Q~~	0.299	0.0996
2,6-Dinitrotoluene	606-20-2		U	0.299	0.0996
2-Amino-4,6-dinitrotoluene	35572-78-2		U	0.299	0.0996
2-Nitrotoluene	88-72-2		U	0.299	0.0996
3-Nitrotoluene	99-08-1		U	0.299	0.0996
4-Nitrotoluene	99-99-0		U	0.299	0.0996
4-Amino-2,6-dinitrotoluene	19406-51-0		U	0.299	0.0996
HMX	2691-41-0		U	0.299	0.0996
Nitrobenzene	98-95-3		U	0.299	0.0996
RDX	121-82-4		U	0.299	0.0996
Tetryl	479-45-8		U ~~Q~~	0.299	0.0996
Nitroglycerin	55-63-0		U	0.299	0.0996

BSL

Surrogate	% Recovery	Lower	Upper	Qual
1,2-Dinitrobenzene	95.5	50	150	

U Undetected; the analyte was analyzed for, but not detected.
Q One or more quality control criteria failed. See narrative.

Microbac

20 lw 31,d09

4

Sample Number: L08120577-04
Client ID: MR08-IS132-08D
Matrix: Soil
Workgroup Number: WG291709
Collect Date: 12/16/2008 11:50
Sample Tag: 02

PrePrep Method: NONE
Prep Method: METHOD
Analytical Method: 8330MOD
Analyst: ECL
Dilution: 1
Units: mg/kg

Instrument: HPLC5
Prep Date: 12/29/2008 09:00
Cal Date: 12/16/2008 16:51
Run Date: 01/06/2009 11:32
File ID: 5L003743.F

Analyte	CAS. Number	Result	Qual	RL	MDL
PETN	78-11-5		U	0.299	0.0996

U Undetected; the analyte was analyzed for, but not detected.

Microbac

19 MW 3/10/09

5

Sample Number: L08120577-05
Client ID: MR08-SS131-08D
Matrix: Soil
Workgroup Number: WG291709
Collect Date: 12/16/2008 13:15
Sample Tag: 01

PrePrep Method: NONE
Prep Method: METHOD
Analytical Method: 8330MOD
Analyst: ECL
Dilution: 1
Units: mg/kg

Instrument: HPLC5
Prep Date: 12/29/2008 09:00
Cal Date: 12/16/2008 16:51
Run Date: 01/05/2009 16:10
File ID: 5L003725.F

Analyte	CAS. Number	Result	Qual	RL	MDL
1,3,5-Trinitrobenzene	99-35-4		U	0.294	0.0979
1,3-Dinitrobenzene	99-65-0		U	0.294	0.0979
2,4,6-Trinitrotoluene	118-96-7		U ~~Q~~	0.294	0.0979
2,4-Dinitrotoluene	121-14-2		U ~~Q~~	0.294	0.0979
2,6-Dinitrotoluene	606-20-2		U	0.294	0.0979
2-Amino-4,6-dinitrotoluene	35572-78-2		U	0.294	0.0979
2-Nitrotoluene	88-72-2		U	0.294	0.0979
3-Nitrotoluene	99-08-1		U	0.294	0.0979
4-Nitrotoluene	99-99-0		U	0.294	0.0979
4-Amino-2,6-dinitrotoluene	19406-51-0		U	0.294	0.0979
HMX	2691-41-0		U	0.294	0.0979
Nitrobenzene	98-95-3		U	0.294	0.0979
RDX	121-82-4		U	0.294	0.0979
Tetryl	479-45-8		U ~~Q~~	0.294	0.0979
Nitroglycerin	55-63-0		U	0.294	0.0979

Surrogate	% Recovery	Lower	Upper	Qual
1,2-Dinitrobenzene	92.3	50	150	

U Undetected; the analyte was analyzed for, but not detected.
Q One or more quality control criteria failed. See narrative.

BSL

Microbac

22 lw
3/10/09

5

Sample Number: L08120577-05
Client ID: MR08-SS131-08D
Matrix: Soil
Workgroup Number: WG291709
Collect Date: 12/16/2008 13:15
Sample Tag: 02

PrePrep Method: NONE
Prep Method: METHOD
Analytical Method: 8330MOD
Analyst: ECL
Dilution: 1
Units: mg/kg

Instrument: HPLC5
Prep Date: 12/29/2008 09:00
Cal Date: 12/16/2008 16:51
Run Date: 01/06/2009 11:45
File ID: 5L003744.F

Analyte	CAS. Number	Result	Qual	RL	MDL
PETN	78-11-5		U	0.294	0.0979

U Undetected; the analyte was analyzed for, but not detected.

Microbac

21 lew 3/10/09

6

Sample Number: L08120577-06
Client ID: MR08-SS111-08D
Matrix: Soil
Workgroup Number: WG291709
Collect Date: 12/16/2008 13:50
Sample Tag: 01

PrePrep Method: NONE
Prep Method: METHOD
Analytical Method: 8330MOD
Analyst: ECL
Dilution: 1
Units: mg/kg

Instrument: HPLC5
Prep Date: 12/29/2008 09:00
Cal Date: 12/16/2008 16:51
Run Date: 01/05/2009 16:48
File ID: 5L003726.F

Analyte	CAS. Number	Result	Qual	RL	MDL
1,3,5-Trinitrobenzene	99-35-4		U	0.295	0.0984
1,3-Dinitrobenzene	99-65-0		U	0.295	0.0984
2,4,6-Trinitrotoluene	118-96-7		U ~~Q~~	0.295	0.0984
2,4-Dinitrotoluene	121-14-2		UJ ~~Q~~	0.295	0.0984
2,6-Dinitrotoluene	606-20-2		U	0.295	0.0984
2-Amino-4,6-dinitrotoluene	35572-78-2		U	0.295	0.0984
2-Nitrotoluene	88-72-2		U	0.295	0.0984
3-Nitrotoluene	99-08-1		U	0.295	0.0984
4-Nitrotoluene	99-99-0		U	0.295	0.0984
4-Amino-2,6-dinitrotoluene	19406-51-0		U	0.295	0.0984
HMX	2691-41-0		U	0.295	0.0984
Nitrobenzene	98-95-3		U	0.295	0.0984
RDX	121-82-4		U	0.295	0.0984
Tetryl	479-45-8		U ~~Q~~	0.295	0.0984
Nitroglycerin	55-63-0		U	0.295	0.0984

Surrogate	% Recovery	Lower	Upper	Qual
1,2-Dinitrobenzene	98.2	50	150	

BSL

U Undetected; the analyte was analyzed for, but not detected.
Q One or more quality control criteria failed. See narrative.

Microbac

23 LW 3/10/09

6

Sample Number: L08120577-06
Client ID: MR08-SS111-08D
Matrix: Soil
Workgroup Number: WG291709
Collect Date: 12/16/2008 13:50
Sample Tag: 02

PrePrep Method: NONE
Prep Method: METHOD
Analytical Method: 8330MOD
Analyst: ECL
Dilution: 1
Units: mg/kg

Instrument: HPLC5
Prep Date: 12/29/2008 09:00
Cal Date: 12/16/2008 16:51
Run Date: 01/06/2009 11:58
File ID: 5L003745.F

Analyte	CAS. Number	Result	Qual	RL	MDL
PETN	78-11-5		U	0.295	0.0984

U Undetected; the analyte was analyzed for, but not detected.

Microbac

24 Rew 3/10/09

7

Sample Number: L08120577-07
Client ID: MR08-SS112-08D
Matrix: Soil
Workgroup Number: WG291709
Collect Date: 12/16/2008 14:30
Sample Tag: 01

PrePrep Method: NONE
Prep Method: METHOD
Analytical Method: 8330MOD
Analyst: ECL
Dilution: 1
Units: mg/kg

Instrument: HPLC5
Prep Date: 12/29/2008 09:00
Cal Date: 12/16/2008 16:51
Run Date: 01/05/2009 17:26
File ID: 5L003727.F

Analyte	CAS. Number	Result	Qual	RL	MDL
1,3,5-Trinitrobenzene	99-35-4		U	0.300	0.100
1,3-Dinitrobenzene	99-65-0		U	0.300	0.100
2,4,6-Trinitrotoluene	118-96-7		U ~~Q~~	0.300	0.100
2,4-Dinitrotoluene	121-14-2		U ~~Q~~	0.300	0.100
2,6-Dinitrotoluene	606-20-2		U	0.300	0.100
2-Amino-4,6-dinitrotoluene	35572-78-2		U	0.300	0.100
2-Nitrotoluene	88-72-2		U	0.300	0.100
3-Nitrotoluene	99-08-1		U	0.300	0.100
4-Nitrotoluene	99-99-0		U	0.300	0.100
4-Amino-2,6-dinitrotoluene	19406-51-0		U	0.300	0.100
HMX	2691-41-0		U	0.300	0.100
Nitrobenzene	98-95-3		U	0.300	0.100
RDX	121-82-4		U	0.300	0.100
Tetryl	479-45-8		U ~~Q~~	0.300	0.100
Nitroglycerin	55-63-0		U	0.300	0.100

Surrogate	% Recovery	Lower	Upper	Qual
1,2-Dinitrobenzene	93.3	50	150	

U Undetected; the analyte was analyzed for, but not detected.
Q One or more quality control criteria failed. See narrative.

BSL

Microbac

26 3/10/09

7

Sample Number: L08120577-07
Client ID: MR08-SS112-08D
Matrix: Soil
Workgroup Number: WG291709
Collect Date: 12/16/2008 14:30
Sample Tag: 02

PrePrep Method: NONE
Prep Method: METHOD
Analytical Method: 8330MOD
Analyst: ECL
Dilution: 1
Units: mg/kg

Instrument: HPLC5
Prep Date: 12/29/2008 09:00
Cal Date: 12/16/2008 16:51
Run Date: 01/06/2009 12:11
File ID: 5L003746.F

Analyte	CAS. Number	Result	Qual	RL	MDL
PETN	78-11-5		U	0.300	0.100

U Undetected; the analyte was analyzed for, but not detected.

Microbac

25 lw 3/10/09

8

Sample Number: L08120577-08
Client ID: MR08-SS133-08D
Matrix: Soil
Workgroup Number: WG291709
Collect Date: 12/16/2008 08:35
Sample Tag: 01

PrePrep Method: NONE
Prep Method: METHOD
Analytical Method: 8330MOD
Analyst: ECL
Dilution: 1
Units: mg/kg

Instrument: HPLC5
Prep Date: 12/29/2008 09:00
Cal Date: 12/16/2008 16:51
Run Date: 01/05/2009 19:20
File ID: 5L003730.F

Analyte	CAS. Number	Result	Qual	RL	MDL
1,3,5-Trinitrobenzene	99-35-4		U	0.299	0.0997
1,3-Dinitrobenzene	99-65-0		U	0.299	0.0997
2,4,6-Trinitrotoluene	118-96-7		U ~~Q~~	0.299	0.0997
2,4-Dinitrotoluene	121-14-2		UJ ~~U~~	0.299	0.0997
2,6-Dinitrotoluene	606-20-2		U	0.299	0.0997
2-Amino-4,6-dinitrotoluene	35572-78-2		U	0.299	0.0997
2-Nitrotoluene	88-72-2		U	0.299	0.0997
3-Nitrotoluene	99-08-1		U	0.299	0.0997
4-Nitrotoluene	99-99-0		U	0.299	0.0997
4-Amino-2,6-dinitrotoluene	19406-51-0		U	0.299	0.0997
HMX	2691-41-0		U	0.299	0.0997
Nitrobenzene	98-95-3		U	0.299	0.0997
RDX	121-82-4		U	0.299	0.0997
Tetryl	479-45-8		U ~~Q~~	0.299	0.0997
Nitroglycerin	55-63-0		U	0.299	0.0997

Surrogate	% Recovery	Lower	Upper	Qual
1,2-Dinitrobenzene	91.4	50	150	

BSL

U Undetected; the analyte was analyzed for, but not detected.
Q One or more quality control criteria failed. See narrative.

Microbac

27 MW
3/10/09

8

Sample Number: L08120577-08
Client ID: MR08-SS133-08D
Matrix: Soil
Workgroup Number: WG291709
Collect Date: 12/16/2008 08:35
Sample Tag: 02

PrePrep Method: NONE
Prep Method: METHOD
Analytical Method: 8330MOD
Analyst: ECL
Dilution: 1
Units: mg/kg

Instrument: HPLC5
Prep Date: 12/29/2008 09:00
Cal Date: 12/16/2008 16:51
Run Date: 01/06/2009 12:51
File ID: 5L003749.F

Analyte	CAS. Number	Result	Qual	RL	MDL
PETN	78-11-5		U	0.299	0.0997

U Undetected; the analyte was analyzed for, but not detected.

Microbac

28 MW 3/10/09

9

Sample Number: L08120577-09
Client ID: MR08-IS133-08D
Matrix: Soil
Workgroup Number: WG291709
Collect Date: 12/17/2008 08:50
Sample Tag: 01

PrePrep Method: NONE
Prep Method: METHOD
Analytical Method: 8330MOD
Analyst: ECL
Dilution: 1
Units: mg/kg

Instrument: HPLC5
Prep Date: 12/29/2008 09:00
Cal Date: 12/16/2008 16:51
Run Date: 01/05/2009 19:58
File ID: 5L003731.F

Analyte	CAS. Number	Result	Qual	RL	MDL
1,3,5-Trinitrobenzene	99-35-4		U	0.298	0.0994
1,3-Dinitrobenzene	99-65-0		U	0.298	0.0994
2,4,6-Trinitrotoluene	118-96-7		U ~~Q~~	0.298	0.0994
2,4-Dinitrotoluene	121-14-2		UJ ~~U~~	0.298	0.0994
2,6-Dinitrotoluene	606-20-2		U	0.298	0.0994
2-Amino-4,6-dinitrotoluene	35572-78-2		U	0.298	0.0994
2-Nitrotoluene	88-72-2		U	0.298	0.0994
3-Nitrotoluene	99-08-1		U	0.298	0.0994
4-Nitrotoluene	99-99-0		U	0.298	0.0994
4-Amino-2,6-dinitrotoluene	19406-51-0		U	0.298	0.0994
HMX	2691-41-0		U	0.298	0.0994
Nitrobenzene	98-95-3		U	0.298	0.0994
RDX	121-82-4		U	0.298	0.0994
Tetryl	479-45-8		U ~~Q~~	0.298	0.0994
Nitroglycerin	55-63-0		U	0.298	0.0994

BSL

Surrogate	% Recovery	Lower	Upper	Qual
1,2-Dinitrobenzene	95.3	50	150	

U Undetected; the analyte was analyzed for, but not detected.
Q One or more quality control criteria failed. See narrative.

Microbac

 DW 3/10/09

9

Sample Number: L08120577-09
Client ID: MR08-IS133-08D
Matrix: Soil
Workgroup Number: WG291709
Collect Date: 12/17/2008 08:50
Sample Tag: 02

PrePrep Method: NONE
Prep Method: METHOD
Analytical Method: 8330MOD
Analyst: ECL
Dilution: 1
Units: mg/kg

Instrument: HPLC5
Prep Date: 12/29/2008 09:00
Cal Date: 12/16/2008 16:51
Run Date: 01/06/2009 13:04
File ID: 5L003750.F

Analyte	CAS. Number	Result	Qual	RL	MDL
PETN	78-11-5		U	0.298	0.0994

U Undetected; the analyte was analyzed for, but not detected.

Microbac

30 JEW 3/10/09

10

Sample Number: L08120577-10
Client ID: MR08-SS110-08D
Matrix: Soil
Workgroup Number: WG291709
Collect Date: 12/17/2008 09:25
Sample Tag: 01

PrePrep Method: NONE
Prep Method: METHOD
Analytical Method: 8330MOD
Analyst: ECL
Dilution: 1
Units: mg/kg

Instrument: HPLC5
Prep Date: 12/29/2008 09:00
Cal Date: 12/16/2008 16:51
Run Date: 01/05/2009 20:37
File ID: 5L003732.F

Analyte	CAS. Number	Result	Qual	RL	MDL
1,3,5-Trinitrobenzene	99-35-4		U	0.293	0.0978
1,3-Dinitrobenzene	99-65-0		U	0.293	0.0978
2,4,6-Trinitrotoluene	118-96-7		U ~~Q~~	0.293	0.0978
2,4-Dinitrotoluene	121-14-2		U ~~U~~	0.293	0.0978
2,6-Dinitrotoluene	606-20-2		U	0.293	0.0978
2-Amino-4,6-dinitrotoluene	35572-78-2		U	0.293	0.0978
2-Nitrotoluene	88-72-2		U	0.293	0.0978
3-Nitrotoluene	99-08-1		U	0.293	0.0978
4-Nitrotoluene	99-99-0		U	0.293	0.0978
4-Amino-2,6-dinitrotoluene	19406-51-0		U	0.293	0.0978
HMX	2691-41-0		U	0.293	0.0978
Nitrobenzene	98-95-3		U	0.293	0.0978
RDX	121-82-4		U	0.293	0.0978
Tetryl	479-45-8		U ~~Q~~	0.293	0.0978
Nitroglycerin	55-63-0		U	0.293	0.0978

BSL

Surrogate	% Recovery	Lower	Upper	Qual
1,2-Dinitrobenzene	92.1	50	150	

U Undetected; the analyte was analyzed for, but not detected.
Q One or more quality control criteria failed. See narrative.

Microbac

32 lew 3/10/09

10

Sample Number: L08120577-10
Client ID: MR08-SS110-08D
Matrix: Soil
Workgroup Number: WG291709
Collect Date: 12/17/2008 09:25
Sample Tag: 02

PrePrep Method: NONE
Prep Method: METHOD
Analytical Method: 8330MOD
Analyst: ECL
Dilution: 1
Units: mg/kg

Instrument: HPLC5
Prep Date: 12/29/2008 09:00
Cal Date: 12/16/2008 16:51
Run Date: 01/06/2009 13:17
File ID: 5L003751.F

Analyte	CAS. Number	Result	Qual	RL	MDL
PETN	78-11-5		U	0.293	0.0978

U Undetected; the analyte was analyzed for, but not detected.

Microbac

NW
3/18/09

11

Sample Number: L08120577-11
Client ID: MR08-IS110-08D
Matrix: Soil
Workgroup Number: WG291709
Collect Date: 12/17/2008 09:35
Sample Tag: 01

PrePrep Method: NONE
Prep Method: METHOD
Analytical Method: 8330MOD
Analyst: ECL
Dilution: 1
Units: mg/kg

Instrument: HPLC5
Prep Date: 12/29/2008 09:00
Cal Date: 12/16/2008 16:51
Run Date: 01/05/2009 21:15
File ID: 5L003733.F

Analyte	CAS. Number	Result	Qual	RL	MDL
1,3,5-Trinitrobenzene	99-35-4		U	0.299	0.0997
1,3-Dinitrobenzene	99-65-0		U	0.299	0.0997
2,4,6-Trinitrotoluene	118-96-7		U ~~Q~~	0.299	0.0997
2,4-Dinitrotoluene	121-14-2		U ~~Q~~	0.299	0.0997
2,6-Dinitrotoluene	606-20-2		U	0.299	0.0997
2-Amino-4,6-dinitrotoluene	35572-78-2		U	0.299	0.0997
2-Nitrotoluene	88-72-2		U	0.299	0.0997
3-Nitrotoluene	99-08-1		U	0.299	0.0997
4-Nitrotoluene	99-99-0		U	0.299	0.0997
4-Amino-2,6-dinitrotoluene	19406-51-0		U	0.299	0.0997
HMX	2691-41-0		U	0.299	0.0997
Nitrobenzene	98-95-3		U	0.299	0.0997
RDX	121-82-4		U	0.299	0.0997
Tetryl	479-45-8		U ~~Q~~	0.299	0.0997
Nitroglycerin	55-63-0		U	0.299	0.0997

Surrogate	% Recovery	Lower	Upper	Qual
1,2-Dinitrobenzene	95.4	50	150	

U Undetected; the analyte was analyzed for, but not detected.
Q One or more quality control criteria failed. See narrative.

BSL

Microbac

33 MW 3/10/09

11

Sample Number: L08120577-11
Client ID: MR08-IS110-08D
Matrix: Soil
Workgroup Number: WG291709
Collect Date: 12/17/2008 09:35
Sample Tag: 02

PrePrep Method: NONE
Prep Method: METHOD
Analytical Method: 8330MOD
Analyst: ECL
Dilution: 1
Units: mg/kg

Instrument: HPLC5
Prep Date: 12/29/2008 09:00
Cal Date: 12/16/2008 16:51
Run Date: 01/06/2009 13:30
File ID: 5L003752.F

Analyte	CAS. Number	Result	Qual	RL	MDL
PETN	78-11-5		U	0.299	0.0997

U Undetected; the analyte was analyzed for, but not detected.

Microbac

34 lw 3/10/09

ENVIRONMENTAL
Data Services, Inc.

METALS

USEPA Region IV - Level IV Review

Site: MCB Camp Lejeune, TO-09 SDG #: L08120577

Client: CH2M HILL, Inc., Virginia Beach, Virginia Date: March 11, 2009

Laboratory: Microbac Laboratories, Inc., Marietta, Ohio Reviewer: Nancy Weaver

EDS ID	Client Sample ID	Laboratory Sample ID	Matrix
1	MR08-SS130-08D	L08120577-01	Soil
2	MR08-IS130-1.5-3-08D	L08120577-02	Soil
3	MR08-SS132-08D	L08120577-03	Soil
4	MR08-IS132-08D	L08120577-04	Soil
5	MR08-SS131-08D	L08120577-05	Soil
6	MR08-SS111-08D	L08120577-06	Soil
7	MR08-SS112-08D	L08120577-07	Soil
8	MR08-SS133-08D	L08120577-08	Soil
9	MR08-IS133-08D	L08120577-09	Soil
10	MR08-SS110-08D	L08120577-10	Soil
11	MR08-IS110-08D	L08120577-11	Soil
12	MR08-SS134-08D	L08120577-12	Soil
13	MR08-IS134-08D	L08120577-13	Soil
14	MR08-SS135-08D	L08120577-14	Soil
15	MR08-IS135-1.5-2-08D	L08120577-15	Soil
16	MR08-SS156-08D	L08120577-16	Soil
17	MR08-IS156-1.5-2-08D	L08120577-17	Soil
18	MR08-SS159-08D	L08120577-18	Soil
19	MR08-IS159-4-5-08D	L08120577-19	Soil
20	MR08-SS158-08D	L08120577-20	Soil
21	MR08-IS158-4-5-08D	L08120577-21	Soil
22	MR08-SS157-08D	L08120577-22	Soil
23	MR08-IS157-08D	L08120577-23	Soil
24	MR08-SS181-08D	L08120577-24	Soil
25	MR08-IS181-1-2-08D	L08120577-25	Soil

The USEPA "Contract Laboratory Program National Functional Guidelines for Inorganic Data Review," October 2004, and professional judgement were used in evaluating the data in this summary report.

Holding Times - All samples were prepared and analyzed within 28 days for mercury and 180 days for all other metals.

Calibration - The ICV and CCV %R values were acceptable.

Method and Calibration Blanks - The method blanks were free of contamination.

Field and Equipment Blank - Field QC results are summarized below.

Blank ID	Compound	Conc. ug/L	Action Level ug/L	Qualifier	Affected Samples
MR08-FB1120608	None - ND	-	-	-	-

ICP Interference Check Sample - All %R values were acceptable.

MS/MSD - The MS/MSD sample exhibited acceptable %R and RPD values except the following.

MS/MSD Sample ID	Compound	MS/MSD %R/RPD	Qualifier	Affected Samples
Reference (WG291620)	Barium	56.5%/Ok/Ok	J/UJ	20-25
Reference (WG291263)	Arsenic	Ok/58.7%/31.6	J/UJ	20-25
	Lead	72.8%/48.4%/38.3	None	See ICP Serial Dilution
Reference (WG291264)	Selenium	73.7%/69.2/Ok	J/UJ	1-19

LCS - The LCS samples exhibited acceptable %R values.

ICP Serial Dilution - The ICP serial dilution sample exhibited acceptable %D values except the following.

ICP Sample ID	Compound	%D	Qualifier	Affected Samples
WG291263	Lead	10.50%	J	20-25

Field Duplicates - Field duplicate samples were not analyzed.

Compound Quantitation - No discrepancies were identified.

Report Date : January 16, 2009

Sample Number: L08120577-01
Client ID: MR08-SS130-08D
Matrix: Soil
Workgroup Number: WG291541
Collect Date: 12/16/2008 10:30
Sample Tag: 01

PrePrep Method: NONE
Prep Method: 3051
Analytical Method: 6010B
Analyst: JYH
Dilution: 1
Units: mg/kg

Instrument: IRIS-ICP
Prep Date: 12/22/2008 09:07
Cal Date: 12/30/2008 13:02
Run Date: 12/30/2008 18:09
File ID: IR.123008.180900
Percent Solid: 87.1

Analyte	CAS. Number	Result	Qual	RL	MDL
Silver, Total	7440-22-4	0.532	J	0.861	0.215
Barium, Total	7440-39-3	5.61		0.430	0.0861
Cadmium, Total	7440-43-9	0.497		0.172	0.0430
Chromium, Total	7440-47-3	6.27		0.861	0.103
Copper, Total	7440-50-8	2.76		1.72	0.430
Antimony, Total	7440-36-0	1.04	J	1.72	0.430
Zinc, Total	7440-66-6	13.7		1.72	0.430

J Estimated ; the analyte concentration was less than the low standard (LOQ)

Microbac

199 JEW 3/11/09

Report Number: L08120577

Report Date : January 16, 2009

Sample Number:	L08120577-01	PrePrep Method:	NONE	Instrument:	ELAN-ICP
Client ID:	MR08-SS130-08D	Prep Method:	3051	Prep Date:	12/22/2008 06:55
Matrix:	Soil	Analytical Method:	6020	Cal Date:	12/31/2008 11:37
Workgroup Number:	WG291264	Analyst:	JYH	Run Date:	12/31/2008 17:26
Collect Date:	12/16/2008 10:30	Dilution:	1	File ID:	EL.123108.172625
Sample Tag:	01	Units:	mg/kg	Percent Solid:	87.1

Analyte	CAS. Number	Result	Qual	RL	MDL
Arsenic, Total	7440-38-2	8.41		0.342	0.0856
Lead, Total	7439-92-1	30.6		0.457	0.114
Selenium, Total	7782-49-2	0.393 J	J	0.457	0.114

MSL

J Estimated ; the analyte concentration was less than the low standard (LOQ)

Microbac

QW 3/11/09

727

Report Number: L08120577

Report Date : January 16, 2009

Sample Number:	L08120577-01	PrePrep Method:	NONE	Instrument:	HYDRA
Client ID:	MR08-SS130-08D	Prep Method:	7471A	Prep Date:	12/22/2008 07:45
Matrix:	Soil	Analytical Method:	7471A	Cal Date:	12/29/2008 11:32
Workgroup Number:	WG291464	Analyst:	ADC	Run Date:	12/29/2008 12:23
Collect Date:	12/16/2008 10:30	Dilution:	1	File ID:	HY.122908.122355
Sample Tag:	01	Units:	mg/kg	Percent Solid:	87.1

Analyte	CAS. Number	Result	Qual	RL	MDL
Mercury, Total	7439-97-6		U	0.114	0.0229

U Undetected; the analyte was analyzed for, but not detected.

Microbac

lew 3/11/09

2

Sample Number: L08120577-02
Client ID: MR08-IS130-1.5-3-08D
Matrix: Soil
Workgroup Number: WG291541
Collect Date: 12/16/2008 10:45
Sample Tag: 01

PrePrep Method: NONE
Prep Method: 3051
Analytical Method: 6010B
Analyst: JYH
Dilution: 1
Units: mg/kg

Instrument: IRIS-ICP
Prep Date: 12/22/2008 09:08
Cal Date: 12/30/2008 13:02
Run Date: 12/30/2008 18:46
File ID: IR.123008.184600
Percent Solid: 86.7

Analyte	CAS. Number	Result	Qual	RL	MDL
Silver, Total	7440-22-4	0.546	J	0.850	0.213
Barium, Total	7440-39-3	3.96		0.425	0.0850
Cadmium, Total	7440-43-9	0.280		0.170	0.0425
Chromium, Total	7440-47-3	5.92		0.850	0.102
Copper, Total	7440-50-8	1.50	J	1.70	0.425
Antimony, Total	7440-36-0	0.631	J	1.70	0.425
Zinc, Total	7440-66-6	4.62		1.70	0.425

J Estimated ; the analyte concentration was less than the low standard (LOQ)

Microbac

200 flw 3/11/09

2

Sample Number: L08120577-02
Client ID: MR08-IS130-1.5-3-08D
Matrix: Soil
Workgroup Number: WG291264
Collect Date: 12/16/2008 10:45
Sample Tag: 01

PrePrep Method: NONE
Prep Method: 3051
Analytical Method: 6020
Analyst: JYH
Dilution: 1
Units: mg/kg

Instrument: ELAN-ICP
Prep Date: 12/22/2008 06:55
Cal Date: 12/31/2008 11:37
Run Date: 12/31/2008 17:33
File ID: EL.123108.173350
Percent Solid: 86.7

Analyte	CAS. Number	Result	Qual	RL	MDL
Arsenic, Total	7440-38-2	0.864		0.338	0.0845
Lead, Total	7439-92-1	9.62		0.450	0.113
Selenium, Total	7782-49-2	0.584 J		0.450	0.113

MSL

Microbac

Jew 3/11/09

2

Sample Number: L08120577-02
Client ID: MR08-IS130-1.5-3-08D
Matrix: Soil
Workgroup Number: WG291464
Collect Date: 12/16/2008 10:45
Sample Tag: 01

PrePrep Method: NONE
Prep Method: 7471A
Analytical Method: 7471A
Analyst: ADC
Dilution: 1
Units: mg/kg

Instrument: HYDRA
Prep Date: 12/22/2008 07:45
Cal Date: 12/29/2008 11:32
Run Date: 12/29/2008 12:31
File ID: HY.122908.123119
Percent Solid: 86.7

Analyte	CAS. Number	Result	Qual	RL	MDL
Mercury, Total	7439-97-6		U	0.110	0.0220

U Undetected; the analyte was analyzed for, but not detected.

Microbac

MW 3/16/09

3

Sample Number: L08120577-03
Client ID: MR08-SS132-08D
Matrix: Soil
Workgroup Number: WG291541
Collect Date: 12/16/2008 11:40
Sample Tag: 01

PrePrep Method: NONE
Prep Method: 3051
Analytical Method: 6010B
Analyst: JYH
Dilution: 1
Units: mg/kg

Instrument: IRIS-ICP
Prep Date: 12/22/2008 09:09
Cal Date: 12/30/2008 13:02
Run Date: 12/30/2008 18:52
File ID: IR.123008.185200
Percent Solid: 84.6

Analyte	CAS. Number	Result	Qual	RL	MDL
Silver, Total	7440-22-4		U	0.870	0.217
Barium, Total	7440-39-3	4.31		0.435	0.0870
Cadmium, Total	7440-43-9		U	0.174	0.0435
Chromium, Total	7440-47-3	4.16		0.870	0.104
Copper, Total	7440-50-8	0.867	J	1.74	0.435
Antimony, Total	7440-36-0		U	1.74	0.435
Zinc, Total	7440-66-6	1.23	J	1.74	0.435

U Undetected; the analyte was analyzed for, but not detected.
J Estimated ; the analyte concentration was less than the low standard (LOQ)

Microbac

201 3/11/09

3

Sample Number: L08120577-03
Client ID: MR08-SS132-08D
Matrix: Soil
Workgroup Number: WG291264
Collect Date: 12/16/2008 11:40
Sample Tag: 02

PrePrep Method: NONE
Prep Method: 3051
Analytical Method: 6020
Analyst: JYH
Dilution: 1
Units: mg/kg

Instrument: ELAN-ICP
Prep Date: 12/22/2008 06:55
Cal Date: 01/03/2009 12:50
Run Date: 01/03/2009 20:01
File ID: EL.010309.200116
Percent Solid: 84.6

Analyte	CAS. Number	Result	Qual	RL	MDL
Lead, Total	7439-92-1	1.75		0.439	0.110

Microbac

JEW 3/11/09

3

Sample Number: L08120577-03
Client ID: MR08-SS132-08D
Matrix: Soil
Workgroup Number: WG291264
Collect Date: 12/16/2008 11:40
Sample Tag: 01

PrePrep Method: NONE
Prep Method: 3051
Analytical Method: 6020
Analyst: JYH
Dilution: 1
Units: mg/kg

Instrument: ELAN-ICP
Prep Date: 12/22/2008 06:55
Cal Date: 12/31/2008 11:37
Run Date: 12/31/2008 18:04
File ID: EL.123108.180430
Percent Solid: 84.6

Analyte	CAS. Number	Result	Qual	RL	MDL	
Arsenic, Total	7440-38-2	8.32		0.329	0.0822	
Selenium, Total	7782-49-2	UJ	✓	0.439	0.110	MSL

U Undetected; the analyte was analyzed for, but not detected.

Microbac

lew 3/11/09

3

Sample Number:	L08120577-03	PrePrep Method:	NONE	Instrument:	HYDRA
Client ID:	MR08-SS132-08D	Prep Method:	7471A	Prep Date:	12/22/2008 07:45
Matrix:	Soil	Analytical Method:	7471A	Cal Date:	12/29/2008 11:32
Workgroup Number:	WG291464	Analyst:	ADC	Run Date:	12/29/2008 12:33
Collect Date:	12/16/2008 11:40	Dilution:	1	File ID:	HY.122908.123314
Sample Tag:	01	Units:	mg/kg	Percent Solid:	84.6

Analyte	CAS. Number	Result	Qual	RL	MDL
Mercury, Total	7439-97-6		U	0.112	0.0223

U Undetected; the analyte was analyzed for, but not detected.

Microbac

lew 3/11/09

4

Sample Number: L08120577-04
Client ID: MR08-IS132-08D
Matrix: Soil
Workgroup Number: WG291541
Collect Date: 12/16/2008 11:50
Sample Tag: 01

PrePrep Method: NONE
Prep Method: 3051
Analytical Method: 6010B
Analyst: JYH
Dilution: 1
Units: mg/kg

Instrument: IRIS-ICP
Prep Date: 12/22/2008 09:12
Cal Date: 12/30/2008 13:02
Run Date: 12/30/2008 18:58
File ID: IR.123008.185800
Percent Solid: 79.4

Analyte	CAS. Number	Result	Qual	RL	MDL
Silver, Total	7440-22-4	0.464	J	0.911	0.228
Barium, Total	7440-39-3	5.00		0.456	0.0911
Cadmium, Total	7440-43-9	0.0902	J	0.182	0.0456
Chromium, Total	7440-47-3	4.07		0.911	0.109
Copper, Total	7440-50-8	1.22	J	1.82	0.456
Antimony, Total	7440-36-0		U	1.82	0.456
Zinc, Total	7440-66-6	2.72		1.82	0.456

U Undetected; the analyte was analyzed for, but not detected.
J Estimated ; the analyte concentration was less than the low standard (LOQ)

Microbac

202 3/4/09

4

Sample Number: L08120577-04
Client ID: MR08-IS132-08D
Matrix: Soil
Workgroup Number: WG291264
Collect Date: 12/16/2008 11:50
Sample Tag: 02

PrePrep Method: NONE
Prep Method: 3051
Analytical Method: 6020
Analyst: JYH
Dilution: 1
Units: mg/kg

Instrument: ELAN-ICP
Prep Date: 12/22/2008 06:55
Cal Date: 01/03/2009 12:50
Run Date: 01/03/2009 20:06
File ID: EL.010309.200640
Percent Solid: 79.4

Analyte	CAS. Number	Result	Qual	RL	MDL
Lead, Total	7439-92-1	4.66		0.498	0.125

Microbac

JEW 3/11/09

4

Sample Number: L08120577-04
Client ID: MR08-IS132-08D
Matrix: Soil
Workgroup Number: WG291264
Collect Date: 12/16/2008 11:50
Sample Tag: 01

PrePrep Method: NONE
Prep Method: 3051
Analytical Method: 6020
Analyst: JYH
Dilution: 1
Units: mg/kg

Instrument: ELAN-ICP
Prep Date: 12/22/2008 06:55
Cal Date: 12/31/2008 11:37
Run Date: 12/31/2008 18:09
File ID: EL.123108.180954
Percent Solid: 79.4

Analyte	CAS. Number	Result	Qual	RL	MDL
Arsenic, Total	7440-38-2	10.5		0.374	0.0934
Selenium, Total	7782-49-2	0.305 J	J	0.498	0.125

MSL

J Estimated ; the analyte concentration was less than the low standard (LOQ)

Microbac

lew 3/4/09

732

4

Sample Number: L08120577-04
Client ID: MR08-IS132-08D
Matrix: Soil
Workgroup Number: WG291464
Collect Date: 12/16/2008 11:50
Sample Tag: 01

PrePrep Method: NONE
Prep Method: 7471A
Analytical Method: 7471A
Analyst: ADC
Dilution: 1
Units: mg/kg

Instrument: HYDRA
Prep Date: 12/22/2008 07:45
Cal Date: 12/29/2008 11:32
Run Date: 12/29/2008 12:34
File ID: HY.122908.123458
Percent Solid: 79.4

Analyte	CAS. Number	Result	Qual	RL	MDL
Mercury, Total	7439-97-6		U	0.125	0.0250

U Undetected; the analyte was analyzed for, but not detected.

Microbac

lw 3/4/09

5

Sample Number: L08120577-05
Client ID: MR08-SS131-08D
Matrix: Soil
Workgroup Number: WG291541
Collect Date: 12/16/2008 13:15
Sample Tag: 01

PrePrep Method: NONE
Prep Method: 3051
Analytical Method: 6010B
Analyst: JYH
Dilution: 1
Units: mg/kg

Instrument: IRIS-ICP
Prep Date: 12/22/2008 09:12
Cal Date: 12/30/2008 13:02
Run Date: 12/30/2008 19:04
File ID: IR.123008.190400
Percent Solid: 82.1

Analyte	CAS. Number	Result	Qual	RL	MDL
Silver, Total	7440-22-4	0.460	J	0.916	0.229
Barium, Total	7440-39-3	14.8		0.458	0.0916
Cadmium, Total	7440-43-9	0.909		0.183	0.0458
Chromium, Total	7440-47-3	9.54		0.916	0.110
Copper, Total	7440-50-8	10.8		1.83	0.458
Antimony, Total	7440-36-0	4.60		1.83	0.458
Zinc, Total	7440-66-6	60.0		1.83	0.458

J Estimated ; the analyte concentration was less than the low standard (LOQ)

Microbac

MW 3/11/09

5

Sample Number:	L08120577-05	PrePrep Method:	NONE	Instrument:	ELAN-ICP
Client ID:	MR08-SS131-08D	Prep Method:	3051	Prep Date:	12/22/2008 06:55
Matrix:	Soil	Analytical Method:	6020	Cal Date:	01/03/2009 12:50
Workgroup Number:	WG291264	Analyst:	JYH	Run Date:	01/03/2009 20:12
Collect Date:	12/16/2008 13:15	Dilution:	10	File ID:	EL.010309.201204
Sample Tag:	DL01	Units:	mg/kg	Percent Solid:	82.1

Analyte	CAS. Number	Result	Qual	RL	MDL
Lead, Total	7439-92-1	114		4.68	1.17

Microbac

lew 1/3/09

5

Sample Number: L08120577-05
Client ID: MR08-SS131-08D
Matrix: Soil
Workgroup Number: WG291264
Collect Date: 12/16/2008 13:15
Sample Tag: 01

PrePrep Method: NONE
Prep Method: 3051
Analytical Method: 6020
Analyst: JYH
Dilution: 1
Units: mg/kg

Instrument: ELAN-ICP
Prep Date: 12/22/2008 06:55
Cal Date: 12/31/2008 11:37
Run Date: 12/31/2008 18:15
File ID: EL.123108.181519
Percent Solid: 82.1

Analyte	CAS. Number	Result	Qual	RL	MDL
Arsenic, Total	7440-38-2	9.53		0.351	0.0878
Selenium, Total	7782-49-2	0.326 J	J	0.468	0.117

MSL

J Estimated ; the analyte concentration was less than the low standard (LOQ)

Microbac

734

Lee 3/11/09

5

Sample Number: L08120577-05
Client ID: MR08-SS131-08D
Matrix: Soil
Workgroup Number: WG291464
Collect Date: 12/16/2008 13:15
Sample Tag: 01

PrePrep Method: NONE
Prep Method: 7471A
Analytical Method: 7471A
Analyst: ADC
Dilution: 1
Units: mg/kg

Instrument: HYDRA
Prep Date: 12/22/2008 07:45
Cal Date: 12/29/2008 11:32
Run Date: 12/29/2008 12:36
File ID: HY.122908.123643
Percent Solid: 82.1

Analyte	CAS. Number	Result	Qual	RL	MDL
Mercury, Total	7439-97-6		U	0.115	0.0231

U Undetected; the analyte was analyzed for, but not detected.

Microbac

lw
3/11/09

6

Sample Number: L08120577-06
Client ID: MR08-SS111-08D
Matrix: Soil
Workgroup Number: WG291541
Collect Date: 12/16/2008 13:50
Sample Tag: 01

PrePrep Method: NONE
Prep Method: 3051
Analytical Method: 6010B
Analyst: JYH
Dilution: 1
Units: mg/kg

Instrument: IRIS-ICP
Prep Date: 12/22/2008 09:14
Cal Date: 12/30/2008 13:02
Run Date: 12/30/2008 19:10
File ID: IR.123008.191000
Percent Solid: 93.6

Analyte	CAS. Number	Result	Qual	RL	MDL
Silver, Total	7440-22-4	0.298	J	0.795	0.199
Barium, Total	7440-39-3	3.19		0.397	0.0795
Cadmium, Total	7440-43-9	0.135	J	0.159	0.0397
Chromium, Total	7440-47-3	3.22		0.795	0.0954
Copper, Total	7440-50-8	0.653	J	1.59	0.397
Antimony, Total	7440-36-0		U	1.59	0.397
Zinc, Total	7440-66-6	3.39		1.59	0.397

U Undetected; the analyte was analyzed for, but not detected.
J Estimated ; the analyte concentration was less than the low standard (LOQ)

Microbac

204 KEW 3/4/09

6

Sample Number: L08120577-06
Client ID: MR08-SS111-08D
Matrix: Soil
Workgroup Number: WG291264
Collect Date: 12/16/2008 13:50
Sample Tag: 01

PrePrep Method: NONE
Prep Method: 3051
Analytical Method: 6020
Analyst: JYH
Dilution: 1
Units: mg/kg

Instrument: ELAN-ICP
Prep Date: 12/22/2008 06:55
Cal Date: 12/31/2008 11:37
Run Date: 12/31/2008 18:20
File ID: EL.123108.182043
Percent Solid: 93.6

Analyte	CAS. Number	Result	Qual	RL	MDL
Arsenic, Total	7440-38-2	7.81		0.312	0.0781
Selenium, Total	7782-49-2	0.354	J	0.417	0.104

MSL

J Estimated ; the analyte concentration was less than the low standard (LOQ)

Microbac

LLW 3/11/09

6

Sample Number: L08120577-06
Client ID: MR08-SS111-08D
Matrix: Soil
Workgroup Number: WG291264
Collect Date: 12/16/2008 13:50
Sample Tag: 02

PrePrep Method: NONE
Prep Method: 3051
Analytical Method: 6020
Analyst: JYH
Dilution: 1
Units: mg/kg

Instrument: ELAN-ICP
Prep Date: 12/22/2008 06:55
Cal Date: 01/03/2009 12:50
Run Date: 01/03/2009 20:17
File ID: EL.010309.201728
Percent Solid: 93.6

Analyte	CAS. Number	Result	Qual	RL	MDL
Lead, Total	7439-92-1	2.92		0.417	0.104

Microbac

3/11/09

6

Sample Number:	L08120577-06	PrePrep Method:	NONE	Instrument:	HYDRA
Client ID:	MR08-SS111-08D	Prep Method:	7471A	Prep Date:	12/22/2008 07:45
Matrix:	Soil	Analytical Method:	7471A	Cal Date:	12/29/2008 11:32
Workgroup Number:	WG291464	Analyst:	ADC	Run Date:	12/29/2008 12:38
Collect Date:	12/16/2008 13:50	Dilution:	1	File ID:	HY.122908.123825
Sample Tag:	01	Units:	mg/kg	Percent Solid:	93.6

Analyte	CAS. Number	Result	Qual	RL	MDL
Mercury, Total	7439-97-6		U	0.105	0.0210

U Undetected; the analyte was analyzed for, but not detected.

Microbac

MW 3/4/09

Sample Number:	L08120577-07	PrePrep Method:	NONE	Instrument:	IRIS-ICP
Client ID:	MR08-SS112-08D	Prep Method:	3051	Prep Date:	12/22/2008 09:15
Matrix:	Soil	Analytical Method:	6010B	Cal Date:	12/30/2008 13:02
Workgroup Number:	WG291541	Analyst:	JYH	Run Date:	12/30/2008 19:16
Collect Date:	12/16/2008 14:30	Dilution:	1	File ID:	IR.123008.191600
Sample Tag:	01	Units:	mg/kg	Percent Solid:	92.8

Analyte	CAS. Number	Result	Qual	RL	MDL
Silver, Total	7440-22-4	0.680	J	0.813	0.203
Barium, Total	7440-39-3	7.35		0.406	0.0813
Cadmium, Total	7440-43-9	0.695		0.163	0.0406
Chromium, Total	7440-47-3	6.10		0.813	0.0975
Copper, Total	7440-50-8	2.38		1.63	0.406
Antimony, Total	7440-36-0	1.35	J	1.63	0.406
Zinc, Total	7440-66-6	15.5		1.63	0.406

J Estimated ; the analyte concentration was less than the low standard (LOQ)

Microbac

205 3/4/09

7

Sample Number: L08120577-07
Client ID: MR08-SS112-08D
Matrix: Soil
Workgroup Number: WG291264
Collect Date: 12/16/2008 14:30
Sample Tag: 02

PrePrep Method: NONE
Prep Method: 3051
Analytical Method: 6020
Analyst: JYH
Dilution: 1
Units: mg/kg

Instrument: ELAN-ICP
Prep Date: 12/22/2008 06:55
Cal Date: 01/03/2009 12:50
Run Date: 01/03/2009 20:22
File ID: EL.010309.202253
Percent Solid: 92.8

Analyte	CAS. Number	Result	Qual	RL	MDL
Lead, Total	7439-92-1	31.7		0.408	0.102

Microbac

lee 3/4/09

7

Sample Number: L08120577-07
Client ID: MR08-SS112-08D
Matrix: Soil
Workgroup Number: WG291264
Collect Date: 12/16/2008 14:30
Sample Tag: 01

PrePrep Method: NONE
Prep Method: 3051
Analytical Method: 6020
Analyst: JYH
Dilution: 1
Units: mg/kg

Instrument: ELAN-ICP
Prep Date: 12/22/2008 06:55
Cal Date: 12/31/2008 11:37
Run Date: 12/31/2008 18:26
File ID: EL.123108.182604
Percent Solid: 92.8

Analyte	CAS. Number	Result	Qual	RL	MDL
Arsenic, Total	7440-38-2	9.76		0.306	0.0765
Selenium, Total	7782-49-2	0.490 J		0.408	0.102

Microbac

Qew 3/11/09

7

Sample Number: L08120577-07
Client ID: MR08-SS112-08D
Matrix: Soil
Workgroup Number: WG291464
Collect Date: 12/16/2008 14:30
Sample Tag: 01

PrePrep Method: NONE
Prep Method: 7471A
Analytical Method: 7471A
Analyst: ADC
Dilution: 1
Units: mg/kg

Instrument: HYDRA
Prep Date: 12/22/2008 07:45
Cal Date: 12/29/2008 11:32
Run Date: 12/29/2008 12:40
File ID: HY.122908.124017
Percent Solid: 92.8

Analyte	CAS. Number	Result	Qual	RL	MDL
Mercury, Total	7439-97-6		U	0.105	0.0209

U Undetected; the analyte was analyzed for, but not detected.

Microbac

1855 flw 3/4/09

8

Sample Number: L08120577-08
Client ID: MR08-SS133-08D
Matrix: Soil
Workgroup Number: WG291541
Collect Date: 12/16/2008 08:35
Sample Tag: 01

PrePrep Method: NONE
Prep Method: 3051
Analytical Method: 6010B
Analyst: JYH
Dilution: 1
Units: mg/kg

Instrument: IRIS-ICP
Prep Date: 12/22/2008 09:16
Cal Date: 12/30/2008 13:02
Run Date: 12/30/2008 19:22
File ID: IR.123008.192200
Percent Solid: 71.7

Analyte	CAS. Number	Result	Qual	RL	MDL
Silver, Total	7440-22-4	0.404	J	1.04	0.260
Barium, Total	7440-39-3	8.76		0.521	0.104
Cadmium, Total	7440-43-9	0.220		0.208	0.0521
Chromium, Total	7440-47-3	3.96		1.04	0.125
Copper, Total	7440-50-8	7.60		2.08	0.521
Antimony, Total	7440-36-0	0.647	J	2.08	0.521
Zinc, Total	7440-66-6	31.2		2.08	0.521

J Estimated ; the analyte concentration was less than the low standard (LOQ)

Microbac

206 3/11/09

8

Sample Number: L08120577-08
Client ID: MR08-SS133-08D
Matrix: Soil
Workgroup Number: WG291264
Collect Date: 12/16/2008 08:35
Sample Tag: 01

PrePrep Method: NONE
Prep Method: 3051
Analytical Method: 6020
Analyst: JYH
Dilution: 1
Units: mg/kg

Instrument: ELAN-ICP
Prep Date: 12/22/2008 06:55
Cal Date: 12/31/2008 11:37
Run Date: 12/31/2008 18:31
File ID: EL.123108.183126
Percent Solid: 71.7

Analyte	CAS. Number	Result	Qual	RL	MDL	
Arsenic, Total	7440-38-2	0.793		0.401	0.100	
Selenium, Total	7782-49-2	0.207 J	J	0.534	0.134	MSL

J Estimated ; the analyte concentration was less than the low standard (LOQ)

Microbac

flw
739 3/11/09

8

Sample Number: L08120577-08
Client ID: MR08-SS133-08D
Matrix: Soil
Workgroup Number: WG291264
Collect Date: 12/16/2008 08:35
Sample Tag: 02

PrePrep Method: NONE
Prep Method: 3051
Analytical Method: 6020
Analyst: JYH
Dilution: 1
Units: mg/kg

Instrument: ELAN-ICP
Prep Date: 12/22/2008 06:55
Cal Date: 01/03/2009 12:50
Run Date: 01/03/2009 20:28
File ID: EL.010309.202816
Percent Solid: 71.7

Analyte	CAS. Number	Result	Qual	RL	MDL
Lead, Total	7439-92-1	32.4		0.534	0.134

Microbac

kw 3/4/09

8

Sample Number: L08120577-08
Client ID: MR08-SS133-08D
Matrix: Soil
Workgroup Number: WG291464
Collect Date: 12/16/2008 08:35
Sample Tag: 01

PrePrep Method: NONE
Prep Method: 7471A
Analytical Method: 7471A
Analyst: ADC
Dilution: 1
Units: mg/kg

Instrument: HYDRA
Prep Date: 12/22/2008 07:45
Cal Date: 12/29/2008 11:32
Run Date: 12/29/2008 12:42
File ID: HY.122908.124239
Percent Solid: 71.7

Analyte	CAS. Number	Result	Qual	RL	MDL
Mercury, Total	7439-97-6	0.0299	J	0.129	0.0258

J Estimated ; the analyte concentration was less than the low standard (LOQ)

Microbac

1856 lw 3/4/09

9

Sample Number: L08120577-09
Client ID: MR08-IS133-08D
Matrix: Soil
Workgroup Number: WG291541
Collect Date: 12/17/2008 08:50
Sample Tag: 01

PrePrep Method: NONE
Prep Method: 3051
Analytical Method: 6010B
Analyst: JYH
Dilution: 1
Units: mg/kg

Instrument: IRIS-ICP
Prep Date: 12/22/2008 09:17
Cal Date: 12/30/2008 13:02
Run Date: 12/30/2008 19:28
File ID: IR.123008.192800
Percent Solid: 80.7

Analyte	CAS. Number	Result	Qual	RL	MDL
Silver, Total	7440-22-4		U	0.831	0.208
Barium, Total	7440-39-3	8.40		0.415	0.0831
Cadmium, Total	7440-43-9		U	0.166	0.0415
Chromium, Total	7440-47-3	3.54		0.831	0.0997
Copper, Total	7440-50-8	0.547	J	1.66	0.415
Antimony, Total	7440-36-0		U	1.66	0.415
Zinc, Total	7440-66-6	2.04		1.66	0.415

U Undetected; the analyte was analyzed for, but not detected.
J Estimated ; the analyte concentration was less than the low standard (LOQ)

Microbac

lew 3/11/09

9

Sample Number: L08120577-10
Client ID: MR08-SS110-08D
Matrix: Soil
Workgroup Number: WG291541
Collect Date: 12/17/2008 09:25
Sample Tag: 01

PrePrep Method: NONE
Prep Method: 3051
Analytical Method: 6010B
Analyst: JYH
Dilution: 1
Units: mg/kg

Instrument: IRIS-ICP
Prep Date: 12/22/2008 09:17
Cal Date: 12/30/2008 13:02
Run Date: 12/30/2008 19:34
File ID: IR.123008.193400
Percent Solid: 83.3

Analyte	CAS. Number	Result	Qual	RL	MDL
Silver, Total	7440-22-4	0.712	J	0.923	0.231
Barium, Total	7440-39-3	4.58		0.462	0.0923
Cadmium, Total	7440-43-9	0.488		0.185	0.0462
Chromium, Total	7440-47-3	4.00		0.923	0.111
Copper, Total	7440-50-8	1.58	J	1.85	0.462
Antimony, Total	7440-36-0		U	1.85	0.462
Zinc, Total	7440-66-6	12.9		1.85	0.462

U Undetected; the analyte was analyzed for, but not detected.
J Estimated ; the analyte concentration was less than the low standard (LOQ)

Microbac

MW 3/11/09

9

Sample Number: L08120577-09
Client ID: MR08-IS133-08D
Matrix: Soil
Workgroup Number: WG291264
Collect Date: 12/17/2008 08:50
Sample Tag: 02

PrePrep Method: NONE
Prep Method: 3051
Analytical Method: 6020
Analyst: JYH
Dilution: 1
Units: mg/kg

Instrument: ELAN-ICP
Prep Date: 12/22/2008 06:55
Cal Date: 01/03/2009 12:50
Run Date: 01/03/2009 20:33
File ID: EL.010309.203338
Percent Solid: 80.7

Analyte	CAS. Number	Result	Qual	RL	MDL
Lead, Total	7439-92-1	4.01		0.494	0.124

Microbac

Clw 3/11/09

9

Sample Number: L08120577-09
Client ID: MR08-IS133-08D
Matrix: Soil
Workgroup Number: WG291264
Collect Date: 12/17/2008 08:50
Sample Tag: 01

PrePrep Method: NONE
Prep Method: 3051
Analytical Method: 6020
Analyst: JYH
Dilution: 1
Units: mg/kg

Instrument: ELAN-ICP
Prep Date: 12/22/2008 06:55
Cal Date: 12/31/2008 11:37
Run Date: 12/31/2008 18:36
File ID: EL.123108.183649
Percent Solid: 80.7

Analyte	CAS. Number	Result	Qual	RL	MDL
Arsenic, Total	7440-38-2	0.985		0.371	0.0927
Selenium, Total	7782-49-2	UJ	~~U~~	0.494	0.124

MSL

U Undetected; the analyte was analyzed for, but not detected.

Microbac

lew 3/11/09

9

Sample Number:	L08120577-09	PrePrep Method:	NONE	Instrument:	HYDRA
Client ID:	MR08-IS133-08D	Prep Method:	7471A	Prep Date:	12/22/2008 07:45
Matrix:	Soil	Analytical Method:	7471A	Cal Date:	12/29/2008 11:32
Workgroup Number:	WG291464	Analyst:	ADC	Run Date:	12/29/2008 12:44
Collect Date:	12/17/2008 08:50	Dilution:	1	File ID:	HY.122908.124443
Sample Tag:	01	Units:	mg/kg	Percent Solid:	80.7

Analyte	CAS. Number	Result	Qual	RL	MDL
Mercury, Total	7439-97-6		U	0.121	0.0241

U Undetected; the analyte was analyzed for, but not detected.

Microbac

1857 lles 3/4/09

10

Sample Number: L08120577-10
Client ID: MR08-SS110-08D
Matrix: Soil
Workgroup Number: WG291264
Collect Date: 12/17/2008 09:25
Sample Tag: 01

PrePrep Method: NONE
Prep Method: 3051
Analytical Method: 6020
Analyst: JYH
Dilution: 1
Units: mg/kg

Instrument: ELAN-ICP
Prep Date: 12/22/2008 06:55
Cal Date: 12/31/2008 11:37
Run Date: 12/31/2008 18:42
File ID: EL.123108.184211
Percent Solid: 83.3

Analyte	CAS. Number	Result	Qual	RL	MDL	
Arsenic, Total	7440-38-2	2.37		0.357	0.0891	
Selenium, Total	7782-49-2	0.416 J	~~J~~	0.475	0.119	NJL

J Estimated ; the analyte concentration was less than the low standard (LOQ)

Microbac

lee 3/11/09

10

Sample Number: L08120577-10
Client ID: MR08-SS110-08D
Matrix: Soil
Workgroup Number: WG291264
Collect Date: 12/17/2008 09:25
Sample Tag: 02

PrePrep Method: NONE
Prep Method: 3051
Analytical Method: 6020
Analyst: JYH
Dilution: 1
Units: mg/kg

Instrument: ELAN-ICP
Prep Date: 12/22/2008 06:55
Cal Date: 01/03/2009 12:50
Run Date: 01/03/2009 20:52
File ID: EL.010309.205202
Percent Solid: 83.3

Analyte	CAS. Number	Result	Qual	RL	MDL
Lead, Total	7439-92-1	4.12		0.475	0.119

Microbac

flee 3/11/09

10

Sample Number:	L08120577-10	PrePrep Method:	NONE	Instrument:	HYDRA
Client ID:	MR08-SS110-08D	Prep Method:	7471A	Prep Date:	12/22/2008 07:45
Matrix:	Soil	Analytical Method:	7471A	Cal Date:	12/29/2008 11:32
Workgroup Number:	WG291464	Analyst:	ADC	Run Date:	12/29/2008 12:47
Collect Date:	12/17/2008 09:25	Dilution:	1	File ID:	HY.122908.124708
Sample Tag:	01	Units:	mg/kg	Percent Solid:	83.3

Analyte	CAS. Number	Result	Qual	RL	MDL
Mercury, Total	7439-97-6		U	0.117	0.0234

U Undetected; the analyte was analyzed for, but not detected.

Microbac

hw 3/11/09

11

Sample Number: L08120577-11
Client ID: MR08-IS110-08D
Matrix: Soil
Workgroup Number: WG291541
Collect Date: 12/17/2008 09:35
Sample Tag: 01

PrePrep Method: NONE
Prep Method: 3051
Analytical Method: 6010B
Analyst: JYH
Dilution: 1
Units: mg/kg

Instrument: IRIS-ICP
Prep Date: 12/22/2008 09:18
Cal Date: 12/30/2008 13:02
Run Date: 12/30/2008 19:41
File ID: IR.123008.194100
Percent Solid: 90.8

Analyte	CAS. Number	Result	Qual	RL	MDL
Silver, Total	7440-22-4	0.236	J	0.743	0.186
Barium, Total	7440-39-3	3.68		0.372	0.0743
Cadmium, Total	7440-43-9	0.0740	J	0.149	0.0372
Chromium, Total	7440-47-3	4.16		0.743	0.0892
Copper, Total	7440-50-8		U	1.49	0.372
Antimony, Total	7440-36-0		U	1.49	0.372
Zinc, Total	7440-66-6	1.89		1.49	0.372

U Undetected; the analyte was analyzed for, but not detected.
J Estimated ; the analyte concentration was less than the low standard (LOQ)

Microbac

 DLW 3/4/09

11

Sample Number:	L08120577-11	PrePrep Method:	NONE	Instrument:	ELAN-ICP
Client ID:	MR08-IS110-08D	Prep Method:	3051	Prep Date:	12/22/2008 06:55
Matrix:	Soil	Analytical Method:	6020	Cal Date:	01/03/2009 12:50
Workgroup Number:	WG291264	Analyst:	JYH	Run Date:	01/03/2009 20:57
Collect Date:	12/17/2008 09:35	Dilution:	1	File ID:	EL.010309.205725
Sample Tag:	02	Units:	mg/kg	Percent Solid:	90.8

Analyte	CAS. Number	Result	Qual	RL	MDL
Lead, Total	7439-92-1	2.60		0.423	0.106

Microbac

JW 3/4/09

11

Sample Number: L08120577-11
Client ID: MR08-IS110-08D
Matrix: Soil
Workgroup Number: WG291264
Collect Date: 12/17/2008 09:35
Sample Tag: 01

PrePrep Method: NONE
Prep Method: 3051
Analytical Method: 6020
Analyst: JYH
Dilution: 1
Units: mg/kg

Instrument: ELAN-ICP
Prep Date: 12/22/2008 06:55
Cal Date: 12/31/2008 11:37
Run Date: 12/31/2008 18:47
File ID: EL.123108.184734
Percent Solid: 90.8

Analyte	CAS. Number	Result	Qual	RL	MDL
Arsenic, Total	7440-38-2	1.04		0.317	0.0792
Selenium, Total	7782-49-2	0.328 J	J	0.423	0.106

MSL

J Estimated ; the analyte concentration was less than the low standard (LOQ)

Microbac

Qew
746 3/4/09

11

Sample Number: L08120577-11
Client ID: MR08-IS110-08D
Matrix: Soil
Workgroup Number: WG291615
Collect Date: 12/17/2008 09:35
Sample Tag: 01

PrePrep Method: NONE
Prep Method: 7471A
Analytical Method: 7471A
Analyst: ADC
Dilution: 1
Units: mg/kg

Instrument: HYDRA
Prep Date: 12/22/2008 10:58
Cal Date: 12/31/2008 09:48
Run Date: 12/31/2008 10:06
File ID: HY.123108.100603
Percent Solid: 90.8

Analyte	CAS. Number	Result	Qual	RL	MDL
Mercury, Total	7439-97-6		U	0.108	0.0217

U Undetected; the analyte was analyzed for, but not detected.

Microbac

Mw 3/4/09

12

Sample Number: L08120577-12
Client ID: MR08-SS134-08D
Matrix: Soil
Workgroup Number: WG291541
Collect Date: 12/17/2008 10:20
Sample Tag: 01

PrePrep Method: NONE
Prep Method: 3051
Analytical Method: 6010B
Analyst: JYH
Dilution: 1
Units: mg/kg

Instrument: IRIS-ICP
Prep Date: 12/22/2008 09:19
Cal Date: 12/30/2008 13:02
Run Date: 12/30/2008 19:59
File ID: IR.123008.195900
Percent Solid: 79.4

Analyte	CAS. Number	Result	Qual	RL	MDL
Silver, Total	7440-22-4	0.583	J	0.887	0.222
Barium, Total	7440-39-3	21.9		0.444	0.0887
Cadmium, Total	7440-43-9	1.70		0.177	0.0444
Chromium, Total	7440-47-3	12.6		0.887	0.106

J Estimated ; the analyte concentration was less than the low standard (LOQ)

Microbac

210 3/4/09

12

Sample Number: L08120577-12
Client ID: MR08-SS134-08D
Matrix: Soil
Workgroup Number: WG291264
Collect Date: 12/17/2008 10:20
Sample Tag: 01

PrePrep Method: NONE
Prep Method: 3051
Analytical Method: 6020
Analyst: JYH
Dilution: 1
Units: mg/kg

Instrument: ELAN-ICP
Prep Date: 12/22/2008 06:55
Cal Date: 12/31/2008 11:37
Run Date: 12/31/2008 19:06
File ID: EL.123108.190600
Percent Solid: 79.4

Analyte	CAS. Number	Result	Qual	RL	MDL
Arsenic, Total	7440-38-2	13.6		0.367	0.0919
Selenium, Total	7782-49-2	0.238 J	J	0.490	0.122

MSL

J Estimated ; the analyte concentration was less than the low standard (LOQ)

Microbac

QWO 3/11/09

12

Sample Number: L08120577-12
Client ID: MR08-SS134-08D
Matrix: Soil
Workgroup Number: WG291264
Collect Date: 12/17/2008 10:20
Sample Tag: DL01

PrePrep Method: NONE
Prep Method: 3051
Analytical Method: 6020
Analyst: JYH
Dilution: 100
Units: mg/kg

Instrument: ELAN-ICP
Prep Date: 12/22/2008 06:55
Cal Date: 01/03/2009 12:50
Run Date: 01/03/2009 21:02
File ID: EL.010309.210247
Percent Solid: 79.4

Analyte	CAS. Number	Result	Qual	RL	MDL
Lead, Total	7439-92-1	435		49.0	12.2

Microbac

lew 3/11/09

12

Sample Number:	L08120577-12	PrePrep Method:	NONE	Instrument:	HYDRA
Client ID:	MR08-SS134-08D	Prep Method:	7471A	Prep Date:	12/22/2008 10:58
Matrix:	Soil	Analytical Method:	7471A	Cal Date:	12/31/2008 09:48
Workgroup Number:	WG291615	Analyst:	ADC	Run Date:	12/31/2008 10:14
Collect Date:	12/17/2008 10:20	Dilution:	1	File ID:	HY.123108.101418
Sample Tag:	01	Units:	mg/kg	Percent Solid:	79.4

Analyte	CAS. Number	Result	Qual	RL	MDL
Mercury, Total	7439-97-6	0.0659	J	0.123	0.0246

J Estimated ; the analyte concentration was less than the low standard (LOQ)

Microbac

Rev 3/4/09

13

Sample Number: L08120577-13
Client ID: MR08-IS134-08D
Matrix: Soil
Workgroup Number: WG291541
Collect Date: 12/17/2008 10:25
Sample Tag: 01

PrePrep Method: NONE
Prep Method: 3051
Analytical Method: 6010B
Analyst: JYH
Dilution: 1
Units: mg/kg

Instrument: IRIS-ICP
Prep Date: 12/22/2008 09:19
Cal Date: 12/30/2008 13:02
Run Date: 12/30/2008 20:05
File ID: IR.123008.200500
Percent Solid: 86.7

Analyte	CAS. Number	Result	Qual	RL	MDL
Silver, Total	7440-22-4		U	0.791	0.198
Barium, Total	7440-39-3	3.59		0.396	0.0791
Cadmium, Total	7440-43-9	0.0431	J	0.158	0.0396
Chromium, Total	7440-47-3	0.742	J	0.791	0.0949

U Undetected; the analyte was analyzed for, but not detected.
J Estimated ; the analyte concentration was less than the low standard (LOQ)

Microbac

211 3/11/09

13

Sample Number: L08120577-13
Client ID: MR08-IS134-08D
Matrix: Soil
Workgroup Number: WG291264
Collect Date: 12/17/2008 10:25
Sample Tag: 02

PrePrep Method: NONE
Prep Method: 3051
Analytical Method: 6020
Analyst: JYH
Dilution: 1
Units: mg/kg

Instrument: ELAN-ICP
Prep Date: 12/22/2008 06:55
Cal Date: 01/03/2009 12:50
Run Date: 01/03/2009 21:08
File ID: EL.010309.210810
Percent Solid: 86.7

Analyte	CAS. Number	Result	Qual	RL	MDL
Lead, Total	7439-92-1	12.6		0.445	0.111

Microbac

749

QW 3/4/09

13

Sample Number:	L08120577-13	PrePrep Method:	NONE	Instrument:	ELAN-ICP
Client ID:	MR08-IS134-08D	Prep Method:	3051	Prep Date:	12/22/2008 06:55
Matrix:	Soil	Analytical Method:	6020	Cal Date:	12/31/2008 11:37
Workgroup Number:	WG291264	Analyst:	JYH	Run Date:	12/31/2008 19:11
Collect Date:	12/17/2008 10:25	Dilution:	1	File ID:	EL.123108.191124
Sample Tag:	01	Units:	mg/kg	Percent Solid:	86.7

Analyte	CAS. Number	Result	Qual	RL	MDL
Arsenic, Total	7440-38-2	9.76		0.334	0.0835
Selenium, Total	7782-49-2	0.154 J	~~J~~	0.445	0.111 MSL

J Estimated ; the analyte concentration was less than the low standard (LOQ)

Microbac

750 Jew 3/4/09

13

Sample Number: L08120577-13
Client ID: MR08-IS134-08D
Matrix: Soil
Workgroup Number: WG291615
Collect Date: 12/17/2008 10:25
Sample Tag: 01

PrePrep Method: NONE
Prep Method: 7471A
Analytical Method: 7471A
Analyst: ADC
Dilution: 1
Units: mg/kg

Instrument: HYDRA
Prep Date: 12/22/2008 10:58
Cal Date: 12/31/2008 09:48
Run Date: 12/31/2008 10:16
File ID: HY.123108.101611
Percent Solid: 86.7

Analyte	CAS. Number	Result	Qual	RL	MDL
Mercury, Total	7439-97-6		U	0.115	0.0230

U Undetected; the analyte was analyzed for, but not detected.

Microbac

1861 3/11/09

14

Sample Number: L08120577-14
Client ID: MR08-SS135-08D
Matrix: Soil
Workgroup Number: WG291541
Collect Date: 12/17/2008 11:05
Sample Tag: 01

PrePrep Method: NONE
Prep Method: 3051
Analytical Method: 6010B
Analyst: JYH
Dilution: 1
Units: mg/kg

Instrument: IRIS-ICP
Prep Date: 12/22/2008 09:20
Cal Date: 12/30/2008 13:02
Run Date: 12/30/2008 20:11
File ID: IR.123008.201100
Percent Solid: 95.3

Analyte	CAS. Number	Result	Qual	RL	MDL
Silver, Total	7440-22-4	0.445	J	0.775	0.194
Barium, Total	7440-39-3	3.36		0.388	0.0775
Cadmium, Total	7440-43-9	0.232		0.155	0.0388
Chromium, Total	7440-47-3	3.84		0.775	0.0930

J Estimated ; the analyte concentration was less than the low standard (LOQ)

Microbac

212 3/11/09

14

Sample Number: L08120577-14
Client ID: MR08-SS135-08D
Matrix: Soil
Workgroup Number: WG291264
Collect Date: 12/17/2008 11:05
Sample Tag: 02

PrePrep Method: NONE
Prep Method: 3051
Analytical Method: 6020
Analyst: JYH
Dilution: 1
Units: mg/kg

Instrument: ELAN-ICP
Prep Date: 12/22/2008 06:55
Cal Date: 01/03/2009 12:50
Run Date: 01/03/2009 21:13
File ID: EL.010309.211334
Percent Solid: 95.3

Analyte	CAS. Number	Result	Qual	RL	MDL
Lead, Total	7439-92-1	1.26		0.415	0.104

Microbac

751 JLW 3/11/09

14

Sample Number: L08120577-14
Client ID: MR08-SS135-08D
Matrix: Soil
Workgroup Number: WG291264
Collect Date: 12/17/2008 11:05
Sample Tag: 01

PrePrep Method: NONE
Prep Method: 3051
Analytical Method: 6020
Analyst: JYH
Dilution: 1
Units: mg/kg

Instrument: ELAN-ICP
Prep Date: 12/22/2008 06:55
Cal Date: 12/31/2008 11:37
Run Date: 12/31/2008 19:16
File ID: EL.123108.191648
Percent Solid: 95.3

Analyte	CAS. Number	Result	Qual	RL	MDL
Arsenic, Total	7440-38-2	0.878		0.312	0.0779
Selenium, Total	7782-49-2	0.451 J		0.415	0.104

MSL

Microbac

752

lw 3/11/09

14

Sample Number:	L08120577-14	PrePrep Method:	NONE	Instrument:	HYDRA
Client ID:	MR08-SS135-08D	Prep Method:	7471A	Prep Date:	12/22/2008 10:58
Matrix:	Soil	Analytical Method:	7471A	Cal Date:	12/31/2008 09:50
Workgroup Number:	WG291615	Analyst:	ADC	Run Date:	12/31/2008 10:17
Collect Date:	12/17/2008 11:05	Dilution:	1	File ID:	HY.123108.101753
Sample Tag:	01	Units:	mg/kg	Percent Solid:	95.3

Analyte	CAS. Number	Result	Qual	RL	MDL
Mercury, Total	7439-97-6		U	0.105	0.0209

U Undetected; the analyte was analyzed for, but not detected.

Microbac

1862 lew 3/4/09

15

Sample Number: L08120577-15
Client ID: MR08-IS135-1.5-2-08D
Matrix: Soil
Workgroup Number: WG291541
Collect Date: 12/17/2008 11:11
Sample Tag: 01

PrePrep Method: NONE
Prep Method: 3051
Analytical Method: 6010B
Analyst: JYH
Dilution: 1
Units: mg/kg

Instrument: IRIS-ICP
Prep Date: 12/22/2008 09:21
Cal Date: 12/30/2008 13:02
Run Date: 12/30/2008 20:17
File ID: IR.123008.201700
Percent Solid: 94.0

Analyte	CAS. Number	Result	Qual	RL	MDL
Silver, Total	7440-22-4		U	0.816	0.204
Barium, Total	7440-39-3	0.962		0.408	0.0816
Cadmium, Total	7440-43-9		U	0.163	0.0408
Chromium, Total	7440-47-3	1.51		0.816	0.0979

U Undetected; the analyte was analyzed for, but not detected.

Microbac

lw
2/3 3/11/09

15

Sample Number: L08120577-15
Client ID: MR08-IS135-1.5-2-08D
Matrix: Soil
Workgroup Number: WG291264
Collect Date: 12/17/2008 11:11
Sample Tag: 01

PrePrep Method: NONE
Prep Method: 3051
Analytical Method: 6020
Analyst: JYH
Dilution: 1
Units: mg/kg

Instrument: ELAN-ICP
Prep Date: 12/22/2008 06:55
Cal Date: 12/31/2008 11:37
Run Date: 12/31/2008 19:22
File ID: EL.123108.192212
Percent Solid: 94.0

Analyte	CAS. Number	Result	Qual	RL	MDL	
Arsenic, Total	7440-38-2	0.506		0.312	0.0781	
Selenium, Total	7782-49-2	0.112 J	J	0.416	0.104	MSL

J Estimated ; the analyte concentration was less than the low standard (LOQ)

Microbac

MW 3/4/09

15

Sample Number: L08120577-15
Client ID: MR08-IS135-1.5-2-08D
Matrix: Soil
Workgroup Number: WG291264
Collect Date: 12/17/2008 11:11
Sample Tag: 02

PrePrep Method: NONE
Prep Method: 3051
Analytical Method: 6020
Analyst: JYH
Dilution: 1
Units: mg/kg

Instrument: ELAN-ICP
Prep Date: 12/22/2008 06:55
Cal Date: 01/03/2009 12:50
Run Date: 01/03/2009 21:18
File ID: EL.010309.211857
Percent Solid: 94.0

Analyte	CAS. Number	Result	Qual	RL	MDL
Lead, Total	7439-92-1	1.04		0.416	0.104

Microbac

754 Lew 3/11/09

15

Sample Number: L08120577-15
Client ID: MR08-IS135-1.5-2-08D
Matrix: Soil
Workgroup Number: WG291615
Collect Date: 12/17/2008 11:11
Sample Tag: 01

PrePrep Method: NONE
Prep Method: 7471A
Analytical Method: 7471A
Analyst: ADC
Dilution: 1
Units: mg/kg

Instrument: HYDRA
Prep Date: 12/22/2008 10:58
Cal Date: 12/31/2008 09:50
Run Date: 12/31/2008 10:19
File ID: HY.123108.101949
Percent Solid: 94.0

Analyte	CAS. Number	Result	Qual	RL	MDL
Mercury, Total	7439-97-6		U	0.105	0.0210

U Undetected; the analyte was analyzed for, but not detected.

Microbac

MW 3/4/09

16

Sample Number: L08120577-16
Client ID: MR08-SS156-08D
Matrix: Soil
Workgroup Number: WG291551
Collect Date: 12/17/2008 13:00
Sample Tag: 01

PrePrep Method: NONE
Prep Method: 3051
Analytical Method: 6010B
Analyst: JYH
Dilution: 1
Units: mg/kg

Instrument: IRIS-ICP
Prep Date: 12/22/2008 12:40
Cal Date: 12/30/2008 13:02
Run Date: 12/31/2008 00:34
File ID: IR.123108.003400
Percent Solid: 95.5

Analyte	CAS. Number	Result	Qual	RL	MDL	
Silver, Total	7440-22-4	0.501	J	0.789	0.197	
Barium, Total	7440-39-3	7.54 J		0.394	0.0789	SD
Cadmium, Total	7440-43-9	0.276		0.158	0.0394	
Chromium, Total	7440-47-3	7.69 J		0.789	0.0946	SD

J Estimated ; the analyte concentration was less than the low standard (LOQ)

Microbac

lew 3/4/09

16

Sample Number: L08120577-16
Client ID: MR08-SS156-08D
Matrix: Soil
Workgroup Number: WG291264
Collect Date: 12/17/2008 13:00
Sample Tag: 02

PrePrep Method: NONE
Prep Method: 3051
Analytical Method: 6020
Analyst: JYH
Dilution: 1
Units: mg/kg

Instrument: ELAN-ICP
Prep Date: 12/22/2008 06:55
Cal Date: 01/03/2009 12:50
Run Date: 01/03/2009 21:24
File ID: EL.010309.212422
Percent Solid: 95.5

Analyte	CAS. Number	Result	Qual	RL	MDL
Lead, Total	7439-92-1	2.73		0.400	0.100

Microbac

fw 3/4/09

16

Sample Number: L08120577-16
Client ID: MR08-SS156-08D
Matrix: Soil
Workgroup Number: WG291264
Collect Date: 12/17/2008 13:00
Sample Tag: 01

PrePrep Method: NONE
Prep Method: 3051
Analytical Method: 6020
Analyst: JYH
Dilution: 1
Units: mg/kg

Instrument: ELAN-ICP
Prep Date: 12/22/2008 06:55
Cal Date: 12/31/2008 11:37
Run Date: 12/31/2008 19:27
File ID: EL.123108.192737
Percent Solid: 95.5

Analyte	CAS. Number	Result	Qual	RL	MDL
Arsenic, Total	7440-38-2	9.72		0.300	0.0751
Selenium, Total	7782-49-2	0.441 J		0.400	0.100

MSL

Microbac

MW 3/11/09

16

Sample Number:	L08120577-16	PrePrep Method:	NONE	Instrument:	HYDRA
Client ID:	MR08-SS156-08D	Prep Method:	7471A	Prep Date:	12/22/2008 10:58
Matrix:	Soil	Analytical Method:	7471A	Cal Date:	12/31/2008 09:50
Workgroup Number:	WG291615	Analyst:	ADC	Run Date:	12/31/2008 10:25
Collect Date:	12/17/2008 13:00	Dilution:	1	File ID:	HY.123108.102538
Sample Tag:	01	Units:	mg/kg	Percent Solid:	95.5

Analyte	CAS. Number	Result	Qual	RL	MDL
Mercury, Total	7439-97-6		U	0.103	0.0206

U Undetected; the analyte was analyzed for, but not detected.

Microbac

1864 3/11/09

17

Sample Number: L08120577-17
Client ID: MR08-IS156-1.5-2-08D
Matrix: Soil
Workgroup Number: WG291541
Collect Date: 12/17/2008 13:10
Sample Tag: 01

PrePrep Method: NONE
Prep Method: 3051
Analytical Method: 6010B
Analyst: JYH
Dilution: 1
Units: mg/kg

Instrument: IRIS-ICP
Prep Date: 12/22/2008 09:23
Cal Date: 12/30/2008 13:02
Run Date: 12/30/2008 20:23
File ID: IR.123008.202300
Percent Solid: 89.6

Analyte	CAS. Number	Result	Qual	RL	MDL
Silver, Total	7440-22-4	0.438	J	0.770	0.193
Barium, Total	7440-39-3	5.99		0.385	0.0770
Cadmium, Total	7440-43-9	0.291		0.154	0.0385
Chromium, Total	7440-47-3	8.62		0.770	0.0924

J Estimated ; the analyte concentration was less than the low standard (LOQ)

Microbac

Rew
215 3/4/09

17

Sample Number: L08120577-17
Client ID: MR08-IS156-1.5-2-08D
Matrix: Soil
Workgroup Number: WG291264
Collect Date: 12/17/2008 13:10
Sample Tag: 01

PrePrep Method: NONE
Prep Method: 3051
Analytical Method: 6020
Analyst: JYH
Dilution: 1
Units: mg/kg

Instrument: ELAN-ICP
Prep Date: 12/22/2008 06:55
Cal Date: 12/31/2008 11:37
Run Date: 12/31/2008 19:33
File ID: EL.123108.193302
Percent Solid: 89.6

Analyte	CAS. Number	Result	Qual	RL	MDL
Arsenic, Total	7440-38-2	0.354		0.323	0.0808
Selenium, Total	7782-49-2	0.173 J	J	0.431	0.108

MSL

J Estimated ; the analyte concentration was less than the low standard (LOQ)

Microbac

757 MW 3/4/09

17

Sample Number: L08120577-17
Client ID: MR08-IS156-1.5-2-08D
Matrix: Soil
Workgroup Number: WG291264
Collect Date: 12/17/2008 13:10
Sample Tag: 02

PrePrep Method: NONE
Prep Method: 3051
Analytical Method: 6020
Analyst: JYH
Dilution: 1
Units: mg/kg

Instrument: ELAN-ICP
Prep Date: 12/22/2008 06:55
Cal Date: 01/03/2009 12:50
Run Date: 01/03/2009 21:29
File ID: EL.010309.212946
Percent Solid: 89.6

Analyte	CAS. Number	Result	Qual	RL	MDL
Lead, Total	7439-92-1	3.62		0.431	0.108

Microbac

758

Aew 3/11/09

17

Sample Number:	L08120577-17	PrePrep Method:	NONE	Instrument:	HYDRA
Client ID:	MR08-IS156-1.5-2-08D	Prep Method:	7471A	Prep Date:	12/22/2008 10:58
Matrix:	Soil	Analytical Method:	7471A	Cal Date:	12/31/2008 09:50
Workgroup Number:	WG291615	Analyst:	ADC	Run Date:	12/31/2008 10:27
Collect Date:	12/17/2008 13:10	Dilution:	1	File ID:	HY.123108.102745
Sample Tag:	01	Units:	mg/kg	Percent Solid:	89.6

Analyte	CAS. Number	Result	Qual	RL	MDL
Mercury, Total	7439-97-6		U	0.110	0.0220

U Undetected; the analyte was analyzed for, but not detected.

Microbac

MW 3/11/09

18

Sample Number: L08120577-18
Client ID: MR08-SS159-08D
Matrix: Soil
Workgroup Number: WG291541
Collect Date: 12/17/2008 14:10
Sample Tag: 01

PrePrep Method: NONE
Prep Method: 3051
Analytical Method: 6010B
Analyst: JYH
Dilution: 1
Units: mg/kg

Instrument: IRIS-ICP
Prep Date: 12/22/2008 09:24
Cal Date: 12/30/2008 13:02
Run Date: 12/30/2008 20:30
File ID: IR.123008.203000
Percent Solid: 89.1

Analyte	CAS. Number	Result	Qual	RL	MDL
Silver, Total	7440-22-4	0.402	J	0.801	0.200
Barium, Total	7440-39-3	4.22		0.401	0.0801
Cadmium, Total	7440-43-9	0.197		0.160	0.0401
Chromium, Total	7440-47-3	3.50		0.801	0.0962

J Estimated ; the analyte concentration was less than the low standard (LOQ)

Microbac

MW
216 3/4/09

18

Sample Number: L08120577-18
Client ID: MR08-SS159-08D
Matrix: Soil
Workgroup Number: WG291264
Collect Date: 12/17/2008 14:10
Sample Tag: 02

PrePrep Method: NONE
Prep Method: 3051
Analytical Method: 6020
Analyst: JYH
Dilution: 1
Units: mg/kg

Instrument: ELAN-ICP
Prep Date: 12/22/2008 06:55
Cal Date: 01/03/2009 12:50
Run Date: 01/03/2009 21:35
File ID: EL.010309.213511
Percent Solid: 89.1

Analyte	CAS. Number	Result	Qual	RL	MDL
Lead, Total	7439-92-1	3.07		0.436	0.109

Microbac

lew 3/4/09

18

Sample Number: L08120577-18
Client ID: MR08-SS159-08D
Matrix: Soil
Workgroup Number: WG291264
Collect Date: 12/17/2008 14:10
Sample Tag: 01

PrePrep Method: NONE
Prep Method: 3051
Analytical Method: 6020
Analyst: JYH
Dilution: 1
Units: mg/kg

Instrument: ELAN-ICP
Prep Date: 12/22/2008 06:55
Cal Date: 12/31/2008 11:37
Run Date: 12/31/2008 19:38
File ID: EL.123108.193826
Percent Solid: 89.1

Analyte	CAS. Number	Result	Qual	RL	MDL
Arsenic, Total	7440-38-2	1.31		0.327	0.0818
Selenium, Total	7782-49-2	0.575 J		0.436	0.109

MSL

Microbac

MEW 3/4/09

18

Sample Number:	L08120577-18	PrePrep Method:	NONE	Instrument:	HYDRA
Client ID:	MR08-SS159-08D	Prep Method:	7471A	Prep Date:	12/22/2008 10:58
Matrix:	Soil	Analytical Method:	7471A	Cal Date:	12/31/2008 09:50
Workgroup Number:	WG291615	Analyst:	ADC	Run Date:	12/31/2008 10:29
Collect Date:	12/17/2008 14:10	Dilution:	1	File ID:	HY.123108.102927
Sample Tag:	01	Units:	mg/kg	Percent Solid:	89.1

Analyte	CAS. Number	Result	Qual	RL	MDL
Mercury, Total	7439-97-6		U	0.111	0.0221

U Undetected; the analyte was analyzed for, but not detected.

Microbac

lew
3/11/09

19

Sample Number: L08120577-19
Client ID: MR08-IS159-4-5-08D
Matrix: Soil
Workgroup Number: WG291541
Collect Date: 12/17/2008 14:15
Sample Tag: 01

PrePrep Method: NONE
Prep Method: 3051
Analytical Method: 6010B
Analyst: JYH
Dilution: 1
Units: mg/kg

Instrument: IRIS-ICP
Prep Date: 12/22/2008 09:25
Cal Date: 12/30/2008 13:02
Run Date: 12/30/2008 17:44
File ID: IR.123008.174400
Percent Solid: 89.3

Analyte	CAS. Number	Result	Qual	RL	MDL
Silver, Total	7440-22-4		U	0.774	0.194
Barium, Total	7440-39-3	5.47		0.387	0.0774
Cadmium, Total	7440-43-9		U	0.155	0.0387
Chromium, Total	7440-47-3	4.74		0.774	0.0929

U Undetected; the analyte was analyzed for, but not detected.

Microbac

217 CEW 3/11/09

19

Sample Number: L08120577-19
Client ID: MR08-IS159-4-5-08D
Matrix: Soil
Workgroup Number: WG291264
Collect Date: 12/17/2008 14:15
Sample Tag: 01

PrePrep Method: NONE
Prep Method: 3051
Analytical Method: 6020
Analyst: JYH
Dilution: 1
Units: mg/kg

Instrument: ELAN-ICP
Prep Date: 12/22/2008 06:55
Cal Date: 12/31/2008 11:37
Run Date: 12/31/2008 17:04
File ID: EL.123108.170457
Percent Solid: 89.3

Analyte	CAS. Number	Result	Qual	RL	MDL
Arsenic, Total	7440-38-2	0.562		0.332	0.0830
Lead, Total	7439-92-1	2.90		0.443	0.111
Selenium, Total	7782-49-2	0.125 J	~~J~~	0.443	0.111

MSL

J Estimated ; the analyte concentration was less than the low standard (LOQ)

Microbac

lew 3/11/09

19

Sample Number: L08120577-19
Client ID: MR08-IS159-4-5-08D
Matrix: Soil
Workgroup Number: WG291615
Collect Date: 12/17/2008 14:15
Sample Tag: 01

PrePrep Method: NONE
Prep Method: 7471A
Analytical Method: 7471A
Analyst: ADC
Dilution: 1
Units: mg/kg

Instrument: HYDRA
Prep Date: 12/22/2008 10:58
Cal Date: 12/31/2008 09:50
Run Date: 12/31/2008 10:31
File ID: HY.123108.103141
Percent Solid: 89.3

Analyte	CAS. Number	Result	Qual	RL	MDL
Mercury, Total	7439-97-6		U	0.109	0.0217

U Undetected; the analyte was analyzed for, but not detected.

Microbac

LW 3/11/09

20

Sample Number: L08120577-20
Client ID: MR08-SS158-08D
Matrix: Soil
Workgroup Number: WG291620
Collect Date: 12/17/2008 14:50
Sample Tag: 02

PrePrep Method: NONE
Prep Method: 3051
Analytical Method: 6010B
Analyst: JYH
Dilution: 1
Units: mg/kg

Instrument: IRIS-ICP
Prep Date: 12/22/2008 10:01
Cal Date: 12/31/2008 10:30
Run Date: 12/31/2008 15:26
File ID: IR.123108.152600
Percent Solid: 93.6

Analyte	CAS. Number	Result	Qual	RL	MDL
Silver, Total	7440-22-4		U	0.807	0.202
Barium, Total	7440-39-3	5.12 J		0.404	0.0807
Cadmium, Total	7440-43-9	0.226		0.161	0.0404
Chromium, Total	7440-47-3	5.17		0.807	0.0969

MSL

U Undetected; the analyte was analyzed for, but not detected.

Microbac

lew
218 3/11/09

20

Sample Number: L08120577-20
Client ID: MR08-SS158-08D
Matrix: Soil
Workgroup Number: WG291263
Collect Date: 12/17/2008 14:50
Sample Tag: 01

PrePrep Method: NONE
Prep Method: 3051
Analytical Method: 6020
Analyst: JYH
Dilution: 1
Units: mg/kg

Instrument: ELAN-ICP
Prep Date: 12/22/2008 08:24
Cal Date: 12/31/2008 11:37
Run Date: 12/31/2008 15:58
File ID: EL.123108.155806
Percent Solid: 93.6

Analyte	CAS. Number	Result	Qual	RL	MDL
Arsenic, Total	7440-38-2	8.72 J		0.305	0.0763
Lead, Total	7439-92-1	1.81 J		0.407	0.102
Selenium, Total	7782-49-2	0.636		0.407	0.102

MSL
SD

Microbac

762 hw
4/1/09

20

Sample Number: L08120577-20
Client ID: MR08-SS158-08D
Matrix: Soil
Workgroup Number: WG291615
Collect Date: 12/17/2008 14:50
Sample Tag: 01

PrePrep Method: NONE
Prep Method: 7471A
Analytical Method: 7471A
Analyst: ADC
Dilution: 1
Units: mg/kg

Instrument: HYDRA
Prep Date: 12/22/2008 10:58
Cal Date: 12/31/2008 09:50
Run Date: 12/31/2008 10:33
File ID: HY.123108.103336
Percent Solid: 93.6

Analyte	CAS. Number	Result	Qual	RL	MDL
Mercury, Total	7439-97-6		U	0.106	0.0212

U Undetected; the analyte was analyzed for, but not detected.

Microbac

lees
3/11/09

21

Sample Number: L08120577-21
Client ID: MR08-IS158-4-5-08D
Matrix: Soil
Workgroup Number: WG291620
Collect Date: 12/17/2008 15:05
Sample Tag: 02

PrePrep Method: NONE
Prep Method: 3051
Analytical Method: 6010B
Analyst: JYH
Dilution: 1
Units: mg/kg

Instrument: IRIS-ICP
Prep Date: 12/22/2008 10:01
Cal Date: 12/31/2008 10:30
Run Date: 12/31/2008 15:32
File ID: IR.123108.153200
Percent Solid: 87.8

Analyte	CAS. Number	Result	Qual	RL	MDL
Silver, Total	7440-22-4		U	0.869	0.217
Barium, Total	7440-39-3	11.1 J		0.435	0.0869
Cadmium, Total	7440-43-9	0.0543	J	0.174	0.0435
Chromium, Total	7440-47-3	7.36		0.869	0.104

MSL

U Undetected; the analyte was analyzed for, but not detected.
J Estimated ; the analyte concentration was less than the low standard (LOQ)

Microbac

LEW
219 3/11/09

21

Sample Number: L08120577-21
Client ID: MR08-IS158-4-5-08D
Matrix: Soil
Workgroup Number: WG291263
Collect Date: 12/17/2008 15:05
Sample Tag: 01

PrePrep Method: NONE
Prep Method: 3051
Analytical Method: 6020
Analyst: JYH
Dilution: 1
Units: mg/kg

Instrument: ELAN-ICP
Prep Date: 12/22/2008 08:24
Cal Date: 12/31/2008 11:37
Run Date: 12/31/2008 16:03
File ID: EL.123108.160328
Percent Solid: 87.8

Analyte	CAS. Number	Result	Qual	RL	MDL
Arsenic, Total	7440-38-2	0.706 J		0.329	0.0823
Lead, Total	7439-92-1	3.20 J		0.439	0.110
Selenium, Total	7782-49-2		U	0.439	0.110

MSL SD

U Undetected; the analyte was analyzed for, but not detected.

Microbac

lew 4/1/09

21

Sample Number: L08120577-21
Client ID: MR08-IS158-4-5-08D
Matrix: Soil
Workgroup Number: WG291615
Collect Date: 12/17/2008 15:05
Sample Tag: 01

PrePrep Method: NONE
Prep Method: 7471A
Analytical Method: 7471A
Analyst: ADC
Dilution: 1
Units: mg/kg

Instrument: HYDRA
Prep Date: 12/22/2008 10:58
Cal Date: 12/31/2008 09:50
Run Date: 12/31/2008 10:35
File ID: HY.123108.103530
Percent Solid: 87.8

Analyte	CAS. Number	Result	Qual	RL	MDL
Mercury, Total	7439-97-6		U	0.113	0.0227

U Undetected; the analyte was analyzed for, but not detected.

Microbac

MEO 3/11/09

22

Sample Number: L08120577-22
Client ID: MR08-SS157-08D
Matrix: Soil
Workgroup Number: WG291620
Collect Date: 12/17/2008 15:20
Sample Tag: 02

PrePrep Method: NONE
Prep Method: 3051
Analytical Method: 6010B
Analyst: JYH
Dilution: 1
Units: mg/kg

Instrument: IRIS-ICP
Prep Date: 12/22/2008 10:02
Cal Date: 12/31/2008 10:30
Run Date: 12/31/2008 15:38
File ID: IR.123108.153800
Percent Solid: 89.8

Analyte	CAS. Number	Result	Qual	RL	MDL
Silver, Total	7440-22-4		U	0.780	0.195
Barium, Total	7440-39-3	6.27 J		0.390	0.0780
Cadmium, Total	7440-43-9	0.160		0.156	0.0390
Chromium, Total	7440-47-3	3.93		0.780	0.0936

MSL

U Undetected; the analyte was analyzed for, but not detected.

Microbac

220 3/4/09

22

Sample Number: L08120577-22
Client ID: MR08-SS157-08D
Matrix: Soil
Workgroup Number: WG291263
Collect Date: 12/17/2008 15:20
Sample Tag: 01

PrePrep Method: NONE
Prep Method: 3051
Analytical Method: 6020
Analyst: JYH
Dilution: 1
Units: mg/kg

Instrument: ELAN-ICP
Prep Date: 12/22/2008 08:24
Cal Date: 12/31/2008 11:37
Run Date: 12/31/2008 16:08
File ID: EL.123108.160850
Percent Solid: 89.8

Analyte	CAS. Number	Result	Qual	RL	MDL
Arsenic, Total	7440-38-2	0.518 J		0.322	0.0805
Lead, Total	7439-92-1	8.99 J		0.429	0.107
Selenium, Total	7782-49-2	0.117	J	0.429	0.107

MSL
SD

J Estimated ; the analyte concentration was less than the low standard (LOQ)

Microbac

MW 4/1/09

22

Sample Number: L08120577-22
Client ID: MR08-SS157-08D
Matrix: Soil
Workgroup Number: WG291615
Collect Date: 12/17/2008 15:20
Sample Tag: 01

PrePrep Method: NONE
Prep Method: 7471A
Analytical Method: 7471A
Analyst: ADC
Dilution: 1
Units: mg/kg

Instrument: HYDRA
Prep Date: 12/22/2008 10:58
Cal Date: 12/31/2008 09:50
Run Date: 12/31/2008 10:37
File ID: HY.123108.103712
Percent Solid: 89.8

Analyte	CAS. Number	Result	Qual	RL	MDL
Mercury, Total	7439-97-6		U	0.110	0.0220

U Undetected; the analyte was analyzed for, but not detected.

Microbac

lew 3/4/09

23

Sample Number: L08120577-23
Client ID: MR08-IS157-08D
Matrix: Soil
Workgroup Number: WG291620
Collect Date: 12/17/2008 15:45
Sample Tag: 02

PrePrep Method: NONE
Prep Method: 3051
Analytical Method: 6010B
Analyst: JYH
Dilution: 1
Units: mg/kg

Instrument: IRIS-ICP
Prep Date: 12/22/2008 10:03
Cal Date: 12/31/2008 10:30
Run Date: 12/31/2008 15:44
File ID: IR.123108.154400
Percent Solid: 84.9

Analyte	CAS. Number	Result	Qual	RL	MDL
Silver, Total	7440-22-4		U	0.830	0.208
Barium, Total	7440-39-3	5.77 J		0.415	0.0830
Cadmium, Total	7440-43-9	0.0714	J	0.166	0.0415
Chromium, Total	7440-47-3	3.15		0.830	0.0996

MSL

U Undetected; the analyte was analyzed for, but not detected.
J Estimated ; the analyte concentration was less than the low standard (LOQ)

Microbac

221 JW 3/11/09

23

Sample Number: L08120577-23
Client ID: MR08-IS157-08D
Matrix: Soil
Workgroup Number: WG291263
Collect Date: 12/17/2008 15:45
Sample Tag: 01

PrePrep Method: NONE
Prep Method: 3051
Analytical Method: 6020
Analyst: JYH
Dilution: 1
Units: mg/kg

Instrument: ELAN-ICP
Prep Date: 12/22/2008 08:24
Cal Date: 12/31/2008 11:37
Run Date: 12/31/2008 16:14
File ID: EL.123108.161413
Percent Solid: 84.9

Analyte	CAS. Number	Result	Qual	RL	MDL	
Arsenic, Total	7440-38-2	0.355 J		0.351	0.0878	MSL
Lead, Total	7439-92-1	3.90 J		0.468	0.117	SD
Selenium, Total	7782-49-2		U	0.468	0.117	

U Undetected; the analyte was analyzed for, but not detected.

Microbac

765 lw 4/1/09

23

Sample Number: L08120577-23
Client ID: MR08-IS157-08D
Matrix: Soil
Workgroup Number: WG291615
Collect Date: 12/17/2008 15:45
Sample Tag: 01

PrePrep Method: NONE
Prep Method: 7471A
Analytical Method: 7471A
Analyst: ADC
Dilution: 1
Units: mg/kg

Instrument: HYDRA
Prep Date: 12/22/2008 10:58
Cal Date: 12/31/2008 09:50
Run Date: 12/31/2008 10:38
File ID: HY.123108.103854
Percent Solid: 84.9

Analyte	CAS. Number	Result	Qual	RL	MDL
Mercury, Total	7439-97-6		U	0.115	0.0230

U Undetected; the analyte was analyzed for, but not detected.

Microbac

MW 3/11/09

24

Sample Number: L08120577-24
Client ID: MR08-SS181-08D
Matrix: Soil
Workgroup Number: WG291620
Collect Date: 12/17/2008 16:10
Sample Tag: 02

PrePrep Method: NONE
Prep Method: 3051
Analytical Method: 6010B
Analyst: JYH
Dilution: 1
Units: mg/kg

Instrument: IRIS-ICP
Prep Date: 12/22/2008 10:03
Cal Date: 12/31/2008 10:30
Run Date: 12/31/2008 15:50
File ID: IR.123108.155000
Percent Solid: 87.8

Analyte	CAS. Number	Result	Qual	RL	MDL
Silver, Total	7440-22-4		U	0.863	0.216
Barium, Total	7440-39-3	15.6 J		0.431	0.0863
Cadmium, Total	7440-43-9	0.426		0.173	0.0431
Chromium, Total	7440-47-3	8.61		0.863	0.104

MSL

U Undetected; the analyte was analyzed for, but not detected.

Microbac

JEW 3/4/09

24

Sample Number: L08120577-24
Client ID: MR08-SS181-08D
Matrix: Soil
Workgroup Number: WG291263
Collect Date: 12/17/2008 16:10
Sample Tag: DL01

PrePrep Method: NONE
Prep Method: 3051
Analytical Method: 6020
Analyst: JYH
Dilution: 10
Units: mg/kg

Instrument: ELAN-ICP
Prep Date: 12/22/2008 08:24
Cal Date: 12/31/2008 11:37
Run Date: 01/01/2009 02:02
File ID: EL.010109.020203
Percent Solid: 87.8

Analyte	CAS. Number	Result	Qual	RL	MDL
Lead, Total	7439-92-1	119 J		4.43	1.11

SD

Microbac

Jew 3/11/09

24

Sample Number:	L08120577-24	PrePrep Method:	NONE	Instrument:	ELAN-ICP
Client ID:	MR08-SS181-08D	Prep Method:	3051	Prep Date:	12/22/2008 08:24
Matrix:	Soil	Analytical Method:	6020	Cal Date:	12/31/2008 11:37
Workgroup Number:	WG291263	Analyst:	JYH	Run Date:	12/31/2008 16:19
Collect Date:	12/17/2008 16:10	Dilution:	1	File ID:	EL.123108.161936
Sample Tag:	01	Units:	mg/kg	Percent Solid:	87.8

Analyte	CAS. Number	Result	Qual	RL	MDL
Arsenic, Total	7440-38-2	0.925 J		0.332	0.0831
Selenium, Total	7782-49-2	0.286	J	0.443	0.111

MSL

J Estimated ; the analyte concentration was less than the low standard (LOQ)

Microbac

RW
1/1/09

24

Sample Number: L08120577-24
Client ID: MR08-SS181-08D
Matrix: Soil
Workgroup Number: WG291615
Collect Date: 12/17/2008 16:10
Sample Tag: 01

PrePrep Method: NONE
Prep Method: 7471A
Analytical Method: 7471A
Analyst: ADC
Dilution: 1
Units: mg/kg

Instrument: HYDRA
Prep Date: 12/22/2008 10:58
Cal Date: 12/31/2008 09:50
Run Date: 12/31/2008 10:41
File ID: HY.123108.104109
Percent Solid: 87.8

Analyte	CAS. Number	Result	Qual	RL	MDL
Mercury, Total	7439-97-6		U	0.112	0.0224

U Undetected; the analyte was analyzed for, but not detected.

Microbac

lew 3/11/09

25

Sample Number: L08120577-25
Client ID: MR08-IS181-1-2-08D
Matrix: Soil
Workgroup Number: WG291620
Collect Date: 12/17/2008 16:30
Sample Tag: 02

PrePrep Method: NONE
Prep Method: 3051
Analytical Method: 6010B
Analyst: JYH
Dilution: 1
Units: mg/kg

Instrument: IRIS-ICP
Prep Date: 12/22/2008 10:04
Cal Date: 12/31/2008 10:30
Run Date: 12/31/2008 15:56
File ID: IR.123108.155600
Percent Solid: 83.5

Analyte	CAS. Number	Result	Qual	RL	MDL
Silver, Total	7440-22-4		U	0.893	0.223
Barium, Total	7440-39-3	6.82 J		0.446	0.0893
Cadmium, Total	7440-43-9	0.0500	J	0.179	0.0446
Chromium, Total	7440-47-3	2.71		0.893	0.107

MSL

U Undetected; the analyte was analyzed for, but not detected.
J Estimated ; the analyte concentration was less than the low standard (LOQ)

Microbac

kw 3/1/09

25

Sample Number: L08120577-25
Client ID: MR08-IS181-1-2-08D
Matrix: Soil
Workgroup Number: WG291263
Collect Date: 12/17/2008 16:30
Sample Tag: 01

PrePrep Method: NONE
Prep Method: 3051
Analytical Method: 6020
Analyst: JYH
Dilution: 1
Units: mg/kg

Instrument: ELAN-ICP
Prep Date: 12/22/2008 08:24
Cal Date: 12/31/2008 11:37
Run Date: 12/31/2008 16:24
File ID: EL.123108.162459
Percent Solid: 83.5

Analyte	CAS. Number	Result	Qual	RL	MDL
Arsenic, Total	7440-38-2	0.331 J	~~J~~	0.347	0.0868
Lead, Total	7439-92-1	3.27 J		0.463	0.116
Selenium, Total	7782-49-2	0.175	J	0.463	0.116

MSL
SD

J Estimated ; the analyte concentration was less than the low standard (LOQ)

Microbac

lmd
4/1/09

25

Sample Number: L08120577-25
Client ID: MR08-IS181-1-2-08D
Matrix: Soil
Workgroup Number: WG291615
Collect Date: 12/17/2008 16:30
Sample Tag: 01

PrePrep Method: NONE
Prep Method: 7471A
Analytical Method: 7471A
Analyst: ADC
Dilution: 1
Units: mg/kg

Instrument: HYDRA
Prep Date: 12/22/2008 10:58
Cal Date: 12/31/2008 09:50
Run Date: 12/31/2008 10:44
File ID: HY.123108.104402
Percent Solid: 83.5

Analyte	CAS. Number	Result	Qual	RL	MDL
Mercury, Total	7439-97-6		U	0.120	0.0239

U Undetected; the analyte was analyzed for, but not detected.

Microbac

1873 MW 3/4/09

ENVIRONMENTAL
Data Services, Inc.

METALS

USEPA Region IV - Level IV Review

Site: MCB Camp Lejeune, TO-09 SDG #: L08120612

Client: CH2M HILL, Inc., Virginia Beach, Virginia Date: March 12, 2009

Laboratory: Microbac Laboratories, Inc., Marietta, Ohio Reviewer: Nancy Weaver

EDS ID	Client Sample ID	Laboratory Sample ID	Matrix
1	MR08-IS179-1.5-2-08D	L08120612-01	Soil
2	MR08-SS179-08D	L08120612-02	Soil
3	MR08-IS160-5-6-08D	L08120612-03	Soil
4	MR08-SS160-08D	L08120612-04	Soil
5	MR08-IS155-1-2-08D	L08120612-05	Soil
6	MR08-SS155-08D	L08120612-06	Soil
7	MR08-IS136-1-2-08D	L08120612-07	Soil
8	MR08-SS136-08D	L08120612-08	Soil
9	MR08-SS137-08D	L08120612-09	Soil
10	MR08-IS137-2.5-3.5-08D	L08120612-10	Soil
11	MR08-SS154-08D	L08120612-11	Soil
12	MR08-SS154D-08D	L08120612-12	Soil
13	MR08-IS154-1-1.5-08D	L08120612-13	Soil
14	MR08-IS154D-1-1.5-08D	L08120612-14	Soil
15	MR08-SS161-08D	L08120612-15	Soil
16	MR08-IS161-1-1.5-08D	L08120612-16	Soil
17	MR08-SS178-08D	L08120612-17	Soil
18	MR08-SS178D-08D	L08120612-18	Soil
19	MR08-IS178-4-5-08D	L08120612-19	Soil
20	MR08-IS178D-4-5-08D	L08120612-20	Soil
21	MR08-SS177-08D	L08120612-21	Soil
22	MR08-IS177-2-3-08D	L08120612-22	Soil
23	MR08-EB01-121908	L08120612-23	Water
24	MR08-SS176-08D	L08120612-24	Soil
25	MR08-IS176-4-5-08D	L08120612-25	Soil
26	MR08-SS163-08D	L08120612-26	Soil
27	MR08-IS163-4-5-08D	L08120612-27	Soil
28	MR08-SS152-08D	L08120612-28	Soil
29	MR08-IS152-4-508D	L08120612-29	Soil
30	MR08-SS139-08D	L08120612-30	Soil
31	MR08-SS139D-08D	L08120612-31	Soil
32	MR08-IS139-.5-1.5-08D	L08120612-32	Soil
33	MR08-IS139D-.5-1.5-08D	L08120612-33	Soil

The USEPA "Contract Laboratory Program National Functional Guidelines for Inorganic Data Review," October 2004, and professional judgement were used in evaluating the data in this summary report.

Holding Times - All samples were prepared and analyzed within 28 days for mercury and 180 days for all other metals.

Calibration - The ICV and CCV %R values were acceptable.

Method and Calibration Blanks - The method blank were free of contaminations.

Field and Equipment Blank - Field QC results are summarized below.

Blank ID	Compound	Conc. ug/L	Action Level mg/kg	Qualifier	Affected Samples
MR08-EB01-121908	Mercury	0.112	0.037	U	4, 8, 29, 31
MR08-FB1120608	None - ND	-	-	-	-

ICP Interference Check Sample - All %R values were acceptable.

MS/MSD - The MS/MSD sample exhibited acceptable %R and RPD values except the following.

MS/MSD Sample ID	Compound	MS/MSD %R/RPD	Qualifier	Affected Samples
Reference (WG291536)	Chromium	74.8%/155%/29.5	J/UJ	1-10
Reference (WG291701)	Cadmium	138%/Ok/22.8	J	11-13, 15, 17, 18, 21, 24-26, 28, 30, 31
	Chromium	46.6%/121.7%/Ok	J/UJ	11-22, 24-31
Reference (WG291663)	Lead	Ok/130%/Ok	J	21, 22, 24-33

LCS - The LCS samples exhibited acceptable %R values.

ICP Serial Dilution - The ICP serial dilution sample exhibited acceptable %D values.

Field Duplicates - Field duplicate results are summarized below.

Compound	MR08-SS154-08D mg/kg	MR08-SS154D-08D mg/kg	RPD	Qualifier
Silver	0.417	0.438	5%	None
Barium	10.8	14.7	31%	None
Cadmium	0.989	1.45	38%	None
Chromium	21.3	26.5	22%	None
Arsenic	0.870	1.25	36%	None
Selenium	0.245	0.284	15%	None
Lead	70.3	172	84%	None

Compound	MR08-IS154-1-1.5-08D mg/kg	MR08-IS154D-1-1.5-08D mg/kg	RPD	Qualifier
Barium	8.40	8.84	5%	None
Cadmium	0.0753	0.192 U	NC	None
Chromium	5.10	5.07	1%	None
Arsenic	0.664	0.627	6%	None
Selenium	15.0	11.9	23%	None
Lead	0.325	0.254	25%	None

Compound	MR08-SS178-08D mg/kg	MR08-SS178D-08D mg/kg	RPD	Qualifier
Silver	0.264	0.510	64%	None
Barium	3.10	3.92	23%	None
Cadmium	0.678	0.674	1%	None
Chromium	2.36	2.57	9%	None
Arsenic	4.17	5.26	23%	None
Lead	4.94	10.5	72%	None
Selenium	0.385	0.399	4%	None

Compound	MR08-IS178-4-5-08D mg/kg	MR08-IS178D-4-5-08D mg/kg	RPD	Qualifier
Silver	0.255	0.848 U	NC	None
Barium	6.07	7.08	15%	None
Chromium	1.64	1.76	7%	None
Arsenic	0.285	0.301	5%	None
Lead	2.61	2.78	6%	None
Selenium	0.469 U	0.125	NC	None

Compound	MR08-SS139-08D mg/kg	MR08-SS139D-08D mg/kg	RPD	Qualifier
Silver	0.897 U	0.489	NC	None
Barium	24.3	21.8	11%	None
Cadmium	1.87	1.75	7%	None
Chromium	26.1	32.2	21%	None
Arsenic	9.44	6.47	37%	None
Lead	355	411	15%	None
Selenium	0.323	0.405	23%	None
Mercury	0.0379	0.114 U	NC	None

Compound	MR08-IS139-.5-1.5-08D mg/kg	MR08-IS139D-.5-1.5-08D mg/kg	RPD	Qualifier
Silver	0.225	0.304	30%	None

Compound	MR08-IS139-.5-1.5-08D mg/kg	MR08-IS139D-.5-1.5-08D mg/kg	RPD	Qualifier
Barium	6.51	4.84	29%	None
Cadmium	0.0744	0.157 U	NC	None
Chromium	2.65	2.46	7%	None
Arsenic	0.408	0.294	32%	None
Lead	8.07	4.94	48%	None
Selenium	0.445	0.312	35%	None

Compound Quantitation - No discrepancies were identified.

Report Number: L08120612

Report Date : January 15, 2009

Sample Number: L08120612-01
Client ID: MR08-IS179-1.5-2-08D
Matrix: Soil
Workgroup Number: WG291536
Collect Date: 12/18/2008 09:00
Sample Tag: 01

PrePrep Method: NONE
Prep Method: 3051
Analytical Method: 6010B
Analyst: JYH
Dilution: 1
Units: mg/kg

Instrument: IRIS-ICP
Prep Date: 12/23/2008 09:00
Cal Date: 12/30/2008 13:02
Run Date: 12/30/2008 15:49
File ID: IR.123008.154900
Percent Solid: 92.7

Analyte	CAS. Number	Result	Qual	RL	MDL
Silver, Total	7440-22-4	0.303	J	0.788	0.197
Barium, Total	7440-39-3	24.3		0.394	0.0788
Cadmium, Total	7440-43-9	0.0993	J	0.158	0.0394
Chromium, Total	7440-47-3	1.84 J		0.788	0.0945

MSL

J Estimated ; the analyte concentration was less than the low standard (LOQ)

Microbac

DW 1/31/2009

Sample Number: L08120612-01
Client ID: MR08-IS179-1.5-2-08D
Matrix: Soil
Workgroup Number: WG291664
Collect Date: 12/18/2008 09:00
Sample Tag: 01

PrePrep Method: NONE
Prep Method: 3051
Analytical Method: 6020
Analyst: JYH
Dilution: 1
Units: mg/kg

Instrument: ELAN-ICP
Prep Date: 12/23/2008 06:26
Cal Date: 12/31/2008 11:37
Run Date: 12/31/2008 22:27
File ID: EL.123108.222722
Percent Solid: 92.7

Analyte	CAS. Number	Result	Qual	RL	MDL
Arsenic, Total	7440-38-2	0.285	J	0.322	0.0805
Lead, Total	7439-92-1	2.34		0.429	0.107
Selenium, Total	7782-49-2	0.133	J	0.429	0.107

J Estimated ; the analyte concentration was less than the low standard (LOQ)

Microbac

lew
3/12/09

Report Number: L08120612

Report Date : January 15, 2009

Sample Number:	L08120612-01	PrePrep Method:	NONE	Instrument:	HYDRA
Client ID:	MR08-IS179-1.5-2-08D	Prep Method:	7471A	Prep Date:	12/23/2008 06:44
Matrix:	Soil	Analytical Method:	7471A	Cal Date:	12/31/2008 14:32
Workgroup Number:	WG291645	Analyst:	ADC	Run Date:	12/31/2008 15:30
Collect Date:	12/18/2008 09:00	Dilution:	1	File ID:	HY.123108.153057
Sample Tag:	01	Units:	mg/kg	Percent Solid:	92.7

Analyte	CAS. Number	Result	Qual	RL	MDL
Mercury, Total	7439-97-6		U	0.105	0.0211

U Undetected; the analyte was analyzed for, but not detected.

Microbac

2177 LW 3/12/09

2

Sample Number: L08120612-02
Client ID: MR08-SS179-08D
Matrix: Soil
Workgroup Number: WG291536
Collect Date: 12/18/2008 09:10
Sample Tag: 01

PrePrep Method: NONE
Prep Method: 3051
Analytical Method: 6010B
Analyst: JYH
Dilution: 1
Units: mg/kg

Instrument: IRIS-ICP
Prep Date: 12/23/2008 09:02
Cal Date: 12/30/2008 13:02
Run Date: 12/30/2008 15:55
File ID: IR.123008.155500
Percent Solid: 78.2

Analyte	CAS. Number	Result	Qual	RL	MDL
Silver, Total	7440-22-4	0.527	J	0.876	0.219
Barium, Total	7440-39-3	8.77		0.438	0.0876
Cadmium, Total	7440-43-9	0.670		0.175	0.0438
Chromium, Total	7440-47-3	7.18 J		0.876	0.105

MSL

J Estimated ; the analyte concentration was less than the low standard (LOQ)

Microbac

lw
10 3/12/09

2

Sample Number: L08120612-02
Client ID: MR08-SS179-08D
Matrix: Soil
Workgroup Number: WG291664
Collect Date: 12/18/2008 09:10
Sample Tag: DL01

PrePrep Method: NONE
Prep Method: 3051
Analytical Method: 6020
Analyst: JYH
Dilution: 50
Units: mg/kg

Instrument: ELAN-ICP
Prep Date: 12/23/2008 06:26
Cal Date: 01/03/2009 12:50
Run Date: 01/03/2009 21:40
File ID: EL.010309.214036
Percent Solid: 78.2

Analyte	CAS. Number	Result	Qual	RL	MDL
Lead, Total	7439-92-1	59.2		25.5	6.37

Microbac

MW
3/12/09

2

Sample Number: L08120612-02
Client ID: MR08-SS179-08D
Matrix: Soil
Workgroup Number: WG291664
Collect Date: 12/18/2008 09:10
Sample Tag: 01

PrePrep Method: NONE
Prep Method: 3051
Analytical Method: 6020
Analyst: JYH
Dilution: 1
Units: mg/kg

Instrument: ELAN-ICP
Prep Date: 12/23/2008 06:26
Cal Date: 12/31/2008 11:37
Run Date: 12/31/2008 22:32
File ID: EL.123108.223245
Percent Solid: 78.2

Analyte	CAS. Number	Result	Qual	RL	MDL
Arsenic, Total	7440-38-2	1.30		0.382	0.0955
Selenium, Total	7782-49-2	0.403	J	0.509	0.127

J Estimated ; the analyte concentration was less than the low standard (LOQ)

Microbac

JEW 3/12/09

2

Sample Number: L08120612-02
Client ID: MR08-SS179-08D
Matrix: Soil
Workgroup Number: WG291645
Collect Date: 12/18/2008 09:10
Sample Tag: 01

PrePrep Method: NONE
Prep Method: 7471A
Analytical Method: 7471A
Analyst: ADC
Dilution: 1
Units: mg/kg

Instrument: HYDRA
Prep Date: 12/23/2008 06:44
Cal Date: 12/31/2008 14:32
Run Date: 12/31/2008 15:39
File ID: HY.123108.153927
Percent Solid: 78.2

Analyte	CAS. Number	Result	Qual	RL	MDL
Mercury, Total	7439-97-6		U	0.123	0.0246

U Undetected; the analyte was analyzed for, but not detected.

Microbac

lew 3/12/09

3

Sample Number: L08120612-03
Client ID: MR08-IS160-5-6-08D
Matrix: Soil
Workgroup Number: WG291536
Collect Date: 12/18/2008 09:40
Sample Tag: 01

PrePrep Method: NONE
Prep Method: 3051
Analytical Method: 6010B
Analyst: JYH
Dilution: 1
Units: mg/kg

Instrument: IRIS-ICP
Prep Date: 12/23/2008 09:03
Cal Date: 12/30/2008 13:02
Run Date: 12/30/2008 16:01
File ID: IR.123008.160100
Percent Solid: 90.3

Analyte	CAS. Number	Result	Qual	RL	MDL
Silver, Total	7440-22-4		U	0.811	0.203
Barium, Total	7440-39-3	14.5		0.406	0.0811
Cadmium, Total	7440-43-9		U	0.162	0.0406
Chromium, Total	7440-47-3	7.07 J		0.811	0.0974

MSL

U Undetected; the analyte was analyzed for, but not detected.

Microbac

aw
17 3/12/09

3

Sample Number: L08120612-03
Client ID: MR08-IS160-5-6-08D
Matrix: Soil
Workgroup Number: WG291664
Collect Date: 12/18/2008 09:40
Sample Tag: 01

PrePrep Method: NONE
Prep Method: 3051
Analytical Method: 6020
Analyst: JYH
Dilution: 1
Units: mg/kg

Instrument: ELAN-ICP
Prep Date: 12/23/2008 06:26
Cal Date: 12/31/2008 11:37
Run Date: 12/31/2008 22:38
File ID: EL.123108.223808
Percent Solid: 90.3

Analyte	CAS. Number	Result	Qual	RL	MDL
Arsenic, Total	7440-38-2	0.756		0.330	0.0824
Lead, Total	7439-92-1	5.95		0.439	0.110
Selenium, Total	7782-49-2	0.161	J	0.439	0.110

J Estimated ; the analyte concentration was less than the low standard (LOQ)

Microbac

Leo 3/12/09

3

Sample Number: L08120612-03
Client ID: MR08-IS160-5-6-08D
Matrix: Soil
Workgroup Number: WG291645
Collect Date: 12/18/2008 09:40
Sample Tag: 01

PrePrep Method: NONE
Prep Method: 7471A
Analytical Method: 7471A
Analyst: ADC
Dilution: 1
Units: mg/kg

Instrument: HYDRA
Prep Date: 12/23/2008 06:44
Cal Date: 12/31/2008 14:32
Run Date: 12/31/2008 15:41
File ID: HY.123108.154110
Percent Solid: 90.3

Analyte	CAS. Number	Result	Qual	RL	MDL
Mercury, Total	7439-97-6		U	0.104	0.0208

U Undetected; the analyte was analyzed for, but not detected.

Microbac

JLW 3/12/09

4

Sample Number: L08120612-04
Client ID: MR08-SS160 -08D
Matrix: Soil
Workgroup Number: WG291536
Collect Date: 12/18/2008 09:50
Sample Tag: 01

PrePrep Method: NONE
Prep Method: 3051
Analytical Method: 6010B
Analyst: JYH
Dilution: 1
Units: mg/kg

Instrument: IRIS-ICP
Prep Date: 12/23/2008 09:04
Cal Date: 12/30/2008 13:02
Run Date: 12/30/2008 16:19
File ID: IR.123008.161900
Percent Solid: 80.8

Analyte	CAS. Number	Result	Qual	RL	MDL
Silver, Total	7440-22-4	0.317	J	0.857	0.214
Barium, Total	7440-39-3	28.0		0.428	0.0857
Cadmium, Total	7440-43-9	0.278		0.171	0.0428
Chromium, Total	7440-47-3	6.24 J		0.857	0.103

MSL

J Estimated ; the analyte concentration was less than the low standard (LOQ)

Microbac

MW
18 3/12/09

4

Sample Number: L08120612-04
Client ID: MR08-SS160 -08D
Matrix: Soil
Workgroup Number: WG291664
Collect Date: 12/18/2008 09:50
Sample Tag: DL01

PrePrep Method: NONE
Prep Method: 3051
Analytical Method: 6020
Analyst: JYH
Dilution: 50
Units: mg/kg

Instrument: ELAN-ICP
Prep Date: 12/23/2008 06:26
Cal Date: 01/03/2009 12:50
Run Date: 01/03/2009 21:59
File ID: EL.010309.215903
Percent Solid: 80.8

Analyte	CAS. Number	Result	Qual	RL	MDL
Lead, Total	7439-92-1	52.6		24.2	6.05

Microbac

YW 3/12/09

4

Sample Number: L08120612-04
Client ID: MR08-SS160 -08D
Matrix: Soil
Workgroup Number: WG291664
Collect Date: 12/18/2008 09:50
Sample Tag: 01

PrePrep Method: NONE
Prep Method: 3051
Analytical Method: 6020
Analyst: JYH
Dilution: 1
Units: mg/kg

Instrument: ELAN-ICP
Prep Date: 12/23/2008 06:26
Cal Date: 12/31/2008 11:37
Run Date: 12/31/2008 23:07
File ID: EL.123108.230724
Percent Solid: 80.8

Analyte	CAS. Number	Result	Qual	RL	MDL
Arsenic, Total	7440-38-2	0.790		0.363	0.0907
Selenium, Total	7782-49-2	0.475	J	0.484	0.121

J Estimated ; the analyte concentration was less than the low standard (LOQ)

Microbac

MW
3/12/09

4

Sample Number: L08120612-04
Client ID: MR08-SS160 -08D
Matrix: Soil
Workgroup Number: WG291645
Collect Date: 12/18/2008 09:50
Sample Tag: 01

PrePrep Method: NONE
Prep Method: 7471A
Analytical Method: 7471A
Analyst: ADC
Dilution: 1
Units: mg/kg

Instrument: HYDRA
Prep Date: 12/23/2008 06:44
Cal Date: 12/31/2008 14:32
Run Date: 12/31/2008 15:42
File ID: HY.123108.154255
Percent Solid: 80.8

Analyte	CAS. Number	Result	Qual	RL	MDL
Mercury, Total	7439-97-6	0.119 ~~0.0334~~	U ~~J~~	0.119	0.0237

BL

J Estimated ; the analyte concentration was less than the low standard (LOQ)

Microbac

JEW 1/31/2009

5

Sample Number: L08120612-05
Client ID: MR08-IS155-1-2-08D
Matrix: Soil
Workgroup Number: WG291536
Collect Date: 12/18/2008 10:05
Sample Tag: 01

PrePrep Method: NONE
Prep Method: 3051
Analytical Method: 6010B
Analyst: JYH
Dilution: 1
Units: mg/kg

Instrument: IRIS-ICP
Prep Date: 12/23/2008 09:04
Cal Date: 12/30/2008 13:02
Run Date: 12/30/2008 16:25
File ID: IR.123008.162500
Percent Solid: 89.2

Analyte	CAS. Number	Result	Qual	RL	MDL
Silver, Total	7440-22-4	0.249	J	0.852	0.213
Barium, Total	7440-39-3	7.13		0.426	0.0852
Cadmium, Total	7440-43-9		U	0.170	0.0426
Chromium, Total	7440-47-3	7.25 J		0.852	0.102

MSC

U Undetected; the analyte was analyzed for, but not detected.
J Estimated ; the analyte concentration was less than the low standard (LOQ)

Microbac

MW 3/12/09

5

Sample Number: L08120612-05
Client ID: MR08-IS155-1-2-08D
Matrix: Soil
Workgroup Number: WG291664
Collect Date: 12/18/2008 10:05
Sample Tag: 01

PrePrep Method: NONE
Prep Method: 3051
Analytical Method: 6020
Analyst: JYH
Dilution: 1
Units: mg/kg

Instrument: ELAN-ICP
Prep Date: 12/23/2008 06:26
Cal Date: 12/31/2008 11:37
Run Date: 12/31/2008 23:12
File ID: EL.123108.231249
Percent Solid: 89.2

Analyte	CAS. Number	Result	Qual	RL	MDL
Arsenic, Total	7440-38-2	1.03		0.331	0.0826
Lead, Total	7439-92-1	4.65		0.441	0.110
Selenium, Total	7782-49-2	0.497		0.441	0.110

Microbac

lew 3/12/09

880

5

Sample Number: L08120612-05
Client ID: MR08-IS155-1-2-08D
Matrix: Soil
Workgroup Number: WG291645
Collect Date: 12/18/2008 10:05
Sample Tag: 01

PrePrep Method: NONE
Prep Method: 7471A
Analytical Method: 7471A
Analyst: ADC
Dilution: 1
Units: mg/kg

Instrument: HYDRA
Prep Date: 12/23/2008 06:44
Cal Date: 12/31/2008 14:32
Run Date: 12/31/2008 15:45
File ID: HY.123108.154502
Percent Solid: 89.2

Analyte	CAS. Number	Result	Qual	RL	MDL
Mercury, Total	7439-97-6		U	0.105	0.0210

U Undetected; the analyte was analyzed for, but not detected.

Microbac

lew
3/12/09

6

Sample Number: L08120612-06
Client ID: MR08-SS155-08D
Matrix: Soil
Workgroup Number: WG291536
Collect Date: 12/18/2008 10:30
Sample Tag: 01

PrePrep Method: NONE
Prep Method: 3051
Analytical Method: 6010B
Analyst: JYH
Dilution: 1
Units: mg/kg

Instrument: IRIS-ICP
Prep Date: 12/23/2008 09:05
Cal Date: 12/30/2008 13:02
Run Date: 12/30/2008 16:31
File ID: IR.123008.163100
Percent Solid: 80.1

Analyte	CAS. Number	Result	Qual	RL	MDL
Silver, Total	7440-22-4	0.603	J	0.870	0.217
Barium, Total	7440-39-3	18.1		0.435	0.0870
Cadmium, Total	7440-43-9	1.39		0.174	0.0435
Chromium, Total	7440-47-3	18.7 J		0.870	0.104

MSL

J Estimated ; the analyte concentration was less than the low standard (LOQ)

Microbac

MW 3/12/09

6

Sample Number: L08120612-06
Client ID: MR08-SS155-08D
Matrix: Soil
Workgroup Number: WG291664
Collect Date: 12/18/2008 10:30
Sample Tag: 01

PrePrep Method: NONE
Prep Method: 3051
Analytical Method: 6020
Analyst: JYH
Dilution: 1
Units: mg/kg

Instrument: ELAN-ICP
Prep Date: 12/23/2008 06:26
Cal Date: 12/31/2008 11:37
Run Date: 12/31/2008 23:18
File ID: EL.123108.231815
Percent Solid: 80.1

Analyte	CAS. Number	Result	Qual	RL	MDL
Arsenic, Total	7440-38-2	1.70		0.374	0.0935
Selenium, Total	7782-49-2	0.967		0.498	0.125

Microbac

lew 3/12/09

6

Sample Number: L08120612-06
Client ID: MR08-SS155-08D
Matrix: Soil
Workgroup Number: WG291664
Collect Date: 12/18/2008 10:30
Sample Tag: DL01

PrePrep Method: NONE
Prep Method: 3051
Analytical Method: 6020
Analyst: JYH
Dilution: 50
Units: mg/kg

Instrument: ELAN-ICP
Prep Date: 12/23/2008 06:26
Cal Date: 01/03/2009 12:50
Run Date: 01/03/2009 22:04
File ID: EL.010309.220425
Percent Solid: 80.1

Analyte	CAS. Number	Result	Qual	RL	MDL
Lead, Total	7439-92-1	222		24.9	6.23

Microbac

fw 3/12/09

6

Sample Number:	L08120612-06	PrePrep Method:	NONE	Instrument:	HYDRA
Client ID:	MR08-SS155-08D	Prep Method:	7471A	Prep Date:	12/23/2008 06:44
Matrix:	Soil	Analytical Method:	7471A	Cal Date:	12/31/2008 14:32
Workgroup Number:	WG291645	Analyst:	ADC	Run Date:	12/31/2008 15:51
Collect Date:	12/18/2008 10:30	Dilution:	1	File ID:	HY.123108.155118
Sample Tag:	01	Units:	mg/kg	Percent Solid:	80.1

Analyte	CAS. Number	Result	Qual	RL	MDL
Mercury, Total	7439-97-6	0.0401	J	0.117	0.0233

J Estimated ; the analyte concentration was less than the low standard (LOQ)

Microbac

gw 3/12/09

7

Sample Number: L08120612-07
Client ID: MR08-IS136-1-2-08D
Matrix: Soil
Workgroup Number: WG291536
Collect Date: 12/18/2008 10:55
Sample Tag: 01

PrePrep Method: NONE
Prep Method: 3051
Analytical Method: 6010B
Analyst: JYH
Dilution: 1
Units: mg/kg

Instrument: IRIS-ICP
Prep Date: 12/23/2008 09:05
Cal Date: 12/30/2008 13:02
Run Date: 12/30/2008 16:37
File ID: IR.123008.163700
Percent Solid: 87.7

Analyte	CAS. Number	Result	Qual	RL	MDL
Silver, Total	7440-22-4		U	0.841	0.210
Barium, Total	7440-39-3	6.91		0.420	0.0841
Cadmium, Total	7440-43-9		U	0.168	0.0420
Chromium, Total	7440-47-3	9.75 J		0.841	0.101

MSL

U Undetected; the analyte was analyzed for, but not detected.

Microbac

MW
21 3/12/09

7

Sample Number: L08120612-07
Client ID: MR08-IS136-1-2-08D
Matrix: Soil
Workgroup Number: WG291664
Collect Date: 12/18/2008 10:55
Sample Tag: 01

PrePrep Method: NONE
Prep Method: 3051
Analytical Method: 6020
Analyst: JYH
Dilution: 1
Units: mg/kg

Instrument: ELAN-ICP
Prep Date: 12/23/2008 06:26
Cal Date: 12/31/2008 11:37
Run Date: 12/31/2008 23:23
File ID: EL.123108.232340
Percent Solid: 87.7

Analyte	CAS. Number	Result	Qual	RL	MDL
Arsenic, Total	7440-38-2	0.657		0.336	0.0840
Lead, Total	7439-92-1	4.00		0.448	0.112
Selenium, Total	7782-49-2	0.333	J	0.448	0.112

J Estimated ; the analyte concentration was less than the low standard (LOQ)

Microbac

QW 3/12/09

7

Sample Number: L08120612-07
Client ID: MR08-IS136-1-2-08D
Matrix: Soil
Workgroup Number: WG291645
Collect Date: 12/18/2008 10:55
Sample Tag: 01

PrePrep Method: NONE
Prep Method: 7471A
Analytical Method: 7471A
Analyst: ADC
Dilution: 1
Units: mg/kg

Instrument: HYDRA
Prep Date: 12/23/2008 06:44
Cal Date: 12/31/2008 14:32
Run Date: 12/31/2008 15:54
File ID: HY.123108.155414
Percent Solid: 87.7

Analyte	CAS. Number	Result	Qual	RL	MDL
Mercury, Total	7439-97-6		U	0.109	0.0219

U Undetected; the analyte was analyzed for, but not detected.

Microbac

lw 3/12/09

8

Sample Number: L08120612-08
Client ID: MR08-SS136-08D
Matrix: Soil
Workgroup Number: WG291536
Collect Date: 12/18/2008 11:05
Sample Tag: 01

PrePrep Method: NONE
Prep Method: 3051
Analytical Method: 6010B
Analyst: JYH
Dilution: 1
Units: mg/kg

Instrument: IRIS-ICP
Prep Date: 12/23/2008 09:06
Cal Date: 12/30/2008 13:02
Run Date: 12/30/2008 16:43
File ID: IR.123008.164300
Percent Solid: 83.3

Analyte	CAS. Number	Result	Qual	RL	MDL
Silver, Total	7440-22-4	0.287	J	0.828	0.207
Barium, Total	7440-39-3	15.5		0.414	0.0828
Cadmium, Total	7440-43-9	0.329		0.166	0.0414
Chromium, Total	7440-47-3	6.63 J		0.828	0.0994

MSL

J Estimated ; the analyte concentration was less than the low standard (LOQ)

Microbac

lew 3/12/09

8

Sample Number: L08120612-08
Client ID: MR08-SS136-08D
Matrix: Soil
Workgroup Number: WG291664
Collect Date: 12/18/2008 11:05
Sample Tag: 01

PrePrep Method: NONE
Prep Method: 3051
Analytical Method: 6020
Analyst: JYH
Dilution: 1
Units: mg/kg

Instrument: ELAN-ICP
Prep Date: 12/23/2008 06:26
Cal Date: 12/31/2008 11:37
Run Date: 12/31/2008 23:29
File ID: EL.123108.232906
Percent Solid: 83.3

Analyte	CAS. Number	Result	Qual	RL	MDL
Arsenic, Total	7440-38-2	0.992		0.347	0.0869
Lead, Total	7439-92-1	39.0		0.463	0.116
Selenium, Total	7782-49-2	0.544		0.463	0.116

Microbac

JWS 3/12/09

8

Sample Number: L08120612-08
Client ID: MR08-SS136-08D
Matrix: Soil
Workgroup Number: WG291645
Collect Date: 12/18/2008 11:05
Sample Tag: 01

PrePrep Method: NONE
Prep Method: 7471A
Analytical Method: 7471A
Analyst: ADC
Dilution: 1
Units: mg/kg

Instrument: HYDRA
Prep Date: 12/23/2008 06:44
Cal Date: 12/31/2008 14:32
Run Date: 12/31/2008 15:56
File ID: HY.123108.155601
Percent Solid: 83.3

Analyte	CAS. Number	Result	Qual	RL	MDL
Mercury, Total	7439-97-6	0.119 ~~0.0313~~	U ~~J~~	0.119	0.0238

BL

J Estimated ; the analyte concentration was less than the low standard (LOQ)

Microbac

MW 3/12/09

9

Sample Number: L08120612-09
Client ID: MR08-SS137-08D
Matrix: Soil
Workgroup Number: WG291536
Collect Date: 12/18/2008 12:35
Sample Tag: 01

PrePrep Method: NONE
Prep Method: 3051
Analytical Method: 6010B
Analyst: JYH
Dilution: 1
Units: mg/kg

Instrument: IRIS-ICP
Prep Date: 12/23/2008 09:07
Cal Date: 12/30/2008 13:02
Run Date: 12/30/2008 16:50
File ID: IR.123008.165000
Percent Solid: 83.9

Analyte	CAS. Number	Result	Qual	RL	MDL
Silver, Total	7440-22-4	0.356	J	0.804	0.201
Barium, Total	7440-39-3	7.89		0.402	0.0804
Cadmium, Total	7440-43-9	0.278		0.161	0.0402
Chromium, Total	7440-47-3	6.28 J		0.804	0.0965 MSL

J Estimated ; the analyte concentration was less than the low standard (LOQ)

Microbac

MW 3/12/09

9

Sample Number: L08120612-09
Client ID: MR08-SS137-08D
Matrix: Soil
Workgroup Number: WG291664
Collect Date: 12/18/2008 12:35
Sample Tag: 01

PrePrep Method: NONE
Prep Method: 3051
Analytical Method: 6020
Analyst: JYH
Dilution: 1
Units: mg/kg

Instrument: ELAN-ICP
Prep Date: 12/23/2008 06:26
Cal Date: 12/31/2008 11:37
Run Date: 12/31/2008 23:34
File ID: EL.123108.233432
Percent Solid: 83.9

Analyte	CAS. Number	Result	Qual	RL	MDL
Arsenic, Total	7440-38-2	0.725		0.356	0.0889
Lead, Total	7439-92-1	23.5		0.474	0.119
Selenium, Total	7782-49-2	0.239	J	0.474	0.119

J Estimated ; the analyte concentration was less than the low standard (LOQ)

Microbac

lew 3/12/09

9

Sample Number: L08120612-09
Client ID: MR08-SS137-08D
Matrix: Soil
Workgroup Number: WG291645
Collect Date: 12/18/2008 12:35
Sample Tag: 01

PrePrep Method: NONE
Prep Method: 7471A
Analytical Method: 7471A
Analyst: ADC
Dilution: 1
Units: mg/kg

Instrument: HYDRA
Prep Date: 12/23/2008 06:44
Cal Date: 12/31/2008 14:32
Run Date: 12/31/2008 15:58
File ID: HY.123108.155816
Percent Solid: 83.9

Analyte	CAS. Number	Result	Qual	RL	MDL
Mercury, Total	7439-97-6		U	0.114	0.0227

U Undetected; the analyte was analyzed for, but not detected.

Microbac

lew 3/12/09

10

Sample Number: L08120612-10
Client ID: MR08-IS137-2.5-3.5-08D
Matrix: Soil
Workgroup Number: WG291536
Collect Date: 12/18/2008 12:40
Sample Tag: 01

PrePrep Method: NONE
Prep Method: 3051
Analytical Method: 6010B
Analyst: JYH
Dilution: 1
Units: mg/kg

Instrument: IRIS-ICP
Prep Date: 12/23/2008 09:07
Cal Date: 12/30/2008 13:02
Run Date: 12/30/2008 16:56
File ID: IR.123008.165600
Percent Solid: 89.3

Analyte	CAS. Number	Result	Qual	RL	MDL
Silver, Total	7440-22-4		U	0.814	0.203
Barium, Total	7440-39-3	3.69		0.407	0.0814
Cadmium, Total	7440-43-9		U	0.163	0.0407
Chromium, Total	7440-47-3	4.80 J		0.814	0.0976

MSL

U Undetected; the analyte was analyzed for, but not detected.

Microbac

lw 3/12/09

10

Sample Number: L08120612-10
Client ID: MR08-IS137-2.5-3.5-08D
Matrix: Soil
Workgroup Number: WG291664
Collect Date: 12/18/2008 12:40
Sample Tag: 01

PrePrep Method: NONE
Prep Method: 3051
Analytical Method: 6020
Analyst: JYH
Dilution: 1
Units: mg/kg

Instrument: ELAN-ICP
Prep Date: 12/23/2008 06:26
Cal Date: 12/31/2008 11:37
Run Date: 12/31/2008 23:39
File ID: EL.123108.233959
Percent Solid: 89.3

Analyte	CAS. Number	Result	Qual	RL	MDL
Arsenic, Total	7440-38-2	0.911		0.332	0.0830
Lead, Total	7439-92-1	3.39		0.442	0.111
Selenium, Total	7782-49-2		U	0.442	0.111

U Undetected; the analyte was analyzed for, but not detected.

Microbac

fw 1/31/2009

10

Sample Number: L08120612-10
Client ID: MR08-IS137-2.5-3.5-08D
Matrix: Soil
Workgroup Number: WG291645
Collect Date: 12/18/2008 12:40
Sample Tag: 01

PrePrep Method: NONE
Prep Method: 7471A
Analytical Method: 7471A
Analyst: ADC
Dilution: 1
Units: mg/kg

Instrument: HYDRA
Prep Date: 12/23/2008 06:44
Cal Date: 12/31/2008 14:32
Run Date: 12/31/2008 16:00
File ID: HY.123108.160020
Percent Solid: 89.3

Analyte	CAS. Number	Result	Qual	RL	MDL
Mercury, Total	7439-97-6		U	0.103	0.0207

U Undetected; the analyte was analyzed for, but not detected.

Microbac

kw 3/12/09

11

Sample Number: L08120612-11
Client ID: MR08-SS154-08D
Matrix: Soil
Workgroup Number: WG291701
Collect Date: 12/18/2008 13:10
Sample Tag: 01

PrePrep Method: NONE
Prep Method: 3051
Analytical Method: 6010B
Analyst: KHR
Dilution: 1
Units: mg/kg

Instrument: IRIS-ICP
Prep Date: 12/23/2008 08:51
Cal Date: 01/05/2009 10:22
Run Date: 01/05/2009 16:46
File ID: IR.010509.164600
Percent Solid: 88.2

Analyte	CAS. Number	Result	Qual	RL	MDL
Silver, Total	7440-22-4	0.417	J	0.849	0.212
Barium, Total	7440-39-3	10.8		0.425	0.0849
Cadmium, Total	7440-43-9	0.989 J		0.170	0.0425
Chromium, Total	7440-47-3	21.3 J		0.849	0.102

MSH
MSL

J Estimated ; the analyte concentration was less than the low standard (LOQ)

Microbac

25

3/12/09

11

Sample Number: L08120612-11
Client ID: MR08-SS154-08D
Matrix: Soil
Workgroup Number: WG291664
Collect Date: 12/18/2008 13:10
Sample Tag: 01

PrePrep Method: NONE
Prep Method: 3051
Analytical Method: 6020
Analyst: JYH
Dilution: 1
Units: mg/kg

Instrument: ELAN-ICP
Prep Date: 12/23/2008 06:26
Cal Date: 12/31/2008 11:37
Run Date: 12/31/2008 23:45
File ID: EL.123108.234524
Percent Solid: 88.2

Analyte	CAS. Number	Result	Qual	RL	MDL
Arsenic, Total	7440-38-2	0.870		0.340	0.0849
Selenium, Total	7782-49-2	0.245	J	0.453	0.113

J Estimated ; the analyte concentration was less than the low standard (LOQ)

Microbac

887

3/12/09

11

Sample Number: L08120612-11
Client ID: MR08-SS154-08D
Matrix: Soil
Workgroup Number: WG291664
Collect Date: 12/18/2008 13:10
Sample Tag: DL01

PrePrep Method: NONE
Prep Method: 3051
Analytical Method: 6020
Analyst: JYH
Dilution: 50
Units: mg/kg

Instrument: ELAN-ICP
Prep Date: 12/23/2008 06:26
Cal Date: 01/03/2009 12:50
Run Date: 01/03/2009 22:09
File ID: EL.010309.220948
Percent Solid: 88.2

Analyte	CAS. Number	Result	Qual	RL	MDL
Lead, Total	7439-92-1	70.3		22.6	5.66

Microbac

888

Alex 3/12/09

11

Sample Number:	L08120612-11	PrePrep Method:	NONE	Instrument:	HYDRA
Client ID:	MR08-SS154-08D	Prep Method:	7471A	Prep Date:	12/23/2008 06:44
Matrix:	Soil	Analytical Method:	7471A	Cal Date:	12/31/2008 14:32
Workgroup Number:	WG291645	Analyst:	ADC	Run Date:	12/31/2008 16:02
Collect Date:	12/18/2008 13:10	Dilution:	1	File ID:	HY.123108.160206
Sample Tag:	01	Units:	mg/kg	Percent Solid:	88.2

Analyte	CAS. Number	Result	Qual	RL	MDL
Mercury, Total	7439-97-6		U	0.107	0.0214

U Undetected; the analyte was analyzed for, but not detected.

Microbac

RW
2187 3/12/09

12

Sample Number: L08120612-12
Client ID: MR08-SS154D-08D
Matrix: Soil
Workgroup Number: WG291701
Collect Date: 12/18/2008 13:10
Sample Tag: 01

PrePrep Method: NONE
Prep Method: 3051
Analytical Method: 6010B
Analyst: KHR
Dilution: 1
Units: mg/kg

Instrument: IRIS-ICP
Prep Date: 12/23/2008 08:52
Cal Date: 01/05/2009 10:22
Run Date: 01/05/2009 17:11
File ID: IR.010509.171100
Percent Solid: 86.0

Analyte	CAS. Number	Result	Qual	RL	MDL	
Silver, Total	7440-22-4	0.438	J	0.863	0.216	
Barium, Total	7440-39-3	14.7		0.432	0.0863	
Cadmium, Total	7440-43-9	1.45 J		0.173	0.0432	MSH
Chromium, Total	7440-47-3	26.5 J		0.863	0.104	MSL

J Estimated ; the analyte concentration was less than the low standard (LOQ)

Microbac

26 Dew 3/1/2009

12

Sample Number: L08120612-12
Client ID: MR08-SS154D-08D
Matrix: Soil
Workgroup Number: WG291664
Collect Date: 12/18/2008 13:10
Sample Tag: 01

PrePrep Method: NONE
Prep Method: 3051
Analytical Method: 6020
Analyst: JYH
Dilution: 1
Units: mg/kg

Instrument: ELAN-ICP
Prep Date: 12/23/2008 06:26
Cal Date: 12/31/2008 11:37
Run Date: 12/31/2008 23:50
File ID: EL.123108.235048
Percent Solid: 86.0

Analyte	CAS. Number	Result	Qual	RL	MDL
Arsenic, Total	7440-38-2	1.25		0.346	0.0865
Selenium, Total	7782-49-2	0.284	J	0.461	0.115

J Estimated ; the analyte concentration was less than the low standard (LOQ)

Microbac

lew 3/12/09

12

Sample Number: L08120612-12
Client ID: MR08-SS154D-08D
Matrix: Soil
Workgroup Number: WG291664
Collect Date: 12/18/2008 13:10
Sample Tag: DL01

PrePrep Method: NONE
Prep Method: 3051
Analytical Method: 6020
Analyst: JYH
Dilution: 50
Units: mg/kg

Instrument: ELAN-ICP
Prep Date: 12/23/2008 06:26
Cal Date: 01/03/2009 12:50
Run Date: 01/03/2009 22:15
File ID: EL.010309.221511
Percent Solid: 86.0

Analyte	CAS. Number	Result	Qual	RL	MDL
Lead, Total	7439-92-1	172		23.1	5.77

Microbac

890 JEW 3/12/09

12

Sample Number: L08120612-12
Client ID: MR08-SS154D-08D
Matrix: Soil
Workgroup Number: WG291645
Collect Date: 12/18/2008 13:10
Sample Tag: 01

PrePrep Method: NONE
Prep Method: 7471A
Analytical Method: 7471A
Analyst: ADC
Dilution: 1
Units: mg/kg

Instrument: HYDRA
Prep Date: 12/23/2008 06:44
Cal Date: 12/31/2008 14:32
Run Date: 12/31/2008 16:04
File ID: HY.123108.160451
Percent Solid: 86.0

Analyte	CAS. Number	Result	Qual	RL	MDL
Mercury, Total	7439-97-6		U	0.110	0.0220

U Undetected; the analyte was analyzed for, but not detected.

Microbac

lw 3/12/09

13

Sample Number: L08120612-13
Client ID: MR08-IS154-1-1.5-08D
Matrix: Soil
Workgroup Number: WG291701
Collect Date: 12/18/2008 13:20
Sample Tag: 01

PrePrep Method: NONE
Prep Method: 3051
Analytical Method: 6010B
Analyst: KHR
Dilution: 1
Units: mg/kg

Instrument: IRIS-ICP
Prep Date: 12/23/2008 08:53
Cal Date: 01/05/2009 10:22
Run Date: 01/05/2009 17:17
File ID: IR.010509.171700
Percent Solid: 87.8

Analyte	CAS. Number	Result	Qual	RL	MDL	
Silver, Total	7440-22-4		U	0.875	0.219	
Barium, Total	7440-39-3	8.40		0.438	0.0875	
Cadmium, Total	7440-43-9	0.0753 J	J	0.175	0.0438	MSH
Chromium, Total	7440-47-3	5.10 J		0.875	0.105	MSL

U Undetected; the analyte was analyzed for, but not detected.
J Estimated ; the analyte concentration was less than the low standard (LOQ)

Microbac

27 CLW 3/1/2009

13

Sample Number: L08120612-13
Client ID: MR08-IS154-1-1.5-08D
Matrix: Soil
Workgroup Number: WG291664
Collect Date: 12/18/2008 13:20
Sample Tag: 01

PrePrep Method: NONE
Prep Method: 3051
Analytical Method: 6020
Analyst: JYH
Dilution: 1
Units: mg/kg

Instrument: ELAN-ICP
Prep Date: 12/23/2008 06:26
Cal Date: 12/31/2008 11:37
Run Date: 01/01/2009 00:09
File ID: EL.010109.000915
Percent Solid: 87.8

Analyte	CAS. Number	Result	Qual	RL	MDL
Arsenic, Total	7440-38-2	0.664		0.339	0.0847
Lead, Total	7439-92-1	15.0		0.452	0.113
Selenium, Total	7782-49-2	0.325	J	0.452	0.113

J Estimated ; the analyte concentration was less than the low standard (LOQ)

Microbac

Lee 3/12/09

13

Sample Number: L08120612-13
Client ID: MR08-IS154-1-1.5-08D
Matrix: Soil
Workgroup Number: WG291645
Collect Date: 12/18/2008 13:20
Sample Tag: 01

PrePrep Method: NONE
Prep Method: 7471A
Analytical Method: 7471A
Analyst: ADC
Dilution: 1
Units: mg/kg

Instrument: HYDRA
Prep Date: 12/23/2008 06:44
Cal Date: 12/31/2008 14:32
Run Date: 12/31/2008 16:06
File ID: HY.123108.160634
Percent Solid: 87.8

Analyte	CAS. Number	Result	Qual	RL	MDL
Mercury, Total	7439-97-6		U	0.114	0.0228

U Undetected; the analyte was analyzed for, but not detected.

Microbac

RW 3/12/09

14

Sample Number: L08120612-14
Client ID: MR08-IS154D-1-1.5-08D
Matrix: Soil
Workgroup Number: WG291701
Collect Date: 12/18/2008 13:20
Sample Tag: 01

PrePrep Method: NONE
Prep Method: 3051
Analytical Method: 6010B
Analyst: KHR
Dilution: 1
Units: mg/kg

Instrument: IRIS-ICP
Prep Date: 12/23/2008 08:54
Cal Date: 01/05/2009 10:22
Run Date: 01/05/2009 17:36
File ID: IR.010509.173600
Percent Solid: 79.8

Analyte	CAS. Number	Result	Qual	RL	MDL
Silver, Total	7440-22-4		U	0.961	0.240
Barium, Total	7440-39-3	8.84		0.481	0.0961
Cadmium, Total	7440-43-9		U	0.192	0.0481
Chromium, Total	7440-47-3	5.07 J		0.961	0.115

MSL

U Undetected; the analyte was analyzed for, but not detected.

Microbac

28 CW 3/12/09

14

Sample Number: L08120612-14
Client ID: MR08-IS154D-1-1.5-08D
Matrix: Soil
Workgroup Number: WG291664
Collect Date: 12/18/2008 13:20
Sample Tag: 01

PrePrep Method: NONE
Prep Method: 3051
Analytical Method: 6020
Analyst: JYH
Dilution: 1
Units: mg/kg

Instrument: ELAN-ICP
Prep Date: 12/23/2008 06:26
Cal Date: 12/31/2008 11:37
Run Date: 01/01/2009 00:14
File ID: EL.010109.001439
Percent Solid: 79.8

Analyte	CAS. Number	Result	Qual	RL	MDL
Arsenic, Total	7440-38-2	0.627		0.367	0.0918
Lead, Total	7439-92-1	11.9		0.490	0.122
Selenium, Total	7782-49-2	0.254	J	0.490	0.122

J Estimated ; the analyte concentration was less than the low standard (LOQ)

Microbac

lew 3/1/2009

14

Sample Number: L08120612-14
Client ID: MR08-IS154D-1-1.5-08D
Matrix: Soil
Workgroup Number: WG291645
Collect Date: 12/18/2008 13:20
Sample Tag: 01

PrePrep Method: NONE
Prep Method: 7471A
Analytical Method: 7471A
Analyst: ADC
Dilution: 1
Units: mg/kg

Instrument: HYDRA
Prep Date: 12/23/2008 06:44
Cal Date: 12/31/2008 14:32
Run Date: 12/31/2008 16:08
File ID: HY.123108.160818
Percent Solid: 79.8

Analyte	CAS. Number	Result	Qual	RL	MDL
Mercury, Total	7439-97-6		U	0.124	0.0247

U Undetected; the analyte was analyzed for, but not detected.

Microbac

Lee 3/12/09

15

Sample Number: L08120612-15
Client ID: MR08-SS161-08D
Matrix: Soil
Workgroup Number: WG291701
Collect Date: 12/18/2008 14:00
Sample Tag: 01

PrePrep Method: NONE
Prep Method: 3051
Analytical Method: 6010B
Analyst: KHR
Dilution: 1
Units: mg/kg

Instrument: IRIS-ICP
Prep Date: 12/23/2008 08:55
Cal Date: 01/05/2009 10:22
Run Date: 01/05/2009 17:42
File ID: IR.010509.174200
Percent Solid: 85.3

Analyte	CAS. Number	Result	Qual	RL	MDL	
Silver, Total	7440-22-4	0.503	J	0.837	0.209	
Barium, Total	7440-39-3	16.8		0.418	0.0837	
Cadmium, Total	7440-43-9	1.37 J		0.167	0.0418	MSH
Chromium, Total	7440-47-3	13.4 J		0.837	0.100	MSL

J Estimated ; the analyte concentration was less than the low standard (LOQ)

Microbac

29 lew 3/12/09

15

Sample Number: L08120612-15
Client ID: MR08-SS161-08D
Matrix: Soil
Workgroup Number: WG291664
Collect Date: 12/18/2008 14:00
Sample Tag: 01

PrePrep Method: NONE
Prep Method: 3051
Analytical Method: 6020
Analyst: JYH
Dilution: 1
Units: mg/kg

Instrument: ELAN-ICP
Prep Date: 12/23/2008 06:26
Cal Date: 12/31/2008 11:37
Run Date: 01/01/2009 00:20
File ID: EL.010109.002004
Percent Solid: 85.3

Analyte	CAS. Number	Result	Qual	RL	MDL
Arsenic, Total	7440-38-2	1.10		0.346	0.0865
Selenium, Total	7782-49-2	0.346	J	0.462	0.115

J Estimated ; the analyte concentration was less than the low standard (LOQ)

Microbac

AW
893 B/12/09

15

Sample Number: L08120612-15
Client ID: MR08-SS161-08D
Matrix: Soil
Workgroup Number: WG291664
Collect Date: 12/18/2008 14:00
Sample Tag: DL01

PrePrep Method: NONE
Prep Method: 3051
Analytical Method: 6020
Analyst: WTD
Dilution: 50
Units: mg/kg

Instrument: ELAN-ICP
Prep Date: 12/23/2008 06:26
Cal Date: 01/13/2009 12:08
Run Date: 01/13/2009 15:55
File ID: EL.011309.155544
Percent Solid: 85.3

Analyte	CAS. Number	Result	Qual	RL	MDL
Lead, Total	7439-92-1	126		23.1	5.77

Microbac

Leo 3/12/09

15

Sample Number: L08120612-15
Client ID: MR08-SS161-08D
Matrix: Soil
Workgroup Number: WG291645
Collect Date: 12/18/2008 14:00
Sample Tag: 01

PrePrep Method: NONE
Prep Method: 7471A
Analytical Method: 7471A
Analyst: ADC
Dilution: 1
Units: mg/kg

Instrument: HYDRA
Prep Date: 12/23/2008 06:44
Cal Date: 12/31/2008 14:32
Run Date: 12/31/2008 16:10
File ID: HY.123108.161003
Percent Solid: 85.3

Analyte	CAS. Number	Result	Qual	RL	MDL
Mercury, Total	7439-97-6	0.151		0.116	0.0233

Microbac

lcw 3/12/09

16

Sample Number: L08120612-16
Client ID: MR08-IS161-1-1.5-08D
Matrix: Soil
Workgroup Number: WG291701
Collect Date: 12/18/2008 14:10
Sample Tag: 01

PrePrep Method: NONE
Prep Method: 3051
Analytical Method: 6010B
Analyst: KHR
Dilution: 1
Units: mg/kg

Instrument: IRIS-ICP
Prep Date: 12/23/2008 08:55
Cal Date: 01/05/2009 10:22
Run Date: 01/05/2009 17:48
File ID: IR.010509.174800
Percent Solid: 88.5

Analyte	CAS. Number	Result	Qual	RL	MDL
Silver, Total	7440-22-4	0.273	J	0.850	0.213
Barium, Total	7440-39-3	5.24		0.425	0.0850
Cadmium, Total	7440-43-9		U	0.170	0.0425
Chromium, Total	7440-47-3	2.89 J		0.850	0.102

MSL

U Undetected; the analyte was analyzed for, but not detected.
J Estimated ; the analyte concentration was less than the low standard (LOQ)

Microbac

fw 3/12/09

16

Sample Number: L08120612-16
Client ID: MR08-IS161-1-1.5-08D
Matrix: Soil
Workgroup Number: WG291664
Collect Date: 12/18/2008 14:10
Sample Tag: 01

PrePrep Method: NONE
Prep Method: 3051
Analytical Method: 6020
Analyst: JYH
Dilution: 1
Units: mg/kg

Instrument: ELAN-ICP
Prep Date: 12/23/2008 06:26
Cal Date: 12/31/2008 11:37
Run Date: 01/01/2009 00:25
File ID: EL.010109.002529
Percent Solid: 88.5

Analyte	CAS. Number	Result	Qual	RL	MDL
Arsenic, Total	7440-38-2	0.571		0.332	0.0829
Lead, Total	7439-92-1	4.81		0.442	0.111
Selenium, Total	7782-49-2	0.152	J	0.442	0.111

J Estimated ; the analyte concentration was less than the low standard (LOQ)

Microbac

KW
3/12/09

16

Sample Number: L08120612-16
Client ID: MR08-IS161-1-1.5-08D
Matrix: Soil
Workgroup Number: WG291645
Collect Date: 12/18/2008 14:10
Sample Tag: 01

PrePrep Method: NONE
Prep Method: 7471A
Analytical Method: 7471A
Analyst: ADC
Dilution: 1
Units: mg/kg

Instrument: HYDRA
Prep Date: 12/23/2008 06:44
Cal Date: 12/31/2008 14:32
Run Date: 12/31/2008 16:15
File ID: HY.123108.161546
Percent Solid: 88.5

Analyte	CAS. Number	Result	Qual	RL	MDL
Mercury, Total	7439-97-6		U	0.111	0.0223

U Undetected; the analyte was analyzed for, but not detected.

Microbac

Geo 3/12/09

17

Sample Number: L08120612-17
Client ID: MR08-SS178-08D
Matrix: Soil
Workgroup Number: WG291701
Collect Date: 12/18/2008 14:40
Sample Tag: 01

PrePrep Method: NONE
Prep Method: 3051
Analytical Method: 6010B
Analyst: KHR
Dilution: 1
Units: mg/kg

Instrument: IRIS-ICP
Prep Date: 12/23/2008 08:56
Cal Date: 01/05/2009 10:22
Run Date: 01/05/2009 17:54
File ID: IR.010509.175400
Percent Solid: 94.8

Analyte	CAS. Number	Result	Qual	RL	MDL	
Silver, Total	7440-22-4	0.264	J	0.781	0.195	
Barium, Total	7440-39-3	3.10		0.390	0.0781	
Cadmium, Total	7440-43-9	0.678 J		0.156	0.0390	MSH
Chromium, Total	7440-47-3	2.36 J		0.781	0.0937	MSL

J Estimated ; the analyte concentration was less than the low standard (LOQ)

Microbac

31 3/12/09

17

Sample Number: L08120612-17
Client ID: MR08-SS178-08D
Matrix: Soil
Workgroup Number: WG291664
Collect Date: 12/18/2008 14:40
Sample Tag: 01

PrePrep Method: NONE
Prep Method: 3051
Analytical Method: 6020
Analyst: JYH
Dilution: 1
Units: mg/kg

Instrument: ELAN-ICP
Prep Date: 12/23/2008 06:26
Cal Date: 12/31/2008 11:37
Run Date: 01/01/2009 00:30
File ID: EL.010109.003054
Percent Solid: 94.8

Analyte	CAS. Number	Result	Qual	RL	MDL
Arsenic, Total	7440-38-2	4.17		0.315	0.0788
Lead, Total	7439-92-1	4.94		0.420	0.105
Selenium, Total	7782-49-2	0.385	J	0.420	0.105

J Estimated ; the analyte concentration was less than the low standard (LOQ)

Microbac

896

RCW 3/12/09

17

Sample Number: L08120612-17
Client ID: MR08-SS178-08D
Matrix: Soil
Workgroup Number: WG291645
Collect Date: 12/18/2008 14:40
Sample Tag: 01

PrePrep Method: NONE
Prep Method: 7471A
Analytical Method: 7471A
Analyst: ADC
Dilution: 1
Units: mg/kg

Instrument: HYDRA
Prep Date: 12/23/2008 06:44
Cal Date: 12/31/2008 14:32
Run Date: 12/31/2008 16:17
File ID: HY.123108.161742
Percent Solid: 94.8

Analyte	CAS. Number	Result	Qual	RL	MDL
Mercury, Total	7439-97-6		U	0.105	0.0210

U Undetected; the analyte was analyzed for, but not detected.

Microbac

flw 3/12/09

18

Sample Number: L08120612-18
Client ID: MR08-SS178D-08D
Matrix: Soil
Workgroup Number: WG291701
Collect Date: 12/18/2008 14:40
Sample Tag: 01

PrePrep Method: NONE
Prep Method: 3051
Analytical Method: 6010B
Analyst: KHR
Dilution: 1
Units: mg/kg

Instrument: IRIS-ICP
Prep Date: 12/23/2008 08:57
Cal Date: 01/05/2009 10:22
Run Date: 01/05/2009 18:00
File ID: IR.010509.180000
Percent Solid: 93.1

Analyte	CAS. Number	Result	Qual	RL	MDL	
Silver, Total	7440-22-4	0.510	J	0.778	0.195	
Barium, Total	7440-39-3	3.92		0.389	0.0778	
Cadmium, Total	7440-43-9	0.674 J		0.156	0.0389	MSH
Chromium, Total	7440-47-3	2.57 J		0.778	0.0934	MSL

J Estimated ; the analyte concentration was less than the low standard (LOQ)

Microbac

RW
32 3/12/09

18

Sample Number: L08120612-18
Client ID: MR08-SS178D-08D
Matrix: Soil
Workgroup Number: WG291664
Collect Date: 12/18/2008 14:40
Sample Tag: 01

PrePrep Method: NONE
Prep Method: 3051
Analytical Method: 6020
Analyst: JYH
Dilution: 1
Units: mg/kg

Instrument: ELAN-ICP
Prep Date: 12/23/2008 06:26
Cal Date: 12/31/2008 11:37
Run Date: 01/01/2009 00:36
File ID: EL.010109.003619
Percent Solid: 93.1

Analyte	CAS. Number	Result	Qual	RL	MDL
Arsenic, Total	7440-38-2	5.26		0.320	0.0801
Lead, Total	7439-92-1	10.5		0.427	0.107
Selenium, Total	7782-49-2	0.399	J	0.427	0.107

J Estimated ; the analyte concentration was less than the low standard (LOQ)

Microbac

897 MW 3/12/09

18

Sample Number: L08120612-18
Client ID: MR08-SS178D-08D
Matrix: Soil
Workgroup Number: WG291645
Collect Date: 12/18/2008 14:40
Sample Tag: 01

PrePrep Method: NONE
Prep Method: 7471A
Analytical Method: 7471A
Analyst: ADC
Dilution: 1
Units: mg/kg

Instrument: HYDRA
Prep Date: 12/23/2008 06:44
Cal Date: 12/31/2008 14:32
Run Date: 12/31/2008 16:19
File ID: HY.123108.161926
Percent Solid: 93.1

Analyte	CAS. Number	Result	Qual	RL	MDL
Mercury, Total	7439-97-6		U	0.103	0.0205

U Undetected; the analyte was analyzed for, but not detected.

Microbac

lee
3/12/09

19

Sample Number: L08120612-19
Client ID: MR08-IS178-4-5-08D
Matrix: Soil
Workgroup Number: WG291701
Collect Date: 12/18/2008 14:50
Sample Tag: 01

PrePrep Method: NONE
Prep Method: 3051
Analytical Method: 6010B
Analyst: KHR
Dilution: 1
Units: mg/kg

Instrument: IRIS-ICP
Prep Date: 12/23/2008 08:58
Cal Date: 01/05/2009 10:22
Run Date: 01/05/2009 18:07
File ID: IR.010509.180700
Percent Solid: 83.9

Analyte	CAS. Number	Result	Qual	RL	MDL
Silver, Total	7440-22-4	0.255	J	0.850	0.213
Barium, Total	7440-39-3	6.07		0.425	0.0850
Cadmium, Total	7440-43-9		U	0.170	0.0425
Chromium, Total	7440-47-3	1.64 J		0.850	0.102

MSL

U Undetected; the analyte was analyzed for, but not detected.
J Estimated ; the analyte concentration was less than the low standard (LOQ)

Microbac

QW
3/12/09

19

Sample Number: L08120612-19
Client ID: MR08-IS178-4-5-08D
Matrix: Soil
Workgroup Number: WG291664
Collect Date: 12/18/2008 14:50
Sample Tag: 01

PrePrep Method: NONE
Prep Method: 3051
Analytical Method: 6020
Analyst: JYH
Dilution: 1
Units: mg/kg

Instrument: ELAN-ICP
Prep Date: 12/23/2008 06:26
Cal Date: 12/31/2008 11:37
Run Date: 01/01/2009 00:41
File ID: EL.010109.004145
Percent Solid: 83.9

Analyte	CAS. Number	Result	Qual	RL	MDL
Arsenic, Total	7440-38-2	0.285	J	0.352	0.0880
Lead, Total	7439-92-1	2.61		0.469	0.117
Selenium, Total	7782-49-2		U	0.469	0.117

U Undetected; the analyte was analyzed for, but not detected.
J Estimated ; the analyte concentration was less than the low standard (LOQ)

Microbac

898 lw 3/12/09

19

Sample Number: L08120612-19
Client ID: MR08-IS178-4-5-08D
Matrix: Soil
Workgroup Number: WG291645
Collect Date: 12/18/2008 14:50
Sample Tag: 01

PrePrep Method: NONE
Prep Method: 7471A
Analytical Method: 7471A
Analyst: ADC
Dilution: 1
Units: mg/kg

Instrument: HYDRA
Prep Date: 12/23/2008 06:44
Cal Date: 12/31/2008 14:32
Run Date: 12/31/2008 16:21
File ID: HY.123108.162113
Percent Solid: 83.9

Analyte	CAS. Number	Result	Qual	RL	MDL
Mercury, Total	7439-97-6		U	0.115	0.0231

U Undetected; the analyte was analyzed for, but not detected.

Microbac

lee 3/12/09

20

Sample Number: L08120612-20
Client ID: MR08-IS178D-4-5-08D
Matrix: Soil
Workgroup Number: WG291701
Collect Date: 12/18/2008 14:50
Sample Tag: 01

PrePrep Method: NONE
Prep Method: 3051
Analytical Method: 6010B
Analyst: KHR
Dilution: 1
Units: mg/kg

Instrument: IRIS-ICP
Prep Date: 12/23/2008 08:58
Cal Date: 01/05/2009 10:22
Run Date: 01/05/2009 18:13
File ID: IR.010509.181300
Percent Solid: 84.8

Analyte	CAS. Number	Result	Qual	RL	MDL
Silver, Total	7440-22-4		U	0.848	0.212
Barium, Total	7440-39-3	7.08		0.424	0.0848
Cadmium, Total	7440-43-9		U	0.170	0.0424
Chromium, Total	7440-47-3	1.76 J		0.848	0.102

MSL

U Undetected; the analyte was analyzed for, but not detected.

Microbac

3/12/09

20

Sample Number: L08120612-20
Client ID: MR08-IS178D-4-5-08D
Matrix: Soil
Workgroup Number: WG291664
Collect Date: 12/18/2008 14:50
Sample Tag: 01

PrePrep Method: NONE
Prep Method: 3051
Analytical Method: 6020
Analyst: JYH
Dilution: 1
Units: mg/kg

Instrument: ELAN-ICP
Prep Date: 12/23/2008 06:26
Cal Date: 12/31/2008 11:37
Run Date: 12/31/2008 22:11
File ID: EL.123108.221105
Percent Solid: 84.8

Analyte	CAS. Number	Result	Qual	RL	MDL
Arsenic, Total	7440-38-2	0.301	J	0.353	0.0882
Lead, Total	7439-92-1	2.78		0.471	0.118
Selenium, Total	7782-49-2	0.125	J	0.471	0.118

J Estimated ; the analyte concentration was less than the low standard (LOQ)

Microbac

JEW 3/12/09

20

Sample Number: L08120612-20
Client ID: MR08-IS178D-4-5-08D
Matrix: Soil
Workgroup Number: WG291645
Collect Date: 12/18/2008 14:50
Sample Tag: 01

PrePrep Method: NONE
Prep Method: 7471A
Analytical Method: 7471A
Analyst: ADC
Dilution: 1
Units: mg/kg

Instrument: HYDRA
Prep Date: 12/23/2008 06:44
Cal Date: 12/31/2008 14:32
Run Date: 12/31/2008 16:23
File ID: HY.123108.162317
Percent Solid: 84.8

Analyte	CAS. Number	Result	Qual	RL	MDL
Mercury, Total	7439-97-6		U	0.112	0.0224

U Undetected; the analyte was analyzed for, but not detected.

Microbac

MW 3/12/09

21

Sample Number: L08120612-21
Client ID: MR08-SS177-08D
Matrix: Soil
Workgroup Number: WG291701
Collect Date: 12/18/2008 15:30
Sample Tag: 01

PrePrep Method: NONE
Prep Method: 3051
Analytical Method: 6010B
Analyst: KHR
Dilution: 1
Units: mg/kg

Instrument: IRIS-ICP
Prep Date: 12/23/2008 08:59
Cal Date: 01/05/2009 10:22
Run Date: 01/05/2009 18:19
File ID: IR.010509.181900
Percent Solid: 84.4

Analyte	CAS. Number	Result	Qual	RL	MDL	
Silver, Total	7440-22-4	0.345	J	0.877	0.219	
Barium, Total	7440-39-3	11.7		0.438	0.0877	
Cadmium, Total	7440-43-9	0.0473 J	J	0.175	0.0438	MSH
Chromium, Total	7440-47-3	4.25 J		0.877	0.105	MSL

J Estimated ; the analyte concentration was less than the low standard (LOQ)

Microbac

KLW 3/12/09

21

Sample Number: L08120612-21
Client ID: MR08-SS177-08D
Matrix: Soil
Workgroup Number: WG291663
Collect Date: 12/18/2008 15:30
Sample Tag: 01

PrePrep Method: NONE
Prep Method: 3051
Analytical Method: 6020
Analyst: JYH
Dilution: 1
Units: mg/kg

Instrument: ELAN-ICP
Prep Date: 12/23/2008 08:07
Cal Date: 12/31/2008 11:37
Run Date: 12/31/2008 20:23
File ID: EL.123108.202349
Percent Solid: 84.4

Analyte	CAS. Number	Result	Qual	RL	MDL
Arsenic, Total	7440-38-2	0.553		0.355	0.0888
Lead, Total	7439-92-1	4.83 J		0.474	0.118
Selenium, Total	7782-49-2	0.354	J	0.474	0.118

MSH

J Estimated ; the analyte concentration was less than the low standard (LOQ)

Microbac

900

3/12/09

21

Sample Number:	L08120612-21	PrePrep Method:	NONE	Instrument:	HYDRA
Client ID:	MR08-SS177-08D	Prep Method:	7471A	Prep Date:	12/23/2008 09:10
Matrix:	Soil	Analytical Method:	7471A	Cal Date:	12/31/2008 14:32
Workgroup Number:	WG291647	Analyst:	ADC	Run Date:	12/31/2008 14:49
Collect Date:	12/18/2008 15:30	Dilution:	1	File ID:	HY.123108.144929
Sample Tag:	01	Units:	mg/kg	Percent Solid:	84.4

Analyte	CAS. Number	Result	Qual	RL	MDL
Mercury, Total	7439-97-6		U	0.109	0.0219

U Undetected; the analyte was analyzed for, but not detected.

Microbac

JLW 3/12/09

22

Sample Number: L08120612-22
Client ID: MR08-IS177-2-3-08D
Matrix: Soil
Workgroup Number: WG291701
Collect Date: 12/18/2008 15:40
Sample Tag: 01

PrePrep Method: NONE
Prep Method: 3051
Analytical Method: 6010B
Analyst: KHR
Dilution: 1
Units: mg/kg

Instrument: IRIS-ICP
Prep Date: 12/23/2008 09:00
Cal Date: 01/05/2009 10:22
Run Date: 01/05/2009 18:25
File ID: IR.010509.182500
Percent Solid: 85.4

Analyte	CAS. Number	Result	Qual	RL	MDL
Silver, Total	7440-22-4		U	0.879	0.220
Barium, Total	7440-39-3	9.96		0.440	0.0879
Cadmium, Total	7440-43-9		U	0.176	0.0440
Chromium, Total	7440-47-3	4.01 J		0.879	0.106

MSL

U Undetected; the analyte was analyzed for, but not detected.

Microbac

AW 1/31/2009

22

Sample Number: L08120612-22
Client ID: MR08-IS177-2-3-08D
Matrix: Soil
Workgroup Number: WG291663
Collect Date: 12/18/2008 15:40
Sample Tag: 01

PrePrep Method: NONE
Prep Method: 3051
Analytical Method: 6020
Analyst: JYH
Dilution: 1
Units: mg/kg

Instrument: ELAN-ICP
Prep Date: 12/23/2008 08:07
Cal Date: 12/31/2008 11:37
Run Date: 12/31/2008 20:29
File ID: EL.123108.202913
Percent Solid: 85.4

Analyte	CAS. Number	Result	Qual	RL	MDL
Arsenic, Total	7440-38-2	0.526		0.349	0.0872
Lead, Total	7439-92-1	6.01 J		0.465	0.116
Selenium, Total	7782-49-2	0.405	J	0.465	0.116

MSH

J Estimated ; the analyte concentration was less than the low standard (LOQ)

Microbac

901

CWO 3/12/09

22

Sample Number: L08120612-22
Client ID: MR08-IS177-2-3-08D
Matrix: Soil
Workgroup Number: WG291647
Collect Date: 12/18/2008 15:40
Sample Tag: 01

PrePrep Method: NONE
Prep Method: 7471A
Analytical Method: 7471A
Analyst: ADC
Dilution: 1
Units: mg/kg

Instrument: HYDRA
Prep Date: 12/23/2008 09:10
Cal Date: 12/31/2008 14:32
Run Date: 12/31/2008 14:51
File ID: HY.123108.145142
Percent Solid: 85.4

Analyte	CAS. Number	Result	Qual	RL	MDL
Mercury, Total	7439-97-6		U	0.111	0.0222

U Undetected; the analyte was analyzed for, but not detected.

Microbac

DW 3/12/09

23

Sample Number: L08120612-23
Client ID: MR08-EB01-121908
Matrix: Water
Workgroup Number: WG291466
Collect Date: 12/19/2008 07:10
Sample Tag: 01

PrePrep Method: NONE
Prep Method: 3005A
Analytical Method: 6010B
Analyst: SLP
Dilution: 1
Units: ug/L

Instrument: PE-ICP2
Prep Date: 12/23/2008 06:35
Cal Date: 01/05/2009 11:20
Run Date: 01/05/2009 13:30
File ID: P2.010509.133047

Analyte	CAS. Number	Result	Qual	RL	MDL
Barium, Total	7440-39-3		U	10.0	2.50
Cadmium, Total	7440-43-9		U	1.00	0.250
Chromium, Total	7440-47-3		U	10.0	2.50
Silver, Total	7440-22-4		U	6.00	2.00

U Undetected; the analyte was analyzed for, but not detected.

Microbac

MW
3/12/09

23

Sample Number: L08120612-23
Client ID: MR08-EB01-121908
Matrix: Water
Workgroup Number: WG291634
Collect Date: 12/19/2008 07:10
Sample Tag: 01

PrePrep Method: NONE
Prep Method: 3015
Analytical Method: 6020
Analyst: JYH
Dilution: 1
Units: ug/L

Instrument: ELAN-ICP
Prep Date: 12/23/2008 10:01
Cal Date: 01/03/2009 12:50
Run Date: 01/03/2009 14:18
File ID: EL.010309.141820

Analyte	CAS. Number	Result	Qual	RL	MDL
Arsenic, Total	7440-38-2		U	1.00	0.250
Lead, Total	7439-92-1		U	1.00	0.250
Selenium, Total	7782-49-2		U	2.00	0.500

U Undetected; the analyte was analyzed for, but not detected.

Microbac

902 JEW 3/12/09

23

Sample Number: L08120612-23
Client ID: MR08-EB01-121908
Matrix: Water
Workgroup Number: WG291352
Collect Date: 12/19/2008 07:10
Sample Tag: 01

PrePrep Method: NONE
Prep Method: 7470A
Analytical Method: 7470A
Analyst: ADC
Dilution: 1
Units: ug/L

Instrument: HYDRA
Prep Date: 12/23/2008 08:34
Cal Date: 12/29/2008 10:10
Run Date: 12/29/2008 11:02
File ID: HY.122908.110213

Analyte	CAS. Number	Result	Qual	RL	MDL
Mercury	7439-97-6	0.112	J	0.400	0.100

J Estimated ; the analyte concentration was less than the low standard (LOQ)

Microbac

QW
3/12/09

24

Sample Number: L08120612-24
Client ID: MR08-SS176-08D
Matrix: Soil
Workgroup Number: WG291701
Collect Date: 12/19/2008 08:20
Sample Tag: 01

PrePrep Method: NONE
Prep Method: 3051
Analytical Method: 6010B
Analyst: KHR
Dilution: 1
Units: mg/kg

Instrument: IRIS-ICP
Prep Date: 12/23/2008 09:01
Cal Date: 01/05/2009 10:22
Run Date: 01/05/2009 18:31
File ID: IR.010509.183100
Percent Solid: 83.5

Analyte	CAS. Number	Result	Qual	RL	MDL	
Silver, Total	7440-22-4	1.37		0.910	0.227	
Barium, Total	7440-39-3	29.1		0.455	0.0910	
Cadmium, Total	7440-43-9	4.50 J		0.182	0.0455	MSH
Chromium, Total	7440-47-3	31.4 J		0.910	0.109	MSL

Microbac

YW
3/12/09

24

Sample Number: L08120612-24
Client ID: MR08-SS176-08D
Matrix: Soil
Workgroup Number: WG291663
Collect Date: 12/19/2008 08:20
Sample Tag: DL01

PrePrep Method: NONE
Prep Method: 3051
Analytical Method: 6020
Analyst: WTD
Dilution: 100
Units: mg/kg

Instrument: ELAN-ICP
Prep Date: 12/23/2008 08:07
Cal Date: 01/13/2009 12:08
Run Date: 01/13/2009 15:12
File ID: EL.011309.151220
Percent Solid: 83.5

Analyte	CAS. Number	Result	Qual	RL	MDL
Lead, Total	7439-92-1	334 J		47.4	11.9

MSH

Microbac

903 MW 3/12/09

24

Sample Number: L08120612-24
Client ID: MR08-SS176-08D
Matrix: Soil
Workgroup Number: WG291663
Collect Date: 12/19/2008 08:20
Sample Tag: 01

PrePrep Method: NONE
Prep Method: 3051
Analytical Method: 6020
Analyst: JYH
Dilution: 1
Units: mg/kg

Instrument: ELAN-ICP
Prep Date: 12/23/2008 08:07
Cal Date: 12/31/2008 11:37
Run Date: 12/31/2008 20:34
File ID: EL.123108.203438
Percent Solid: 83.5

Analyte	CAS. Number	Result	Qual	RL	MDL
Arsenic, Total	7440-38-2	2.61		0.356	0.0889
Selenium, Total	7782-49-2	0.625		0.474	0.119

Microbac

904 lee 3/12/09

24

Sample Number: L08120612-24
Client ID: MR08-SS176-08D
Matrix: Soil
Workgroup Number: WG291647
Collect Date: 12/19/2008 08:20
Sample Tag: 01

PrePrep Method: NONE
Prep Method: 7471A
Analytical Method: 7471A
Analyst: ADC
Dilution: 1
Units: mg/kg

Instrument: HYDRA
Prep Date: 12/23/2008 09:10
Cal Date: 12/31/2008 14:28
Run Date: 12/31/2008 14:53
File ID: HY.123108.145323
Percent Solid: 83.5

Analyte	CAS. Number	Result	Qual	RL	MDL
Mercury, Total	7439-97-6	0.259		0.119	0.0238

Microbac

Jew
3/12/09

25

Sample Number: L08120612-25
Client ID: MR08-IS176-4-5-08D
Matrix: Soil
Workgroup Number: WG291701
Collect Date: 12/19/2008 08:30
Sample Tag: 01

PrePrep Method: NONE
Prep Method: 3051
Analytical Method: 6010B
Analyst: KHR
Dilution: 1
Units: mg/kg

Instrument: IRIS-ICP
Prep Date: 12/23/2008 09:03
Cal Date: 01/05/2009 10:22
Run Date: 01/05/2009 18:49
File ID: IR.010509.184900
Percent Solid: 93.0

Analyte	CAS. Number	Result	Qual	RL	MDL
Silver, Total	7440-22-4	0.267	J	0.802	0.200
Barium, Total	7440-39-3	1.44		0.401	0.0802
Cadmium, Total	7440-43-9	0.0637 J	~~J~~	0.160	0.0401
Chromium, Total	7440-47-3	1.23 J		0.802	0.0962

MSH
MSL

J Estimated ; the analyte concentration was less than the low standard (LOQ)

Microbac

KW
3/12/09

25

Sample Number: L08120612-25
Client ID: MR08-IS176-4-5-08D
Matrix: Soil
Workgroup Number: WG291663
Collect Date: 12/19/2008 08:30
Sample Tag: 01

PrePrep Method: NONE
Prep Method: 3051
Analytical Method: 6020
Analyst: JYH
Dilution: 1
Units: mg/kg

Instrument: ELAN-ICP
Prep Date: 12/23/2008 08:07
Cal Date: 12/31/2008 11:37
Run Date: 12/31/2008 21:03
File ID: EL.123108.210358
Percent Solid: 93.0

Analyte	CAS. Number	Result	Qual	RL	MDL
Arsenic, Total	7440-38-2		U	0.319	0.0797
Lead, Total	7439-92-1	3.42		0.425	0.106
Selenium, Total	7782-49-2		U	0.425	0.106

MSH

U Undetected; the analyte was analyzed for, but not detected.

Microbac

905

lw 3/12/09

25

Sample Number: L08120612-25
Client ID: MR08-IS176-4-5-08D
Matrix: Soil
Workgroup Number: WG291647
Collect Date: 12/19/2008 08:30
Sample Tag: 01

PrePrep Method: NONE
Prep Method: 7471A
Analytical Method: 7471A
Analyst: ADC
Dilution: 1
Units: mg/kg

Instrument: HYDRA
Prep Date: 12/23/2008 09:10
Cal Date: 12/31/2008 14:28
Run Date: 12/31/2008 14:55
File ID: HY.123108.145527
Percent Solid: 93.0

Analyte	CAS. Number	Result	Qual	RL	MDL
Mercury, Total	7439-97-6		U	0.104	0.0208

U Undetected; the analyte was analyzed for, but not detected.

Microbac

Lee 3/12/09

26

Sample Number: L08120612-26
Client ID: MR08-SS163-08D
Matrix: Soil
Workgroup Number: WG291701
Collect Date: 12/19/2008 09:10
Sample Tag: 01

PrePrep Method: NONE
Prep Method: 3051
Analytical Method: 6010B
Analyst: KHR
Dilution: 1
Units: mg/kg

Instrument: IRIS-ICP
Prep Date: 12/23/2008 09:04
Cal Date: 01/05/2009 10:22
Run Date: 01/05/2009 18:56
File ID: IR.010509.185600
Percent Solid: 84.7

Analyte	CAS. Number	Result	Qual	RL	MDL
Silver, Total	7440-22-4	0.320	J	0.892	0.223
Barium, Total	7440-39-3	17.0		0.446	0.0892
Cadmium, Total	7440-43-9	0.466 J		0.178	0.0446
Chromium, Total	7440-47-3	8.68 J		0.892	0.107

MSH
MSL

J Estimated ; the analyte concentration was less than the low standard (LOQ)

Microbac

lew 3/12/09

26

Sample Number:	L08120612-26	PrePrep Method:	NONE	Instrument:	ELAN-ICP
Client ID:	MR08-SS163-08D	Prep Method:	3051	Prep Date:	12/23/2008 08:07
Matrix:	Soil	Analytical Method:	6020	Cal Date:	12/31/2008 11:37
Workgroup Number:	WG291663	Analyst:	JYH	Run Date:	12/31/2008 21:09
Collect Date:	12/19/2008 09:10	Dilution:	1	File ID:	EL.123108.210923
Sample Tag:	01	Units:	mg/kg	Percent Solid:	84.7

Analyte	CAS. Number	Result	Qual	RL	MDL
Arsenic, Total	7440-38-2	1.11		0.351	0.0877
Selenium, Total	7782-49-2	0.347	J	0.468	0.117

J Estimated ; the analyte concentration was less than the low standard (LOQ)

Microbac

906 MW 3/12/09

26

Sample Number: L08120612-26
Client ID: MR08-SS163-08D
Matrix: Soil
Workgroup Number: WG291663
Collect Date: 12/19/2008 09:10
Sample Tag: DL01

PrePrep Method: NONE
Prep Method: 3051
Analytical Method: 6020
Analyst: WTD
Dilution: 10
Units: mg/kg

Instrument: ELAN-ICP
Prep Date: 12/23/2008 08:07
Cal Date: 01/13/2009 12:08
Run Date: 01/13/2009 15:30
File ID: EL.011309.153054
Percent Solid: 84.7

Analyte	CAS. Number	Result	Qual	RL	MDL
Lead, Total	7439-92-1	72.3 J		4.68	1.17

MSH

Microbac

907 AW 3/12/09

26

Sample Number: L08120612-26
Client ID: MR08-SS163-08D
Matrix: Soil
Workgroup Number: WG291647
Collect Date: 12/19/2008 09:10
Sample Tag: 01

PrePrep Method: NONE
Prep Method: 7471A
Analytical Method: 7471A
Analyst: ADC
Dilution: 1
Units: mg/kg

Instrument: HYDRA
Prep Date: 12/23/2008 09:10
Cal Date: 12/31/2008 14:32
Run Date: 12/31/2008 15:08
File ID: HY.123108.150817
Percent Solid: 84.7

Analyte	CAS. Number	Result	Qual	RL	MDL
Mercury, Total	7439-97-6	0.0411	J	0.111	0.0223

J Estimated ; the analyte concentration was less than the low standard (LOQ)

Microbac

2202

fee 31/12/09

27

Sample Number: L08120612-27
Client ID: MR08-IS163-4-5-08D
Matrix: Soil
Workgroup Number: WG291701
Collect Date: 12/19/2008 09:20
Sample Tag: 01

PrePrep Method: NONE
Prep Method: 3051
Analytical Method: 6010B
Analyst: KHR
Dilution: 1
Units: mg/kg

Instrument: IRIS-ICP
Prep Date: 12/23/2008 09:05
Cal Date: 01/05/2009 10:22
Run Date: 01/05/2009 19:02
File ID: IR.010509.190200
Percent Solid: 87.6

Analyte	CAS. Number	Result	Qual	RL	MDL
Silver, Total	7440-22-4		U	0.836	0.209
Barium, Total	7440-39-3	10.4		0.418	0.0836
Cadmium, Total	7440-43-9		U	0.167	0.0418
Chromium, Total	7440-47-3	7.44 J		0.836	0.100

MSL

U Undetected; the analyte was analyzed for, but not detected.

Microbac

Alw
41 ' 3/12/09

27

Sample Number: L08120612-27
Client ID: MR08-IS163-4-5-08D
Matrix: Soil
Workgroup Number: WG291663
Collect Date: 12/19/2008 09:20
Sample Tag: 01

PrePrep Method: NONE
Prep Method: 3051
Analytical Method: 6020
Analyst: JYH
Dilution: 1
Units: mg/kg

Instrument: ELAN-ICP
Prep Date: 12/23/2008 08:07
Cal Date: 12/31/2008 11:37
Run Date: 12/31/2008 21:14
File ID: EL.123108.211446
Percent Solid: 87.6

Analyte	CAS. Number	Result	Qual	RL	MDL
Arsenic, Total	7440-38-2	1.35		0.342	0.0854
Lead, Total	7439-92-1	5.21 J		0.456	0.114
Selenium, Total	7782-49-2	0.306	J	0.456	0.114

MSH

J Estimated ; the analyte concentration was less than the low standard (LOQ)

Microbac

908 3/12/09

27

Sample Number: L08120612-27
Client ID: MR08-IS163-4-5-08D
Matrix: Soil
Workgroup Number: WG291647
Collect Date: 12/19/2008 09:20
Sample Tag: 01

PrePrep Method: NONE
Prep Method: 7471A
Analytical Method: 7471A
Analyst: ADC
Dilution: 1
Units: mg/kg

Instrument: HYDRA
Prep Date: 12/23/2008 09:10
Cal Date: 12/31/2008 14:32
Run Date: 12/31/2008 15:10
File ID: HY.123108.151015
Percent Solid: 87.6

Analyte	CAS. Number	Result	Qual	RL	MDL
Mercury, Total	7439-97-6		U	0.110	0.0220

U Undetected; the analyte was analyzed for, but not detected.

Microbac

Dew 3/12/09

28

Sample Number: L08120612-28
Client ID: MR08-SS152-08D
Matrix: Soil
Workgroup Number: WG291701
Collect Date: 12/19/2008 09:55
Sample Tag: 01

PrePrep Method: NONE
Prep Method: 3051
Analytical Method: 6010B
Analyst: KHR
Dilution: 1
Units: mg/kg

Instrument: IRIS-ICP
Prep Date: 12/23/2008 09:06
Cal Date: 01/05/2009 10:22
Run Date: 01/05/2009 19:08
File ID: IR.010509.190800
Percent Solid: 87.2

Analyte	CAS. Number	Result	Qual	RL	MDL
Silver, Total	7440-22-4	0.327	J	0.832	0.208
Barium, Total	7440-39-3	15.3		0.416	0.0832
Cadmium, Total	7440-43-9	1.57 J		0.166	0.0416
Chromium, Total	7440-47-3	12.1 J		0.832	0.0998

MSH
MSL

J Estimated ; the analyte concentration was less than the low standard (LOQ)

Microbac

gw
3/12/09

28

Sample Number:	L08120612-28	PrePrep Method:	NONE	Instrument:	ELAN-ICP
Client ID:	MR08-SS152-08D	Prep Method:	3051	Prep Date:	12/23/2008 08:07
Matrix:	Soil	Analytical Method:	6020	Cal Date:	12/31/2008 11:37
Workgroup Number:	WG291663	Analyst:	JYH	Run Date:	12/31/2008 21:20
Collect Date:	12/19/2008 09:55	Dilution:	1	File ID:	EL.123108.212009
Sample Tag:	01	Units:	mg/kg	Percent Solid:	87.2

Analyte	CAS. Number	Result	Qual	RL	MDL
Arsenic, Total	7440-38-2	0.833		0.341	0.0853
Selenium, Total	7782-49-2	0.268	J	0.455	0.114

J Estimated ; the analyte concentration was less than the low standard (LOQ)

Microbac

909 3/12/09

28

Sample Number: L08120612-28
Client ID: MR08-SS152-08D
Matrix: Soil
Workgroup Number: WG291663
Collect Date: 12/19/2008 09:55
Sample Tag: DL01

PrePrep Method: NONE
Prep Method: 3051
Analytical Method: 6020
Analyst: WTD
Dilution: 20
Units: mg/kg

Instrument: ELAN-ICP
Prep Date: 12/23/2008 08:07
Cal Date: 01/13/2009 12:08
Run Date: 01/13/2009 15:37
File ID: EL.011309.153706
Percent Solid: 87.2

Analyte	CAS. Number	Result	Qual	RL	MDL
Lead, Total	7439-92-1	153 J		9.10	2.27

MSH

Microbac

910 lee 3/12/09

28

Sample Number: L08120612-28
Client ID: MR08-SS152-08D
Matrix: Soil
Workgroup Number: WG291647
Collect Date: 12/19/2008 09:55
Sample Tag: 01

PrePrep Method: NONE
Prep Method: 7471A
Analytical Method: 7471A
Analyst: ADC
Dilution: 1
Units: mg/kg

Instrument: HYDRA
Prep Date: 12/23/2008 09:10
Cal Date: 12/31/2008 14:32
Run Date: 12/31/2008 15:12
File ID: HY.123108.151201
Percent Solid: 87.2

Analyte	CAS. Number	Result	Qual	RL	MDL
Mercury, Total	7439-97-6	0.0577	J	0.115	0.0229

J Estimated ; the analyte concentration was less than the low standard (LOQ)

Microbac

2204 fee 3/12/09

29

Sample Number: L08120612-29
Client ID: MR08-IS152-4-5-08D
Matrix: Soil
Workgroup Number: WG291701
Collect Date: 12/19/2008 10:00
Sample Tag: 01

PrePrep Method: NONE
Prep Method: 3051
Analytical Method: 6010B
Analyst: KHR
Dilution: 1
Units: mg/kg

Instrument: IRIS-ICP
Prep Date: 12/23/2008 09:07
Cal Date: 01/05/2009 10:22
Run Date: 01/05/2009 19:14
File ID: IR.010509.191400
Percent Solid: 87.4

Analyte	CAS. Number	Result	Qual	RL	MDL
Silver, Total	7440-22-4	0.211	J	0.829	0.207
Barium, Total	7440-39-3	4.79		0.414	0.0829
Cadmium, Total	7440-43-9		U	0.166	0.0414
Chromium, Total	7440-47-3	6.24 J		0.829	0.0995

MSL

U Undetected; the analyte was analyzed for, but not detected.
J Estimated ; the analyte concentration was less than the low standard (LOQ)

Microbac

3/12/09

29

Sample Number: L08120612-29
Client ID: MR08-IS152-4-5-08D
Matrix: Soil
Workgroup Number: WG291663
Collect Date: 12/19/2008 10:00
Sample Tag: 01

PrePrep Method: NONE
Prep Method: 3051
Analytical Method: 6020
Analyst: JYH
Dilution: 1
Units: mg/kg

Instrument: ELAN-ICP
Prep Date: 12/23/2008 08:07
Cal Date: 12/31/2008 11:37
Run Date: 12/31/2008 21:25
File ID: EL.123108.212533
Percent Solid: 87.4

Analyte	CAS. Number	Result	Qual	RL	MDL
Arsenic, Total	7440-38-2	0.834		0.338	0.0844
Lead, Total	7439-92-1	6.49 J		0.450	0.113
Selenium, Total	7782-49-2	0.375	J	0.450	0.113

MSH

J Estimated ; the analyte concentration was less than the low standard (LOQ)

Microbac

911 fcw 3/12/09

29

Sample Number: L08120612-29
Client ID: MR08-IS152-4-5-08D
Matrix: Soil
Workgroup Number: WG291647
Collect Date: 12/19/2008 10:00
Sample Tag: 01

PrePrep Method: NONE
Prep Method: 7471A
Analytical Method: 7471A
Analyst: ADC
Dilution: 1
Units: mg/kg

Instrument: HYDRA
Prep Date: 12/23/2008 09:10
Cal Date: 12/31/2008 14:32
Run Date: 12/31/2008 15:13
File ID: HY.123108.151357
Percent Solid: 87.4

Analyte	CAS. Number	Result	Qual	RL	MDL
Mercury, Total	7439-97-6	0.111 ~~0.0339~~	U J	0.111	0.0222

BL

J Estimated ; the analyte concentration was less than the low standard (LOQ)

Microbac

Jew 3/12/09

30

Sample Number: L08120612-30
Client ID: MR08-SS139-08D
Matrix: Soil
Workgroup Number: WG291701
Collect Date: 12/19/2008 10:30
Sample Tag: 01

PrePrep Method: NONE
Prep Method: 3051
Analytical Method: 6010B
Analyst: KHR
Dilution: 1
Units: mg/kg

Instrument: IRIS-ICP
Prep Date: 12/23/2008 09:08
Cal Date: 01/05/2009 10:22
Run Date: 01/05/2009 19:20
File ID: IR.010509.192000
Percent Solid: 85.6

Analyte	CAS. Number	Result	Qual	RL	MDL	
Silver, Total	7440-22-4		U	0.897	0.224	
Barium, Total	7440-39-3	24.3		0.448	0.0897	
Cadmium, Total	7440-43-9	1.87 J		0.179	0.0448	MSH
Chromium, Total	7440-47-3	26.1 J		0.897	0.108	MSL

U Undetected; the analyte was analyzed for, but not detected.

Microbac

lw
3/12/09

30

Sample Number:	L08120612-30	PrePrep Method:	NONE	Instrument:	ELAN-ICP
Client ID:	MR08-SS139-08D	Prep Method:	3051	Prep Date:	12/23/2008 08:07
Matrix:	Soil	Analytical Method:	6020	Cal Date:	01/13/2009 12:08
Workgroup Number:	WG291663	Analyst:	WTD	Run Date:	01/13/2009 15:43
Collect Date:	12/19/2008 10:30	Dilution:	100	File ID:	EL.011309.154318
Sample Tag:	DL01	Units:	mg/kg	Percent Solid:	85.6

Analyte	CAS. Number	Result	Qual	RL	MDL
Lead, Total	7439-92-1	355 J		45.6	11.4

MSH

Microbac

912 | 3/12/09

30

Sample Number: L08120612-30
Client ID: MR08-SS139-08D
Matrix: Soil
Workgroup Number: WG291663
Collect Date: 12/19/2008 10:30
Sample Tag: 01

PrePrep Method: NONE
Prep Method: 3051
Analytical Method: 6020
Analyst: JYH
Dilution: 1
Units: mg/kg

Instrument: ELAN-ICP
Prep Date: 12/23/2008 08:07
Cal Date: 12/31/2008 11:37
Run Date: 12/31/2008 21:30
File ID: EL.123108.213057
Percent Solid: 85.6

Analyte	CAS. Number	Result	Qual	RL	MDL
Arsenic, Total	7440-38-2	9.44		0.342	0.0856
Selenium, Total	7782-49-2	0.323	J	0.456	0.114

J Estimated ; the analyte concentration was less than the low standard (LOQ)

Microbac

913 / 3/12/09

30

Sample Number: L08120612-30
Client ID: MR08-SS139-08D
Matrix: Soil
Workgroup Number: WG291647
Collect Date: 12/19/2008 10:30
Sample Tag: 01

PrePrep Method: NONE
Prep Method: 7471A
Analytical Method: 7471A
Analyst: ADC
Dilution: 1
Units: mg/kg

Instrument: HYDRA
Prep Date: 12/23/2008 09:10
Cal Date: 12/31/2008 14:32
Run Date: 12/31/2008 15:15
File ID: HY.123108.151549
Percent Solid: 85.6

Analyte	CAS. Number	Result	Qual	RL	MDL
Mercury, Total	7439-97-6	0.0379	J	0.114	0.0228

J Estimated ; the analyte concentration was less than the low standard (LOQ)

Microbac

2206 lee 3/12/09

31

Sample Number: L08120612-31
Client ID: MR08-SS139D-08D
Matrix: Soil
Workgroup Number: WG291701
Collect Date: 12/19/2008 10:30
Sample Tag: 01

PrePrep Method: NONE
Prep Method: 3051
Analytical Method: 6010B
Analyst: KHR
Dilution: 1
Units: mg/kg

Instrument: IRIS-ICP
Prep Date: 12/23/2008 09:09
Cal Date: 01/05/2009 10:22
Run Date: 01/05/2009 19:26
File ID: IR.010509.192600
Percent Solid: 85.6

Analyte	CAS. Number	Result	Qual	RL	MDL
Silver, Total	7440-22-4	0.489	J	0.863	0.216
Barium, Total	7440-39-3	21.8		0.432	0.0863
Cadmium, Total	7440-43-9	1.75 J		0.173	0.0432
Chromium, Total	7440-47-3	32.2 J		0.863	0.104

MSH
MSL

J Estimated ; the analyte concentration was less than the low standard (LOQ)

Microbac

45 3/12/09

31

Sample Number:	L08120612-31	PrePrep Method:	NONE	Instrument:	ELAN-ICP
Client ID:	MR08-SS139D-08D	Prep Method:	3051	Prep Date:	12/23/2008 08:07
Matrix:	Soil	Analytical Method:	6020	Cal Date:	12/31/2008 11:37
Workgroup Number:	WG291663	Analyst:	JYH	Run Date:	12/31/2008 21:36
Collect Date:	12/19/2008 10:30	Dilution:	1	File ID:	EL.123108.213621
Sample Tag:	01	Units:	mg/kg	Percent Solid:	85.6

Analyte	CAS. Number	Result	Qual	RL	MDL
Arsenic, Total	7440-38-2	6.47		0.343	0.0858
Selenium, Total	7782-49-2	0.405	J	0.457	0.114

J Estimated ; the analyte concentration was less than the low standard (LOQ)

Microbac

914 MW 3/12/09

31

Sample Number: L08120612-31
Client ID: MR08-SS139D-08D
Matrix: Soil
Workgroup Number: WG291663
Collect Date: 12/19/2008 10:30
Sample Tag: DL01

PrePrep Method: NONE
Prep Method: 3051
Analytical Method: 6020
Analyst: WTD
Dilution: 100
Units: mg/kg

Instrument: ELAN-ICP
Prep Date: 12/23/2008 08:07
Cal Date: 01/13/2009 12:08
Run Date: 01/13/2009 15:49
File ID: EL.011309.154931
Percent Solid: 85.6

Analyte	CAS. Number	Result	Qual	RL	MDL
Lead, Total	7439-92-1	411 J		45.7	11.4

MSH

Microbac

915 MEJ 3/12/09

31

Sample Number: L08120612-31
Client ID: MR08-SS139D-08D
Matrix: Soil
Workgroup Number: WG291647
Collect Date: 12/19/2008 10:30
Sample Tag: 01

PrePrep Method: NONE
Prep Method: 7471A
Analytical Method: 7471A
Analyst: ADC
Dilution: 1
Units: mg/kg

Instrument: HYDRA
Prep Date: 12/23/2008 09:10
Cal Date: 12/31/2008 14:32
Run Date: 12/31/2008 15:17
File ID: HY.123108.151750
Percent Solid: 85.6

Analyte	CAS. Number	Result	Qual	RL	MDL
Mercury, Total	7439-97-6	0.114 ~~0.0291~~	U J	0.114	0.0229

BL

J Estimated ; the analyte concentration was less than the low standard (LOQ)

Microbac

2207 (Loe) 3/12/09

32

Sample Number: L08120612-32
Client ID: MR08-IS139-.5-1.5-08D
Matrix: Soil
Workgroup Number: WG291704
Collect Date: 12/19/2008 10:55
Sample Tag: 01

PrePrep Method: NONE
Prep Method: 3051
Analytical Method: 6010B
Analyst: KHR
Dilution: 1
Units: mg/kg

Instrument: IRIS-ICP
Prep Date: 12/29/2008 12:20
Cal Date: 01/05/2009 10:22
Run Date: 01/05/2009 12:42
File ID: IR.010509.124200
Percent Solid: 87.8

Analyte	CAS. Number	Result	Qual	RL	MDL
Silver, Total	7440-22-4	0.225	J	0.813	0.203
Barium, Total	7440-39-3	6.51		0.406	0.0813
Cadmium, Total	7440-43-9	0.0744	J	0.163	0.0406
Chromium, Total	7440-47-3	2.65		0.813	0.0975

J Estimated ; the analyte concentration was less than the low standard (LOQ)

Microbac

fw 3/12/09

32

Sample Number: L08120612-32
Client ID: MR08-IS139-.5-1.5-08D
Matrix: Soil
Workgroup Number: WG291663
Collect Date: 12/19/2008 10:55
Sample Tag: 01

PrePrep Method: NONE
Prep Method: 3051
Analytical Method: 6020
Analyst: JYH
Dilution: 1
Units: mg/kg

Instrument: ELAN-ICP
Prep Date: 12/23/2008 08:07
Cal Date: 12/31/2008 11:37
Run Date: 12/31/2008 21:41
File ID: EL.123108.214145
Percent Solid: 87.8

Analyte	CAS. Number	Result	Qual	RL	MDL
Arsenic, Total	7440-38-2	0.408		0.338	0.0844
Lead, Total	7439-92-1	8.07 J		0.450	0.113
Selenium, Total	7782-49-2	0.445	J	0.450	0.113

MSH

J Estimated ; the analyte concentration was less than the low standard (LOQ)

Microbac

916 / 3/12/09

32

Sample Number: L08120612-32
Client ID: MR08-IS139-.5-1.5-08D
Matrix: Soil
Workgroup Number: WG291647
Collect Date: 12/19/2008 10:55
Sample Tag: 01

PrePrep Method: NONE
Prep Method: 7471A
Analytical Method: 7471A
Analyst: ADC
Dilution: 1
Units: mg/kg

Instrument: HYDRA
Prep Date: 12/23/2008 09:10
Cal Date: 12/31/2008 14:32
Run Date: 12/31/2008 15:19
File ID: HY.123108.151933
Percent Solid: 87.8

Analyte	CAS. Number	Result	Qual	RL	MDL
Mercury, Total	7439-97-6		U	0.108	0.0216

U Undetected; the analyte was analyzed for, but not detected.

Microbac

2208 JEW 3/12/09

33

Sample Number: L08120612-33
Client ID: MR08-IS139D-.5-1.5-08D
Matrix: Soil
Workgroup Number: WG291704
Collect Date: 12/19/2008 10:55
Sample Tag: 01

PrePrep Method: NONE
Prep Method: 3051
Analytical Method: 6010B
Analyst: KHR
Dilution: 1
Units: mg/kg

Instrument: IRIS-ICP
Prep Date: 12/29/2008 12:20
Cal Date: 01/05/2009 10:22
Run Date: 01/05/2009 13:56
File ID: IR.010509.135600
Percent Solid: 87.4

Analyte	CAS. Number	Result	Qual	RL	MDL
Silver, Total	7440-22-4	0.304	J	0.786	0.196
Barium, Total	7440-39-3	4.84		0.393	0.0786
Cadmium, Total	7440-43-9		U	0.157	0.0393
Chromium, Total	7440-47-3	2.46		0.786	0.0943

U Undetected; the analyte was analyzed for, but not detected.
J Estimated ; the analyte concentration was less than the low standard (LOQ)

Microbac

QEW
47 3/12/09

33

Sample Number: L08120612-33
Client ID: MR08-IS139D-.5-1.5-08D
Matrix: Soil
Workgroup Number: WG291663
Collect Date: 12/19/2008 10:55
Sample Tag: 01

PrePrep Method: NONE
Prep Method: 3051
Analytical Method: 6020
Analyst: JYH
Dilution: 1
Units: mg/kg

Instrument: ELAN-ICP
Prep Date: 12/23/2008 08:07
Cal Date: 12/31/2008 11:37
Run Date: 12/31/2008 20:07
File ID: EL.123108.200737
Percent Solid: 87.4

Analyte	CAS. Number	Result	Qual	RL	MDL
Arsenic, Total	7440-38-2	0.294	J	0.343	0.0857
Lead, Total	7439-92-1	4.94 J		0.457	0.114
Selenium, Total	7782-49-2	0.312	J	0.457	0.114

NSH

J Estimated ; the analyte concentration was less than the low standard (LOQ)

Microbac

MW 3/12/09

33

Sample Number: L08120612-33
Client ID: MR08-IS139D-.5-1.5-08D
Matrix: Soil
Workgroup Number: WG291647
Collect Date: 12/19/2008 10:55
Sample Tag: 01

PrePrep Method: NONE
Prep Method: 7471A
Analytical Method: 7471A
Analyst: ADC
Dilution: 1
Units: mg/kg

Instrument: HYDRA
Prep Date: 12/23/2008 09:10
Cal Date: 12/31/2008 14:32
Run Date: 12/31/2008 15:21
File ID: HY.123108.152117
Percent Solid: 87.4

Analyte	CAS. Number	Result	Qual	RL	MDL
Mercury, Total	7439-97-6		U	0.107	0.0215

U Undetected; the analyte was analyzed for, but not detected.

Microbac

2209

Jew 3/12/09

ENVIRONMENTAL
Data Services, Inc.

METALS

USEPA Region IV - Level IV Review

Site: MCB Camp Lejeune, TO-09 SDG #: L08120643

Client: CH2M HILL, Inc., Virginia Beach, Virginia Date: March 12, 2009

Laboratory: Microbac Laboratories, Inc., Marietta, Ohio Reviewer: Nancy Weaver

EDS ID	Client Sample ID	Laboratory Sample ID	Matrix
1	MR08-SS167-08D	L08120643-01	Soil
2	MR08-IS167-2-3-08D	L08120643-02	Soil
3	MR08-SS172-08D	L08120643-03	Soil
4	MR08-IS172-1-2-08D	L08120643-04	Soil
5	MR08-SS191-08D	L08120643-05	Soil
6	MR08-IS191-2-3-08D	L08120643-06	Soil
7	MR08-SS190-08D	L08120643-07	Soil
8	MR08-IS190-1-2-08D	L08120643-08	Soil
9	MR08-SS189-08D	L08120643-09	Soil
10	MR08-SS189D-08D	L08120643-10	Soil
11	MR08-IS189-3-4-08D	L08120643-11	Soil
12	MR08-IS189D-3-4-08D	L08120643-12	Soil
13	MR08-EB01-122108	L08120643-13	Soil
14	MR08-SS199-08D	L08120643-14	Soil
15	MR08-SS199D-08D	L08120643-15	Soil
16	MR08-IS199-1-2-08D	L08120643-16	Soil
17	MR08-IS199D-1-2-08D	L08120643-17	Soil
18	MR08-SS198-0810	L08120643-18	Soil
19	MR08-IS198-5-6-08D	L08120643-19	Soil
20	MR08-SS197-08D	L08120643-20	Soil

The USEPA "Contract Laboratory Program National Functional Guidelines for Inorganic Data Review," October 2004, and professional judgement were used in evaluating the data in this summary report.

Holding Times - All samples were prepared and analyzed within 28 days for mercury and 180 days for all other metals.

Calibration - The ICV and CCV %R values were acceptable.

Method and Calibration Blanks - The method blanks were free of contamination.

Field and Equipment Blank - Field QC results are summarized below.

Blank ID	Compound	Conc. ug/L	Action Level ug/L	Qualifier	Affected Samples
MR08-EB01-122108	None - ND	-	-	-	-
MR08-FB1120608	None - ND	-	-	-	-

ICP Interference Check Sample - All %R values were acceptable.

MS/MSD - The MS/MSD sample exhibited acceptable %R and RPD values.

LCS - The LCS samples exhibited acceptable %R values.

ICP Serial Dilution - The ICP serial dilution sample exhibited acceptable %D values.

Field Duplicates - Field duplicate results are summarized below.

Compound	MR08-SS189-08D mg/kg	MR08-SS189D-08D mg/kg	RPD	Qualifier
Silver	0.332	0.447	30%	None
Barium	4.04	4.03	0%	None
Cadmium	0.413	0.462	11%	None
Chromium	5.69	5.68	0%	None
Arsenic	1.19	0.892	29%	None
Lead	1.76	2.02	14%	None
Selenium	0.595	0.180	107%	None

Compound	MR08-IS189-3-4-08D mg/kg	MR08-IS189D-3-4-08D mg/kg	RPD	Qualifier
Barium	3.38	3.31	2%	None
Chromium	1.92	2.25	16%	None
Arsenic	0.750	0.705	6%	None
Lead	2.30	2.10	9%	None

Compound	MR08-SS199-08D mg/kg	MR08-SS199D-08D mg/kg	RPD	Qualifier
Silver	0.372	0.376	1%	None
Barium	5.94	4.01	39%	None
Cadmium	1.83	0.927	66%	None
Chromium	6.80	5.36	24%	None
Arsenic	1.06	1.18	4%	None
Lead	31.9	31.0	3%	None
Selenium	0.439	0.333	27%	None

Compound	MR08-IS199-1-2-08D mg/kg	MR08-IS199D-1-2-08D mg/kg	RPD	Qualifier
Silver	0.809 U	0.359	NC	None
Barium	11.2	13.7	20%	None
Cadmium	0.216	0.229	6%	None
Chromium	3.47	3.94	13%	None
Arsenic	0.813	0.670	19%	None
Lead	30.0	18.0	50%	None
Selenium	0.230	0.208	10%	None

Compound Quantitation - No discrepancies were identified.

Report Number: L08120643

Report Date : January 12, 2009

Sample Number:	L08120643-01	PrePrep Method:	NONE	Instrument:	IRIS-ICP
Client ID:	MR08-SS167-08D	Prep Method:	3051	Prep Date:	12/29/2008 10:22
Matrix:	Soil	Analytical Method:	6010B	Cal Date:	01/06/2009 09:53
Workgroup Number:	WG291809	Analyst:	KHR	Run Date:	01/06/2009 12:02
Collect Date:	12/20/2008 12:55	Dilution:	1	File ID:	IR.010609.120200
Sample Tag:	01	Units:	mg/kg	Percent Solid:	91.0

Analyte	CAS. Number	Result	Qual	RL	MDL
Silver, Total	7440-22-4		U	0.836	0.209
Barium, Total	7440-39-3	8.86		0.418	0.0836
Cadmium, Total	7440-43-9	3.12		0.167	0.0418
Chromium, Total	7440-47-3	7.24		0.836	0.100

U Undetected; the analyte was analyzed for, but not detected.

Microbac

12 LLW 3/12/09

Sample Number: L08120643-01
Client ID: MR08-SS167-08D
Matrix: Soil
Workgroup Number: WG291683
Collect Date: 12/20/2008 12:55
Sample Tag: 01

PrePrep Method: NONE
Prep Method: 3051
Analytical Method: 6020
Analyst: JYH
Dilution: 1
Units: mg/kg

Instrument: ELAN-ICP
Prep Date: 12/29/2008 07:10
Cal Date: 01/03/2009 12:50
Run Date: 01/04/2009 02:00
File ID: EL.010409.020037
Percent Solid: 91.0

Analyte	CAS. Number	Result	Qual	RL	MDL
Arsenic, Total	7440-38-2	0.915		0.321	0.0802
Lead, Total	7439-92-1	37.6		0.428	0.107
Selenium, Total	7782-49-2	0.217	J	0.428	0.107

J Estimated ; the analyte concentration was less than the low standard (LOQ)

Microbac

545 lw 3/12/09

Report Number: L08120643

Report Date : January 12, 2009

Sample Number:	L08120643-01	PrePrep Method:	NONE	Instrument:	HYDRA
Client ID:	MR08-SS167-08D	Prep Method:	7471A	Prep Date:	12/29/2008 07:29
Matrix:	Soil	Analytical Method:	7471A	Cal Date:	01/05/2009 10:02
Workgroup Number:	WG291714	Analyst:	ADC	Run Date:	01/05/2009 10:28
Collect Date:	12/20/2008 12:55	Dilution:	1	File ID:	HY.010509.102852
Sample Tag:	01	Units:	mg/kg	Percent Solid:	91.0

Analyte	CAS. Number	Result	Qual	RL	MDL
Mercury, Total	7439-97-6		U	0.105	0.0211

U Undetected; the analyte was analyzed for, but not detected.

Microbac

1647 lew 3/12/09

2

Sample Number: L08120643-02
Client ID: MR08-IS167-2-3-08D
Matrix: Soil
Workgroup Number: WG291809
Collect Date: 12/20/2008 13:00
Sample Tag: 01

PrePrep Method: NONE
Prep Method: 3051
Analytical Method: 6010B
Analyst: KHR
Dilution: 1
Units: mg/kg

Instrument: IRIS-ICP
Prep Date: 12/29/2008 10:22
Cal Date: 01/06/2009 09:53
Run Date: 01/06/2009 12:27
File ID: IR.010609.122700
Percent Solid: 88.5

Analyte	CAS. Number	Result	Qual	RL	MDL
Silver, Total	7440-22-4		U	0.828	0.207
Barium, Total	7440-39-3	3.85		0.414	0.0828
Cadmium, Total	7440-43-9	0.0430	J	0.166	0.0414
Chromium, Total	7440-47-3	0.560	J	0.828	0.0993

U Undetected; the analyte was analyzed for, but not detected.
J Estimated ; the analyte concentration was less than the low standard (LOQ)

Microbac

QW 3/12/09

2

Sample Number: L08120643-02
Client ID: MR08-IS167-2-3-08D
Matrix: Soil
Workgroup Number: WG291683
Collect Date: 12/20/2008 13:00
Sample Tag: 01

PrePrep Method: NONE
Prep Method: 3051
Analytical Method: 6020
Analyst: JYH
Dilution: 1
Units: mg/kg

Instrument: ELAN-ICP
Prep Date: 12/29/2008 07:10
Cal Date: 01/03/2009 12:50
Run Date: 01/04/2009 02:06
File ID: EL.010409.020602
Percent Solid: 88.5

Analyte	CAS. Number	Result	Qual	RL	MDL
Arsenic, Total	7440-38-2		U	0.336	0.0841
Lead, Total	7439-92-1	0.851		0.448	0.112
Selenium, Total	7782-49-2		U	0.448	0.112

U Undetected; the analyte was analyzed for, but not detected.

Microbac

KW 3/12/09

2

Sample Number:	L08120643-02	PrePrep Method:	NONE	Instrument:	HYDRA
Client ID:	MR08-IS167-2-3-08D	Prep Method:	7471A	Prep Date:	12/29/2008 07:30
Matrix:	Soil	Analytical Method:	7471A	Cal Date:	01/05/2009 10:02
Workgroup Number:	WG291714	Analyst:	ADC	Run Date:	01/05/2009 10:30
Collect Date:	12/20/2008 13:00	Dilution:	1	File ID:	HY.010509.103040
Sample Tag:	01	Units:	mg/kg	Percent Solid:	88.5

Analyte	CAS. Number	Result	Qual	RL	MDL
Mercury, Total	7439-97-6		U	0.112	0.0224

U Undetected; the analyte was analyzed for, but not detected.

Microbac

1648 lew 3/1/2009

3

Sample Number:	L08120643-03	PrePrep Method:	NONE	Instrument:	IRIS-ICP
Client ID:	MR08-SS172-08D	Prep Method:	3051	Prep Date:	12/29/2008 10:23
Matrix:	Soil	Analytical Method:	6010B	Cal Date:	01/06/2009 09:53
Workgroup Number:	WG291809	Analyst:	KHR	Run Date:	01/06/2009 12:33
Collect Date:	12/20/2008 13:40	Dilution:	1	File ID:	IR.010609.123300
Sample Tag:	01	Units:	mg/kg	Percent Solid:	90.9

Analyte	CAS. Number	Result	Qual	RL	MDL
Silver, Total	7440-22-4	0.472	J	0.811	0.203
Barium, Total	7440-39-3	5.41		0.405	0.0811
Cadmium, Total	7440-43-9	1.08		0.162	0.0405
Chromium, Total	7440-47-3	5.61		0.811	0.0973

J Estimated ; the analyte concentration was less than the low standard (LOQ)

Microbac

14 RW 1/12/09

3

Sample Number: L08120643-03
Client ID: MR08-SS172-08D
Matrix: Soil
Workgroup Number: WG291683
Collect Date: 12/20/2008 13:40
Sample Tag: DL01

PrePrep Method: NONE
Prep Method: 3051
Analytical Method: 6020
Analyst: JYH
Dilution: 10
Units: mg/kg

Instrument: ELAN-ICP
Prep Date: 12/29/2008 07:10
Cal Date: 01/05/2009 11:17
Run Date: 01/05/2009 13:50
File ID: EL.010509.135011
Percent Solid: 90.9

Analyte	CAS. Number	Result	Qual	RL	MDL
Lead, Total	7439-92-1	53.1		4.28	1.07

Microbac

LEW
547 3/12/09

3.

Sample Number:	L08120643-03	PrePrep Method:	NONE	Instrument:	ELAN-ICP
Client ID:	MR08-SS172-08D	Prep Method:	3051	Prep Date:	12/29/2008 07:10
Matrix:	Soil	Analytical Method:	6020	Cal Date:	01/03/2009 12:50
Workgroup Number:	WG291683	Analyst:	JYH	Run Date:	01/04/2009 02:11
Collect Date:	12/20/2008 13:40	Dilution:	1	File ID:	EL.010409.021126
Sample Tag:	01	Units:	mg/kg	Percent Solid:	90.9

Analyte	CAS. Number	Result	Qual	RL	MDL
Arsenic, Total	7440-38-2	1.20		0.321	0.0803
Selenium, Total	7782-49-2	0.275	J	0.428	0.107

J Estimated ; the analyte concentration was less than the low standard (LOQ)

Microbac

MW 3/12/09

3

Sample Number:	L08120643-03	PrePrep Method:	NONE	Instrument:	HYDRA
Client ID:	MR08-SS172-08D	Prep Method:	7471A	Prep Date:	12/29/2008 07:30
Matrix:	Soil	Analytical Method:	7471A	Cal Date:	01/05/2009 10:02
Workgroup Number:	WG291714	Analyst:	ADC	Run Date:	01/05/2009 10:33
Collect Date:	12/20/2008 13:40	Dilution:	1	File ID:	HY.010509.103307
Sample Tag:	01	Units:	mg/kg	Percent Solid:	90.9

Analyte	CAS. Number	Result	Qual	RL	MDL
Mercury, Total	7439-97-6		U	0.105	0.0211

U Undetected; the analyte was analyzed for, but not detected.

Microbac

1649 lew 3/12/09

4

Sample Number: L08120643-04
Client ID: MR08-IS172-1-2-08D
Matrix: Soil
Workgroup Number: WG291809
Collect Date: 12/20/2008 13:45
Sample Tag: 01

PrePrep Method: NONE
Prep Method: 3051
Analytical Method: 6010B
Analyst: KHR
Dilution: 1
Units: mg/kg

Instrument: IRIS-ICP
Prep Date: 12/29/2008 10:23
Cal Date: 01/06/2009 09:53
Run Date: 01/06/2009 12:39
File ID: IR.010609.123900
Percent Solid: 93.1

Analyte	CAS. Number	Result	Qual	RL	MDL
Silver, Total	7440-22-4	0.337	J	0.785	0.196
Barium, Total	7440-39-3	3.72		0.393	0.0785
Cadmium, Total	7440-43-9	0.383		0.157	0.0393
Chromium, Total	7440-47-3	2.52		0.785	0.0943

J Estimated ; the analyte concentration was less than the low standard (LOQ)

Microbac

MW 3/12/09

4

Sample Number: L08120643-04
Client ID: MR08-IS172-1-2-08D
Matrix: Soil
Workgroup Number: WG291683
Collect Date: 12/20/2008 13:45
Sample Tag: 01

PrePrep Method: NONE
Prep Method: 3051
Analytical Method: 6020
Analyst: JYH
Dilution: 1
Units: mg/kg

Instrument: ELAN-ICP
Prep Date: 12/29/2008 07:10
Cal Date: 01/03/2009 12:50
Run Date: 01/04/2009 02:40
File ID: EL.010409.024042
Percent Solid: 93.1

Analyte	CAS. Number	Result	Qual	RL	MDL
Arsenic, Total	7440-38-2	0.466		0.315	0.0789
Lead, Total	7439-92-1	7.56		0.421	0.105
Selenium, Total	7782-49-2		U	0.421	0.105

U Undetected; the analyte was analyzed for, but not detected.

Microbac

hw 3/12/09

4

Sample Number: L08120643-04
Client ID: MR08-IS172-1-2-08D
Matrix: Soil
Workgroup Number: WG291714
Collect Date: 12/20/2008 13:45
Sample Tag: 01

PrePrep Method: NONE
Prep Method: 7471A
Analytical Method: 7471A
Analyst: ADC
Dilution: 1
Units: mg/kg

Instrument: HYDRA
Prep Date: 12/29/2008 07:32
Cal Date: 01/05/2009 10:02
Run Date: 01/05/2009 10:40
File ID: HY.010509.104055
Percent Solid: 93.1

Analyte	CAS. Number	Result	Qual	RL	MDL
Mercury, Total	7439-97-6		U	0.105	0.0210

U Undetected; the analyte was analyzed for, but not detected.

Microbac

1650 3/12/09

5

Sample Number: L08120643-05
Client ID: MR08-SS191-08D
Matrix: Soil
Workgroup Number: WG291809
Collect Date: 12/20/2008 14:15
Sample Tag: 01

PrePrep Method: NONE
Prep Method: 3051
Analytical Method: 6010B
Analyst: KHR
Dilution: 1
Units: mg/kg

Instrument: IRIS-ICP
Prep Date: 12/29/2008 10:24
Cal Date: 01/06/2009 09:53
Run Date: 01/06/2009 12:45
File ID: IR.010609.124500
Percent Solid: 87.6

Analyte	CAS. Number	Result	Qual	RL	MDL
Silver, Total	7440-22-4	0.285	J	0.859	0.215
Barium, Total	7440-39-3	15.8		0.429	0.0859
Cadmium, Total	7440-43-9	2.16		0.172	0.0429
Chromium, Total	7440-47-3	8.37		0.859	0.103

J Estimated ; the analyte concentration was less than the low standard (LOQ)

Microbac

16 3/12/09

5

Sample Number: L08120643-05
Client ID: MR08-SS191-08D
Matrix: Soil
Workgroup Number: WG291683
Collect Date: 12/20/2008 14:15
Sample Tag: 01

PrePrep Method: NONE
Prep Method: 3051
Analytical Method: 6020
Analyst: JYH
Dilution: 1
Units: mg/kg

Instrument: ELAN-ICP
Prep Date: 12/29/2008 07:10
Cal Date: 01/03/2009 12:50
Run Date: 01/04/2009 02:46
File ID: EL.010409.024607
Percent Solid: 87.6

Analyte	CAS. Number	Result	Qual	RL	MDL
Arsenic, Total	7440-38-2	0.863		0.343	0.0856
Lead, Total	7439-92-1	39.6		0.457	0.114
Selenium, Total	7782-49-2	0.290	J	0.457	0.114

J Estimated ; the analyte concentration was less than the low standard (LOQ)

Microbac

550

fw 1/12/09

5

Sample Number:	L08120643-05	PrePrep Method:	NONE	Instrument:	HYDRA
Client ID:	MR08-SS191-08D	Prep Method:	7471A	Prep Date:	12/29/2008 07:32
Matrix:	Soil	Analytical Method:	7471A	Cal Date:	01/05/2009 10:02
Workgroup Number:	WG291714	Analyst:	ADC	Run Date:	01/05/2009 10:42
Collect Date:	12/20/2008 14:15	Dilution:	1	File ID:	HY.010509.104241
Sample Tag:	01	Units:	mg/kg	Percent Solid:	87.6

Analyte	CAS. Number	Result	Qual	RL	MDL
Mercury, Total	7439-97-6		U	0.112	0.0225

U Undetected; the analyte was analyzed for, but not detected.

Microbac

1651 lew 3/12/09

6

Sample Number: L08120643-06
Client ID: MR08-IS191-2-3-08D
Matrix: Soil
Workgroup Number: WG291809
Collect Date: 12/20/2008 14:20
Sample Tag: 01

PrePrep Method: NONE
Prep Method: 3051
Analytical Method: 6010B
Analyst: KHR
Dilution: 1
Units: mg/kg

Instrument: IRIS-ICP
Prep Date: 12/29/2008 10:25
Cal Date: 01/06/2009 09:53
Run Date: 01/06/2009 13:03
File ID: IR.010609.130300
Percent Solid: 91.2

Analyte	CAS. Number	Result	Qual	RL	MDL
Silver, Total	7440-22-4		U	0.805	0.201
Barium, Total	7440-39-3	5.62		0.403	0.0805
Cadmium, Total	7440-43-9		U	0.161	0.0403
Chromium, Total	7440-47-3	3.13		0.805	0.0967

U Undetected; the analyte was analyzed for, but not detected.

Microbac

MW
17 3/12/09

6

Sample Number: L08120643-06
Client ID: MR08-IS191-2-3-08D
Matrix: Soil
Workgroup Number: WG291683
Collect Date: 12/20/2008 14:20
Sample Tag: 01

PrePrep Method: NONE
Prep Method: 3051
Analytical Method: 6020
Analyst: JYH
Dilution: 1
Units: mg/kg

Instrument: ELAN-ICP
Prep Date: 12/29/2008 07:10
Cal Date: 01/03/2009 12:50
Run Date: 01/04/2009 02:51
File ID: EL.010409.025132
Percent Solid: 91.2

Analyte	CAS. Number	Result	Qual	RL	MDL
Arsenic, Total	7440-38-2	0.119	J	0.319	0.0797
Lead, Total	7439-92-1	1.36		0.425	0.106
Selenium, Total	7782-49-2		U	0.425	0.106

U Undetected; the analyte was analyzed for, but not detected.
J Estimated ; the analyte concentration was less than the low standard (LOQ)

Microbac

lew 3/12/09

6

Sample Number:	L08120643-06	PrePrep Method:	NONE	Instrument:	HYDRA
Client ID:	MR08-IS191-2-3-08D	Prep Method:	7471A	Prep Date:	12/29/2008 07:33
Matrix:	Soil	Analytical Method:	7471A	Cal Date:	01/05/2009 10:02
Workgroup Number:	WG291714	Analyst:	ADC	Run Date:	01/05/2009 10:48
Collect Date:	12/20/2008 14:20	Dilution:	1	File ID:	HY.010509.104822
Sample Tag:	01	Units:	mg/kg	Percent Solid:	91.2

Analyte	CAS. Number	Result	Qual	RL	MDL
Mercury, Total	7439-97-6		U	0.108	0.0217

U Undetected; the analyte was analyzed for, but not detected.

Microbac

AW 3/12/09

7

Sample Number: L08120643-07
Client ID: MR08-SS190-08D
Matrix: Soil
Workgroup Number: WG291809
Collect Date: 12/20/2008 15:00
Sample Tag: 01

PrePrep Method: NONE
Prep Method: 3051
Analytical Method: 6010B
Analyst: KHR
Dilution: 1
Units: mg/kg

Instrument: IRIS-ICP
Prep Date: 12/29/2008 10:25
Cal Date: 01/06/2009 09:53
Run Date: 01/06/2009 13:09
File ID: IR.010609.130900
Percent Solid: 95.3

Analyte	CAS. Number	Result	Qual	RL	MDL
Silver, Total	7440-22-4	0.364	J	0.777	0.194
Barium, Total	7440-39-3	4.48		0.389	0.0777
Cadmium, Total	7440-43-9	0.353		0.155	0.0389
Chromium, Total	7440-47-3	4.68		0.777	0.0933

J Estimated ; the analyte concentration was less than the low standard (LOQ)

Microbac

18 MW 3/12/09

7

Sample Number: L08120643-07
Client ID: MR08-SS190-08D
Matrix: Soil
Workgroup Number: WG291683
Collect Date: 12/20/2008 15:00
Sample Tag: 01

PrePrep Method: NONE
Prep Method: 3051
Analytical Method: 6020
Analyst: JYH
Dilution: 1
Units: mg/kg

Instrument: ELAN-ICP
Prep Date: 12/29/2008 07:10
Cal Date: 01/03/2009 12:50
Run Date: 01/04/2009 02:56
File ID: EL.010409.025658
Percent Solid: 95.3

Analyte	CAS. Number	Result	Qual	RL	MDL
Arsenic, Total	7440-38-2	0.775		0.311	0.0778
Lead, Total	7439-92-1	6.38		0.415	0.104
Selenium, Total	7782-49-2	0.232	J	0.415	0.104

J Estimated ; the analyte concentration was less than the low standard (LOQ)

Microbac

fw 3/12/09

7

Sample Number: L08120643-07
Client ID: MR08-SS190-08D
Matrix: Soil
Workgroup Number: WG291714
Collect Date: 12/20/2008 15:00
Sample Tag: 01

PrePrep Method: NONE
Prep Method: 7471A
Analytical Method: 7471A
Analyst: ADC
Dilution: 1
Units: mg/kg

Instrument: HYDRA
Prep Date: 12/29/2008 07:33
Cal Date: 01/05/2009 10:02
Run Date: 01/05/2009 10:50
File ID: HY.010509.105003
Percent Solid: 95.3

Analyte	CAS. Number	Result	Qual	RL	MDL
Mercury, Total	7439-97-6		U	0.103	0.0205

U Undetected; the analyte was analyzed for, but not detected.

Microbac

1653 llw 3/12/09

8

Sample Number: L08120643-08
Client ID: MR08-IS190-1-2-08D
Matrix: Soil
Workgroup Number: WG291809
Collect Date: 12/20/2008 15:10
Sample Tag: 01

PrePrep Method: NONE
Prep Method: 3051
Analytical Method: 6010B
Analyst: KHR
Dilution: 1
Units: mg/kg

Instrument: IRIS-ICP
Prep Date: 12/29/2008 10:26
Cal Date: 01/06/2009 09:53
Run Date: 01/06/2009 13:16
File ID: IR.010609.131600
Percent Solid: 93.2

Analyte	CAS. Number	Result	Qual	RL	MDL
Silver, Total	7440-22-4		U	0.816	0.204
Barium, Total	7440-39-3	4.10		0.408	0.0816
Cadmium, Total	7440-43-9		U	0.163	0.0408
Chromium, Total	7440-47-3	2.79		0.816	0.0979

U Undetected; the analyte was analyzed for, but not detected.

Microbac

19 Lew 3/12/09

8

Sample Number: L08120643-08
Client ID: MR08-IS190-1-2-08D
Matrix: Soil
Workgroup Number: WG291683
Collect Date: 12/20/2008 15:10
Sample Tag: 01

PrePrep Method: NONE
Prep Method: 3051
Analytical Method: 6020
Analyst: JYH
Dilution: 1
Units: mg/kg

Instrument: ELAN-ICP
Prep Date: 12/29/2008 07:10
Cal Date: 01/03/2009 12:50
Run Date: 01/04/2009 03:02
File ID: EL.010409.030224
Percent Solid: 93.2

Analyte	CAS. Number	Result	Qual	RL	MDL
Arsenic, Total	7440-38-2	0.271	J	0.321	0.0801
Lead, Total	7439-92-1	1.92		0.427	0.107
Selenium, Total	7782-49-2		U	0.427	0.107

U Undetected; the analyte was analyzed for, but not detected.
J Estimated ; the analyte concentration was less than the low standard (LOQ)

Microbac

lew 3/12/09

8

Sample Number:	L08120643-08	PrePrep Method:	NONE	Instrument:	HYDRA
Client ID:	MR08-IS190-1-2-08D	Prep Method:	7471A	Prep Date:	12/29/2008 07:34
Matrix:	Soil	Analytical Method:	7471A	Cal Date:	01/05/2009 10:02
Workgroup Number:	WG291714	Analyst:	ADC	Run Date:	01/05/2009 10:51
Collect Date:	12/20/2008 15:10	Dilution:	1	File ID:	HY.010509.105147
Sample Tag:	01	Units:	mg/kg	Percent Solid:	93.2

Analyte	CAS. Number	Result	Qual	RL	MDL
Mercury, Total	7439-97-6		U	0.106	0.0212

U Undetected; the analyte was analyzed for, but not detected.

Microbac

MW 5/12/09

9

Sample Number: L08120643-09
Client ID: MR08-SS189-08D
Matrix: Soil
Workgroup Number: WG291809
Collect Date: 12/20/2008 15:30
Sample Tag: 01

PrePrep Method: NONE
Prep Method: 3051
Analytical Method: 6010B
Analyst: KHR
Dilution: 1
Units: mg/kg

Instrument: IRIS-ICP
Prep Date: 12/29/2008 10:27
Cal Date: 01/06/2009 09:53
Run Date: 01/06/2009 13:22
File ID: IR.010609.132200
Percent Solid: 96.1

Analyte	CAS. Number	Result	Qual	RL	MDL
Silver, Total	7440-22-4	0.332	J	0.784	0.196
Barium, Total	7440-39-3	4.04		0.392	0.0784
Cadmium, Total	7440-43-9	0.413		0.157	0.0392
Chromium, Total	7440-47-3	5.69		0.784	0.0941

J Estimated ; the analyte concentration was less than the low standard (LOQ)

Microbac

20 3/12/09

9

Sample Number:	L08120643-09	PrePrep Method:	NONE	Instrument:	ELAN-ICP
Client ID:	MR08-SS189-08D	Prep Method:	3051	Prep Date:	12/29/2008 07:10
Matrix:	Soil	Analytical Method:	6020	Cal Date:	01/03/2009 12:50
Workgroup Number:	WG291683	Analyst:	JYH	Run Date:	01/04/2009 03:07
Collect Date:	12/20/2008 15:30	Dilution:	1	File ID:	EL.010409.030750
Sample Tag:	01	Units:	mg/kg	Percent Solid:	96.1

Analyte	CAS. Number	Result	Qual	RL	MDL
Arsenic, Total	7440-38-2	1.19		0.312	0.0779
Lead, Total	7439-92-1	1.76		0.415	0.104
Selenium, Total	7782-49-2	0.595		0.415	0.104

Microbac

 fw 3/12/09

9

Sample Number:	L08120643-09	PrePrep Method:	NONE	Instrument:	HYDRA
Client ID:	MR08-SS189-08D	Prep Method:	7471A	Prep Date:	12/29/2008 07:34
Matrix:	Soil	Analytical Method:	7471A	Cal Date:	01/05/2009 10:02
Workgroup Number:	WG291714	Analyst:	ADC	Run Date:	01/05/2009 10:53
Collect Date:	12/20/2008 15:30	Dilution:	1	File ID:	HY.010509.105341
Sample Tag:	01	Units:	mg/kg	Percent Solid:	96.1

Analyte	CAS. Number	Result	Qual	RL	MDL
Mercury, Total	7439-97-6		U	0.0974	0.0195

U Undetected; the analyte was analyzed for, but not detected.

Microbac

1655

3/12/09

10

Sample Number:	L08120643-10	PrePrep Method:	NONE	Instrument:	IRIS-ICP
Client ID:	MR08-SS189D-08D	Prep Method:	3051	Prep Date:	12/29/2008 10:28
Matrix:	Soil	Analytical Method:	6010B	Cal Date:	01/06/2009 09:53
Workgroup Number:	WG291809	Analyst:	KHR	Run Date:	01/06/2009 13:28
Collect Date:	12/20/2008 15:30	Dilution:	1	File ID:	IR.010609.132800
Sample Tag:	01	Units:	mg/kg	Percent Solid:	96.0

Analyte	CAS. Number	Result	Qual	RL	MDL
Silver, Total	7440-22-4	0.477	J	0.787	0.197
Barium, Total	7440-39-3	4.03		0.393	0.0787
Cadmium, Total	7440-43-9	0.462		0.157	0.0393
Chromium, Total	7440-47-3	5.68		0.787	0.0944

J Estimated ; the analyte concentration was less than the low standard (LOQ)

Microbac

leo 3/12/09

10

Sample Number: L08120643-10
Client ID: MR08-SS189D-08D
Matrix: Soil
Workgroup Number: WG291683
Collect Date: 12/20/2008 15:30
Sample Tag: 01

PrePrep Method: NONE
Prep Method: 3051
Analytical Method: 6020
Analyst: JYH
Dilution: 1
Units: mg/kg

Instrument: ELAN-ICP
Prep Date: 12/29/2008 07:10
Cal Date: 01/03/2009 12:50
Run Date: 01/04/2009 03:13
File ID: EL.010409.031316
Percent Solid: 96.0

Analyte	CAS. Number	Result	Qual	RL	MDL
Arsenic, Total	7440-38-2	0.892		0.308	0.0769
Lead, Total	7439-92-1	2.02		0.410	0.103
Selenium, Total	7782-49-2	0.180	J	0.410	0.103

J Estimated ; the analyte concentration was less than the low standard (LOQ)

Microbac

555

3/12/09

10

Sample Number:	L08120643-10	PrePrep Method:	NONE	Instrument:	HYDRA
Client ID:	MR08-SS189D-08D	Prep Method:	7471A	Prep Date:	12/29/2008 07:34
Matrix:	Soil	Analytical Method:	7471A	Cal Date:	01/05/2009 10:02
Workgroup Number:	WG291714	Analyst:	ADC	Run Date:	01/05/2009 10:55
Collect Date:	12/20/2008 15:30	Dilution:	1	File ID:	HY.010509.105535
Sample Tag:	01	Units:	mg/kg	Percent Solid:	96.0

Analyte	CAS. Number	Result	Qual	RL	MDL
Mercury, Total	7439-97-6		U	0.0982	0.0196

U Undetected; the analyte was analyzed for, but not detected.

Microbac

MW 3/12/09

11

Sample Number: L08120643-11
Client ID: MR08-IS189-3-4-08D
Matrix: Soil
Workgroup Number: WG291809
Collect Date: 12/20/2008 15:40
Sample Tag: 01

PrePrep Method: NONE
Prep Method: 3051
Analytical Method: 6010B
Analyst: KHR
Dilution: 1
Units: mg/kg

Instrument: IRIS-ICP
Prep Date: 12/29/2008 10:29
Cal Date: 01/06/2009 09:53
Run Date: 01/06/2009 13:34
File ID: IR.010609.133400
Percent Solid: 91.8

Analyte	CAS. Number	Result	Qual	RL	MDL
Silver, Total	7440-22-4		U	0.810	0.203
Barium, Total	7440-39-3	3.38		0.405	0.0810
Cadmium, Total	7440-43-9		U	0.162	0.0405
Chromium, Total	7440-47-3	1.92		0.810	0.0972

U Undetected; the analyte was analyzed for, but not detected.

Microbac

3/12/09

11

Sample Number: L08120643-11
Client ID: MR08-IS189-3-4-08D
Matrix: Soil
Workgroup Number: WG291683
Collect Date: 12/20/2008 15:40
Sample Tag: 01

PrePrep Method: NONE
Prep Method: 3051
Analytical Method: 6020
Analyst: JYH
Dilution: 1
Units: mg/kg

Instrument: ELAN-ICP
Prep Date: 12/29/2008 07:10
Cal Date: 01/03/2009 12:50
Run Date: 01/04/2009 03:18
File ID: EL.010409.031843
Percent Solid: 91.8

Analyte	CAS. Number	Result	Qual	RL	MDL
Arsenic, Total	7440-38-2	0.750		0.320	0.0800
Lead, Total	7439-92-1	2.30		0.426	0.107
Selenium, Total	7782-49-2		U	0.426	0.107

U Undetected; the analyte was analyzed for, but not detected.

Microbac

MW 1/12/09

11

Sample Number: L08120643-11
Client ID: MR08-IS189-3-4-08D
Matrix: Soil
Workgroup Number: WG291714
Collect Date: 12/20/2008 15:40
Sample Tag: 01

PrePrep Method: NONE
Prep Method: 7471A
Analytical Method: 7471A
Analyst: ADC
Dilution: 1
Units: mg/kg

Instrument: HYDRA
Prep Date: 12/29/2008 07:35
Cal Date: 01/05/2009 10:02
Run Date: 01/05/2009 10:57
File ID: HY.010509.105730
Percent Solid: 91.8

Analyte	CAS. Number	Result	Qual	RL	MDL
Mercury, Total	7439-97-6		U	0.103	0.0206

U Undetected; the analyte was analyzed for, but not detected.

Microbac

1657 lew 3/12/09

12

Sample Number: L08120643-12
Client ID: MR08-IS189D-3-4-08D
Matrix: Soil
Workgroup Number: WG291809
Collect Date: 12/20/2008 15:40
Sample Tag: 01

PrePrep Method: NONE
Prep Method: 3051
Analytical Method: 6010B
Analyst: KHR
Dilution: 1
Units: mg/kg

Instrument: IRIS-ICP
Prep Date: 12/29/2008 10:29
Cal Date: 01/06/2009 09:53
Run Date: 01/06/2009 13:40
File ID: IR.010609.134000
Percent Solid: 90.9

Analyte	CAS. Number	Result	Qual	RL	MDL
Silver, Total	7440-22-4		U	0.837	0.209
Barium, Total	7440-39-3	3.31		0.418	0.0837
Cadmium, Total	7440-43-9		U	0.167	0.0418
Chromium, Total	7440-47-3	2.25		0.837	0.100

U Undetected; the analyte was analyzed for, but not detected.

Microbac

23 fw 3/12/09

12

Sample Number: L08120643-12
Client ID: MR08-IS189D-3-4-08D
Matrix: Soil
Workgroup Number: WG291683
Collect Date: 12/20/2008 15:40
Sample Tag: 01

PrePrep Method: NONE
Prep Method: 3051
Analytical Method: 6020
Analyst: JYH
Dilution: 1
Units: mg/kg

Instrument: ELAN-ICP
Prep Date: 12/29/2008 07:10
Cal Date: 01/03/2009 12:50
Run Date: 01/04/2009 03:24
File ID: EL.010409.032409
Percent Solid: 90.9

Analyte	CAS. Number	Result	Qual	RL	MDL
Arsenic, Total	7440-38-2	0.705		0.322	0.0804
Lead, Total	7439-92-1	2.10		0.429	0.107
Selenium, Total	7782-49-2		U	0.429	0.107

U Undetected; the analyte was analyzed for, but not detected.

Microbac

lew 3/12/09

12

Sample Number: L08120643-12
Client ID: MR08-IS189D-3-4-08D
Matrix: Soil
Workgroup Number: WG291714
Collect Date: 12/20/2008 15:40
Sample Tag: 01

PrePrep Method: NONE
Prep Method: 7471A
Analytical Method: 7471A
Analyst: ADC
Dilution: 1
Units: mg/kg

Instrument: HYDRA
Prep Date: 12/29/2008 07:35
Cal Date: 01/05/2009 10:02
Run Date: 01/05/2009 10:59
File ID: HY.010509.105946
Percent Solid: 90.9

Analyte	CAS. Number	Result	Qual	RL	MDL
Mercury, Total	7439-97-6		U	0.108	0.0216

U Undetected; the analyte was analyzed for, but not detected.

Microbac

1658

flw 3/12/09

13

Sample Number: L08120643-13
Client ID: MR08-EB01-122108
Matrix: Water
Workgroup Number: WG291502
Collect Date: 12/21/2008 08:00
Sample Tag: 01

PrePrep Method: NONE
Prep Method: 3005A
Analytical Method: 6010B
Analyst: SLP
Dilution: 1
Units: ug/L

Instrument: PE-ICP2
Prep Date: 12/29/2008 10:46
Cal Date: 01/05/2009 11:20
Run Date: 01/05/2009 18:15
File ID: P2.010509.181547

Analyte	CAS. Number	Result	Qual	RL	MDL
Barium, Total	7440-39-3		U	10.0	2.50
Cadmium, Total	7440-43-9		U	1.00	0.250
Chromium, Total	7440-47-3		U	10.0	2.50
Silver, Total	7440-22-4		U	6.00	2.00

U Undetected; the analyte was analyzed for, but not detected.

Microbac

24 3/12/09

13

Sample Number: L08120643-13
Client ID: MR08-EB01-122108
Matrix: Water
Workgroup Number: WG291525
Collect Date: 12/21/2008 08:00
Sample Tag: 01

PrePrep Method: NONE
Prep Method: 3015
Analytical Method: 6020
Analyst: JYH
Dilution: 1
Units: ug/L

Instrument: ELAN-ICP
Prep Date: 12/29/2008 07:08
Cal Date: 12/30/2008 13:23
Run Date: 12/30/2008 16:28
File ID: EL.123008.162841

Analyte	CAS. Number	Result	Qual	RL	MDL
Arsenic, Total	7440-38-2		U	1.00	0.250
Lead, Total	7439-92-1		U	1.00	0.250
Selenium, Total	7782-49-2		U	2.00	0.500

U Undetected; the analyte was analyzed for, but not detected.

Microbac

MW 3/12/09

13

Sample Number: L08120643-13
Client ID: MR08-EB01-122108
Matrix: Water
Workgroup Number: WG291953
Collect Date: 12/21/2008 08:00
Sample Tag: 01

PrePrep Method: NONE
Prep Method: 7470A
Analytical Method: 7470A
Analyst: ADC
Dilution: 1
Units: ug/L

Instrument: HYDRA
Prep Date: 01/07/2009 07:48
Cal Date: 01/08/2009 09:47
Run Date: 01/08/2009 10:49
File ID: HY.010809.104928

Analyte	CAS. Number	Result	Qual	RL	MDL
Mercury	7439-97-6		U	0.400	0.100

U Undetected; the analyte was analyzed for, but not detected.

Microbac

lew 3/12/09

14

Sample Number: L08120643-14
Client ID: MR08-SS199-08D
Matrix: Soil
Workgroup Number: WG291809
Collect Date: 12/21/2008 08:55
Sample Tag: 01

PrePrep Method: NONE
Prep Method: 3051
Analytical Method: 6010B
Analyst: KHR
Dilution: 1
Units: mg/kg

Instrument: IRIS-ICP
Prep Date: 12/29/2008 10:30
Cal Date: 01/06/2009 09:53
Run Date: 01/06/2009 13:46
File ID: IR.010609.134600
Percent Solid: 91.0

Analyte	CAS. Number	Result	Qual	RL	MDL
Silver, Total	7440-22-4	0.372	J	0.824	0.206
Barium, Total	7440-39-3	5.94		0.412	0.0824
Cadmium, Total	7440-43-9	1.83		0.165	0.0412
Chromium, Total	7440-47-3	6.80		0.824	0.0989

J Estimated ; the analyte concentration was less than the low standard (LOQ)

Microbac

25 RW 3/12/09

14

Sample Number:	L08120643-14	PrePrep Method:	NONE	Instrument:	ELAN-ICP
Client ID:	MR08-SS199-08D	Prep Method:	3051	Prep Date:	12/29/2008 07:10
Matrix:	Soil	Analytical Method:	6020	Cal Date:	01/03/2009 12:50
Workgroup Number:	WG291683	Analyst:	JYH	Run Date:	01/04/2009 03:29
Collect Date:	12/21/2008 08:55	Dilution:	1	File ID:	EL.010409.032933
Sample Tag:	01	Units:	mg/kg	Percent Solid:	91.0

Analyte	CAS. Number	Result	Qual	RL	MDL
Arsenic, Total	7440-38-2	1.06		0.328	0.0821
Lead, Total	7439-92-1	31.9		0.438	0.109
Selenium, Total	7782-49-2	0.439		0.438	0.109

Microbac

MW 3/12/09

14

Sample Number:	L08120643-14	PrePrep Method:	NONE	Instrument:	HYDRA
Client ID:	MR08-SS199-08D	Prep Method:	7471A	Prep Date:	12/29/2008 07:36
Matrix:	Soil	Analytical Method:	7471A	Cal Date:	01/05/2009 10:02
Workgroup Number:	WG291714	Analyst:	ADC	Run Date:	01/05/2009 11:01
Collect Date:	12/21/2008 08:55	Dilution:	1	File ID:	HY.010509.110148
Sample Tag:	01	Units:	mg/kg	Percent Solid:	91.0

Analyte	CAS. Number	Result	Qual	RL	MDL
Mercury, Total	7439-97-6		U	0.106	0.0212

U Undetected; the analyte was analyzed for, but not detected.

Microbac

1660 MW 3/12/09

15

Sample Number:	L08120643-15	PrePrep Method:	NONE	Instrument:	ELAN-ICP
Client ID:	MR08-SS199D-08D	Prep Method:	3051	Prep Date:	12/29/2008 07:10
Matrix:	Soil	Analytical Method:	6020	Cal Date:	01/03/2009 12:50
Workgroup Number:	WG291683	Analyst:	JYH	Run Date:	01/04/2009 03:48
Collect Date:	12/21/2008 08:55	Dilution:	1	File ID:	EL.010409.034800
Sample Tag:	01	Units:	mg/kg	Percent Solid:	91.0

Analyte	CAS. Number	Result	Qual	RL	MDL
Arsenic, Total	7440-38-2	1.18		0.319	0.0797
Lead, Total	7439-92-1	31.0		0.425	0.106
Selenium, Total	7782-49-2	0.333	J	0.425	0.106

J Estimated ; the analyte concentration was less than the low standard (LOQ)

Microbac

3/1/2009

15

Sample Number: L08120643-15
Client ID: MR08-SS199D-08D
Matrix: Soil
Workgroup Number: WG291809
Collect Date: 12/21/2008 08:55
Sample Tag: 01

PrePrep Method: NONE
Prep Method: 3051
Analytical Method: 6010B
Analyst: KHR
Dilution: 1
Units: mg/kg

Instrument: IRIS-ICP
Prep Date: 12/29/2008 10:30
Cal Date: 01/06/2009 09:53
Run Date: 01/06/2009 13:52
File ID: IR.010609.135200
Percent Solid: 91.0

Analyte	CAS. Number	Result	Qual	RL	MDL
Silver, Total	7440-22-4	0.376	J	0.813	0.203
Barium, Total	7440-39-3	4.01		0.406	0.0813
Cadmium, Total	7440-43-9	0.927		0.163	0.0406
Chromium, Total	7440-47-3	5.36		0.813	0.0976

J Estimated ; the analyte concentration was less than the low standard (LOQ)

Microbac

LW 3/12/09

15

Sample Number: L08120643-15
Client ID: MR08-SS199D-08D
Matrix: Soil
Workgroup Number: WG291714
Collect Date: 12/21/2008 08:55
Sample Tag: 01

PrePrep Method: NONE
Prep Method: 7471A
Analytical Method: 7471A
Analyst: ADC
Dilution: 1
Units: mg/kg

Instrument: HYDRA
Prep Date: 12/29/2008 07:36
Cal Date: 01/05/2009 10:02
Run Date: 01/05/2009 11:04
File ID: HY.010509.110411
Percent Solid: 91.0

Analyte	CAS. Number	Result	Qual	RL	MDL
Mercury, Total	7439-97-6		U	0.102	0.0203

U Undetected; the analyte was analyzed for, but not detected.

Microbac

1661

lw 3/12/09

16

Sample Number: L08120643-16
Client ID: MR08-IS199-1-2-08D
Matrix: Soil
Workgroup Number: WG291809
Collect Date: 12/21/2008 09:00
Sample Tag: 01

PrePrep Method: NONE
Prep Method: 3051
Analytical Method: 6010B
Analyst: KHR
Dilution: 1
Units: mg/kg

Instrument: IRIS-ICP
Prep Date: 12/29/2008 10:31
Cal Date: 01/06/2009 09:53
Run Date: 01/06/2009 13:58
File ID: IR.010609.135800
Percent Solid: 90.2

Analyte	CAS. Number	Result	Qual	RL	MDL
Silver, Total	7440-22-4		U	0.809	0.202
Barium, Total	7440-39-3	11.2		0.405	0.0809
Cadmium, Total	7440-43-9	0.216		0.162	0.0405
Chromium, Total	7440-47-3	3.47		0.809	0.0971

U Undetected; the analyte was analyzed for, but not detected.

Microbac

MW 3/12/09

16

Sample Number: L08120643-16
Client ID: MR08-IS199-1-2-08D
Matrix: Soil
Workgroup Number: WG291683
Collect Date: 12/21/2008 09:00
Sample Tag: 01

PrePrep Method: NONE
Prep Method: 3051
Analytical Method: 6020
Analyst: JYH
Dilution: 1
Units: mg/kg

Instrument: ELAN-ICP
Prep Date: 12/29/2008 07:10
Cal Date: 01/03/2009 12:50
Run Date: 01/04/2009 03:53
File ID: EL.010409.035324
Percent Solid: 90.2

Analyte	CAS. Number	Result	Qual	RL	MDL
Arsenic, Total	7440-38-2	0.813		0.326	0.0816
Lead, Total	7439-92-1	30.0		0.435	0.109
Selenium, Total	7782-49-2	0.230	J	0.435	0.109

J Estimated ; the analyte concentration was less than the low standard (LOQ)

Microbac

561 MW 3/12/09

16

Sample Number: L08120643-16
Client ID: MR08-IS199-1-2-08D
Matrix: Soil
Workgroup Number: WG291714
Collect Date: 12/21/2008 09:00
Sample Tag: 01

PrePrep Method: NONE
Prep Method: 7471A
Analytical Method: 7471A
Analyst: ADC
Dilution: 1
Units: mg/kg

Instrument: HYDRA
Prep Date: 12/29/2008 07:37
Cal Date: 01/05/2009 10:02
Run Date: 01/05/2009 11:06
File ID: HY.010509.110602
Percent Solid: 90.2

Analyte	CAS. Number	Result	Qual	RL	MDL
Mercury, Total	7439-97-6		U	0.108	0.0216

U Undetected; the analyte was analyzed for, but not detected.

Microbac

1662

JL 1/12/09

17

Sample Number: L08120643-17
Client ID: MR08-IS199D-1-2-08D
Matrix: Soil
Workgroup Number: WG291809
Collect Date: 12/21/2008 09:00
Sample Tag: 01

PrePrep Method: NONE
Prep Method: 3051
Analytical Method: 6010B
Analyst: KHR
Dilution: 1
Units: mg/kg

Instrument: IRIS-ICP
Prep Date: 12/29/2008 10:32
Cal Date: 01/06/2009 09:53
Run Date: 01/06/2009 14:17
File ID: IR.010609.141700
Percent Solid: 88.8

Analyte	CAS. Number	Result	Qual	RL	MDL
Silver, Total	7440-22-4	0.359	J	0.842	0.210
Barium, Total	7440-39-3	13.7		0.421	0.0842
Cadmium, Total	7440-43-9	0.229		0.168	0.0421
Chromium, Total	7440-47-3	3.94		0.842	0.101

J Estimated ; the analyte concentration was less than the low standard (LOQ)

Microbac

lew 1/12/09

17

Sample Number: L08120643-17
Client ID: MR08-IS199D-1-2-08D
Matrix: Soil
Workgroup Number: WG291683
Collect Date: 12/21/2008 09:00
Sample Tag: 01

PrePrep Method: NONE
Prep Method: 3051
Analytical Method: 6020
Analyst: JYH
Dilution: 1
Units: mg/kg

Instrument: ELAN-ICP
Prep Date: 12/29/2008 07:10
Cal Date: 01/03/2009 12:50
Run Date: 01/04/2009 03:58
File ID: EL.010409.035849
Percent Solid: 88.8

Analyte	CAS. Number	Result	Qual	RL	MDL
Arsenic, Total	7440-38-2	0.670		0.327	0.0818
Lead, Total	7439-92-1	18.0		0.436	0.109
Selenium, Total	7782-49-2	0.208	J	0.436	0.109

J Estimated ; the analyte concentration was less than the low standard (LOQ)

Microbac

562 3/12/09

17

Sample Number:	L08120643-17	PrePrep Method:	NONE	Instrument:	HYDRA
Client ID:	MR08-IS199D-1-2-08D	Prep Method:	7471A	Prep Date:	12/29/2008 07:37
Matrix:	Soil	Analytical Method:	7471A	Cal Date:	01/05/2009 10:02
Workgroup Number:	WG291714	Analyst:	ADC	Run Date:	01/05/2009 11:12
Collect Date:	12/21/2008 09:00	Dilution:	1	File ID:	HY.010509.111213
Sample Tag:	01	Units:	mg/kg	Percent Solid:	88.8

Analyte	CAS. Number	Result	Qual	RL	MDL
Mercury, Total	7439-97-6		U	0.111	0.0221

U Undetected; the analyte was analyzed for, but not detected.

Microbac

lew 3/12/09

18

Sample Number: L08120643-18
Client ID: MR08-SS198-0810
Matrix: Soil
Workgroup Number: WG291809
Collect Date: 12/21/2008 10:00
Sample Tag: 01

PrePrep Method: NONE
Prep Method: 3051
Analytical Method: 6010B
Analyst: KHR
Dilution: 1
Units: mg/kg

Instrument: IRIS-ICP
Prep Date: 12/29/2008 10:32
Cal Date: 01/06/2009 09:53
Run Date: 01/06/2009 14:23
File ID: IR.010609.142300
Percent Solid: 94.0

Analyte	CAS. Number	Result	Qual	RL	MDL
Silver, Total	7440-22-4	0.335	J	0.795	0.199
Barium, Total	7440-39-3	4.34		0.398	0.0795
Cadmium, Total	7440-43-9	0.543		0.159	0.0398
Chromium, Total	7440-47-3	5.77		0.795	0.0954

J Estimated ; the analyte concentration was less than the low standard (LOQ)

Microbac

MW 3/12/09

18

Sample Number: L08120643-18
Client ID: MR08-SS198-0810
Matrix: Soil
Workgroup Number: WG291683
Collect Date: 12/21/2008 10:00
Sample Tag: 01

PrePrep Method: NONE
Prep Method: 3051
Analytical Method: 6020
Analyst: JYH
Dilution: 1
Units: mg/kg

Instrument: ELAN-ICP
Prep Date: 12/29/2008 07:10
Cal Date: 01/03/2009 12:50
Run Date: 01/04/2009 04:04
File ID: EL.010409.040415
Percent Solid: 94.0

Analyte	CAS. Number	Result	Qual	RL	MDL
Arsenic, Total	7440-38-2	0.755		0.319	0.0797
Lead, Total	7439-92-1	1.20		0.425	0.106
Selenium, Total	7782-49-2	0.273	J	0.425	0.106

J Estimated ; the analyte concentration was less than the low standard (LOQ)

Microbac

563 3/12/09

18

Sample Number:	L08120643-18	PrePrep Method:	NONE	Instrument:	HYDRA
Client ID:	MR08-SS198-0810	Prep Method:	7471A	Prep Date:	12/29/2008 07:37
Matrix:	Soil	Analytical Method:	7471A	Cal Date:	01/05/2009 10:02
Workgroup Number:	WG291714	Analyst:	ADC	Run Date:	01/05/2009 11:14
Collect Date:	12/21/2008 10:00	Dilution:	1	File ID:	HY.010509.111417
Sample Tag:	01	Units:	mg/kg	Percent Solid:	94.0

Analyte	CAS. Number	Result	Qual	RL	MDL
Mercury, Total	7439-97-6		U	0.100	0.0200

U Undetected; the analyte was analyzed for, but not detected.

Microbac

QW
3/12/09

19

Sample Number: L08120643-19
Client ID: MR08-IS198-5-6-08
Matrix: Soil
Workgroup Number: WG291809
Collect Date: 12/21/2008 10:05
Sample Tag: 01

PrePrep Method: NONE
Prep Method: 3051
Analytical Method: 6010B
Analyst: KHR
Dilution: 1
Units: mg/kg

Instrument: IRIS-ICP
Prep Date: 12/29/2008 10:33
Cal Date: 01/06/2009 09:53
Run Date: 01/06/2009 14:29
File ID: IR.010609.142900
Percent Solid: 90.8

Analyte	CAS. Number	Result	Qual	RL	MDL
Silver, Total	7440-22-4		U	0.844	0.211
Barium, Total	7440-39-3	3.79		0.422	0.0844
Cadmium, Total	7440-43-9		U	0.169	0.0422
Chromium, Total	7440-47-3	2.46		0.844	0.101

U Undetected; the analyte was analyzed for, but not detected.

Microbac

Qw 1/12/09

19

Sample Number: L08120643-19
Client ID: MR08-IS198-5-6-08
Matrix: Soil
Workgroup Number: WG291683
Collect Date: 12/21/2008 10:05
Sample Tag: 01

PrePrep Method: NONE
Prep Method: 3051
Analytical Method: 6020
Analyst: JYH
Dilution: 1
Units: mg/kg

Instrument: ELAN-ICP
Prep Date: 12/29/2008 07:10
Cal Date: 01/03/2009 12:50
Run Date: 01/04/2009 04:09
File ID: EL.010409.040940
Percent Solid: 90.8

Analyte	CAS. Number	Result	Qual	RL	MDL
Arsenic, Total	7440-38-2	0.116	J	0.330	0.0824
Lead, Total	7439-92-1	1.58		0.440	0.110
Selenium, Total	7782-49-2		U	0.440	0.110

U Undetected; the analyte was analyzed for, but not detected.
J Estimated ; the analyte concentration was less than the low standard (LOQ)

Microbac

564 3/12/09

19

Sample Number:	L08120643-19	PrePrep Method:	NONE	Instrument:	HYDRA
Client ID:	MR08-IS198-5-6-08	Prep Method:	7471A	Prep Date:	12/29/2008 07:38
Matrix:	Soil	Analytical Method:	7471A	Cal Date:	01/05/2009 10:02
Workgroup Number:	WG291714	Analyst:	ADC	Run Date:	01/05/2009 11:16
Collect Date:	12/21/2008 10:05	Dilution:	1	File ID:	HY.010509.111622
Sample Tag:	01	Units:	mg/kg	Percent Solid:	90.8

Analyte	CAS. Number	Result	Qual	RL	MDL
Mercury, Total	7439-97-6		U	0.109	0.0218

U Undetected; the analyte was analyzed for, but not detected.

Microbac

QLW 3/12/09

20

Sample Number: L08120643-20
Client ID: MR08-SS197-08D
Matrix: Soil
Workgroup Number: WG291809
Collect Date: 12/21/2008 10:30
Sample Tag: 01

PrePrep Method: NONE
Prep Method: 3051
Analytical Method: 6010B
Analyst: KHR
Dilution: 1
Units: mg/kg

Instrument: IRIS-ICP
Prep Date: 12/29/2008 10:33
Cal Date: 01/06/2009 09:53
Run Date: 01/06/2009 14:35
File ID: IR.010609.143500
Percent Solid: 93.8

Analyte	CAS. Number	Result	Qual	RL	MDL
Silver, Total	7440-22-4	0.338	J	0.800	0.200
Barium, Total	7440-39-3	3.42		0.400	0.0800
Cadmium, Total	7440-43-9	0.429		0.160	0.0400
Chromium, Total	7440-47-3	5.84		0.800	0.0960

J Estimated ; the analyte concentration was less than the low standard (LOQ)

Microbac

 3/12/09

20

Sample Number:	L08120643-20	PrePrep Method:	NONE	Instrument:	ELAN-ICP
Client ID:	MR08-SS197-08D	Prep Method:	3051	Prep Date:	12/29/2008 07:10
Matrix:	Soil	Analytical Method:	6020	Cal Date:	01/03/2009 12:50
Workgroup Number:	WG291683	Analyst:	JYH	Run Date:	01/04/2009 04:15
Collect Date:	12/21/2008 10:30	Dilution:	1	File ID:	EL.010409.041506
Sample Tag:	01	Units:	mg/kg	Percent Solid:	93.8

Analyte	CAS. Number	Result	Qual	RL	MDL
Arsenic, Total	7440-38-2	1.07		0.319	0.0798
Lead, Total	7439-92-1	1.17		0.425	0.106
Selenium, Total	7782-49-2	0.226	J	0.425	0.106

J Estimated ; the analyte concentration was less than the low standard (LOQ)

Microbac

565 3/12/09

20

Sample Number:	L08120643-20	PrePrep Method:	NONE	Instrument:	HYDRA
Client ID:	MR08-SS197-08D	Prep Method:	7471A	Prep Date:	12/29/2008 07:39
Matrix:	Soil	Analytical Method:	7471A	Cal Date:	01/05/2009 10:02
Workgroup Number:	WG291714	Analyst:	ADC	Run Date:	01/05/2009 11:18
Collect Date:	12/21/2008 10:30	Dilution:	1	File ID:	HY.010509.111806
Sample Tag:	01	Units:	mg/kg	Percent Solid:	93.8

Analyte	CAS. Number	Result	Qual	RL	MDL
Mercury, Total	7439-97-6		U	0.105	0.0210

U Undetected; the analyte was analyzed for, but not detected.

Microbac

1666 3/12/09

ENVIRONMENTAL
Data Services, Inc.

METALS

USEPA Region IV - Level IV Review

Site: MCB Camp Lejeune, TO-09 SDG #: L08120644

Client: CH2M HILL, Inc., Virginia Beach, Virginia Date: March 12, 2009

Laboratory: Microbac Laboratories, Inc., Marietta, Ohio Reviewer: Nancy Weaver

EDS ID	Client Sample ID	Laboratory Sample ID	Matrix
1	MR08-IS197-5-6-08D	L08120644-01	Soil
2	MR08-SS196-08D	L08120644-02	Soil
3	MR08-IS196-1-2-08D	L08120644-03	Soil
4	MR08-SS200-08D	L08120644-04	Soil
5	MR08-IS200-2-3-08D	L08120644-05	Soil
6	MR08-SS224-08D	L08120644-06	Soil
7	MR08-IS224-1-2-08D	L08120644-07	Soil
8	MR08-SS235-08D	L08120644-08	Soil
9	MR08-IS235-1-2-08D	L08120644-09	Soil
10	MR08-SS211-08D	L08120644-10	Soil
11	MR08-IS211-1-2-08D	L08120644-11	Soil
12	MR08-EB01-122208	L08120644-12	Soil
13	MR08-SS202-08D	L08120644-13	Soil
14	MR08-IS202-4-5-08D	L08120644-14	Soil
15	MR08-SS185-08D	L08120644-15	Soil
16	MR08-IS185-4-5-08D	L08120644-16	Soil
17	MR08-SS186-08D	L08120644-17	Soil
18	MR08-IS186-4-5-08D	L08120644-18	Soil
19	MR08-SS201-08D	L08120644-19	Soil
20	MR08-IS201-4-5-08D	L08120644-20	Soil

The USEPA "Contract Laboratory Program National Functional Guidelines for Inorganic Data Review," October 2004, and professional judgement were used in evaluating the data in this summary report.

Holding Times - All samples were prepared and analyzed within 28 days for mercury and 180 days for all other metals.

Calibration - The ICV and CCV %R values were acceptable.

Method and Calibration Blanks - The method blank contaminations were free of contamination.

Field and Equipment Blank - Field QC results are summarized below.

Blank ID	Compound	Conc. ug/L	Action Level ug/L	Qualifier	Affected Samples
MR08-EB01-122208	None - ND	-	-	-	-
MR08-FB1120608	None - ND	-	-	-	-

ICP Interference Check Sample - All %R values were acceptable.

MS/MSD - The MS/MSD sample exhibited acceptable %R and RPD values except the following.

MS/MSD Sample ID	Compound	MS/MSD %R/RPD	Qualifier	Affected Samples
Reference (WG291682)	Arsenic	74.0%/Ok/Ok	J/UJ	2-11, 13-20
	Selenium	73.2%/74.0%/Ok	J/UJ	2-11, 13-20

LCS - The LCS samples exhibited acceptable %R values.

ICP Serial Dilution - The ICP serial dilution sample exhibited acceptable %D values.

Field Duplicates - Field duplicate samples were not included in this data package.

Compound Quantitation - No discrepancies were identified.

Report Number: L08120644

Report Date : January 15, 2009

Sample Number:	L08120644-01	PrePrep Method:	NONE	Instrument:	IRIS-ICP
Client ID:	MR08-IS-197-5-6-08D	Prep Method:	3051	Prep Date:	12/29/2008 10:34
Matrix:	Soil	Analytical Method:	6010B	Cal Date:	01/06/2009 09:53
Workgroup Number:	WG291809	Analyst:	KHR	Run Date:	01/06/2009 14:41
Collect Date:	12/21/2008 10:35	Dilution:	1	File ID:	IR.010609.144100
Sample Tag:	01	Units:	mg/kg	Percent Solid:	91.5

Analyte	CAS. Number	Result	Qual	RL	MDL
Silver, Total	7440-22-4		U	0.825	0.206
Barium, Total	7440-39-3	5.42		0.413	0.0825
Cadmium, Total	7440-43-9		U	0.165	0.0413
Chromium, Total	7440-47-3	3.59		0.825	0.0991

U Undetected; the analyte was analyzed for, but not detected.

Microbac

RW
13 3/1/2009

Report Number: L08120644

Report Date : January 15, 2009

Sample Number: L08120644-01
Client ID: MR08-IS-197-5-6-08D
Matrix: Soil
Workgroup Number: WG291683
Collect Date: 12/21/2008 10:35
Sample Tag: 01

PrePrep Method: NONE
Prep Method: 3051
Analytical Method: 6020
Analyst: JYH
Dilution: 1
Units: mg/kg

Instrument: ELAN-ICP
Prep Date: 12/29/2008 07:10
Cal Date: 01/03/2009 12:50
Run Date: 01/04/2009 01:44
File ID: EL.010409.014418
Percent Solid: 91.5

Analyte	CAS. Number	Result	Qual	RL	MDL
Arsenic, Total	7440-38-2	0.171	J	0.323	0.0807
Lead, Total	7439-92-1	1.78		0.430	0.108
Selenium, Total	7782-49-2		U	0.430	0.108

U Undetected; the analyte was analyzed for, but not detected.
J Estimated ; the analyte concentration was less than the low standard (LOQ)

Microbac

lew 3/12/09

Report Number: L08120644
Report Date : January 15, 2009

Sample Number:	L08120644-01	PrePrep Method:	NONE	Instrument:	HYDRA
Client ID:	MR08-IS-197-5-6-08D	Prep Method:	7471A	Prep Date:	12/29/2008 09:31
Matrix:	Soil	Analytical Method:	7471A	Cal Date:	01/05/2009 10:02
Workgroup Number:	WG291715	Analyst:	ADC	Run Date:	01/05/2009 11:27
Collect Date:	12/21/2008 10:35	Dilution:	1	File ID:	HY.010509.112703
Sample Tag:	01	Units:	mg/kg	Percent Solid:	91.5

Analyte	CAS. Number	Result	Qual	RL	MDL
Mercury, Total	7439-97-6		U	0.109	0.0217

U Undetected; the analyte was analyzed for, but not detected.

Microbac

1680 KLO 3/12/09

2

Sample Number: L08120644-02
Client ID: MR08-SS196-08D
Matrix: Soil
Workgroup Number: WG291810
Collect Date: 12/21/2008 11:10
Sample Tag: 01

PrePrep Method: NONE
Prep Method: 3051
Analytical Method: 6010B
Analyst: KHR
Dilution: 1
Units: mg/kg

Instrument: IRIS-ICP
Prep Date: 12/29/2008 10:53
Cal Date: 01/06/2009 09:53
Run Date: 01/06/2009 15:11
File ID: IR.010609.151100
Percent Solid: 93.0

Analyte	CAS. Number	Result	Qual	RL	MDL
Silver, Total	7440-22-4	0.311	J	0.806	0.201
Barium, Total	7440-39-3	6.16		0.403	0.0806
Cadmium, Total	7440-43-9	0.527		0.161	0.0403
Chromium, Total	7440-47-3	8.26		0.806	0.0967

J Estimated ; the analyte concentration was less than the low standard (LOQ)

Microbac

lee 31.2109

2

Sample Number:	L08120644-02	PrePrep Method:	NONE	Instrument:	ELAN-ICP
Client ID:	MR08-SS196-08D	Prep Method:	3051	Prep Date:	12/29/2008 08:21
Matrix:	Soil	Analytical Method:	6020	Cal Date:	01/05/2009 11:17
Workgroup Number:	WG291682	Analyst:	JYH	Run Date:	01/05/2009 17:36
Collect Date:	12/21/2008 11:10	Dilution:	1	File ID:	EL.010509.173648
Sample Tag:	01	Units:	mg/kg	Percent Solid:	93.0

Analyte	CAS. Number	Result	Qual	RL	MDL	
Arsenic, Total	7440-38-2	0.788 J		0.321	0.0803	MSL
Lead, Total	7439-92-1	2.25		0.428	0.107	
Selenium, Total	7782-49-2	0.412 J	~~J~~	0.428	0.107	MSL

J Estimated ; the analyte concentration was less than the low standard (LOQ)

Microbac

QCW 3/12/09

2

Sample Number: L08120644-02
Client ID: MR08-SS196-08D
Matrix: Soil
Workgroup Number: WG291715
Collect Date: 12/21/2008 11:10
Sample Tag: 01

PrePrep Method: NONE
Prep Method: 7471A
Analytical Method: 7471A
Analyst: ADC
Dilution: 1
Units: mg/kg

Instrument: HYDRA
Prep Date: 12/29/2008 09:33
Cal Date: 01/05/2009 10:02
Run Date: 01/05/2009 11:35
File ID: HY.010509.113530
Percent Solid: 93.0

Analyte	CAS. Number	Result	Qual	RL	MDL
Mercury, Total	7439-97-6		U	0.105	0.0210

U Undetected; the analyte was analyzed for, but not detected.

Microbac

1681 few 3/12/09

3

Sample Number: L08120644-03
Client ID: MRO8-IS196-1-2-08D
Matrix: Soil
Workgroup Number: WG291810
Collect Date: 12/21/2008 11:20
Sample Tag: 01

PrePrep Method: NONE
Prep Method: 3051
Analytical Method: 6010B
Analyst: KHR
Dilution: 1
Units: mg/kg

Instrument: IRIS-ICP
Prep Date: 12/29/2008 10:53
Cal Date: 01/06/2009 09:53
Run Date: 01/06/2009 15:48
File ID: IR.010609.154800
Percent Solid: 89.5

Analyte	CAS. Number	Result	Qual	RL	MDL
Silver, Total	7440-22-4	0.268	J	0.814	0.204
Barium, Total	7440-39-3	8.05		0.407	0.0814
Cadmium, Total	7440-43-9	0.221		0.163	0.0407
Chromium, Total	7440-47-3	2.74		0.814	0.0977

J Estimated ; the analyte concentration was less than the low standard (LOQ)

Microbac

lw
15 3/1/2009

3

Sample Number: L08120644-03
Client ID: MRO8-IS196-1-2-08D
Matrix: Soil
Workgroup Number: WG291682
Collect Date: 12/21/2008 11:20
Sample Tag: 01

PrePrep Method: NONE
Prep Method: 3051
Analytical Method: 6020
Analyst: JYH
Dilution: 1
Units: mg/kg

Instrument: ELAN-ICP
Prep Date: 12/29/2008 08:21
Cal Date: 01/05/2009 11:17
Run Date: 01/05/2009 17:52
File ID: EL.010509.175256
Percent Solid: 89.5

Analyte	CAS. Number	Result	Qual	RL	MDL	
Arsenic, Total	7440-38-2	0.451 J		0.325	0.0813	MSL
Lead, Total	7439-92-1	17.4		0.434	0.108	
Selenium, Total	7782-49-2	0.254 J		0.434	0.108	MSL

J Estimated ; the analyte concentration was less than the low standard (LOQ)

Microbac

MW 3/12/09

3

Sample Number: L08120644-03
Client ID: MRO8-IS196-1-2-08D
Matrix: Soil
Workgroup Number: WG291715
Collect Date: 12/21/2008 11:20
Sample Tag: 01

PrePrep Method: NONE
Prep Method: 7471A
Analytical Method: 7471A
Analyst: ADC
Dilution: 1
Units: mg/kg

Instrument: HYDRA
Prep Date: 12/29/2008 09:33
Cal Date: 01/05/2009 10:02
Run Date: 01/05/2009 11:37
File ID: HY.010509.113744
Percent Solid: 89.5

Analyte	CAS. Number	Result	Qual	RL	MDL
Mercury, Total	7439-97-6		U	0.110	0.0220

U Undetected; the analyte was analyzed for, but not detected.

Microbac

1682 MEO 3/12/09

4

Sample Number: L08120644-04
Client ID: MR08-SS200-08D
Matrix: Soil
Workgroup Number: WG291810
Collect Date: 12/21/2008 13:10
Sample Tag: 01

PrePrep Method: NONE
Prep Method: 3051
Analytical Method: 6010B
Analyst: KHR
Dilution: 1
Units: mg/kg

Instrument: IRIS-ICP
Prep Date: 12/29/2008 10:54
Cal Date: 01/06/2009 09:53
Run Date: 01/06/2009 15:54
File ID: IR.010609.155400
Percent Solid: 85.6

Analyte	CAS. Number	Result	Qual	RL	MDL
Silver, Total	7440-22-4	0.590	J	0.890	0.223
Barium, Total	7440-39-3	26.8		0.445	0.0890
Cadmium, Total	7440-43-9	4.09		0.178	0.0445
Chromium, Total	7440-47-3	26.5		0.890	0.107

J Estimated ; the analyte concentration was less than the low standard (LOQ)

Microbac

16 lw 3/12/09

4

Sample Number: L08120644-04
Client ID: MR08-SS200-08D
Matrix: Soil
Workgroup Number: WG291682
Collect Date: 12/21/2008 13:10
Sample Tag: 01

PrePrep Method: NONE
Prep Method: 3051
Analytical Method: 6020
Analyst: JYH
Dilution: 1
Units: mg/kg

Instrument: ELAN-ICP
Prep Date: 12/29/2008 08:21
Cal Date: 01/05/2009 11:17
Run Date: 01/05/2009 17:58
File ID: EL.010509.175817
Percent Solid: 85.6

Analyte	CAS. Number	Result	Qual	RL	MDL	
Arsenic, Total	7440-38-2	0.925 J		0.346	0.0865	MSL
Selenium, Total	7782-49-2	0.296 J	~~J~~	0.462	0.115	MSL

J Estimated ; the analyte concentration was less than the low standard (LOQ)

Microbac

JW 3/1/2009

4

Sample Number: L08120644-04
Client ID: MR08-SS200-08D
Matrix: Soil
Workgroup Number: WG291682
Collect Date: 12/21/2008 13:10
Sample Tag: DL01

PrePrep Method: NONE
Prep Method: 3051
Analytical Method: 6020
Analyst: JYH
Dilution: 25
Units: mg/kg

Instrument: ELAN-ICP
Prep Date: 12/29/2008 08:21
Cal Date: 01/05/2009 11:17
Run Date: 01/05/2009 19:55
File ID: EL.010509.195555
Percent Solid: 85.6

Analyte	CAS. Number	Result	Qual	RL	MDL
Lead, Total	7439-92-1	258		11.5	2.88

Microbac

pw 3/12/09

4

Sample Number: L08120644-04
Client ID: MR08-SS200-08D
Matrix: Soil
Workgroup Number: WG291715
Collect Date: 12/21/2008 13:10
Sample Tag: 01

PrePrep Method: NONE
Prep Method: 7471A
Analytical Method: 7471A
Analyst: ADC
Dilution: 1
Units: mg/kg

Instrument: HYDRA
Prep Date: 12/29/2008 09:34
Cal Date: 01/05/2009 10:02
Run Date: 01/05/2009 11:39
File ID: HY.010509.113932
Percent Solid: 85.6

Analyte	CAS. Number	Result	Qual	RL	MDL
Mercury, Total	7439-97-6	0.142		0.114	0.0229

Microbac

3/12/09

5

Sample Number: L08120644-05
Client ID: MR08-IS200-2-3-08D
Matrix: Soil
Workgroup Number: WG291810
Collect Date: 12/21/2008 13:15
Sample Tag: 01

PrePrep Method: NONE
Prep Method: 3051
Analytical Method: 6010B
Analyst: KHR
Dilution: 1
Units: mg/kg

Instrument: IRIS-ICP
Prep Date: 12/29/2008 10:55
Cal Date: 01/06/2009 09:53
Run Date: 01/06/2009 16:00
File ID: IR.010609.160000
Percent Solid: 92.5

Analyte	CAS. Number	Result	Qual	RL	MDL
Silver, Total	7440-22-4		U	0.818	0.204
Barium, Total	7440-39-3	5.21		0.409	0.0818
Cadmium, Total	7440-43-9		U	0.164	0.0409
Chromium, Total	7440-47-3	2.55		0.818	0.0981

U Undetected; the analyte was analyzed for, but not detected.

Microbac

17 lew 3/12/09

5

Sample Number: L08120644-05
Client ID: MR08-IS200-2-3-08D
Matrix: Soil
Workgroup Number: WG291682
Collect Date: 12/21/2008 13:15
Sample Tag: 01

PrePrep Method: NONE
Prep Method: 3051
Analytical Method: 6020
Analyst: JYH
Dilution: 1
Units: mg/kg

Instrument: ELAN-ICP
Prep Date: 12/29/2008 08:21
Cal Date: 01/05/2009 11:17
Run Date: 01/05/2009 18:16
File ID: EL.010509.181642
Percent Solid: 92.5

Analyte	CAS. Number	Result	Qual	RL	MDL	
Arsenic, Total	7440-38-2	0.268 J	~~J~~	0.321	0.0803	MSL
Lead, Total	7439-92-1	2.71		0.428	0.107	
Selenium, Total	7782-49-2	UJ	~~J~~	0.428	0.107	MSL

U Undetected; the analyte was analyzed for, but not detected.
J Estimated ; the analyte concentration was less than the low standard (LOQ)

Microbac

QW 3/12/09

5

Sample Number: L08120644-05
Client ID: MR08-IS200-2-3-08D
Matrix: Soil
Workgroup Number: WG291715
Collect Date: 12/21/2008 13:15
Sample Tag: 01

PrePrep Method: NONE
Prep Method: 7471A
Analytical Method: 7471A
Analyst: ADC
Dilution: 1
Units: mg/kg

Instrument: HYDRA
Prep Date: 12/29/2008 09:34
Cal Date: 01/05/2009 10:02
Run Date: 01/05/2009 11:43
File ID: HY.010509.114311
Percent Solid: 92.5

Analyte	CAS. Number	Result	Qual	RL	MDL
Mercury, Total	7439-97-6		U	0.108	0.0215

U Undetected; the analyte was analyzed for, but not detected.

Microbac

1684 fw 3/12/09

6

Sample Number: L08120644-06
Client ID: MR08-SS224-08D
Matrix: Soil
Workgroup Number: WG291810
Collect Date: 12/21/2008 13:45
Sample Tag: 01

PrePrep Method: NONE
Prep Method: 3051
Analytical Method: 6010B
Analyst: KHR
Dilution: 1
Units: mg/kg

Instrument: IRIS-ICP
Prep Date: 12/29/2008 10:55
Cal Date: 01/06/2009 09:53
Run Date: 01/06/2009 16:06
File ID: IR.010609.160600
Percent Solid: 81.2

Analyte	CAS. Number	Result	Qual	RL	MDL
Silver, Total	7440-22-4	0.962		0.918	0.229
Barium, Total	7440-39-3	20.0		0.459	0.0918
Cadmium, Total	7440-43-9	0.712		0.184	0.0459
Chromium, Total	7440-47-3	10.4		0.918	0.110

Microbac

lew 3/1/2009

6

Sample Number:	L08120644-06	PrePrep Method:	NONE	Instrument:	ELAN-ICP
Client ID:	MR08-SS224-08D	Prep Method:	3051	Prep Date:	12/29/2008 08:21
Matrix:	Soil	Analytical Method:	6020	Cal Date:	01/05/2009 11:17
Workgroup Number:	WG291682	Analyst:	JYH	Run Date:	01/05/2009 20:01
Collect Date:	12/21/2008 13:45	Dilution:	25	File ID:	EL.010509.200119
Sample Tag:	DL01	Units:	mg/kg	Percent Solid:	81.2

Analyte	CAS. Number	Result	Qual	RL	MDL
Lead, Total	7439-92-1	108		12.1	3.03

Microbac

MW 3/12/09

6

Sample Number: L08120644-06
Client ID: MR08-SS224-08D
Matrix: Soil
Workgroup Number: WG291682
Collect Date: 12/21/2008 13:45
Sample Tag: 01

PrePrep Method: NONE
Prep Method: 3051
Analytical Method: 6020
Analyst: JYH
Dilution: 1
Units: mg/kg

Instrument: ELAN-ICP
Prep Date: 12/29/2008 08:21
Cal Date: 01/05/2009 11:17
Run Date: 01/05/2009 18:22
File ID: EL.010509.182204
Percent Solid: 81.2

Analyte	CAS. Number	Result	Qual	RL	MDL	
Arsenic, Total	7440-38-2	0.805 J		0.364	0.0909	MSL
Selenium, Total	7782-49-2	0.287 J	~~J~~	0.485	0.121	MSL

J Estimated ; the analyte concentration was less than the low standard (LOQ)

Microbac

LW
3/12/09

6

Sample Number: L08120644-06
Client ID: MR08-SS224-08D
Matrix: Soil
Workgroup Number: WG291715
Collect Date: 12/21/2008 13:45
Sample Tag: 01

PrePrep Method: NONE
Prep Method: 7471A
Analytical Method: 7471A
Analyst: ADC
Dilution: 1
Units: mg/kg

Instrument: HYDRA
Prep Date: 12/29/2008 09:35
Cal Date: 01/05/2009 10:02
Run Date: 01/05/2009 11:49
File ID: HY.010509.114924
Percent Solid: 81.2

Analyte	CAS. Number	Result	Qual	RL	MDL
Mercury, Total	7439-97-6	0.226		0.119	0.0238

Microbac

1685 Mw 3/12/09

7

Sample Number: L08120644-07
Client ID: MR08-IS224-1-2-08D
Matrix: Soil
Workgroup Number: WG291810
Collect Date: 12/21/2008 13:50
Sample Tag: 01

PrePrep Method: NONE
Prep Method: 3051
Analytical Method: 6010B
Analyst: KHR
Dilution: 1
Units: mg/kg

Instrument: IRIS-ICP
Prep Date: 12/29/2008 10:56
Cal Date: 01/06/2009 09:53
Run Date: 01/06/2009 16:12
File ID: IR.010609.161200
Percent Solid: 89.2

Analyte	CAS. Number	Result	Qual	RL	MDL
Silver, Total	7440-22-4		U	0.804	0.201
Barium, Total	7440-39-3	5.39		0.402	0.0804
Cadmium, Total	7440-43-9		U	0.161	0.0402
Chromium, Total	7440-47-3	2.05		0.804	0.0965

U Undetected; the analyte was analyzed for, but not detected.

Microbac

19 3/12/09

7

Sample Number: L08120644-07
Client ID: MR08-IS224-1-2-08D
Matrix: Soil
Workgroup Number: WG291682
Collect Date: 12/21/2008 13:50
Sample Tag: 01

PrePrep Method: NONE
Prep Method: 3051
Analytical Method: 6020
Analyst: JYH
Dilution: 1
Units: mg/kg

Instrument: ELAN-ICP
Prep Date: 12/29/2008 08:21
Cal Date: 01/05/2009 11:17
Run Date: 01/05/2009 18:27
File ID: EL.010509.182727
Percent Solid: 89.2

Analyte	CAS. Number	Result	Qual	RL	MDL	
Arsenic, Total	7440-38-2	0.334 J		0.328	0.0821	MSL
Lead, Total	7439-92-1	3.12		0.438	0.109	
Selenium, Total	7782-49-2	0.173 J	J	0.438	0.109	MSL

J Estimated ; the analyte concentration was less than the low standard (LOQ)

Microbac

lcw 1-31-2009

7

Sample Number: L08120644-07
Client ID: MR08-IS224-1-2-08D
Matrix: Soil
Workgroup Number: WG291715
Collect Date: 12/21/2008 13:50
Sample Tag: 01

PrePrep Method: NONE
Prep Method: 7471A
Analytical Method: 7471A
Analyst: ADC
Dilution: 1
Units: mg/kg

Instrument: HYDRA
Prep Date: 12/29/2008 09:35
Cal Date: 01/05/2009 10:02
Run Date: 01/05/2009 11:51
File ID: HY.010509.115152
Percent Solid: 89.2

Analyte	CAS. Number	Result	Qual	RL	MDL
Mercury, Total	7439-97-6		U	0.109	0.0218

U Undetected; the analyte was analyzed for, but not detected.

Microbac

PW 3/12/09

8

Sample Number: L08120644-08
Client ID: MR08-SS235-08D
Matrix: Soil
Workgroup Number: WG291810
Collect Date: 12/21/2008 14:15
Sample Tag: 01

PrePrep Method: NONE
Prep Method: 3051
Analytical Method: 6010B
Analyst: KHR
Dilution: 1
Units: mg/kg

Instrument: IRIS-ICP
Prep Date: 12/29/2008 10:57
Cal Date: 01/06/2009 09:53
Run Date: 01/06/2009 16:18
File ID: IR.010609.161800
Percent Solid: 83.8

Analyte	CAS. Number	Result	Qual	RL	MDL
Silver, Total	7440-22-4	0.417	J	0.890	0.223
Barium, Total	7440-39-3	24.3		0.445	0.0890
Cadmium, Total	7440-43-9	1.05		0.178	0.0445
Chromium, Total	7440-47-3	18.2		0.890	0.107

J Estimated ; the analyte concentration was less than the low standard (LOQ)

Microbac

20 lew 3/12/09

8

Sample Number: L08120644-08
Client ID: MR08-SS235-08D
Matrix: Soil
Workgroup Number: WG291682
Collect Date: 12/21/2008 14:15
Sample Tag: DL01

PrePrep Method: NONE
Prep Method: 3051
Analytical Method: 6020
Analyst: JYH
Dilution: 25
Units: mg/kg

Instrument: ELAN-ICP
Prep Date: 12/29/2008 08:21
Cal Date: 01/05/2009 11:17
Run Date: 01/05/2009 20:06
File ID: EL.010509.200644
Percent Solid: 83.8

Analyte	CAS. Number	Result	Qual	RL	MDL
Lead, Total	7439-92-1	212		11.9	2.97

Microbac

Leo 3/12/09

8

Sample Number: L08120644-08
Client ID: MR08-SS235-08D
Matrix: Soil
Workgroup Number: WG291682
Collect Date: 12/21/2008 14:15
Sample Tag: 01

PrePrep Method: NONE
Prep Method: 3051
Analytical Method: 6020
Analyst: JYH
Dilution: 1
Units: mg/kg

Instrument: ELAN-ICP
Prep Date: 12/29/2008 08:21
Cal Date: 01/05/2009 11:17
Run Date: 01/05/2009 18:32
File ID: EL.010509.183250
Percent Solid: 83.8

Analyte	CAS. Number	Result	Qual	RL	MDL	
Arsenic, Total	7440-38-2	1.16 J		0.357	0.0891	MSL
Selenium, Total	7782-49-2	0.365 J	J	0.475	0.119	MSL

J Estimated ; the analyte concentration was less than the low standard (LOQ)

Microbac

3/12/09

8

Sample Number:	L08120644-08	PrePrep Method:	NONE	Instrument:	HYDRA
Client ID:	MR08-SS235-08D	Prep Method:	7471A	Prep Date:	12/29/2008 09:36
Matrix:	Soil	Analytical Method:	7471A	Cal Date:	01/05/2009 10:02
Workgroup Number:	WG291715	Analyst:	ADC	Run Date:	01/05/2009 11:53
Collect Date:	12/21/2008 14:15	Dilution:	1	File ID:	HY.010509.115335
Sample Tag:	01	Units:	mg/kg	Percent Solid:	83.8

Analyte	CAS. Number	Result	Qual	RL	MDL
Mercury, Total	7439-97-6	0.116		0.116	0.0232

Microbac

1687 3/12/09

9

Sample Number: L08120644-09
Client ID: MR08-IS235-1-2-08D
Matrix: Soil
Workgroup Number: WG291810
Collect Date: 12/21/2008 14:25
Sample Tag: 01

PrePrep Method: NONE
Prep Method: 3051
Analytical Method: 6010B
Analyst: KHR
Dilution: 1
Units: mg/kg

Instrument: IRIS-ICP
Prep Date: 12/29/2008 10:57
Cal Date: 01/06/2009 09:53
Run Date: 01/06/2009 16:24
File ID: IR.010609.162400
Percent Solid: 90.9

Analyte	CAS. Number	Result	Qual	RL	MDL
Silver, Total	7440-22-4		U	0.766	0.191
Barium, Total	7440-39-3	9.38		0.383	0.0766
Cadmium, Total	7440-43-9		U	0.153	0.0383
Chromium, Total	7440-47-3	2.88		0.766	0.0919

U Undetected; the analyte was analyzed for, but not detected.

Microbac

21 JW 3/12/09

9

Sample Number: L08120644-09
Client ID: MR08-IS235-1-2-08D
Matrix: Soil
Workgroup Number: WG291682
Collect Date: 12/21/2008 14:25
Sample Tag: 01

PrePrep Method: NONE
Prep Method: 3051
Analytical Method: 6020
Analyst: JYH
Dilution: 1
Units: mg/kg

Instrument: ELAN-ICP
Prep Date: 12/29/2008 08:21
Cal Date: 01/05/2009 11:17
Run Date: 01/05/2009 18:38
File ID: EL.010509.183813
Percent Solid: 90.9

Analyte	CAS. Number	Result	Qual	RL	MDL	
Arsenic, Total	7440-38-2	0.406 J		0.323	0.0807	MSL
Lead, Total	7439-92-1	3.56		0.430	0.108	
Selenium, Total	7782-49-2	0.138 J	J	0.430	0.108	MSL

J Estimated ; the analyte concentration was less than the low standard (LOQ)

Microbac

JW 3/12/09

9

Sample Number:	L08120644-09	PrePrep Method:	NONE	Instrument:	HYDRA
Client ID:	MR08-IS235-1-2-08D	Prep Method:	7471A	Prep Date:	12/29/2008 09:36
Matrix:	Soil	Analytical Method:	7471A	Cal Date:	01/05/2009 10:02
Workgroup Number:	WG291715	Analyst:	ADC	Run Date:	01/05/2009 11:55
Collect Date:	12/21/2008 14:25	Dilution:	1	File ID:	HY.010509.115519
Sample Tag:	01	Units:	mg/kg	Percent Solid:	90.9

Analyte	CAS. Number	Result	Qual	RL	MDL
Mercury, Total	7439-97-6		U	0.107	0.0214

U Undetected; the analyte was analyzed for, but not detected.

Microbac

Rev 3/12/09

11

Sample Number: L08120644-10
Client ID: MR08-SS211-08D
Matrix: Soil
Workgroup Number: WG291810
Collect Date: 12/21/2008 14:45
Sample Tag: 01

PrePrep Method: NONE
Prep Method: 3051
Analytical Method: 6010B
Analyst: KHR
Dilution: 1
Units: mg/kg

Instrument: IRIS-ICP
Prep Date: 12/29/2008 10:58
Cal Date: 01/06/2009 09:53
Run Date: 01/06/2009 16:43
File ID: IR.010609.164300
Percent Solid: 80.5

Analyte	CAS. Number	Result	Qual	RL	MDL
Silver, Total	7440-22-4		U	0.937	0.234
Barium, Total	7440-39-3	28.3		0.469	0.0937
Cadmium, Total	7440-43-9	0.929		0.187	0.0469
Chromium, Total	7440-47-3	10.5		0.937	0.112

U Undetected; the analyte was analyzed for, but not detected.

Microbac

3/12/09

10

Sample Number:	L08120644-10	PrePrep Method:	NONE	Instrument:	ELAN-ICP
Client ID:	MR08-SS211-08D	Prep Method:	3051	Prep Date:	12/29/2008 08:21
Matrix:	Soil	Analytical Method:	6020	Cal Date:	01/05/2009 11:17
Workgroup Number:	WG291682	Analyst:	JYH	Run Date:	01/05/2009 18:43
Collect Date:	12/21/2008 14:45	Dilution:	1	File ID:	EL.010509.184337
Sample Tag:	01	Units:	mg/kg	Percent Solid:	80.5

Analyte	CAS. Number	Result	Qual	RL	MDL	
Arsenic, Total	7440-38-2	0.892 J		0.366	0.0916	MSL
Selenium, Total	7782-49-2	0.464 J	J	0.488	0.122	MSL

J Estimated ; the analyte concentration was less than the low standard (LOQ)

Microbac

lew 3/12/09

10

Sample Number: L08120644-10
Client ID: MR08-SS211-08D
Matrix: Soil
Workgroup Number: WG291682
Collect Date: 12/21/2008 14:45
Sample Tag: DL01

PrePrep Method: NONE
Prep Method: 3051
Analytical Method: 6020
Analyst: JYH
Dilution: 25
Units: mg/kg

Instrument: ELAN-ICP
Prep Date: 12/29/2008 08:21
Cal Date: 01/05/2009 11:17
Run Date: 01/05/2009 20:12
File ID: EL.010509.201208
Percent Solid: 80.5

Analyte	CAS. Number	Result	Qual	RL	MDL
Lead, Total	7439-92-1	127		12.2	3.05

Microbac

Rlew 3/12/09

10

Sample Number:	L08120644-10	PrePrep Method:	NONE	Instrument:	HYDRA
Client ID:	MR08-SS211-08D	Prep Method:	7471A	Prep Date:	12/29/2008 09:37
Matrix:	Soil	Analytical Method:	7471A	Cal Date:	01/05/2009 10:02
Workgroup Number:	WG291715	Analyst:	ADC	Run Date:	01/05/2009 11:57
Collect Date:	12/21/2008 14:45	Dilution:	1	File ID:	HY.010509.115706
Sample Tag:	01	Units:	mg/kg	Percent Solid:	80.5

Analyte	CAS. Number	Result	Qual	RL	MDL
Mercury, Total	7439-97-6	0.0477	J	0.115	0.0231

J Estimated ; the analyte concentration was less than the low standard (LOQ)

Microbac

1689 KW 3/12/09

11

Sample Number: L08120644-11
Client ID: MR08-IS211-1-2-08D
Matrix: Soil
Workgroup Number: WG291810
Collect Date: 12/21/2008 15:05
Sample Tag: 01

PrePrep Method: NONE
Prep Method: 3051
Analytical Method: 6010B
Analyst: KHR
Dilution: 1
Units: mg/kg

Instrument: IRIS-ICP
Prep Date: 12/29/2008 10:58
Cal Date: 01/06/2009 09:53
Run Date: 01/06/2009 16:49
File ID: IR.010609.164900
Percent Solid: 90.6

Analyte	CAS. Number	Result	Qual	RL	MDL
Silver, Total	7440-22-4		U	0.815	0.204
Barium, Total	7440-39-3	42.4		0.408	0.0815
Cadmium, Total	7440-43-9	0.279		0.163	0.0408
Chromium, Total	7440-47-3	2.79		0.815	0.0978

U Undetected; the analyte was analyzed for, but not detected.

Microbac

Lew 3/1/2009

11

Sample Number: L08120644-11
Client ID: MR08-IS211-1-2-08D
Matrix: Soil
Workgroup Number: WG291682
Collect Date: 12/21/2008 15:05
Sample Tag: 01

PrePrep Method: NONE
Prep Method: 3051
Analytical Method: 6020
Analyst: JYH
Dilution: 1
Units: mg/kg

Instrument: ELAN-ICP
Prep Date: 12/29/2008 08:21
Cal Date: 01/05/2009 11:17
Run Date: 01/05/2009 18:49
File ID: EL.010509.184901
Percent Solid: 90.6

Analyte	CAS. Number	Result	Qual	RL	MDL	
Arsenic, Total	7440-38-2	0.619 J		0.328	0.0820	MSL
Lead, Total	7439-92-1	10.3		0.437	0.109	
Selenium, Total	7782-49-2	0.215 J		0.437	0.109	MSL

J Estimated ; the analyte concentration was less than the low standard (LOQ)

Microbac

KEW 3/12/09

11

Sample Number:	L08120644-11	PrePrep Method:	NONE	Instrument:	HYDRA
Client ID:	MR08-IS211-1-2-08D	Prep Method:	7471A	Prep Date:	12/29/2008 09:37
Matrix:	Soil	Analytical Method:	7471A	Cal Date:	01/05/2009 10:02
Workgroup Number:	WG291715	Analyst:	ADC	Run Date:	01/05/2009 11:59
Collect Date:	12/21/2008 15:05	Dilution:	1	File ID:	HY.010509.115941
Sample Tag:	01	Units:	mg/kg	Percent Solid:	90.6

Analyte	CAS. Number	Result	Qual	RL	MDL
Mercury, Total	7439-97-6		U	0.109	0.0217

U Undetected; the analyte was analyzed for, but not detected.

Microbac

1690 KW 1/12/09

12

Sample Number: L08120644-12
Client ID: MR08-EB01-122208
Matrix: Water
Workgroup Number: WG291502
Collect Date: 12/22/2008 07:15
Sample Tag: 01

PrePrep Method: NONE
Prep Method: 3005A
Analytical Method: 6010B
Analyst: SLP
Dilution: 1
Units: ug/L

Instrument: PE-ICP2
Prep Date: 12/29/2008 10:46
Cal Date: 01/05/2009 11:20
Run Date: 01/05/2009 18:22
File ID: P2.010509.182208

Analyte	CAS. Number	Result	Qual	RL	MDL
Barium, Total	7440-39-3		U	10.0	2.50
Cadmium, Total	7440-43-9		U	1.00	0.250
Chromium, Total	7440-47-3		U	10.0	2.50
Silver, Total	7440-22-4		U	6.00	2.00

U Undetected; the analyte was analyzed for, but not detected.

Microbac

24 fw 3/12/09

12

Sample Number: L08120644-12
Client ID: MR08-EB01-122208
Matrix: Water
Workgroup Number: WG291525
Collect Date: 12/22/2008 07:15
Sample Tag: 01

PrePrep Method: NONE
Prep Method: 3015
Analytical Method: 6020
Analyst: JYH
Dilution: 1
Units: ug/L

Instrument: ELAN-ICP
Prep Date: 12/29/2008 07:08
Cal Date: 12/30/2008 13:23
Run Date: 12/30/2008 16:34
File ID: EL.123008.163402

Analyte	CAS. Number	Result	Qual	RL	MDL
Arsenic, Total	7440-38-2		U	1.00	0.250
Lead, Total	7439-92-1		U	1.00	0.250
Selenium, Total	7782-49-2		U	2.00	0.500

U Undetected; the analyte was analyzed for, but not detected.

Microbac

aw
3/12/09

12

Sample Number: L08120644-12
Client ID: MR08-EB01-122208
Matrix: Water
Workgroup Number: WG291953
Collect Date: 12/22/2008 07:15
Sample Tag: 01

PrePrep Method: NONE
Prep Method: 7470A
Analytical Method: 7470A
Analyst: ADC
Dilution: 1
Units: ug/L

Instrument: HYDRA
Prep Date: 01/07/2009 07:48
Cal Date: 01/08/2009 09:47
Run Date: 01/08/2009 10:51
File ID: HY.010809.105112

Analyte	CAS. Number	Result	Qual	RL	MDL
Mercury	7439-97-6		U	0.475	0.100

U Undetected; the analyte was analyzed for, but not detected.

Microbac

1691 JEW 3/12/09

13

Sample Number: L08120644-13
Client ID: MR08-SS202-08D
Matrix: Soil
Workgroup Number: WG291810
Collect Date: 12/22/2008 08:10
Sample Tag: 01

PrePrep Method: NONE
Prep Method: 3051
Analytical Method: 6010B
Analyst: KHR
Dilution: 1
Units: mg/kg

Instrument: IRIS-ICP
Prep Date: 12/29/2008 10:59
Cal Date: 01/06/2009 09:53
Run Date: 01/06/2009 16:55
File ID: IR.010609.165500
Percent Solid: 94.4

Analyte	CAS. Number	Result	Qual	RL	MDL
Silver, Total	7440-22-4	0.461	J	0.792	0.198
Barium, Total	7440-39-3	5.01		0.396	0.0792
Cadmium, Total	7440-43-9	0.463		0.158	0.0396
Chromium, Total	7440-47-3	7.50		0.792	0.0951

J Estimated ; the analyte concentration was less than the low standard (LOQ)

Microbac

JEW 3/1/2009

13

Sample Number: L08120644-13
Client ID: MR08-SS202-08D
Matrix: Soil
Workgroup Number: WG291682
Collect Date: 12/22/2008 08:10
Sample Tag: 01

PrePrep Method: NONE
Prep Method: 3051
Analytical Method: 6020
Analyst: JYH
Dilution: 1
Units: mg/kg

Instrument: ELAN-ICP
Prep Date: 12/29/2008 08:21
Cal Date: 01/05/2009 11:17
Run Date: 01/05/2009 18:54
File ID: EL.010509.185425
Percent Solid: 94.4

Analyte	CAS. Number	Result	Qual	RL	MDL	
Arsenic, Total	7440-38-2	2.03 J		0.317	0.0791	MSL
Lead, Total	7439-92-1	1.94		0.422	0.106	
Selenium, Total	7782-49-2	0.520 J		0.422	0.106	MSL

Microbac

lew 3/12/09

13

Sample Number: L08120644-13
Client ID: MR08-SS202-08D
Matrix: Soil
Workgroup Number: WG291715
Collect Date: 12/22/2008 08:10
Sample Tag: 01

PrePrep Method: NONE
Prep Method: 7471A
Analytical Method: 7471A
Analyst: ADC
Dilution: 1
Units: mg/kg

Instrument: HYDRA
Prep Date: 12/29/2008 09:38
Cal Date: 01/05/2009 10:02
Run Date: 01/05/2009 12:01
File ID: HY.010509.120134
Percent Solid: 94.4

Analyte	CAS. Number	Result	Qual	RL	MDL
Mercury, Total	7439-97-6		U	0.104	0.0207

U Undetected; the analyte was analyzed for, but not detected.

Microbac

1692 3/12/09

14

Sample Number: L08120644-14
Client ID: MR08-IS202-4-5-08D
Matrix: Soil
Workgroup Number: WG291810
Collect Date: 12/22/2008 08:20
Sample Tag: 01

PrePrep Method: NONE
Prep Method: 3051
Analytical Method: 6010B
Analyst: KHR
Dilution: 1
Units: mg/kg

Instrument: IRIS-ICP
Prep Date: 12/29/2008 10:59
Cal Date: 01/06/2009 09:53
Run Date: 01/06/2009 17:01
File ID: IR.010609.170100
Percent Solid: 90.3

Analyte	CAS. Number	Result	Qual	RL	MDL
Silver, Total	7440-22-4	0.321	J	0.824	0.206
Barium, Total	7440-39-3	5.37		0.412	0.0824
Cadmium, Total	7440-43-9	0.0610	J	0.165	0.0412
Chromium, Total	7440-47-3	3.51		0.824	0.0989

J Estimated ; the analyte concentration was less than the low standard (LOQ)

Microbac

26 flw 3/12/09

14

Sample Number: L08120644-14
Client ID: MR08-IS202-4-5-08D
Matrix: Soil
Workgroup Number: WG291682
Collect Date: 12/22/2008 08:20
Sample Tag: 01

PrePrep Method: NONE
Prep Method: 3051
Analytical Method: 6020
Analyst: JYH
Dilution: 1
Units: mg/kg

Instrument: ELAN-ICP
Prep Date: 12/29/2008 08:21
Cal Date: 01/05/2009 11:17
Run Date: 01/05/2009 18:59
File ID: EL.010509.185950
Percent Solid: 90.3

Analyte	CAS. Number	Result	Qual	RL	MDL	
Arsenic, Total	7440-38-2	0.444 J		0.324	0.0811	MSL
Lead, Total	7439-92-1	2.27		0.433	0.108	
Selenium, Total	7782-49-2	UJ	~~J~~	0.433	0.108	MSL

U Undetected; the analyte was analyzed for, but not detected.

Microbac

Geo 3/12/09

14

Sample Number:	L08120644-14	PrePrep Method:	NONE	Instrument:	HYDRA
Client ID:	MR08-IS202-4-5-08D	Prep Method:	7471A	Prep Date:	12/29/2008 09:38
Matrix:	Soil	Analytical Method:	7471A	Cal Date:	01/05/2009 10:02
Workgroup Number:	WG291715	Analyst:	ADC	Run Date:	01/05/2009 12:03
Collect Date:	12/22/2008 08:20	Dilution:	1	File ID:	HY.010509.120327
Sample Tag:	01	Units:	mg/kg	Percent Solid:	90.3

Analyte	CAS. Number	Result	Qual	RL	MDL
Mercury, Total	7439-97-6		U	0.109	0.0218

U Undetected; the analyte was analyzed for, but not detected.

Microbac

1693 3/12/09

15

Sample Number: L08120644-15
Client ID: MR08-SS185-08D
Matrix: Soil
Workgroup Number: WG291810
Collect Date: 12/22/2008 08:45
Sample Tag: 01

PrePrep Method: NONE
Prep Method: 3051
Analytical Method: 6010B
Analyst: KHR
Dilution: 1
Units: mg/kg

Instrument: IRIS-ICP
Prep Date: 12/29/2008 11:00
Cal Date: 01/06/2009 09:53
Run Date: 01/06/2009 17:07
File ID: IR.010609.170700
Percent Solid: 94.6

Analyte	CAS. Number	Result	Qual	RL	MDL
Silver, Total	7440-22-4	0.350	J	0.810	0.202
Barium, Total	7440-39-3	5.96		0.405	0.0810
Cadmium, Total	7440-43-9	0.361		0.162	0.0405
Chromium, Total	7440-47-3	8.64		0.810	0.0972

J Estimated ; the analyte concentration was less than the low standard (LOQ)

Microbac

MW
27 3/12/09

15

Sample Number: L08120644-15
Client ID: MR08-SS185-08D
Matrix: Soil
Workgroup Number: WG291682
Collect Date: 12/22/2008 08:45
Sample Tag: 01

PrePrep Method: NONE
Prep Method: 3051
Analytical Method: 6020
Analyst: JYH
Dilution: 1
Units: mg/kg

Instrument: ELAN-ICP
Prep Date: 12/29/2008 08:21
Cal Date: 01/05/2009 11:17
Run Date: 01/05/2009 19:05
File ID: EL.010509.190513
Percent Solid: 94.6

Analyte	CAS. Number	Result	Qual	RL	MDL	
Arsenic, Total	7440-38-2	1.67 J		0.314	0.0786	MSL
Lead, Total	7439-92-1	1.58		0.419	0.105	
Selenium, Total	7782-49-2	0.481 J		0.419	0.105	MSL

Microbac

lew 3/12/09

15

Sample Number: L08120644-15
Client ID: MR08-SS185-08D
Matrix: Soil
Workgroup Number: WG291715
Collect Date: 12/22/2008 08:45
Sample Tag: 01

PrePrep Method: NONE
Prep Method: 7471A
Analytical Method: 7471A
Analyst: ADC
Dilution: 1
Units: mg/kg

Instrument: HYDRA
Prep Date: 12/29/2008 09:39
Cal Date: 01/05/2009 10:02
Run Date: 01/05/2009 12:05
File ID: HY.010509.120510
Percent Solid: 94.6

Analyte	CAS. Number	Result	Qual	RL	MDL
Mercury, Total	7439-97-6		U	0.101	0.0202

U Undetected; the analyte was analyzed for, but not detected.

Microbac

1694 MW 3/12/09

16

Sample Number: L08120644-16
Client ID: MR08-IS185-4-5-08D
Matrix: Soil
Workgroup Number: WG291810
Collect Date: 12/22/2008 09:00
Sample Tag: 01

PrePrep Method: NONE
Prep Method: 3051
Analytical Method: 6010B
Analyst: KHR
Dilution: 1
Units: mg/kg

Instrument: IRIS-ICP
Prep Date: 12/29/2008 11:00
Cal Date: 01/06/2009 09:53
Run Date: 01/06/2009 17:13
File ID: IR.010609.171300
Percent Solid: 93.1

Analyte	CAS. Number	Result	Qual	RL	MDL
Silver, Total	7440-22-4		U	0.804	0.201
Barium, Total	7440-39-3	2.57		0.402	0.0804
Cadmium, Total	7440-43-9		U	0.161	0.0402
Chromium, Total	7440-47-3	1.08		0.804	0.0965

U Undetected; the analyte was analyzed for, but not detected.

Microbac

lew 3/12/09

16

Sample Number: L08120644-16
Client ID: MR08-IS185-4-5-08D
Matrix: Soil
Workgroup Number: WG291682
Collect Date: 12/22/2008 09:00
Sample Tag: 01

PrePrep Method: NONE
Prep Method: 3051
Analytical Method: 6020
Analyst: JYH
Dilution: 1
Units: mg/kg

Instrument: ELAN-ICP
Prep Date: 12/29/2008 08:21
Cal Date: 01/05/2009 11:17
Run Date: 01/05/2009 19:23
File ID: EL.010509.192338
Percent Solid: 93.1

Analyte	CAS. Number	Result	Qual	RL	MDL	
Arsenic, Total	7440-38-2	0.116 J	~~J~~	0.320	0.0799	MSL
Lead, Total	7439-92-1	1.20		0.426	0.107	
Selenium, Total	7782-49-2	0.113 J	~~J~~	0.426	0.107	MSL

J Estimated ; the analyte concentration was less than the low standard (LOQ)

Microbac

fcw
1/5/2009

16

Sample Number: L08120644-16
Client ID: MR08-IS185-4-5-08D
Matrix: Soil
Workgroup Number: WG291715
Collect Date: 12/22/2008 09:00
Sample Tag: 01

PrePrep Method: NONE
Prep Method: 7471A
Analytical Method: 7471A
Analyst: ADC
Dilution: 1
Units: mg/kg

Instrument: HYDRA
Prep Date: 12/29/2008 09:39
Cal Date: 01/05/2009 10:02
Run Date: 01/05/2009 12:07
File ID: HY.010509.120724
Percent Solid: 93.1

Analyte	CAS. Number	Result	Qual	RL	MDL
Mercury, Total	7439-97-6		U	0.0998	0.0200

U Undetected; the analyte was analyzed for, but not detected.

Microbac

kw 3/12/09

17

Sample Number: L08120644-17
Client ID: MR08-SS186-08D
Matrix: Soil
Workgroup Number: WG291810
Collect Date: 12/22/2008 09:45
Sample Tag: 01

PrePrep Method: NONE
Prep Method: 3051
Analytical Method: 6010B
Analyst: KHR
Dilution: 1
Units: mg/kg

Instrument: IRIS-ICP
Prep Date: 12/29/2008 11:01
Cal Date: 01/06/2009 09:53
Run Date: 01/06/2009 17:20
File ID: IR.010609.172000
Percent Solid: 96.1

Analyte	CAS. Number	Result	Qual	RL	MDL
Silver, Total	7440-22-4	0.243	J	0.792	0.198
Barium, Total	7440-39-3	3.53		0.396	0.0792
Cadmium, Total	7440-43-9	0.162		0.158	0.0396
Chromium, Total	7440-47-3	4.15		0.792	0.0950

J Estimated ; the analyte concentration was less than the low standard (LOQ)

Microbac

KW 3/12/09

17

Sample Number: L08120644-17
Client ID: MR08-SS186-08D
Matrix: Soil
Workgroup Number: WG291682
Collect Date: 12/22/2008 09:45
Sample Tag: 01

PrePrep Method: NONE
Prep Method: 3051
Analytical Method: 6020
Analyst: JYH
Dilution: 1
Units: mg/kg

Instrument: ELAN-ICP
Prep Date: 12/29/2008 08:21
Cal Date: 01/05/2009 11:17
Run Date: 01/05/2009 19:29
File ID: EL.010509.192900
Percent Solid: 96.1

Analyte	CAS. Number	Result	Qual	RL	MDL	
Arsenic, Total	7440-38-2	0.575 J		0.312	0.0779	MSL
Lead, Total	7439-92-1	1.56		0.416	0.104	
Selenium, Total	7782-49-2	0.166 J	J	0.416	0.104	MSL

J Estimated ; the analyte concentration was less than the low standard (LOQ)

Microbac

OW 3/12/09

17

Sample Number:	L08120644-17	PrePrep Method:	NONE	Instrument:	HYDRA
Client ID:	MR08-SS186-08D	Prep Method:	7471A	Prep Date:	12/29/2008 09:40
Matrix:	Soil	Analytical Method:	7471A	Cal Date:	01/05/2009 10:02
Workgroup Number:	WG291715	Analyst:	ADC	Run Date:	01/05/2009 12:13
Collect Date:	12/22/2008 09:45	Dilution:	1	File ID:	HY.010509.121315
Sample Tag:	01	Units:	mg/kg	Percent Solid:	96.1

Analyte	CAS. Number	Result	Qual	RL	MDL
Mercury, Total	7439-97-6	0.0340	J	0.103	0.0206

J Estimated ; the analyte concentration was less than the low standard (LOQ)

Microbac

1696 3/12/09

18

Sample Number: L08120644-18
Client ID: MR08-IS186-4-5-08D
Matrix: Soil
Workgroup Number: WG291810
Collect Date: 12/22/2008 09:55
Sample Tag: 01

PrePrep Method: NONE
Prep Method: 3051
Analytical Method: 6010B
Analyst: KHR
Dilution: 1
Units: mg/kg

Instrument: IRIS-ICP
Prep Date: 12/29/2008 11:02
Cal Date: 01/06/2009 09:53
Run Date: 01/06/2009 17:26
File ID: IR.010609.172600
Percent Solid: 90.2

Analyte	CAS. Number	Result	Qual	RL	MDL
Silver, Total	7440-22-4		U	0.847	0.212
Barium, Total	7440-39-3	7.32		0.424	0.0847
Cadmium, Total	7440-43-9		U	0.169	0.0424
Chromium, Total	7440-47-3	9.00		0.847	0.102

U Undetected; the analyte was analyzed for, but not detected.

Microbac

30 lew 3/12/09

18

Sample Number: L08120644-18
Client ID: MR08-IS186-4-5-08D
Matrix: Soil
Workgroup Number: WG291682
Collect Date: 12/22/2008 09:55
Sample Tag: 01

PrePrep Method: NONE
Prep Method: 3051
Analytical Method: 6020
Analyst: JYH
Dilution: 1
Units: mg/kg

Instrument: ELAN-ICP
Prep Date: 12/29/2008 08:21
Cal Date: 01/05/2009 11:17
Run Date: 01/05/2009 19:34
File ID: EL.010509.193422
Percent Solid: 90.2

Analyte	CAS. Number	Result	Qual	RL	MDL	
Arsenic, Total	7440-38-2	2.13 J		0.326	0.0815	MSL
Lead, Total	7439-92-1	3.23		0.435	0.109	
Selenium, Total	7782-49-2	0.157 J	~~J~~	0.435	0.109	MSL

J Estimated ; the analyte concentration was less than the low standard (LOQ)

Microbac

KW 3/12/09

18

Sample Number: L08120644-18
Client ID: MR08-IS186-4-5-08D
Matrix: Soil
Workgroup Number: WG291715
Collect Date: 12/22/2008 09:55
Sample Tag: 01

PrePrep Method: NONE
Prep Method: 7471A
Analytical Method: 7471A
Analyst: ADC
Dilution: 1
Units: mg/kg

Instrument: HYDRA
Prep Date: 12/29/2008 09:40
Cal Date: 01/05/2009 10:02
Run Date: 01/05/2009 12:14
File ID: HY.010509.121459
Percent Solid: 90.2

Analyte	CAS. Number	Result	Qual	RL	MDL
Mercury, Total	7439-97-6		U	0.109	0.0218

U Undetected; the analyte was analyzed for, but not detected.

Microbac

RW 3/12/09

19

Sample Number: L08120644-19
Client ID: MR08-SS201-08D
Matrix: Soil
Workgroup Number: WG291810
Collect Date: 12/22/2008 11:00
Sample Tag: 01

PrePrep Method: NONE
Prep Method: 3051
Analytical Method: 6010B
Analyst: KHR
Dilution: 1
Units: mg/kg

Instrument: IRIS-ICP
Prep Date: 12/29/2008 11:03
Cal Date: 01/06/2009 09:53
Run Date: 01/06/2009 17:32
File ID: IR.010609.173200
Percent Solid: 94.8

Analyte	CAS. Number	Result	Qual	RL	MDL
Silver, Total	7440-22-4	0.487	J	0.781	0.195
Barium, Total	7440-39-3	6.96		0.391	0.0781
Cadmium, Total	7440-43-9	0.244		0.156	0.0391
Chromium, Total	7440-47-3	4.97		0.781	0.0937

J Estimated ; the analyte concentration was less than the low standard (LOQ)

Microbac

31

MEW 3/12/09

19

Sample Number: L08120644-19
Client ID: MR08-SS201-08D
Matrix: Soil
Workgroup Number: WG291682
Collect Date: 12/22/2008 11:00
Sample Tag: 01

PrePrep Method: NONE
Prep Method: 3051
Analytical Method: 6020
Analyst: JYH
Dilution: 1
Units: mg/kg

Instrument: ELAN-ICP
Prep Date: 12/29/2008 08:21
Cal Date: 01/05/2009 11:17
Run Date: 01/05/2009 19:39
File ID: EL.010509.193945
Percent Solid: 94.8

Analyte	CAS. Number	Result	Qual	RL	MDL	
Arsenic, Total	7440-38-2	0.579 J		0.310	0.0775	MSL
Lead, Total	7439-92-1	1.74		0.414	0.103	
Selenium, Total	7782-49-2	0.259 J	J	0.414	0.103	MSL

J Estimated ; the analyte concentration was less than the low standard (LOQ)

Microbac

JW 3/12/09

19

Sample Number: L08120644-19
Client ID: MR08-SS201-08D
Matrix: Soil
Workgroup Number: WG291715
Collect Date: 12/22/2008 11:00
Sample Tag: 01

PrePrep Method: NONE
Prep Method: 7471A
Analytical Method: 7471A
Analyst: ADC
Dilution: 1
Units: mg/kg

Instrument: HYDRA
Prep Date: 12/29/2008 09:41
Cal Date: 01/05/2009 10:02
Run Date: 01/05/2009 12:16
File ID: HY.010509.121644
Percent Solid: 94.8

Analyte	CAS. Number	Result	Qual	RL	MDL
Mercury, Total	7439-97-6		U	0.104	0.0208

U Undetected; the analyte was analyzed for, but not detected.

Microbac

Mes 3/12/09

20

Sample Number: L08120644-20
Client ID: MR08-IS201-4-5-08D
Matrix: Soil
Workgroup Number: WG291810
Collect Date: 12/22/2008 11:10
Sample Tag: 01

PrePrep Method: NONE
Prep Method: 3051
Analytical Method: 6010B
Analyst: KHR
Dilution: 1
Units: mg/kg

Instrument: IRIS-ICP
Prep Date: 12/29/2008 11:03
Cal Date: 01/06/2009 09:53
Run Date: 01/06/2009 17:38
File ID: IR.010609.173800
Percent Solid: 90.0

Analyte	CAS. Number	Result	Qual	RL	MDL
Silver, Total	7440-22-4		U	0.844	0.211
Barium, Total	7440-39-3	6.31		0.422	0.0844
Cadmium, Total	7440-43-9	0.0490	J	0.169	0.0422
Chromium, Total	7440-47-3	8.22		0.844	0.101

U Undetected; the analyte was analyzed for, but not detected.
J Estimated ; the analyte concentration was less than the low standard (LOQ)

Microbac

 3/12/09

20

Sample Number: L08120644-20
Client ID: MR08-IS201-4-5-08D
Matrix: Soil
Workgroup Number: WG291682
Collect Date: 12/22/2008 11:10
Sample Tag: 01

PrePrep Method: NONE
Prep Method: 3051
Analytical Method: 6020
Analyst: JYH
Dilution: 1
Units: mg/kg

Instrument: ELAN-ICP
Prep Date: 12/29/2008 08:21
Cal Date: 01/05/2009 11:17
Run Date: 01/05/2009 19:45
File ID: EL.010509.194508
Percent Solid: 90.0

Analyte	CAS. Number	Result		Qual	RL	MDL	
Arsenic, Total	7440-38-2	0.653	J		0.329	0.0823	MSL
Lead, Total	7439-92-1	2.73			0.439	0.110	
Selenium, Total	7782-49-2	0.135	J	J	0.439	0.110	MSL

J Estimated ; the analyte concentration was less than the low standard (LOQ)

Microbac

KW 3/12/09

20

Sample Number: L08120644-20
Client ID: MR08-IS201-4-5-08D
Matrix: Soil
Workgroup Number: WG291715
Collect Date: 12/22/2008 11:10
Sample Tag: 01

PrePrep Method: NONE
Prep Method: 7471A
Analytical Method: 7471A
Analyst: ADC
Dilution: 1
Units: mg/kg

Instrument: HYDRA
Prep Date: 12/29/2008 09:41
Cal Date: 01/05/2009 10:02
Run Date: 01/05/2009 12:18
File ID: HY.010509.121857
Percent Solid: 90.0

Analyte	CAS. Number	Result	Qual	RL	MDL
Mercury, Total	7439-97-6		U	0.105	0.0211

U Undetected; the analyte was analyzed for, but not detected.

Microbac

1699

3/12/09

ENVIRONMENTAL
Data Services, Inc.

METALS

USEPA Region IV - Level IV Review

Site: MCB Camp Lejeune, TO-09 SDG #: L08120645

Client: CH2M HILL, Inc., Virginia Beach, Virginia Date: March 12, 2009

Laboratory: Microbac Laboratories, Inc., Marietta, Ohio Reviewer: Nancy Weaver

EDS ID	Client Sample ID	Laboratory Sample ID	Matrix
1	MR08-SS138-08D	L08120645-01	Soil
2	MR08-IS138-2-3-08D	L08120645-02	Soil
3	MR08-SS187-08D	L08120645-03	Soil
4	MR08-IS187-4-5-08D	L08120645-04	Soil
5	MR08-SS188-08D	L08120645-05	Soil
6	MR08-IS188-1-2-07D	L08120645-06	Soil
7	MR08-SS175-08D	L08120645-07	Soil
8	MR08-IS175-2-3-08D	L08120645-08	Soil
9	MR08-EB01-122008	L08120645-09	Water
10	MR08-FB-122008	L08120645-10	Water
11	MR08-SS164-08D	L08120645-11	Soil
12	MR08-IS164-5-6-08D	L08120645-12	Soil
13	MR08-SS165-08D	L08120645-13	Soil
14	MR08-IS165-5-6-08D	L08120645-14	Soil
15	MR08-SS166-08D	L08120645-15	Soil
16	MR08-IS166-5-6-08D	L08120645-16	Soil
17	MR08-SS173-08D	L08120645-17	Soil
18	MR08-IS173-5-6-08D	L08120645-18	Soil
19	MR08-SS174-08D	L08120645-19	Soil
20	MR08-IS174-5-6-08D	L08120645-20	Soil

The USEPA "Contract Laboratory Program National Functional Guidelines for Inorganic Data Review," October 2004, and professional judgement were used in evaluating the data in this summary report.

Holding Times - All samples were prepared and analyzed within 28 days for mercury and 180 days for all other metals.

Calibration - The ICV and CCV %R values were acceptable.

Method and Calibration Blanks - The method blank contaminations were free of contamination.

Field and Equipment Blank - Field QC results are summarized below.

Blank ID	Compound	Conc. ug/L	Action Level ug/L	Qualifier	Affected Samples
MR08-EB01-12008	None - ND	-	-	-	-
MR08-FB-1220608	None - ND	-	-	-	-

ICP Interference Check Sample - All %R values were acceptable.

MS/MSD - The MS/MSD sample exhibited acceptable %R and RPD values except the following.

MS/MSD Sample ID	Compound	MS/MSD %R/RPD	Qualifier	Affected Sample
Reference (WG291681)	Selenium	Ok/74.1%/Ok	J/UJ	3-8, 11-20
Reference (WG291682)	Arsenic	74.0%/Ok/Ok	J/UJ	1, 2
	Selenium	73.2%/74.0%/Ok	J/UJ	1, 2

LCS - The LCS samples exhibited acceptable %R values.

ICP Serial Dilution - The ICP serial dilution sample exhibited acceptable %D values.

Field Duplicates - Field duplicate samples were not included in this data package.

Compound Quantitation - No discrepancies were identified.

Sample Number: L08120645-01
Client ID: MR08-SS138-08D
Matrix: Soil
Workgroup Number: WG291810
Collect Date: 12/19/2008 13:20
Sample Tag: 01

PrePrep Method: NONE
Prep Method: 3051
Analytical Method: 6010B
Analyst: KHR
Dilution: 1
Units: mg/kg

Instrument: IRIS-ICP
Prep Date: 12/29/2008 11:04
Cal Date: 01/06/2009 09:53
Run Date: 01/06/2009 17:56
File ID: IR.010609.175600
Percent Solid: 92.1

Analyte	CAS. Number	Result	Qual	RL	MDL
Silver, Total	7440-22-4	0.290	J	0.744	0.186
Barium, Total	7440-39-3	5.32		0.372	0.0744
Cadmium, Total	7440-43-9	0.311		0.149	0.0372
Chromium, Total	7440-47-3	6.72		0.744	0.0893

J Estimated ; the analyte concentration was less than the low standard (LOQ)

Microbac

kw
13 3/12/09

Report Number: L08120645

Report Date : January 15, 2009

Sample Number: L08120645-01
Client ID: MR08-SS138-08D
Matrix: Soil
Workgroup Number: WG291682
Collect Date: 12/19/2008 13:20
Sample Tag: 01

PrePrep Method: NONE
Prep Method: 3051
Analytical Method: 6020
Analyst: JYH
Dilution: 1
Units: mg/kg

Instrument: ELAN-ICP
Prep Date: 12/29/2008 08:21
Cal Date: 01/05/2009 11:17
Run Date: 01/05/2009 19:50
File ID: EL.010509.195031
Percent Solid: 92.1

Analyte	CAS. Number	Result	Qual	RL	MDL	
Arsenic, Total	7440-38-2	1.01 J		0.320	0.0800	MSL
Lead, Total	7439-92-1	1.74		0.427	0.107	
Selenium, Total	7782-49-2	0.417 J	J	0.427	0.107	MSL

J Estimated ; the analyte concentration was less than the low standard (LOQ)

Microbac

LEW 3/12/09

Report Number: L08120645

Report Date : January 15, 2009

Sample Number:	L08120645-01	PrePrep Method:	NONE	Instrument:	HYDRA
Client ID:	MR08-SS138-08D	Prep Method:	7471A	Prep Date:	12/29/2008 11:49
Matrix:	Soil	Analytical Method:	7471A	Cal Date:	01/05/2009 10:02
Workgroup Number:	WG291716	Analyst:	ADC	Run Date:	01/05/2009 13:43
Collect Date:	12/19/2008 13:20	Dilution:	1	File ID:	HY.010509.134303
Sample Tag:	01	Units:	mg/kg	Percent Solid:	92.1

Analyte	CAS. Number	Result	Qual	RL	MDL
Mercury, Total	7439-97-6		U	0.103	0.0207

U Undetected; the analyte was analyzed for, but not detected.

Microbac

1991 LLW 3/12/09

2

Sample Number: L08120645-02
Client ID: MR08-IS138-2-3-08D
Matrix: Soil
Workgroup Number: WG291810
Collect Date: 12/19/2008 13:30
Sample Tag: 01

PrePrep Method: NONE
Prep Method: 3051
Analytical Method: 6010B
Analyst: KHR
Dilution: 1
Units: mg/kg

Instrument: IRIS-ICP
Prep Date: 12/29/2008 11:05
Cal Date: 01/06/2009 09:53
Run Date: 01/06/2009 18:02
File ID: IR.010609.180200
Percent Solid: 89.2

Analyte	CAS. Number	Result	Qual	RL	MDL
Silver, Total	7440-22-4		U	0.844	0.211
Barium, Total	7440-39-3	6.73		0.422	0.0844
Cadmium, Total	7440-43-9		U	0.169	0.0422
Chromium, Total	7440-47-3	6.68		0.844	0.101

U Undetected; the analyte was analyzed for, but not detected.

Microbac

14 3/12/09

2

Sample Number: L08120645-02
Client ID: MR08-IS138-2-3-08D
Matrix: Soil
Workgroup Number: WG291682
Collect Date: 12/19/2008 13:30
Sample Tag: 01

PrePrep Method: NONE
Prep Method: 3051
Analytical Method: 6020
Analyst: JYH
Dilution: 1
Units: mg/kg

Instrument: ELAN-ICP
Prep Date: 12/29/2008 08:21
Cal Date: 01/05/2009 11:17
Run Date: 01/05/2009 17:20
File ID: EL.010509.172038
Percent Solid: 89.2

Analyte	CAS. Number	Result	Qual	RL	MDL	
Arsenic, Total	7440-38-2	0.631 J		0.332	0.0829	MSL
Lead, Total	7439-92-1	4.16		0.442	0.111	
Selenium, Total	7782-49-2	0.230 J	J	0.442	0.111	MSL

J Estimated ; the analyte concentration was less than the low standard (LOQ)

Microbac

JW 3/12/09

2

Sample Number: L08120645-02
Client ID: MR08-IS138-2-3-08D
Matrix: Soil
Workgroup Number: WG291716
Collect Date: 12/19/2008 13:30
Sample Tag: 01

PrePrep Method: NONE
Prep Method: 7471A
Analytical Method: 7471A
Analyst: ADC
Dilution: 1
Units: mg/kg

Instrument: HYDRA
Prep Date: 12/29/2008 11:49
Cal Date: 01/05/2009 10:02
Run Date: 01/05/2009 12:44
File ID: HY.010509.124415
Percent Solid: 89.2

Analyte	CAS. Number	Result	Qual	RL	MDL
Mercury, Total	7439-97-6		U	0.110	0.0220

U Undetected; the analyte was analyzed for, but not detected.

Microbac

ler
1992 3/12/09

3

Sample Number: L08120645-03
Client ID: MR08-SS187-08D
Matrix: Soil
Workgroup Number: WG291704
Collect Date: 12/19/2008 14:50
Sample Tag: 01

PrePrep Method: NONE
Prep Method: 3051
Analytical Method: 6010B
Analyst: KHR
Dilution: 1
Units: mg/kg

Instrument: IRIS-ICP
Prep Date: 12/29/2008 11:24
Cal Date: 01/05/2009 10:22
Run Date: 01/05/2009 14:02
File ID: IR.010509.140200
Percent Solid: 87.8

Analyte	CAS. Number	Result	Qual	RL	MDL
Silver, Total	7440-22-4	0.288	J	0.866	0.217
Barium, Total	7440-39-3	9.08		0.433	0.0866
Cadmium, Total	7440-43-9	0.255		0.173	0.0433
Chromium, Total	7440-47-3	4.37		0.866	0.104

J Estimated ; the analyte concentration was less than the low standard (LOQ)

Microbac

lw 3/12/09

3

Sample Number: L08120645-03
Client ID: MR08-SS187-08D
Matrix: Soil
Workgroup Number: WG291681
Collect Date: 12/19/2008 14:50
Sample Tag: 01

PrePrep Method: NONE
Prep Method: 3051
Analytical Method: 6020
Analyst: JYH
Dilution: 1
Units: mg/kg

Instrument: ELAN-ICP
Prep Date: 12/29/2008 09:19
Cal Date: 01/03/2009 12:50
Run Date: 01/03/2009 17:37
File ID: EL.010309.173736
Percent Solid: 87.8

Analyte	CAS. Number	Result	Qual	RL	MDL	
Arsenic, Total	7440-38-2	0.539		0.332	0.0831	
Lead, Total	7439-92-1	38.4		0.443	0.111	
Selenium, Total	7782-49-2	U ~~J~~		0.443	0.111	MSL

U Undetected; the analyte was analyzed for, but not detected.

Microbac

JEW 3/12/09

3

Sample Number: L08120645-03
Client ID: MR08-SS187-08D
Matrix: Soil
Workgroup Number: WG291716
Collect Date: 12/19/2008 14:50
Sample Tag: 01

PrePrep Method: NONE
Prep Method: 7471A
Analytical Method: 7471A
Analyst: ADC
Dilution: 1
Units: mg/kg

Instrument: HYDRA
Prep Date: 12/29/2008 11:49
Cal Date: 01/05/2009 10:02
Run Date: 01/05/2009 12:45
File ID: HY.010509.124557
Percent Solid: 87.8

Analyte	CAS. Number	Result	Qual	RL	MDL
Mercury, Total	7439-97-6		U	0.114	0.0228

U Undetected; the analyte was analyzed for, but not detected.

Microbac

lew 3/12/09

1993

4

Sample Number: L08120645-04
Client ID: MR08-IS187-4-5-08D
Matrix: Soil
Workgroup Number: WG291704
Collect Date: 12/19/2008 15:00
Sample Tag: 01

PrePrep Method: NONE
Prep Method: 3051
Analytical Method: 6010B
Analyst: KHR
Dilution: 1
Units: mg/kg

Instrument: IRIS-ICP
Prep Date: 12/29/2008 11:25
Cal Date: 01/05/2009 10:22
Run Date: 01/05/2009 14:08
File ID: IR.010509.140800
Percent Solid: 88.6

Analyte	CAS. Number	Result	Qual	RL	MDL
Silver, Total	7440-22-4		U	0.814	0.204
Barium, Total	7440-39-3	10.4		0.407	0.0814
Cadmium, Total	7440-43-9	0.109	J	0.163	0.0407
Chromium, Total	7440-47-3	4.98		0.814	0.0977

U Undetected; the analyte was analyzed for, but not detected.
J Estimated ; the analyte concentration was less than the low standard (LOQ)

Microbac

16 / lew 3/12/09

4

Sample Number: L08120645-04
Client ID: MR08-IS187-4-5-08D
Matrix: Soil
Workgroup Number: WG291681
Collect Date: 12/19/2008 15:00
Sample Tag: 01

PrePrep Method: NONE
Prep Method: 3051
Analytical Method: 6020
Analyst: JYH
Dilution: 1
Units: mg/kg

Instrument: ELAN-ICP
Prep Date: 12/29/2008 09:19
Cal Date: 01/03/2009 12:50
Run Date: 01/03/2009 17:42
File ID: EL.010309.174257
Percent Solid: 88.6

Analyte	CAS. Number	Result	Qual	RL	MDL
Arsenic, Total	7440-38-2	0.384		0.329	0.0822
Lead, Total	7439-92-1	19.0		0.438	0.110
Selenium, Total	7782-49-2	UJ	~~U~~	0.438	0.110

MSL

U Undetected; the analyte was analyzed for, but not detected.

Microbac

Cleo 3/12/09

4

Sample Number: L08120645-04
Client ID: MR08-IS187-4-5-08D
Matrix: Soil
Workgroup Number: WG291716
Collect Date: 12/19/2008 15:00
Sample Tag: 01

PrePrep Method: NONE
Prep Method: 7471A
Analytical Method: 7471A
Analyst: ADC
Dilution: 1
Units: mg/kg

Instrument: HYDRA
Prep Date: 12/29/2008 11:49
Cal Date: 01/05/2009 10:02
Run Date: 01/05/2009 12:47
File ID: HY.010509.124739
Percent Solid: 88.6

Analyte	CAS. Number	Result	Qual	RL	MDL
Mercury, Total	7439-97-6		U	0.112	0.0223

U Undetected; the analyte was analyzed for, but not detected.

Microbac

1994 AW 3/12/09

5

Sample Number: L08120645-05
Client ID: MR08-SS188-08D
Matrix: Soil
Workgroup Number: WG291704
Collect Date: 12/19/2008 15:40
Sample Tag: 01

PrePrep Method: NONE
Prep Method: 3051
Analytical Method: 6010B
Analyst: KHR
Dilution: 1
Units: mg/kg

Instrument: IRIS-ICP
Prep Date: 12/29/2008 11:25
Cal Date: 01/05/2009 10:22
Run Date: 01/05/2009 14:14
File ID: IR.010509.141400
Percent Solid: 95.0

Analyte	CAS. Number	Result	Qual	RL	MDL
Silver, Total	7440-22-4	0.318	J	0.720	0.180
Barium, Total	7440-39-3	5.45		0.360	0.0720
Cadmium, Total	7440-43-9	1.37		0.144	0.0360
Chromium, Total	7440-47-3	5.64		0.720	0.0864

J Estimated ; the analyte concentration was less than the low standard (LOQ)

Microbac

lew
3/12/09

5

Sample Number: L08120645-05
Client ID: MR08-SS188-08D
Matrix: Soil
Workgroup Number: WG291681
Collect Date: 12/19/2008 15:40
Sample Tag: 01

PrePrep Method: NONE
Prep Method: 3051
Analytical Method: 6020
Analyst: JYH
Dilution: 1
Units: mg/kg

Instrument: ELAN-ICP
Prep Date: 12/29/2008 09:19
Cal Date: 01/03/2009 12:50
Run Date: 01/03/2009 18:38
File ID: EL.010309.183816
Percent Solid: 95.0

Analyte	CAS. Number	Result	Qual	RL	MDL
Arsenic, Total	7440-38-2	1.45		0.306	0.0765
Lead, Total	7439-92-1	20.3		0.408	0.102
Selenium, Total	7782-49-2	0.490 J		0.408	0.102

MSL

Microbac

Geo 3/12/09

5

Sample Number:	L08120645-05	PrePrep Method:	NONE	Instrument:	HYDRA
Client ID:	MR08-SS188-08D	Prep Method:	7471A	Prep Date:	12/29/2008 11:49
Matrix:	Soil	Analytical Method:	7471A	Cal Date:	01/05/2009 10:02
Workgroup Number:	WG291716	Analyst:	ADC	Run Date:	01/05/2009 12:49
Collect Date:	12/19/2008 15:40	Dilution:	1	File ID:	HY.010509.124926
Sample Tag:	01	Units:	mg/kg	Percent Solid:	95.0

Analyte	CAS. Number	Result	Qual	RL	MDL
Mercury, Total	7439-97-6		U	0.103	0.0206

U Undetected; the analyte was analyzed for, but not detected.

Microbac

lew 3/12/09

6

Sample Number: L08120645-06
Client ID: MR08-IS188-1-2-08D
Matrix: Soil
Workgroup Number: WG291704
Collect Date: 12/19/2008 15:50
Sample Tag: 01

PrePrep Method: NONE
Prep Method: 3051
Analytical Method: 6010B
Analyst: KHR
Dilution: 1
Units: mg/kg

Instrument: IRIS-ICP
Prep Date: 12/29/2008 11:25
Cal Date: 01/05/2009 10:22
Run Date: 01/05/2009 14:20
File ID: IR.010509.142000
Percent Solid: 93.4

Analyte	CAS. Number	Result	Qual	RL	MDL
Silver, Total	7440-22-4	0.339	J	0.780	0.195
Barium, Total	7440-39-3	3.80		0.390	0.0780
Cadmium, Total	7440-43-9	0.0936	J	0.156	0.0390
Chromium, Total	7440-47-3	1.39		0.780	0.0936

J Estimated ; the analyte concentration was less than the low standard (LOQ)

Microbac

LW
18 3/12/09

6

Sample Number: L08120645-06
Client ID: MR08-IS188-1-2-08D
Matrix: Soil
Workgroup Number: WG291681
Collect Date: 12/19/2008 15:50
Sample Tag: 01

PrePrep Method: NONE
Prep Method: 3051
Analytical Method: 6020
Analyst: JYH
Dilution: 1
Units: mg/kg

Instrument: ELAN-ICP
Prep Date: 12/29/2008 09:19
Cal Date: 01/03/2009 12:50
Run Date: 01/03/2009 18:43
File ID: EL.010309.184339
Percent Solid: 93.4

Analyte	CAS. Number	Result	Qual	RL	MDL
Arsenic, Total	7440-38-2	0.330		0.317	0.0792
Lead, Total	7439-92-1	8.88		0.423	0.106
Selenium, Total	7782-49-2	UJ	✓	0.423	0.106

MSL

U Undetected; the analyte was analyzed for, but not detected.

Microbac

lee 3/12/09

6

Sample Number: L08120645-06
Client ID: MR08-IS188-1-2-08D
Matrix: Soil
Workgroup Number: WG291716
Collect Date: 12/19/2008 15:50
Sample Tag: 01

PrePrep Method: NONE
Prep Method: 7471A
Analytical Method: 7471A
Analyst: ADC
Dilution: 1
Units: mg/kg

Instrument: HYDRA
Prep Date: 12/29/2008 11:49
Cal Date: 01/05/2009 10:02
Run Date: 01/05/2009 12:51
File ID: HY.010509.125141
Percent Solid: 93.4

Analyte	CAS. Number	Result	Qual	RL	MDL
Mercury, Total	7439-97-6		U	0.104	0.0208

U Undetected; the analyte was analyzed for, but not detected.

Microbac

1996 lew 3/12/09

Sample Number: L08120645-07
Client ID: MR08-SS175-08D
Matrix: Soil
Workgroup Number: WG291704
Collect Date: 12/19/2008 16:00
Sample Tag: 01

PrePrep Method: NONE
Prep Method: 3051
Analytical Method: 6010B
Analyst: KHR
Dilution: 1
Units: mg/kg

Instrument: IRIS-ICP
Prep Date: 12/29/2008 11:26
Cal Date: 01/05/2009 10:22
Run Date: 01/05/2009 14:26
File ID: IR.010509.142600
Percent Solid: 90.7

Analyte	CAS. Number	Result	Qual	RL	MDL
Silver, Total	7440-22-4	0.208	J	0.788	0.197
Barium, Total	7440-39-3	7.06		0.394	0.0788
Cadmium, Total	7440-43-9		U	0.158	0.0394
Chromium, Total	7440-47-3	2.38		0.788	0.0945

U Undetected; the analyte was analyzed for, but not detected.
J Estimated ; the analyte concentration was less than the low standard (LOQ)

Microbac

3/12/09

7

Sample Number: L08120645-07
Client ID: MR08-SS175-08D
Matrix: Soil
Workgroup Number: WG291681
Collect Date: 12/19/2008 16:00
Sample Tag: 01

PrePrep Method: NONE
Prep Method: 3051
Analytical Method: 6020
Analyst: JYH
Dilution: 1
Units: mg/kg

Instrument: ELAN-ICP
Prep Date: 12/29/2008 09:19
Cal Date: 01/03/2009 12:50
Run Date: 01/03/2009 18:49
File ID: EL.010309.184903
Percent Solid: 90.7

Analyte	CAS. Number	Result	Qual	RL	MDL
Arsenic, Total	7440-38-2	0.442		0.325	0.0813
Lead, Total	7439-92-1	2.42		0.434	0.108
Selenium, Total	7782-49-2	0.148 J	J	0.434	0.108

MSL

J Estimated ; the analyte concentration was less than the low standard (LOQ)

Microbac

875 3/12/09

7

Sample Number:	L08120645-07	PrePrep Method:	NONE	Instrument:	HYDRA
Client ID:	MR08-SS175-08D	Prep Method:	7471A	Prep Date:	12/29/2008 11:49
Matrix:	Soil	Analytical Method:	7471A	Cal Date:	01/05/2009 10:02
Workgroup Number:	WG291716	Analyst:	ADC	Run Date:	01/05/2009 12:53
Collect Date:	12/19/2008 16:00	Dilution:	1	File ID:	HY.010509.125332
Sample Tag:	01	Units:	mg/kg	Percent Solid:	90.7

Analyte	CAS. Number	Result	Qual	RL	MDL
Mercury, Total	7439-97-6		U	0.105	0.0210

U Undetected; the analyte was analyzed for, but not detected.

Microbac

1997 leaJ 3/12/09

8

Sample Number: L08120645-08
Client ID: MR08-IS175-2-3-08D
Matrix: Soil
Workgroup Number: WG291704
Collect Date: 12/19/2008 16:10
Sample Tag: 01

PrePrep Method: NONE
Prep Method: 3051
Analytical Method: 6010B
Analyst: KHR
Dilution: 1
Units: mg/kg

Instrument: IRIS-ICP
Prep Date: 12/29/2008 11:26
Cal Date: 01/05/2009 10:22
Run Date: 01/05/2009 14:32
File ID: IR.010509.143200
Percent Solid: 94.0

Analyte	CAS. Number	Result	Qual	RL	MDL
Silver, Total	7440-22-4	0.223	J	0.795	0.199
Barium, Total	7440-39-3	5.57		0.397	0.0795
Cadmium, Total	7440-43-9	0.970		0.159	0.0397
Chromium, Total	7440-47-3	5.60		0.795	0.0954

J Estimated ; the analyte concentration was less than the low standard (LOQ)

Microbac

few 3/12/09

8

Sample Number: L08120645-08
Client ID: MR08-IS175-2-3-08D
Matrix: Soil
Workgroup Number: WG291681
Collect Date: 12/19/2008 16:10
Sample Tag: 01

PrePrep Method: NONE
Prep Method: 3051
Analytical Method: 6020
Analyst: JYH
Dilution: 1
Units: mg/kg

Instrument: ELAN-ICP
Prep Date: 12/29/2008 09:19
Cal Date: 01/03/2009 12:50
Run Date: 01/03/2009 18:54
File ID: EL.010309.185426
Percent Solid: 94.0

Analyte	CAS. Number	Result	Qual	RL	MDL
Arsenic, Total	7440-38-2	0.870		0.314	0.0786
Lead, Total	7439-92-1	25.1		0.419	0.105
Selenium, Total	7782-49-2	0.240 J	~~J~~	0.419	0.105

MSL

J Estimated ; the analyte concentration was less than the low standard (LOQ)

Microbac

9w 3/12/09

8

Sample Number: L08120645-08
Client ID: MR08-IS175-2-3-08D
Matrix: Soil
Workgroup Number: WG291716
Collect Date: 12/19/2008 16:10
Sample Tag: 01

PrePrep Method: NONE
Prep Method: 7471A
Analytical Method: 7471A
Analyst: ADC
Dilution: 1
Units: mg/kg

Instrument: HYDRA
Prep Date: 12/29/2008 11:49
Cal Date: 01/05/2009 10:02
Run Date: 01/05/2009 12:55
File ID: HY.010509.125515
Percent Solid: 94.0

Analyte	CAS. Number	Result	Qual	RL	MDL
Mercury, Total	7439-97-6		U	0.105	0.0209

U Undetected; the analyte was analyzed for, but not detected.

Microbac

lew
1998 1/12/09

9

Sample Number: L08120645-09
Client ID: MR08-EB01-122008
Matrix: Water
Workgroup Number: WG291502
Collect Date: 12/20/2008 07:40
Sample Tag: 01

PrePrep Method: NONE
Prep Method: 3005A
Analytical Method: 6010B
Analyst: SLP
Dilution: 1
Units: ug/L

Instrument: PE-ICP2
Prep Date: 12/29/2008 10:46
Cal Date: 01/05/2009 11:20
Run Date: 01/05/2009 18:28
File ID: P2.010509.182827

Analyte	CAS. Number	Result	Qual	RL	MDL
Barium, Total	7440-39-3		U	10.0	2.50
Cadmium, Total	7440-43-9		U	1.00	0.250
Chromium, Total	7440-47-3		U	10.0	2.50
Silver, Total	7440-22-4		U	6.00	2.00

U Undetected; the analyte was analyzed for, but not detected.

Microbac

fcw 2/12/09

9

Sample Number: L08120645-09
Client ID: MR08-EB01-122008
Matrix: Water
Workgroup Number: WG291525
Collect Date: 12/20/2008 07:40
Sample Tag: 01

PrePrep Method: NONE
Prep Method: 3015
Analytical Method: 6020
Analyst: JYH
Dilution: 1
Units: ug/L

Instrument: ELAN-ICP
Prep Date: 12/29/2008 07:08
Cal Date: 12/30/2008 13:23
Run Date: 12/30/2008 16:39
File ID: EL.123008.163924

Analyte	CAS. Number	Result	Qual	RL	MDL
Arsenic, Total	7440-38-2		U	1.00	0.250
Lead, Total	7439-92-1		U	1.00	0.250
Selenium, Total	7782-49-2		U	2.00	0.500

U Undetected; the analyte was analyzed for, but not detected.

Microbac

lew 3/12/09

9

Sample Number: L08120645-09
Client ID: MR08-EB01-122008
Matrix: Water
Workgroup Number: WG291953
Collect Date: 12/20/2008 07:40
Sample Tag: 01

PrePrep Method: NONE
Prep Method: 7470A
Analytical Method: 7470A
Analyst: ADC
Dilution: 1
Units: ug/L

Instrument: HYDRA
Prep Date: 01/07/2009 07:48
Cal Date: 01/08/2009 09:47
Run Date: 01/08/2009 10:23
File ID: HY.010809.102346

Analyte	CAS. Number	Result	Qual	RL	MDL
Mercury	7439-97-6		U	0.474	0.100

U Undetected; the analyte was analyzed for, but not detected.

Microbac

1999 lw 3/12/09

10

Sample Number: L08120645-10
Client ID: MR08-FB-122008
Matrix: Water
Workgroup Number: WG291502
Collect Date: 12/20/2008 08:20
Sample Tag: 01

PrePrep Method: NONE
Prep Method: 3005A
Analytical Method: 6010B
Analyst: SLP
Dilution: 1
Units: ug/L

Instrument: PE-ICP2
Prep Date: 12/29/2008 10:46
Cal Date: 01/05/2009 11:20
Run Date: 01/05/2009 18:34
File ID: P2.010509.183444

Analyte	CAS. Number	Result	Qual	RL	MDL
Barium, Total	7440-39-3		U	10.0	2.50
Cadmium, Total	7440-43-9		U	1.00	0.250
Chromium, Total	7440-47-3		U	10.0	2.50
Silver, Total	7440-22-4		U	6.00	2.00

U Undetected; the analyte was analyzed for, but not detected.

Microbac

lew 3/12/09

10

Sample Number: L08120645-10
Client ID: MR08-FB-122008
Matrix: Water
Workgroup Number: WG291525
Collect Date: 12/20/2008 08:20
Sample Tag: 01

PrePrep Method: NONE
Prep Method: 3015
Analytical Method: 6020
Analyst: JYH
Dilution: 1
Units: ug/L

Instrument: ELAN-ICP
Prep Date: 12/29/2008 07:08
Cal Date: 12/30/2008 13:23
Run Date: 12/30/2008 16:44
File ID: EL.123008.164446

Analyte	CAS. Number	Result	Qual	RL	MDL
Arsenic, Total	7440-38-2		U	1.00	0.250
Lead, Total	7439-92-1		U	1.00	0.250
Selenium, Total	7782-49-2		U	2.00	0.500

U Undetected; the analyte was analyzed for, but not detected.

Microbac

MW 3/12/09

10

Sample Number: L08120645-10
Client ID: MR08-FB-122008
Matrix: Water
Workgroup Number: WG291953
Collect Date: 12/20/2008 08:20
Sample Tag: 01

PrePrep Method: NONE
Prep Method: 7470A
Analytical Method: 7470A
Analyst: ADC
Dilution: 1
Units: ug/L

Instrument: HYDRA
Prep Date: 01/07/2009 07:48
Cal Date: 01/08/2009 09:47
Run Date: 01/08/2009 10:53
File ID: HY.010809.105325

Analyte	CAS. Number	Result	Qual	RL	MDL
Mercury	7439-97-6		U	0.526	0.100

U Undetected; the analyte was analyzed for, but not detected.

Microbac

2000 JEW 3/12/09

11

Sample Number: L08120645-11
Client ID: MR08-SS164-08D
Matrix: Soil
Workgroup Number: WG291704
Collect Date: 12/20/2008 08:40
Sample Tag: 01

PrePrep Method: NONE
Prep Method: 3051
Analytical Method: 6010B
Analyst: KHR
Dilution: 1
Units: mg/kg

Instrument: IRIS-ICP
Prep Date: 12/29/2008 11:27
Cal Date: 01/05/2009 10:22
Run Date: 01/05/2009 14:39
File ID: IR.010509.143900
Percent Solid: 88.7

Analyte	CAS. Number	Result	Qual	RL	MDL
Silver, Total	7440-22-4	0.454	J	0.794	0.199
Barium, Total	7440-39-3	7.04		0.397	0.0794
Cadmium, Total	7440-43-9	1.84		0.159	0.0397
Chromium, Total	7440-47-3	5.21		0.794	0.0953

J Estimated ; the analyte concentration was less than the low standard (LOQ)

Microbac

MW 3/12/09

23

11

Sample Number: L08120645-11
Client ID: MR08-SS164-08D
Matrix: Soil
Workgroup Number: WG291681
Collect Date: 12/20/2008 08:40
Sample Tag: 01

PrePrep Method: NONE
Prep Method: 3051
Analytical Method: 6020
Analyst: JYH
Dilution: 1
Units: mg/kg

Instrument: ELAN-ICP
Prep Date: 12/29/2008 09:19
Cal Date: 01/03/2009 12:50
Run Date: 01/03/2009 18:59
File ID: EL.010309.185950
Percent Solid: 88.7

Analyte	CAS. Number	Result	Qual	RL	MDL
Arsenic, Total	7440-38-2	1.40		0.335	0.0837
Lead, Total	7439-92-1	44.2		0.447	0.112
Selenium, Total	7782-49-2	0.523 J		0.447	0.112

MSL

Microbac

JW 3/12/09

11

Sample Number:	L08120645-11	PrePrep Method:	NONE	Instrument:	HYDRA
Client ID:	MR08-SS164-08D	Prep Method:	7471A	Prep Date:	12/29/2008 11:49
Matrix:	Soil	Analytical Method:	7471A	Cal Date:	01/05/2009 10:02
Workgroup Number:	WG291716	Analyst:	ADC	Run Date:	01/05/2009 12:56
Collect Date:	12/20/2008 08:40	Dilution:	1	File ID:	HY.010509.125659
Sample Tag:	01	Units:	mg/kg	Percent Solid:	88.7

Analyte	CAS. Number	Result	Qual	RL	MDL
Mercury, Total	7439-97-6		U	0.111	0.0222

U Undetected; the analyte was analyzed for, but not detected.

Microbac

2001 REW 3/12/09

12

Sample Number: L08120645-12
Client ID: MR08-IS164-5-6-08D
Matrix: Soil
Workgroup Number: WG291704
Collect Date: 12/20/2008 08:45
Sample Tag: 01

PrePrep Method: NONE
Prep Method: 3051
Analytical Method: 6010B
Analyst: KHR
Dilution: 1
Units: mg/kg

Instrument: IRIS-ICP
Prep Date: 12/29/2008 11:28
Cal Date: 01/05/2009 10:22
Run Date: 01/05/2009 14:45
File ID: IR.010509.144500
Percent Solid: 89.1

Analyte	CAS. Number	Result	Qual	RL	MDL
Silver, Total	7440-22-4	0.270	J	0.795	0.199
Barium, Total	7440-39-3	6.65		0.398	0.0795
Cadmium, Total	7440-43-9		U	0.159	0.0398
Chromium, Total	7440-47-3	4.15		0.795	0.0955

U Undetected; the analyte was analyzed for, but not detected.
J Estimated ; the analyte concentration was less than the low standard (LOQ)

Microbac

24 3/12/09

12

Sample Number: L08120645-12
Client ID: MR08-IS164-5-6-08D
Matrix: Soil
Workgroup Number: WG291681
Collect Date: 12/20/2008 08:45
Sample Tag: 01

PrePrep Method: NONE
Prep Method: 3051
Analytical Method: 6020
Analyst: JYH
Dilution: 1
Units: mg/kg

Instrument: ELAN-ICP
Prep Date: 12/29/2008 09:19
Cal Date: 01/03/2009 12:50
Run Date: 01/03/2009 19:05
File ID: EL.010309.190515
Percent Solid: 89.1

Analyte	CAS. Number	Result	Qual	RL	MDL
Arsenic, Total	7440-38-2	0.683		0.334	0.0835
Lead, Total	7439-92-1	3.56		0.445	0.111
Selenium, Total	7782-49-2	UJ	✓	0.445	0.111

MSL

U Undetected; the analyte was analyzed for, but not detected.

Microbac

JLW 3/12/09

12

Sample Number: L08120645-12
Client ID: MR08-IS164-5-6-08D
Matrix: Soil
Workgroup Number: WG291716
Collect Date: 12/20/2008 08:45
Sample Tag: 01

PrePrep Method: NONE
Prep Method: 7471A
Analytical Method: 7471A
Analyst: ADC
Dilution: 1
Units: mg/kg

Instrument: HYDRA
Prep Date: 12/29/2008 11:49
Cal Date: 01/05/2009 10:02
Run Date: 01/05/2009 13:02
File ID: HY.010509.130224
Percent Solid: 89.1

Analyte	CAS. Number	Result	Qual	RL	MDL
Mercury, Total	7439-97-6		U	0.105	0.0210

U Undetected; the analyte was analyzed for, but not detected.

Microbac

2002 3/12/09

13.

Sample Number: L08120645-13
Client ID: MR08-SS165-08D
Matrix: Soil
Workgroup Number: WG291704
Collect Date: 12/20/2008 09:15
Sample Tag: 01

PrePrep Method: NONE
Prep Method: 3051
Analytical Method: 6010B
Analyst: KHR
Dilution: 1
Units: mg/kg

Instrument: IRIS-ICP
Prep Date: 12/29/2008 11:28
Cal Date: 01/05/2009 10:22
Run Date: 01/05/2009 14:51
File ID: IR.010509.145100
Percent Solid: 92.9

Analyte	CAS. Number	Result	Qual	RL	MDL
Silver, Total	7440-22-4	0.507	J	0.811	0.203
Barium, Total	7440-39-3	4.20		0.405	0.0811
Cadmium, Total	7440-43-9	0.661		0.162	0.0405
Chromium, Total	7440-47-3	5.85		0.811	0.0973

J Estimated ; the analyte concentration was less than the low standard (LOQ)

Microbac

25

3/12/09

13

Sample Number: L08120645-13
Client ID: MR08-SS165-08D
Matrix: Soil
Workgroup Number: WG291681
Collect Date: 12/20/2008 09:15
Sample Tag: 01

PrePrep Method: NONE
Prep Method: 3051
Analytical Method: 6020
Analyst: JYH
Dilution: 1
Units: mg/kg

Instrument: ELAN-ICP
Prep Date: 12/29/2008 09:19
Cal Date: 01/03/2009 12:50
Run Date: 01/03/2009 19:10
File ID: EL.010309.191037
Percent Solid: 92.9

Analyte	CAS. Number	Result	Qual	RL	MDL
Arsenic, Total	7440-38-2	1.40		0.322	0.0805
Lead, Total	7439-92-1	3.13		0.429	0.107
Selenium, Total	7782-49-2	0.478 J		0.429	0.107

MSL

Microbac

881 3/12/09

13

Sample Number:	L08120645-13	PrePrep Method:	NONE	Instrument:	HYDRA
Client ID:	MR08-SS165-08D	Prep Method:	7471A	Prep Date:	12/29/2008 11:49
Matrix:	Soil	Analytical Method:	7471A	Cal Date:	01/05/2009 10:02
Workgroup Number:	WG291716	Analyst:	ADC	Run Date:	01/05/2009 13:04
Collect Date:	12/20/2008 09:15	Dilution:	1	File ID:	HY.010509.130426
Sample Tag:	01	Units:	mg/kg	Percent Solid:	92.9

Analyte	CAS. Number	Result	Qual	RL	MDL
Mercury, Total	7439-97-6		U	0.107	0.0214

U Undetected; the analyte was analyzed for, but not detected.

Microbac

2003 MW 3/12/06

14

Sample Number: L08120645-14
Client ID: MR08-IS165-5-608D
Matrix: Soil
Workgroup Number: WG291704
Collect Date: 12/20/2008 09:20
Sample Tag: 01

PrePrep Method: NONE
Prep Method: 3051
Analytical Method: 6010B
Analyst: KHR
Dilution: 1
Units: mg/kg

Instrument: IRIS-ICP
Prep Date: 12/29/2008 11:29
Cal Date: 01/05/2009 10:22
Run Date: 01/05/2009 15:09
File ID: IR.010509.150900
Percent Solid: 85.0

Analyte	CAS. Number	Result	Qual	RL	MDL
Silver, Total	7440-22-4	0.344	J	0.826	0.206
Barium, Total	7440-39-3	22.4		0.413	0.0826
Cadmium, Total	7440-43-9		U	0.165	0.0413
Chromium, Total	7440-47-3	8.04		0.826	0.0991

U Undetected; the analyte was analyzed for, but not detected.
J Estimated ; the analyte concentration was less than the low standard (LOQ)

Microbac

26 3/12/09

14

Sample Number: L08120645-14
Client ID: MR08-IS165-5-608D
Matrix: Soil
Workgroup Number: WG291681
Collect Date: 12/20/2008 09:20
Sample Tag: 01

PrePrep Method: NONE
Prep Method: 3051
Analytical Method: 6020
Analyst: JYH
Dilution: 1
Units: mg/kg

Instrument: ELAN-ICP
Prep Date: 12/29/2008 09:19
Cal Date: 01/03/2009 12:50
Run Date: 01/03/2009 19:15
File ID: EL.010309.191559
Percent Solid: 85.0

Analyte	CAS. Number	Result	Qual	RL	MDL
Arsenic, Total	7440-38-2	1.21		0.343	0.0858
Lead, Total	7439-92-1	8.22		0.458	0.114
Selenium, Total	7782-49-2	UJ	U	0.458	0.114

MSL

U Undetected; the analyte was analyzed for, but not detected.

Microbac

Lee 3/12/09

14

Sample Number: L08120645-14
Client ID: MR08-IS165-5-608D
Matrix: Soil
Workgroup Number: WG291716
Collect Date: 12/20/2008 09:20
Sample Tag: 01

PrePrep Method: NONE
Prep Method: 7471A
Analytical Method: 7471A
Analyst: ADC
Dilution: 1
Units: mg/kg

Instrument: HYDRA
Prep Date: 12/29/2008 11:49
Cal Date: 01/05/2009 10:02
Run Date: 01/05/2009 13:06
File ID: HY.010509.130628
Percent Solid: 85.0

Analyte	CAS. Number	Result	Qual	RL	MDL
Mercury, Total	7439-97-6		U	0.110	0.0220

U Undetected; the analyte was analyzed for, but not detected.

Microbac

2004 3/12/09

15

Sample Number: L08120645-15
Client ID: MR08-SS166-08D
Matrix: Soil
Workgroup Number: WG291704
Collect Date: 12/20/2008 09:50
Sample Tag: 01

PrePrep Method: NONE
Prep Method: 3051
Analytical Method: 6010B
Analyst: KHR
Dilution: 1
Units: mg/kg

Instrument: IRIS-ICP
Prep Date: 12/29/2008 11:29
Cal Date: 01/05/2009 10:22
Run Date: 01/05/2009 15:15
File ID: IR.010509.151500
Percent Solid: 93.2

Analyte	CAS. Number	Result	Qual	RL	MDL
Silver, Total	7440-22-4	0.390	J	0.793	0.198
Barium, Total	7440-39-3	6.16		0.396	0.0793
Cadmium, Total	7440-43-9	1.51		0.159	0.0396
Chromium, Total	7440-47-3	4.55		0.793	0.0951

J Estimated ; the analyte concentration was less than the low standard (LOQ)

Microbac

27 MW 3/12/09

15

Sample Number: L08120645-15
Client ID: MR08-SS166-08D
Matrix: Soil
Workgroup Number: WG291681
Collect Date: 12/20/2008 09:50
Sample Tag: 01

PrePrep Method: NONE
Prep Method: 3051
Analytical Method: 6020
Analyst: JYH
Dilution: 1
Units: mg/kg

Instrument: ELAN-ICP
Prep Date: 12/29/2008 09:19
Cal Date: 01/03/2009 12:50
Run Date: 01/03/2009 19:21
File ID: EL.010309.192120
Percent Solid: 93.2

Analyte	CAS. Number	Result	Qual	RL	MDL
Arsenic, Total	7440-38-2	1.78		0.312	0.0780
Lead, Total	7439-92-1	9.31		0.416	0.104
Selenium, Total	7782-49-2	0.300 J	J	0.416	0.104

MSL

J Estimated ; the analyte concentration was less than the low standard (LOQ)

Microbac

Jeo 3/12/09

15

Sample Number: L08120645-15
Client ID: MR08-SS166-08D
Matrix: Soil
Workgroup Number: WG291716
Collect Date: 12/20/2008 09:50
Sample Tag: 01

PrePrep Method: NONE
Prep Method: 7471A
Analytical Method: 7471A
Analyst: ADC
Dilution: 1
Units: mg/kg

Instrument: HYDRA
Prep Date: 12/29/2008 11:49
Cal Date: 01/05/2009 10:02
Run Date: 01/05/2009 13:08
File ID: HY.010509.130826
Percent Solid: 93.2

Analyte	CAS. Number	Result	Qual	RL	MDL
Mercury, Total	7439-97-6		U	0.106	0.0211

U Undetected; the analyte was analyzed for, but not detected.

Microbac

2005 lew 3/12/09

16

Sample Number: L08120645-16
Client ID: MR08-IS166-5-6-08D
Matrix: Soil
Workgroup Number: WG291704
Collect Date: 12/20/2008 10:00
Sample Tag: 01

PrePrep Method: NONE
Prep Method: 3051
Analytical Method: 6010B
Analyst: KHR
Dilution: 1
Units: mg/kg

Instrument: IRIS-ICP
Prep Date: 12/29/2008 11:30
Cal Date: 01/05/2009 10:22
Run Date: 01/05/2009 15:21
File ID: IR.010509.152100
Percent Solid: 85.9

Analyte	CAS. Number	Result	Qual	RL	MDL
Silver, Total	7440-22-4	0.284	J	0.859	0.215
Barium, Total	7440-39-3	10.9		0.429	0.0859
Cadmium, Total	7440-43-9		U	0.172	0.0429
Chromium, Total	7440-47-3	5.84		0.859	0.103

U Undetected; the analyte was analyzed for, but not detected.
J Estimated ; the analyte concentration was less than the low standard (LOQ)

Microbac

lew
3/12/09

16

Sample Number: L08120645-16
Client ID: MR08-IS166-5-6-08D
Matrix: Soil
Workgroup Number: WG291681
Collect Date: 12/20/2008 10:00
Sample Tag: 01

PrePrep Method: NONE
Prep Method: 3051
Analytical Method: 6020
Analyst: JYH
Dilution: 1
Units: mg/kg

Instrument: ELAN-ICP
Prep Date: 12/29/2008 09:19
Cal Date: 01/03/2009 12:50
Run Date: 01/03/2009 19:26
File ID: EL.010309.192642
Percent Solid: 85.9

Analyte	CAS. Number	Result	Qual	RL	MDL
Arsenic, Total	7440-38-2	1.81		0.342	0.0856
Lead, Total	7439-92-1	6.98		0.457	0.114
Selenium, Total	7782-49-2	0.136 J	~~J~~	0.457	0.114

MSL

J Estimated ; the analyte concentration was less than the low standard (LOQ)

Microbac

884

lew 3/12/09

16

Sample Number:	L08120645-16	PrePrep Method:	NONE	Instrument:	HYDRA
Client ID:	MR08-IS166-5-6-08D	Prep Method:	7471A	Prep Date:	12/29/2008 11:49
Matrix:	Soil	Analytical Method:	7471A	Cal Date:	01/05/2009 10:02
Workgroup Number:	WG291716	Analyst:	ADC	Run Date:	01/05/2009 13:10
Collect Date:	12/20/2008 10:00	Dilution:	1	File ID:	HY.010509.131041
Sample Tag:	01	Units:	mg/kg	Percent Solid:	85.9

Analyte	CAS. Number	Result	Qual	RL	MDL
Mercury, Total	7439-97-6		U	0.112	0.0225

U Undetected; the analyte was analyzed for, but not detected.

Microbac

Clw
2006 5/12/09

17

Sample Number: L08120645-17
Client ID: MR08-SS173-08D
Matrix: Soil
Workgroup Number: WG291704
Collect Date: 12/20/2008 10:30
Sample Tag: 01

PrePrep Method: NONE
Prep Method: 3051
Analytical Method: 6010B
Analyst: KHR
Dilution: 1
Units: mg/kg

Instrument: IRIS-ICP
Prep Date: 12/29/2008 11:30
Cal Date: 01/05/2009 10:22
Run Date: 01/05/2009 15:27
File ID: IR.010509.152700
Percent Solid: 94.8

Analyte	CAS. Number	Result	Qual	RL	MDL
Silver, Total	7440-22-4	0.421	J	0.804	0.201
Barium, Total	7440-39-3	7.07		0.402	0.0804
Cadmium, Total	7440-43-9	1.09		0.161	0.0402
Chromium, Total	7440-47-3	8.97		0.804	0.0965

J Estimated ; the analyte concentration was less than the low standard (LOQ)

Microbac

dew
5/12/09

17

Sample Number: L08120645-17
Client ID: MR08-SS173-08D
Matrix: Soil
Workgroup Number: WG291681
Collect Date: 12/20/2008 10:30
Sample Tag: 01

PrePrep Method: NONE
Prep Method: 3051
Analytical Method: 6020
Analyst: JYH
Dilution: 1
Units: mg/kg

Instrument: ELAN-ICP
Prep Date: 12/29/2008 09:19
Cal Date: 01/03/2009 12:50
Run Date: 01/03/2009 19:45
File ID: EL.010309.194507
Percent Solid: 94.8

Analyte	CAS. Number	Result	Qual	RL	MDL
Lead, Total	7439-92-1	31.3		0.414	0.103
Selenium, Total	7782-49-2	0.248	J ~~J~~	0.414	0.103

MSL

J Estimated ; the analyte concentration was less than the low standard (LOQ)

Microbac

885

3/12/09

17

Sample Number:	L08120645-17	PrePrep Method:	NONE	Instrument:	ELAN-ICP
Client ID:	MR08-SS173-08D	Prep Method:	3051	Prep Date:	12/29/2008 09:19
Matrix:	Soil	Analytical Method:	6020	Cal Date:	01/05/2009 11:17
Workgroup Number:	WG291681	Analyst:	JYH	Run Date:	01/05/2009 20:30
Collect Date:	12/20/2008 10:30	Dilution:	1	File ID:	EL.010509.203037
Sample Tag:	02	Units:	mg/kg	Percent Solid:	94.8

Analyte	CAS. Number	Result	Qual	RL	MDL
Arsenic, Total	7440-38-2	1.63		0.310	0.0776

Microbac

3/12/09

17

Sample Number: L08120645-17
Client ID: MR08-SS173-08D
Matrix: Soil
Workgroup Number: WG291716
Collect Date: 12/20/2008 10:30
Sample Tag: 01

PrePrep Method: NONE
Prep Method: 7471A
Analytical Method: 7471A
Analyst: ADC
Dilution: 1
Units: mg/kg

Instrument: HYDRA
Prep Date: 12/29/2008 11:49
Cal Date: 01/05/2009 10:02
Run Date: 01/05/2009 13:12
File ID: HY.010509.131224
Percent Solid: 94.8

Analyte	CAS. Number	Result	Qual	RL	MDL
Mercury, Total	7439-97-6		U	0.102	0.0205

U Undetected; the analyte was analyzed for, but not detected.

Microbac

2007 3/12/09

18

Sample Number: L08120645-18
Client ID: MR08-IS173-5-6-08D
Matrix: Soil
Workgroup Number: WG291704
Collect Date: 12/20/2008 10:35
Sample Tag: 01

PrePrep Method: NONE
Prep Method: 3051
Analytical Method: 6010B
Analyst: KHR
Dilution: 1
Units: mg/kg

Instrument: IRIS-ICP
Prep Date: 12/29/2008 11:31
Cal Date: 01/05/2009 10:22
Run Date: 01/05/2009 15:33
File ID: IR.010509.153300
Percent Solid: 95.0

Analyte	CAS. Number	Result	Qual	RL	MDL
Silver, Total	7440-22-4		U	0.789	0.197
Barium, Total	7440-39-3	2.03		0.394	0.0789
Cadmium, Total	7440-43-9		U	0.158	0.0394
Chromium, Total	7440-47-3	1.34		0.789	0.0947

U Undetected; the analyte was analyzed for, but not detected.

Microbac

Ok 3/12/09

18

Sample Number: L08120645-18
Client ID: MR08-IS173-5-6-08D
Matrix: Soil
Workgroup Number: WG291681
Collect Date: 12/20/2008 10:35
Sample Tag: 02

PrePrep Method: NONE
Prep Method: 3051
Analytical Method: 6020
Analyst: JYH
Dilution: 1
Units: mg/kg

Instrument: ELAN-ICP
Prep Date: 12/29/2008 09:19
Cal Date: 01/05/2009 11:17
Run Date: 01/05/2009 20:36
File ID: EL.010509.203600
Percent Solid: 95.0

Analyte	CAS. Number	Result	Qual	RL	MDL
Arsenic, Total	7440-38-2	0.230	J	0.310	0.0775

J Estimated ; the analyte concentration was less than the low standard (LOQ)

Microbac

lee 3/12/09

18

Sample Number: L08120645-18
Client ID: MR08-IS173-5-6-08D
Matrix: Soil
Workgroup Number: WG291681
Collect Date: 12/20/2008 10:35
Sample Tag: 01

PrePrep Method: NONE
Prep Method: 3051
Analytical Method: 6020
Analyst: JYH
Dilution: 1
Units: mg/kg

Instrument: ELAN-ICP
Prep Date: 12/29/2008 09:19
Cal Date: 01/03/2009 12:50
Run Date: 01/03/2009 19:50
File ID: EL.010309.195030
Percent Solid: 95.0

Analyte	CAS. Number	Result	Qual	RL	MDL
Lead, Total	7439-92-1	1.41		0.413	0.103
Selenium, Total	7782-49-2	UJ	U	0.413	0.103

MSL

U Undetected; the analyte was analyzed for, but not detected.

Microbac

3/12/09

18

Sample Number:	L08120645-18	PrePrep Method:	NONE	Instrument:	HYDRA
Client ID:	MR08-IS173-5-6-08D	Prep Method:	7471A	Prep Date:	12/29/2008 11:49
Matrix:	Soil	Analytical Method:	7471A	Cal Date:	01/05/2009 10:02
Workgroup Number:	WG291716	Analyst:	ADC	Run Date:	01/05/2009 13:14
Collect Date:	12/20/2008 10:35	Dilution:	1	File ID:	HY.010509.131406
Sample Tag:	01	Units:	mg/kg	Percent Solid:	95.0

Analyte	CAS. Number	Result	Qual	RL	MDL
Mercury, Total	7439-97-6		U	0.101	0.0201

U Undetected; the analyte was analyzed for, but not detected.

Microbac

2008 1/12/09

19

Sample Number: L08120645-19
Client ID: MR08-SS174-08D
Matrix: Soil
Workgroup Number: WG291704
Collect Date: 12/20/2008 11:25
Sample Tag: DL01

PrePrep Method: NONE
Prep Method: 3051
Analytical Method: 6010B
Analyst: KHR
Dilution: 2
Units: mg/kg

Instrument: IRIS-ICP
Prep Date: 12/29/2008 11:31
Cal Date: 01/06/2009 09:53
Run Date: 01/06/2009 10:37
File ID: IR.010609.103700
Percent Solid: 95.0

Analyte	CAS. Number	Result	Qual	RL	MDL
Silver, Total	7440-22-4		U	1.59	0.398
Barium, Total	7440-39-3	4.61		0.795	0.159
Cadmium, Total	7440-43-9	0.797		0.318	0.0795
Chromium, Total	7440-47-3	6.31		1.59	0.191

U Undetected; the analyte was analyzed for, but not detected.

Microbac

Lee 3/12/09

19

Sample Number: L08120645-19
Client ID: MR08-SS174-08D
Matrix: Soil
Workgroup Number: WG291681
Collect Date: 12/20/2008 11:25
Sample Tag: 01

PrePrep Method: NONE
Prep Method: 3051
Analytical Method: 6020
Analyst: JYH
Dilution: 1
Units: mg/kg

Instrument: ELAN-ICP
Prep Date: 12/29/2008 09:19
Cal Date: 01/03/2009 12:50
Run Date: 01/03/2009 19:55
File ID: EL.010309.195553
Percent Solid: 95.0

Analyte	CAS. Number	Result	Qual	RL	MDL
Lead, Total	7439-92-1	2.39		0.413	0.103
Selenium, Total	7782-49-2	0.256 J		0.413	0.103

MSL

J Estimated ; the analyte concentration was less than the low standard (LOQ)

Microbac

LW 3/12/09

19

Sample Number: L08120645-19
Client ID: MR08-SS174-08D
Matrix: Soil
Workgroup Number: WG291681
Collect Date: 12/20/2008 11:25
Sample Tag: 02

PrePrep Method: NONE
Prep Method: 3051
Analytical Method: 6020
Analyst: JYH
Dilution: 1
Units: mg/kg

Instrument: ELAN-ICP
Prep Date: 12/29/2008 09:19
Cal Date: 01/05/2009 11:17
Run Date: 01/05/2009 20:41
File ID: EL.010509.204122
Percent Solid: 95.0

Analyte	CAS. Number	Result	Qual	RL	MDL
Arsenic, Total	7440-38-2	1.73		0.310	0.0775

Microbac

Alex
3/12/09

19

Sample Number: L08120645-19
Client ID: MR08-SS174-08D
Matrix: Soil
Workgroup Number: WG291716
Collect Date: 12/20/2008 11:25
Sample Tag: 01

PrePrep Method: NONE
Prep Method: 7471A
Analytical Method: 7471A
Analyst: ADC
Dilution: 1
Units: mg/kg

Instrument: HYDRA
Prep Date: 12/29/2008 11:49
Cal Date: 01/05/2009 10:02
Run Date: 01/05/2009 13:15
File ID: HY.010509.131551
Percent Solid: 95.0

Analyte	CAS. Number	Result	Qual	RL	MDL
Mercury, Total	7439-97-6		U	0.101	0.0202

U Undetected; the analyte was analyzed for, but not detected.

Microbac

lew
2009 3/12/09

20

Sample Number: L08120645-20
Client ID: MR08-IS174-5-6-08D
Matrix: Soil
Workgroup Number: WG291704
Collect Date: 12/20/2008 11:30
Sample Tag: 01

PrePrep Method: NONE
Prep Method: 3051
Analytical Method: 6010B
Analyst: KHR
Dilution: 1
Units: mg/kg

Instrument: IRIS-ICP
Prep Date: 12/29/2008 11:32
Cal Date: 01/05/2009 10:22
Run Date: 01/05/2009 13:07
File ID: IR.010509.130700
Percent Solid: 91.5

Analyte	CAS. Number	Result	Qual	RL	MDL
Silver, Total	7440-22-4	0.348	J	0.820	0.205
Barium, Total	7440-39-3	9.81		0.410	0.0820
Cadmium, Total	7440-43-9		U	0.164	0.0410
Chromium, Total	7440-47-3	3.95		0.820	0.0984

U Undetected; the analyte was analyzed for, but not detected.
J Estimated ; the analyte concentration was less than the low standard (LOQ)

Microbac

 KW 3/12/09

20

Sample Number: L08120645-20
Client ID: MR08-IS174-5-6-08D
Matrix: Soil
Workgroup Number: WG291681
Collect Date: 12/20/2008 11:30
Sample Tag: 01

PrePrep Method: NONE
Prep Method: 3051
Analytical Method: 6020
Analyst: JYH
Dilution: 1
Units: mg/kg

Instrument: ELAN-ICP
Prep Date: 12/29/2008 09:19
Cal Date: 01/03/2009 12:50
Run Date: 01/03/2009 17:21
File ID: EL.010309.172131
Percent Solid: 91.5

Analyte	CAS. Number	Result	Qual	RL	MDL
Arsenic, Total	7440-38-2	0.734		0.323	0.0807
Lead, Total	7439-92-1	3.96		0.430	0.108
Selenium, Total	7782-49-2	U5	~~U~~	0.430	0.108

MSL

U Undetected; the analyte was analyzed for, but not detected.

Microbac

lew 3/12/09

20

Sample Number: L08120645-20
Client ID: MR08-IS174-5-6-08D
Matrix: Soil
Workgroup Number: WG291716
Collect Date: 12/20/2008 11:30
Sample Tag: 01

PrePrep Method: NONE
Prep Method: 7471A
Analytical Method: 7471A
Analyst: ADC
Dilution: 1
Units: mg/kg

Instrument: HYDRA
Prep Date: 12/29/2008 11:49
Cal Date: 01/05/2009 10:02
Run Date: 01/05/2009 13:17
File ID: HY.010509.131738
Percent Solid: 91.5

Analyte	CAS. Number	Result	Qual	RL	MDL
Mercury, Total	7439-97-6		U	0.106	0.0212

U Undetected; the analyte was analyzed for, but not detected.

Microbac

2010 1/12/09

ENVIRONMENTAL
Data Services, Inc.

VOLATILE ORGANIC COMPOUNDS
USEPA Region IV - Level IV Review

Site: MCB Camp Lejeune, TO-09 SDG #: LEJEUNE022

Client: CH2M HILL, Inc., Virginia Beach, Virginia Date: February 26, 2009

Laboratory: Empirical Laboratories, Nashville, Tennessee Reviewer: Nancy Weaver

EDS ID	Client Sample ID	Laboratory Sample ID	Matrix
1	MR08-SS067-08D	0812057-01	Soil
1RE	MR08-SS067-08DRE	0812057-01RE	Soil
DL	MR08-SS067-08DDL	0812057-01DL	Soil
2	MR08-IS067-6-7-08D	0812057-02	Soil
3	MR08-SS068-08D	0812057-03	Soil
3MS	MR08-SS068-08DMS	0812057-03MS	Soil
3MSD	MR08-SS068-08DMSD	0812057-03MSD	Soil
RE	MR08-SS068-08DRE	0812057-03RE	Soil
4	MR08-IS068-8-9-08D	0812057-04	Soil
4MS	MR08-IS068-8-9-08DMS	0812057-04MS	Soil
4MSD	MR08-IS068-8-9-08DMSD	0812057-04MSD	Soil
5	MR08-SS069-08D	0812057-05	Soil
5RE	MR08-SS069-08DRE	0812057-05RE	Soil
6	MR08-SS069D-08D	0812057-06	Soil
6RE	MR08-SS069D-08DRE	0812057-06RE	Soil
7	MR08-IS069-6-7-08D	0812057-07	Soil
8	MR08-IS069D-6-7-08D	0812057-08	Soil
9	MR08-SS070-08D	0812057-09	Soil
9RE	MR08-SS070-08DRE	0812057-09RE	Soil
10	MR08-IS070-8-9-08D	0812057-10	Soil
11	MR08-SS071-08D	0812057-11	Soil
11RE	MR08-SS071-08DRE	0812057-11RE	Soil
12	MR08-IS071-6-7-08D	0812057-12	Soil
13	MR08-SS072-08D	0812057-13	Soil
13RE	MR08-SS072-08DRE	0812057-13RE	Soil
14	MR08-IS072-6-7-08D	0812057-14	Soil
15	MR08-SS073-08D	0812057-15	Soil
15RE	MR08-SS073-08DRE	0812057-15RE	Soil
15DL	MR08-SS073-08DDL	0812057-15DL	Soil
16	MR08-IS073-6-7-08D	0812057-16	Soil
17	MR08-TB01120308	0812057-17	Water
18	MR08-EB01120308-SS	0812057-18	Water
19	MR08-EB01120308-IS	0812057-19	Water

The USEPA "Contract Laboratory Program National Functional Guidelines for Organic Data Review," October 1999, and professional judgement were used in evaluating the data in this summary report.

Holding Times - All samples were analyzed within 14 days for preserved water and soil samples.

GC/MS Tuning - All of the BFB tunes in the initial and continuing calibrations met the percent relative abundance criteria.

Initial Calibration - The initial calibrations exhibited acceptable %RSD and mean RRF values.

Continuing Calibration - The continuing calibrations exhibited acceptable %D and RRF values except the following.

CCAL Date	Compound	%D/RRF	Qualifier	Affected Samples
12/08/08	Bromomethane	38.9%	J/UJ	17-19
	1,2,4-Trichlorobenzene	30.0%	J/UJ	17-19
12/13/08 (0744)	Bromomethane	27.6%	J/UJ	2, 4, 7, 8
	Methylene chloride	53.3%	J/UJ	2, 4, 7, 8
12/13/08 (1918)	Acetone	50.4%	J/UJ	10, 12, 14, 16
	Bromomethane	26.2%	J/UJ	10, 12, 14, 16
12/16/08	Acetone	62.5%	J/UJ	3RE
	Chloromethane	25.6%	J/UJ	3RE
	2-Hexanone	25.2%	J/UJ	3RE
12/17/08	Acetone	38.8%	None	Already qualified due to surrogates and/or IS
	Bromomethane	26.7%	None	Already qualified due to surrogates and/or IS
	Dichlorodifluoromethane	33.6%	None	Already qualified due to surrogates and/or IS
12/19/09	Dichlorodifluoromethane	30.1%	J/UJ	1DL, 15DL

Surrogates - All samples exhibited acceptable surrogate recoveries except the following.

Sample ID	Surrogate	%R	Qualifier
1	S3-Toluene-d8	123%	J/UJ - unless (R) due to IS
	S4-Bromofluorobenzene	76%	
1RE	S3-Toluene-d8	124%	J/UJ - unless (R) due to IS
	S4-Bromofluorobenzene	70%	
3	S3-Toluene-d8	134%	J/UJ - unless (R) due to IS
	S4-Bromofluorobenzene	69%	
5	S3-Toluene-d8	140%	J/UJ - unless (R) due to IS
	S4-Bromofluorobenzene	64%	
5RE	S3-Toluene-d8	157%	J/UJ - unless (R) due to IS
	S4-Bromofluorobenzene	60%	
6	S3-Toluene-d8	159%	J/UJ - unless (R) due to IS
	S4-Bromofluorobenzene	61%	

Sample ID	Surrogate	%R	Qualifier
6RE	S3-Toluene-d8	140%	J/UJ - unless (R) due to IS
	S4-Bromofluorobenzene	63%	
9	S4-Bromofluorobenzene	76%	J/UJ - unless (R) due to IS
9RE	S3-Toluene-d8	122%	J/UJ - unless (R) due to IS
	S4-Bromofluorobenzene	74%	
11	S3-Toluene-d8	128%	J/UJ - unless (R) due to IS
	S4-Bromofluorobenzene	75%	
11RE	S3-Toluene-d8	122%	J/UJ - unless (R) due to IS
	S4-Bromofluorobenzene	73%	
13	S3-Toluene-d8	138%	J/UJ - unless (R) due to IS
	S4-Bromofluorobenzene	67%	
13RE	S3-Toluene-d8	170%	J/UJ - unless (R) due to IS
	S4-Bromofluorobenzene	71%	
15	S3-Toluene-d8	121%	J/UJ - unless (R) due to IS
	S4-Bromofluorobenzene	76%	
15RE	S3-Toluene-d8	121%	J/UJ - unless (R) due to IS
	S4-Bromofluorobenzene	76%	

MS/MSD - The MS/MSD sample exhibited acceptable %R and RPD values except the following.

MS/MSD Sample ID	Compound	MS/MSD %R/RPD	Qualifier
3	Chlorobenzene	57%/62%/Ok	None - Already qualified due to surrogates
	1,2-Dichlorobenzene	46%/49%/Ok	None - Already qualified due to surrogates
	1,3-Dichlorobenzene	51%/56%/Ok	None - Already qualified due to surrogates
	1,4-Dichlorobenzene	47%/60%/Ok	None - Already qualified due to surrogates
	cis-1,3-Dichloropropene	62%//Ok/Ok	None - Already qualified due to surrogates
	Ethylbenzene	70%/Ok/Ok	None - Already qualified due to surrogates
	2-Hexanone	Ok/148%/Ok	None - Already qualified due to surrogates
	Isopropylbenzene	58%/62%/Ok	None - Already qualified due to surrogates
	Methyl cyclohexane	48%/51%/Ok	None - Already qualified due to surrogates
	Styrene	29%/30%/Ok	None - Already qualified due to surrogates
	1,1,2,2-Tetrachloroethane	139%/145%/Ok	None - Already qualified due to surrogates
	1,2,4-Trichlorobenzene	19%/21%/Ok	None - Already qualified due to surrogates
	Trichloroethene	68%/74%/Ok	None - Already qualified due to surrogates
	Xylene (total)	61%/65%/Ok	None - Already qualified due to surrogates

MS/MSD Sample ID	Compound	MS/MSD %R/RPD	Qualifier
4	Chlorobenzene	69%/Ok/Ok	J/UJ
	Chloroethane	Ok/Ok/31	None for RPD alone
	1,2-Dibromoethane	67%/Ok/Ok	J/UJ
	1,2-Dichlorobenzene	58%/Ok/Ok	J/UJ
	1,3-Dichlorobenzene	53%/Ok/Ok	J/UJ
	1,4-Dichlorobenzene	58%/Ok/Ok	J/UJ
	1,1-Dichloroethene	Ok/146%/33	None - All ND
	trans-1,2-Dichloroethene	Ok/Ok/35	None for RPD alone
	Methyl acetate	14%/14%/ Ok	J/UJ
	Methylene chloride	Ok/Ok/45	None for RPD alone
	MTBE	Ok/Ok/36	None for RPD alone
	Styrene	52%/70%/Ok	J/UJ
	1,2,4-Trichlorobenzene	48%/Ok/Ok	J/UJ
	Trichloroethene	74%/Ok/Ok	J/UJ
	Trichlorotrifluoroethane	Ok/153%/Ok	None - All ND
	Trichlorofluoromethane	Ok/Ok/31	None for RPD alone

Laboratory Control Sample - The LCS samples exhibited acceptable %R values except the following.

LCS ID	Compound	%R	Qualifier	Affected Samples
V1BLK1212E	Methylene chloride	154%	None	All already qualified
V1BLK1216E	Dichlorodifluoromethane	34%	None	All already qualified

Internal Standard (IS) Area Performance - All internal standards met response and retention time (RT) criteria except the following.

Sample ID	Internal Standard	Area Count	Qualifier
1	IS3-1,4-Dichlorobenzene-d4	Low	J/UJ
1RE	IS3-1,4-Dichlorobenzene-d4	Low	J/UJ
3	IS3-1,4-Dichlorobenzene-d4	Low	J/UJ
5	IS3-1,4-Dichlorobenzene-d4	Low	J/R
5RE	IS1-Fluorobenzene	Low	J/UJ
	IS2-Chlorobenzene-d5	Low	J/UJ
	IS3-1,4-Dichlorobenzene-d4	Low	J/R
6	IS2-Chlorobenzene-d5	Low	J/UJ
	IS3-1,4-Dichlorobenzene-d4	Low	J/R
6RE	IS2-Chlorobenzene-d5	Low	J/UJ
	IS3-1,4-Dichlorobenzene-d4	Low	J/R
9	IS3-1,4-Dichlorobenzene-d4	Low	J/UJ
9RE	IS3-1,4-Dichlorobenzene-d4	Low	J/UJ
11	IS3-1,4-Dichlorobenzene-d4	Low	J/UJ
11RE	IS3-1,4-Dichlorobenzene-d4	Low	J/UJ
13	IS3-1,4-Dichlorobenzene-d4	Low	J/UJ
13RE	IS1-Fluorobenzene	Low	J/R
	IS2-Chlorobenzene-d5	Low	J/R
	IS3-1,4-Dichlorobenzene-d4	Low	J/R
15	IS3-1,4-Dichlorobenzene-d4	Low	J/UJ

Sample ID	Internal Standard	Area Count	Qualifier
15RE	IS3-1,4-Dichlorobenzene-d4	Low	J/UJ

Method Blank - The method blanks exhibited the following contamination.

Blank ID	Compound	Conc.	Action Level	Qualifier	Affected Samples
V3BLK1208	Methylene chloride	0.27 ug/L	27 ug/L	U	17-19
V1BLK1216	Methylene chloride	2.1 ug/kg	21 ug/kg	U	3RE
V1BLK1216E	Methylene chloride	2.5 ug/kg	25 ug/kg	U	1RE, 5RE, 6RE, 9RE, 11RE, 13RE, 15RE
V1MBLK1219	Chloromethane	250 ug/kg	1250 ug/kg	None	All ND
	Vinyl chloride	300 ug/kg	1500 ug/kg	None	All ND

Trip, Field, Equipment Blank - Field QC results are summarized below.

Blank ID	Compound	Conc. ug/L	Action Level ug/L or ug/kg	Qualifier	Affected Samples
MR08-TB01120308	None - ND	-	-	-	-
MR08-EB01120308-SS	Toluene	0.22	1.1	None	All ND or >5X
MR08-EB011120308-IS	Acetone	4.7	47	U	2, 4, 7, 8, 12, 14, 16
	Bromodichloromethane	0.15	0.75	None	All ND or >5X
	Chloroform	1.9	9.5	None	All ND or >5X
	Toluene	0.21	1.05	None	All ND or >5X
MR08-FB01120608	Acetone	3.8	38	None	See EB
	Bromodichloromethane	0.2	1.0	None	All ND or >5X
	Chloroform	3.0	15	U	3, 3RE, 5, 5RE, 6, 6RE
	Toluene	0.35	1.75	U	2, 11, 11RE

Field Duplicates - Field duplicate results are summarized below.

Compound	MR08-SS069-08D ug/kg	MR08-SS069D-08D ug/kg	RPD	Qualifier
Acetone	860	940	9%	None
2-Butanone	19	21	10%	None
Methylene chloride	2.9	26 U	NC	None
Styrene	3.2	0.93	110%	None
Toluene	8.3	3.3	86%	None

Compound	MR08-IS069-6-7-08D ug/kg	MR08-IS069D6-7-08D ug/kg	RPD	Qualifier
Methylene chloride	2.4	8.4	111%	None

Tentatively Identified Compounds (TICs) - TICs were not reported.

Compound Quantitation - Several samples exhibited high concentrations of target compounds over the calibration range and were flagged (E). The laboratory diluted and reanalyzed samples. The reviewer replaced the original results with the dilution results. The original Form Is should be used for reporting purposes.

Several samples exhibited internal standard and/or surrogate deficiencies. These samples were reanalyzed. Refer to Form Is for which were used for reporting purposes.

FORM 1
VOLATILE ORGANICS ANALYSIS DATA SHEET

CLIENT SAMPLE NO. 1

MR08-SS067-08D

Lab Name: EMPIRICAL LABS Contract: CH2MHILL

Lab Code: NA Case No.: NA SAS No.: NA SDG No.: LEJEUNE022

Matrix: (soil/water) SOIL Lab Sample ID: 0812057-01

Sample wt/vol: 3.2 (g/mL) G Lab File ID: 1205701A

Level: (low/med) LOW Date Sampled: 12/03/08 08:30 use dilution

% Moisture: not dec. 29 Date Analyzed: 12/13/08 10:20

GC Column: RTX-VRX ID: 0.25 (mm) Dilution Factor: 1.0

Soil Extract Volume:_____(uL) Soil Aliquot Volume: _____(uL)

CONCENTRATION UNITS: (ug/L or ug/Kg) UG/KG

CAS NO.	COMPOUND	MDL	RL	CONC	Q
67-64-1	Acetone	4.4	22	870	J
71-43-2	Benzene	1.0	22		U UJ
75-27-4	Bromodichloromethane	0.66	22		U
75-25-2	Bromoform	2.2	22		U
74-83-9	Bromomethane	1.6	22		U
78-93-3	2-Butanone	3.1	22	20	J J
75-15-0	Carbon disulfide	2.8	22		U UJ
56-23-5	Carbon tetrachloride	1.9	22		U
108-90-7	Chlorobenzene	0.75	22		U
75-00-3	Chloroethane	2.4	22		U
67-66-3	Chloroform	1.2	22		U
74-87-3	Chloromethane	1.1	22		U
110-82-7	Cyclohexane	1.2	22		U
124-48-1	Dibromochloromethane	0.75	22		U
96-12-8	1,2-Dibromo-3-chloropropane	2.6	11		U
106-93-4	1,2-Dibromoethane	0.94	22		U
95-50-1	1,2-Dichlorobenzene	0.81	22		U
541-73-1	1,3-Dichlorobenzene	1.8	22		U
106-46-7	1,4-Dichlorobenzene	1.2	22		U
75-71-8	Dichlorodifluoromethane	2.4	22		U
75-34-3	1,1-Dichloroethane	1.2	22		U
107-06-2	1,2-Dichloroethane	1.0	22		U
75-35-4	1,1-Dichloroethene	2.6	22		U
156-59-2	cis-1,2-Dichloroethene	2.6	22		U
156-60-5	trans-1,2-Dichloroethene	2.4	22		U
78-87-5	1,2-Dichloropropane	1.0	22		U
10061-01-5	cis-1,3-Dichloropropene	1.1	22		U
10061-02-6	trans-1,3-Dichloropropene	0.70	22		U
100-41-4	Ethylbenzene	1.6	22		U
591-78-6	2-Hexanone	5.0	22		U
98-82-8	Isopropylbenzene	1.9	22		U
79-20-9	Methyl acetate	3.5	22		U
75-09-2	Methylene chloride	1.4	22	11	J J
108-87-2	Methyl cyclohexane	0.66	22		U UJ
1634-04-4	Methyl tert-butyl ether	0.70	22		U
108-10-1	4-Methyl-2-pentanone	1.3	22		U
100-42-5	Styrene	0.77	22		U
79-34-5	1,1,2,2-Tetrachloroethane	0.94	22		U
127-18-4	Tetrachloroethene	2.1	22		U

DL

R

SS

FORM I VOA

LW 2/26/09

FORM 1
VOLATILE ORGANICS ANALYSIS DATA SHEET

CLIENT SAMPLE NO. 1

MR08-SS067-08D

Lab Name: EMPIRICAL LABS Contract: CH2MHILL

Lab Code: NA Case No.: NA SAS No.: NA SDG No.: LEJEUNE022

Matrix: (soil/water) SOIL Lab Sample ID: 0812057-01

Sample wt/vol: 3.2 (g/mL) G Lab File ID: 1205701A

Level: (low/med) LOW Date Sampled: 12/03/08 08:30

% Moisture: not dec. 29 Date Analyzed: 12/13/08 10:20

GC Column: RTX-VRX ID: 0.25 (mm) Dilution Factor: 1.0

Soil Extract Volume:_____(uL) Soil Aliquot Volume: _____(uL)

Use dilution

CONCENTRATION UNITS: (ug/L or ug/Kg) UG/KG

CAS NO.	COMPOUND	MDL	RL	CONC	Q
108-88-3	Toluene	1.9	22	4.3	~~U~~ J
120-82-1	1,2,4-Trichlorobenzene	0.40	22		U UJ
71-55-6	1,1,1-Trichloroethane	2.0	22		U
79-00-5	1,1,2-Trichloroethane	0.77	22		U
79-01-6	Trichloroethene	1.9	22		U
76-13-1	Trichlorotrifluoroethane	1.2	22		U
75-69-4	Trichlorofluoromethane	2.1	22		U
75-01-4	Vinyl chloride	2.4	22		U
1330-20-7	Xylene(total)	1.5	22		U

R DL

SS

FORM I VOA

lw 2/26/09

FORM 1
VOLATILE ORGANICS ANALYSIS DATA SHEET

CLIENT SAMPLE NO. 1RE

MR08-SS067-08DR

Lab Name: EMPIRICAL LABS Contract: CH2MHILL

Lab Code: NA Case No.: NA SAS No.: NA SDG No.: LEJEUNE022

Matrix: (soil/water) SOIL Lab Sample ID: 0812057-01R

Sample wt/vol: 4.3 (g/mL) G Lab File ID: 1205701B

Level: (low/med) LOW Date Sampled: 12/03/08 08:30

% Moisture: not dec. 29 Date Analyzed: 12/17/08 03:49 Use dilution

GC Column: RTX-VRX ID: 0.25 (mm) Dilution Factor: 1.0

Soil Extract Volume:_____(uL) Soil Aliquot Volume: _____(uL)

CONCENTRATION UNITS: (ug/L or ug/Kg) UG/KG

CAS NO.	COMPOUND	MDL	RL	CONC	Q
67-64-1	Acetone	3.3	16	240J ~~670~~	~~E~~ LR R DL
71-43-2	Benzene	0.78	16		U UJ SS
75-27-4	Bromodichloromethane	0.50	16		U
75-25-2	Bromoform	1.6	16		U
74-83-9	Bromomethane	1.2	16		U
78-93-3	2-Butanone	2.3	16	18	J
75-15-0	Carbon disulfide	2.2	16		U UJ
56-23-5	Carbon tetrachloride	1.4	16		U
108-90-7	Chlorobenzene	0.56	16		U
75-00-3	Chloroethane	1.8	16		U
67-66-3	Chloroform	0.91	16		U
74-87-3	Chloromethane	0.86	16		U
110-82-7	Cyclohexane	0.89	16		U
124-48-1	Dibromochloromethane	0.56	16		U
96-12-8	1,2-Dibromo-3-chloropropane	2.0	8.3		U
106-93-4	1,2-Dibromoethane	0.71	16		U
95-50-1	1,2-Dichlorobenzene	0.61	16		U
541-73-1	1,3-Dichlorobenzene	1.4	16		U
106-46-7	1,4-Dichlorobenzene	0.91	16		U
75-71-8	Dichlorodifluoromethane	1.8	16		U
75-34-3	1,1-Dichloroethane	0.89	16		U
107-06-2	1,2-Dichloroethane	0.76	16		U
75-35-4	1,1-Dichloroethene	2.0	16		U
156-59-2	cis-1,2-Dichloroethene	2.0	16		U
156-60-5	trans-1,2-Dichloroethene	1.8	16		U
78-87-5	1,2-Dichloropropane	0.76	16		U
10061-01-5	cis-1,3-Dichloropropene	0.83	16		U
10061-02-6	trans-1,3-Dichloropropene	0.53	16		U
100-41-4	Ethylbenzene	1.2	16		U
591-78-6	2-Hexanone	3.8	16		U
98-82-8	Isopropylbenzene	1.4	16		U
79-20-9	Methyl acetate	2.6	16		U
75-09-2	Methylene chloride	1.0	16	16UJ ~~3.8~~	~~JB~~ SSL B
108-87-2	Methyl cyclohexane	0.50	16		U UJ SS
1634-04-4	Methyl tert-butyl ether	0.53	16		U
108-10-1	4-Methyl-2-pentanone	0.96	16		U
100-42-5	Styrene	0.58	16		U
79-34-5	1,1,2,2-Tetrachloroethane	0.71	16		U
127-18-4	Tetrachloroethene	1.6	16		U

FORM I VOA

lw 2/21/09

FORM 1
VOLATILE ORGANICS ANALYSIS DATA SHEET

CLIENT SAMPLE NO. IRE

MR08-SS067-08DR

Lab Name: EMPIRICAL LABS Contract: CH2MHILL

Lab Code: NA Case No.: NA SAS No.: NA SDG No.: LEJEUNE022

Matrix: (soil/water) SOIL Lab Sample ID: 0812057-01R

Sample wt/vol: 4.3 (g/mL) G Lab File ID: 1205701B

Level: (low/med) LOW Date Sampled: 12/03/08 08:30

% Moisture: not dec. 29 Date Analyzed: 12/17/08 03:49

GC Column: RTX-VRX ID: 0.25 (mm) Dilution Factor: 1.0 use dilution

Soil Extract Volume:_____(uL) Soil Aliquot Volume: _____(uL)

CONCENTRATION UNITS: (ug/L or ug/Kg) UG/KG

CAS NO.	COMPOUND	MDL	RL	CONC	Q
108-88-3	Toluene	1.4	16	3.2	~~J~~ SSL
120-82-1	1,2,4-Trichlorobenzene	0.30	16		U UJ
71-55-6	1,1,1-Trichloroethane	1.5	16		U
79-00-5	1,1,2-Trichloroethane	0.58	16		U
79-01-6	Trichloroethene	1.4	16		U
76-13-1	Trichlorotrifluoroethane	0.91	16		U
75-69-4	Trichlorofluoromethane	1.6	16		U
75-01-4	Vinyl chloride	1.8	16		U
1330-20-7	Xylene(total)	1.2	16		U

R DL

FORM I VOA

lw
2/26/09

FORM 1
VOLATILE ORGANICS ANALYSIS DATA SHEET

CLIENT SAMPLE NO. 1DL

MR08-SS0
67-08DDL

Lab Name: EMPIRICAL LABS Contract: CH2MHILL

Lab Code: NA Case No.: NA SAS No.: NA SDG No.: LEJEUNE022

Matrix: (soil/water) SOIL Lab Sample ID: 0812057-01DL

Sample wt/vol: 3.9 (g/mL) G Lab File ID: 1205701D

Level: (low/med) MED Date Sampled: 12/03/08 08:30

% Moisture: not dec. 29 Date Analyzed: 12/20/08 00:19

GC Column: RTX-VRX ID: 0.25 (mm) Dilution Factor: 1.0

Soil Extract Volume: 5000(uL) Soil Aliquot Volume: 100(uL)

CONCENTRATION UNITS: (ug/L or ug/Kg) UG/KG

CAS NO.	COMPOUND	MDL	RL	CONC	Q
67-64-1	Acetone	180	910	240	JD
71-43-2	Benzene	43	910		UD
75-27-4	Bromodichloromethane	27	910		UD
75-25-2	Bromoform	91	910		UD
74-83-9	Bromomethane	66	910		UD
78-93-3	2-Butanone	130	910		UD
75-15-0	Carbon disulfide	120	910		UD
56-23-5	Carbon tetrachloride	80	910		UD
108-90-7	Chlorobenzene	31	910		UD
75-00-3	Chloroethane	100	910		UD
67-66-3	Chloroform	50	910		UD
74-87-3	Chloromethane	47	910		UD
110-82-7	Cyclohexane	49	910		UD
124-48-1	Dibromochloromethane	31	910		UD
96-12-8	1,2-Dibromo-3-chloropropane	110	460		UD
106-93-4	1,2-Dibromoethane	39	910		UD
95-50-1	1,2-Dichlorobenzene	34	910		UD
541-73-1	1,3-Dichlorobenzene	76	910		UD
106-46-7	1,4-Dichlorobenzene	50	910		UD
75-71-8	Dichlorodifluoromethane	100	910		~~UD~~ UJ CI
75-34-3	1,1-Dichloroethane	49	910		UD
107-06-2	1,2-Dichloroethane	42	910		UD
75-35-4	1,1-Dichloroethene	110	910		UD
156-59-2	cis-1,2-Dichloroethene	110	910		UD
156-60-5	trans-1,2-Dichloroethene	100	910		UD
78-87-5	1,2-Dichloropropane	42	910		UD
10061-01-5	cis-1,3-Dichloropropene	46	910		UD
10061-02-6	trans-1,3-Dichloropropene	29	910		UD
100-41-4	Ethylbenzene	68	910		UD
591-78-6	2-Hexanone	210	910		UD
98-82-8	Isopropylbenzene	80	910		UD
79-20-9	Methyl acetate	140	910		UD
75-09-2	Methylene chloride	56	910	600	JD
108-87-2	Methyl cyclohexane	27	910		UD
1634-04-4	Methyl tert-butyl ether	29	910		UD
108-10-1	4-Methyl-2-pentanone	53	910		UD
100-42-5	Styrene	32	910		UD
79-34-5	1,1,2,2-Tetrachloroethane	39	910		UD
127-18-4	Tetrachloroethene	88	910		UD

FORM I VOA

fw
2/26/09

FORM 1
VOLATILE ORGANICS ANALYSIS DATA SHEET

CLIENT SAMPLE NO. 1DL

MR08-SS0
67-08DDL

Lab Name: EMPIRICAL LABS Contract: CH2MHILL

Lab Code: NA Case No.: NA SAS No.: NA SDG No.: LEJEUNE022

Matrix: (soil/water) SOIL Lab Sample ID: 0812057-01DL

Sample wt/vol: 3.9 (g/mL) G Lab File ID: 1205701D

Level: (low/med) MED Date Sampled: 12/03/08 08:30

% Moisture: not dec. 29 Date Analyzed: 12/20/08 00:19

GC Column: RTX-VRX ID: 0.25 (mm) Dilution Factor: 1.0

Soil Extract Volume: 5000(uL) Soil Aliquot Volume: 100(uL)

CONCENTRATION UNITS: (ug/L or ug/Kg) UG/KG

CAS NO.	COMPOUND	MDL	RL	CONC	Q
108-88-3	Toluene	78	910		UD
120-82-1	1,2,4-Trichlorobenzene	16	910		UD
71-55-6	1,1,1-Trichloroethane	82	910		UD
79-00-5	1,1,2-Trichloroethane	32	910		UD
79-01-6	Trichloroethene	77	910		UD
76-13-1	Trichlorotrifluoroethane	50	910		UD
75-69-4	Trichlorofluoromethane	86	910		UD
75-01-4	Vinyl chloride	100	910		UD
1330-20-7	Xylene(total)	64	910		UD

RW
2/26/09

FORM 1
VOLATILE ORGANICS ANALYSIS DATA SHEET

CLIENT SAMPLE NO. 2

MR08-IS06
7-6-7-08D

Lab Name: EMPIRICAL LABS Contract: CH2MHILL

Lab Code: NA Case No.: NA SAS No.: NA SDG No.: LEJEUNE022

Matrix: (soil/water) SOIL Lab Sample ID: 0812057-02

Sample wt/vol: 3.5 (g/mL) G Lab File ID: 1205702A

Level: (low/med) LOW Date Sampled: 12/03/08 08:55

% Moisture: not dec. 12 Date Analyzed: 12/13/08 10:59

GC Column: RTX-VRX ID: 0.25 (mm) Dilution Factor: 1.0

Soil Extract Volume:_____(uL) Soil Aliquot Volume: _____(uL)

CONCENTRATION UNITS: (ug/L or ug/Kg) UG/KG

CAS NO.	COMPOUND	MDL	RL	CONC	Q
67-64-1	Acetone	3.3	16	20	U B1
71-43-2	Benzene	0.77	16		U
75-27-4	Bromodichloromethane	0.49	16		U
75-25-2	Bromoform	1.6	16		U
74-83-9	Bromomethane	1.2	16		~~U~~ UJ CH
78-93-3	2-Butanone	2.3	16		U
75-15-0	Carbon disulfide	2.1	16		U
56-23-5	Carbon tetrachloride	1.4	16		U
108-90-7	Chlorobenzene	0.56	16		U
75-00-3	Chloroethane	1.8	16		U
67-66-3	Chloroform	0.90	16		U
74-87-3	Chloromethane	0.85	16		U
110-82-7	Cyclohexane	0.89	16		U
124-48-1	Dibromochloromethane	0.56	16		U
96-12-8	1,2-Dibromo-3-chloropropane	2.0	8.2		U
106-93-4	1,2-Dibromoethane	0.71	16		U
95-50-1	1,2-Dichlorobenzene	0.61	16		U
541-73-1	1,3-Dichlorobenzene	1.4	16		U
106-46-7	1,4-Dichlorobenzene	0.90	16		U
75-71-8	Dichlorodifluoromethane	1.8	16		U~~Y~~
75-34-3	1,1-Dichloroethane	0.89	16		U
107-06-2	1,2-Dichloroethane	0.76	16		U
75-35-4	1,1-Dichloroethene	2.0	16		U
156-59-2	cis-1,2-Dichloroethene	2.0	16		U
156-60-5	trans-1,2-Dichloroethene	1.8	16		U
78-87-5	1,2-Dichloropropane	0.76	16		U
10061-01-5	cis-1,3-Dichloropropene	0.82	16		U
10061-02-6	trans-1,3-Dichloropropene	0.52	16		U
100-41-4	Ethylbenzene	1.2	16		U
591-78-6	2-Hexanone	3.8	16		U
98-82-8	Isopropylbenzene	1.4	16		U
79-20-9	Methyl acetate	2.6	16		U
75-09-2	Methylene chloride	1.0	16	3.7	~~J~~ J CH
108-87-2	Methyl cyclohexane	0.49	16		U
1634-04-4	Methyl tert-butyl ether	0.52	16		U
108-10-1	4-Methyl-2-pentanone	0.95	16		U
100-42-5	Styrene	0.58	16		U
79-34-5	1,1,2,2-Tetrachloroethane	0.71	16		U
127-18-4	Tetrachloroethene	1.6	16		U

lw 2/26/09

FORM 1
VOLATILE ORGANICS ANALYSIS DATA SHEET

CLIENT SAMPLE NO. 2

MR08-IS06
7-6-7-08D

Lab Name: EMPIRICAL LABS Contract: CH2MHILL

Lab Code: NA Case No.: NA SAS No.: NA SDG No.: LEJEUNE022

Matrix: (soil/water) SOIL Lab Sample ID: 0812057-02

Sample wt/vol: 3.5 (g/mL) G Lab File ID: 1205702A

Level: (low/med) LOW Date Sampled: 12/03/08 08:55

% Moisture: not dec. 12 Date Analyzed: 12/13/08 10:59

GC Column: RTX-VRX ID: 0.25 (mm) Dilution Factor: 1.0

Soil Extract Volume:_____(uL) Soil Aliquot Volume: _____(uL)

CONCENTRATION UNITS: (ug/L or ug/Kg) UG/KG

CAS NO.	COMPOUND	MDL	RL	CONC	Q	
108-88-3	Toluene	1.4	16	16u ~~1.5~~	~~J~~	B
120-82-1	1,2,4-Trichlorobenzene	0.30	16		U	
71-55-6	1,1,1-Trichloroethane	1.5	16		U	
79-00-5	1,1,2-Trichloroethane	0.58	16		U	
79-01-6	Trichloroethene	1.4	16		U	
76-13-1	Trichlorotrifluoroethane	0.90	16		U	
75-69-4	Trichlorofluoromethane	1.6	16		U	
75-01-4	Vinyl chloride	1.8	16		U	
1330-20-7	Xylene(total)	1.2	16		U	

gw
2/26/09

FORM 1
VOLATILE ORGANICS ANALYSIS DATA SHEET

CLIENT SAMPLE NO. 3

MR08-SS068-08D

Lab Name: EMPIRICAL LABS Contract: CH2MHILL

Lab Code: NA Case No.: NA SAS No.: NA SDG No.: LEJEUNE022

Matrix: (soil/water) SOIL Lab Sample ID: 0812057-03

Sample wt/vol: 2.2 (g/mL) G Lab File ID: 1205703A

Level: (low/med) LOW Date Sampled: 12/03/08 09:35

% Moisture: not dec. 53 Date Analyzed: 12/13/08 11:38

GC Column: RTX-VRX ID: 0.25 (mm) Dilution Factor: 1.0

Soil Extract Volume:_____(uL) Soil Aliquot Volume: _____(uL)

CONCENTRATION UNITS: (ug/L or ug/Kg) UG/KG

CAS NO.	COMPOUND	MDL	RL	CONC	Q	
67-64-1	Acetone	9.6	48	1700	J	SS
71-43-2	Benzene	2.2	48		U UJ	
75-27-4	Bromodichloromethane	1.4	48		U	
75-25-2	Bromoform	4.8	48		U	
74-83-9	Bromomethane	3.4	48		U	
78-93-3	2-Butanone	6.7	48	46	J J	
75-15-0	Carbon disulfide	6.2	48		U UJ	
56-23-5	Carbon tetrachloride	4.2	48		U	
108-90-7	Chlorobenzene	1.6	48		U	
75-00-3	Chloroethane	5.3	48		U	
67-66-3	Chloroform	2.6	48	48UJ~~5.4~~	U	B
74-87-3	Chloromethane	2.5	48		U UJ	
110-82-7	Cyclohexane	2.6	48		U	
124-48-1	Dibromochloromethane	1.6	48		U	
96-12-8	1,2-Dibromo-3-chloropropane	5.8	24		U	
106-93-4	1,2-Dibromoethane	2.1	48		U	
95-50-1	1,2-Dichlorobenzene	1.8	48		U	
541-73-1	1,3-Dichlorobenzene	4.0	48		U	
106-46-7	1,4-Dichlorobenzene	2.6	48		U	
75-71-8	Dichlorodifluoromethane	5.3	48		U	
75-34-3	1,1-Dichloroethane	2.6	48		U	
107-06-2	1,2-Dichloroethane	2.2	48		U	
75-35-4	1,1-Dichloroethene	5.8	48		U	
156-59-2	cis-1,2-Dichloroethene	5.8	48		U	
156-60-5	trans-1,2-Dichloroethene	5.3	48		U	
78-87-5	1,2-Dichloropropane	2.2	48		U	
10061-01-5	cis-1,3-Dichloropropene	2.4	48		U	
10061-02-6	trans-1,3-Dichloropropene	1.5	48		U	
100-41-4	Ethylbenzene	3.6	48		U	
591-78-6	2-Hexanone	11	48		U	
98-82-8	Isopropylbenzene	4.2	48		U	
79-20-9	Methyl acetate	7.7	48		U	
75-09-2	Methylene chloride	3.0	48	6.4	J J	
108-87-2	Methyl cyclohexane	1.4	48		U UJ	
1634-04-4	Methyl tert-butyl ether	1.5	48		U	
108-10-1	4-Methyl-2-pentanone	2.8	48		U	
100-42-5	Styrene	1.7	48		U	
79-34-5	1,1,2,2-Tetrachloroethane	2.1	48		U	
127-18-4	Tetrachloroethene	4.6	48		U	

FORM I VOA

7/26/09

FORM 1
VOLATILE ORGANICS ANALYSIS DATA SHEET

CLIENT SAMPLE NO. 3

MR08-SS068-08D

Lab Name: EMPIRICAL LABS Contract: CH2MHILL

Lab Code: NA Case No.: NA SAS No.: NA SDG No.: LEJEUNE022

Matrix: (soil/water) SOIL Lab Sample ID: 0812057-03

Sample wt/vol: 2.2 (g/mL) G Lab File ID: 1205703A

Level: (low/med) LOW Date Sampled: 12/03/08 09:35

% Moisture: not dec. 53 Date Analyzed: 12/13/08 11:38

GC Column: RTX-VRX ID: 0.25 (mm) Dilution Factor: 1.0

Soil Extract Volume:_____(uL) Soil Aliquot Volume: _____(uL)

CONCENTRATION UNITS: (ug/L or ug/Kg) UG/KG

CAS NO.	COMPOUND	MDL	RL	CONC	Q
108-88-3	Toluene	4.1	48	6.2	~~J~~ J SSI
120-82-1	1,2,4-Trichlorobenzene	0.86	48		U UJ
71-55-6	1,1,1-Trichloroethane	4.3	48		U
79-00-5	1,1,2-Trichloroethane	1.7	48		U
79-01-6	Trichloroethene	4.1	48		U
76-13-1	Trichlorotrifluoroethane	2.6	48		U
75-69-4	Trichlorofluoromethane	4.6	48		U
75-01-4	Vinyl chloride	5.3	48		U
1330-20-7	Xylene(total)	3.4	48		U

lw
2/26/09

FORM 1
VOLATILE ORGANICS ANALYSIS DATA SHEET

CLIENT SAMPLE NO. 3RE

MR08-SS068-08DR

Lab Name: EMPIRICAL LABS Contract: CH2MHILL

Lab Code: NA Case No.: NA SAS No.: NA SDG No.: LEJEUNE022

Matrix: (soil/water) SOIL Lab Sample ID: 0812057-03R

Sample wt/vol: 2.0 (g/mL) G Lab File ID: 1205703B

Level: (low/med) LOW Date Sampled: 12/03/08 09:35

% Moisture: not dec. 53 Date Analyzed: 12/16/08 22:08

GC Column: RTX-VRX ID: 0.25 (mm) Dilution Factor: 1.0 Use original

Soil Extract Volume:_____(uL) Soil Aliquot Volume: _____(uL)

CONCENTRATION UNITS: (ug/L or ug/Kg) UG/KG

CAS NO.	COMPOUND	MDL	RL	CONC	Q
67-64-1	Acetone	11	54	900	~~X~~ J CCH
71-43-2	Benzene	2.6	54		U
75-27-4	Bromodichloromethane	1.6	54		U
75-25-2	Bromoform	5.4	54		U
74-83-9	Bromomethane	3.9	54		U
78-93-3	2-Butanone	7.6	54	29	J
75-15-0	Carbon disulfide	7.0	54		U
56-23-5	Carbon tetrachloride	4.8	54		U
108-90-7	Chlorobenzene	1.8	54		U
75-00-3	Chloroethane	6.0	54		U
67-66-3	Chloroform	3.0	54	54U ~~6.9~~	~~J~~ BU
74-87-3	Chloromethane	2.8	54		~~U~~ UJ CCH
110-82-7	Cyclohexane	2.9	54		U
124-48-1	Dibromochloromethane	1.8	54		U
96-12-8	1,2-Dibromo-3-chloropropane	6.5	27		U
106-93-4	1,2-Dibromoethane	2.3	54		U
95-50-1	1,2-Dichlorobenzene	2.0	54		U
541-73-1	1,3-Dichlorobenzene	4.6	54		U
106-46-7	1,4-Dichlorobenzene	3.0	54		U
75-71-8	Dichlorodifluoromethane	6.0	54		U
75-34-3	1,1-Dichloroethane	2.9	54		U
107-06-2	1,2-Dichloroethane	2.5	54		U
75-35-4	1,1-Dichloroethene	6.5	54		U
156-59-2	cis-1,2-Dichloroethene	6.5	54		U
156-60-5	trans-1,2-Dichloroethene	6.0	54		U
78-87-5	1,2-Dichloropropane	2.5	54		U
10061-01-5	cis-1,3-Dichloropropene	2.7	54		U
10061-02-6	trans-1,3-Dichloropropene	1.7	54		U
100-41-4	Ethylbenzene	4.1	54		U
591-78-6	2-Hexanone	12	54		~~U~~ UJ CCH
98-82-8	Isopropylbenzene	4.8	54		U
79-20-9	Methyl acetate	8.7	54		U
75-09-2	Methylene chloride	3.4	54	54U ~~10~~	~~JB~~
108-87-2	Methyl cyclohexane	1.6	54		U
1634-04-4	Methyl tert-butyl ether	1.7	54		U
108-10-1	4-Methyl-2-pentanone	3.1	54		U
100-42-5	Styrene	1.9	54	3.2	J
79-34-5	1,1,2,2-Tetrachloroethane	2.3	54		U
127-18-4	Tetrachloroethene	5.3	54		U

FORM I VOA

lw 2/26/09

FORM 1
VOLATILE ORGANICS ANALYSIS DATA SHEET

CLIENT SAMPLE NO. 3RE

MR08-SS068-08DR

Lab Name: EMPIRICAL LABS Contract: CH2MHILL

Lab Code: NA Case No.: NA SAS No.: NA SDG No.: LEJEUNE022

Matrix: (soil/water) SOIL Lab Sample ID: 0812057-03R

Sample wt/vol: 2.0 (g/mL) G Lab File ID: 1205703B

Level: (low/med) LOW Date Sampled: 12/03/08 09:35

% Moisture: not dec. 53 Date Analyzed: 12/16/08 22:08 Use Original

GC Column: RTX-VRX ID: 0.25 (mm) Dilution Factor: 1.0

Soil Extract Volume:_____(uL) Soil Aliquot Volume: _____(uL)

CONCENTRATION UNITS: (ug/L or ug/Kg) UG/KG

CAS NO.	COMPOUND	MDL	RL	CONC	Q
108-88-3	Toluene	4.7	54	5.3	J
120-82-1	1,2,4-Trichlorobenzene	0.98	54		U
71-55-6	1,1,1-Trichloroethane	4.9	54		U
79-00-5	1,1,2-Trichloroethane	1.9	54		U
79-01-6	Trichloroethene	4.6	54		U
76-13-1	Trichlorotrifluoroethane	3.0	54		U
75-69-4	Trichlorofluoromethane	5.2	54		U
75-01-4	Vinyl chloride	6.0	54		U
1330-20-7	Xylene(total)	3.8	54		U

R RE

FORM I VOA

2/26/09

FORM 1
VOLATILE ORGANICS ANALYSIS DATA SHEET

CLIENT SAMPLE NO. 4

MR08-IS0688908D

Lab Name: EMPIRICAL LABS Contract: CH2MHILL

Lab Code: NA Case No.: NA SAS No.: NA SDG No.: LEJEUNE022

Matrix: (soil/water) SOIL Lab Sample ID: 0812057-04

Sample wt/vol: 6.6 (g/mL) G Lab File ID: 1205704A

Level: (low/med) LOW Date Sampled: 12/03/08 10:15

% Moisture: not dec. 19 Date Analyzed: 12/13/08 12:18

GC Column: RTX-VRX ID: 0.25 (mm) Dilution Factor: 1.0

Soil Extract Volume:_____(uL) Soil Aliquot Volume: _____(uL)

CONCENTRATION UNITS: (ug/L or ug/Kg) UG/KG

CAS NO.	COMPOUND	MDL	RL	CONC	Q	
67-64-1	Acetone	1.9	9.3	9.7	U	B
71-43-2	Benzene	0.44	9.3		U	
75-27-4	Bromodichloromethane	0.28	9.3		U	
75-25-2	Bromoform	0.93	9.3		U	
74-83-9	Bromomethane	0.67	9.3		~~U~~ UJ	CC
78-93-3	2-Butanone	1.3	9.3		U	
75-15-0	Carbon disulfide	1.2	9.3		U	
56-23-5	Carbon tetrachloride	0.82	9.3		U	
108-90-7	Chlorobenzene	0.32	9.3		~~U~~ UJ	MS
75-00-3	Chloroethane	1.0	9.3		U	
67-66-3	Chloroform	0.51	9.3		U	
74-87-3	Chloromethane	0.48	9.3		U	
110-82-7	Cyclohexane	0.50	9.3		U	
124-48-1	Dibromochloromethane	0.32	9.3		U	
96-12-8	1,2-Dibromo-3-chloropropane	1.1	4.7		U	
106-93-4	1,2-Dibromoethane	0.40	9.3		U	UJ MSI
95-50-1	1,2-Dichlorobenzene	0.34	9.3		U	
541-73-1	1,3-Dichlorobenzene	0.78	9.3		U	
106-46-7	1,4-Dichlorobenzene	0.51	9.3		U	
75-71-8	Dichlorodifluoromethane	1.0	9.3		U	
75-34-3	1,1-Dichloroethane	0.50	9.3		U	
107-06-2	1,2-Dichloroethane	0.43	9.3		U	
75-35-4	1,1-Dichloroethene	1.1	9.3		U	
156-59-2	cis-1,2-Dichloroethene	1.1	9.3		U	
156-60-5	trans-1,2-Dichloroethene	1.0	9.3		U	
78-87-5	1,2-Dichloropropane	0.43	9.3		U	
10061-01-5	cis-1,3-Dichloropropene	0.47	9.3		U	
10061-02-6	trans-1,3-Dichloropropene	0.30	9.3		U	
100-41-4	Ethylbenzene	0.70	9.3		U	
591-78-6	2-Hexanone	2.1	9.3		U	
98-82-8	Isopropylbenzene	0.82	9.3		U	
79-20-9	Methyl acetate	1.5	9.3		~~U~~ UJ	MS
75-09-2	Methylene chloride	0.58	9.3	6.4	~~U~~ J	CCL
108-87-2	Methyl cyclohexane	0.28	9.3		U	
1634-04-4	Methyl tert-butyl ether	0.30	9.3		U	
108-10-1	4-Methyl-2-pentanone	0.54	9.3		U	
100-42-5	Styrene	0.33	9.3		~~U~~ UJ	MSI
79-34-5	1,1,2,2-Tetrachloroethane	0.40	9.3		U	
127-18-4	Tetrachloroethene	0.90	9.3		U	

FORM I VOA

lw
2/26/09

FORM 1
VOLATILE ORGANICS ANALYSIS DATA SHEET

CLIENT SAMPLE NO. 4

MR08-IS0688908D

Lab Name: EMPIRICAL LABS Contract: CH2MHILL

Lab Code: NA Case No.: NA SAS No.: NA SDG No.: LEJEUNE022

Matrix: (soil/water) SOIL Lab Sample ID: 0812057-04

Sample wt/vol: 6.6 (g/mL) G Lab File ID: 1205704A

Level: (low/med) LOW Date Sampled: 12/03/08 10:15

% Moisture: not dec. 19 Date Analyzed: 12/13/08 12:18

GC Column: RTX-VRX ID: 0.25 (mm) Dilution Factor: 1.0

Soil Extract Volume:_____(uL) Soil Aliquot Volume: _____(uL)

CONCENTRATION UNITS: (ug/L or ug/Kg) UG/KG

CAS NO.	COMPOUND	MDL	RL	CONC	Q
108-88-3	Toluene	0.80	9.3		U
120-82-1	1,2,4-Trichlorobenzene	0.17	9.3		~~U~~ UJ MSL
71-55-6	1,1,1-Trichloroethane	0.84	9.3		U
79-00-5	1,1,2-Trichloroethane	0.33	9.3		U
79-01-6	Trichloroethene	0.79	9.3		~~U~~ UJ MS
76-13-1	Trichlorotrifluoroethane	0.51	9.3		U
75-69-4	Trichlorofluoromethane	0.89	9.3		U
75-01-4	Vinyl chloride	1.0	9.3		U
1330-20-7	Xylene(total)	0.65	9.3		U

lw
2/26/09

FORM 1
VOLATILE ORGANICS ANALYSIS DATA SHEET

CLIENT SAMPLE NO. 5

MR08-SS069-08D

Lab Name: EMPIRICAL LABS Contract: CH2MHILL

Lab Code: NA Case No.: NA SAS No.: NA SDG No.: LEJEUNE022

Matrix: (soil/water) SOIL Lab Sample ID: 0812057-05

Sample wt/vol: 3.4 (g/mL) G Lab File ID: 1205705A

Level: (low/med) LOW Date Sampled: 12/03/08 11:20

% Moisture: not dec. 38 Date Analyzed: 12/13/08 12:57

GC Column: RTX-VRX ID: 0.25 (mm) Dilution Factor: 1.0

Soil Extract Volume:_____(uL) Soil Aliquot Volume: _____(uL)

CONCENTRATION UNITS: (ug/L or ug/Kg) UG/KG

CAS NO.	COMPOUND	MDL	RL	CONC	Q	
67-64-1	Acetone	4.7	24	860	J	SSL
71-43-2	Benzene	1.1	24		U UJ	
75-27-4	Bromodichloromethane	0.71	24		U	
75-25-2	Bromoform	2.4	24		U	
74-83-9	Bromomethane	1.7	24		U	
78-93-3	2-Butanone	3.3	24	19	J J	
75-15-0	Carbon disulfide	3.1	24		U UJ	
56-23-5	Carbon tetrachloride	2.1	24		U	
108-90-7	Chlorobenzene	0.80	24		U	
75-00-3	Chloroethane	2.6	24		U	
67-66-3	Chloroform	1.3	24	24UJ ~~1.9~~	J SSL	B
74-87-3	Chloromethane	1.2	24		U UJ	
110-82-7	Cyclohexane	1.3	24		U	
124-48-1	Dibromochloromethane	0.80	24		U	
96-12-8	1,2-Dibromo-3-chloropropane	2.8	12		~~U~~ R	IS
106-93-4	1,2-Dibromoethane	1.0	24		~~U~~ UJ	SS
95-50-1	1,2-Dichlorobenzene	0.88	24		~~U~~ R	IS
541-73-1	1,3-Dichlorobenzene	2.0	24		~~U~~	
106-46-7	1,4-Dichlorobenzene	1.3	24		~~U~~	
75-71-8	Dichlorodifluoromethane	2.6	24		~~U~~ UJ	S
75-34-3	1,1-Dichloroethane	1.3	24		U	
107-06-2	1,2-Dichloroethane	1.1	24		U	
75-35-4	1,1-Dichloroethene	2.8	24		U	
156-59-2	cis-1,2-Dichloroethene	2.8	24		U	
156-60-5	trans-1,2-Dichloroethene	2.6	24		U	
78-87-5	1,2-Dichloropropane	1.1	24		U	
10061-01-5	cis-1,3-Dichloropropene	1.2	24		U	
10061-02-6	trans-1,3-Dichloropropene	0.76	24		U	
100-41-4	Ethylbenzene	1.8	24		U	
591-78-6	2-Hexanone	5.4	24		U	
98-82-8	Isopropylbenzene	2.1	24		U	
79-20-9	Methyl acetate	3.8	24		U	
75-09-2	Methylene chloride	1.5	24	2.9	J J	
108-87-2	Methyl cyclohexane	0.71	24		U UJ	
1634-04-4	Methyl tert-butyl ether	0.76	24		U	
108-10-1	4-Methyl-2-pentanone	1.4	24		U	
100-42-5	Styrene	0.83	24	3.2	J J	
79-34-5	1,1,2,2-Tetrachloroethane	1.0	24		~~U~~ R	I
127-18-4	Tetrachloroethene	2.3	24		~~U~~ UJ	SS

FORM I VOA

LW
2/26/09

FORM 1
VOLATILE ORGANICS ANALYSIS DATA SHEET

CLIENT SAMPLE NO. 5

MR08-SS069-08D

Lab Name: EMPIRICAL LABS Contract: CH2MHILL

Lab Code: NA Case No.: NA SAS No.: NA SDG No.: LEJEUNE022

Matrix: (soil/water) SOIL Lab Sample ID: 0812057-05

Sample wt/vol: 3.4 (g/mL) G Lab File ID: 1205705A

Level: (low/med) LOW Date Sampled: 12/03/08 11:20

% Moisture: not dec. 38 Date Analyzed: 12/13/08 12:57

GC Column: RTX-VRX ID: 0.25 (mm) Dilution Factor: 1.0

Soil Extract Volume:_____(uL) Soil Aliquot Volume: _____(uL)

CONCENTRATION UNITS: (ug/L or ug/Kg) UG/KG

CAS NO.	COMPOUND	MDL	RL	CONC	Q	
108-88-3	Toluene	2.0	24	8.3	~~U~~ J	SS
120-82-1	1,2,4-Trichlorobenzene	0.42	24		~~U~~ R	FS
71-55-6	1,1,1-Trichloroethane	2.1	24		U	UJ SS
79-00-5	1,1,2-Trichloroethane	0.83	24		U	
79-01-6	Trichloroethene	2.0	24		U	
76-13-1	Trichlorotrifluoroethane	1.3	24		U	
75-69-4	Trichlorofluoromethane	2.2	24		U	
75-01-4	Vinyl chloride	2.6	24		U	
1330-20-7	Xylene(total)	1.6	24		U	

FORM I VOA

lw
2/26/09

FORM 1
VOLATILE ORGANICS ANALYSIS DATA SHEET

CLIENT SAMPLE NO. 52E

MR08-SS069-08DR

Lab Name: EMPIRICAL LABS Contract: CH2MHILL

Lab Code: NA Case No.: NA SAS No.: NA SDG No.: LEJEUNE022

Matrix: (soil/water) SOIL Lab Sample ID: 0812057-05R

Sample wt/vol: 3.5 (g/mL) G Lab File ID: 1205705B

Level: (low/med) LOW Date Sampled: 12/03/08 11:20

% Moisture: not dec. 38 Date Analyzed: 12/17/08 04:29 Use ORIGINAL

GC Column: RTX-VRX ID: 0.25 (mm) Dilution Factor: 1.0

Soil Extract Volume:_____(uL) Soil Aliquot Volume: _____(uL)

CONCENTRATION UNITS: (ug/L or ug/Kg) UG/KG

CAS NO.	COMPOUND	MDL	RL	CONC	Q
67-64-1	Acetone	4.6	23	420	J SSL
71-43-2	Benzene	1.1	23		U UJ
75-27-4	Bromodichloromethane	0.69	23		U
75-25-2	Bromoform	2.3	23		U
74-83-9	Bromomethane	1.6	23		U
78-93-3	2-Butanone	3.2	23	9.6	J J
75-15-0	Carbon disulfide	3.0	23		U UJ
56-23-5	Carbon tetrachloride	2.0	23		U
108-90-7	Chlorobenzene	0.78	23		U
75-00-3	Chloroethane	2.5	23		U
67-66-3	Chloroform	1.3	23	23UJ ~~2.1~~	~~J~~ SSL B
74-87-3	Chloromethane	1.2	23		U UJ SSL
110-82-7	Cyclohexane	1.2	23		U
124-48-1	Dibromochloromethane	0.78	23		U
96-12-8	1,2-Dibromo-3-chloropropane	2.8	11		U R ISL
106-93-4	1,2-Dibromoethane	0.99	23		U UJ SSL
95-50-1	1,2-Dichlorobenzene	0.85	23		U R ISL
541-73-1	1,3-Dichlorobenzene	1.9	23		U
106-46-7	1,4-Dichlorobenzene	1.3	23		U
75-71-8	Dichlorodifluoromethane	2.5	23		U UJ SSL
75-34-3	1,1-Dichloroethane	1.2	23		U
107-06-2	1,2-Dichloroethane	1.0	23		U
75-35-4	1,1-Dichloroethene	2.8	23		U
156-59-2	cis-1,2-Dichloroethene	2.8	23		U
156-60-5	trans-1,2-Dichloroethene	2.5	23		U
78-87-5	1,2-Dichloropropane	1.0	23		U
10061-01-5	cis-1,3-Dichloropropene	1.1	23		U
10061-02-6	trans-1,3-Dichloropropene	0.74	23		U
100-41-4	Ethylbenzene	1.7	23		U
591-78-6	2-Hexanone	5.3	23		U
98-82-8	Isopropylbenzene	2.0	23		U
79-20-9	Methyl acetate	3.7	23		U
75-09-2	Methylene chloride	1.4	23	23UJ ~~3.6~~	~~JB~~ SSL B
108-87-2	Methyl cyclohexane	0.69	23		U UJ SSL
1634-04-4	Methyl tert-butyl ether	0.74	23		U
108-10-1	4-Methyl-2-pentanone	1.3	23		U
100-42-5	Styrene	0.80	23	6.5	J J
79-34-5	1,1,2,2-Tetrachloroethane	0.99	23		U R ISL
127-18-4	Tetrachloroethene	2.2	23		U UJ SSL

FORM I VOA

LW 2/26/09

FORM 1
VOLATILE ORGANICS ANALYSIS DATA SHEET

CLIENT SAMPLE NO.

5RE

MR08-SS069-08DR

Lab Name: EMPIRICAL LABS Contract: CH2MHILL

Lab Code: NA Case No.: NA SAS No.: NA SDG No.: LEJEUNE022

Matrix: (soil/water) SOIL Lab Sample ID: 0812057-05R

Sample wt/vol: 3.5 (g/mL) G Lab File ID: 1205705B

Level: (low/med) LOW Date Sampled: 12/03/08 11:20

% Moisture: not dec. 38 Date Analyzed: 12/17/08 04:29

use original

GC Column: RTX-VRX ID: 0.25 (mm) Dilution Factor: 1.0

Soil Extract Volume:_____(uL) Soil Aliquot Volume: _____(uL)

CONCENTRATION UNITS: (ug/L or ug/Kg) UG/KG

CAS NO.	COMPOUND	MDL	RL	CONC	Q
108-88-3------	Toluene	2.0	23	8.1	~~J~~ J SSL
120-82-1------	1,2,4-Trichlorobenzene	0.41	23		~~U~~ R ISL
71-55-6-------	1,1,1-Trichloroethane	2.1	23		~~U~~ UJ SSL
79-00-5-------	1,1,2-Trichloroethane	0.80	23		U
79-01-6-------	Trichloroethene	2.0	23		U
76-13-1-------	Trichlorotrifluoroethane	1.3	23		U
75-69-4-------	Trichlorofluoromethane	2.2	23		U
75-01-4-------	Vinyl chloride	2.5	23		U
1330-20-7-----	Xylene(total)	1.6	23		U

R

FORM I VOA

KW
2/26/09

FORM 1
VOLATILE ORGANICS ANALYSIS DATA SHEET

CLIENT SAMPLE NO. 6

MR08-SS069D-08D

Lab Name: EMPIRICAL LABS Contract: CH2MHILL

Lab Code: NA Case No.: NA SAS No.: NA SDG No.: LEJEUNE022

Matrix: (soil/water) SOIL Lab Sample ID: 0812057-06

Sample wt/vol: 3.1 (g/mL) G Lab File ID: 1205706A

Level: (low/med) LOW Date Sampled: 12/03/08 11:30

% Moisture: not dec. 39 Date Analyzed: 12/13/08 13:37 Use reanalysis

GC Column: RTX-VRX ID: 0.25 (mm) Dilution Factor: 1.0

Soil Extract Volume:_____(uL) Soil Aliquot Volume: _____(uL)

CONCENTRATION UNITS: (ug/L or ug/Kg) UG/KG

CAS NO.	COMPOUND	MDL	RL	CONC	Q
67-64-1	Acetone	5.2	26	600	J SSL
71-43-2	Benzene	1.2	26		U UJ
75-27-4	Bromodichloromethane	0.79	26		U
75-25-2	Bromoform	2.6	26		U
74-83-9	Bromomethane	1.9	26		U
78-93-3	2-Butanone	3.7	26	15	J J
75-15-0	Carbon disulfide	3.4	26		U UJ
56-23-5	Carbon tetrachloride	2.3	26		U
108-90-7	Chlorobenzene	0.89	26		U
75-00-3	Chloroethane	2.9	26		U
67-66-3	Chloroform	1.4	26	26 UJ ~~2.4~~	J SSL
74-87-3	Chloromethane	1.4	26		U UJ
110-82-7	Cyclohexane	1.4	26		U
124-48-1	Dibromochloromethane	0.89	26		U
96-12-8	1,2-Dibromo-3-chloropropane	3.1	13		U R IS
106-93-4	1,2-Dibromoethane	1.1	26		U UJ SS
95-50-1	1,2-Dichlorobenzene	0.97	26		U R IS
541-73-1	1,3-Dichlorobenzene	2.2	26		U
106-46-7	1,4-Dichlorobenzene	1.4	26		U
75-71-8	Dichlorodifluoromethane	2.9	26		U UJ SS
75-34-3	1,1-Dichloroethane	1.4	26		U
107-06-2	1,2-Dichloroethane	1.2	26		U
75-35-4	1,1-Dichloroethene	3.1	26		U
156-59-2	cis-1,2-Dichloroethene	3.1	26		U
156-60-5	trans-1,2-Dichloroethene	2.9	26		U
78-87-5	1,2-Dichloropropane	1.2	26		U
10061-01-5	cis-1,3-Dichloropropene	1.3	26		U
10061-02-6	trans-1,3-Dichloropropene	0.84	26		U
100-41-4	Ethylbenzene	2.0	26		U
591-78-6	2-Hexanone	6.0	26		U
98-82-8	Isopropylbenzene	2.3	26		U
79-20-9	Methyl acetate	4.2	26		U
75-09-2	Methylene chloride	1.6	26	4.1	J J
108-87-2	Methyl cyclohexane	0.79	26		U UJ
1634-04-4	Methyl tert-butyl ether	0.84	26		U
108-10-1	4-Methyl-2-pentanone	1.5	26		U
100-42-5	Styrene	0.92	26	2.0	J J
79-34-5	1,1,2,2-Tetrachloroethane	1.1	26		U R IS
127-18-4	Tetrachloroethene	2.5	26		U UJ SS

FORM I VOA

RW 2/26/09

FORM 1
VOLATILE ORGANICS ANALYSIS DATA SHEET

CLIENT SAMPLE NO. 6

MR08-SS069D-08D

Lab Name: EMPIRICAL LABS Contract: CH2MHILL

Lab Code: NA Case No.: NA SAS No.: NA SDG No.: LEJEUNE022

Matrix: (soil/water) SOIL Lab Sample ID: 0812057-06

Sample wt/vol: 3.1 (g/mL) G Lab File ID: 1205706A

Level: (low/med) LOW Date Sampled: 12/03/08 11:30

% Moisture: not dec. 39 Date Analyzed: 12/13/08 13:37

GC Column: RTX-VRX ID: 0.25 (mm) Dilution Factor: 1.0

Soil Extract Volume:_____(uL) Soil Aliquot Volume: _____(uL)

Use Reanalysis

CONCENTRATION UNITS: (ug/L or ug/Kg) UG/KG

CAS NO.	COMPOUND	MDL	RL	CONC	Q
108-88-3	Toluene	2.2	26	3.5	~~J~~ J SSI
120-82-1	1,2,4-Trichlorobenzene	0.47	26		~~U~~ R SSI
71-55-6	1,1,1-Trichloroethane	2.4	26		U UJ SSI
79-00-5	1,1,2-Trichloroethane	0.92	26		U
79-01-6	Trichloroethene	2.2	26		U
76-13-1	Trichlorotrifluoroethane	1.4	26		U
75-69-4	Trichlorofluoromethane	2.5	26		U
75-01-4	Vinyl chloride	2.9	26		U
1330-20-7	Xylene(total)	1.8	26		U

MW 2/26/09

FORM 1
VOLATILE ORGANICS ANALYSIS DATA SHEET

CLIENT SAMPLE NO. 6RE

MR08-SS0
69D-08DR

Lab Name: EMPIRICAL LABS Contract: CH2MHILL

Lab Code: NA Case No.: NA SAS No.: NA SDG No.: LEJEUNE022

Matrix: (soil/water) SOIL Lab Sample ID: 0812057-06R

Sample wt/vol: 3.2 (g/mL) G Lab File ID: 1205706B

Level: (low/med) LOW Date Sampled: 12/03/08 11:30

% Moisture: not dec. 39 Date Analyzed: 12/17/08 05:08

GC Column: RTX-VRX ID: 0.25 (mm) Dilution Factor: 1.0

Soil Extract Volume:_____(uL) Soil Aliquot Volume: _____(uL)

CONCENTRATION UNITS: (ug/L or ug/Kg) UG/KG

CAS NO.	COMPOUND	MDL	RL	CONC	Q
67-64-1	Acetone	5.1	26	940	J SSL
71-43-2	Benzene	1.2	26		U UJ
75-27-4	Bromodichloromethane	0.77	26		U
75-25-2	Bromoform	2.6	26		U
74-83-9	Bromomethane	1.8	26		U
78-93-3	2-Butanone	3.6	26	21	J J
75-15-0	Carbon disulfide	3.3	26		U UJ
56-23-5	Carbon tetrachloride	2.2	26		U
108-90-7	Chlorobenzene	0.87	26		U
75-00-3	Chloroethane	2.8	26		U
67-66-3	Chloroform	1.4	26	26 UJ ~~1.9~~	~~J~~ SSL
74-87-3	Chloromethane	1.3	26		U UJ SS
110-82-7	Cyclohexane	1.4	26		U
124-48-1	Dibromochloromethane	0.87	26		U
96-12-8	1,2-Dibromo-3-chloropropane	3.1	13		~~U~~ R IS
106-93-4	1,2-Dibromoethane	1.1	26		~~U~~ UJ SS
95-50-1	1,2-Dichlorobenzene	0.95	26		U R IS
541-73-1	1,3-Dichlorobenzene	2.2	26		U
106-46-7	1,4-Dichlorobenzene	1.4	26		U
75-71-8	Dichlorodifluoromethane	2.8	26		~~U~~ UJ S
75-34-3	1,1-Dichloroethane	1.4	26		U
107-06-2	1,2-Dichloroethane	1.2	26		U
75-35-4	1,1-Dichloroethene	3.1	26		U
156-59-2	cis-1,2-Dichloroethene	3.1	26		U
156-60-5	trans-1,2-Dichloroethene	2.8	26		U
78-87-5	1,2-Dichloropropane	1.2	26		U
10061-01-5	cis-1,3-Dichloropropene	1.3	26		U
10061-02-6	trans-1,3-Dichloropropene	0.82	26		U
100-41-4	Ethylbenzene	1.9	26		U
591-78-6	2-Hexanone	5.9	26		U
98-82-8	Isopropylbenzene	2.2	26		U
79-20-9	Methyl acetate	4.1	26		U
75-09-2	Methylene chloride	1.6	26	26 UJ ~~3.6~~	~~JB~~ SSL
108-87-2	Methyl cyclohexane	0.77	26		U UJ S
1634-04-4	Methyl tert-butyl ether	0.82	26		U
108-10-1	4-Methyl-2-pentanone	1.5	26		U
100-42-5	Styrene	0.90	26	0.93	J J
79-34-5	1,1,2,2-Tetrachloroethane	1.1	26		~~U~~ R IS
127-18-4	Tetrachloroethene	2.5	26		~~U~~ UJ S

FORM I VOA

lw 2/26/09

FORM 1
VOLATILE ORGANICS ANALYSIS DATA SHEET

CLIENT SAMPLE NO.

MR08-SS0
69D-08DR

6RE

Lab Name: EMPIRICAL LABS Contract: CH2MHILL

Lab Code: NA Case No.: NA SAS No.: NA SDG No.: LEJEUNE022

Matrix: (soil/water) SOIL Lab Sample ID: 0812057-06R

Sample wt/vol: 3.2 (g/mL) G Lab File ID: 1205706B

Level: (low/med) LOW Date Sampled: 12/03/08 11:30

% Moisture: not dec. 39 Date Analyzed: 12/17/08 05:08

GC Column: RTX-VRX ID: 0.25 (mm) Dilution Factor: 1.0

Soil Extract Volume:_____(uL) Soil Aliquot Volume: _____(uL)

CONCENTRATION UNITS: (ug/L or ug/Kg) UG/KG

CAS NO.	COMPOUND	MDL	RL	CONC	Q
108-88-3	Toluene	2.2	26	3.3	~~J~~ J SSL
120-82-1	1,2,4-Trichlorobenzene	0.46	26		~~U~~ R ISL
71-55-6	1,1,1-Trichloroethane	2.3	26		U UJ SSL
79-00-5	1,1,2-Trichloroethane	0.90	26		U
79-01-6	Trichloroethene	2.2	26		U
76-13-1	Trichlorotrifluoroethane	1.4	26		U
75-69-4	Trichlorofluoromethane	2.4	26		U
75-01-4	Vinyl chloride	2.8	26		U
1330-20-7	Xylene(total)	1.8	26		U

FORM I VOA

lw
2/26/09

FORM 1
VOLATILE ORGANICS ANALYSIS DATA SHEET

CLIENT SAMPLE NO. 7

MR08-IS06
9-6-7-08D

Lab Name: EMPIRICAL LABS Contract: CH2MHILL

Lab Code: NA Case No.: NA SAS No.: NA SDG No.: LEJEUNE022

Matrix: (soil/water) SOIL Lab Sample ID: 0812057-07

Sample wt/vol: 4.4 (g/mL) G Lab File ID: 1205707A

Level: (low/med) LOW Date Sampled: 12/03/08 11:55

% Moisture: not dec. 33 Date Analyzed: 12/13/08 14:16

GC Column: RTX-VRX ID: 0.25 (mm) Dilution Factor: 1.0

Soil Extract Volume:_____(uL) Soil Aliquot Volume: _____(uL)

CONCENTRATION UNITS: (ug/L or ug/Kg) UG/KG

CAS NO.	COMPOUND	MDL	RL	CONC	Q
67-64-1	Acetone	3.4	17	43	U B1
71-43-2	Benzene	0.79	17		U
75-27-4	Bromodichloromethane	0.50	17		U
75-25-2	Bromoform	1.7	17		U
74-83-9	Bromomethane	1.2	17		~~U~~ UJ CCV
78-93-3	2-Butanone	2.4	17		U
75-15-0	Carbon disulfide	2.2	17		U
56-23-5	Carbon tetrachloride	1.5	17		U
108-90-7	Chlorobenzene	0.57	17		U
75-00-3	Chloroethane	1.8	17		U
67-66-3	Chloroform	0.92	17		U
74-87-3	Chloromethane	0.88	17		U
110-82-7	Cyclohexane	0.91	17		U
124-48-1	Dibromochloromethane	0.57	17		U
96-12-8	1,2-Dibromo-3-chloropropane	2.0	8.4		U
106-93-4	1,2-Dibromoethane	0.72	17		U
95-50-1	1,2-Dichlorobenzene	0.62	17		U
541-73-1	1,3-Dichlorobenzene	1.4	17		U
106-46-7	1,4-Dichlorobenzene	0.92	17		U
75-71-8	Dichlorodifluoromethane	1.8	17		U
75-34-3	1,1-Dichloroethane	0.91	17		U
107-06-2	1,2-Dichloroethane	0.77	17		U
75-35-4	1,1-Dichloroethene	2.0	17		U
156-59-2	cis-1,2-Dichloroethene	2.0	17		U
156-60-5	trans-1,2-Dichloroethene	1.8	17		U
78-87-5	1,2-Dichloropropane	0.77	17		U
10061-01-5	cis-1,3-Dichloropropene	0.84	17		U
10061-02-6	trans-1,3-Dichloropropene	0.54	17		U
100-41-4	Ethylbenzene	1.3	17		U
591-78-6	2-Hexanone	3.9	17		U
98-82-8	Isopropylbenzene	1.5	17		U
79-20-9	Methyl acetate	2.7	17		U
75-09-2	Methylene chloride	1.0	17	2.4	~~J~~ J CCV
108-87-2	Methyl cyclohexane	0.50	17		U
1634-04-4	Methyl tert-butyl ether	0.54	17		U
108-10-1	4-Methyl-2-pentanone	0.98	17		U
100-42-5	Styrene	0.59	17		U
79-34-5	1,1,2,2-Tetrachloroethane	0.72	17		U
127-18-4	Tetrachloroethene	1.6	17		U

FORM I VOA

MW 2/26/09

FORM 1
VOLATILE ORGANICS ANALYSIS DATA SHEET

CLIENT SAMPLE NO.

7

MR08-IS06
9-6-7-08D

Lab Name: EMPIRICAL LABS Contract: CH2MHILL

Lab Code: NA Case No.: NA SAS No.: NA SDG No.: LEJEUNE022

Matrix: (soil/water) SOIL Lab Sample ID: 0812057-07

Sample wt/vol: 4.4 (g/mL) G Lab File ID: 1205707A

Level: (low/med) LOW Date Sampled: 12/03/08 11:55

% Moisture: not dec. 33 Date Analyzed: 12/13/08 14:16

GC Column: RTX-VRX ID: 0.25 (mm) Dilution Factor: 1.0

Soil Extract Volume:_____(uL) Soil Aliquot Volume: _____(uL)

CONCENTRATION UNITS: (ug/L or ug/Kg) UG/KG

CAS NO.	COMPOUND	MDL	RL	CONC	Q
108-88-3	Toluene	1.4	17		U
120-82-1	1,2,4-Trichlorobenzene	0.30	17		U
71-55-6	1,1,1-Trichloroethane	1.5	17		U
79-00-5	1,1,2-Trichloroethane	0.59	17		U
79-01-6	Trichloroethene	1.4	17		U
76-13-1	Trichlorotrifluoroethane	0.92	17		U
75-69-4	Trichlorofluoromethane	1.6	17		U
75-01-4	Vinyl chloride	1.8	17		U
1330-20-7	Xylene(total)	1.2	17		U

lw
2/26/09

FORM 1
VOLATILE ORGANICS ANALYSIS DATA SHEET

CLIENT SAMPLE NO.

MR08-IS06
9D-6-7-08D

8

Lab Name: EMPIRICAL LABS Contract: CH2MHILL

Lab Code: NA Case No.: NA SAS No.: NA SDG No.: LEJEUNE022

Matrix: (soil/water) SOIL Lab Sample ID: 0812057-08

Sample wt/vol: 5.4 (g/mL) G Lab File ID: 1205708A

Level: (low/med) LOW Date Sampled: 12/03/08 12:05

% Moisture: not dec. 16 Date Analyzed: 12/13/08 14:55

GC Column: RTX-VRX ID: 0.25 (mm) Dilution Factor: 1.0

Soil Extract Volume:_____(uL) Soil Aliquot Volume: _____(uL)

CONCENTRATION UNITS: (ug/L or ug/Kg) UG/KG

CAS NO.	COMPOUND	MDL	RL	CONC	Q
67-64-1	Acetone	2.2	11	36	U B
71-43-2	Benzene	0.52	11		U
75-27-4	Bromodichloromethane	0.33	11		U
75-25-2	Bromoform	1.1	11		U
74-83-9	Bromomethane	0.79	11		~~U~~ UJ CC
78-93-3	2-Butanone	1.5	11		U
75-15-0	Carbon disulfide	1.4	11		U
56-23-5	Carbon tetrachloride	0.97	11		U
108-90-7	Chlorobenzene	0.37	11		U
75-00-3	Chloroethane	1.2	11		U
67-66-3	Chloroform	0.60	11		U
74-87-3	Chloromethane	0.57	11		U
110-82-7	Cyclohexane	0.59	11		U
124-48-1	Dibromochloromethane	0.37	11		U
96-12-8	1,2-Dibromo-3-chloropropane	1.3	5.5		U
106-93-4	1,2-Dibromoethane	0.47	11		U
95-50-1	1,2-Dichlorobenzene	0.41	11		U
541-73-1	1,3-Dichlorobenzene	0.92	11		U
106-46-7	1,4-Dichlorobenzene	0.60	11		U
75-71-8	Dichlorodifluoromethane	1.2	11		U
75-34-3	1,1-Dichloroethane	0.59	11		U
107-06-2	1,2-Dichloroethane	0.50	11		U
75-35-4	1,1-Dichloroethene	1.3	11		U
156-59-2	cis-1,2-Dichloroethene	1.3	11		U
156-60-5	trans-1,2-Dichloroethene	1.2	11		U
78-87-5	1,2-Dichloropropane	0.50	11		U
10061-01-5	cis-1,3-Dichloropropene	0.55	11		U
10061-02-6	trans-1,3-Dichloropropene	0.35	11		U
100-41-4	Ethylbenzene	0.82	11		U
591-78-6	2-Hexanone	2.5	11		U
98-82-8	Isopropylbenzene	0.97	11		U
79-20-9	Methyl acetate	1.8	11		U
75-09-2	Methylene chloride	0.68	11	8.4	~~J~~ J CC
108-87-2	Methyl cyclohexane	0.33	11		U
1634-04-4	Methyl tert-butyl ether	0.35	11		U
108-10-1	4-Methyl-2-pentanone	0.64	11		U
100-42-5	Styrene	0.38	11		U
79-34-5	1,1,2,2-Tetrachloroethane	0.47	11		U
127-18-4	Tetrachloroethene	1.1	11		U

FORM I VOA

lw 7/20/09

FORM 1
VOLATILE ORGANICS ANALYSIS DATA SHEET

CLIENT SAMPLE NO.

8

MR08-IS06
9D-6-7-08D

Lab Name: EMPIRICAL LABS Contract: CH2MHILL

Lab Code: NA Case No.: NA SAS No.: NA SDG No.: LEJEUNE022

Matrix: (soil/water) SOIL Lab Sample ID: 0812057-08

Sample wt/vol: 5.4 (g/mL) G Lab File ID: 1205708A

Level: (low/med) LOW Date Sampled: 12/03/08 12:05

% Moisture: not dec. 16 Date Analyzed: 12/13/08 14:55

GC Column: RTX-VRX ID: 0.25 (mm) Dilution Factor: 1.0

Soil Extract Volume:_____(uL) Soil Aliquot Volume: _____(uL)

CONCENTRATION UNITS: (ug/L or ug/Kg) UG/KG

CAS NO.	COMPOUND	MDL	RL	CONC	Q
108-88-3	Toluene	0.94	11		U
120-82-1	1,2,4-Trichlorobenzene	0.20	11		U
71-55-6	1,1,1-Trichloroethane	0.99	11		U
79-00-5	1,1,2-Trichloroethane	0.38	11		U
79-01-6	Trichloroethene	0.93	11		U
76-13-1	Trichlorotrifluoroethane	0.60	11		U
75-69-4	Trichlorofluoromethane	1.0	11		U
75-01-4	Vinyl chloride	1.2	11		U
1330-20-7	Xylene(total)	0.77	11		U

lw
2/26/09

FORM 1
VOLATILE ORGANICS ANALYSIS DATA SHEET

CLIENT SAMPLE NO. 9

MR08-SS070-08D

Lab Name: EMPIRICAL LABS Contract: CH2MHILL

Lab Code: NA Case No.: NA SAS No.: NA SDG No.: LEJEUNE022

Matrix: (soil/water) SOIL Lab Sample ID: 0812057-09

Sample wt/vol: 4.3 (g/mL) G Lab File ID: 1205709A

Level: (low/med) LOW Date Sampled: 12/03/08 13:50

% Moisture: not dec. 18 Date Analyzed: 12/13/08 15:34

GC Column: RTX-VRX ID: 0.25 (mm) Dilution Factor: 1.0

Soil Extract Volume:_____(uL) Soil Aliquot Volume: _____(uL)

CONCENTRATION UNITS: (ug/L or ug/Kg) UG/KG

CAS NO.	COMPOUND	MDL	RL	CONC	Q
67-64-1	Acetone	2.8	14	300	J SSL
71-43-2	Benzene	0.66	14		U UJ
75-27-4	Bromodichloromethane	0.42	14		U
75-25-2	Bromoform	1.4	14		U
74-83-9	Bromomethane	1.0	14		U
78-93-3	2-Butanone	2.0	14	4.0	~~U~~ J
75-15-0	Carbon disulfide	1.8	14		U UJ
56-23-5	Carbon tetrachloride	1.2	14		U
108-90-7	Chlorobenzene	0.48	14		U
75-00-3	Chloroethane	1.6	14		U
67-66-3	Chloroform	0.78	14		U
74-87-3	Chloromethane	0.74	14		U
110-82-7	Cyclohexane	0.76	14		U
124-48-1	Dibromochloromethane	0.48	14		U
96-12-8	1,2-Dibromo-3-chloropropane	1.7	7.1		U
106-93-4	1,2-Dibromoethane	0.61	14		U
95-50-1	1,2-Dichlorobenzene	0.52	14		U
541-73-1	1,3-Dichlorobenzene	1.2	14		U
106-46-7	1,4-Dichlorobenzene	0.78	14		U
75-71-8	Dichlorodifluoromethane	1.6	14		U
75-34-3	1,1-Dichloroethane	0.76	14		U
107-06-2	1,2-Dichloroethane	0.65	14		U
75-35-4	1,1-Dichloroethene	1.7	14		U
156-59-2	cis-1,2-Dichloroethene	1.7	14		U
156-60-5	trans-1,2-Dichloroethene	1.6	14		U
78-87-5	1,2-Dichloropropane	0.65	14		U
10061-01-5	cis-1,3-Dichloropropene	0.71	14		U
10061-02-6	trans-1,3-Dichloropropene	0.45	14		U
100-41-4	Ethylbenzene	1.1	14		U
591-78-6	2-Hexanone	3.2	14		U
98-82-8	Isopropylbenzene	1.2	14		U
79-20-9	Methyl acetate	2.3	14		U
75-09-2	Methylene chloride	0.88	14	1.6	J J
108-87-2	Methyl cyclohexane	0.42	14		U UJ
1634-04-4	Methyl tert-butyl ether	0.45	14		U
108-10-1	4-Methyl-2-pentanone	0.82	14		U
100-42-5	Styrene	0.50	14		U
79-34-5	1,1,2,2-Tetrachloroethane	0.61	14		U
127-18-4	Tetrachloroethene	1.4	14		U

FORM I VOA

RW 2/26/09

FORM 1
VOLATILE ORGANICS ANALYSIS DATA SHEET

CLIENT SAMPLE NO. 9

MR08-SS070-08D

Lab Name: EMPIRICAL LABS Contract: CH2MHILL

Lab Code: NA Case No.: NA SAS No.: NA SDG No.: LEJEUNE022

Matrix: (soil/water) SOIL Lab Sample ID: 0812057-09

Sample wt/vol: 4.3 (g/mL) G Lab File ID: 1205709A

Level: (low/med) LOW Date Sampled: 12/03/08 13:50

% Moisture: not dec. 18 Date Analyzed: 12/13/08 15:34

GC Column: RTX-VRX ID: 0.25 (mm) Dilution Factor: 1.0

Soil Extract Volume:_____(uL) Soil Aliquot Volume: _____(uL)

CONCENTRATION UNITS: (ug/L or ug/Kg) UG/KG

CAS NO.	COMPOUND	MDL	RL	CONC	Q
108-88-3	Toluene	1.2	14		U
120-82-1	1,2,4-Trichlorobenzene	0.25	14		U
71-55-6	1,1,1-Trichloroethane	1.3	14		U
79-00-5	1,1,2-Trichloroethane	0.50	14		U
79-01-6	Trichloroethene	1.2	14		U
76-13-1	Trichlorotrifluoroethane	0.78	14		U
75-69-4	Trichlorofluoromethane	1.3	14		U
75-01-4	Vinyl chloride	1.6	14		U
1330-20-7	Xylene(total)	0.99	14		U

w/ SSL

FORM I VOA

2/26/09

FORM 1
VOLATILE ORGANICS ANALYSIS DATA SHEET

CLIENT SAMPLE NO. 9RE

MR08-SS070-08DR

Lab Name: EMPIRICAL LABS Contract: CH2MHILL

Lab Code: NA Case No.: NA SAS No.: NA SDG No.: LEJEUNE022

Matrix: (soil/water) SOIL Lab Sample ID: 0812057-09R

Sample wt/vol: 4.2 (g/mL) G Lab File ID: 1205709B

Level: (low/med) LOW Date Sampled: 12/03/08 13:50 Not original

% Moisture: not dec. 18 Date Analyzed: 12/17/08 05:47

GC Column: RTX-VRX ID: 0.25 (mm) Dilution Factor: 1.0

Soil Extract Volume:_____(uL) Soil Aliquot Volume: _____(uL)

CONCENTRATION UNITS: (ug/L or ug/Kg) UG/KG

CAS NO.	COMPOUND	MDL	RL	CONC	Q
67-64-1	Acetone	2.9	14	230	J SSL
71-43-2	Benzene	0.68	14		U UJ
75-27-4	Bromodichloromethane	0.43	14		U
75-25-2	Bromoform	1.4	14		U
74-83-9	Bromomethane	1.0	14		U
78-93-3	2-Butanone	2.0	14	2.6	~~J~~ J
75-15-0	Carbon disulfide	1.9	14		U UJ
56-23-5	Carbon tetrachloride	1.3	14		U
108-90-7	Chlorobenzene	0.49	14		U
75-00-3	Chloroethane	1.6	14		U
67-66-3	Chloroform	0.79	14		U
74-87-3	Chloromethane	0.75	14		U
110-82-7	Cyclohexane	0.78	14		U
124-48-1	Dibromochloromethane	0.49	14		U
96-12-8	1,2-Dibromo-3-chloropropane	1.7	7.2		U
106-93-4	1,2-Dibromoethane	0.62	14		U
95-50-1	1,2-Dichlorobenzene	0.53	14		U
541-73-1	1,3-Dichlorobenzene	1.2	14		U
106-46-7	1,4-Dichlorobenzene	0.79	14		U
75-71-8	Dichlorodifluoromethane	1.6	14		U
75-34-3	1,1-Dichloroethane	0.78	14		U
107-06-2	1,2-Dichloroethane	0.66	14		U
75-35-4	1,1-Dichloroethene	1.7	14		U
156-59-2	cis-1,2-Dichloroethene	1.7	14		U
156-60-5	trans-1,2-Dichloroethene	1.6	14		U
78-87-5	1,2-Dichloropropane	0.66	14		U
10061-01-5	cis-1,3-Dichloropropene	0.72	14		U
10061-02-6	trans-1,3-Dichloropropene	0.46	14		U
100-41-4	Ethylbenzene	1.1	14		U
591-78-6	2-Hexanone	3.3	14		U
98-82-8	Isopropylbenzene	1.3	14		U
79-20-9	Methyl acetate	2.3	14		U
75-09-2	Methylene chloride	0.90	14	144 ~~J 1.7~~	~~JB~~ SSL
108-87-2	Methyl cyclohexane	0.43	14		U UJ
1634-04-4	Methyl tert-butyl ether	0.46	14		U
108-10-1	4-Methyl-2-pentanone	0.84	14		U
100-42-5	Styrene	0.50	14		U
79-34-5	1,1,2,2-Tetrachloroethane	0.62	14		U
127-18-4	Tetrachloroethene	1.4	14		U

FORM I VOA

2/26/09

FORM 1
VOLATILE ORGANICS ANALYSIS DATA SHEET

CLIENT SAMPLE NO.

MR08-SS070-08DR

Lab Name: EMPIRICAL LABS Contract: CH2MHILL

Lab Code: NA Case No.: NA SAS No.: NA SDG No.: LEJEUNE022

Matrix: (soil/water) SOIL Lab Sample ID: 0812057-09R

Sample wt/vol: 4.2 (g/mL) G Lab File ID: 1205709B

Level: (low/med) LOW Date Sampled: 12/03/08 13:50

% Moisture: not dec. 18 Date Analyzed: 12/17/08 05:47

GC Column: RTX-VRX ID: 0.25 (mm) Dilution Factor: 1.0

Soil Extract Volume:_____(uL) Soil Aliquot Volume:_____(uL)

CONCENTRATION UNITS: (ug/L or ug/Kg) UG/KG

CAS NO.	COMPOUND	MDL	RL	CONC	Q
108-88-3	Toluene	1.2	14		U
120-82-1	1,2,4-Trichlorobenzene	0.26	14		U
71-55-6	1,1,1-Trichloroethane	1.3	14		U
79-00-5	1,1,2-Trichloroethane	0.50	14		U
79-01-6	Trichloroethene	1.2	14		U
76-13-1	Trichlorotrifluoroethane	0.79	14		U
75-69-4	Trichlorofluoromethane	1.4	14		U
75-01-4	Vinyl chloride	1.6	14		U
1330-20-7	Xylene(total)	1.0	14		U

use original

2/26/09

FORM 1
VOLATILE ORGANICS ANALYSIS DATA SHEET

CLIENT SAMPLE NO. 10

MR08-IS07
0-8-9-08D

Lab Name: EMPIRICAL LABS Contract: CH2MHILL

Lab Code: NA Case No.: NA SAS No.: NA SDG No.: LEJEUNE022

Matrix: (soil/water) SOIL Lab Sample ID: 0812057-10

Sample wt/vol: 5.0 (g/mL) G Lab File ID: 1205710A

Level: (low/med) LOW Date Sampled: 12/03/08 14:20

% Moisture: not dec. 9 Date Analyzed: 12/13/08 21:55

GC Column: RTX-VRX ID: 0.25 (mm) Dilution Factor: 1.0

Soil Extract Volume:_____(uL) Soil Aliquot Volume: _____(uL)

CONCENTRATION UNITS: (ug/L or ug/Kg) UG/KG

CAS NO.	COMPOUND	MDL	RL	CONC	Q
67-64-1	Acetone	2.2	11		~~U~~ UJ CH
71-43-2	Benzene	0.52	11		U
75-27-4	Bromodichloromethane	0.33	11		U
75-25-2	Bromoform	1.1	11		U
74-83-9	Bromomethane	0.79	11		~~U~~ UJ CH
78-93-3	2-Butanone	1.5	11		U
75-15-0	Carbon disulfide	1.4	11		U
56-23-5	Carbon tetrachloride	0.97	11		U
108-90-7	Chlorobenzene	0.37	11		U
75-00-3	Chloroethane	1.2	11		U
67-66-3	Chloroform	0.60	11		U
74-87-3	Chloromethane	0.57	11		U
110-82-7	Cyclohexane	0.59	11		U
124-48-1	Dibromochloromethane	0.37	11		U
96-12-8	1,2-Dibromo-3-chloropropane	1.3	5.5		U
106-93-4	1,2-Dibromoethane	0.47	11		U
95-50-1	1,2-Dichlorobenzene	0.41	11		U
541-73-1	1,3-Dichlorobenzene	0.92	11		U
106-46-7	1,4-Dichlorobenzene	0.60	11		U
75-71-8	Dichlorodifluoromethane	1.2	11		U~~J~~
75-34-3	1,1-Dichloroethane	0.59	11		U
107-06-2	1,2-Dichloroethane	0.50	11		U
75-35-4	1,1-Dichloroethene	1.3	11		U
156-59-2	cis-1,2-Dichloroethene	1.3	11		U
156-60-5	trans-1,2-Dichloroethene	1.2	11		U
78-87-5	1,2-Dichloropropane	0.50	11		U
10061-01-5	cis-1,3-Dichloropropene	0.55	11		U
10061-02-6	trans-1,3-Dichloropropene	0.35	11		U
100-41-4	Ethylbenzene	0.82	11		U
591-78-6	2-Hexanone	2.5	11		U
98-82-8	Isopropylbenzene	0.97	11		U
79-20-9	Methyl acetate	1.8	11		U
75-09-2	Methylene chloride	0.68	11	2.0	J
108-87-2	Methyl cyclohexane	0.33	11		U
1634-04-4	Methyl tert-butyl ether	0.35	11		U
108-10-1	4-Methyl-2-pentanone	0.64	11		U
100-42-5	Styrene	0.38	11		U
79-34-5	1,1,2,2-Tetrachloroethane	0.47	11		U
127-18-4	Tetrachloroethene	1.1	11		U

lw 2/26/09

FORM 1
VOLATILE ORGANICS ANALYSIS DATA SHEET

CLIENT SAMPLE NO. 10

MR08-IS07
0-8-9-08D

Lab Name: EMPIRICAL LABS Contract: CH2MHILL

Lab Code: NA Case No.: NA SAS No.: NA SDG No.: LEJEUNE022

Matrix: (soil/water) SOIL Lab Sample ID: 0812057-10

Sample wt/vol: 5.0 (g/mL) G Lab File ID: 1205710A

Level: (low/med) LOW Date Sampled: 12/03/08 14:20

% Moisture: not dec. 9 Date Analyzed: 12/13/08 21:55

GC Column: RTX-VRX ID: 0.25 (mm) Dilution Factor: 1.0

Soil Extract Volume:_____(uL) Soil Aliquot Volume: _____(uL)

CONCENTRATION UNITS: (ug/L or ug/Kg) UG/KG

CAS NO.	COMPOUND	MDL	RL	CONC	Q
108-88-3	Toluene	0.94	11		U
120-82-1	1,2,4-Trichlorobenzene	0.20	11		U
71-55-6	1,1,1-Trichloroethane	0.99	11		U
79-00-5	1,1,2-Trichloroethane	0.38	11		U
79-01-6	Trichloroethene	0.93	11		U
76-13-1	Trichlorotrifluoroethane	0.60	11		U
75-69-4	Trichlorofluoromethane	1.0	11		U
75-01-4	Vinyl chloride	1.2	11		U
1330-20-7	Xylene(total)	0.77	11		U

hw
2/26/09

FORM 1
VOLATILE ORGANICS ANALYSIS DATA SHEET

CLIENT SAMPLE NO. 11

MR08-SS071-08D

Lab Name: EMPIRICAL LABS Contract: CH2MHILL

Lab Code: NA Case No.: NA SAS No.: NA SDG No.: LEJEUNE022

Matrix: (soil/water) SOIL Lab Sample ID: 0812057-11

Sample wt/vol: 5.7 (g/mL) G Lab File ID: 1205711A

Level: (low/med) LOW Date Sampled: 12/03/08 14:35

% Moisture: not dec. 19 Date Analyzed: 12/13/08 22:34 Use reanalysis

GC Column: RTX-VRX ID: 0.25 (mm) Dilution Factor: 1.0

Soil Extract Volume:_____(uL) Soil Aliquot Volume: _____(uL)

CONCENTRATION UNITS: (ug/L or ug/Kg) UG/KG

CAS NO.	COMPOUND	MDL	RL	CONC	Q
67-64-1	Acetone	2.2	11	280	J SSL
71-43-2	Benzene	0.51	11		U UJ
75-27-4	Bromodichloromethane	0.33	11		U
75-25-2	Bromoform	1.1	11		U
74-83-9	Bromomethane	0.78	11		U
78-93-3	2-Butanone	1.5	11	3.2	J
75-15-0	Carbon disulfide	1.4	11		U UJ
56-23-5	Carbon tetrachloride	0.96	11		U
108-90-7	Chlorobenzene	0.37	11		U
75-00-3	Chloroethane	1.2	11		U
67-66-3	Chloroform	0.60	11		U
74-87-3	Chloromethane	0.56	11		U
110-82-7	Cyclohexane	0.59	11		U
124-48-1	Dibromochloromethane	0.37	11		U
96-12-8	1,2-Dibromo-3-chloropropane	1.3	5.4		U
106-93-4	1,2-Dibromoethane	0.47	11		U
95-50-1	1,2-Dichlorobenzene	0.40	11		U
541-73-1	1,3-Dichlorobenzene	0.91	11		U
106-46-7	1,4-Dichlorobenzene	0.60	11		U
75-71-8	Dichlorodifluoromethane	1.2	11		U
75-34-3	1,1-Dichloroethane	0.59	11		U
107-06-2	1,2-Dichloroethane	0.50	11		U
75-35-4	1,1-Dichloroethene	1.3	11		U
156-59-2	cis-1,2-Dichloroethene	1.3	11		U
156-60-5	trans-1,2-Dichloroethene	1.2	11		U
78-87-5	1,2-Dichloropropane	0.50	11		U
10061-01-5	cis-1,3-Dichloropropene	0.54	11		U
10061-02-6	trans-1,3-Dichloropropene	0.35	11		U
100-41-4	Ethylbenzene	0.82	11		U
591-78-6	2-Hexanone	2.5	11		U
98-82-8	Isopropylbenzene	0.96	11		U
79-20-9	Methyl acetate	1.7	11		U
75-09-2	Methylene chloride	0.67	11		U
108-87-2	Methyl cyclohexane	0.33	11		U
1634-04-4	Methyl tert-butyl ether	0.35	11		U
108-10-1	4-Methyl-2-pentanone	0.63	11		U
100-42-5	Styrene	0.38	11		U
79-34-5	1,1,2,2-Tetrachloroethane	0.47	11		U
127-18-4	Tetrachloroethene	1.0	11		U

RE

FORM I VOA

MW 2/26/09

FORM 1
VOLATILE ORGANICS ANALYSIS DATA SHEET

CLIENT SAMPLE NO. 11

MR08-SS071-08D

Lab Name: EMPIRICAL LABS Contract: CH2MHILL

Lab Code: NA Case No.: NA SAS No.: NA SDG No.: LEJEUNE022

Matrix: (soil/water) SOIL Lab Sample ID: 0812057-11

Sample wt/vol: 5.7 (g/mL) G Lab File ID: 1205711A

Level: (low/med) LOW Date Sampled: 12/03/08 14:35

% Moisture: not dec. 19 Date Analyzed: 12/13/08 22:34 Use reanalysis

GC Column: RTX-VRX ID: 0.25 (mm) Dilution Factor: 1.0

Soil Extract Volume:_____(uL) Soil Aliquot Volume:_____(uL)

CONCENTRATION UNITS: (ug/L or ug/Kg) UG/KG

CAS NO.	COMPOUND	MDL	RL	CONC	Q
108-88-3	Toluene	0.94	11	11UJ ~~1.7~~	~~J~~ SSL BC
120-82-1	1,2,4-Trichlorobenzene	0.20	11		U UJ SSL
71-55-6	1,1,1-Trichloroethane	0.98	11		U
79-00-5	1,1,2-Trichloroethane	0.38	11		U
79-01-6	Trichloroethene	0.92	11		U
76-13-1	Trichlorotrifluoroethane	0.60	11		U
75-69-4	Trichlorofluoromethane	1.0	11		U
75-01-4	Vinyl chloride	1.2	11		U
1330-20-7	Xylene(total)	0.76	11		U

R RE

FORM I VOA

lus 2/26/09

FORM 1
VOLATILE ORGANICS ANALYSIS DATA SHEET

CLIENT SAMPLE NO. 11RE

MR08-SS071-08DR

Lab Name: EMPIRICAL LABS Contract: CH2MHILL

Lab Code: NA Case No.: NA SAS No.: NA SDG No.: LEJEUNE022

Matrix: (soil/water) SOIL Lab Sample ID: 0812057-11R

Sample wt/vol: 5.1 (g/mL) G Lab File ID: 1205711B

Level: (low/med) LOW Date Sampled: 12/03/08 14:35

% Moisture: not dec. 19 Date Analyzed: 12/17/08 06:26

GC Column: RTX-VRX ID: 0.25 (mm) Dilution Factor: 1.0

Soil Extract Volume:_____(uL) Soil Aliquot Volume: _____(uL)

CONCENTRATION UNITS: (ug/L or ug/Kg) UG/KG

CAS NO.	COMPOUND	MDL	RL	CONC	Q
67-64-1	Acetone	2.4	12	290	J SSL
71-43-2	Benzene	0.57	12		U UJ
75-27-4	Bromodichloromethane	0.37	12		U
75-25-2	Bromoform	1.2	12		U
74-83-9	Bromomethane	0.88	12		U
78-93-3	2-Butanone	1.7	12	3.8	J J
75-15-0	Carbon disulfide	1.6	12		U UJ
56-23-5	Carbon tetrachloride	1.1	12		U
108-90-7	Chlorobenzene	0.41	12		U
75-00-3	Chloroethane	1.3	12		U
67-66-3	Chloroform	0.67	12		U
74-87-3	Chloromethane	0.63	12		U
110-82-7	Cyclohexane	0.66	12		U
124-48-1	Dibromochloromethane	0.41	12		U
96-12-8	1,2-Dibromo-3-chloropropane	1.5	6.1		U
106-93-4	1,2-Dibromoethane	0.52	12		U
95-50-1	1,2-Dichlorobenzene	0.45	12		U
541-73-1	1,3-Dichlorobenzene	1.0	12		U
106-46-7	1,4-Dichlorobenzene	0.67	12		U
75-71-8	Dichlorodifluoromethane	1.3	12		U UJ
75-34-3	1,1-Dichloroethane	0.66	12		U
107-06-2	1,2-Dichloroethane	0.56	12		U
75-35-4	1,1-Dichloroethene	1.5	12		U
156-59-2	cis-1,2-Dichloroethene	1.5	12		U
156-60-5	trans-1,2-Dichloroethene	1.3	12		U
78-87-5	1,2-Dichloropropane	0.56	12		U
10061-01-5	cis-1,3-Dichloropropene	0.61	12		U
10061-02-6	trans-1,3-Dichloropropene	0.39	12		U
100-41-4	Ethylbenzene	0.92	12		U
591-78-6	2-Hexanone	2.8	12		U
98-82-8	Isopropylbenzene	1.1	12		U
79-20-9	Methyl acetate	2.0	12		U
75-09-2	Methylene chloride	0.76	12	12 UJ	3 ~~3 JB~~ SSL B
108-87-2	Methyl cyclohexane	0.37	12		U UJ SS
1634-04-4	Methyl tert-butyl ether	0.39	12		U
108-10-1	4-Methyl-2-pentanone	0.71	12		U
100-42-5	Styrene	0.43	12		U
79-34-5	1,1,2,2-Tetrachloroethane	0.52	12		U
127-18-4	Tetrachloroethene	1.2	12		U

FORM I VOA

dw 7/26/09

FORM 1
VOLATILE ORGANICS ANALYSIS DATA SHEET

CLIENT SAMPLE NO. 11RE

MR08-SS071-08DR

Lab Name: EMPIRICAL LABS Contract: CH2MHILL

Lab Code: NA Case No.: NA SAS No.: NA SDG No.: LEJEUNE022

Matrix: (soil/water) SOIL Lab Sample ID: 0812057-11R

Sample wt/vol: 5.1 (g/mL) G Lab File ID: 1205711B

Level: (low/med) LOW Date Sampled: 12/03/08 14:35

% Moisture: not dec. 19 Date Analyzed: 12/17/08 06:26

GC Column: RTX-VRX ID: 0.25 (mm) Dilution Factor: 1.0

Soil Extract Volume:_____(uL) Soil Aliquot Volume: _____(uL)

CONCENTRATION UNITS: (ug/L or ug/Kg) UG/KG

CAS NO.	COMPOUND	MDL	RL	CONC	Q
108-88-3	Toluene	1.0	12	12UJ ~~1.6 J~~	SSL B
120-82-1	1,2,4-Trichlorobenzene	0.22	12		U
71-55-6	1,1,1-Trichloroethane	1.1	12		UUJ
79-00-5	1,1,2-Trichloroethane	0.43	12		U
79-01-6	Trichloroethene	1.0	12		U
76-13-1	Trichlorotrifluoroethane	0.67	12		U
75-69-4	Trichlorofluoromethane	1.2	12		U
75-01-4	Vinyl chloride	1.3	12		U
1330-20-7	Xylene(total)	0.85	12		U

FORM I VOA

KW
2/26/09

FORM 1
VOLATILE ORGANICS ANALYSIS DATA SHEET

CLIENT SAMPLE NO.

12

MR08-IS07
1-6-7-08D

Lab Name: EMPIRICAL LABS Contract: CH2MHILL

Lab Code: NA Case No.: NA SAS No.: NA SDG No.: LEJEUNE022

Matrix: (soil/water) SOIL Lab Sample ID: 0812057-12

Sample wt/vol: 6.0 (g/mL) G Lab File ID: 1205712A

Level: (low/med) LOW Date Sampled: 12/03/08 14:50

% Moisture: not dec. 13 Date Analyzed: 12/13/08 23:13

GC Column: RTX-VRX ID: 0.25 (mm) Dilution Factor: 1.0

Soil Extract Volume:_____(uL) Soil Aliquot Volume: _____(uL)

CONCENTRATION UNITS: (ug/L or ug/Kg) UG/KG

CAS NO.	COMPOUND	MDL	RL	CONC	Q
67-64-1	Acetone	1.9	9.7	9.14 J ~~6.4~~	JCCH B
71-43-2	Benzene	0.46	9.7		U
75-27-4	Bromodichloromethane	0.29	9.7		U
75-25-2	Bromoform	0.97	9.7		U
74-83-9	Bromomethane	0.70	9.7		~~J~~ UJCCH
78-93-3	2-Butanone	1.4	9.7		U
75-15-0	Carbon disulfide	1.3	9.7		U
56-23-5	Carbon tetrachloride	0.85	9.7		U
108-90-7	Chlorobenzene	0.33	9.7		U
75-00-3	Chloroethane	1.1	9.7		U
67-66-3	Chloroform	0.53	9.7		U
74-87-3	Chloromethane	0.50	9.7		U
110-82-7	Cyclohexane	0.52	9.7		U
124-48-1	Dibromochloromethane	0.33	9.7		U
96-12-8	1,2-Dibromo-3-chloropropane	1.2	4.8		U
106-93-4	1,2-Dibromoethane	0.42	9.7		U
95-50-1	1,2-Dichlorobenzene	0.36	9.7		U
541-73-1	1,3-Dichlorobenzene	0.82	9.7		U
106-46-7	1,4-Dichlorobenzene	0.53	9.7		U
75-71-8	Dichlorodifluoromethane	1.1	9.7		U
75-34-3	1,1-Dichloroethane	0.52	9.7		U
107-06-2	1,2-Dichloroethane	0.45	9.7		U
75-35-4	1,1-Dichloroethene	1.2	9.7		U
156-59-2	cis-1,2-Dichloroethene	1.2	9.7		U
156-60-5	trans-1,2-Dichloroethene	1.1	9.7		U
78-87-5	1,2-Dichloropropane	0.45	9.7		U
10061-01-5	cis-1,3-Dichloropropene	0.48	9.7		U
10061-02-6	trans-1,3-Dichloropropene	0.31	9.7		U
100-41-4	Ethylbenzene	0.73	9.7		U
591-78-6	2-Hexanone	2.2	9.7		U
98-82-8	Isopropylbenzene	0.85	9.7		U
79-20-9	Methyl acetate	1.6	9.7		U
75-09-2	Methylene chloride	0.60	9.7	1.1	J
108-87-2	Methyl cyclohexane	0.29	9.7		U
1634-04-4	Methyl tert-butyl ether	0.31	9.7		U
108-10-1	4-Methyl-2-pentanone	0.56	9.7		U
100-42-5	Styrene	0.34	9.7		U
79-34-5	1,1,2,2-Tetrachloroethane	0.42	9.7		U
127-18-4	Tetrachloroethene	0.94	9.7		U

lw 7/26/09

FORM 1
VOLATILE ORGANICS ANALYSIS DATA SHEET

CLIENT SAMPLE NO.

MR08-IS07
1-6-7-08D

12

Lab Name: EMPIRICAL LABS Contract: CH2MHILL

Lab Code: NA Case No.: NA SAS No.: NA SDG No.: LEJEUNE022

Matrix: (soil/water) SOIL Lab Sample ID: 0812057-12

Sample wt/vol: 6.0 (g/mL) G Lab File ID: 1205712A

Level: (low/med) LOW Date Sampled: 12/03/08 14:50

% Moisture: not dec. 13 Date Analyzed: 12/13/08 23:13

GC Column: RTX-VRX ID: 0.25 (mm) Dilution Factor: 1.0

Soil Extract Volume:_____(uL) Soil Aliquot Volume: _____(uL)

CONCENTRATION UNITS: (ug/L or ug/Kg) UG/KG

CAS NO.	COMPOUND	MDL	RL	CONC	Q
108-88-3	Toluene	0.83	9.7		U
120-82-1	1,2,4-Trichlorobenzene	0.17	9.7		U
71-55-6	1,1,1-Trichloroethane	0.87	9.7		U
79-00-5	1,1,2-Trichloroethane	0.34	9.7		U
79-01-6	Trichloroethene	0.82	9.7		U
76-13-1	Trichlorotrifluoroethane	0.53	9.7		U
75-69-4	Trichlorofluoromethane	0.92	9.7		U
75-01-4	Vinyl chloride	1.1	9.7		U
1330-20-7	Xylene(total)	0.68	9.7		U

MW
2/26/09

FORM 1
VOLATILE ORGANICS ANALYSIS DATA SHEET

CLIENT SAMPLE NO. 13

MR08-SS072-08D

Lab Name: EMPIRICAL LABS Contract: CH2MHILL

Lab Code: NA Case No.: NA SAS No.: NA SDG No.: LEJEUNE022

Matrix: (soil/water) SOIL Lab Sample ID: 0812057-13

Sample wt/vol: 5.4 (g/mL) G Lab File ID: 1205713A

Level: (low/med) LOW Date Sampled: 12/03/08 15:05

% Moisture: not dec. 23 Date Analyzed: 12/13/08 23:52

GC Column: RTX-VRX ID: 0.25 (mm) Dilution Factor: 1.0

Soil Extract Volume:_____(uL) Soil Aliquot Volume: _____(uL)

CONCENTRATION UNITS: (ug/L or ug/Kg) UG/KG

CAS NO.	COMPOUND	MDL	RL	CONC	Q
67-64-1	Acetone	2.4	12	410	J SSL
71-43-2	Benzene	0.56	12		U UJ
75-27-4	Bromodichloromethane	0.36	12		U
75-25-2	Bromoform	1.2	12		U
74-83-9	Bromomethane	0.87	12		U
78-93-3	2-Butanone	1.7	12	5.0	~~U~~ J
75-15-0	Carbon disulfide	1.6	12		U UJ
56-23-5	Carbon tetrachloride	1.0	12		U
108-90-7	Chlorobenzene	0.41	12		U
75-00-3	Chloroethane	1.3	12		U
67-66-3	Chloroform	0.66	12		U
74-87-3	Chloromethane	0.62	12		U
110-82-7	Cyclohexane	0.65	12		U
124-48-1	Dibromochloromethane	0.41	12		U
96-12-8	1,2-Dibromo-3-chloropropane	1.4	6.0		U
106-93-4	1,2-Dibromoethane	0.52	12		U
95-50-1	1,2-Dichlorobenzene	0.44	12		U
541-73-1	1,3-Dichlorobenzene	1.0	12		U
106-46-7	1,4-Dichlorobenzene	0.66	12		U
75-71-8	Dichlorodifluoromethane	1.3	12		U
75-34-3	1,1-Dichloroethane	0.65	12		U
107-06-2	1,2-Dichloroethane	0.55	12		U
75-35-4	1,1-Dichloroethene	1.4	12		U
156-59-2	cis-1,2-Dichloroethene	1.4	12		U
156-60-5	trans-1,2-Dichloroethene	1.3	12		U
78-87-5	1,2-Dichloropropane	0.55	12		U
10061-01-5	cis-1,3-Dichloropropene	0.60	12		U
10061-02-6	trans-1,3-Dichloropropene	0.38	12		U
100-41-4	Ethylbenzene	0.90	12		U
591-78-6	2-Hexanone	2.8	12		U
98-82-8	Isopropylbenzene	1.0	12		U
79-20-9	Methyl acetate	1.9	12		U
75-09-2	Methylene chloride	0.74	12	1.7	J J
108-87-2	Methyl cyclohexane	0.36	12		U UJ
1634-04-4	Methyl tert-butyl ether	0.38	12		U
108-10-1	4-Methyl-2-pentanone	0.70	12		U
100-42-5	Styrene	0.42	12		U
79-34-5	1,1,2,2-Tetrachloroethane	0.52	12		U
127-18-4	Tetrachloroethene	1.2	12		U

KW 2/26/09

FORM 1
VOLATILE ORGANICS ANALYSIS DATA SHEET

CLIENT SAMPLE NO. 13

MR08-SS072-08D

Lab Name: EMPIRICAL LABS Contract: CH2MHILL

Lab Code: NA Case No.: NA SAS No.: NA SDG No.: LEJEUNE022

Matrix: (soil/water) SOIL Lab Sample ID: 0812057-13

Sample wt/vol: 5.4 (g/mL) G Lab File ID: 1205713A

Level: (low/med) LOW Date Sampled: 12/03/08 15:05

% Moisture: not dec. 23 Date Analyzed: 12/13/08 23:52

GC Column: RTX-VRX ID: 0.25 (mm) Dilution Factor: 1.0

Soil Extract Volume:_____(uL) Soil Aliquot Volume: _____(uL)

CONCENTRATION UNITS: (ug/L or ug/Kg) UG/KG

CAS NO.	COMPOUND	MDL	RL	CONC	Q
108-88-3	Toluene	1.0	12	3.0	~~J~~ J SSL
120-82-1	1,2,4-Trichlorobenzene	0.22	12		U UJ
71-55-6	1,1,1-Trichloroethane	1.1	12		U
79-00-5	1,1,2-Trichloroethane	0.42	12		U
79-01-6	Trichloroethene	1.0	12		U
76-13-1	Trichlorotrifluoroethane	0.66	12		U
75-69-4	Trichlorofluoromethane	1.1	12		U
75-01-4	Vinyl chloride	1.3	12		U
1330-20-7	Xylene(total)	0.84	12		U

lw
2/26/09

FORM 1
VOLATILE ORGANICS ANALYSIS DATA SHEET

CLIENT SAMPLE NO. 13R

MR08-SS072-08DR

Lab Name: EMPIRICAL LABS Contract: CH2MHILL

Lab Code: NA Case No.: NA SAS No.: NA SDG No.: LEJEUNE022

Matrix: (soil/water) SOIL Lab Sample ID: 0812057-13R

Sample wt/vol: 5.4 (g/mL) G Lab File ID: 1205713B

Level: (low/med) LOW Date Sampled: 12/03/08 15:05

% Moisture: not dec. 23 Date Analyzed: 12/17/08 07:05 use original

GC Column: RTX-VRX ID: 0.25 (mm) Dilution Factor: 1.0

Soil Extract Volume:_____(uL) Soil Aliquot Volume:_____(uL)

CONCENTRATION UNITS: (ug/L or ug/Kg) UG/KG

CAS NO.	COMPOUND	MDL	RL	CONC	Q
67-64-1	Acetone	2.4	12	120	J ISL
71-43-2	Benzene	0.56	12		U R
75-27-4	Bromodichloromethane	0.36	12		U
75-25-2	Bromoform	1.2	12		U
74-83-9	Bromomethane	0.86	12		U
78-93-3	2-Butanone	1.7	12		U
75-15-0	Carbon disulfide	1.6	12		U
56-23-5	Carbon tetrachloride	1.0	12		U
108-90-7	Chlorobenzene	0.41	12		U
75-00-3	Chloroethane	1.3	12		U
67-66-3	Chloroform	0.66	12		U
74-87-3	Chloromethane	0.62	12		U
110-82-7	Cyclohexane	0.65	12		U
124-48-1	Dibromochloromethane	0.41	12		U
96-12-8	1,2-Dibromo-3-chloropropane	1.4	6.0		U
106-93-4	1,2-Dibromoethane	0.52	12		U
95-50-1	1,2-Dichlorobenzene	0.44	12		U
541-73-1	1,3-Dichlorobenzene	1.0	12		U
106-46-7	1,4-Dichlorobenzene	0.66	12		U
75-71-8	Dichlorodifluoromethane	1.3	12		U
75-34-3	1,1-Dichloroethane	0.65	12		U
107-06-2	1,2-Dichloroethane	0.55	12		U
75-35-4	1,1-Dichloroethene	1.4	12		U
156-59-2	cis-1,2-Dichloroethene	1.4	12		U
156-60-5	trans-1,2-Dichloroethene	1.3	12		U
78-87-5	1,2-Dichloropropane	0.55	12		U
10061-01-5	cis-1,3-Dichloropropene	0.60	12		U
10061-02-6	trans-1,3-Dichloropropene	0.38	12		U
100-41-4	Ethylbenzene	0.90	12		U
591-78-6	2-Hexanone	2.8	12		U
98-82-8	Isopropylbenzene	1.0	12		U
79-20-9	Methyl acetate	1.9	12		U
75-09-2	Methylene chloride	0.74	12	120	~~1.6 JB~~ R B
108-87-2	Methyl cyclohexane	0.36	12		U
1634-04-4	Methyl tert-butyl ether	0.38	12		U
108-10-1	4-Methyl-2-pentanone	0.70	12		U
100-42-5	Styrene	0.42	12		U
79-34-5	1,1,2,2-Tetrachloroethane	0.52	12		U
127-18-4	Tetrachloroethene	1.2	12		U

FORM I VOA

LW 2/26/09

FORM 1
VOLATILE ORGANICS ANALYSIS DATA SHEET

CLIENT SAMPLE NO. 13RE

MR08-SS072-08DR

Lab Name: EMPIRICAL LABS Contract: CH2MHILL

Lab Code: NA Case No.: NA SAS No.: NA SDG No.: LEJEUNE022

Matrix: (soil/water) SOIL Lab Sample ID: 0812057-13R

Sample wt/vol: 5.4 (g/mL) G Lab File ID: 1205713B

Level: (low/med) LOW Date Sampled: 12/03/08 15:05

% Moisture: not dec. 23 Date Analyzed: 12/17/08 07:05

GC Column: RTX-VRX ID: 0.25 (mm) Dilution Factor: 1.0 use original

Soil Extract Volume:_____(uL) Soil Aliquot Volume: _____(uL)

CONCENTRATION UNITS: (ug/L or ug/Kg) UG/KG

CAS NO.	COMPOUND	MDL	RL	CONC	Q
108-88-3	Toluene	1.0	12	3.0	~~U~~ J
120-82-1	1,2,4-Trichlorobenzene	0.22	12		U R
71-55-6	1,1,1-Trichloroethane	1.1	12		U
79-00-5	1,1,2-Trichloroethane	0.42	12		U
79-01-6	Trichloroethene	1.0	12		U
76-13-1	Trichlorotrifluoroethane	0.66	12		U
75-69-4	Trichlorofluoromethane	1.1	12		U
75-01-4	Vinyl chloride	1.3	12		U
1330-20-7	Xylene(total)	0.84	12		U

I SL

R RE

FORM I VOA

QW 2/26/09

FORM 1
VOLATILE ORGANICS ANALYSIS DATA SHEET

CLIENT SAMPLE NO.

MR08-IS07
2-6-7-08D

14

Lab Name: EMPIRICAL LABS Contract: CH2MHILL

Lab Code: NA Case No.: NA SAS No.: NA SDG No.: LEJEUNE022

Matrix: (soil/water) SOIL Lab Sample ID: 0812057-14

Sample wt/vol: 5.4 (g/mL) G Lab File ID: 1205714A

Level: (low/med) LOW Date Sampled: 12/03/08 15:25

% Moisture: not dec. 8 Date Analyzed: 12/14/08 00:31

GC Column: RTX-VRX ID: 0.25 (mm) Dilution Factor: 1.0

Soil Extract Volume:_____(uL) Soil Aliquot Volume: _____(uL)

CONCENTRATION UNITS: (ug/L or ug/Kg) UG/KG

CAS NO.	COMPOUND	MDL	RL	CONC	Q
67-64-1	Acetone	2.0	10	10UJ ~~9.0~~ J	CCH BC
71-43-2	Benzene	0.48	10		U
75-27-4	Bromodichloromethane	0.30	10		U
75-25-2	Bromoform	1.0	10		U
74-83-9	Bromomethane	0.73	10		UUJ CCH
78-93-3	2-Butanone	1.4	10		U
75-15-0	Carbon disulfide	1.3	10		U
56-23-5	Carbon tetrachloride	0.89	10		U
108-90-7	Chlorobenzene	0.34	10		U
75-00-3	Chloroethane	1.1	10		U
67-66-3	Chloroform	0.56	10		U
74-87-3	Chloromethane	0.53	10		U
110-82-7	Cyclohexane	0.55	10		U
124-48-1	Dibromochloromethane	0.34	10		U
96-12-8	1,2-Dibromo-3-chloropropane	1.2	5.1		U
106-93-4	1,2-Dibromoethane	0.44	10		U
95-50-1	1,2-Dichlorobenzene	0.38	10		U
541-73-1	1,3-Dichlorobenzene	0.85	10		U
106-46-7	1,4-Dichlorobenzene	0.56	10		U
75-71-8	Dichlorodifluoromethane	1.1	10		U
75-34-3	1,1-Dichloroethane	0.55	10		U
107-06-2	1,2-Dichloroethane	0.47	10		U
75-35-4	1,1-Dichloroethene	1.2	10		U
156-59-2	cis-1,2-Dichloroethene	1.2	10		U
156-60-5	trans-1,2-Dichloroethene	1.1	10		U
78-87-5	1,2-Dichloropropane	0.47	10		U
10061-01-5	cis-1,3-Dichloropropene	0.51	10		U
10061-02-6	trans-1,3-Dichloropropene	0.32	10		U
100-41-4	Ethylbenzene	0.76	10		U
591-78-6	2-Hexanone	2.3	10		U
98-82-8	Isopropylbenzene	0.89	10		U
79-20-9	Methyl acetate	1.6	10		U
75-09-2	Methylene chloride	0.63	10	2.3	J
108-87-2	Methyl cyclohexane	0.30	10		U
1634-04-4	Methyl tert-butyl ether	0.32	10		U
108-10-1	4-Methyl-2-pentanone	0.59	10		U
100-42-5	Styrene	0.35	10		U
79-34-5	1,1,2,2-Tetrachloroethane	0.44	10		U
127-18-4	Tetrachloroethene	0.98	10		U

2/26/09

FORM 1
VOLATILE ORGANICS ANALYSIS DATA SHEET

CLIENT SAMPLE NO.

MR08-IS07
2-6-7-08D

14

Lab Name: EMPIRICAL LABS Contract: CH2MHILL

Lab Code: NA Case No.: NA SAS No.: NA SDG No.: LEJEUNE022

Matrix: (soil/water) SOIL Lab Sample ID: 0812057-14

Sample wt/vol: 5.4 (g/mL) G Lab File ID: 1205714A

Level: (low/med) LOW Date Sampled: 12/03/08 15:25

% Moisture: not dec. 8 Date Analyzed: 12/14/08 00:31

GC Column: RTX-VRX ID: 0.25 (mm) Dilution Factor: 1.0

Soil Extract Volume:_____(uL) Soil Aliquot Volume: _____(uL)

CONCENTRATION UNITS: (ug/L or ug/Kg) UG/KG

CAS NO.	COMPOUND	MDL	RL	CONC	Q
108-88-3	Toluene	0.87	10		U
120-82-1	1,2,4-Trichlorobenzene	0.18	10		U
71-55-6	1,1,1-Trichloroethane	0.91	10		U
79-00-5	1,1,2-Trichloroethane	0.35	10		U
79-01-6	Trichloroethene	0.86	10		U
76-13-1	Trichlorotrifluoroethane	0.56	10		U
75-69-4	Trichlorofluoromethane	0.96	10		U
75-01-4	Vinyl chloride	1.1	10		U
1330-20-7	Xylene(total)	0.71	10		U

JW 2/26/09

FORM 1
VOLATILE ORGANICS ANALYSIS DATA SHEET

CLIENT SAMPLE NO.

15

MR08-SS073-08D

Lab Name: EMPIRICAL LABS Contract: CH2MHILL

Lab Code: NA Case No.: NA SAS No.: NA SDG No.: LEJEUNE022

Matrix: (soil/water) SOIL Lab Sample ID: 0812057-15

Sample wt/vol: 5.1 (g/mL) G Lab File ID: 1205715A

Level: (low/med) LOW Date Sampled: 12/03/08 15:40

% Moisture: not dec. 23 Date Analyzed: 12/14/08 01:10

GC Column: RTX-VRX ID: 0.25 (mm) Dilution Factor: 1.0

Soil Extract Volume:_____(uL) Soil Aliquot Volume: _____(uL)

CONCENTRATION UNITS: (ug/L or ug/Kg) UG/KG

CAS NO.	COMPOUND	MDL	RL	CONC	Q
67-64-1	Acetone	2.5	13	520 ~~520~~	~~E~~ J LRQ
71-43-2	Benzene	0.59	13		U UJ
75-27-4	Bromodichloromethane	0.38	13		U
75-25-2	Bromoform	1.3	13		U
74-83-9	Bromomethane	0.91	13		U
78-93-3	2-Butanone	1.8	13	9.3	U J
75-15-0	Carbon disulfide	1.6	13		U UJ
56-23-5	Carbon tetrachloride	1.1	13		U
108-90-7	Chlorobenzene	0.43	13		U
75-00-3	Chloroethane	1.4	13		U
67-66-3	Chloroform	0.69	13		U
74-87-3	Chloromethane	0.66	13		U
110-82-7	Cyclohexane	0.68	13		U
124-48-1	Dibromochloromethane	0.43	13		U
96-12-8	1,2-Dibromo-3-chloropropane	1.5	6.3		U
106-93-4	1,2-Dibromoethane	0.54	13		U
95-50-1	1,2-Dichlorobenzene	0.47	13		U
541-73-1	1,3-Dichlorobenzene	1.0	13		U
106-46-7	1,4-Dichlorobenzene	0.69	13		U
75-71-8	Dichlorodifluoromethane	1.4	13		U
75-34-3	1,1-Dichloroethane	0.68	13		U
107-06-2	1,2-Dichloroethane	0.58	13		U
75-35-4	1,1-Dichloroethene	1.5	13		U
156-59-2	cis-1,2-Dichloroethene	1.5	13		U
156-60-5	trans-1,2-Dichloroethene	1.4	13		U
78-87-5	1,2-Dichloropropane	0.58	13		U
10061-01-5	cis-1,3-Dichloropropene	0.63	13		U
10061-02-6	trans-1,3-Dichloropropene	0.40	13		U
100-41-4	Ethylbenzene	0.95	13		U
591-78-6	2-Hexanone	2.9	13		U
98-82-8	Isopropylbenzene	1.1	13		U
79-20-9	Methyl acetate	2.0	13		U
75-09-2	Methylene chloride	0.78	13	1.7	J J
108-87-2	Methyl cyclohexane	0.38	13		U UJ
1634-04-4	Methyl tert-butyl ether	0.40	13		U
108-10-1	4-Methyl-2-pentanone	0.73	13		U
100-42-5	Styrene	0.44	13		U
79-34-5	1,1,2,2-Tetrachloroethane	0.54	13		U
127-18-4	Tetrachloroethene	1.2	13		U

DL

R

lew 2/26/09

FORM 1
VOLATILE ORGANICS ANALYSIS DATA SHEET

CLIENT SAMPLE NO.

15

MR08-SS073-08D

Lab Name: EMPIRICAL LABS Contract: CH2MHILL

Lab Code: NA Case No.: NA SAS No.: NA SDG No.: LEJEUNE022

Matrix: (soil/water) SOIL Lab Sample ID: 0812057-15

Sample wt/vol: 5.1 (g/mL) G Lab File ID: 1205715A

Level: (low/med) LOW Date Sampled: 12/03/08 15:40

% Moisture: not dec. 23 Date Analyzed: 12/14/08 01:10 use dilution

GC Column: RTX-VRX ID: 0.25 (mm) Dilution Factor: 1.0

Soil Extract Volume:_____(uL) Soil Aliquot Volume: _____(uL)

CONCENTRATION UNITS: (ug/L or ug/Kg) UG/KG

CAS NO.	COMPOUND	MDL	RL	CONC	Q
108-88-3	Toluene	1.1	13	2.7	~~J~~ J
120-82-1	1,2,4-Trichlorobenzene	0.23	13		U
71-55-6	1,1,1-Trichloroethane	1.1	13		U
79-00-5	1,1,2-Trichloroethane	0.44	13		U
79-01-6	Trichloroethene	1.1	13		U
76-13-1	Trichlorotrifluoroethane	0.69	13		U
75-69-4	Trichlorofluoromethane	1.2	13		U
75-01-4	Vinyl chloride	1.4	13		U
1330-20-7	Xylene(total)	0.88	13		U

UJ

SS

R

FORM I VOA

LW
2/26/09

FORM 1
VOLATILE ORGANICS ANALYSIS DATA SHEET

CLIENT SAMPLE NO.

MR08-SS073-08DR

15RE

Lab Name: EMPIRICAL LABS Contract: CH2MHILL

Lab Code: NA Case No.: NA SAS No.: NA SDG No.: LEJEUNE022

Matrix: (soil/water) SOIL Lab Sample ID: 0812057-15R

Sample wt/vol: 4.8 (g/mL) G Lab File ID: 1205715B

Level: (low/med) LOW Date Sampled: 12/03/08 15:40

% Moisture: not dec. 23 Date Analyzed: 12/17/08 07:45

GC Column: RTX-VRX ID: 0.25 (mm) Dilution Factor: 1.0 use dilution

Soil Extract Volume:_____(uL) Soil Aliquot Volume: _____(uL)

CONCENTRATION UNITS: (ug/L or ug/Kg) UG/KG

CAS NO.	COMPOUND	MDL	RL	CONC	Q
67-64-1	Acetone	2.7	14	660J 1R060	~~U~~ RD
71-43-2	Benzene	0.64	14		U UJ SS
75-27-4	Bromodichloromethane	0.41	14		U
75-25-2	Bromoform	1.4	14		U
74-83-9	Bromomethane	0.98	14		U
78-93-3	2-Butanone	1.9	14	14	J
75-15-0	Carbon disulfide	1.8	14		U UJ
56-23-5	Carbon tetrachloride	1.2	14		U
108-90-7	Chlorobenzene	0.46	14		U
75-00-3	Chloroethane	1.5	14		U
67-66-3	Chloroform	0.75	14		U
74-87-3	Chloromethane	0.71	14		U
110-82-7	Cyclohexane	0.73	14		U
124-48-1	Dibromochloromethane	0.46	14		U
96-12-8	1,2-Dibromo-3-chloropropane	1.6	6.8		U
106-93-4	1,2-Dibromoethane	0.58	14		U
95-50-1	1,2-Dichlorobenzene	0.50	14		U
541-73-1	1,3-Dichlorobenzene	1.1	14		U
106-46-7	1,4-Dichlorobenzene	0.75	14		U
75-71-8	Dichlorodifluoromethane	1.5	14		U
75-34-3	1,1-Dichloroethane	0.73	14		U
107-06-2	1,2-Dichloroethane	0.62	14		U
75-35-4	1,1-Dichloroethene	1.6	14		U
156-59-2	cis-1,2-Dichloroethene	1.6	14		U
156-60-5	trans-1,2-Dichloroethene	1.5	14		U
78-87-5	1,2-Dichloropropane	0.62	14		U
10061-01-5	cis-1,3-Dichloropropene	0.68	14		U
10061-02-6	trans-1,3-Dichloropropene	0.44	14		U
100-41-4	Ethylbenzene	1.0	14		U
591-78-6	2-Hexanone	3.1	14		U
98-82-8	Isopropylbenzene	1.2	14		U
79-20-9	Methyl acetate	2.2	14		U
75-09-2	Methylene chloride	0.84	14	14UJ ~~1.4~~	~~JB~~ SSB
108-87-2	Methyl cyclohexane	0.41	14		U UJ
1634-04-4	Methyl tert-butyl ether	0.44	14		U
108-10-1	4-Methyl-2-pentanone	0.79	14		U
100-42-5	Styrene	0.48	14		U
79-34-5	1,1,2,2-Tetrachloroethane	0.58	14		U
127-18-4	Tetrachloroethene	1.3	14		U

lw 2/26/09

FORM 1
VOLATILE ORGANICS ANALYSIS DATA SHEET

CLIENT SAMPLE NO. 1SRE

MR08-SS073-08DR

Lab Name: EMPIRICAL LABS Contract: CH2MHILL

Lab Code: NA Case No.: NA SAS No.: NA SDG No.: LEJEUNE022

Matrix: (soil/water) SOIL Lab Sample ID: 0812057-15R

Sample wt/vol: 4.8 (g/mL) G Lab File ID: 1205715B

Level: (low/med) LOW Date Sampled: 12/03/08 15:40

% Moisture: not dec. 23 Date Analyzed: 12/17/08 07:45

GC Column: RTX-VRX ID: 0.25 (mm) Dilution Factor: 1.0 Use dilution

Soil Extract Volume:_____(uL) Soil Aliquot Volume: _____(uL)

CONCENTRATION UNITS: (ug/L or ug/Kg) UG/KG

CAS NO.	COMPOUND	MDL	RL	CONC	Q
108-88-3	Toluene	1.2	14	3.4	~~J~~ J SSL
120-82-1	1,2,4-Trichlorobenzene	0.24	14		U UJ
71-55-6	1,1,1-Trichloroethane	1.2	14		U
79-00-5	1,1,2-Trichloroethane	0.48	14		U
79-01-6	Trichloroethene	1.2	14		U
76-13-1	Trichlorotrifluoroethane	0.75	14		U
75-69-4	Trichlorofluoromethane	1.3	14		U
75-01-4	Vinyl chloride	1.5	14		U
1330-20-7	Xylene(total)	0.95	14		U

RDL

FORM I VOA

MW
2/26/09

FORM 1
VOLATILE ORGANICS ANALYSIS DATA SHEET

CLIENT SAMPLE NO.

MR08-SS0
73-08DDL

15DL

Lab Name: EMPIRICAL LABS Contract: CH2MHILL

Lab Code: NA Case No.: NA SAS No.: NA SDG No.: LEJEUNE022

Matrix: (soil/water) SOIL Lab Sample ID: 0812057-15DL

Sample wt/vol: 4.5 (g/mL) G Lab File ID: 1205715D

Level: (low/med) MED Date Sampled: 12/03/08 15:40

% Moisture: not dec. 23 Date Analyzed: 12/20/08 00:58

GC Column: RTX-VRX ID: 0.25 (mm) Dilution Factor: 1.0

Soil Extract Volume: 5000(uL) Soil Aliquot Volume: 100(uL)

CONCENTRATION UNITS: (ug/L or ug/Kg) UG/KG

CAS NO.	COMPOUND	MDL	RL	CONC	Q
67-64-1	Acetone	140	730	660 J	~~UD~~ LR
71-43-2	Benzene	34	730		UD
75-27-4	Bromodichloromethane	22	730		UD
75-25-2	Bromoform	73	730		UD
74-83-9	Bromomethane	52	730		UD
78-93-3	2-Butanone	100	730		UD
75-15-0	Carbon disulfide	95	730		UD
56-23-5	Carbon tetrachloride	64	730		UD
108-90-7	Chlorobenzene	25	730		UD
75-00-3	Chloroethane	80	730		UD
67-66-3	Chloroform	40	730		UD
74-87-3	Chloromethane	38	730		UD
110-82-7	Cyclohexane	39	730		UD
124-48-1	Dibromochloromethane	25	730		UD
96-12-8	1,2-Dibromo-3-chloropropane	87	360		UD
106-93-4	1,2-Dibromoethane	31	730		UD
95-50-1	1,2-Dichlorobenzene	27	730		UD
541-73-1	1,3-Dichlorobenzene	61	730		UD
106-46-7	1,4-Dichlorobenzene	40	730		UD
75-71-8	Dichlorodifluoromethane	80	730		~~UD~~ UJ CC
75-34-3	1,1-Dichloroethane	39	730		UD
107-06-2	1,2-Dichloroethane	34	730		UD
75-35-4	1,1-Dichloroethene	87	730		UD
156-59-2	cis-1,2-Dichloroethene	87	730		UD
156-60-5	trans-1,2-Dichloroethene	80	730		UD
78-87-5	1,2-Dichloropropane	34	730		UD
10061-01-5	cis-1,3-Dichloropropene	36	730		UD
10061-02-6	trans-1,3-Dichloropropene	23	730		UD
100-41-4	Ethylbenzene	55	730		UD
591-78-6	2-Hexanone	170	730		UD
98-82-8	Isopropylbenzene	64	730		UD
79-20-9	Methyl acetate	120	730	860	P
75-09-2	Methylene chloride	45	730	170	UD
108-87-2	Methyl cyclohexane	22	730		UD
1634-04-4	Methyl tert-butyl ether	23	730		UD
108-10-1	4-Methyl-2-pentanone	42	730		UD
100-42-5	Styrene	26	730		UD
79-34-5	1,1,2,2-Tetrachloroethane	31	730		UD
127-18-4	Tetrachloroethene	71	730		UD

lw
7/26/09

FORM 1
VOLATILE ORGANICS ANALYSIS DATA SHEET

CLIENT SAMPLE NO. 15DL

MR08-SS0
73-08DDL

Lab Name: EMPIRICAL LABS Contract: CH2MHILL

Lab Code: NA Case No.: NA SAS No.: NA SDG No.: LEJEUNE022

Matrix: (soil/water) SOIL Lab Sample ID: 0812057-15DL

Sample wt/vol: 4.5 (g/mL) G Lab File ID: 1205715D

Level: (low/med) MED Date Sampled: 12/03/08 15:40

% Moisture: not dec. 23 Date Analyzed: 12/20/08 00:58

GC Column: RTX-VRX ID: 0.25 (mm) Dilution Factor: 1.0

Soil Extract Volume: 5000(uL) Soil Aliquot Volume: 100(uL)

CONCENTRATION UNITS: (ug/L or ug/Kg) UG/KG

CAS NO.	COMPOUND	MDL	RL	CONC	Q
108-88-3	Toluene	63	730		UD
120-82-1	1,2,4-Trichlorobenzene	13	730		UD
71-55-6	1,1,1-Trichloroethane	66	730		UD
79-00-5	1,1,2-Trichloroethane	26	730		UD
79-01-6	Trichloroethene	62	730		UD
76-13-1	Trichlorotrifluoroethane	40	730		UD
75-69-4	Trichlorofluoromethane	69	730		UD
75-01-4	Vinyl chloride	80	730		UD
1330-20-7	Xylene(total)	51	730		UD

fw
2/26/09

FORM 1
VOLATILE ORGANICS ANALYSIS DATA SHEET

CLIENT SAMPLE NO.

16

MR08-IS07
3-6-7-08D

Lab Name: EMPIRICAL LABS Contract: CH2MHILL

Lab Code: NA Case No.: NA SAS No.: NA SDG No.: LEJEUNE022

Matrix: (soil/water) SOIL Lab Sample ID: 0812057-16

Sample wt/vol: 4.6 (g/mL) G Lab File ID: 1205716A

Level: (low/med) LOW Date Sampled: 12/03/08 16:00

% Moisture: not dec. 10 Date Analyzed: 12/14/08 01:49

GC Column: RTX-VRX ID: 0.25 (mm) Dilution Factor: 1.0

Soil Extract Volume:_____(uL) Soil Aliquot Volume: _____(uL)

CONCENTRATION UNITS: (ug/L or ug/Kg) UG/KG

CAS NO.	COMPOUND	MDL	RL	CONC	Q
67-64-1	Acetone	2.4	12	124 J ~~8.5~~ ~~J~~ CCH	
71-43-2	Benzene	0.57	12		U
75-27-4	Bromodichloromethane	0.36	12		U
75-25-2	Bromoform	1.2	12		U
74-83-9	Bromomethane	0.87	12		~~U~~ UJ CCH
78-93-3	2-Butanone	1.7	12		U
75-15-0	Carbon disulfide	1.6	12		U
56-23-5	Carbon tetrachloride	1.1	12		U
108-90-7	Chlorobenzene	0.41	12		U
75-00-3	Chloroethane	1.3	12		U
67-66-3	Chloroform	0.67	12		U
74-87-3	Chloromethane	0.63	12		U
110-82-7	Cyclohexane	0.65	12		U
124-48-1	Dibromochloromethane	0.41	12		U
96-12-8	1,2-Dibromo-3-chloropropane	1.4	6.0		U
106-93-4	1,2-Dibromoethane	0.52	12		U
95-50-1	1,2-Dichlorobenzene	0.45	12		U
541-73-1	1,3-Dichlorobenzene	1.0	12		U
106-46-7	1,4-Dichlorobenzene	0.67	12		U
75-71-8	Dichlorodifluoromethane	1.3	12		U
75-34-3	1,1-Dichloroethane	0.65	12		U
107-06-2	1,2-Dichloroethane	0.56	12		U
75-35-4	1,1-Dichloroethene	1.4	12		U
156-59-2	cis-1,2-Dichloroethene	1.4	12		U
156-60-5	trans-1,2-Dichloroethene	1.3	12		U
78-87-5	1,2-Dichloropropane	0.56	12		U
10061-01-5	cis-1,3-Dichloropropene	0.60	12		U
10061-02-6	trans-1,3-Dichloropropene	0.39	12		U
100-41-4	Ethylbenzene	0.91	12		U
591-78-6	2-Hexanone	2.8	12		U
98-82-8	Isopropylbenzene	1.1	12		U
79-20-9	Methyl acetate	1.9	12		U
75-09-2	Methylene chloride	0.75	12	1.9	J
108-87-2	Methyl cyclohexane	0.36	12		U
1634-04-4	Methyl tert-butyl ether	0.39	12		U
108-10-1	4-Methyl-2-pentanone	0.70	12		U
100-42-5	Styrene	0.42	12		U
79-34-5	1,1,2,2-Tetrachloroethane	0.52	12		U
127-18-4	Tetrachloroethene	1.2	12		U

MW 2/26/09

FORM 1
VOLATILE ORGANICS ANALYSIS DATA SHEET

CLIENT SAMPLE NO.

MR08-IS07
3-6-7-08D

16

Lab Name: EMPIRICAL LABS Contract: CH2MHILL

Lab Code: NA Case No.: NA SAS No.: NA SDG No.: LEJEUNE022

Matrix: (soil/water) SOIL Lab Sample ID: 0812057-16

Sample wt/vol: 4.6 (g/mL) G Lab File ID: 1205716A

Level: (low/med) LOW Date Sampled: 12/03/08 16:00

% Moisture: not dec. 10 Date Analyzed: 12/14/08 01:49

GC Column: RTX-VRX ID: 0.25 (mm) Dilution Factor: 1.0

Soil Extract Volume:_____(uL) Soil Aliquot Volume: _____(uL)

CONCENTRATION UNITS: (ug/L or ug/Kg) UG/KG

CAS NO.	COMPOUND	MDL	RL	CONC	Q
108-88-3	Toluene	1.0	12		U
120-82-1	1,2,4-Trichlorobenzene	0.22	12		U
71-55-6	1,1,1-Trichloroethane	1.1	12		U
79-00-5	1,1,2-Trichloroethane	0.42	12		U
79-01-6	Trichloroethene	1.0	12		U
76-13-1	Trichlorotrifluoroethane	0.67	12		U
75-69-4	Trichlorofluoromethane	1.2	12		U
75-01-4	Vinyl chloride	1.3	12		U
1330-20-7	Xylene(total)	0.85	12		U

RW
2/26/09

FORM 1
VOLATILE ORGANICS ANALYSIS DATA SHEET

CLIENT SAMPLE NO. 17

MR08-TB01120308

Lab Name: EMPIRICAL LABS Contract: CH2MHILL

Lab Code: NA Case No.: NA SAS No.: NA SDG No.: LEJEUNE022

Matrix: (soil/water) WATER Lab Sample ID: 0812057-17

Sample wt/vol: 5.000 (g/mL) ML Lab File ID: 1205717

Level: (low/med) LOW Date Sampled: 12/03/08 16:00

% Moisture: not dec. _____ Date Analyzed: 12/08/08 19:29

GC Column: RTX-VRX ID: 0.25 (mm) Dilution Factor: 1.0

Soil Extract Volume:_____(uL) Soil Aliquot Volume: _____(uL)

CONCENTRATION UNITS: (ug/L or ug/Kg) UG/L

CAS NO.	COMPOUND	MDL	RL	CONC	Q
67-64-1	Acetone	0.84	2.5		U
71-43-2	Benzene	0.11	1.0		U
75-27-4	Bromodichloromethane	0.10	1.0		U
75-25-2	Bromoform	0.10	1.0		U
74-83-9	Bromomethane	0.32	1.0		~~U~~ UJ CCH
78-93-3	2-Butanone	1.0	3.0		U
75-15-0	Carbon disulfide	0.13	1.0		U
56-23-5	Carbon tetrachloride	0.15	1.0		U
108-90-7	Chlorobenzene	0.10	1.0		U
75-00-3	Chloroethane	0.18	1.0		U
67-66-3	Chloroform	0.11	1.0		U
74-87-3	Chloromethane	0.29	1.0		U
110-82-7	Cyclohexane	0.20	1.0		U
124-48-1	Dibromochloromethane	0.10	1.0		U
96-12-8	1,2-Dibromo-3-chloropropane	0.11	1.0		U
106-93-4	1,2-Dibromoethane	0.10	1.0		U
95-50-1	1,2-Dichlorobenzene	0.10	1.0		U
541-73-1	1,3-Dichlorobenzene	0.13	1.0		U
106-46-7	1,4-Dichlorobenzene	0.10	1.0		U
75-71-8	Dichlorodifluoromethane	0.22	1.0		U
75-34-3	1,1-Dichloroethane	0.12	1.0		U
107-06-2	1,2-Dichloroethane	0.10	1.0		U
75-35-4	1,1-Dichloroethene	0.15	1.0		U
156-59-2	cis-1,2-Dichloroethene	0.13	1.0		U
156-60-5	trans-1,2-Dichloroethene	0.13	1.0		U
78-87-5	1,2-Dichloropropane	0.10	1.0		U
10061-01-5	cis-1,3-Dichloropropene	0.11	1.0		U
10061-02-6	trans-1,3-Dichloropropene	0.10	1.0		U
100-41-4	Ethylbenzene	0.13	1.0		U
591-78-6	2-Hexanone	0.30	2.0		U
98-82-8	Isopropylbenzene	0.15	1.0		U
79-20-9	Methyl acetate	0.30	1.0		U
75-09-2	Methylene chloride	0.14	1.0	2.1	~~B~~ U B
108-87-2	Methyl cyclohexane	0.17	1.0		U
1634-04-4	Methyl tert-butyl ether	0.10	1.0		U
108-10-1	4-Methyl-2-pentanone	0.29	2.0		U
100-42-5	Styrene	0.10	1.0		U
79-34-5	1,1,2,2-Tetrachloroethane	0.10	1.0		U
127-18-4	Tetrachloroethene	0.15	1.0		U

LW 7/26/09

FORM 1
VOLATILE ORGANICS ANALYSIS DATA SHEET

CLIENT SAMPLE NO.

17

MR08-TB01120308

Lab Name: EMPIRICAL LABS Contract: CH2MHILL

Lab Code: NA Case No.: NA SAS No.: NA SDG No.: LEJEUNE022

Matrix: (soil/water) WATER Lab Sample ID: 0812057-17

Sample wt/vol: 5.000 (g/mL) ML Lab File ID: 1205717

Level: (low/med) LOW Date Sampled: 12/03/08 16:00

% Moisture: not dec. _____ Date Analyzed: 12/08/08 19:29

GC Column: RTX-VRX ID: 0.25 (mm) Dilution Factor: 1.0

Soil Extract Volume:_____(uL) Soil Aliquot Volume: _____(uL)

CONCENTRATION UNITS: (ug/L or ug/Kg) UG/L

CAS NO.	COMPOUND	MDL	RL	CONC	Q
108-88-3	Toluene	0.10	1.0		U
120-82-1	1,2,4-Trichlorobenzene	0.10	1.0		~~U~~ UJ CCH
71-55-6	1,1,1-Trichloroethane	0.17	1.0		U
79-00-5	1,1,2-Trichloroethane	0.10	1.0		U
79-01-6	Trichloroethene	0.13	1.0		U
76-13-1	Trichlorotrifluoroethane	0.18	1.0		U
75-69-4	Trichlorofluoromethane	0.17	1.0		U
75-01-4	Vinyl chloride	0.18	1.0		U
1330-20-7	Xylene(total)	0.22	1.0		U

FORM I VOA

MH
2/26/09

FORM 1
VOLATILE ORGANICS ANALYSIS DATA SHEET

CLIENT SAMPLE NO.

MR08-EB01
120308-SS

18

Lab Name: EMPIRICAL LABS Contract: CH2MHILL

Lab Code: NA Case No.: NA SAS No.: NA SDG No.: LEJEUNE022

Matrix: (soil/water) WATER Lab Sample ID: 0812057-18

Sample wt/vol: 5.000 (g/mL) ML Lab File ID: 1205718

Level: (low/med) LOW Date Sampled: 12/03/08 13:00

% Moisture: not dec. _____ Date Analyzed: 12/08/08 20:59

GC Column: RTX-VRX ID: 0.25 (mm) Dilution Factor: 1.0

Soil Extract Volume:_____(uL) Soil Aliquot Volume: _____(uL)

CONCENTRATION UNITS: (ug/L or ug/Kg) UG/L

CAS NO.	COMPOUND	MDL	RL	CONC	Q
67-64-1	Acetone	0.84	2.5		U
71-43-2	Benzene	0.11	1.0		U
75-27-4	Bromodichloromethane	0.10	1.0		U
75-25-2	Bromoform	0.10	1.0		U
74-83-9	Bromomethane	0.32	1.0		~~U~~ UJ 04
78-93-3	2-Butanone	1.0	3.0		U
75-15-0	Carbon disulfide	0.13	1.0		U
56-23-5	Carbon tetrachloride	0.15	1.0		U
108-90-7	Chlorobenzene	0.10	1.0		U
75-00-3	Chloroethane	0.18	1.0		U
67-66-3	Chloroform	0.11	1.0		U
74-87-3	Chloromethane	0.29	1.0		U
110-82-7	Cyclohexane	0.20	1.0		U
124-48-1	Dibromochloromethane	0.10	1.0		U
96-12-8	1,2-Dibromo-3-chloropropane	0.11	1.0		U
106-93-4	1,2-Dibromoethane	0.10	1.0		U
95-50-1	1,2-Dichlorobenzene	0.10	1.0		U
541-73-1	1,3-Dichlorobenzene	0.13	1.0		U
106-46-7	1,4-Dichlorobenzene	0.10	1.0		U
75-71-8	Dichlorodifluoromethane	0.22	1.0		U
75-34-3	1,1-Dichloroethane	0.12	1.0		U
107-06-2	1,2-Dichloroethane	0.10	1.0		U
75-35-4	1,1-Dichloroethene	0.15	1.0		U
156-59-2	cis-1,2-Dichloroethene	0.13	1.0		U
156-60-5	trans-1,2-Dichloroethene	0.13	1.0		U
78-87-5	1,2-Dichloropropane	0.10	1.0		U
10061-01-5	cis-1,3-Dichloropropene	0.11	1.0		U
10061-02-6	trans-1,3-Dichloropropene	0.10	1.0		U
100-41-4	Ethylbenzene	0.13	1.0		U
591-78-6	2-Hexanone	0.30	2.0		U
98-82-8	Isopropylbenzene	0.15	1.0		U
79-20-9	Methyl acetate	0.30	1.0		U
75-09-2	Methylene chloride	0.14	1.0	1.04 ~~0.72~~	~~JB~~ B
108-87-2	Methyl cyclohexane	0.17	1.0		U
1634-04-4	Methyl tert-butyl ether	0.10	1.0		U
108-10-1	4-Methyl-2-pentanone	0.29	2.0		U
100-42-5	Styrene	0.10	1.0		U
79-34-5	1,1,2,2-Tetrachloroethane	0.10	1.0		U
127-18-4	Tetrachloroethene	0.15	1.0		U

FORM I VOA

LEW
2/26/09

FORM 1
VOLATILE ORGANICS ANALYSIS DATA SHEET

CLIENT SAMPLE NO.

MR08-EB01
120308-SS

18

Lab Name: EMPIRICAL LABS Contract: CH2MHILL

Lab Code: NA Case No.: NA SAS No.: NA SDG No.: LEJEUNE022

Matrix: (soil/water) WATER Lab Sample ID: 0812057-18

Sample wt/vol: 5.000 (g/mL) ML Lab File ID: 1205718

Level: (low/med) LOW Date Sampled: 12/03/08 13:00

% Moisture: not dec. _____ Date Analyzed: 12/08/08 20:59

GC Column: RTX-VRX ID: 0.25 (mm) Dilution Factor: 1.0

Soil Extract Volume:_____(uL) Soil Aliquot Volume: _____(uL)

CONCENTRATION UNITS: (ug/L or ug/Kg) UG/L

CAS NO.	COMPOUND	MDL	RL	CONC	Q
108-88-3------	Toluene	0.10	1.0	0.22	J
120-82-1------	1,2,4-Trichlorobenzene	0.10	1.0		~~U~~ UJ CH
71-55-6-------	1,1,1-Trichloroethane	0.17	1.0		U
79-00-5-------	1,1,2-Trichloroethane	0.10	1.0		U
79-01-6-------	Trichloroethene	0.13	1.0		U
76-13-1-------	Trichlorotrifluoroethane	0.18	1.0		U
75-69-4-------	Trichlorofluoromethane	0.17	1.0		U
75-01-4-------	Vinyl chloride	0.18	1.0		U
1330-20-7-----	Xylene(total)	0.22	1.0		U

MW 2/26/09

FORM 1
VOLATILE ORGANICS ANALYSIS DATA SHEET

CLIENT SAMPLE NO.

MR08-EB01
120308-IS

19

Lab Name: EMPIRICAL LABS Contract: CH2MHILL

Lab Code: NA Case No.: NA SAS No.: NA SDG No.: LEJEUNE022

Matrix: (soil/water) WATER Lab Sample ID: 0812057-19

Sample wt/vol: 5.000 (g/mL) ML Lab File ID: 1205719

Level: (low/med) LOW Date Sampled: 12/03/08 13:30

% Moisture: not dec. _____ Date Analyzed: 12/08/08 21:28

GC Column: RTX-VRX ID: 0.25 (mm) Dilution Factor: 1.0

Soil Extract Volume:_____(uL) Soil Aliquot Volume: _____(uL)

CONCENTRATION UNITS: (ug/L or ug/Kg) UG/L

CAS NO.	COMPOUND	MDL	RL	CONC	Q
67-64-1	Acetone	0.84	2.5	4.7	
71-43-2	Benzene	0.11	1.0		U
75-27-4	Bromodichloromethane	0.10	1.0	0.15	J
75-25-2	Bromoform	0.10	1.0		U
74-83-9	Bromomethane	0.32	1.0		~~U~~ UJ cu
78-93-3	2-Butanone	1.0	3.0		U
75-15-0	Carbon disulfide	0.13	1.0		U
56-23-5	Carbon tetrachloride	0.15	1.0		U
108-90-7	Chlorobenzene	0.10	1.0		U
75-00-3	Chloroethane	0.18	1.0		U
67-66-3	Chloroform	0.11	1.0	1.9	
74-87-3	Chloromethane	0.29	1.0		U
110-82-7	Cyclohexane	0.20	1.0		U
124-48-1	Dibromochloromethane	0.10	1.0		U
96-12-8	1,2-Dibromo-3-chloropropane	0.11	1.0		U
106-93-4	1,2-Dibromoethane	0.10	1.0		U
95-50-1	1,2-Dichlorobenzene	0.10	1.0		U
541-73-1	1,3-Dichlorobenzene	0.13	1.0		U
106-46-7	1,4-Dichlorobenzene	0.10	1.0		U
75-71-8	Dichlorodifluoromethane	0.22	1.0		U
75-34-3	1,1-Dichloroethane	0.12	1.0		U
107-06-2	1,2-Dichloroethane	0.10	1.0		U
75-35-4	1,1-Dichloroethene	0.15	1.0		U
156-59-2	cis-1,2-Dichloroethene	0.13	1.0		U
156-60-5	trans-1,2-Dichloroethene	0.13	1.0		U
78-87-5	1,2-Dichloropropane	0.10	1.0		U
10061-01-5	cis-1,3-Dichloropropene	0.11	1.0		U
10061-02-6	trans-1,3-Dichloropropene	0.10	1.0		U
100-41-4	Ethylbenzene	0.13	1.0		U
591-78-6	2-Hexanone	0.30	2.0		U
98-82-8	Isopropylbenzene	0.15	1.0		U
79-20-9	Methyl acetate	0.30	1.0		U
75-09-2	Methylene chloride	0.14	1.0	1.2	~~B~~U E
108-87-2	Methyl cyclohexane	0.17	1.0		U
1634-04-4	Methyl tert-butyl ether	0.10	1.0		U
108-10-1	4-Methyl-2-pentanone	0.29	2.0		U
100-42-5	Styrene	0.10	1.0		U
79-34-5	1,1,2,2-Tetrachloroethane	0.10	1.0		U
127-18-4	Tetrachloroethene	0.15	1.0		U

cw 7/26/09

FORM 1
VOLATILE ORGANICS ANALYSIS DATA SHEET

CLIENT SAMPLE NO.

MR08-EB01
120308-IS

19

Lab Name: EMPIRICAL LABS Contract: CH2MHILL

Lab Code: NA Case No.: NA SAS No.: NA SDG No.: LEJEUNE022

Matrix: (soil/water) WATER Lab Sample ID: 0812057-19

Sample wt/vol: 5.000 (g/mL) ML Lab File ID: 1205719

Level: (low/med) LOW Date Sampled: 12/03/08 13:30

% Moisture: not dec. _____ Date Analyzed: 12/08/08 21:28

GC Column: RTX-VRX ID: 0.25 (mm) Dilution Factor: 1.0

Soil Extract Volume:_____(uL) Soil Aliquot Volume: _____(uL)

CONCENTRATION UNITS: (ug/L or ug/Kg) UG/L

CAS NO.	COMPOUND	MDL	RL	CONC	Q
108-88-3	Toluene	0.10	1.0	0.21	J
120-82-1	1,2,4-Trichlorobenzene	0.10	1.0		~~U~~ UJ CCH
71-55-6	1,1,1-Trichloroethane	0.17	1.0		U
79-00-5	1,1,2-Trichloroethane	0.10	1.0		U
79-01-6	Trichloroethene	0.13	1.0		U
76-13-1	Trichlorotrifluoroethane	0.18	1.0		U
75-69-4	Trichlorofluoromethane	0.17	1.0		U
75-01-4	Vinyl chloride	0.18	1.0		U
1330-20-7	Xylene(total)	0.22	1.0		U

lw
2/26/09

ENVIRONMENTAL
Data Services, Inc.

VOLATILE ORGANIC COMPOUNDS
USEPA Region IV - Level IV Review

Site: MCB Camp Lejeune, TO-09 SDG #: LEJEUNE023

Client: CH2M HILL, Inc., Virginia Beach, Virginia Date: February 26, 2009

Laboratory: Empirical Laboratories, Nashville, Tennessee Reviewer: Nancy Weaver

EDS ID	Client Sample ID	Laboratory Sample ID	Matrix
1	MR08-SS074-08D	0812082-01	Soil
1RE	MR08-SS074-08DRE	0812082-01RE	Soil
2	MR08-IS074-7-8-08D	0812082-02	Soil
3	MR08-SS075-08D	0812082-03	Soil
4	MR08-IS075-6-7-08D	0812082-04	Soil
5	MR08-SS076-08D	0812082-05	Soil
5RE	MR08-SS076-08DRE	0812082-05RE	Soil
6	MR08-IS076-6-7-08D	0812082-06	Soil
7	MR08-SS077-08D	0812082-07	Soil
8	MR08-IS077-6-7-08D	0812082-08	Soil
9	MR08-SS078-08D	0812082-09	Soil
9RE	MR08-SS078-08DRE	0812082-09RE	Soil
10	MR08-IS078-6-7-08D	0812082-10	Soil
11	MR08-SS079-08D	0812082-11	Soil
11RE	MR08-SS079-08DRE	0812082-11RE	Soil
12	MR08-SS079D-08D	0812082-12	Soil
12RE	MR08-SS079D-08DRE	0812082-12RE	Soil
13	MR08-IS079-6-7-08D	0812082-13	Soil
14	MR08-IS079D-6-7-08D	0812082-14	Soil
15	MR08-SS097-08D	0812082-15	Soil
15RE	MR08-SS097-08DRE	0812082-15RE	Soil
16	MR08-IS097-6-7-08D	0812082-16	Soil
17	MR08-SS096-08D	0812082-17	Soil
17RE	MR08-SS096-08DRE	0812082-17RE	Soil
17DL	MR08-SS096-08DDL	0812082-17DL	Soil
18	MR08-IS096-6-7-08D	0812082-18	Soil
19	MR08-SS095-08D	0812082-19	Soil
19RE	MR08-SS095-08DRE	0812082-19RE	Soil
20	MR08-IS095-6-7-08D	0812082-20	Soil
21	MR08-SS094-08D	0812082-21	Soil
21RE	MR08-SS094-08DRE	0812082-21RE	Soil
22	MR08-IS094-5-6-08D	0812082-22	Soil
23	MR08-SS092-08D	0812082-23	Soil
23RE	MR08-SS092-08DRE	0812082-23RE	Soil
24	MR08-IS092-4-5-08D	0812082-24	Soil

EDS ID	Client Sample ID	Laboratory Sample ID	Matrix
25	MR08-EB01120408-SS	0812082-25	Water
26	MR08-EB01120408-IS	0812082-26	Water
27	MR08-TB01120408	0812082-27	Water

The USEPA "Contract Laboratory Program National Functional Guidelines for Organic Data Review," October 1999, and professional judgement were used in evaluating the data in this summary report.

Holding Times - All samples were analyzed within 14 days for preserved water and soil samples.

GC/MS Tuning - All of the BFB tunes in the initial and continuing calibrations met the percent relative abundance criteria.

Initial Calibration - The initial calibrations exhibited acceptable %RSD and mean RRF values.

Continuing Calibration - The continuing calibrations exhibited acceptable %D and RRF values except the following.

CCAL Date	Compound	%D/RRF	Qualifier	Affected Samples
12/11/08	2-Hexanone	31.6%	J/UJ	25-27
12/13/08	Bromomethane	26.2%	J/UJ	2-4, 6, 7
12/14/08	Acetone	104.7%	J/UJ	8, 10, 13, 14, 16, 18
	Bromomethane	31.2%	J/UJ	8, 10, 13, 14, 16, 18
	2-Butanone	27.1%	J/UJ	8, 10, 13, 14, 16, 18
	Chloromethane	30.3%	J/UJ	8, 10, 13, 14, 16, 18
	2-Hexanone	49.2%	J/UJ	8, 10, 13, 14, 16, 18
	Vinyl chloride	28.4%	J/UJ	8, 10, 13, 14, 16, 18
12/15/08	Acetone	77.3%	J/UJ	20, 22, 24
	2-Hexanone	30.1%	J/UJ	20, 22, 24
12/17/08	Acetone	38.8%	J/UJ	1RE, 5RE
	Bromomethane	26.7%	J/UJ	1RE, 5RE
	Dichlorodifluoromethane	33.6%	J/UJ	1RE, 5RE
12/18/08	Bromomethane	41.5%	J/UJ	21RE, 23RE
	Chloroethane	31.6%	J/UJ	21RE, 23RE

Surrogates - All samples exhibited acceptable surrogate recoveries except the following.

Sample ID	Surrogate	%R	Qualifier
1	S4-Bromofluorobenzene	79%	J/UJ
5	S4-Bromofluorobenzene	78%	J/UJ
9	S3-Toluene-d8	126%	J/UJ
	S4-Bromofluorobenzene	76%	J/UJ
9RE	S3-Toluene-d8	125%	J/UJ

Sample ID	Surrogate	%R	Qualifier
9RE	S4-Bromofluorobenzene	71%	J/UJ
11	S3-Toluene-d8	125%	J/UJ
	S4-Bromofluorobenzene	72%	J/UJ
11RE	S3-Toluene-d8	125%	J/UJ
	S4-Bromofluorobenzene	70%	J/UJ
12	S3-Toluene-d8	122%	J/UJ
	S4-Bromofluorobenzene	70%	J/UJ
12RE	S3-Toluene-d8	123%	J/UJ
	S4-Bromofluorobenzene	71%	J/UJ
15	S4-Bromofluorobenzene	78%	J/UJ
15RE	S4-Bromofluorobenzene	79%	J/UJ
17	S3-Toluene-d8	125%	J/UJ
	S4-Bromofluorobenzene	71%	J/UJ
17RE	S4-Bromofluorobenzene	70%	J/UJ
19	S3-Toluene-d8	134%	J/UJ
	S4-Bromofluorobenzene	67%	J/UJ
19RE	S3-Toluene-d8	139%	J/UJ
	S4-Bromofluorobenzene	64%	J/UJ
21	S3-Toluene-d8	124%	J/UJ
	S4-Bromofluorobenzene	74%	J/UJ
21RE	S3-Toluene-d8	126%	J
23	S4-Bromofluorobenzene	78%	J/UJ

MS/MSD - A MS/MSD sample was not analyzed from this data package.

Laboratory Control Sample - The LCS samples exhibited acceptable %R values except the following.

LCS ID	Compound	%R	Qualifier	Affected Samples
V3BLK1211	2-Butanone	166%	None	All ND
	2-Hxanone	138%	None	All ND
V1BLK1216E	Dichlorodifluoromethane	34%	None	Already qualified due to CCAL or surrogates

Internal Standard (IS) Area Performance - All internal standards met response and retention time (RT) criteria except the following.

Sample ID	Internal Standard	Area Count	Qualifier
1RE	IS3-1,4-Dichlorobenzene-d4	Low	J/UJ
5	IS3-1,4-Dichlorobenzene-d4	Low	J/UJ
5RE	IS3-1,4-Dichlorobenzene-d4	Low	J/UJ
9	IS3-1,4-Dichlorobenzene-d4	Low	J/UJ
9RE	IS2-Chlorobenzene-d4	Low	J/UJ
	IS3-1,4-Dichlorobenzene-d4	Low	J/UJ
11	IS3-1,4-Dichlorobenzene-d4	Low	J/UJ
11RE	IS3-1,4-Dichlorobenzene-d4	Low	J/UJ
12	IS3-1,4-Dichlorobenzene-d4	Low	J/UJ

Sample ID	Internal Standard	Area Count	Qualifier
12RE	IS3-1,4-Dichlorobenzene-d4	Low	J/UJ
15	IS3-1,4-Dichlorobenzene-d4	Low	J/UJ
15RE	IS3-1,4-Dichlorobenzene-d4	Low	J/UJ
17	IS3-1,4-Dichlorobenzene-d4	Low	J/UJ
17RE	IS3-1,4-Dichlorobenzene-d4	Low	J/UJ
19	IS3-1,4-Dichlorobenzene-d4	Low	J/UJ
19RE	IS2-Chlorobenzene-d4	Low	J/UJ
	IS3-1,4-Dichlorobenzene-d4	Low	J/R
21	IS3-1,4-Dichlorobenzene-d4	Low	J/UJ
21RE	IS3-1,4-Dichlorobenzene-d4	Low	J/UJ

Method Blank - The method blanks exhibited the following contamination.

Blank ID	Compound	Conc.	Action Level	Qualifier	Affected Samples
V3BLK1211	Methylene chloride	0.56 ug/L	5.6 ug/L	U	26, 27
V1BLK1214	Methylene chloride	2.0 ug/kg	20 ug/kg	U	8-10, 12-16, 18
V1BLK1215	Methylene chloride	2.4 ug/kg	24 ug/kg	U	20-24
V1BLK1216E	Methylene chloride	2.5 ug/kg	25 ug/kg	U	1RE, 5RE, 9RE, 11RE, 12RE, 15RE, 17RE, 19RE
V1MBLK1219	Chloromethane	250 ug/kg	1250 ug/kg	None	All ND
	Vinyl chloride	300 ug/kg	1500 ug/kg	None	All ND

Trip, Field, Equipment Blank - Field QC results are summarized below.

Blank ID	Compound	Conc. ug/L	Action Level ug/L or ug/kg	Qualifier	Affected Samples
MR08-EB01120408-SS	Acetone	0.97	9.7	None	See FB
	Chlorobenzene	0.13	0.65	None	All ND
	Cyclohexane	1.8	9.0	U	23, 23RE
	Methyl cyclohexane	1.1	5.5	U	17, 23, 23RE
	Toluene	0.13	0.65	None	See FB
MR08-EB01120408-IS	Acetone	3.2	32	None	See FB
	Bromodichloromethane	0.19	0.95	None	All ND
	Chloroform	1.9	9.5	None	All ND
	Toluene	0.18	0.90	None	See FB
MR08-EB01120608	Acetone	3.8	38	U	2, 4, 6, 8, 10, 13, 14, 16, 18, 20, 22, 24
	Bromodichloromethane	0.2	1.0	None	All ND
	Chloroform	3.0	15	None	All ND
	Toluene	0.35	1.75	U	3, 12, 12RE, 15, 15RE
MR08-TB01120408	None - ND	-	-	-	-

Field Duplicates - Field duplicate results are summarized below.

Compound	MR08-SS079-08D ug/kg	MR08-SS079D-08D ug/kg	RPD	Qualifier

Compound	MR08-SS079-08D ug/kg	MR08-SS079D-08D ug/kg	RPD	Qualifier
Acetone	220	190	15%	None
2-Butanone	4.2	3.6	15%	None
Methyl acetate	24	12 U	NC	None
Toluene	1.8	12 U	NC	None

Compound	MR08-IS079-6-7-08D ug/kg	MR08-IS079D-6-7-08D ug/kg	RPD	Qualifier
2-Butanone	11U	5	NC	None
Chloromethane	11U	0.60	NC	None

Tentatively Identified Compounds (TICs) - TICs were not reported.

Compound Quantitation - Several samples exhibited high concentrations of target compounds over the calibration range and were flagged (E). The laboratory diluted and reanalyzed samples. The reviewer replaced the original results with the dilution results. The original Form Is should be used for reporting purposes.

Several samples exhibited internal standard and/or surrogate deficiencies. These samples were reanalyzed. Refer to Form Is for which were used for reporting purposes.

FORM 1
VOLATILE ORGANICS ANALYSIS DATA SHEET

CLIENT SAMPLE NO.

MR08-SS074-08D

Lab Name: EMPIRICAL LABS Contract: CH2MHILL

Lab Code: NA Case No.: NA SAS No.: NA SDG No.: LEJEUNE023

Matrix: (soil/water) SOIL Lab Sample ID: 0812082-01

Sample wt/vol: 4.8 (g/mL) G Lab File ID: 1208201A

Level: (low/med) LOW Date Sampled: 12/04/08 08:45

% Moisture: not dec. 25 Date Analyzed: 12/14/08 02:28

GC Column: RTX-VRX ID: 0.25 (mm) Dilution Factor: 1.0

Soil Extract Volume:_____(uL) Soil Aliquot Volume: _____(uL)

CONCENTRATION UNITS: (ug/L or ug/Kg) UG/KG

CAS NO.	COMPOUND	MDL	RL	CONC	Q
67-64-1	Acetone	2.8	14	530	J
71-43-2	Benzene	0.66	14		U UJ
75-27-4	Bromodichloromethane	0.42	14		U
75-25-2	Bromoform	1.4	14		U
74-83-9	Bromomethane	1.0	14		U
78-93-3	2-Butanone	2.0	14	7.2	J J
75-15-0	Carbon disulfide	1.8	14		U UJ
56-23-5	Carbon tetrachloride	1.2	14		U
108-90-7	Chlorobenzene	0.47	14		U
75-00-3	Chloroethane	1.5	14		U
67-66-3	Chloroform	0.77	14		U
74-87-3	Chloromethane	0.72	14		U
110-82-7	Cyclohexane	0.75	14		U
124-48-1	Dibromochloromethane	0.47	14		U
96-12-8	1,2-Dibromo-3-chloropropane	1.7	7.0		U
106-93-4	1,2-Dibromoethane	0.60	14		U
95-50-1	1,2-Dichlorobenzene	0.52	14		U
541-73-1	1,3-Dichlorobenzene	1.2	14		U
106-46-7	1,4-Dichlorobenzene	0.77	14		U
75-71-8	Dichlorodifluoromethane	1.5	14		U
75-34-3	1,1-Dichloroethane	0.75	14		U
107-06-2	1,2-Dichloroethane	0.64	14		U
75-35-4	1,1-Dichloroethene	1.7	14		U
156-59-2	cis-1,2-Dichloroethene	1.7	14		U
156-60-5	trans-1,2-Dichloroethene	1.5	14		U
78-87-5	1,2-Dichloropropane	0.64	14		U
10061-01-5	cis-1,3-Dichloropropene	0.70	14		U
10061-02-6	trans-1,3-Dichloropropene	0.45	14		U
100-41-4	Ethylbenzene	1.0	14		U
591-78-6	2-Hexanone	3.2	14		U
98-82-8	Isopropylbenzene	1.2	14		U
79-20-9	Methyl acetate	2.2	14		U
75-09-2	Methylene chloride	0.86	14	3.0	J J
108-87-2	Methyl cyclohexane	0.42	14		U UJ
1634-04-4	Methyl tert-butyl ether	0.45	14		U
108-10-1	4-Methyl-2-pentanone	0.81	14		U
100-42-5	Styrene	0.49	14		U
79-34-5	1,1,2,2-Tetrachloroethane	0.60	14		U
127-18-4	Tetrachloroethene	1.4	14		U

SS

FORM I VOA

lw
2/26/09

FORM 1
VOLATILE ORGANICS ANALYSIS DATA SHEET

CLIENT SAMPLE NO.

MR08-SS074-08D

Lab Name: EMPIRICAL LABS Contract: CH2MHILL

Lab Code: NA Case No.: NA SAS No.: NA SDG No.: LEJEUNE023

Matrix: (soil/water) SOIL Lab Sample ID: 0812082-01

Sample wt/vol: 4.8 (g/mL) G Lab File ID: 1208201A

Level: (low/med) LOW Date Sampled: 12/04/08 08:45

% Moisture: not dec. 25 Date Analyzed: 12/14/08 02:28

GC Column: RTX-VRX ID: 0.25 (mm) Dilution Factor: 1.0

Soil Extract Volume:_____(uL) Soil Aliquot Volume: _____(uL)

CONCENTRATION UNITS: (ug/L or ug/Kg) UG/KG

CAS NO.	COMPOUND	MDL	RL	CONC	Q
108-88-3	Toluene	1.2	14	4.6	~~J~~ J SSL
120-82-1	1,2,4-Trichlorobenzene	0.25	14		U UJ
71-55-6	1,1,1-Trichloroethane	1.2	14		U
79-00-5	1,1,2-Trichloroethane	0.49	14		U
79-01-6	Trichloroethene	1.2	14		U
76-13-1	Trichlorotrifluoroethane	0.77	14		U
75-69-4	Trichlorofluoromethane	1.3	14		U
75-01-4	Vinyl chloride	1.5	14		U
1330-20-7	Xylene(total)	0.98	14		U

LW
2/26/09

FORM 1
VOLATILE ORGANICS ANALYSIS DATA SHEET

CLIENT SAMPLE NO. RE

MR08-SS074-08DR

Lab Name: EMPIRICAL LABS Contract: CH2MHILL

Lab Code: NA Case No.: NA SAS No.: NA SDG No.: LEJEUNE023

Matrix: (soil/water) SOIL Lab Sample ID: 0812082-01R

Sample wt/vol: 4.1 (g/mL) G Lab File ID: 1208201B

Level: (low/med) LOW Date Sampled: 12/04/08 08:45

% Moisture: not dec. 25 Date Analyzed: 12/17/08 08:24 use original

GC Column: RTX-VRX ID: 0.25 (mm) Dilution Factor: 1.0

Soil Extract Volume:_____(uL) Soil Aliquot Volume: _____(uL)

CONCENTRATION UNITS: (ug/L or ug/Kg) UG/KG

CAS NO.	COMPOUND	MDL	RL	CONC	Q
67-64-1	Acetone	3.2	16	450	J CCH
71-43-2	Benzene	0.76	16		U
75-27-4	Bromodichloromethane	0.49	16		U
75-25-2	Bromoform	1.6	16		U
74-83-9	Bromomethane	1.2	16		~~U~~ UJ CC
78-93-3	2-Butanone	2.3	16	9.7	J
75-15-0	Carbon disulfide	2.1	16		U
56-23-5	Carbon tetrachloride	1.4	16		U
108-90-7	Chlorobenzene	0.55	16		U
75-00-3	Chloroethane	1.8	16		U
67-66-3	Chloroform	0.89	16		U
74-87-3	Chloromethane	0.85	16		U
110-82-7	Cyclohexane	0.88	16		U
124-48-1	Dibromochloromethane	0.55	16		U
96-12-8	1,2-Dibromo-3-chloropropane	2.0	8.1		~~U~~ UJ IS
106-93-4	1,2-Dibromoethane	0.70	16		U
95-50-1	1,2-Dichlorobenzene	0.60	16		U UJ IS
541-73-1	1,3-Dichlorobenzene	1.4	16		U
106-46-7	1,4-Dichlorobenzene	0.89	16		U
75-71-8	Dichlorodifluoromethane	1.8	16		~~U~~ UJ CC
75-34-3	1,1-Dichloroethane	0.88	16		U
107-06-2	1,2-Dichloroethane	0.75	16		U
75-35-4	1,1-Dichloroethene	2.0	16		U
156-59-2	cis-1,2-Dichloroethene	2.0	16		U
156-60-5	trans-1,2-Dichloroethene	1.8	16		U
78-87-5	1,2-Dichloropropane	0.75	16		U
10061-01-5	cis-1,3-Dichloropropene	0.81	16		U
10061-02-6	trans-1,3-Dichloropropene	0.52	16		U
100-41-4	Ethylbenzene	1.2	16		U
591-78-6	2-Hexanone	3.7	16		U
98-82-8	Isopropylbenzene	1.4	16		U
79-20-9	Methyl acetate	2.6	16		U
75-09-2	Methylene chloride	1.0	16	16u	~~1.9 JB~~ BI
108-87-2	Methyl cyclohexane	0.49	16		U
1634-04-4	Methyl tert-butyl ether	0.52	16		U
108-10-1	4-Methyl-2-pentanone	0.94	16		U
100-42-5	Styrene	0.57	16		U
79-34-5	1,1,2,2-Tetrachloroethane	0.70	16		~~U~~ UJ IS
127-18-4	Tetrachloroethene	1.6	16		U

FORM I VOA

LW 2/26/09

FORM 1
VOLATILE ORGANICS ANALYSIS DATA SHEET

CLIENT SAMPLE NO. 1RE

MR08-SS074-08DR

Lab Name: EMPIRICAL LABS Contract: CH2MHILL

Lab Code: NA Case No.: NA SAS No.: NA SDG No.: LEJEUNE023

Matrix: (soil/water) SOIL Lab Sample ID: 0812082-01R

Sample wt/vol: 4.1 (g/mL) G Lab File ID: 1208201B

Level: (low/med) LOW Date Sampled: 12/04/08 08:45

% Moisture: not dec. 25 Date Analyzed: 12/17/08 08:24 Use original

GC Column: RTX-VRX ID: 0.25 (mm) Dilution Factor: 1.0

Soil Extract Volume:_____(uL) Soil Aliquot Volume: _____(uL)

CONCENTRATION UNITS: (ug/L or ug/Kg) UG/KG

CAS NO.	COMPOUND	MDL	RL	CONC	Q
108-88-3	Toluene	1.4	16	1.9	J
120-82-1	1,2,4-Trichlorobenzene	0.29	16		U
71-55-6	1,1,1-Trichloroethane	1.5	16		U
79-00-5	1,1,2-Trichloroethane	0.57	16		U
79-01-6	Trichloroethene	1.4	16		U
76-13-1	Trichlorotrifluoroethane	0.89	16		U
75-69-4	Trichlorofluoromethane	1.5	16		U
75-01-4	Vinyl chloride	1.8	16		U
1330-20-7	Xylene(total)	1.1	16		U

R RE

FORM I VOA

lus
2/26/09

FORM 1
VOLATILE ORGANICS ANALYSIS DATA SHEET

CLIENT SAMPLE NO. 2

MR08-IS07
4-7-8-08D

Lab Name: EMPIRICAL LABS Contract: CH2MHILL

Lab Code: NA Case No.: NA SAS No.: NA SDG No.: LEJEUNE023

Matrix: (soil/water) SOIL Lab Sample ID: 0812082-02

Sample wt/vol: 4.5 (g/mL) G Lab File ID: 1208202A

Level: (low/med) LOW Date Sampled: 12/04/08 09:05

% Moisture: not dec. 6 Date Analyzed: 12/14/08 03:07

GC Column: RTX-VRX ID: 0.25 (mm) Dilution Factor: 1.0

Soil Extract Volume:_____(uL) Soil Aliquot Volume: _____(uL)

CONCENTRATION UNITS: (ug/L or ug/Kg) UG/KG

CAS NO.	COMPOUND	MDL	RL	CONC	Q
67-64-1	Acetone	2.4	12	12U ~~6.3~~	~~J~~ B1
71-43-2	Benzene	0.56	12		U
75-27-4	Bromodichloromethane	0.36	12		U
75-25-2	Bromoform	1.2	12		U
74-83-9	Bromomethane	0.86	12		~~U~~ UJ CCH
78-93-3	2-Butanone	1.7	12		U
75-15-0	Carbon disulfide	1.6	12		U
56-23-5	Carbon tetrachloride	1.0	12		U
108-90-7	Chlorobenzene	0.41	12		U
75-00-3	Chloroethane	1.3	12		U
67-66-3	Chloroform	0.66	12		U
74-87-3	Chloromethane	0.62	12		U
110-82-7	Cyclohexane	0.65	12		U
124-48-1	Dibromochloromethane	0.41	12		U
96-12-8	1,2-Dibromo-3-chloropropane	1.4	6.0		U
106-93-4	1,2-Dibromoethane	0.51	12		U
95-50-1	1,2-Dichlorobenzene	0.44	12		U
541-73-1	1,3-Dichlorobenzene	1.0	12		U
106-46-7	1,4-Dichlorobenzene	0.66	12		U
75-71-8	Dichlorodifluoromethane	1.3	12		U
75-34-3	1,1-Dichloroethane	0.65	12		U
107-06-2	1,2-Dichloroethane	0.55	12		U
75-35-4	1,1-Dichloroethene	1.4	12		U
156-59-2	cis-1,2-Dichloroethene	1.4	12		U
156-60-5	trans-1,2-Dichloroethene	1.3	12		U
78-87-5	1,2-Dichloropropane	0.55	12		U
10061-01-5	cis-1,3-Dichloropropene	0.60	12		U
10061-02-6	trans-1,3-Dichloropropene	0.38	12		U
100-41-4	Ethylbenzene	0.90	12		U
591-78-6	2-Hexanone	2.8	12		U
98-82-8	Isopropylbenzene	1.0	12		U
79-20-9	Methyl acetate	1.9	12		U
75-09-2	Methylene chloride	0.74	12	1.6	J
108-87-2	Methyl cyclohexane	0.36	12		U
1634-04-4	Methyl tert-butyl ether	0.38	12		U
108-10-1	4-Methyl-2-pentanone	0.69	12		U
100-42-5	Styrene	0.42	12		U
79-34-5	1,1,2,2-Tetrachloroethane	0.51	12		U
127-18-4	Tetrachloroethene	1.2	12		U

FORM I VOA

LW 2/26/09

FORM 1
VOLATILE ORGANICS ANALYSIS DATA SHEET

CLIENT SAMPLE NO. 2

MR08-IS07
4-7-8-08D

Lab Name: EMPIRICAL LABS Contract: CH2MHILL

Lab Code: NA Case No.: NA SAS No.: NA SDG No.: LEJEUNE023

Matrix: (soil/water) SOIL Lab Sample ID: 0812082-02

Sample wt/vol: 4.5 (g/mL) G Lab File ID: 1208202A

Level: (low/med) LOW Date Sampled: 12/04/08 09:05

% Moisture: not dec. 6 Date Analyzed: 12/14/08 03:07

GC Column: RTX-VRX ID: 0.25 (mm) Dilution Factor: 1.0

Soil Extract Volume:_____(uL) Soil Aliquot Volume: _____(uL)

CONCENTRATION UNITS: (ug/L or ug/Kg) UG/KG

CAS NO.	COMPOUND	MDL	RL	CONC	Q
108-88-3	Toluene	1.0	12		U
120-82-1	1,2,4-Trichlorobenzene	0.22	12		U
71-55-6	1,1,1-Trichloroethane	1.1	12		U
79-00-5	1,1,2-Trichloroethane	0.42	12		U
79-01-6	Trichloroethene	1.0	12		U
76-13-1	Trichlorotrifluoroethane	0.66	12		U
75-69-4	Trichlorofluoromethane	1.1	12		U
75-01-4	Vinyl chloride	1.3	12		U
1330-20-7	Xylene(total)	0.84	12		U

lw
2/26/09

FORM 1
VOLATILE ORGANICS ANALYSIS DATA SHEET

CLIENT SAMPLE NO. 3

MR08-SS075-08D

Lab Name: EMPIRICAL LABS Contract: CH2MHILL

Lab Code: NA Case No.: NA SAS No.: NA SDG No.: LEJEUNE023

Matrix: (soil/water) SOIL Lab Sample ID: 0812082-03

Sample wt/vol: 4.9 (g/mL) G Lab File ID: 1208203A

Level: (low/med) LOW Date Sampled: 12/04/08 09:20

% Moisture: not dec. 15 Date Analyzed: 12/14/08 03:46

GC Column: RTX-VRX ID: 0.25 (mm) Dilution Factor: 1.0

Soil Extract Volume:_____(uL) Soil Aliquot Volume: _____(uL)

CONCENTRATION UNITS: (ug/L or ug/Kg) UG/KG

CAS NO.	COMPOUND	MDL	RL	CONC	Q
67-64-1	Acetone	2.4	12	320	
71-43-2	Benzene	0.56	12		U
75-27-4	Bromodichloromethane	0.36	12		U
75-25-2	Bromoform	1.2	12		U
74-83-9	Bromomethane	0.86	12		UNJ CCH
78-93-3	2-Butanone	1.7	12	4.0	J
75-15-0	Carbon disulfide	1.6	12		U
56-23-5	Carbon tetrachloride	1.0	12		U
108-90-7	Chlorobenzene	0.41	12		U
75-00-3	Chloroethane	1.3	12		U
67-66-3	Chloroform	0.66	12		U
74-87-3	Chloromethane	0.62	12		U
110-82-7	Cyclohexane	0.65	12		U
124-48-1	Dibromochloromethane	0.41	12		U
96-12-8	1,2-Dibromo-3-chloropropane	1.4	6.0		U
106-93-4	1,2-Dibromoethane	0.52	12		U
95-50-1	1,2-Dichlorobenzene	0.44	12		U
541-73-1	1,3-Dichlorobenzene	1.0	12		U
106-46-7	1,4-Dichlorobenzene	0.66	12		U
75-71-8	Dichlorodifluoromethane	1.3	12		UJ
75-34-3	1,1-Dichloroethane	0.65	12		U
107-06-2	1,2-Dichloroethane	0.55	12		U
75-35-4	1,1-Dichloroethene	1.4	12		U
156-59-2	cis-1,2-Dichloroethene	1.4	12		U
156-60-5	trans-1,2-Dichloroethene	1.3	12		U
78-87-5	1,2-Dichloropropane	0.55	12		U
10061-01-5	cis-1,3-Dichloropropene	0.60	12		U
10061-02-6	trans-1,3-Dichloropropene	0.38	12		U
100-41-4	Ethylbenzene	0.90	12		U
591-78-6	2-Hexanone	2.8	12		U
98-82-8	Isopropylbenzene	1.0	12		U
79-20-9	Methyl acetate	1.9	12		U
75-09-2	Methylene chloride	0.74	12	2.3	J
108-87-2	Methyl cyclohexane	0.36	12		U
1634-04-4	Methyl tert-butyl ether	0.38	12		U
108-10-1	4-Methyl-2-pentanone	0.70	12		U
100-42-5	Styrene	0.42	12		U
79-34-5	1,1,2,2-Tetrachloroethane	0.52	12		U
127-18-4	Tetrachloroethene	1.2	12		U

FORM I VOA

MW 2/26/09

FORM 1
VOLATILE ORGANICS ANALYSIS DATA SHEET

CLIENT SAMPLE NO. 3

MR08-SS075-08D

Lab Name: EMPIRICAL LABS Contract: CH2MHILL

Lab Code: NA Case No.: NA SAS No.: NA SDG No.: LEJEUNE023

Matrix: (soil/water) SOIL Lab Sample ID: 0812082-03

Sample wt/vol: 4.9 (g/mL) G Lab File ID: 1208203A

Level: (low/med) LOW Date Sampled: 12/04/08 09:20

% Moisture: not dec. 15 Date Analyzed: 12/14/08 03:46

GC Column: RTX-VRX ID: 0.25 (mm) Dilution Factor: 1.0

Soil Extract Volume:_____(uL) Soil Aliquot Volume: _____(uL)

CONCENTRATION UNITS: (ug/L or ug/Kg) UG/KG

CAS NO.	COMPOUND	MDL	RL	CONC	Q
108-88-3	Toluene	1.0	12	12U ~~1.2~~	~~J~~
120-82-1	1,2,4-Trichlorobenzene	0.22	12		U
71-55-6	1,1,1-Trichloroethane	1.1	12		U
79-00-5	1,1,2-Trichloroethane	0.42	12		U
79-01-6	Trichloroethene	1.0	12		U
76-13-1	Trichlorotrifluoroethane	0.66	12		U
75-69-4	Trichlorofluoromethane	1.1	12		U
75-01-4	Vinyl chloride	1.3	12		U
1330-20-7	Xylene(total)	0.84	12		U

BL

kw
2/26/09

FORM 1
VOLATILE ORGANICS ANALYSIS DATA SHEET

CLIENT SAMPLE NO. 4

MR08-IS07
5-6-7-08D

Lab Name: EMPIRICAL LABS Contract: CH2MHILL

Lab Code: NA Case No.: NA SAS No.: NA SDG No.: LEJEUNE023

Matrix: (soil/water) SOIL Lab Sample ID: 0812082-04

Sample wt/vol: 5.9 (g/mL) G Lab File ID: 1208204A

Level: (low/med) LOW Date Sampled: 12/04/08 09:35

% Moisture: not dec. 7 Date Analyzed: 12/14/08 04:26

GC Column: RTX-VRX ID: 0.25 (mm) Dilution Factor: 1.0

Soil Extract Volume:_____(uL) Soil Aliquot Volume: _____(uL)

CONCENTRATION UNITS: (ug/L or ug/Kg) UG/KG

CAS NO.	COMPOUND	MDL	RL	CONC	Q
67-64-1	Acetone	1.8	9.1	9.1u ~~6.9~~	~~J~~ B
71-43-2	Benzene	0.43	9.1		U
75-27-4	Bromodichloromethane	0.27	9.1		U
75-25-2	Bromoform	0.91	9.1		U
74-83-9	Bromomethane	0.66	9.1		~~U~~ UJ CC4
78-93-3	2-Butanone	1.3	9.1		U
75-15-0	Carbon disulfide	1.2	9.1		U
56-23-5	Carbon tetrachloride	0.80	9.1		U
108-90-7	Chlorobenzene	0.31	9.1		U
75-00-3	Chloroethane	1.0	9.1		U
67-66-3	Chloroform	0.50	9.1		U
74-87-3	Chloromethane	0.47	9.1		U
110-82-7	Cyclohexane	0.49	9.1		U
124-48-1	Dibromochloromethane	0.31	9.1		U
96-12-8	1,2-Dibromo-3-chloropropane	1.1	4.6		U
106-93-4	1,2-Dibromoethane	0.39	9.1		U
95-50-1	1,2-Dichlorobenzene	0.34	9.1		U
541-73-1	1,3-Dichlorobenzene	0.76	9.1		U
106-46-7	1,4-Dichlorobenzene	0.50	9.1		U
75-71-8	Dichlorodifluoromethane	1.0	9.1		U
75-34-3	1,1-Dichloroethane	0.49	9.1		U
107-06-2	1,2-Dichloroethane	0.42	9.1		U
75-35-4	1,1-Dichloroethene	1.1	9.1		U
156-59-2	cis-1,2-Dichloroethene	1.1	9.1		U
156-60-5	trans-1,2-Dichloroethene	1.0	9.1		U
78-87-5	1,2-Dichloropropane	0.42	9.1		U
10061-01-5	cis-1,3-Dichloropropene	0.46	9.1		U
10061-02-6	trans-1,3-Dichloropropene	0.29	9.1		U
100-41-4	Ethylbenzene	0.68	9.1		U
591-78-6	2-Hexanone	2.1	9.1		U
98-82-8	Isopropylbenzene	0.80	9.1		U
79-20-9	Methyl acetate	1.4	9.1		U
75-09-2	Methylene chloride	0.56	9.1	1.0	J
108-87-2	Methyl cyclohexane	0.27	9.1		U
1634-04-4	Methyl tert-butyl ether	0.29	9.1		U
108-10-1	4-Methyl-2-pentanone	0.53	9.1		U
100-42-5	Styrene	0.32	9.1		U
79-34-5	1,1,2,2-Tetrachloroethane	0.39	9.1		U
127-18-4	Tetrachloroethene	0.88	9.1		U

LW 2/26/09

FORM 1
VOLATILE ORGANICS ANALYSIS DATA SHEET

CLIENT SAMPLE NO. 4

MR08-IS07
5-6-7-08D

Lab Name: EMPIRICAL LABS Contract: CH2MHILL

Lab Code: NA Case No.: NA SAS No.: NA SDG No.: LEJEUNE023

Matrix: (soil/water) SOIL Lab Sample ID: 0812082-04

Sample wt/vol: 5.9 (g/mL) G Lab File ID: 1208204A

Level: (low/med) LOW Date Sampled: 12/04/08 09:35

% Moisture: not dec. 7 Date Analyzed: 12/14/08 04:26

GC Column: RTX-VRX ID: 0.25 (mm) Dilution Factor: 1.0

Soil Extract Volume:_____(uL) Soil Aliquot Volume: _____(uL)

CONCENTRATION UNITS: (ug/L or ug/Kg) UG/KG

CAS NO.	COMPOUND	MDL	RL	CONC	Q
108-88-3	Toluene	0.78	9.1		U
120-82-1	1,2,4-Trichlorobenzene	0.16	9.1		U
71-55-6	1,1,1-Trichloroethane	0.82	9.1		U
79-00-5	1,1,2-Trichloroethane	0.32	9.1		U
79-01-6	Trichloroethene	0.78	9.1		U
76-13-1	Trichlorotrifluoroethane	0.50	9.1		U
75-69-4	Trichlorofluoromethane	0.87	9.1		U
75-01-4	Vinyl chloride	1.0	9.1		U
1330-20-7	Xylene(total)	0.64	9.1		U

FORM I VOA

gw
2/26/09

FORM 1
VOLATILE ORGANICS ANALYSIS DATA SHEET

CLIENT SAMPLE NO. 5

MR08-SS076-08D

Lab Name: EMPIRICAL LABS Contract: CH2MHILL

Lab Code: NA Case No.: NA SAS No.: NA SDG No.: LEJEUNE023

Matrix: (soil/water) SOIL Lab Sample ID: 0812082-05

Sample wt/vol: 5.5 (g/mL) G Lab File ID: 1208205A

Level: (low/med) LOW Date Sampled: 12/04/08 09:50

% Moisture: not dec. 17 Date Analyzed: 12/14/08 05:05 Use reanalysis

GC Column: RTX-VRX ID: 0.25 (mm) Dilution Factor: 1.0

Soil Extract Volume:_____(uL) Soil Aliquot Volume: _____(uL)

CONCENTRATION UNITS: (ug/L or ug/Kg) UG/KG

CAS NO.	COMPOUND	MDL	RL	CONC	Q
67-64-1	Acetone	2.2	11	260	J SQ
71-43-2	Benzene	0.52	11		U UJ
75-27-4	Bromodichloromethane	0.33	11		U
75-25-2	Bromoform	1.1	11		U
74-83-9	Bromomethane	0.79	11		U
78-93-3	2-Butanone	1.5	11	4.4	J J
75-15-0	Carbon disulfide	1.4	11		U UJ
56-23-5	Carbon tetrachloride	0.97	11		U
108-90-7	Chlorobenzene	0.37	11		U
75-00-3	Chloroethane	1.2	11		U
67-66-3	Chloroform	0.60	11		U
74-87-3	Chloromethane	0.57	11		U
110-82-7	Cyclohexane	0.59	11		U
124-48-1	Dibromochloromethane	0.37	11		U
96-12-8	1,2-Dibromo-3-chloropropane	1.3	5.5		U
106-93-4	1,2-Dibromoethane	0.47	11		U
95-50-1	1,2-Dichlorobenzene	0.41	11		U
541-73-1	1,3-Dichlorobenzene	0.92	11		U
106-46-7	1,4-Dichlorobenzene	0.60	11		U
75-71-8	Dichlorodifluoromethane	1.2	11		U M
75-34-3	1,1-Dichloroethane	0.59	11		U
107-06-2	1,2-Dichloroethane	0.50	11		U
75-35-4	1,1-Dichloroethene	1.3	11		U
156-59-2	cis-1,2-Dichloroethene	1.3	11		U
156-60-5	trans-1,2-Dichloroethene	1.2	11		U
78-87-5	1,2-Dichloropropane	0.50	11		U
10061-01-5	cis-1,3-Dichloropropene	0.55	11		U
10061-02-6	trans-1,3-Dichloropropene	0.35	11		U
100-41-4	Ethylbenzene	0.82	11		U
591-78-6	2-Hexanone	2.5	11		U
98-82-8	Isopropylbenzene	0.97	11		U
79-20-9	Methyl acetate	1.8	11		U
75-09-2	Methylene chloride	0.68	11	1.3	J J
108-87-2	Methyl cyclohexane	0.33	11		U UJ
1634-04-4	Methyl tert-butyl ether	0.35	11		U
108-10-1	4-Methyl-2-pentanone	0.64	11		U
100-42-5	Styrene	0.38	11		U
79-34-5	1,1,2,2-Tetrachloroethane	0.47	11		U
127-18-4	Tetrachloroethene	1.1	11		U

FORM I VOA

HW 2/26/09

FORM 1
VOLATILE ORGANICS ANALYSIS DATA SHEET

CLIENT SAMPLE NO. 5

MR08-SS076-08D

Lab Name: EMPIRICAL LABS Contract: CH2MHILL

Lab Code: NA Case No.: NA SAS No.: NA SDG No.: LEJEUNE023

Matrix: (soil/water) SOIL Lab Sample ID: 0812082-05

Sample wt/vol: 5.5 (g/mL) G Lab File ID: 1208205A

Level: (low/med) LOW Date Sampled: 12/04/08 09:50

% Moisture: not dec. 17 Date Analyzed: 12/14/08 05:05 Use reanalysis

GC Column: RTX-VRX ID: 0.25 (mm) Dilution Factor: 1.0

Soil Extract Volume:_____(uL) Soil Aliquot Volume: _____(uL)

CONCENTRATION UNITS: (ug/L or ug/Kg) UG/KG

CAS NO.	COMPOUND	MDL	RL	CONC	Q
108-88-3	Toluene	0.94	11		U UJ SS
120-82-1	1,2,4-Trichlorobenzene	0.20	11		U
71-55-6	1,1,1-Trichloroethane	0.99	11		U
79-00-5	1,1,2-Trichloroethane	0.38	11		U
79-01-6	Trichloroethene	0.93	11		U
76-13-1	Trichlorotrifluoroethane	0.60	11		U
75-69-4	Trichlorofluoromethane	1.0	11		U
75-01-4	Vinyl chloride	1.2	11		U
1330-20-7	Xylene(total)	0.77	11		U

R

FORM I VOA

JW
2/26/09

FORM 1
VOLATILE ORGANICS ANALYSIS DATA SHEET

CLIENT SAMPLE NO. 5RE

MR08-SS076-08DR

Lab Name: EMPIRICAL LABS Contract: CH2MHILL

Lab Code: NA Case No.: NA SAS No.: NA SDG No.: LEJEUNE023

Matrix: (soil/water) SOIL Lab Sample ID: 0812082-05R

Sample wt/vol: 4.4 (g/mL) G Lab File ID: 1208205B

Level: (low/med) LOW Date Sampled: 12/04/08 09:50

% Moisture: not dec. 17 Date Analyzed: 12/17/08 09:03

GC Column: RTX-VRX ID: 0.25 (mm) Dilution Factor: 1.0

Soil Extract Volume:_____(uL) Soil Aliquot Volume: _____(uL)

CONCENTRATION UNITS: (ug/L or ug/Kg) UG/KG

CAS NO.	COMPOUND	MDL	RL	CONC	Q
67-64-1	Acetone	2.7	14	260	J CCH
71-43-2	Benzene	0.64	14		U
75-27-4	Bromodichloromethane	0.41	14		U
75-25-2	Bromoform	1.4	14		U
74-83-9	Bromomethane	0.99	14		~~U~~UJ CCH
78-93-3	2-Butanone	1.9	14	4.1	J
75-15-0	Carbon disulfide	1.8	14		U
56-23-5	Carbon tetrachloride	1.2	14		U
108-90-7	Chlorobenzene	0.46	14		U
75-00-3	Chloroethane	1.5	14		U
67-66-3	Chloroform	0.75	14		U
74-87-3	Chloromethane	0.71	14		U
110-82-7	Cyclohexane	0.74	14		U
124-48-1	Dibromochloromethane	0.46	14		U
96-12-8	1,2-Dibromo-3-chloropropane	1.6	6.8		~~U~~UJ IS
106-93-4	1,2-Dibromoethane	0.59	14		U
95-50-1	1,2-Dichlorobenzene	0.51	14		U UJ IS
541-73-1	1,3-Dichlorobenzene	1.2	14		U
106-46-7	1,4-Dichlorobenzene	0.75	14		U
75-71-8	Dichlorodifluoromethane	1.5	14		~~U~~UJ CCH
75-34-3	1,1-Dichloroethane	0.74	14		U
107-06-2	1,2-Dichloroethane	0.63	14		U
75-35-4	1,1-Dichloroethene	1.6	14		U
156-59-2	cis-1,2-Dichloroethene	1.6	14		U
156-60-5	trans-1,2-Dichloroethene	1.5	14		U
78-87-5	1,2-Dichloropropane	0.63	14		U
10061-01-5	cis-1,3-Dichloropropene	0.68	14		U
10061-02-6	trans-1,3-Dichloropropene	0.44	14		U
100-41-4	Ethylbenzene	1.0	14		U
591-78-6	2-Hexanone	3.2	14		U
98-82-8	Isopropylbenzene	1.2	14		U
79-20-9	Methyl acetate	2.2	14		U
75-09-2	Methylene chloride	0.85	14	14u ~~2.0~~	~~J~~B BL
108-87-2	Methyl cyclohexane	0.41	14		U
1634-04-4	Methyl tert-butyl ether	0.44	14		U
108-10-1	4-Methyl-2-pentanone	0.79	14		U
100-42-5	Styrene	0.48	14		U
79-34-5	1,1,2,2-Tetrachloroethane	0.59	14		~~U~~UJ IS
127-18-4	Tetrachloroethene	1.3	14		U

FORM I VOA

MW 2/26/09

FORM 1
VOLATILE ORGANICS ANALYSIS DATA SHEET

CLIENT SAMPLE NO. 5RE

MR08-SS076-08DR

Lab Name: EMPIRICAL LABS Contract: CH2MHILL

Lab Code: NA Case No.: NA SAS No.: NA SDG No.: LEJEUNE023

Matrix: (soil/water) SOIL Lab Sample ID: 0812082-05R

Sample wt/vol: 4.4 (g/mL) G Lab File ID: 1208205B

Level: (low/med) LOW Date Sampled: 12/04/08 09:50

% Moisture: not dec. 17 Date Analyzed: 12/17/08 09:03

GC Column: RTX-VRX ID: 0.25 (mm) Dilution Factor: 1.0

Soil Extract Volume:_____(uL) Soil Aliquot Volume: _____(uL)

CONCENTRATION UNITS: (ug/L or ug/Kg) UG/KG

CAS NO.	COMPOUND	MDL	RL	CONC	Q
108-88-3	Toluene	1.2	14		U
120-82-1	1,2,4-Trichlorobenzene	0.25	14		~~U~~ UJ IS
71-55-6	1,1,1-Trichloroethane	1.2	14		U
79-00-5	1,1,2-Trichloroethane	0.48	14		U
79-01-6	Trichloroethene	1.2	14		U
76-13-1	Trichlorotrifluoroethane	0.75	14		U
75-69-4	Trichlorofluoromethane	1.3	14		U
75-01-4	Vinyl chloride	1.5	14		U
1330-20-7	Xylene(total)	0.96	14		U

FORM I VOA

hw
2/26/09

FORM 1
VOLATILE ORGANICS ANALYSIS DATA SHEET

CLIENT SAMPLE NO. 6

MR08-IS07
6-6-7-08D

Lab Name: EMPIRICAL LABS Contract: CH2MHILL

Lab Code: NA Case No.: NA SAS No.: NA SDG No.: LEJEUNE023

Matrix: (soil/water) SOIL Lab Sample ID: 0812082-06

Sample wt/vol: 5.9 (g/mL) G Lab File ID: 1208206A

Level: (low/med) LOW Date Sampled: 12/04/08 10:05

% Moisture: not dec. 10 Date Analyzed: 12/14/08 05:44

GC Column: RTX-VRX ID: 0.25 (mm) Dilution Factor: 1.0

Soil Extract Volume:_____(uL) Soil Aliquot Volume: _____(uL)

CONCENTRATION UNITS: (ug/L or ug/Kg) UG/KG

CAS NO.	COMPOUND	MDL	RL	CONC	Q
67-64-1	Acetone	1.9	9.4	10	U BL
71-43-2	Benzene	0.44	9.4		U
75-27-4	Bromodichloromethane	0.28	9.4		U
75-25-2	Bromoform	0.94	9.4		U
74-83-9	Bromomethane	0.68	9.4		~~U~~ UJ CCV
78-93-3	2-Butanone	1.3	9.4		U
75-15-0	Carbon disulfide	1.2	9.4		U
56-23-5	Carbon tetrachloride	0.83	9.4		U
108-90-7	Chlorobenzene	0.32	9.4		U
75-00-3	Chloroethane	1.0	9.4		U
67-66-3	Chloroform	0.52	9.4		U
74-87-3	Chloromethane	0.49	9.4		U
110-82-7	Cyclohexane	0.51	9.4		U
124-48-1	Dibromochloromethane	0.32	9.4		U
96-12-8	1,2-Dibromo-3-chloropropane	1.1	4.7		U
106-93-4	1,2-Dibromoethane	0.40	9.4		U
95-50-1	1,2-Dichlorobenzene	0.35	9.4		U
541-73-1	1,3-Dichlorobenzene	0.79	9.4		U
106-46-7	1,4-Dichlorobenzene	0.52	9.4		U
75-71-8	Dichlorodifluoromethane	1.0	9.4		UJ
75-34-3	1,1-Dichloroethane	0.51	9.4		U
107-06-2	1,2-Dichloroethane	0.43	9.4		U
75-35-4	1,1-Dichloroethene	1.1	9.4		U
156-59-2	cis-1,2-Dichloroethene	1.1	9.4		U
156-60-5	trans-1,2-Dichloroethene	1.0	9.4		U
78-87-5	1,2-Dichloropropane	0.43	9.4		U
10061-01-5	cis-1,3-Dichloropropene	0.47	9.4		U
10061-02-6	trans-1,3-Dichloropropene	0.30	9.4		U
100-41-4	Ethylbenzene	0.70	9.4		U
591-78-6	2-Hexanone	2.2	9.4		U
98-82-8	Isopropylbenzene	0.83	9.4		U
79-20-9	Methyl acetate	1.5	9.4		U
75-09-2	Methylene chloride	0.58	9.4	2.2	J
108-87-2	Methyl cyclohexane	0.28	9.4		U
1634-04-4	Methyl tert-butyl ether	0.30	9.4		U
108-10-1	4-Methyl-2-pentanone	0.54	9.4		U
100-42-5	Styrene	0.33	9.4		U
79-34-5	1,1,2,2-Tetrachloroethane	0.40	9.4		U
127-18-4	Tetrachloroethene	0.91	9.4		U

AW
2/26/09

FORM 1
VOLATILE ORGANICS ANALYSIS DATA SHEET

CLIENT SAMPLE NO. 6

MR08-IS07
6-6-7-08D

Lab Name: EMPIRICAL LABS Contract: CH2MHILL

Lab Code: NA Case No.: NA SAS No.: NA SDG No.: LEJEUNE023

Matrix: (soil/water) SOIL Lab Sample ID: 0812082-06

Sample wt/vol: 5.9 (g/mL) G Lab File ID: 1208206A

Level: (low/med) LOW Date Sampled: 12/04/08 10:05

% Moisture: not dec. 10 Date Analyzed: 12/14/08 05:44

GC Column: RTX-VRX ID: 0.25 (mm) Dilution Factor: 1.0

Soil Extract Volume:_____(uL) Soil Aliquot Volume: _____(uL)

CONCENTRATION UNITS: (ug/L or ug/Kg) UG/KG

CAS NO.	COMPOUND	MDL	RL	CONC	Q
108-88-3	Toluene	0.81	9.4		U
120-82-1	1,2,4-Trichlorobenzene	0.17	9.4		U
71-55-6	1,1,1-Trichloroethane	0.85	9.4		U
79-00-5	1,1,2-Trichloroethane	0.33	9.4		U
79-01-6	Trichloroethene	0.80	9.4		U
76-13-1	Trichlorotrifluoroethane	0.52	9.4		U
75-69-4	Trichlorofluoromethane	0.89	9.4		U
75-01-4	Vinyl chloride	1.0	9.4		U
1330-20-7	Xylene(total)	0.66	9.4		U

hW
2/26/09

FORM 1
VOLATILE ORGANICS ANALYSIS DATA SHEET

CLIENT SAMPLE NO. 7

MR08-SS077-08D

Lab Name: EMPIRICAL LABS Contract: CH2MHILL

Lab Code: NA Case No.: NA SAS No.: NA SDG No.: LEJEUNE023

Matrix: (soil/water) SOIL Lab Sample ID: 0812082-07

Sample wt/vol: 5.5 (g/mL) G Lab File ID: 1208207A

Level: (low/med) LOW Date Sampled: 12/04/08 10:20

% Moisture: not dec. 15 Date Analyzed: 12/14/08 06:23

GC Column: RTX-VRX ID: 0.25 (mm) Dilution Factor: 1.0

Soil Extract Volume:_____(uL) Soil Aliquot Volume: _____(uL)

CONCENTRATION UNITS: (ug/L or ug/Kg) UG/KG

CAS NO.	COMPOUND	MDL	RL	CONC	Q
67-64-1	Acetone	2.1	11	360	
71-43-2	Benzene	0.50	11		U
75-27-4	Bromodichloromethane	0.32	11		U
75-25-2	Bromoform	1.1	11		U
74-83-9	Bromomethane	0.77	11		~~U~~ UJ CCH
78-93-3	2-Butanone	1.5	11	5.7	J
75-15-0	Carbon disulfide	1.4	11		U
56-23-5	Carbon tetrachloride	0.94	11		U
108-90-7	Chlorobenzene	0.36	11		U
75-00-3	Chloroethane	1.2	11		U
67-66-3	Chloroform	0.59	11		U
74-87-3	Chloromethane	0.56	11		U
110-82-7	Cyclohexane	0.58	11		U
124-48-1	Dibromochloromethane	0.36	11		U
96-12-8	1,2-Dibromo-3-chloropropane	1.3	5.4		U
106-93-4	1,2-Dibromoethane	0.46	11		U
95-50-1	1,2-Dichlorobenzene	0.40	11		U
541-73-1	1,3-Dichlorobenzene	0.90	11		U
106-46-7	1,4-Dichlorobenzene	0.59	11		U
75-71-8	Dichlorodifluoromethane	1.2	11		U
75-34-3	1,1-Dichloroethane	0.58	11		U
107-06-2	1,2-Dichloroethane	0.49	11		U
75-35-4	1,1-Dichloroethene	1.3	11		U
156-59-2	cis-1,2-Dichloroethene	1.3	11		U
156-60-5	trans-1,2-Dichloroethene	1.2	11		U
78-87-5	1,2-Dichloropropane	0.49	11		U
10061-01-5	cis-1,3-Dichloropropene	0.54	11		U
10061-02-6	trans-1,3-Dichloropropene	0.34	11		U
100-41-4	Ethylbenzene	0.80	11		U
591-78-6	2-Hexanone	2.5	11		U
98-82-8	Isopropylbenzene	0.94	11		U
79-20-9	Methyl acetate	1.7	11		U
75-09-2	Methylene chloride	0.66	11	2.0	J
108-87-2	Methyl cyclohexane	0.32	11		U
1634-04-4	Methyl tert-butyl ether	0.34	11		U
108-10-1	4-Methyl-2-pentanone	0.62	11		U
100-42-5	Styrene	0.38	11		U
79-34-5	1,1,2,2-Tetrachloroethane	0.46	11		U
127-18-4	Tetrachloroethene	1.0	11		U

FORM I VOA

RW
2/26/09

FORM 1
VOLATILE ORGANICS ANALYSIS DATA SHEET

CLIENT SAMPLE NO. 7

MR08-SS077-08D

Lab Name: EMPIRICAL LABS Contract: CH2MHILL

Lab Code: NA Case No.: NA SAS No.: NA SDG No.: LEJEUNE023

Matrix: (soil/water) SOIL Lab Sample ID: 0812082-07

Sample wt/vol: 5.5 (g/mL) G Lab File ID: 1208207A

Level: (low/med) LOW Date Sampled: 12/04/08 10:20

% Moisture: not dec. 15 Date Analyzed: 12/14/08 06:23

GC Column: RTX-VRX ID: 0.25 (mm) Dilution Factor: 1.0

Soil Extract Volume:_____(uL) Soil Aliquot Volume: _____(uL)

CONCENTRATION UNITS: (ug/L or ug/Kg) UG/KG

CAS NO.	COMPOUND	MDL	RL	CONC	Q
108-88-3	Toluene	0.92	11	2.7	J
120-82-1	1,2,4-Trichlorobenzene	0.19	11		U
71-55-6	1,1,1-Trichloroethane	0.97	11		U
79-00-5	1,1,2-Trichloroethane	0.38	11		U
79-01-6	Trichloroethene	0.91	11		U
76-13-1	Trichlorotrifluoroethane	0.59	11		U
75-69-4	Trichlorofluoromethane	1.0	11		U
75-01-4	Vinyl chloride	1.2	11		U
1330-20-7	Xylene(total)	0.75	11		U

MW
2/26/09

FORM 1
VOLATILE ORGANICS ANALYSIS DATA SHEET

CLIENT SAMPLE NO. 8

MR08-IS07
7-6-7-08D

Lab Name: EMPIRICAL LABS Contract: CH2MHILL

Lab Code: NA Case No.: NA SAS No.: NA SDG No.: LEJEUNE023

Matrix: (soil/water) SOIL Lab Sample ID: 0812082-08

Sample wt/vol: 6.0 (g/mL) G Lab File ID: 1208208A

Level: (low/med) LOW Date Sampled: 12/04/08 10:30

% Moisture: not dec. 13 Date Analyzed: 12/14/08 12:16

GC Column: RTX-VRX ID: 0.25 (mm) Dilution Factor: 1.0

Soil Extract Volume:_____(uL) Soil Aliquot Volume: _____(uL)

CONCENTRATION UNITS: (ug/L or ug/Kg) UG/KG

CAS NO.	COMPOUND	MDL	RL	CONC	Q
67-64-1	Acetone	1.9	9.6	9.6 ~~4.9~~	U CCH ~~B~~
71-43-2	Benzene	0.45	9.6		U
75-27-4	Bromodichloromethane	0.29	9.6		U
75-25-2	Bromoform	0.96	9.6		U
74-83-9	Bromomethane	0.70	9.6		~~U~~ UJ CCH
78-93-3	2-Butanone	1.4	9.6		~~U~~ UJ CCH
75-15-0	Carbon disulfide	1.2	9.6		U
56-23-5	Carbon tetrachloride	0.85	9.6		U
108-90-7	Chlorobenzene	0.33	9.6		U
75-00-3	Chloroethane	1.1	9.6		U
67-66-3	Chloroform	0.53	9.6		U
74-87-3	Chloromethane	0.50	9.6		~~U~~ UJ CCH
110-82-7	Cyclohexane	0.52	9.6		U
124-48-1	Dibromochloromethane	0.33	9.6		U
96-12-8	1,2-Dibromo-3-chloropropane	1.2	4.8		U
106-93-4	1,2-Dibromoethane	0.42	9.6		U
95-50-1	1,2-Dichlorobenzene	0.36	9.6		U
541-73-1	1,3-Dichlorobenzene	0.81	9.6		U
106-46-7	1,4-Dichlorobenzene	0.53	9.6		U
75-71-8	Dichlorodifluoromethane	1.1	9.6		U
75-34-3	1,1-Dichloroethane	0.52	9.6		U
107-06-2	1,2-Dichloroethane	0.44	9.6		U
75-35-4	1,1-Dichloroethene	1.2	9.6		U
156-59-2	cis-1,2-Dichloroethene	1.2	9.6		U
156-60-5	trans-1,2-Dichloroethene	1.1	9.6		U
78-87-5	1,2-Dichloropropane	0.44	9.6		U
10061-01-5	cis-1,3-Dichloropropene	0.48	9.6		U
10061-02-6	trans-1,3-Dichloropropene	0.31	9.6		U
100-41-4	Ethylbenzene	0.72	9.6		U
591-78-6	2-Hexanone	2.2	9.6		~~U~~ UJ CCH
98-82-8	Isopropylbenzene	0.85	9.6		U
79-20-9	Methyl acetate	1.5	9.6		U
75-09-2	Methylene chloride	0.60	9.6	9.6 ~~1.1~~	~~JB~~ BL
108-87-2	Methyl cyclohexane	0.29	9.6		U
1634-04-4	Methyl tert-butyl ether	0.31	9.6		U
108-10-1	4-Methyl-2-pentanone	0.56	9.6		U
100-42-5	Styrene	0.34	9.6		U
79-34-5	1,1,2,2-Tetrachloroethane	0.42	9.6		U
127-18-4	Tetrachloroethene	0.94	9.6		U

lw 2/26/09

FORM 1
VOLATILE ORGANICS ANALYSIS DATA SHEET

CLIENT SAMPLE NO. 8

MR08-IS07
7-6-7-08D

Lab Name: EMPIRICAL LABS Contract: CH2MHILL

Lab Code: NA Case No.: NA SAS No.: NA SDG No.: LEJEUNE023

Matrix: (soil/water) SOIL Lab Sample ID: 0812082-08

Sample wt/vol: 6.0 (g/mL) G Lab File ID: 1208208A

Level: (low/med) LOW Date Sampled: 12/04/08 10:30

% Moisture: not dec. 13 Date Analyzed: 12/14/08 12:16

GC Column: RTX-VRX ID: 0.25 (mm) Dilution Factor: 1.0

Soil Extract Volume:_____(uL) Soil Aliquot Volume: _____(uL)

CONCENTRATION UNITS: (ug/L or ug/Kg) UG/KG

CAS NO.	COMPOUND	MDL	RL	CONC	Q
108-88-3	Toluene	0.83	9.6		U
120-82-1	1,2,4-Trichlorobenzene	0.17	9.6		U
71-55-6	1,1,1-Trichloroethane	0.87	9.6		U
79-00-5	1,1,2-Trichloroethane	0.34	9.6		U
79-01-6	Trichloroethene	0.82	9.6		U
76-13-1	Trichlorotrifluoroethane	0.53	9.6		U
75-69-4	Trichlorofluoromethane	0.92	9.6		U
75-01-4	Vinyl chloride	1.1	9.6		~~U~~ UJ CCH
1330-20-7	Xylene(total)	0.68	9.6		U

LW
2/26/09

FORM 1
VOLATILE ORGANICS ANALYSIS DATA SHEET

CLIENT SAMPLE NO. 9

MR08-SS078-08D

Lab Name: EMPIRICAL LABS Contract: CH2MHILL

Lab Code: NA Case No.: NA SAS No.: NA SDG No.: LEJEUNE023

Matrix: (soil/water) SOIL Lab Sample ID: 0812082-09

Sample wt/vol: 5.7 (g/mL) G Lab File ID: 1208209A

Level: (low/med) LOW Date Sampled: 12/04/08 10:45

% Moisture: not dec. 16 Date Analyzed: 12/14/08 12:55

GC Column: RTX-VRX ID: 0.25 (mm) Dilution Factor: 1.0

Soil Extract Volume:_____(uL) Soil Aliquot Volume: _____(uL)

CONCENTRATION UNITS: (ug/L or ug/Kg) UG/KG

CAS NO.	COMPOUND	MDL	RL	CONC	Q
67-64-1	Acetone	2.1	10	200	~~X~~ J SS
71-43-2	Benzene	0.50	10		U UJ
75-27-4	Bromodichloromethane	0.32	10		U
75-25-2	Bromoform	1.0	10		U
74-83-9	Bromomethane	0.76	10		U
78-93-3	2-Butanone	1.5	10	3.2	J J
75-15-0	Carbon disulfide	1.4	10		U UJ
56-23-5	Carbon tetrachloride	0.93	10		U
108-90-7	Chlorobenzene	0.36	10		U
75-00-3	Chloroethane	1.2	10		U
67-66-3	Chloroform	0.58	10		U
74-87-3	Chloromethane	0.55	10		U
110-82-7	Cyclohexane	0.57	10		U
124-48-1	Dibromochloromethane	0.36	10		U
96-12-8	1,2-Dibromo-3-chloropropane	1.3	5.3		U
106-93-4	1,2-Dibromoethane	0.45	10		U
95-50-1	1,2-Dichlorobenzene	0.39	10		U
541-73-1	1,3-Dichlorobenzene	0.89	10		U
106-46-7	1,4-Dichlorobenzene	0.58	10		U
75-71-8	Dichlorodifluoromethane	1.2	10		U ~~X~~
75-34-3	1,1-Dichloroethane	0.57	10		U
107-06-2	1,2-Dichloroethane	0.48	10		U
75-35-4	1,1-Dichloroethene	1.3	10		U
156-59-2	cis-1,2-Dichloroethene	1.3	10		U
156-60-5	trans-1,2-Dichloroethene	1.2	10		U
78-87-5	1,2-Dichloropropane	0.48	10		U
10061-01-5	cis-1,3-Dichloropropene	0.53	10		U
10061-02-6	trans-1,3-Dichloropropene	0.34	10		U
100-41-4	Ethylbenzene	0.79	10		U
591-78-6	2-Hexanone	2.4	10		U
98-82-8	Isopropylbenzene	0.93	10		U
79-20-9	Methyl acetate	1.7	10		U
75-09-2	Methylene chloride	0.65	10	10UJ ~~2.2~~	~~JB~~ SS ~~Q~~
108-87-2	Methyl cyclohexane	0.32	10		U UJ SS
1634-04-4	Methyl tert-butyl ether	0.34	10		U
108-10-1	4-Methyl-2-pentanone	0.61	10		U
100-42-5	Styrene	0.37	10		U
79-34-5	1,1,2,2-Tetrachloroethane	0.45	10		U
127-18-4	Tetrachloroethene	1.0	10		U

FORM I VOA

uw
2/26/09

FORM 1
VOLATILE ORGANICS ANALYSIS DATA SHEET

CLIENT SAMPLE NO. 9

MR08-SS078-08D

Lab Name: EMPIRICAL LABS Contract: CH2MHILL

Lab Code: NA Case No.: NA SAS No.: NA SDG No.: LEJEUNE023

Matrix: (soil/water) SOIL Lab Sample ID: 0812082-09

Sample wt/vol: 5.7 (g/mL) G Lab File ID: 1208209A

Level: (low/med) LOW Date Sampled: 12/04/08 10:45

% Moisture: not dec. 16 Date Analyzed: 12/14/08 12:55

GC Column: RTX-VRX ID: 0.25 (mm) Dilution Factor: 1.0

Soil Extract Volume:_____(uL) Soil Aliquot Volume: _____(uL)

CONCENTRATION UNITS: (ug/L or ug/Kg) UG/KG

CAS NO.	COMPOUND	MDL	RL	CONC	Q
108-88-3	Toluene	0.91	10		U
120-82-1	1,2,4-Trichlorobenzene	0.19	10		U
71-55-6	1,1,1-Trichloroethane	0.95	10		U
79-00-5	1,1,2-Trichloroethane	0.37	10		U
79-01-6	Trichloroethene	0.90	10		U
76-13-1	Trichlorotrifluoroethane	0.58	10		U
75-69-4	Trichlorofluoromethane	1.0	10		U
75-01-4	Vinyl chloride	1.2	10		U
1330-20-7	Xylene(total)	0.74	10		U

U US SS

FORM I VOA

DW
2/26/09

FORM 1
VOLATILE ORGANICS ANALYSIS DATA SHEET

CLIENT SAMPLE NO. 9RE

MR08-SS078-08DR

Lab Name: EMPIRICAL LABS Contract: CH2MHILL

Lab Code: NA Case No.: NA SAS No.: NA SDG No.: LEJEUNE023

Matrix: (soil/water) SOIL Lab Sample ID: 0812082-09R

Sample wt/vol: 5.1 (g/mL) G Lab File ID: 1208209B

Level: (low/med) LOW Date Sampled: 12/04/08 10:45 Use original

% Moisture: not dec. 16 Date Analyzed: 12/17/08 09:42

GC Column: RTX-VRX ID: 0.25 (mm) Dilution Factor: 1.0

Soil Extract Volume:_____(uL) Soil Aliquot Volume: _____(uL)

CONCENTRATION UNITS: (ug/L or ug/Kg) UG/KG

CAS NO.	COMPOUND	MDL	RL	CONC	Q
67-64-1	Acetone	2.3	12	220	~~X~~ J SSL
71-43-2	Benzene	0.55	12		U UJ
75-27-4	Bromodichloromethane	0.35	12		U
75-25-2	Bromoform	1.2	12		U
74-83-9	Bromomethane	0.84	12		U
78-93-3	2-Butanone	1.6	12		U
75-15-0	Carbon disulfide	1.5	12		U
56-23-5	Carbon tetrachloride	1.0	12		U
108-90-7	Chlorobenzene	0.40	12		U
75-00-3	Chloroethane	1.3	12		U
67-66-3	Chloroform	0.64	12		U
74-87-3	Chloromethane	0.61	12		U
110-82-7	Cyclohexane	0.63	12		U
124-48-1	Dibromochloromethane	0.40	12		U
96-12-8	1,2-Dibromo-3-chloropropane	1.4	5.8		U
106-93-4	1,2-Dibromoethane	0.50	12		U
95-50-1	1,2-Dichlorobenzene	0.43	12		U
541-73-1	1,3-Dichlorobenzene	0.98	12		U
106-46-7	1,4-Dichlorobenzene	0.64	12		U
75-71-8	Dichlorodifluoromethane	1.3	12		UY
75-34-3	1,1-Dichloroethane	0.63	12		U
107-06-2	1,2-Dichloroethane	0.54	12		U
75-35-4	1,1-Dichloroethene	1.4	12		U
156-59-2	cis-1,2-Dichloroethene	1.4	12		U
156-60-5	trans-1,2-Dichloroethene	1.3	12		U
78-87-5	1,2-Dichloropropane	0.54	12		U
10061-01-5	cis-1,3-Dichloropropene	0.58	12		U
10061-02-6	trans-1,3-Dichloropropene	0.37	12		U
100-41-4	Ethylbenzene	0.88	12		U
591-78-6	2-Hexanone	2.7	12		U
98-82-8	Isopropylbenzene	1.0	12		U
79-20-9	Methyl acetate	1.9	12		U
75-09-2	Methylene chloride	0.72	12	124J ~~2.0 JB~~	SSB
108-87-2	Methyl cyclohexane	0.35	12		U UJ SS
1634-04-4	Methyl tert-butyl ether	0.37	12		U
108-10-1	4-Methyl-2-pentanone	0.68	12		U
100-42-5	Styrene	0.41	12		U
79-34-5	1,1,2,2-Tetrachloroethane	0.50	12		U
127-18-4	Tetrachloroethene	1.1	12		U

FORM I VOA

RE

RE

RE

FORM 1
VOLATILE ORGANICS ANALYSIS DATA SHEET

CLIENT SAMPLE NO. 9RE

MR08-SS078-08DR

Lab Name: EMPIRICAL LABS Contract: CH2MHILL

Lab Code: NA Case No.: NA SAS No.: NA SDG No.: LEJEUNE023

Matrix: (soil/water) SOIL Lab Sample ID: 0812082-09R

Sample wt/vol: 5.1 (g/mL) G Lab File ID: 1208209B

Level: (low/med) LOW Date Sampled: 12/04/08 10:45

% Moisture: not dec. 16 Date Analyzed: 12/17/08 09:42 Use Original

GC Column: RTX-VRX ID: 0.25 (mm) Dilution Factor: 1.0

Soil Extract Volume:_____(uL) Soil Aliquot Volume: _____(uL)

CONCENTRATION UNITS: (ug/L or ug/Kg) UG/KG

CAS NO.	COMPOUND	MDL	RL	CONC	Q
108-88-3	Toluene	1.0	12		U UJ SSI
120-82-1	1,2,4-Trichlorobenzene	0.21	12		U
71-55-6	1,1,1-Trichloroethane	1.0	12		U
79-00-5	1,1,2-Trichloroethane	0.41	12		U
79-01-6	Trichloroethene	0.99	12		U
76-13-1	Trichlorotrifluoroethane	0.64	12		U
75-69-4	Trichlorofluoromethane	1.1	12		U
75-01-4	Vinyl chloride	1.3	12		U
1330-20-7	Xylene(total)	0.82	12		U

R RE

FORM I VOA

MW 2/26/09

FORM 1
VOLATILE ORGANICS ANALYSIS DATA SHEET

CLIENT SAMPLE NO. 10

MR08-IS07
8-6-7-08D

Lab Name: EMPIRICAL LABS Contract: CH2MHILL

Lab Code: NA Case No.: NA SAS No.: NA SDG No.: LEJEUNE023

Matrix: (soil/water) SOIL Lab Sample ID: 0812082-10

Sample wt/vol: 4.8 (g/mL) G Lab File ID: 1208210A

Level: (low/med) LOW Date Sampled: 12/04/08 10:55

% Moisture: not dec. 13 Date Analyzed: 12/14/08 13:34

GC Column: RTX-VRX ID: 0.25 (mm) Dilution Factor: 1.0

Soil Extract Volume:_____(uL) Soil Aliquot Volume: _____(uL)

CONCENTRATION UNITS: (ug/L or ug/Kg) UG/KG

CAS NO.	COMPOUND	MDL	RL	CONC	Q
67-64-1	Acetone	2.4	12	13	~~X~~ UJ ~~B~~ CCi
71-43-2	Benzene	0.56	12		U
75-27-4	Bromodichloromethane	0.35	12		U
75-25-2	Bromoform	1.2	12		U
74-83-9	Bromomethane	0.85	12		~~U~~ UJ CCH
78-93-3	2-Butanone	1.6	12		~~U~~ UJ CCi
75-15-0	Carbon disulfide	1.5	12		U
56-23-5	Carbon tetrachloride	1.0	12		U
108-90-7	Chlorobenzene	0.40	12		U
75-00-3	Chloroethane	1.3	12		U
67-66-3	Chloroform	0.65	12		U
74-87-3	Chloromethane	0.62	12		~~U~~ UJ CCH
110-82-7	Cyclohexane	0.64	12		U
124-48-1	Dibromochloromethane	0.40	12		U
96-12-8	1,2-Dibromo-3-chloropropane	1.4	5.9		U
106-93-4	1,2-Dibromoethane	0.51	12		U
95-50-1	1,2-Dichlorobenzene	0.44	12		U
541-73-1	1,3-Dichlorobenzene	0.99	12		U
106-46-7	1,4-Dichlorobenzene	0.65	12		U
75-71-8	Dichlorodifluoromethane	1.3	12		U
75-34-3	1,1-Dichloroethane	0.64	12		U
107-06-2	1,2-Dichloroethane	0.54	12		U
75-35-4	1,1-Dichloroethene	1.4	12		U
156-59-2	cis-1,2-Dichloroethene	1.4	12		U
156-60-5	trans-1,2-Dichloroethene	1.3	12		U
78-87-5	1,2-Dichloropropane	0.54	12		U
10061-01-5	cis-1,3-Dichloropropene	0.59	12		U
10061-02-6	trans-1,3-Dichloropropene	0.38	12		U
100-41-4	Ethylbenzene	0.89	12		U
591-78-6	2-Hexanone	2.7	12		~~U~~ UJ CCi
98-82-8	Isopropylbenzene	1.0	12		U
79-20-9	Methyl acetate	1.9	12		U
75-09-2	Methylene chloride	0.73	12	124	~~1.4 JB~~ B
108-87-2	Methyl cyclohexane	0.35	12		U
1634-04-4	Methyl tert-butyl ether	0.38	12		U
108-10-1	4-Methyl-2-pentanone	0.69	12		U
100-42-5	Styrene	0.41	12		U
79-34-5	1,1,2,2-Tetrachloroethane	0.51	12		U
127-18-4	Tetrachloroethene	1.1	12		U

FORM I VOA

LW
2/26/09

FORM 1
VOLATILE ORGANICS ANALYSIS DATA SHEET

CLIENT SAMPLE NO.

10

MR08-IS07
8-6-7-08D

Lab Name: EMPIRICAL LABS Contract: CH2MHILL

Lab Code: NA Case No.: NA SAS No.: NA SDG No.: LEJEUNE023

Matrix: (soil/water) SOIL Lab Sample ID: 0812082-10

Sample wt/vol: 4.8 (g/mL) G Lab File ID: 1208210A

Level: (low/med) LOW Date Sampled: 12/04/08 10:55

% Moisture: not dec. 13 Date Analyzed: 12/14/08 13:34

GC Column: RTX-VRX ID: 0.25 (mm) Dilution Factor: 1.0

Soil Extract Volume:_____(uL) Soil Aliquot Volume: _____(uL)

CONCENTRATION UNITS: (ug/L or ug/Kg) UG/KG

CAS NO.	COMPOUND	MDL	RL	CONC	Q
108-88-3	Toluene	1.0	12		U
120-82-1	1,2,4-Trichlorobenzene	0.21	12		U
71-55-6	1,1,1-Trichloroethane	1.1	12		U
79-00-5	1,1,2-Trichloroethane	0.41	12		U
79-01-6	Trichloroethene	1.0	12		U
76-13-1	Trichlorotrifluoroethane	0.65	12		U
75-69-4	Trichlorofluoromethane	1.1	12		U
75-01-4	Vinyl chloride	1.3	12		~~U~~ UJ CCI
1330-20-7	Xylene(total)	0.83	12		U

FORM I VOA

GW
2/26/09

FORM 1
VOLATILE ORGANICS ANALYSIS DATA SHEET

CLIENT SAMPLE NO. 11

MR08-SS079-08D

Lab Name: EMPIRICAL LABS Contract: CH2MHILL

Lab Code: NA Case No.: NA SAS No.: NA SDG No.: LEJEUNE023

Matrix: (soil/water) SOIL Lab Sample ID: 0812082-11

Sample wt/vol: 5.4 (g/mL) G Lab File ID: 1208211A

Level: (low/med) LOW Date Sampled: 12/04/08 11:20

% Moisture: not dec. 18 Date Analyzed: 12/14/08 14:13

GC Column: RTX-VRX ID: 0.25 (mm) Dilution Factor: 1.0

Soil Extract Volume:_____(uL) Soil Aliquot Volume: _____(uL)

CONCENTRATION UNITS: (ug/L or ug/Kg) UG/KG

CAS NO.	COMPOUND	MDL	RL	CONC	Q
67-64-1	Acetone	2.3	11	220	~~X~~ J SSL
71-43-2	Benzene	0.53	11		U UJ
75-27-4	Bromodichloromethane	0.34	11		U
75-25-2	Bromoform	1.1	11		U
74-83-9	Bromomethane	0.82	11		U
78-93-3	2-Butanone	1.6	11	4.2	J J
75-15-0	Carbon disulfide	1.5	11		U UJ
56-23-5	Carbon tetrachloride	1.00	11		U
108-90-7	Chlorobenzene	0.38	11		U
75-00-3	Chloroethane	1.2	11		U
67-66-3	Chloroform	0.62	11		U
74-87-3	Chloromethane	0.59	11		U
110-82-7	Cyclohexane	0.61	11		U
124-48-1	Dibromochloromethane	0.38	11		U
96-12-8	1,2-Dibromo-3-chloropropane	1.4	5.7		U
106-93-4	1,2-Dibromoethane	0.49	11		U
95-50-1	1,2-Dichlorobenzene	0.42	11		U
541-73-1	1,3-Dichlorobenzene	0.95	11		U
106-46-7	1,4-Dichlorobenzene	0.62	11		U
75-71-8	Dichlorodifluoromethane	1.2	11		U
75-34-3	1,1-Dichloroethane	0.61	11		U
107-06-2	1,2-Dichloroethane	0.52	11		U
75-35-4	1,1-Dichloroethene	1.4	11		U
156-59-2	cis-1,2-Dichloroethene	1.4	11		U
156-60-5	trans-1,2-Dichloroethene	1.2	11		U
78-87-5	1,2-Dichloropropane	0.52	11		U
10061-01-5	cis-1,3-Dichloropropene	0.57	11		U
10061-02-6	trans-1,3-Dichloropropene	0.36	11		U
100-41-4	Ethylbenzene	0.85	11		U
591-78-6	2-Hexanone	2.6	11		U
98-82-8	Isopropylbenzene	1.00	11		U
79-20-9	Methyl acetate	1.8	11	24	J
75-09-2	Methylene chloride	0.70	11		U UJ
108-87-2	Methyl cyclohexane	0.34	11		U
1634-04-4	Methyl tert-butyl ether	0.36	11		U
108-10-1	4-Methyl-2-pentanone	0.66	11		U
100-42-5	Styrene	0.40	11		U
79-34-5	1,1,2,2-Tetrachloroethane	0.49	11		U
127-18-4	Tetrachloroethene	1.1	11		U

FORM I VOA

hw
2/26/09

FORM 1
VOLATILE ORGANICS ANALYSIS DATA SHEET

CLIENT SAMPLE NO. (1

MR08-SS079-08D

Lab Name: EMPIRICAL LABS Contract: CH2MHILL

Lab Code: NA Case No.: NA SAS No.: NA SDG No.: LEJEUNE023

Matrix: (soil/water) SOIL Lab Sample ID: 0812082-11

Sample wt/vol: 5.4 (g/mL) G Lab File ID: 1208211A

Level: (low/med) LOW Date Sampled: 12/04/08 11:20

% Moisture: not dec. 18 Date Analyzed: 12/14/08 14:13

GC Column: RTX-VRX ID: 0.25 (mm) Dilution Factor: 1.0

Soil Extract Volume:_____(uL) Soil Aliquot Volume: _____(uL)

CONCENTRATION UNITS: (ug/L or ug/Kg) UG/KG

CAS NO.	COMPOUND	MDL	RL	CONC	Q
108-88-3	Toluene	0.97	11	1.8	~~J~~ J SS
120-82-1	1,2,4-Trichlorobenzene	0.20	11		~~U~~ UJ
71-55-6	1,1,1-Trichloroethane	1.0	11		~~U~~
79-00-5	1,1,2-Trichloroethane	0.40	11		~~U~~
79-01-6	Trichloroethene	0.96	11		~~U~~
76-13-1	Trichlorotrifluoroethane	0.62	11		~~U~~
75-69-4	Trichlorofluoromethane	1.1	11		~~U~~
75-01-4	Vinyl chloride	1.2	11		~~U~~
1330-20-7	Xylene(total)	0.79	11		~~U~~

LW
2/26/09

FORM 1
VOLATILE ORGANICS ANALYSIS DATA SHEET

CLIENT SAMPLE NO. 11RE

MR08-SS079-08DR

Lab Name: EMPIRICAL LABS Contract: CH2MHILL

Lab Code: NA Case No.: NA SAS No.: NA SDG No.: LEJEUNE023

Matrix: (soil/water) SOIL Lab Sample ID: 0812082-11R

Sample wt/vol: 5.6 (g/mL) G Lab File ID: 1208211B

Level: (low/med) LOW Date Sampled: 12/04/08 11:20

% Moisture: not dec. 18 Date Analyzed: 12/17/08 10:22 Use original

GC Column: RTX-VRX ID: 0.25 (mm) Dilution Factor: 1.0

Soil Extract Volume:_____(uL) Soil Aliquot Volume: _____(uL)

CONCENTRATION UNITS: (ug/L or ug/Kg) UG/KG

CAS NO.	COMPOUND	MDL	RL	CONC	Q
67-64-1	Acetone	2.2	11	180	J SSL
71-43-2	Benzene	0.52	11		U UJ
75-27-4	Bromodichloromethane	0.33	11		U
75-25-2	Bromoform	1.1	11		U
74-83-9	Bromomethane	0.79	11		U
78-93-3	2-Butanone	1.5	11	3.3	J J
75-15-0	Carbon disulfide	1.4	11		U UJ
56-23-5	Carbon tetrachloride	0.97	11		U
108-90-7	Chlorobenzene	0.37	11		U
75-00-3	Chloroethane	1.2	11		U
67-66-3	Chloroform	0.61	11		U
74-87-3	Chloromethane	0.57	11		U
110-82-7	Cyclohexane	0.60	11		U
124-48-1	Dibromochloromethane	0.37	11		U
96-12-8	1,2-Dibromo-3-chloropropane	1.3	5.5		U
106-93-4	1,2-Dibromoethane	0.47	11		U
95-50-1	1,2-Dichlorobenzene	0.41	11		U
541-73-1	1,3-Dichlorobenzene	0.92	11		U
106-46-7	1,4-Dichlorobenzene	0.61	11		U
75-71-8	Dichlorodifluoromethane	1.2	11		U
75-34-3	1,1-Dichloroethane	0.60	11		U
107-06-2	1,2-Dichloroethane	0.51	11		U
75-35-4	1,1-Dichloroethene	1.3	11		U
156-59-2	cis-1,2-Dichloroethene	1.3	11		U
156-60-5	trans-1,2-Dichloroethene	1.2	11		U
78-87-5	1,2-Dichloropropane	0.51	11		U
10061-01-5	cis-1,3-Dichloropropene	0.55	11		U
10061-02-6	trans-1,3-Dichloropropene	0.35	11		U
100-41-4	Ethylbenzene	0.83	11		U
591-78-6	2-Hexanone	2.5	11		U
98-82-8	Isopropylbenzene	0.97	11		U
79-20-9	Methyl acetate	1.8	11		U
75-09-2	Methylene chloride	0.68	11	11UJ 1.7	JB SSL B
108-87-2	Methyl cyclohexane	0.33	11		U UJ SSL
1634-04-4	Methyl tert-butyl ether	0.35	11		U
108-10-1	4-Methyl-2-pentanone	0.64	11		U
100-42-5	Styrene	0.38	11		U
79-34-5	1,1,2,2-Tetrachloroethane	0.47	11		U
127-18-4	Tetrachloroethene	1.1	11		U

RE

FORM I VOA

hW 2/26/09

FORM 1
VOLATILE ORGANICS ANALYSIS DATA SHEET

CLIENT SAMPLE NO.

MR08-SS079-08DR

1RE

Lab Name: EMPIRICAL LABS Contract: CH2MHILL

Lab Code: NA Case No.: NA SAS No.: NA SDG No.: LEJEUNE023

Matrix: (soil/water) SOIL Lab Sample ID: 0812082-11R

Sample wt/vol: 5.6 (g/mL) G Lab File ID: 1208211B

Level: (low/med) LOW Date Sampled: 12/04/08 11:20

% Moisture: not dec. 18 Date Analyzed: 12/17/08 10:22

GC Column: RTX-VRX ID: 0.25 (mm) Dilution Factor: 1.0

Soil Extract Volume:_____(uL) Soil Aliquot Volume: _____(uL)

Use original

CONCENTRATION UNITS: (ug/L or ug/Kg) UG/KG

CAS NO.	COMPOUND	MDL	RL	CONC	Q
108-88-3	Toluene	0.95	11		U UJ SS
120-82-1	1,2,4-Trichlorobenzene	0.20	11		U
71-55-6	1,1,1-Trichloroethane	0.99	11		U
79-00-5	1,1,2-Trichloroethane	0.38	11		U
79-01-6	Trichloroethene	0.94	11		U
76-13-1	Trichlorotrifluoroethane	0.61	11		U
75-69-4	Trichlorofluoromethane	1.0	11		U
75-01-4	Vinyl chloride	1.2	11		U
1330-20-7	Xylene(total)	0.77	11		U

R

FORM I VOA

kw
2/24/09

FORM 1
VOLATILE ORGANICS ANALYSIS DATA SHEET

CLIENT SAMPLE NO. 12

MR08-SS079D-08D

Lab Name: EMPIRICAL LABS Contract: CH2MHILL

Lab Code: NA Case No.: NA SAS No.: NA SDG No.: LEJEUNE023

Matrix: (soil/water) SOIL Lab Sample ID: 0812082-12

Sample wt/vol: 4.9 (g/mL) G Lab File ID: 1208212A

Level: (low/med) LOW Date Sampled: 12/04/08 11:25

% Moisture: not dec. 17 Date Analyzed: 12/14/08 14:52

GC Column: RTX-VRX ID: 0.25 (mm) Dilution Factor: 1.0

Soil Extract Volume:_____(uL) Soil Aliquot Volume: _____(uL)

CONCENTRATION UNITS: (ug/L or ug/Kg) UG/KG

CAS NO.	COMPOUND	MDL	RL	CONC	Q
67-64-1	Acetone	2.4	12	190	~~U~~ J SSL
71-43-2	Benzene	0.58	12		U UJ
75-27-4	Bromodichloromethane	0.37	12		U
75-25-2	Bromoform	1.2	12		U
74-83-9	Bromomethane	0.88	12		U
78-93-3	2-Butanone	1.7	12	3.6	J J
75-15-0	Carbon disulfide	1.6	12		U UJ
56-23-5	Carbon tetrachloride	1.1	12		U
108-90-7	Chlorobenzene	0.42	12		U
75-00-3	Chloroethane	1.3	12		U
67-66-3	Chloroform	0.67	12		U
74-87-3	Chloromethane	0.64	12		U
110-82-7	Cyclohexane	0.66	12		U
124-48-1	Dibromochloromethane	0.42	12		U
96-12-8	1,2-Dibromo-3-chloropropane	1.5	6.1		U
106-93-4	1,2-Dibromoethane	0.53	12		U
95-50-1	1,2-Dichlorobenzene	0.45	12		U
541-73-1	1,3-Dichlorobenzene	1.0	12		U
106-46-7	1,4-Dichlorobenzene	0.67	12		U
75-71-8	Dichlorodifluoromethane	1.3	12		U
75-34-3	1,1-Dichloroethane	0.66	12		U
107-06-2	1,2-Dichloroethane	0.56	12		U
75-35-4	1,1-Dichloroethene	1.5	12		U
156-59-2	cis-1,2-Dichloroethene	1.5	12		U
156-60-5	trans-1,2-Dichloroethene	1.3	12		U
78-87-5	1,2-Dichloropropane	0.56	12		U
10061-01-5	cis-1,3-Dichloropropene	0.61	12		U
10061-02-6	trans-1,3-Dichloropropene	0.39	12		U
100-41-4	Ethylbenzene	0.92	12		U
591-78-6	2-Hexanone	2.8	12		U
98-82-8	Isopropylbenzene	1.1	12		U
79-20-9	Methyl acetate	2.0	12		U
75-09-2	Methylene chloride	0.76	12	12 UJ ~~1.5~~	JB SSL Bl
108-87-2	Methyl cyclohexane	0.37	12		U UJ SS
1634-04-4	Methyl tert-butyl ether	0.39	12		U
108-10-1	4-Methyl-2-pentanone	0.71	12		U
100-42-5	Styrene	0.43	12		U
79-34-5	1,1,2,2-Tetrachloroethane	0.53	12		U
127-18-4	Tetrachloroethene	1.2	12		U

FORM I VOA

LW 2/26/09

FORM 1
VOLATILE ORGANICS ANALYSIS DATA SHEET

CLIENT SAMPLE NO. 12

MR08-SS079D-08D

Lab Name: EMPIRICAL LABS Contract: CH2MHILL

Lab Code: NA Case No.: NA SAS No.: NA SDG No.: LEJEUNE023

Matrix: (soil/water) SOIL Lab Sample ID: 0812082-12

Sample wt/vol: 4.9 (g/mL) G Lab File ID: 1208212A

Level: (low/med) LOW Date Sampled: 12/04/08 11:25

% Moisture: not dec. 17 Date Analyzed: 12/14/08 14:52

GC Column: RTX-VRX ID: 0.25 (mm) Dilution Factor: 1.0

Soil Extract Volume:_____(uL) Soil Aliquot Volume: _____(uL)

CONCENTRATION UNITS: (ug/L or ug/Kg) UG/KG

CAS NO.	COMPOUND	MDL	RL	CONC	Q
108-88-3	Toluene	1.0	12	12U ~~B1.2~~	~~U~~ UJ SSL
120-82-1	1,2,4-Trichlorobenzene	0.22	12		U UJ
71-55-6	1,1,1-Trichloroethane	1.1	12		U
79-00-5	1,1,2-Trichloroethane	0.43	12		U
79-01-6	Trichloroethene	1.0	12		U
76-13-1	Trichlorotrifluoroethane	0.67	12		U
75-69-4	Trichlorofluoromethane	1.2	12		U
75-01-4	Vinyl chloride	1.3	12		U
1330-20-7	Xylene(total)	0.86	12		U

LW
2/26/09

FORM 1
VOLATILE ORGANICS ANALYSIS DATA SHEET

CLIENT SAMPLE NO. 12RE

MR08-SS0
79D-08DR

Lab Name: EMPIRICAL LABS Contract: CH2MHILL

Lab Code: NA Case No.: NA SAS No.: NA SDG No.: LEJEUNE023

Matrix: (soil/water) SOIL Lab Sample ID: 0812082-12R

Sample wt/vol: 5.1 (g/mL) G Lab File ID: 1208212B

Level: (low/med) LOW Date Sampled: 12/04/08 11:25 Use ORIGINAL

% Moisture: not dec. 17 Date Analyzed: 12/17/08 11:01

GC Column: RTX-VRX ID: 0.25 (mm) Dilution Factor: 1.0

Soil Extract Volume:_____(uL) Soil Aliquot Volume: _____(uL)

CONCENTRATION UNITS: (ug/L or ug/Kg) UG/KG

CAS NO.	COMPOUND	MDL	RL	CONC	Q
67-64-1	Acetone	2.3	12	180	J SSL
71-43-2	Benzene	0.55	12		U UJ
75-27-4	Bromodichloromethane	0.35	12		U
75-25-2	Bromoform	1.2	12		U
74-83-9	Bromomethane	0.84	12		U
78-93-3	2-Butanone	1.6	12	4.9	J J
75-15-0	Carbon disulfide	1.5	12		U UJ
56-23-5	Carbon tetrachloride	1.0	12		U
108-90-7	Chlorobenzene	0.40	12		U
75-00-3	Chloroethane	1.3	12		U
67-66-3	Chloroform	0.64	12		U
74-87-3	Chloromethane	0.61	12		U
110-82-7	Cyclohexane	0.63	12		U
124-48-1	Dibromochloromethane	0.40	12		U
96-12-8	1,2-Dibromo-3-chloropropane	1.4	5.9		U
106-93-4	1,2-Dibromoethane	0.50	12		U
95-50-1	1,2-Dichlorobenzene	0.43	12		U
541-73-1	1,3-Dichlorobenzene	0.98	12		U
106-46-7	1,4-Dichlorobenzene	0.64	12		U
75-71-8	Dichlorodifluoromethane	1.3	12		UW
75-34-3	1,1-Dichloroethane	0.63	12		U
107-06-2	1,2-Dichloroethane	0.54	12		U
75-35-4	1,1-Dichloroethene	1.4	12		U
156-59-2	cis-1,2-Dichloroethene	1.4	12		U
156-60-5	trans-1,2-Dichloroethene	1.3	12		U
78-87-5	1,2-Dichloropropane	0.54	12		U
10061-01-5	cis-1,3-Dichloropropene	0.59	12		U
10061-02-6	trans-1,3-Dichloropropene	0.38	12		U
100-41-4	Ethylbenzene	0.88	12		U
591-78-6	2-Hexanone	2.7	12		U
98-82-8	Isopropylbenzene	1.0	12		U
79-20-9	Methyl acetate	1.9	12		U
75-09-2	Methylene chloride	0.73	12	12UJ ~~1.3~~	JB SSLB
108-87-2	Methyl cyclohexane	0.35	12		U
1634-04-4	Methyl tert-butyl ether	0.38	12		U UJ SS
108-10-1	4-Methyl-2-pentanone	0.68	12		U
100-42-5	Styrene	0.41	12		U
79-34-5	1,1,2,2-Tetrachloroethane	0.50	12		U
127-18-4	Tetrachloroethene	1.1	12		U

FORM I VOA

LW 2/26/09

FORM 1
VOLATILE ORGANICS ANALYSIS DATA SHEET

CLIENT SAMPLE NO. 12RE

MR08-SS0
79D-08DR

Lab Name: EMPIRICAL LABS Contract: CH2MHILL

Lab Code: NA Case No.: NA SAS No.: NA SDG No.: LEJEUNE023

Matrix: (soil/water) SOIL Lab Sample ID: 0812082-12R

Sample wt/vol: 5.1 (g/mL) G Lab File ID: 1208212B

Level: (low/med) LOW Date Sampled: 12/04/08 11:25

% Moisture: not dec. 17 Date Analyzed: 12/17/08 11:01

GC Column: RTX-VRX ID: 0.25 (mm) Dilution Factor: 1.0

Soil Extract Volume:_____(uL) Soil Aliquot Volume:_____(uL)

use ORIGINAL

CONCENTRATION UNITS: (ug/L or ug/Kg) UG/KG

CAS NO.	COMPOUND	MDL	RL	CONC	Q
108-88-3	Toluene	1.0	12	12U ~~1.1~~	~~U~~ UJ SSL
120-82-1	1,2,4-Trichlorobenzene	0.21	12		UJ
71-55-6	1,1,1-Trichloroethane	1.0	12		U
79-00-5	1,1,2-Trichloroethane	0.41	12		U
79-01-6	Trichloroethene	1.00	12		U
76-13-1	Trichlorotrifluoroethane	0.64	12		U
75-69-4	Trichlorofluoromethane	1.1	12		U
75-01-4	Vinyl chloride	1.3	12		U
1330-20-7	Xylene(total)	0.82	12		U

R

hw
2/26/09

FORM 1
VOLATILE ORGANICS ANALYSIS DATA SHEET

CLIENT SAMPLE NO. 13

MR08-IS07
9-6-7-08D

Lab Name: EMPIRICAL LABS Contract: CH2MHILL

Lab Code: NA Case No.: NA SAS No.: NA SDG No.: LEJEUNE023

Matrix: (soil/water) SOIL Lab Sample ID: 0812082-13

Sample wt/vol: 5.0 (g/mL) G Lab File ID: 1208213A

Level: (low/med) LOW Date Sampled: 12/04/08 11:45

% Moisture: not dec. 13 Date Analyzed: 12/14/08 15:31

GC Column: RTX-VRX ID: 0.25 (mm) Dilution Factor: 1.0

Soil Extract Volume:_____(uL) Soil Aliquot Volume: _____(uL)

CONCENTRATION UNITS: (ug/L or ug/Kg) UG/KG

CAS NO.	COMPOUND	MDL	RL	CONC	Q
67-64-1	Acetone	2.3	11	17	~~X~~ UJ ~~B~~ CC
71-43-2	Benzene	0.54	11		U
75-27-4	Bromodichloromethane	0.34	11		U
75-25-2	Bromoform	1.1	11		U
74-83-9	Bromomethane	0.82	11		~~U~~ UJ CC
78-93-3	2-Butanone	1.6	11		~~U~~ UJ CC
75-15-0	Carbon disulfide	1.5	11		U
56-23-5	Carbon tetrachloride	1.0	11		U
108-90-7	Chlorobenzene	0.39	11		U
75-00-3	Chloroethane	1.2	11		U
67-66-3	Chloroform	0.63	11		U
74-87-3	Chloromethane	0.59	11		~~U~~ UJ CC
110-82-7	Cyclohexane	0.62	11		U
124-48-1	Dibromochloromethane	0.39	11		U
96-12-8	1,2-Dibromo-3-chloropropane	1.4	5.7		U
106-93-4	1,2-Dibromoethane	0.49	11		U
95-50-1	1,2-Dichlorobenzene	0.42	11		U
541-73-1	1,3-Dichlorobenzene	0.96	11		U
106-46-7	1,4-Dichlorobenzene	0.63	11		U
75-71-8	Dichlorodifluoromethane	1.2	11		UJ
75-34-3	1,1-Dichloroethane	0.62	11		U
107-06-2	1,2-Dichloroethane	0.52	11		U
75-35-4	1,1-Dichloroethene	1.4	11		U
156-59-2	cis-1,2-Dichloroethene	1.4	11		U
156-60-5	trans-1,2-Dichloroethene	1.2	11		U
78-87-5	1,2-Dichloropropane	0.52	11		U
10061-01-5	cis-1,3-Dichloropropene	0.57	11		U
10061-02-6	trans-1,3-Dichloropropene	0.36	11		U
100-41-4	Ethylbenzene	0.86	11		U
591-78-6	2-Hexanone	2.6	11		~~U~~ UJ CC
98-82-8	Isopropylbenzene	1.0	11		U
79-20-9	Methyl acetate	1.8	11		U
75-09-2	Methylene chloride	0.71	11	114	~~2.8 JB~~ B
108-87-2	Methyl cyclohexane	0.34	11		U
1634-04-4	Methyl tert-butyl ether	0.36	11		U
108-10-1	4-Methyl-2-pentanone	0.66	11		U
100-42-5	Styrene	0.40	11		U
79-34-5	1,1,2,2-Tetrachloroethane	0.49	11		U
127-18-4	Tetrachloroethene	1.1	11		U

QW
2/26/09

FORM 1
VOLATILE ORGANICS ANALYSIS DATA SHEET

CLIENT SAMPLE NO. 13

MR08-IS07
9-6-7-08D

Lab Name: EMPIRICAL LABS Contract: CH2MHILL

Lab Code: NA Case No.: NA SAS No.: NA SDG No.: LEJEUNE023

Matrix: (soil/water) SOIL Lab Sample ID: 0812082-13

Sample wt/vol: 5.0 (g/mL) G Lab File ID: 1208213A

Level: (low/med) LOW Date Sampled: 12/04/08 11:45

% Moisture: not dec. 13 Date Analyzed: 12/14/08 15:31

GC Column: RTX-VRX ID: 0.25 (mm) Dilution Factor: 1.0

Soil Extract Volume:_____(uL) Soil Aliquot Volume: _____(uL)

CONCENTRATION UNITS: (ug/L or ug/Kg) UG/KG

CAS NO.	COMPOUND	MDL	RL	CONC	Q
108-88-3	Toluene	0.98	11		U
120-82-1	1,2,4-Trichlorobenzene	0.20	11		U
71-55-6	1,1,1-Trichloroethane	1.0	11		U
79-00-5	1,1,2-Trichloroethane	0.40	11		U
79-01-6	Trichloroethene	0.97	11		U
76-13-1	Trichlorotrifluoroethane	0.63	11		U
75-69-4	Trichlorofluoromethane	1.1	11		U
75-01-4	Vinyl chloride	1.2	11		~~U~~ UJ CCH
1330-20-7	Xylene(total)	0.80	11		U

AW
2/26/09

FORM 1
VOLATILE ORGANICS ANALYSIS DATA SHEET

CLIENT SAMPLE NO. 14

MR08-IS07
9D-6-7-08D

Lab Name: EMPIRICAL LABS Contract: CH2MHILL

Lab Code: NA Case No.: NA SAS No.: NA SDG No.: LEJEUNE023

Matrix: (soil/water) SOIL Lab Sample ID: 0812082-14

Sample wt/vol: 6.4 (g/mL) G Lab File ID: 1208214A

Level: (low/med) LOW Date Sampled: 12/04/08 11:55

% Moisture: not dec. 9 Date Analyzed: 12/14/08 16:10

GC Column: RTX-VRX ID: 0.25 (mm) Dilution Factor: 1.0

Soil Extract Volume:_____(uL) Soil Aliquot Volume: _____(uL)

CONCENTRATION UNITS: (ug/L or ug/Kg) UG/KG

CAS NO.	COMPOUND	MDL	RL	CONC	Q
67-64-1	Acetone	1.7	8.6	32	~~X~~ UJ BE CC
71-43-2	Benzene	0.40	8.6		U
75-27-4	Bromodichloromethane	0.26	8.6		U
75-25-2	Bromoform	0.86	8.6		U
74-83-9	Bromomethane	0.62	8.6		~~U~~ UJ CC
78-93-3	2-Butanone	1.2	8.6	5.0	~~J~~ J CC
75-15-0	Carbon disulfide	1.1	8.6		U
56-23-5	Carbon tetrachloride	0.75	8.6		U
108-90-7	Chlorobenzene	0.29	8.6		U
75-00-3	Chloroethane	0.94	8.6		U
67-66-3	Chloroform	0.47	8.6		U
74-87-3	Chloromethane	0.44	8.6	0.60	~~J~~ J CC
110-82-7	Cyclohexane	0.46	8.6		U
124-48-1	Dibromochloromethane	0.29	8.6		U
96-12-8	1,2-Dibromo-3-chloropropane	1.0	4.3		U
106-93-4	1,2-Dibromoethane	0.37	8.6		U
95-50-1	1,2-Dichlorobenzene	0.32	8.6		U
541-73-1	1,3-Dichlorobenzene	0.72	8.6		U
106-46-7	1,4-Dichlorobenzene	0.47	8.6		U
75-71-8	Dichlorodifluoromethane	0.94	8.6		UN
75-34-3	1,1-Dichloroethane	0.46	8.6		U
107-06-2	1,2-Dichloroethane	0.39	8.6		U
75-35-4	1,1-Dichloroethene	1.0	8.6		U
156-59-2	cis-1,2-Dichloroethene	1.0	8.6		U
156-60-5	trans-1,2-Dichloroethene	0.94	8.6		U
78-87-5	1,2-Dichloropropane	0.39	8.6		U
10061-01-5	cis-1,3-Dichloropropene	0.43	8.6		U
10061-02-6	trans-1,3-Dichloropropene	0.27	8.6		U
100-41-4	Ethylbenzene	0.64	8.6		U
591-78-6	2-Hexanone	2.0	8.6		~~U~~ UJ CC
98-82-8	Isopropylbenzene	0.75	8.6		U
79-20-9	Methyl acetate	1.4	8.6		U
75-09-2	Methylene chloride	0.53	8.6	8.64	~~1.7~~ ~~JB~~ BL
108-87-2	Methyl cyclohexane	0.26	8.6		U
1634-04-4	Methyl tert-butyl ether	0.27	8.6		U
108-10-1	4-Methyl-2-pentanone	0.50	8.6		U
100-42-5	Styrene	0.30	8.6		U
79-34-5	1,1,2,2-Tetrachloroethane	0.37	8.6		U
127-18-4	Tetrachloroethene	0.83	8.6		U

LW
2/26/09

FORM 1
VOLATILE ORGANICS ANALYSIS DATA SHEET

CLIENT SAMPLE NO. 14

MR08-IS07
9D-6-7-08D

Lab Name: EMPIRICAL LABS Contract: CH2MHILL

Lab Code: NA Case No.: NA SAS No.: NA SDG No.: LEJEUNE023

Matrix: (soil/water) SOIL Lab Sample ID: 0812082-14

Sample wt/vol: 6.4 (g/mL) G Lab File ID: 1208214A

Level: (low/med) LOW Date Sampled: 12/04/08 11:55

% Moisture: not dec. 9 Date Analyzed: 12/14/08 16:10

GC Column: RTX-VRX ID: 0.25 (mm) Dilution Factor: 1.0

Soil Extract Volume:_____(uL) Soil Aliquot Volume: _____(uL)

CONCENTRATION UNITS: (ug/L or ug/Kg) UG/KG

CAS NO.	COMPOUND	MDL	RL	CONC	Q
108-88-3	Toluene	0.74	8.6		U
120-82-1	1,2,4-Trichlorobenzene	0.15	8.6		U
71-55-6	1,1,1-Trichloroethane	0.77	8.6		U
79-00-5	1,1,2-Trichloroethane	0.30	8.6		U
79-01-6	Trichloroethene	0.73	8.6		U
76-13-1	Trichlorotrifluoroethane	0.47	8.6		U
75-69-4	Trichlorofluoromethane	0.81	8.6		U
75-01-4	Vinyl chloride	0.94	8.6		~~U~~ UJ CQ
1330-20-7	Xylene(total)	0.60	8.6		U

FORM I VOA

MW 2/26/09

FORM 1
VOLATILE ORGANICS ANALYSIS DATA SHEET

CLIENT SAMPLE NO. 15

MR08-SS097-08D

Lab Name: EMPIRICAL LABS Contract: CH2MHILL

Lab Code: NA Case No.: NA SAS No.: NA SDG No.: LEJEUNE023

Matrix: (soil/water) SOIL Lab Sample ID: 0812082-15

Sample wt/vol: 5.7 (g/mL) G Lab File ID: 1208215A

Level: (low/med) LOW Date Sampled: 12/04/08 13:40

% Moisture: not dec. 15 Date Analyzed: 12/14/08 16:49

GC Column: RTX-VRX ID: 0.25 (mm) Dilution Factor: 1.0

Soil Extract Volume:_____(uL) Soil Aliquot Volume: _____(uL)

CONCENTRATION UNITS: (ug/L or ug/Kg) UG/KG

CAS NO.	COMPOUND	MDL	RL	CONC	Q
67-64-1	Acetone	2.1	10	290	~~X~~ J SSL
71-43-2	Benzene	0.49	10	0.64	~~J~~ J
75-27-4	Bromodichloromethane	0.31	10		U UJ
75-25-2	Bromoform	1.0	10		U
74-83-9	Bromomethane	0.75	10		U
78-93-3	2-Butanone	1.4	10	8.6	J J
75-15-0	Carbon disulfide	1.3	10	1.7	J J
56-23-5	Carbon tetrachloride	0.91	10		U UJ
108-90-7	Chlorobenzene	0.35	10		U
75-00-3	Chloroethane	1.1	10		U
67-66-3	Chloroform	0.57	10		U
74-87-3	Chloromethane	0.54	10		U
110-82-7	Cyclohexane	0.56	10		U
124-48-1	Dibromochloromethane	0.35	10		U
96-12-8	1,2-Dibromo-3-chloropropane	1.2	5.2		U
106-93-4	1,2-Dibromoethane	0.45	10		U
95-50-1	1,2-Dichlorobenzene	0.38	10		U
541-73-1	1,3-Dichlorobenzene	0.87	10		U
106-46-7	1,4-Dichlorobenzene	0.57	10		U
75-71-8	Dichlorodifluoromethane	1.1	10		U
75-34-3	1,1-Dichloroethane	0.56	10		U
107-06-2	1,2-Dichloroethane	0.48	10		U
75-35-4	1,1-Dichloroethene	1.2	10		U
156-59-2	cis-1,2-Dichloroethene	1.2	10		U
156-60-5	trans-1,2-Dichloroethene	1.1	10		U
78-87-5	1,2-Dichloropropane	0.48	10		U
10061-01-5	cis-1,3-Dichloropropene	0.52	10		U
10061-02-6	trans-1,3-Dichloropropene	0.33	10		U
100-41-4	Ethylbenzene	0.78	10		U
591-78-6	2-Hexanone	2.4	10		U
98-82-8	Isopropylbenzene	0.91	10		U
79-20-9	Methyl acetate	1.6	10		U
75-09-2	Methylene chloride	0.64	10	10UJ	~~1.8 JB~~ BL
108-87-2	Methyl cyclohexane	0.31	10		U UJ
1634-04-4	Methyl tert-butyl ether	0.33	10		U
108-10-1	4-Methyl-2-pentanone	0.60	10		U
100-42-5	Styrene	0.36	10		U
79-34-5	1,1,2,2-Tetrachloroethane	0.45	10		U
127-18-4	Tetrachloroethene	1.0	10		U

FORM I VOA

LW 2/26/09

FORM 1
VOLATILE ORGANICS ANALYSIS DATA SHEET

CLIENT SAMPLE NO.

15

MR08-SS097-08D

Lab Name: EMPIRICAL LABS Contract: CH2MHILL

Lab Code: NA Case No.: NA SAS No.: NA SDG No.: LEJEUNE023

Matrix: (soil/water) SOIL Lab Sample ID: 0812082-15

Sample wt/vol: 5.7 (g/mL) G Lab File ID: 1208215A

Level: (low/med) LOW Date Sampled: 12/04/08 13:40

% Moisture: not dec. 15 Date Analyzed: 12/14/08 16:49

GC Column: RTX-VRX ID: 0.25 (mm) Dilution Factor: 1.0

Soil Extract Volume:_____(uL) Soil Aliquot Volume: _____(uL)

CONCENTRATION UNITS: (ug/L or ug/Kg) UG/KG

CAS NO.	COMPOUND	MDL	RL	CONC	Q
108-88-3	Toluene	0.89	10	10X ~~1.7~~	~~U~~ J SL
120-82-1	1,2,4-Trichlorobenzene	0.19	10		~~U~~ UJ SL
71-55-6	1,1,1-Trichloroethane	0.93	10		U
79-00-5	1,1,2-Trichloroethane	0.36	10		U
79-01-6	Trichloroethene	0.88	10		U
76-13-1	Trichlorotrifluoroethane	0.57	10		U
75-69-4	Trichlorofluoromethane	0.98	10		U
75-01-4	Vinyl chloride	1.1	10		U
1330-20-7	Xylene(total)	0.73	10		U

FORM I VOA

LW 2/26/09

FORM 1
VOLATILE ORGANICS ANALYSIS DATA SHEET

CLIENT SAMPLE NO. 15RE

MR08-SS097-08DR

Lab Name: EMPIRICAL LABS Contract: CH2MHILL

Lab Code: NA Case No.: NA SAS No.: NA SDG No.: LEJEUNE023

Matrix: (soil/water) SOIL Lab Sample ID: 0812082-15R

Sample wt/vol: 5.8 (g/mL) G Lab File ID: 1208215B

Level: (low/med) LOW Date Sampled: 12/04/08 13:40

% Moisture: not dec. 15 Date Analyzed: 12/17/08 11:40

GC Column: RTX-VRX ID: 0.25 (mm) Dilution Factor: 1.0

Soil Extract Volume:_____(uL) Soil Aliquot Volume: _____(uL)

CONCENTRATION UNITS: (ug/L or ug/Kg) UG/KG

CAS NO.	COMPOUND	MDL	RL	CONC	Q
67-64-1	Acetone	2.0	10	280	J SSL
71-43-2	Benzene	0.48	10		U UJ
75-27-4	Bromodichloromethane	0.30	10		U
75-25-2	Bromoform	1.0	10		U
74-83-9	Bromomethane	0.73	10		U
78-93-3	2-Butanone	1.4	10	6.8	J J
75-15-0	Carbon disulfide	1.3	10		U UJ
56-23-5	Carbon tetrachloride	0.90	10		U
108-90-7	Chlorobenzene	0.35	10		U
75-00-3	Chloroethane	1.1	10		U
67-66-3	Chloroform	0.56	10		U
74-87-3	Chloromethane	0.53	10		U
110-82-7	Cyclohexane	0.55	10		U
124-48-1	Dibromochloromethane	0.35	10		U
96-12-8	1,2-Dibromo-3-chloropropane	1.2	5.1		U
106-93-4	1,2-Dibromoethane	0.44	10		U
95-50-1	1,2-Dichlorobenzene	0.38	10		U
541-73-1	1,3-Dichlorobenzene	0.85	10		U
106-46-7	1,4-Dichlorobenzene	0.56	10		U
75-71-8	Dichlorodifluoromethane	1.1	10		U
75-34-3	1,1-Dichloroethane	0.55	10		U
107-06-2	1,2-Dichloroethane	0.47	10		U
75-35-4	1,1-Dichloroethene	1.2	10		U
156-59-2	cis-1,2-Dichloroethene	1.2	10		U
156-60-5	trans-1,2-Dichloroethene	1.1	10		U
78-87-5	1,2-Dichloropropane	0.47	10		U
10061-01-5	cis-1,3-Dichloropropene	0.51	10		U
10061-02-6	trans-1,3-Dichloropropene	0.32	10		U
100-41-4	Ethylbenzene	0.76	10		U
591-78-6	2-Hexanone	2.3	10		U
98-82-8	Isopropylbenzene	0.90	10		U
79-20-9	Methyl acetate	1.6	10		U
75-09-2	Methylene chloride	0.63	10	10UJ	~~1.5 JB~~ SSL
108-87-2	Methyl cyclohexane	0.30	10		U UJ SSL
1634-04-4	Methyl tert-butyl ether	0.32	10		U
108-10-1	4-Methyl-2-pentanone	0.59	10		U
100-42-5	Styrene	0.36	10		U
79-34-5	1,1,2,2-Tetrachloroethane	0.44	10		U
127-18-4	Tetrachloroethene	0.99	10		U

RE

use. orig NA

FORM I VOA

LW 2/26/09

FORM 1
VOLATILE ORGANICS ANALYSIS DATA SHEET

CLIENT SAMPLE NO.

MR08-SS097-08DR 15RE

Lab Name: EMPIRICAL LABS Contract: CH2MHILL

Lab Code: NA Case No.: NA SAS No.: NA SDG No.: LEJEUNE023

Matrix: (soil/water) SOIL Lab Sample ID: 0812082-15R

Sample wt/vol: 5.8 (g/mL) G Lab File ID: 1208215B

Level: (low/med) LOW Date Sampled: 12/04/08 13:40 use original

% Moisture: not dec. 15 Date Analyzed: 12/17/08 11:40

GC Column: RTX-VRX ID: 0.25 (mm) Dilution Factor: 1.0

Soil Extract Volume:_____(uL) Soil Aliquot Volume:_____(uL)

CONCENTRATION UNITS: (ug/L or ug/Kg) UG/KG

CAS NO.	COMPOUND	MDL	RL	CONC	Q
108-88-3	Toluene	0.88	10	10W ~~BK 1.1~~	~~UJ~~ SS
120-82-1	1,2,4-Trichlorobenzene	0.18	10		U UJ
71-55-6	1,1,1-Trichloroethane	0.92	10		U
79-00-5	1,1,2-Trichloroethane	0.36	10		U
79-01-6	Trichloroethene	0.86	10		U
76-13-1	Trichlorotrifluoroethane	0.56	10		U
75-69-4	Trichlorofluoromethane	0.97	10		U
75-01-4	Vinyl chloride	1.1	10		U
1330-20-7	Xylene(total)	0.71	10		U

RE

FORM I VOA

MW 2/26/09

FORM 1
VOLATILE ORGANICS ANALYSIS DATA SHEET

CLIENT SAMPLE NO. 16

MR08-IS09
7-6-7-08D

Lab Name: EMPIRICAL LABS Contract: CH2MHILL

Lab Code: NA Case No.: NA SAS No.: NA SDG No.: LEJEUNE023

Matrix: (soil/water) SOIL Lab Sample ID: 0812082-16

Sample wt/vol: 6.4 (g/mL) G Lab File ID: 1208216A

Level: (low/med) LOW Date Sampled: 12/04/08 13:50

% Moisture: not dec. 16 Date Analyzed: 12/14/08 17:29

GC Column: RTX-VRX ID: 0.25 (mm) Dilution Factor: 1.0

Soil Extract Volume:_____(uL) Soil Aliquot Volume: _____(uL)

CONCENTRATION UNITS: (ug/L or ug/Kg) UG/KG

CAS NO.	COMPOUND	MDL	RL	CONC	Q
67-64-1	Acetone	1.8	9.2	18	~~XUJ~~ BL CC
71-43-2	Benzene	0.43	9.2		U
75-27-4	Bromodichloromethane	0.28	9.2		U
75-25-2	Bromoform	0.92	9.2		U
74-83-9	Bromomethane	0.66	9.2		~~U~~ UJ CC
78-93-3	2-Butanone	1.3	9.2		~~U~~ UJ CC
75-15-0	Carbon disulfide	1.2	9.2		U
56-23-5	Carbon tetrachloride	0.81	9.2		U
108-90-7	Chlorobenzene	0.31	9.2		U
75-00-3	Chloroethane	1.0	9.2		U
67-66-3	Chloroform	0.51	9.2		U
74-87-3	Chloromethane	0.48	9.2		~~U~~ UJ CC
110-82-7	Cyclohexane	0.50	9.2		U
124-48-1	Dibromochloromethane	0.31	9.2		U
96-12-8	1,2-Dibromo-3-chloropropane	1.1	4.6		U
106-93-4	1,2-Dibromoethane	0.40	9.2		U
95-50-1	1,2-Dichlorobenzene	0.34	9.2		U
541-73-1	1,3-Dichlorobenzene	0.78	9.2		U
106-46-7	1,4-Dichlorobenzene	0.51	9.2		U
75-71-8	Dichlorodifluoromethane	1.0	9.2		U
75-34-3	1,1-Dichloroethane	0.50	9.2		U
107-06-2	1,2-Dichloroethane	0.42	9.2		U
75-35-4	1,1-Dichloroethene	1.1	9.2		U
156-59-2	cis-1,2-Dichloroethene	1.1	9.2		U
156-60-5	trans-1,2-Dichloroethene	1.0	9.2		U
78-87-5	1,2-Dichloropropane	0.42	9.2		U
10061-01-5	cis-1,3-Dichloropropene	0.46	9.2		U
10061-02-6	trans-1,3-Dichloropropene	0.30	9.2		U
100-41-4	Ethylbenzene	0.69	9.2		U
591-78-6	2-Hexanone	2.1	9.2		~~U~~ UJ CC
98-82-8	Isopropylbenzene	0.81	9.2		U
79-20-9	Methyl acetate	1.5	9.2		U
75-09-2	Methylene chloride	0.57	9.2	9.2	~~2.0 JB~~ BL
108-87-2	Methyl cyclohexane	0.28	9.2		U
1634-04-4	Methyl tert-butyl ether	0.30	9.2		U
108-10-1	4-Methyl-2-pentanone	0.54	9.2		U
100-42-5	Styrene	0.32	9.2		U
79-34-5	1,1,2,2-Tetrachloroethane	0.40	9.2		U
127-18-4	Tetrachloroethene	0.90	9.2		U

hW
2/26/09

FORM 1
VOLATILE ORGANICS ANALYSIS DATA SHEET

CLIENT SAMPLE NO.

MR08-IS09
7-6-7-08D

16

Lab Name: EMPIRICAL LABS Contract: CH2MHILL

Lab Code: NA Case No.: NA SAS No.: NA SDG No.: LEJEUNE023

Matrix: (soil/water) SOIL Lab Sample ID: 0812082-16

Sample wt/vol: 6.4 (g/mL) G Lab File ID: 1208216A

Level: (low/med) LOW Date Sampled: 12/04/08 13:50

% Moisture: not dec. 16 Date Analyzed: 12/14/08 17:29

GC Column: RTX-VRX ID: 0.25 (mm) Dilution Factor: 1.0

Soil Extract Volume:_____(uL) Soil Aliquot Volume: _____(uL)

CONCENTRATION UNITS: (ug/L or ug/Kg) UG/KG

CAS NO.	COMPOUND	MDL	RL	CONC	Q
108-88-3	Toluene	0.79	9.2		U
120-82-1	1,2,4-Trichlorobenzene	0.17	9.2		U
71-55-6	1,1,1-Trichloroethane	0.83	9.2		U
79-00-5	1,1,2-Trichloroethane	0.32	9.2		U
79-01-6	Trichloroethene	0.78	9.2		U
76-13-1	Trichlorotrifluoroethane	0.51	9.2		U
75-69-4	Trichlorofluoromethane	0.88	9.2		U
75-01-4	Vinyl chloride	1.0	9.2		~~U~~ UJ CCH
1330-20-7	Xylene(total)	0.65	9.2		U

DWS
2/26/09

FORM 1
VOLATILE ORGANICS ANALYSIS DATA SHEET

CLIENT SAMPLE NO. 17

MR08-SS096-08D

Lab Name: EMPIRICAL LABS Contract: CH2MHILL

Lab Code: NA Case No.: NA SAS No.: NA SDG No.: LEJEUNE023

Matrix: (soil/water) SOIL Lab Sample ID: 0812082-17

Sample wt/vol: 4.4 (g/mL) G Lab File ID: 1208217A

Level: (low/med) LOW Date Sampled: 12/04/08 14:05

% Moisture: not dec. 33 Date Analyzed: 12/14/08 18:08

GC Column: RTX-VRX ID: 0.25 (mm) Dilution Factor: 1.0

Soil Extract Volume:_____(uL) Soil Aliquot Volume: _____(uL)

CONCENTRATION UNITS: (ug/L or ug/Kg) UG/KG

CAS NO.	COMPOUND	MDL	RL	CONC	Q
67-64-1	Acetone	3.4	17	1200 J ~~1200~~ E	LR
71-43-2	Benzene	0.80	17	3.3	J J
75-27-4	Bromodichloromethane	0.51	17		U UJ
75-25-2	Bromoform	1.7	17		U
74-83-9	Bromomethane	1.2	17		U
78-93-3	2-Butanone	2.4	17		U
75-15-0	Carbon disulfide	2.2	17	5.8	J J
56-23-5	Carbon tetrachloride	1.5	17		U UJ
108-90-7	Chlorobenzene	0.58	17		U
75-00-3	Chloroethane	1.9	17		U
67-66-3	Chloroform	0.94	17		U
74-87-3	Chloromethane	0.88	17		U
110-82-7	Cyclohexane	0.92	17		U
124-48-1	Dibromochloromethane	0.58	17		U
96-12-8	1,2-Dibromo-3-chloropropane	2.0	8.5		U
106-93-4	1,2-Dibromoethane	0.73	17		U
95-50-1	1,2-Dichlorobenzene	0.63	17		U
541-73-1	1,3-Dichlorobenzene	1.4	17		U
106-46-7	1,4-Dichlorobenzene	0.94	17		U
75-71-8	Dichlorodifluoromethane	1.9	17		U
75-34-3	1,1-Dichloroethane	0.92	17		U
107-06-2	1,2-Dichloroethane	0.78	17		U
75-35-4	1,1-Dichloroethene	2.0	17		U
156-59-2	cis-1,2-Dichloroethene	2.0	17		U
156-60-5	trans-1,2-Dichloroethene	1.9	17		U
78-87-5	1,2-Dichloropropane	0.78	17		U
10061-01-5	cis-1,3-Dichloropropene	0.85	17		U
10061-02-6	trans-1,3-Dichloropropene	0.54	17		U
100-41-4	Ethylbenzene	1.3	17		U
591-78-6	2-Hexanone	3.9	17	7.0	J J
98-82-8	Isopropylbenzene	1.5	17		U UJ
79-20-9	Methyl acetate	2.7	17		U
75-09-2	Methylene chloride	1.0	17		U
108-87-2	Methyl cyclohexane	0.51	17	17 ~~0.53~~	J UJ
1634-04-4	Methyl tert-butyl ether	0.54	17		U UJ
108-10-1	4-Methyl-2-pentanone	0.99	17	2.1	J J
100-42-5	Styrene	0.60	17		U UJ
79-34-5	1,1,2,2-Tetrachloroethane	0.73	17		U
127-18-4	Tetrachloroethene	1.6	17		U

FORM I VOA

LW 2/26/09

FORM 1
VOLATILE ORGANICS ANALYSIS DATA SHEET

CLIENT SAMPLE NO. 17

MR08-SS096-08D

Lab Name: EMPIRICAL LABS Contract: CH2MHILL

Lab Code: NA Case No.: NA SAS No.: NA SDG No.: LEJEUNE023

Matrix: (soil/water) SOIL Lab Sample ID: 0812082-17

Sample wt/vol: 4.4 (g/mL) G Lab File ID: 1208217A

Level: (low/med) LOW Date Sampled: 12/04/08 14:05

% Moisture: not dec. 33 Date Analyzed: 12/14/08 18:08

GC Column: RTX-VRX ID: 0.25 (mm) Dilution Factor: 1.0

Soil Extract Volume:_____(uL) Soil Aliquot Volume: _____(uL)

CONCENTRATION UNITS: (ug/L or ug/Kg) UG/KG

CAS NO.	COMPOUND	MDL	RL	CONC	Q
108-88-3	Toluene	1.5	17	14	~~J~~ J
120-82-1	1,2,4-Trichlorobenzene	0.31	17		~~U~~ UJ
71-55-6	1,1,1-Trichloroethane	1.5	17		~~U~~
79-00-5	1,1,2-Trichloroethane	0.60	17		~~U~~
79-01-6	Trichloroethene	1.4	17		~~U~~
76-13-1	Trichlorotrifluoroethane	0.94	17		~~U~~
75-69-4	Trichlorofluoromethane	1.6	17		~~U~~
75-01-4	Vinyl chloride	1.9	17		~~U~~
1330-20-7	Xylene(total)	1.2	17	3.1	~~J~~ J

SS

FORM I VOA

MW 2/26/09

FORM 1
VOLATILE ORGANICS ANALYSIS DATA SHEET

CLIENT SAMPLE NO. 17RE

MR08-SS096-08DR

Lab Name: EMPIRICAL LABS Contract: CH2MHILL

Lab Code: NA Case No.: NA SAS No.: NA SDG No.: LEJEUNE023

Matrix: (soil/water) SOIL Lab Sample ID: 0812082-17R

Sample wt/vol: 5.3 (g/mL) G Lab File ID: 1208217B

Level: (low/med) LOW Date Sampled: 12/04/08 14:05

% Moisture: not dec. 33 Date Analyzed: 12/17/08 12:19 use ORIGINAL

GC Column: RTX-VRX ID: 0.25 (mm) Dilution Factor: 1.0

Soil Extract Volume:_____(uL) Soil Aliquot Volume: _____(uL)

CONCENTRATION UNITS: (ug/L or ug/Kg) UG/KG

CAS NO.	COMPOUND	MDL	RL	CONC	Q
67-64-1	Acetone	2.8	14	920	~~E~~ J LR
71-43-2	Benzene	0.67	14		U UJ SSL
75-27-4	Bromodichloromethane	0.43	14		U
75-25-2	Bromoform	1.4	14		U
74-83-9	Bromomethane	1.0	14		U
78-93-3	2-Butanone	2.0	14	21	J
75-15-0	Carbon disulfide	1.8	14		U UJ
56-23-5	Carbon tetrachloride	1.2	14		U
108-90-7	Chlorobenzene	0.48	14		U
75-00-3	Chloroethane	1.6	14		U
67-66-3	Chloroform	0.78	14		U
74-87-3	Chloromethane	0.74	14		U
110-82-7	Cyclohexane	0.77	14		U
124-48-1	Dibromochloromethane	0.48	14		U
96-12-8	1,2-Dibromo-3-chloropropane	1.7	7.1		U
106-93-4	1,2-Dibromoethane	0.61	14		U
95-50-1	1,2-Dichlorobenzene	0.52	14		U
541-73-1	1,3-Dichlorobenzene	1.2	14		U
106-46-7	1,4-Dichlorobenzene	0.78	14		U
75-71-8	Dichlorodifluoromethane	1.6	14		U
75-34-3	1,1-Dichloroethane	0.77	14		U
107-06-2	1,2-Dichloroethane	0.65	14		U
75-35-4	1,1-Dichloroethene	1.7	14		U
156-59-2	cis-1,2-Dichloroethene	1.7	14		U
156-60-5	trans-1,2-Dichloroethene	1.6	14		U
78-87-5	1,2-Dichloropropane	0.65	14		U
10061-01-5	cis-1,3-Dichloropropene	0.71	14		U
10061-02-6	trans-1,3-Dichloropropene	0.45	14		U
100-41-4	Ethylbenzene	1.1	14		U
591-78-6	2-Hexanone	3.3	14		U
98-82-8	Isopropylbenzene	1.2	14		U
79-20-9	Methyl acetate	2.3	14		U
75-09-2	Methylene chloride	0.88	14	14 UJ 2.4	~~JB~~ SSL B
108-87-2	Methyl cyclohexane	0.43	14		U UJ SSL
1634-04-4	Methyl tert-butyl ether	0.45	14		U
108-10-1	4-Methyl-2-pentanone	0.82	14		U
100-42-5	Styrene	0.50	14		U
79-34-5	1,1,2,2-Tetrachloroethane	0.61	14		U
127-18-4	Tetrachloroethene	1.4	14		U

RE

FORM I VOA

FORM 1
VOLATILE ORGANICS ANALYSIS DATA SHEET

CLIENT SAMPLE NO. 17RE

MR08-SS096-08DR

Lab Name: EMPIRICAL LABS Contract: CH2MHILL

Lab Code: NA Case No.: NA SAS No.: NA SDG No.: LEJEUNE023

Matrix: (soil/water) SOIL Lab Sample ID: 0812082-17R

Sample wt/vol: 5.3 (g/mL) G Lab File ID: 1208217B

Level: (low/med) LOW Date Sampled: 12/04/08 14:05

% Moisture: not dec. 33 Date Analyzed: 12/17/08 12:19

GC Column: RTX-VRX ID: 0.25 (mm) Dilution Factor: 1.0

Soil Extract Volume:_____(uL) Soil Aliquot Volume: _____(uL)

use ORIGINAL

CONCENTRATION UNITS: (ug/L or ug/Kg) UG/KG

CAS NO.	COMPOUND	MDL	RL	CONC	Q
108-88-3	Toluene	1.2	14	5.0	~~J~~ SJL
120-82-1	1,2,4-Trichlorobenzene	0.26	14		~~U~~ UJ
71-55-6	1,1,1-Trichloroethane	1.3	14		U
79-00-5	1,1,2-Trichloroethane	0.50	14		U
79-01-6	Trichloroethene	1.2	14		U
76-13-1	Trichlorotrifluoroethane	0.78	14		U
75-69-4	Trichlorofluoromethane	1.3	14		U
75-01-4	Vinyl chloride	1.6	14		U
1330-20-7	Xylene(total)	0.99	14		U

R

MW 2/26/09

FORM 1
VOLATILE ORGANICS ANALYSIS DATA SHEET

CLIENT SAMPLE NO. 17DL

MR08-SS0
96-08DDL

Lab Name: EMPIRICAL LABS Contract: CH2MHILL

Lab Code: NA Case No.: NA SAS No.: NA SDG No.: LEJEUNE023

Matrix: (soil/water) SOIL Lab Sample ID: 0812082-17DL

Sample wt/vol: 4.8 (g/mL) G Lab File ID: 1208217D

Level: (low/med) MED Date Sampled: 12/04/08 14:05

% Moisture: not dec. 33 Date Analyzed: 12/19/08 23:40

GC Column: RTX-VRX ID: 0.25 (mm) Dilution Factor: 1.0

Soil Extract Volume: 5000(uL) Soil Aliquot Volume: 100(uL)

Use original

CONCENTRATION UNITS: (ug/L or ug/Kg) UG/KG

CAS NO.	COMPOUND	MDL	RL	CONC	Q
67-64-1	Acetone	160	780	280	JD
71-43-2	Benzene	36	780		UD
75-27-4	Bromodichloromethane	23	780		UD
75-25-2	Bromoform	78	780		UD
74-83-9	Bromomethane	56	780		UD
78-93-3	2-Butanone	110	780		UD
75-15-0	Carbon disulfide	100	780		UD
56-23-5	Carbon tetrachloride	68	780		UD
108-90-7	Chlorobenzene	26	780		UD
75-00-3	Chloroethane	85	780		UD
67-66-3	Chloroform	43	780		UD
74-87-3	Chloromethane	40	780		UD
110-82-7	Cyclohexane	42	780		UD
124-48-1	Dibromochloromethane	26	780		UD
96-12-8	1,2-Dibromo-3-chloropropane	93	390		UD
106-93-4	1,2-Dibromoethane	33	780		UD
95-50-1	1,2-Dichlorobenzene	29	780		UD
541-73-1	1,3-Dichlorobenzene	65	780		UD
106-46-7	1,4-Dichlorobenzene	43	780		UD
75-71-8	Dichlorodifluoromethane	85	780		UD
75-34-3	1,1-Dichloroethane	42	780		UD
107-06-2	1,2-Dichloroethane	36	780		UD
75-35-4	1,1-Dichloroethene	93	780		UD
156-59-2	cis-1,2-Dichloroethene	93	780		UD
156-60-5	trans-1,2-Dichloroethene	85	780		UD
78-87-5	1,2-Dichloropropane	36	780		UD
10061-01-5	cis-1,3-Dichloropropene	39	780		UD
10061-02-6	trans-1,3-Dichloropropene	25	780		UD
100-41-4	Ethylbenzene	58	780		UD
591-78-6	2-Hexanone	180	780		UD
98-82-8	Isopropylbenzene	68	780		UD
79-20-9	Methyl acetate	120	780		UD
75-09-2	Methylene chloride	48	780	380	JD
108-87-2	Methyl cyclohexane	23	780		UD
1634-04-4	Methyl tert-butyl ether	25	780		UD
108-10-1	4-Methyl-2-pentanone	45	780		UD
100-42-5	Styrene	27	780		UD
79-34-5	1,1,2,2-Tetrachloroethane	33	780		UD
127-18-4	Tetrachloroethene	75	780		UD

lw 2/26/09

FORM 1
VOLATILE ORGANICS ANALYSIS DATA SHEET

CLIENT SAMPLE NO. 17DL

MR08-SS0
96-08DDL

Lab Name: EMPIRICAL LABS Contract: CH2MHILL

Lab Code: NA Case No.: NA SAS No.: NA SDG No.: LEJEUNE023

Matrix: (soil/water) SOIL Lab Sample ID: 0812082-17DL

Sample wt/vol: 4.8 (g/mL) G Lab File ID: 1208217D

Level: (low/med) MED Date Sampled: 12/04/08 14:05

% Moisture: not dec. 33 Date Analyzed: 12/19/08 23:40

GC Column: RTX-VRX ID: 0.25 (mm) Dilution Factor: 1.0

Soil Extract Volume: 5000(uL) Soil Aliquot Volume: 100(uL)

use - original

CONCENTRATION UNITS: (ug/L or ug/Kg) UG/KG

CAS NO.	COMPOUND	MDL	RL	CONC	Q
108-88-3	Toluene	67	780		UD
120-82-1	1,2,4-Trichlorobenzene	14	780		UD
71-55-6	1,1,1-Trichloroethane	70	780		UD
79-00-5	1,1,2-Trichloroethane	27	780		UD
79-01-6	Trichloroethene	66	780		UD
76-13-1	Trichlorotrifluoroethane	43	780		UD
75-69-4	Trichlorofluoromethane	74	780		UD
75-01-4	Vinyl chloride	85	780		UD
1330-20-7	Xylene(total)	54	780		UD

R

FORM I VOA

RW 2/26/09

FORM 1
VOLATILE ORGANICS ANALYSIS DATA SHEET

CLIENT SAMPLE NO. 18

MR08-IS09
6-6-7-08D

Lab Name: EMPIRICAL LABS Contract: CH2MHILL

Lab Code: NA Case No.: NA SAS No.: NA SDG No.: LEJEUNE023

Matrix: (soil/water) SOIL Lab Sample ID: 0812082-18

Sample wt/vol: 5.3 (g/mL) G Lab File ID: 1208218A

Level: (low/med) LOW Date Sampled: 12/04/08 14:20

% Moisture: not dec. 9 Date Analyzed: 12/14/08 18:47

GC Column: RTX-VRX ID: 0.25 (mm) Dilution Factor: 1.0

Soil Extract Volume:_____(uL) Soil Aliquot Volume: _____(uL)

CONCENTRATION UNITS: (ug/L or ug/Kg) UG/KG

CAS NO.	COMPOUND	MDL	RL	CONC	Q
67-64-1	Acetone	2.1	10	32	~~X~~ UJ ~~BC~~ CC
71-43-2	Benzene	0.48	10		U
75-27-4	Bromodichloromethane	0.31	10		U
75-25-2	Bromoform	1.0	10		U
74-83-9	Bromomethane	0.74	10		~~U~~ UJ CC4
78-93-3	2-Butanone	1.4	10		~~U~~ UJ CC4
75-15-0	Carbon disulfide	1.3	10		U
56-23-5	Carbon tetrachloride	0.91	10		U
108-90-7	Chlorobenzene	0.35	10		U
75-00-3	Chloroethane	1.1	10		U
67-66-3	Chloroform	0.57	10		U
74-87-3	Chloromethane	0.54	10		~~U~~ UJ CC4
110-82-7	Cyclohexane	0.56	10		U
124-48-1	Dibromochloromethane	0.35	10		U
96-12-8	1,2-Dibromo-3-chloropropane	1.2	5.2		U
106-93-4	1,2-Dibromoethane	0.44	10		U
95-50-1	1,2-Dichlorobenzene	0.38	10		U
541-73-1	1,3-Dichlorobenzene	0.87	10		U
106-46-7	1,4-Dichlorobenzene	0.57	10		U
75-71-8	Dichlorodifluoromethane	1.1	10		U
75-34-3	1,1-Dichloroethane	0.56	10		U
107-06-2	1,2-Dichloroethane	0.47	10		U
75-35-4	1,1-Dichloroethene	1.2	10		U
156-59-2	cis-1,2-Dichloroethene	1.2	10		U
156-60-5	trans-1,2-Dichloroethene	1.1	10		U
78-87-5	1,2-Dichloropropane	0.47	10		U
10061-01-5	cis-1,3-Dichloropropene	0.52	10		U
10061-02-6	trans-1,3-Dichloropropene	0.33	10		U
100-41-4	Ethylbenzene	0.77	10		U
591-78-6	2-Hexanone	2.4	10		~~U~~ UJ CC4
98-82-8	Isopropylbenzene	0.91	10		U
79-20-9	Methyl acetate	1.6	10		U
75-09-2	Methylene chloride	0.64	10	104	~~2.1 JB~~ B
108-87-2	Methyl cyclohexane	0.31	10		U
1634-04-4	Methyl tert-butyl ether	0.33	10		U
108-10-1	4-Methyl-2-pentanone	0.60	10		U
100-42-5	Styrene	0.36	10		U
79-34-5	1,1,2,2-Tetrachloroethane	0.44	10		U
127-18-4	Tetrachloroethene	1.0	10		U

FORM I VOA

MW 2/26/09

FORM 1
VOLATILE ORGANICS ANALYSIS DATA SHEET

CLIENT SAMPLE NO. 18

MR08-IS09
6-6-7-08D

Lab Name: EMPIRICAL LABS Contract: CH2MHILL

Lab Code: NA Case No.: NA SAS No.: NA SDG No.: LEJEUNE023

Matrix: (soil/water) SOIL Lab Sample ID: 0812082-18

Sample wt/vol: 5.3 (g/mL) G Lab File ID: 1208218A

Level: (low/med) LOW Date Sampled: 12/04/08 14:20

% Moisture: not dec. 9 Date Analyzed: 12/14/08 18:47

GC Column: RTX-VRX ID: 0.25 (mm) Dilution Factor: 1.0

Soil Extract Volume:_____(uL) Soil Aliquot Volume: _____(uL)

CONCENTRATION UNITS: (ug/L or ug/Kg) UG/KG

CAS NO.	COMPOUND	MDL	RL	CONC	Q
108-88-3	Toluene	0.89	10		U
120-82-1	1,2,4-Trichlorobenzene	0.18	10		U
71-55-6	1,1,1-Trichloroethane	0.93	10		U
79-00-5	1,1,2-Trichloroethane	0.36	10		U
79-01-6	Trichloroethene	0.88	10		U
76-13-1	Trichlorotrifluoroethane	0.57	10		U
75-69-4	Trichlorofluoromethane	0.98	10		U
75-01-4	Vinyl chloride	1.1	10		~~U~~ UJ CA
1330-20-7	Xylene(total)	0.72	10		U

FORM I VOA

lw
2/26/09

FORM 1
VOLATILE ORGANICS ANALYSIS DATA SHEET

CLIENT SAMPLE NO. 19

MR08-SS095-08D

Lab Name: EMPIRICAL LABS Contract: CH2MHILL

Lab Code: NA Case No.: NA SAS No.: NA SDG No.: LEJEUNE023

Matrix: (soil/water) SOIL Lab Sample ID: 0812082-19

Sample wt/vol: 4.5 (g/mL) G Lab File ID: 1208219A

Level: (low/med) LOW Date Sampled: 12/04/08 14:35

% Moisture: not dec. 23 Date Analyzed: 12/14/08 19:26

GC Column: RTX-VRX ID: 0.25 (mm) Dilution Factor: 1.0

Soil Extract Volume:_____(uL) Soil Aliquot Volume: _____(uL)

CONCENTRATION UNITS: (ug/L or ug/Kg) UG/KG

CAS NO.	COMPOUND	MDL	RL	CONC	Q
67-64-1	Acetone	2.9	14	360J ~~600~~	E SSL ~~RD~~
71-43-2	Benzene	0.68	14		U UJ SSI
75-27-4	Bromodichloromethane	0.43	14		U
75-25-2	Bromoform	1.4	14		U
74-83-9	Bromomethane	1.0	14		U
78-93-3	2-Butanone	2.0	14	9.9	J J
75-15-0	Carbon disulfide	1.9	14		U UJ
56-23-5	Carbon tetrachloride	1.3	14		U
108-90-7	Chlorobenzene	0.49	14		U
75-00-3	Chloroethane	1.6	14		U
67-66-3	Chloroform	0.79	14		U
74-87-3	Chloromethane	0.75	14		U
110-82-7	Cyclohexane	0.78	14		U
124-48-1	Dibromochloromethane	0.49	14		U
96-12-8	1,2-Dibromo-3-chloropropane	1.7	7.2		U
106-93-4	1,2-Dibromoethane	0.62	14		U
95-50-1	1,2-Dichlorobenzene	0.53	14		U
541-73-1	1,3-Dichlorobenzene	1.2	14		U
106-46-7	1,4-Dichlorobenzene	0.79	14		U
75-71-8	Dichlorodifluoromethane	1.6	14		U
75-34-3	1,1-Dichloroethane	0.78	14		U
107-06-2	1,2-Dichloroethane	0.66	14		U
75-35-4	1,1-Dichloroethene	1.7	14		U
156-59-2	cis-1,2-Dichloroethene	1.7	14		U
156-60-5	trans-1,2-Dichloroethene	1.6	14		U
78-87-5	1,2-Dichloropropane	0.66	14		U
10061-01-5	cis-1,3-Dichloropropene	0.72	14		U
10061-02-6	trans-1,3-Dichloropropene	0.46	14		U
100-41-4	Ethylbenzene	1.1	14		U
591-78-6	2-Hexanone	3.3	14		U
98-82-8	Isopropylbenzene	1.3	14		U
79-20-9	Methyl acetate	2.3	14		U
75-09-2	Methylene chloride	0.90	14		U
108-87-2	Methyl cyclohexane	0.43	14		U
1634-04-4	Methyl tert-butyl ether	0.46	14		U
108-10-1	4-Methyl-2-pentanone	0.84	14		U
100-42-5	Styrene	0.50	14		U
79-34-5	1,1,2,2-Tetrachloroethane	0.62	14		U
127-18-4	Tetrachloroethene	1.4	14		U

2/26/09

FORM 1
VOLATILE ORGANICS ANALYSIS DATA SHEET

CLIENT SAMPLE NO. 19

MR08-SS095-08D

Lab Name: EMPIRICAL LABS Contract: CH2MHILL

Lab Code: NA Case No.: NA SAS No.: NA SDG No.: LEJEUNE023

Matrix: (soil/water) SOIL Lab Sample ID: 0812082-19

Sample wt/vol: 4.5 (g/mL) G Lab File ID: 1208219A

Level: (low/med) LOW Date Sampled: 12/04/08 14:35

% Moisture: not dec. 23 Date Analyzed: 12/14/08 19:26

GC Column: RTX-VRX ID: 0.25 (mm) Dilution Factor: 1.0

Soil Extract Volume:_____(uL) Soil Aliquot Volume: _____(uL)

CONCENTRATION UNITS: (ug/L or ug/Kg) UG/KG

CAS NO.	COMPOUND	MDL	RL	CONC	Q
108-88-3	Toluene	1.2	14	2.4	~~J~~ J SSL
120-82-1	1,2,4-Trichlorobenzene	0.26	14		~~U~~ UJ
71-55-6	1,1,1-Trichloroethane	1.3	14		~~U~~
79-00-5	1,1,2-Trichloroethane	0.50	14		~~U~~
79-01-6	Trichloroethene	1.2	14		~~U~~
76-13-1	Trichlorotrifluoroethane	0.79	14		~~U~~
75-69-4	Trichlorofluoromethane	1.4	14		~~U~~
75-01-4	Vinyl chloride	1.6	14		~~U~~
1330-20-7	Xylene(total)	1.0	14		U

FORM I VOA

Qw
2/26/09

FORM 1
VOLATILE ORGANICS ANALYSIS DATA SHEET

CLIENT SAMPLE NO. 19RE

MR08-SS095-08DR

Lab Name: EMPIRICAL LABS Contract: CH2MHILL

Lab Code: NA Case No.: NA SAS No.: NA SDG No.: LEJEUNE023

Matrix: (soil/water) SOIL Lab Sample ID: 0812082-19R

Sample wt/vol: 4.7 (g/mL) G Lab File ID: 1208219B

Level: (low/med) LOW Date Sampled: 12/04/08 14:35

% Moisture: not dec. 23 Date Analyzed: 12/17/08 12:58

GC Column: RTX-VRX ID: 0.25 (mm) Dilution Factor: 1.0

Soil Extract Volume:_____(uL) Soil Aliquot Volume: _____(uL)

CONCENTRATION UNITS: (ug/L or ug/Kg) UG/KG

CAS NO.	COMPOUND	MDL	RL	CONC	Q
67-64-1	Acetone	2.8	14	360	J SSL
71-43-2	Benzene	0.66	14		U UJ
75-27-4	Bromodichloromethane	0.42	14		U
75-25-2	Bromoform	1.4	14		U
74-83-9	Bromomethane	1.0	14		U
78-93-3	2-Butanone	2.0	14	5.8	J
75-15-0	Carbon disulfide	1.8	14		U UJ
56-23-5	Carbon tetrachloride	1.2	14		U
108-90-7	Chlorobenzene	0.47	14		U
75-00-3	Chloroethane	1.5	14		U
67-66-3	Chloroform	0.77	14		U
74-87-3	Chloromethane	0.72	14		U
110-82-7	Cyclohexane	0.75	14		U
124-48-1	Dibromochloromethane	0.47	14		U
96-12-8	1,2-Dibromo-3-chloropropane	1.7	7.0		U R ISL
106-93-4	1,2-Dibromoethane	0.60	14		U UJ SS
95-50-1	1,2-Dichlorobenzene	0.52	14		U R ISL
541-73-1	1,3-Dichlorobenzene	1.2	14		U
106-46-7	1,4-Dichlorobenzene	0.77	14		U
75-71-8	Dichlorodifluoromethane	1.5	14		U UJ SS
75-34-3	1,1-Dichloroethane	0.75	14		U
107-06-2	1,2-Dichloroethane	0.64	14		U
75-35-4	1,1-Dichloroethene	1.7	14		U
156-59-2	cis-1,2-Dichloroethene	1.7	14		U
156-60-5	trans-1,2-Dichloroethene	1.5	14		U
78-87-5	1,2-Dichloropropane	0.64	14		U
10061-01-5	cis-1,3-Dichloropropene	0.70	14		U
10061-02-6	trans-1,3-Dichloropropene	0.45	14		U
100-41-4	Ethylbenzene	1.0	14		U
591-78-6	2-Hexanone	3.2	14		U
98-82-8	Isopropylbenzene	1.2	14		U
79-20-9	Methyl acetate	2.2	14		U
75-09-2	Methylene chloride	0.86	14	14 UJ ~~2.1~~	~~JB~~ SSL B
108-87-2	Methyl cyclohexane	0.42	14		U UJ S
1634-04-4	Methyl tert-butyl ether	0.45	14		U
108-10-1	4-Methyl-2-pentanone	0.81	14		U
100-42-5	Styrene	0.49	14		U
79-34-5	1,1,2,2-Tetrachloroethane	0.60	14		U R IS
127-18-4	Tetrachloroethene	1.4	14		U UJ SS

FORM I VOA

ORIGINAL

MW 2/26/09

FORM 1
VOLATILE ORGANICS ANALYSIS DATA SHEET

CLIENT SAMPLE NO. 19RE

MR08-SS095-08DR

Lab Name: EMPIRICAL LABS Contract: CH2MHILL

Lab Code: NA Case No.: NA SAS No.: NA SDG No.: LEJEUNE023

Matrix: (soil/water) SOIL Lab Sample ID: 0812082-19R

Sample wt/vol: 4.7 (g/mL) G Lab File ID: 1208219B

Level: (low/med) LOW Date Sampled: 12/04/08 14:35

% Moisture: not dec. 23 Date Analyzed: 12/17/08 12:58

GC Column: RTX-VRX ID: 0.25 (mm) Dilution Factor: 1.0

Soil Extract Volume:_____(uL) Soil Aliquot Volume: _____(uL)

Use ORIGINAL

CONCENTRATION UNITS: (ug/L or ug/Kg) UG/KG

CAS NO.	COMPOUND	MDL	RL	CONC	Q
108-88-3	Toluene	1.2	14		~~U~~ UJ SSL
120-82-1	1,2,4-Trichlorobenzene	0.25	14		~~U~~ R ISI
71-55-6	1,1,1-Trichloroethane	1.2	14		U UJ SSL
79-00-5	1,1,2-Trichloroethane	0.49	14		U
79-01-6	Trichloroethene	1.2	14		U
76-13-1	Trichlorotrifluoroethane	0.77	14		U
75-69-4	Trichlorofluoromethane	1.3	14		U
75-01-4	Vinyl chloride	1.5	14		U
1330-20-7	Xylene(total)	0.98	14		U

R

FORM I VOA

fw 2/26/09

FORM 1
VOLATILE ORGANICS ANALYSIS DATA SHEET

CLIENT SAMPLE NO. 20

MR08-IS09
5-6-7-08D

Lab Name: EMPIRICAL LABS Contract: CH2MHILL

Lab Code: NA Case No.: NA SAS No.: NA SDG No.: LEJEUNE023

Matrix: (soil/water) SOIL Lab Sample ID: 0812082-20

Sample wt/vol: 5.8 (g/mL) G Lab File ID: 1208220B

Level: (low/med) LOW Date Sampled: 12/04/08 14:45

% Moisture: not dec. 12 Date Analyzed: 12/15/08 11:18

GC Column: RTX-VRX ID: 0.25 (mm) Dilution Factor: 1.0

Soil Extract Volume:_____(uL) Soil Aliquot Volume: _____(uL)

CONCENTRATION UNITS: (ug/L or ug/Kg) UG/KG

CAS NO.	COMPOUND	MDL	RL	CONC	Q
67-64-1	Acetone	2.0	9.8	9.8U ~~4.4~~	~~J~~ CU ~~BC~~
71-43-2	Benzene	0.46	9.8		U
75-27-4	Bromodichloromethane	0.29	9.8		U
75-25-2	Bromoform	0.98	9.8		U
74-83-9	Bromomethane	0.70	9.8		U
78-93-3	2-Butanone	1.4	9.8		U
75-15-0	Carbon disulfide	1.3	9.8		U
56-23-5	Carbon tetrachloride	0.86	9.8		U
108-90-7	Chlorobenzene	0.33	9.8		U
75-00-3	Chloroethane	1.1	9.8		U
67-66-3	Chloroform	0.54	9.8		U
74-87-3	Chloromethane	0.51	9.8		U
110-82-7	Cyclohexane	0.53	9.8		U
124-48-1	Dibromochloromethane	0.33	9.8		U
96-12-8	1,2-Dibromo-3-chloropropane	1.2	4.9		U
106-93-4	1,2-Dibromoethane	0.42	9.8		U
95-50-1	1,2-Dichlorobenzene	0.36	9.8		U
541-73-1	1,3-Dichlorobenzene	0.82	9.8		U
106-46-7	1,4-Dichlorobenzene	0.54	9.8		U
75-71-8	Dichlorodifluoromethane	1.1	9.8		U
75-34-3	1,1-Dichloroethane	0.53	9.8		U
107-06-2	1,2-Dichloroethane	0.45	9.8		U
75-35-4	1,1-Dichloroethene	1.2	9.8		U
156-59-2	cis-1,2-Dichloroethene	1.2	9.8		U
156-60-5	trans-1,2-Dichloroethene	1.1	9.8		U
78-87-5	1,2-Dichloropropane	0.45	9.8		U
10061-01-5	cis-1,3-Dichloropropene	0.49	9.8		U
10061-02-6	trans-1,3-Dichloropropene	0.31	9.8		U
100-41-4	Ethylbenzene	0.73	9.8		U
591-78-6	2-Hexanone	2.2	9.8		~~U~~ UJ CU
98-82-8	Isopropylbenzene	0.86	9.8		U
79-20-9	Methyl acetate	1.6	9.8		U
75-09-2	Methylene chloride	0.60	9.8	9.8U ~~1.2~~	~~JB~~
108-87-2	Methyl cyclohexane	0.29	9.8		U
1634-04-4	Methyl tert-butyl ether	0.31	9.8		U
108-10-1	4-Methyl-2-pentanone	0.56	9.8		U
100-42-5	Styrene	0.34	9.8		U
79-34-5	1,1,2,2-Tetrachloroethane	0.42	9.8		U
127-18-4	Tetrachloroethene	0.95	9.8		U

FORM I VOA

LW
2/26/09

FORM 1
VOLATILE ORGANICS ANALYSIS DATA SHEET

CLIENT SAMPLE NO. 20

MR08-IS09
5-6-7-08D

Lab Name: EMPIRICAL LABS Contract: CH2MHILL

Lab Code: NA Case No.: NA SAS No.: NA SDG No.: LEJEUNE023

Matrix: (soil/water) SOIL Lab Sample ID: 0812082-20

Sample wt/vol: 5.8 (g/mL) G Lab File ID: 1208220B

Level: (low/med) LOW Date Sampled: 12/04/08 14:45

% Moisture: not dec. 12 Date Analyzed: 12/15/08 11:18

GC Column: RTX-VRX ID: 0.25 (mm) Dilution Factor: 1.0

Soil Extract Volume:_____(uL) Soil Aliquot Volume: _____(uL)

CONCENTRATION UNITS: (ug/L or ug/Kg) UG/KG

CAS NO.	COMPOUND	MDL	RL	CONC	Q
108-88-3	Toluene	0.84	9.8		U
120-82-1	1,2,4-Trichlorobenzene	0.18	9.8		U
71-55-6	1,1,1-Trichloroethane	0.88	9.8		U
79-00-5	1,1,2-Trichloroethane	0.34	9.8		U
79-01-6	Trichloroethene	0.83	9.8		U
76-13-1	Trichlorotrifluoroethane	0.54	9.8		U
75-69-4	Trichlorofluoromethane	0.93	9.8		U
75-01-4	Vinyl chloride	1.1	9.8		U
1330-20-7	Xylene(total)	0.68	9.8		U

lw
2/26/09

FORM 1
VOLATILE ORGANICS ANALYSIS DATA SHEET

CLIENT SAMPLE NO.

21

MR08-SS094-08D

Lab Name: EMPIRICAL LABS Contract: CH2MHILL

Lab Code: NA Case No.: NA SAS No.: NA SDG No.: LEJEUNE023

Matrix: (soil/water) SOIL Lab Sample ID: 0812082-21

Sample wt/vol: 5.5 (g/mL) G Lab File ID: 1208221A

Level: (low/med) LOW Date Sampled: 12/04/08 15:05

% Moisture: not dec. 21 Date Analyzed: 12/15/08 11:57

GC Column: RTX-VRX ID: 0.25 (mm) Dilution Factor: 1.0

Soil Extract Volume:_____(uL) Soil Aliquot Volume: _____(uL)

CONCENTRATION UNITS: (ug/L or ug/Kg) UG/KG

CAS NO.	COMPOUND	MDL	RL	CONC	Q
67-64-1	Acetone	2.3	12	270J ~~650~~	~~E~~ SSL RD
71-43-2	Benzene	0.55	12		U UJ SSL
75-27-4	Bromodichloromethane	0.35	12		U
75-25-2	Bromoform	1.2	12		U
74-83-9	Bromomethane	0.84	12		U
78-93-3	2-Butanone	1.6	12	14	J
75-15-0	Carbon disulfide	1.5	12		U UJ
56-23-5	Carbon tetrachloride	1.0	12		U
108-90-7	Chlorobenzene	0.40	12		U
75-00-3	Chloroethane	1.3	12		U
67-66-3	Chloroform	0.64	12		U
74-87-3	Chloromethane	0.60	12		U
110-82-7	Cyclohexane	0.63	12		U
124-48-1	Dibromochloromethane	0.40	12		U
96-12-8	1,2-Dibromo-3-chloropropane	1.4	5.8		U
106-93-4	1,2-Dibromoethane	0.50	12		U
95-50-1	1,2-Dichlorobenzene	0.43	12		U
541-73-1	1,3-Dichlorobenzene	0.98	12		U
106-46-7	1,4-Dichlorobenzene	0.64	12		U
75-71-8	Dichlorodifluoromethane	1.3	12		U ~~UY~~
75-34-3	1,1-Dichloroethane	0.63	12		U
107-06-2	1,2-Dichloroethane	0.54	12		U
75-35-4	1,1-Dichloroethene	1.4	12		U
156-59-2	cis-1,2-Dichloroethene	1.4	12		U
156-60-5	trans-1,2-Dichloroethene	1.3	12		U
78-87-5	1,2-Dichloropropane	0.54	12		U
10061-01-5	cis-1,3-Dichloropropene	0.58	12		U
10061-02-6	trans-1,3-Dichloropropene	0.37	12		U
100-41-4	Ethylbenzene	0.87	12		U
591-78-6	2-Hexanone	2.7	12		U
98-82-8	Isopropylbenzene	1.0	12		U
79-20-9	Methyl acetate	1.9	12		U
75-09-2	Methylene chloride	0.72	12	12UJ ~~1.3~~	~~JB~~ SSL
108-87-2	Methyl cyclohexane	0.35	12		U UJ SS
1634-04-4	Methyl tert-butyl ether	0.37	12		U
108-10-1	4-Methyl-2-pentanone	0.67	12		U
100-42-5	Styrene	0.41	12		U
79-34-5	1,1,2,2-Tetrachloroethane	0.50	12		U
127-18-4	Tetrachloroethene	1.1	12		U

FORM I VOA

MW
2/26/09

FORM 1
VOLATILE ORGANICS ANALYSIS DATA SHEET

CLIENT SAMPLE NO. 21

MR08-SS094-08D

Lab Name: EMPIRICAL LABS Contract: CH2MHILL

Lab Code: NA Case No.: NA SAS No.: NA SDG No.: LEJEUNE023

Matrix: (soil/water) SOIL Lab Sample ID: 0812082-21

Sample wt/vol: 5.5 (g/mL) G Lab File ID: 1208221A

Level: (low/med) LOW Date Sampled: 12/04/08 15:05

% Moisture: not dec. 21 Date Analyzed: 12/15/08 11:57

GC Column: RTX-VRX ID: 0.25 (mm) Dilution Factor: 1.0

Soil Extract Volume:_____(uL) Soil Aliquot Volume: _____(uL)

CONCENTRATION UNITS: (ug/L or ug/Kg) UG/KG

CAS NO.	COMPOUND	MDL	RL	CONC	Q
108-88-3	Toluene	1.0	12	2.0	~~J~~ J SSL
120-82-1	1,2,4-Trichlorobenzene	0.21	12		U UJ
71-55-6	1,1,1-Trichloroethane	1.0	12		U
79-00-5	1,1,2-Trichloroethane	0.41	12		U
79-01-6	Trichloroethene	0.99	12		U
76-13-1	Trichlorotrifluoroethane	0.64	12		U
75-69-4	Trichlorofluoromethane	1.1	12		U
75-01-4	Vinyl chloride	1.3	12		U
1330-20-7	Xylene(total)	0.81	12		U

LW 2/26/09

FORM 1
VOLATILE ORGANICS ANALYSIS DATA SHEET

CLIENT SAMPLE NO. 21RE

MR08-SS094-08DR

Lab Name: EMPIRICAL LABS Contract: CH2MHILL

Lab Code: NA Case No.: NA SAS No.: NA SDG No.: LEJEUNE023

Matrix: (soil/water) SOIL Lab Sample ID: 0812082-21R

Sample wt/vol: 5.2 (g/mL) G Lab File ID: 1208221B

Level: (low/med) LOW Date Sampled: 12/04/08 15:05 use ORIGINAL

% Moisture: not dec. 21 Date Analyzed: 12/18/08 14:49

GC Column: RTX-VRX ID: 0.25 (mm) Dilution Factor: 1.0

Soil Extract Volume:_____(uL) Soil Aliquot Volume: _____(uL)

CONCENTRATION UNITS: (ug/L or ug/Kg) UG/KG

CAS NO.	COMPOUND	MDL	RL	CONC	Q
67-64-1	Acetone	2.4	12	270	J SSH
71-43-2	Benzene	0.58	12		U
75-27-4	Bromodichloromethane	0.37	12		U
75-25-2	Bromoform	1.2	12		U
74-83-9	Bromomethane	0.88	12		~~U~~ UJ CCH
78-93-3	2-Butanone	1.7	12	8.8	~~J~~ J SSH
75-15-0	Carbon disulfide	1.6	12		U
56-23-5	Carbon tetrachloride	1.1	12		U
108-90-7	Chlorobenzene	0.42	12		U
75-00-3	Chloroethane	1.3	12		~~U~~ UJ CCH
67-66-3	Chloroform	0.67	12		U
74-87-3	Chloromethane	0.64	12		U
110-82-7	Cyclohexane	0.66	12		U
124-48-1	Dibromochloromethane	0.42	12		U
96-12-8	1,2-Dibromo-3-chloropropane	1.5	6.1		~~U~~ UJ IS
106-93-4	1,2-Dibromoethane	0.53	12		U
95-50-1	1,2-Dichlorobenzene	0.45	12		~~U~~ UJ IS
541-73-1	1,3-Dichlorobenzene	1.0	12		~~U~~ ↓ ↓
106-46-7	1,4-Dichlorobenzene	0.67	12		~~U~~ ↓
75-71-8	Dichlorodifluoromethane	1.3	12		U
75-34-3	1,1-Dichloroethane	0.66	12		U
107-06-2	1,2-Dichloroethane	0.56	12		U
75-35-4	1,1-Dichloroethene	1.5	12		U
156-59-2	cis-1,2-Dichloroethene	1.5	12		U
156-60-5	trans-1,2-Dichloroethene	1.3	12		U
78-87-5	1,2-Dichloropropane	0.56	12		U
10061-01-5	cis-1,3-Dichloropropene	0.61	12		U
10061-02-6	trans-1,3-Dichloropropene	0.39	12		U
100-41-4	Ethylbenzene	0.92	12		U
591-78-6	2-Hexanone	2.8	12		U
98-82-8	Isopropylbenzene	1.1	12		U
79-20-9	Methyl acetate	2.0	12		U
75-09-2	Methylene chloride	0.76	12		U
108-87-2	Methyl cyclohexane	0.37	12		U
1634-04-4	Methyl tert-butyl ether	0.39	12		U
108-10-1	4-Methyl-2-pentanone	0.71	12		U
100-42-5	Styrene	0.43	12		U
79-34-5	1,1,2,2-Tetrachloroethane	0.53	12		~~U~~ UJ IS
127-18-4	Tetrachloroethene	1.2	12		U

2/26/09

FORM 1
VOLATILE ORGANICS ANALYSIS DATA SHEET

CLIENT SAMPLE NO. 21RE

MR08-SS094-08DR

Lab Name: EMPIRICAL LABS Contract: CH2MHILL

Lab Code: NA Case No.: NA SAS No.: NA SDG No.: LEJEUNE023

Matrix: (soil/water) SOIL Lab Sample ID: 0812082-21R

Sample wt/vol: 5.2 (g/mL) G Lab File ID: 1208221B

Level: (low/med) LOW Date Sampled: 12/04/08 15:05

% Moisture: not dec. 21 Date Analyzed: 12/18/08 14:49 Use orig NA

GC Column: RTX-VRX ID: 0.25 (mm) Dilution Factor: 1.0

Soil Extract Volume:_____(uL) Soil Aliquot Volume: _____(uL)

CONCENTRATION UNITS: (ug/L or ug/Kg) UG/KG

CAS NO.	COMPOUND	MDL	RL	CONC	Q
108-88-3	Toluene	1.0	12	1.9	~~J~~ J SI
120-82-1	1,2,4-Trichlorobenzene	0.22	12		~~U~~ UJ ES
71-55-6	1,1,1-Trichloroethane	1.1	12		U
79-00-5	1,1,2-Trichloroethane	0.43	12		U
79-01-6	Trichloroethene	1.0	12		U
76-13-1	Trichlorotrifluoroethane	0.67	12		U
75-69-4	Trichlorofluoromethane	1.2	12		U
75-01-4	Vinyl chloride	1.3	12		U
1330-20-7	Xylene(total)	0.86	12		U

R

FORM I VOA

RW 2/26/09

FORM 1
VOLATILE ORGANICS ANALYSIS DATA SHEET

CLIENT SAMPLE NO. 22

MR08-IS09
4-5-6-08D

Lab Name: EMPIRICAL LABS Contract: CH2MHILL

Lab Code: NA Case No.: NA SAS No.: NA SDG No.: LEJEUNE023

Matrix: (soil/water) SOIL Lab Sample ID: 0812082-22

Sample wt/vol: 7.0 (g/mL) G Lab File ID: 1208222A

Level: (low/med) LOW Date Sampled: 12/04/08 15:15

% Moisture: not dec. 11 Date Analyzed: 12/15/08 12:36

GC Column: RTX-VRX ID: 0.25 (mm) Dilution Factor: 1.0

Soil Extract Volume:_____(uL) Soil Aliquot Volume: _____(uL)

CONCENTRATION UNITS: (ug/L or ug/Kg) UG/KG

CAS NO.	COMPOUND	MDL	RL	CONC	Q
67-64-1	Acetone	1.6	7.9	10	UJ BLC
71-43-2	Benzene	0.37	7.9		U
75-27-4	Bromodichloromethane	0.24	7.9		U
75-25-2	Bromoform	0.79	7.9		U
74-83-9	Bromomethane	0.57	7.9		U
78-93-3	2-Butanone	1.1	7.9		U
75-15-0	Carbon disulfide	1.0	7.9		U
56-23-5	Carbon tetrachloride	0.70	7.9		U
108-90-7	Chlorobenzene	0.27	7.9		U
75-00-3	Chloroethane	0.87	7.9		U
67-66-3	Chloroform	0.44	7.9		U
74-87-3	Chloromethane	0.41	7.9		U
110-82-7	Cyclohexane	0.43	7.9		U
124-48-1	Dibromochloromethane	0.27	7.9		U
96-12-8	1,2-Dibromo-3-chloropropane	0.95	4.0		U
106-93-4	1,2-Dibromoethane	0.34	7.9		U
95-50-1	1,2-Dichlorobenzene	0.29	7.9		U
541-73-1	1,3-Dichlorobenzene	0.67	7.9		U
106-46-7	1,4-Dichlorobenzene	0.44	7.9		U
75-71-8	Dichlorodifluoromethane	0.87	7.9		UN
75-34-3	1,1-Dichloroethane	0.43	7.9		U
107-06-2	1,2-Dichloroethane	0.36	7.9		U
75-35-4	1,1-Dichloroethene	0.95	7.9		U
156-59-2	cis-1,2-Dichloroethene	0.95	7.9		U
156-60-5	trans-1,2-Dichloroethene	0.87	7.9		U
78-87-5	1,2-Dichloropropane	0.36	7.9		U
10061-01-5	cis-1,3-Dichloropropene	0.40	7.9		U
10061-02-6	trans-1,3-Dichloropropene	0.25	7.9		U
100-41-4	Ethylbenzene	0.60	7.9		U
591-78-6	2-Hexanone	1.8	7.9		UNJ CH
98-82-8	Isopropylbenzene	0.70	7.9		U
79-20-9	Methyl acetate	1.3	7.9		U
75-09-2	Methylene chloride	0.49	7.9	7.9u ~~0.95~~ JB	
108-87-2	Methyl cyclohexane	0.24	7.9		U
1634-04-4	Methyl tert-butyl ether	0.25	7.9		U
108-10-1	4-Methyl-2-pentanone	0.46	7.9		U
100-42-5	Styrene	0.28	7.9		U
79-34-5	1,1,2,2-Tetrachloroethane	0.34	7.9		U
127-18-4	Tetrachloroethene	0.77	7.9		U

MW 7/26/09

FORM 1
VOLATILE ORGANICS ANALYSIS DATA SHEET

CLIENT SAMPLE NO. 22

MR08-IS09
4-5-6-08D

Lab Name: EMPIRICAL LABS Contract: CH2MHILL

Lab Code: NA Case No.: NA SAS No.: NA SDG No.: LEJEUNE023

Matrix: (soil/water) SOIL Lab Sample ID: 0812082-22

Sample wt/vol: 7.0 (g/mL) G Lab File ID: 1208222A

Level: (low/med) LOW Date Sampled: 12/04/08 15:15

% Moisture: not dec. 11 Date Analyzed: 12/15/08 12:36

GC Column: RTX-VRX ID: 0.25 (mm) Dilution Factor: 1.0

Soil Extract Volume:_____(uL) Soil Aliquot Volume: _____(uL)

CONCENTRATION UNITS: (ug/L or ug/Kg) UG/KG

CAS NO.	COMPOUND	MDL	RL	CONC	Q
108-88-3	Toluene	0.68	7.9		U
120-82-1	1,2,4-Trichlorobenzene	0.14	7.9		U
71-55-6	1,1,1-Trichloroethane	0.71	7.9		U
79-00-5	1,1,2-Trichloroethane	0.28	7.9		U
79-01-6	Trichloroethene	0.68	7.9		U
76-13-1	Trichlorotrifluoroethane	0.44	7.9		U
75-69-4	Trichlorofluoromethane	0.75	7.9		U
75-01-4	Vinyl chloride	0.87	7.9		U
1330-20-7	Xylene(total)	0.56	7.9		U

2/24/09

FORM 1
VOLATILE ORGANICS ANALYSIS DATA SHEET

CLIENT SAMPLE NO.

23

MR08-SS092-08D

Lab Name: EMPIRICAL LABS Contract: CH2MHILL

Lab Code: NA Case No.: NA SAS No.: NA SDG No.: LEJEUNE023

Matrix: (soil/water) SOIL Lab Sample ID: 0812082-23

Sample wt/vol: 6.8 (g/mL) G Lab File ID: 1208223A

Level: (low/med) LOW Date Sampled: 12/04/08 15:30

% Moisture: not dec. 17 Date Analyzed: 12/15/08 13:15

GC Column: RTX-VRX ID: 0.25 (mm) Dilution Factor: 1.0

Soil Extract Volume:_____(uL) Soil Aliquot Volume: _____(uL)

CONCENTRATION UNITS: (ug/L or ug/Kg) UG/KG

CAS NO.	COMPOUND	MDL	RL	CONC	Q
67-64-1	Acetone	1.8	8.8	340	J SSL
71-43-2	Benzene	0.41	8.8	1.6	~~U~~ J
75-27-4	Bromodichloromethane	0.26	8.8		U UJ
75-25-2	Bromoform	0.88	8.8		U
74-83-9	Bromomethane	0.63	8.8		U
78-93-3	2-Butanone	1.2	8.8	21	J
75-15-0	Carbon disulfide	1.1	8.8	3.4	~~U~~ J
56-23-5	Carbon tetrachloride	0.77	8.8		U UJ
108-90-7	Chlorobenzene	0.30	8.8		U
75-00-3	Chloroethane	0.97	8.8		U
67-66-3	Chloroform	0.48	8.8		U
74-87-3	Chloromethane	0.46	8.8		U
110-82-7	Cyclohexane	0.47	8.8	8.8 ~~1.2~~	~~J~~ UJ
124-48-1	Dibromochloromethane	0.30	8.8		U UJ
96-12-8	1,2-Dibromo-3-chloropropane	1.0	4.4		U
106-93-4	1,2-Dibromoethane	0.38	8.8		U
95-50-1	1,2-Dichlorobenzene	0.32	8.8		U
541-73-1	1,3-Dichlorobenzene	0.74	8.8		U
106-46-7	1,4-Dichlorobenzene	0.48	8.8		U
75-71-8	Dichlorodifluoromethane	0.97	8.8		UK
75-34-3	1,1-Dichloroethane	0.47	8.8		U
107-06-2	1,2-Dichloroethane	0.40	8.8		U
75-35-4	1,1-Dichloroethene	1.0	8.8		U
156-59-2	cis-1,2-Dichloroethene	1.0	8.8		U
156-60-5	trans-1,2-Dichloroethene	0.97	8.8		U
78-87-5	1,2-Dichloropropane	0.40	8.8		U
10061-01-5	cis-1,3-Dichloropropene	0.44	8.8		U
10061-02-6	trans-1,3-Dichloropropene	0.28	8.8		U
100-41-4	Ethylbenzene	0.66	8.8	3.1	J J
591-78-6	2-Hexanone	2.0	8.8	4.8	J J
98-82-8	Isopropylbenzene	0.77	8.8		U UJ
79-20-9	Methyl acetate	1.4	8.8		U UJ
75-09-2	Methylene chloride	0.54	8.8	8.8 ~~1.1~~	~~J~~B SSL
108-87-2	Methyl cyclohexane	0.26	8.8	8.8 ~~1.1~~	~~J~~ UJ SSL
1634-04-4	Methyl tert-butyl ether	0.28	8.8		U UJ
108-10-1	4-Methyl-2-pentanone	0.51	8.8	1.5	J J
100-42-5	Styrene	0.31	8.8		U UJ
79-34-5	1,1,2,2-Tetrachloroethane	0.38	8.8		U
127-18-4	Tetrachloroethene	0.85	8.8		U

FORM I VOA

lw
7/7/09

FORM 1
VOLATILE ORGANICS ANALYSIS DATA SHEET

CLIENT SAMPLE NO. 23

MR08-SS092-08D

Lab Name: EMPIRICAL LABS Contract: CH2MHILL

Lab Code: NA Case No.: NA SAS No.: NA SDG No.: LEJEUNE023

Matrix: (soil/water) SOIL Lab Sample ID: 0812082-23

Sample wt/vol: 6.8 (g/mL) G Lab File ID: 1208223A

Level: (low/med) LOW Date Sampled: 12/04/08 15:30

% Moisture: not dec. 17 Date Analyzed: 12/15/08 13:15

GC Column: RTX-VRX ID: 0.25 (mm) Dilution Factor: 1.0

Soil Extract Volume:_____(uL) Soil Aliquot Volume: _____(uL)

CONCENTRATION UNITS: (ug/L or ug/Kg) UG/KG

CAS NO.	COMPOUND	MDL	RL	CONC	Q
108-88-3	Toluene	0.76	8.8	4.0	~~U~~ J
120-82-1	1,2,4-Trichlorobenzene	0.16	8.8		U UJ
71-55-6	1,1,1-Trichloroethane	0.79	8.8		U
79-00-5	1,1,2-Trichloroethane	0.31	8.8		U
79-01-6	Trichloroethene	0.75	8.8		U
76-13-1	Trichlorotrifluoroethane	0.48	8.8		U
75-69-4	Trichlorofluoromethane	0.84	8.8		U
75-01-4	Vinyl chloride	0.97	8.8		U
1330-20-7	Xylene(total)	0.62	8.8	2.3	~~U~~ J

FORM I VOA

MW
2/26/09

FORM 1
VOLATILE ORGANICS ANALYSIS DATA SHEET

CLIENT SAMPLE NO.

23R

MR08-SS092-08DR

Lab Name: EMPIRICAL LABS Contract: CH2MHILL

Lab Code: NA Case No.: NA SAS No.: NA SDG No.: LEJEUNE023

Matrix: (soil/water) SOIL Lab Sample ID: 0812082-23R

Sample wt/vol: 4.8 (g/mL) G Lab File ID: 1208223B

Level: (low/med) LOW Date Sampled: 12/04/08 15:30

% Moisture: not dec. 17 Date Analyzed: 12/18/08 15:28

GC Column: RTX-VRX ID: 0.25 (mm) Dilution Factor: 1.0

Soil Extract Volume:_____(uL) Soil Aliquot Volume: _____(uL)

Use Original

CONCENTRATION UNITS: (ug/L or ug/Kg) UG/KG

CAS NO.	COMPOUND	MDL	RL	CONC	Q
67-64-1	Acetone	2.5	12	200	
71-43-2	Benzene	0.58	12	2.2	J
75-27-4	Bromodichloromethane	0.37	12		U
75-25-2	Bromoform	1.2	12		U
74-83-9	Bromomethane	0.89	12		~~U~~ UJ CC
78-93-3	2-Butanone	1.7	12	14	
75-15-0	Carbon disulfide	1.6	12	4.7	J
56-23-5	Carbon tetrachloride	1.1	12		U
108-90-7	Chlorobenzene	0.42	12		U
75-00-3	Chloroethane	1.4	12		~~U~~ UJ CC
67-66-3	Chloroform	0.68	12		U
74-87-3	Chloromethane	0.64	12		U
110-82-7	Cyclohexane	0.67	12	12U ~~0.96~~ ~~J~~	BL
124-48-1	Dibromochloromethane	0.42	12		U
96-12-8	1,2-Dibromo-3-chloropropane	1.5	6.2		U
106-93-4	1,2-Dibromoethane	0.53	12		U
95-50-1	1,2-Dichlorobenzene	0.46	12		U
541-73-1	1,3-Dichlorobenzene	1.0	12		U
106-46-7	1,4-Dichlorobenzene	0.68	12		U
75-71-8	Dichlorodifluoromethane	1.4	12		U
75-34-3	1,1-Dichloroethane	0.67	12		U
107-06-2	1,2-Dichloroethane	0.57	12		U
75-35-4	1,1-Dichloroethene	1.5	12		U
156-59-2	cis-1,2-Dichloroethene	1.5	12		U
156-60-5	trans-1,2-Dichloroethene	1.4	12		U
78-87-5	1,2-Dichloropropane	0.57	12		U
10061-01-5	cis-1,3-Dichloropropene	0.62	12		U
10061-02-6	trans-1,3-Dichloropropene	0.40	12		U
100-41-4	Ethylbenzene	0.92	12	2.8	J
591-78-6	2-Hexanone	2.8	12	3.7	J
98-82-8	Isopropylbenzene	1.1	12		U
79-20-9	Methyl acetate	2.0	12		U
75-09-2	Methylene chloride	0.76	12		U
108-87-2	Methyl cyclohexane	0.37	12	12U ~~0.94~~ ~~J~~	BL
1634-04-4	Methyl tert-butyl ether	0.40	12		U
108-10-1	4-Methyl-2-pentanone	0.72	12		U
100-42-5	Styrene	0.43	12		U
79-34-5	1,1,2,2-Tetrachloroethane	0.53	12		U
127-18-4	Tetrachloroethene	1.2	12		U

FORM I VOA

2/26/09

FORM 1
VOLATILE ORGANICS ANALYSIS DATA SHEET

CLIENT SAMPLE NO. 23RE

MR08-SS092-08DR

Lab Name: EMPIRICAL LABS Contract: CH2MHILL

Lab Code: NA Case No.: NA SAS No.: NA SDG No.: LEJEUNE023

Matrix: (soil/water) SOIL Lab Sample ID: 0812082-23R

Sample wt/vol: 4.8 (g/mL) G Lab File ID: 1208223B

Level: (low/med) LOW Date Sampled: 12/04/08 15:30

% Moisture: not dec. 17 Date Analyzed: 12/18/08 15:28

GC Column: RTX-VRX ID: 0.25 (mm) Dilution Factor: 1.0

Use original

Soil Extract Volume:_____(uL) Soil Aliquot Volume: _____(uL)

CONCENTRATION UNITS: (ug/L or ug/Kg) UG/KG

CAS NO.	COMPOUND	MDL	RL	CONC	Q
108-88-3	Toluene	1.1	12	6.0	J
120-82-1	1,2,4-Trichlorobenzene	0.22	12		U
71-55-6	1,1,1-Trichloroethane	1.1	12		U
79-00-5	1,1,2-Trichloroethane	0.43	12		U
79-01-6	Trichloroethene	1.0	12		U
76-13-1	Trichlorotrifluoroethane	0.68	12		U
75-69-4	Trichlorofluoromethane	1.2	12		U
75-01-4	Vinyl chloride	1.4	12		U
1330-20-7	Xylene(total)	0.86	12	3.7	J

FORM I VOA

lw 2/26/09

FORM 1
VOLATILE ORGANICS ANALYSIS DATA SHEET

CLIENT SAMPLE NO.

24

MR08-IS09
2-4-5-08D

Lab Name: EMPIRICAL LABS Contract: CH2MHILL

Lab Code: NA Case No.: NA SAS No.: NA SDG No.: LEJEUNE023

Matrix: (soil/water) SOIL Lab Sample ID: 0812082-24

Sample wt/vol: 5.1 (g/mL) G Lab File ID: 1208224A

Level: (low/med) LOW Date Sampled: 12/04/08 15:45

% Moisture: not dec. 9 Date Analyzed: 12/15/08 13:54

GC Column: RTX-VRX ID: 0.25 (mm) Dilution Factor: 1.0

Soil Extract Volume:_____(uL) Soil Aliquot Volume: _____(uL)

CONCENTRATION UNITS: (ug/L or ug/Kg) UG/KG

CAS NO.	COMPOUND	MDL	RL	CONC	Q
67-64-1	Acetone	2.2	11	20	UJ CCH BC
71-43-2	Benzene	0.51	11		U
75-27-4	Bromodichloromethane	0.33	11		U
75-25-2	Bromoform	1.1	11		U
74-83-9	Bromomethane	0.78	11		U
78-93-3	2-Butanone	1.5	11		U
75-15-0	Carbon disulfide	1.4	11		U
56-23-5	Carbon tetrachloride	0.96	11		U
108-90-7	Chlorobenzene	0.37	11		U
75-00-3	Chloroethane	1.2	11		U
67-66-3	Chloroform	0.60	11		U
74-87-3	Chloromethane	0.57	11		U
110-82-7	Cyclohexane	0.59	11		U
124-48-1	Dibromochloromethane	0.37	11		U
96-12-8	1,2-Dibromo-3-chloropropane	1.3	5.4		U
106-93-4	1,2-Dibromoethane	0.47	11		U
95-50-1	1,2-Dichlorobenzene	0.40	11		U
541-73-1	1,3-Dichlorobenzene	0.91	11		U
106-46-7	1,4-Dichlorobenzene	0.60	11		U
75-71-8	Dichlorodifluoromethane	1.2	11		U
75-34-3	1,1-Dichloroethane	0.59	11		U
107-06-2	1,2-Dichloroethane	0.50	11		U
75-35-4	1,1-Dichloroethene	1.3	11		U
156-59-2	cis-1,2-Dichloroethene	1.3	11		U
156-60-5	trans-1,2-Dichloroethene	1.2	11		U
78-87-5	1,2-Dichloropropane	0.50	11		U
10061-01-5	cis-1,3-Dichloropropene	0.54	11		U
10061-02-6	trans-1,3-Dichloropropene	0.35	11		U
100-41-4	Ethylbenzene	0.82	11		U
591-78-6	2-Hexanone	2.5	11		~~U~~ UJ CCH
98-82-8	Isopropylbenzene	0.96	11		U
79-20-9	Methyl acetate	1.7	11		U
75-09-2	Methylene chloride	0.67	11	11U	~~2.0 JB~~ B
108-87-2	Methyl cyclohexane	0.33	11		U
1634-04-4	Methyl tert-butyl ether	0.35	11		U
108-10-1	4-Methyl-2-pentanone	0.63	11		U
100-42-5	Styrene	0.38	11		U
79-34-5	1,1,2,2-Tetrachloroethane	0.47	11		U
127-18-4	Tetrachloroethene	1.0	11		U

FORM I VOA

kw
2/26/09

FORM 1
VOLATILE ORGANICS ANALYSIS DATA SHEET

CLIENT SAMPLE NO. 24

MR08-IS09
2-4-5-08D

Lab Name: EMPIRICAL LABS Contract: CH2MHILL

Lab Code: NA Case No.: NA SAS No.: NA SDG No.: LEJEUNE023

Matrix: (soil/water) SOIL Lab Sample ID: 0812082-24

Sample wt/vol: 5.1 (g/mL) G Lab File ID: 1208224A

Level: (low/med) LOW Date Sampled: 12/04/08 15:45

% Moisture: not dec. 9 Date Analyzed: 12/15/08 13:54

GC Column: RTX-VRX ID: 0.25 (mm) Dilution Factor: 1.0

Soil Extract Volume:_____(uL) Soil Aliquot Volume: _____(uL)

CONCENTRATION UNITS: (ug/L or ug/Kg) UG/KG

CAS NO.	COMPOUND	MDL	RL	CONC	Q
108-88-3	Toluene	0.94	11		U
120-82-1	1,2,4-Trichlorobenzene	0.20	11		U
71-55-6	1,1,1-Trichloroethane	0.98	11		U
79-00-5	1,1,2-Trichloroethane	0.38	11		U
79-01-6	Trichloroethene	0.92	11		U
76-13-1	Trichlorotrifluoroethane	0.60	11		U
75-69-4	Trichlorofluoromethane	1.0	11		U
75-01-4	Vinyl chloride	1.2	11		U
1330-20-7	Xylene(total)	0.76	11		U

kes
2/26/09

FORM 1
VOLATILE ORGANICS ANALYSIS DATA SHEET

CLIENT SAMPLE NO.

25

MR08-EB01
120408-SS

Lab Name: EMPIRICAL LABS Contract: CH2MHILL

Lab Code: NA Case No.: NA SAS No.: NA SDG No.: LEJEUNE023

Matrix: (soil/water) WATER Lab Sample ID: 0812082-25

Sample wt/vol: 5.000 (g/mL) ML Lab File ID: 1208225

Level: (low/med) LOW Date Sampled: 12/04/08 12:50

% Moisture: not dec. _____ Date Analyzed: 12/11/08 23:12

GC Column: RTX-VRX ID: 0.25 (mm) Dilution Factor: 1.0

Soil Extract Volume:_____(uL) Soil Aliquot Volume: _____(uL)

CONCENTRATION UNITS: (ug/L or ug/Kg) UG/L

CAS NO.	COMPOUND	MDL	RL	CONC	Q
67-64-1	Acetone	0.84	2.5	0.97	J
71-43-2	Benzene	0.11	1.0		U
75-27-4	Bromodichloromethane	0.10	1.0		U
75-25-2	Bromoform	0.10	1.0		U
74-83-9	Bromomethane	0.32	1.0		U
78-93-3	2-Butanone	1.0	3.0		U
75-15-0	Carbon disulfide	0.13	1.0		U
56-23-5	Carbon tetrachloride	0.15	1.0		U
108-90-7	Chlorobenzene	0.10	1.0	0.13	J
75-00-3	Chloroethane	0.18	1.0		U
67-66-3	Chloroform	0.11	1.0		U
74-87-3	Chloromethane	0.29	1.0		U
110-82-7	Cyclohexane	0.20	1.0	1.8	
124-48-1	Dibromochloromethane	0.10	1.0		U
96-12-8	1,2-Dibromo-3-chloropropane	0.11	1.0		U
106-93-4	1,2-Dibromoethane	0.10	1.0		U
95-50-1	1,2-Dichlorobenzene	0.10	1.0		U
541-73-1	1,3-Dichlorobenzene	0.13	1.0		U
106-46-7	1,4-Dichlorobenzene	0.10	1.0		U
75-71-8	Dichlorodifluoromethane	0.22	1.0		U
75-34-3	1,1-Dichloroethane	0.12	1.0		U
107-06-2	1,2-Dichloroethane	0.10	1.0		U
75-35-4	1,1-Dichloroethene	0.15	1.0		U
156-59-2	cis-1,2-Dichloroethene	0.13	1.0		U
156-60-5	trans-1,2-Dichloroethene	0.13	1.0		U
78-87-5	1,2-Dichloropropane	0.10	1.0		U
10061-01-5	cis-1,3-Dichloropropene	0.11	1.0		U
10061-02-6	trans-1,3-Dichloropropene	0.10	1.0		U
100-41-4	Ethylbenzene	0.13	1.0		U
591-78-6	2-Hexanone	0.30	4.0		~~U~~ UJ CQ
98-82-8	Isopropylbenzene	0.15	1.0		U
79-20-9	Methyl acetate	0.30	2.0		U
75-09-2	Methylene chloride	0.14	1.0		U
108-87-2	Methyl cyclohexane	0.17	1.0	1.1	
1634-04-4	Methyl tert-butyl ether	0.10	1.0		U
108-10-1	4-Methyl-2-pentanone	0.29	2.0		U
100-42-5	Styrene	0.10	1.0		U
79-34-5	1,1,2,2-Tetrachloroethane	0.10	1.0		U
127-18-4	Tetrachloroethene	0.15	1.0		U

lw
2/26/09

FORM 1
VOLATILE ORGANICS ANALYSIS DATA SHEET

CLIENT SAMPLE NO.

25

MR08-EB01
120408-SS

Lab Name: EMPIRICAL LABS Contract: CH2MHILL

Lab Code: NA Case No.: NA SAS No.: NA SDG No.: LEJEUNE023

Matrix: (soil/water) WATER Lab Sample ID: 0812082-25

Sample wt/vol: 5.000 (g/mL) ML Lab File ID: 1208225

Level: (low/med) LOW Date Sampled: 12/04/08 12:50

% Moisture: not dec. _____ Date Analyzed: 12/11/08 23:12

GC Column: RTX-VRX ID: 0.25 (mm) Dilution Factor: 1.0

Soil Extract Volume:_____(uL) Soil Aliquot Volume: _____(uL)

CONCENTRATION UNITS: (ug/L or ug/Kg) UG/L

CAS NO.	COMPOUND	MDL	RL	CONC	Q
108-88-3	Toluene	0.10	1.0	0.13	J
120-82-1	1,2,4-Trichlorobenzene	0.10	1.0		U
71-55-6	1,1,1-Trichloroethane	0.17	1.0		U
79-00-5	1,1,2-Trichloroethane	0.10	1.0		U
79-01-6	Trichloroethene	0.13	1.0		U
76-13-1	Trichlorotrifluoroethane	0.18	1.0		U
75-69-4	Trichlorofluoromethane	0.17	1.0		U
75-01-4	Vinyl chloride	0.18	1.0		U
1330-20-7	Xylene(total)	0.22	1.0		U

fw
2/26/09

FORM 1
VOLATILE ORGANICS ANALYSIS DATA SHEET

CLIENT SAMPLE NO.

MR08-EB01
120408-IS

26

Lab Name: EMPIRICAL LABS Contract: CH2MHILL

Lab Code: NA Case No.: NA SAS No.: NA SDG No.: LEJEUNE023

Matrix: (soil/water) WATER Lab Sample ID: 0812082-26

Sample wt/vol: 5.000 (g/mL) ML Lab File ID: 1208226

Level: (low/med) LOW Date Sampled: 12/04/08 13:30

% Moisture: not dec. _____ Date Analyzed: 12/11/08 23:41

GC Column: RTX-VRX ID: 0.25 (mm) Dilution Factor: 1.0

Soil Extract Volume:_____(uL) Soil Aliquot Volume: _____(uL)

CONCENTRATION UNITS: (ug/L or ug/Kg) UG/L

CAS NO.	COMPOUND	MDL	RL	CONC	Q
67-64-1	Acetone	0.84	2.5	3.2	
71-43-2	Benzene	0.11	1.0		U
75-27-4	Bromodichloromethane	0.10	1.0	0.19	J
75-25-2	Bromoform	0.10	1.0		U
74-83-9	Bromomethane	0.32	1.0		U
78-93-3	2-Butanone	1.0	3.0		U
75-15-0	Carbon disulfide	0.13	1.0		U
56-23-5	Carbon tetrachloride	0.15	1.0		U
108-90-7	Chlorobenzene	0.10	1.0		U
75-00-3	Chloroethane	0.18	1.0		U
67-66-3	Chloroform	0.11	1.0	1.9	
74-87-3	Chloromethane	0.29	1.0		U
110-82-7	Cyclohexane	0.20	1.0		U
124-48-1	Dibromochloromethane	0.10	1.0		U
96-12-8	1,2-Dibromo-3-chloropropane	0.11	1.0		U
106-93-4	1,2-Dibromoethane	0.10	1.0		U
95-50-1	1,2-Dichlorobenzene	0.10	1.0		U
541-73-1	1,3-Dichlorobenzene	0.13	1.0		U
106-46-7	1,4-Dichlorobenzene	0.10	1.0		U
75-71-8	Dichlorodifluoromethane	0.22	1.0		U
75-34-3	1,1-Dichloroethane	0.12	1.0		U
107-06-2	1,2-Dichloroethane	0.10	1.0		U
75-35-4	1,1-Dichloroethene	0.15	1.0		U
156-59-2	cis-1,2-Dichloroethene	0.13	1.0		U
156-60-5	trans-1,2-Dichloroethene	0.13	1.0		U
78-87-5	1,2-Dichloropropane	0.10	1.0		U
10061-01-5	cis-1,3-Dichloropropene	0.11	1.0		U
10061-02-6	trans-1,3-Dichloropropene	0.10	1.0		U
100-41-4	Ethylbenzene	0.13	1.0		U
591-78-6	2-Hexanone	0.30	4.0		~~U~~ UJ CH
98-82-8	Isopropylbenzene	0.15	1.0		U
79-20-9	Methyl acetate	0.30	2.0		U
75-09-2	Methylene chloride	0.14	1.0	1.4u ~~1.4~~ ~~B~~	B
108-87-2	Methyl cyclohexane	0.17	1.0		U
1634-04-4	Methyl tert-butyl ether	0.10	1.0		U
108-10-1	4-Methyl-2-pentanone	0.29	2.0		U
100-42-5	Styrene	0.10	1.0		U
79-34-5	1,1,2,2-Tetrachloroethane	0.10	1.0		U
127-18-4	Tetrachloroethene	0.15	1.0		U

lw
2/26/09

FORM 1
VOLATILE ORGANICS ANALYSIS DATA SHEET

CLIENT SAMPLE NO.

MR08-EB01
120408-IS

26

Lab Name: EMPIRICAL LABS Contract: CH2MHILL

Lab Code: NA Case No.: NA SAS No.: NA SDG No.: LEJEUNE023

Matrix: (soil/water) WATER Lab Sample ID: 0812082-26

Sample wt/vol: 5.000 (g/mL) ML Lab File ID: 1208226

Level: (low/med) LOW Date Sampled: 12/04/08 13:30

% Moisture: not dec. _____ Date Analyzed: 12/11/08 23:41

GC Column: RTX-VRX ID: 0.25 (mm) Dilution Factor: 1.0

Soil Extract Volume:_____(uL) Soil Aliquot Volume: _____(uL)

CONCENTRATION UNITS: (ug/L or ug/Kg) UG/L

CAS NO.	COMPOUND	MDL	RL	CONC	Q
108-88-3	Toluene	0.10	1.0	0.18	J
120-82-1	1,2,4-Trichlorobenzene	0.10	1.0		U
71-55-6	1,1,1-Trichloroethane	0.17	1.0		U
79-00-5	1,1,2-Trichloroethane	0.10	1.0		U
79-01-6	Trichloroethene	0.13	1.0		U
76-13-1	Trichlorotrifluoroethane	0.18	1.0		U
75-69-4	Trichlorofluoromethane	0.17	1.0		U
75-01-4	Vinyl chloride	0.18	1.0		U
1330-20-7	Xylene(total)	0.22	1.0		U

lw
2/26/09

FORM 1
VOLATILE ORGANICS ANALYSIS DATA SHEET

CLIENT SAMPLE NO.

27

MR08-TB01120408

Lab Name: EMPIRICAL LABS Contract: CH2MHILL

Lab Code: NA Case No.: NA SAS No.: NA SDG No.: LEJEUNE023

Matrix: (soil/water) WATER Lab Sample ID: 0812082-27

Sample wt/vol: 5.000 (g/mL) ML Lab File ID: 1208227

Level: (low/med) LOW Date Sampled: 12/04/08 13:50

% Moisture: not dec. _____ Date Analyzed: 12/11/08 19:43

GC Column: RTX-VRX ID: 0.25 (mm) Dilution Factor: 1.0

Soil Extract Volume:_____(uL) Soil Aliquot Volume: _____(uL)

CONCENTRATION UNITS: (ug/L or ug/Kg) UG/L

CAS NO.	COMPOUND	MDL	RL	CONC	Q
67-64-1	Acetone	0.84	2.5		U
71-43-2	Benzene	0.11	1.0		U
75-27-4	Bromodichloromethane	0.10	1.0		U
75-25-2	Bromoform	0.10	1.0		U
74-83-9	Bromomethane	0.32	1.0		U
78-93-3	2-Butanone	1.0	3.0		U
75-15-0	Carbon disulfide	0.13	1.0		U
56-23-5	Carbon tetrachloride	0.15	1.0		U
108-90-7	Chlorobenzene	0.10	1.0		U
75-00-3	Chloroethane	0.18	1.0		U
67-66-3	Chloroform	0.11	1.0		U
74-87-3	Chloromethane	0.29	1.0		U
110-82-7	Cyclohexane	0.20	1.0		U
124-48-1	Dibromochloromethane	0.10	1.0		U
96-12-8	1,2-Dibromo-3-chloropropane	0.11	1.0		U
106-93-4	1,2-Dibromoethane	0.10	1.0		U
95-50-1	1,2-Dichlorobenzene	0.10	1.0		U
541-73-1	1,3-Dichlorobenzene	0.13	1.0		U
106-46-7	1,4-Dichlorobenzene	0.10	1.0		U
75-71-8	Dichlorodifluoromethane	0.22	1.0		U
75-34-3	1,1-Dichloroethane	0.12	1.0		U
107-06-2	1,2-Dichloroethane	0.10	1.0		U
75-35-4	1,1-Dichloroethene	0.15	1.0		U
156-59-2	cis-1,2-Dichloroethene	0.13	1.0		U
156-60-5	trans-1,2-Dichloroethene	0.13	1.0		U
78-87-5	1,2-Dichloropropane	0.10	1.0		U
10061-01-5	cis-1,3-Dichloropropene	0.11	1.0		U
10061-02-6	trans-1,3-Dichloropropene	0.10	1.0		U
100-41-4	Ethylbenzene	0.13	1.0		U
591-78-6	2-Hexanone	0.30	4.0		~~U~~ UJ CH
98-82-8	Isopropylbenzene	0.15	1.0		U
79-20-9	Methyl acetate	0.30	2.0		U
75-09-2	Methylene chloride	0.14	1.0	1.7	~~B~~ U B
108-87-2	Methyl cyclohexane	0.17	1.0		U
1634-04-4	Methyl tert-butyl ether	0.10	1.0		U
108-10-1	4-Methyl-2-pentanone	0.29	2.0		U
100-42-5	Styrene	0.10	1.0		U
79-34-5	1,1,2,2-Tetrachloroethane	0.10	1.0		U
127-18-4	Tetrachloroethene	0.15	1.0		U

KW
7/26/09

FORM 1
VOLATILE ORGANICS ANALYSIS DATA SHEET

CLIENT SAMPLE NO.

MR08-TB01120408

27

Lab Name: EMPIRICAL LABS Contract: CH2MHILL

Lab Code: NA Case No.: NA SAS No.: NA SDG No.: LEJEUNE023

Matrix: (soil/water) WATER Lab Sample ID: 0812082-27

Sample wt/vol: 5.000 (g/mL) ML Lab File ID: 1208227

Level: (low/med) LOW Date Sampled: 12/04/08 13:50

% Moisture: not dec. _____ Date Analyzed: 12/11/08 19:43

GC Column: RTX-VRX ID: 0.25 (mm) Dilution Factor: 1.0

Soil Extract Volume:_____(uL) Soil Aliquot Volume: _____(uL)

CONCENTRATION UNITS: (ug/L or ug/Kg) UG/L

CAS NO.	COMPOUND	MDL	RL	CONC	Q
108-88-3	Toluene	0.10	1.0		U
120-82-1	1,2,4-Trichlorobenzene	0.10	1.0		U
71-55-6	1,1,1-Trichloroethane	0.17	1.0		U
79-00-5	1,1,2-Trichloroethane	0.10	1.0		U
79-01-6	Trichloroethene	0.13	1.0		U
76-13-1	Trichlorotrifluoroethane	0.18	1.0		U
75-69-4	Trichlorofluoromethane	0.17	1.0		U
75-01-4	Vinyl chloride	0.18	1.0		U
1330-20-7	Xylene(total)	0.22	1.0		U

lw
2/26/09

ENVIRONMENTAL
Data Services, Inc.

VOLATILE ORGANIC COMPOUNDS
USEPA Region IV - Level IV Review

Site: MCB Camp Lejeune, TO-09 SDG #: LEJEUNE24

Client: CH2M HILL, Inc., Virginia Beach, Virginia Date: February 26, 2009

Laboratory: Empirical Laboratories, Nashville, Tennessee Reviewer: Nancy Weaver

EDS ID	Client Sample ID	Laboratory Sample ID	Matrix
1	MR08-SS091-08D	0812097-01	Soil
1RE	MR08-SS091-08DRE	0812097-01RE	Soil
2	MR08-IS091-2-3-08D	0812097-02	Soil
3	MR08-SS093-08D	0812097-03	Soil
4	MR08-IS093-2-3-08D	0812097-04	Soil
5	MR08-SS103-08D	0812097-05	Soil
5RE	MR08-SS103-08DRE	0812097-05RE	Soil
6	MR08-IS103-3-4-08D	0812097-06	Soil
7	MR08-SS116-08D	0812097-07	Soil
8	MR08-IS116-3-4-08D	0812097-08	Soil
9	MR08-SS117-08D	0812097-09	Soil
10	MR08-IS117-2-3-08D	0812097-10	Soil
11	MR08-SS125-08D	0812097-11	Soil
11RE	MR08-SS125-08DRE	0812097-11RE	Soil
12	MR08-IS125-4-5-08D	0812097-12	Soil
13	MR08-SS123-08D	0812097-13	Soil
14	MR08-IS123-6-7-08D	0812097-14	Soil
15	MR08-EB01120508-SS	0812097-15	Water
16	MR08-EB01120508-IS	0812097-16	Water
17	MR08-TB01120508	0812097-17	Water

The USEPA "Contract Laboratory Program National Functional Guidelines for Organic Data Review," October 1999, and professional judgement were used in evaluating the data in this summary report.

Holding Times - All samples were analyzed within 14 days for preserved water and soil samples.

GC/MS Tuning - All of the BFB tunes in the initial and continuing calibrations met the percent relative abundance criteria.

Initial Calibration - The initial calibrations exhibited acceptable %RSD and mean RRF values.

Continuing Calibration - The continuing calibrations exhibited acceptable %D and RRF values except the following.

CCAL Date	Compound	%D/RRF	Qualifier	Affected Samples
12/14/08	Acetone	33.5%	J/UJ	15-17
12/15/08	Acetone	77.3%	J/UJ	2, 3, 5-9
	2-Hexanone	30.1%	J/UJ	2, 3, 5-9
12/18/08	Bromomethane	41.5%	J/UJ	1RE
	Chloroethane	31.6%	J/UJ	1RE

Surrogates - All samples exhibited acceptable surrogate recoveries except the following.

Sample ID	Surrogate	%R	Qualifier
1	S4-Bromofluorobenzene	78%	J/UJ
4	S3-Toluene-d8	128%	J/UJ
	S4-Bromofluorobenzene	76%	J/UJ
5RE	S3-Toluene-d8	135%	J/UJ
	S4-Bromofluorobenzene	72%	J/UJ
11	S4-Bromofluorobenzene	73%	J/UJ
11RE	S3-Toluene-d8	123%	J/UJ
	S4-Bromofluorobenzene	76%	J/UJ

MS/MSD - A MS/MSD sample was not analyzed from this data package.

Laboratory Control Sample - The LCS samples exhibited acceptable %R values.

Internal Standard (IS) Area Performance - All internal standards met response and retention time (RT) criteria except the following.

Sample ID	Internal Standard	Area Count	Qualifier
5RE	IS3-1,4-Dichlorobenzene-d4	Low	None - Already qualified due to surrogate
11	IS3-1,4-Dichlorobenzene-d4	Low	None - Already qualified due to surrogate
11RE	IS3-1,4-Dichlorobenzene-d4	Low	None - Already qualified due to surrogate

Method Blank - The method blanks exhibited the following contamination.

Blank ID	Compound	Conc.	Action Level	Qualifier	Affected Samples
V3BLK1214	Methylene chloride	0.23 ug/L	2.3 ug/L	U	15-17
V1BLK1215	Methylene chloride	2.4 ug/kg	24 ug/kg	U	1-9
V1BLK1215E	Methylene chloride	2.4 ug/kg	24 ug/kg	U	10-14

Trip, Field, Equipment Blank - Field QC results are summarized below.

Blank ID	Compound	Conc. ug/L	Action Level ug/kg	Qualifier	Affected Samples
MR08-EB1120508-SS	Acetone	4.3	43	U	3, 5, 5RE, 7, 9, 11, 11RE, 13
	Bromodichloromethane	0.17	0.85	None	All ND
	Chloroform	2.5	12.5	None	All ND
	Toluene	0.36	1.8	U	1, 1RE, 9
MR08-EB1120508-IS	Acetone	3.2	32	None	See EB
	Chloroform	2.5	12.5	None	All ND
	Toluene	0.43	2.15	None	See EB
MR08-FB01120608	Acetone	3.8	38	U	2, 4, 6, 8, 10, 12
	Bromodichloromethane	0.2	1.0	None	All ND
	Chloroform	3.0	15	None	All ND
	Toluene	0.35	1.75	None	See EB
MR08-TB01120508	None - ND	-	-	-	-

Field Duplicates - Field duplicate samples were not included in this data package.

Tentatively Identified Compounds (TICs) - TICs were not reported.

Compound Quantitation - Several samples exhibited high concentrations of target compounds over the calibration range and were flagged (E). The laboratory diluted and reanalyzed samples. The reviewer replaced the original results with the dilution results. The original Form Is should be used for reporting purposes.

Several samples exhibited internal standard and/or surrogate deficiencies. These samples were reanalyzed. Refer to Form Is for which were used for reporting purposes.

FORM 1
VOLATILE ORGANICS ANALYSIS DATA SHEET

CLIENT SAMPLE NO. 1

MR08-SS091-08D

Lab Name: EMPIRICAL LABS Contract: CH2MHILL

Lab Code: NA Case No.: NA SAS No.: NA SDG No.: LEJEUNE024

Matrix: (soil/water) SOIL Lab Sample ID: 0812097-01

Sample wt/vol: 6.4 (g/mL) G Lab File ID: 1209701A

Level: (low/med) LOW Date Sampled: 12/05/08 08:35

% Moisture: not dec. 29 Date Analyzed: 12/15/08 14:33 Use reanalysis

GC Column: RTX-VRX ID: 0.25 (mm) Dilution Factor: 1.0

Soil Extract Volume:_____(uL) Soil Aliquot Volume: _____(uL)

CONCENTRATION UNITS: (ug/L or ug/Kg) UG/KG

CAS NO.	COMPOUND	MDL	RL	CONC	Q
67-64-1-------	Acetone	2.2	11	340	J SSL
71-43-2-------	Benzene	0.51	11	1.1	J J
75-27-4-------	Bromodichloromethane	0.33	11		U UJ
75-25-2-------	Bromoform	1.1	11		U
74-83-9-------	Bromomethane	0.79	11		U
78-93-3-------	2-Butanone	1.5	11	16	J
75-15-0-------	Carbon disulfide	1.4	11		U UJ
56-23-5-------	Carbon tetrachloride	0.96	11		U
108-90-7------	Chlorobenzene	0.37	11		U
75-00-3-------	Chloroethane	1.2	11		U
67-66-3-------	Chloroform	0.60	11		U
74-87-3-------	Chloromethane	0.57	11		U
110-82-7------	Cyclohexane	0.59	11	0.92	J J
124-48-1------	Dibromochloromethane	0.37	11		U UJ
96-12-8-------	1,2-Dibromo-3-chloropropane	1.3	5.5		U
106-93-4------	1,2-Dibromoethane	0.47	11		U
95-50-1-------	1,2-Dichlorobenzene	0.40	11		U
541-73-1------	1,3-Dichlorobenzene	0.92	11		U
106-46-7------	1,4-Dichlorobenzene	0.60	11		U
75-71-8-------	Dichlorodifluoromethane	1.2	11		U
75-34-3-------	1,1-Dichloroethane	0.59	11		U
107-06-2------	1,2-Dichloroethane	0.50	11		U
75-35-4-------	1,1-Dichloroethene	1.3	11		U
156-59-2------	cis-1,2-Dichloroethene	1.3	11		U
156-60-5------	trans-1,2-Dichloroethene	1.2	11		U
78-87-5-------	1,2-Dichloropropane	0.50	11		U
10061-01-5----	cis-1,3-Dichloropropene	0.55	11		U
10061-02-6----	trans-1,3-Dichloropropene	0.35	11		U
100-41-4------	Ethylbenzene	0.82	11	2.5	J J
591-78-6------	2-Hexanone	2.5	11		U UJ
98-82-8-------	Isopropylbenzene	0.96	11		U
79-20-9-------	Methyl acetate	1.8	11		U
75-09-2-------	Methylene chloride	0.68	11	11 UJ ~~2.1~~	~~JB~~ SSL
108-87-2------	Methyl cyclohexane	0.33	11	1.2	J J SS
1634-04-4-----	Methyl tert-butyl ether	0.35	11		U UJ
108-10-1------	4-Methyl-2-pentanone	0.64	11	1.5	J J
100-42-5------	Styrene	0.38	11		U UJ
79-34-5-------	1,1,2,2-Tetrachloroethane	0.47	11		U
127-18-4------	Tetrachloroethene	1.1	11		U

FORM I VOA

LW 2/26/09

FORM 1
VOLATILE ORGANICS ANALYSIS DATA SHEET

CLIENT SAMPLE NO. 1

MR08-SS091-08D

Lab Name: EMPIRICAL LABS Contract: CH2MHILL

Lab Code: NA Case No.: NA SAS No.: NA SDG No.: LEJEUNE024

Matrix: (soil/water) SOIL Lab Sample ID: 0812097-01

Sample wt/vol: 6.4 (g/mL) G Lab File ID: 1209701A

Level: (low/med) LOW Date Sampled: 12/05/08 08:35

% Moisture: not dec. 29 Date Analyzed: 12/15/08 14:33 Use reanalysis

GC Column: RTX-VRX ID: 0.25 (mm) Dilution Factor: 1.0

Soil Extract Volume:_____(uL) Soil Aliquot Volume: _____(uL)

CONCENTRATION UNITS: (ug/L or ug/Kg) UG/KG

CAS NO.	COMPOUND	MDL	RL	CONC	Q
108-88-3	Toluene	0.94	11	11UJ ~~1.4~~	~~J~~ SSL
120-82-1	1,2,4-Trichlorobenzene	0.20	11		UUJ SS
71-55-6	1,1,1-Trichloroethane	0.99	11		U
79-00-5	1,1,2-Trichloroethane	0.38	11		U
79-01-6	Trichloroethene	0.93	11		U
76-13-1	Trichlorotrifluoroethane	0.60	11		U
75-69-4	Trichlorofluoromethane	1.0	11		U
75-01-4	Vinyl chloride	1.2	11		U
1330-20-7	Xylene(total)	0.77	11		U

FORM I VOA

2/26/09

FORM 1
VOLATILE ORGANICS ANALYSIS DATA SHEET

CLIENT SAMPLE NO. 1RE

MR08-SS091-08DR

Lab Name: EMPIRICAL LABS Contract: CH2MHILL

Lab Code: NA Case No.: NA SAS No.: NA SDG No.: LEJEUNE024

Matrix: (soil/water) SOIL Lab Sample ID: 0812097-01R

Sample wt/vol: 4.3 (g/mL) G Lab File ID: 1209701B

Level: (low/med) LOW Date Sampled: 12/05/08 08:35

% Moisture: not dec. 29 Date Analyzed: 12/18/08 16:18

GC Column: RTX-VRX ID: 0.25 (mm) Dilution Factor: 1.0

Soil Extract Volume:_____(uL) Soil Aliquot Volume: _____(uL)

CONCENTRATION UNITS: (ug/L or ug/Kg) UG/KG

CAS NO.	COMPOUND	MDL	RL	CONC	Q
67-64-1	Acetone	3.2	16	230	
71-43-2	Benzene	0.76	16	1.5	J
75-27-4	Bromodichloromethane	0.48	16		U
75-25-2	Bromoform	1.6	16		U
74-83-9	Bromomethane	1.2	16		~~U~~ UJ CC
78-93-3	2-Butanone	2.2	16	18	
75-15-0	Carbon disulfide	2.1	16		U
56-23-5	Carbon tetrachloride	1.4	16		U
108-90-7	Chlorobenzene	0.55	16		U
75-00-3	Chloroethane	1.8	16		~~U~~ UJ CC
67-66-3	Chloroform	0.89	16		U
74-87-3	Chloromethane	0.84	16		U
110-82-7	Cyclohexane	0.87	16	1.5	J
124-48-1	Dibromochloromethane	0.55	16		U
96-12-8	1,2-Dibromo-3-chloropropane	1.9	8.1		U
106-93-4	1,2-Dibromoethane	0.69	16		U
95-50-1	1,2-Dichlorobenzene	0.60	16		U
541-73-1	1,3-Dichlorobenzene	1.4	16		U
106-46-7	1,4-Dichlorobenzene	0.89	16		U
75-71-8	Dichlorodifluoromethane	1.8	16		U
75-34-3	1,1-Dichloroethane	0.87	16		U
107-06-2	1,2-Dichloroethane	0.74	16		U
75-35-4	1,1-Dichloroethene	1.9	16		U
156-59-2	cis-1,2-Dichloroethene	1.9	16		U
156-60-5	trans-1,2-Dichloroethene	1.8	16		U
78-87-5	1,2-Dichloropropane	0.74	16		U
10061-01-5	cis-1,3-Dichloropropene	0.81	16		U
10061-02-6	trans-1,3-Dichloropropene	0.52	16		U
100-41-4	Ethylbenzene	1.2	16	3.1	J
591-78-6	2-Hexanone	3.7	16		U
98-82-8	Isopropylbenzene	1.4	16		U
79-20-9	Methyl acetate	2.6	16		U
75-09-2	Methylene chloride	1.00	16		U
108-87-2	Methyl cyclohexane	0.48	16	1.6	J
1634-04-4	Methyl tert-butyl ether	0.52	16		U
108-10-1	4-Methyl-2-pentanone	0.94	16	2.1	J
100-42-5	Styrene	0.56	16		U
79-34-5	1,1,2,2-Tetrachloroethane	0.69	16		U
127-18-4	Tetrachloroethene	1.6	16		U

FORM I VOA

kw 2/26/09

FORM 1
VOLATILE ORGANICS ANALYSIS DATA SHEET

CLIENT SAMPLE NO. 1RE

MR08-SS091-08DR

Lab Name: EMPIRICAL LABS Contract: CH2MHILL

Lab Code: NA Case No.: NA SAS No.: NA SDG No.: LEJEUNE024

Matrix: (soil/water) SOIL Lab Sample ID: 0812097-01R

Sample wt/vol: 4.3 (g/mL) G Lab File ID: 1209701B

Level: (low/med) LOW Date Sampled: 12/05/08 08:35

% Moisture: not dec. 29 Date Analyzed: 12/18/08 16:18

GC Column: RTX-VRX ID: 0.25 (mm) Dilution Factor: 1.0

Soil Extract Volume:_____(uL) Soil Aliquot Volume: _____(uL)

CONCENTRATION UNITS: (ug/L or ug/Kg) UG/KG

CAS NO.	COMPOUND	MDL	RL	CONC	Q
108-88-3	Toluene	1.4	16	16u ~~1.8~~	~~J~~ U B
120-82-1	1,2,4-Trichlorobenzene	0.29	16		U
71-55-6	1,1,1-Trichloroethane	1.4	16		U
79-00-5	1,1,2-Trichloroethane	0.56	16		U
79-01-6	Trichloroethene	1.4	16		U
76-13-1	Trichlorotrifluoroethane	0.89	16		U
75-69-4	Trichlorofluoromethane	1.5	16		U
75-01-4	Vinyl chloride	1.8	16		U
1330-20-7	Xylene(total)	1.1	16		U

lw 2/26/09

FORM 1
VOLATILE ORGANICS ANALYSIS DATA SHEET

CLIENT SAMPLE NO. 2

MR08-IS09
1-2-3-08D

Lab Name: EMPIRICAL LABS Contract: CH2MHILL

Lab Code: NA Case No.: NA SAS No.: NA SDG No.: LEJEUNE024

Matrix: (soil/water) SOIL Lab Sample ID: 0812097-02

Sample wt/vol: 6.1 (g/mL) G Lab File ID: 1209702A

Level: (low/med) LOW Date Sampled: 12/05/08 08:45

% Moisture: not dec. 34 Date Analyzed: 12/15/08 15:12

GC Column: RTX-VRX ID: 0.25 (mm) Dilution Factor: 1.0

Soil Extract Volume:_____(uL) Soil Aliquot Volume: _____(uL)

CONCENTRATION UNITS: (ug/L or ug/Kg) UG/KG

CAS NO.	COMPOUND	MDL	RL	CONC	Q
67-64-1	Acetone	2.5	12	40	UJ CCHE
71-43-2	Benzene	0.58	12		U
75-27-4	Bromodichloromethane	0.37	12		U
75-25-2	Bromoform	1.2	12		U
74-83-9	Bromomethane	0.89	12		U
78-93-3	2-Butanone	1.7	12		U
75-15-0	Carbon disulfide	1.6	12		U
56-23-5	Carbon tetrachloride	1.1	12		U
108-90-7	Chlorobenzene	0.42	12		U
75-00-3	Chloroethane	1.4	12		U
67-66-3	Chloroform	0.68	12		U
74-87-3	Chloromethane	0.64	12		U
110-82-7	Cyclohexane	0.67	12		U
124-48-1	Dibromochloromethane	0.42	12		U
96-12-8	1,2-Dibromo-3-chloropropane	1.5	6.2		U
106-93-4	1,2-Dibromoethane	0.53	12		U
95-50-1	1,2-Dichlorobenzene	0.46	12		U
541-73-1	1,3-Dichlorobenzene	1.0	12		U
106-46-7	1,4-Dichlorobenzene	0.68	12		U
75-71-8	Dichlorodifluoromethane	1.4	12		UJ
75-34-3	1,1-Dichloroethane	0.67	12		U
107-06-2	1,2-Dichloroethane	0.57	12		U
75-35-4	1,1-Dichloroethene	1.5	12		U
156-59-2	cis-1,2-Dichloroethene	1.5	12		U
156-60-5	trans-1,2-Dichloroethene	1.4	12		U
78-87-5	1,2-Dichloropropane	0.57	12		U
10061-01-5	cis-1,3-Dichloropropene	0.62	12		U
10061-02-6	trans-1,3-Dichloropropene	0.40	12		U
100-41-4	Ethylbenzene	0.93	12		U
591-78-6	2-Hexanone	2.8	12		UJ CC
98-82-8	Isopropylbenzene	1.1	12		U
79-20-9	Methyl acetate	2.0	12		U
75-09-2	Methylene chloride	0.77	12	12U	~~2.5 JB~~
108-87-2	Methyl cyclohexane	0.37	12		U
1634-04-4	Methyl tert-butyl ether	0.40	12		U
108-10-1	4-Methyl-2-pentanone	0.72	12		U
100-42-5	Styrene	0.43	12		U
79-34-5	1,1,2,2-Tetrachloroethane	0.53	12		U
127-18-4	Tetrachloroethene	1.2	12		U

FORM I VOA

QW
2/26/09

FORM 1
VOLATILE ORGANICS ANALYSIS DATA SHEET

CLIENT SAMPLE NO. 2

MR08-IS09
1-2-3-08D

Lab Name: EMPIRICAL LABS Contract: CH2MHILL

Lab Code: NA Case No.: NA SAS No.: NA SDG No.: LEJEUNE024

Matrix: (soil/water) SOIL Lab Sample ID: 0812097-02

Sample wt/vol: 6.1 (g/mL) G Lab File ID: 1209702A

Level: (low/med) LOW Date Sampled: 12/05/08 08:45

% Moisture: not dec. 34 Date Analyzed: 12/15/08 15:12

GC Column: RTX-VRX ID: 0.25 (mm) Dilution Factor: 1.0

Soil Extract Volume:_____(uL) Soil Aliquot Volume: _____(uL)

CONCENTRATION UNITS: (ug/L or ug/Kg) UG/KG

CAS NO.	COMPOUND	MDL	RL	CONC	Q
108-88-3	Toluene	1.1	12		U
120-82-1	1,2,4-Trichlorobenzene	0.22	12		U
71-55-6	1,1,1-Trichloroethane	1.1	12		U
79-00-5	1,1,2-Trichloroethane	0.43	12		U
79-01-6	Trichloroethene	1.0	12		U
76-13-1	Trichlorotrifluoroethane	0.68	12		U
75-69-4	Trichlorofluoromethane	1.2	12		U
75-01-4	Vinyl chloride	1.4	12		U
1330-20-7	Xylene(total)	0.87	12		U

dw
2/26/09

FORM 1
VOLATILE ORGANICS ANALYSIS DATA SHEET

CLIENT SAMPLE NO. 3

MR08-SS093-08D

Lab Name: EMPIRICAL LABS Contract: CH2MHILL

Lab Code: NA Case No.: NA SAS No.: NA SDG No.: LEJEUNE024

Matrix: (soil/water) SOIL Lab Sample ID: 0812097-03

Sample wt/vol: 6.4 (g/mL) G Lab File ID: 1209703A

Level: (low/med) LOW Date Sampled: 12/05/08 09:25

% Moisture: not dec. 12 Date Analyzed: 12/15/08 15:51

GC Column: RTX-VRX ID: 0.25 (mm) Dilution Factor: 1.0

Soil Extract Volume:_____(uL) Soil Aliquot Volume: _____(uL)

CONCENTRATION UNITS: (ug/L or ug/Kg) UG/KG

CAS NO.	COMPOUND	MDL	RL	CONC	Q
67-64-1	Acetone	1.8	8.9	28	UJ C CH BL
71-43-2	Benzene	0.42	8.9		U
75-27-4	Bromodichloromethane	0.27	8.9		U
75-25-2	Bromoform	0.89	8.9		U
74-83-9	Bromomethane	0.64	8.9		U
78-93-3	2-Butanone	1.2	8.9		U
75-15-0	Carbon disulfide	1.2	8.9	2.2	J
56-23-5	Carbon tetrachloride	0.78	8.9		U
108-90-7	Chlorobenzene	0.30	8.9		U
75-00-3	Chloroethane	0.98	8.9		U
67-66-3	Chloroform	0.49	8.9		U
74-87-3	Chloromethane	0.46	8.9		U
110-82-7	Cyclohexane	0.48	8.9		U
124-48-1	Dibromochloromethane	0.30	8.9		U
96-12-8	1,2-Dibromo-3-chloropropane	1.1	4.4		U
106-93-4	1,2-Dibromoethane	0.38	8.9		U
95-50-1	1,2-Dichlorobenzene	0.33	8.9		U
541-73-1	1,3-Dichlorobenzene	0.74	8.9		U
106-46-7	1,4-Dichlorobenzene	0.49	8.9		U
75-71-8	Dichlorodifluoromethane	0.98	8.9		UJ
75-34-3	1,1-Dichloroethane	0.48	8.9		U
107-06-2	1,2-Dichloroethane	0.41	8.9		U
75-35-4	1,1-Dichloroethene	1.1	8.9		U
156-59-2	cis-1,2-Dichloroethene	1.1	8.9		U
156-60-5	trans-1,2-Dichloroethene	0.98	8.9		U
78-87-5	1,2-Dichloropropane	0.41	8.9		U
10061-01-5	cis-1,3-Dichloropropene	0.44	8.9		U
10061-02-6	trans-1,3-Dichloropropene	0.28	8.9		U
100-41-4	Ethylbenzene	0.66	8.9		U
591-78-6	2-Hexanone	2.0	8.9		~~U~~ UJ CC
98-82-8	Isopropylbenzene	0.78	8.9		U
79-20-9	Methyl acetate	1.4	8.9		U
75-09-2	Methylene chloride	0.55	8.9	8.9	~~1.5 UB~~ BC
108-87-2	Methyl cyclohexane	0.27	8.9		U
1634-04-4	Methyl tert-butyl ether	0.28	8.9		U
108-10-1	4-Methyl-2-pentanone	0.51	8.9		U
100-42-5	Styrene	0.31	8.9		U
79-34-5	1,1,2,2-Tetrachloroethane	0.38	8.9		U
127-18-4	Tetrachloroethene	0.86	8.9		U

FORM I VOA

DW 2/26/09

FORM 1
VOLATILE ORGANICS ANALYSIS DATA SHEET

CLIENT SAMPLE NO. 3

MR08-SS093-08D

Lab Name: EMPIRICAL LABS Contract: CH2MHILL

Lab Code: NA Case No.: NA SAS No.: NA SDG No.: LEJEUNE024

Matrix: (soil/water) SOIL Lab Sample ID: 0812097-03

Sample wt/vol: 6.4 (g/mL) G Lab File ID: 1209703A

Level: (low/med) LOW Date Sampled: 12/05/08 09:25

% Moisture: not dec. 12 Date Analyzed: 12/15/08 15:51

GC Column: RTX-VRX ID: 0.25 (mm) Dilution Factor: 1.0

Soil Extract Volume:_____(uL) Soil Aliquot Volume: _____(uL)

CONCENTRATION UNITS: (ug/L or ug/Kg) UG/KG

CAS NO.	COMPOUND	MDL	RL	CONC	Q
108-88-3	Toluene	0.76	8.9		U
120-82-1	1,2,4-Trichlorobenzene	0.16	8.9		U
71-55-6	1,1,1-Trichloroethane	0.80	8.9		U
79-00-5	1,1,2-Trichloroethane	0.31	8.9		U
79-01-6	Trichloroethene	0.75	8.9		U
76-13-1	Trichlorotrifluoroethane	0.49	8.9		U
75-69-4	Trichlorofluoromethane	0.84	8.9		U
75-01-4	Vinyl chloride	0.98	8.9		U
1330-20-7	Xylene(total)	0.62	8.9		U

JW 2/26/09

FORM 1
VOLATILE ORGANICS ANALYSIS DATA SHEET

CLIENT SAMPLE NO. 4

MR08-IS09
3-2-3-08D

Lab Name: EMPIRICAL LABS Contract: CH2MHILL

Lab Code: NA Case No.: NA SAS No.: NA SDG No.: LEJEUNE024

Matrix: (soil/water) SOIL Lab Sample ID: 0812097-04

Sample wt/vol: 5.9 (g/mL) G Lab File ID: 1209704A

Level: (low/med) LOW Date Sampled: 12/05/08 09:50

% Moisture: not dec. 14 Date Analyzed: 12/15/08 16:30

GC Column: RTX-VRX ID: 0.25 (mm) Dilution Factor: 1.0

Soil Extract Volume:_____(uL) Soil Aliquot Volume: _____(uL)

CONCENTRATION UNITS: (ug/L or ug/Kg) UG/KG

CAS NO.	COMPOUND	MDL	RL	CONC	Q
67-64-1	Acetone	2.0	9.8	26	UJ SSL BL
71-43-2	Benzene	0.46	9.8		U UJ SS
75-27-4	Bromodichloromethane	0.29	9.8		U
75-25-2	Bromoform	0.98	9.8		U
74-83-9	Bromomethane	0.70	9.8		U
78-93-3	2-Butanone	1.4	9.8		U
75-15-0	Carbon disulfide	1.3	9.8	3.6	J J
56-23-5	Carbon tetrachloride	0.86	9.8		U UJ
108-90-7	Chlorobenzene	0.33	9.8		U
75-00-3	Chloroethane	1.1	9.8		U
67-66-3	Chloroform	0.54	9.8		U
74-87-3	Chloromethane	0.51	9.8		U
110-82-7	Cyclohexane	0.53	9.8		U
124-48-1	Dibromochloromethane	0.33	9.8		U
96-12-8	1,2-Dibromo-3-chloropropane	1.2	4.9		U
106-93-4	1,2-Dibromoethane	0.42	9.8		U
95-50-1	1,2-Dichlorobenzene	0.36	9.8		U
541-73-1	1,3-Dichlorobenzene	0.82	9.8		U
106-46-7	1,4-Dichlorobenzene	0.54	9.8		U
75-71-8	Dichlorodifluoromethane	1.1	9.8		U
75-34-3	1,1-Dichloroethane	0.53	9.8		U
107-06-2	1,2-Dichloroethane	0.45	9.8		U
75-35-4	1,1-Dichloroethene	1.2	9.8		U
156-59-2	cis-1,2-Dichloroethene	1.2	9.8		U
156-60-5	trans-1,2-Dichloroethene	1.1	9.8		U
78-87-5	1,2-Dichloropropane	0.45	9.8		U
10061-01-5	cis-1,3-Dichloropropene	0.49	9.8		U
10061-02-6	trans-1,3-Dichloropropene	0.31	9.8		U
100-41-4	Ethylbenzene	0.73	9.8		U
591-78-6	2-Hexanone	2.2	9.8		U
98-82-8	Isopropylbenzene	0.86	9.8		U
79-20-9	Methyl acetate	1.6	9.8		U
75-09-2	Methylene chloride	0.60	9.8	9.8 UJ ~~1.8~~	~~JB~~ BL SS
108-87-2	Methyl cyclohexane	0.29	9.8	2.7	J J SS
1634-04-4	Methyl tert-butyl ether	0.31	9.8		U UJ
108-10-1	4-Methyl-2-pentanone	0.56	9.8		U
100-42-5	Styrene	0.34	9.8		U
79-34-5	1,1,2,2-Tetrachloroethane	0.42	9.8		U
127-18-4	Tetrachloroethene	0.95	9.8		U

FORM I VOA

lew 2/26/09

FORM 1
VOLATILE ORGANICS ANALYSIS DATA SHEET

CLIENT SAMPLE NO. 4

MR08-IS09
3-2-3-08D

Lab Name: EMPIRICAL LABS Contract: CH2MHILL

Lab Code: NA Case No.: NA SAS No.: NA SDG No.: LEJEUNE024

Matrix: (soil/water) SOIL Lab Sample ID: 0812097-04

Sample wt/vol: 5.9 (g/mL) G Lab File ID: 1209704A

Level: (low/med) LOW Date Sampled: 12/05/08 09:50

% Moisture: not dec. 14 Date Analyzed: 12/15/08 16:30

GC Column: RTX-VRX ID: 0.25 (mm) Dilution Factor: 1.0

Soil Extract Volume:_____(uL) Soil Aliquot Volume: _____(uL)

CONCENTRATION UNITS: (ug/L or ug/Kg) UG/KG

CAS NO.	COMPOUND	MDL	RL	CONC	Q
108-88-3	Toluene	0.84	9.8		~~U~~ UJ SSI
120-82-1	1,2,4-Trichlorobenzene	0.18	9.8		~~U~~
71-55-6	1,1,1-Trichloroethane	0.88	9.8		~~U~~
79-00-5	1,1,2-Trichloroethane	0.34	9.8		~~U~~
79-01-6	Trichloroethene	0.83	9.8		~~U~~
76-13-1	Trichlorotrifluoroethane	0.54	9.8		~~U~~
75-69-4	Trichlorofluoromethane	0.93	9.8		~~U~~
75-01-4	Vinyl chloride	1.1	9.8		~~U~~
1330-20-7	Xylene(total)	0.68	9.8		~~U~~

FORM I VOA

JLW
2/26/09

FORM 1
VOLATILE ORGANICS ANALYSIS DATA SHEET

CLIENT SAMPLE NO. 5

MR08-SS103-08D

Lab Name: EMPIRICAL LABS Contract: CH2MHILL

Lab Code: NA Case No.: NA SAS No.: NA SDG No.: LEJEUNE024

Matrix: (soil/water) SOIL Lab Sample ID: 0812097-05

Sample wt/vol: 5.2 (g/mL) G Lab File ID: 1209705A

Level: (low/med) LOW Date Sampled: 12/05/08 10:10

% Moisture: not dec. 12 Date Analyzed: 12/15/08 17:10

GC Column: RTX-VRX ID: 0.25 (mm) Dilution Factor: 1.0

Soil Extract Volume:_____(uL) Soil Aliquot Volume: _____(uL)

CONCENTRATION UNITS: (ug/L or ug/Kg) UG/KG

CAS NO.	COMPOUND	MDL	RL	CONC	Q
67-64-1	Acetone	2.2	11	26	UJ CC B
71-43-2	Benzene	0.51	11	0.67	J
75-27-4	Bromodichloromethane	0.33	11		U
75-25-2	Bromoform	1.1	11		U
74-83-9	Bromomethane	0.78	11		U
78-93-3	2-Butanone	1.5	11		U
75-15-0	Carbon disulfide	1.4	11		U
56-23-5	Carbon tetrachloride	0.96	11		U
108-90-7	Chlorobenzene	0.37	11		U
75-00-3	Chloroethane	1.2	11		U
67-66-3	Chloroform	0.60	11		U
74-87-3	Chloromethane	0.57	11		U
110-82-7	Cyclohexane	0.59	11		U
124-48-1	Dibromochloromethane	0.37	11		U
96-12-8	1,2-Dibromo-3-chloropropane	1.3	5.4		U
106-93-4	1,2-Dibromoethane	0.47	11		U
95-50-1	1,2-Dichlorobenzene	0.40	11		U
541-73-1	1,3-Dichlorobenzene	0.92	11		U
106-46-7	1,4-Dichlorobenzene	0.60	11		U
75-71-8	Dichlorodifluoromethane	1.2	11		U
75-34-3	1,1-Dichloroethane	0.59	11		U
107-06-2	1,2-Dichloroethane	0.50	11		U
75-35-4	1,1-Dichloroethene	1.3	11		U
156-59-2	cis-1,2-Dichloroethene	1.3	11		U
156-60-5	trans-1,2-Dichloroethene	1.2	11		U
78-87-5	1,2-Dichloropropane	0.50	11		U
10061-01-5	cis-1,3-Dichloropropene	0.54	11		U
10061-02-6	trans-1,3-Dichloropropene	0.35	11		U
100-41-4	Ethylbenzene	0.82	11	1.1	J
591-78-6	2-Hexanone	2.5	11		UJ CC
98-82-8	Isopropylbenzene	0.96	11		U
79-20-9	Methyl acetate	1.7	11		U
75-09-2	Methylene chloride	0.68	11	11u 3.5 ~~JB~~	B
108-87-2	Methyl cyclohexane	0.33	11		U
1634-04-4	Methyl tert-butyl ether	0.35	11		U
108-10-1	4-Methyl-2-pentanone	0.63	11		U
100-42-5	Styrene	0.38	11		U
79-34-5	1,1,2,2-Tetrachloroethane	0.47	11		U
127-18-4	Tetrachloroethene	1.0	11		U

FORM I VOA

JW 2/26/09

FORM 1
VOLATILE ORGANICS ANALYSIS DATA SHEET

CLIENT SAMPLE NO. 5

MR08-SS103-08D

Lab Name: EMPIRICAL LABS Contract: CH2MHILL

Lab Code: NA Case No.: NA SAS No.: NA SDG No.: LEJEUNE024

Matrix: (soil/water) SOIL Lab Sample ID: 0812097-05

Sample wt/vol: 5.2 (g/mL) G Lab File ID: 1209705A

Level: (low/med) LOW Date Sampled: 12/05/08 10:10

% Moisture: not dec. 12 Date Analyzed: 12/15/08 17:10

GC Column: RTX-VRX ID: 0.25 (mm) Dilution Factor: 1.0

Soil Extract Volume:_____(uL) Soil Aliquot Volume: _____(uL)

CONCENTRATION UNITS: (ug/L or ug/Kg) UG/KG

CAS NO.	COMPOUND	MDL	RL	CONC	Q
108-88-3	Toluene	0.94	11	3.0	J
120-82-1	1,2,4-Trichlorobenzene	0.20	11		U
71-55-6	1,1,1-Trichloroethane	0.98	11		U
79-00-5	1,1,2-Trichloroethane	0.38	11		U
79-01-6	Trichloroethene	0.93	11		U
76-13-1	Trichlorotrifluoroethane	0.60	11		U
75-69-4	Trichlorofluoromethane	1.0	11		U
75-01-4	Vinyl chloride	1.2	11		U
1330-20-7	Xylene(total)	0.76	11		U

lw 2/26/09

FORM 1
VOLATILE ORGANICS ANALYSIS DATA SHEET

CLIENT SAMPLE NO. 5RE

MR08-SS103-08DR

Lab Name: EMPIRICAL LABS Contract: CH2MHILL

Lab Code: NA Case No.: NA SAS No.: NA SDG No.: LEJEUNE024

Matrix: (soil/water) SOIL Lab Sample ID: 0812097-05R

Sample wt/vol: 4.8 (g/mL) G Lab File ID: 1209705B

Level: (low/med) LOW Date Sampled: 12/05/08 10:10

% Moisture: not dec. 12 Date Analyzed: 12/18/08 16:57

GC Column: RTX-VRX ID: 0.25 (mm) Dilution Factor: 1.0

Use Original

Soil Extract Volume:_____(uL) Soil Aliquot Volume:_____(uL)

CONCENTRATION UNITS: (ug/L or ug/Kg) UG/KG

CAS NO.	COMPOUND	MDL	RL	CONC	Q
67-64-1	Acetone	2.4	12	20	UJ SSBL
71-43-2	Benzene	0.56	12	0.81	J J SSL
75-27-4	Bromodichloromethane	0.36	12		U UJ
75-25-2	Bromoform	1.2	12		U
74-83-9	Bromomethane	0.86	12		U
78-93-3	2-Butanone	1.7	12		U
75-15-0	Carbon disulfide	1.5	12		U
56-23-5	Carbon tetrachloride	1.0	12		U
108-90-7	Chlorobenzene	0.40	12		U
75-00-3	Chloroethane	1.3	12		U
67-66-3	Chloroform	0.66	12		U
74-87-3	Chloromethane	0.62	12		U
110-82-7	Cyclohexane	0.64	12		U
124-48-1	Dibromochloromethane	0.40	12		U
96-12-8	1,2-Dibromo-3-chloropropane	1.4	6.0		U
106-93-4	1,2-Dibromoethane	0.51	12		U
95-50-1	1,2-Dichlorobenzene	0.44	12		U
541-73-1	1,3-Dichlorobenzene	1.0	12		U
106-46-7	1,4-Dichlorobenzene	0.66	12		U
75-71-8	Dichlorodifluoromethane	1.3	12		U
75-34-3	1,1-Dichloroethane	0.64	12		U
107-06-2	1,2-Dichloroethane	0.55	12		U
75-35-4	1,1-Dichloroethene	1.4	12		U
156-59-2	cis-1,2-Dichloroethene	1.4	12		U
156-60-5	trans-1,2-Dichloroethene	1.3	12		U
78-87-5	1,2-Dichloropropane	0.55	12		U
10061-01-5	cis-1,3-Dichloropropene	0.60	12		U
10061-02-6	trans-1,3-Dichloropropene	0.38	12		U
100-41-4	Ethylbenzene	0.89	12		U
591-78-6	2-Hexanone	2.7	12		U
98-82-8	Isopropylbenzene	1.0	12		U
79-20-9	Methyl acetate	1.9	12		U
75-09-2	Methylene chloride	0.74	12		U
108-87-2	Methyl cyclohexane	0.36	12		U
1634-04-4	Methyl tert-butyl ether	0.38	12		U
108-10-1	4-Methyl-2-pentanone	0.69	12		U
100-42-5	Styrene	0.42	12		U
79-34-5	1,1,2,2-Tetrachloroethane	0.51	12		U
127-18-4	Tetrachloroethene	1.2	12		U

FORM I VOA

dw 2/26/09

FORM 1
VOLATILE ORGANICS ANALYSIS DATA SHEET

CLIENT SAMPLE NO. 5RE

MR08-SS103-08DR

Lab Name: EMPIRICAL LABS Contract: CH2MHILL

Lab Code: NA Case No.: NA SAS No.: NA SDG No.: LEJEUNE024

Matrix: (soil/water) SOIL Lab Sample ID: 0812097-05R

Sample wt/vol: 4.8 (g/mL) G Lab File ID: 1209705B

Level: (low/med) LOW Date Sampled: 12/05/08 10:10

% Moisture: not dec. 12 Date Analyzed: 12/18/08 16:57

GC Column: RTX-VRX ID: 0.25 (mm) Dilution Factor: 1.0

Soil Extract Volume:_____(uL) Soil Aliquot Volume: _____(uL)

Use original

CONCENTRATION UNITS: (ug/L or ug/Kg) UG/KG

CAS NO.	COMPOUND	MDL	RL	CONC	Q
108-88-3	Toluene	1.0	12	4.2	~~U~~ J SS
120-82-1	1,2,4-Trichlorobenzene	0.21	12		~~U~~ UJ
71-55-6	1,1,1-Trichloroethane	1.1	12		~~U~~
79-00-5	1,1,2-Trichloroethane	0.42	12		~~U~~
79-01-6	Trichloroethene	1.0	12		~~U~~
76-13-1	Trichlorotrifluoroethane	0.66	12		~~U~~
75-69-4	Trichlorofluoromethane	1.1	12		~~U~~
75-01-4	Vinyl chloride	1.3	12		~~U~~
1330-20-7	Xylene(total)	0.83	12		~~U~~

R RE

FORM I VOA

lw 2/26/09

FORM 1
VOLATILE ORGANICS ANALYSIS DATA SHEET

CLIENT SAMPLE NO. 6

MR08-IS10
3-3-4-08D

Lab Name: EMPIRICAL LABS Contract: CH2MHILL

Lab Code: NA Case No.: NA SAS No.: NA SDG No.: LEJEUNE024

Matrix: (soil/water) SOIL Lab Sample ID: 0812097-06

Sample wt/vol: 7.3 (g/mL) G Lab File ID: 1209706A

Level: (low/med) LOW Date Sampled: 12/05/08 10:30

% Moisture: not dec. 11 Date Analyzed: 12/15/08 17:49

GC Column: RTX-VRX ID: 0.25 (mm) Dilution Factor: 1.0

Soil Extract Volume:_____(uL) Soil Aliquot Volume: _____(uL)

CONCENTRATION UNITS: (ug/L or ug/Kg) UG/KG

CAS NO.	COMPOUND	MDL	RL	CONC	Q
67-64-1	Acetone	1.5	7.6	10	US CH B
71-43-2	Benzene	0.36	7.6		U
75-27-4	Bromodichloromethane	0.23	7.6		U
75-25-2	Bromoform	0.76	7.6		U
74-83-9	Bromomethane	0.55	7.6		U
78-93-3	2-Butanone	1.1	7.6		U
75-15-0	Carbon disulfide	0.99	7.6		U
56-23-5	Carbon tetrachloride	0.67	7.6		U
108-90-7	Chlorobenzene	0.26	7.6		U
75-00-3	Chloroethane	0.84	7.6		U
67-66-3	Chloroform	0.42	7.6		U
74-87-3	Chloromethane	0.40	7.6		U
110-82-7	Cyclohexane	0.41	7.6		U
124-48-1	Dibromochloromethane	0.26	7.6		U
96-12-8	1,2-Dibromo-3-chloropropane	0.92	3.8		U
106-93-4	1,2-Dibromoethane	0.33	7.6		U
95-50-1	1,2-Dichlorobenzene	0.28	7.6		U
541-73-1	1,3-Dichlorobenzene	0.64	7.6		U
106-46-7	1,4-Dichlorobenzene	0.42	7.6		U
75-71-8	Dichlorodifluoromethane	0.84	7.6		U
75-34-3	1,1-Dichloroethane	0.41	7.6		U
107-06-2	1,2-Dichloroethane	0.35	7.6		U
75-35-4	1,1-Dichloroethene	0.92	7.6		U
156-59-2	cis-1,2-Dichloroethene	0.92	7.6		U
156-60-5	trans-1,2-Dichloroethene	0.84	7.6		U
78-87-5	1,2-Dichloropropane	0.35	7.6		U
10061-01-5	cis-1,3-Dichloropropene	0.38	7.6		U
10061-02-6	trans-1,3-Dichloropropene	0.24	7.6		U
100-41-4	Ethylbenzene	0.57	7.6		U
591-78-6	2-Hexanone	1.8	7.6		U US CC1
98-82-8	Isopropylbenzene	0.67	7.6		U
79-20-9	Methyl acetate	1.2	7.6		U
75-09-2	Methylene chloride	0.47	7.6	7.6u	~~1.9 JB~~ BL
108-87-2	Methyl cyclohexane	0.23	7.6		U
1634-04-4	Methyl tert-butyl ether	0.24	7.6		U
108-10-1	4-Methyl-2-pentanone	0.44	7.6		U
100-42-5	Styrene	0.27	7.6		U
79-34-5	1,1,2,2-Tetrachloroethane	0.33	7.6		U
127-18-4	Tetrachloroethene	0.74	7.6		U

FORM I VOA

lw
7/20/09

FORM 1
VOLATILE ORGANICS ANALYSIS DATA SHEET

CLIENT SAMPLE NO. 6

MR08-IS10
3-3-4-08D

Lab Name: EMPIRICAL LABS Contract: CH2MHILL

Lab Code: NA Case No.: NA SAS No.: NA SDG No.: LEJEUNE024

Matrix: (soil/water) SOIL Lab Sample ID: 0812097-06

Sample wt/vol: 7.3 (g/mL) G Lab File ID: 1209706A

Level: (low/med) LOW Date Sampled: 12/05/08 10:30

% Moisture: not dec. 11 Date Analyzed: 12/15/08 17:49

GC Column: RTX-VRX ID: 0.25 (mm) Dilution Factor: 1.0

Soil Extract Volume:_____(uL) Soil Aliquot Volume: _____(uL)

CONCENTRATION UNITS: (ug/L or ug/Kg) UG/KG

CAS NO.	COMPOUND	MDL	RL	CONC	Q
108-88-3	Toluene	0.66	7.6		U
120-82-1	1,2,4-Trichlorobenzene	0.14	7.6		U
71-55-6	1,1,1-Trichloroethane	0.69	7.6		U
79-00-5	1,1,2-Trichloroethane	0.27	7.6		U
79-01-6	Trichloroethene	0.65	7.6		U
76-13-1	Trichlorotrifluoroethane	0.42	7.6		U
75-69-4	Trichlorofluoromethane	0.72	7.6		U
75-01-4	Vinyl chloride	0.84	7.6		U
1330-20-7	Xylene(total)	0.53	7.6		U

lw 2/26/09

FORM 1
VOLATILE ORGANICS ANALYSIS DATA SHEET

CLIENT SAMPLE NO. 7

MR08-SS116-08D

Lab Name: EMPIRICAL LABS Contract: CH2MHILL

Lab Code: NA Case No.: NA SAS No.: NA SDG No.: LEJEUNE024

Matrix: (soil/water) SOIL Lab Sample ID: 0812097-07

Sample wt/vol: 6.3 (g/mL) G Lab File ID: 1209707A

Level: (low/med) LOW Date Sampled: 12/05/08 11:00

% Moisture: not dec. 18 Date Analyzed: 12/15/08 18:28

GC Column: RTX-VRX ID: 0.25 (mm) Dilution Factor: 1.0

Soil Extract Volume:_____(uL) Soil Aliquot Volume: _____(uL)

CONCENTRATION UNITS: (ug/L or ug/Kg) UG/KG

CAS NO.	COMPOUND	MDL	RL	CONC	Q
67-64-1	Acetone	1.9	9.5	26	UJ CH
71-43-2	Benzene	0.45	9.5	2.9	J
75-27-4	Bromodichloromethane	0.29	9.5		U
75-25-2	Bromoform	0.95	9.5		U
74-83-9	Bromomethane	0.69	9.5		U
78-93-3	2-Butanone	1.3	9.5	3.6	J
75-15-0	Carbon disulfide	1.2	9.5	1.3	J
56-23-5	Carbon tetrachloride	0.84	9.5		U
108-90-7	Chlorobenzene	0.32	9.5		U
75-00-3	Chloroethane	1.0	9.5		U
67-66-3	Chloroform	0.52	9.5		U
74-87-3	Chloromethane	0.50	9.5		U
110-82-7	Cyclohexane	0.52	9.5	0.75	J
124-48-1	Dibromochloromethane	0.32	9.5		U
96-12-8	1,2-Dibromo-3-chloropropane	1.1	4.8		U
106-93-4	1,2-Dibromoethane	0.41	9.5		U
95-50-1	1,2-Dichlorobenzene	0.35	9.5		U
541-73-1	1,3-Dichlorobenzene	0.80	9.5		U
106-46-7	1,4-Dichlorobenzene	0.52	9.5		U
75-71-8	Dichlorodifluoromethane	1.0	9.5		UJ
75-34-3	1,1-Dichloroethane	0.52	9.5		U
107-06-2	1,2-Dichloroethane	0.44	9.5		U
75-35-4	1,1-Dichloroethene	1.1	9.5		U
156-59-2	cis-1,2-Dichloroethene	1.1	9.5		U
156-60-5	trans-1,2-Dichloroethene	1.0	9.5		U
78-87-5	1,2-Dichloropropane	0.44	9.5		U
10061-01-5	cis-1,3-Dichloropropene	0.48	9.5		U
10061-02-6	trans-1,3-Dichloropropene	0.30	9.5		U
100-41-4	Ethylbenzene	0.72	9.5	3.0	J
591-78-6	2-Hexanone	2.2	9.5		UJ CC
98-82-8	Isopropylbenzene	0.84	9.5		U
79-20-9	Methyl acetate	1.5	9.5		U
75-09-2	Methylene chloride	0.59	9.5	9.5u ~~2.8~~ ~~JB~~	BL
108-87-2	Methyl cyclohexane	0.29	9.5	0.80	J
1634-04-4	Methyl tert-butyl ether	0.30	9.5		U
108-10-1	4-Methyl-2-pentanone	0.55	9.5	0.81	J
100-42-5	Styrene	0.33	9.5		U
79-34-5	1,1,2,2-Tetrachloroethane	0.41	9.5		U
127-18-4	Tetrachloroethene	0.92	9.5		U

FORM I VOA

dw 2/26/09

FORM 1
VOLATILE ORGANICS ANALYSIS DATA SHEET

CLIENT SAMPLE NO. 7

MR08-SS116-08D

Lab Name: EMPIRICAL LABS Contract: CH2MHILL

Lab Code: NA Case No.: NA SAS No.: NA SDG No.: LEJEUNE024

Matrix: (soil/water) SOIL Lab Sample ID: 0812097-07

Sample wt/vol: 6.3 (g/mL) G Lab File ID: 1209707A

Level: (low/med) LOW Date Sampled: 12/05/08 11:00

% Moisture: not dec. 18 Date Analyzed: 12/15/08 18:28

GC Column: RTX-VRX ID: 0.25 (mm) Dilution Factor: 1.0

Soil Extract Volume:_____(uL) Soil Aliquot Volume: _____(uL)

CONCENTRATION UNITS: (ug/L or ug/Kg) UG/KG

CAS NO.	COMPOUND	MDL	RL	CONC	Q
108-88-3	Toluene	0.82	9.5	3.7	J
120-82-1	1,2,4-Trichlorobenzene	0.17	9.5		U
71-55-6	1,1,1-Trichloroethane	0.86	9.5		U
79-00-5	1,1,2-Trichloroethane	0.33	9.5		U
79-01-6	Trichloroethene	0.81	9.5		U
76-13-1	Trichlorotrifluoroethane	0.52	9.5		U
75-69-4	Trichlorofluoromethane	0.91	9.5		U
75-01-4	Vinyl chloride	1.0	9.5		U
1330-20-7	Xylene(total)	0.67	9.5		U

DW
2/26/09

FORM 1
VOLATILE ORGANICS ANALYSIS DATA SHEET

CLIENT SAMPLE NO. 8

MR08-IS11
6-3-4-08D

Lab Name: EMPIRICAL LABS Contract: CH2MHILL

Lab Code: NA Case No.: NA SAS No.: NA SDG No.: LEJEUNE024

Matrix: (soil/water) SOIL Lab Sample ID: 0812097-08

Sample wt/vol: 6.7 (g/mL) G Lab File ID: 1209708A

Level: (low/med) LOW Date Sampled: 12/05/08 11:15

% Moisture: not dec. 14 Date Analyzed: 12/15/08 19:07

GC Column: RTX-VRX ID: 0.25 (mm) Dilution Factor: 1.0

Soil Extract Volume:_____(uL) Soil Aliquot Volume: _____(uL)

CONCENTRATION UNITS: (ug/L or ug/Kg) UG/KG

CAS NO.	COMPOUND	MDL	RL	CONC	Q
67-64-1	Acetone	1.7	8.7	10	UJ CH B1
71-43-2	Benzene	0.41	8.7		U
75-27-4	Bromodichloromethane	0.26	8.7		U
75-25-2	Bromoform	0.87	8.7		U
74-83-9	Bromomethane	0.63	8.7		U
78-93-3	2-Butanone	1.2	8.7		U
75-15-0	Carbon disulfide	1.1	8.7		U
56-23-5	Carbon tetrachloride	0.77	8.7		U
108-90-7	Chlorobenzene	0.30	8.7		U
75-00-3	Chloroethane	0.96	8.7		U
67-66-3	Chloroform	0.48	8.7		U
74-87-3	Chloromethane	0.45	8.7		U
110-82-7	Cyclohexane	0.47	8.7		U
124-48-1	Dibromochloromethane	0.30	8.7		U
96-12-8	1,2-Dibromo-3-chloropropane	1.0	4.4		U
106-93-4	1,2-Dibromoethane	0.37	8.7		U
95-50-1	1,2-Dichlorobenzene	0.32	8.7		U
541-73-1	1,3-Dichlorobenzene	0.73	8.7		U
106-46-7	1,4-Dichlorobenzene	0.48	8.7		U
75-71-8	Dichlorodifluoromethane	0.96	8.7		U
75-34-3	1,1-Dichloroethane	0.47	8.7		U
107-06-2	1,2-Dichloroethane	0.40	8.7		U
75-35-4	1,1-Dichloroethene	1.0	8.7		U
156-59-2	cis-1,2-Dichloroethene	1.0	8.7		U
156-60-5	trans-1,2-Dichloroethene	0.96	8.7		U
78-87-5	1,2-Dichloropropane	0.40	8.7		U
10061-01-5	cis-1,3-Dichloropropene	0.44	8.7		U
10061-02-6	trans-1,3-Dichloropropene	0.28	8.7		U
100-41-4	Ethylbenzene	0.65	8.7		U
591-78-6	2-Hexanone	2.0	8.7		~~U~~ UJ CC
98-82-8	Isopropylbenzene	0.77	8.7		U
79-20-9	Methyl acetate	1.4	8.7		U
75-09-2	Methylene chloride	0.54	8.7	8.7 U	~~3.5 JB~~ BL
108-87-2	Methyl cyclohexane	0.26	8.7		U
1634-04-4	Methyl tert-butyl ether	0.28	8.7		U
108-10-1	4-Methyl-2-pentanone	0.50	8.7		U
100-42-5	Styrene	0.30	8.7		U
79-34-5	1,1,2,2-Tetrachloroethane	0.37	8.7		U
127-18-4	Tetrachloroethene	0.84	8.7		U

FORM I VOA

MW 2/26/09

FORM 1
VOLATILE ORGANICS ANALYSIS DATA SHEET

CLIENT SAMPLE NO. 8

MR08-IS11
6-3-4-08D

Lab Name: EMPIRICAL LABS Contract: CH2MHILL

Lab Code: NA Case No.: NA SAS No.: NA SDG No.: LEJEUNE024

Matrix: (soil/water) SOIL Lab Sample ID: 0812097-08

Sample wt/vol: 6.7 (g/mL) G Lab File ID: 1209708A

Level: (low/med) LOW Date Sampled: 12/05/08 11:15

% Moisture: not dec. 14 Date Analyzed: 12/15/08 19:07

GC Column: RTX-VRX ID: 0.25 (mm) Dilution Factor: 1.0

Soil Extract Volume:_____(uL) Soil Aliquot Volume: _____(uL)

CONCENTRATION UNITS: (ug/L or ug/Kg) UG/KG

CAS NO.	COMPOUND	MDL	RL	CONC	Q
108-88-3	Toluene	0.75	8.7		U
120-82-1	1,2,4-Trichlorobenzene	0.16	8.7		U
71-55-6	1,1,1-Trichloroethane	0.78	8.7		U
79-00-5	1,1,2-Trichloroethane	0.30	8.7		U
79-01-6	Trichloroethene	0.74	8.7		U
76-13-1	Trichlorotrifluoroethane	0.48	8.7		U
75-69-4	Trichlorofluoromethane	0.83	8.7		U
75-01-4	Vinyl chloride	0.96	8.7		U
1330-20-7	Xylene(total)	0.61	8.7		U

RW 2/26/09

FORM 1
VOLATILE ORGANICS ANALYSIS DATA SHEET

CLIENT SAMPLE NO. 9

MR08-SS117-08D

Lab Name: EMPIRICAL LABS Contract: CH2MHILL

Lab Code: NA Case No.: NA SAS No.: NA SDG No.: LEJEUNE024

Matrix: (soil/water) SOIL Lab Sample ID: 0812097-09

Sample wt/vol: 4.4 (g/mL) G Lab File ID: 1209709A

Level: (low/med) LOW Date Sampled: 12/05/08 13:00

% Moisture: not dec. 10 Date Analyzed: 12/15/08 19:46

GC Column: RTX-VRX ID: 0.25 (mm) Dilution Factor: 1.0

Soil Extract Volume:_____(uL) Soil Aliquot Volume: _____(uL)

CONCENTRATION UNITS: (ug/L or ug/Kg) UG/KG

CAS NO.	COMPOUND	MDL	RL	CONC	Q
67-64-1	Acetone	2.5	13	33	UJ CCU B1
71-43-2	Benzene	0.59	13	1.1	J
75-27-4	Bromodichloromethane	0.38	13		U
75-25-2	Bromoform	1.3	13		U
74-83-9	Bromomethane	0.91	13		U
78-93-3	2-Butanone	1.8	13	3.8	J
75-15-0	Carbon disulfide	1.6	13		U
56-23-5	Carbon tetrachloride	1.1	13		U
108-90-7	Chlorobenzene	0.43	13		U
75-00-3	Chloroethane	1.4	13		U
67-66-3	Chloroform	0.69	13		U
74-87-3	Chloromethane	0.66	13		U
110-82-7	Cyclohexane	0.68	13		U
124-48-1	Dibromochloromethane	0.43	13		U
96-12-8	1,2-Dibromo-3-chloropropane	1.5	6.3		U
106-93-4	1,2-Dibromoethane	0.54	13		U
95-50-1	1,2-Dichlorobenzene	0.47	13		U
541-73-1	1,3-Dichlorobenzene	1.1	13		U
106-46-7	1,4-Dichlorobenzene	0.69	13		U
75-71-8	Dichlorodifluoromethane	1.4	13		UJ
75-34-3	1,1-Dichloroethane	0.68	13		U
107-06-2	1,2-Dichloroethane	0.58	13		U
75-35-4	1,1-Dichloroethene	1.5	13		U
156-59-2	cis-1,2-Dichloroethene	1.5	13		U
156-60-5	trans-1,2-Dichloroethene	1.4	13		U
78-87-5	1,2-Dichloropropane	0.58	13		U
10061-01-5	cis-1,3-Dichloropropene	0.63	13		U
10061-02-6	trans-1,3-Dichloropropene	0.40	13		U
100-41-4	Ethylbenzene	0.95	13	1.4	J
591-78-6	2-Hexanone	2.9	13		UJ CCU
98-82-8	Isopropylbenzene	1.1	13		U
79-20-9	Methyl acetate	2.0	13		U
75-09-2	Methylene chloride	0.78	13	13U	~~3.3 JB~~ BL
108-87-2	Methyl cyclohexane	0.38	13	0.96	J
1634-04-4	Methyl tert-butyl ether	0.40	13		U
108-10-1	4-Methyl-2-pentanone	0.73	13		U
100-42-5	Styrene	0.44	13		U
79-34-5	1,1,2,2-Tetrachloroethane	0.54	13		U
127-18-4	Tetrachloroethene	1.2	13		U

FORM I VOA

2/26/09

FORM 1
VOLATILE ORGANICS ANALYSIS DATA SHEET

CLIENT SAMPLE NO. 9

MR08-SS117-08D

Lab Name: EMPIRICAL LABS Contract: CH2MHILL

Lab Code: NA Case No.: NA SAS No.: NA SDG No.: LEJEUNE024

Matrix: (soil/water) SOIL Lab Sample ID: 0812097-09

Sample wt/vol: 4.4 (g/mL) G Lab File ID: 1209709A

Level: (low/med) LOW Date Sampled: 12/05/08 13:00

% Moisture: not dec. 10 Date Analyzed: 12/15/08 19:46

GC Column: RTX-VRX ID: 0.25 (mm) Dilution Factor: 1.0

Soil Extract Volume:_____(uL) Soil Aliquot Volume: _____(uL)

CONCENTRATION UNITS: (ug/L or ug/Kg) UG/KG

CAS NO.	COMPOUND	MDL	RL	CONC	Q
108-88-3	Toluene	1.1	13	13u ~~1.2~~	~~J~~
120-82-1	1,2,4-Trichlorobenzene	0.23	13		U
71-55-6	1,1,1-Trichloroethane	1.1	13		U
79-00-5	1,1,2-Trichloroethane	0.44	13		U
79-01-6	Trichloroethene	1.1	13		U
76-13-1	Trichlorotrifluoroethane	0.69	13		U
75-69-4	Trichlorofluoromethane	1.2	13		U
75-01-4	Vinyl chloride	1.4	13		U
1330-20-7	Xylene(total)	0.88	13		U

B

FORM I VOA

lw
2/26/09

FORM 1
VOLATILE ORGANICS ANALYSIS DATA SHEET

CLIENT SAMPLE NO. 10

MR08-IS11
7-2-3-08D

Lab Name: EMPIRICAL LABS Contract: CH2MHILL

Lab Code: NA Case No.: NA SAS No.: NA SDG No.: LEJEUNE024

Matrix: (soil/water) SOIL Lab Sample ID: 0812097-10

Sample wt/vol: 7.4 (g/mL) G Lab File ID: 1209710A

Level: (low/med) LOW Date Sampled: 12/05/08 13:20

% Moisture: not dec. 12 Date Analyzed: 12/16/08 00:48

GC Column: RTX-VRX ID: 0.25 (mm) Dilution Factor: 1.0

Soil Extract Volume:_____(uL) Soil Aliquot Volume: _____(uL)

CONCENTRATION UNITS: (ug/L or ug/Kg) UG/KG

CAS NO.	COMPOUND	MDL	RL	CONC	Q
67-64-1	Acetone	1.5	7.7	7.8	u
71-43-2	Benzene	0.36	7.7		U
75-27-4	Bromodichloromethane	0.23	7.7		U
75-25-2	Bromoform	0.77	7.7		U
74-83-9	Bromomethane	0.56	7.7		U
78-93-3	2-Butanone	1.1	7.7		U
75-15-0	Carbon disulfide	1.0	7.7		U
56-23-5	Carbon tetrachloride	0.68	7.7		U
108-90-7	Chlorobenzene	0.26	7.7		U
75-00-3	Chloroethane	0.85	7.7		U
67-66-3	Chloroform	0.42	7.7		U
74-87-3	Chloromethane	0.40	7.7		U
110-82-7	Cyclohexane	0.42	7.7		U
124-48-1	Dibromochloromethane	0.26	7.7		U
96-12-8	1,2-Dibromo-3-chloropropane	0.93	3.9		U
106-93-4	1,2-Dibromoethane	0.33	7.7		U
95-50-1	1,2-Dichlorobenzene	0.29	7.7		U
541-73-1	1,3-Dichlorobenzene	0.65	7.7		U
106-46-7	1,4-Dichlorobenzene	0.42	7.7		U
75-71-8	Dichlorodifluoromethane	0.85	7.7		U
75-34-3	1,1-Dichloroethane	0.42	7.7		U
107-06-2	1,2-Dichloroethane	0.36	7.7		U
75-35-4	1,1-Dichloroethene	0.93	7.7		U
156-59-2	cis-1,2-Dichloroethene	0.93	7.7		U
156-60-5	trans-1,2-Dichloroethene	0.85	7.7		U
78-87-5	1,2-Dichloropropane	0.36	7.7		U
10061-01-5	cis-1,3-Dichloropropene	0.39	7.7		U
10061-02-6	trans-1,3-Dichloropropene	0.25	7.7		U
100-41-4	Ethylbenzene	0.58	7.7		U
591-78-6	2-Hexanone	1.8	7.7		U
98-82-8	Isopropylbenzene	0.68	7.7		U
79-20-9	Methyl acetate	1.2	7.7		U
75-09-2	Methylene chloride	0.48	7.7	7.7u ~~1.5 JB~~	B
108-87-2	Methyl cyclohexane	0.23	7.7		U
1634-04-4	Methyl tert-butyl ether	0.25	7.7		U
108-10-1	4-Methyl-2-pentanone	0.45	7.7		U
100-42-5	Styrene	0.27	7.7		U
79-34-5	1,1,2,2-Tetrachloroethane	0.33	7.7		U
127-18-4	Tetrachloroethene	0.75	7.7		U

FORM I VOA

lw 2/26/09

FORM 1
VOLATILE ORGANICS ANALYSIS DATA SHEET

CLIENT SAMPLE NO. 10

MR08-IS11
7-2-3-08D

Lab Name: EMPIRICAL LABS Contract: CH2MHILL

Lab Code: NA Case No.: NA SAS No.: NA SDG No.: LEJEUNE024

Matrix: (soil/water) SOIL Lab Sample ID: 0812097-10

Sample wt/vol: 7.4 (g/mL) G Lab File ID: 1209710A

Level: (low/med) LOW Date Sampled: 12/05/08 13:20

% Moisture: not dec. 12 Date Analyzed: 12/16/08 00:48

GC Column: RTX-VRX ID: 0.25 (mm) Dilution Factor: 1.0

Soil Extract Volume:_____(uL) Soil Aliquot Volume: _____(uL)

CONCENTRATION UNITS: (ug/L or ug/Kg) UG/KG

CAS NO.	COMPOUND	MDL	RL	CONC	Q
108-88-3	Toluene	0.66	7.7		U
120-82-1	1,2,4-Trichlorobenzene	0.14	7.7		U
71-55-6	1,1,1-Trichloroethane	0.70	7.7		U
79-00-5	1,1,2-Trichloroethane	0.27	7.7		U
79-01-6	Trichloroethene	0.66	7.7		U
76-13-1	Trichlorotrifluoroethane	0.42	7.7		U
75-69-4	Trichlorofluoromethane	0.73	7.7		U
75-01-4	Vinyl chloride	0.85	7.7		U
1330-20-7	Xylene(total)	0.54	7.7		U

JW 2/26/09

FORM 1
VOLATILE ORGANICS ANALYSIS DATA SHEET

CLIENT SAMPLE NO. 11

MR08-SS125-08D

Lab Name: EMPIRICAL LABS Contract: CH2MHILL

Lab Code: NA Case No.: NA SAS No.: NA SDG No.: LEJEUNE024

Matrix: (soil/water) SOIL Lab Sample ID: 0812097-11

Sample wt/vol: 5.8 (g/mL) G Lab File ID: 1209711A

Level: (low/med) LOW Date Sampled: 12/05/08 13:35

% Moisture: not dec. 7 Date Analyzed: 12/16/08 01:27

GC Column: RTX-VRX ID: 0.25 (mm) Dilution Factor: 1.0

Soil Extract Volume:_____(uL) Soil Aliquot Volume: _____(uL)

CONCENTRATION UNITS: (ug/L or ug/Kg) UG/KG

CAS NO.	COMPOUND	MDL	RL	CONC	Q
67-64-1	Acetone	1.8	9.3	27	UJ SS-BK SS
71-43-2	Benzene	0.44	9.3	3.6	J J
75-27-4	Bromodichloromethane	0.28	9.3		U UJ
75-25-2	Bromoform	0.93	9.3		U
74-83-9	Bromomethane	0.67	9.3		U
78-93-3	2-Butanone	1.3	9.3	3.5	J J
75-15-0	Carbon disulfide	1.2	9.3	1.8	J J
56-23-5	Carbon tetrachloride	0.82	9.3		U UJ
108-90-7	Chlorobenzene	0.32	9.3		U
75-00-3	Chloroethane	1.0	9.3		U
67-66-3	Chloroform	0.51	9.3		U
74-87-3	Chloromethane	0.48	9.3		U
110-82-7	Cyclohexane	0.50	9.3	0.51	J J
124-48-1	Dibromochloromethane	0.32	9.3		U UJ
96-12-8	1,2-Dibromo-3-chloropropane	1.1	4.6		U
106-93-4	1,2-Dibromoethane	0.40	9.3		U
95-50-1	1,2-Dichlorobenzene	0.34	9.3		U
541-73-1	1,3-Dichlorobenzene	0.78	9.3		U
106-46-7	1,4-Dichlorobenzene	0.51	9.3		U
75-71-8	Dichlorodifluoromethane	1.0	9.3		U
75-34-3	1,1-Dichloroethane	0.50	9.3		U
107-06-2	1,2-Dichloroethane	0.43	9.3		U
75-35-4	1,1-Dichloroethene	1.1	9.3		U
156-59-2	cis-1,2-Dichloroethene	1.1	9.3		U
156-60-5	trans-1,2-Dichloroethene	1.0	9.3		U
78-87-5	1,2-Dichloropropane	0.43	9.3		U
10061-01-5	cis-1,3-Dichloropropene	0.46	9.3		U
10061-02-6	trans-1,3-Dichloropropene	0.30	9.3		U
100-41-4	Ethylbenzene	0.70	9.3	2.4	J J
591-78-6	2-Hexanone	2.1	9.3		U UJ
98-82-8	Isopropylbenzene	0.82	9.3		U
79-20-9	Methyl acetate	1.5	9.3		U
75-09-2	Methylene chloride	0.58	9.3	9.3	UJ ~~1.3 JB~~ BL
108-87-2	Methyl cyclohexane	0.28	9.3	0.48	J J
1634-04-4	Methyl tert-butyl ether	0.30	9.3		U UJ
108-10-1	4-Methyl-2-pentanone	0.54	9.3		U
100-42-5	Styrene	0.32	9.3		U
79-34-5	1,1,2,2-Tetrachloroethane	0.40	9.3		U
127-18-4	Tetrachloroethene	0.90	9.3		U

DW 2/26/09

FORM 1
VOLATILE ORGANICS ANALYSIS DATA SHEET

CLIENT SAMPLE NO. 11

MR08-SS125-08D

Lab Name: EMPIRICAL LABS Contract: CH2MHILL

Lab Code: NA Case No.: NA SAS No.: NA SDG No.: LEJEUNE024

Matrix: (soil/water) SOIL Lab Sample ID: 0812097-11

Sample wt/vol: 5.8 (g/mL) G Lab File ID: 1209711A

Level: (low/med) LOW Date Sampled: 12/05/08 13:35

% Moisture: not dec. 7 Date Analyzed: 12/16/08 01:27

GC Column: RTX-VRX ID: 0.25 (mm) Dilution Factor: 1.0

Soil Extract Volume:_____(uL) Soil Aliquot Volume: _____(uL)

CONCENTRATION UNITS: (ug/L or ug/Kg) UG/KG

CAS NO.	COMPOUND	MDL	RL	CONC	Q
108-88-3	Toluene	0.80	9.3	4.6	~~J~~ J SSL
120-82-1	1,2,4-Trichlorobenzene	0.17	9.3		U UJ
71-55-6	1,1,1-Trichloroethane	0.84	9.3		U
79-00-5	1,1,2-Trichloroethane	0.32	9.3		U
79-01-6	Trichloroethene	0.79	9.3		U
76-13-1	Trichlorotrifluoroethane	0.51	9.3		U
75-69-4	Trichlorofluoromethane	0.88	9.3		U
75-01-4	Vinyl chloride	1.0	9.3		U
1330-20-7	Xylene(total)	0.65	9.3		U

FORM I VOA

lw
2/26/09

FORM 1
VOLATILE ORGANICS ANALYSIS DATA SHEET

CLIENT SAMPLE NO. 11RE

MR08-SS125-08DR

Lab Name: EMPIRICAL LABS Contract: CH2MHILL

Lab Code: NA Case No.: NA SAS No.: NA SDG No.: LEJEUNE024

Matrix: (soil/water) SOIL Lab Sample ID: 0812097-11R

Sample wt/vol: 6.1 (g/mL) G Lab File ID: 1209711B

Level: (low/med) LOW Date Sampled: 12/05/08 13:35

% Moisture: not dec. 7 Date Analyzed: 12/18/08 17:36 use original

GC Column: RTX-VRX ID: 0.25 (mm) Dilution Factor: 1.0

Soil Extract Volume:_____(uL) Soil Aliquot Volume: _____(uL)

CONCENTRATION UNITS: (ug/L or ug/Kg) UG/KG

CAS NO.	COMPOUND	MDL	RL	CONC	Q
67-64-1	Acetone	1.8	8.8	18	UJ SSLB
71-43-2	Benzene	0.41	8.8	3.6	J J SSL
75-27-4	Bromodichloromethane	0.26	8.8		U UJ
75-25-2	Bromoform	0.88	8.8		U
74-83-9	Bromomethane	0.63	8.8		U
78-93-3	2-Butanone	1.2	8.8	3.2	J J
75-15-0	Carbon disulfide	1.1	8.8	1.2	J J
56-23-5	Carbon tetrachloride	0.78	8.8		U UJ
108-90-7	Chlorobenzene	0.30	8.8		U
75-00-3	Chloroethane	0.97	8.8		U
67-66-3	Chloroform	0.48	8.8		U
74-87-3	Chloromethane	0.46	8.8		U
110-82-7	Cyclohexane	0.48	8.8		U
124-48-1	Dibromochloromethane	0.30	8.8		U
96-12-8	1,2-Dibromo-3-chloropropane	1.0	4.4		U
106-93-4	1,2-Dibromoethane	0.38	8.8		U
95-50-1	1,2-Dichlorobenzene	0.33	8.8		U
541-73-1	1,3-Dichlorobenzene	0.74	8.8		U
106-46-7	1,4-Dichlorobenzene	0.48	8.8		U
75-71-8	Dichlorodifluoromethane	0.97	8.8		U
75-34-3	1,1-Dichloroethane	0.48	8.8		U
107-06-2	1,2-Dichloroethane	0.40	8.8		U
75-35-4	1,1-Dichloroethene	1.0	8.8		U
156-59-2	cis-1,2-Dichloroethene	1.0	8.8		U
156-60-5	trans-1,2-Dichloroethene	0.97	8.8		U
78-87-5	1,2-Dichloropropane	0.40	8.8		U
10061-01-5	cis-1,3-Dichloropropene	0.44	8.8		U
10061-02-6	trans-1,3-Dichloropropene	0.28	8.8		U
100-41-4	Ethylbenzene	0.66	8.8	2.4	U J
591-78-6	2-Hexanone	2.0	8.8		U UJ
98-82-8	Isopropylbenzene	0.78	8.8		U
79-20-9	Methyl acetate	1.4	8.8		U
75-09-2	Methylene chloride	0.55	8.8		U
108-87-2	Methyl cyclohexane	0.26	8.8	0.33	J J
1634-04-4	Methyl tert-butyl ether	0.28	8.8		U UJ
108-10-1	4-Methyl-2-pentanone	0.51	8.8		U
100-42-5	Styrene	0.31	8.8		U
79-34-5	1,1,2,2-Tetrachloroethane	0.38	8.8		U
127-18-4	Tetrachloroethene	0.86	8.8		U

RW 2/26/09

FORM 1
VOLATILE ORGANICS ANALYSIS DATA SHEET

CLIENT SAMPLE NO. 11RE

MR08-SS125-08DR

Lab Name: EMPIRICAL LABS Contract: CH2MHILL

Lab Code: NA Case No.: NA SAS No.: NA SDG No.: LEJEUNE024

Matrix: (soil/water) SOIL Lab Sample ID: 0812097-11R

Sample wt/vol: 6.1 (g/mL) G Lab File ID: 1209711B

Level: (low/med) LOW Date Sampled: 12/05/08 13:35

% Moisture: not dec. 7 Date Analyzed: 12/18/08 17:36 Use original

GC Column: RTX-VRX ID: 0.25 (mm) Dilution Factor: 1.0

Soil Extract Volume:_____(uL) Soil Aliquot Volume:_____(uL)

CONCENTRATION UNITS: (ug/L or ug/Kg) UG/KG

CAS NO.	COMPOUND	MDL	RL	CONC	Q	
108-88-3	Toluene	0.76	8.8	4.7	~~J~~ J	SS
120-82-1	1,2,4-Trichlorobenzene	0.16	8.8		~~U~~ UJ	
71-55-6	1,1,1-Trichloroethane	0.79	8.8		~~U~~	
79-00-5	1,1,2-Trichloroethane	0.31	8.8		~~U~~	
79-01-6	Trichloroethene	0.75	8.8		~~U~~	
76-13-1	Trichlorotrifluoroethane	0.48	8.8		~~U~~	
75-69-4	Trichlorofluoromethane	0.84	8.8		~~U~~	
75-01-4	Vinyl chloride	0.97	8.8		~~U~~	
1330-20-7	Xylene(total)	0.62	8.8		~~U~~	

R RE

FORM I VOA

lew 2/26/09

FORM 1
VOLATILE ORGANICS ANALYSIS DATA SHEET

CLIENT SAMPLE NO. 12

MR08-IS12
5-4-5-08D

Lab Name: EMPIRICAL LABS Contract: CH2MHILL

Lab Code: NA Case No.: NA SAS No.: NA SDG No.: LEJEUNE024

Matrix: (soil/water) SOIL Lab Sample ID: 0812097-12

Sample wt/vol: 5.4 (g/mL) G Lab File ID: 1209712A

Level: (low/med) LOW Date Sampled: 12/05/08 13:50

% Moisture: not dec. 16 Date Analyzed: 12/16/08 02:06

GC Column: RTX-VRX ID: 0.25 (mm) Dilution Factor: 1.0

Soil Extract Volume:_____(uL) Soil Aliquot Volume: _____(uL)

CONCENTRATION UNITS: (ug/L or ug/Kg) UG/KG

CAS NO.	COMPOUND	MDL	RL	CONC	Q
67-64-1	Acetone	2.2	11	114 ~~8.9~~	~~J~~
71-43-2	Benzene	0.52	11		U
75-27-4	Bromodichloromethane	0.33	11		U
75-25-2	Bromoform	1.1	11		U
74-83-9	Bromomethane	0.80	11		U
78-93-3	2-Butanone	1.6	11		U
75-15-0	Carbon disulfide	1.4	11		U
56-23-5	Carbon tetrachloride	0.98	11		U
108-90-7	Chlorobenzene	0.38	11		U
75-00-3	Chloroethane	1.2	11		U
67-66-3	Chloroform	0.61	11		U
74-87-3	Chloromethane	0.58	11		U
110-82-7	Cyclohexane	0.60	11		U
124-48-1	Dibromochloromethane	0.38	11		U
96-12-8	1,2-Dibromo-3-chloropropane	1.3	5.5		U
106-93-4	1,2-Dibromoethane	0.48	11		U
95-50-1	1,2-Dichlorobenzene	0.41	11		U
541-73-1	1,3-Dichlorobenzene	0.93	11		U
106-46-7	1,4-Dichlorobenzene	0.61	11		U
75-71-8	Dichlorodifluoromethane	1.2	11		U
75-34-3	1,1-Dichloroethane	0.60	11		U
107-06-2	1,2-Dichloroethane	0.51	11		U
75-35-4	1,1-Dichloroethene	1.3	11		U
156-59-2	cis-1,2-Dichloroethene	1.3	11		U
156-60-5	trans-1,2-Dichloroethene	1.2	11		U
78-87-5	1,2-Dichloropropane	0.51	11		U
10061-01-5	cis-1,3-Dichloropropene	0.55	11		U
10061-02-6	trans-1,3-Dichloropropene	0.35	11		U
100-41-4	Ethylbenzene	0.83	11		U
591-78-6	2-Hexanone	2.5	11		U
98-82-8	Isopropylbenzene	0.98	11		U
79-20-9	Methyl acetate	1.8	11		U
75-09-2	Methylene chloride	0.69	11	114 ~~3.0~~	~~JB~~ B
108-87-2	Methyl cyclohexane	0.33	11		U
1634-04-4	Methyl tert-butyl ether	0.35	11		U
108-10-1	4-Methyl-2-pentanone	0.64	11		U
100-42-5	Styrene	0.39	11		U
79-34-5	1,1,2,2-Tetrachloroethane	0.48	11		U
127-18-4	Tetrachloroethene	1.1	11		U

FORM I VOA

MW 2/26/09

FORM 1
VOLATILE ORGANICS ANALYSIS DATA SHEET

CLIENT SAMPLE NO. 12

MR08-IS12
5-4-5-08D

Lab Name: EMPIRICAL LABS Contract: CH2MHILL

Lab Code: NA Case No.: NA SAS No.: NA SDG No.: LEJEUNE024

Matrix: (soil/water) SOIL Lab Sample ID: 0812097-12

Sample wt/vol: 5.4 (g/mL) G Lab File ID: 1209712A

Level: (low/med) LOW Date Sampled: 12/05/08 13:50

% Moisture: not dec. 16 Date Analyzed: 12/16/08 02:06

GC Column: RTX-VRX ID: 0.25 (mm) Dilution Factor: 1.0

Soil Extract Volume:_____(uL) Soil Aliquot Volume: _____(uL)

CONCENTRATION UNITS: (ug/L or ug/Kg) UG/KG

CAS NO.	COMPOUND	MDL	RL	CONC	Q
108-88-3	Toluene	0.95	11		U
120-82-1	1,2,4-Trichlorobenzene	0.20	11		U
71-55-6	1,1,1-Trichloroethane	1.00	11		U
79-00-5	1,1,2-Trichloroethane	0.39	11		U
79-01-6	Trichloroethene	0.94	11		U
76-13-1	Trichlorotrifluoroethane	0.61	11		U
75-69-4	Trichlorofluoromethane	1.0	11		U
75-01-4	Vinyl chloride	1.2	11		U
1330-20-7	Xylene(total)	0.78	11		U

QW 2/26/09

FORM 1
VOLATILE ORGANICS ANALYSIS DATA SHEET

CLIENT SAMPLE NO. 13

MR08-SS123-08D

Lab Name: EMPIRICAL LABS Contract: CH2MHILL

Lab Code: NA Case No.: NA SAS No.: NA SDG No.: LEJEUNE024

Matrix: (soil/water) SOIL Lab Sample ID: 0812097-13

Sample wt/vol: 5.6 (g/mL) G Lab File ID: 1209713A

Level: (low/med) LOW Date Sampled: 12/05/08 14:20

% Moisture: not dec. 14 Date Analyzed: 12/16/08 02:45

GC Column: RTX-VRX ID: 0.25 (mm) Dilution Factor: 1.0

Soil Extract Volume:_____(uL) Soil Aliquot Volume: _____(uL)

CONCENTRATION UNITS: (ug/L or ug/Kg) UG/KG

CAS NO.	COMPOUND	MDL	RL	CONC	Q	
67-64-1	Acetone	2.1	10	28	u	BL
71-43-2	Benzene	0.48	10	1.9	J	
75-27-4	Bromodichloromethane	0.31	10		U	
75-25-2	Bromoform	1.0	10		U	
74-83-9	Bromomethane	0.74	10		U	
78-93-3	2-Butanone	1.4	10		U	
75-15-0	Carbon disulfide	1.3	10		U	
56-23-5	Carbon tetrachloride	0.91	10		U	
108-90-7	Chlorobenzene	0.35	10		U	
75-00-3	Chloroethane	1.1	10		U	
67-66-3	Chloroform	0.57	10		U	
74-87-3	Chloromethane	0.54	10		U	
110-82-7	Cyclohexane	0.56	10	0.86	J	
124-48-1	Dibromochloromethane	0.35	10		U	
96-12-8	1,2-Dibromo-3-chloropropane	1.2	5.2		U	
106-93-4	1,2-Dibromoethane	0.44	10		U	
95-50-1	1,2-Dichlorobenzene	0.38	10		U	
541-73-1	1,3-Dichlorobenzene	0.87	10		U	
106-46-7	1,4-Dichlorobenzene	0.57	10		U	
75-71-8	Dichlorodifluoromethane	1.1	10		UN	
75-34-3	1,1-Dichloroethane	0.56	10		U	
107-06-2	1,2-Dichloroethane	0.47	10		U	
75-35-4	1,1-Dichloroethene	1.2	10		U	
156-59-2	cis-1,2-Dichloroethene	1.2	10		U	
156-60-5	trans-1,2-Dichloroethene	1.1	10		U	
78-87-5	1,2-Dichloropropane	0.47	10		U	
10061-01-5	cis-1,3-Dichloropropene	0.52	10		U	
10061-02-6	trans-1,3-Dichloropropene	0.33	10		U	
100-41-4	Ethylbenzene	0.77	10	2.7	J	
591-78-6	2-Hexanone	2.4	10		U	
98-82-8	Isopropylbenzene	0.91	10		U	
79-20-9	Methyl acetate	1.6	10		U	
75-09-2	Methylene chloride	0.64	10	10U	~~2.1~~ ~~JB~~	BL
108-87-2	Methyl cyclohexane	0.31	10	0.92	J	
1634-04-4	Methyl tert-butyl ether	0.33	10		U	
108-10-1	4-Methyl-2-pentanone	0.60	10	0.83	J	
100-42-5	Styrene	0.36	10		U	
79-34-5	1,1,2,2-Tetrachloroethane	0.44	10		U	
127-18-4	Tetrachloroethene	1.0	10		U	

FORM I VOA

QW
7/26/09

FORM 1
VOLATILE ORGANICS ANALYSIS DATA SHEET

CLIENT SAMPLE NO.

13

MR08-SS123-08D

Lab Name: EMPIRICAL LABS Contract: CH2MHILL

Lab Code: NA Case No.: NA SAS No.: NA SDG No.: LEJEUNE024

Matrix: (soil/water) SOIL Lab Sample ID: 0812097-13

Sample wt/vol: 5.6 (g/mL) G Lab File ID: 1209713A

Level: (low/med) LOW Date Sampled: 12/05/08 14:20

% Moisture: not dec. 14 Date Analyzed: 12/16/08 02:45

GC Column: RTX-VRX ID: 0.25 (mm) Dilution Factor: 1.0

Soil Extract Volume:_____(uL) Soil Aliquot Volume: _____(uL)

CONCENTRATION UNITS: (ug/L or ug/Kg) UG/KG

CAS NO.	COMPOUND	MDL	RL	CONC	Q
108-88-3	Toluene	0.89	10	2.6	J
120-82-1	1,2,4-Trichlorobenzene	0.18	10		U
71-55-6	1,1,1-Trichloroethane	0.93	10		U
79-00-5	1,1,2-Trichloroethane	0.36	10		U
79-01-6	Trichloroethene	0.88	10		U
76-13-1	Trichlorotrifluoroethane	0.57	10		U
75-69-4	Trichlorofluoromethane	0.98	10		U
75-01-4	Vinyl chloride	1.1	10		U
1330-20-7	Xylene(total)	0.72	10		U

DW
2/26/09

FORM 1
VOLATILE ORGANICS ANALYSIS DATA SHEET

CLIENT SAMPLE NO. 14

MR08-IS12
3-6-7-08D

Lab Name: EMPIRICAL LABS Contract: CH2MHILL

Lab Code: NA Case No.: NA SAS No.: NA SDG No.: LEJEUNE024

Matrix: (soil/water) SOIL Lab Sample ID: 0812097-14

Sample wt/vol: 4.8 (g/mL) G Lab File ID: 1209714A

Level: (low/med) LOW Date Sampled: 12/05/08 14:30

% Moisture: not dec. 11 Date Analyzed: 12/16/08 03:24

GC Column: RTX-VRX ID: 0.25 (mm) Dilution Factor: 1.0

Soil Extract Volume:_____(uL) Soil Aliquot Volume: _____(uL)

CONCENTRATION UNITS: (ug/L or ug/Kg) UG/KG

CAS NO.	COMPOUND	MDL	RL	CONC	Q
67-64-1	Acetone	2.3	12	12U ~~6.8~~ ~~J~~	BL
71-43-2	Benzene	0.54	12		U
75-27-4	Bromodichloromethane	0.35	12		U
75-25-2	Bromoform	1.2	12		U
74-83-9	Bromomethane	0.84	12		U
78-93-3	2-Butanone	1.6	12		U
75-15-0	Carbon disulfide	1.5	12		U
56-23-5	Carbon tetrachloride	1.0	12		U
108-90-7	Chlorobenzene	0.39	12		U
75-00-3	Chloroethane	1.3	12		U
67-66-3	Chloroform	0.64	12		U
74-87-3	Chloromethane	0.60	12		U
110-82-7	Cyclohexane	0.63	12		U
124-48-1	Dibromochloromethane	0.39	12		U
96-12-8	1,2-Dibromo-3-chloropropane	1.4	5.8		U
106-93-4	1,2-Dibromoethane	0.50	12		U
95-50-1	1,2-Dichlorobenzene	0.43	12		U
541-73-1	1,3-Dichlorobenzene	0.98	12		U
106-46-7	1,4-Dichlorobenzene	0.64	12		U
75-71-8	Dichlorodifluoromethane	1.3	12		U
75-34-3	1,1-Dichloroethane	0.63	12		U
107-06-2	1,2-Dichloroethane	0.53	12		U
75-35-4	1,1-Dichloroethene	1.4	12		U
156-59-2	cis-1,2-Dichloroethene	1.4	12		U
156-60-5	trans-1,2-Dichloroethene	1.3	12		U
78-87-5	1,2-Dichloropropane	0.53	12		U
10061-01-5	cis-1,3-Dichloropropene	0.58	12		U
10061-02-6	trans-1,3-Dichloropropene	0.37	12		U
100-41-4	Ethylbenzene	0.87	12		U
591-78-6	2-Hexanone	2.7	12		U
98-82-8	Isopropylbenzene	1.0	12		U
79-20-9	Methyl acetate	1.8	12		U
75-09-2	Methylene chloride	0.72	12	12U ~~4.0~~ ~~JB~~	BL
108-87-2	Methyl cyclohexane	0.35	12		U
1634-04-4	Methyl tert-butyl ether	0.37	12		U
108-10-1	4-Methyl-2-pentanone	0.67	12		U
100-42-5	Styrene	0.41	12		U
79-34-5	1,1,2,2-Tetrachloroethane	0.50	12		U
127-18-4	Tetrachloroethene	1.1	12		U

ew 2/26/09

FORM 1
VOLATILE ORGANICS ANALYSIS DATA SHEET

CLIENT SAMPLE NO.

MR08-IS12
3-6-7-08D

14

Lab Name: EMPIRICAL LABS Contract: CH2MHILL

Lab Code: NA Case No.: NA SAS No.: NA SDG No.: LEJEUNE024

Matrix: (soil/water) SOIL Lab Sample ID: 0812097-14

Sample wt/vol: 4.8 (g/mL) G Lab File ID: 1209714A

Level: (low/med) LOW Date Sampled: 12/05/08 14:30

% Moisture: not dec. 11 Date Analyzed: 12/16/08 03:24

GC Column: RTX-VRX ID: 0.25 (mm) Dilution Factor: 1.0

Soil Extract Volume:_____(uL) Soil Aliquot Volume: _____(uL)

CONCENTRATION UNITS: (ug/L or ug/Kg) UG/KG

CAS NO.	COMPOUND	MDL	RL	CONC	Q
108-88-3	Toluene	1.00	12		U
120-82-1	1,2,4-Trichlorobenzene	0.21	12		U
71-55-6	1,1,1-Trichloroethane	1.0	12		U
79-00-5	1,1,2-Trichloroethane	0.41	12		U
79-01-6	Trichloroethene	0.99	12		U
76-13-1	Trichlorotrifluoroethane	0.64	12		U
75-69-4	Trichlorofluoromethane	1.1	12		U
75-01-4	Vinyl chloride	1.3	12		U
1330-20-7	Xylene(total)	0.81	12		U

Jew
7/26/09

FORM 1
VOLATILE ORGANICS ANALYSIS DATA SHEET

CLIENT SAMPLE NO. 15

MR08-EB01
120508-SS

Lab Name: EMPIRICAL LABS Contract: CH2MHILL

Lab Code: NA Case No.: NA SAS No.: NA SDG No.: LEJEUNE024

Matrix: (soil/water) WATER Lab Sample ID: 0812097-15

Sample wt/vol: 5.000 (g/mL) ML Lab File ID: 1209715

Level: (low/med) LOW Date Sampled: 12/05/08 13:20

% Moisture: not dec. _____ Date Analyzed: 12/14/08 13:02

GC Column: RTX-VRX ID: 0.25 (mm) Dilution Factor: 1.0

Soil Extract Volume:_____(uL) Soil Aliquot Volume: _____(uL)

CONCENTRATION UNITS: (ug/L or ug/Kg) UG/L

CAS NO.	COMPOUND	MDL	RL	CONC	Q
67-64-1	Acetone	0.84	2.5	4.3	J CCH
71-43-2	Benzene	0.11	1.0		U
75-27-4	Bromodichloromethane	0.10	1.0	0.17	J
75-25-2	Bromoform	0.10	1.0		U
74-83-9	Bromomethane	0.32	1.0		U
78-93-3	2-Butanone	1.0	3.0		U
75-15-0	Carbon disulfide	0.13	1.0		U
56-23-5	Carbon tetrachloride	0.15	1.0		U
108-90-7	Chlorobenzene	0.10	1.0		U
75-00-3	Chloroethane	0.18	1.0		U
67-66-3	Chloroform	0.11	1.0	2.5	
74-87-3	Chloromethane	0.29	1.0		U
110-82-7	Cyclohexane	0.20	1.0		U
124-48-1	Dibromochloromethane	0.10	1.0		U
96-12-8	1,2-Dibromo-3-chloropropane	0.11	1.0		U
106-93-4	1,2-Dibromoethane	0.10	1.0		U
95-50-1	1,2-Dichlorobenzene	0.10	1.0		U
541-73-1	1,3-Dichlorobenzene	0.13	1.0		U
106-46-7	1,4-Dichlorobenzene	0.10	1.0		U
75-71-8	Dichlorodifluoromethane	0.22	1.0		U
75-34-3	1,1-Dichloroethane	0.12	1.0		U
107-06-2	1,2-Dichloroethane	0.10	1.0		U
75-35-4	1,1-Dichloroethene	0.15	1.0		U
156-59-2	cis-1,2-Dichloroethene	0.13	1.0		U
156-60-5	trans-1,2-Dichloroethene	0.13	1.0		U
78-87-5	1,2-Dichloropropane	0.10	1.0		U
10061-01-5	cis-1,3-Dichloropropene	0.11	1.0		U
10061-02-6	trans-1,3-Dichloropropene	0.10	1.0		U
100-41-4	Ethylbenzene	0.13	1.0		U
591-78-6	2-Hexanone	0.30	4.0		U
98-82-8	Isopropylbenzene	0.15	1.0		U
79-20-9	Methyl acetate	0.30	2.0		U
75-09-2	Methylene chloride	0.14	1.0	1.5u ~~1.5~~	~~B~~ BL
108-87-2	Methyl cyclohexane	0.17	1.0		U
1634-04-4	Methyl tert-butyl ether	0.10	1.0		U
108-10-1	4-Methyl-2-pentanone	0.29	2.0		U
100-42-5	Styrene	0.10	1.0		U
79-34-5	1,1,2,2-Tetrachloroethane	0.10	1.0		U
127-18-4	Tetrachloroethene	0.15	1.0		U

FORM I VOA

RW 2/26/09

FORM 1
VOLATILE ORGANICS ANALYSIS DATA SHEET

CLIENT SAMPLE NO. 15

MR08-EB01
120508-SS

Lab Name: EMPIRICAL LABS Contract: CH2MHILL

Lab Code: NA Case No.: NA SAS No.: NA SDG No.: LEJEUNE024

Matrix: (soil/water) WATER Lab Sample ID: 0812097-15

Sample wt/vol: 5.000 (g/mL) ML Lab File ID: 1209715

Level: (low/med) LOW Date Sampled: 12/05/08 13:20

% Moisture: not dec. _____ Date Analyzed: 12/14/08 13:02

GC Column: RTX-VRX ID: 0.25 (mm) Dilution Factor: 1.0

Soil Extract Volume:_____(uL) Soil Aliquot Volume: _____(uL)

CONCENTRATION UNITS: (ug/L or ug/Kg) UG/L

CAS NO.	COMPOUND	MDL	RL	CONC	Q
108-88-3	Toluene	0.10	1.0	0.36	J
120-82-1	1,2,4-Trichlorobenzene	0.10	1.0		U
71-55-6	1,1,1-Trichloroethane	0.17	1.0		U
79-00-5	1,1,2-Trichloroethane	0.10	1.0		U
79-01-6	Trichloroethene	0.13	1.0		U
76-13-1	Trichlorotrifluoroethane	0.18	1.0		U
75-69-4	Trichlorofluoromethane	0.17	1.0		U
75-01-4	Vinyl chloride	0.18	1.0		U
1330-20-7	Xylene(total)	0.22	1.0		U

RW
2/26/09

FORM 1
VOLATILE ORGANICS ANALYSIS DATA SHEET

CLIENT SAMPLE NO. 16

MR08-EB01
120508-IS

Lab Name: EMPIRICAL LABS Contract: CH2MHILL

Lab Code: NA Case No.: NA SAS No.: NA SDG No.: LEJEUNE024

Matrix: (soil/water) WATER Lab Sample ID: 0812097-16

Sample wt/vol: 5.000 (g/mL) ML Lab File ID: 1209716

Level: (low/med) LOW Date Sampled: 12/05/08 14:00

% Moisture: not dec. _____ Date Analyzed: 12/14/08 13:33

GC Column: RTX-VRX ID: 0.25 (mm) Dilution Factor: 1.0

Soil Extract Volume:_____(uL) Soil Aliquot Volume: _____(uL)

CONCENTRATION UNITS: (ug/L or ug/Kg) UG/L

CAS NO.	COMPOUND	MDL	RL	CONC	Q
67-64-1	Acetone	0.84	2.5	3.2	J CCH
71-43-2	Benzene	0.11	1.0		U
75-27-4	Bromodichloromethane	0.10	1.0		U
75-25-2	Bromoform	0.10	1.0		U
74-83-9	Bromomethane	0.32	1.0		U
78-93-3	2-Butanone	1.0	3.0		U
75-15-0	Carbon disulfide	0.13	1.0		U
56-23-5	Carbon tetrachloride	0.15	1.0		U
108-90-7	Chlorobenzene	0.10	1.0		U
75-00-3	Chloroethane	0.18	1.0		U
67-66-3	Chloroform	0.11	1.0	2.5	
74-87-3	Chloromethane	0.29	1.0		U
110-82-7	Cyclohexane	0.20	1.0		U
124-48-1	Dibromochloromethane	0.10	1.0		U
96-12-8	1,2-Dibromo-3-chloropropane	0.11	1.0		U
106-93-4	1,2-Dibromoethane	0.10	1.0		U
95-50-1	1,2-Dichlorobenzene	0.10	1.0		U
541-73-1	1,3-Dichlorobenzene	0.13	1.0		U
106-46-7	1,4-Dichlorobenzene	0.10	1.0		U
75-71-8	Dichlorodifluoromethane	0.22	1.0		U
75-34-3	1,1-Dichloroethane	0.12	1.0		U
107-06-2	1,2-Dichloroethane	0.10	1.0		U
75-35-4	1,1-Dichloroethene	0.15	1.0		U
156-59-2	cis-1,2-Dichloroethene	0.13	1.0		U
156-60-5	trans-1,2-Dichloroethene	0.13	1.0		U
78-87-5	1,2-Dichloropropane	0.10	1.0		U
10061-01-5	cis-1,3-Dichloropropene	0.11	1.0		U
10061-02-6	trans-1,3-Dichloropropene	0.10	1.0		U
100-41-4	Ethylbenzene	0.13	1.0		U
591-78-6	2-Hexanone	0.30	4.0		U
98-82-8	Isopropylbenzene	0.15	1.0		U
79-20-9	Methyl acetate	0.30	2.0		U
75-09-2	Methylene chloride	0.14	1.0	1.6	~~BU~~ B
108-87-2	Methyl cyclohexane	0.17	1.0		U
1634-04-4	Methyl tert-butyl ether	0.10	1.0		U
108-10-1	4-Methyl-2-pentanone	0.29	2.0		U
100-42-5	Styrene	0.10	1.0		U
79-34-5	1,1,2,2-Tetrachloroethane	0.10	1.0		U
127-18-4	Tetrachloroethene	0.15	1.0		U

FORM I VOA

LW 12/26/09

FORM 1
VOLATILE ORGANICS ANALYSIS DATA SHEET

CLIENT SAMPLE NO. 16

MR08-EB01
120508-IS

Lab Name: EMPIRICAL LABS Contract: CH2MHILL

Lab Code: NA Case No.: NA SAS No.: NA SDG No.: LEJEUNE024

Matrix: (soil/water) WATER Lab Sample ID: 0812097-16

Sample wt/vol: 5.000 (g/mL) ML Lab File ID: 1209716

Level: (low/med) LOW Date Sampled: 12/05/08 14:00

% Moisture: not dec. _____ Date Analyzed: 12/14/08 13:33

GC Column: RTX-VRX ID: 0.25 (mm) Dilution Factor: 1.0

Soil Extract Volume:_____(uL) Soil Aliquot Volume: _____(uL)

CONCENTRATION UNITS: (ug/L or ug/Kg) UG/L

CAS NO.	COMPOUND	MDL	RL	CONC	Q
108-88-3	Toluene	0.10	1.0	0.43	J
120-82-1	1,2,4-Trichlorobenzene	0.10	1.0		U
71-55-6	1,1,1-Trichloroethane	0.17	1.0		U
79-00-5	1,1,2-Trichloroethane	0.10	1.0		U
79-01-6	Trichloroethene	0.13	1.0		U
76-13-1	Trichlorotrifluoroethane	0.18	1.0		U
75-69-4	Trichlorofluoromethane	0.17	1.0		U
75-01-4	Vinyl chloride	0.18	1.0		U
1330-20-7	Xylene(total)	0.22	1.0		U

DW 2/26/09

FORM 1
VOLATILE ORGANICS ANALYSIS DATA SHEET

CLIENT SAMPLE NO. 17

MR08-TB01120508

Lab Name: EMPIRICAL LABS Contract: CH2MHILL

Lab Code: NA Case No.: NA SAS No.: NA SDG No.: LEJEUNE024

Matrix: (soil/water) WATER Lab Sample ID: 0812097-17

Sample wt/vol: 5.000 (g/mL) ML Lab File ID: 1209717

Level: (low/med) LOW Date Sampled: 12/05/08 14:10

% Moisture: not dec. _____ Date Analyzed: 12/14/08 12:32

GC Column: RTX-VRX ID: 0.25 (mm) Dilution Factor: 1.0

Soil Extract Volume:_____(uL) Soil Aliquot Volume: _____(uL)

CONCENTRATION UNITS: (ug/L or ug/Kg) UG/L

CAS NO.	COMPOUND	MDL	RL	CONC	Q
67-64-1	Acetone	0.84	2.5		~~U~~ UJ CC
71-43-2	Benzene	0.11	1.0		U
75-27-4	Bromodichloromethane	0.10	1.0		U
75-25-2	Bromoform	0.10	1.0		U
74-83-9	Bromomethane	0.32	1.0		U
78-93-3	2-Butanone	1.0	3.0		U
75-15-0	Carbon disulfide	0.13	1.0		U
56-23-5	Carbon tetrachloride	0.15	1.0		U
108-90-7	Chlorobenzene	0.10	1.0		U
75-00-3	Chloroethane	0.18	1.0		U
67-66-3	Chloroform	0.11	1.0		U
74-87-3	Chloromethane	0.29	1.0		U
110-82-7	Cyclohexane	0.20	1.0		U
124-48-1	Dibromochloromethane	0.10	1.0		U
96-12-8	1,2-Dibromo-3-chloropropane	0.11	1.0		U
106-93-4	1,2-Dibromoethane	0.10	1.0		U
95-50-1	1,2-Dichlorobenzene	0.10	1.0		U
541-73-1	1,3-Dichlorobenzene	0.13	1.0		U
106-46-7	1,4-Dichlorobenzene	0.10	1.0		U
75-71-8	Dichlorodifluoromethane	0.22	1.0		U
75-34-3	1,1-Dichloroethane	0.12	1.0		U
107-06-2	1,2-Dichloroethane	0.10	1.0		U
75-35-4	1,1-Dichloroethene	0.15	1.0		U
156-59-2	cis-1,2-Dichloroethene	0.13	1.0		U
156-60-5	trans-1,2-Dichloroethene	0.13	1.0		U
78-87-5	1,2-Dichloropropane	0.10	1.0		U
10061-01-5	cis-1,3-Dichloropropene	0.11	1.0		U
10061-02-6	trans-1,3-Dichloropropene	0.10	1.0		U
100-41-4	Ethylbenzene	0.13	1.0		U
591-78-6	2-Hexanone	0.30	4.0		U
98-82-8	Isopropylbenzene	0.15	1.0		U
79-20-9	Methyl acetate	0.30	2.0		U
75-09-2	Methylene chloride	0.14	1.0	1.1	~~B~~ U BL
108-87-2	Methyl cyclohexane	0.17	1.0		U
1634-04-4	Methyl tert-butyl ether	0.10	1.0		U
108-10-1	4-Methyl-2-pentanone	0.29	2.0		U
100-42-5	Styrene	0.10	1.0		U
79-34-5	1,1,2,2-Tetrachloroethane	0.10	1.0		U
127-18-4	Tetrachloroethene	0.15	1.0		U

FORM I VOA

MW 2/26/09

FORM 1
VOLATILE ORGANICS ANALYSIS DATA SHEET

CLIENT SAMPLE NO.

MR08-TB01120508

17

Lab Name: EMPIRICAL LABS Contract: CH2MHILL

Lab Code: NA Case No.: NA SAS No.: NA SDG No.: LEJEUNE024

Matrix: (soil/water) WATER Lab Sample ID: 0812097-17

Sample wt/vol: 5.000 (g/mL) ML Lab File ID: 1209717

Level: (low/med) LOW Date Sampled: 12/05/08 14:10

% Moisture: not dec. _____ Date Analyzed: 12/14/08 12:32

GC Column: RTX-VRX ID: 0.25 (mm) Dilution Factor: 1.0

Soil Extract Volume:_____(uL) Soil Aliquot Volume: _____(uL)

CONCENTRATION UNITS: (ug/L or ug/Kg) UG/L

CAS NO.	COMPOUND	MDL	RL	CONC	Q
108-88-3	Toluene	0.10	1.0		U
120-82-1	1,2,4-Trichlorobenzene	0.10	1.0		U
71-55-6	1,1,1-Trichloroethane	0.17	1.0		U
79-00-5	1,1,2-Trichloroethane	0.10	1.0		U
79-01-6	Trichloroethene	0.13	1.0		U
76-13-1	Trichlorotrifluoroethane	0.18	1.0		U
75-69-4	Trichlorofluoromethane	0.17	1.0		U
75-01-4	Vinyl chloride	0.18	1.0		U
1330-20-7	Xylene(total)	0.22	1.0		U

Leo 2/26/09

ENVIRONMENTAL
Data Services, Inc.

VOLATILE ORGANIC COMPOUNDS
USEPA Region IV - Level IV Review

Site: MCB Camp Lejeune, TO-09 SDG #: LEJEUNE 025

Client: CH2M HILL, Inc., Virginia Beach, Virginia Date: February 26, 2009

Laboratory: Empirical Laboratories, Nashville, Tennessee Reviewer: Nancy Weaver

EDS ID	Client Sample ID	Laboratory Sample ID	Matrix
1	MR08-SS109-08D	0812108-01	Soil
2	MR08-SS109D-08D	0812108-02	Soil
3	MR08-SS104-08D	0812108-03	Soil
3MS	MR08-SS104-08DMS	0812108-03MS	Soil
3MSD	MR08-SS104-08DMSD	0812108-03MSD	Soil
3RE	MR08-SS104-08DRE	0812108-03RE	Soil
4	MR08-SS105-08D	0812108-04	Soil
5	MR08-IS104-1-2-08D	0812108-05	Soil
5MS	MR08-IS104-1-2-08DMS	0812108-05MS	Soil
5MSD	MR08-IS104-1-2-08DMSD	0812108-05MSD	Soil
5RE	MR08-IS104-1-2-08DRE	0812108-05RE	Soil
6	MR08-IS105-2-3-08D	0812108-06	Soil
7	MR08-IS106-2-3-08D	0812108-07	Soil
8	MR08-SS087-08D	0812108-08	Soil
9	MR08-IS087-2-3-08D	0812108-09	Soil
9RE	MR08-IS087-2-3-08DRE	0812108-09RE	Soil
10	MR08-SS086-08D	0812108-10	Soil
10MS	MR08-SS086-08DMS	0812108-10MS	Soil
10MSD	MR08-SS086-08DMSD	0812108-10MSD	Soil
11	MR08-IS086-2-3-08D	0812108-11	Soil
11MS	MR08-IS086-2-3-08DMS	0812108-11MS	Soil
11MSD	MR08-IS086-2-3-08DMSD	0812108-11MSD	Soil
12	MR08-EB01120808-SS	0812108-12	Water
13	MR08-EB01120808-IS	0812108-13	Water
14	MR08-TB01120808	0812108-14	Water
15	MR08-SS106-08D	0812108-15	Soil

The USEPA "Contract Laboratory Program National Functional Guidelines for Organic Data Review," October 1999, and professional judgement were used in evaluating the data in this summary report.

Holding Times - All samples were analyzed within 14 days for preserved water and soil samples except the following.

Sample	Date Sampled	Date Analyzed	# of Days	Qualifier
3RE	12/08/08	12/28/08	20	J/UJ
5RE	12/08/08	12/30/08	22	J/UJ
9RE	12/08/08	12/30/08	22	J/UJ

GC/MS Tuning - All of the BFB tunes in the initial and continuing calibrations met the percent relative abundance criteria.

Initial Calibration - The initial calibrations exhibited acceptable %RSD and mean RRF values.

Continuing Calibration - The continuing calibrations exhibited acceptable %D and RRF values except the following.

CCAL Date	Compound	%D/RRF	Qualifier	Affected Samples
12/20/08 (1458)	cis-1,3-Dichloropropene	31.5%	J/UJ	1-7, 10, 11 unless already qualified
	trans-1,3-Dichloropropene	29.2%	J/UJ	1-7, 10, 11 unless already qualified
	Ethylbenzene	32.8%	J/UJ	1-7, 10, 11 unless already qualified
	Isopropylbenzene	41.6%	J/UJ	1-7, 10, 11 unless already qualified
	4-Methyl-2-pentanone	39.0%	J/UJ	1-7, 10, 11 unless already qualified
	Styrene	43.5%	J/UJ	1-7, 10, 11 unless already qualified
	1,1,2,2-Tetrachloroethane	28.4%	J/UJ	1-7, 10, 11 unless already qualified
	Toluene	27.4%	J/UJ	1-7, 10, 11 unless already qualified
	1,1,2-Trichloroethane	31.4%	J/UJ	1-7, 10, 11 unless already qualified
	Xylene	35.3%	J/UJ	1-7, 10, 11 unless already qualified
	2-Butanone	25.7%	J/UJ	1-7, 10, 11 unless already qualified
	Chlorobenzene	32.0%	J/UJ	1-7, 10, 11 unless already qualified
	Dibromochloromethane	28.8%	J/UJ	1-7, 10, 11 unless already qualified
	1,2-Dibromo-3-chloropropane	30.4%	J/UJ	1-7, 10, 11 unless already qualified
	1,2-Dibromoethane	28.9%	J/UJ	1-7, 10, 11 unless already qualified
	1,2-Dichlorobenzene	31.3%	J/UJ	1-7, 10, 11 unless already qualified
	1,4-Dichlorobenzene	29.9%	J/UJ	1-7, 10, 11 unless already qualified
	1,2-Dichloropropane	30.3%	J/UJ	1-7, 10, 11 unless already qualified
12/21/08	Bromomethane	48.2%	J/UJ	8, 15
	Chloroethane	26.5%	J/UJ	8, 15
	Chloromethane	28.8%	J/UJ	8, 15
	Dichlorodifluoromethane	28.7%	J/UJ	8, 15
12/30/08	2-Hexanone	30.0%	J/UJ	None - Already qualified due to HT

Surrogates - All samples exhibited acceptable surrogate recoveries except the following.

Sample ID	Surrogate	%R	Qualifier
9	Toluene-d8	126%	J/UJ
	Bromofluorobenzene	79%	J/UJ

MS/MSD - The MS/MSD sample exhibited acceptable %R and RPD values except the following.

MS/MSD Sample ID	Compound	MS/MSD %R/RPD	Qualifier
3	Chlorobenzene	Ok/69%/Ok	J/UJ
	1,2-Dichlorobenzene	60%/51%/Ok	None - Already qualified due to IS
	1,3-Dichlorobenzene	64%/52%/32	None - Already qualified due to IS
	1,4-Dichlorobenzene	63%/54%/Ok	None - Already qualified due to IS
	Styrene	63%/55%/Ok	J/UJ
	1,2,4-Trichlorobenzene	26%/20%/35	J/UJ
	Methyl acetate	Ok/Ok/33	J/UJ
	1,1,1-Trichloroethane	Ok/69%/Ok	J/UJ
	Trichloroethene	Ok/68%/Ok	J/UJ
	Trichlorofluoromethane	Ok/Ok/35	J/UJ
	Vinyl acetate	Ok/59%/Ok	J/UJ
5	1,2,4-Trichlorobenzene	42%/Ok/Ok	None - Already qualified due to IS
	1,2-Dichlorobenzene	Ok/57%/50	J/UJ
	1,3-Dichlorobenzene	Ok/55%/60	None - Already qualified due to IS
	1,4-Dichlorobenzene	Ok/57%/52	J/UJ
	Methyl acetate	Ok/40%/Ok	J/UJ
	Styrene	Ok/68%/Ok	J/UJ
	Vinyl chloride	Ok/57%/Ok	J/UJ
10	Acetone	Ok/Ok/37	None for RPD alone
	Benzene	74%/Ok/Ok	J/UJ
	Bromodichloromethane	65%/Ok/Ok	J/UJ
	Bromomethane	28%/Ok/Ok	J/UJ
	Carbon tetrachloride	63%/Ok/Ok	J/UJ
	Chlorobenzene	58%/74%/Ok	J/UJ
	Chloroform	69%Ok/Ok	J/UJ
	1,2-Dibromoethane	68%/Ok/Ok	J/UJ
	1,2-Dichlorobenzene	51%/66%/Ok	J/UJ
	1,3-Dichlorobenzene	42%/60%/39	J/UJ
	1,4-Dichlorobenzene	43%/56%/31	J/UJ
	1,2-Dichloroethane	66%/Ok/Ok/	J/UJ
	cis-1,2-Dichloroethene	64%/Ok/Ok	J/UJ
	trans-1,2-Dichloroethene	60%/Ok/Ok	J/UJ
	cis-1,3-Dichloropropene	45%/Ok/50	J/UJ
	trans-1,3-Dichloropropene	54%/Ok/40	J/UJ
	Ethylbenzene	59%/Ok/Ok	J/UJ
	Isopropylbenzene	71%/Ok/Ok	J/UJ
	Tetrachloroethene	58%/73%/38	J/UJ
	Styrene	52%/Ok/Ok	J/UJ
	1,2,4-Trichlorobenzene	25%/41%/50	J/UJ
	1,1,1-Trichloroethane	67%/Ok/Ok	J/UJ
	Trichloroethene	55%/71%/Ok	J/UJ
	Vinyl chloride	50%//47%/Ok	J/UJ
	Xylene (total)	63%//Ok/Ok	J/UJ
11	Benzene	72%/64%/Ok	J/UJ
	Bromodichloromethane	62%/58%/Ok	J/UJ
	Bromomethane	Ok/25%/72	J/UJ
	Carbon tetrachloride	64%/58%/Ok	J/UJ
	Chlorobenzene	54%/44%/33	J/UJ

MS/MSD Sample ID	Compound	MS/MSD %R/RPD	Qualifier
11	Chloroform	Ok/64%/Ok	J/UJ
	1,2-Dibromoethane	65%/50%/37	J/UJ
	1,2-Dichlorobenzene	40%/29%/41	J/UJ
	1,3-Dichlorobenzene	36%/26%/43	J/UJ
	1,4-Dichlorobenzene	42%/23%/68	J/UJ
	1,2-Dichloroethane	66%/56%/Ok	J/UJ
	1,1-Dichloroethene	Ok/64%/32	J/UJ
	cis-1,2-Dichloroethene	Ok/54%/38	J/UJ
	trans-1,2-Dichloroethene	Ok/47%/48	J/UJ
	1,2-Dichloropropane	Ok/69%/Ok	J/UJ
	cis-1,3-Dichloropropene	60%//43%/43	J/UJ
	trans-1,3-Dichloropropene	60%/40%/50	J/UJ
	Ethylbenzene	58%/49%/Ok	J/UJ
	Isopropylbenzene	62%/54%/Ok	J/UJ
	Methyl acetate	30%/30%/Ok	J/UJ
	Methyl cyclohexane	Ok/64%/Ok	J/UJ
	Styrene	15%/5%/108	J/R
	Tetrachloroethene	61%/54%/Ok	J/UJ
	Toluene	68%/61%/Ok	J/UJ
	1,2,4-Trichlorobenzene	19%/11%/61	J/UJ
	1,1,1-Trichloroethane	68%/61%/Ok	J/UJ
	Trichloroethene	60%/51%/Ok	J/UJ
	Vinyl chloride	55%/46%/Ok	J/UJ
	Xylene (total)	57%/48%/Ok	J/UJ

Note: Several samples exhibited RPD values that exceeded the QC acceptance limits, however, these samples do not require qualifiers. No further action was required.

Laboratory Control Sample - The LCS samples exhibited acceptable %R values except the following.

LCS ID	Compound	%R	Qualifier	Affected Samples
V1BLK1219E	Vinyl chloride	58%	None	Already qualified due to MS/MSD

Internal Standard (IS) Area Performance - All internal standards met response and retention time (RT) criteria except the following.

Sample ID	Internal Standard	Area Count	Qualifier
3	IS3-1,4-Dichloobenzene-d4	Low	J/UJ
5	IS3-1,4-Dichloobenzene-d4	Low	J/UJ
9	IS3-1,4-Dichloobenzene-d4	Low	J/UJ
9RE	IS3-1,4-Dichloobenzene-d4	Low	J/UJ

Method Blank The method blanks exhibited the following contamination.

Blank ID	Compound	Conc.	Action Level	Qualifier	Affected Samples
V3BLK1213	Methylene chloride	0.45 ug/L	4.5 ug/L	U	12-14

Blank ID	Compound	Conc.	Action Level	Qualifier	Affected Samples
V1BLK1219E	Methylene chloride	6.0 ug/kg	60.0 ug/kg	None	All ND
V1BLK1227	Methylene chloride	1.8 ug/kg	18 ug/kg	U	3RE
V1BLK1230	Methylene chloride	3.0 ug/kg	30 ug/kg	U	5RE, 9RE

Trip, Field, Equipment Blank - Field QC results are summarized below.

Blank ID	Compound	Conc. ug/L	Action Level ug/L or ug/kg	Qualifier	Affected Samples
MR08-TB01120808	None - ND	-	-	-	-
MR08-FB01120608	Acetone	3.8	38	None	See EB
	Bromodichloromethane	0.2	1.0	None	See EB
	Chloroform	3.0	15.0	None	See EB
	Toluene	0.35	1.75	U	2, 4, 5, 10, 11
MR08-EB01120808-IS	Acetone	3.5	35	None	See FB
	Chloroform	2.7	13.5	None	See FB
MR08-EB1120808-SS	Acetone	4.2	42	U	1, 2, 4, 5, 5RE, 6, 8, 10, 11
	Bromodichloromethane	0.19	0.95	None	See FB
	Chloroform	2.6	13	None	See FB
	Toluene	0.32	1.6	None	See FB

Field Duplicates - Field duplicate results are summarized below.

Compound	MR08-SS109-08D ug/kg	MR08-SS109D-08D ug/kg	RPD	Qualifier
Benzene	18 U	0.73	NC	None
Cyclohexane	18 U	0.66	NC	None
Ethylbenzene	1.7	1.9	11%	None
Methyl cyclohexane	0.87	0.84	4%	None

Tentatively Identified Compounds (TICs) - TICs were not reported.

Compound Quantitation - Several samples exhibited high concentrations of target compounds over the calibration range and were flagged (E). The laboratory diluted and reanalyzed samples. The reviewer replaced the original results with the dilution results. The original Form Is should be used for reporting purposes.

Several samples exhibited internal standard and/or surrogate deficiencies. These samples were reanalyzed. Refer to Form Is for which were used for reporting purposes.

FORM 1
VOLATILE ORGANICS ANALYSIS DATA SHEET

CLIENT SAMPLE NO.

MR08-SS109-08D

Lab Name: EMPIRICAL LABS Contract: CH2MHILL

Lab Code: NA Case No.: NA SAS No.: NA SDG No.: LEJEUNE025

Matrix: (soil/water) SOIL Lab Sample ID: 0812108-01

Sample wt/vol: 3.0 (g/mL) G Lab File ID: 1210801A

Level: (low/med) LOW Date Sampled: 12/08/08 08:45

% Moisture: not dec. 6 Date Analyzed: 12/20/08 17:35

GC Column: RTX-VRX ID: 0.25 (mm) Dilution Factor: 1.0

Soil Extract Volume:_____(uL) Soil Aliquot Volume: _____(uL)

CONCENTRATION UNITS: (ug/L or ug/Kg) UG/KG

CAS NO.	COMPOUND	MDL	RL	CONC	Q
67-64-1	Acetone	3.6	18	18u ~~14~~	~~J~~ B
71-43-2	Benzene	0.84	18		U
75-27-4	Bromodichloromethane	0.53	18		U
75-25-2	Bromoform	1.8	18		U
74-83-9	Bromomethane	1.3	18		U
78-93-3	2-Butanone	2.5	18		~~U~~ UJ CCH
75-15-0	Carbon disulfide	2.3	18		U
56-23-5	Carbon tetrachloride	1.6	18		U
108-90-7	Chlorobenzene	0.60	18		~~U~~ UJ CCH
75-00-3	Chloroethane	2.0	18		U
67-66-3	Chloroform	0.98	18		U
74-87-3	Chloromethane	0.93	18		U
110-82-7	Cyclohexane	0.96	18		U
124-48-1	Dibromochloromethane	0.60	18		~~U~~ UJ CCH
96-12-8	1,2-Dibromo-3-chloropropane	2.1	8.9		~~U~~ UJ CCH
106-93-4	1,2-Dibromoethane	0.76	18		~~U~~ UJ CCH
95-50-1	1,2-Dichlorobenzene	0.66	18		~~U~~ ↓
541-73-1	1,3-Dichlorobenzene	1.5	18		U
106-46-7	1,4-Dichlorobenzene	0.98	18		U UJ CC
75-71-8	Dichlorodifluoromethane	2.0	18		U
75-34-3	1,1-Dichloroethane	0.96	18		U
107-06-2	1,2-Dichloroethane	0.82	18		U
75-35-4	1,1-Dichloroethene	2.1	18		U
156-59-2	cis-1,2-Dichloroethene	2.1	18		U
156-60-5	trans-1,2-Dichloroethene	2.0	18		U
78-87-5	1,2-Dichloropropane	0.82	18		~~U~~ UJ CC
10061-01-5	cis-1,3-Dichloropropene	0.89	18		U
10061-02-6	trans-1,3-Dichloropropene	0.57	18		U
100-41-4	Ethylbenzene	1.3	18	1.7	~~J~~ J
591-78-6	2-Hexanone	4.1	18		U
98-82-8	Isopropylbenzene	1.6	18		~~U~~ UJ CC
79-20-9	Methyl acetate	2.8	18		U
75-09-2	Methylene chloride	1.1	18		U
108-87-2	Methyl cyclohexane	0.53	18	0.87	J
1634-04-4	Methyl tert-butyl ether	0.57	18		U
108-10-1	4-Methyl-2-pentanone	1.0	18		~~U~~ UJ CCH
100-42-5	Styrene	0.62	18		~~U~~ UJ CCH
79-34-5	1,1,2,2-Tetrachloroethane	0.76	18		~~U~~ UJ CCH
127-18-4	Tetrachloroethene	1.7	18		U

lw 2/26/09

FORM 1
VOLATILE ORGANICS ANALYSIS DATA SHEET

CLIENT SAMPLE NO.

MR08-SS109-08D

Lab Name: EMPIRICAL LABS Contract: CH2MHILL

Lab Code: NA Case No.: NA SAS No.: NA SDG No.: LEJEUNE025

Matrix: (soil/water) SOIL Lab Sample ID: 0812108-01

Sample wt/vol: 3.0 (g/mL) G Lab File ID: 1210801A

Level: (low/med) LOW Date Sampled: 12/08/08 08:45

% Moisture: not dec. 6 Date Analyzed: 12/20/08 17:35

GC Column: RTX-VRX ID: 0.25 (mm) Dilution Factor: 1.0

Soil Extract Volume:_____(uL) Soil Aliquot Volume: _____(uL)

CONCENTRATION UNITS: (ug/L or ug/Kg) UG/KG

CAS NO.	COMPOUND	MDL	RL	CONC	Q
108-88-3	Toluene	1.5	18		~~U~~ UJ CC
120-82-1	1,2,4-Trichlorobenzene	0.32	18		U
71-55-6	1,1,1-Trichloroethane	1.6	18		U
79-00-5	1,1,2-Trichloroethane	0.62	18		~~U~~ UJ CC
79-01-6	Trichloroethene	1.5	18		U
76-13-1	Trichlorotrifluoroethane	0.98	18		U
75-69-4	Trichlorofluoromethane	1.7	18		U
75-01-4	Vinyl chloride	2.0	18		U
1330-20-7	Xylene(total)	1.2	18		~~U~~ UJ CC

2/26/09

FORM 1
VOLATILE ORGANICS ANALYSIS DATA SHEET

CLIENT SAMPLE NO. 2

MR08-SS109D-08D

Lab Name: EMPIRICAL LABS Contract: CH2MHILL

Lab Code: NA Case No.: NA SAS No.: NA SDG No.: LEJEUNE025

Matrix: (soil/water) SOIL Lab Sample ID: 0812108-02

Sample wt/vol: 5.2 (g/mL) G Lab File ID: 1210802A

Level: (low/med) LOW Date Sampled: 12/08/08 09:00

% Moisture: not dec. 6 Date Analyzed: 12/20/08 18:14

GC Column: RTX-VRX ID: 0.25 (mm) Dilution Factor: 1.0

Soil Extract Volume:_____(uL) Soil Aliquot Volume: _____(uL)

CONCENTRATION UNITS: (ug/L or ug/Kg) UG/KG

CAS NO.	COMPOUND	MDL	RL	CONC	Q
67-64-1	Acetone	2.0	10	10U ~~9.6~~	~~J~~ B
71-43-2	Benzene	0.48	10	0.73	J
75-27-4	Bromodichloromethane	0.31	10		U
75-25-2	Bromoform	1.0	10		U
74-83-9	Bromomethane	0.74	10		U
78-93-3	2-Butanone	1.4	10		~~U~~ UJ CCH
75-15-0	Carbon disulfide	1.3	10		U
56-23-5	Carbon tetrachloride	0.90	10		U
108-90-7	Chlorobenzene	0.35	10		~~U~~ UJ CCH
75-00-3	Chloroethane	1.1	10		U
67-66-3	Chloroform	0.56	10		U
74-87-3	Chloromethane	0.53	10		U
110-82-7	Cyclohexane	0.55	10	0.66	J
124-48-1	Dibromochloromethane	0.35	10		U UJ CCH
96-12-8	1,2-Dibromo-3-chloropropane	1.2	5.1		U
106-93-4	1,2-Dibromoethane	0.44	10		U
95-50-1	1,2-Dichlorobenzene	0.38	10		U
541-73-1	1,3-Dichlorobenzene	0.86	10		U
106-46-7	1,4-Dichlorobenzene	0.56	10		~~U~~ UJ CCH
75-71-8	Dichlorodifluoromethane	1.1	10		U
75-34-3	1,1-Dichloroethane	0.55	10		U
107-06-2	1,2-Dichloroethane	0.47	10		U
75-35-4	1,1-Dichloroethene	1.2	10		U
156-59-2	cis-1,2-Dichloroethene	1.2	10		U
156-60-5	trans-1,2-Dichloroethene	1.1	10		U
78-87-5	1,2-Dichloropropane	0.47	10		U UJ CCH
10061-01-5	cis-1,3-Dichloropropene	0.51	10		U
10061-02-6	trans-1,3-Dichloropropene	0.33	10		U
100-41-4	Ethylbenzene	0.77	10	1.9	J J
591-78-6	2-Hexanone	2.4	10		U
98-82-8	Isopropylbenzene	0.90	10		~~U~~ UJ CCH
79-20-9	Methyl acetate	1.6	10		U
75-09-2	Methylene chloride	0.64	10		U
108-87-2	Methyl cyclohexane	0.31	10	0.84	J
1634-04-4	Methyl tert-butyl ether	0.33	10		U
108-10-1	4-Methyl-2-pentanone	0.60	10		~~U~~ UJ CCH
100-42-5	Styrene	0.36	10		U
79-34-5	1,1,2,2-Tetrachloroethane	0.44	10		U
127-18-4	Tetrachloroethene	1.00	10		U

FORM I VOA

RW 2/26/09

FORM 1
VOLATILE ORGANICS ANALYSIS DATA SHEET

CLIENT SAMPLE NO. 2

MR08-SS109D-08D

Lab Name: EMPIRICAL LABS Contract: CH2MHILL

Lab Code: NA Case No.: NA SAS No.: NA SDG No.: LEJEUNE025

Matrix: (soil/water) SOIL Lab Sample ID: 0812108-02

Sample wt/vol: 5.2 (g/mL) G Lab File ID: 1210802A

Level: (low/med) LOW Date Sampled: 12/08/08 09:00

% Moisture: not dec. 6 Date Analyzed: 12/20/08 18:14

GC Column: RTX-VRX ID: 0.25 (mm) Dilution Factor: 1.0

Soil Extract Volume:_____(uL) Soil Aliquot Volume: _____(uL)

CONCENTRATION UNITS: (ug/L or ug/Kg) UG/KG

CAS NO.	COMPOUND	MDL	RL	CONC	Q
108-88-3	Toluene	0.88	10	10UJ ~~1.4~~	~~J~~ CCH B
120-82-1	1,2,4-Trichlorobenzene	0.18	10		U
71-55-6	1,1,1-Trichloroethane	0.92	10		U
79-00-5	1,1,2-Trichloroethane	0.36	10		~~U~~ UJ CCH
79-01-6	Trichloroethene	0.87	10		U
76-13-1	Trichlorotrifluoroethane	0.56	10		U
75-69-4	Trichlorofluoromethane	0.98	10		U
75-01-4	Vinyl chloride	1.1	10		U
1330-20-7	Xylene(total)	0.72	10		~~U~~ UJ CCH

MW 2/26/09

FORM 1
VOLATILE ORGANICS ANALYSIS DATA SHEET

CLIENT SAMPLE NO. 3

MR08-SS104-08D

Lab Name: EMPIRICAL LABS Contract: CH2MHILL

Lab Code: NA Case No.: NA SAS No.: NA SDG No.: LEJEUNE025

Matrix: (soil/water) SOIL Lab Sample ID: 0812108-03

Sample wt/vol: 4.7 (g/mL) G Lab File ID: 1210803A

Level: (low/med) LOW Date Sampled: 12/08/08 10:00

% Moisture: not dec. 15 Date Analyzed: 12/20/08 12:32 Use Reanalysis

GC Column: RTX-VRX ID: 0.25 (mm) Dilution Factor: 1.0

Soil Extract Volume:_____(uL) Soil Aliquot Volume: _____(uL)

CONCENTRATION UNITS: (ug/L or ug/Kg) UG/KG

CAS NO.	COMPOUND	MDL	RL	CONC	Q
67-64-1	Acetone	2.5	12	100	
71-43-2	Benzene	0.59	12		U
75-27-4	Bromodichloromethane	0.38	12		U
75-25-2	Bromoform	1.2	12		U
74-83-9	Bromomethane	0.90	12		U
78-93-3	2-Butanone	1.8	12		~~U~~ UJ CCH
75-15-0	Carbon disulfide	1.6	12		U
56-23-5	Carbon tetrachloride	1.1	12		U
108-90-7	Chlorobenzene	0.43	12		~~U~~ UJ MS
75-00-3	Chloroethane	1.4	12		U
67-66-3	Chloroform	0.69	12		U
74-87-3	Chloromethane	0.65	12		U
110-82-7	Cyclohexane	0.68	12		U
124-48-1	Dibromochloromethane	0.43	12		U
96-12-8	1,2-Dibromo-3-chloropropane	1.5	6.3		~~U~~ UJ IS
106-93-4	1,2-Dibromoethane	0.54	12		~~U~~ UJ CC
95-50-1	1,2-Dichlorobenzene	0.46	12		~~U~~ UJ IS
541-73-1	1,3-Dichlorobenzene	1.0	12		U
106-46-7	1,4-Dichlorobenzene	0.69	12		U
75-71-8	Dichlorodifluoromethane	1.4	12		~~U~~ UJ CC
75-34-3	1,1-Dichloroethane	0.68	12		U
107-06-2	1,2-Dichloroethane	0.58	12		U
75-35-4	1,1-Dichloroethene	1.5	12		U
156-59-2	cis-1,2-Dichloroethene	1.5	12		U
156-60-5	trans-1,2-Dichloroethene	1.4	12		U
78-87-5	1,2-Dichloropropane	0.58	12		~~U~~ UJ CC
10061-01-5	cis-1,3-Dichloropropene	0.63	12		U
10061-02-6	trans-1,3-Dichloropropene	0.40	12		U
100-41-4	Ethylbenzene	0.94	12		U
591-78-6	2-Hexanone	2.9	12		U
98-82-8	Isopropylbenzene	1.1	12		~~U~~ UJ CC
79-20-9	Methyl acetate	2.0	12		~~U~~ UJ MS
75-09-2	Methylene chloride	0.78	12		U
108-87-2	Methyl cyclohexane	0.38	12		U
1634-04-4	Methyl tert-butyl ether	0.40	12		U
108-10-1	4-Methyl-2-pentanone	0.73	12		~~U~~ UJ CC
100-42-5	Styrene	0.44	12		~~U~~ UJ MS
79-34-5	1,1,2,2-Tetrachloroethane	0.54	12		~~U~~ UJ IS
127-18-4	Tetrachloroethene	1.2	12		U

RE

FORM I VOA

LW 2/26/09

FORM 1
VOLATILE ORGANICS ANALYSIS DATA SHEET

CLIENT SAMPLE NO. 3

MR08-SS104-08D

Lab Name: EMPIRICAL LABS Contract: CH2MHILL

Lab Code: NA Case No.: NA SAS No.: NA SDG No.: LEJEUNE025

Matrix: (soil/water) SOIL Lab Sample ID: 0812108-03

Sample wt/vol: 4.7 (g/mL) G Lab File ID: 1210803A

Level: (low/med) LOW Date Sampled: 12/08/08 10:00

% Moisture: not dec. 15 Date Analyzed: 12/20/08 12:32 Use reanaly

GC Column: RTX-VRX ID: 0.25 (mm) Dilution Factor: 1.0

Soil Extract Volume:_____(uL) Soil Aliquot Volume: _____(uL)

CONCENTRATION UNITS: (ug/L or ug/Kg) UG/KG

CAS NO.	COMPOUND	MDL	RL	CONC	Q
108-88-3	Toluene	1.1	12	4.7	~~J~~ J CCH
120-82-1	1,2,4-Trichlorobenzene	0.22	12		~~U~~ UJ IS
71-55-6	1,1,1-Trichloroethane	1.1	12		~~U~~ UJ MSL
79-00-5	1,1,2-Trichloroethane	0.44	12		~~U~~ UJ CCI
79-01-6	Trichloroethene	1.1	12		~~U~~ UJ MSI
76-13-1	Trichlorotrifluoroethane	0.69	12		U
75-69-4	Trichlorofluoromethane	1.2	12	3.8	~~J~~ J MSL
75-01-4	Vinyl chloride	1.4	12		~~U~~ UJ MSC
1330-20-7	Xylene(total)	0.88	12		~~U~~ UJ CCI

R RE

FORM I VOA

lw 2/26/09

FORM 1
VOLATILE ORGANICS ANALYSIS DATA SHEET

CLIENT SAMPLE NO. 3RE

MR08-SS104-08DR

Lab Name: EMPIRICAL LABS Contract: CH2MHILL

Lab Code: NA Case No.: NA SAS No.: NA SDG No.: LEJEUNE025

Matrix: (soil/water) SOIL Lab Sample ID: 0812108-03R

Sample wt/vol: 4.1 (g/mL) G Lab File ID: 1210803B

Level: (low/med) LOW Date Sampled: 12/08/08 10:00

% Moisture: not dec. 15 Date Analyzed: 12/28/08 02:50

GC Column: RTX-VRX ID: 0.25 (mm) Dilution Factor: 1.0

Soil Extract Volume:_____(uL) Soil Aliquot Volume: _____(uL)

CONCENTRATION UNITS: (ug/L or ug/Kg) UG/KG

CAS NO.	COMPOUND	MDL	RL	CONC	Q	
67-64-1	Acetone	2.8	14	140	J	H
71-43-2	Benzene	0.67	14		U UJ	
75-27-4	Bromodichloromethane	0.43	14		U	
75-25-2	Bromoform	1.4	14		U	
74-83-9	Bromomethane	1.0	14		U	
78-93-3	2-Butanone	2.0	14	4.6	J J	
75-15-0	Carbon disulfide	1.8	14	2.9	J J	
56-23-5	Carbon tetrachloride	1.2	14		U UJ	
108-90-7	Chlorobenzene	0.49	14		U	
75-00-3	Chloroethane	1.6	14		U	
67-66-3	Chloroform	0.79	14		U	
74-87-3	Chloromethane	0.74	14		U	
110-82-7	Cyclohexane	0.77	14		U	
124-48-1	Dibromochloromethane	0.49	14		U	
96-12-8	1,2-Dibromo-3-chloropropane	1.7	7.1		U	
106-93-4	1,2-Dibromoethane	0.61	14		U	
95-50-1	1,2-Dichlorobenzene	0.53	14		U	
541-73-1	1,3-Dichlorobenzene	1.2	14		U	
106-46-7	1,4-Dichlorobenzene	0.79	14		U	
75-71-8	Dichlorodifluoromethane	1.6	14		U	
75-34-3	1,1-Dichloroethane	0.77	14		U	
107-06-2	1,2-Dichloroethane	0.66	14		U	
75-35-4	1,1-Dichloroethene	1.7	14		U	
156-59-2	cis-1,2-Dichloroethene	1.7	14		U	
156-60-5	trans-1,2-Dichloroethene	1.6	14		U	
78-87-5	1,2-Dichloropropane	0.66	14		U	
10061-01-5	cis-1,3-Dichloropropene	0.71	14		U	
10061-02-6	trans-1,3-Dichloropropene	0.46	14		U	
100-41-4	Ethylbenzene	1.1	14		U	
591-78-6	2-Hexanone	3.3	14		U	
98-82-8	Isopropylbenzene	1.2	14		U	
79-20-9	Methyl acetate	2.3	14	5.0	J J	
75-09-2	Methylene chloride	0.89	14	14UJ	~~3.4 JB~~ HT	B
108-87-2	Methyl cyclohexane	0.43	14		U UJ	H
1634-04-4	Methyl tert-butyl ether	0.46	14		U	
108-10-1	4-Methyl-2-pentanone	0.83	14		U	
100-42-5	Styrene	0.50	14		U	
79-34-5	1,1,2,2-Tetrachloroethane	0.61	14		U	
127-18-4	Tetrachloroethene	1.4	14		U	

FORM I VOA

lw 2/26/09

FORM 1
VOLATILE ORGANICS ANALYSIS DATA SHEET

CLIENT SAMPLE NO. 3RE

MR08-SS104-08DR

Lab Name: EMPIRICAL LABS Contract: CH2MHILL

Lab Code: NA Case No.: NA SAS No.: NA SDG No.: LEJEUNE025

Matrix: (soil/water) SOIL Lab Sample ID: 0812108-03R

Sample wt/vol: 4.1 (g/mL) G Lab File ID: 1210803B

Level: (low/med) LOW Date Sampled: 12/08/08 10:00

% Moisture: not dec. 15 Date Analyzed: 12/28/08 02:50

GC Column: RTX-VRX ID: 0.25 (mm) Dilution Factor: 1.0

Soil Extract Volume:_____(uL) Soil Aliquot Volume: _____(uL)

CONCENTRATION UNITS: (ug/L or ug/Kg) UG/KG

CAS NO.	COMPOUND	MDL	RL	CONC	Q
108-88-3	Toluene	1.2	14	5.1	~~J~~ J
120-82-1	1,2,4-Trichlorobenzene	0.26	14		~~U~~ UJ
71-55-6	1,1,1-Trichloroethane	1.3	14		~~U~~
79-00-5	1,1,2-Trichloroethane	0.50	14		~~U~~
79-01-6	Trichloroethene	1.2	14		~~U~~
76-13-1	Trichlorotrifluoroethane	0.79	14		~~U~~
75-69-4	Trichlorofluoromethane	1.4	14		~~U~~
75-01-4	Vinyl chloride	1.6	14		~~U~~
1330-20-7	Xylene(total)	1.0	14		~~U~~

H

FORM I VOA

les 2/26/09

FORM 1
VOLATILE ORGANICS ANALYSIS DATA SHEET

CLIENT SAMPLE NO. 4

MR08-SS105-08D

Lab Name: EMPIRICAL LABS Contract: CH2MHILL

Lab Code: NA Case No.: NA SAS No.: NA SDG No.: LEJEUNE025

Matrix: (soil/water) SOIL Lab Sample ID: 0812108-04

Sample wt/vol: 4.9 (g/mL) G Lab File ID: 1210804A

Level: (low/med) LOW Date Sampled: 12/08/08 11:00

% Moisture: not dec. 6 Date Analyzed: 12/20/08 18:53

GC Column: RTX-VRX ID: 0.25 (mm) Dilution Factor: 1.0

Soil Extract Volume:_____(uL) Soil Aliquot Volume: _____(uL)

CONCENTRATION UNITS: (ug/L or ug/Kg) UG/KG

CAS NO.	COMPOUND	MDL	RL	CONC	Q
67-64-1	Acetone	2.2	11	11u ~~5.6~~	~~J~~ BL
71-43-2	Benzene	0.51	11	0.80	J
75-27-4	Bromodichloromethane	0.32	11		U
75-25-2	Bromoform	1.1	11		U
74-83-9	Bromomethane	0.78	11		U
78-93-3	2-Butanone	1.5	11		~~U~~ UJ CCH
75-15-0	Carbon disulfide	1.4	11		U
56-23-5	Carbon tetrachloride	0.95	11		U
108-90-7	Chlorobenzene	0.37	11		~~U~~ UJ CCH
75-00-3	Chloroethane	1.2	11		U
67-66-3	Chloroform	0.60	11		U
74-87-3	Chloromethane	0.56	11		U
110-82-7	Cyclohexane	0.58	11		U
124-48-1	Dibromochloromethane	0.37	11		~~U~~ UJ CCH
96-12-8	1,2-Dibromo-3-chloropropane	1.3	5.4		U
106-93-4	1,2-Dibromoethane	0.46	11		U
95-50-1	1,2-Dichlorobenzene	0.40	11		U
541-73-1	1,3-Dichlorobenzene	0.91	11		U
106-46-7	1,4-Dichlorobenzene	0.60	11		~~U~~ UJ CCH
75-71-8	Dichlorodifluoromethane	1.2	11		U
75-34-3	1,1-Dichloroethane	0.58	11		U
107-06-2	1,2-Dichloroethane	0.50	11		U
75-35-4	1,1-Dichloroethene	1.3	11		U
156-59-2	cis-1,2-Dichloroethene	1.3	11		U
156-60-5	trans-1,2-Dichloroethene	1.2	11		U
78-87-5	1,2-Dichloropropane	0.50	11		U
10061-01-5	cis-1,3-Dichloropropene	0.54	11		U UJ CCH
10061-02-6	trans-1,3-Dichloropropene	0.35	11		U
100-41-4	Ethylbenzene	0.81	11	1.3	~~U~~ J CCH
591-78-6	2-Hexanone	2.5	11		U
98-82-8	Isopropylbenzene	0.95	11		~~U~~ UJ CCH
79-20-9	Methyl acetate	1.7	11		U
75-09-2	Methylene chloride	0.67	11		U
108-87-2	Methyl cyclohexane	0.32	11	0.64	J
1634-04-4	Methyl tert-butyl ether	0.35	11		U
108-10-1	4-Methyl-2-pentanone	0.63	11		U UJ CCH
100-42-5	Styrene	0.38	11		U
79-34-5	1,1,2,2-Tetrachloroethane	0.46	11		U
127-18-4	Tetrachloroethene	1.0	11		U

FORM I VOA

DW
2/26/09

FORM 1
VOLATILE ORGANICS ANALYSIS DATA SHEET

CLIENT SAMPLE NO. 4

MR08-SS105-08D

Lab Name: EMPIRICAL LABS Contract: CH2MHILL

Lab Code: NA Case No.: NA SAS No.: NA SDG No.: LEJEUNE025

Matrix: (soil/water) SOIL Lab Sample ID: 0812108-04

Sample wt/vol: 4.9 (g/mL) G Lab File ID: 1210804A

Level: (low/med) LOW Date Sampled: 12/08/08 11:00

% Moisture: not dec. 6 Date Analyzed: 12/20/08 18:53

GC Column: RTX-VRX ID: 0.25 (mm) Dilution Factor: 1.0

Soil Extract Volume:_____(uL) Soil Aliquot Volume: _____(uL)

CONCENTRATION UNITS: (ug/L or ug/Kg) UG/KG

CAS NO.	COMPOUND	MDL	RL	CONC	Q
108-88-3	Toluene	0.93	11	11UJ ~~1.2~~	~~J~~ CCH
120-82-1	1,2,4-Trichlorobenzene	0.19	11		U
71-55-6	1,1,1-Trichloroethane	0.97	11		U
79-00-5	1,1,2-Trichloroethane	0.38	11		~~U~~ UJ CC
79-01-6	Trichloroethene	0.92	11		U
76-13-1	Trichlorotrifluoroethane	0.60	11		U
75-69-4	Trichlorofluoromethane	1.0	11		U
75-01-4	Vinyl chloride	1.2	11		U
1330-20-7	Xylene(total)	0.76	11		~~U~~ UJ CC

lew 2/26/09

FORM 1
VOLATILE ORGANICS ANALYSIS DATA SHEET

CLIENT SAMPLE NO. 5

MR08-IS1
04-1-2-08D

Lab Name: EMPIRICAL LABS Contract: CH2MHILL

Lab Code: NA Case No.: NA SAS No.: NA SDG No.: LEJEUNE025

Matrix: (soil/water) SOIL Lab Sample ID: 0812108-05

Sample wt/vol: 5.0 (g/mL) G Lab File ID: 1210805A

Level: (low/med) LOW Date Sampled: 12/08/08 12:20

% Moisture: not dec. 14 Date Analyzed: 12/20/08 19:33

GC Column: RTX-VRX ID: 0.25 (mm) Dilution Factor: 1.0

Soil Extract Volume:_____(uL) Soil Aliquot Volume: _____(uL)

CONCENTRATION UNITS: (ug/L or ug/Kg) UG/KG

CAS NO.	COMPOUND	MDL	RL	CONC	Q	
67-64-1	Acetone	2.3	12	23	U	B
71-43-2	Benzene	0.54	12		U	
75-27-4	Bromodichloromethane	0.35	12		U	
75-25-2	Bromoform	1.2	12		U	
74-83-9	Bromomethane	0.83	12		U	
78-93-3	2-Butanone	1.6	12		~~U~~ UJ CC	
75-15-0	Carbon disulfide	1.5	12		U	
56-23-5	Carbon tetrachloride	1.0	12		U	
108-90-7	Chlorobenzene	0.39	12		~~U~~ UJ CC	
75-00-3	Chloroethane	1.3	12		U	
67-66-3	Chloroform	0.63	12		U	
74-87-3	Chloromethane	0.60	12		U	
110-82-7	Cyclohexane	0.62	12		U	
124-48-1	Dibromochloromethane	0.39	12		~~U~~ UJ CC	
96-12-8	1,2-Dibromo-3-chloropropane	1.4	5.8		~~U~~ UJ IS	
106-93-4	1,2-Dibromoethane	0.50	12		~~U~~ UJ CC	
95-50-1	1,2-Dichlorobenzene	0.43	12		~~U~~ UJ IS	
541-73-1	1,3-Dichlorobenzene	0.97	12		U	
106-46-7	1,4-Dichlorobenzene	0.63	12		U	
75-71-8	Dichlorodifluoromethane	1.3	12		U	
75-34-3	1,1-Dichloroethane	0.62	12		U	
107-06-2	1,2-Dichloroethane	0.53	12		U	
75-35-4	1,1-Dichloroethene	1.4	12		U	
156-59-2	cis-1,2-Dichloroethene	1.4	12		U	
156-60-5	trans-1,2-Dichloroethene	1.3	12		U	
78-87-5	1,2-Dichloropropane	0.53	12		~~U~~ UJ CC	
10061-01-5	cis-1,3-Dichloropropene	0.58	12		U	
10061-02-6	trans-1,3-Dichloropropene	0.37	12		U	
100-41-4	Ethylbenzene	0.86	12		U	
591-78-6	2-Hexanone	2.6	12		U	
98-82-8	Isopropylbenzene	1.0	12		~~U~~ UJ CC	
79-20-9	Methyl acetate	1.8	12		~~U~~ UJ MS	
75-09-2	Methylene chloride	0.72	12		U	
108-87-2	Methyl cyclohexane	0.35	12		U	
1634-04-4	Methyl tert-butyl ether	0.37	12		U	
108-10-1	4-Methyl-2-pentanone	0.67	12		~~U~~ UJ CC	
100-42-5	Styrene	0.40	12		~~U~~ UJ MS	
79-34-5	1,1,2,2-Tetrachloroethane	0.50	12		~~U~~ UJ IS	
127-18-4	Tetrachloroethene	1.1	12		U	

LW 2/26/09

FORM 1
VOLATILE ORGANICS ANALYSIS DATA SHEET

CLIENT SAMPLE NO. 5

MR08-IS1
04-1-2-08D

Lab Name: EMPIRICAL LABS Contract: CH2MHILL

Lab Code: NA Case No.: NA SAS No.: NA SDG No.: LEJEUNE025

Matrix: (soil/water) SOIL Lab Sample ID: 0812108-05

Sample wt/vol: 5.0 (g/mL) G Lab File ID: 1210805A

Level: (low/med) LOW Date Sampled: 12/08/08 12:20

% Moisture: not dec. 14 Date Analyzed: 12/20/08 19:33

GC Column: RTX-VRX ID: 0.25 (mm) Dilution Factor: 1.0

Soil Extract Volume:_____(uL) Soil Aliquot Volume: _____(uL)

CONCENTRATION UNITS: (ug/L or ug/Kg) UG/KG

CAS NO.	COMPOUND	MDL	RL	CONC	Q
108-88-3	Toluene	0.99	12	124J ~~1.5~~	~~J~~ CCH B
120-82-1	1,2,4-Trichlorobenzene	0.21	12		~~U~~ UJ IS
71-55-6	1,1,1-Trichloroethane	1.0	12		U
79-00-5	1,1,2-Trichloroethane	0.40	12		~~U~~ UJ C
79-01-6	Trichloroethene	0.98	12		~~U~~
76-13-1	Trichlorotrifluoroethane	0.63	12		U
75-69-4	Trichlorofluoromethane	1.1	12		U
75-01-4	Vinyl chloride	1.3	12		~~U~~ UJ MS
1330-20-7	Xylene(total)	0.81	12		~~U~~ UJ CCH

gw 2/26/09

FORM 1
VOLATILE ORGANICS ANALYSIS DATA SHEET

CLIENT SAMPLE NO. 5RE

MR08-IS10
4-1-2-08DR

Lab Name: EMPIRICAL LABS Contract: CH2MHILL

Lab Code: NA Case No.: NA SAS No.: NA SDG No.: LEJEUNE025

Matrix: (soil/water) SOIL Lab Sample ID: 0812108-05R

Sample wt/vol: 5.1 (g/mL) G Lab File ID: 1210805B

Level: (low/med) LOW Date Sampled: 12/08/08 12:20

% Moisture: not dec. 14 Date Analyzed: 12/30/08 14:16 use origin

GC Column: RTX-VRX ID: 0.25 (mm) Dilution Factor: 1.0

Soil Extract Volume:_____(uL) Soil Aliquot Volume: _____(uL)

CONCENTRATION UNITS: (ug/L or ug/Kg) UG/KG

CAS NO.	COMPOUND	MDL	RL	CONC	Q
67-64-1	Acetone	2.3	11	26	UJ HTB
71-43-2	Benzene	0.53	11		U UJ H
75-27-4	Bromodichloromethane	0.34	11		U
75-25-2	Bromoform	1.1	11		U
74-83-9	Bromomethane	0.82	11		U
78-93-3	2-Butanone	1.6	11		U
75-15-0	Carbon disulfide	1.5	11		U
56-23-5	Carbon tetrachloride	1.0	11		U
108-90-7	Chlorobenzene	0.39	11		U
75-00-3	Chloroethane	1.2	11		U
67-66-3	Chloroform	0.63	11		U
74-87-3	Chloromethane	0.59	11		U
110-82-7	Cyclohexane	0.61	11		U
124-48-1	Dibromochloromethane	0.39	11		U
96-12-8	1,2-Dibromo-3-chloropropane	1.4	5.7		U
106-93-4	1,2-Dibromoethane	0.49	11		U
95-50-1	1,2-Dichlorobenzene	0.42	11		U
541-73-1	1,3-Dichlorobenzene	0.96	11		U
106-46-7	1,4-Dichlorobenzene	0.63	11		U
75-71-8	Dichlorodifluoromethane	1.2	11		U
75-34-3	1,1-Dichloroethane	0.61	11		U
107-06-2	1,2-Dichloroethane	0.52	11		U
75-35-4	1,1-Dichloroethene	1.4	11		U
156-59-2	cis-1,2-Dichloroethene	1.4	11		U
156-60-5	trans-1,2-Dichloroethene	1.2	11		U
78-87-5	1,2-Dichloropropane	0.52	11		U
10061-01-5	cis-1,3-Dichloropropene	0.57	11		U
10061-02-6	trans-1,3-Dichloropropene	0.36	11		U
100-41-4	Ethylbenzene	0.85	11		U
591-78-6	2-Hexanone	2.6	11		U
98-82-8	Isopropylbenzene	1.0	11		U
79-20-9	Methyl acetate	1.8	11		U
75-09-2	Methylene chloride	0.70	11	11 UJ	~~4.6 JB~~ HTB
108-87-2	Methyl cyclohexane	0.34	11		U UJ H
1634-04-4	Methyl tert-butyl ether	0.36	11		U
108-10-1	4-Methyl-2-pentanone	0.66	11		U
100-42-5	Styrene	0.40	11		U
79-34-5	1,1,2,2-Tetrachloroethane	0.49	11		U
127-18-4	Tetrachloroethene	1.1	11		U

FORM I VOA

DLW 2/26/09

FORM 1
VOLATILE ORGANICS ANALYSIS DATA SHEET

CLIENT SAMPLE NO. SRE

MR08-IS10
4-1-2-08DR

Lab Name: EMPIRICAL LABS Contract: CH2MHILL

Lab Code: NA Case No.: NA SAS No.: NA SDG No.: LEJEUNE025

Matrix: (soil/water) SOIL Lab Sample ID: 0812108-05R

Sample wt/vol: 5.1 (g/mL) G Lab File ID: 1210805B

Level: (low/med) LOW Date Sampled: 12/08/08 12:20

% Moisture: not dec. 14 Date Analyzed: 12/30/08 14:16 Use original

GC Column: RTX-VRX ID: 0.25 (mm) Dilution Factor: 1.0

Soil Extract Volume:_____(uL) Soil Aliquot Volume: _____(uL)

CONCENTRATION UNITS: (ug/L or ug/Kg) UG/KG

CAS NO.	COMPOUND	MDL	RL	CONC	Q
108-88-3	Toluene	0.98	11		U UJ
120-82-1	1,2,4-Trichlorobenzene	0.20	11		U
71-55-6	1,1,1-Trichloroethane	1.0	11		U
79-00-5	1,1,2-Trichloroethane	0.40	11		U
79-01-6	Trichloroethene	0.97	11		U
76-13-1	Trichlorotrifluoroethane	0.63	11		U
75-69-4	Trichlorofluoromethane	1.1	11	1.3	~~U~~ J
75-01-4	Vinyl chloride	1.2	11		U UJ
1330-20-7	Xylene(total)	0.80	11		U

H

R RE

FORM I VOA

CW 2/26/09

FORM 1
VOLATILE ORGANICS ANALYSIS DATA SHEET

CLIENT SAMPLE NO.

MR08-IS10
5-2-3-08D

6

Lab Name: EMPIRICAL LABS Contract: CH2MHILL

Lab Code: NA Case No.: NA SAS No.: NA SDG No.: LEJEUNE025

Matrix: (soil/water) SOIL Lab Sample ID: 0812108-06

Sample wt/vol: 3.6 (g/mL) G Lab File ID: 1210806A

Level: (low/med) LOW Date Sampled: 12/08/08 12:55

% Moisture: not dec. 9 Date Analyzed: 12/20/08 20:12

GC Column: RTX-VRX ID: 0.25 (mm) Dilution Factor: 1.0

Soil Extract Volume:_____(uL) Soil Aliquot Volume: _____(uL)

CONCENTRATION UNITS: (ug/L or ug/Kg) UG/KG

CAS NO.	COMPOUND	MDL	RL	CONC	Q	
67-64-1	Acetone	3.0	15	15u	~~11 J~~	B
71-43-2	Benzene	0.71	15		U	
75-27-4	Bromodichloromethane	0.45	15		U	
75-25-2	Bromoform	1.5	15		U	
74-83-9	Bromomethane	1.1	15		U	
78-93-3	2-Butanone	2.1	15		~~U~~ UJ	CC
75-15-0	Carbon disulfide	2.0	15		U	
56-23-5	Carbon tetrachloride	1.3	15		U	
108-90-7	Chlorobenzene	0.52	15		~~U~~ UJ	CCH
75-00-3	Chloroethane	1.7	15		U	
67-66-3	Chloroform	0.83	15		U	
74-87-3	Chloromethane	0.79	15		U	
110-82-7	Cyclohexane	0.82	15		U	
124-48-1	Dibromochloromethane	0.52	15		~~U~~ UJ	CC
96-12-8	1,2-Dibromo-3-chloropropane	1.8	7.6		~~U~~	
106-93-4	1,2-Dibromoethane	0.65	15		~~U~~	
95-50-1	1,2-Dichlorobenzene	0.56	15		~~U~~	
541-73-1	1,3-Dichlorobenzene	1.3	15		U	
106-46-7	1,4-Dichlorobenzene	0.83	15		~~U~~ UJ	CC
75-71-8	Dichlorodifluoromethane	1.7	15		U	
75-34-3	1,1-Dichloroethane	0.82	15		U	
107-06-2	1,2-Dichloroethane	0.70	15		U	
75-35-4	1,1-Dichloroethene	1.8	15		U	
156-59-2	cis-1,2-Dichloroethene	1.8	15		U	
156-60-5	trans-1,2-Dichloroethene	1.7	15		U	
78-87-5	1,2-Dichloropropane	0.70	15		~~U~~ UJ	CC
10061-01-5	cis-1,3-Dichloropropene	0.76	15		~~U~~	
10061-02-6	trans-1,3-Dichloropropene	0.48	15		~~U~~	
100-41-4	Ethylbenzene	1.1	15		~~U~~	
591-78-6	2-Hexanone	3.5	15		U	
98-82-8	Isopropylbenzene	1.3	15		~~U~~ UJ	CC
79-20-9	Methyl acetate	2.4	15		U	
75-09-2	Methylene chloride	0.94	15		U	
108-87-2	Methyl cyclohexane	0.45	15		U	
1634-04-4	Methyl tert-butyl ether	0.48	15		U	
108-10-1	4-Methyl-2-pentanone	0.88	15		~~U~~ UJ	CC
100-42-5	Styrene	0.53	15		~~U~~	
79-34-5	1,1,2,2-Tetrachloroethane	0.65	15		~~U~~	
127-18-4	Tetrachloroethene	1.5	15		U	

LW
2/26/09

FORM 1
VOLATILE ORGANICS ANALYSIS DATA SHEET

CLIENT SAMPLE NO. 6

MR08-IS10
5-2-3-08D

Lab Name: EMPIRICAL LABS Contract: CH2MHILL

Lab Code: NA Case No.: NA SAS No.: NA SDG No.: LEJEUNE025

Matrix: (soil/water) SOIL Lab Sample ID: 0812108-06

Sample wt/vol: 3.6 (g/mL) G Lab File ID: 1210806A

Level: (low/med) LOW Date Sampled: 12/08/08 12:55

% Moisture: not dec. 9 Date Analyzed: 12/20/08 20:12

GC Column: RTX-VRX ID: 0.25 (mm) Dilution Factor: 1.0

Soil Extract Volume:_____(uL) Soil Aliquot Volume: _____(uL)

CONCENTRATION UNITS: (ug/L or ug/Kg) UG/KG

CAS NO.	COMPOUND	MDL	RL	CONC	Q
108-88-3	Toluene	1.3	15		~~U~~ UJ CA
120-82-1	1,2,4-Trichlorobenzene	0.27	15		U
71-55-6	1,1,1-Trichloroethane	1.4	15		U
79-00-5	1,1,2-Trichloroethane	0.53	15		~~U~~ UJ CA
79-01-6	Trichloroethene	1.3	15		U
76-13-1	Trichlorotrifluoroethane	0.83	15		U
75-69-4	Trichlorofluoromethane	1.4	15	6.8	J
75-01-4	Vinyl chloride	1.7	15		U
1330-20-7	Xylene(total)	1.1	15		~~U~~ UJ CA

FORM I VOA

RW 2/26/09

FORM 1
VOLATILE ORGANICS ANALYSIS DATA SHEET

CLIENT SAMPLE NO. 7

MR08-IS10
6-2-3-08D

Lab Name: EMPIRICAL LABS Contract: CH2MHILL

Lab Code: NA Case No.: NA SAS No.: NA SDG No.: LEJEUNE025

Matrix: (soil/water) SOIL Lab Sample ID: 0812108-07

Sample wt/vol: 5.5 (g/mL) G Lab File ID: 1210807A

Level: (low/med) LOW Date Sampled: 12/08/08 13:30

% Moisture: not dec. 9 Date Analyzed: 12/20/08 20:51

GC Column: RTX-VRX ID: 0.25 (mm) Dilution Factor: 1.0

Soil Extract Volume:_____(uL) Soil Aliquot Volume: _____(uL)

CONCENTRATION UNITS: (ug/L or ug/Kg) UG/KG

CAS NO.	COMPOUND	MDL	RL	CONC	Q
67-64-1	Acetone	2.0	9.9	63	
71-43-2	Benzene	0.46	9.9		U
75-27-4	Bromodichloromethane	0.30	9.9		U
75-25-2	Bromoform	0.99	9.9		U
74-83-9	Bromomethane	0.71	9.9		U
78-93-3	2-Butanone	1.4	9.9	2.6	~~J~~ J CH
75-15-0	Carbon disulfide	1.3	9.9		U
56-23-5	Carbon tetrachloride	0.87	9.9		U
108-90-7	Chlorobenzene	0.34	9.9		~~U~~ UJ CCH
75-00-3	Chloroethane	1.1	9.9		U
67-66-3	Chloroform	0.54	9.9		U
74-87-3	Chloromethane	0.51	9.9		U
110-82-7	Cyclohexane	0.53	9.9		U
124-48-1	Dibromochloromethane	0.34	9.9		~~U~~ UJ CCH
96-12-8	1,2-Dibromo-3-chloropropane	1.2	4.9		U
106-93-4	1,2-Dibromoethane	0.42	9.9		U
95-50-1	1,2-Dichlorobenzene	0.36	9.9		U
541-73-1	1,3-Dichlorobenzene	0.83	9.9		U
106-46-7	1,4-Dichlorobenzene	0.54	9.9		~~U~~ UJ CCH
75-71-8	Dichlorodifluoromethane	1.1	9.9		U
75-34-3	1,1-Dichloroethane	0.53	9.9		U
107-06-2	1,2-Dichloroethane	0.45	9.9		U
75-35-4	1,1-Dichloroethene	1.2	9.9		U
156-59-2	cis-1,2-Dichloroethene	1.2	9.9		U
156-60-5	trans-1,2-Dichloroethene	1.1	9.9		U
78-87-5	1,2-Dichloropropane	0.45	9.9		U UJ CCI
10061-01-5	cis-1,3-Dichloropropene	0.49	9.9		U
10061-02-6	trans-1,3-Dichloropropene	0.32	9.9		U
100-41-4	Ethylbenzene	0.74	9.9	0.82	~~J~~ J
591-78-6	2-Hexanone	2.3	9.9		U
98-82-8	Isopropylbenzene	0.87	9.9		~~U~~ UJ CCI
79-20-9	Methyl acetate	1.6	9.9		U
75-09-2	Methylene chloride	0.61	9.9		U
108-87-2	Methyl cyclohexane	0.30	9.9		U
1634-04-4	Methyl tert-butyl ether	0.32	9.9		U
108-10-1	4-Methyl-2-pentanone	0.57	9.9		U UJ CCI
100-42-5	Styrene	0.34	9.9		U
79-34-5	1,1,2,2-Tetrachloroethane	0.42	9.9		U
127-18-4	Tetrachloroethene	0.96	9.9		U

FORM I VOA

lw 2/26/09

FORM 1
VOLATILE ORGANICS ANALYSIS DATA SHEET

CLIENT SAMPLE NO.

MR08-IS10
6-2-3-08D

7

Lab Name: EMPIRICAL LABS Contract: CH2MHILL

Lab Code: NA Case No.: NA SAS No.: NA SDG No.: LEJEUNE025

Matrix: (soil/water) SOIL Lab Sample ID: 0812108-07

Sample wt/vol: 5.5 (g/mL) G Lab File ID: 1210807A

Level: (low/med) LOW Date Sampled: 12/08/08 13:30

% Moisture: not dec. 9 Date Analyzed: 12/20/08 20:51

GC Column: RTX-VRX ID: 0.25 (mm) Dilution Factor: 1.0

Soil Extract Volume:_____(uL) Soil Aliquot Volume: _____(uL)

CONCENTRATION UNITS: (ug/L or ug/Kg) UG/KG

CAS NO.	COMPOUND	MDL	RL	CONC	Q	
108-88-3	Toluene	0.85	9.9		~~U~~ UJ	CC
120-82-1	1,2,4-Trichlorobenzene	0.18	9.9		U	
71-55-6	1,1,1-Trichloroethane	0.89	9.9		U	
79-00-5	1,1,2-Trichloroethane	0.34	9.9		~~U~~ UJ	CC
79-01-6	Trichloroethene	0.84	9.9		U	
76-13-1	Trichlorotrifluoroethane	0.54	9.9		U	
75-69-4	Trichlorofluoromethane	0.94	9.9		U	
75-01-4	Vinyl chloride	1.1	9.9		U	
1330-20-7	Xylene(total)	0.69	9.9		~~U~~ UJ	CI

FORM I VOA

lew
2/26/09

FORM 1
VOLATILE ORGANICS ANALYSIS DATA SHEET

CLIENT SAMPLE NO.

8

MR08-SS087-08D

Lab Name: EMPIRICAL LABS Contract: CH2MHILL

Lab Code: NA Case No.: NA SAS No.: NA SDG No.: LEJEUNE025

Matrix: (soil/water) SOIL Lab Sample ID: 0812108-08

Sample wt/vol: 5.0 (g/mL) G Lab File ID: 1210808A

Level: (low/med) LOW Date Sampled: 12/08/08 14:20

% Moisture: not dec. 8 Date Analyzed: 12/21/08 05:48

GC Column: RTX-VRX ID: 0.25 (mm) Dilution Factor: 1.0

Soil Extract Volume:_____(uL) Soil Aliquot Volume: _____(uL)

CONCENTRATION UNITS: (ug/L or ug/Kg) UG/KG

CAS NO.	COMPOUND	MDL	RL	CONC	Q
67-64-1	Acetone	2.2	11	jlu ~~4.0~~	~~J~~ B
71-43-2	Benzene	0.52	11	0.54	J
75-27-4	Bromodichloromethane	0.33	11		U
75-25-2	Bromoform	1.1	11		U
74-83-9	Bromomethane	0.79	11		~~U~~ UJ CCH
78-93-3	2-Butanone	1.5	11		U
75-15-0	Carbon disulfide	1.4	11		U
56-23-5	Carbon tetrachloride	0.96	11		U
108-90-7	Chlorobenzene	0.37	11		U
75-00-3	Chloroethane	1.2	11		~~U~~ UJ CCH
67-66-3	Chloroform	0.60	11		U
74-87-3	Chloromethane	0.57	11		~~U~~ UJ CCH
110-82-7	Cyclohexane	0.59	11		U
124-48-1	Dibromochloromethane	0.37	11		U
96-12-8	1,2-Dibromo-3-chloropropane	1.3	5.5		U
106-93-4	1,2-Dibromoethane	0.47	11		U
95-50-1	1,2-Dichlorobenzene	0.40	11		U
541-73-1	1,3-Dichlorobenzene	0.92	11		U
106-46-7	1,4-Dichlorobenzene	0.60	11		U
75-71-8	Dichlorodifluoromethane	1.2	11		~~U~~ UJ CCH
75-34-3	1,1-Dichloroethane	0.59	11		U
107-06-2	1,2-Dichloroethane	0.50	11		U
75-35-4	1,1-Dichloroethene	1.3	11		U
156-59-2	cis-1,2-Dichloroethene	1.3	11		U
156-60-5	trans-1,2-Dichloroethene	1.2	11		U
78-87-5	1,2-Dichloropropane	0.50	11		U
10061-01-5	cis-1,3-Dichloropropene	0.55	11		U
10061-02-6	trans-1,3-Dichloropropene	0.35	11		U
100-41-4	Ethylbenzene	0.82	11		U
591-78-6	2-Hexanone	2.5	11		U
98-82-8	Isopropylbenzene	0.96	11		U
79-20-9	Methyl acetate	1.8	11		U
75-09-2	Methylene chloride	0.68	11		U
108-87-2	Methyl cyclohexane	0.33	11	0.36	J
1634-04-4	Methyl tert-butyl ether	0.35	11		U
108-10-1	4-Methyl-2-pentanone	0.64	11		U
100-42-5	Styrene	0.38	11		U
79-34-5	1,1,2,2-Tetrachloroethane	0.47	11		U
127-18-4	Tetrachloroethene	1.1	11		U

FORM I VOA

kw 2/26/09

FORM 1
VOLATILE ORGANICS ANALYSIS DATA SHEET

CLIENT SAMPLE NO.

8

MR08-SS087-08D

Lab Name: EMPIRICAL LABS Contract: CH2MHILL

Lab Code: NA Case No.: NA SAS No.: NA SDG No.: LEJEUNE025

Matrix: (soil/water) SOIL Lab Sample ID: 0812108-08

Sample wt/vol: 5.0 (g/mL) G Lab File ID: 1210808A

Level: (low/med) LOW Date Sampled: 12/08/08 14:20

% Moisture: not dec. 8 Date Analyzed: 12/21/08 05:48

GC Column: RTX-VRX ID: 0.25 (mm) Dilution Factor: 1.0

Soil Extract Volume:_____(uL) Soil Aliquot Volume: _____(uL)

CONCENTRATION UNITS: (ug/L or ug/Kg) UG/KG

CAS NO.	COMPOUND	MDL	RL	CONC	Q
108-88-3	Toluene	0.94	11		U
120-82-1	1,2,4-Trichlorobenzene	0.20	11		U
71-55-6	1,1,1-Trichloroethane	0.99	11		U
79-00-5	1,1,2-Trichloroethane	0.38	11		U
79-01-6	Trichloroethene	0.93	11		U
76-13-1	Trichlorotrifluoroethane	0.60	11		U
75-69-4	Trichlorofluoromethane	1.0	11		U
75-01-4	Vinyl chloride	1.2	11		U
1330-20-7	Xylene(total)	0.77	11		U

lw
2/26/09

FORM 1
VOLATILE ORGANICS ANALYSIS DATA SHEET

CLIENT SAMPLE NO. 9

MR08-IS08
7-2-3-08D

Lab Name: EMPIRICAL LABS Contract: CH2MHILL

Lab Code: NA Case No.: NA SAS No.: NA SDG No.: LEJEUNE025

Matrix: (soil/water) SOIL Lab Sample ID: 0812108-09

Sample wt/vol: 5.6 (g/mL) G Lab File ID: 1210809A

Level: (low/med) LOW Date Sampled: 12/08/08 14:45

% Moisture: not dec. 14 Date Analyzed: 12/21/08 06:28

GC Column: RTX-VRX ID: 0.25 (mm) Dilution Factor: 1.0

Soil Extract Volume:_____(uL) Soil Aliquot Volume: _____(uL)

CONCENTRATION UNITS: (ug/L or ug/Kg) UG/KG

CAS NO.	COMPOUND	MDL	RL	CONC	Q
67-64-1	Acetone	2.1	10	85	J
71-43-2	Benzene	0.49	10	1.2	J
75-27-4	Bromodichloromethane	0.31	10		UJ
75-25-2	Bromoform	1.0	10		
74-83-9	Bromomethane	0.75	10		
78-93-3	2-Butanone	1.5	10	6.2	J
75-15-0	Carbon disulfide	1.4	10	1.6	J
56-23-5	Carbon tetrachloride	0.92	10		UJ
108-90-7	Chlorobenzene	0.36	10		
75-00-3	Chloroethane	1.2	10		
67-66-3	Chloroform	0.58	10		
74-87-3	Chloromethane	0.54	10		
110-82-7	Cyclohexane	0.56	10	0.64	J
124-48-1	Dibromochloromethane	0.36	10		UJ
96-12-8	1,2-Dibromo-3-chloropropane	1.2	5.2		
106-93-4	1,2-Dibromoethane	0.45	10		
95-50-1	1,2-Dichlorobenzene	0.39	10		
541-73-1	1,3-Dichlorobenzene	0.88	10		
106-46-7	1,4-Dichlorobenzene	0.58	10		
75-71-8	Dichlorodifluoromethane	1.2	10		
75-34-3	1,1-Dichloroethane	0.56	10		
107-06-2	1,2-Dichloroethane	0.48	10		
75-35-4	1,1-Dichloroethene	1.2	10		
156-59-2	cis-1,2-Dichloroethene	1.2	10	2.9	J
156-60-5	trans-1,2-Dichloroethene	1.2	10		UJ
78-87-5	1,2-Dichloropropane	0.48	10		
10061-01-5	cis-1,3-Dichloropropene	0.52	10		
10061-02-6	trans-1,3-Dichloropropene	0.34	10		
100-41-4	Ethylbenzene	0.78	10	1.6	J
591-78-6	2-Hexanone	2.4	10		UJ
98-82-8	Isopropylbenzene	0.92	10		
79-20-9	Methyl acetate	1.7	10		
75-09-2	Methylene chloride	0.65	10		
108-87-2	Methyl cyclohexane	0.31	10		
1634-04-4	Methyl tert-butyl ether	0.34	10		
108-10-1	4-Methyl-2-pentanone	0.61	10		
100-42-5	Styrene	0.37	10		
79-34-5	1,1,2,2-Tetrachloroethane	0.45	10		
127-18-4	Tetrachloroethene	1.0	10		

FORM I VOA

DW 2/26/09

FORM 1
VOLATILE ORGANICS ANALYSIS DATA SHEET

CLIENT SAMPLE NO.

MR08-IS08
7-2-3-08D

9

Lab Name: EMPIRICAL LABS Contract: CH2MHILL

Lab Code: NA Case No.: NA SAS No.: NA SDG No.: LEJEUNE025

Matrix: (soil/water) SOIL Lab Sample ID: 0812108-09

Sample wt/vol: 5.6 (g/mL) G Lab File ID: 1210809A

Level: (low/med) LOW Date Sampled: 12/08/08 14:45

% Moisture: not dec. 14 Date Analyzed: 12/21/08 06:28

GC Column: RTX-VRX ID: 0.25 (mm) Dilution Factor: 1.0

Soil Extract Volume:_____(uL) Soil Aliquot Volume: _____(uL)

CONCENTRATION UNITS: (ug/L or ug/Kg) UG/KG

CAS NO.	COMPOUND	MDL	RL	CONC	Q
108-88-3	Toluene	0.90	10	3.2	~~U~~ J SSI
120-82-1	1,2,4-Trichlorobenzene	0.19	10		U UJ
71-55-6	1,1,1-Trichloroethane	0.94	10		U
79-00-5	1,1,2-Trichloroethane	0.37	10		U
79-01-6	Trichloroethene	0.89	10		U
76-13-1	Trichlorotrifluoroethane	0.58	10		U
75-69-4	Trichlorofluoromethane	0.99	10		U
75-01-4	Vinyl chloride	1.2	10		U
1330-20-7	Xylene(total)	0.73	10	4.4	J J

JCW 2/26/09

FORM 1
VOLATILE ORGANICS ANALYSIS DATA SHEET

CLIENT SAMPLE NO.

MR08-IS08
7-2-3-08DR

9RE

Lab Name: EMPIRICAL LABS Contract: CH2MHILL

Lab Code: NA Case No.: NA SAS No.: NA SDG No.: LEJEUNE025

Matrix: (soil/water) SOIL Lab Sample ID: 0812108-09R

Sample wt/vol: 3.8 (g/mL) G Lab File ID: 1210809B

Level: (low/med) LOW Date Sampled: 12/08/08 14:45

% Moisture: not dec. 14 Date Analyzed: 12/30/08 14:54 use original

GC Column: RTX-VRX ID: 0.25 (mm) Dilution Factor: 1.0

Soil Extract Volume:_____(uL) Soil Aliquot Volume:_____(uL)

CONCENTRATION UNITS: (ug/L or ug/Kg) UG/KG

CAS NO.	COMPOUND	MDL	RL	CONC	Q	
67-64-1	Acetone	3.0	15	120	J	H
71-43-2	Benzene	0.72	15	1.2	J J	
75-27-4	Bromodichloromethane	0.46	15		U UJ	
75-25-2	Bromoform	1.5	15		U	
74-83-9	Bromomethane	1.1	15		U	
78-93-3	2-Butanone	2.1	15	8.4	J J	
75-15-0	Carbon disulfide	2.0	15	2.2	J J	
56-23-5	Carbon tetrachloride	1.3	15		U UJ	
108-90-7	Chlorobenzene	0.52	15		U	
75-00-3	Chloroethane	1.7	15		U	
67-66-3	Chloroform	0.84	15		U	
74-87-3	Chloromethane	0.79	15		U	
110-82-7	Cyclohexane	0.82	15		U	
124-48-1	Dibromochloromethane	0.52	15		U	
96-12-8	1,2-Dibromo-3-chloropropane	1.8	7.6		U UJ	IS
106-93-4	1,2-Dibromoethane	0.66	15		U UJ	H
95-50-1	1,2-Dichlorobenzene	0.56	15		U UJ	IS
541-73-1	1,3-Dichlorobenzene	1.3	15		U	
106-46-7	1,4-Dichlorobenzene	0.84	15		U	
75-71-8	Dichlorodifluoromethane	1.7	15		U UJ	H
75-34-3	1,1-Dichloroethane	0.82	15		U	
107-06-2	1,2-Dichloroethane	0.70	15		U	
75-35-4	1,1-Dichloroethene	1.8	15		U	
156-59-2	cis-1,2-Dichloroethene	1.8	15		U	
156-60-5	trans-1,2-Dichloroethene	1.7	15		U	
78-87-5	1,2-Dichloropropane	0.70	15		U	
10061-01-5	cis-1,3-Dichloropropene	0.76	15		U	
10061-02-6	trans-1,3-Dichloropropene	0.49	15		U	
100-41-4	Ethylbenzene	1.1	15	1.6	J J	
591-78-6	2-Hexanone	3.5	15		U UJ	
98-82-8	Isopropylbenzene	1.3	15		U	
79-20-9	Methyl acetate	2.4	15		U	
75-09-2	Methylene chloride	0.95	15	15 ~~2.3~~	~~JB~~	HT B
108-87-2	Methyl cyclohexane	0.46	15	0.85	J	H
1634-04-4	Methyl tert-butyl ether	0.49	15		U UJ	
108-10-1	4-Methyl-2-pentanone	0.89	15		U	
100-42-5	Styrene	0.53	15		U	
79-34-5	1,1,2,2-Tetrachloroethane	0.66	15		U UJ	IS
127-18-4	Tetrachloroethene	1.5	15		U	

FORM I VOA

2/26/09

FORM 1
VOLATILE ORGANICS ANALYSIS DATA SHEET

CLIENT SAMPLE NO.

MR08-IS08
7-2-3-08DR

9RE

Lab Name: EMPIRICAL LABS Contract: CH2MHILL

Lab Code: NA Case No.: NA SAS No.: NA SDG No.: LEJEUNE025

Matrix: (soil/water) SOIL Lab Sample ID: 0812108-09R

Sample wt/vol: 3.8 (g/mL) G Lab File ID: 1210809B

Level: (low/med) LOW Date Sampled: 12/08/08 14:45

% Moisture: not dec. 14 Date Analyzed: 12/30/08 14:54

use orig

GC Column: RTX-VRX ID: 0.25 (mm) Dilution Factor: 1.0

Soil Extract Volume:_____(uL) Soil Aliquot Volume: _____(uL)

CONCENTRATION UNITS: (ug/L or ug/Kg) UG/KG

CAS NO.	COMPOUND	MDL	RL	CONC	Q
108-88-3	Toluene	1.3	15	2.1	~~U~~ J
120-82-1	1,2,4-Trichlorobenzene	0.27	15		~~U~~ UJ
71-55-6	1,1,1-Trichloroethane	1.4	15		~~U~~
79-00-5	1,1,2-Trichloroethane	0.53	15		~~U~~
79-01-6	Trichloroethene	1.3	15		~~U~~
76-13-1	Trichlorotrifluoroethane	0.84	15		~~U~~
75-69-4	Trichlorofluoromethane	1.4	15		~~U~~
75-01-4	Vinyl chloride	1.7	15		~~U~~
1330-20-7	Xylene(total)	1.1	15	1.2	~~J~~ J

RE

H
JS
H

FORM I VOA

RW
2/26/09

FORM 1
VOLATILE ORGANICS ANALYSIS DATA SHEET

CLIENT SAMPLE NO.

MR08-SS086-08D

10

Lab Name: EMPIRICAL LABS Contract: CH2MHILL

Lab Code: NA Case No.: NA SAS No.: NA SDG No.: LEJEUNE025

Matrix: (soil/water) SOIL Lab Sample ID: 0812108-10

Sample wt/vol: 5.3 (g/mL) G Lab File ID: 1210810A

Level: (low/med) LOW Date Sampled: 12/08/08 15:15

% Moisture: not dec. 9 Date Analyzed: 12/20/08 21:30

GC Column: RTX-VRX ID: 0.25 (mm) Dilution Factor: 1.0

Soil Extract Volume:_____(uL) Soil Aliquot Volume: _____(uL)

CONCENTRATION UNITS: (ug/L or ug/Kg) UG/KG

CAS NO.	COMPOUND	MDL	RL	CONC	Q
67-64-1	Acetone	2.1	10	10u ~~8.3~~	~~J~~ B
71-43-2	Benzene	0.49	10	0.80	~~J~~ J MS
75-27-4	Bromodichloromethane	0.31	10		~~U~~ UJ MS
75-25-2	Bromoform	1.0	10		U
74-83-9	Bromomethane	0.75	10		~~U~~ UJ MS
78-93-3	2-Butanone	1.5	10		~~U~~ UJ CC
75-15-0	Carbon disulfide	1.4	10		U
56-23-5	Carbon tetrachloride	0.92	10		~~U~~ UJ MS
108-90-7	Chlorobenzene	0.35	10		~~U~~ UJ MS
75-00-3	Chloroethane	1.1	10		U
67-66-3	Chloroform	0.57	10		~~U~~ UJ MS
74-87-3	Chloromethane	0.54	10		U
110-82-7	Cyclohexane	0.56	10	0.72	J
124-48-1	Dibromochloromethane	0.35	10		~~U~~ UJ CC
96-12-8	1,2-Dibromo-3-chloropropane	1.2	5.2		U
106-93-4	1,2-Dibromoethane	0.45	10		~~U~~ UJ MS
95-50-1	1,2-Dichlorobenzene	0.39	10		U
541-73-1	1,3-Dichlorobenzene	0.88	10		U
106-46-7	1,4-Dichlorobenzene	0.57	10		U
75-71-8	Dichlorodifluoromethane	1.1	10		U
75-34-3	1,1-Dichloroethane	0.56	10		U
107-06-2	1,2-Dichloroethane	0.48	10		~~U~~ UJ MS
75-35-4	1,1-Dichloroethene	1.2	10		U
156-59-2	cis-1,2-Dichloroethene	1.2	10		~~U~~ UJ MS
156-60-5	trans-1,2-Dichloroethene	1.1	10		U
78-87-5	1,2-Dichloropropane	0.48	10		~~U~~ UJ CC
10061-01-5	cis-1,3-Dichloropropene	0.52	10		~~U~~ UJ MS
10061-02-6	trans-1,3-Dichloropropene	0.33	10		U
100-41-4	Ethylbenzene	0.78	10	1.6	~~J~~ J
591-78-6	2-Hexanone	2.4	10		U
98-82-8	Isopropylbenzene	0.92	10		~~U~~ UJ MS
79-20-9	Methyl acetate	1.7	10		U
75-09-2	Methylene chloride	0.65	10		U
108-87-2	Methyl cyclohexane	0.31	10	0.74	J
1634-04-4	Methyl tert-butyl ether	0.33	10		U
108-10-1	4-Methyl-2-pentanone	0.60	10		~~U~~ UJ CC
100-42-5	Styrene	0.36	10		~~U~~ UJ MS
79-34-5	1,1,2,2-Tetrachloroethane	0.45	10		~~U~~ UJ CC
127-18-4	Tetrachloroethene	1.0	10		U

FORM I VOA

LWJ 2/28/09

FORM 1
VOLATILE ORGANICS ANALYSIS DATA SHEET

CLIENT SAMPLE NO.

MR08-SS086-08D

10

Lab Name: EMPIRICAL LABS Contract: CH2MHILL

Lab Code: NA Case No.: NA SAS No.: NA SDG No.: LEJEUNE025

Matrix: (soil/water) SOIL Lab Sample ID: 0812108-10

Sample wt/vol: 5.3 (g/mL) G Lab File ID: 1210810A

Level: (low/med) LOW Date Sampled: 12/08/08 15:15

% Moisture: not dec. 9 Date Analyzed: 12/20/08 21:30

GC Column: RTX-VRX ID: 0.25 (mm) Dilution Factor: 1.0

Soil Extract Volume:_____(uL) Soil Aliquot Volume: _____(uL)

CONCENTRATION UNITS: (ug/L or ug/Kg) UG/KG

CAS NO.	COMPOUND	MDL	RL	CONC	Q
108-88-3	Toluene	0.90	10	10 UJ ~~1.2 J~~	CCH
120-82-1	1,2,4-Trichlorobenzene	0.19	10		U UJ MS
71-55-6	1,1,1-Trichloroethane	0.94	10		U ↓ ↓
79-00-5	1,1,2-Trichloroethane	0.36	10		~~U~~ UJ CC
79-01-6	Trichloroethene	0.89	10		~~U~~ UJ MS
76-13-1	Trichlorotrifluoroethane	0.57	10		U
75-69-4	Trichlorofluoromethane	0.99	10		U
75-01-4	Vinyl chloride	1.1	10		U UJ MS
1330-20-7	Xylene(total)	0.73	10		U ↓ ↓

FORM I VOA

gw
2/26/09

FORM 1
VOLATILE ORGANICS ANALYSIS DATA SHEET

CLIENT SAMPLE NO. 11

MR08-IS0
86-2-3-08D

Lab Name: EMPIRICAL LABS Contract: CH2MHILL

Lab Code: NA Case No.: NA SAS No.: NA SDG No.: LEJEUNE025

Matrix: (soil/water) SOIL Lab Sample ID: 0812108-11

Sample wt/vol: 4.8 (g/mL) G Lab File ID: 1210811A

Level: (low/med) LOW Date Sampled: 12/08/08 15:30

% Moisture: not dec. 13 Date Analyzed: 12/20/08 22:09

GC Column: RTX-VRX ID: 0.25 (mm) Dilution Factor: 1.0

Soil Extract Volume:_____(uL) Soil Aliquot Volume: _____(uL)

CONCENTRATION UNITS: (ug/L or ug/Kg) UG/KG

CAS NO.	COMPOUND	MDL	RL	CONC	Q
67-64-1	Acetone	2.4	12	30	U B
71-43-2	Benzene	0.57	12	0.74	~~U~~ J MS
75-27-4	Bromodichloromethane	0.36	12		~~U~~ UJ MS
75-25-2	Bromoform	1.2	12		U
74-83-9	Bromomethane	0.87	12		~~U~~ UJ MS
78-93-3	2-Butanone	1.7	12		~~U~~ UJ CC
75-15-0	Carbon disulfide	1.6	12	6.2	J
56-23-5	Carbon tetrachloride	1.1	12		~~U~~ UJ MS
108-90-7	Chlorobenzene	0.41	12		~~U~~ UJ MS
75-00-3	Chloroethane	1.3	12		U
67-66-3	Chloroform	0.67	12		~~U~~ UJ MS
74-87-3	Chloromethane	0.63	12		U
110-82-7	Cyclohexane	0.65	12	3.1	J
124-48-1	Dibromochloromethane	0.41	12		~~U~~ UJ MS
96-12-8	1,2-Dibromo-3-chloropropane	1.4	6.0		~~U~~ UJ CC
106-93-4	1,2-Dibromoethane	0.52	12		~~U~~ UJ MS
95-50-1	1,2-Dichlorobenzene	0.45	12		U
541-73-1	1,3-Dichlorobenzene	1.0	12		U
106-46-7	1,4-Dichlorobenzene	0.67	12		U
75-71-8	Dichlorodifluoromethane	1.3	12		U
75-34-3	1,1-Dichloroethane	0.65	12		U
107-06-2	1,2-Dichloroethane	0.56	12		~~U~~ UJ MS
75-35-4	1,1-Dichloroethene	1.4	12		U
156-59-2	cis-1,2-Dichloroethene	1.4	12		U
156-60-5	trans-1,2-Dichloroethene	1.3	12		U
78-87-5	1,2-Dichloropropane	0.56	12		U
10061-01-5	cis-1,3-Dichloropropene	0.60	12		~~U~~ UJ MS
10061-02-6	trans-1,3-Dichloropropene	0.39	12		~~U~~ UJ MS
100-41-4	Ethylbenzene	0.91	12	3.2	~~U~~ J MS
591-78-6	2-Hexanone	2.8	12		U
98-82-8	Isopropylbenzene	1.1	12	2.6	~~U~~ J MS
79-20-9	Methyl acetate	1.9	12		~~U~~ UJ MS
75-09-2	Methylene chloride	0.75	12		U
108-87-2	Methyl cyclohexane	0.36	12	7.6	~~U~~ J MS
1634-04-4	Methyl tert-butyl ether	0.39	12		U
108-10-1	4-Methyl-2-pentanone	0.70	12		~~U~~ UJ CC
100-42-5	Styrene	0.42	12		~~U~~ R MS
79-34-5	1,1,2,2-Tetrachloroethane	0.52	12		~~U~~ UJ CC
127-18-4	Tetrachloroethene	1.2	12		~~U~~ UJ MS

gwl
2/26/09

FORM 1
VOLATILE ORGANICS ANALYSIS DATA SHEET

CLIENT SAMPLE NO.

MR08-IS0
86-2-3-08D

11

Lab Name: EMPIRICAL LABS Contract: CH2MHILL

Lab Code: NA Case No.: NA SAS No.: NA SDG No.: LEJEUNE025

Matrix: (soil/water) SOIL Lab Sample ID: 0812108-11

Sample wt/vol: 4.8 (g/mL) G Lab File ID: 1210811A

Level: (low/med) LOW Date Sampled: 12/08/08 15:30

% Moisture: not dec. 13 Date Analyzed: 12/20/08 22:09

GC Column: RTX-VRX ID: 0.25 (mm) Dilution Factor: 1.0

Soil Extract Volume:_____(uL) Soil Aliquot Volume: _____(uL)

CONCENTRATION UNITS: (ug/L or ug/Kg) UG/KG

CAS NO.	COMPOUND	MDL	RL	CONC	Q
108-88-3	Toluene	1.0	12	12UJ ~~1.3~~	~~J~~ MSL B
120-82-1	1,2,4-Trichlorobenzene	0.22	12		U UJ MS
71-55-6	1,1,1-Trichloroethane	1.1	12		U ↓
79-00-5	1,1,2-Trichloroethane	0.42	12		~~U~~ UJ CC
79-01-6	Trichloroethene	1.0	12		~~U~~ UJ MS
76-13-1	Trichlorotrifluoroethane	0.67	12		U
75-69-4	Trichlorofluoromethane	1.2	12		U
75-01-4	Vinyl chloride	1.3	12		~~U~~ UJ MS
1330-20-7	Xylene(total)	0.85	12	1.7	~~J~~ J ↓

FORM I VOA

fw
2/26/09

FORM 1
VOLATILE ORGANICS ANALYSIS DATA SHEET

CLIENT SAMPLE NO.

MR08-EB01
120808-SS

12

Lab Name: EMPIRICAL LABS Contract: CH2MHILL

Lab Code: NA Case No.: NA SAS No.: NA SDG No.: LEJEUNE025

Matrix: (soil/water) WATER Lab Sample ID: 0812108-12

Sample wt/vol: 5.000 (g/mL) ML Lab File ID: 1210812

Level: (low/med) LOW Date Sampled: 12/08/08 14:00

% Moisture: not dec. _____ Date Analyzed: 12/13/08 12:00

GC Column: RTX-VRX ID: 0.25 (mm) Dilution Factor: 1.0

Soil Extract Volume:_____(uL) Soil Aliquot Volume: _____(uL)

CONCENTRATION UNITS: (ug/L or ug/Kg) UG/L

CAS NO.	COMPOUND	MDL	RL	CONC	Q
67-64-1	Acetone	0.84	2.5	4.2	
71-43-2	Benzene	0.11	1.0		U
75-27-4	Bromodichloromethane	0.10	1.0	0.19	J
75-25-2	Bromoform	0.10	1.0		U
74-83-9	Bromomethane	0.32	1.0		U
78-93-3	2-Butanone	1.0	3.0		U
75-15-0	Carbon disulfide	0.13	1.0		U
56-23-5	Carbon tetrachloride	0.15	1.0		U
108-90-7	Chlorobenzene	0.10	1.0		U
75-00-3	Chloroethane	0.18	1.0		U
67-66-3	Chloroform	0.11	1.0	2.6	
74-87-3	Chloromethane	0.29	1.0		U
110-82-7	Cyclohexane	0.20	1.0		U
124-48-1	Dibromochloromethane	0.10	1.0		U
96-12-8	1,2-Dibromo-3-chloropropane	0.11	1.0		U
106-93-4	1,2-Dibromoethane	0.10	1.0		U
95-50-1	1,2-Dichlorobenzene	0.10	1.0		U
541-73-1	1,3-Dichlorobenzene	0.13	1.0		U
106-46-7	1,4-Dichlorobenzene	0.10	1.0		U
75-71-8	Dichlorodifluoromethane	0.22	1.0		U
75-34-3	1,1-Dichloroethane	0.12	1.0		U
107-06-2	1,2-Dichloroethane	0.10	1.0		U
75-35-4	1,1-Dichloroethene	0.15	1.0		U
156-59-2	cis-1,2-Dichloroethene	0.13	1.0		U
156-60-5	trans-1,2-Dichloroethene	0.13	1.0		U
78-87-5	1,2-Dichloropropane	0.10	1.0		U
10061-01-5	cis-1,3-Dichloropropene	0.11	1.0		U
10061-02-6	trans-1,3-Dichloropropene	0.10	1.0		U
100-41-4	Ethylbenzene	0.13	1.0		U
591-78-6	2-Hexanone	0.30	4.0		U
98-82-8	Isopropylbenzene	0.15	1.0		U
79-20-9	Methyl acetate	0.30	2.0		U
75-09-2	Methylene chloride	0.14	1.0	1.7	~~BK~~ BL
108-87-2	Methyl cyclohexane	0.17	1.0		U
1634-04-4	Methyl tert-butyl ether	0.10	1.0		U
108-10-1	4-Methyl-2-pentanone	0.29	2.0		U
100-42-5	Styrene	0.10	1.0		U
79-34-5	1,1,2,2-Tetrachloroethane	0.10	1.0		U
127-18-4	Tetrachloroethene	0.15	1.0		U

RW
2/26/09

FORM 1
VOLATILE ORGANICS ANALYSIS DATA SHEET

CLIENT SAMPLE NO.

MR08-EB01
120808-SS

12

Lab Name: EMPIRICAL LABS Contract: CH2MHILL

Lab Code: NA Case No.: NA SAS No.: NA SDG No.: LEJEUNE025

Matrix: (soil/water) WATER Lab Sample ID: 0812108-12

Sample wt/vol: 5.000 (g/mL) ML Lab File ID: 1210812

Level: (low/med) LOW Date Sampled: 12/08/08 14:00

% Moisture: not dec. _____ Date Analyzed: 12/13/08 12:00

GC Column: RTX-VRX ID: 0.25 (mm) Dilution Factor: 1.0

Soil Extract Volume:_____(uL) Soil Aliquot Volume: _____(uL)

CONCENTRATION UNITS: (ug/L or ug/Kg) UG/L

CAS NO.	COMPOUND	MDL	RL	CONC	Q
108-88-3	Toluene	0.10	1.0	0.32	J
120-82-1	1,2,4-Trichlorobenzene	0.10	1.0		U
71-55-6	1,1,1-Trichloroethane	0.17	1.0		U
79-00-5	1,1,2-Trichloroethane	0.10	1.0		U
79-01-6	Trichloroethene	0.13	1.0		U
76-13-1	Trichlorotrifluoroethane	0.18	1.0		U
75-69-4	Trichlorofluoromethane	0.17	1.0		U
75-01-4	Vinyl chloride	0.18	1.0		U
1330-20-7	Xylene(total)	0.22	1.0		U

lw
2/26/09

FORM 1
VOLATILE ORGANICS ANALYSIS DATA SHEET

CLIENT SAMPLE NO.

MR08-EB01
120808-IS

13

Lab Name: EMPIRICAL LABS Contract: CH2MHILL

Lab Code: NA Case No.: NA SAS No.: NA SDG No.: LEJEUNE025

Matrix: (soil/water) WATER Lab Sample ID: 0812108-13

Sample wt/vol: 5.000 (g/mL) ML Lab File ID: 1210813

Level: (low/med) LOW Date Sampled: 12/08/08 14:30

% Moisture: not dec. _____ Date Analyzed: 12/13/08 12:30

GC Column: RTX-VRX ID: 0.25 (mm) Dilution Factor: 1.0

Soil Extract Volume:_____(uL) Soil Aliquot Volume: _____(uL)

CONCENTRATION UNITS: (ug/L or ug/Kg) UG/L

CAS NO.	COMPOUND	MDL	RL	CONC	Q
67-64-1	Acetone	0.84	2.5	3.5	
71-43-2	Benzene	0.11	1.0		U
75-27-4	Bromodichloromethane	0.10	1.0		U
75-25-2	Bromoform	0.10	1.0		U
74-83-9	Bromomethane	0.32	1.0		U
78-93-3	2-Butanone	1.0	3.0		U
75-15-0	Carbon disulfide	0.13	1.0		U
56-23-5	Carbon tetrachloride	0.15	1.0		U
108-90-7	Chlorobenzene	0.10	1.0		U
75-00-3	Chloroethane	0.18	1.0		U
67-66-3	Chloroform	0.11	1.0	2.7	
74-87-3	Chloromethane	0.29	1.0		U
110-82-7	Cyclohexane	0.20	1.0		U
124-48-1	Dibromochloromethane	0.10	1.0		U
96-12-8	1,2-Dibromo-3-chloropropane	0.11	1.0		U
106-93-4	1,2-Dibromoethane	0.10	1.0		U
95-50-1	1,2-Dichlorobenzene	0.10	1.0		U
541-73-1	1,3-Dichlorobenzene	0.13	1.0		U
106-46-7	1,4-Dichlorobenzene	0.10	1.0		U
75-71-8	Dichlorodifluoromethane	0.22	1.0		U
75-34-3	1,1-Dichloroethane	0.12	1.0		U
107-06-2	1,2-Dichloroethane	0.10	1.0		U
75-35-4	1,1-Dichloroethene	0.15	1.0		U
156-59-2	cis-1,2-Dichloroethene	0.13	1.0		U
156-60-5	trans-1,2-Dichloroethene	0.13	1.0		U
78-87-5	1,2-Dichloropropane	0.10	1.0		U
10061-01-5	cis-1,3-Dichloropropene	0.11	1.0		U
10061-02-6	trans-1,3-Dichloropropene	0.10	1.0		U
100-41-4	Ethylbenzene	0.13	1.0		U
591-78-6	2-Hexanone	0.30	4.0		U
98-82-8	Isopropylbenzene	0.15	1.0		U
79-20-9	Methyl acetate	0.30	2.0		U
75-09-2	Methylene chloride	0.14	1.0	1.7	~~B~~ U B
108-87-2	Methyl cyclohexane	0.17	1.0		U
1634-04-4	Methyl tert-butyl ether	0.10	1.0		U
108-10-1	4-Methyl-2-pentanone	0.29	2.0		U
100-42-5	Styrene	0.10	1.0		U
79-34-5	1,1,2,2-Tetrachloroethane	0.10	1.0		U
127-18-4	Tetrachloroethene	0.15	1.0		U

FORM I VOA

RW 2/26/09

FORM 1
VOLATILE ORGANICS ANALYSIS DATA SHEET

CLIENT SAMPLE NO.

MR08-EB01
120808-IS

13

Lab Name: EMPIRICAL LABS Contract: CH2MHILL

Lab Code: NA Case No.: NA SAS No.: NA SDG No.: LEJEUNE025

Matrix: (soil/water) WATER Lab Sample ID: 0812108-13

Sample wt/vol: 5.000 (g/mL) ML Lab File ID: 1210813

Level: (low/med) LOW Date Sampled: 12/08/08 14:30

% Moisture: not dec. _____ Date Analyzed: 12/13/08 12:30

GC Column: RTX-VRX ID: 0.25 (mm) Dilution Factor: 1.0

Soil Extract Volume:_____(uL) Soil Aliquot Volume: _____(uL)

CONCENTRATION UNITS: (ug/L or ug/Kg) UG/L

CAS NO.	COMPOUND	MDL	RL	CONC	Q
108-88-3	Toluene	0.10	1.0		U
120-82-1	1,2,4-Trichlorobenzene	0.10	1.0		U
71-55-6	1,1,1-Trichloroethane	0.17	1.0		U
79-00-5	1,1,2-Trichloroethane	0.10	1.0		U
79-01-6	Trichloroethene	0.13	1.0		U
76-13-1	Trichlorotrifluoroethane	0.18	1.0		U
75-69-4	Trichlorofluoromethane	0.17	1.0		U
75-01-4	Vinyl chloride	0.18	1.0		U
1330-20-7	Xylene(total)	0.22	1.0		U

2/26/09

FORM 1
VOLATILE ORGANICS ANALYSIS DATA SHEET

CLIENT SAMPLE NO. 14

MR08-TB01120808

Lab Name: EMPIRICAL LABS Contract: CH2MHILL

Lab Code: NA Case No.: NA SAS No.: NA SDG No.: LEJEUNE025

Matrix: (soil/water) WATER Lab Sample ID: 0812108-14

Sample wt/vol: 5.000 (g/mL) ML Lab File ID: 1210814

Level: (low/med) LOW Date Sampled: 12/08/08 15:00

% Moisture: not dec. _____ Date Analyzed: 12/13/08 12:59

GC Column: RTX-VRX ID: 0.25 (mm) Dilution Factor: 1.0

Soil Extract Volume:_____(uL) Soil Aliquot Volume: _____(uL)

CONCENTRATION UNITS: (ug/L or ug/Kg) UG/L

CAS NO.	COMPOUND	MDL	RL	CONC	Q
67-64-1	Acetone	0.84	2.5		U
71-43-2	Benzene	0.11	1.0		U
75-27-4	Bromodichloromethane	0.10	1.0		U
75-25-2	Bromoform	0.10	1.0		U
74-83-9	Bromomethane	0.32	1.0		U
78-93-3	2-Butanone	1.0	3.0		U
75-15-0	Carbon disulfide	0.13	1.0		U
56-23-5	Carbon tetrachloride	0.15	1.0		U
108-90-7	Chlorobenzene	0.10	1.0		U
75-00-3	Chloroethane	0.18	1.0		U
67-66-3	Chloroform	0.11	1.0		U
74-87-3	Chloromethane	0.29	1.0		U
110-82-7	Cyclohexane	0.20	1.0		U
124-48-1	Dibromochloromethane	0.10	1.0		U
96-12-8	1,2-Dibromo-3-chloropropane	0.11	1.0		U
106-93-4	1,2-Dibromoethane	0.10	1.0		U
95-50-1	1,2-Dichlorobenzene	0.10	1.0		U
541-73-1	1,3-Dichlorobenzene	0.13	1.0		U
106-46-7	1,4-Dichlorobenzene	0.10	1.0		U
75-71-8	Dichlorodifluoromethane	0.22	1.0		U
75-34-3	1,1-Dichloroethane	0.12	1.0		U
107-06-2	1,2-Dichloroethane	0.10	1.0		U
75-35-4	1,1-Dichloroethene	0.15	1.0		U
156-59-2	cis-1,2-Dichloroethene	0.13	1.0		U
156-60-5	trans-1,2-Dichloroethene	0.13	1.0		U
78-87-5	1,2-Dichloropropane	0.10	1.0		U
10061-01-5	cis-1,3-Dichloropropene	0.11	1.0		U
10061-02-6	trans-1,3-Dichloropropene	0.10	1.0		U
100-41-4	Ethylbenzene	0.13	1.0		U
591-78-6	2-Hexanone	0.30	4.0		U
98-82-8	Isopropylbenzene	0.15	1.0		U
79-20-9	Methyl acetate	0.30	2.0		U
75-09-2	Methylene chloride	0.14	1.0	2.4	~~B~~ U BI
108-87-2	Methyl cyclohexane	0.17	1.0		U
1634-04-4	Methyl tert-butyl ether	0.10	1.0		U
108-10-1	4-Methyl-2-pentanone	0.29	2.0		U
100-42-5	Styrene	0.10	1.0		U
79-34-5	1,1,2,2-Tetrachloroethane	0.10	1.0		U
127-18-4	Tetrachloroethene	0.15	1.0		U

LW 2/26/09

FORM 1
VOLATILE ORGANICS ANALYSIS DATA SHEET

CLIENT SAMPLE NO. 14

MR08-TB01120808

Lab Name: EMPIRICAL LABS Contract: CH2MHILL

Lab Code: NA Case No.: NA SAS No.: NA SDG No.: LEJEUNE025

Matrix: (soil/water) WATER Lab Sample ID: 0812108-14

Sample wt/vol: 5.000 (g/mL) ML Lab File ID: 1210814

Level: (low/med) LOW Date Sampled: 12/08/08 15:00

% Moisture: not dec. _____ Date Analyzed: 12/13/08 12:59

GC Column: RTX-VRX ID: 0.25 (mm) Dilution Factor: 1.0

Soil Extract Volume:_____(uL) Soil Aliquot Volume: _____(uL)

CONCENTRATION UNITS: (ug/L or ug/Kg) UG/L

CAS NO.	COMPOUND	MDL	RL	CONC	Q
108-88-3	Toluene	0.10	1.0		U
120-82-1	1,2,4-Trichlorobenzene	0.10	1.0		U
71-55-6	1,1,1-Trichloroethane	0.17	1.0		U
79-00-5	1,1,2-Trichloroethane	0.10	1.0		U
79-01-6	Trichloroethene	0.13	1.0		U
76-13-1	Trichlorotrifluoroethane	0.18	1.0		U
75-69-4	Trichlorofluoromethane	0.17	1.0		U
75-01-4	Vinyl chloride	0.18	1.0		U
1330-20-7	Xylene(total)	0.22	1.0		U

MLD 2/26/09

FORM 1
VOLATILE ORGANICS ANALYSIS DATA SHEET

CLIENT SAMPLE NO. 15

MR08-SS106-08D

Lab Name: EMPIRICAL LABS Contract: CH2MHILL

Lab Code: NA Case No.: NA SAS No.: NA SDG No.: LEJEUNE025

Matrix: (soil/water) SOIL Lab Sample ID: 0812108-15

Sample wt/vol: 3.4 (g/mL) G Lab File ID: 1210815A

Level: (low/med) LOW Date Sampled: 12/08/08 11:30

% Moisture: not dec. 8 Date Analyzed: 12/21/08 07:07

GC Column: RTX-VRX ID: 0.25 (mm) Dilution Factor: 1.0

Soil Extract Volume:_____(uL) Soil Aliquot Volume: _____(uL)

CONCENTRATION UNITS: (ug/L or ug/Kg) UG/KG

CAS NO.	COMPOUND	MDL	RL	CONC	Q
67-64-1	Acetone	3.2	16		U
71-43-2	Benzene	0.74	16		U
75-27-4	Bromodichloromethane	0.48	16		U
75-25-2	Bromoform	1.6	16		U
74-83-9	Bromomethane	1.1	16		~~U~~ UJ CC
78-93-3	2-Butanone	2.2	16		U
75-15-0	Carbon disulfide	2.1	16		U
56-23-5	Carbon tetrachloride	1.4	16		U
108-90-7	Chlorobenzene	0.54	16		U
75-00-3	Chloroethane	1.7	16		~~U~~ UJ CC
67-66-3	Chloroform	0.87	16		U
74-87-3	Chloromethane	0.82	16		~~U~~ UJ CC
110-82-7	Cyclohexane	0.86	16		U
124-48-1	Dibromochloromethane	0.54	16		U
96-12-8	1,2-Dibromo-3-chloropropane	1.9	7.9		U
106-93-4	1,2-Dibromoethane	0.68	16		U
95-50-1	1,2-Dichlorobenzene	0.59	16		U
541-73-1	1,3-Dichlorobenzene	1.3	16		U
106-46-7	1,4-Dichlorobenzene	0.87	16		U
75-71-8	Dichlorodifluoromethane	1.7	16		~~U~~ UJ CC
75-34-3	1,1-Dichloroethane	0.86	16		U
107-06-2	1,2-Dichloroethane	0.73	16		U
75-35-4	1,1-Dichloroethene	1.9	16		U
156-59-2	cis-1,2-Dichloroethene	1.9	16		U
156-60-5	trans-1,2-Dichloroethene	1.7	16		U
78-87-5	1,2-Dichloropropane	0.73	16		U
10061-01-5	cis-1,3-Dichloropropene	0.79	16		U
10061-02-6	trans-1,3-Dichloropropene	0.51	16		U
100-41-4	Ethylbenzene	1.2	16		U
591-78-6	2-Hexanone	3.6	16		U
98-82-8	Isopropylbenzene	1.4	16		U
79-20-9	Methyl acetate	2.5	16		U
75-09-2	Methylene chloride	0.98	16	1.1	J
108-87-2	Methyl cyclohexane	0.48	16		U
1634-04-4	Methyl tert-butyl ether	0.51	16		U
108-10-1	4-Methyl-2-pentanone	0.92	16		U
100-42-5	Styrene	0.56	16		U
79-34-5	1,1,2,2-Tetrachloroethane	0.68	16		U
127-18-4	Tetrachloroethene	1.5	16		U

FORM I VOA

MW 2/26/09

FORM 1
VOLATILE ORGANICS ANALYSIS DATA SHEET

CLIENT SAMPLE NO. 15

MR08-SS106-08D

Lab Name: EMPIRICAL LABS Contract: CH2MHILL

Lab Code: NA Case No.: NA SAS No.: NA SDG No.: LEJEUNE025

Matrix: (soil/water) SOIL Lab Sample ID: 0812108-15

Sample wt/vol: 3.4 (g/mL) G Lab File ID: 1210815A

Level: (low/med) LOW Date Sampled: 12/08/08 11:30

% Moisture: not dec. 8 Date Analyzed: 12/21/08 07:07

GC Column: RTX-VRX ID: 0.25 (mm) Dilution Factor: 1.0

Soil Extract Volume:_____(uL) Soil Aliquot Volume: _____(uL)

CONCENTRATION UNITS: (ug/L or ug/Kg) UG/KG

CAS NO.	COMPOUND	MDL	RL	CONC	Q
108-88-3	Toluene	1.4	16		U
120-82-1	1,2,4-Trichlorobenzene	0.28	16		U
71-55-6	1,1,1-Trichloroethane	1.4	16		U
79-00-5	1,1,2-Trichloroethane	0.56	16		U
79-01-6	Trichloroethene	1.3	16		U
76-13-1	Trichlorotrifluoroethane	0.87	16		U
75-69-4	Trichlorofluoromethane	1.5	16		U
75-01-4	Vinyl chloride	1.7	16		U
1330-20-7	Xylene(total)	1.1	16		U

DW 12/26/09

ENVIRONMENTAL
Data Services, Inc.

VOLATILE ORGANIC COMPOUNDS
USEPA Region IV - Level IV Review

Site: MCB Camp Lejeune, TO-09 SDG #: LEJEUNE026

Client: CH2M HILL, Inc., Virginia Beach, Virginia Date: February 27, 2009

Laboratory: Empirical Laboratories, Nashville, Tennessee Reviewer: Nancy Weaver

EDS ID	Client Sample ID	Laboratory Sample ID	Matrix
1	MR08-SS080-08D	0812109-01	Soil
1RE	MR08-SS080-08DRE	0812109-01RE	Soil
2	MR08-IS080-5-6-08D	0812109-02	Soil
2RE	MR08-IS080-5-6-08DRE	0812109-02RE	Soil
3	MR08-SS081-08D	0812109-03	Soil
3RE	MR08-SS081-08DRE	0812109-03RE	Soil
3DL	MR08-SS081-08DDL	0812109-03DL	Soil
4	MR08-IS081-6-7-08D	0812109-04	Soil
5	MR08-SS082-08D	0812109-05	Soil
6	MR08-IS082-5-6-08D	0812109-06	Soil
7	MR08-SS083-08D	0812109-07	Soil
7RE	MR08-SS083-08DRE	0812109-07RE	Soil
8	MR08-IS083-6-7-08D	0812109-08	Soil
9	MR08-SS084-08D	0812109-09	Soil
10	MR08-IS084-4-5-08D	0812109-10	Soil
11	MR08-SS085-08D	0812109-11	Soil
11RE	MR08-SS085-08DRE	0812109-11RE	Soil
12	MR08-IS085-1-2-08D	0812109-12	Soil
13	MR08-SS107-08D	0812109-13	Soil
14	MR08-IS107-2-3-08D	0812109-14	Soil
15	MR08-SS108-08D	0812109-15	Soil
16	MR08-IS108-2-3-08D	0812109-16	Soil
17	MR08-IS109-2-3-08D	0812109-17	Soil
18	MR08-IS109D-2-3-08D	0812109-18	Soil
18RE	MR08-IS109D-2-3-08DRE	0812109-18RE	Soil
19	MR08-EB01120708-SS	0812109-19	Water
20	MR08-EB01120708-IS	0812109-20	Water

The USEPA "Contract Laboratory Program National Functional Guidelines for Organic Data Review," October 1999, and professional judgement were used in evaluating the data in this summary report.

Holding Times - All samples were analyzed within 14 days for preserved water and soil samples except the following.

Sample	Date Sampled	Date Analyzed	# of Days	Qualifier
1RE	12/07/08	12/25/08	18	J/UJ
2RE	12/07/08	12/25/08	18	J/UJ
3RE	12/07/08	12/25/08	18	J/UJ - unless (R) due to IS
3DL	12/07/08	01/04/08	28	J/UJ
7RE	12/07/08	12/25/08	18	J/UJ - unless (R) due to IS
11RE	12/07/08	12/25/08	18	J/UJ
18RE	12/07/08	12/25/08	18	J/UJ

GC/MS Tuning - All of the BFB tunes in the initial and continuing calibrations met the percent relative abundance criteria.

Initial Calibration - The initial calibrations exhibited acceptable %RSD and mean RRF values.

Continuing Calibration - The continuing calibrations exhibited acceptable %D and RRF values except the following.

CCAL Date	Compound	%D/RRF	Qualifier	Affected Samples
12/19/08	Dichlorodifluoromethane	30.1%	J/UJ	1, 4-7
12/20/08	Dichlorodifluoromethane	39.2%	J/UJ	8-17
12/24/08	Chloromethane	32.6%	None	Already qualified due to HT

Surrogates - All samples exhibited acceptable surrogate recoveries except the following.

Sample ID	Surrogate	%R	Qualifier
1	S3-Toluene-d8	122%	J
1RE	S4-Bromofluorobenzene	78%	None - Already qualified due to HT
3	S3-Toluene-d8	163%	J/UJ unless (R) due to IS
	S4-Bromofluorobenzene	66%	
3RE	S1-Dibromofluoromethane	127%	None - Already qualified due to HT
	S3-Toluene-d8	156%	
	S4-Bromofluorobenzene	63%	
7	S3-Toluene-d8	122%	None - All ND
18	S3-Toluene-d8	154%	J/UJ
	S4-Bromofluorobenzene	69%	

MS/MSD - A MS/MSD sample was not analyzed from this data package.

Laboratory Control Sample - The LCS samples exhibited acceptable %R values except the following.

LCS ID	Compound	%R	Qualifier	Affected Samples
V1BLK1219E	Vinyl chloride	58%	J/UJ	8-17

Internal Standard (IS) Area Performance - All internal standards met response and retention time (RT) criteria except the following.

Sample ID	Internal Standard	Area Count	Qualifier
1	IS3-1,4-Dichlorobenzene-d4	Low	J/UJ
1RE	IS3-1,4-Dichlorobenzene-d4	Low	None - Already qualified due to HT
2	IS1-Fluorobenzene	Severely Low	J/R
	IS2-Chlorobenzene-d5	Severely Low	J/R
	IS3-1,4-Dichlorobenzene-d4	Severely Low	J/R
2RE	IS3-1,4-Dichlorobenzene-d4	Low	None - Already qualified due to HT
3	IS2-Chlorobenzene-d5	Low	J/UJ
	IS3-1,4-Dichlorobenzene-d4	Low	J/R
3RE	IS2-Chlorobenzene-d5	Severely Low	J/UJ
	IS3-1,4-Dichlorobenzene-d4	Severely Low	J/R
7	IS3-1,4-Dichlorobenzene-d4	Severely Low	J/UJ
7RE	IS1-Fluorobenzene	Severely Low	J/R
	IS2-Chlorobenzene-d5	Severely Low	J/R
	IS3-1,4-Dichlorobenzene-d4	Severely Low	J/R
9	IS3-1,4-Dichlorobenzene-d4	Low	J/UJ
11	IS3-1,4-Dichlorobenzene-d4	Low	J/UJ
18	IS2-Chlorobenzene-d5	Low	J/UJ
	IS3-1,4-Dichlorobenzene-d4	Low	J/UJ

Method Blank - The method blanks exhibited the following contamination.

Blank ID	Compound	Conc.	Action Level	Qualifier	Affected Samples
V3BLK1213	Methylene chloride	0.45 ug/L	4.5 ug/L	U	19, 20
V1BLK1219E	Vinyl chloride	6.0 ug/kg	30 ug/kg	None	All ND
V1BLK1224E	Methylene chloride	3.2 ug/kg	32 ug/kg	U	1RE, 2RE, 3RE, 7RE, 11RE, 18RE
V1MBLK0104	Methylene chloride	81 ug/kg	810 ug/kg	U	3DL

Trip, Field, Equipment Blank - Field QC results are summarized below.

Blank ID	Compound	Conc. ug/L	Action Level ug/L or ug/kg	Qualifier	Affected Samples
MR08-EB01120708-IS	Acetone	3.6	36	None	See FB
	Bromodichloromethane	0.20	1.0	None	All ND
	Chloroform	3.0	15.0	None	See FB
	Cyclohexane	1.7	8.5	None	All ND
MR08-EB01120708-SS	Acetone	3.1	31	None	See FB
	Chloroform	3.1	15.5	U	3, 3RE, 11RE
	Toluene	0.22	1.1	None	See FB

Blank ID	Compound	Conc. ug/L	Action Level ug/L or ug/kg	Qualifier	Affected Samples
MR08-FB01120608	Acetone	3.8	38	U	4, 6, 8, 10, 12, 13, 15, 16
	Bromodichloromethane	0.2	1.0	None	All ND
	Chloroform	3.0	15.0	None	All ND
	Toluene	0.35	1.75	U	5

Field Duplicates - Field duplicate results are summarized below.

Compound	MR08-IS109-2-3-08D ug/kg	MR08-IS109D-2-3-08D ug/kg	RPD	Qualifier
Acetone	74	140	62%	None
Benzene	1.2	10	157%	None
2-Butanone	22 U	11	NC	None
cis-1,2-Dichloroethene	22 U	13	NC	None
Ethylbenzene	22 U	1.8	NC	None
Methylene chloride	1.6	16 U	NC	None
Toluene	3.0	29	163%	None

Tentatively Identified Compounds (TICs) - TICs were not reported.

Compound Quantitation - Several samples exhibited high concentrations of target compounds over the calibration range and were flagged (E). The laboratory diluted and reanalyzed samples. The reviewer replaced the original results with the dilution results. The original Form Is should be used for reporting purposes.

Several samples exhibited internal standard and/or surrogate deficiencies. These samples were reanalyzed. Refer to Form Is for which were used for reporting purposes.

FORM 1
VOLATILE ORGANICS ANALYSIS DATA SHEET

CLIENT SAMPLE NO.

MR08-SS080-08D

Lab Name: EMPIRICAL LABS Contract: CH2MHILL

Lab Code: NA Case No.: NA SAS No.: NA SDG No.: LEJEUNE026

Matrix: (soil/water) SOIL Lab Sample ID: 0812109-01

Sample wt/vol: 2.5 (g/mL) G Lab File ID: 1210901A

Level: (low/med) LOW Date Sampled: 12/07/08 08:20

% Moisture: not dec. 26 Date Analyzed: 12/19/08 19:05

GC Column: RTX-VRX ID: 0.25 (mm) Dilution Factor: 1.0

Soil Extract Volume:_____(uL) Soil Aliquot Volume: _____(uL)

CONCENTRATION UNITS: (ug/L or ug/Kg) UG/KG

CAS NO.	COMPOUND	MDL	RL	CONC	Q
67-64-1	Acetone	5.4	27	540	J SS
71-43-2	Benzene	1.3	27		U
75-27-4	Bromodichloromethane	0.80	27		U
75-25-2	Bromoform	2.7	27		U
74-83-9	Bromomethane	1.9	27		U
78-93-3	2-Butanone	3.8	27	10	~~J~~ J SS
75-15-0	Carbon disulfide	3.5	27		U
56-23-5	Carbon tetrachloride	2.4	27		U
108-90-7	Chlorobenzene	0.91	27		U
75-00-3	Chloroethane	2.9	27		U
67-66-3	Chloroform	1.5	27		U
74-87-3	Chloromethane	1.4	27		U
110-82-7	Cyclohexane	1.4	27		U
124-48-1	Dibromochloromethane	0.91	27		U
96-12-8	1,2-Dibromo-3-chloropropane	3.2	13		~~U~~ UJ IS
106-93-4	1,2-Dibromoethane	1.2	27		U
95-50-1	1,2-Dichlorobenzene	0.99	27		~~U~~ UJ IS
541-73-1	1,3-Dichlorobenzene	2.2	27		U
106-46-7	1,4-Dichlorobenzene	1.5	27		U
75-71-8	Dichlorodifluoromethane	2.9	27		~~U~~ UJ CC
75-34-3	1,1-Dichloroethane	1.4	27		U
107-06-2	1,2-Dichloroethane	1.2	27		U
75-35-4	1,1-Dichloroethene	3.2	27		U
156-59-2	cis-1,2-Dichloroethene	3.2	27		U
156-60-5	trans-1,2-Dichloroethene	2.9	27		U
78-87-5	1,2-Dichloropropane	1.2	27		U
10061-01-5	cis-1,3-Dichloropropene	1.3	27		U
10061-02-6	trans-1,3-Dichloropropene	0.86	27		U
100-41-4	Ethylbenzene	2.0	27		U
591-78-6	2-Hexanone	6.2	27		U
98-82-8	Isopropylbenzene	2.4	27		U
79-20-9	Methyl acetate	4.3	27		U
75-09-2	Methylene chloride	1.7	27		U
108-87-2	Methyl cyclohexane	0.80	27		U
1634-04-4	Methyl tert-butyl ether	0.86	27		U
108-10-1	4-Methyl-2-pentanone	1.6	27		U
100-42-5	Styrene	0.94	27		U
79-34-5	1,1,2,2-Tetrachloroethane	1.2	27		~~U~~ UJ IS
127-18-4	Tetrachloroethene	2.6	27		U

FORM I VOA

LW
2/27/09

FORM 1
VOLATILE ORGANICS ANALYSIS DATA SHEET

CLIENT SAMPLE NO.

MR08-SS080-08D

Lab Name: EMPIRICAL LABS Contract: CH2MHILL

Lab Code: NA Case No.: NA SAS No.: NA SDG No.: LEJEUNE026

Matrix: (soil/water) SOIL Lab Sample ID: 0812109-01

Sample wt/vol: 2.5 (g/mL) G Lab File ID: 1210901A

Level: (low/med) LOW Date Sampled: 12/07/08 08:20

% Moisture: not dec. 26 Date Analyzed: 12/19/08 19:05

GC Column: RTX-VRX ID: 0.25 (mm) Dilution Factor: 1.0

Soil Extract Volume:_____(uL) Soil Aliquot Volume: _____(uL)

CONCENTRATION UNITS: (ug/L or ug/Kg) UG/KG

CAS NO.	COMPOUND	MDL	RL	CONC	Q
108-88-3	Toluene	2.3	27	3.6	J
120-82-1	1,2,4-Trichlorobenzene	0.48	27		~~U~~ UJ IS
71-55-6	1,1,1-Trichloroethane	2.4	27		U
79-00-5	1,1,2-Trichloroethane	0.94	27		U
79-01-6	Trichloroethene	2.3	27		U
76-13-1	Trichlorotrifluoroethane	1.5	27		U
75-69-4	Trichlorofluoromethane	2.5	27		U
75-01-4	Vinyl chloride	2.9	27		U
1330-20-7	Xylene(total)	1.9	27		U

FORM I VOA

RW
2/27/09

FORM 1
VOLATILE ORGANICS ANALYSIS DATA SHEET

CLIENT SAMPLE NO. 1RE

MR08-SS080-08DR

Lab Name: EMPIRICAL LABS Contract: CH2MHILL

Lab Code: NA Case No.: NA SAS No.: NA SDG No.: LEJEUNE026

Matrix: (soil/water) SOIL Lab Sample ID: 0812109-01R

Sample wt/vol: 3.0 (g/mL) G Lab File ID: 1210901B

Level: (low/med) LOW Date Sampled: 12/07/08 08:20

% Moisture: not dec. 26 Date Analyzed: 12/25/08 04:13 use original

GC Column: RTX-VRX ID: 0.25 (mm) Dilution Factor: 1.0

Soil Extract Volume:_____(uL) Soil Aliquot Volume:_____(uL)

CONCENTRATION UNITS: (ug/L or ug/Kg) UG/KG

CAS NO.	COMPOUND	MDL	RL	CONC	Q
67-64-1-------	Acetone	4.4	22	940J ~~940~~	E HT ~~R~~
71-43-2-------	Benzene	1.0	22		U UJ HT
75-27-4-------	Bromodichloromethane	0.67	22		U
75-25-2-------	Bromoform	2.2	22		U
74-83-9-------	Bromomethane	1.6	22		U
78-93-3-------	2-Butanone	3.1	22	14	J J
75-15-0-------	Carbon disulfide	2.9	22		U UJ
56-23-5-------	Carbon tetrachloride	2.0	22		U
108-90-7------	Chlorobenzene	0.76	22		U
75-00-3-------	Chloroethane	2.4	22		U
67-66-3-------	Chloroform	1.2	22		U
74-87-3-------	Chloromethane	1.2	22		U
110-82-7------	Cyclohexane	1.2	22		U
124-48-1------	Dibromochloromethane	0.76	22		U
96-12-8-------	1,2-Dibromo-3-chloropropane	2.7	11		U
106-93-4------	1,2-Dibromoethane	0.96	22		U
95-50-1-------	1,2-Dichlorobenzene	0.82	22		U
541-73-1------	1,3-Dichlorobenzene	1.9	22		U
106-46-7------	1,4-Dichlorobenzene	1.2	22		U
75-71-8-------	Dichlorodifluoromethane	2.4	22		U
75-34-3-------	1,1-Dichloroethane	1.2	22		U
107-06-2------	1,2-Dichloroethane	1.0	22		U
75-35-4-------	1,1-Dichloroethene	2.7	22		U
156-59-2------	cis-1,2-Dichloroethene	2.7	22		U
156-60-5------	trans-1,2-Dichloroethene	2.4	22		U
78-87-5-------	1,2-Dichloropropane	1.0	22		U
10061-01-5----	cis-1,3-Dichloropropene	1.1	22		U
10061-02-6----	trans-1,3-Dichloropropene	0.71	22		U
100-41-4------	Ethylbenzene	1.7	22		U
591-78-6------	2-Hexanone	5.1	22		U
98-82-8-------	Isopropylbenzene	2.0	22		U
79-20-9-------	Methyl acetate	3.6	22	8.2	J J
75-09-2-------	Methylene chloride	1.4	22	22UJ ~~2.5~~	JB HT ~~B~~
108-87-2------	Methyl cyclohexane	0.67	22		U UJ
1634-04-4-----	Methyl tert-butyl ether	0.71	22		U
108-10-1------	4-Methyl-2-pentanone	1.3	22		U
100-42-5------	Styrene	0.78	22		U
79-34-5-------	1,1,2,2-Tetrachloroethane	0.96	22		U
127-18-4------	Tetrachloroethene	2.2	22		U

FORM I VOA

lw 2/27/09

FORM 1
VOLATILE ORGANICS ANALYSIS DATA SHEET

CLIENT SAMPLE NO.

MR08-SS080-08DR

1RE

Lab Name: EMPIRICAL LABS Contract: CH2MHILL

Lab Code: NA Case No.: NA SAS No.: NA SDG No.: LEJEUNE026

Matrix: (soil/water) SOIL Lab Sample ID: 0812109-01R

Sample wt/vol: 3.0 (g/mL) G Lab File ID: 1210901B

Level: (low/med) LOW Date Sampled: 12/07/08 08:20

% Moisture: not dec. 26 Date Analyzed: 12/25/08 04:13

GC Column: RTX-VRX ID: 0.25 (mm) Dilution Factor: 1.0

use orig INP

Soil Extract Volume:_____(uL) Soil Aliquot Volume: _____(uL)

CONCENTRATION UNITS: (ug/L or ug/Kg) UG/KG

CAS NO.	COMPOUND	MDL	RL	CONC	Q
108-88-3	Toluene	1.9	22	2.9	~~J~~ J
120-82-1	1,2,4-Trichlorobenzene	0.40	22		U UJ
71-55-6	1,1,1-Trichloroethane	2.0	22		U
79-00-5	1,1,2-Trichloroethane	0.78	22		U
79-01-6	Trichloroethene	1.9	22		U
76-13-1	Trichlorotrifluoroethane	1.2	22		U
75-69-4	Trichlorofluoromethane	2.1	22		U
75-01-4	Vinyl chloride	2.4	22		U
1330-20-7	Xylene(total)	1.6	22		U

R

FORM I VOA

RW 2/27/09

FORM 1
VOLATILE ORGANICS ANALYSIS DATA SHEET

CLIENT SAMPLE NO. 2

MR08-IS08
0-5-6-08D

Lab Name: EMPIRICAL LABS Contract: CH2MHILL

Lab Code: NA Case No.: NA SAS No.: NA SDG No.: LEJEUNE026

Matrix: (soil/water) SOIL Lab Sample ID: 0812109-02

Sample wt/vol: 3.0 (g/mL) G Lab File ID: 1210902A

Level: (low/med) LOW Date Sampled: 12/07/08 08:40

% Moisture: not dec. 15 Date Analyzed: 12/19/08 19:45

GC Column: RTX-VRX ID: 0.25 (mm) Dilution Factor: 1.0

Soil Extract Volume:_____(uL) Soil Aliquot Volume: _____(uL)

CONCENTRATION UNITS: (ug/L or ug/Kg) UG/KG

CAS NO.	COMPOUND	MDL	RL	CONC	Q
67-64-1	Acetone	3.9	19	46	J
71-43-2	Benzene	0.91	19	1.00	J
75-27-4	Bromodichloromethane	0.58	19		U
75-25-2	Bromoform	1.9	19		U
74-83-9	Bromomethane	1.4	19	22	
78-93-3	2-Butanone	2.7	19		U
75-15-0	Carbon disulfide	2.5	19		U
56-23-5	Carbon tetrachloride	1.7	19		U
108-90-7	Chlorobenzene	0.66	19		U
75-00-3	Chloroethane	2.1	19		U
67-66-3	Chloroform	1.1	19		U
74-87-3	Chloromethane	1.0	19	12	J
110-82-7	Cyclohexane	1.0	19		U
124-48-1	Dibromochloromethane	0.66	19		U
96-12-8	1,2-Dibromo-3-chloropropane	2.3	9.7		U
106-93-4	1,2-Dibromoethane	0.83	19		U
95-50-1	1,2-Dichlorobenzene	0.72	19	1.6	J
541-73-1	1,3-Dichlorobenzene	1.6	19		U
106-46-7	1,4-Dichlorobenzene	1.1	19	2.0	J
75-71-8	Dichlorodifluoromethane	2.1	19		U
75-34-3	1,1-Dichloroethane	1.0	19		U
107-06-2	1,2-Dichloroethane	0.89	19		U
75-35-4	1,1-Dichloroethene	2.3	19		U
156-59-2	cis-1,2-Dichloroethene	2.3	19		U
156-60-5	trans-1,2-Dichloroethene	2.1	19	3.2	J
78-87-5	1,2-Dichloropropane	0.89	19		U
10061-01-5	cis-1,3-Dichloropropene	0.97	19		U
10061-02-6	trans-1,3-Dichloropropene	0.62	19		U
100-41-4	Ethylbenzene	1.4	19		U
591-78-6	2-Hexanone	4.4	19		U
98-82-8	Isopropylbenzene	1.7	19		U
79-20-9	Methyl acetate	3.1	19		U
75-09-2	Methylene chloride	1.2	19		U
108-87-2	Methyl cyclohexane	0.58	19		U
1634-04-4	Methyl tert-butyl ether	0.62	19	2.1	J
108-10-1	4-Methyl-2-pentanone	1.1	19	1.8	J
100-42-5	Styrene	0.68	19	0.92	J
79-34-5	1,1,2,2-Tetrachloroethane	0.83	19		U
127-18-4	Tetrachloroethene	1.9	19		U

IS

FORM I VOA

JRW 2/27/09

FORM 1
VOLATILE ORGANICS ANALYSIS DATA SHEET

CLIENT SAMPLE NO. 2

MR08-IS08
0-5-6-08D

Lab Name: EMPIRICAL LABS Contract: CH2MHILL

Lab Code: NA Case No.: NA SAS No.: NA SDG No.: LEJEUNE026

Matrix: (soil/water) SOIL Lab Sample ID: 0812109-02

Sample wt/vol: 3.0 (g/mL) G Lab File ID: 1210902A

Level: (low/med) LOW Date Sampled: 12/07/08 08:40

% Moisture: not dec. 15 Date Analyzed: 12/19/08 19:45

GC Column: RTX-VRX ID: 0.25 (mm) Dilution Factor: 1.0

Soil Extract Volume:_____(uL) Soil Aliquot Volume: _____(uL)

CONCENTRATION UNITS: (ug/L or ug/Kg) UG/KG

CAS NO.	COMPOUND	MDL	RL	CONC	Q
108-88-3	Toluene	1.7	19		~~U~~ R
120-82-1	1,2,4-Trichlorobenzene	0.35	19	4.5	~~U~~ J
71-55-6	1,1,1-Trichloroethane	1.7	19		~~U~~ R
79-00-5	1,1,2-Trichloroethane	0.68	19		U
79-01-6	Trichloroethene	1.6	19		U
76-13-1	Trichlorotrifluoroethane	1.1	19		U
75-69-4	Trichlorofluoromethane	1.8	19		U
75-01-4	Vinyl chloride	2.1	19	12	~~U~~ J
1330-20-7	Xylene(total)	1.4	19		U R

IS

FORM I VOA

Qw 2/27/09

FORM 1
VOLATILE ORGANICS ANALYSIS DATA SHEET

CLIENT SAMPLE NO. 2RE

MR08-IS08
0-5-6-08DR

Lab Name: EMPIRICAL LABS Contract: CH2MHILL

Lab Code: NA Case No.: NA SAS No.: NA SDG No.: LEJEUNE026

Matrix: (soil/water) SOIL Lab Sample ID: 0812109-02R

Sample wt/vol: 2.3 (g/mL) G Lab File ID: 1210902B

Level: (low/med) LOW Date Sampled: 12/07/08 08:40

% Moisture: not dec. 15 Date Analyzed: 12/25/08 04:52 use original

GC Column: RTX-VRX ID: 0.25 (mm) Dilution Factor: 1.0

Soil Extract Volume:_____(uL) Soil Aliquot Volume: _____(uL)

CONCENTRATION UNITS: (ug/L or ug/Kg) UG/KG

CAS NO.	COMPOUND	MDL	RL	CONC	Q
67-64-1	Acetone	5.1	26	63	J HT
71-43-2	Benzene	1.2	26		U UJ
75-27-4	Bromodichloromethane	0.77	26		U
75-25-2	Bromoform	2.6	26		U
74-83-9	Bromomethane	1.8	26		U
78-93-3	2-Butanone	3.6	26		U
75-15-0	Carbon disulfide	3.3	26		U
56-23-5	Carbon tetrachloride	2.2	26		U
108-90-7	Chlorobenzene	0.87	26		U
75-00-3	Chloroethane	2.8	26		U
67-66-3	Chloroform	1.4	26		U
74-87-3	Chloromethane	1.3	26		U
110-82-7	Cyclohexane	1.4	26		U
124-48-1	Dibromochloromethane	0.87	26		U
96-12-8	1,2-Dibromo-3-chloropropane	3.1	13		U
106-93-4	1,2-Dibromoethane	1.1	26		U
95-50-1	1,2-Dichlorobenzene	0.95	26		U
541-73-1	1,3-Dichlorobenzene	2.2	26		U
106-46-7	1,4-Dichlorobenzene	1.4	26		U
75-71-8	Dichlorodifluoromethane	2.8	26		U
75-34-3	1,1-Dichloroethane	1.4	26		U
107-06-2	1,2-Dichloroethane	1.2	26		U
75-35-4	1,1-Dichloroethene	3.1	26		U
156-59-2	cis-1,2-Dichloroethene	3.1	26		U
156-60-5	trans-1,2-Dichloroethene	2.8	26		U
78-87-5	1,2-Dichloropropane	1.2	26		U
10061-01-5	cis-1,3-Dichloropropene	1.3	26		U
10061-02-6	trans-1,3-Dichloropropene	0.82	26		U
100-41-4	Ethylbenzene	1.9	26		U
591-78-6	2-Hexanone	5.9	26		U
98-82-8	Isopropylbenzene	2.2	26		U
79-20-9	Methyl acetate	4.1	26	61	~~X~~ J
75-09-2	Methylene chloride	1.6	26	26 UJ ~~8.4~~	~~JB~~ HT B
108-87-2	Methyl cyclohexane	0.77	26		U UJ HT
1634-04-4	Methyl tert-butyl ether	0.82	26		U
108-10-1	4-Methyl-2-pentanone	1.5	26		U
100-42-5	Styrene	0.90	26		U
79-34-5	1,1,2,2-Tetrachloroethane	1.1	26		U
127-18-4	Tetrachloroethene	2.5	26		U

FORM I VOA

JW 2/27/09

FORM 1
VOLATILE ORGANICS ANALYSIS DATA SHEET

CLIENT SAMPLE NO.

2RE

MR08-IS08
0-5-6-08DR

Lab Name: EMPIRICAL LABS Contract: CH2MHILL

Lab Code: NA Case No.: NA SAS No.: NA SDG No.: LEJEUNE026

Matrix: (soil/water) SOIL Lab Sample ID: 0812109-02R

Sample wt/vol: 2.3 (g/mL) G Lab File ID: 1210902B

Level: (low/med) LOW Date Sampled: 12/07/08 08:40

% Moisture: not dec. 15 Date Analyzed: 12/25/08 04:52

Vol. mg/kg

GC Column: RTX-VRX ID: 0.25 (mm) Dilution Factor: 1.0

Soil Extract Volume:_____(uL) Soil Aliquot Volume: _____(uL)

CONCENTRATION UNITS: (ug/L or ug/Kg) UG/KG

CAS NO.	COMPOUND	MDL	RL	CONC	Q
108-88-3	Toluene	2.2	26		U UJ HIT
120-82-1	1,2,4-Trichlorobenzene	0.46	26		U
71-55-6	1,1,1-Trichloroethane	2.3	26		U
79-00-5	1,1,2-Trichloroethane	0.90	26		U
79-01-6	Trichloroethene	2.2	26		U
76-13-1	Trichlorotrifluoroethane	1.4	26		U
75-69-4	Trichlorofluoromethane	2.4	26		U
75-01-4	Vinyl chloride	2.8	26		U
1330-20-7	Xylene(total)	1.8	26		U

R R

FORM I VOA

RW 2/27/09

FORM 1
VOLATILE ORGANICS ANALYSIS DATA SHEET

CLIENT SAMPLE NO. 3

MR08-SS081-08D

Lab Name: EMPIRICAL LABS Contract: CH2MHILL

Lab Code: NA Case No.: NA SAS No.: NA SDG No.: LEJEUNE026

Matrix: (soil/water) SOIL Lab Sample ID: 0812109-03

Sample wt/vol: 2.6 (g/mL) G Lab File ID: 1210903A

Level: (low/med) LOW Date Sampled: 12/07/08 09:00

% Moisture: not dec. 37 Date Analyzed: 12/19/08 20:24 Lose reanalysis

GC Column: RTX-VRX ID: 0.25 (mm) Dilution Factor: 1.0

Soil Extract Volume:_____(uL) Soil Aliquot Volume: _____(uL)

CONCENTRATION UNITS: (ug/L or ug/Kg) UG/KG

CAS NO.	COMPOUND	MDL	RL	CONC	Q
67-64-1-------	Acetone	6.1	30	750	J SSL
71-43-2-------	Benzene	1.4	30		U UJ
75-27-4-------	Bromodichloromethane	0.91	30		U
75-25-2-------	Bromoform	3.0	30		U
74-83-9-------	Bromomethane	2.2	30		U
78-93-3-------	2-Butanone	4.3	30	10	J J
75-15-0-------	Carbon disulfide	4.0	30		U UJ
56-23-5-------	Carbon tetrachloride	2.7	30		U
108-90-7------	Chlorobenzene	1.0	30		U
75-00-3-------	Chloroethane	3.3	30		U
67-66-3-------	Chloroform	1.7	30	304J ~~1.9~~	J SSL B
74-87-3-------	Chloromethane	1.6	30	16	J J SS
110-82-7------	Cyclohexane	1.6	30		U UJ
124-48-1------	Dibromochloromethane	1.0	30		U UJ
96-12-8-------	1,2-Dibromo-3-chloropropane	3.6	15		U R ISL
106-93-4------	1,2-Dibromoethane	1.3	30		U UJ SSL
95-50-1-------	1,2-Dichlorobenzene	1.1	30		U R ISL
541-73-1------	1,3-Dichlorobenzene	2.6	30		U
106-46-7------	1,4-Dichlorobenzene	1.7	30		U
75-71-8-------	Dichlorodifluoromethane	3.3	30		U
75-34-3-------	1,1-Dichloroethane	1.6	30		U UJ SSL
107-06-2------	1,2-Dichloroethane	1.4	30		U
75-35-4-------	1,1-Dichloroethene	3.6	30		U
156-59-2------	cis-1,2-Dichloroethene	3.6	30		U
156-60-5------	trans-1,2-Dichloroethene	3.3	30		U
78-87-5-------	1,2-Dichloropropane	1.4	30		U
10061-01-5----	cis-1,3-Dichloropropene	1.5	30		U
10061-02-6----	trans-1,3-Dichloropropene	0.97	30		U
100-41-4------	Ethylbenzene	2.3	30		U
591-78-6------	2-Hexanone	7.0	30		U
98-82-8-------	Isopropylbenzene	2.7	30		U
79-20-9-------	Methyl acetate	4.9	30		U
75-09-2-------	Methylene chloride	1.9	30		U
108-87-2------	Methyl cyclohexane	0.91	30		U
1634-04-4-----	Methyl tert-butyl ether	0.97	30		U
108-10-1------	4-Methyl-2-pentanone	1.8	30		U
100-42-5------	Styrene	1.1	30		U
79-34-5-------	1,1,2,2-Tetrachloroethane	1.3	30		U R ISL
127-18-4------	Tetrachloroethene	3.0	30		U UJ SS

FORM I VOA

RE

Dec 2/27/09

FORM 1
VOLATILE ORGANICS ANALYSIS DATA SHEET

CLIENT SAMPLE NO. 3

MR08-SS081-08D

Lab Name: EMPIRICAL LABS Contract: CH2MHILL

Lab Code: NA Case No.: NA SAS No.: NA SDG No.: LEJEUNE026

Matrix: (soil/water) SOIL Lab Sample ID: 0812109-03

Sample wt/vol: 2.6 (g/mL) G Lab File ID: 1210903A

Level: (low/med) LOW Date Sampled: 12/07/08 09:00

% Moisture: not dec. 37 Date Analyzed: 12/19/08 20:24

GC Column: RTX-VRX ID: 0.25 (mm) Dilution Factor: 1.0

Soil Extract Volume:_____(uL) Soil Aliquot Volume: _____(uL)

CONCENTRATION UNITS: (ug/L or ug/Kg) UG/KG

CAS NO.	COMPOUND	MDL	RL	CONC	Q
108-88-3	Toluene	2.6	30	4.2	~~U~~ J SSL
120-82-1	1,2,4-Trichlorobenzene	0.55	30		~~U~~ R I SL
71-55-6	1,1,1-Trichloroethane	2.7	30		U UJ SSL
79-00-5	1,1,2-Trichloroethane	1.1	30		U
79-01-6	Trichloroethene	2.6	30		U
76-13-1	Trichlorotrifluoroethane	1.7	30		U
75-69-4	Trichlorofluoromethane	2.9	30		U
75-01-4	Vinyl chloride	3.3	30		U
1330-20-7	Xylene(total)	2.1	30		U

use reanalysis

R

FORM I VOA

lw 2/27/09

FORM 1
VOLATILE ORGANICS ANALYSIS DATA SHEET

CLIENT SAMPLE NO. 3RE

MR08-SS081-08DR

Lab Name: EMPIRICAL LABS Contract: CH2MHILL

Lab Code: NA Case No.: NA SAS No.: NA SDG No.: LEJEUNE026

Matrix: (soil/water) SOIL Lab Sample ID: 0812109-03R

Sample wt/vol: 2.6 (g/mL) G Lab File ID: 1210903B

Level: (low/med) LOW Date Sampled: 12/07/08 09:00

% Moisture: not dec. 37 Date Analyzed: 12/25/08 05:31

GC Column: RTX-VRX ID: 0.25 (mm) Dilution Factor: 1.0

Soil Extract Volume:_____(uL) Soil Aliquot Volume: _____(uL)

CONCENTRATION UNITS: (ug/L or ug/Kg) UG/KG

CAS NO.	COMPOUND	MDL	RL	CONC	Q
67-64-1-------	Acetone	6.0	30	180UJ ~~1400~~	~~E~~ HT
71-43-2-------	Benzene	1.4	30		U UJ
75-27-4-------	Bromodichloromethane	0.90	30		U
75-25-2-------	Bromoform	3.0	30		U
74-83-9-------	Bromomethane	2.2	30		U
78-93-3-------	2-Butanone	4.2	30	15	J J
75-15-0-------	Carbon disulfide	3.9	30		U UJ
56-23-5-------	Carbon tetrachloride	2.6	30		U
108-90-7------	Chlorobenzene	1.0	30		U
75-00-3-------	Chloroethane	3.3	30		U
67-66-3-------	Chloroform	1.6	30	30UJ ~~2.6~~	~~J~~ HT
74-87-3-------	Chloromethane	1.6	30	2.2	~~J~~ J
110-82-7------	Cyclohexane	1.6	30		U UJ
124-48-1------	Dibromochloromethane	1.0	30		U UJ
96-12-8-------	1,2-Dibromo-3-chloropropane	3.6	15		~~U~~ R
106-93-4------	1,2-Dibromoethane	1.3	30		~~U~~ UJ
95-50-1-------	1,2-Dichlorobenzene	1.1	30		U R
541-73-1------	1,3-Dichlorobenzene	2.5	30		U
106-46-7------	1,4-Dichlorobenzene	1.6	30		U
75-71-8-------	Dichlorodifluoromethane	3.3	30		U UJ
75-34-3-------	1,1-Dichloroethane	1.6	30		U
107-06-2------	1,2-Dichloroethane	1.4	30		U
75-35-4-------	1,1-Dichloroethene	3.6	30		U
156-59-2------	cis-1,2-Dichloroethene	3.6	30		U
156-60-5------	trans-1,2-Dichloroethene	3.3	30		U
78-87-5-------	1,2-Dichloropropane	1.4	30		U
10061-01-5----	cis-1,3-Dichloropropene	1.5	30		U
10061-02-6----	trans-1,3-Dichloropropene	0.96	30		U
100-41-4------	Ethylbenzene	2.2	30		U
591-78-6------	2-Hexanone	6.9	30		U
98-82-8-------	Isopropylbenzene	2.6	30		U
79-20-9-------	Methyl acetate	4.8	30	2700J ~~5400~~	E HT
75-09-2-------	Methylene chloride	1.9	30	30UJ ~~6.3~~	~~JB~~ HT
108-87-2------	Methyl cyclohexane	0.90	30		U UJ HT
1634-04-4-----	Methyl tert-butyl ether	0.96	30		U
108-10-1------	4-Methyl-2-pentanone	1.7	30		U
100-42-5------	Styrene	1.0	30		U
79-34-5-------	1,1,2,2-Tetrachloroethane	1.3	30		~~U~~ R
127-18-4------	Tetrachloroethene	2.9	30		~~U~~ UJ

FORM I VOA

LW 2/27/09

FORM 1
VOLATILE ORGANICS ANALYSIS DATA SHEET

CLIENT SAMPLE NO. 3RE

MR08-SS081-08DR

Lab Name: EMPIRICAL LABS Contract: CH2MHILL

Lab Code: NA Case No.: NA SAS No.: NA SDG No.: LEJEUNE026

Matrix: (soil/water) SOIL Lab Sample ID: 0812109-03R

Sample wt/vol: 2.6 (g/mL) G Lab File ID: 1210903B

Level: (low/med) LOW Date Sampled: 12/07/08 09:00

% Moisture: not dec. 37 Date Analyzed: 12/25/08 05:31

GC Column: RTX-VRX ID: 0.25 (mm) Dilution Factor: 1.0

Soil Extract Volume:_____(uL) Soil Aliquot Volume: _____(uL)

CONCENTRATION UNITS: (ug/L or ug/Kg) UG/KG

CAS NO.	COMPOUND	MDL	RL	CONC	Q	
108-88-3	Toluene	2.6	30	3.6	~~J~~ J	H
120-82-1	1,2,4-Trichlorobenzene	0.54	30		~~U~~ R	ISC
71-55-6	1,1,1-Trichloroethane	2.7	30		~~U~~ UJ	H
79-00-5	1,1,2-Trichloroethane	1.0	30		~~U~~	
79-01-6	Trichloroethene	2.6	30		~~U~~	
76-13-1	Trichlorotrifluoroethane	1.6	30		~~U~~	
75-69-4	Trichlorofluoromethane	2.8	30		~~U~~	
75-01-4	Vinyl chloride	3.3	30		~~U~~	
1330-20-7	Xylene(total)	2.1	30		~~U~~	

FORM I VOA

fuw
2/27/09

FORM 1
VOLATILE ORGANICS ANALYSIS DATA SHEET

CLIENT SAMPLE NO.

MR08-SS0
81-08DDL

3DL

Lab Name: EMPIRICAL LABS Contract: CH2MHILL

Lab Code: NA Case No.: NA SAS No.: NA SDG No.: LEJEUNE026

Matrix: (soil/water) SOIL Lab Sample ID: 0812109-03DL

Sample wt/vol: 1.3 (g/mL) G Lab File ID: 1210903D

Level: (low/med) MED Date Sampled: 12/07/08 09:00

% Moisture: not dec. 37 Date Analyzed: 01/04/09 21:57 Use reanalysis

GC Column: RTX-VRX ID: 0.25 (mm) Dilution Factor: 2.0

Soil Extract Volume: 5000(uL) Soil Aliquot Volume: 100(uL)

CONCENTRATION UNITS: (ug/L or ug/Kg) UG/KG

CAS NO.	COMPOUND	MDL	RL	CONC	Q
67-64-1	Acetone	1200	6200	1800	UD J H
71-43-2	Benzene	290	6200		UD UJ
75-27-4	Bromodichloromethane	190	6200		UD
75-25-2	Bromoform	620	6200		UD
74-83-9	Bromomethane	450	6200		UD
78-93-3	2-Butanone	870	6200		UD
75-15-0	Carbon disulfide	810	6200		UD
56-23-5	Carbon tetrachloride	550	6200		UD
108-90-7	Chlorobenzene	210	6200		UD
75-00-3	Chloroethane	680	6200		UD
67-66-3	Chloroform	340	6200		UD
74-87-3	Chloromethane	320	6200		UD
110-82-7	Cyclohexane	340	6200		UD
124-48-1	Dibromochloromethane	210	6200		UD
96-12-8	1,2-Dibromo-3-chloropropane	740	3100		UD
106-93-4	1,2-Dibromoethane	270	6200		UD
95-50-1	1,2-Dichlorobenzene	230	6200		UD
541-73-1	1,3-Dichlorobenzene	520	6200		UD
106-46-7	1,4-Dichlorobenzene	340	6200		UD
75-71-8	Dichlorodifluoromethane	680	6200		UD
75-34-3	1,1-Dichloroethane	340	6200		UD
107-06-2	1,2-Dichloroethane	280	6200		UD
75-35-4	1,1-Dichloroethene	740	6200		UD
156-59-2	cis-1,2-Dichloroethene	740	6200		UD
156-60-5	trans-1,2-Dichloroethene	680	6200		UD
78-87-5	1,2-Dichloropropane	280	6200		UD
10061-01-5	cis-1,3-Dichloropropene	310	6200		UD
10061-02-6	trans-1,3-Dichloropropene	200	6200		UD
100-41-4	Ethylbenzene	460	6200		UD
591-78-6	2-Hexanone	1400	6200		UD
98-82-8	Isopropylbenzene	550	6200		UD
79-20-9	Methyl acetate	990	6200	2700	UD J
75-09-2	Methylene chloride	380	6200	6200 UJ ~~1300~~	~~JHD~~ HT
108-87-2	Methyl cyclohexane	190	6200		UD UJ
1634-04-4	Methyl tert-butyl ether	200	6200		UD
108-10-1	4-Methyl-2-pentanone	360	6200		UD
100-42-5	Styrene	220	6200		UD
79-34-5	1,1,2,2-Tetrachloroethane	270	6200		UD
127-18-4	Tetrachloroethene	600	6200		UD

FORM I VOA

lw 2/27/09

FORM 1
VOLATILE ORGANICS ANALYSIS DATA SHEET

CLIENT SAMPLE NO. 3DL

MR08-SS0
81-08DDL

Lab Name: EMPIRICAL LABS Contract: CH2MHILL

Lab Code: NA Case No.: NA SAS No.: NA SDG No.: LEJEUNE026

Matrix: (soil/water) SOIL Lab Sample ID: 0812109-03DL

Sample wt/vol: 1.3 (g/mL) G Lab File ID: 1210903D

Level: (low/med) MED Date Sampled: 12/07/08 09:00

% Moisture: not dec. 37 Date Analyzed: 01/04/09 21:57 use reanalysis

GC Column: RTX-VRX ID: 0.25 (mm) Dilution Factor: 2.0

Soil Extract Volume: 5000(uL) Soil Aliquot Volume: 100(uL)

CONCENTRATION UNITS: (ug/L or ug/Kg) UG/KG

CAS NO.	COMPOUND	MDL	RL	CONC	Q
108-88-3	Toluene	530	6200		UD
120-82-1	1,2,4-Trichlorobenzene	110	6200		UD
71-55-6	1,1,1-Trichloroethane	560	6200		UD
79-00-5	1,1,2-Trichloroethane	220	6200		UD
79-01-6	Trichloroethene	530	6200		UD
76-13-1	Trichlorotrifluoroethane	340	6200		UD
75-69-4	Trichlorofluoromethane	590	6200		UD
75-01-4	Vinyl chloride	680	6200		UD
1330-20-7	Xylene(total)	430	6200		UD

R R

FORM I VOA

lw 2/27/09

FORM 1
VOLATILE ORGANICS ANALYSIS DATA SHEET

CLIENT SAMPLE NO. 4

MR08-IS08
1-6-7-08D

Lab Name: EMPIRICAL LABS Contract: CH2MHILL

Lab Code: NA Case No.: NA SAS No.: NA SDG No.: LEJEUNE026

Matrix: (soil/water) SOIL Lab Sample ID: 0812109-04

Sample wt/vol: 4.0 (g/mL) G Lab File ID: 1210904A

Level: (low/med) LOW Date Sampled: 12/07/08 09:20

% Moisture: not dec. 6 Date Analyzed: 12/19/08 21:03

GC Column: RTX-VRX ID: 0.25 (mm) Dilution Factor: 1.0

Soil Extract Volume:_____(uL) Soil Aliquot Volume: _____(uL)

CONCENTRATION UNITS: (ug/L or ug/Kg) UG/KG

CAS NO.	COMPOUND	MDL	RL	CONC	Q
67-64-1	Acetone	2.7	13	19	U
71-43-2	Benzene	0.63	13		U
75-27-4	Bromodichloromethane	0.40	13		U
75-25-2	Bromoform	1.3	13		U
74-83-9	Bromomethane	0.97	13		U
78-93-3	2-Butanone	1.9	13		U
75-15-0	Carbon disulfide	1.7	13		U
56-23-5	Carbon tetrachloride	1.2	13		U
108-90-7	Chlorobenzene	0.46	13		U
75-00-3	Chloroethane	1.5	13		U
67-66-3	Chloroform	0.74	13		U
74-87-3	Chloromethane	0.70	13	7.0	J
110-82-7	Cyclohexane	0.72	13		U
124-48-1	Dibromochloromethane	0.46	13		U
96-12-8	1,2-Dibromo-3-chloropropane	1.6	6.7		U
106-93-4	1,2-Dibromoethane	0.58	13		U
95-50-1	1,2-Dichlorobenzene	0.50	13		U
541-73-1	1,3-Dichlorobenzene	1.1	13		U
106-46-7	1,4-Dichlorobenzene	0.74	13		U
75-71-8	Dichlorodifluoromethane	1.5	13		~~U~~ UJ CCH
75-34-3	1,1-Dichloroethane	0.72	13		U
107-06-2	1,2-Dichloroethane	0.62	13		U
75-35-4	1,1-Dichloroethene	1.6	13		U
156-59-2	cis-1,2-Dichloroethene	1.6	13		U
156-60-5	trans-1,2-Dichloroethene	1.5	13		U
78-87-5	1,2-Dichloropropane	0.62	13		U
10061-01-5	cis-1,3-Dichloropropene	0.67	13		U
10061-02-6	trans-1,3-Dichloropropene	0.43	13		U
100-41-4	Ethylbenzene	1.0	13		U
591-78-6	2-Hexanone	3.1	13		U
98-82-8	Isopropylbenzene	1.2	13		U
79-20-9	Methyl acetate	2.2	13		U
75-09-2	Methylene chloride	0.83	13		U
108-87-2	Methyl cyclohexane	0.40	13		U
1634-04-4	Methyl tert-butyl ether	0.43	13		U
108-10-1	4-Methyl-2-pentanone	0.78	13		U
100-42-5	Styrene	0.47	13		U
79-34-5	1,1,2,2-Tetrachloroethane	0.58	13		U
127-18-4	Tetrachloroethene	1.3	13		U

2/27/09

FORM 1
VOLATILE ORGANICS ANALYSIS DATA SHEET

CLIENT SAMPLE NO. 4

MR08-IS08
1-6-7-08D

Lab Name: EMPIRICAL LABS Contract: CH2MHILL

Lab Code: NA Case No.: NA SAS No.: NA SDG No.: LEJEUNE026

Matrix: (soil/water) SOIL Lab Sample ID: 0812109-04

Sample wt/vol: 4.0 (g/mL) G Lab File ID: 1210904A

Level: (low/med) LOW Date Sampled: 12/07/08 09:20

% Moisture: not dec. 6 Date Analyzed: 12/19/08 21:03

GC Column: RTX-VRX ID: 0.25 (mm) Dilution Factor: 1.0

Soil Extract Volume:_____(uL) Soil Aliquot Volume: _____(uL)

CONCENTRATION UNITS: (ug/L or ug/Kg) UG/KG

CAS NO.	COMPOUND	MDL	RL	CONC	Q
108-88-3	Toluene	1.2	13		U
120-82-1	1,2,4-Trichlorobenzene	0.24	13		U
71-55-6	1,1,1-Trichloroethane	1.2	13		U
79-00-5	1,1,2-Trichloroethane	0.47	13		U
79-01-6	Trichloroethene	1.1	13		U
76-13-1	Trichlorotrifluoroethane	0.74	13		U
75-69-4	Trichlorofluoromethane	1.3	13		U
75-01-4	Vinyl chloride	1.5	13		U
1330-20-7	Xylene(total)	0.94	13		U

RW
2/27/09

FORM 1
VOLATILE ORGANICS ANALYSIS DATA SHEET

CLIENT SAMPLE NO. 5

MR08-SS082-08D

Lab Name: EMPIRICAL LABS Contract: CH2MHILL

Lab Code: NA Case No.: NA SAS No.: NA SDG No.: LEJEUNE026

Matrix: (soil/water) SOIL Lab Sample ID: 0812109-05

Sample wt/vol: 3.6 (g/mL) G Lab File ID: 1210905A

Level: (low/med) LOW Date Sampled: 12/07/08 09:35

% Moisture: not dec. 18 Date Analyzed: 12/19/08 21:42

GC Column: RTX-VRX ID: 0.25 (mm) Dilution Factor: 1.0

Soil Extract Volume:_____(uL) Soil Aliquot Volume: _____(uL)

CONCENTRATION UNITS: (ug/L or ug/Kg) UG/KG

CAS NO.	COMPOUND	MDL	RL	CONC	Q
67-64-1	Acetone	3.4	17	260	
71-43-2	Benzene	0.79	17		U
75-27-4	Bromodichloromethane	0.51	17		U
75-25-2	Bromoform	1.7	17		U
74-83-9	Bromomethane	1.2	17		U
78-93-3	2-Butanone	2.4	17	6.8	J
75-15-0	Carbon disulfide	2.2	17		U
56-23-5	Carbon tetrachloride	1.5	17		U
108-90-7	Chlorobenzene	0.57	17		U
75-00-3	Chloroethane	1.8	17		U
67-66-3	Chloroform	0.93	17		U
74-87-3	Chloromethane	0.88	17		U
110-82-7	Cyclohexane	0.91	17		U
124-48-1	Dibromochloromethane	0.57	17		U
96-12-8	1,2-Dibromo-3-chloropropane	2.0	8.4		U
106-93-4	1,2-Dibromoethane	0.73	17		U
95-50-1	1,2-Dichlorobenzene	0.62	17		U
541-73-1	1,3-Dichlorobenzene	1.4	17		U
106-46-7	1,4-Dichlorobenzene	0.93	17		U
75-71-8	Dichlorodifluoromethane	1.8	17		U us CG
75-34-3	1,1-Dichloroethane	0.91	17		U
107-06-2	1,2-Dichloroethane	0.78	17		U
75-35-4	1,1-Dichloroethene	2.0	17		U
156-59-2	cis-1,2-Dichloroethene	2.0	17		U
156-60-5	trans-1,2-Dichloroethene	1.8	17		U
78-87-5	1,2-Dichloropropane	0.78	17		U
10061-01-5	cis-1,3-Dichloropropene	0.84	17		U
10061-02-6	trans-1,3-Dichloropropene	0.54	17		U
100-41-4	Ethylbenzene	1.3	17		U
591-78-6	2-Hexanone	3.9	17		U
98-82-8	Isopropylbenzene	1.5	17		U
79-20-9	Methyl acetate	2.7	17		U
75-09-2	Methylene chloride	1.0	17		U
108-87-2	Methyl cyclohexane	0.51	17		U
1634-04-4	Methyl tert-butyl ether	0.54	17		U
108-10-1	4-Methyl-2-pentanone	0.98	17		U
100-42-5	Styrene	0.59	17		U
79-34-5	1,1,2,2-Tetrachloroethane	0.73	17		U
127-18-4	Tetrachloroethene	1.6	17		U

lew 7/27/09

FORM 1
VOLATILE ORGANICS ANALYSIS DATA SHEET

CLIENT SAMPLE NO. 5

MR08-SS082-08D

Lab Name: EMPIRICAL LABS Contract: CH2MHILL

Lab Code: NA Case No.: NA SAS No.: NA SDG No.: LEJEUNE026

Matrix: (soil/water) SOIL Lab Sample ID: 0812109-05

Sample wt/vol: 3.6 (g/mL) G Lab File ID: 1210905A

Level: (low/med) LOW Date Sampled: 12/07/08 09:35

% Moisture: not dec. 18 Date Analyzed: 12/19/08 21:42

GC Column: RTX-VRX ID: 0.25 (mm) Dilution Factor: 1.0

Soil Extract Volume:_____(uL) Soil Aliquot Volume: _____(uL)

CONCENTRATION UNITS: (ug/L or ug/Kg) UG/KG

CAS NO.	COMPOUND	MDL	RL	CONC	Q
108-88-3	Toluene	1.4	17	Mu ~~2.0~~	~~J~~
120-82-1	1,2,4-Trichlorobenzene	0.30	17		U
71-55-6	1,1,1-Trichloroethane	1.5	17		U
79-00-5	1,1,2-Trichloroethane	0.59	17		U
79-01-6	Trichloroethene	1.4	17		U
76-13-1	Trichlorotrifluoroethane	0.93	17		U
75-69-4	Trichlorofluoromethane	1.6	17		U
75-01-4	Vinyl chloride	1.8	17		U
1330-20-7	Xylene(total)	1.2	17		U

B

aw 2/27/09

FORM 1
VOLATILE ORGANICS ANALYSIS DATA SHEET

CLIENT SAMPLE NO.

MR08-IS08
2-5-6-08D

Lab Name: EMPIRICAL LABS Contract: CH2MHILL

Lab Code: NA Case No.: NA SAS No.: NA SDG No.: LEJEUNE026

Matrix: (soil/water) SOIL Lab Sample ID: 0812109-06

Sample wt/vol: 3.5 (g/mL) G Lab File ID: 1210906A

Level: (low/med) LOW Date Sampled: 12/07/08 09:50

% Moisture: not dec. 3 Date Analyzed: 12/19/08 22:21

GC Column: RTX-VRX ID: 0.25 (mm) Dilution Factor: 1.0

Soil Extract Volume:_____(uL) Soil Aliquot Volume: _____(uL)

CONCENTRATION UNITS: (ug/L or ug/Kg) UG/KG

CAS NO.	COMPOUND	MDL	RL	CONC	Q
67-64-1	Acetone	3.0	15	15u ~~8.4 J~~	B
71-43-2	Benzene	0.70	15		U
75-27-4	Bromodichloromethane	0.44	15		U
75-25-2	Bromoform	1.5	15		U
74-83-9	Bromomethane	1.1	15		U
78-93-3	2-Butanone	2.1	15		U
75-15-0	Carbon disulfide	1.9	15		U
56-23-5	Carbon tetrachloride	1.3	15		U
108-90-7	Chlorobenzene	0.50	15		U
75-00-3	Chloroethane	1.6	15		U
67-66-3	Chloroform	0.82	15		U
74-87-3	Chloromethane	0.77	15		U
110-82-7	Cyclohexane	0.80	15		U
124-48-1	Dibromochloromethane	0.50	15		U
96-12-8	1,2-Dibromo-3-chloropropane	1.8	7.4		U
106-93-4	1,2-Dibromoethane	0.64	15		U
95-50-1	1,2-Dichlorobenzene	0.55	15		U
541-73-1	1,3-Dichlorobenzene	1.2	15		U
106-46-7	1,4-Dichlorobenzene	0.82	15		U
75-71-8	Dichlorodifluoromethane	1.6	15		~~U~~ UJ CG
75-34-3	1,1-Dichloroethane	0.80	15		U
107-06-2	1,2-Dichloroethane	0.68	15		U
75-35-4	1,1-Dichloroethene	1.8	15		U
156-59-2	cis-1,2-Dichloroethene	1.8	15		U
156-60-5	trans-1,2-Dichloroethene	1.6	15		U
78-87-5	1,2-Dichloropropane	0.68	15		U
10061-01-5	cis-1,3-Dichloropropene	0.74	15		U
10061-02-6	trans-1,3-Dichloropropene	0.47	15		U
100-41-4	Ethylbenzene	1.1	15		U
591-78-6	2-Hexanone	3.4	15		U
98-82-8	Isopropylbenzene	1.3	15		U
79-20-9	Methyl acetate	2.4	15		U
75-09-2	Methylene chloride	0.92	15		U
108-87-2	Methyl cyclohexane	0.44	15		U
1634-04-4	Methyl tert-butyl ether	0.47	15		U
108-10-1	4-Methyl-2-pentanone	0.86	15		U
100-42-5	Styrene	0.52	15		U
79-34-5	1,1,2,2-Tetrachloroethane	0.64	15		U
127-18-4	Tetrachloroethene	1.4	15		U

FORM I VOA

LWJ 2/27/09

FORM 1
VOLATILE ORGANICS ANALYSIS DATA SHEET

CLIENT SAMPLE NO.

MR08-IS08
2-5-6-08D

6

Lab Name: EMPIRICAL LABS Contract: CH2MHILL

Lab Code: NA Case No.: NA SAS No.: NA SDG No.: LEJEUNE026

Matrix: (soil/water) SOIL Lab Sample ID: 0812109-06

Sample wt/vol: 3.5 (g/mL) G Lab File ID: 1210906A

Level: (low/med) LOW Date Sampled: 12/07/08 09:50

% Moisture: not dec. 3 Date Analyzed: 12/19/08 22:21

GC Column: RTX-VRX ID: 0.25 (mm) Dilution Factor: 1.0

Soil Extract Volume:_____(uL) Soil Aliquot Volume: _____(uL)

CONCENTRATION UNITS: (ug/L or ug/Kg) UG/KG

CAS NO.	COMPOUND	MDL	RL	CONC	Q
108-88-3	Toluene	1.3	15		U
120-82-1	1,2,4-Trichlorobenzene	0.27	15		U
71-55-6	1,1,1-Trichloroethane	1.3	15		U
79-00-5	1,1,2-Trichloroethane	0.52	15		U
79-01-6	Trichloroethene	1.3	15		U
76-13-1	Trichlorotrifluoroethane	0.82	15		U
75-69-4	Trichlorofluoromethane	1.4	15		U
75-01-4	Vinyl chloride	1.6	15		U
1330-20-7	Xylene(total)	1.0	15		U

DW 2/27/09

FORM 1
VOLATILE ORGANICS ANALYSIS DATA SHEET

CLIENT SAMPLE NO. 7

MR08-SS083-08D

Lab Name: EMPIRICAL LABS Contract: CH2MHILL

Lab Code: NA Case No.: NA SAS No.: NA SDG No.: LEJEUNE026

Matrix: (soil/water) SOIL Lab Sample ID: 0812109-07

Sample wt/vol: 3.0 (g/mL) G Lab File ID: 1210907A

Level: (low/med) LOW Date Sampled: 12/07/08 10:20 use reanalysis

% Moisture: not dec. 16 Date Analyzed: 12/19/08 23:01

GC Column: RTX-VRX ID: 0.25 (mm) Dilution Factor: 1.0

Soil Extract Volume:_____(uL) Soil Aliquot Volume: _____(uL)

CONCENTRATION UNITS: (ug/L or ug/Kg) UG/KG

CAS NO.	COMPOUND	MDL	RL	CONC	Q
67-64-1	Acetone	4.0	20		U
71-43-2	Benzene	0.93	20		U
75-27-4	Bromodichloromethane	0.59	20		U
75-25-2	Bromoform	2.0	20		U
74-83-9	Bromomethane	1.4	20		U
78-93-3	2-Butanone	2.8	20		U
75-15-0	Carbon disulfide	2.6	20		U
56-23-5	Carbon tetrachloride	1.7	20		U
108-90-7	Chlorobenzene	0.67	20		U
75-00-3	Chloroethane	2.2	20		U
67-66-3	Chloroform	1.1	20		U
74-87-3	Chloromethane	1.0	20		U
110-82-7	Cyclohexane	1.1	20		U
124-48-1	Dibromochloromethane	0.67	20		U
96-12-8	1,2-Dibromo-3-chloropropane	2.4	9.9		~~U~~ UJ IS
106-93-4	1,2-Dibromoethane	0.85	20		U
95-50-1	1,2-Dichlorobenzene	0.73	20		~~U~~ UJ IS
541-73-1	1,3-Dichlorobenzene	1.6	20		U
106-46-7	1,4-Dichlorobenzene	1.1	20		U
75-71-8	Dichlorodifluoromethane	2.2	20		~~U~~ UJ CA
75-34-3	1,1-Dichloroethane	1.1	20		U
107-06-2	1,2-Dichloroethane	0.91	20		U
75-35-4	1,1-Dichloroethene	2.4	20		U
156-59-2	cis-1,2-Dichloroethene	2.4	20		U
156-60-5	trans-1,2-Dichloroethene	2.2	20		U
78-87-5	1,2-Dichloropropane	0.91	20		U
10061-01-5	cis-1,3-Dichloropropene	0.99	20		U
10061-02-6	trans-1,3-Dichloropropene	0.63	20		U
100-41-4	Ethylbenzene	1.5	20		U
591-78-6	2-Hexanone	4.5	20		U
98-82-8	Isopropylbenzene	1.7	20		U
79-20-9	Methyl acetate	3.2	20		U
75-09-2	Methylene chloride	1.2	20		U
108-87-2	Methyl cyclohexane	0.59	20		U
1634-04-4	Methyl tert-butyl ether	0.63	20		U
108-10-1	4-Methyl-2-pentanone	1.1	20		U
100-42-5	Styrene	0.69	20		U
79-34-5	1,1,2,2-Tetrachloroethane	0.85	20		~~U~~ UJ IS
127-18-4	Tetrachloroethene	1.9	20		U

FORM I VOA

2/27/09

FORM 1
VOLATILE ORGANICS ANALYSIS DATA SHEET

CLIENT SAMPLE NO. 7

MR08-SS083-08D

Lab Name: EMPIRICAL LABS Contract: CH2MHILL

Lab Code: NA Case No.: NA SAS No.: NA SDG No.: LEJEUNE026

Matrix: (soil/water) SOIL Lab Sample ID: 0812109-07

Sample wt/vol: 3.0 (g/mL) G Lab File ID: 1210907A

Level: (low/med) LOW Date Sampled: 12/07/08 10:20

% Moisture: not dec. 16 Date Analyzed: 12/19/08 23:01 use reanalysis

GC Column: RTX-VRX ID: 0.25 (mm) Dilution Factor: 1.0

Soil Extract Volume:_____(uL) Soil Aliquot Volume: _____(uL)

CONCENTRATION UNITS: (ug/L or ug/Kg) UG/KG

CAS NO.	COMPOUND	MDL	RL	CONC	Q
108-88-3	Toluene	1.7	20		U
120-82-1	1,2,4-Trichlorobenzene	0.36	20		~~U~~ UJ JSL
71-55-6	1,1,1-Trichloroethane	1.8	20		U
79-00-5	1,1,2-Trichloroethane	0.69	20		U
79-01-6	Trichloroethene	1.7	20		U
76-13-1	Trichlorotrifluoroethane	1.1	20		U
75-69-4	Trichlorofluoromethane	1.9	20		U
75-01-4	Vinyl chloride	2.2	20		U
1330-20-7	Xylene(total)	1.4	20		U

DW
2/27/09

FORM 1
VOLATILE ORGANICS ANALYSIS DATA SHEET

CLIENT SAMPLE NO.

MR08-SS083-08DR

Lab Name: EMPIRICAL LABS Contract: CH2MHILL

Lab Code: NA Case No.: NA SAS No.: NA SDG No.: LEJEUNE026

Matrix: (soil/water) SOIL Lab Sample ID: 0812109-07R

Sample wt/vol: 3.0 (g/mL) G Lab File ID: 1210907B

Level: (low/med) LOW Date Sampled: 12/07/08 10:20

% Moisture: not dec. 16 Date Analyzed: 12/25/08 06:10

GC Column: RTX-VRX ID: 0.25 (mm) Dilution Factor: 1.0

Soil Extract Volume:_____(uL) Soil Aliquot Volume: _____(uL)

CONCENTRATION UNITS: (ug/L or ug/Kg) UG/KG

CAS NO.	COMPOUND	MDL	RL	CONC	Q
67-64-1	Acetone	3.9	19	580	J JSL
71-43-2	Benzene	0.92	19		U R
75-27-4	Bromodichloromethane	0.58	19		U
75-25-2	Bromoform	1.9	19		U
74-83-9	Bromomethane	1.4	19		U
78-93-3	2-Butanone	2.7	19		U
75-15-0	Carbon disulfide	2.5	19		U
56-23-5	Carbon tetrachloride	1.7	19		U
108-90-7	Chlorobenzene	0.66	19		U
75-00-3	Chloroethane	2.1	19		U
67-66-3	Chloroform	1.1	19		U
74-87-3	Chloromethane	1.0	19		U
110-82-7	Cyclohexane	1.0	19		U
124-48-1	Dibromochloromethane	0.66	19		U
96-12-8	1,2-Dibromo-3-chloropropane	2.3	9.7		U
106-93-4	1,2-Dibromoethane	0.84	19		U
95-50-1	1,2-Dichlorobenzene	0.72	19		U
541-73-1	1,3-Dichlorobenzene	1.6	19		U
106-46-7	1,4-Dichlorobenzene	1.1	19		U
75-71-8	Dichlorodifluoromethane	2.1	19		U
75-34-3	1,1-Dichloroethane	1.0	19		U
107-06-2	1,2-Dichloroethane	0.90	19		U
75-35-4	1,1-Dichloroethene	2.3	19		U
156-59-2	cis-1,2-Dichloroethene	2.3	19		U
156-60-5	trans-1,2-Dichloroethene	2.1	19		U
78-87-5	1,2-Dichloropropane	0.90	19		U
10061-01-5	cis-1,3-Dichloropropene	0.97	19		U
10061-02-6	trans-1,3-Dichloropropene	0.62	19		U
100-41-4	Ethylbenzene	1.5	19		U
591-78-6	2-Hexanone	4.5	19		U
98-82-8	Isopropylbenzene	1.7	19		U
79-20-9	Methyl acetate	3.1	19	170	~~X~~ J
75-09-2	Methylene chloride	1.2	19	194 ~~5.3~~	~~JB~~ R ISL
108-87-2	Methyl cyclohexane	0.58	19		U R ISL
1634-04-4	Methyl tert-butyl ether	0.62	19		U
108-10-1	4-Methyl-2-pentanone	1.1	19		U
100-42-5	Styrene	0.68	19		U
79-34-5	1,1,2,2-Tetrachloroethane	0.84	19		U
127-18-4	Tetrachloroethene	1.9	19		U

FORM I VOA

kw 2/27/09

FORM 1
VOLATILE ORGANICS ANALYSIS DATA SHEET

CLIENT SAMPLE NO. 7RE

MR08-SS083-08DR

Lab Name: EMPIRICAL LABS Contract: CH2MHILL

Lab Code: NA Case No.: NA SAS No.: NA SDG No.: LEJEUNE026

Matrix: (soil/water) SOIL Lab Sample ID: 0812109-07R

Sample wt/vol: 3.0 (g/mL) G Lab File ID: 1210907B

Level: (low/med) LOW Date Sampled: 12/07/08 10:20

% Moisture: not dec. 16 Date Analyzed: 12/25/08 06:10

GC Column: RTX-VRX ID: 0.25 (mm) Dilution Factor: 1.0

Soil Extract Volume:_____(uL) Soil Aliquot Volume: _____(uL)

CONCENTRATION UNITS: (ug/L or ug/Kg) UG/KG

CAS NO.	COMPOUND	MDL	RL	CONC	Q
108-88-3	Toluene	1.7	19	3.6	~~U~~ J
120-82-1	1,2,4-Trichlorobenzene	0.35	19		U R
71-55-6	1,1,1-Trichloroethane	1.8	19		U
79-00-5	1,1,2-Trichloroethane	0.68	19		U
79-01-6	Trichloroethene	1.6	19		U
76-13-1	Trichlorotrifluoroethane	1.1	19		U
75-69-4	Trichlorofluoromethane	1.8	19		U
75-01-4	Vinyl chloride	2.1	19		U
1330-20-7	Xylene(total)	1.4	19		U

#51

FORM I VOA

lw
2/27/09

FORM 1
VOLATILE ORGANICS ANALYSIS DATA SHEET

CLIENT SAMPLE NO. 8

MR08-IS08
3-6-7-08D

Lab Name: EMPIRICAL LABS Contract: CH2MHILL

Lab Code: NA Case No.: NA SAS No.: NA SDG No.: LEJEUNE026

Matrix: (soil/water) SOIL Lab Sample ID: 0812109-08

Sample wt/vol: 3.2 (g/mL) G Lab File ID: 1210908A

Level: (low/med) LOW Date Sampled: 12/07/08 10:30

% Moisture: not dec. 4 Date Analyzed: 12/20/08 05:21

GC Column: RTX-VRX ID: 0.25 (mm) Dilution Factor: 1.0

Soil Extract Volume:_____(uL) Soil Aliquot Volume: _____(uL)

CONCENTRATION UNITS: (ug/L or ug/Kg) UG/KG

CAS NO.	COMPOUND	MDL	RL	CONC	Q
67-64-1	Acetone	3.3	16	164 ~~8.6~~	~~J~~
71-43-2	Benzene	0.77	16		U
75-27-4	Bromodichloromethane	0.49	16		U
75-25-2	Bromoform	1.6	16		U
74-83-9	Bromomethane	1.2	16		U
78-93-3	2-Butanone	2.3	16		U
75-15-0	Carbon disulfide	2.1	16		U
56-23-5	Carbon tetrachloride	1.4	16		U
108-90-7	Chlorobenzene	0.56	16		U
75-00-3	Chloroethane	1.8	16		U
67-66-3	Chloroform	0.90	16		U
74-87-3	Chloromethane	0.85	16		U
110-82-7	Cyclohexane	0.88	16		U
124-48-1	Dibromochloromethane	0.56	16		U
96-12-8	1,2-Dibromo-3-chloropropane	2.0	8.2		U
106-93-4	1,2-Dibromoethane	0.70	16		U
95-50-1	1,2-Dichlorobenzene	0.60	16		U
541-73-1	1,3-Dichlorobenzene	1.4	16		U
106-46-7	1,4-Dichlorobenzene	0.90	16		U
75-71-8	Dichlorodifluoromethane	1.8	16		~~U~~ UJ CCH
75-34-3	1,1-Dichloroethane	0.88	16		U
107-06-2	1,2-Dichloroethane	0.75	16		U
75-35-4	1,1-Dichloroethene	2.0	16		U
156-59-2	cis-1,2-Dichloroethene	2.0	16		U
156-60-5	trans-1,2-Dichloroethene	1.8	16		U
78-87-5	1,2-Dichloropropane	0.75	16		U
10061-01-5	cis-1,3-Dichloropropene	0.82	16		U
10061-02-6	trans-1,3-Dichloropropene	0.52	16		U
100-41-4	Ethylbenzene	1.2	16		U
591-78-6	2-Hexanone	3.8	16		U
98-82-8	Isopropylbenzene	1.4	16		U
79-20-9	Methyl acetate	2.6	16		U
75-09-2	Methylene chloride	1.0	16		U
108-87-2	Methyl cyclohexane	0.49	16		U
1634-04-4	Methyl tert-butyl ether	0.52	16		U
108-10-1	4-Methyl-2-pentanone	0.95	16		U
100-42-5	Styrene	0.57	16		U
79-34-5	1,1,2,2-Tetrachloroethane	0.70	16		U
127-18-4	Tetrachloroethene	1.6	16		U

Bi

FORM I VOA

lw 2/27/09

FORM 1
VOLATILE ORGANICS ANALYSIS DATA SHEET

CLIENT SAMPLE NO. 8

MR08-IS08
3-6-7-08D

Lab Name: EMPIRICAL LABS Contract: CH2MHILL

Lab Code: NA Case No.: NA SAS No.: NA SDG No.: LEJEUNE026

Matrix: (soil/water) SOIL Lab Sample ID: 0812109-08

Sample wt/vol: 3.2 (g/mL) G Lab File ID: 1210908A

Level: (low/med) LOW Date Sampled: 12/07/08 10:30

% Moisture: not dec. 4 Date Analyzed: 12/20/08 05:21

GC Column: RTX-VRX ID: 0.25 (mm) Dilution Factor: 1.0

Soil Extract Volume:_____(uL) Soil Aliquot Volume: _____(uL)

CONCENTRATION UNITS: (ug/L or ug/Kg) UG/KG

CAS NO.	COMPOUND	MDL	RL	CONC	Q
108-88-3	Toluene	1.4	16		U
120-82-1	1,2,4-Trichlorobenzene	0.29	16		U
71-55-6	1,1,1-Trichloroethane	1.5	16		U
79-00-5	1,1,2-Trichloroethane	0.57	16		U
79-01-6	Trichloroethene	1.4	16		U
76-13-1	Trichlorotrifluoroethane	0.90	16		U
75-69-4	Trichlorofluoromethane	1.6	16		U
75-01-4	Vinyl chloride	1.8	16		~~U~~ UJ BS1
1330-20-7	Xylene(total)	1.1	16		U

FORM I VOA

KW
2/27/09

FORM 1
VOLATILE ORGANICS ANALYSIS DATA SHEET

CLIENT SAMPLE NO. 9

MR08-SS084-08D

Lab Name: EMPIRICAL LABS Contract: CH2MHILL

Lab Code: NA Case No.: NA SAS No.: NA SDG No.: LEJEUNE026

Matrix: (soil/water) SOIL Lab Sample ID: 0812109-09

Sample wt/vol: 3.5 (g/mL) G Lab File ID: 1210909A

Level: (low/med) LOW Date Sampled: 12/07/08 10:50

% Moisture: not dec. 13 Date Analyzed: 12/20/08 06:01

GC Column: RTX-VRX ID: 0.25 (mm) Dilution Factor: 1.0

Soil Extract Volume:_____(uL) Soil Aliquot Volume: _____(uL)

CONCENTRATION UNITS: (ug/L or ug/Kg) UG/KG

CAS NO.	COMPOUND	MDL	RL	CONC	Q
67-64-1	Acetone	3.3	16	210	
71-43-2	Benzene	0.77	16		U
75-27-4	Bromodichloromethane	0.49	16		U
75-25-2	Bromoform	1.6	16		U
74-83-9	Bromomethane	1.2	16		U
78-93-3	2-Butanone	2.3	16	2.4	J
75-15-0	Carbon disulfide	2.1	16		U
56-23-5	Carbon tetrachloride	1.4	16		U
108-90-7	Chlorobenzene	0.56	16		U
75-00-3	Chloroethane	1.8	16		U
67-66-3	Chloroform	0.90	16		U
74-87-3	Chloromethane	0.86	16		U
110-82-7	Cyclohexane	0.89	16		U
124-48-1	Dibromochloromethane	0.56	16		U
96-12-8	1,2-Dibromo-3-chloropropane	2.0	8.2		UJ IS
106-93-4	1,2-Dibromoethane	0.71	16		U
95-50-1	1,2-Dichlorobenzene	0.61	16		UJ IS
541-73-1	1,3-Dichlorobenzene	1.4	16		U
106-46-7	1,4-Dichlorobenzene	0.90	16		U
75-71-8	Dichlorodifluoromethane	1.8	16		UJ CH
75-34-3	1,1-Dichloroethane	0.89	16		U
107-06-2	1,2-Dichloroethane	0.76	16		U
75-35-4	1,1-Dichloroethene	2.0	16		U
156-59-2	cis-1,2-Dichloroethene	2.0	16		U
156-60-5	trans-1,2-Dichloroethene	1.8	16		U
78-87-5	1,2-Dichloropropane	0.76	16		U
10061-01-5	cis-1,3-Dichloropropene	0.82	16		U
10061-02-6	trans-1,3-Dichloropropene	0.53	16		U
100-41-4	Ethylbenzene	1.2	16		U
591-78-6	2-Hexanone	3.8	16		U
98-82-8	Isopropylbenzene	1.4	16		U
79-20-9	Methyl acetate	2.6	16		U
75-09-2	Methylene chloride	1.0	16		U
108-87-2	Methyl cyclohexane	0.49	16		U
1634-04-4	Methyl tert-butyl ether	0.53	16		U
108-10-1	4-Methyl-2-pentanone	0.95	16		U
100-42-5	Styrene	0.58	16		U
79-34-5	1,1,2,2-Tetrachloroethane	0.71	16		UJ IS
127-18-4	Tetrachloroethene	1.6	16		U

lw 2/27/09

FORM 1
VOLATILE ORGANICS ANALYSIS DATA SHEET

CLIENT SAMPLE NO. 9

MR08-SS084-08D

Lab Name: EMPIRICAL LABS Contract: CH2MHILL

Lab Code: NA Case No.: NA SAS No.: NA SDG No.: LEJEUNE026

Matrix: (soil/water) SOIL Lab Sample ID: 0812109-09

Sample wt/vol: 3.5 (g/mL) G Lab File ID: 1210909A

Level: (low/med) LOW Date Sampled: 12/07/08 10:50

% Moisture: not dec. 13 Date Analyzed: 12/20/08 06:01

GC Column: RTX-VRX ID: 0.25 (mm) Dilution Factor: 1.0

Soil Extract Volume:_____(uL) Soil Aliquot Volume: _____(uL)

CONCENTRATION UNITS: (ug/L or ug/Kg) UG/KG

CAS NO.	COMPOUND	MDL	RL	CONC	Q
108-88-3	Toluene	1.4	16		U
120-82-1	1,2,4-Trichlorobenzene	0.30	16		~~U~~ UJ I SL
71-55-6	1,1,1-Trichloroethane	1.5	16		U
79-00-5	1,1,2-Trichloroethane	0.58	16		U
79-01-6	Trichloroethene	1.4	16		U
76-13-1	Trichlorotrifluoroethane	0.90	16		U
75-69-4	Trichlorofluoromethane	1.6	16		U
75-01-4	Vinyl chloride	1.8	16		~~U~~ UJ BSL
1330-20-7	Xylene(total)	1.2	16		U

FORM I VOA

LW 2/27/09

FORM 1
VOLATILE ORGANICS ANALYSIS DATA SHEET

CLIENT SAMPLE NO.

MR08-IS08
4-4-5-08D

10

Lab Name: EMPIRICAL LABS Contract: CH2MHILL

Lab Code: NA Case No.: NA SAS No.: NA SDG No.: LEJEUNE026

Matrix: (soil/water) SOIL Lab Sample ID: 0812109-10

Sample wt/vol: 2.3 (g/mL) G Lab File ID: 1210910A

Level: (low/med) LOW Date Sampled: 12/07/08 11:00

% Moisture: not dec. 13 Date Analyzed: 12/20/08 06:40

GC Column: RTX-VRX ID: 0.25 (mm) Dilution Factor: 1.0

Soil Extract Volume:_____(uL) Soil Aliquot Volume: _____(uL)

CONCENTRATION UNITS: (ug/L or ug/Kg) UG/KG

CAS NO.	COMPOUND	MDL	RL	CONC	Q
67-64-1	Acetone	4.9	24	24u 13 ~~J~~	B
71-43-2	Benzene	1.2	24		U
75-27-4	Bromodichloromethane	0.74	24		U
75-25-2	Bromoform	2.4	24		U
74-83-9	Bromomethane	1.8	24		U
78-93-3	2-Butanone	3.4	24		U
75-15-0	Carbon disulfide	3.2	24		U
56-23-5	Carbon tetrachloride	2.2	24		U
108-90-7	Chlorobenzene	0.83	24		U
75-00-3	Chloroethane	2.7	24		U
67-66-3	Chloroform	1.3	24		U
74-87-3	Chloromethane	1.3	24		U
110-82-7	Cyclohexane	1.3	24		U
124-48-1	Dibromochloromethane	0.83	24		U
96-12-8	1,2-Dibromo-3-chloropropane	2.9	12		U
106-93-4	1,2-Dibromoethane	1.0	24		U
95-50-1	1,2-Dichlorobenzene	0.91	24		U
541-73-1	1,3-Dichlorobenzene	2.1	24		U
106-46-7	1,4-Dichlorobenzene	1.3	24		U
75-71-8	Dichlorodifluoromethane	2.7	24		~~U~~ UJ CC
75-34-3	1,1-Dichloroethane	1.3	24		U
107-06-2	1,2-Dichloroethane	1.1	24		U
75-35-4	1,1-Dichloroethene	2.9	24		U
156-59-2	cis-1,2-Dichloroethene	2.9	24		U
156-60-5	trans-1,2-Dichloroethene	2.7	24		U
78-87-5	1,2-Dichloropropane	1.1	24		U
10061-01-5	cis-1,3-Dichloropropene	1.2	24		U
10061-02-6	trans-1,3-Dichloropropene	0.78	24		U
100-41-4	Ethylbenzene	1.8	24		U
591-78-6	2-Hexanone	5.6	24		U
98-82-8	Isopropylbenzene	2.2	24		U
79-20-9	Methyl acetate	3.9	24		U
75-09-2	Methylene chloride	1.5	24		U
108-87-2	Methyl cyclohexane	0.74	24		U
1634-04-4	Methyl tert-butyl ether	0.78	24		U
108-10-1	4-Methyl-2-pentanone	1.4	24		U
100-42-5	Styrene	0.86	24		U
79-34-5	1,1,2,2-Tetrachloroethane	1.0	24		U
127-18-4	Tetrachloroethene	2.4	24		U

LW
2127609

FORM 1
VOLATILE ORGANICS ANALYSIS DATA SHEET

CLIENT SAMPLE NO. 10

MR08-IS08
4-4-5-08D

Lab Name: EMPIRICAL LABS Contract: CH2MHILL

Lab Code: NA Case No.: NA SAS No.: NA SDG No.: LEJEUNE026

Matrix: (soil/water) SOIL Lab Sample ID: 0812109-10

Sample wt/vol: 2.3 (g/mL) G Lab File ID: 1210910A

Level: (low/med) LOW Date Sampled: 12/07/08 11:00

% Moisture: not dec. 13 Date Analyzed: 12/20/08 06:40

GC Column: RTX-VRX ID: 0.25 (mm) Dilution Factor: 1.0

Soil Extract Volume:_____(uL) Soil Aliquot Volume: _____(uL)

CONCENTRATION UNITS: (ug/L or ug/Kg) UG/KG

CAS NO.	COMPOUND	MDL	RL	CONC	Q
108-88-3	Toluene	2.1	24		U
120-82-1	1,2,4-Trichlorobenzene	0.44	24		U
71-55-6	1,1,1-Trichloroethane	2.2	24		U
79-00-5	1,1,2-Trichloroethane	0.86	24		U
79-01-6	Trichloroethene	2.1	24		U
76-13-1	Trichlorotrifluoroethane	1.3	24		U
75-69-4	Trichlorofluoromethane	2.3	24		U
75-01-4	Vinyl chloride	2.7	24		~~U~~ UJ
1330-20-7	Xylene(total)	1.7	24		U

JLW
2/27/09

FORM 1
VOLATILE ORGANICS ANALYSIS DATA SHEET

CLIENT SAMPLE NO.

11

MR08-SS085-08D

Lab Name: EMPIRICAL LABS Contract: CH2MHILL

Lab Code: NA Case No.: NA SAS No.: NA SDG No.: LEJEUNE026

Matrix: (soil/water) SOIL Lab Sample ID: 0812109-11

Sample wt/vol: 3.7 (g/mL) G Lab File ID: 1210911A

Level: (low/med) LOW Date Sampled: 12/07/08 11:25

% Moisture: not dec. 20 Date Analyzed: 12/20/08 07:19 Use reanalysis

GC Column: RTX-VRX ID: 0.25 (mm) Dilution Factor: 1.0

Soil Extract Volume:_____(uL) Soil Aliquot Volume:_____(uL)

CONCENTRATION UNITS: (ug/L or ug/Kg) UG/KG

CAS NO.	COMPOUND	MDL	RL	CONC	Q
67-64-1	Acetone	3.4	17	300	
71-43-2	Benzene	0.79	17		U
75-27-4	Bromodichloromethane	0.51	17		U
75-25-2	Bromoform	1.7	17		U
74-83-9	Bromomethane	1.2	17		U
78-93-3	2-Butanone	2.4	17	4.2	J
75-15-0	Carbon disulfide	2.2	17		U
56-23-5	Carbon tetrachloride	1.5	17		U
108-90-7	Chlorobenzene	0.57	17		U
75-00-3	Chloroethane	1.9	17		U
67-66-3	Chloroform	0.93	17		U
74-87-3	Chloromethane	0.88	17		U
110-82-7	Cyclohexane	0.91	17		U
124-48-1	Dibromochloromethane	0.57	17		U
96-12-8	1,2-Dibromo-3-chloropropane	2.0	8.4		~~U~~ UJ IS
106-93-4	1,2-Dibromoethane	0.73	17		U
95-50-1	1,2-Dichlorobenzene	0.62	17		U UJ IS
541-73-1	1,3-Dichlorobenzene	1.4	17		U
106-46-7	1,4-Dichlorobenzene	0.93	17		U
75-71-8	Dichlorodifluoromethane	1.9	17		~~U~~ UJ CC
75-34-3	1,1-Dichloroethane	0.91	17		U
107-06-2	1,2-Dichloroethane	0.78	17		U
75-35-4	1,1-Dichloroethene	2.0	17		U
156-59-2	cis-1,2-Dichloroethene	2.0	17		U
156-60-5	trans-1,2-Dichloroethene	1.9	17		U
78-87-5	1,2-Dichloropropane	0.78	17		U
10061-01-5	cis-1,3-Dichloropropene	0.84	17		U
10061-02-6	trans-1,3-Dichloropropene	0.54	17		U
100-41-4	Ethylbenzene	1.3	17		U
591-78-6	2-Hexanone	3.9	17		U
98-82-8	Isopropylbenzene	1.5	17		U
79-20-9	Methyl acetate	2.7	17		U
75-09-2	Methylene chloride	1.0	17		U
108-87-2	Methyl cyclohexane	0.51	17		U
1634-04-4	Methyl tert-butyl ether	0.54	17		U
108-10-1	4-Methyl-2-pentanone	0.98	17		U
100-42-5	Styrene	0.59	17		U
79-34-5	1,1,2,2-Tetrachloroethane	0.73	17		~~U~~ UJ IS
127-18-4	Tetrachloroethene	1.6	17		U

RE

FORM I VOA

lw 2/27/09

FORM 1
VOLATILE ORGANICS ANALYSIS DATA SHEET

CLIENT SAMPLE NO. 11

MR08-SS085-08D

Lab Name: EMPIRICAL LABS Contract: CH2MHILL

Lab Code: NA Case No.: NA SAS No.: NA SDG No.: LEJEUNE026

Matrix: (soil/water) SOIL Lab Sample ID: 0812109-11

Sample wt/vol: 3.7 (g/mL) G Lab File ID: 1210911A

Level: (low/med) LOW Date Sampled: 12/07/08 11:25

% Moisture: not dec. 20 Date Analyzed: 12/20/08 07:19

GC Column: RTX-VRX ID: 0.25 (mm) Dilution Factor: 1.0

Soil Extract Volume:_____(uL) Soil Aliquot Volume:_____(uL)

CONCENTRATION UNITS: (ug/L or ug/Kg) UG/KG

CAS NO.	COMPOUND	MDL	RL	CONC	Q
108-88-3	Toluene	1.4	17		U
120-82-1	1,2,4-Trichlorobenzene	0.30	17		~~U~~ UJ IS
71-55-6	1,1,1-Trichloroethane	1.5	17		U
79-00-5	1,1,2-Trichloroethane	0.59	17		U
79-01-6	Trichloroethene	1.4	17		U
76-13-1	Trichlorotrifluoroethane	0.93	17		U
75-69-4	Trichlorofluoromethane	1.6	17		U
75-01-4	Vinyl chloride	1.9	17		~~U~~ UJ BSI
1330-20-7	Xylene(total)	1.2	17		U

Use reanalys

R

FORM I VOA

MW 2/27/09

FORM 1
VOLATILE ORGANICS ANALYSIS DATA SHEET

CLIENT SAMPLE NO.

MR08-SS085-08DR

1 RE

Lab Name: EMPIRICAL LABS Contract: CH2MHILL

Lab Code: NA Case No.: NA SAS No.: NA SDG No.: LEJEUNE026

Matrix: (soil/water) SOIL Lab Sample ID: 0812109-11R

Sample wt/vol: 4.2 (g/mL) G Lab File ID: 1210911B

Level: (low/med) LOW Date Sampled: 12/07/08 11:25

% Moisture: not dec. 20 Date Analyzed: 12/25/08 06:49

GC Column: RTX-VRX ID: 0.25 (mm) Dilution Factor: 1.0

Soil Extract Volume:_____(uL) Soil Aliquot Volume: _____(uL)

CONCENTRATION UNITS: (ug/L or ug/Kg) UG/KG

CAS NO.	COMPOUND	MDL	RL	CONC	Q	
67-64-1	Acetone	3.0	15	490	J	HT
71-43-2	Benzene	0.71	15		U UJ	
75-27-4	Bromodichloromethane	0.45	15		U	
75-25-2	Bromoform	1.5	15		U	
74-83-9	Bromomethane	1.1	15		U	
78-93-3	2-Butanone	2.1	15	11	J UJ	
75-15-0	Carbon disulfide	2.0	15		U UJ	
56-23-5	Carbon tetrachloride	1.3	15		U	
108-90-7	Chlorobenzene	0.51	15		U	
75-00-3	Chloroethane	1.7	15		U	
67-66-3	Chloroform	0.83	15	15 UJ ~~0.86~~	J HT	BL
74-87-3	Chloromethane	0.79	15		U UJ	H
110-82-7	Cyclohexane	0.82	15		U	
124-48-1	Dibromochloromethane	0.51	15		U	
96-12-8	1,2-Dibromo-3-chloropropane	1.8	7.6		U	
106-93-4	1,2-Dibromoethane	0.65	15		U	
95-50-1	1,2-Dichlorobenzene	0.56	15		U	
541-73-1	1,3-Dichlorobenzene	1.3	15		U	
106-46-7	1,4-Dichlorobenzene	0.83	15		U	
75-71-8	Dichlorodifluoromethane	1.7	15		U	
75-34-3	1,1-Dichloroethane	0.82	15		U	
107-06-2	1,2-Dichloroethane	0.70	15		U	
75-35-4	1,1-Dichloroethene	1.8	15		U	
156-59-2	cis-1,2-Dichloroethene	1.8	15		U	
156-60-5	trans-1,2-Dichloroethene	1.7	15		U	
78-87-5	1,2-Dichloropropane	0.70	15		U	
10061-01-5	cis-1,3-Dichloropropene	0.76	15		U	
10061-02-6	trans-1,3-Dichloropropene	0.48	15		U	
100-41-4	Ethylbenzene	1.1	15		U	
591-78-6	2-Hexanone	3.5	15		U	
98-82-8	Isopropylbenzene	1.3	15		U	
79-20-9	Methyl acetate	2.4	15	100	~~X~~ J	
75-09-2	Methylene chloride	0.94	15	15 UJ ~~2.0~~	JB HT	B
108-87-2	Methyl cyclohexane	0.45	15		U UJ	H
1634-04-4	Methyl tert-butyl ether	0.48	15		U	
108-10-1	4-Methyl-2-pentanone	0.88	15		U	
100-42-5	Styrene	0.53	15		U	
79-34-5	1,1,2,2-Tetrachloroethane	0.65	15		U	
127-18-4	Tetrachloroethene	1.5	15		U	

FORM I VOA

LW
2/27/09

FORM 1
VOLATILE ORGANICS ANALYSIS DATA SHEET

CLIENT SAMPLE NO.

MR08-SS085-08DR

1 1RE

Lab Name: EMPIRICAL LABS Contract: CH2MHILL

Lab Code: NA Case No.: NA SAS No.: NA SDG No.: LEJEUNE026

Matrix: (soil/water) SOIL Lab Sample ID: 0812109-11R

Sample wt/vol: 4.2 (g/mL) G Lab File ID: 1210911B

Level: (low/med) LOW Date Sampled: 12/07/08 11:25

% Moisture: not dec. 20 Date Analyzed: 12/25/08 06:49

GC Column: RTX-VRX ID: 0.25 (mm) Dilution Factor: 1.0

Soil Extract Volume:_____(uL) Soil Aliquot Volume: _____(uL)

CONCENTRATION UNITS: (ug/L or ug/Kg) UG/KG

CAS NO.	COMPOUND	MDL	RL	CONC	Q
108-88-3	Toluene	1.3	15		U UJ
120-82-1	1,2,4-Trichlorobenzene	0.27	15		U
71-55-6	1,1,1-Trichloroethane	1.4	15		U
79-00-5	1,1,2-Trichloroethane	0.53	15		U
79-01-6	Trichloroethene	1.3	15		U
76-13-1	Trichlorotrifluoroethane	0.83	15		U
75-69-4	Trichlorofluoromethane	1.4	15		U
75-01-4	Vinyl chloride	1.7	15		U
1330-20-7	Xylene(total)	1.0	15		U

H

FORM I VOA

lw
2/27/09

FORM 1
VOLATILE ORGANICS ANALYSIS DATA SHEET

CLIENT SAMPLE NO.

MR08-IS08
5-1-2-08D

12

Lab Name: EMPIRICAL LABS Contract: CH2MHILL

Lab Code: NA Case No.: NA SAS No.: NA SDG No.: LEJEUNE026

Matrix: (soil/water) SOIL Lab Sample ID: 0812109-12

Sample wt/vol: 3.9 (g/mL) G Lab File ID: 1210912A

Level: (low/med) LOW Date Sampled: 12/07/08 11:45

% Moisture: not dec. 9 Date Analyzed: 12/20/08 07:58

GC Column: RTX-VRX ID: 0.25 (mm) Dilution Factor: 1.0

Soil Extract Volume:_____(uL) Soil Aliquot Volume: _____(uL)

CONCENTRATION UNITS: (ug/L or ug/Kg) UG/KG

CAS NO.	COMPOUND	MDL	RL	CONC	Q
67-64-1	Acetone	2.8	14	14u ~~12 J~~	U
71-43-2	Benzene	0.66	14		U
75-27-4	Bromodichloromethane	0.42	14		U
75-25-2	Bromoform	1.4	14		U
74-83-9	Bromomethane	1.0	14		U
78-93-3	2-Butanone	2.0	14		U
75-15-0	Carbon disulfide	1.8	14		U
56-23-5	Carbon tetrachloride	1.2	14		U
108-90-7	Chlorobenzene	0.48	14		U
75-00-3	Chloroethane	1.6	14		U
67-66-3	Chloroform	0.78	14		U
74-87-3	Chloromethane	0.74	14		U
110-82-7	Cyclohexane	0.76	14		U
124-48-1	Dibromochloromethane	0.48	14		U
96-12-8	1,2-Dibromo-3-chloropropane	1.7	7.1		U
106-93-4	1,2-Dibromoethane	0.61	14		U
95-50-1	1,2-Dichlorobenzene	0.52	14		U
541-73-1	1,3-Dichlorobenzene	1.2	14		U
106-46-7	1,4-Dichlorobenzene	0.78	14		U
75-71-8	Dichlorodifluoromethane	1.6	14		~~U~~ UJ CH
75-34-3	1,1-Dichloroethane	0.76	14		U
107-06-2	1,2-Dichloroethane	0.65	14		U
75-35-4	1,1-Dichloroethene	1.7	14		U
156-59-2	cis-1,2-Dichloroethene	1.7	14		U
156-60-5	trans-1,2-Dichloroethene	1.6	14		U
78-87-5	1,2-Dichloropropane	0.65	14		U
10061-01-5	cis-1,3-Dichloropropene	0.71	14		U
10061-02-6	trans-1,3-Dichloropropene	0.45	14		U
100-41-4	Ethylbenzene	1.1	14		U
591-78-6	2-Hexanone	3.2	14		U
98-82-8	Isopropylbenzene	1.2	14		U
79-20-9	Methyl acetate	2.3	14		U
75-09-2	Methylene chloride	0.88	14		U
108-87-2	Methyl cyclohexane	0.42	14		U
1634-04-4	Methyl tert-butyl ether	0.45	14		U
108-10-1	4-Methyl-2-pentanone	0.82	14		U
100-42-5	Styrene	0.50	14		U
79-34-5	1,1,2,2-Tetrachloroethane	0.61	14		U
127-18-4	Tetrachloroethene	1.4	14		U

B

lw 2/27/09

FORM 1
VOLATILE ORGANICS ANALYSIS DATA SHEET

CLIENT SAMPLE NO.

MR08-IS08
5-1-2-08D

12

Lab Name: EMPIRICAL LABS Contract: CH2MHILL

Lab Code: NA Case No.: NA SAS No.: NA SDG No.: LEJEUNE026

Matrix: (soil/water) SOIL Lab Sample ID: 0812109-12

Sample wt/vol: 3.9 (g/mL) G Lab File ID: 1210912A

Level: (low/med) LOW Date Sampled: 12/07/08 11:45

% Moisture: not dec. 9 Date Analyzed: 12/20/08 07:58

GC Column: RTX-VRX ID: 0.25 (mm) Dilution Factor: 1.0

Soil Extract Volume:_____(uL) Soil Aliquot Volume: _____(uL)

CONCENTRATION UNITS: (ug/L or ug/Kg) UG/KG

CAS NO.	COMPOUND	MDL	RL	CONC	Q
108-88-3	Toluene	1.2	14		U
120-82-1	1,2,4-Trichlorobenzene	0.25	14		U
71-55-6	1,1,1-Trichloroethane	1.3	14		U
79-00-5	1,1,2-Trichloroethane	0.50	14		U
79-01-6	Trichloroethene	1.2	14		U
76-13-1	Trichlorotrifluoroethane	0.78	14		U
75-69-4	Trichlorofluoromethane	1.3	14		U
75-01-4	Vinyl chloride	1.6	14		~~U~~ UJ BSL
1330-20-7	Xylene(total)	0.99	14		U

FORM I VOA

2/27/09

FORM 1
VOLATILE ORGANICS ANALYSIS DATA SHEET

CLIENT SAMPLE NO. 13

MR08-SS107-08D

Lab Name: EMPIRICAL LABS Contract: CH2MHILL

Lab Code: NA Case No.: NA SAS No.: NA SDG No.: LEJEUNE026

Matrix: (soil/water) SOIL Lab Sample ID: 0812109-13

Sample wt/vol: 3.8 (g/mL) G Lab File ID: 1210913A

Level: (low/med) LOW Date Sampled: 12/07/08 14:15

% Moisture: not dec. 9 Date Analyzed: 12/20/08 08:37

GC Column: RTX-VRX ID: 0.25 (mm) Dilution Factor: 1.0

Soil Extract Volume:_____(uL) Soil Aliquot Volume: _____(uL)

CONCENTRATION UNITS: (ug/L or ug/Kg) UG/KG

CAS NO.	COMPOUND	MDL	RL	CONC	Q
67-64-1	Acetone	2.9	14	14u ~~7.8~~	U BL
71-43-2	Benzene	0.68	14		U
75-27-4	Bromodichloromethane	0.43	14		U
75-25-2	Bromoform	1.4	14		U
74-83-9	Bromomethane	1.0	14		U
78-93-3	2-Butanone	2.0	14		U
75-15-0	Carbon disulfide	1.9	14		U
56-23-5	Carbon tetrachloride	1.3	14		U
108-90-7	Chlorobenzene	0.49	14		U
75-00-3	Chloroethane	1.6	14		U
67-66-3	Chloroform	0.79	14		U
74-87-3	Chloromethane	0.75	14		U
110-82-7	Cyclohexane	0.78	14		U
124-48-1	Dibromochloromethane	0.49	14		U
96-12-8	1,2-Dibromo-3-chloropropane	1.7	7.2		U
106-93-4	1,2-Dibromoethane	0.62	14		U
95-50-1	1,2-Dichlorobenzene	0.53	14		U
541-73-1	1,3-Dichlorobenzene	1.2	14		U
106-46-7	1,4-Dichlorobenzene	0.79	14		U
75-71-8	Dichlorodifluoromethane	1.6	14		~~U~~ UJCC
75-34-3	1,1-Dichloroethane	0.78	14		U
107-06-2	1,2-Dichloroethane	0.66	14		U
75-35-4	1,1-Dichloroethene	1.7	14		U
156-59-2	cis-1,2-Dichloroethene	1.7	14		U
156-60-5	trans-1,2-Dichloroethene	1.6	14		U
78-87-5	1,2-Dichloropropane	0.66	14		U
10061-01-5	cis-1,3-Dichloropropene	0.72	14		U
10061-02-6	trans-1,3-Dichloropropene	0.46	14		U
100-41-4	Ethylbenzene	1.1	14		U
591-78-6	2-Hexanone	3.3	14		U
98-82-8	Isopropylbenzene	1.3	14		U
79-20-9	Methyl acetate	2.3	14		U
75-09-2	Methylene chloride	0.89	14		U
108-87-2	Methyl cyclohexane	0.43	14		U
1634-04-4	Methyl tert-butyl ether	0.46	14		U
108-10-1	4-Methyl-2-pentanone	0.84	14		U
100-42-5	Styrene	0.50	14		U
79-34-5	1,1,2,2-Tetrachloroethane	0.62	14		U
127-18-4	Tetrachloroethene	1.4	14		U

Rev 2/27/09

FORM 1
VOLATILE ORGANICS ANALYSIS DATA SHEET

CLIENT SAMPLE NO. 13

MR08-SS107-08D

Lab Name: EMPIRICAL LABS Contract: CH2MHILL

Lab Code: NA Case No.: NA SAS No.: NA SDG No.: LEJEUNE026

Matrix: (soil/water) SOIL Lab Sample ID: 0812109-13

Sample wt/vol: 3.8 (g/mL) G Lab File ID: 1210913A

Level: (low/med) LOW Date Sampled: 12/07/08 14:15

% Moisture: not dec. 9 Date Analyzed: 12/20/08 08:37

GC Column: RTX-VRX ID: 0.25 (mm) Dilution Factor: 1.0

Soil Extract Volume:_____(uL) Soil Aliquot Volume: _____(uL)

CONCENTRATION UNITS: (ug/L or ug/Kg) UG/KG

CAS NO.	COMPOUND	MDL	RL	CONC	Q
108-88-3	Toluene	1.2	14		U
120-82-1	1,2,4-Trichlorobenzene	0.26	14		U
71-55-6	1,1,1-Trichloroethane	1.3	14		U
79-00-5	1,1,2-Trichloroethane	0.50	14		U
79-01-6	Trichloroethene	1.2	14		U
76-13-1	Trichlorotrifluoroethane	0.79	14		U
75-69-4	Trichlorofluoromethane	1.4	14		U
75-01-4	Vinyl chloride	1.6	14		~~U~~ UJ BS
1330-20-7	Xylene(total)	1.0	14		U

FORM I VOA

LW
2/27/09

FORM 1
VOLATILE ORGANICS ANALYSIS DATA SHEET

CLIENT SAMPLE NO. 14

MR08-IS10
7-2-3-08D

Lab Name: EMPIRICAL LABS Contract: CH2MHILL

Lab Code: NA Case No.: NA SAS No.: NA SDG No.: LEJEUNE026

Matrix: (soil/water) SOIL Lab Sample ID: 0812109-14

Sample wt/vol: 4.8 (g/mL) G Lab File ID: 1210914A

Level: (low/med) LOW Date Sampled: 12/07/08 15:00

% Moisture: not dec. 10 Date Analyzed: 12/20/08 09:17

GC Column: RTX-VRX ID: 0.25 (mm) Dilution Factor: 1.0

Soil Extract Volume:_____(uL) Soil Aliquot Volume: _____(uL)

CONCENTRATION UNITS: (ug/L or ug/Kg) UG/KG

CAS NO.	COMPOUND	MDL	RL	CONC	Q
67-64-1	Acetone	2.3	12		U
71-43-2	Benzene	0.54	12		U
75-27-4	Bromodichloromethane	0.35	12		U
75-25-2	Bromoform	1.2	12		U
74-83-9	Bromomethane	0.83	12		U
78-93-3	2-Butanone	1.6	12		U
75-15-0	Carbon disulfide	1.5	12		U
56-23-5	Carbon tetrachloride	1.0	12		U
108-90-7	Chlorobenzene	0.39	12		U
75-00-3	Chloroethane	1.3	12		U
67-66-3	Chloroform	0.64	12		U
74-87-3	Chloromethane	0.60	12		U
110-82-7	Cyclohexane	0.62	12		U
124-48-1	Dibromochloromethane	0.39	12		U
96-12-8	1,2-Dibromo-3-chloropropane	1.4	5.8		U
106-93-4	1,2-Dibromoethane	0.50	12		U
95-50-1	1,2-Dichlorobenzene	0.43	12		U
541-73-1	1,3-Dichlorobenzene	0.97	12		U
106-46-7	1,4-Dichlorobenzene	0.64	12		U
75-71-8	Dichlorodifluoromethane	1.3	12		~~U~~ UJ CA
75-34-3	1,1-Dichloroethane	0.62	12		U
107-06-2	1,2-Dichloroethane	0.53	12		U
75-35-4	1,1-Dichloroethene	1.4	12		U
156-59-2	cis-1,2-Dichloroethene	1.4	12		U
156-60-5	trans-1,2-Dichloroethene	1.3	12		U
78-87-5	1,2-Dichloropropane	0.53	12		U
10061-01-5	cis-1,3-Dichloropropene	0.58	12		U
10061-02-6	trans-1,3-Dichloropropene	0.37	12		U
100-41-4	Ethylbenzene	0.87	12		U
591-78-6	2-Hexanone	2.6	12		U
98-82-8	Isopropylbenzene	1.0	12		U
79-20-9	Methyl acetate	1.8	12		U
75-09-2	Methylene chloride	0.72	12		U
108-87-2	Methyl cyclohexane	0.35	12		U
1634-04-4	Methyl tert-butyl ether	0.37	12		U
108-10-1	4-Methyl-2-pentanone	0.67	12		U
100-42-5	Styrene	0.40	12		U
79-34-5	1,1,2,2-Tetrachloroethane	0.50	12		U
127-18-4	Tetrachloroethene	1.1	12		U

fw
2/27/09

FORM 1
VOLATILE ORGANICS ANALYSIS DATA SHEET

CLIENT SAMPLE NO. 14

MR08-IS10
7-2-3-08D

Lab Name: EMPIRICAL LABS Contract: CH2MHILL

Lab Code: NA Case No.: NA SAS No.: NA SDG No.: LEJEUNE026

Matrix: (soil/water) SOIL Lab Sample ID: 0812109-14

Sample wt/vol: 4.8 (g/mL) G Lab File ID: 1210914A

Level: (low/med) LOW Date Sampled: 12/07/08 15:00

% Moisture: not dec. 10 Date Analyzed: 12/20/08 09:17

GC Column: RTX-VRX ID: 0.25 (mm) Dilution Factor: 1.0

Soil Extract Volume:_____(uL) Soil Aliquot Volume: _____(uL)

CONCENTRATION UNITS: (ug/L or ug/Kg) UG/KG

CAS NO.	COMPOUND	MDL	RL	CONC	Q
108-88-3	Toluene	0.99	12		U
120-82-1	1,2,4-Trichlorobenzene	0.21	12		U
71-55-6	1,1,1-Trichloroethane	1.0	12		U
79-00-5	1,1,2-Trichloroethane	0.40	12		U
79-01-6	Trichloroethene	0.98	12		U
76-13-1	Trichlorotrifluoroethane	0.64	12		U
75-69-4	Trichlorofluoromethane	1.1	12		U
75-01-4	Vinyl chloride	1.3	12		~~U~~ UJ BSL
1330-20-7	Xylene(total)	0.81	12		U

FORM I VOA

kw 2/27/09

FORM 1
VOLATILE ORGANICS ANALYSIS DATA SHEET

CLIENT SAMPLE NO. 15

MR08-SS108-08D

Lab Name: EMPIRICAL LABS Contract: CH2MHILL

Lab Code: NA Case No.: NA SAS No.: NA SDG No.: LEJEUNE026

Matrix: (soil/water) SOIL Lab Sample ID: 0812109-15

Sample wt/vol: 2.5 (g/mL) G Lab File ID: 1210915A

Level: (low/med) LOW Date Sampled: 12/07/08 15:45

% Moisture: not dec. 7 Date Analyzed: 12/20/08 09:56

GC Column: RTX-VRX ID: 0.25 (mm) Dilution Factor: 1.0

Soil Extract Volume:_____(uL) Soil Aliquot Volume: _____(uL)

CONCENTRATION UNITS: (ug/L or ug/Kg) UG/KG

CAS NO.	COMPOUND	MDL	RL	CONC	Q
67-64-1	Acetone	4.2	21	21U ~~16~~	~~J~~ B
71-43-2	Benzene	0.99	21	1.6	J
75-27-4	Bromodichloromethane	0.63	21		U
75-25-2	Bromoform	2.1	21		U
74-83-9	Bromomethane	1.5	21		U
78-93-3	2-Butanone	3.0	21	3.2	J
75-15-0	Carbon disulfide	2.7	21		U
56-23-5	Carbon tetrachloride	1.8	21		U
108-90-7	Chlorobenzene	0.72	21		U
75-00-3	Chloroethane	2.3	21		U
67-66-3	Chloroform	1.2	21		U
74-87-3	Chloromethane	1.1	21		U
110-82-7	Cyclohexane	1.1	21		U
124-48-1	Dibromochloromethane	0.72	21		U
96-12-8	1,2-Dibromo-3-chloropropane	2.5	10		U
106-93-4	1,2-Dibromoethane	0.91	21		U
95-50-1	1,2-Dichlorobenzene	0.78	21		U
541-73-1	1,3-Dichlorobenzene	1.8	21		U
106-46-7	1,4-Dichlorobenzene	1.2	21		U
75-71-8	Dichlorodifluoromethane	2.3	21		~~U~~ UJ CCV
75-34-3	1,1-Dichloroethane	1.1	21		U
107-06-2	1,2-Dichloroethane	0.97	21		U
75-35-4	1,1-Dichloroethene	2.5	21		U
156-59-2	cis-1,2-Dichloroethene	2.5	21		U
156-60-5	trans-1,2-Dichloroethene	2.3	21		U
78-87-5	1,2-Dichloropropane	0.97	21		U
10061-01-5	cis-1,3-Dichloropropene	1.0	21		U
10061-02-6	trans-1,3-Dichloropropene	0.67	21		U
100-41-4	Ethylbenzene	1.6	21	2.0	J
591-78-6	2-Hexanone	4.8	21		U
98-82-8	Isopropylbenzene	1.8	21		U
79-20-9	Methyl acetate	3.4	21		U
75-09-2	Methylene chloride	1.3	21		U
108-87-2	Methyl cyclohexane	0.63	21	1.0	J
1634-04-4	Methyl tert-butyl ether	0.67	21		U
108-10-1	4-Methyl-2-pentanone	1.2	21		U
100-42-5	Styrene	0.74	21		U
79-34-5	1,1,2,2-Tetrachloroethane	0.91	21		U
127-18-4	Tetrachloroethene	2.0	21		U

7/22/09

FORM 1
VOLATILE ORGANICS ANALYSIS DATA SHEET

CLIENT SAMPLE NO.

15

MR08-SS108-08D

Lab Name: EMPIRICAL LABS Contract: CH2MHILL

Lab Code: NA Case No.: NA SAS No.: NA SDG No.: LEJEUNE026

Matrix: (soil/water) SOIL Lab Sample ID: 0812109-15

Sample wt/vol: 2.5 (g/mL) G Lab File ID: 1210915A

Level: (low/med) LOW Date Sampled: 12/07/08 15:45

% Moisture: not dec. 7 Date Analyzed: 12/20/08 09:56

GC Column: RTX-VRX ID: 0.25 (mm) Dilution Factor: 1.0

Soil Extract Volume:_____(uL) Soil Aliquot Volume: _____(uL)

CONCENTRATION UNITS: (ug/L or ug/Kg) UG/KG

CAS NO.	COMPOUND	MDL	RL	CONC	Q
108-88-3	Toluene	1.8	21	2.0	J
120-82-1	1,2,4-Trichlorobenzene	0.38	21		U
71-55-6	1,1,1-Trichloroethane	1.9	21		U
79-00-5	1,1,2-Trichloroethane	0.74	21		U
79-01-6	Trichloroethene	1.8	21		U
76-13-1	Trichlorotrifluoroethane	1.2	21		U
75-69-4	Trichlorofluoromethane	2.0	21		U
75-01-4	Vinyl chloride	2.3	21		~~U~~ UJ BSL
1330-20-7	Xylene(total)	1.5	21		U

FORM I VOA

dw
2/27/09

FORM 1
VOLATILE ORGANICS ANALYSIS DATA SHEET

CLIENT SAMPLE NO.

MR08-IS10
8-2-3-08D

16

Lab Name: EMPIRICAL LABS Contract: CH2MHILL

Lab Code: NA Case No.: NA SAS No.: NA SDG No.: LEJEUNE026

Matrix: (soil/water) SOIL Lab Sample ID: 0812109-16

Sample wt/vol: 2.5 (g/mL) G Lab File ID: 1210916A

Level: (low/med) LOW Date Sampled: 12/07/08 15:55

% Moisture: not dec. 9 Date Analyzed: 12/20/08 10:35

GC Column: RTX-VRX ID: 0.25 (mm) Dilution Factor: 1.0

Soil Extract Volume:_____(uL) Soil Aliquot Volume: _____(uL)

CONCENTRATION UNITS: (ug/L or ug/Kg) UG/KG

CAS NO.	COMPOUND	MDL	RL	CONC	Q
67-64-1	Acetone	4.5	22	22u ~~18~~	~~J~~
71-43-2	Benzene	1.0	22		U
75-27-4	Bromodichloromethane	0.67	22		U
75-25-2	Bromoform	2.2	22		U
74-83-9	Bromomethane	1.6	22		U
78-93-3	2-Butanone	3.1	22		U
75-15-0	Carbon disulfide	2.9	22		U
56-23-5	Carbon tetrachloride	2.0	22		U
108-90-7	Chlorobenzene	0.76	22		U
75-00-3	Chloroethane	2.5	22		U
67-66-3	Chloroform	1.2	22		U
74-87-3	Chloromethane	1.2	22		U
110-82-7	Cyclohexane	1.2	22		U
124-48-1	Dibromochloromethane	0.76	22		U
96-12-8	1,2-Dibromo-3-chloropropane	2.7	11		U
106-93-4	1,2-Dibromoethane	0.96	22		U
95-50-1	1,2-Dichlorobenzene	0.83	22		U
541-73-1	1,3-Dichlorobenzene	1.9	22		U
106-46-7	1,4-Dichlorobenzene	1.2	22		U
75-71-8	Dichlorodifluoromethane	2.5	22		UJ
75-34-3	1,1-Dichloroethane	1.2	22		U
107-06-2	1,2-Dichloroethane	1.0	22		U
75-35-4	1,1-Dichloroethene	2.7	22		U
156-59-2	cis-1,2-Dichloroethene	2.7	22		U
156-60-5	trans-1,2-Dichloroethene	2.5	22		U
78-87-5	1,2-Dichloropropane	1.0	22		U
10061-01-5	cis-1,3-Dichloropropene	1.1	22		U
10061-02-6	trans-1,3-Dichloropropene	0.72	22		U
100-41-4	Ethylbenzene	1.7	22		U
591-78-6	2-Hexanone	5.2	22		U
98-82-8	Isopropylbenzene	2.0	22		U
79-20-9	Methyl acetate	3.6	22		U
75-09-2	Methylene chloride	1.4	22		U
108-87-2	Methyl cyclohexane	0.67	22		U
1634-04-4	Methyl tert-butyl ether	0.72	22		U
108-10-1	4-Methyl-2-pentanone	1.3	22		U
100-42-5	Styrene	0.78	22		U
79-34-5	1,1,2,2-Tetrachloroethane	0.96	22		U
127-18-4	Tetrachloroethene	2.2	22		U

hw 2/27/09

FORM 1
VOLATILE ORGANICS ANALYSIS DATA SHEET

CLIENT SAMPLE NO. 16

MR08-IS10
8-2-3-08D

Lab Name: EMPIRICAL LABS Contract: CH2MHILL

Lab Code: NA Case No.: NA SAS No.: NA SDG No.: LEJEUNE026

Matrix: (soil/water) SOIL Lab Sample ID: 0812109-16

Sample wt/vol: 2.5 (g/mL) G Lab File ID: 1210916A

Level: (low/med) LOW Date Sampled: 12/07/08 15:55

% Moisture: not dec. 9 Date Analyzed: 12/20/08 10:35

GC Column: RTX-VRX ID: 0.25 (mm) Dilution Factor: 1.0

Soil Extract Volume:_____(uL) Soil Aliquot Volume: _____(uL)

CONCENTRATION UNITS: (ug/L or ug/Kg) UG/KG

CAS NO.	COMPOUND	MDL	RL	CONC	Q
108-88-3	Toluene	1.9	22		U
120-82-1	1,2,4-Trichlorobenzene	0.40	22		U
71-55-6	1,1,1-Trichloroethane	2.0	22		U
79-00-5	1,1,2-Trichloroethane	0.78	22		U
79-01-6	Trichloroethene	1.9	22		U
76-13-1	Trichlorotrifluoroethane	1.2	22		U
75-69-4	Trichlorofluoromethane	2.1	22		U
75-01-4	Vinyl chloride	2.5	22		~~U~~ UJ BS
1330-20-7	Xylene(total)	1.6	22		U

FORM I VOA

pw
2/27/09

FORM 1
VOLATILE ORGANICS ANALYSIS DATA SHEET

CLIENT SAMPLE NO. 17

MR08-IS10
9-2-3-08D

Lab Name: EMPIRICAL LABS Contract: CH2MHILL

Lab Code: NA Case No.: NA SAS No.: NA SDG No.: LEJEUNE026

Matrix: (soil/water) SOIL Lab Sample ID: 0812109-17

Sample wt/vol: 2.7 (g/mL) G Lab File ID: 1210917A

Level: (low/med) LOW Date Sampled: 12/07/08 16:30

% Moisture: not dec. 16 Date Analyzed: 12/20/08 11:14

GC Column: RTX-VRX ID: 0.25 (mm) Dilution Factor: 1.0

Soil Extract Volume:_____(uL) Soil Aliquot Volume: _____(uL)

CONCENTRATION UNITS: (ug/L or ug/Kg) UG/KG

CAS NO.	COMPOUND	MDL	RL	CONC	Q
67-64-1	Acetone	4.4	22	74	
71-43-2	Benzene	1.0	22	1.2	J
75-27-4	Bromodichloromethane	0.65	22		U
75-25-2	Bromoform	2.2	22		U
74-83-9	Bromomethane	1.6	22		U
78-93-3	2-Butanone	3.0	22		U
75-15-0	Carbon disulfide	2.8	22		U
56-23-5	Carbon tetrachloride	1.9	22		U
108-90-7	Chlorobenzene	0.74	22		U
75-00-3	Chloroethane	2.4	22		U
67-66-3	Chloroform	1.2	22		U
74-87-3	Chloromethane	1.1	22		U
110-82-7	Cyclohexane	1.2	22		U
124-48-1	Dibromochloromethane	0.74	22		U
96-12-8	1,2-Dibromo-3-chloropropane	2.6	11		U
106-93-4	1,2-Dibromoethane	0.94	22		U
95-50-1	1,2-Dichlorobenzene	0.81	22		U
541-73-1	1,3-Dichlorobenzene	1.8	22		U
106-46-7	1,4-Dichlorobenzene	1.2	22		U
75-71-8	Dichlorodifluoromethane	2.4	22		UJ
75-34-3	1,1-Dichloroethane	1.2	22		U
107-06-2	1,2-Dichloroethane	1.0	22		U
75-35-4	1,1-Dichloroethene	2.6	22		U
156-59-2	cis-1,2-Dichloroethene	2.6	22		U
156-60-5	trans-1,2-Dichloroethene	2.4	22		U
78-87-5	1,2-Dichloropropane	1.0	22		U
10061-01-5	cis-1,3-Dichloropropene	1.1	22		U
10061-02-6	trans-1,3-Dichloropropene	0.70	22		U
100-41-4	Ethylbenzene	1.6	22		U
591-78-6	2-Hexanone	5.0	22		U
98-82-8	Isopropylbenzene	1.9	22		U
79-20-9	Methyl acetate	3.5	22		U
75-09-2	Methylene chloride	1.4	22	1.6	J
108-87-2	Methyl cyclohexane	0.65	22		U
1634-04-4	Methyl tert-butyl ether	0.70	22		U
108-10-1	4-Methyl-2-pentanone	1.3	22		U
100-42-5	Styrene	0.76	22		U
79-34-5	1,1,2,2-Tetrachloroethane	0.94	22		U
127-18-4	Tetrachloroethene	2.1	22		U

lw
2/27/09

FORM 1
VOLATILE ORGANICS ANALYSIS DATA SHEET

CLIENT SAMPLE NO.

MR08-IS10
9-2-3-08D

17

Lab Name: EMPIRICAL LABS Contract: CH2MHILL

Lab Code: NA Case No.: NA SAS No.: NA SDG No.: LEJEUNE026

Matrix: (soil/water) SOIL Lab Sample ID: 0812109-17

Sample wt/vol: 2.7 (g/mL) G Lab File ID: 1210917A

Level: (low/med) LOW Date Sampled: 12/07/08 16:30

% Moisture: not dec. 16 Date Analyzed: 12/20/08 11:14

GC Column: RTX-VRX ID: 0.25 (mm) Dilution Factor: 1.0

Soil Extract Volume:_____(uL) Soil Aliquot Volume: _____(uL)

CONCENTRATION UNITS: (ug/L or ug/Kg) UG/KG

CAS NO.	COMPOUND	MDL	RL	CONC	Q
108-88-3	Toluene	1.9	22	3.0	J
120-82-1	1,2,4-Trichlorobenzene	0.39	22		U
71-55-6	1,1,1-Trichloroethane	2.0	22		U
79-00-5	1,1,2-Trichloroethane	0.76	22		U
79-01-6	Trichloroethene	1.8	22		U
76-13-1	Trichlorotrifluoroethane	1.2	22		U
75-69-4	Trichlorofluoromethane	2.1	22		U
75-01-4	Vinyl chloride	2.4	22		~~UJ~~ BSL
1330-20-7	Xylene(total)	1.5	22		U

FORM I VOA

fw
2/27/09

FORM 1
VOLATILE ORGANICS ANALYSIS DATA SHEET

CLIENT SAMPLE NO.

MR08-IS10
9D-2-3-08D

18

Lab Name: EMPIRICAL LABS Contract: CH2MHILL

Lab Code: NA Case No.: NA SAS No.: NA SDG No.: LEJEUNE026

Matrix: (soil/water) SOIL Lab Sample ID: 0812109-18

Sample wt/vol: 3.6 (g/mL) G Lab File ID: 1210918A

Level: (low/med) LOW Date Sampled: 12/07/08 16:45

% Moisture: not dec. 15 Date Analyzed: 12/20/08 11:53

GC Column: RTX-VRX ID: 0.25 (mm) Dilution Factor: 1.0

Soil Extract Volume:_____(uL) Soil Aliquot Volume: _____(uL)

CONCENTRATION UNITS: (ug/L or ug/Kg) UG/KG

CAS NO.	COMPOUND	MDL	RL	CONC	Q	
67-64-1	Acetone	3.3	16	140	J	SSL
71-43-2	Benzene	0.77	16	10	J J	
75-27-4	Bromodichloromethane	0.49	16		U UJ	
75-25-2	Bromoform	1.6	16		U	
74-83-9	Bromomethane	1.2	16		U	
78-93-3	2-Butanone	2.3	16	11	J J	
75-15-0	Carbon disulfide	2.1	16		U UJ	
56-23-5	Carbon tetrachloride	1.4	16		U	
108-90-7	Chlorobenzene	0.56	16		U	
75-00-3	Chloroethane	1.8	16		U	
67-66-3	Chloroform	0.90	16		U	
74-87-3	Chloromethane	0.85	16		U	
110-82-7	Cyclohexane	0.88	16		U	
124-48-1	Dibromochloromethane	0.56	16		U	
96-12-8	1,2-Dibromo-3-chloropropane	2.0	8.2		U	
106-93-4	1,2-Dibromoethane	0.70	16		U	
95-50-1	1,2-Dichlorobenzene	0.60	16		U	
541-73-1	1,3-Dichlorobenzene	1.4	16		U	
106-46-7	1,4-Dichlorobenzene	0.90	16		U	
75-71-8	Dichlorodifluoromethane	1.8	16		U	
75-34-3	1,1-Dichloroethane	0.88	16		U	
107-06-2	1,2-Dichloroethane	0.75	16		U	
75-35-4	1,1-Dichloroethene	2.0	16		U	
156-59-2	cis-1,2-Dichloroethene	2.0	16	13	J J	
156-60-5	trans-1,2-Dichloroethene	1.8	16		U UJ	
78-87-5	1,2-Dichloropropane	0.75	16		U	
10061-01-5	cis-1,3-Dichloropropene	0.82	16		U	
10061-02-6	trans-1,3-Dichloropropene	0.52	16		U	
100-41-4	Ethylbenzene	1.2	16	1.8	J J	
591-78-6	2-Hexanone	3.8	16		U UJ	
98-82-8	Isopropylbenzene	1.4	16		U	
79-20-9	Methyl acetate	2.6	16		U	
75-09-2	Methylene chloride	1.0	16		U	
108-87-2	Methyl cyclohexane	0.49	16		U	
1634-04-4	Methyl tert-butyl ether	0.52	16		U	
108-10-1	4-Methyl-2-pentanone	0.95	16		U	
100-42-5	Styrene	0.57	16		U	
79-34-5	1,1,2,2-Tetrachloroethane	0.70	16		U	
127-18-4	Tetrachloroethene	1.6	16		U	

FORM I VOA

hw
2/17/09

FORM 1
VOLATILE ORGANICS ANALYSIS DATA SHEET

CLIENT SAMPLE NO.

MR08-IS10
9D-2-3-08D

18

Lab Name: EMPIRICAL LABS Contract: CH2MHILL

Lab Code: NA Case No.: NA SAS No.: NA SDG No.: LEJEUNE026

Matrix: (soil/water) SOIL Lab Sample ID: 0812109-18

Sample wt/vol: 3.6 (g/mL) G Lab File ID: 1210918A

Level: (low/med) LOW Date Sampled: 12/07/08 16:45

% Moisture: not dec. 15 Date Analyzed: 12/20/08 11:53

GC Column: RTX-VRX ID: 0.25 (mm) Dilution Factor: 1.0

Soil Extract Volume:_____(uL) Soil Aliquot Volume: _____(uL)

CONCENTRATION UNITS: (ug/L or ug/Kg) UG/KG

CAS NO.	COMPOUND	MDL	RL	CONC	Q
108-88-3	Toluene	1.4	16	29	J SS1
120-82-1	1,2,4-Trichlorobenzene	0.29	16		~~U~~ UJ
71-55-6	1,1,1-Trichloroethane	1.5	16		~~U~~
79-00-5	1,1,2-Trichloroethane	0.57	16		~~U~~
79-01-6	Trichloroethene	1.4	16		~~U~~
76-13-1	Trichlorotrifluoroethane	0.90	16		~~U~~
75-69-4	Trichlorofluoromethane	1.6	16		~~U~~
75-01-4	Vinyl chloride	1.8	16		~~U~~
1330-20-7	Xylene(total)	1.1	16		~~U~~

MW
2/27/09

FORM 1
VOLATILE ORGANICS ANALYSIS DATA SHEET

CLIENT SAMPLE NO.

MR08-IS10
9D-2-3-08DR

1822

Lab Name: EMPIRICAL LABS Contract: CH2MHILL

Lab Code: NA Case No.: NA SAS No.: NA SDG No.: LEJEUNE026

Matrix: (soil/water) SOIL Lab Sample ID: 0812109-18R

Sample wt/vol: 4.3 (g/mL) G Lab File ID: 1210918B

Level: (low/med) LOW Date Sampled: 12/07/08 16:45

% Moisture: not dec. 15 Date Analyzed: 12/25/08 07:28 Use original

GC Column: RTX-VRX ID: 0.25 (mm) Dilution Factor: 1.0

Soil Extract Volume:_____(uL) Soil Aliquot Volume: _____(uL)

CONCENTRATION UNITS: (ug/L or ug/Kg) UG/KG

CAS NO.	COMPOUND	MDL	RL	CONC	Q
67-64-1	Acetone	2.7	14	42	J
71-43-2	Benzene	0.64	14	1.1	~~J~~ J
75-27-4	Bromodichloromethane	0.41	14		U UJ
75-25-2	Bromoform	1.4	14		U
74-83-9	Bromomethane	0.99	14		U
78-93-3	2-Butanone	1.9	14		U
75-15-0	Carbon disulfide	1.8	14		U
56-23-5	Carbon tetrachloride	1.2	14		U
108-90-7	Chlorobenzene	0.46	14		U
75-00-3	Chloroethane	1.5	14		U
67-66-3	Chloroform	0.75	14		U
74-87-3	Chloromethane	0.71	14		U
110-82-7	Cyclohexane	0.74	14		U
124-48-1	Dibromochloromethane	0.46	14		U
96-12-8	1,2-Dibromo-3-chloropropane	1.6	6.8		U
106-93-4	1,2-Dibromoethane	0.59	14		U
95-50-1	1,2-Dichlorobenzene	0.51	14		U
541-73-1	1,3-Dichlorobenzene	1.2	14		U
106-46-7	1,4-Dichlorobenzene	0.75	14		U
75-71-8	Dichlorodifluoromethane	1.5	14		U
75-34-3	1,1-Dichloroethane	0.74	14		U
107-06-2	1,2-Dichloroethane	0.63	14		U
75-35-4	1,1-Dichloroethene	1.6	14		U
156-59-2	cis-1,2-Dichloroethene	1.6	14		U
156-60-5	trans-1,2-Dichloroethene	1.5	14		U
78-87-5	1,2-Dichloropropane	0.63	14		U
10061-01-5	cis-1,3-Dichloropropene	0.68	14		U
10061-02-6	trans-1,3-Dichloropropene	0.44	14		U
100-41-4	Ethylbenzene	1.0	14		U
591-78-6	2-Hexanone	3.1	14		U
98-82-8	Isopropylbenzene	1.2	14		U
79-20-9	Methyl acetate	2.2	14		U
75-09-2	Methylene chloride	0.85	14	14u J	~~2.5 JB~~ HT
108-87-2	Methyl cyclohexane	0.41	14		U UJ
1634-04-4	Methyl tert-butyl ether	0.44	14		U
108-10-1	4-Methyl-2-pentanone	0.79	14		U
100-42-5	Styrene	0.48	14		U
79-34-5	1,1,2,2-Tetrachloroethane	0.59	14		U
127-18-4	Tetrachloroethene	1.3	14		U

FORM I VOA

MW 2/27/09

FORM 1
VOLATILE ORGANICS ANALYSIS DATA SHEET

CLIENT SAMPLE NO. 18RE

MR08-IS10
9D-2-3-08D

Lab Name: EMPIRICAL LABS Contract: CH2MHILL

Lab Code: NA Case No.: NA SAS No.: NA SDG No.: LEJEUNE026

Matrix: (soil/water) SOIL Lab Sample ID: 0812109-18R

Sample wt/vol: 4.3 (g/mL) G Lab File ID: 1210918B

Level: (low/med) LOW Date Sampled: 12/07/08 16:45

% Moisture: not dec. 15 Date Analyzed: 12/25/08 07:28 use org. ind

GC Column: RTX-VRX ID: 0.25 (mm) Dilution Factor: 1.0

Soil Extract Volume:_____(uL) Soil Aliquot Volume: _____(uL)

CONCENTRATION UNITS: (ug/L or ug/Kg) UG/KG

CAS NO.	COMPOUND	MDL	RL	CONC	Q
108-88-3	Toluene	1.2	14		~~U~~ UJ
120-82-1	1,2,4-Trichlorobenzene	0.25	14		~~U~~
71-55-6	1,1,1-Trichloroethane	1.2	14		~~U~~
79-00-5	1,1,2-Trichloroethane	0.48	14		~~U~~
79-01-6	Trichloroethene	1.2	14		~~U~~
76-13-1	Trichlorotrifluoroethane	0.75	14		~~U~~
75-69-4	Trichlorofluoromethane	1.3	14		~~U~~
75-01-4	Vinyl chloride	1.5	14		~~U~~
1330-20-7	Xylene(total)	0.96	14		~~U~~

R RE

FORM I VOA

LW
2/27/09

FORM 1
VOLATILE ORGANICS ANALYSIS DATA SHEET

CLIENT SAMPLE NO. 19

MR08-EB01
120708-SS

Lab Name: EMPIRICAL LABS Contract: CH2MHILL

Lab Code: NA Case No.: NA SAS No.: NA SDG No.: LEJEUNE026

Matrix: (soil/water) WATER Lab Sample ID: 0812109-19

Sample wt/vol: 5.000 (g/mL) ML Lab File ID: 1210919

Level: (low/med) LOW Date Sampled: 12/07/08 15:00

% Moisture: not dec. _____ Date Analyzed: 12/13/08 13:29

GC Column: RTX-VRX ID: 0.25 (mm) Dilution Factor: 1.0

Soil Extract Volume:_____(uL) Soil Aliquot Volume: _____(uL)

CONCENTRATION UNITS: (ug/L or ug/Kg) UG/L

CAS NO.	COMPOUND	MDL	RL	CONC	Q
67-64-1	Acetone	0.84	2.5	3.1	
71-43-2	Benzene	0.11	1.0		U
75-27-4	Bromodichloromethane	0.10	1.0		U
75-25-2	Bromoform	0.10	1.0		U
74-83-9	Bromomethane	0.32	1.0		U
78-93-3	2-Butanone	1.0	3.0		U
75-15-0	Carbon disulfide	0.13	1.0		U
56-23-5	Carbon tetrachloride	0.15	1.0		U
108-90-7	Chlorobenzene	0.10	1.0		U
75-00-3	Chloroethane	0.18	1.0		U
67-66-3	Chloroform	0.11	1.0	3.1	
74-87-3	Chloromethane	0.29	1.0		U
110-82-7	Cyclohexane	0.20	1.0		U
124-48-1	Dibromochloromethane	0.10	1.0		U
96-12-8	1,2-Dibromo-3-chloropropane	0.11	1.0		U
106-93-4	1,2-Dibromoethane	0.10	1.0		U
95-50-1	1,2-Dichlorobenzene	0.10	1.0		U
541-73-1	1,3-Dichlorobenzene	0.13	1.0		U
106-46-7	1,4-Dichlorobenzene	0.10	1.0		U
75-71-8	Dichlorodifluoromethane	0.22	1.0		U
75-34-3	1,1-Dichloroethane	0.12	1.0		U
107-06-2	1,2-Dichloroethane	0.10	1.0		U
75-35-4	1,1-Dichloroethene	0.15	1.0		U
156-59-2	cis-1,2-Dichloroethene	0.13	1.0		U
156-60-5	trans-1,2-Dichloroethene	0.13	1.0		U
78-87-5	1,2-Dichloropropane	0.10	1.0		U
10061-01-5	cis-1,3-Dichloropropene	0.11	1.0		U
10061-02-6	trans-1,3-Dichloropropene	0.10	1.0		U
100-41-4	Ethylbenzene	0.13	1.0		U
591-78-6	2-Hexanone	0.30	4.0		U
98-82-8	Isopropylbenzene	0.15	1.0		U
79-20-9	Methyl acetate	0.30	2.0		U
75-09-2	Methylene chloride	0.14	1.0	2.0	BU
108-87-2	Methyl cyclohexane	0.17	1.0		U
1634-04-4	Methyl tert-butyl ether	0.10	1.0		U
108-10-1	4-Methyl-2-pentanone	0.29	2.0		U
100-42-5	Styrene	0.10	1.0		U
79-34-5	1,1,2,2-Tetrachloroethane	0.10	1.0		U
127-18-4	Tetrachloroethene	0.15	1.0		U

12/21/09

FORM 1
VOLATILE ORGANICS ANALYSIS DATA SHEET

CLIENT SAMPLE NO.

MR08-EB01
120708-SS

19

Lab Name: EMPIRICAL LABS Contract: CH2MHILL

Lab Code: NA Case No.: NA SAS No.: NA SDG No.: LEJEUNE026

Matrix: (soil/water) WATER Lab Sample ID: 0812109-19

Sample wt/vol: 5.000 (g/mL) ML Lab File ID: 1210919

Level: (low/med) LOW Date Sampled: 12/07/08 15:00

% Moisture: not dec. _____ Date Analyzed: 12/13/08 13:29

GC Column: RTX-VRX ID: 0.25 (mm) Dilution Factor: 1.0

Soil Extract Volume:_____(uL) Soil Aliquot Volume: _____(uL)

CONCENTRATION UNITS: (ug/L or ug/Kg) UG/L

CAS NO.	COMPOUND	MDL	RL	CONC	Q
108-88-3	Toluene	0.10	1.0	0.22	J
120-82-1	1,2,4-Trichlorobenzene	0.10	1.0		U
71-55-6	1,1,1-Trichloroethane	0.17	1.0		U
79-00-5	1,1,2-Trichloroethane	0.10	1.0		U
79-01-6	Trichloroethene	0.13	1.0		U
76-13-1	Trichlorotrifluoroethane	0.18	1.0		U
75-69-4	Trichlorofluoromethane	0.17	1.0		U
75-01-4	Vinyl chloride	0.18	1.0		U
1330-20-7	Xylene(total)	0.22	1.0		U

JWD
2/17/2009

FORM 1
VOLATILE ORGANICS ANALYSIS DATA SHEET

CLIENT SAMPLE NO. 20

MR08-EB01
120708-IS

Lab Name: EMPIRICAL LABS Contract: CH2MHILL

Lab Code: NA Case No.: NA SAS No.: NA SDG No.: LEJEUNE026

Matrix: (soil/water) WATER Lab Sample ID: 0812109-20

Sample wt/vol: 5.000 (g/mL) ML Lab File ID: 1210920

Level: (low/med) LOW Date Sampled: 12/07/08 15:30

% Moisture: not dec. _____ Date Analyzed: 12/13/08 13:59

GC Column: RTX-VRX ID: 0.25 (mm) Dilution Factor: 1.0

Soil Extract Volume:_____(uL) Soil Aliquot Volume: _____(uL)

CONCENTRATION UNITS: (ug/L or ug/Kg) UG/L

CAS NO.	COMPOUND	MDL	RL	CONC	Q
67-64-1	Acetone	0.84	2.5	3.6	
71-43-2	Benzene	0.11	1.0		U
75-27-4	Bromodichloromethane	0.10	1.0	0.20	J
75-25-2	Bromoform	0.10	1.0		U
74-83-9	Bromomethane	0.32	1.0		U
78-93-3	2-Butanone	1.0	3.0		U
75-15-0	Carbon disulfide	0.13	1.0		U
56-23-5	Carbon tetrachloride	0.15	1.0		U
108-90-7	Chlorobenzene	0.10	1.0		U
75-00-3	Chloroethane	0.18	1.0		U
67-66-3	Chloroform	0.11	1.0	3.0	
74-87-3	Chloromethane	0.29	1.0		U
110-82-7	Cyclohexane	0.20	1.0	1.7	
124-48-1	Dibromochloromethane	0.10	1.0		U
96-12-8	1,2-Dibromo-3-chloropropane	0.11	1.0		U
106-93-4	1,2-Dibromoethane	0.10	1.0		U
95-50-1	1,2-Dichlorobenzene	0.10	1.0		U
541-73-1	1,3-Dichlorobenzene	0.13	1.0		U
106-46-7	1,4-Dichlorobenzene	0.10	1.0		U
75-71-8	Dichlorodifluoromethane	0.22	1.0		U
75-34-3	1,1-Dichloroethane	0.12	1.0		U
107-06-2	1,2-Dichloroethane	0.10	1.0		U
75-35-4	1,1-Dichloroethene	0.15	1.0		U
156-59-2	cis-1,2-Dichloroethene	0.13	1.0		U
156-60-5	trans-1,2-Dichloroethene	0.13	1.0		U
78-87-5	1,2-Dichloropropane	0.10	1.0		U
10061-01-5	cis-1,3-Dichloropropene	0.11	1.0		U
10061-02-6	trans-1,3-Dichloropropene	0.10	1.0		U
100-41-4	Ethylbenzene	0.13	1.0		U
591-78-6	2-Hexanone	0.30	4.0		U
98-82-8	Isopropylbenzene	0.15	1.0		U
79-20-9	Methyl acetate	0.30	2.0		U
75-09-2	Methylene chloride	0.14	1.0	2.0	~~B~~ U BL
108-87-2	Methyl cyclohexane	0.17	1.0		U
1634-04-4	Methyl tert-butyl ether	0.10	1.0		U
108-10-1	4-Methyl-2-pentanone	0.29	2.0		U
100-42-5	Styrene	0.10	1.0		U
79-34-5	1,1,2,2-Tetrachloroethane	0.10	1.0		U
127-18-4	Tetrachloroethene	0.15	1.0		U

LW 7/22/09

FORM 1
VOLATILE ORGANICS ANALYSIS DATA SHEET

CLIENT SAMPLE NO. 20

MR08-EB01
120708-IS

Lab Name: EMPIRICAL LABS Contract: CH2MHILL

Lab Code: NA Case No.: NA SAS No.: NA SDG No.: LEJEUNE026

Matrix: (soil/water) WATER Lab Sample ID: 0812109-20

Sample wt/vol: 5.000 (g/mL) ML Lab File ID: 1210920

Level: (low/med) LOW Date Sampled: 12/07/08 15:30

% Moisture: not dec. _____ Date Analyzed: 12/13/08 13:59

GC Column: RTX-VRX ID: 0.25 (mm) Dilution Factor: 1.0

Soil Extract Volume:_____(uL) Soil Aliquot Volume: _____(uL)

CONCENTRATION UNITS: (ug/L or ug/Kg) UG/L

CAS NO.	COMPOUND	MDL	RL	CONC	Q
108-88-3	Toluene	0.10	1.0		U
120-82-1	1,2,4-Trichlorobenzene	0.10	1.0		U
71-55-6	1,1,1-Trichloroethane	0.17	1.0		U
79-00-5	1,1,2-Trichloroethane	0.10	1.0		U
79-01-6	Trichloroethene	0.13	1.0		U
76-13-1	Trichlorotrifluoroethane	0.18	1.0		U
75-69-4	Trichlorofluoromethane	0.17	1.0		U
75-01-4	Vinyl chloride	0.18	1.0		U
1330-20-7	Xylene(total)	0.22	1.0		U

JW
2/27/09

ENVIRONMENTAL
Data Services, Inc.

VOLATILE ORGANIC COMPOUNDS

USEPA Region IV - Level IV Review

Site: MCB Camp Lejeune, TO-09 SDG #: LEJEUNE027

Client: CH2M HILL, Inc., Virginia Beach, Virginia Date: February 27, 2008

Laboratory: Empirical Laboratories, Nashville, Tennessee Reviewer: Nancy Weaver

EDS ID	Client Sample ID	Laboratory Sample ID	Matrix
1	MR08-SS056-08D	0812110-01	Soil
1RE	MR08-SS056-08DRE	0812110-01RE	Soil
2	MR08-IS056-2-3-08D	0812110-02	Soil
3	MR08-SS057-08D	0812110-03	Soil
3RE	MR08-SS057-08DRE	0812110-03RE	Soil
4	MR08-IS057-2-3-08D	0812110-04	Soil
5	MR08-SS058-08D	0812110-05	Soil
6	MR08-IS058-2-3-08D	0812110-06	Soil
7	MR08-SS059-08D	0812110-07	Soil
8	MR08-SS059D-08D	0812110-08	Soil
8RE	MR08-SS059D-08DRE	0812110-08RE	Soil
9	MR08-IS059-3-4-08D	0812110-09	Soil
10	MR08-IS059D-3-4-08D	0812110-10	Soil
11	MR08-SS060-08D	0812110-11	Soil
12	MR08-IS060-2-3-08D	0812110-12	Soil
13	MR08-SS061-08D	0812110-13	Soil
13RE	MR08-SS061-08DRE	0812110-13RE	Soil
14	MR08-IS061-2-3-08D	0812110-14	Soil
15	MR08-SS062-8D	0812110-15	Soil
15RE	MR08-SS062-8DRE	0812110-15RE	Soil
16	MR08-IS062-2-3-08D	0812110-16	Soil
17	MR08-SS063-08D	0812110-17	Soil
18	MR08-IS063-2-3-08D	0812110-18	Soil
18RE	MR08-IS063-2-3-08DRE	0812110-18RE	Soil
19	MR08-SS064-08D	0812110-19	Soil
19RE	MR08-SS064-08DRE	0812110-19RE	Soil
20	MR08-IS064-2-3-08D	0812110-20	Soil
21	MR08-SS065-08D	0812110-21	Soil
22	MR08-IS065-1-2-08D	0812110-22	Soil
23	MR08-SS066-08D	0812110-23	Soil
24	MR08-EB01120608-SS	0812110-24	Water
25	MR08-EB011206-08	0812110-25	Water
26	MR08-TB01120608	0812110-26	Water
27	MR08-FB01120608	0812110-27	Water
28	MR08-IS066-2-3-08	0812110-28	Soil

EDS ID	Client Sample ID	Laboratory Sample ID	Matrix
28RE	MR08-IS066-2-3-08RE	0812110-28RE	Soil

The USEPA "Contract Laboratory Program National Functional Guidelines for Organic Data Review," October 1999, and professional judgement were used in evaluating the data in this summary report.

Holding Times - All samples were analyzed within 14 days for preserved water and soil samples except the following.

Sample	Date Sampled	Date Analyzed	# of Days	Qualifier
1RE	12/06/08	12/21/08	15	None - Already qualified due to surrogates
3RE	12/06/08	12/21/08	15	J/UJ
8RE	12/06/08	12/21/08	15	J/UJ
13RE	12/06/08	12/28/08	22	J/UJ
15RE	12/06/08	12/28/08	22	J/UJ
18RE	12/06/08	12/28/08	22	J/UJ
19RE	12/06/08	01/03/08	28	J/UJ
28RE	12/06/08	12/28/08	22	J/UJ

GC/MS Tuning - All of the BFB tunes in the initial and continuing calibrations met the percent relative abundance criteria.

Initial Calibration - The initial calibrations exhibited acceptable %RSD and mean RRF values.

Continuing Calibration - The continuing calibrations exhibited acceptable %D and RRF values except the following.

CCAL Date	Compound	%D/RRF	Qualifier	Affected Samples
12/17/08	Dichlorodifluoromethane	30.1%	J/UJ	23, 28
12/18/08	Bromomethane	41.5%	J/UJ	2-7
	Chloroethane	31.6%	J/UJ	2-7
12/21/08	Chloromethane	25.1%	None	Already qualified due to HT or surrogates
	Dichlorodifluoromethane	27.6%	None	Already qualified due to HT or surrogates
01/02/09	Chloromethane	34.4%	None	Already qualified due to HT or surrogates
	Dichlorodifluoromethane	40.4%	None	Already qualified due to HT or surrogates
	Trichlorofluoromethane	28.4%	None	Already qualified due to HT or surrogates
	Vinyl chloride	28.0%	None	Already qualified due to HT or surrogates

Surrogates - All samples exhibited acceptable surrogate recoveries except the following.

Sample ID	Surrogate	%R	Qualifier
1	S3-Toluene-d8	132%	J/UJ

Sample ID	Surrogate	%R	Qualifier
1	S4-Bromofluorobenzene	68%	J/UJ
1RE	S3-Toluene-d8	129%	J/UJ
	S4-Bromofluorobenzene	75%	J/UJ
8	S3-Toluene-d8	127%	J/UJ
	S4-Bromofluorobenzene	78%	J/UJ
15	S3-Toluene-d8	135%	J/UJ
	S4-Bromofluorobenzene	73%	J/UJ
28	S3-Toluene-d8	123%	J

MS/MSD - A MS/MSD sample was not analyzed from this data package.

Laboratory Control Sample - The LCS samples exhibited acceptable %R values except the following.

LCS ID	Compound	%R	Qualifier	Affected Samples
V1BLK1219H	Vinyl chloride	51%	None	Already qualified due to HT

Internal Standard (IS) Area Performance - All internal standards met response and retention time (RT) criteria except the following.

Sample ID	Internal Standard	Area Count	Qualifier
1	IS3-1,4-Dichlorobenzene-d4	Low	None - Already qualified due to surrogate
1RE	IS3-1,4-Dichlorobenzene-d4	Low	None - Already qualified due to surrogate
3	IS3-1,4-Dichlorobenzene-d4	Low	J/UJ
13RE	IS3-1,4-Dichlorobenzene-d4	Low	J/UJ
15RE	IS2-Chlorobenzene-d5	Low	J/UJ
	IS3-1,4-Dichlorobenzene-d4	Low	J/UJ
28	IS3-1,4-Dichlorobenzene-d4	Low	J/UJ
28RE	IS3-1,4-Dichlorobenzene-d4	Low	J/UJ

Method Blank - The method blanks exhibited the following contamination.

Blank ID	Compound	Conc.	Action Level	Qualifier	Affected Samples
V3BLK1213	Methylene chloride	0.45 ug/L	4.5 ug/L	U	24-27
V1BLK1218E	Methylene chloride	1.4 ug/kg	14 ug/kg	None	All ND or >10X
V1BLK1219H	Vinyl chloride	6.1 ug/kg	30.5 ug/kg	None	All ND
V1BLK1227	Methylene chloride	1.8 ug/kg	18 ug/kg	U	13RE, 15RE, 18RE, 28RE
V1BLK0101F	Methylene chloride	3.8 ug/kg	38 ug/kg	U	19RE

Trip, Field, Equipment Blank - Field QC results are summarized below.

Blank ID	Compound	Conc. ug/L	Action Level ug/L or ug/kg	Qualifier	Affected Samples
MR08-EB01120608-SS	None -ND	-	-	-	-
MR08-EB01120608-IS	None -ND	-	-	-	-
MR08-FB01120608	Acetone	3.8	38	U	4, 6, 9, 10, 12, 14, 16, 18RE, 20, 22
	Bromodichloromethane	0.2	1.0	None	All ND or >10X
	Chloroform	3.0	15.0	U	5, 7, 8, 8RE, 15, 15RE
	Toluene	0.35	1.75	U	13RE, 19
MR06-TB01120608	None - ND	-	-	-	-

Field Duplicates - Field duplicate results are summarized below.

Compound	MR08-SS059-08D ug/kg	MR08-SS059D-08D ug/kg	RPD	Qualifier
Acetone	120	130	8%	None
Methylene chloride	33U	17	NC	None
Styrene	33U	0.91	NC	None
Toluene	33U	3.3	NC	None

Compound	MR08-IS059-3-4-08 ug/kg	MR08-IS059D-3-4-08 ug/kg	RPD	Qualifier
None	ND	ND	-	-

Tentatively Identified Compounds (TICs) - TICs were not reported.

Compound Quantitation - Several samples exhibited high concentrations of target compounds over the calibration range and were flagged (E). The laboratory diluted and reanalyzed samples. The reviewer replaced the original results with the dilution results. The original Form Is should be used for reporting purposes.

Several samples exhibited internal standard and/or surrogate deficiencies. These samples were reanalyzed. Refer to Form Is for which were used for reporting purposes.

FORM 1
VOLATILE ORGANICS ANALYSIS DATA SHEET

CLIENT SAMPLE NO.

MR08-SS056-08D

Lab Name: EMPIRICAL LABS Contract: CH2MHILL

Lab Code: NA Case No.: NA SAS No.: NA SDG No.: LEJEUNE027

Matrix: (soil/water) SOIL Lab Sample ID: 0812110-01

Sample wt/vol: 4.4 (g/mL) G Lab File ID: 1211001A

Level: (low/med) LOW Date Sampled: 12/06/08 08:30

% Moisture: not dec. 32 Date Analyzed: 12/18/08 18:15 Use reanalysis

GC Column: RTX-VRX ID: 0.25 (mm) Dilution Factor: 1.0

Soil Extract Volume:_____(uL) Soil Aliquot Volume: _____(uL)

CONCENTRATION UNITS: (ug/L or ug/Kg) UG/KG

CAS NO.	COMPOUND	MDL	RL	CONC	Q
67-64-1	Acetone	3.3	16	300	J
71-43-2	Benzene	0.78	16	0.82	J J
75-27-4	Bromodichloromethane	0.50	16	2.0	J J
75-25-2	Bromoform	1.6	16		U UJ
74-83-9	Bromomethane	1.2	16		U UJ
78-93-3	2-Butanone	2.3	16	27	J
75-15-0	Carbon disulfide	2.1	16	5.0	J J
56-23-5	Carbon tetrachloride	1.4	16		U UJ
108-90-7	Chlorobenzene	0.56	16	8.8	J J
75-00-3	Chloroethane	1.8	16		U UJ
67-66-3	Chloroform	0.91	16	18	J
74-87-3	Chloromethane	0.86	16		U UJ
110-82-7	Cyclohexane	0.89	16		U
124-48-1	Dibromochloromethane	0.56	16		U
96-12-8	1,2-Dibromo-3-chloropropane	2.0	8.2		U
106-93-4	1,2-Dibromoethane	0.71	16		U
95-50-1	1,2-Dichlorobenzene	0.61	16		U
541-73-1	1,3-Dichlorobenzene	1.4	16		U
106-46-7	1,4-Dichlorobenzene	0.91	16	8.1	J J
75-71-8	Dichlorodifluoromethane	1.8	16		U UJ
75-34-3	1,1-Dichloroethane	0.89	16		U
107-06-2	1,2-Dichloroethane	0.76	16		U
75-35-4	1,1-Dichloroethene	2.0	16		U
156-59-2	cis-1,2-Dichloroethene	2.0	16	5.1	J J
156-60-5	trans-1,2-Dichloroethene	1.8	16		U UJ
78-87-5	1,2-Dichloropropane	0.76	16		U
10061-01-5	cis-1,3-Dichloropropene	0.82	16		U
10061-02-6	trans-1,3-Dichloropropene	0.53	16		U
100-41-4	Ethylbenzene	1.2	16		U
591-78-6	2-Hexanone	3.8	16		U
98-82-8	Isopropylbenzene	1.4	16		U
79-20-9	Methyl acetate	2.6	16		U
75-09-2	Methylene chloride	1.0	16		U
108-87-2	Methyl cyclohexane	0.50	16		U
1634-04-4	Methyl tert-butyl ether	0.53	16		U
108-10-1	4-Methyl-2-pentanone	0.96	16		U
100-42-5	Styrene	0.58	16		U
79-34-5	1,1,2,2-Tetrachloroethane	0.71	16		U
127-18-4	Tetrachloroethene	1.6	16	1.7	J J

SS

FORM I VOA

lw 2/27/09

FORM 1
VOLATILE ORGANICS ANALYSIS DATA SHEET

CLIENT SAMPLE NO.

MR08-SS056-08D

Lab Name: EMPIRICAL LABS Contract: CH2MHILL

Lab Code: NA Case No.: NA SAS No.: NA SDG No.: LEJEUNE027

Matrix: (soil/water) SOIL Lab Sample ID: 0812110-01

Sample wt/vol: 4.4 (g/mL) G Lab File ID: 1211001A

Level: (low/med) LOW Date Sampled: 12/06/08 08:30

% Moisture: not dec. 32 Date Analyzed: 12/18/08 18:15 Use reanaly

GC Column: RTX-VRX ID: 0.25 (mm) Dilution Factor: 1.0

Soil Extract Volume:_____(uL) Soil Aliquot Volume: _____(uL)

CONCENTRATION UNITS: (ug/L or ug/Kg) UG/KG

CAS NO.	COMPOUND	MDL	RL	CONC	Q
108-88-3	Toluene	1.4	16	3.6	~~U~~ J
120-82-1	1,2,4-Trichlorobenzene	0.30	16		U UJ
71-55-6	1,1,1-Trichloroethane	1.5	16		U
79-00-5	1,1,2-Trichloroethane	0.58	16		U
79-01-6	Trichloroethene	1.4	16	3.0	J J
76-13-1	Trichlorotrifluoroethane	0.91	16		U UJ
75-69-4	Trichlorofluoromethane	1.6	16		U
75-01-4	Vinyl chloride	1.8	16		U
1330-20-7	Xylene(total)	1.2	16		U

RE

FORM I VOA

AW 2/27/09

FORM 1
VOLATILE ORGANICS ANALYSIS DATA SHEET

CLIENT SAMPLE NO. 1RE

MR08-SS056-08DR

Lab Name: EMPIRICAL LABS Contract: CH2MHILL

Lab Code: NA Case No.: NA SAS No.: NA SDG No.: LEJEUNE027

Matrix: (soil/water) SOIL Lab Sample ID: 0812110-01R

Sample wt/vol: 3.8 (g/mL) G Lab File ID: 1211001B

Level: (low/med) LOW Date Sampled: 12/06/08 08:30

% Moisture: not dec. 32 Date Analyzed: 12/21/08 19:18

GC Column: RTX-VRX ID: 0.25 (mm) Dilution Factor: 1.0

Soil Extract Volume:_____(uL) Soil Aliquot Volume: _____(uL)

CONCENTRATION UNITS: (ug/L or ug/Kg) UG/KG

CAS NO.	COMPOUND	MDL	RL	CONC	Q	
67-64-1	Acetone	3.8	19	400	J	SSL
71-43-2	Benzene	0.90	19	0.99	J J	
75-27-4	Bromodichloromethane	0.58	19	2.5	J J	
75-25-2	Bromoform	1.9	19		U UJ	
74-83-9	Bromomethane	1.4	19		U UJ	
78-93-3	2-Butanone	2.7	19	36	J	
75-15-0	Carbon disulfide	2.5	19	6.4	J J	
56-23-5	Carbon tetrachloride	1.7	19		U UJ	
108-90-7	Chlorobenzene	0.65	19	11	J J	
75-00-3	Chloroethane	2.1	19		U UJ	
67-66-3	Chloroform	1.0	19	23	J	
74-87-3	Chloromethane	1.0	19		U UJ	
110-82-7	Cyclohexane	1.0	19		U	
124-48-1	Dibromochloromethane	0.65	19		U	
96-12-8	1,2-Dibromo-3-chloropropane	2.3	9.6		U	
106-93-4	1,2-Dibromoethane	0.83	19		U	
95-50-1	1,2-Dichlorobenzene	0.71	19		U	
541-73-1	1,3-Dichlorobenzene	1.6	19		U	
106-46-7	1,4-Dichlorobenzene	1.0	19	11	J J	
75-71-8	Dichlorodifluoromethane	2.1	19		U UJ	
75-34-3	1,1-Dichloroethane	1.0	19		U	
107-06-2	1,2-Dichloroethane	0.88	19		U	
75-35-4	1,1-Dichloroethene	2.3	19		U	
156-59-2	cis-1,2-Dichloroethene	2.3	19	5.1	J J	
156-60-5	trans-1,2-Dichloroethene	2.1	19		U UJ	
78-87-5	1,2-Dichloropropane	0.88	19		U	
10061-01-5	cis-1,3-Dichloropropene	0.96	19		U	
10061-02-6	trans-1,3-Dichloropropene	0.62	19		U	
100-41-4	Ethylbenzene	1.4	19		U	
591-78-6	2-Hexanone	4.4	19	5.6	J J	
98-82-8	Isopropylbenzene	1.7	19		U UJ	
79-20-9	Methyl acetate	3.1	19		U	
75-09-2	Methylene chloride	1.2	19		U	
108-87-2	Methyl cyclohexane	0.58	19		U	
1634-04-4	Methyl tert-butyl ether	0.62	19		U	
108-10-1	4-Methyl-2-pentanone	1.1	19		U	
100-42-5	Styrene	0.67	19		U	
79-34-5	1,1,2,2-Tetrachloroethane	0.83	19		U	
127-18-4	Tetrachloroethene	1.9	19	2.2	J J	

LW 2/27/09

FORM 1
VOLATILE ORGANICS ANALYSIS DATA SHEET

CLIENT SAMPLE NO. 1RE

MR08-SS056-08DR

Lab Name: EMPIRICAL LABS Contract: CH2MHILL

Lab Code: NA Case No.: NA SAS No.: NA SDG No.: LEJEUNE027

Matrix: (soil/water) SOIL Lab Sample ID: 0812110-01R

Sample wt/vol: 3.8 (g/mL) G Lab File ID: 1211001B

Level: (low/med) LOW Date Sampled: 12/06/08 08:30

% Moisture: not dec. 32 Date Analyzed: 12/21/08 19:18

GC Column: RTX-VRX ID: 0.25 (mm) Dilution Factor: 1.0

Soil Extract Volume:_____(uL) Soil Aliquot Volume: _____(uL)

CONCENTRATION UNITS: (ug/L or ug/Kg) UG/KG

CAS NO.	COMPOUND	MDL	RL	CONC	Q
108-88-3	Toluene	1.6	19	4.5	~~J~~ J SSI
120-82-1	1,2,4-Trichlorobenzene	0.35	19		U UJ
71-55-6	1,1,1-Trichloroethane	1.7	19		U
79-00-5	1,1,2-Trichloroethane	0.67	19		U
79-01-6	Trichloroethene	1.6	19	3.2	~~J~~ J
76-13-1	Trichlorotrifluoroethane	1.0	19		U UJ
75-69-4	Trichlorofluoromethane	1.8	19		U
75-01-4	Vinyl chloride	2.1	19		U
1330-20-7	Xylene(total)	1.3	19		U

lw 2/27/09

FORM 1
VOLATILE ORGANICS ANALYSIS DATA SHEET

CLIENT SAMPLE NO. 2

MR08-IS05
6-2-3-08D

Lab Name: EMPIRICAL LABS Contract: CH2MHILL

Lab Code: NA Case No.: NA SAS No.: NA SDG No.: LEJEUNE027

Matrix: (soil/water) SOIL Lab Sample ID: 0812110-02

Sample wt/vol: 3.0 (g/mL) G Lab File ID: 1211002B

Level: (low/med) LOW Date Sampled: 12/06/08 08:45

% Moisture: not dec. 20 Date Analyzed: 12/18/08 18:54

GC Column: RTX-VRX ID: 0.25 (mm) Dilution Factor: 1.0

Soil Extract Volume:_____(uL) Soil Aliquot Volume: _____(uL)

CONCENTRATION UNITS: (ug/L or ug/Kg) UG/KG

CAS NO.	COMPOUND	MDL	RL	CONC	Q
67-64-1	Acetone	4.2	21	50	
71-43-2	Benzene	0.99	21		U
75-27-4	Bromodichloromethane	0.64	21		U
75-25-2	Bromoform	2.1	21		U
74-83-9	Bromomethane	1.5	21		~~U~~ UJ CC
78-93-3	2-Butanone	3.0	21		U
75-15-0	Carbon disulfide	2.8	21		U
56-23-5	Carbon tetrachloride	1.9	21		U
108-90-7	Chlorobenzene	0.72	21		U
75-00-3	Chloroethane	2.3	21		~~U~~ UJ CC
67-66-3	Chloroform	1.2	21		U
74-87-3	Chloromethane	1.1	21		U
110-82-7	Cyclohexane	1.1	21		U
124-48-1	Dibromochloromethane	0.72	21		U
96-12-8	1,2-Dibromo-3-chloropropane	2.5	10		U
106-93-4	1,2-Dibromoethane	0.91	21		U
95-50-1	1,2-Dichlorobenzene	0.78	21		U
541-73-1	1,3-Dichlorobenzene	1.8	21		U
106-46-7	1,4-Dichlorobenzene	1.2	21		U
75-71-8	Dichlorodifluoromethane	2.3	21		U
75-34-3	1,1-Dichloroethane	1.1	21		U
107-06-2	1,2-Dichloroethane	0.97	21		U
75-35-4	1,1-Dichloroethene	2.5	21		U
156-59-2	cis-1,2-Dichloroethene	2.5	21		U
156-60-5	trans-1,2-Dichloroethene	2.3	21		U
78-87-5	1,2-Dichloropropane	0.97	21		U
10061-01-5	cis-1,3-Dichloropropene	1.0	21		U
10061-02-6	trans-1,3-Dichloropropene	0.68	21		U
100-41-4	Ethylbenzene	1.6	21		U
591-78-6	2-Hexanone	4.9	21		U
98-82-8	Isopropylbenzene	1.9	21		U
79-20-9	Methyl acetate	3.4	21		U
75-09-2	Methylene chloride	1.3	21		U
108-87-2	Methyl cyclohexane	0.64	21		U
1634-04-4	Methyl tert-butyl ether	0.68	21		U
108-10-1	4-Methyl-2-pentanone	1.2	21		U
100-42-5	Styrene	0.74	21		U
79-34-5	1,1,2,2-Tetrachloroethane	0.91	21		U
127-18-4	Tetrachloroethene	2.0	21		U

lw
7/27/09

FORM 1
VOLATILE ORGANICS ANALYSIS DATA SHEET

CLIENT SAMPLE NO. 2

MR08-IS05
6-2-3-08D

Lab Name: EMPIRICAL LABS Contract: CH2MHILL

Lab Code: NA Case No.: NA SAS No.: NA SDG No.: LEJEUNE027

Matrix: (soil/water) SOIL Lab Sample ID: 0812110-02

Sample wt/vol: 3.0 (g/mL) G Lab File ID: 1211002B

Level: (low/med) LOW Date Sampled: 12/06/08 08:45

% Moisture: not dec. 20 Date Analyzed: 12/18/08 18:54

GC Column: RTX-VRX ID: 0.25 (mm) Dilution Factor: 1.0

Soil Extract Volume:_____(uL) Soil Aliquot Volume: _____(uL)

CONCENTRATION UNITS: (ug/L or ug/Kg) UG/KG

CAS NO.	COMPOUND	MDL	RL	CONC	Q
108-88-3	Toluene	1.8	21		U
120-82-1	1,2,4-Trichlorobenzene	0.38	21		U
71-55-6	1,1,1-Trichloroethane	1.9	21		U
79-00-5	1,1,2-Trichloroethane	0.74	21		U
79-01-6	Trichloroethene	1.8	21		U
76-13-1	Trichlorotrifluoroethane	1.2	21		U
75-69-4	Trichlorofluoromethane	2.0	21		U
75-01-4	Vinyl chloride	2.3	21		U
1330-20-7	Xylene(total)	1.5	21		U

lw
7/27/09

FORM 1
VOLATILE ORGANICS ANALYSIS DATA SHEET

CLIENT SAMPLE NO. 3

MR08-SS057-08D

Lab Name: EMPIRICAL LABS Contract: CH2MHILL

Lab Code: NA Case No.: NA SAS No.: NA SDG No.: LEJEUNE027

Matrix: (soil/water) SOIL Lab Sample ID: 0812110-03

Sample wt/vol: 3.6 (g/mL) G Lab File ID: 1211003A

Level: (low/med) LOW Date Sampled: 12/06/08 09:25

% Moisture: not dec. 27 Date Analyzed: 12/18/08 19:33

GC Column: RTX-VRX ID: 0.25 (mm) Dilution Factor: 1.0

Soil Extract Volume:_____(uL) Soil Aliquot Volume: _____(uL)

CONCENTRATION UNITS: (ug/L or ug/Kg) UG/KG

CAS NO.	COMPOUND	MDL	RL	CONC	Q
67-64-1	Acetone	3.8	19	170	
71-43-2	Benzene	0.90	19		U
75-27-4	Bromodichloromethane	0.58	19		U
75-25-2	Bromoform	1.9	19		U
74-83-9	Bromomethane	1.4	19		~~U~~ UJ CC
78-93-3	2-Butanone	2.7	19		U
75-15-0	Carbon disulfide	2.5	19		U
56-23-5	Carbon tetrachloride	1.7	19		U
108-90-7	Chlorobenzene	0.65	19		U
75-00-3	Chloroethane	2.1	19		~~U~~ UJ CC
67-66-3	Chloroform	1.0	19		U
74-87-3	Chloromethane	1.0	19		U
110-82-7	Cyclohexane	1.0	19		U
124-48-1	Dibromochloromethane	0.65	19		U
96-12-8	1,2-Dibromo-3-chloropropane	2.3	9.6		~~U~~ UJ IS
106-93-4	1,2-Dibromoethane	0.83	19		U
95-50-1	1,2-Dichlorobenzene	0.71	19		U UJ IS
541-73-1	1,3-Dichlorobenzene	1.6	19		U
106-46-7	1,4-Dichlorobenzene	1.0	19		U
75-71-8	Dichlorodifluoromethane	2.1	19		U
75-34-3	1,1-Dichloroethane	1.0	19		U
107-06-2	1,2-Dichloroethane	0.88	19		U
75-35-4	1,1-Dichloroethene	2.3	19		U
156-59-2	cis-1,2-Dichloroethene	2.3	19		U
156-60-5	trans-1,2-Dichloroethene	2.1	19		U
78-87-5	1,2-Dichloropropane	0.88	19		U
10061-01-5	cis-1,3-Dichloropropene	0.96	19		U
10061-02-6	trans-1,3-Dichloropropene	0.62	19		U
100-41-4	Ethylbenzene	1.4	19		U
591-78-6	2-Hexanone	4.4	19		U
98-82-8	Isopropylbenzene	1.7	19		U
79-20-9	Methyl acetate	3.1	19		U
75-09-2	Methylene chloride	1.2	19		U
108-87-2	Methyl cyclohexane	0.58	19		U
1634-04-4	Methyl tert-butyl ether	0.62	19		U
108-10-1	4-Methyl-2-pentanone	1.1	19		U
100-42-5	Styrene	0.67	19		U
79-34-5	1,1,2,2-Tetrachloroethane	0.83	19		~~U~~ UJ IS
127-18-4	Tetrachloroethene	1.9	19		U

FORM I VOA

LW
2/27/09

FORM 1
VOLATILE ORGANICS ANALYSIS DATA SHEET

CLIENT SAMPLE NO. 3

MR08-SS057-08D

Lab Name: EMPIRICAL LABS Contract: CH2MHILL

Lab Code: NA Case No.: NA SAS No.: NA SDG No.: LEJEUNE027

Matrix: (soil/water) SOIL Lab Sample ID: 0812110-03

Sample wt/vol: 3.6 (g/mL) G Lab File ID: 1211003A

Level: (low/med) LOW Date Sampled: 12/06/08 09:25

% Moisture: not dec. 27 Date Analyzed: 12/18/08 19:33

GC Column: RTX-VRX ID: 0.25 (mm) Dilution Factor: 1.0

Soil Extract Volume:_____(uL) Soil Aliquot Volume: _____(uL)

CONCENTRATION UNITS: (ug/L or ug/Kg) UG/KG

CAS NO.	COMPOUND	MDL	RL	CONC	Q
108-88-3	Toluene	1.6	19		U
120-82-1	1,2,4-Trichlorobenzene	0.35	19		~~U~~ UJ I
71-55-6	1,1,1-Trichloroethane	1.7	19		U
79-00-5	1,1,2-Trichloroethane	0.67	19		U
79-01-6	Trichloroethene	1.6	19		U
76-13-1	Trichlorotrifluoroethane	1.0	19		U
75-69-4	Trichlorofluoromethane	1.8	19		U
75-01-4	Vinyl chloride	2.1	19		U
1330-20-7	Xylene(total)	1.3	19		U

AW
2/27/09

FORM 1
VOLATILE ORGANICS ANALYSIS DATA SHEET

CLIENT SAMPLE NO. 3RE

MR08-SS057-08DR

Lab Name: EMPIRICAL LABS Contract: CH2MHILL

Lab Code: NA Case No.: NA SAS No.: NA SDG No.: LEJEUNE027

Matrix: (soil/water) SOIL Lab Sample ID: 0812110-03R

Sample wt/vol: 3.8 (g/mL) G Lab File ID: 1211003B

Level: (low/med) LOW Date Sampled: 12/06/08 09:25

% Moisture: not dec. 27 Date Analyzed: 12/21/08 19:57 Use original

GC Column: RTX-VRX ID: 0.25 (mm) Dilution Factor: 1.0

Soil Extract Volume:_____(uL) Soil Aliquot Volume:_____(uL)

CONCENTRATION UNITS: (ug/L or ug/Kg) UG/KG

CAS NO.	COMPOUND	MDL	RL	CONC	Q
67-64-1	Acetone	3.6	18	140	J
71-43-2	Benzene	0.84	18		U UJ
75-27-4	Bromodichloromethane	0.54	18		U
75-25-2	Bromoform	1.8	18		U
74-83-9	Bromomethane	1.3	18		U
78-93-3	2-Butanone	2.5	18		U
75-15-0	Carbon disulfide	2.3	18		U
56-23-5	Carbon tetrachloride	1.6	18		U
108-90-7	Chlorobenzene	0.61	18		U
75-00-3	Chloroethane	2.0	18		U
67-66-3	Chloroform	0.99	18		U
74-87-3	Chloromethane	0.94	18		U
110-82-7	Cyclohexane	0.97	18		U
124-48-1	Dibromochloromethane	0.61	18		U
96-12-8	1,2-Dibromo-3-chloropropane	2.2	9.0		U
106-93-4	1,2-Dibromoethane	0.77	18		U
95-50-1	1,2-Dichlorobenzene	0.66	18		U
541-73-1	1,3-Dichlorobenzene	1.5	18		U
106-46-7	1,4-Dichlorobenzene	0.99	18		U
75-71-8	Dichlorodifluoromethane	2.0	18		U
75-34-3	1,1-Dichloroethane	0.97	18		U
107-06-2	1,2-Dichloroethane	0.83	18		U
75-35-4	1,1-Dichloroethene	2.2	18		U
156-59-2	cis-1,2-Dichloroethene	2.2	18		U
156-60-5	trans-1,2-Dichloroethene	2.0	18		U
78-87-5	1,2-Dichloropropane	0.83	18		U
10061-01-5	cis-1,3-Dichloropropene	0.90	18		U
10061-02-6	trans-1,3-Dichloropropene	0.58	18		U
100-41-4	Ethylbenzene	1.3	18		U
591-78-6	2-Hexanone	4.1	18		U
98-82-8	Isopropylbenzene	1.6	18		U
79-20-9	Methyl acetate	2.9	18		U
75-09-2	Methylene chloride	1.1	18		U
108-87-2	Methyl cyclohexane	0.54	18		U
1634-04-4	Methyl tert-butyl ether	0.58	18		U
108-10-1	4-Methyl-2-pentanone	1.0	18		U
100-42-5	Styrene	0.63	18		U
79-34-5	1,1,2,2-Tetrachloroethane	0.77	18		U
127-18-4	Tetrachloroethene	1.7	18		U

FORM I VOA

lw 2/27/09

FORM 1
VOLATILE ORGANICS ANALYSIS DATA SHEET

CLIENT SAMPLE NO. 3RE

MR08-SS057-08DR

Lab Name: EMPIRICAL LABS Contract: CH2MHILL

Lab Code: NA Case No.: NA SAS No.: NA SDG No.: LEJEUNE027

Matrix: (soil/water) SOIL Lab Sample ID: 0812110-03R

Sample wt/vol: 3.8 (g/mL) G Lab File ID: 1211003B

Level: (low/med) LOW Date Sampled: 12/06/08 09:25

% Moisture: not dec. 27 Date Analyzed: 12/21/08 19:57 Use original

GC Column: RTX-VRX ID: 0.25 (mm) Dilution Factor: 1.0

Soil Extract Volume:_____(uL) Soil Aliquot Volume: _____(uL)

CONCENTRATION UNITS: (ug/L or ug/Kg) UG/KG

CAS NO.	COMPOUND	MDL	RL	CONC	Q	
108-88-3	Toluene	1.5	18		~~U~~ UJ	H
120-82-1	1,2,4-Trichlorobenzene	0.32	18		U	
71-55-6	1,1,1-Trichloroethane	1.6	18		U	
79-00-5	1,1,2-Trichloroethane	0.63	18		U	
79-01-6	Trichloroethene	1.5	18		U	
76-13-1	Trichlorotrifluoroethane	0.99	18		U	
75-69-4	Trichlorofluoromethane	1.7	18		U	
75-01-4	Vinyl chloride	2.0	18		U	
1330-20-7	Xylene(total)	1.2	18		U	

R

lw
2/27/09

FORM 1
VOLATILE ORGANICS ANALYSIS DATA SHEET

CLIENT SAMPLE NO. 4

MR08-IS05
7-2-3-08D

Lab Name: EMPIRICAL LABS Contract: CH2MHILL

Lab Code: NA Case No.: NA SAS No.: NA SDG No.: LEJEUNE027

Matrix: (soil/water) SOIL Lab Sample ID: 0812110-04

Sample wt/vol: 2.6 (g/mL) G Lab File ID: 1211004A

Level: (low/med) LOW Date Sampled: 12/06/08 09:40

% Moisture: not dec. 14 Date Analyzed: 12/18/08 20:13

GC Column: RTX-VRX ID: 0.25 (mm) Dilution Factor: 1.0

Soil Extract Volume:_____(uL) Soil Aliquot Volume: _____(uL)

CONCENTRATION UNITS: (ug/L or ug/Kg) UG/KG

CAS NO.	COMPOUND	MDL	RL	CONC	Q
67-64-1	Acetone	4.5	22	22u ~~13~~	~~J~~ B
71-43-2	Benzene	1.0	22		U
75-27-4	Bromodichloromethane	0.67	22		U
75-25-2	Bromoform	2.2	22		U
74-83-9	Bromomethane	1.6	22		~~U~~ UJ CC
78-93-3	2-Butanone	3.1	22		U
75-15-0	Carbon disulfide	2.9	22		U
56-23-5	Carbon tetrachloride	2.0	22		U
108-90-7	Chlorobenzene	0.76	22		U
75-00-3	Chloroethane	2.5	22		~~U~~ UJ CC
67-66-3	Chloroform	1.2	22		U
74-87-3	Chloromethane	1.2	22		U
110-82-7	Cyclohexane	1.2	22		U
124-48-1	Dibromochloromethane	0.76	22		U
96-12-8	1,2-Dibromo-3-chloropropane	2.7	11		U
106-93-4	1,2-Dibromoethane	0.96	22		U
95-50-1	1,2-Dichlorobenzene	0.83	22		U
541-73-1	1,3-Dichlorobenzene	1.9	22		U
106-46-7	1,4-Dichlorobenzene	1.2	22		U
75-71-8	Dichlorodifluoromethane	2.5	22		U
75-34-3	1,1-Dichloroethane	1.2	22		U
107-06-2	1,2-Dichloroethane	1.0	22		U
75-35-4	1,1-Dichloroethene	2.7	22		U
156-59-2	cis-1,2-Dichloroethene	2.7	22		U
156-60-5	trans-1,2-Dichloroethene	2.5	22		U
78-87-5	1,2-Dichloropropane	1.0	22		U
10061-01-5	cis-1,3-Dichloropropene	1.1	22		U
10061-02-6	trans-1,3-Dichloropropene	0.72	22		U
100-41-4	Ethylbenzene	1.7	22		U
591-78-6	2-Hexanone	5.2	22		U
98-82-8	Isopropylbenzene	2.0	22		U
79-20-9	Methyl acetate	3.6	22		U
75-09-2	Methylene chloride	1.4	22		U
108-87-2	Methyl cyclohexane	0.67	22		U
1634-04-4	Methyl tert-butyl ether	0.72	22		U
108-10-1	4-Methyl-2-pentanone	1.3	22		U
100-42-5	Styrene	0.78	22		U
79-34-5	1,1,2,2-Tetrachloroethane	0.96	22		U
127-18-4	Tetrachloroethene	2.2	22		U

FORM I VOA

RW
2/27/09

FORM 1
VOLATILE ORGANICS ANALYSIS DATA SHEET

CLIENT SAMPLE NO. 4

MR08-IS05
7-2-3-08D

Lab Name: EMPIRICAL LABS Contract: CH2MHILL

Lab Code: NA Case No.: NA SAS No.: NA SDG No.: LEJEUNE027

Matrix: (soil/water) SOIL Lab Sample ID: 0812110-04

Sample wt/vol: 2.6 (g/mL) G Lab File ID: 1211004A

Level: (low/med) LOW Date Sampled: 12/06/08 09:40

% Moisture: not dec. 14 Date Analyzed: 12/18/08 20:13

GC Column: RTX-VRX ID: 0.25 (mm) Dilution Factor: 1.0

Soil Extract Volume:_____(uL) Soil Aliquot Volume: _____(uL)

CONCENTRATION UNITS: (ug/L or ug/Kg) UG/KG

CAS NO.	COMPOUND	MDL	RL	CONC	Q
108-88-3	Toluene	1.9	22		U
120-82-1	1,2,4-Trichlorobenzene	0.40	22		U
71-55-6	1,1,1-Trichloroethane	2.0	22		U
79-00-5	1,1,2-Trichloroethane	0.78	22		U
79-01-6	Trichloroethene	1.9	22		U
76-13-1	Trichlorotrifluoroethane	1.2	22		U
75-69-4	Trichlorofluoromethane	2.1	22		U
75-01-4	Vinyl chloride	2.5	22		U
1330-20-7	Xylene(total)	1.6	22		U

lw
7/17/09

FORM 1
VOLATILE ORGANICS ANALYSIS DATA SHEET

CLIENT SAMPLE NO. 5

MR08-SS058-08D

Lab Name: EMPIRICAL LABS Contract: CH2MHILL

Lab Code: NA Case No.: NA SAS No.: NA SDG No.: LEJEUNE027

Matrix: (soil/water) SOIL Lab Sample ID: 0812110-05

Sample wt/vol: 4.2 (g/mL) G Lab File ID: 1211005A

Level: (low/med) LOW Date Sampled: 12/06/08 10:05

% Moisture: not dec. 13 Date Analyzed: 12/18/08 20:52

GC Column: RTX-VRX ID: 0.25 (mm) Dilution Factor: 1.0

Soil Extract Volume:_____(uL) Soil Aliquot Volume: _____(uL)

CONCENTRATION UNITS: (ug/L or ug/Kg) UG/KG

CAS NO.	COMPOUND	MDL	RL	CONC	Q
67-64-1	Acetone	2.8	14	53	
71-43-2	Benzene	0.65	14		U
75-27-4	Bromodichloromethane	0.42	14		U
75-25-2	Bromoform	1.4	14		U
74-83-9	Bromomethane	1.00	14		~~U~~ UJ CCH
78-93-3	2-Butanone	1.9	14	5.2	J
75-15-0	Carbon disulfide	1.8	14		U
56-23-5	Carbon tetrachloride	1.2	14		U
108-90-7	Chlorobenzene	0.47	14		U
75-00-3	Chloroethane	1.5	14		~~U~~ UJ CCH
67-66-3	Chloroform	0.76	14	144 ~~2.5~~	~~J~~ BI
74-87-3	Chloromethane	0.72	14		U
110-82-7	Cyclohexane	0.75	14		U
124-48-1	Dibromochloromethane	0.47	14		U
96-12-8	1,2-Dibromo-3-chloropropane	1.7	6.9		U
106-93-4	1,2-Dibromoethane	0.60	14		U
95-50-1	1,2-Dichlorobenzene	0.51	14		U
541-73-1	1,3-Dichlorobenzene	1.2	14		U
106-46-7	1,4-Dichlorobenzene	0.76	14		U
75-71-8	Dichlorodifluoromethane	1.5	14		U
75-34-3	1,1-Dichloroethane	0.75	14		U
107-06-2	1,2-Dichloroethane	0.64	14		U
75-35-4	1,1-Dichloroethene	1.7	14		U
156-59-2	cis-1,2-Dichloroethene	1.7	14		U
156-60-5	trans-1,2-Dichloroethene	1.5	14		U
78-87-5	1,2-Dichloropropane	0.64	14		U
10061-01-5	cis-1,3-Dichloropropene	0.69	14		U
10061-02-6	trans-1,3-Dichloropropene	0.44	14		U
100-41-4	Ethylbenzene	1.0	14		U
591-78-6	2-Hexanone	3.2	14		U
98-82-8	Isopropylbenzene	1.2	14		U
79-20-9	Methyl acetate	2.2	14		U
75-09-2	Methylene chloride	0.86	14		U
108-87-2	Methyl cyclohexane	0.42	14		U
1634-04-4	Methyl tert-butyl ether	0.44	14		U
108-10-1	4-Methyl-2-pentanone	0.80	14		U
100-42-5	Styrene	0.48	14		U
79-34-5	1,1,2,2-Tetrachloroethane	0.60	14		U
127-18-4	Tetrachloroethene	1.3	14		U

FORM I VOA

lw
2/27/09

FORM 1
VOLATILE ORGANICS ANALYSIS DATA SHEET

CLIENT SAMPLE NO. 5

MR08-SS058-08D

Lab Name: EMPIRICAL LABS Contract: CH2MHILL

Lab Code: NA Case No.: NA SAS No.: NA SDG No.: LEJEUNE027

Matrix: (soil/water) SOIL Lab Sample ID: 0812110-05

Sample wt/vol: 4.2 (g/mL) G Lab File ID: 1211005A

Level: (low/med) LOW Date Sampled: 12/06/08 10:05

% Moisture: not dec. 13 Date Analyzed: 12/18/08 20:52

GC Column: RTX-VRX ID: 0.25 (mm) Dilution Factor: 1.0

Soil Extract Volume:_____(uL) Soil Aliquot Volume: _____(uL)

CONCENTRATION UNITS: (ug/L or ug/Kg) UG/KG

CAS NO.	COMPOUND	MDL	RL	CONC	Q
108-88-3	Toluene	1.2	14		U
120-82-1	1,2,4-Trichlorobenzene	0.25	14		U
71-55-6	1,1,1-Trichloroethane	1.2	14		U
79-00-5	1,1,2-Trichloroethane	0.48	14		U
79-01-6	Trichloroethene	1.2	14		U
76-13-1	Trichlorotrifluoroethane	0.76	14		U
75-69-4	Trichlorofluoromethane	1.3	14		U
75-01-4	Vinyl chloride	1.5	14		U
1330-20-7	Xylene(total)	0.97	14		U

lw
2/27/09

FORM 1
VOLATILE ORGANICS ANALYSIS DATA SHEET

CLIENT SAMPLE NO. 6

MR08-IS05
8-2-3-08D

Lab Name: EMPIRICAL LABS Contract: CH2MHILL

Lab Code: NA Case No.: NA SAS No.: NA SDG No.: LEJEUNE027

Matrix: (soil/water) SOIL Lab Sample ID: 0812110-06

Sample wt/vol: 5.6 (g/mL) G Lab File ID: 1211006A

Level: (low/med) LOW Date Sampled: 12/06/08 10:20

% Moisture: not dec. 13 Date Analyzed: 12/18/08 21:31

GC Column: RTX-VRX ID: 0.25 (mm) Dilution Factor: 1.0

Soil Extract Volume:_____(uL) Soil Aliquot Volume: _____(uL)

CONCENTRATION UNITS: (ug/L or ug/Kg) UG/KG

CAS NO.	COMPOUND	MDL	RL	CONC	Q
67-64-1	Acetone	2.1	10	12	u B
71-43-2	Benzene	0.49	10		U
75-27-4	Bromodichloromethane	0.31	10		U
75-25-2	Bromoform	1.0	10		U
74-83-9	Bromomethane	0.74	10		~~U~~ UJ CC
78-93-3	2-Butanone	1.4	10		U
75-15-0	Carbon disulfide	1.3	10		U
56-23-5	Carbon tetrachloride	0.91	10		U
108-90-7	Chlorobenzene	0.35	10		U
75-00-3	Chloroethane	1.1	10		~~U~~ UJ CC
67-66-3	Chloroform	0.57	10		U
74-87-3	Chloromethane	0.54	10		U
110-82-7	Cyclohexane	0.56	10		U
124-48-1	Dibromochloromethane	0.35	10		U
96-12-8	1,2-Dibromo-3-chloropropane	1.2	5.2		U
106-93-4	1,2-Dibromoethane	0.44	10		U
95-50-1	1,2-Dichlorobenzene	0.38	10		U
541-73-1	1,3-Dichlorobenzene	0.87	10		U
106-46-7	1,4-Dichlorobenzene	0.57	10		U
75-71-8	Dichlorodifluoromethane	1.1	10		U
75-34-3	1,1-Dichloroethane	0.56	10		U
107-06-2	1,2-Dichloroethane	0.48	10		U
75-35-4	1,1-Dichloroethene	1.2	10		U
156-59-2	cis-1,2-Dichloroethene	1.2	10		U
156-60-5	trans-1,2-Dichloroethene	1.1	10		U
78-87-5	1,2-Dichloropropane	0.48	10		U
10061-01-5	cis-1,3-Dichloropropene	0.52	10		U
10061-02-6	trans-1,3-Dichloropropene	0.33	10		U
100-41-4	Ethylbenzene	0.78	10		U
591-78-6	2-Hexanone	2.4	10		U
98-82-8	Isopropylbenzene	0.91	10		U
79-20-9	Methyl acetate	1.6	10		U
75-09-2	Methylene chloride	0.64	10		U
108-87-2	Methyl cyclohexane	0.31	10		U
1634-04-4	Methyl tert-butyl ether	0.33	10		U
108-10-1	4-Methyl-2-pentanone	0.60	10		U
100-42-5	Styrene	0.36	10		U
79-34-5	1,1,2,2-Tetrachloroethane	0.44	10		U
127-18-4	Tetrachloroethene	1.0	10		U

lw
2/27/09

FORM 1
VOLATILE ORGANICS ANALYSIS DATA SHEET

CLIENT SAMPLE NO.

MR08-IS05
8-2-3-08D

6

Lab Name: EMPIRICAL LABS Contract: CH2MHILL

Lab Code: NA Case No.: NA SAS No.: NA SDG No.: LEJEUNE027

Matrix: (soil/water) SOIL Lab Sample ID: 0812110-06

Sample wt/vol: 5.6 (g/mL) G Lab File ID: 1211006A

Level: (low/med) LOW Date Sampled: 12/06/08 10:20

% Moisture: not dec. 13 Date Analyzed: 12/18/08 21:31

GC Column: RTX-VRX ID: 0.25 (mm) Dilution Factor: 1.0

Soil Extract Volume:_____(uL) Soil Aliquot Volume: _____(uL)

CONCENTRATION UNITS: (ug/L or ug/Kg) UG/KG

CAS NO.	COMPOUND	MDL	RL	CONC	Q
108-88-3	Toluene	0.89	10		U
120-82-1	1,2,4-Trichlorobenzene	0.19	10		U
71-55-6	1,1,1-Trichloroethane	0.93	10		U
79-00-5	1,1,2-Trichloroethane	0.36	10		U
79-01-6	Trichloroethene	0.88	10		U
76-13-1	Trichlorotrifluoroethane	0.57	10		U
75-69-4	Trichlorofluoromethane	0.98	10		U
75-01-4	Vinyl chloride	1.1	10		U
1330-20-7	Xylene(total)	0.72	10		U

lew
2/27/09

FORM 1
VOLATILE ORGANICS ANALYSIS DATA SHEET

CLIENT SAMPLE NO.

7

MR08-SS059-08D

Lab Name: EMPIRICAL LABS Contract: CH2MHILL

Lab Code: NA Case No.: NA SAS No.: NA SDG No.: LEJEUNE027

Matrix: (soil/water) SOIL Lab Sample ID: 0812110-07

Sample wt/vol: 1.7 (g/mL) G Lab File ID: 1211007A

Level: (low/med) LOW Date Sampled: 12/06/08 10:40

% Moisture: not dec. 14 Date Analyzed: 12/18/08 22:10

GC Column: RTX-VRX ID: 0.25 (mm) Dilution Factor: 1.0

Soil Extract Volume:_____(uL) Soil Aliquot Volume: _____(uL)

CONCENTRATION UNITS: (ug/L or ug/Kg) UG/KG

CAS NO.	COMPOUND	MDL	RL	CONC	Q
67-64-1	Acetone	6.6	33	120	
71-43-2	Benzene	1.6	33		U
75-27-4	Bromodichloromethane	1.00	33		U
75-25-2	Bromoform	3.3	33		U
74-83-9	Bromomethane	2.4	33		~~U~~ UJ CC
78-93-3	2-Butanone	4.6	33		U
75-15-0	Carbon disulfide	4.3	33		U
56-23-5	Carbon tetrachloride	2.9	33		U
108-90-7	Chlorobenzene	1.1	33		U
75-00-3	Chloroethane	3.6	33		~~U~~ UJ CC
67-66-3	Chloroform	1.8	33	33u ~~7.8 J~~	
74-87-3	Chloromethane	1.7	33		U
110-82-7	Cyclohexane	1.8	33		U
124-48-1	Dibromochloromethane	1.1	33		U
96-12-8	1,2-Dibromo-3-chloropropane	4.0	17		U
106-93-4	1,2-Dibromoethane	1.4	33		U
95-50-1	1,2-Dichlorobenzene	1.2	33		U
541-73-1	1,3-Dichlorobenzene	2.8	33		U
106-46-7	1,4-Dichlorobenzene	1.8	33		U
75-71-8	Dichlorodifluoromethane	3.6	33		U
75-34-3	1,1-Dichloroethane	1.8	33		U
107-06-2	1,2-Dichloroethane	1.5	33		U
75-35-4	1,1-Dichloroethene	4.0	33		U
156-59-2	cis-1,2-Dichloroethene	4.0	33		U
156-60-5	trans-1,2-Dichloroethene	3.6	33		U
78-87-5	1,2-Dichloropropane	1.5	33		U
10061-01-5	cis-1,3-Dichloropropene	1.7	33		U
10061-02-6	trans-1,3-Dichloropropene	1.1	33		U
100-41-4	Ethylbenzene	2.5	33		U
591-78-6	2-Hexanone	7.6	33		U
98-82-8	Isopropylbenzene	2.9	33		U
79-20-9	Methyl acetate	5.3	33		U
75-09-2	Methylene chloride	2.0	33		U
108-87-2	Methyl cyclohexane	1.00	33		U
1634-04-4	Methyl tert-butyl ether	1.1	33		U
108-10-1	4-Methyl-2-pentanone	1.9	33		U
100-42-5	Styrene	1.2	33		U
79-34-5	1,1,2,2-Tetrachloroethane	1.4	33		U
127-18-4	Tetrachloroethene	3.2	33		U

FORM I VOA

LW
2/27/09

FORM 1
VOLATILE ORGANICS ANALYSIS DATA SHEET

CLIENT SAMPLE NO.

7

MR08-SS059-08D

Lab Name: EMPIRICAL LABS Contract: CH2MHILL

Lab Code: NA Case No.: NA SAS No.: NA SDG No.: LEJEUNE027

Matrix: (soil/water) SOIL Lab Sample ID: 0812110-07

Sample wt/vol: 1.7 (g/mL) G Lab File ID: 1211007A

Level: (low/med) LOW Date Sampled: 12/06/08 10:40

% Moisture: not dec. 14 Date Analyzed: 12/18/08 22:10

GC Column: RTX-VRX ID: 0.25 (mm) Dilution Factor: 1.0

Soil Extract Volume:_____(uL) Soil Aliquot Volume: _____(uL)

CONCENTRATION UNITS: (ug/L or ug/Kg) UG/KG

CAS NO.	COMPOUND	MDL	RL	CONC	Q
108-88-3	Toluene	2.8	33		U
120-82-1	1,2,4-Trichlorobenzene	0.60	33		U
71-55-6	1,1,1-Trichloroethane	3.0	33		U
79-00-5	1,1,2-Trichloroethane	1.2	33		U
79-01-6	Trichloroethene	2.8	33		U
76-13-1	Trichlorotrifluoroethane	1.8	33		U
75-69-4	Trichlorofluoromethane	3.2	33		U
75-01-4	Vinyl chloride	3.6	33		U
1330-20-7	Xylene(total)	2.3	33		U

QW
2/27/09

FORM 1
VOLATILE ORGANICS ANALYSIS DATA SHEET

CLIENT SAMPLE NO. 8

MR08-SS059D-08D

Lab Name: EMPIRICAL LABS Contract: CH2MHILL

Lab Code: NA Case No.: NA SAS No.: NA SDG No.: LEJEUNE027

Matrix: (soil/water) SOIL Lab Sample ID: 0812110-08

Sample wt/vol: 3.7 (g/mL) G Lab File ID: 1211008A

Level: (low/med) LOW Date Sampled: 12/06/08 10:45

% Moisture: not dec. 13 Date Analyzed: 12/19/08 02:33

GC Column: RTX-VRX ID: 0.25 (mm) Dilution Factor: 1.0

Soil Extract Volume:_____(uL) Soil Aliquot Volume: _____(uL)

CONCENTRATION UNITS: (ug/L or ug/Kg) UG/KG

CAS NO.	COMPOUND	MDL	RL	CONC	Q	
67-64-1	Acetone	3.1	15	130	J	SSL
71-43-2	Benzene	0.72	15		U UJ	
75-27-4	Bromodichloromethane	0.46	15		U	
75-25-2	Bromoform	1.5	15		U	
74-83-9	Bromomethane	1.1	15		U	
78-93-3	2-Butanone	2.1	15		U	
75-15-0	Carbon disulfide	2.0	15		U	
56-23-5	Carbon tetrachloride	1.3	15		U	
108-90-7	Chlorobenzene	0.52	15		U	
75-00-3	Chloroethane	1.7	15		U	
67-66-3	Chloroform	0.84	15	15UJ ~~1.7~~	~~J~~ SSL	
74-87-3	Chloromethane	0.80	15		U UJ	SS
110-82-7	Cyclohexane	0.83	15		U	
124-48-1	Dibromochloromethane	0.52	15		U	
96-12-8	1,2-Dibromo-3-chloropropane	1.8	7.6		U	
106-93-4	1,2-Dibromoethane	0.66	15		U	
95-50-1	1,2-Dichlorobenzene	0.57	15		U	
541-73-1	1,3-Dichlorobenzene	1.3	15		U	
106-46-7	1,4-Dichlorobenzene	0.84	15		U	
75-71-8	Dichlorodifluoromethane	1.7	15		U	
75-34-3	1,1-Dichloroethane	0.83	15		U	
107-06-2	1,2-Dichloroethane	0.70	15		U	
75-35-4	1,1-Dichloroethene	1.8	15		U	
156-59-2	cis-1,2-Dichloroethene	1.8	15		U	
156-60-5	trans-1,2-Dichloroethene	1.7	15		U	
78-87-5	1,2-Dichloropropane	0.70	15		U	
10061-01-5	cis-1,3-Dichloropropene	0.76	15		U	
10061-02-6	trans-1,3-Dichloropropene	0.49	15		U	
100-41-4	Ethylbenzene	1.1	15		U	
591-78-6	2-Hexanone	3.5	15		U	
98-82-8	Isopropylbenzene	1.3	15		U	
79-20-9	Methyl acetate	2.4	15		U	
75-09-2	Methylene chloride	0.95	15	17	~~B~~ J	
108-87-2	Methyl cyclohexane	0.46	15		U UJ	
1634-04-4	Methyl tert-butyl ether	0.49	15		U	
108-10-1	4-Methyl-2-pentanone	0.89	15		U	
100-42-5	Styrene	0.54	15	0.91	J J	
79-34-5	1,1,2,2-Tetrachloroethane	0.66	15		U UJ	
127-18-4	Tetrachloroethene	1.5	15		U UJ	

FORM I VOA

JW 2/27/09

FORM 1
VOLATILE ORGANICS ANALYSIS DATA SHEET

CLIENT SAMPLE NO. 8

MR08-SS059D-08D

Lab Name: EMPIRICAL LABS Contract: CH2MHILL

Lab Code: NA Case No.: NA SAS No.: NA SDG No.: LEJEUNE027

Matrix: (soil/water) SOIL Lab Sample ID: 0812110-08

Sample wt/vol: 3.7 (g/mL) G Lab File ID: 1211008A

Level: (low/med) LOW Date Sampled: 12/06/08 10:45

% Moisture: not dec. 13 Date Analyzed: 12/19/08 02:33

GC Column: RTX-VRX ID: 0.25 (mm) Dilution Factor: 1.0

Soil Extract Volume:_____(uL) Soil Aliquot Volume: _____(uL)

CONCENTRATION UNITS: (ug/L or ug/Kg) UG/KG

CAS NO.	COMPOUND	MDL	RL	CONC	Q
108-88-3	Toluene	1.3	15	3.3	~~J~~ J
120-82-1	1,2,4-Trichlorobenzene	0.28	15		U
71-55-6	1,1,1-Trichloroethane	1.4	15		U UJ
79-00-5	1,1,2-Trichloroethane	0.54	15		U
79-01-6	Trichloroethene	1.3	15		U
76-13-1	Trichlorotrifluoroethane	0.84	15		U
75-69-4	Trichlorofluoromethane	1.4	15		U
75-01-4	Vinyl chloride	1.7	15		U
1330-20-7	Xylene(total)	1.1	15		U

SS

FORM I VOA

lcw
2/27/09

FORM 1
VOLATILE ORGANICS ANALYSIS DATA SHEET

CLIENT SAMPLE NO. 8RE

MR08-SS0
59D-08DR

Lab Name: EMPIRICAL LABS Contract: CH2MHILL

Lab Code: NA Case No.: NA SAS No.: NA SDG No.: LEJEUNE027

Matrix: (soil/water) SOIL Lab Sample ID: 0812110-08R

Sample wt/vol: 1.2 (g/mL) G Lab File ID: 1211008B

Level: (low/med) LOW Date Sampled: 12/06/08 10:45

% Moisture: not dec. 13 Date Analyzed: 12/21/08 20:36 use original

GC Column: RTX-VRX ID: 0.25 (mm) Dilution Factor: 1.0

Soil Extract Volume:_____(uL) Soil Aliquot Volume: _____(uL)

CONCENTRATION UNITS: (ug/L or ug/Kg) UG/KG

CAS NO.	COMPOUND	MDL	RL	CONC	Q	
67-64-1	Acetone	9.5	47	120	J	HT
71-43-2	Benzene	2.2	47		U UJ	
75-27-4	Bromodichloromethane	1.4	47		U	
75-25-2	Bromoform	4.7	47		U	
74-83-9	Bromomethane	3.4	47		U	
78-93-3	2-Butanone	6.6	47	6.8	~~J~~ J	
75-15-0	Carbon disulfide	6.2	47		U UJ	
56-23-5	Carbon tetrachloride	4.2	47		U	
108-90-7	Chlorobenzene	1.6	47		U	
75-00-3	Chloroethane	5.2	47		U	
67-66-3	Chloroform	2.6	47	41UJ	~~15 J~~ HT	
74-87-3	Chloromethane	2.5	47		U UJ	
110-82-7	Cyclohexane	2.6	47		U	
124-48-1	Dibromochloromethane	1.6	47		U	
96-12-8	1,2-Dibromo-3-chloropropane	5.7	24		U	
106-93-4	1,2-Dibromoethane	2.0	47		U	
95-50-1	1,2-Dichlorobenzene	1.8	47		U	
541-73-1	1,3-Dichlorobenzene	4.0	47		U	
106-46-7	1,4-Dichlorobenzene	2.6	47		U	
75-71-8	Dichlorodifluoromethane	5.2	47		U	
75-34-3	1,1-Dichloroethane	2.6	47		U	
107-06-2	1,2-Dichloroethane	2.2	47		U	
75-35-4	1,1-Dichloroethene	5.7	47		U	
156-59-2	cis-1,2-Dichloroethene	5.7	47		U	
156-60-5	trans-1,2-Dichloroethene	5.2	47		U	
78-87-5	1,2-Dichloropropane	2.2	47		U	
10061-01-5	cis-1,3-Dichloropropene	2.4	47		U	
10061-02-6	trans-1,3-Dichloropropene	1.5	47		U	
100-41-4	Ethylbenzene	3.6	47		U	
591-78-6	2-Hexanone	11	47		U	
98-82-8	Isopropylbenzene	4.2	47		U	
79-20-9	Methyl acetate	7.6	47		U	
75-09-2	Methylene chloride	2.9	47		U	
108-87-2	Methyl cyclohexane	1.4	47		U	
1634-04-4	Methyl tert-butyl ether	1.5	47		U	
108-10-1	4-Methyl-2-pentanone	2.7	47		U	
100-42-5	Styrene	1.6	47		U	
79-34-5	1,1,2,2-Tetrachloroethane	2.0	47		U	
127-18-4	Tetrachloroethene	4.6	47		U	

FORM I VOA

aw
2/27/09

FORM 1
VOLATILE ORGANICS ANALYSIS DATA SHEET

CLIENT SAMPLE NO.

8RE

MR08-SS0
59D-08DR

Lab Name: EMPIRICAL LABS Contract: CH2MHILL

Lab Code: NA Case No.: NA SAS No.: NA SDG No.: LEJEUNE027

Matrix: (soil/water) SOIL Lab Sample ID: 0812110-08R

Sample wt/vol: 1.2 (g/mL) G Lab File ID: 1211008B

Level: (low/med) LOW Date Sampled: 12/06/08 10:45

% Moisture: not dec. 13 Date Analyzed: 12/21/08 20:36 Use original

GC Column: RTX-VRX ID: 0.25 (mm) Dilution Factor: 1.0

Soil Extract Volume:_____(uL) Soil Aliquot Volume: _____(uL)

CONCENTRATION UNITS: (ug/L or ug/Kg) UG/KG

CAS NO.	COMPOUND	MDL	RL	CONC	Q
108-88-3	Toluene	4.1	47		U UJ
120-82-1	1,2,4-Trichlorobenzene	0.85	47		U
71-55-6	1,1,1-Trichloroethane	4.3	47		U
79-00-5	1,1,2-Trichloroethane	1.6	47		U
79-01-6	Trichloroethene	4.0	47		U
76-13-1	Trichlorotrifluoroethane	2.6	47		U
75-69-4	Trichlorofluoromethane	4.5	47		U
75-01-4	Vinyl chloride	5.2	47		U
1330-20-7	Xylene(total)	3.3	47		U

R

H

FORM I VOA

LW
2/27/09

FORM 1
VOLATILE ORGANICS ANALYSIS DATA SHEET

CLIENT SAMPLE NO.

MR08-IS05
9-3-4-08D

9

Lab Name: EMPIRICAL LABS Contract: CH2MHILL

Lab Code: NA Case No.: NA SAS No.: NA SDG No.: LEJEUNE027

Matrix: (soil/water) SOIL Lab Sample ID: 0812110-09

Sample wt/vol: 3.3 (g/mL) G Lab File ID: 1211009A

Level: (low/med) LOW Date Sampled: 12/06/08 10:50

% Moisture: not dec. 12 Date Analyzed: 12/19/08 03:12

GC Column: RTX-VRX ID: 0.25 (mm) Dilution Factor: 1.0

Soil Extract Volume:_____(uL) Soil Aliquot Volume: _____(uL)

CONCENTRATION UNITS: (ug/L or ug/Kg) UG/KG

CAS NO.	COMPOUND	MDL	RL	CONC	Q
67-64-1	Acetone	3.5	17	17U ~~8.1~~	~~J~~ B
71-43-2	Benzene	0.82	17		U
75-27-4	Bromodichloromethane	0.52	17		U
75-25-2	Bromoform	1.7	17		U
74-83-9	Bromomethane	1.2	17		U
78-93-3	2-Butanone	2.4	17		U
75-15-0	Carbon disulfide	2.3	17		U
56-23-5	Carbon tetrachloride	1.5	17		U
108-90-7	Chlorobenzene	0.59	17		U
75-00-3	Chloroethane	1.9	17		U
67-66-3	Chloroform	0.96	17		U
74-87-3	Chloromethane	0.91	17		U
110-82-7	Cyclohexane	0.94	17		U
124-48-1	Dibromochloromethane	0.59	17		U
96-12-8	1,2-Dibromo-3-chloropropane	2.1	8.7		U
106-93-4	1,2-Dibromoethane	0.75	17		U
95-50-1	1,2-Dichlorobenzene	0.65	17		U
541-73-1	1,3-Dichlorobenzene	1.5	17		U
106-46-7	1,4-Dichlorobenzene	0.96	17		U
75-71-8	Dichlorodifluoromethane	1.9	17		U
75-34-3	1,1-Dichloroethane	0.94	17		U
107-06-2	1,2-Dichloroethane	0.80	17		U
75-35-4	1,1-Dichloroethene	2.1	17		U
156-59-2	cis-1,2-Dichloroethene	2.1	17		U
156-60-5	trans-1,2-Dichloroethene	1.9	17		U
78-87-5	1,2-Dichloropropane	0.80	17		U
10061-01-5	cis-1,3-Dichloropropene	0.87	17		U
10061-02-6	trans-1,3-Dichloropropene	0.56	17		U
100-41-4	Ethylbenzene	1.3	17		U
591-78-6	2-Hexanone	4.0	17		U
98-82-8	Isopropylbenzene	1.5	17		U
79-20-9	Methyl acetate	2.8	17		U
75-09-2	Methylene chloride	1.1	17		U
108-87-2	Methyl cyclohexane	0.52	17		U
1634-04-4	Methyl tert-butyl ether	0.56	17		U
108-10-1	4-Methyl-2-pentanone	1.0	17		U
100-42-5	Styrene	0.61	17		U
79-34-5	1,1,2,2-Tetrachloroethane	0.75	17		U
127-18-4	Tetrachloroethene	1.7	17		U

FORM I VOA

RW
2/27/09

FORM 1
VOLATILE ORGANICS ANALYSIS DATA SHEET

CLIENT SAMPLE NO.

MR08-IS05
9-3-4-08D

9

Lab Name: EMPIRICAL LABS Contract: CH2MHILL

Lab Code: NA Case No.: NA SAS No.: NA SDG No.: LEJEUNE027

Matrix: (soil/water) SOIL Lab Sample ID: 0812110-09

Sample wt/vol: 3.3 (g/mL) G Lab File ID: 1211009A

Level: (low/med) LOW Date Sampled: 12/06/08 10:50

% Moisture: not dec. 12 Date Analyzed: 12/19/08 03:12

GC Column: RTX-VRX ID: 0.25 (mm) Dilution Factor: 1.0

Soil Extract Volume:_____(uL) Soil Aliquot Volume: _____(uL)

CONCENTRATION UNITS: (ug/L or ug/Kg) UG/KG

CAS NO.	COMPOUND	MDL	RL	CONC	Q
108-88-3	Toluene	1.5	17		U
120-82-1	1,2,4-Trichlorobenzene	0.31	17		U
71-55-6	1,1,1-Trichloroethane	1.6	17		U
79-00-5	1,1,2-Trichloroethane	0.61	17		U
79-01-6	Trichloroethene	1.5	17		U
76-13-1	Trichlorotrifluoroethane	0.96	17		U
75-69-4	Trichlorofluoromethane	1.6	17		U
75-01-4	Vinyl chloride	1.9	17		U
1330-20-7	Xylene(total)	1.2	17		U

lw
2/27/09

FORM 1
VOLATILE ORGANICS ANALYSIS DATA SHEET

CLIENT SAMPLE NO.

MR08-IS05
9D-3-4-08D

10

Lab Name: EMPIRICAL LABS Contract: CH2MHILL

Lab Code: NA Case No.: NA SAS No.: NA SDG No.: LEJEUNE027

Matrix: (soil/water) SOIL Lab Sample ID: 0812110-10

Sample wt/vol: 2.6 (g/mL) G Lab File ID: 1211010A

Level: (low/med) LOW Date Sampled: 12/06/08 11:00

% Moisture: not dec. 27 Date Analyzed: 12/19/08 03:51

GC Column: RTX-VRX ID: 0.25 (mm) Dilution Factor: 1.0

Soil Extract Volume:_____(uL) Soil Aliquot Volume: _____(uL)

CONCENTRATION UNITS: (ug/L or ug/Kg) UG/KG

CAS NO.	COMPOUND	MDL	RL	CONC	Q
67-64-1	Acetone	5.2	26	26u ~~13~~ ~~J~~	B
71-43-2	Benzene	1.2	26		U
75-27-4	Bromodichloromethane	0.78	26		U
75-25-2	Bromoform	2.6	26		U
74-83-9	Bromomethane	1.9	26		U
78-93-3	2-Butanone	3.6	26		U
75-15-0	Carbon disulfide	3.4	26		U
56-23-5	Carbon tetrachloride	2.3	26		U
108-90-7	Chlorobenzene	0.88	26		U
75-00-3	Chloroethane	2.8	26		U
67-66-3	Chloroform	1.4	26		U
74-87-3	Chloromethane	1.3	26		U
110-82-7	Cyclohexane	1.4	26		U
124-48-1	Dibromochloromethane	0.88	26		U
96-12-8	1,2-Dibromo-3-chloropropane	3.1	13		U
106-93-4	1,2-Dibromoethane	1.1	26		U
95-50-1	1,2-Dichlorobenzene	0.96	26		U
541-73-1	1,3-Dichlorobenzene	2.2	26		U
106-46-7	1,4-Dichlorobenzene	1.4	26		U
75-71-8	Dichlorodifluoromethane	2.8	26		U
75-34-3	1,1-Dichloroethane	1.4	26		U
107-06-2	1,2-Dichloroethane	1.2	26		U
75-35-4	1,1-Dichloroethene	3.1	26		U
156-59-2	cis-1,2-Dichloroethene	3.1	26		U
156-60-5	trans-1,2-Dichloroethene	2.8	26		U
78-87-5	1,2-Dichloropropane	1.2	26		U
10061-01-5	cis-1,3-Dichloropropene	1.3	26		U
10061-02-6	trans-1,3-Dichloropropene	0.83	26		U
100-41-4	Ethylbenzene	1.9	26		U
591-78-6	2-Hexanone	6.0	26		U
98-82-8	Isopropylbenzene	2.3	26		U
79-20-9	Methyl acetate	4.1	26		U
75-09-2	Methylene chloride	1.6	26		U
108-87-2	Methyl cyclohexane	0.78	26		U
1634-04-4	Methyl tert-butyl ether	0.83	26		U
108-10-1	4-Methyl-2-pentanone	1.5	26		U
100-42-5	Styrene	0.91	26		U
79-34-5	1,1,2,2-Tetrachloroethane	1.1	26		U
127-18-4	Tetrachloroethene	2.5	26		U

FORM I VOA

2/27/09

FORM 1
VOLATILE ORGANICS ANALYSIS DATA SHEET

CLIENT SAMPLE NO. 10

MR08-IS05
9D-3-4-08D

Lab Name: EMPIRICAL LABS Contract: CH2MHILL

Lab Code: NA Case No.: NA SAS No.: NA SDG No.: LEJEUNE027

Matrix: (soil/water) SOIL Lab Sample ID: 0812110-10

Sample wt/vol: 2.6 (g/mL) G Lab File ID: 1211010A

Level: (low/med) LOW Date Sampled: 12/06/08 11:00

% Moisture: not dec. 27 Date Analyzed: 12/19/08 03:51

GC Column: RTX-VRX ID: 0.25 (mm) Dilution Factor: 1.0

Soil Extract Volume:_____(uL) Soil Aliquot Volume: _____(uL)

CONCENTRATION UNITS: (ug/L or ug/Kg) UG/KG

CAS NO.	COMPOUND	MDL	RL	CONC	Q
108-88-3	Toluene	2.2	26		U
120-82-1	1,2,4-Trichlorobenzene	0.47	26		U
71-55-6	1,1,1-Trichloroethane	2.3	26		U
79-00-5	1,1,2-Trichloroethane	0.91	26		U
79-01-6	Trichloroethene	2.2	26		U
76-13-1	Trichlorotrifluoroethane	1.4	26		U
75-69-4	Trichlorofluoromethane	2.5	26		U
75-01-4	Vinyl chloride	2.8	26		U
1330-20-7	Xylene(total)	1.8	26		U

kw
2/27/09

FORM 1
VOLATILE ORGANICS ANALYSIS DATA SHEET

CLIENT SAMPLE NO.

MR08-SS060-08D

Lab Name: EMPIRICAL LABS Contract: CH2MHILL

Lab Code: NA Case No.: NA SAS No.: NA SDG No.: LEJEUNE027

Matrix: (soil/water) SOIL Lab Sample ID: 0812110-11

Sample wt/vol: 2.8 (g/mL) G Lab File ID: 1211011A

Level: (low/med) LOW Date Sampled: 12/06/08 11:20

% Moisture: not dec. 13 Date Analyzed: 12/19/08 04:30

GC Column: RTX-VRX ID: 0.25 (mm) Dilution Factor: 1.0

Soil Extract Volume:_____(uL) Soil Aliquot Volume: _____(uL)

CONCENTRATION UNITS: (ug/L or ug/Kg) UG/KG

CAS NO.	COMPOUND	MDL	RL	CONC	Q
67-64-1	Acetone	4.1	20	120	
71-43-2	Benzene	0.96	20		U
75-27-4	Bromodichloromethane	0.61	20		U
75-25-2	Bromoform	2.0	20		U
74-83-9	Bromomethane	1.5	20		U
78-93-3	2-Butanone	2.9	20	3.1	J
75-15-0	Carbon disulfide	2.7	20		U
56-23-5	Carbon tetrachloride	1.8	20		U
108-90-7	Chlorobenzene	0.70	20		U
75-00-3	Chloroethane	2.2	20		U
67-66-3	Chloroform	1.1	20		U
74-87-3	Chloromethane	1.1	20		U
110-82-7	Cyclohexane	1.1	20		U
124-48-1	Dibromochloromethane	0.70	20		U
96-12-8	1,2-Dibromo-3-chloropropane	2.4	10		U
106-93-4	1,2-Dibromoethane	0.88	20		U
95-50-1	1,2-Dichlorobenzene	0.76	20		U
541-73-1	1,3-Dichlorobenzene	1.7	20		U
106-46-7	1,4-Dichlorobenzene	1.1	20		U
75-71-8	Dichlorodifluoromethane	2.2	20		U
75-34-3	1,1-Dichloroethane	1.1	20		U
107-06-2	1,2-Dichloroethane	0.94	20		U
75-35-4	1,1-Dichloroethene	2.4	20		U
156-59-2	cis-1,2-Dichloroethene	2.4	20		U
156-60-5	trans-1,2-Dichloroethene	2.2	20		U
78-87-5	1,2-Dichloropropane	0.94	20		U
10061-01-5	cis-1,3-Dichloropropene	1.0	20		U
10061-02-6	trans-1,3-Dichloropropene	0.66	20		U
100-41-4	Ethylbenzene	1.5	20		U
591-78-6	2-Hexanone	4.7	20		U
98-82-8	Isopropylbenzene	1.8	20		U
79-20-9	Methyl acetate	3.3	20		U
75-09-2	Methylene chloride	1.3	20		U
108-87-2	Methyl cyclohexane	0.61	20		U
1634-04-4	Methyl tert-butyl ether	0.66	20		U
108-10-1	4-Methyl-2-pentanone	1.2	20		U
100-42-5	Styrene	0.72	20		U
79-34-5	1,1,2,2-Tetrachloroethane	0.88	20		U
127-18-4	Tetrachloroethene	2.0	20		U

LW 2/27/09

FORM 1
VOLATILE ORGANICS ANALYSIS DATA SHEET

CLIENT SAMPLE NO.

MR08-SS060-08D

Lab Name: EMPIRICAL LABS Contract: CH2MHILL

Lab Code: NA Case No.: NA SAS No.: NA SDG No.: LEJEUNE027

Matrix: (soil/water) SOIL Lab Sample ID: 0812110-11

Sample wt/vol: 2.8 (g/mL) G Lab File ID: 1211011A

Level: (low/med) LOW Date Sampled: 12/06/08 11:20

% Moisture: not dec. 13 Date Analyzed: 12/19/08 04:30

GC Column: RTX-VRX ID: 0.25 (mm) Dilution Factor: 1.0

Soil Extract Volume:_____(uL) Soil Aliquot Volume: _____(uL)

CONCENTRATION UNITS: (ug/L or ug/Kg) UG/KG

CAS NO.	COMPOUND	MDL	RL	CONC	Q
108-88-3	Toluene	1.8	20		U
120-82-1	1,2,4-Trichlorobenzene	0.37	20		U
71-55-6	1,1,1-Trichloroethane	1.8	20		U
79-00-5	1,1,2-Trichloroethane	0.72	20		U
79-01-6	Trichloroethene	1.7	20		U
76-13-1	Trichlorotrifluoroethane	1.1	20		U
75-69-4	Trichlorofluoromethane	1.9	20		U
75-01-4	Vinyl chloride	2.2	20		U
1330-20-7	Xylene(total)	1.4	20		U

2/27/09

FORM 1
VOLATILE ORGANICS ANALYSIS DATA SHEET

CLIENT SAMPLE NO. 12

MR08-IS06
0-2-3-08D

Lab Name: EMPIRICAL LABS Contract: CH2MHILL

Lab Code: NA Case No.: NA SAS No.: NA SDG No.: LEJEUNE027

Matrix: (soil/water) SOIL Lab Sample ID: 0812110-12

Sample wt/vol: 4.7 (g/mL) G Lab File ID: 1211012A

Level: (low/med) LOW Date Sampled: 12/06/08 12:45

% Moisture: not dec. 11 Date Analyzed: 12/19/08 05:10

GC Column: RTX-VRX ID: 0.25 (mm) Dilution Factor: 1.0

Soil Extract Volume:_____(uL) Soil Aliquot Volume: _____(uL)

CONCENTRATION UNITS: (ug/L or ug/Kg) UG/KG

CAS NO.	COMPOUND	MDL	RL	CONC	Q
67-64-1	Acetone	2.4	12	12	u
71-43-2	Benzene	0.56	12		U
75-27-4	Bromodichloromethane	0.36	12		U
75-25-2	Bromoform	1.2	12		U
74-83-9	Bromomethane	0.86	12		U
78-93-3	2-Butanone	1.7	12		U
75-15-0	Carbon disulfide	1.5	12		U
56-23-5	Carbon tetrachloride	1.0	12		U
108-90-7	Chlorobenzene	0.40	12		U
75-00-3	Chloroethane	1.3	12		U
67-66-3	Chloroform	0.65	12		U
74-87-3	Chloromethane	0.62	12		U
110-82-7	Cyclohexane	0.64	12		U
124-48-1	Dibromochloromethane	0.40	12		U
96-12-8	1,2-Dibromo-3-chloropropane	1.4	5.9		U
106-93-4	1,2-Dibromoethane	0.51	12		U
95-50-1	1,2-Dichlorobenzene	0.44	12		U
541-73-1	1,3-Dichlorobenzene	1.00	12		U
106-46-7	1,4-Dichlorobenzene	0.65	12		U
75-71-8	Dichlorodifluoromethane	1.3	12		U
75-34-3	1,1-Dichloroethane	0.64	12		U
107-06-2	1,2-Dichloroethane	0.55	12		U
75-35-4	1,1-Dichloroethene	1.4	12		U
156-59-2	cis-1,2-Dichloroethene	1.4	12		U
156-60-5	trans-1,2-Dichloroethene	1.3	12		U
78-87-5	1,2-Dichloropropane	0.55	12		U
10061-01-5	cis-1,3-Dichloropropene	0.59	12		U
10061-02-6	trans-1,3-Dichloropropene	0.38	12		U
100-41-4	Ethylbenzene	0.89	12		U
591-78-6	2-Hexanone	2.7	12		U
98-82-8	Isopropylbenzene	1.0	12		U
79-20-9	Methyl acetate	1.9	12		U
75-09-2	Methylene chloride	0.74	12		U
108-87-2	Methyl cyclohexane	0.36	12		U
1634-04-4	Methyl tert-butyl ether	0.38	12		U
108-10-1	4-Methyl-2-pentanone	0.69	12		U
100-42-5	Styrene	0.42	12		U
79-34-5	1,1,2,2-Tetrachloroethane	0.51	12		U
127-18-4	Tetrachloroethene	1.2	12		U

LW
2/27/09

FORM 1
VOLATILE ORGANICS ANALYSIS DATA SHEET

CLIENT SAMPLE NO. 12

MR08-IS06
0-2-3-08D

Lab Name: EMPIRICAL LABS Contract: CH2MHILL

Lab Code: NA Case No.: NA SAS No.: NA SDG No.: LEJEUNE027

Matrix: (soil/water) SOIL Lab Sample ID: 0812110-12

Sample wt/vol: 4.7 (g/mL) G Lab File ID: 1211012A

Level: (low/med) LOW Date Sampled: 12/06/08 12:45

% Moisture: not dec. 11 Date Analyzed: 12/19/08 05:10

GC Column: RTX-VRX ID: 0.25 (mm) Dilution Factor: 1.0

Soil Extract Volume:_____(uL) Soil Aliquot Volume: _____(uL)

CONCENTRATION UNITS: (ug/L or ug/Kg) UG/KG

CAS NO.	COMPOUND	MDL	RL	CONC	Q
108-88-3	Toluene	1.0	12		U
120-82-1	1,2,4-Trichlorobenzene	0.21	12		U
71-55-6	1,1,1-Trichloroethane	1.1	12		U
79-00-5	1,1,2-Trichloroethane	0.42	12		U
79-01-6	Trichloroethene	1.0	12		U
76-13-1	Trichlorotrifluoroethane	0.65	12		U
75-69-4	Trichlorofluoromethane	1.1	12		U
75-01-4	Vinyl chloride	1.3	12		U
1330-20-7	Xylene(total)	0.83	12		U

aw
2/27/09

FORM 1
VOLATILE ORGANICS ANALYSIS DATA SHEET

CLIENT SAMPLE NO. 13

MR08-SS061-08D

Lab Name: EMPIRICAL LABS Contract: CH2MHILL

Lab Code: NA Case No.: NA SAS No.: NA SDG No.: LEJEUNE027

Matrix: (soil/water) SOIL Lab Sample ID: 0812110-13

Sample wt/vol: 5.3 (g/mL) G Lab File ID: 1211013A

Level: (low/med) LOW Date Sampled: 12/06/08 13:20 Use reanalysis

% Moisture: not dec. 24 Date Analyzed: 12/19/08 05:49

GC Column: RTX-VRX ID: 0.25 (mm) Dilution Factor: 1.0

Soil Extract Volume:_____(uL) Soil Aliquot Volume: _____(uL)

CONCENTRATION UNITS: (ug/L or ug/Kg) UG/KG

CAS NO.	COMPOUND	MDL	RL	CONC	Q
67-64-1	Acetone	2.5	12		U
71-43-2	Benzene	0.59	12		U
75-27-4	Bromodichloromethane	0.38	12		U
75-25-2	Bromoform	1.2	12		U
74-83-9	Bromomethane	0.90	12		U
78-93-3	2-Butanone	1.8	12	6.6	J
75-15-0	Carbon disulfide	1.6	12		U
56-23-5	Carbon tetrachloride	1.1	12		U
108-90-7	Chlorobenzene	0.42	12		U
75-00-3	Chloroethane	1.4	12		U
67-66-3	Chloroform	0.69	12		U
74-87-3	Chloromethane	0.65	12		U
110-82-7	Cyclohexane	0.68	12		U
124-48-1	Dibromochloromethane	0.42	12		U
96-12-8	1,2-Dibromo-3-chloropropane	1.5	6.2		U
106-93-4	1,2-Dibromoethane	0.54	12		U
95-50-1	1,2-Dichlorobenzene	0.46	12		U
541-73-1	1,3-Dichlorobenzene	1.0	12		U
106-46-7	1,4-Dichlorobenzene	0.69	12		U
75-71-8	Dichlorodifluoromethane	1.4	12		U
75-34-3	1,1-Dichloroethane	0.68	12		U
107-06-2	1,2-Dichloroethane	0.58	12		U
75-35-4	1,1-Dichloroethene	1.5	12		U
156-59-2	cis-1,2-Dichloroethene	1.5	12		U
156-60-5	trans-1,2-Dichloroethene	1.4	12		U
78-87-5	1,2-Dichloropropane	0.58	12		U
10061-01-5	cis-1,3-Dichloropropene	0.62	12		U
10061-02-6	trans-1,3-Dichloropropene	0.40	12		U
100-41-4	Ethylbenzene	0.94	12		U
591-78-6	2-Hexanone	2.9	12		U
98-82-8	Isopropylbenzene	1.1	12		U
79-20-9	Methyl acetate	2.0	12		U
75-09-2	Methylene chloride	0.78	12		U
108-87-2	Methyl cyclohexane	0.38	12		U
1634-04-4	Methyl tert-butyl ether	0.40	12		U
108-10-1	4-Methyl-2-pentanone	0.72	12		U
100-42-5	Styrene	0.44	12		U
79-34-5	1,1,2,2-Tetrachloroethane	0.54	12		U
127-18-4	Tetrachloroethene	1.2	12		U

lw 7/27/09

FORM 1
VOLATILE ORGANICS ANALYSIS DATA SHEET

CLIENT SAMPLE NO. 13

MR08-SS061-08D

Lab Name: EMPIRICAL LABS Contract: CH2MHILL

Lab Code: NA Case No.: NA SAS No.: NA SDG No.: LEJEUNE027

Matrix: (soil/water) SOIL Lab Sample ID: 0812110-13

Sample wt/vol: 5.3 (g/mL) G Lab File ID: 1211013A

Level: (low/med) LOW Date Sampled: 12/06/08 13:20

% Moisture: not dec. 24 Date Analyzed: 12/19/08 05:49 use reanalysis

GC Column: RTX-VRX ID: 0.25 (mm) Dilution Factor: 1.0

Soil Extract Volume:_____(uL) Soil Aliquot Volume: _____(uL)

CONCENTRATION UNITS: (ug/L or ug/Kg) UG/KG

CAS NO.	COMPOUND	MDL	RL	CONC	Q
108-88-3	Toluene	1.1	12		U
120-82-1	1,2,4-Trichlorobenzene	0.22	12		U
71-55-6	1,1,1-Trichloroethane	1.1	12		U
79-00-5	1,1,2-Trichloroethane	0.44	12		U
79-01-6	Trichloroethene	1.1	12		U
76-13-1	Trichlorotrifluoroethane	0.69	12		U
75-69-4	Trichlorofluoromethane	1.2	12		U
75-01-4	Vinyl chloride	1.4	12		U
1330-20-7	Xylene(total)	0.88	12		U

kw
2/27/09

FORM 1
VOLATILE ORGANICS ANALYSIS DATA SHEET

CLIENT SAMPLE NO. 13RE

MR08-SS061-08DR

Lab Name: EMPIRICAL LABS Contract: CH2MHILL

Lab Code: NA Case No.: NA SAS No.: NA SDG No.: LEJEUNE027

Matrix: (soil/water) SOIL Lab Sample ID: 0812110-13R

Sample wt/vol: 5.4 (g/mL) G Lab File ID: 1211013B

Level: (low/med) LOW Date Sampled: 12/06/08 13:20

% Moisture: not dec. 24 Date Analyzed: 12/28/08 00:13

GC Column: RTX-VRX ID: 0.25 (mm) Dilution Factor: 1.0

Soil Extract Volume:_____(uL) Soil Aliquot Volume: _____(uL)

CONCENTRATION UNITS: (ug/L or ug/Kg) UG/KG

CAS NO.	COMPOUND	MDL	RL	CONC	Q	
67-64-1	Acetone	2.4	12	120	J	HT
71-43-2	Benzene	0.57	12		U UJ	
75-27-4	Bromodichloromethane	0.36	12		U	
75-25-2	Bromoform	1.2	12		U	
74-83-9	Bromomethane	0.87	12		U	
78-93-3	2-Butanone	1.7	12	7.7	J J	
75-15-0	Carbon disulfide	1.6	12		U UJ	
56-23-5	Carbon tetrachloride	1.1	12		U	
108-90-7	Chlorobenzene	0.41	12		U	
75-00-3	Chloroethane	1.3	12		U	
67-66-3	Chloroform	0.67	12		U	
74-87-3	Chloromethane	0.63	12		U	
110-82-7	Cyclohexane	0.66	12		U	
124-48-1	Dibromochloromethane	0.41	12		U	
96-12-8	1,2-Dibromo-3-chloropropane	1.4	6.1		U UJ	I
106-93-4	1,2-Dibromoethane	0.52	12		U UJ	H
95-50-1	1,2-Dichlorobenzene	0.45	12	0.45	J J	I
541-73-1	1,3-Dichlorobenzene	1.0	12		U UJ	
106-46-7	1,4-Dichlorobenzene	0.67	12		U UJ	
75-71-8	Dichlorodifluoromethane	1.3	12		U UJ	H
75-34-3	1,1-Dichloroethane	0.66	12		U	
107-06-2	1,2-Dichloroethane	0.56	12		U	
75-35-4	1,1-Dichloroethene	1.4	12		U	
156-59-2	cis-1,2-Dichloroethene	1.4	12		U	
156-60-5	trans-1,2-Dichloroethene	1.3	12		U	
78-87-5	1,2-Dichloropropane	0.56	12		U	
10061-01-5	cis-1,3-Dichloropropene	0.61	12		U	
10061-02-6	trans-1,3-Dichloropropene	0.39	12		U	
100-41-4	Ethylbenzene	0.91	12		U	
591-78-6	2-Hexanone	2.8	12		U	
98-82-8	Isopropylbenzene	1.1	12		U	
79-20-9	Methyl acetate	1.9	12	13	J	
75-09-2	Methylene chloride	0.75	12	12UJ ~~2.1~~	JB HT	B
108-87-2	Methyl cyclohexane	0.36	12		U UJ	
1634-04-4	Methyl tert-butyl ether	0.39	12		U	
108-10-1	4-Methyl-2-pentanone	0.70	12		U	
100-42-5	Styrene	0.42	12		U	
79-34-5	1,1,2,2-Tetrachloroethane	0.52	12		U UJ	IS
127-18-4	Tetrachloroethene	1.2	12		U UJ	HT

FORM I VOA

lw
2/27/09

FORM 1
VOLATILE ORGANICS ANALYSIS DATA SHEET

CLIENT SAMPLE NO.

13 RS

MR08-SS061-08DR

Lab Name: EMPIRICAL LABS Contract: CH2MHILL

Lab Code: NA Case No.: NA SAS No.: NA SDG No.: LEJEUNE027

Matrix: (soil/water) SOIL Lab Sample ID: 0812110-13R

Sample wt/vol: 5.4 (g/mL) G Lab File ID: 1211013B

Level: (low/med) LOW Date Sampled: 12/06/08 13:20

% Moisture: not dec. 24 Date Analyzed: 12/28/08 00:13

GC Column: RTX-VRX ID: 0.25 (mm) Dilution Factor: 1.0

Soil Extract Volume:_____(uL) Soil Aliquot Volume: _____(uL)

CONCENTRATION UNITS: (ug/L or ug/Kg) UG/KG

CAS NO.	COMPOUND	MDL	RL	CONC	Q
108-88-3	Toluene	1.0	12	12UJ ~~1.2~~	~~J~~ HT
120-82-1	1,2,4-Trichlorobenzene	0.22	12	0.90	~~J~~ J
71-55-6	1,1,1-Trichloroethane	1.1	12		U UJ
79-00-5	1,1,2-Trichloroethane	0.42	12		U
79-01-6	Trichloroethene	1.0	12		U
76-13-1	Trichlorotrifluoroethane	0.67	12		U
75-69-4	Trichlorofluoromethane	1.2	12		U
75-01-4	Vinyl chloride	1.3	12		U
1330-20-7	Xylene(total)	0.85	12		U

FORM I VOA

CW
2/27/09

FORM 1
VOLATILE ORGANICS ANALYSIS DATA SHEET

CLIENT SAMPLE NO.

MR08-IS06
1-2-3-08D

14

Lab Name: EMPIRICAL LABS Contract: CH2MHILL

Lab Code: NA Case No.: NA SAS No.: NA SDG No.: LEJEUNE027

Matrix: (soil/water) SOIL Lab Sample ID: 0812110-14

Sample wt/vol: 5.6 (g/mL) G Lab File ID: 1211014A

Level: (low/med) LOW Date Sampled: 12/06/08 13:30

% Moisture: not dec. 12 Date Analyzed: 12/19/08 06:28

GC Column: RTX-VRX ID: 0.25 (mm) Dilution Factor: 1.0

Soil Extract Volume:_____(uL) Soil Aliquot Volume: _____(uL)

CONCENTRATION UNITS: (ug/L or ug/Kg) UG/KG

CAS NO.	COMPOUND	MDL	RL	CONC	Q
67-64-1	Acetone	2.0	10	10U ~~8.4~~	~~J~~ B
71-43-2	Benzene	0.47	10		U
75-27-4	Bromodichloromethane	0.30	10		U
75-25-2	Bromoform	1.0	10		U
74-83-9	Bromomethane	0.73	10		U
78-93-3	2-Butanone	1.4	10		U
75-15-0	Carbon disulfide	1.3	10		U
56-23-5	Carbon tetrachloride	0.89	10		U
108-90-7	Chlorobenzene	0.34	10		U
75-00-3	Chloroethane	1.1	10		U
67-66-3	Chloroform	0.56	10		U
74-87-3	Chloromethane	0.52	10		U
110-82-7	Cyclohexane	0.54	10		U
124-48-1	Dibromochloromethane	0.34	10		U
96-12-8	1,2-Dibromo-3-chloropropane	1.2	5.0		U
106-93-4	1,2-Dibromoethane	0.43	10		U
95-50-1	1,2-Dichlorobenzene	0.37	10		U
541-73-1	1,3-Dichlorobenzene	0.85	10		U
106-46-7	1,4-Dichlorobenzene	0.56	10		U
75-71-8	Dichlorodifluoromethane	1.1	10		U
75-34-3	1,1-Dichloroethane	0.54	10		U
107-06-2	1,2-Dichloroethane	0.46	10		U
75-35-4	1,1-Dichloroethene	1.2	10		U
156-59-2	cis-1,2-Dichloroethene	1.2	10		U
156-60-5	trans-1,2-Dichloroethene	1.1	10		U
78-87-5	1,2-Dichloropropane	0.46	10		U
10061-01-5	cis-1,3-Dichloropropene	0.50	10		U
10061-02-6	trans-1,3-Dichloropropene	0.32	10		U
100-41-4	Ethylbenzene	0.76	10		U
591-78-6	2-Hexanone	2.3	10		U
98-82-8	Isopropylbenzene	0.89	10		U
79-20-9	Methyl acetate	1.6	10		U
75-09-2	Methylene chloride	0.63	10		U
108-87-2	Methyl cyclohexane	0.30	10		U
1634-04-4	Methyl tert-butyl ether	0.32	10		U
108-10-1	4-Methyl-2-pentanone	0.58	10		U
100-42-5	Styrene	0.35	10		U
79-34-5	1,1,2,2-Tetrachloroethane	0.43	10		U
127-18-4	Tetrachloroethene	0.98	10		U

2/27/09

FORM 1
VOLATILE ORGANICS ANALYSIS DATA SHEET

CLIENT SAMPLE NO.

MR08-IS06
1-2-3-08D

14

Lab Name: EMPIRICAL LABS Contract: CH2MHILL

Lab Code: NA Case No.: NA SAS No.: NA SDG No.: LEJEUNE027

Matrix: (soil/water) SOIL Lab Sample ID: 0812110-14

Sample wt/vol: 5.6 (g/mL) G Lab File ID: 1211014A

Level: (low/med) LOW Date Sampled: 12/06/08 13:30

% Moisture: not dec. 12 Date Analyzed: 12/19/08 06:28

GC Column: RTX-VRX ID: 0.25 (mm) Dilution Factor: 1.0

Soil Extract Volume:_____(uL) Soil Aliquot Volume: _____(uL)

CONCENTRATION UNITS: (ug/L or ug/Kg) UG/KG

CAS NO.	COMPOUND	MDL	RL	CONC	Q
108-88-3	Toluene	0.87	10		U
120-82-1	1,2,4-Trichlorobenzene	0.18	10		U
71-55-6	1,1,1-Trichloroethane	0.91	10		U
79-00-5	1,1,2-Trichloroethane	0.35	10		U
79-01-6	Trichloroethene	0.86	10		U
76-13-1	Trichlorotrifluoroethane	0.56	10		U
75-69-4	Trichlorofluoromethane	0.96	10		U
75-01-4	Vinyl chloride	1.1	10		U
1330-20-7	Xylene(total)	0.71	10		U

MW 1/27/09

FORM 1
VOLATILE ORGANICS ANALYSIS DATA SHEET

CLIENT SAMPLE NO. 15

MR08-SS062-08D

Lab Name: EMPIRICAL LABS Contract: CH2MHILL

Lab Code: NA Case No.: NA SAS No.: NA SDG No.: LEJEUNE027

Matrix: (soil/water) SOIL Lab Sample ID: 0812110-15

Sample wt/vol: 6.0 (g/mL) G Lab File ID: 1211015A

Level: (low/med) LOW Date Sampled: 12/06/08 14:00

% Moisture: not dec. 14 Date Analyzed: 12/19/08 07:07

GC Column: RTX-VRX ID: 0.25 (mm) Dilution Factor: 1.0

Soil Extract Volume:_____(uL) Soil Aliquot Volume: _____(uL)

CONCENTRATION UNITS: (ug/L or ug/Kg) UG/KG

CAS NO.	COMPOUND	MDL	RL	CONC	Q	
67-64-1	Acetone	1.9	9.7	58	J	SS
71-43-2	Benzene	0.46	9.7		U UJ	
75-27-4	Bromodichloromethane	0.29	9.7		U	
75-25-2	Bromoform	0.97	9.7		U	
74-83-9	Bromomethane	0.70	9.7		U	
78-93-3	2-Butanone	1.4	9.7		U	
75-15-0	Carbon disulfide	1.3	9.7		U	
56-23-5	Carbon tetrachloride	0.86	9.7		U	
108-90-7	Chlorobenzene	0.33	9.7		U	
75-00-3	Chloroethane	1.1	9.7		U	
67-66-3	Chloroform	0.54	9.7	9.7 UJ ~~0.55~~	~~J~~ SSL	B
74-87-3	Chloromethane	0.51	9.7		U UJ	SS
110-82-7	Cyclohexane	0.53	9.7		U	
124-48-1	Dibromochloromethane	0.33	9.7		U	
96-12-8	1,2-Dibromo-3-chloropropane	1.2	4.9		U	
106-93-4	1,2-Dibromoethane	0.42	9.7		U	
95-50-1	1,2-Dichlorobenzene	0.36	9.7		U	
541-73-1	1,3-Dichlorobenzene	0.82	9.7		U	
106-46-7	1,4-Dichlorobenzene	0.54	9.7		U	
75-71-8	Dichlorodifluoromethane	1.1	9.7		U	
75-34-3	1,1-Dichloroethane	0.53	9.7		U	
107-06-2	1,2-Dichloroethane	0.45	9.7		U	
75-35-4	1,1-Dichloroethene	1.2	9.7		U	
156-59-2	cis-1,2-Dichloroethene	1.2	9.7		U	
156-60-5	trans-1,2-Dichloroethene	1.1	9.7		U	
78-87-5	1,2-Dichloropropane	0.45	9.7		U	
10061-01-5	cis-1,3-Dichloropropene	0.49	9.7		U	
10061-02-6	trans-1,3-Dichloropropene	0.31	9.7		U	
100-41-4	Ethylbenzene	0.73	9.7		U	
591-78-6	2-Hexanone	2.2	9.7		U	
98-82-8	Isopropylbenzene	0.86	9.7		U	
79-20-9	Methyl acetate	1.6	9.7		U	
75-09-2	Methylene chloride	0.60	9.7		U	
108-87-2	Methyl cyclohexane	0.29	9.7		U	
1634-04-4	Methyl tert-butyl ether	0.31	9.7		U	
108-10-1	4-Methyl-2-pentanone	0.56	9.7		U	
100-42-5	Styrene	0.34	9.7		U	
79-34-5	1,1,2,2-Tetrachloroethane	0.42	9.7		U	
127-18-4	Tetrachloroethene	0.94	9.7		U	

FORM I VOA

LW
2/27/09

FORM 1
VOLATILE ORGANICS ANALYSIS DATA SHEET

CLIENT SAMPLE NO. 15

MR08-SS062-08D

Lab Name: EMPIRICAL LABS Contract: CH2MHILL

Lab Code: NA Case No.: NA SAS No.: NA SDG No.: LEJEUNE027

Matrix: (soil/water) SOIL Lab Sample ID: 0812110-15

Sample wt/vol: 6.0 (g/mL) G Lab File ID: 1211015A

Level: (low/med) LOW Date Sampled: 12/06/08 14:00

% Moisture: not dec. 14 Date Analyzed: 12/19/08 07:07

GC Column: RTX-VRX ID: 0.25 (mm) Dilution Factor: 1.0

Soil Extract Volume:_____(uL) Soil Aliquot Volume: _____(uL)

CONCENTRATION UNITS: (ug/L or ug/Kg) UG/KG

CAS NO.	COMPOUND	MDL	RL	CONC	Q
108-88-3	Toluene	0.84	9.7		U UJ
120-82-1	1,2,4-Trichlorobenzene	0.18	9.7		U
71-55-6	1,1,1-Trichloroethane	0.88	9.7		U
79-00-5	1,1,2-Trichloroethane	0.34	9.7		U
79-01-6	Trichloroethene	0.83	9.7		U
76-13-1	Trichlorotrifluoroethane	0.54	9.7		U
75-69-4	Trichlorofluoromethane	0.93	9.7		U
75-01-4	Vinyl chloride	1.1	9.7		U
1330-20-7	Xylene(total)	0.68	9.7		U

S.

FORM I VOA

lw 2/27/09

FORM 1
VOLATILE ORGANICS ANALYSIS DATA SHEET

CLIENT SAMPLE NO.

15R

MR08-SS062-08DR

Lab Name: EMPIRICAL LABS Contract: CH2MHILL

Lab Code: NA Case No.: NA SAS No.: NA SDG No.: LEJEUNE027

Matrix: (soil/water) SOIL Lab Sample ID: 0812110-15R

Sample wt/vol: 5.7 (g/mL) G Lab File ID: 1211015B

Level: (low/med) LOW Date Sampled: 12/06/08 14:00

% Moisture: not dec. 14 Date Analyzed: 12/28/08 00:52 use original

GC Column: RTX-VRX ID: 0.25 (mm) Dilution Factor: 1.0

Soil Extract Volume:_____(uL) Soil Aliquot Volume: _____(uL)

CONCENTRATION UNITS: (ug/L or ug/Kg) UG/KG

CAS NO.	COMPOUND	MDL	RL	CONC	Q	
67-64-1	Acetone	2.0	10	50	J	H
71-43-2	Benzene	0.48	10		~~U~~ UJ	H
75-27-4	Bromodichloromethane	0.31	10		~~U~~ UJ	I
75-25-2	Bromoform	1.0	10		~~U~~ UJ	I
74-83-9	Bromomethane	0.74	10		U UJ	H
78-93-3	2-Butanone	1.4	10		U	
75-15-0	Carbon disulfide	1.3	10		U	
56-23-5	Carbon tetrachloride	0.90	10		U	
108-90-7	Chlorobenzene	0.35	10		~~U~~ UJ	I
75-00-3	Chloroethane	1.1	10		~~U~~ UJ	H
67-66-3	Chloroform	0.56	10	10UJ ~~0.63~~	~~J~~ HT	B
74-87-3	Chloromethane	0.53	10		U UJ	H
110-82-7	Cyclohexane	0.55	10		U UJ	H
124-48-1	Dibromochloromethane	0.35	10		~~U~~ UJ	I
96-12-8	1,2-Dibromo-3-chloropropane	1.2	5.1		~~U~~ UJ	I
106-93-4	1,2-Dibromoethane	0.44	10		~~U~~ UJ	I
95-50-1	1,2-Dichlorobenzene	0.38	10		U UJ	I
541-73-1	1,3-Dichlorobenzene	0.86	10		U	
106-46-7	1,4-Dichlorobenzene	0.56	10		U	
75-71-8	Dichlorodifluoromethane	1.1	10		U UJ	H
75-34-3	1,1-Dichloroethane	0.55	10		U	
107-06-2	1,2-Dichloroethane	0.47	10		U	
75-35-4	1,1-Dichloroethene	1.2	10		U	
156-59-2	cis-1,2-Dichloroethene	1.2	10		U	
156-60-5	trans-1,2-Dichloroethene	1.1	10		U	
78-87-5	1,2-Dichloropropane	0.47	10		U	
10061-01-5	cis-1,3-Dichloropropene	0.51	10		U	
10061-02-6	trans-1,3-Dichloropropene	0.33	10		~~U~~ UJ	I
100-41-4	Ethylbenzene	0.77	10		~~U~~ UJ	I
591-78-6	2-Hexanone	2.4	10		~~U~~ UJ	I
98-82-8	Isopropylbenzene	0.90	10		U UJ	I
79-20-9	Methyl acetate	1.6	10		U UJ	I
75-09-2	Methylene chloride	0.63	10	10UJ ~~1.2~~	JB HT	B
108-87-2	Methyl cyclohexane	0.31	10		U UJ	I
1634-04-4	Methyl tert-butyl ether	0.33	10		U	
108-10-1	4-Methyl-2-pentanone	0.59	10		U	
100-42-5	Styrene	0.36	10		~~U~~ UJ	I
79-34-5	1,1,2,2-Tetrachloroethane	0.44	10		~~U~~ UJ	I
127-18-4	Tetrachloroethene	0.99	10		~~U~~ UJ	I

FORM I VOA

kw 2/27/09

FORM 1
VOLATILE ORGANICS ANALYSIS DATA SHEET

CLIENT SAMPLE NO. 15RE

MR08-SS062-08DR

Lab Name: EMPIRICAL LABS Contract: CH2MHILL

Lab Code: NA Case No.: NA SAS No.: NA SDG No.: LEJEUNE027

Matrix: (soil/water) SOIL Lab Sample ID: 0812110-15R

Sample wt/vol: 5.7 (g/mL) G Lab File ID: 1211015B

Level: (low/med) LOW Date Sampled: 12/06/08 14:00

% Moisture: not dec. 14 Date Analyzed: 12/28/08 00:52 Use Orig/INA

GC Column: RTX-VRX ID: 0.25 (mm) Dilution Factor: 1.0

Soil Extract Volume:_____(uL) Soil Aliquot Volume: _____(uL)

CONCENTRATION UNITS: (ug/L or ug/Kg) UG/KG

CAS NO.	COMPOUND	MDL	RL	CONC	Q
108-88-3	Toluene	0.88	10		~~U~~ UJ ISL
120-82-1	1,2,4-Trichlorobenzene	0.18	10		~~U~~ UJ IS
71-55-6	1,1,1-Trichloroethane	0.92	10		~~U~~ UJ HT
79-00-5	1,1,2-Trichloroethane	0.36	10		~~U~~ UJ ISL
79-01-6	Trichloroethene	0.87	10		~~U~~ UJ HT
76-13-1	Trichlorotrifluoroethane	0.56	10		U
75-69-4	Trichlorofluoromethane	0.97	10		U
75-01-4	Vinyl chloride	1.1	10		U
1330-20-7	Xylene(total)	0.72	10		~~U~~ UJ ISL

R

FORM I VOA

pw
2/27/09

FORM 1
VOLATILE ORGANICS ANALYSIS DATA SHEET

CLIENT SAMPLE NO.

MR08-IS06
2-2-3-08D

16

Lab Name: EMPIRICAL LABS Contract: CH2MHILL

Lab Code: NA Case No.: NA SAS No.: NA SDG No.: LEJEUNE027

Matrix: (soil/water) SOIL Lab Sample ID: 0812110-16

Sample wt/vol: 5.0 (g/mL) G Lab File ID: 1211016A

Level: (low/med) LOW Date Sampled: 12/06/08 14:15

% Moisture: not dec. 14 Date Analyzed: 12/19/08 07:47

GC Column: RTX-VRX ID: 0.25 (mm) Dilution Factor: 1.0

Soil Extract Volume:_____(uL) Soil Aliquot Volume: _____(uL)

CONCENTRATION UNITS: (ug/L or ug/Kg) UG/KG

CAS NO.	COMPOUND	MDL	RL	CONC	Q
67-64-1	Acetone	2.3	12	124 ~~4.3~~	J
71-43-2	Benzene	0.54	12		U
75-27-4	Bromodichloromethane	0.34	12		U
75-25-2	Bromoform	1.2	12		U
74-83-9	Bromomethane	0.83	12		U
78-93-3	2-Butanone	1.6	12		U
75-15-0	Carbon disulfide	1.5	12		U
56-23-5	Carbon tetrachloride	1.0	12		U
108-90-7	Chlorobenzene	0.39	12		U
75-00-3	Chloroethane	1.3	12		U
67-66-3	Chloroform	0.63	12		U
74-87-3	Chloromethane	0.60	12		U
110-82-7	Cyclohexane	0.62	12		U
124-48-1	Dibromochloromethane	0.39	12		U
96-12-8	1,2-Dibromo-3-chloropropane	1.4	5.8		U
106-93-4	1,2-Dibromoethane	0.50	12		U
95-50-1	1,2-Dichlorobenzene	0.43	12		U
541-73-1	1,3-Dichlorobenzene	0.97	12		U
106-46-7	1,4-Dichlorobenzene	0.63	12		U
75-71-8	Dichlorodifluoromethane	1.3	12		U
75-34-3	1,1-Dichloroethane	0.62	12		U
107-06-2	1,2-Dichloroethane	0.53	12		U
75-35-4	1,1-Dichloroethene	1.4	12		U
156-59-2	cis-1,2-Dichloroethene	1.4	12		U
156-60-5	trans-1,2-Dichloroethene	1.3	12		U
78-87-5	1,2-Dichloropropane	0.53	12		U
10061-01-5	cis-1,3-Dichloropropene	0.58	12		U
10061-02-6	trans-1,3-Dichloropropene	0.37	12		U
100-41-4	Ethylbenzene	0.86	12		U
591-78-6	2-Hexanone	2.6	12		U
98-82-8	Isopropylbenzene	1.0	12		U
79-20-9	Methyl acetate	1.8	12		U
75-09-2	Methylene chloride	0.71	12		U
108-87-2	Methyl cyclohexane	0.34	12		U
1634-04-4	Methyl tert-butyl ether	0.37	12		U
108-10-1	4-Methyl-2-pentanone	0.67	12		U
100-42-5	Styrene	0.40	12		U
79-34-5	1,1,2,2-Tetrachloroethane	0.50	12		U
127-18-4	Tetrachloroethene	1.1	12		U

lw
2/27/09

FORM 1
VOLATILE ORGANICS ANALYSIS DATA SHEET

CLIENT SAMPLE NO. 16

MR08-IS06
2-2-3-08D

Lab Name: EMPIRICAL LABS Contract: CH2MHILL

Lab Code: NA Case No.: NA SAS No.: NA SDG No.: LEJEUNE027

Matrix: (soil/water) SOIL Lab Sample ID: 0812110-16

Sample wt/vol: 5.0 (g/mL) G Lab File ID: 1211016A

Level: (low/med) LOW Date Sampled: 12/06/08 14:15

% Moisture: not dec. 14 Date Analyzed: 12/19/08 07:47

GC Column: RTX-VRX ID: 0.25 (mm) Dilution Factor: 1.0

Soil Extract Volume:_____(uL) Soil Aliquot Volume: _____(uL)

CONCENTRATION UNITS: (ug/L or ug/Kg) UG/KG

CAS NO.	COMPOUND	MDL	RL	CONC	Q
108-88-3	Toluene	0.99	12		U
120-82-1	1,2,4-Trichlorobenzene	0.21	12		U
71-55-6	1,1,1-Trichloroethane	1.0	12		U
79-00-5	1,1,2-Trichloroethane	0.40	12		U
79-01-6	Trichloroethene	0.98	12		U
76-13-1	Trichlorotrifluoroethane	0.63	12		U
75-69-4	Trichlorofluoromethane	1.1	12		U
75-01-4	Vinyl chloride	1.3	12		U
1330-20-7	Xylene(total)	0.81	12		U

2/27/09

FORM 1
VOLATILE ORGANICS ANALYSIS DATA SHEET

CLIENT SAMPLE NO. 17

MR08-SS063-08D

Lab Name: EMPIRICAL LABS Contract: CH2MHILL

Lab Code: NA Case No.: NA SAS No.: NA SDG No.: LEJEUNE027

Matrix: (soil/water) SOIL Lab Sample ID: 0812110-17

Sample wt/vol: 5.3 (g/mL) G Lab File ID: 1211017A

Level: (low/med) LOW Date Sampled: 12/06/08 14:45

% Moisture: not dec. 13 Date Analyzed: 12/19/08 08:26

GC Column: RTX-VRX ID: 0.25 (mm) Dilution Factor: 1.0

Soil Extract Volume:_____(uL) Soil Aliquot Volume: _____(uL)

CONCENTRATION UNITS: (ug/L or ug/Kg) UG/KG

CAS NO.	COMPOUND	MDL	RL	CONC	Q
67-64-1	Acetone	2.2	11	97	
71-43-2	Benzene	0.52	11		U
75-27-4	Bromodichloromethane	0.33	11		U
75-25-2	Bromoform	1.1	11		U
74-83-9	Bromomethane	0.79	11		U
78-93-3	2-Butanone	1.5	11		U
75-15-0	Carbon disulfide	1.4	11		U
56-23-5	Carbon tetrachloride	0.97	11		U
108-90-7	Chlorobenzene	0.37	11		U
75-00-3	Chloroethane	1.2	11		U
67-66-3	Chloroform	0.60	11		U
74-87-3	Chloromethane	0.57	11		U
110-82-7	Cyclohexane	0.59	11		U
124-48-1	Dibromochloromethane	0.37	11		U
96-12-8	1,2-Dibromo-3-chloropropane	1.3	5.5		U
106-93-4	1,2-Dibromoethane	0.47	11		U
95-50-1	1,2-Dichlorobenzene	0.41	11		U
541-73-1	1,3-Dichlorobenzene	0.92	11		U
106-46-7	1,4-Dichlorobenzene	0.60	11		U
75-71-8	Dichlorodifluoromethane	1.2	11		U
75-34-3	1,1-Dichloroethane	0.59	11		U
107-06-2	1,2-Dichloroethane	0.50	11		U
75-35-4	1,1-Dichloroethene	1.3	11		U
156-59-2	cis-1,2-Dichloroethene	1.3	11		U
156-60-5	trans-1,2-Dichloroethene	1.2	11		U
78-87-5	1,2-Dichloropropane	0.50	11		U
10061-01-5	cis-1,3-Dichloropropene	0.55	11		U
10061-02-6	trans-1,3-Dichloropropene	0.35	11		U
100-41-4	Ethylbenzene	0.82	11		U
591-78-6	2-Hexanone	2.5	11		U
98-82-8	Isopropylbenzene	0.97	11		U
79-20-9	Methyl acetate	1.8	11		U
75-09-2	Methylene chloride	0.68	11		U
108-87-2	Methyl cyclohexane	0.33	11		U
1634-04-4	Methyl tert-butyl ether	0.35	11		U
108-10-1	4-Methyl-2-pentanone	0.64	11		U
100-42-5	Styrene	0.38	11		U
79-34-5	1,1,2,2-Tetrachloroethane	0.47	11		U
127-18-4	Tetrachloroethene	1.1	11		U

FORM I VOA

lw 7/27/09

FORM 1
VOLATILE ORGANICS ANALYSIS DATA SHEET

CLIENT SAMPLE NO. 17

MR08-SS063-08D

Lab Name: EMPIRICAL LABS Contract: CH2MHILL

Lab Code: NA Case No.: NA SAS No.: NA SDG No.: LEJEUNE027

Matrix: (soil/water) SOIL Lab Sample ID: 0812110-17

Sample wt/vol: 5.3 (g/mL) G Lab File ID: 1211017A

Level: (low/med) LOW Date Sampled: 12/06/08 14:45

% Moisture: not dec. 13 Date Analyzed: 12/19/08 08:26

GC Column: RTX-VRX ID: 0.25 (mm) Dilution Factor: 1.0

Soil Extract Volume:_____(uL) Soil Aliquot Volume: _____(uL)

CONCENTRATION UNITS: (ug/L or ug/Kg) UG/KG

CAS NO.	COMPOUND	MDL	RL	CONC	Q
108-88-3	Toluene	0.94	11		U
120-82-1	1,2,4-Trichlorobenzene	0.20	11		U
71-55-6	1,1,1-Trichloroethane	0.99	11		U
79-00-5	1,1,2-Trichloroethane	0.38	11		U
79-01-6	Trichloroethene	0.93	11		U
76-13-1	Trichlorotrifluoroethane	0.60	11		U
75-69-4	Trichlorofluoromethane	1.0	11		U
75-01-4	Vinyl chloride	1.2	11		U
1330-20-7	Xylene(total)	0.77	11		U

fcd
2/27/09

FORM 1
VOLATILE ORGANICS ANALYSIS DATA SHEET

CLIENT SAMPLE NO. 18

MR08-IS06
3-2-3-08D

Lab Name: EMPIRICAL LABS Contract: CH2MHILL

Lab Code: NA Case No.: NA SAS No.: NA SDG No.: LEJEUNE027

Matrix: (soil/water) SOIL Lab Sample ID: 0812110-18

Sample wt/vol: 3.0 (g/mL) G Lab File ID: 1211018A

Level: (low/med) LOW Date Sampled: 12/06/08 14:55

% Moisture: not dec. 14 Date Analyzed: 12/19/08 09:05

GC Column: RTX-VRX ID: 0.25 (mm) Dilution Factor: 1.0

Soil Extract Volume:_____(uL) Soil Aliquot Volume: _____(uL)

CONCENTRATION UNITS: (ug/L or ug/Kg) UG/KG

CAS NO.	COMPOUND	MDL	RL	CONC	Q
67-64-1	Acetone	3.8	19		U
71-43-2	Benzene	0.90	19		U
75-27-4	Bromodichloromethane	0.57	19		U
75-25-2	Bromoform	1.9	19		U
74-83-9	Bromomethane	1.4	19		U
78-93-3	2-Butanone	2.7	19		U
75-15-0	Carbon disulfide	2.5	19		U
56-23-5	Carbon tetrachloride	1.7	19		U
108-90-7	Chlorobenzene	0.65	19		U
75-00-3	Chloroethane	2.1	19		U
67-66-3	Chloroform	1.0	19		U
74-87-3	Chloromethane	0.99	19		U
110-82-7	Cyclohexane	1.0	19		U
124-48-1	Dibromochloromethane	0.65	19		U
96-12-8	1,2-Dibromo-3-chloropropane	2.3	9.5		U
106-93-4	1,2-Dibromoethane	0.82	19		U
95-50-1	1,2-Dichlorobenzene	0.70	19		U
541-73-1	1,3-Dichlorobenzene	1.6	19		U
106-46-7	1,4-Dichlorobenzene	1.0	19		U
75-71-8	Dichlorodifluoromethane	2.1	19		U
75-34-3	1,1-Dichloroethane	1.0	19		U
107-06-2	1,2-Dichloroethane	0.88	19		U
75-35-4	1,1-Dichloroethene	2.3	19		U
156-59-2	cis-1,2-Dichloroethene	2.3	19		U
156-60-5	trans-1,2-Dichloroethene	2.1	19		U
78-87-5	1,2-Dichloropropane	0.88	19		U
10061-01-5	cis-1,3-Dichloropropene	0.95	19		U
10061-02-6	trans-1,3-Dichloropropene	0.61	19		U
100-41-4	Ethylbenzene	1.4	19		U
591-78-6	2-Hexanone	4.4	19		U
98-82-8	Isopropylbenzene	1.7	19		U
79-20-9	Methyl acetate	3.0	19		U
75-09-2	Methylene chloride	1.2	19		U
108-87-2	Methyl cyclohexane	0.57	19		U
1634-04-4	Methyl tert-butyl ether	0.61	19		U
108-10-1	4-Methyl-2-pentanone	1.1	19		U
100-42-5	Styrene	0.67	19		U
79-34-5	1,1,2,2-Tetrachloroethane	0.82	19		U
127-18-4	Tetrachloroethene	1.8	19		U

MW 2/27/09

FORM 1
VOLATILE ORGANICS ANALYSIS DATA SHEET

CLIENT SAMPLE NO. 18

MR08-IS06
3-2-3-08D

Lab Name: EMPIRICAL LABS Contract: CH2MHILL

Lab Code: NA Case No.: NA SAS No.: NA SDG No.: LEJEUNE027

Matrix: (soil/water) SOIL Lab Sample ID: 0812110-18

Sample wt/vol: 3.0 (g/mL) G Lab File ID: 1211018A

Level: (low/med) LOW Date Sampled: 12/06/08 14:55

% Moisture: not dec. 14 Date Analyzed: 12/19/08 09:05

GC Column: RTX-VRX ID: 0.25 (mm) Dilution Factor: 1.0

Soil Extract Volume:_____(uL) Soil Aliquot Volume: _____(uL)

CONCENTRATION UNITS: (ug/L or ug/Kg) UG/KG

CAS NO.	COMPOUND	MDL	RL	CONC	Q
108-88-3	Toluene	1.6	19		U
120-82-1	1,2,4-Trichlorobenzene	0.34	19		U
71-55-6	1,1,1-Trichloroethane	1.7	19		U
79-00-5	1,1,2-Trichloroethane	0.67	19		U
79-01-6	Trichloroethene	1.6	19		U
76-13-1	Trichlorotrifluoroethane	1.0	19		U
75-69-4	Trichlorofluoromethane	1.8	19		U
75-01-4	Vinyl chloride	2.1	19		U
1330-20-7	Xylene(total)	1.3	19		U

AW
2/27/09

FORM 1
VOLATILE ORGANICS ANALYSIS DATA SHEET

CLIENT SAMPLE NO.

MR08-IS06
3-2-3-08DR

18R

Lab Name: EMPIRICAL LABS Contract: CH2MHILL

Lab Code: NA Case No.: NA SAS No.: NA SDG No.: LEJEUNE027

Matrix: (soil/water) SOIL Lab Sample ID: 0812110-18R

Sample wt/vol: 2.1 (g/mL) G Lab File ID: 1211018B

Level: (low/med) LOW Date Sampled: 12/06/08 14:55

% Moisture: not dec. 14 Date Analyzed: 12/28/08 01:32 use orig INP

GC Column: RTX-VRX ID: 0.25 (mm) Dilution Factor: 1.0

Soil Extract Volume:_____(uL) Soil Aliquot Volume: _____(uL)

CONCENTRATION UNITS: (ug/L or ug/Kg) UG/KG

CAS NO.	COMPOUND	MDL	RL	CONC	Q
67-64-1	Acetone	5.4	27	27uJ ~~14 J~~ HT	B
71-43-2	Benzene	1.3	27		U uJ H
75-27-4	Bromodichloromethane	0.82	27		U
75-25-2	Bromoform	2.7	27		U
74-83-9	Bromomethane	2.0	27		U
78-93-3	2-Butanone	3.8	27		U
75-15-0	Carbon disulfide	3.5	27		U
56-23-5	Carbon tetrachloride	2.4	27		U
108-90-7	Chlorobenzene	0.92	27		U
75-00-3	Chloroethane	3.0	27		U
67-66-3	Chloroform	1.5	27		U
74-87-3	Chloromethane	1.4	27		U
110-82-7	Cyclohexane	1.5	27		U
124-48-1	Dibromochloromethane	0.92	27		U
96-12-8	1,2-Dibromo-3-chloropropane	3.3	14		U
106-93-4	1,2-Dibromoethane	1.2	27		U
95-50-1	1,2-Dichlorobenzene	1.0	27		U
541-73-1	1,3-Dichlorobenzene	2.3	27		U
106-46-7	1,4-Dichlorobenzene	1.5	27		U
75-71-8	Dichlorodifluoromethane	3.0	27		U
75-34-3	1,1-Dichloroethane	1.5	27		U
107-06-2	1,2-Dichloroethane	1.2	27		U
75-35-4	1,1-Dichloroethene	3.3	27		U
156-59-2	cis-1,2-Dichloroethene	3.3	27		U
156-60-5	trans-1,2-Dichloroethene	3.0	27		U
78-87-5	1,2-Dichloropropane	1.2	27		U
10061-01-5	cis-1,3-Dichloropropene	1.4	27		U
10061-02-6	trans-1,3-Dichloropropene	0.87	27		U
100-41-4	Ethylbenzene	2.0	27		U
591-78-6	2-Hexanone	6.2	27		U
98-82-8	Isopropylbenzene	2.4	27		U
79-20-9	Methyl acetate	4.3	27		U
75-09-2	Methylene chloride	1.7	27	27uJ ~~3.8 JB~~ HT	B
108-87-2	Methyl cyclohexane	0.82	27		U uJ H
1634-04-4	Methyl tert-butyl ether	0.87	27		U
108-10-1	4-Methyl-2-pentanone	1.6	27		U
100-42-5	Styrene	0.95	27		U
79-34-5	1,1,2,2-Tetrachloroethane	1.2	27		U
127-18-4	Tetrachloroethene	2.6	27		U

FORM I VOA

dw 2/27/09

FORM 1
VOLATILE ORGANICS ANALYSIS DATA SHEET

CLIENT SAMPLE NO.

MR08-IS06
3-2-3-08DR

18RE

Lab Name: EMPIRICAL LABS Contract: CH2MHILL

Lab Code: NA Case No.: NA SAS No.: NA SDG No.: LEJEUNE027

Matrix: (soil/water) SOIL Lab Sample ID: 0812110-18R

Sample wt/vol: 2.1 (g/mL) G Lab File ID: 1211018B

Level: (low/med) LOW Date Sampled: 12/06/08 14:55

% Moisture: not dec. 14 Date Analyzed: 12/28/08 01:32

Use original

GC Column: RTX-VRX ID: 0.25 (mm) Dilution Factor: 1.0

Soil Extract Volume:_____(uL) Soil Aliquot Volume: _____(uL)

CONCENTRATION UNITS: (ug/L or ug/Kg) UG/KG

CAS NO.	COMPOUND	MDL	RL	CONC	Q
108-88-3	Toluene	2.3	27		~~U~~ J
120-82-1	1,2,4-Trichlorobenzene	0.49	27		U
71-55-6	1,1,1-Trichloroethane	2.4	27		U
79-00-5	1,1,2-Trichloroethane	0.95	27		U
79-01-6	Trichloroethene	2.3	27		U
76-13-1	Trichlorotrifluoroethane	1.5	27		U
75-69-4	Trichlorofluoromethane	2.6	27		U
75-01-4	Vinyl chloride	3.0	27		U
1330-20-7	Xylene(total)	1.9	27		U

H7

FORM I VOA

lw
2/27/09

FORM 1
VOLATILE ORGANICS ANALYSIS DATA SHEET

CLIENT SAMPLE NO.

MR08-SS064-08D

19

Lab Name: EMPIRICAL LABS Contract: CH2MHILL

Lab Code: NA Case No.: NA SAS No.: NA SDG No.: LEJEUNE027

Matrix: (soil/water) SOIL Lab Sample ID: 0812110-19

Sample wt/vol: 5.2 (g/mL) G Lab File ID: 1211019A

Level: (low/med) LOW Date Sampled: 12/06/08 15:05

% Moisture: not dec. 13 Date Analyzed: 12/19/08 09:45

GC Column: RTX-VRX ID: 0.25 (mm) Dilution Factor: 1.0

Soil Extract Volume:_____(uL) Soil Aliquot Volume: _____(uL)

CONCENTRATION UNITS: (ug/L or ug/Kg) UG/KG

CAS NO.	COMPOUND	MDL	RL	CONC	Q
67-64-1	Acetone	2.2	11	200	
71-43-2	Benzene	0.52	11		U
75-27-4	Bromodichloromethane	0.33	11		U
75-25-2	Bromoform	1.1	11		U
74-83-9	Bromomethane	0.79	11		U
78-93-3	2-Butanone	1.5	11		U
75-15-0	Carbon disulfide	1.4	11		U
56-23-5	Carbon tetrachloride	0.97	11		U
108-90-7	Chlorobenzene	0.37	11		U
75-00-3	Chloroethane	1.2	11		U
67-66-3	Chloroform	0.61	11		U
74-87-3	Chloromethane	0.57	11		U
110-82-7	Cyclohexane	0.60	11		U
124-48-1	Dibromochloromethane	0.37	11		U
96-12-8	1,2-Dibromo-3-chloropropane	1.3	5.5		U
106-93-4	1,2-Dibromoethane	0.47	11		U
95-50-1	1,2-Dichlorobenzene	0.41	11		U
541-73-1	1,3-Dichlorobenzene	0.92	11		U
106-46-7	1,4-Dichlorobenzene	0.61	11		U
75-71-8	Dichlorodifluoromethane	1.2	11		U
75-34-3	1,1-Dichloroethane	0.60	11		U
107-06-2	1,2-Dichloroethane	0.51	11		U
75-35-4	1,1-Dichloroethene	1.3	11		U
156-59-2	cis-1,2-Dichloroethene	1.3	11		U
156-60-5	trans-1,2-Dichloroethene	1.2	11		U
78-87-5	1,2-Dichloropropane	0.51	11		U
10061-01-5	cis-1,3-Dichloropropene	0.55	11		U
10061-02-6	trans-1,3-Dichloropropene	0.35	11		U
100-41-4	Ethylbenzene	0.83	11		U
591-78-6	2-Hexanone	2.5	11		U
98-82-8	Isopropylbenzene	0.97	11		U
79-20-9	Methyl acetate	1.8	11		U
75-09-2	Methylene chloride	0.68	11		U
108-87-2	Methyl cyclohexane	0.33	11		U
1634-04-4	Methyl tert-butyl ether	0.35	11		U
108-10-1	4-Methyl-2-pentanone	0.64	11		U
100-42-5	Styrene	0.38	11		U
79-34-5	1,1,2,2-Tetrachloroethane	0.47	11		U
127-18-4	Tetrachloroethene	1.1	11		U

gw
2/27/09

FORM 1
VOLATILE ORGANICS ANALYSIS DATA SHEET

CLIENT SAMPLE NO.

19

MR08-SS064-08D

Lab Name: EMPIRICAL LABS Contract: CH2MHILL

Lab Code: NA Case No.: NA SAS No.: NA SDG No.: LEJEUNE027

Matrix: (soil/water) SOIL Lab Sample ID: 0812110-19

Sample wt/vol: 5.2 (g/mL) G Lab File ID: 1211019A

Level: (low/med) LOW Date Sampled: 12/06/08 15:05

% Moisture: not dec. 13 Date Analyzed: 12/19/08 09:45

GC Column: RTX-VRX ID: 0.25 (mm) Dilution Factor: 1.0

Soil Extract Volume:_____(uL) Soil Aliquot Volume: _____(uL)

CONCENTRATION UNITS: (ug/L or ug/Kg) UG/KG

CAS NO.	COMPOUND	MDL	RL	CONC	Q
108-88-3	Toluene	0.95	11	1.4 ~~J~~	B
120-82-1	1,2,4-Trichlorobenzene	0.20	11		U
71-55-6	1,1,1-Trichloroethane	0.99	11		U
79-00-5	1,1,2-Trichloroethane	0.38	11		U
79-01-6	Trichloroethene	0.94	11		U
76-13-1	Trichlorotrifluoroethane	0.61	11		U
75-69-4	Trichlorofluoromethane	1.0	11		U
75-01-4	Vinyl chloride	1.2	11		U
1330-20-7	Xylene(total)	0.77	11		U

2/27/09

FORM 1
VOLATILE ORGANICS ANALYSIS DATA SHEET

CLIENT SAMPLE NO.

MR08-SS064-08DR

1 9R

Lab Name: EMPIRICAL LABS Contract: CH2MHILL

Lab Code: NA Case No.: NA SAS No.: NA SDG No.: LEJEUNE027

Matrix: (soil/water) SOIL Lab Sample ID: 0812110-19R

Sample wt/vol: 4.7 (g/mL) G Lab File ID: 1211019B

Level: (low/med) LOW Date Sampled: 12/06/08 15:05 use

% Moisture: not dec. 13 Date Analyzed: 01/03/09 00:41 ORIGINA

GC Column: RTX-VRX ID: 0.25 (mm) Dilution Factor: 1.0

Soil Extract Volume:_____(uL) Soil Aliquot Volume: _____(uL)

CONCENTRATION UNITS: (ug/L or ug/Kg) UG/KG

CAS NO.	COMPOUND	MDL	RL	CONC	Q
67-64-1	Acetone	2.5	12	280	J
71-43-2	Benzene	0.58	12		U UJ
75-27-4	Bromodichloromethane	0.37	12		U
75-25-2	Bromoform	1.2	12		U
74-83-9	Bromomethane	0.89	12		U
78-93-3	2-Butanone	1.7	12	4.1	J J
75-15-0	Carbon disulfide	1.6	12		U UJ
56-23-5	Carbon tetrachloride	1.1	12		U
108-90-7	Chlorobenzene	0.42	12		U
75-00-3	Chloroethane	1.4	12		U
67-66-3	Chloroform	0.68	12		U
74-87-3	Chloromethane	0.64	12		U
110-82-7	Cyclohexane	0.67	12		U
124-48-1	Dibromochloromethane	0.42	12		U
96-12-8	1,2-Dibromo-3-chloropropane	1.5	6.2		U
106-93-4	1,2-Dibromoethane	0.53	12		U
95-50-1	1,2-Dichlorobenzene	0.46	12		U
541-73-1	1,3-Dichlorobenzene	1.0	12		U
106-46-7	1,4-Dichlorobenzene	0.68	12		U
75-71-8	Dichlorodifluoromethane	1.4	12		U
75-34-3	1,1-Dichloroethane	0.67	12		U
107-06-2	1,2-Dichloroethane	0.57	12		U
75-35-4	1,1-Dichloroethene	1.5	12		U
156-59-2	cis-1,2-Dichloroethene	1.5	12		U
156-60-5	trans-1,2-Dichloroethene	1.4	12		U
78-87-5	1,2-Dichloropropane	0.57	12		U
10061-01-5	cis-1,3-Dichloropropene	0.62	12		U
10061-02-6	trans-1,3-Dichloropropene	0.40	12		U
100-41-4	Ethylbenzene	0.93	12		U
591-78-6	2-Hexanone	2.8	12		U
98-82-8	Isopropylbenzene	1.1	12		U
79-20-9	Methyl acetate	2.0	12		U
75-09-2	Methylene chloride	0.77	12	12UJ ~~1.4~~	~~JB~~ HT
108-87-2	Methyl cyclohexane	0.37	12		U UJ
1634-04-4	Methyl tert-butyl ether	0.40	12		U
108-10-1	4-Methyl-2-pentanone	0.72	12		U
100-42-5	Styrene	0.43	12		U
79-34-5	1,1,2,2-Tetrachloroethane	0.53	12		U
127-18-4	Tetrachloroethene	1.2	12		U

FORM I VOA

MW
2/27/09

FORM 1
VOLATILE ORGANICS ANALYSIS DATA SHEET

CLIENT SAMPLE NO.

MR08-SS064-08DR

19RE

Lab Name: EMPIRICAL LABS Contract: CH2MHILL

Lab Code: NA Case No.: NA SAS No.: NA SDG No.: LEJEUNE027

Matrix: (soil/water) SOIL Lab Sample ID: 0812110-19R

Sample wt/vol: 4.7 (g/mL) G Lab File ID: 1211019B

Level: (low/med) LOW Date Sampled: 12/06/08 15:05

% Moisture: not dec. 13 Date Analyzed: 01/03/09 00:41

Use original

GC Column: RTX-VRX ID: 0.25 (mm) Dilution Factor: 1.0

Soil Extract Volume:_____(uL) Soil Aliquot Volume: _____(uL)

CONCENTRATION UNITS: (ug/L or ug/Kg) UG/KG

CAS NO.	COMPOUND	MDL	RL	CONC	Q
108-88-3	Toluene	1.1	12		U
120-82-1	1,2,4-Trichlorobenzene	0.22	12		U
71-55-6	1,1,1-Trichloroethane	1.1	12		U
79-00-5	1,1,2-Trichloroethane	0.43	12		U
79-01-6	Trichloroethene	1.0	12		U
76-13-1	Trichlorotrifluoroethane	0.68	12		U
75-69-4	Trichlorofluoromethane	1.2	12		U
75-01-4	Vinyl chloride	1.4	12		U
1330-20-7	Xylene(total)	0.87	12		U

UJ

H

RE

FORM I VOA

MW
2/27/09

FORM 1
VOLATILE ORGANICS ANALYSIS DATA SHEET

CLIENT SAMPLE NO.

20

MR08-IS06
4-2-3-08D

Lab Name: EMPIRICAL LABS Contract: CH2MHILL

Lab Code: NA Case No.: NA SAS No.: NA SDG No.: LEJEUNE027

Matrix: (soil/water) SOIL Lab Sample ID: 0812110-20

Sample wt/vol: 2.8 (g/mL) G Lab File ID: 1211020A

Level: (low/med) LOW Date Sampled: 12/06/08 15:25

% Moisture: not dec. 12 Date Analyzed: 12/19/08 10:24

GC Column: RTX-VRX ID: 0.25 (mm) Dilution Factor: 1.0

Soil Extract Volume:_____(uL) Soil Aliquot Volume: _____(uL)

CONCENTRATION UNITS: (ug/L or ug/Kg) UG/KG

CAS NO.	COMPOUND	MDL	RL	CONC	Q
67-64-1	Acetone	4.1	20	20u ~~9.4~~	~~J~~
71-43-2	Benzene	0.96	20		U
75-27-4	Bromodichloromethane	0.62	20		U
75-25-2	Bromoform	2.0	20		U
74-83-9	Bromomethane	1.5	20		U
78-93-3	2-Butanone	2.9	20		U
75-15-0	Carbon disulfide	2.7	20		U
56-23-5	Carbon tetrachloride	1.8	20		U
108-90-7	Chlorobenzene	0.70	20		U
75-00-3	Chloroethane	2.2	20		U
67-66-3	Chloroform	1.1	20		U
74-87-3	Chloromethane	1.1	20		U
110-82-7	Cyclohexane	1.1	20		U
124-48-1	Dibromochloromethane	0.70	20		U
96-12-8	1,2-Dibromo-3-chloropropane	2.5	10		U
106-93-4	1,2-Dibromoethane	0.88	20		U
95-50-1	1,2-Dichlorobenzene	0.76	20		U
541-73-1	1,3-Dichlorobenzene	1.7	20		U
106-46-7	1,4-Dichlorobenzene	1.1	20		U
75-71-8	Dichlorodifluoromethane	2.2	20		U
75-34-3	1,1-Dichloroethane	1.1	20		U
107-06-2	1,2-Dichloroethane	0.94	20		U
75-35-4	1,1-Dichloroethene	2.5	20		U
156-59-2	cis-1,2-Dichloroethene	2.5	20		U
156-60-5	trans-1,2-Dichloroethene	2.2	20		U
78-87-5	1,2-Dichloropropane	0.94	20		U
10061-01-5	cis-1,3-Dichloropropene	1.0	20		U
10061-02-6	trans-1,3-Dichloropropene	0.66	20		U
100-41-4	Ethylbenzene	1.5	20		U
591-78-6	2-Hexanone	4.7	20		U
98-82-8	Isopropylbenzene	1.8	20		U
79-20-9	Methyl acetate	3.3	20		U
75-09-2	Methylene chloride	1.3	20		U
108-87-2	Methyl cyclohexane	0.62	20		U
1634-04-4	Methyl tert-butyl ether	0.66	20		U
108-10-1	4-Methyl-2-pentanone	1.2	20		U
100-42-5	Styrene	0.72	20		U
79-34-5	1,1,2,2-Tetrachloroethane	0.88	20		U
127-18-4	Tetrachloroethene	2.0	20		U

FORM I VOA

MW 2/27/09

FORM 1
VOLATILE ORGANICS ANALYSIS DATA SHEET

CLIENT SAMPLE NO.

20

MR08-IS06
4-2-3-08D

Lab Name: EMPIRICAL LABS Contract: CH2MHILL

Lab Code: NA Case No.: NA SAS No.: NA SDG No.: LEJEUNE027

Matrix: (soil/water) SOIL Lab Sample ID: 0812110-20

Sample wt/vol: 2.8 (g/mL) G Lab File ID: 1211020A

Level: (low/med) LOW Date Sampled: 12/06/08 15:25

% Moisture: not dec. 12 Date Analyzed: 12/19/08 10:24

GC Column: RTX-VRX ID: 0.25 (mm) Dilution Factor: 1.0

Soil Extract Volume:_____(uL) Soil Aliquot Volume: _____(uL)

CONCENTRATION UNITS: (ug/L or ug/Kg) UG/KG

CAS NO.	COMPOUND	MDL	RL	CONC	Q
108-88-3	Toluene	1.8	20		U
120-82-1	1,2,4-Trichlorobenzene	0.37	20		U
71-55-6	1,1,1-Trichloroethane	1.8	20		U
79-00-5	1,1,2-Trichloroethane	0.72	20		U
79-01-6	Trichloroethene	1.7	20		U
76-13-1	Trichlorotrifluoroethane	1.1	20		U
75-69-4	Trichlorofluoromethane	1.9	20		U
75-01-4	Vinyl chloride	2.2	20		U
1330-20-7	Xylene(total)	1.4	20		U

lw
2/27/09

FORM 1
VOLATILE ORGANICS ANALYSIS DATA SHEET

CLIENT SAMPLE NO.

21

MR08-SS065-08D

Lab Name: EMPIRICAL LABS Contract: CH2MHILL

Lab Code: NA Case No.: NA SAS No.: NA SDG No.: LEJEUNE027

Matrix: (soil/water) SOIL Lab Sample ID: 0812110-21

Sample wt/vol: 4.4 (g/mL) G Lab File ID: 1211021A

Level: (low/med) LOW Date Sampled: 12/06/08 15:35

% Moisture: not dec. 24 Date Analyzed: 12/19/08 11:04

GC Column: RTX-VRX ID: 0.25 (mm) Dilution Factor: 1.0

Soil Extract Volume:_____(uL) Soil Aliquot Volume: _____(uL)

CONCENTRATION UNITS: (ug/L or ug/Kg) UG/KG

CAS NO.	COMPOUND	MDL	RL	CONC	Q
67-64-1	Acetone	3.0	15	360	
71-43-2	Benzene	0.70	15		U
75-27-4	Bromodichloromethane	0.44	15		U
75-25-2	Bromoform	1.5	15		U
74-83-9	Bromomethane	1.1	15		U
78-93-3	2-Butanone	2.1	15	16	
75-15-0	Carbon disulfide	1.9	15		U
56-23-5	Carbon tetrachloride	1.3	15		U
108-90-7	Chlorobenzene	0.50	15		U
75-00-3	Chloroethane	1.6	15		U
67-66-3	Chloroform	0.82	15		U
74-87-3	Chloromethane	0.77	15		U
110-82-7	Cyclohexane	0.80	15		U
124-48-1	Dibromochloromethane	0.50	15		U
96-12-8	1,2-Dibromo-3-chloropropane	1.8	7.4		U
106-93-4	1,2-Dibromoethane	0.64	15		U
95-50-1	1,2-Dichlorobenzene	0.55	15		U
541-73-1	1,3-Dichlorobenzene	1.2	15		U
106-46-7	1,4-Dichlorobenzene	0.82	15		U
75-71-8	Dichlorodifluoromethane	1.6	15		U
75-34-3	1,1-Dichloroethane	0.80	15		U
107-06-2	1,2-Dichloroethane	0.68	15		U
75-35-4	1,1-Dichloroethene	1.8	15		U
156-59-2	cis-1,2-Dichloroethene	1.8	15		U
156-60-5	trans-1,2-Dichloroethene	1.6	15		U
78-87-5	1,2-Dichloropropane	0.68	15		U
10061-01-5	cis-1,3-Dichloropropene	0.74	15		U
10061-02-6	trans-1,3-Dichloropropene	0.48	15		U
100-41-4	Ethylbenzene	1.1	15		U
591-78-6	2-Hexanone	3.4	15		U
98-82-8	Isopropylbenzene	1.3	15		U
79-20-9	Methyl acetate	2.4	15		U
75-09-2	Methylene chloride	0.92	15		U
108-87-2	Methyl cyclohexane	0.44	15		U
1634-04-4	Methyl tert-butyl ether	0.48	15		U
108-10-1	4-Methyl-2-pentanone	0.86	15		U
100-42-5	Styrene	0.52	15		U
79-34-5	1,1,2,2-Tetrachloroethane	0.64	15		U
127-18-4	Tetrachloroethene	1.4	15		U

MW 2/27/09

FORM 1
VOLATILE ORGANICS ANALYSIS DATA SHEET

CLIENT SAMPLE NO.

21

MR08-SS065-08D

Lab Name: EMPIRICAL LABS Contract: CH2MHILL

Lab Code: NA Case No.: NA SAS No.: NA SDG No.: LEJEUNE027

Matrix: (soil/water) SOIL Lab Sample ID: 0812110-21

Sample wt/vol: 4.4 (g/mL) G Lab File ID: 1211021A

Level: (low/med) LOW Date Sampled: 12/06/08 15:35

% Moisture: not dec. 24 Date Analyzed: 12/19/08 11:04

GC Column: RTX-VRX ID: 0.25 (mm) Dilution Factor: 1.0

Soil Extract Volume:_____(uL) Soil Aliquot Volume: _____(uL)

CONCENTRATION UNITS: (ug/L or ug/Kg) UG/KG

CAS NO.	COMPOUND	MDL	RL	CONC	Q
108-88-3	Toluene	1.3	15		U
120-82-1	1,2,4-Trichlorobenzene	0.27	15		U
71-55-6	1,1,1-Trichloroethane	1.3	15		U
79-00-5	1,1,2-Trichloroethane	0.52	15		U
79-01-6	Trichloroethene	1.3	15	3.1	J
76-13-1	Trichlorotrifluoroethane	0.82	15		U
75-69-4	Trichlorofluoromethane	1.4	15		U
75-01-4	Vinyl chloride	1.6	15		U
1330-20-7	Xylene(total)	1.0	15		U

lw
2/27/09

FORM 1
VOLATILE ORGANICS ANALYSIS DATA SHEET

CLIENT SAMPLE NO.

MR08-IS06
5-1-2-08D

22

Lab Name: EMPIRICAL LABS Contract: CH2MHILL

Lab Code: NA Case No.: NA SAS No.: NA SDG No.: LEJEUNE027

Matrix: (soil/water) SOIL Lab Sample ID: 0812110-22

Sample wt/vol: 3.4 (g/mL) G Lab File ID: 1211022A

Level: (low/med) LOW Date Sampled: 12/06/08 15:45

% Moisture: not dec. 19 Date Analyzed: 12/19/08 11:43

GC Column: RTX-VRX ID: 0.25 (mm) Dilution Factor: 1.0

Soil Extract Volume:_____(uL) Soil Aliquot Volume: _____(uL)

CONCENTRATION UNITS: (ug/L or ug/Kg) UG/KG

CAS NO.	COMPOUND	MDL	RL	CONC	Q
67-64-1	Acetone	3.6	18	31	u
71-43-2	Benzene	0.85	18		U
75-27-4	Bromodichloromethane	0.54	18		U
75-25-2	Bromoform	1.8	18		U
74-83-9	Bromomethane	1.3	18		U
78-93-3	2-Butanone	2.5	18		U
75-15-0	Carbon disulfide	2.4	18		U
56-23-5	Carbon tetrachloride	1.6	18		U
108-90-7	Chlorobenzene	0.62	18		U
75-00-3	Chloroethane	2.0	18		U
67-66-3	Chloroform	1.00	18		U
74-87-3	Chloromethane	0.94	18		U
110-82-7	Cyclohexane	0.98	18		U
124-48-1	Dibromochloromethane	0.62	18		U
96-12-8	1,2-Dibromo-3-chloropropane	2.2	9.0		U
106-93-4	1,2-Dibromoethane	0.78	18		U
95-50-1	1,2-Dichlorobenzene	0.67	18		U
541-73-1	1,3-Dichlorobenzene	1.5	18		U
106-46-7	1,4-Dichlorobenzene	1.00	18		U
75-71-8	Dichlorodifluoromethane	2.0	18		U
75-34-3	1,1-Dichloroethane	0.98	18		U
107-06-2	1,2-Dichloroethane	0.83	18		U
75-35-4	1,1-Dichloroethene	2.2	18		U
156-59-2	cis-1,2-Dichloroethene	2.2	18		U
156-60-5	trans-1,2-Dichloroethene	2.0	18		U
78-87-5	1,2-Dichloropropane	0.83	18		U
10061-01-5	cis-1,3-Dichloropropene	0.90	18		U
10061-02-6	trans-1,3-Dichloropropene	0.58	18		U
100-41-4	Ethylbenzene	1.4	18		U
591-78-6	2-Hexanone	4.2	18		U
98-82-8	Isopropylbenzene	1.6	18		U
79-20-9	Methyl acetate	2.9	18		U
75-09-2	Methylene chloride	1.1	18		U
108-87-2	Methyl cyclohexane	0.54	18		U
1634-04-4	Methyl tert-butyl ether	0.58	18		U
108-10-1	4-Methyl-2-pentanone	1.0	18		U
100-42-5	Styrene	0.63	18		U
79-34-5	1,1,2,2-Tetrachloroethane	0.78	18		U
127-18-4	Tetrachloroethene	1.8	18		U

CW
2/27/09

FORM 1
VOLATILE ORGANICS ANALYSIS DATA SHEET

CLIENT SAMPLE NO.

MR08-IS06
5-1-2-08D

22

Lab Name: EMPIRICAL LABS Contract: CH2MHILL

Lab Code: NA Case No.: NA SAS No.: NA SDG No.: LEJEUNE027

Matrix: (soil/water) SOIL Lab Sample ID: 0812110-22

Sample wt/vol: 3.4 (g/mL) G Lab File ID: 1211022A

Level: (low/med) LOW Date Sampled: 12/06/08 15:45

% Moisture: not dec. 19 Date Analyzed: 12/19/08 11:43

GC Column: RTX-VRX ID: 0.25 (mm) Dilution Factor: 1.0

Soil Extract Volume:_____(uL) Soil Aliquot Volume: _____(uL)

CONCENTRATION UNITS: (ug/L or ug/Kg) UG/KG

CAS NO.	COMPOUND	MDL	RL	CONC	Q
108-88-3	Toluene	1.6	18		U
120-82-1	1,2,4-Trichlorobenzene	0.32	18		U
71-55-6	1,1,1-Trichloroethane	1.6	18		U
79-00-5	1,1,2-Trichloroethane	0.63	18		U
79-01-6	Trichloroethene	1.5	18		U
76-13-1	Trichlorotrifluoroethane	1.00	18		U
75-69-4	Trichlorofluoromethane	1.7	18		U
75-01-4	Vinyl chloride	2.0	18		U
1330-20-7	Xylene(total)	1.3	18		U

MW
7/22/09

FORM 1
VOLATILE ORGANICS ANALYSIS DATA SHEET

CLIENT SAMPLE NO.

23

MR08-SS066-08D

Lab Name: EMPIRICAL LABS Contract: CH2MHILL

Lab Code: NA Case No.: NA SAS No.: NA SDG No.: LEJEUNE027

Matrix: (soil/water) SOIL Lab Sample ID: 0812110-23

Sample wt/vol: 4.8 (g/mL) G Lab File ID: 1211023A

Level: (low/med) LOW Date Sampled: 12/06/08 16:05

% Moisture: not dec. 20 Date Analyzed: 12/19/08 17:47

GC Column: RTX-VRX ID: 0.25 (mm) Dilution Factor: 1.0

Soil Extract Volume:_____(uL) Soil Aliquot Volume: _____(uL)

CONCENTRATION UNITS: (ug/L or ug/Kg) UG/KG

CAS NO.	COMPOUND	MDL	RL	CONC	Q
67-64-1	Acetone	2.6	13	86	
71-43-2	Benzene	0.61	13		U
75-27-4	Bromodichloromethane	0.39	13		U
75-25-2	Bromoform	1.3	13		U
74-83-9	Bromomethane	0.93	13		U
78-93-3	2-Butanone	1.8	13		U
75-15-0	Carbon disulfide	1.7	13		U
56-23-5	Carbon tetrachloride	1.1	13		U
108-90-7	Chlorobenzene	0.44	13		U
75-00-3	Chloroethane	1.4	13		U
67-66-3	Chloroform	0.71	13		U
74-87-3	Chloromethane	0.67	13		U
110-82-7	Cyclohexane	0.70	13		U
124-48-1	Dibromochloromethane	0.44	13		U
96-12-8	1,2-Dibromo-3-chloropropane	1.5	6.4		U
106-93-4	1,2-Dibromoethane	0.56	13		U
95-50-1	1,2-Dichlorobenzene	0.48	13		U
541-73-1	1,3-Dichlorobenzene	1.1	13		U
106-46-7	1,4-Dichlorobenzene	0.71	13		U
75-71-8	Dichlorodifluoromethane	1.4	13		~~U~~ UJ CG
75-34-3	1,1-Dichloroethane	0.70	13		U
107-06-2	1,2-Dichloroethane	0.59	13		U
75-35-4	1,1-Dichloroethene	1.5	13		U
156-59-2	cis-1,2-Dichloroethene	1.5	13		U
156-60-5	trans-1,2-Dichloroethene	1.4	13		U
78-87-5	1,2-Dichloropropane	0.59	13		U
10061-01-5	cis-1,3-Dichloropropene	0.64	13		U
10061-02-6	trans-1,3-Dichloropropene	0.41	13		U
100-41-4	Ethylbenzene	0.97	13		U
591-78-6	2-Hexanone	3.0	13		U
98-82-8	Isopropylbenzene	1.1	13		U
79-20-9	Methyl acetate	2.1	13		U
75-09-2	Methylene chloride	0.80	13		U
108-87-2	Methyl cyclohexane	0.39	13		U
1634-04-4	Methyl tert-butyl ether	0.41	13		U
108-10-1	4-Methyl-2-pentanone	0.75	13		U
100-42-5	Styrene	0.45	13		U
79-34-5	1,1,2,2-Tetrachloroethane	0.56	13		U
127-18-4	Tetrachloroethene	1.2	13		U

FORM I VOA

MW 2/23/09

FORM 1
VOLATILE ORGANICS ANALYSIS DATA SHEET

CLIENT SAMPLE NO.

23

MR08-SS066-08D

Lab Name: EMPIRICAL LABS Contract: CH2MHILL

Lab Code: NA Case No.: NA SAS No.: NA SDG No.: LEJEUNE027

Matrix: (soil/water) SOIL Lab Sample ID: 0812110-23

Sample wt/vol: 4.8 (g/mL) G Lab File ID: 1211023A

Level: (low/med) LOW Date Sampled: 12/06/08 16:05

% Moisture: not dec. 20 Date Analyzed: 12/19/08 17:47

GC Column: RTX-VRX ID: 0.25 (mm) Dilution Factor: 1.0

Soil Extract Volume:_____(uL) Soil Aliquot Volume: _____(uL)

CONCENTRATION UNITS: (ug/L or ug/Kg) UG/KG

CAS NO.	COMPOUND	MDL	RL	CONC	Q
108-88-3	Toluene	1.1	13		U
120-82-1	1,2,4-Trichlorobenzene	0.23	13		U
71-55-6	1,1,1-Trichloroethane	1.2	13		U
79-00-5	1,1,2-Trichloroethane	0.45	13		U
79-01-6	Trichloroethene	1.1	13		U
76-13-1	Trichlorotrifluoroethane	0.71	13		U
75-69-4	Trichlorofluoromethane	1.2	13		U
75-01-4	Vinyl chloride	1.4	13		U
1330-20-7	Xylene(total)	0.90	13		U

gw
12/27/09

FORM 1
VOLATILE ORGANICS ANALYSIS DATA SHEET

CLIENT SAMPLE NO.

MR08-EB01
120608-SS

24

Lab Name: EMPIRICAL LABS Contract: CH2MHILL

Lab Code: NA Case No.: NA SAS No.: NA SDG No.: LEJEUNE027

Matrix: (soil/water) WATER Lab Sample ID: 0812110-24

Sample wt/vol: 5.000 (g/mL) ML Lab File ID: 1211024

Level: (low/med) LOW Date Sampled: 12/06/08 13:00

% Moisture: not dec. _____ Date Analyzed: 12/13/08 14:28

GC Column: RTX-VRX ID: 0.25 (mm) Dilution Factor: 1.0

Soil Extract Volume:_____(uL) Soil Aliquot Volume: _____(uL)

CONCENTRATION UNITS: (ug/L or ug/Kg) UG/L

CAS NO.	COMPOUND	MDL	RL	CONC	Q
67-64-1	Acetone	0.84	2.5		U
71-43-2	Benzene	0.11	1.0		U
75-27-4	Bromodichloromethane	0.10	1.0		U
75-25-2	Bromoform	0.10	1.0		U
74-83-9	Bromomethane	0.32	1.0		U
78-93-3	2-Butanone	1.0	3.0		U
75-15-0	Carbon disulfide	0.13	1.0		U
56-23-5	Carbon tetrachloride	0.15	1.0		U
108-90-7	Chlorobenzene	0.10	1.0		U
75-00-3	Chloroethane	0.18	1.0		U
67-66-3	Chloroform	0.11	1.0		U
74-87-3	Chloromethane	0.29	1.0		U
110-82-7	Cyclohexane	0.20	1.0		U
124-48-1	Dibromochloromethane	0.10	1.0		U
96-12-8	1,2-Dibromo-3-chloropropane	0.11	1.0		U
106-93-4	1,2-Dibromoethane	0.10	1.0		U
95-50-1	1,2-Dichlorobenzene	0.10	1.0		U
541-73-1	1,3-Dichlorobenzene	0.13	1.0		U
106-46-7	1,4-Dichlorobenzene	0.10	1.0		U
75-71-8	Dichlorodifluoromethane	0.22	1.0		U
75-34-3	1,1-Dichloroethane	0.12	1.0		U
107-06-2	1,2-Dichloroethane	0.10	1.0		U
75-35-4	1,1-Dichloroethene	0.15	1.0		U
156-59-2	cis-1,2-Dichloroethene	0.13	1.0		U
156-60-5	trans-1,2-Dichloroethene	0.13	1.0		U
78-87-5	1,2-Dichloropropane	0.10	1.0		U
10061-01-5	cis-1,3-Dichloropropene	0.11	1.0		U
10061-02-6	trans-1,3-Dichloropropene	0.10	1.0		U
100-41-4	Ethylbenzene	0.13	1.0		U
591-78-6	2-Hexanone	0.30	4.0		U
98-82-8	Isopropylbenzene	0.15	1.0		U
79-20-9	Methyl acetate	0.30	2.0		U
75-09-2	Methylene chloride	0.14	1.0	1.04 ~~0.27~~ ~~JB~~	B
108-87-2	Methyl cyclohexane	0.17	1.0		U
1634-04-4	Methyl tert-butyl ether	0.10	1.0		U
108-10-1	4-Methyl-2-pentanone	0.29	2.0		U
100-42-5	Styrene	0.10	1.0		U
79-34-5	1,1,2,2-Tetrachloroethane	0.10	1.0		U
127-18-4	Tetrachloroethene	0.15	1.0		U

FORM I VOA

lw 7/27/09

FORM 1
VOLATILE ORGANICS ANALYSIS DATA SHEET

CLIENT SAMPLE NO.

MR08-EB01
120608-SS

24

Lab Name: EMPIRICAL LABS Contract: CH2MHILL

Lab Code: NA Case No.: NA SAS No.: NA SDG No.: LEJEUNE027

Matrix: (soil/water) WATER Lab Sample ID: 0812110-24

Sample wt/vol: 5.000 (g/mL) ML Lab File ID: 1211024

Level: (low/med) LOW Date Sampled: 12/06/08 13:00

% Moisture: not dec. _____ Date Analyzed: 12/13/08 14:28

GC Column: RTX-VRX ID: 0.25 (mm) Dilution Factor: 1.0

Soil Extract Volume:_____(uL) Soil Aliquot Volume: _____(uL)

CONCENTRATION UNITS: (ug/L or ug/Kg) UG/L

CAS NO.	COMPOUND	MDL	RL	CONC	Q
108-88-3	Toluene	0.10	1.0		U
120-82-1	1,2,4-Trichlorobenzene	0.10	1.0		U
71-55-6	1,1,1-Trichloroethane	0.17	1.0		U
79-00-5	1,1,2-Trichloroethane	0.10	1.0		U
79-01-6	Trichloroethene	0.13	1.0		U
76-13-1	Trichlorotrifluoroethane	0.18	1.0		U
75-69-4	Trichlorofluoromethane	0.17	1.0		U
75-01-4	Vinyl chloride	0.18	1.0		U
1330-20-7	Xylene(total)	0.22	1.0		U

hw 2/27/09

FORM 1
VOLATILE ORGANICS ANALYSIS DATA SHEET

CLIENT SAMPLE NO.

MR06-EB0
11206-08

25

Lab Name: EMPIRICAL LABS Contract: CH2MHILL

Lab Code: NA Case No.: NA SAS No.: NA SDG No.: LEJEUNE027

Matrix: (soil/water) WATER Lab Sample ID: 0812110-25

Sample wt/vol: 5.000 (g/mL) ML Lab File ID: 1211025

Level: (low/med) LOW Date Sampled: 12/06/08 13:30

% Moisture: not dec. _____ Date Analyzed: 12/13/08 14:58

GC Column: RTX-VRX ID: 0.25 (mm) Dilution Factor: 1.0

Soil Extract Volume:_____(uL) Soil Aliquot Volume: _____(uL)

CONCENTRATION UNITS: (ug/L or ug/Kg) UG/L

CAS NO.	COMPOUND	MDL	RL	CONC	Q
67-64-1	Acetone	0.84	2.5		U
71-43-2	Benzene	0.11	1.0		U
75-27-4	Bromodichloromethane	0.10	1.0		U
75-25-2	Bromoform	0.10	1.0		U
74-83-9	Bromomethane	0.32	1.0		U
78-93-3	2-Butanone	1.0	3.0		U
75-15-0	Carbon disulfide	0.13	1.0		U
56-23-5	Carbon tetrachloride	0.15	1.0		U
108-90-7	Chlorobenzene	0.10	1.0		U
75-00-3	Chloroethane	0.18	1.0		U
67-66-3	Chloroform	0.11	1.0		U
74-87-3	Chloromethane	0.29	1.0		U
110-82-7	Cyclohexane	0.20	1.0		U
124-48-1	Dibromochloromethane	0.10	1.0		U
96-12-8	1,2-Dibromo-3-chloropropane	0.11	1.0		U
106-93-4	1,2-Dibromoethane	0.10	1.0		U
95-50-1	1,2-Dichlorobenzene	0.10	1.0		U
541-73-1	1,3-Dichlorobenzene	0.13	1.0		U
106-46-7	1,4-Dichlorobenzene	0.10	1.0		U
75-71-8	Dichlorodifluoromethane	0.22	1.0		U
75-34-3	1,1-Dichloroethane	0.12	1.0		U
107-06-2	1,2-Dichloroethane	0.10	1.0		U
75-35-4	1,1-Dichloroethene	0.15	1.0		U
156-59-2	cis-1,2-Dichloroethene	0.13	1.0		U
156-60-5	trans-1,2-Dichloroethene	0.13	1.0		U
78-87-5	1,2-Dichloropropane	0.10	1.0		U
10061-01-5	cis-1,3-Dichloropropene	0.11	1.0		U
10061-02-6	trans-1,3-Dichloropropene	0.10	1.0		U
100-41-4	Ethylbenzene	0.13	1.0		U
591-78-6	2-Hexanone	0.30	4.0		U
98-82-8	Isopropylbenzene	0.15	1.0		U
79-20-9	Methyl acetate	0.30	2.0		U
75-09-2	Methylene chloride	0.14	1.0	1.0u ~~0.30 JB~~	B
108-87-2	Methyl cyclohexane	0.17	1.0		U
1634-04-4	Methyl tert-butyl ether	0.10	1.0		U
108-10-1	4-Methyl-2-pentanone	0.29	2.0		U
100-42-5	Styrene	0.10	1.0		U
79-34-5	1,1,2,2-Tetrachloroethane	0.10	1.0		U
127-18-4	Tetrachloroethene	0.15	1.0		U

FORM I VOA

LW
7/27/09

FORM 1
VOLATILE ORGANICS ANALYSIS DATA SHEET

CLIENT SAMPLE NO. 25

MR06-EB0
11206-08

Lab Name: EMPIRICAL LABS Contract: CH2MHILL

Lab Code: NA Case No.: NA SAS No.: NA SDG No.: LEJEUNE027

Matrix: (soil/water) WATER Lab Sample ID: 0812110-25

Sample wt/vol: 5.000 (g/mL) ML Lab File ID: 1211025

Level: (low/med) LOW Date Sampled: 12/06/08 13:30

% Moisture: not dec. _____ Date Analyzed: 12/13/08 14:58

GC Column: RTX-VRX ID: 0.25 (mm) Dilution Factor: 1.0

Soil Extract Volume:_____(uL) Soil Aliquot Volume: _____(uL)

CONCENTRATION UNITS: (ug/L or ug/Kg) UG/L

CAS NO.	COMPOUND	MDL	RL	CONC	Q
108-88-3	Toluene	0.10	1.0		U
120-82-1	1,2,4-Trichlorobenzene	0.10	1.0		U
71-55-6	1,1,1-Trichloroethane	0.17	1.0		U
79-00-5	1,1,2-Trichloroethane	0.10	1.0		U
79-01-6	Trichloroethene	0.13	1.0		U
76-13-1	Trichlorotrifluoroethane	0.18	1.0		U
75-69-4	Trichlorofluoromethane	0.17	1.0		U
75-01-4	Vinyl chloride	0.18	1.0		U
1330-20-7	Xylene(total)	0.22	1.0		U

lw
2/27/09

FORM 1
VOLATILE ORGANICS ANALYSIS DATA SHEET

CLIENT SAMPLE NO.

MR06-TB01120608

26

Lab Name: EMPIRICAL LABS Contract: CH2MHILL

Lab Code: NA Case No.: NA SAS No.: NA SDG No.: LEJEUNE027

Matrix: (soil/water) WATER Lab Sample ID: 0812110-26

Sample wt/vol: 5.000 (g/mL) ML Lab File ID: 1211026

Level: (low/med) LOW Date Sampled: 12/06/08 14:00

% Moisture: not dec. _____ Date Analyzed: 12/13/08 15:29

GC Column: RTX-VRX ID: 0.25 (mm) Dilution Factor: 1.0

Soil Extract Volume:_____(uL) Soil Aliquot Volume: _____(uL)

CONCENTRATION UNITS: (ug/L or ug/Kg) UG/L

CAS NO.	COMPOUND	MDL	RL	CONC	Q
67-64-1	Acetone	0.84	2.5		U
71-43-2	Benzene	0.11	1.0		U
75-27-4	Bromodichloromethane	0.10	1.0		U
75-25-2	Bromoform	0.10	1.0		U
74-83-9	Bromomethane	0.32	1.0		U
78-93-3	2-Butanone	1.0	3.0		U
75-15-0	Carbon disulfide	0.13	1.0		U
56-23-5	Carbon tetrachloride	0.15	1.0		U
108-90-7	Chlorobenzene	0.10	1.0		U
75-00-3	Chloroethane	0.18	1.0		U
67-66-3	Chloroform	0.11	1.0		U
74-87-3	Chloromethane	0.29	1.0		U
110-82-7	Cyclohexane	0.20	1.0		U
124-48-1	Dibromochloromethane	0.10	1.0		U
96-12-8	1,2-Dibromo-3-chloropropane	0.11	1.0		U
106-93-4	1,2-Dibromoethane	0.10	1.0		U
95-50-1	1,2-Dichlorobenzene	0.10	1.0		U
541-73-1	1,3-Dichlorobenzene	0.13	1.0		U
106-46-7	1,4-Dichlorobenzene	0.10	1.0		U
75-71-8	Dichlorodifluoromethane	0.22	1.0		U
75-34-3	1,1-Dichloroethane	0.12	1.0		U
107-06-2	1,2-Dichloroethane	0.10	1.0		U
75-35-4	1,1-Dichloroethene	0.15	1.0		U
156-59-2	cis-1,2-Dichloroethene	0.13	1.0		U
156-60-5	trans-1,2-Dichloroethene	0.13	1.0		U
78-87-5	1,2-Dichloropropane	0.10	1.0		U
10061-01-5	cis-1,3-Dichloropropene	0.11	1.0		U
10061-02-6	trans-1,3-Dichloropropene	0.10	1.0		U
100-41-4	Ethylbenzene	0.13	1.0		U
591-78-6	2-Hexanone	0.30	4.0		U
98-82-8	Isopropylbenzene	0.15	1.0		U
79-20-9	Methyl acetate	0.30	2.0		U
75-09-2	Methylene chloride	0.14	1.0	1.0u ~~0.81~~	~~JB~~ B
108-87-2	Methyl cyclohexane	0.17	1.0		U
1634-04-4	Methyl tert-butyl ether	0.10	1.0		U
108-10-1	4-Methyl-2-pentanone	0.29	2.0		U
100-42-5	Styrene	0.10	1.0		U
79-34-5	1,1,2,2-Tetrachloroethane	0.10	1.0		U
127-18-4	Tetrachloroethene	0.15	1.0		U

FORM I VOA

LW
2/27/09

FORM 1
VOLATILE ORGANICS ANALYSIS DATA SHEET

CLIENT SAMPLE NO.

MR06-TB01120608

26

Lab Name: EMPIRICAL LABS Contract: CH2MHILL

Lab Code: NA Case No.: NA SAS No.: NA SDG No.: LEJEUNE027

Matrix: (soil/water) WATER Lab Sample ID: 0812110-26

Sample wt/vol: 5.000 (g/mL) ML Lab File ID: 1211026

Level: (low/med) LOW Date Sampled: 12/06/08 14:00

% Moisture: not dec. _____ Date Analyzed: 12/13/08 15:29

GC Column: RTX-VRX ID: 0.25 (mm) Dilution Factor: 1.0

Soil Extract Volume:_____(uL) Soil Aliquot Volume: _____(uL)

CONCENTRATION UNITS: (ug/L or ug/Kg) UG/L

CAS NO.	COMPOUND	MDL	RL	CONC	Q
108-88-3	Toluene	0.10	1.0		U
120-82-1	1,2,4-Trichlorobenzene	0.10	1.0		U
71-55-6	1,1,1-Trichloroethane	0.17	1.0		U
79-00-5	1,1,2-Trichloroethane	0.10	1.0		U
79-01-6	Trichloroethene	0.13	1.0		U
76-13-1	Trichlorotrifluoroethane	0.18	1.0		U
75-69-4	Trichlorofluoromethane	0.17	1.0		U
75-01-4	Vinyl chloride	0.18	1.0		U
1330-20-7	Xylene(total)	0.22	1.0		U

MW 2/27/09

FORM 1
VOLATILE ORGANICS ANALYSIS DATA SHEET

CLIENT SAMPLE NO. 27

MR08-FB01120608

Lab Name: EMPIRICAL LABS Contract: CH2MHILL

Lab Code: NA Case No.: NA SAS No.: NA SDG No.: LEJEUNE027

Matrix: (soil/water) WATER Lab Sample ID: 0812110-27

Sample wt/vol: 5.000 (g/mL) ML Lab File ID: 1211027

Level: (low/med) LOW Date Sampled: 12/06/08 15:20

% Moisture: not dec. _____ Date Analyzed: 12/13/08 15:59

GC Column: RTX-VRX ID: 0.25 (mm) Dilution Factor: 1.0

Soil Extract Volume:_____(uL) Soil Aliquot Volume: _____(uL)

CONCENTRATION UNITS: (ug/L or ug/Kg) UG/L

CAS NO.	COMPOUND	MDL	RL	CONC	Q
67-64-1	Acetone	0.84	2.5	3.8	
71-43-2	Benzene	0.11	1.0		U
75-27-4	Bromodichloromethane	0.10	1.0	0.20	J
75-25-2	Bromoform	0.10	1.0		U
74-83-9	Bromomethane	0.32	1.0		U
78-93-3	2-Butanone	1.0	3.0		U
75-15-0	Carbon disulfide	0.13	1.0		U
56-23-5	Carbon tetrachloride	0.15	1.0		U
108-90-7	Chlorobenzene	0.10	1.0		U
75-00-3	Chloroethane	0.18	1.0		U
67-66-3	Chloroform	0.11	1.0	3.0	
74-87-3	Chloromethane	0.29	1.0		U
110-82-7	Cyclohexane	0.20	1.0		U
124-48-1	Dibromochloromethane	0.10	1.0		U
96-12-8	1,2-Dibromo-3-chloropropane	0.11	1.0		U
106-93-4	1,2-Dibromoethane	0.10	1.0		U
95-50-1	1,2-Dichlorobenzene	0.10	1.0		U
541-73-1	1,3-Dichlorobenzene	0.13	1.0		U
106-46-7	1,4-Dichlorobenzene	0.10	1.0		U
75-71-8	Dichlorodifluoromethane	0.22	1.0		U
75-34-3	1,1-Dichloroethane	0.12	1.0		U
107-06-2	1,2-Dichloroethane	0.10	1.0		U
75-35-4	1,1-Dichloroethene	0.15	1.0		U
156-59-2	cis-1,2-Dichloroethene	0.13	1.0		U
156-60-5	trans-1,2-Dichloroethene	0.13	1.0		U
78-87-5	1,2-Dichloropropane	0.10	1.0		U
10061-01-5	cis-1,3-Dichloropropene	0.11	1.0		U
10061-02-6	trans-1,3-Dichloropropene	0.10	1.0		U
100-41-4	Ethylbenzene	0.13	1.0		U
591-78-6	2-Hexanone	0.30	4.0		U
98-82-8	Isopropylbenzene	0.15	1.0		U
79-20-9	Methyl acetate	0.30	2.0		U
75-09-2	Methylene chloride	0.14	1.0	1.7	~~B~~U B1
108-87-2	Methyl cyclohexane	0.17	1.0		U
1634-04-4	Methyl tert-butyl ether	0.10	1.0		U
108-10-1	4-Methyl-2-pentanone	0.29	2.0		U
100-42-5	Styrene	0.10	1.0		U
79-34-5	1,1,2,2-Tetrachloroethane	0.10	1.0		U
127-18-4	Tetrachloroethene	0.15	1.0		U

FORM I VOA

lw
2/27/09

FORM 1
VOLATILE ORGANICS ANALYSIS DATA SHEET

CLIENT SAMPLE NO. 27

MR08-FB01120608

Lab Name: EMPIRICAL LABS Contract: CH2MHILL

Lab Code: NA Case No.: NA SAS No.: NA SDG No.: LEJEUNE027

Matrix: (soil/water) WATER Lab Sample ID: 0812110-27

Sample wt/vol: 5.000 (g/mL) ML Lab File ID: 1211027

Level: (low/med) LOW Date Sampled: 12/06/08 15:20

% Moisture: not dec. _____ Date Analyzed: 12/13/08 15:59

GC Column: RTX-VRX ID: 0.25 (mm) Dilution Factor: 1.0

Soil Extract Volume:_____(uL) Soil Aliquot Volume: _____(uL)

CONCENTRATION UNITS: (ug/L or ug/Kg) UG/L

CAS NO.	COMPOUND	MDL	RL	CONC	Q
108-88-3	Toluene	0.10	1.0	0.35	J
120-82-1	1,2,4-Trichlorobenzene	0.10	1.0		U
71-55-6	1,1,1-Trichloroethane	0.17	1.0		U
79-00-5	1,1,2-Trichloroethane	0.10	1.0		U
79-01-6	Trichloroethene	0.13	1.0		U
76-13-1	Trichlorotrifluoroethane	0.18	1.0		U
75-69-4	Trichlorofluoromethane	0.17	1.0		U
75-01-4	Vinyl chloride	0.18	1.0		U
1330-20-7	Xylene(total)	0.22	1.0		U

RW
7/27/09

FORM 1
VOLATILE ORGANICS ANALYSIS DATA SHEET

CLIENT SAMPLE NO. 28

MR08-IS06
6-2-3-08D

Lab Name: EMPIRICAL LABS Contract: CH2MHILL

Lab Code: NA Case No.: NA SAS No.: NA SDG No.: LEJEUNE027

Matrix: (soil/water) SOIL Lab Sample ID: 0812110-28

Sample wt/vol: 2.0 (g/mL) G Lab File ID: 1211028A

Level: (low/med) LOW Date Sampled: 12/06/08 16:25

% Moisture: not dec. 37 Date Analyzed: 12/19/08 18:26

GC Column: RTX-VRX ID: 0.25 (mm) Dilution Factor: 1.0

Soil Extract Volume:_____(uL) Soil Aliquot Volume: _____(uL)

CONCENTRATION UNITS: (ug/L or ug/Kg) UG/KG

CAS NO.	COMPOUND	MDL	RL	CONC	Q	
67-64-1	Acetone	8.0	40	100	J	SSU
71-43-2	Benzene	1.9	40		U	
75-27-4	Bromodichloromethane	1.2	40		U	
75-25-2	Bromoform	4.0	40		U	
74-83-9	Bromomethane	2.9	40		U	
78-93-3	2-Butanone	5.6	40		U	
75-15-0	Carbon disulfide	5.2	40		U	
56-23-5	Carbon tetrachloride	3.5	40		U	
108-90-7	Chlorobenzene	1.4	40		U	
75-00-3	Chloroethane	4.4	40		U	
67-66-3	Chloroform	2.2	40		U	
74-87-3	Chloromethane	2.1	40		U	
110-82-7	Cyclohexane	2.1	40		U	
124-48-1	Dibromochloromethane	1.4	40		U	
96-12-8	1,2-Dibromo-3-chloropropane	4.8	20		~~U~~ UJ	ISL
106-93-4	1,2-Dibromoethane	1.7	40		U	
95-50-1	1,2-Dichlorobenzene	1.5	40		U UJ	ISL
541-73-1	1,3-Dichlorobenzene	3.3	40		U	
106-46-7	1,4-Dichlorobenzene	2.2	40		U	
75-71-8	Dichlorodifluoromethane	4.4	40		~~U~~ UJ	CCI
75-34-3	1,1-Dichloroethane	2.1	40		U	
107-06-2	1,2-Dichloroethane	1.8	40		U	
75-35-4	1,1-Dichloroethene	4.8	40		U	
156-59-2	cis-1,2-Dichloroethene	4.8	40		U	
156-60-5	trans-1,2-Dichloroethene	4.4	40		U	
78-87-5	1,2-Dichloropropane	1.8	40		U	
10061-01-5	cis-1,3-Dichloropropene	2.0	40		U	
10061-02-6	trans-1,3-Dichloropropene	1.3	40		U	
100-41-4	Ethylbenzene	3.0	40		U	
591-78-6	2-Hexanone	9.2	40		U	
98-82-8	Isopropylbenzene	3.5	40		U	
79-20-9	Methyl acetate	6.4	40		U	
75-09-2	Methylene chloride	2.5	40		U	
108-87-2	Methyl cyclohexane	1.2	40		U	
1634-04-4	Methyl tert-butyl ether	1.3	40		U	
108-10-1	4-Methyl-2-pentanone	2.3	40		U	
100-42-5	Styrene	1.4	40		U	
79-34-5	1,1,2,2-Tetrachloroethane	1.7	40		U	
127-18-4	Tetrachloroethene	3.9	40		U	

FORM I VOA

MW
2/27/09

FORM 1
VOLATILE ORGANICS ANALYSIS DATA SHEET

CLIENT SAMPLE NO.

28

MR08-IS06
6-2-3-08D

Lab Name: EMPIRICAL LABS Contract: CH2MHILL

Lab Code: NA Case No.: NA SAS No.: NA SDG No.: LEJEUNE027

Matrix: (soil/water) SOIL Lab Sample ID: 0812110-28

Sample wt/vol: 2.0 (g/mL) G Lab File ID: 1211028A

Level: (low/med) LOW Date Sampled: 12/06/08 16:25

% Moisture: not dec. 37 Date Analyzed: 12/19/08 18:26

GC Column: RTX-VRX ID: 0.25 (mm) Dilution Factor: 1.0

Soil Extract Volume:_____(uL) Soil Aliquot Volume: _____(uL)

CONCENTRATION UNITS: (ug/L or ug/Kg) UG/KG

CAS NO.	COMPOUND	MDL	RL	CONC	Q
108-88-3	Toluene	3.4	40		U
120-82-1	1,2,4-Trichlorobenzene	0.72	40		~~U~~ UJ IS
71-55-6	1,1,1-Trichloroethane	3.6	40		U
79-00-5	1,1,2-Trichloroethane	1.4	40		U
79-01-6	Trichloroethene	3.4	40		U
76-13-1	Trichlorotrifluoroethane	2.2	40		U
75-69-4	Trichlorofluoromethane	3.8	40		U
75-01-4	Vinyl chloride	4.4	40		U
1330-20-7	Xylene(total)	2.8	40		U

lw
2/27/09

FORM 1
VOLATILE ORGANICS ANALYSIS DATA SHEET

CLIENT SAMPLE NO. 28R

MR08-IS06
6-2-3-08DR

Lab Name: EMPIRICAL LABS Contract: CH2MHILL

Lab Code: NA Case No.: NA SAS No.: NA SDG No.: LEJEUNE027

Matrix: (soil/water) SOIL Lab Sample ID: 0812110-28R

Sample wt/vol: 4.9 (g/mL) G Lab File ID: 1211028B

Level: (low/med) LOW Date Sampled: 12/06/08 16:25

% Moisture: not dec. 37 Date Analyzed: 12/28/08 02:11

GC Column: RTX-VRX ID: 0.25 (mm) Dilution Factor: 1.0

Soil Extract Volume:_____(uL) Soil Aliquot Volume:_____(uL)

use only in

CONCENTRATION UNITS: (ug/L or ug/Kg) UG/KG

CAS NO.	COMPOUND	MDL	RL	CONC	Q
67-64-1	Acetone	3.2	16	96	J
71-43-2	Benzene	0.76	16		U UJ
75-27-4	Bromodichloromethane	0.48	16		U
75-25-2	Bromoform	1.6	16		U
74-83-9	Bromomethane	1.2	16		U
78-93-3	2-Butanone	2.2	16	3.4	J J
75-15-0	Carbon disulfide	2.1	16		U UJ
56-23-5	Carbon tetrachloride	1.4	16		U
108-90-7	Chlorobenzene	0.55	16		U
75-00-3	Chloroethane	1.8	16		U
67-66-3	Chloroform	0.89	16		U
74-87-3	Chloromethane	0.84	16		U
110-82-7	Cyclohexane	0.87	16		U
124-48-1	Dibromochloromethane	0.55	16		U
96-12-8	1,2-Dibromo-3-chloropropane	1.9	8.0		U UJ
106-93-4	1,2-Dibromoethane	0.69	16		U UJ
95-50-1	1,2-Dichlorobenzene	0.60	16		U UJ
541-73-1	1,3-Dichlorobenzene	1.4	16		U
106-46-7	1,4-Dichlorobenzene	0.89	16		U
75-71-8	Dichlorodifluoromethane	1.8	16		U UJ
75-34-3	1,1-Dichloroethane	0.87	16		U
107-06-2	1,2-Dichloroethane	0.74	16		U
75-35-4	1,1-Dichloroethene	1.9	16		U
156-59-2	cis-1,2-Dichloroethene	1.9	16		U
156-60-5	trans-1,2-Dichloroethene	1.8	16		U
78-87-5	1,2-Dichloropropane	0.74	16		U
10061-01-5	cis-1,3-Dichloropropene	0.80	16		U
10061-02-6	trans-1,3-Dichloropropene	0.52	16		U
100-41-4	Ethylbenzene	1.2	16		U
591-78-6	2-Hexanone	3.7	16		U
98-82-8	Isopropylbenzene	1.4	16		U
79-20-9	Methyl acetate	2.6	16	3.5	J J
75-09-2	Methylene chloride	1.00	16	16UJ ~~11~~	~~JB~~ HH
108-87-2	Methyl cyclohexane	0.48	16		U UJ
1634-04-4	Methyl tert-butyl ether	0.52	16		U
108-10-1	4-Methyl-2-pentanone	0.93	16		U
100-42-5	Styrene	0.56	16		U
79-34-5	1,1,2,2-Tetrachloroethane	0.69	16		U UJ
127-18-4	Tetrachloroethene	1.6	16		U UJ

FORM I VOA

RW 2/27/09

FORM 1
VOLATILE ORGANICS ANALYSIS DATA SHEET

CLIENT SAMPLE NO. 28R

MR08-IS06
6-2-3-08DR

Lab Name: EMPIRICAL LABS Contract: CH2MHILL

Lab Code: NA Case No.: NA SAS No.: NA SDG No.: LEJEUNE027

Matrix: (soil/water) SOIL Lab Sample ID: 0812110-28R

Sample wt/vol: 4.9 (g/mL) G Lab File ID: 1211028B

Level: (low/med) LOW Date Sampled: 12/06/08 16:25

% Moisture: not dec. 37 Date Analyzed: 12/28/08 02:11

GC Column: RTX-VRX ID: 0.25 (mm) Dilution Factor: 1.0

Soil Extract Volume:_____(uL) Soil Aliquot Volume: _____(uL)

CONCENTRATION UNITS: (ug/L or ug/Kg) UG/KG

CAS NO.	COMPOUND	MDL	RL	CONC	Q
108-88-3	Toluene	1.4	16		U UJ
120-82-1	1,2,4-Trichlorobenzene	0.29	16		U UJ
71-55-6	1,1,1-Trichloroethane	1.4	16		U UJ
79-00-5	1,1,2-Trichloroethane	0.56	16		U
79-01-6	Trichloroethene	1.4	16		U
76-13-1	Trichlorotrifluoroethane	0.89	16		U
75-69-4	Trichlorofluoromethane	1.5	16		U
75-01-4	Vinyl chloride	1.8	16		U
1330-20-7	Xylene(total)	1.1	16		U

2/27/09

ENVIRONMENTAL
Data Services, Inc.

VOLATILE ORGANIC COMPOUNDS

USEPA Region IV - Level IV Review

Site: MCB Camp Lejeune, TO-09 SDG #: LEJUENE028

Client: CH2M HILL, Inc., Virginia Beach, Virginia Date: February 27, 2009

Laboratory: Empirical Laboratories, Nashville, Tennessee Reviewer: Nancy Weaver

EDS ID	Client Sample ID	Laboratory Sample ID	Matrix
1	MR08-SS088-08D	0812166-01	Soil
2	MR08-IS088-2-3-08D	0812166-02	Soil
3	MR08-SS089-08D	0812166-03	Soil
4	MR08-SS089D-08D	0812166-04	Soil
5	MR08-IS089-2-3-08D	0812166-05	Soil
6	MR08-IS089D-2-3-08D	0812166-06	Soil
7	MR08-SS090-08D	0812166-07	Soil
8	MR08-IS090-2-3-08D	0812166-08	Soil
9	MR08-SS115-08D	0812166-09	Soil
10	MR08-IS115-2-3-08D	0812166-10	Soil
11	MR08-SS114-08D	0812166-11	Soil
11RE	MR08-SS114-08DRE	0812166-11RE	Soil
12	MR08-IS114-2-3-08D	0812166-12	Soil
13	MR08-SS113-08D	0812166-13	Soil
14	MR08-IS113-2-3-08D	0812166-14	Soil
15	MR08-SS129-08D	0812166-15	Soil
16	MR08-SS129D-08D	0812166-16	Soil
17	MR08-IS129-2-3-08D	0812166-17	Soil
18	MR08-IS129D-2-3-08D	0812166-18	Soil
19	MR08-SS128-08D	0812166-19	Soil
20	MR08-IS128-2-3-08D	0812166-20	Soil
21	MR08-EB01120908-SS	0812166-21	Water
22	MR08-EB01120908-IS	0812166-22	Water
23	MR08-TB01120908	0812166-23	Water

The USEPA "Contract Laboratory Program National Functional Guidelines for Organic Data Review," October 1999, and professional judgement were used in evaluating the data in this summary report.

Holding Times - All samples were analyzed within 14 days for preserved water and soil samples except the following.

Sample	Date Sampled	Date Analyzed	# of Days	Qualifier
11RE	12/09/08	12/30/08	21	J/UJ

GC/MS Tuning - All of the BFB tunes in the initial and continuing calibrations met the percent relative abundance criteria.

Initial Calibration - The initial calibrations exhibited acceptable %RSD and mean RRF values.

Continuing Calibration - The continuing calibrations exhibited acceptable %D and RRF values except the following.

CCAL Date	Compound	%D/RRF	Qualifier	Affected Samples
12/19/08	Chloroethane	37.0%	J/UJ	21-23
12/21/08	Bromomethane	48.2%	J/UJ	1-12
	Chloroethane	26.5%	J/UJ	1-12
	Chloromethane	28.8%	J/UJ	1-12
	Dichlorodifluoromethane	28.7%	J/UJ	1-12
12/21/08	Choromethane	25.1%	J/UJ	13-20
	Dichlorodifluoromethane	27.6%	J/UJ	13-20
12/30/08	2-Hexanone	30.0%	None	Already qualified due to HT

Surrogates - All samples exhibited acceptable surrogate recoveries.

MS/MSD - A MS/MSD sample was not analyzed from this data package.

Laboratory Control Sample - The LCS samples exhibited acceptable %R values except the following.

LCS ID	Compound	%R	Qualifier	Affected Samples
V3BLK1218E	Isopropylbenzene	126%	None	All ND
V1BLK1219H	Vinyl choride	51%	J/UJ	13-20

Internal Standard (IS) Area Performance - All internal standards met response and retention time (RT) criteria except the following.

Sample ID	Internal Standard	Area Count	Qualifier
11*	IS3-1,4-Dichlorobenzene-d4	Low	J/UJ - All associated compounds
11RE	IS3-1,4-Dichlorobenzene-d4	Low	J/UJ - All associated compounds

* This sample should be used for reporting purposes.

Method Blank - The method blanks exhibited the following contamination.

Blank ID	Compound	Conc.	Action Level	Qualifier	Affected Samples
V3BLK1218E	Methylene chloride	0.53 ug/L	5.3 ug/L	U	21-23
	1,2,4-Trichlorobenzene	0.25 ug/L	1.25 ug/L	None	All ND
V1BLK1219H	Vinyl chloride	6.1 ug/kg	61 ug/kg	None	All ND
V1BLK1230	Methylene chloride	3.0 ug/kg	30 ug/kg	U	11RE

Trip, Field, Equipment Blank - Field QC results are summarized below.

Blank ID	Compound	Conc. ug/L	Action Level ug/L or ug/kg	Qualifier	Affected Samples
MR08-EB01120908-IS	Acetone	4.4	44	U	2, 5, 6, 8, 10, 12, 14, 17, 18, 20
	Chloroform	0.63	3.15	None	All ND
	Cyclohexane	0.23	1.15	None	All ND
MR08-EB01120908-SS	Acetone	5.4	54	U	1, 3, 4, 7, 9, 11, 11RE, 13, 15, 16, 19
	Chloroform	1.4	7.0	None	See FB
	Cyclohexane	0.25	1.25	U	11, 11RE
	Toluene	0.17	0.85	None	See FBs
MR08-FB01120608	Acetone	3.8	38	None	See EBs
	Bromodichloromethane	0.2	1.0	None	All ND
	Chloroform	3.0	15.0	None	All ND
	Toluene	0.35	1.75	U	15
MR08-TB01120908	None - ND	-	-	-	-

Field Duplicates - Field duplicate results are summarized below.

Compound	MR08-SS089-08D ug/kg	MR08-SS089D-08D ug/kg	RPD	Qualifier
Benzene	10 U	0.70	NC	None
2-Butanone	1.5	12 U	NC	None

Compound	MR08-IS089-2-3-08D ug/kg	MR08-IS089D-2-3-08D ug/kg	RPD	Qualifier
2-Butanone	1.8	10U	NC	None
Trichloroethene	2.2	1.4	44%	None

Compound	MR08-SS129-08D ug/kg	MR08-SS129D-08D ug/kg	RPD	Qualifier
Benzene	0.96	21 U	NC	None
2-Butanone	1.7	21 U	NC	None
Carbon disulfide	1.7	21 U	NC	None
Ethylbenzene	2.4	21 U	NC	None
Methyl cyclohexane	0.56	21 U	NC	None
Vinyl chloride	6.7	21 U	NC	None

Compound	MR08-IS129-2-3-08D ug/kg	MR08-IS129D-2-3-08D ug/kg	RPD	Qualifier
None	ND	ND	-	-

Tentatively Identified Compounds (TICs) - TICs were not reported.

Compound Quantitation - No discrepancies were identified.

FORM 1
VOLATILE ORGANICS ANALYSIS DATA SHEET

CLIENT SAMPLE NO.

MR08-SS088-08D

Lab Name: EMPIRICAL LABS Contract: CH2MHILL

Lab Code: NA Case No.: NA SAS No.: NA SDG No.: LEJEUNE028

Matrix: (soil/water) SOIL Lab Sample ID: 0812166-01

Sample wt/vol: 5.5 (g/mL) G Lab File ID: 1216601A

Level: (low/med) LOW Date Sampled: 12/09/08 08:25

% Moisture: not dec. 8 Date Analyzed: 12/21/08 07:46

GC Column: RTX-VRX ID: 0.25 (mm) Dilution Factor: 1.0

Soil Extract Volume:_____(uL) Soil Aliquot Volume: _____(uL)

CONCENTRATION UNITS: (ug/L or ug/Kg) UG/KG

CAS NO.	COMPOUND	MDL	RL	CONC	Q	
67-64-1	Acetone	2.0	9.9	9.9 ~~6.5~~	U	BL
71-43-2	Benzene	0.47	9.9	0.58	J	
75-27-4	Bromodichloromethane	0.30	9.9		U	
75-25-2	Bromoform	0.99	9.9		U	
74-83-9	Bromomethane	0.72	9.9		~~U~~ UJ	CCH
78-93-3	2-Butanone	1.4	9.9		U	
75-15-0	Carbon disulfide	1.3	9.9		U	
56-23-5	Carbon tetrachloride	0.87	9.9		U	
108-90-7	Chlorobenzene	0.34	9.9		U	
75-00-3	Chloroethane	1.1	9.9		~~U~~ UJ	CCH
67-66-3	Chloroform	0.55	9.9		U	
74-87-3	Chloromethane	0.52	9.9		~~U~~ UJ	CCH
110-82-7	Cyclohexane	0.54	9.9		U	
124-48-1	Dibromochloromethane	0.34	9.9		U	
96-12-8	1,2-Dibromo-3-chloropropane	1.2	5.0		U	
106-93-4	1,2-Dibromoethane	0.43	9.9		U	
95-50-1	1,2-Dichlorobenzene	0.37	9.9		U	
541-73-1	1,3-Dichlorobenzene	0.83	9.9		U	
106-46-7	1,4-Dichlorobenzene	0.55	9.9		U	
75-71-8	Dichlorodifluoromethane	1.1	9.9		~~U~~ UJ	CCH
75-34-3	1,1-Dichloroethane	0.54	9.9		U	
107-06-2	1,2-Dichloroethane	0.46	9.9		U	
75-35-4	1,1-Dichloroethene	1.2	9.9		U	
156-59-2	cis-1,2-Dichloroethene	1.2	9.9		U	
156-60-5	trans-1,2-Dichloroethene	1.1	9.9		U	
78-87-5	1,2-Dichloropropane	0.46	9.9		U	
10061-01-5	cis-1,3-Dichloropropene	0.50	9.9		U	
10061-02-6	trans-1,3-Dichloropropene	0.32	9.9		U	
100-41-4	Ethylbenzene	0.74	9.9		U	
591-78-6	2-Hexanone	2.3	9.9		U	
98-82-8	Isopropylbenzene	0.87	9.9		U	
79-20-9	Methyl acetate	1.6	9.9		U	
75-09-2	Methylene chloride	0.62	9.9		U	
108-87-2	Methyl cyclohexane	0.30	9.9	0.37	J	
1634-04-4	Methyl tert-butyl ether	0.32	9.9		U	
108-10-1	4-Methyl-2-pentanone	0.58	9.9		U	
100-42-5	Styrene	0.35	9.9		U	
79-34-5	1,1,2,2-Tetrachloroethane	0.43	9.9		U	
127-18-4	Tetrachloroethene	0.96	9.9		U	

lw
2/17/09

FORM 1
VOLATILE ORGANICS ANALYSIS DATA SHEET

CLIENT SAMPLE NO.

MR08-SS088-08D

Lab Name: EMPIRICAL LABS Contract: CH2MHILL

Lab Code: NA Case No.: NA SAS No.: NA SDG No.: LEJEUNE028

Matrix: (soil/water) SOIL Lab Sample ID: 0812166-01

Sample wt/vol: 5.5 (g/mL) G Lab File ID: 1216601A

Level: (low/med) LOW Date Sampled: 12/09/08 08:25

% Moisture: not dec. 8 Date Analyzed: 12/21/08 07:46

GC Column: RTX-VRX ID: 0.25 (mm) Dilution Factor: 1.0

Soil Extract Volume:_____(uL) Soil Aliquot Volume: _____(uL)

CONCENTRATION UNITS: (ug/L or ug/Kg) UG/KG

CAS NO.	COMPOUND	MDL	RL	CONC	Q
108-88-3	Toluene	0.85	9.9		U
120-82-1	1,2,4-Trichlorobenzene	0.18	9.9		U
71-55-6	1,1,1-Trichloroethane	0.89	9.9		U
79-00-5	1,1,2-Trichloroethane	0.35	9.9		U
79-01-6	Trichloroethene	0.84	9.9		U
76-13-1	Trichlorotrifluoroethane	0.55	9.9		U
75-69-4	Trichlorofluoromethane	0.94	9.9		U
75-01-4	Vinyl chloride	1.1	9.9		U
1330-20-7	Xylene(total)	0.70	9.9		U

MW 2127109

FORM 1
VOLATILE ORGANICS ANALYSIS DATA SHEET

CLIENT SAMPLE NO. 2

MR08-IS08
8-2-3-08D

Lab Name: EMPIRICAL LABS Contract: CH2MHILL

Lab Code: NA Case No.: NA SAS No.: NA SDG No.: LEJEUNE028

Matrix: (soil/water) SOIL Lab Sample ID: 0812166-02

Sample wt/vol: 4.7 (g/mL) G Lab File ID: 1216602A

Level: (low/med) LOW Date Sampled: 12/09/08 08:50

% Moisture: not dec. 8 Date Analyzed: 12/21/08 08:25

GC Column: RTX-VRX ID: 0.25 (mm) Dilution Factor: 1.0

Soil Extract Volume:_____(uL) Soil Aliquot Volume: _____(uL)

CONCENTRATION UNITS: (ug/L or ug/Kg) UG/KG

CAS NO.	COMPOUND	MDL	RL	CONC	Q
67-64-1	Acetone	2.3	12	12u ~~8.7~~	U BL
71-43-2	Benzene	0.54	12		U
75-27-4	Bromodichloromethane	0.35	12		U
75-25-2	Bromoform	1.2	12		U
74-83-9	Bromomethane	0.84	12		~~U~~ UJ CCV
78-93-3	2-Butanone	1.6	12		U
75-15-0	Carbon disulfide	1.5	12		U
56-23-5	Carbon tetrachloride	1.0	12		U
108-90-7	Chlorobenzene	0.39	12		U
75-00-3	Chloroethane	1.3	12		~~U~~ UJ CCV
67-66-3	Chloroform	0.64	12		U
74-87-3	Chloromethane	0.60	12		~~U~~ UJ CCV
110-82-7	Cyclohexane	0.63	12		U
124-48-1	Dibromochloromethane	0.39	12		U
96-12-8	1,2-Dibromo-3-chloropropane	1.4	5.8		U
106-93-4	1,2-Dibromoethane	0.50	12		U
95-50-1	1,2-Dichlorobenzene	0.43	12		U
541-73-1	1,3-Dichlorobenzene	0.97	12		U
106-46-7	1,4-Dichlorobenzene	0.64	12		U
75-71-8	Dichlorodifluoromethane	1.3	12		~~U~~ UJ CCV
75-34-3	1,1-Dichloroethane	0.63	12		U
107-06-2	1,2-Dichloroethane	0.53	12		U
75-35-4	1,1-Dichloroethene	1.4	12		U
156-59-2	cis-1,2-Dichloroethene	1.4	12		U
156-60-5	trans-1,2-Dichloroethene	1.3	12		U
78-87-5	1,2-Dichloropropane	0.53	12		U
10061-01-5	cis-1,3-Dichloropropene	0.58	12		U
10061-02-6	trans-1,3-Dichloropropene	0.37	12		U
100-41-4	Ethylbenzene	0.87	12		U
591-78-6	2-Hexanone	2.7	12		U
98-82-8	Isopropylbenzene	1.0	12		U
79-20-9	Methyl acetate	1.8	12		U
75-09-2	Methylene chloride	0.72	12		U
108-87-2	Methyl cyclohexane	0.35	12		U
1634-04-4	Methyl tert-butyl ether	0.37	12		U
108-10-1	4-Methyl-2-pentanone	0.67	12		U
100-42-5	Styrene	0.40	12		U
79-34-5	1,1,2,2-Tetrachloroethane	0.50	12		U
127-18-4	Tetrachloroethene	1.1	12		U

FORM I VOA

AW
2/27/09

FORM 1
VOLATILE ORGANICS ANALYSIS DATA SHEET

CLIENT SAMPLE NO. 2

MR08-IS08
8-2-3-08D

Lab Name: EMPIRICAL LABS Contract: CH2MHILL

Lab Code: NA Case No.: NA SAS No.: NA SDG No.: LEJEUNE028

Matrix: (soil/water) SOIL Lab Sample ID: 0812166-02

Sample wt/vol: 4.7 (g/mL) G Lab File ID: 1216602A

Level: (low/med) LOW Date Sampled: 12/09/08 08:50

% Moisture: not dec. 8 Date Analyzed: 12/21/08 08:25

GC Column: RTX-VRX ID: 0.25 (mm) Dilution Factor: 1.0

Soil Extract Volume:_____(uL) Soil Aliquot Volume: _____(uL)

CONCENTRATION UNITS: (ug/L or ug/Kg) UG/KG

CAS NO.	COMPOUND	MDL	RL	CONC	Q
108-88-3	Toluene	1.00	12		U
120-82-1	1,2,4-Trichlorobenzene	0.21	12		U
71-55-6	1,1,1-Trichloroethane	1.0	12		U
79-00-5	1,1,2-Trichloroethane	0.40	12		U
79-01-6	Trichloroethene	0.98	12		U
76-13-1	Trichlorotrifluoroethane	0.64	12		U
75-69-4	Trichlorofluoromethane	1.1	12		U
75-01-4	Vinyl chloride	1.3	12		U
1330-20-7	Xylene(total)	0.81	12		U

lw
2/27/09

FORM 1
VOLATILE ORGANICS ANALYSIS DATA SHEET

CLIENT SAMPLE NO. 3

MR08-SS089-08D

Lab Name: EMPIRICAL LABS Contract: CH2MHILL

Lab Code: NA Case No.: NA SAS No.: NA SDG No.: LEJEUNE028

Matrix: (soil/water) SOIL Lab Sample ID: 0812166-03

Sample wt/vol: 5.4 (g/mL) G Lab File ID: 1216603A

Level: (low/med) LOW Date Sampled: 12/09/08 09:25

% Moisture: not dec. 11 Date Analyzed: 12/21/08 09:04

GC Column: RTX-VRX ID: 0.25 (mm) Dilution Factor: 1.0

Soil Extract Volume:_____(uL) Soil Aliquot Volume: _____(uL)

CONCENTRATION UNITS: (ug/L or ug/Kg) UG/KG

CAS NO.	COMPOUND	MDL	RL	CONC	Q	
67-64-1	Acetone	2.1	10	18	u	BL
71-43-2	Benzene	0.49	10		U	
75-27-4	Bromodichloromethane	0.31	10		U	
75-25-2	Bromoform	1.0	10		U	
74-83-9	Bromomethane	0.75	10		~~U~~ UJ	CCH
78-93-3	2-Butanone	1.4	10	1.5	J	
75-15-0	Carbon disulfide	1.4	10		U	
56-23-5	Carbon tetrachloride	0.92	10		U	
108-90-7	Chlorobenzene	0.35	10		U	
75-00-3	Chloroethane	1.1	10		~~U~~ UJ	CCH
67-66-3	Chloroform	0.57	10		U	
74-87-3	Chloromethane	0.54	10		~~U~~ UJ	CCH
110-82-7	Cyclohexane	0.56	10		U	
124-48-1	Dibromochloromethane	0.35	10		U	
96-12-8	1,2-Dibromo-3-chloropropane	1.2	5.2		U	
106-93-4	1,2-Dibromoethane	0.45	10		U	
95-50-1	1,2-Dichlorobenzene	0.38	10		U	
541-73-1	1,3-Dichlorobenzene	0.87	10		U	
106-46-7	1,4-Dichlorobenzene	0.57	10		U	
75-71-8	Dichlorodifluoromethane	1.1	10		~~U~~ UJ	CCH
75-34-3	1,1-Dichloroethane	0.56	10		U	
107-06-2	1,2-Dichloroethane	0.48	10		U	
75-35-4	1,1-Dichloroethene	1.2	10		U	
156-59-2	cis-1,2-Dichloroethene	1.2	10		U	
156-60-5	trans-1,2-Dichloroethene	1.1	10		U	
78-87-5	1,2-Dichloropropane	0.48	10		U	
10061-01-5	cis-1,3-Dichloropropene	0.52	10		U	
10061-02-6	trans-1,3-Dichloropropene	0.33	10		U	
100-41-4	Ethylbenzene	0.78	10		U	
591-78-6	2-Hexanone	2.4	10		U	
98-82-8	Isopropylbenzene	0.92	10		U	
79-20-9	Methyl acetate	1.7	10		U	
75-09-2	Methylene chloride	0.64	10		U	
108-87-2	Methyl cyclohexane	0.31	10		U	
1634-04-4	Methyl tert-butyl ether	0.33	10		U	
108-10-1	4-Methyl-2-pentanone	0.60	10		U	
100-42-5	Styrene	0.36	10		U	
79-34-5	1,1,2,2-Tetrachloroethane	0.45	10		U	
127-18-4	Tetrachloroethene	1.0	10		U	

LW 2/27/09

FORM 1
VOLATILE ORGANICS ANALYSIS DATA SHEET

CLIENT SAMPLE NO. 3

MR08-SS089-08D

Lab Name: EMPIRICAL LABS Contract: CH2MHILL

Lab Code: NA Case No.: NA SAS No.: NA SDG No.: LEJEUNE028

Matrix: (soil/water) SOIL Lab Sample ID: 0812166-03

Sample wt/vol: 5.4 (g/mL) G Lab File ID: 1216603A

Level: (low/med) LOW Date Sampled: 12/09/08 09:25

% Moisture: not dec. 11 Date Analyzed: 12/21/08 09:04

GC Column: RTX-VRX ID: 0.25 (mm) Dilution Factor: 1.0

Soil Extract Volume:_____(uL) Soil Aliquot Volume: _____(uL)

CONCENTRATION UNITS: (ug/L or ug/Kg) UG/KG

CAS NO.	COMPOUND	MDL	RL	CONC	Q
108-88-3	Toluene	0.89	10		U
120-82-1	1,2,4-Trichlorobenzene	0.19	10		U
71-55-6	1,1,1-Trichloroethane	0.94	10		U
79-00-5	1,1,2-Trichloroethane	0.36	10		U
79-01-6	Trichloroethene	0.88	10		U
76-13-1	Trichlorotrifluoroethane	0.57	10		U
75-69-4	Trichlorofluoromethane	0.99	10		U
75-01-4	Vinyl chloride	1.1	10		U
1330-20-7	Xylene(total)	0.73	10		U

DWD
2/27/09

FORM 1
VOLATILE ORGANICS ANALYSIS DATA SHEET

CLIENT SAMPLE NO. 4

MR08-SS089D-08D

Lab Name: EMPIRICAL LABS Contract: CH2MHILL

Lab Code: NA Case No.: NA SAS No.: NA SDG No.: LEJEUNE028

Matrix: (soil/water) SOIL Lab Sample ID: 0812166-04

Sample wt/vol: 4.7 (g/mL) G Lab File ID: 1216604A

Level: (low/med) LOW Date Sampled: 12/09/08 09:35

% Moisture: not dec. 10 Date Analyzed: 12/21/08 09:43

GC Column: RTX-VRX ID: 0.25 (mm) Dilution Factor: 1.0

Soil Extract Volume:_____(uL) Soil Aliquot Volume: _____(uL)

CONCENTRATION UNITS: (ug/L or ug/Kg) UG/KG

CAS NO.	COMPOUND	MDL	RL	CONC	Q	
67-64-1	Acetone	2.4	12	21	u	BL
71-43-2	Benzene	0.56	12	0.70	J	
75-27-4	Bromodichloromethane	0.36	12		U	
75-25-2	Bromoform	1.2	12		U	
74-83-9	Bromomethane	0.86	12		~~U~~ UJ	CCH
78-93-3	2-Butanone	1.7	12		U	
75-15-0	Carbon disulfide	1.5	12		U	
56-23-5	Carbon tetrachloride	1.0	12		U	
108-90-7	Chlorobenzene	0.40	12		U	
75-00-3	Chloroethane	1.3	12		~~U~~ UJ	CCH
67-66-3	Chloroform	0.66	12		U	
74-87-3	Chloromethane	0.62	12		~~U~~ UJ	CCH
110-82-7	Cyclohexane	0.64	12		U	
124-48-1	Dibromochloromethane	0.40	12		U	
96-12-8	1,2-Dibromo-3-chloropropane	1.4	6.0		U	
106-93-4	1,2-Dibromoethane	0.51	12		U	
95-50-1	1,2-Dichlorobenzene	0.44	12		U	
541-73-1	1,3-Dichlorobenzene	1.0	12		U	
106-46-7	1,4-Dichlorobenzene	0.66	12		U	
75-71-8	Dichlorodifluoromethane	1.3	12		~~U~~ UJ	CC
75-34-3	1,1-Dichloroethane	0.64	12		U	
107-06-2	1,2-Dichloroethane	0.55	12		U	
75-35-4	1,1-Dichloroethene	1.4	12		U	
156-59-2	cis-1,2-Dichloroethene	1.4	12		U	
156-60-5	trans-1,2-Dichloroethene	1.3	12		U	
78-87-5	1,2-Dichloropropane	0.55	12		U	
10061-01-5	cis-1,3-Dichloropropene	0.60	12		U	
10061-02-6	trans-1,3-Dichloropropene	0.38	12		U	
100-41-4	Ethylbenzene	0.89	12		U	
591-78-6	2-Hexanone	2.7	12		U	
98-82-8	Isopropylbenzene	1.0	12		U	
79-20-9	Methyl acetate	1.9	12		U	
75-09-2	Methylene chloride	0.74	12		U	
108-87-2	Methyl cyclohexane	0.36	12		U	
1634-04-4	Methyl tert-butyl ether	0.38	12		U	
108-10-1	4-Methyl-2-pentanone	0.69	12		U	
100-42-5	Styrene	0.42	12		U	
79-34-5	1,1,2,2-Tetrachloroethane	0.51	12		U	
127-18-4	Tetrachloroethene	1.2	12		U	

lw 7/27/09

FORM 1
VOLATILE ORGANICS ANALYSIS DATA SHEET

CLIENT SAMPLE NO. 4

MR08-SS089D-08D

Lab Name: EMPIRICAL LABS Contract: CH2MHILL

Lab Code: NA Case No.: NA SAS No.: NA SDG No.: LEJEUNE028

Matrix: (soil/water) SOIL Lab Sample ID: 0812166-04

Sample wt/vol: 4.7 (g/mL) G Lab File ID: 1216604A

Level: (low/med) LOW Date Sampled: 12/09/08 09:35

% Moisture: not dec. 10 Date Analyzed: 12/21/08 09:43

GC Column: RTX-VRX ID: 0.25 (mm) Dilution Factor: 1.0

Soil Extract Volume:_____(uL) Soil Aliquot Volume: _____(uL)

CONCENTRATION UNITS: (ug/L or ug/Kg) UG/KG

CAS NO.	COMPOUND	MDL	RL	CONC	Q
108-88-3	Toluene	1.0	12		U
120-82-1	1,2,4-Trichlorobenzene	0.21	12		U
71-55-6	1,1,1-Trichloroethane	1.1	12		U
79-00-5	1,1,2-Trichloroethane	0.42	12		U
79-01-6	Trichloroethene	1.0	12		U
76-13-1	Trichlorotrifluoroethane	0.66	12		U
75-69-4	Trichlorofluoromethane	1.1	12		U
75-01-4	Vinyl chloride	1.3	12		U
1330-20-7	Xylene(total)	0.83	12		U

hes
2/27/09

FORM 1
VOLATILE ORGANICS ANALYSIS DATA SHEET

CLIENT SAMPLE NO. 5

MR08-IS08
9-2-3-08D

Lab Name: EMPIRICAL LABS Contract: CH2MHILL

Lab Code: NA Case No.: NA SAS No.: NA SDG No.: LEJEUNE028

Matrix: (soil/water) SOIL Lab Sample ID: 0812166-05

Sample wt/vol: 4.4 (g/mL) G Lab File ID: 1216605A

Level: (low/med) LOW Date Sampled: 12/09/08 09:50

% Moisture: not dec. 10 Date Analyzed: 12/21/08 10:22

GC Column: RTX-VRX ID: 0.25 (mm) Dilution Factor: 1.0

Soil Extract Volume:_____(uL) Soil Aliquot Volume: _____(uL)

CONCENTRATION UNITS: (ug/L or ug/Kg) UG/KG

CAS NO.	COMPOUND	MDL	RL	CONC	Q	
67-64-1	Acetone	2.5	12	32	U	BL
71-43-2	Benzene	0.59	12		U	
75-27-4	Bromodichloromethane	0.38	12		U	
75-25-2	Bromoform	1.2	12		U	
74-83-9	Bromomethane	0.90	12		~~U~~ UJ	CC
78-93-3	2-Butanone	1.8	12	1.8	J	
75-15-0	Carbon disulfide	1.6	12		U	
56-23-5	Carbon tetrachloride	1.1	12		U	
108-90-7	Chlorobenzene	0.43	12		U	
75-00-3	Chloroethane	1.4	12		~~U~~ UJ	CC
67-66-3	Chloroform	0.69	12		U	
74-87-3	Chloromethane	0.65	12		~~U~~ UJ	CC
110-82-7	Cyclohexane	0.68	12		U	
124-48-1	Dibromochloromethane	0.43	12		U	
96-12-8	1,2-Dibromo-3-chloropropane	1.5	6.3		U	
106-93-4	1,2-Dibromoethane	0.54	12		U	
95-50-1	1,2-Dichlorobenzene	0.46	12		U	
541-73-1	1,3-Dichlorobenzene	1.0	12		U	
106-46-7	1,4-Dichlorobenzene	0.69	12		U	
75-71-8	Dichlorodifluoromethane	1.4	12		~~U~~ UJ	CC
75-34-3	1,1-Dichloroethane	0.68	12		U	
107-06-2	1,2-Dichloroethane	0.58	12		U	
75-35-4	1,1-Dichloroethene	1.5	12		U	
156-59-2	cis-1,2-Dichloroethene	1.5	12		U	
156-60-5	trans-1,2-Dichloroethene	1.4	12		U	
78-87-5	1,2-Dichloropropane	0.58	12		U	
10061-01-5	cis-1,3-Dichloropropene	0.63	12		U	
10061-02-6	trans-1,3-Dichloropropene	0.40	12		U	
100-41-4	Ethylbenzene	0.94	12		U	
591-78-6	2-Hexanone	2.9	12		U	
98-82-8	Isopropylbenzene	1.1	12		U	
79-20-9	Methyl acetate	2.0	12		U	
75-09-2	Methylene chloride	0.78	12		U	
108-87-2	Methyl cyclohexane	0.38	12		U	
1634-04-4	Methyl tert-butyl ether	0.40	12		U	
108-10-1	4-Methyl-2-pentanone	0.73	12		U	
100-42-5	Styrene	0.44	12		U	
79-34-5	1,1,2,2-Tetrachloroethane	0.54	12		U	
127-18-4	Tetrachloroethene	1.2	12		U	

MW 2/27/09

FORM 1
VOLATILE ORGANICS ANALYSIS DATA SHEET

CLIENT SAMPLE NO. 5

MR08-IS08
9-2-3-08D

Lab Name: EMPIRICAL LABS Contract: CH2MHILL

Lab Code: NA Case No.: NA SAS No.: NA SDG No.: LEJEUNE028

Matrix: (soil/water) SOIL Lab Sample ID: 0812166-05

Sample wt/vol: 4.4 (g/mL) G Lab File ID: 1216605A

Level: (low/med) LOW Date Sampled: 12/09/08 09:50

% Moisture: not dec. 10 Date Analyzed: 12/21/08 10:22

GC Column: RTX-VRX ID: 0.25 (mm) Dilution Factor: 1.0

Soil Extract Volume:_____(uL) Soil Aliquot Volume: _____(uL)

CONCENTRATION UNITS: (ug/L or ug/Kg) UG/KG

CAS NO.	COMPOUND	MDL	RL	CONC	Q
108-88-3	Toluene	1.1	12		U
120-82-1	1,2,4-Trichlorobenzene	0.22	12		U
71-55-6	1,1,1-Trichloroethane	1.1	12		U
79-00-5	1,1,2-Trichloroethane	0.44	12		U
79-01-6	Trichloroethene	1.1	12	2.2	J
76-13-1	Trichlorotrifluoroethane	0.69	12		U
75-69-4	Trichlorofluoromethane	1.2	12		U
75-01-4	Vinyl chloride	1.4	12		U
1330-20-7	Xylene(total)	0.88	12		U

gus
2/27/09

FORM 1
VOLATILE ORGANICS ANALYSIS DATA SHEET

CLIENT SAMPLE NO.

MR08-IS08
9D-2-3-08D

6

Lab Name: EMPIRICAL LABS Contract: CH2MHILL

Lab Code: NA Case No.: NA SAS No.: NA SDG No.: LEJEUNE028

Matrix: (soil/water) SOIL Lab Sample ID: 0812166-06

Sample wt/vol: 5.5 (g/mL) G Lab File ID: 1216606A

Level: (low/med) LOW Date Sampled: 12/09/08 10:00

% Moisture: not dec. 10 Date Analyzed: 12/21/08 11:01

GC Column: RTX-VRX ID: 0.25 (mm) Dilution Factor: 1.0

Soil Extract Volume:_____(uL) Soil Aliquot Volume: _____(uL)

CONCENTRATION UNITS: (ug/L or ug/Kg) UG/KG

CAS NO.	COMPOUND	MDL	RL	CONC	Q	
67-64-1	Acetone	2.0	10	18	u	B
71-43-2	Benzene	0.48	10		U	
75-27-4	Bromodichloromethane	0.30	10		U	
75-25-2	Bromoform	1.0	10		U	
74-83-9	Bromomethane	0.73	10		~~U~~ UJ	CC
78-93-3	2-Butanone	1.4	10		U	
75-15-0	Carbon disulfide	1.3	10		U	
56-23-5	Carbon tetrachloride	0.90	10		U	
108-90-7	Chlorobenzene	0.35	10		U	
75-00-3	Chloroethane	1.1	10		~~U~~ UJ	CC
67-66-3	Chloroform	0.56	10		U	
74-87-3	Chloromethane	0.53	10		~~U~~ UJ	CC
110-82-7	Cyclohexane	0.55	10		U	
124-48-1	Dibromochloromethane	0.35	10		U	
96-12-8	1,2-Dibromo-3-chloropropane	1.2	5.1		U	
106-93-4	1,2-Dibromoethane	0.44	10		U	
95-50-1	1,2-Dichlorobenzene	0.38	10		U	
541-73-1	1,3-Dichlorobenzene	0.86	10		U	
106-46-7	1,4-Dichlorobenzene	0.56	10		U	
75-71-8	Dichlorodifluoromethane	1.1	10		~~U~~ UJ	CC
75-34-3	1,1-Dichloroethane	0.55	10		U	
107-06-2	1,2-Dichloroethane	0.47	10		U	
75-35-4	1,1-Dichloroethene	1.2	10		U	
156-59-2	cis-1,2-Dichloroethene	1.2	10		U	
156-60-5	trans-1,2-Dichloroethene	1.1	10		U	
78-87-5	1,2-Dichloropropane	0.47	10		U	
10061-01-5	cis-1,3-Dichloropropene	0.51	10		U	
10061-02-6	trans-1,3-Dichloropropene	0.32	10		U	
100-41-4	Ethylbenzene	0.76	10		U	
591-78-6	2-Hexanone	2.3	10		U	
98-82-8	Isopropylbenzene	0.90	10		U	
79-20-9	Methyl acetate	1.6	10		U	
75-09-2	Methylene chloride	0.63	10		U	
108-87-2	Methyl cyclohexane	0.30	10		U	
1634-04-4	Methyl tert-butyl ether	0.32	10		U	
108-10-1	4-Methyl-2-pentanone	0.59	10		U	
100-42-5	Styrene	0.36	10		U	
79-34-5	1,1,2,2-Tetrachloroethane	0.44	10		U	
127-18-4	Tetrachloroethene	0.99	10		U	

LW
2/27/09

FORM 1
VOLATILE ORGANICS ANALYSIS DATA SHEET

CLIENT SAMPLE NO.

6

MR08-IS08
9D-2-3-08D

Lab Name: EMPIRICAL LABS Contract: CH2MHILL

Lab Code: NA Case No.: NA SAS No.: NA SDG No.: LEJEUNE028

Matrix: (soil/water) SOIL Lab Sample ID: 0812166-06

Sample wt/vol: 5.5 (g/mL) G Lab File ID: 1216606A

Level: (low/med) LOW Date Sampled: 12/09/08 10:00

% Moisture: not dec. 10 Date Analyzed: 12/21/08 11:01

GC Column: RTX-VRX ID: 0.25 (mm) Dilution Factor: 1.0

Soil Extract Volume:_____(uL) Soil Aliquot Volume: _____(uL)

CONCENTRATION UNITS: (ug/L or ug/Kg) UG/KG

CAS NO.	COMPOUND	MDL	RL	CONC	Q
108-88-3	Toluene	0.88	10		U
120-82-1	1,2,4-Trichlorobenzene	0.18	10		U
71-55-6	1,1,1-Trichloroethane	0.92	10		U
79-00-5	1,1,2-Trichloroethane	0.36	10		U
79-01-6	Trichloroethene	0.86	10	1.4	J
76-13-1	Trichlorotrifluoroethane	0.56	10		U
75-69-4	Trichlorofluoromethane	0.97	10		U
75-01-4	Vinyl chloride	1.1	10		U
1330-20-7	Xylene(total)	0.71	10		U

lw
2/27/09

FORM 1
VOLATILE ORGANICS ANALYSIS DATA SHEET

CLIENT SAMPLE NO. 7

MR08-SS090-08D

Lab Name: EMPIRICAL LABS Contract: CH2MHILL

Lab Code: NA Case No.: NA SAS No.: NA SDG No.: LEJEUNE028

Matrix: (soil/water) SOIL Lab Sample ID: 0812166-07

Sample wt/vol: 4.9 (g/mL) G Lab File ID: 1216607A

Level: (low/med) LOW Date Sampled: 12/09/08 10:55

% Moisture: not dec. 11 Date Analyzed: 12/21/08 11:40

GC Column: RTX-VRX ID: 0.25 (mm) Dilution Factor: 1.0

Soil Extract Volume:_____(uL) Soil Aliquot Volume: _____(uL)

CONCENTRATION UNITS: (ug/L or ug/Kg) UG/KG

CAS NO.	COMPOUND	MDL	RL	CONC	Q	
67-64-1	Acetone	2.3	11	32	U	BL
71-43-2	Benzene	0.54	11	0.68	J	
75-27-4	Bromodichloromethane	0.34	11		U	
75-25-2	Bromoform	1.1	11		U	
74-83-9	Bromomethane	0.82	11		~~U~~ UJ	CCV
78-93-3	2-Butanone	1.6	11	2.9	J	
75-15-0	Carbon disulfide	1.5	11		U	
56-23-5	Carbon tetrachloride	1.0	11		U	
108-90-7	Chlorobenzene	0.39	11		U	
75-00-3	Chloroethane	1.2	11		~~U~~ UJ	CCV
67-66-3	Chloroform	0.63	11		U	
74-87-3	Chloromethane	0.60	11		~~U~~ UJ	CCV
110-82-7	Cyclohexane	0.62	11		U	
124-48-1	Dibromochloromethane	0.39	11		U	
96-12-8	1,2-Dibromo-3-chloropropane	1.4	5.7		U	
106-93-4	1,2-Dibromoethane	0.49	11		U	
95-50-1	1,2-Dichlorobenzene	0.42	11		U	
541-73-1	1,3-Dichlorobenzene	0.96	11		U	
106-46-7	1,4-Dichlorobenzene	0.63	11		U	
75-71-8	Dichlorodifluoromethane	1.2	11		~~U~~ UJ	CCV
75-34-3	1,1-Dichloroethane	0.62	11		U	
107-06-2	1,2-Dichloroethane	0.53	11		U	
75-35-4	1,1-Dichloroethene	1.4	11		U	
156-59-2	cis-1,2-Dichloroethene	1.4	11		U	
156-60-5	trans-1,2-Dichloroethene	1.2	11		U	
78-87-5	1,2-Dichloropropane	0.53	11		U	
10061-01-5	cis-1,3-Dichloropropene	0.57	11		U	
10061-02-6	trans-1,3-Dichloropropene	0.37	11		U	
100-41-4	Ethylbenzene	0.86	11		U	
591-78-6	2-Hexanone	2.6	11		U	
98-82-8	Isopropylbenzene	1.0	11		U	
79-20-9	Methyl acetate	1.8	11		U	
75-09-2	Methylene chloride	0.71	11		U	
108-87-2	Methyl cyclohexane	0.34	11	0.65	J	
1634-04-4	Methyl tert-butyl ether	0.37	11		U	
108-10-1	4-Methyl-2-pentanone	0.66	11	1.8	J	
100-42-5	Styrene	0.40	11		U	
79-34-5	1,1,2,2-Tetrachloroethane	0.49	11		U	
127-18-4	Tetrachloroethene	1.1	11		U	

FORM I VOA

lw
2/27/09

FORM 1
VOLATILE ORGANICS ANALYSIS DATA SHEET

CLIENT SAMPLE NO. 7

MR08-SS090-08D

Lab Name: EMPIRICAL LABS Contract: CH2MHILL

Lab Code: NA Case No.: NA SAS No.: NA SDG No.: LEJEUNE028

Matrix: (soil/water) SOIL Lab Sample ID: 0812166-07

Sample wt/vol: 4.9 (g/mL) G Lab File ID: 1216607A

Level: (low/med) LOW Date Sampled: 12/09/08 10:55

% Moisture: not dec. 11 Date Analyzed: 12/21/08 11:40

GC Column: RTX-VRX ID: 0.25 (mm) Dilution Factor: 1.0

Soil Extract Volume:_____(uL) Soil Aliquot Volume: _____(uL)

CONCENTRATION UNITS: (ug/L or ug/Kg) UG/KG

CAS NO.	COMPOUND	MDL	RL	CONC	Q
108-88-3	Toluene	0.98	11		U
120-82-1	1,2,4-Trichlorobenzene	0.20	11		U
71-55-6	1,1,1-Trichloroethane	1.0	11		U
79-00-5	1,1,2-Trichloroethane	0.40	11		U
79-01-6	Trichloroethene	0.97	11		U
76-13-1	Trichlorotrifluoroethane	0.63	11		U
75-69-4	Trichlorofluoromethane	1.1	11		U
75-01-4	Vinyl chloride	1.2	11		U
1330-20-7	Xylene(total)	0.80	11		U

LW
2/27/09

FORM 1
VOLATILE ORGANICS ANALYSIS DATA SHEET

CLIENT SAMPLE NO. 8

MR08-IS09
0-2-3-08D

Lab Name: EMPIRICAL LABS Contract: CH2MHILL

Lab Code: NA Case No.: NA SAS No.: NA SDG No.: LEJEUNE028

Matrix: (soil/water) SOIL Lab Sample ID: 0812166-08

Sample wt/vol: 4.8 (g/mL) G Lab File ID: 1216608A

Level: (low/med) LOW Date Sampled: 12/09/08 11:05

% Moisture: not dec. 12 Date Analyzed: 12/21/08 12:19

GC Column: RTX-VRX ID: 0.25 (mm) Dilution Factor: 1.0

Soil Extract Volume:_____(uL) Soil Aliquot Volume: _____(uL)

CONCENTRATION UNITS: (ug/L or ug/Kg) UG/KG

CAS NO.	COMPOUND	MDL	RL	CONC	Q	
67-64-1	Acetone	2.4	12	12	u	BL
71-43-2	Benzene	0.56	12		U	
75-27-4	Bromodichloromethane	0.36	12		U	
75-25-2	Bromoform	1.2	12		U	
74-83-9	Bromomethane	0.85	12		~~U~~ UJ	CC
78-93-3	2-Butanone	1.7	12		U	
75-15-0	Carbon disulfide	1.5	12		U	
56-23-5	Carbon tetrachloride	1.0	12		U	
108-90-7	Chlorobenzene	0.40	12		U	
75-00-3	Chloroethane	1.3	12		~~U~~ UJ	CC
67-66-3	Chloroform	0.65	12		U	
74-87-3	Chloromethane	0.62	12		~~U~~ UJ	CC
110-82-7	Cyclohexane	0.64	12		U	
124-48-1	Dibromochloromethane	0.40	12		U	
96-12-8	1,2-Dibromo-3-chloropropane	1.4	5.9		U	
106-93-4	1,2-Dibromoethane	0.51	12		U	
95-50-1	1,2-Dichlorobenzene	0.44	12		U	
541-73-1	1,3-Dichlorobenzene	1.00	12		U	
106-46-7	1,4-Dichlorobenzene	0.65	12		U	
75-71-8	Dichlorodifluoromethane	1.3	12		~~U~~ UJ	CC
75-34-3	1,1-Dichloroethane	0.64	12		U	
107-06-2	1,2-Dichloroethane	0.55	12		U	
75-35-4	1,1-Dichloroethene	1.4	12		U	
156-59-2	cis-1,2-Dichloroethene	1.4	12		U	
156-60-5	trans-1,2-Dichloroethene	1.3	12		U	
78-87-5	1,2-Dichloropropane	0.55	12		U	
10061-01-5	cis-1,3-Dichloropropene	0.59	12		U	
10061-02-6	trans-1,3-Dichloropropene	0.38	12		U	
100-41-4	Ethylbenzene	0.89	12		U	
591-78-6	2-Hexanone	2.7	12		U	
98-82-8	Isopropylbenzene	1.0	12		U	
79-20-9	Methyl acetate	1.9	12		U	
75-09-2	Methylene chloride	0.74	12		U	
108-87-2	Methyl cyclohexane	0.36	12		U	
1634-04-4	Methyl tert-butyl ether	0.38	12		U	
108-10-1	4-Methyl-2-pentanone	0.69	12		U	
100-42-5	Styrene	0.42	12		U	
79-34-5	1,1,2,2-Tetrachloroethane	0.51	12		U	
127-18-4	Tetrachloroethene	1.2	12		U	

FORM I VOA

LW
2/27/09

8

FORM 1
VOLATILE ORGANICS ANALYSIS DATA SHEET

CLIENT SAMPLE NO.

MR08-IS09
0-2-3-08D

Lab Name: EMPIRICAL LABS Contract: CH2MHILL

Lab Code: NA Case No.: NA SAS No.: NA SDG No.: LEJEUNE028

Matrix: (soil/water) SOIL Lab Sample ID: 0812166-08

Sample wt/vol: 4.8 (g/mL) G Lab File ID: 1216608A

Level: (low/med) LOW Date Sampled: 12/09/08 11:05

% Moisture: not dec. 12 Date Analyzed: 12/21/08 12:19

GC Column: RTX-VRX ID: 0.25 (mm) Dilution Factor: 1.0

Soil Extract Volume:_____(uL) Soil Aliquot Volume: _____(uL)

CONCENTRATION UNITS: (ug/L or ug/Kg) UG/KG

CAS NO.	COMPOUND	MDL	RL	CONC	Q
108-88-3	Toluene	1.0	12		U
120-82-1	1,2,4-Trichlorobenzene	0.21	12		U
71-55-6	1,1,1-Trichloroethane	1.1	12		U
79-00-5	1,1,2-Trichloroethane	0.42	12		U
79-01-6	Trichloroethene	1.0	12		U
76-13-1	Trichlorotrifluoroethane	0.65	12		U
75-69-4	Trichlorofluoromethane	1.1	12		U
75-01-4	Vinyl chloride	1.3	12		U
1330-20-7	Xylene(total)	0.83	12		U

DW
2/27/09

FORM 1
VOLATILE ORGANICS ANALYSIS DATA SHEET

CLIENT SAMPLE NO. 9

MR08-SS115-08D

Lab Name: EMPIRICAL LABS Contract: CH2MHILL

Lab Code: NA Case No.: NA SAS No.: NA SDG No.: LEJEUNE028

Matrix: (soil/water) SOIL Lab Sample ID: 0812166-09

Sample wt/vol: 2.1 (g/mL) G Lab File ID: 1216609A

Level: (low/med) LOW Date Sampled: 12/09/08 11:45

% Moisture: not dec. 7 Date Analyzed: 12/21/08 12:58

GC Column: RTX-VRX ID: 0.25 (mm) Dilution Factor: 1.0

Soil Extract Volume:_____(uL) Soil Aliquot Volume: _____(uL)

CONCENTRATION UNITS: (ug/L or ug/Kg) UG/KG

CAS NO.	COMPOUND	MDL	RL	CONC	Q	
67-64-1	Acetone	5.1	25	31	U	BL
71-43-2	Benzene	1.2	25	9.5	J	
75-27-4	Bromodichloromethane	0.76	25		U	
75-25-2	Bromoform	2.5	25		U	
74-83-9	Bromomethane	1.8	25		~~U~~ UJ	CCL
78-93-3	2-Butanone	3.6	25		U	
75-15-0	Carbon disulfide	3.3	25	5.6	J	
56-23-5	Carbon tetrachloride	2.2	25		U	
108-90-7	Chlorobenzene	0.87	25		U	
75-00-3	Chloroethane	2.8	25		~~U~~ UJ	CCL
67-66-3	Chloroform	1.4	25		U	
74-87-3	Chloromethane	1.3	25		~~U~~ UJ	CCL
110-82-7	Cyclohexane	1.4	25	2.2	J	
124-48-1	Dibromochloromethane	0.87	25		U	
96-12-8	1,2-Dibromo-3-chloropropane	3.0	13		U	
106-93-4	1,2-Dibromoethane	1.1	25		U	
95-50-1	1,2-Dichlorobenzene	0.94	25		U	
541-73-1	1,3-Dichlorobenzene	2.1	25		U	
106-46-7	1,4-Dichlorobenzene	1.4	25		U	
75-71-8	Dichlorodifluoromethane	2.8	25		~~U~~ UJ	CCL
75-34-3	1,1-Dichloroethane	1.4	25		U	
107-06-2	1,2-Dichloroethane	1.2	25		U	
75-35-4	1,1-Dichloroethene	3.0	25		U	
156-59-2	cis-1,2-Dichloroethene	3.0	25		U	
156-60-5	trans-1,2-Dichloroethene	2.8	25		U	
78-87-5	1,2-Dichloropropane	1.2	25		U	
10061-01-5	cis-1,3-Dichloropropene	1.3	25		U	
10061-02-6	trans-1,3-Dichloropropene	0.82	25		U	
100-41-4	Ethylbenzene	1.9	25	7.7	J	
591-78-6	2-Hexanone	5.9	25		U	
98-82-8	Isopropylbenzene	2.2	25		U	
79-20-9	Methyl acetate	4.1	25		U	
75-09-2	Methylene chloride	1.6	25		U	
108-87-2	Methyl cyclohexane	0.76	25	2.4	J	
1634-04-4	Methyl tert-butyl ether	0.82	25		U	
108-10-1	4-Methyl-2-pentanone	1.5	25		U	
100-42-5	Styrene	0.89	25		U	
79-34-5	1,1,2,2-Tetrachloroethane	1.1	25		U	
127-18-4	Tetrachloroethene	2.5	25		U	

FORM I VOA

lw 2/27/09

FORM 1
VOLATILE ORGANICS ANALYSIS DATA SHEET

CLIENT SAMPLE NO. 9

MR08-SS115-08D

Lab Name: EMPIRICAL LABS Contract: CH2MHILL

Lab Code: NA Case No.: NA SAS No.: NA SDG No.: LEJEUNE028

Matrix: (soil/water) SOIL Lab Sample ID: 0812166-09

Sample wt/vol: 2.1 (g/mL) G Lab File ID: 1216609A

Level: (low/med) LOW Date Sampled: 12/09/08 11:45

% Moisture: not dec. 7 Date Analyzed: 12/21/08 12:58

GC Column: RTX-VRX ID: 0.25 (mm) Dilution Factor: 1.0

Soil Extract Volume:_____(uL) Soil Aliquot Volume: _____(uL)

CONCENTRATION UNITS: (ug/L or ug/Kg) UG/KG

CAS NO.	COMPOUND	MDL	RL	CONC	Q
108-88-3	Toluene	2.2	25	13	J
120-82-1	1,2,4-Trichlorobenzene	0.46	25		U
71-55-6	1,1,1-Trichloroethane	2.3	25		U
79-00-5	1,1,2-Trichloroethane	0.89	25		U
79-01-6	Trichloroethene	2.2	25		U
76-13-1	Trichlorotrifluoroethane	1.4	25		U
75-69-4	Trichlorofluoromethane	2.4	25		U
75-01-4	Vinyl chloride	2.8	25		U
1330-20-7	Xylene(total)	1.8	25		U

lw
2/27/09

FORM 1
VOLATILE ORGANICS ANALYSIS DATA SHEET

CLIENT SAMPLE NO. 10

MR08-IS11
5-2-3-08D

Lab Name: EMPIRICAL LABS Contract: CH2MHILL

Lab Code: NA Case No.: NA SAS No.: NA SDG No.: LEJEUNE028

Matrix: (soil/water) SOIL Lab Sample ID: 0812166-10

Sample wt/vol: 4.8 (g/mL) G Lab File ID: 1216610A

Level: (low/med) LOW Date Sampled: 12/09/08 12:00

% Moisture: not dec. 8 Date Analyzed: 12/21/08 13:37

GC Column: RTX-VRX ID: 0.25 (mm) Dilution Factor: 1.0

Soil Extract Volume:_____(uL) Soil Aliquot Volume: _____(uL)

CONCENTRATION UNITS: (ug/L or ug/Kg) UG/KG

CAS NO.	COMPOUND	MDL	RL	CONC	Q	
67-64-1	Acetone	2.3	11	18	U	B
71-43-2	Benzene	0.53	11		U	
75-27-4	Bromodichloromethane	0.34	11		U	
75-25-2	Bromoform	1.1	11		U	
74-83-9	Bromomethane	0.82	11		~~U~~ UJ	CC
78-93-3	2-Butanone	1.6	11		U	
75-15-0	Carbon disulfide	1.5	11		U	
56-23-5	Carbon tetrachloride	1.00	11		U	
108-90-7	Chlorobenzene	0.39	11		U	
75-00-3	Chloroethane	1.2	11		~~U~~ UJ	CC
67-66-3	Chloroform	0.62	11		U	
74-87-3	Chloromethane	0.59	11		~~U~~ UJ	CC
110-82-7	Cyclohexane	0.61	11		U	
124-48-1	Dibromochloromethane	0.39	11		U	
96-12-8	1,2-Dibromo-3-chloropropane	1.4	5.7		U	
106-93-4	1,2-Dibromoethane	0.49	11		U	
95-50-1	1,2-Dichlorobenzene	0.42	11		U	
541-73-1	1,3-Dichlorobenzene	0.95	11		U	
106-46-7	1,4-Dichlorobenzene	0.62	11		U	
75-71-8	Dichlorodifluoromethane	1.2	11		~~U~~ UJ	CC
75-34-3	1,1-Dichloroethane	0.61	11		U	
107-06-2	1,2-Dichloroethane	0.52	11		U	
75-35-4	1,1-Dichloroethene	1.4	11		U	
156-59-2	cis-1,2-Dichloroethene	1.4	11		U	
156-60-5	trans-1,2-Dichloroethene	1.2	11		U	
78-87-5	1,2-Dichloropropane	0.52	11		U	
10061-01-5	cis-1,3-Dichloropropene	0.57	11		U	
10061-02-6	trans-1,3-Dichloropropene	0.36	11		U	
100-41-4	Ethylbenzene	0.85	11		U	
591-78-6	2-Hexanone	2.6	11		U	
98-82-8	Isopropylbenzene	1.00	11		U	
79-20-9	Methyl acetate	1.8	11		U	
75-09-2	Methylene chloride	0.70	11		U	
108-87-2	Methyl cyclohexane	0.34	11		U	
1634-04-4	Methyl tert-butyl ether	0.36	11		U	
108-10-1	4-Methyl-2-pentanone	0.66	11		U	
100-42-5	Styrene	0.40	11		U	
79-34-5	1,1,2,2-Tetrachloroethane	0.49	11		U	
127-18-4	Tetrachloroethene	1.1	11		U	

FORM I VOA

lw
2/27/09

FORM 1
VOLATILE ORGANICS ANALYSIS DATA SHEET

CLIENT SAMPLE NO. 10

MR08-IS11
5-2-3-08D

Lab Name: EMPIRICAL LABS Contract: CH2MHILL

Lab Code: NA Case No.: NA SAS No.: NA SDG No.: LEJEUNE028

Matrix: (soil/water) SOIL Lab Sample ID: 0812166-10

Sample wt/vol: 4.8 (g/mL) G Lab File ID: 1216610A

Level: (low/med) LOW Date Sampled: 12/09/08 12:00

% Moisture: not dec. 8 Date Analyzed: 12/21/08 13:37

GC Column: RTX-VRX ID: 0.25 (mm) Dilution Factor: 1.0

Soil Extract Volume:_____(uL) Soil Aliquot Volume: _____(uL)

CONCENTRATION UNITS: (ug/L or ug/Kg) UG/KG

CAS NO.	COMPOUND	MDL	RL	CONC	Q
108-88-3	Toluene	0.98	11		U
120-82-1	1,2,4-Trichlorobenzene	0.20	11		U
71-55-6	1,1,1-Trichloroethane	1.0	11		U
79-00-5	1,1,2-Trichloroethane	0.40	11		U
79-01-6	Trichloroethene	0.96	11		U
76-13-1	Trichlorotrifluoroethane	0.62	11		U
75-69-4	Trichlorofluoromethane	1.1	11		U
75-01-4	Vinyl chloride	1.2	11		U
1330-20-7	Xylene(total)	0.79	11		U

lw
2/27/09

11

FORM 1
VOLATILE ORGANICS ANALYSIS DATA SHEET

CLIENT SAMPLE NO.

MR08-SS114-08D

Lab Name: EMPIRICAL LABS Contract: CH2MHILL

Lab Code: NA Case No.: NA SAS No.: NA SDG No.: LEJEUNE028

Matrix: (soil/water) SOIL Lab Sample ID: 0812166-11

Sample wt/vol: 3.5 (g/mL) G Lab File ID: 1216611A

Level: (low/med) LOW Date Sampled: 12/09/08 13:15

% Moisture: not dec. 8 Date Analyzed: 12/21/08 14:16

GC Column: RTX-VRX ID: 0.25 (mm) Dilution Factor: 1.0

Soil Extract Volume:_____(uL) Soil Aliquot Volume: _____(uL)

CONCENTRATION UNITS: (ug/L or ug/Kg) UG/KG

CAS NO.	COMPOUND	MDL	RL	CONC	Q	
67-64-1	Acetone	3.1	16	22	U	BL
71-43-2	Benzene	0.74	16	4.7	J	
75-27-4	Bromodichloromethane	0.47	16		U	
75-25-2	Bromoform	1.6	16		U	
74-83-9	Bromomethane	1.1	16		~~U~~ UJ	CC
78-93-3	2-Butanone	2.2	16	4.4	J	
75-15-0	Carbon disulfide	2.0	16	4.0	J	
56-23-5	Carbon tetrachloride	1.4	16		U	
108-90-7	Chlorobenzene	0.53	16		U	
75-00-3	Chloroethane	1.7	16		~~U~~ UJ	CC
67-66-3	Chloroform	0.86	16		U	
74-87-3	Chloromethane	0.81	16		~~U~~ UJ	CC
110-82-7	Cyclohexane	0.84	16	16u ~~0.94~~	~~J~~	BL
124-48-1	Dibromochloromethane	0.53	16		U	
96-12-8	1,2-Dibromo-3-chloropropane	1.9	7.8		~~U~~ UJ	ISI
106-93-4	1,2-Dibromoethane	0.67	16		U	
95-50-1	1,2-Dichlorobenzene	0.58	16		U UJ	ISI
541-73-1	1,3-Dichlorobenzene	1.3	16		U ↓	↓
106-46-7	1,4-Dichlorobenzene	0.86	16		U	
75-71-8	Dichlorodifluoromethane	1.7	16		~~U~~ UJ	CC
75-34-3	1,1-Dichloroethane	0.84	16		U	
107-06-2	1,2-Dichloroethane	0.72	16		U	
75-35-4	1,1-Dichloroethene	1.9	16		U	
156-59-2	cis-1,2-Dichloroethene	1.9	16		U	
156-60-5	trans-1,2-Dichloroethene	1.7	16		U	
78-87-5	1,2-Dichloropropane	0.72	16		U	
10061-01-5	cis-1,3-Dichloropropene	0.78	16		U	
10061-02-6	trans-1,3-Dichloropropene	0.50	16		U	
100-41-4	Ethylbenzene	1.2	16	5.2	J	
591-78-6	2-Hexanone	3.6	16		U	
98-82-8	Isopropylbenzene	1.4	16		U	
79-20-9	Methyl acetate	2.5	16		U	
75-09-2	Methylene chloride	0.97	16		U	
108-87-2	Methyl cyclohexane	0.47	16	0.82	J	
1634-04-4	Methyl tert-butyl ether	0.50	16		U	
108-10-1	4-Methyl-2-pentanone	0.91	16		U	
100-42-5	Styrene	0.55	16		U	
79-34-5	1,1,2,2-Tetrachloroethane	0.67	16		~~U~~ UJ	IS
127-18-4	Tetrachloroethene	1.5	16		U	

FORM I VOA

lw
2/27/09

FORM 1
VOLATILE ORGANICS ANALYSIS DATA SHEET

CLIENT SAMPLE NO. 11

MR08-SS114-08D

Lab Name: EMPIRICAL LABS Contract: CH2MHILL

Lab Code: NA Case No.: NA SAS No.: NA SDG No.: LEJEUNE028

Matrix: (soil/water) SOIL Lab Sample ID: 0812166-11

Sample wt/vol: 3.5 (g/mL) G Lab File ID: 1216611A

Level: (low/med) LOW Date Sampled: 12/09/08 13:15

% Moisture: not dec. 8 Date Analyzed: 12/21/08 14:16

GC Column: RTX-VRX ID: 0.25 (mm) Dilution Factor: 1.0

Soil Extract Volume:_____(uL) Soil Aliquot Volume: _____(uL)

CONCENTRATION UNITS: (ug/L or ug/Kg) UG/KG

CAS NO.	COMPOUND	MDL	RL	CONC	Q
108-88-3	Toluene	1.3	16	8.1	J
120-82-1	1,2,4-Trichlorobenzene	0.28	16		~~U~~ UJ JSI
71-55-6	1,1,1-Trichloroethane	1.4	16		U
79-00-5	1,1,2-Trichloroethane	0.55	16		U
79-01-6	Trichloroethene	1.3	16		U
76-13-1	Trichlorotrifluoroethane	0.86	16		U
75-69-4	Trichlorofluoromethane	1.5	16		U
75-01-4	Vinyl chloride	1.7	16		U
1330-20-7	Xylene(total)	1.1	16		U

FORM I VOA

hw
2/27/09

FORM 1
VOLATILE ORGANICS ANALYSIS DATA SHEET

CLIENT SAMPLE NO. 11RE

MR08-SS114-08DR

Lab Name: EMPIRICAL LABS Contract: CH2MHILL

Lab Code: NA Case No.: NA SAS No.: NA SDG No.: LEJEUNE028

Matrix: (soil/water) SOIL Lab Sample ID: 0812166-11R

Sample wt/vol: 4.2 (g/mL) G Lab File ID: 1216611B

Level: (low/med) LOW Date Sampled: 12/09/08 13:15

% Moisture: not dec. 8 Date Analyzed: 12/30/08 16:13 Use original

GC Column: RTX-VRX ID: 0.25 (mm) Dilution Factor: 1.0

Soil Extract Volume:_____(uL) Soil Aliquot Volume: _____(uL)

CONCENTRATION UNITS: (ug/L or ug/Kg) UG/KG

CAS NO.	COMPOUND	MDL	RL	CONC	Q	
67-64-1	Acetone	2.6	13	19	UJ HT	BC
71-43-2	Benzene	0.60	13	7.5	J J HT	
75-27-4	Bromodichloromethane	0.38	13		U UJ	HT
75-25-2	Bromoform	1.3	13		U	
74-83-9	Bromomethane	0.92	13		U	
78-93-3	2-Butanone	1.8	13		U	
75-15-0	Carbon disulfide	1.7	13		U	
56-23-5	Carbon tetrachloride	1.1	13		U	
108-90-7	Chlorobenzene	0.44	13		U	
75-00-3	Chloroethane	1.4	13		U	
67-66-3	Chloroform	0.71	13		U	
74-87-3	Chloromethane	0.67	13		U	
110-82-7	Cyclohexane	0.69	13	13UJ ~~0.72~~	~~J~~ HT	BC
124-48-1	Dibromochloromethane	0.44	13		~~U~~ UJ	HT
96-12-8	1,2-Dibromo-3-chloropropane	1.5	6.4		~~U~~ UJ	IS
106-93-4	1,2-Dibromoethane	0.55	13		~~U~~ UJ	HT
95-50-1	1,2-Dichlorobenzene	0.48	13		U UJ	IS
541-73-1	1,3-Dichlorobenzene	1.1	13		U	
106-46-7	1,4-Dichlorobenzene	0.71	13		U	
75-71-8	Dichlorodifluoromethane	1.4	13		U UJ	HT
75-34-3	1,1-Dichloroethane	0.69	13		U	
107-06-2	1,2-Dichloroethane	0.59	13		U	
75-35-4	1,1-Dichloroethene	1.5	13		U	
156-59-2	cis-1,2-Dichloroethene	1.5	13		U	
156-60-5	trans-1,2-Dichloroethene	1.4	13		U	
78-87-5	1,2-Dichloropropane	0.59	13		U	
10061-01-5	cis-1,3-Dichloropropene	0.64	13		U	
10061-02-6	trans-1,3-Dichloropropene	0.41	13		U	
100-41-4	Ethylbenzene	0.96	13	5.3	J J	
591-78-6	2-Hexanone	3.0	13		~~U~~ UJ	CC
98-82-8	Isopropylbenzene	1.1	13		U UJ	HT
79-20-9	Methyl acetate	2.0	13		U UJ	HT
75-09-2	Methylene chloride	0.80	13	13UJ ~~2.0~~ ~~JB~~	HT	BC
108-87-2	Methyl cyclohexane	0.38	13	0.66	~~J~~ J	HT
1634-04-4	Methyl tert-butyl ether	0.41	13		~~U~~ UJ	
108-10-1	4-Methyl-2-pentanone	0.74	13		~~U~~	
100-42-5	Styrene	0.45	13		~~U~~	
79-34-5	1,1,2,2-Tetrachloroethane	0.55	13		~~U~~ UJ	IS
127-18-4	Tetrachloroethene	1.2	13		~~U~~ UJ	HT

lew 2/27/09

FORM 1
VOLATILE ORGANICS ANALYSIS DATA SHEET

CLIENT SAMPLE NO. 1 IRE

MR08-SS114-08DR

Lab Name: EMPIRICAL LABS Contract: CH2MHILL

Lab Code: NA Case No.: NA SAS No.: NA SDG No.: LEJEUNE028

Matrix: (soil/water) SOIL Lab Sample ID: 0812166-11R

Sample wt/vol: 4.2 (g/mL) G Lab File ID: 1216611B

Level: (low/med) LOW Date Sampled: 12/09/08 13:15

% Moisture: not dec. 8 Date Analyzed: 12/30/08 16:13

GC Column: RTX-VRX ID: 0.25 (mm) Dilution Factor: 1.0

Soil Extract Volume:_____(uL) Soil Aliquot Volume: _____(uL)

use orig

CONCENTRATION UNITS: (ug/L or ug/Kg) UG/KG

CAS NO.	COMPOUND	MDL	RL	CONC	Q	
108-88-3	Toluene	1.1	13	11	~~J~~ J	H
120-82-1	1,2,4-Trichlorobenzene	0.23	13		~~U~~ UJ	IS
71-55-6	1,1,1-Trichloroethane	1.2	13		~~U~~ UJ	HT
79-00-5	1,1,2-Trichloroethane	0.45	13		U	
79-01-6	Trichloroethene	1.1	13		U	
76-13-1	Trichlorotrifluoroethane	0.71	13		U	
75-69-4	Trichlorofluoromethane	1.2	13		U	
75-01-4	Vinyl chloride	1.4	13		U	
1330-20-7	Xylene(total)	0.90	13	4.0	~~J~~ J	

RE

MW
7/27/09

FORM 1
VOLATILE ORGANICS ANALYSIS DATA SHEET

CLIENT SAMPLE NO.

MR08-IS11
4-2-3-08D

12

Lab Name: EMPIRICAL LABS Contract: CH2MHILL

Lab Code: NA Case No.: NA SAS No.: NA SDG No.: LEJEUNE028

Matrix: (soil/water) SOIL Lab Sample ID: 0812166-12

Sample wt/vol: 4.5 (g/mL) G Lab File ID: 1216612A

Level: (low/med) LOW Date Sampled: 12/09/08 13:30

% Moisture: not dec. 7 Date Analyzed: 12/21/08 14:55

GC Column: RTX-VRX ID: 0.25 (mm) Dilution Factor: 1.0

Soil Extract Volume:_____(uL) Soil Aliquot Volume: _____(uL)

CONCENTRATION UNITS: (ug/L or ug/Kg) UG/KG

CAS NO.	COMPOUND	MDL	RL	CONC	Q	
67-64-1	Acetone	2.4	12	12u ~~7.8 J~~		BL
71-43-2	Benzene	0.56	12		U	
75-27-4	Bromodichloromethane	0.36	12		U	
75-25-2	Bromoform	1.2	12		U	
74-83-9	Bromomethane	0.87	12		~~U~~ UJ	CCA
78-93-3	2-Butanone	1.7	12		U	
75-15-0	Carbon disulfide	1.6	12		U	
56-23-5	Carbon tetrachloride	1.0	12		U	
108-90-7	Chlorobenzene	0.41	12		U	
75-00-3	Chloroethane	1.3	12		~~U~~ UJ	CCA
67-66-3	Chloroform	0.66	12		U	
74-87-3	Chloromethane	0.63	12		~~U~~ UJ	CCA
110-82-7	Cyclohexane	0.65	12		U	
124-48-1	Dibromochloromethane	0.41	12		U	
96-12-8	1,2-Dibromo-3-chloropropane	1.4	6.0		U	
106-93-4	1,2-Dibromoethane	0.52	12		U	
95-50-1	1,2-Dichlorobenzene	0.44	12		U	
541-73-1	1,3-Dichlorobenzene	1.0	12		U	
106-46-7	1,4-Dichlorobenzene	0.66	12		U	
75-71-8	Dichlorodifluoromethane	1.3	12		~~U~~ UJ	CCA
75-34-3	1,1-Dichloroethane	0.65	12		U	
107-06-2	1,2-Dichloroethane	0.55	12		U	
75-35-4	1,1-Dichloroethene	1.4	12		U	
156-59-2	cis-1,2-Dichloroethene	1.4	12		U	
156-60-5	trans-1,2-Dichloroethene	1.3	12		U	
78-87-5	1,2-Dichloropropane	0.55	12		U	
10061-01-5	cis-1,3-Dichloropropene	0.60	12		U	
10061-02-6	trans-1,3-Dichloropropene	0.38	12		U	
100-41-4	Ethylbenzene	0.90	12		U	
591-78-6	2-Hexanone	2.8	12		U	
98-82-8	Isopropylbenzene	1.0	12		U	
79-20-9	Methyl acetate	1.9	12		U	
75-09-2	Methylene chloride	0.75	12		U	
108-87-2	Methyl cyclohexane	0.36	12		U	
1634-04-4	Methyl tert-butyl ether	0.38	12		U	
108-10-1	4-Methyl-2-pentanone	0.70	12		U	
100-42-5	Styrene	0.42	12		U	
79-34-5	1,1,2,2-Tetrachloroethane	0.52	12		U	
127-18-4	Tetrachloroethene	1.2	12		U	

FORM I VOA

lw
2/27/09

FORM 1
VOLATILE ORGANICS ANALYSIS DATA SHEET

CLIENT SAMPLE NO.

MR08-IS11
4-2-3-08D

12

Lab Name: EMPIRICAL LABS Contract: CH2MHILL

Lab Code: NA Case No.: NA SAS No.: NA SDG No.: LEJEUNE028

Matrix: (soil/water) SOIL Lab Sample ID: 0812166-12

Sample wt/vol: 4.5 (g/mL) G Lab File ID: 1216612A

Level: (low/med) LOW Date Sampled: 12/09/08 13:30

% Moisture: not dec. 7 Date Analyzed: 12/21/08 14:55

GC Column: RTX-VRX ID: 0.25 (mm) Dilution Factor: 1.0

Soil Extract Volume:_____(uL) Soil Aliquot Volume: _____(uL)

CONCENTRATION UNITS: (ug/L or ug/Kg) UG/KG

CAS NO.	COMPOUND	MDL	RL	CONC	Q
108-88-3	Toluene	1.0	12		U
120-82-1	1,2,4-Trichlorobenzene	0.22	12		U
71-55-6	1,1,1-Trichloroethane	1.1	12		U
79-00-5	1,1,2-Trichloroethane	0.42	12		U
79-01-6	Trichloroethene	1.0	12		U
76-13-1	Trichlorotrifluoroethane	0.66	12		U
75-69-4	Trichlorofluoromethane	1.1	12		U
75-01-4	Vinyl chloride	1.3	12		U
1330-20-7	Xylene(total)	0.84	12		U

fw
2/27/09

FORM 1
VOLATILE ORGANICS ANALYSIS DATA SHEET

CLIENT SAMPLE NO. 13

MR08-SS113-08D

Lab Name: EMPIRICAL LABS Contract: CH2MHILL

Lab Code: NA Case No.: NA SAS No.: NA SDG No.: LEJEUNE028

Matrix: (soil/water) SOIL Lab Sample ID: 0812166-13

Sample wt/vol: 3.1 (g/mL) G Lab File ID: 1216613A

Level: (low/med) LOW Date Sampled: 12/09/08 13:40

% Moisture: not dec. 9 Date Analyzed: 12/21/08 21:15

GC Column: RTX-VRX ID: 0.25 (mm) Dilution Factor: 1.0

Soil Extract Volume:_____(uL) Soil Aliquot Volume: _____(uL)

CONCENTRATION UNITS: (ug/L or ug/Kg) UG/KG

CAS NO.	COMPOUND	MDL	RL	CONC	Q	
67-64-1	Acetone	3.6	18	28	u	BL
71-43-2	Benzene	0.84	18	3.0	J	
75-27-4	Bromodichloromethane	0.54	18		U	
75-25-2	Bromoform	1.8	18		U	
74-83-9	Bromomethane	1.3	18		U	
78-93-3	2-Butanone	2.5	18	5.1	J	
75-15-0	Carbon disulfide	2.3	18		U	
56-23-5	Carbon tetrachloride	1.6	18		U	
108-90-7	Chlorobenzene	0.61	18		U	
75-00-3	Chloroethane	2.0	18		U	
67-66-3	Chloroform	0.98	18		U	
74-87-3	Chloromethane	0.93	18		~~U~~ UJ	CU
110-82-7	Cyclohexane	0.96	18	1.3	J	
124-48-1	Dibromochloromethane	0.61	18		U	
96-12-8	1,2-Dibromo-3-chloropropane	2.1	8.9		U	
106-93-4	1,2-Dibromoethane	0.77	18		U	
95-50-1	1,2-Dichlorobenzene	0.66	18		U	
541-73-1	1,3-Dichlorobenzene	1.5	18		U	
106-46-7	1,4-Dichlorobenzene	0.98	18		U	
75-71-8	Dichlorodifluoromethane	2.0	18		~~U~~ UJ	CU
75-34-3	1,1-Dichloroethane	0.96	18		U	
107-06-2	1,2-Dichloroethane	0.82	18		U	
75-35-4	1,1-Dichloroethene	2.1	18		U	
156-59-2	cis-1,2-Dichloroethene	2.1	18		U	
156-60-5	trans-1,2-Dichloroethene	2.0	18		U	
78-87-5	1,2-Dichloropropane	0.82	18		U	
10061-01-5	cis-1,3-Dichloropropene	0.89	18		U	
10061-02-6	trans-1,3-Dichloropropene	0.57	18		U	
100-41-4	Ethylbenzene	1.3	18	3.4	J	
591-78-6	2-Hexanone	4.1	18		U	
98-82-8	Isopropylbenzene	1.6	18		U	
79-20-9	Methyl acetate	2.9	18		U	
75-09-2	Methylene chloride	1.1	18		U	
108-87-2	Methyl cyclohexane	0.54	18	1.9	J	
1634-04-4	Methyl tert-butyl ether	0.57	18		U	
108-10-1	4-Methyl-2-pentanone	1.0	18		U	
100-42-5	Styrene	0.62	18		U	
79-34-5	1,1,2,2-Tetrachloroethane	0.77	18		U	
127-18-4	Tetrachloroethene	1.7	18		U	

FORM I VOA

hw
2/27/09

FORM 1
VOLATILE ORGANICS ANALYSIS DATA SHEET

CLIENT SAMPLE NO.

13

MR08-SS113-08D

Lab Name: EMPIRICAL LABS Contract: CH2MHILL

Lab Code: NA Case No.: NA SAS No.: NA SDG No.: LEJEUNE028

Matrix: (soil/water) SOIL Lab Sample ID: 0812166-13

Sample wt/vol: 3.1 (g/mL) G Lab File ID: 1216613A

Level: (low/med) LOW Date Sampled: 12/09/08 13:40

% Moisture: not dec. 9 Date Analyzed: 12/21/08 21:15

GC Column: RTX-VRX ID: 0.25 (mm) Dilution Factor: 1.0

Soil Extract Volume:_____(uL) Soil Aliquot Volume: _____(uL)

CONCENTRATION UNITS: (ug/L or ug/Kg) UG/KG

CAS NO.	COMPOUND	MDL	RL	CONC	Q
108-88-3	Toluene	1.5	18	3.1	J
120-82-1	1,2,4-Trichlorobenzene	0.32	18		U
71-55-6	1,1,1-Trichloroethane	1.6	18		U
79-00-5	1,1,2-Trichloroethane	0.62	18		U
79-01-6	Trichloroethene	1.5	18		U
76-13-1	Trichlorotrifluoroethane	0.98	18		U
75-69-4	Trichlorofluoromethane	1.7	18		U
75-01-4	Vinyl chloride	2.0	18		~~U~~ UJ BSL
1330-20-7	Xylene(total)	1.2	18		U

MW
2/27/09

FORM 1
VOLATILE ORGANICS ANALYSIS DATA SHEET

CLIENT SAMPLE NO. 14

MR08-IS11
3-2-3-08D

Lab Name: EMPIRICAL LABS Contract: CH2MHILL

Lab Code: NA Case No.: NA SAS No.: NA SDG No.: LEJEUNE028

Matrix: (soil/water) SOIL Lab Sample ID: 0812166-14

Sample wt/vol: 5.4 (g/mL) G Lab File ID: 1216614A

Level: (low/med) LOW Date Sampled: 12/09/08 13:55

% Moisture: not dec. 11 Date Analyzed: 12/21/08 21:54

GC Column: RTX-VRX ID: 0.25 (mm) Dilution Factor: 1.0

Soil Extract Volume:_____(uL) Soil Aliquot Volume: _____(uL)

CONCENTRATION UNITS: (ug/L or ug/Kg) UG/KG

CAS NO.	COMPOUND	MDL	RL	CONC	Q	
67-64-1	Acetone	2.1	10	12	u	BL
71-43-2	Benzene	0.49	10		U	
75-27-4	Bromodichloromethane	0.31	10		U	
75-25-2	Bromoform	1.0	10		U	
74-83-9	Bromomethane	0.75	10		U	
78-93-3	2-Butanone	1.4	10		U	
75-15-0	Carbon disulfide	1.3	10		U	
56-23-5	Carbon tetrachloride	0.91	10		U	
108-90-7	Chlorobenzene	0.35	10		U	
75-00-3	Chloroethane	1.1	10		U	
67-66-3	Chloroform	0.57	10		U	
74-87-3	Chloromethane	0.54	10		~~U~~ UJ	CU
110-82-7	Cyclohexane	0.56	10		U	
124-48-1	Dibromochloromethane	0.35	10		U	
96-12-8	1,2-Dibromo-3-chloropropane	1.2	5.2		U	
106-93-4	1,2-Dibromoethane	0.45	10		U	
95-50-1	1,2-Dichlorobenzene	0.38	10		U	
541-73-1	1,3-Dichlorobenzene	0.87	10		U	
106-46-7	1,4-Dichlorobenzene	0.57	10		U	
75-71-8	Dichlorodifluoromethane	1.1	10		~~U~~ UJ	CU
75-34-3	1,1-Dichloroethane	0.56	10		U	
107-06-2	1,2-Dichloroethane	0.48	10		U	
75-35-4	1,1-Dichloroethene	1.2	10		U	
156-59-2	cis-1,2-Dichloroethene	1.2	10		U	
156-60-5	trans-1,2-Dichloroethene	1.1	10		U	
78-87-5	1,2-Dichloropropane	0.48	10		U	
10061-01-5	cis-1,3-Dichloropropene	0.52	10		U	
10061-02-6	trans-1,3-Dichloropropene	0.33	10		U	
100-41-4	Ethylbenzene	0.78	10		U	
591-78-6	2-Hexanone	2.4	10		U	
98-82-8	Isopropylbenzene	0.91	10		U	
79-20-9	Methyl acetate	1.7	10		U	
75-09-2	Methylene chloride	0.64	10		U	
108-87-2	Methyl cyclohexane	0.31	10		U	
1634-04-4	Methyl tert-butyl ether	0.33	10		U	
108-10-1	4-Methyl-2-pentanone	0.60	10		U	
100-42-5	Styrene	0.36	10		U	
79-34-5	1,1,2,2-Tetrachloroethane	0.45	10		U	
127-18-4	Tetrachloroethene	1.0	10		U	

FORM I VOA

bw
2/27/09

FORM 1
VOLATILE ORGANICS ANALYSIS DATA SHEET

CLIENT SAMPLE NO. 14

MR08-IS11
3-2-3-08D

Lab Name: EMPIRICAL LABS Contract: CH2MHILL

Lab Code: NA Case No.: NA SAS No.: NA SDG No.: LEJEUNE028

Matrix: (soil/water) SOIL Lab Sample ID: 0812166-14

Sample wt/vol: 5.4 (g/mL) G Lab File ID: 1216614A

Level: (low/med) LOW Date Sampled: 12/09/08 13:55

% Moisture: not dec. 11 Date Analyzed: 12/21/08 21:54

GC Column: RTX-VRX ID: 0.25 (mm) Dilution Factor: 1.0

Soil Extract Volume:_____(uL) Soil Aliquot Volume: _____(uL)

CONCENTRATION UNITS: (ug/L or ug/Kg) UG/KG

CAS NO.	COMPOUND	MDL	RL	CONC	Q
108-88-3	Toluene	0.89	10		U
120-82-1	1,2,4-Trichlorobenzene	0.19	10		U
71-55-6	1,1,1-Trichloroethane	0.93	10		U
79-00-5	1,1,2-Trichloroethane	0.36	10		U
79-01-6	Trichloroethene	0.88	10		U
76-13-1	Trichlorotrifluoroethane	0.57	10		U
75-69-4	Trichlorofluoromethane	0.98	10		U
75-01-4	Vinyl chloride	1.1	10		~~U~~ UJ BSC
1330-20-7	Xylene(total)	0.73	10		U

QCW
2/27/09

FORM 1
VOLATILE ORGANICS ANALYSIS DATA SHEET

CLIENT SAMPLE NO. 15

MR08-SS129-08D

Lab Name: EMPIRICAL LABS Contract: CH2MHILL

Lab Code: NA Case No.: NA SAS No.: NA SDG No.: LEJEUNE028

Matrix: (soil/water) SOIL Lab Sample ID: 0812166-15

Sample wt/vol: 4.7 (g/mL) G Lab File ID: 1216615A

Level: (low/med) LOW Date Sampled: 12/09/08 14:30

% Moisture: not dec. 5 Date Analyzed: 12/21/08 22:32

GC Column: RTX-VRX ID: 0.25 (mm) Dilution Factor: 1.0

Soil Extract Volume:_____(uL) Soil Aliquot Volume: _____(uL)

CONCENTRATION UNITS: (ug/L or ug/Kg) UG/KG

CAS NO.	COMPOUND	MDL	RL	CONC	Q
67-64-1	Acetone	2.2	11	11U ~~10~~	~~J~~ BL
71-43-2	Benzene	0.53	11	0.96	J
75-27-4	Bromodichloromethane	0.34	11		U
75-25-2	Bromoform	1.1	11		U
74-83-9	Bromomethane	0.81	11		U
78-93-3	2-Butanone	1.6	11	1.7	J
75-15-0	Carbon disulfide	1.4	11	1.7	J
56-23-5	Carbon tetrachloride	0.99	11		U
108-90-7	Chlorobenzene	0.38	11		U
75-00-3	Chloroethane	1.2	11		U
67-66-3	Chloroform	0.62	11		U
74-87-3	Chloromethane	0.58	11		~~U~~ UJ CC
110-82-7	Cyclohexane	0.60	11		U
124-48-1	Dibromochloromethane	0.38	11		U
96-12-8	1,2-Dibromo-3-chloropropane	1.3	5.6		U
106-93-4	1,2-Dibromoethane	0.48	11		U
95-50-1	1,2-Dichlorobenzene	0.42	11		U
541-73-1	1,3-Dichlorobenzene	0.94	11		U
106-46-7	1,4-Dichlorobenzene	0.62	11		U
75-71-8	Dichlorodifluoromethane	1.2	11		~~U~~ UJ CC
75-34-3	1,1-Dichloroethane	0.60	11		U
107-06-2	1,2-Dichloroethane	0.52	11		U
75-35-4	1,1-Dichloroethene	1.3	11		U
156-59-2	cis-1,2-Dichloroethene	1.3	11		U
156-60-5	trans-1,2-Dichloroethene	1.2	11		U
78-87-5	1,2-Dichloropropane	0.52	11		U
10061-01-5	cis-1,3-Dichloropropene	0.56	11		U
10061-02-6	trans-1,3-Dichloropropene	0.36	11		U
100-41-4	Ethylbenzene	0.84	11	2.4	J
591-78-6	2-Hexanone	2.6	11		U
98-82-8	Isopropylbenzene	0.99	11		U
79-20-9	Methyl acetate	1.8	11		U
75-09-2	Methylene chloride	0.70	11		U
108-87-2	Methyl cyclohexane	0.34	11	0.56	J
1634-04-4	Methyl tert-butyl ether	0.36	11		U
108-10-1	4-Methyl-2-pentanone	0.65	11		U
100-42-5	Styrene	0.39	11		U
79-34-5	1,1,2,2-Tetrachloroethane	0.48	11		U
127-18-4	Tetrachloroethene	1.1	11		U

lw
2/27/09

FORM 1
VOLATILE ORGANICS ANALYSIS DATA SHEET

CLIENT SAMPLE NO. 15

MR08-SS129-08D

Lab Name: EMPIRICAL LABS Contract: CH2MHILL

Lab Code: NA Case No.: NA SAS No.: NA SDG No.: LEJEUNE028

Matrix: (soil/water) SOIL Lab Sample ID: 0812166-15

Sample wt/vol: 4.7 (g/mL) G Lab File ID: 1216615A

Level: (low/med) LOW Date Sampled: 12/09/08 14:30

% Moisture: not dec. 5 Date Analyzed: 12/21/08 22:32

GC Column: RTX-VRX ID: 0.25 (mm) Dilution Factor: 1.0

Soil Extract Volume:_____(uL) Soil Aliquot Volume: _____(uL)

CONCENTRATION UNITS: (ug/L or ug/Kg) UG/KG

CAS NO.	COMPOUND	MDL	RL	CONC	Q	
108-88-3	Toluene	0.96	11	11u ~~1.7~~	~~J~~	BL
120-82-1	1,2,4-Trichlorobenzene	0.20	11		U	
71-55-6	1,1,1-Trichloroethane	1.0	11		U	
79-00-5	1,1,2-Trichloroethane	0.39	11		U	
79-01-6	Trichloroethene	0.95	11		U	
76-13-1	Trichlorotrifluoroethane	0.62	11		U	
75-69-4	Trichlorofluoromethane	1.1	11		U	
75-01-4	Vinyl chloride	1.2	11	6.7 ~~3.8~~	J	BS
1330-20-7	Xylene(total)	0.78	11		U	

FORM I VOA

lw 2/27/09

FORM 1
VOLATILE ORGANICS ANALYSIS DATA SHEET

CLIENT SAMPLE NO. 16

MR08-SS129D-08D

Lab Name: EMPIRICAL LABS Contract: CH2MHILL

Lab Code: NA Case No.: NA SAS No.: NA SDG No.: LEJEUNE028

Matrix: (soil/water) SOIL Lab Sample ID: 0812166-16

Sample wt/vol: 2.5 (g/mL) G Lab File ID: 1216616A

Level: (low/med) LOW Date Sampled: 12/09/08 14:40

% Moisture: not dec. 5 Date Analyzed: 12/21/08 23:12

GC Column: RTX-VRX ID: 0.25 (mm) Dilution Factor: 1.0

Soil Extract Volume:_____(uL) Soil Aliquot Volume: _____(uL)

CONCENTRATION UNITS: (ug/L or ug/Kg) UG/KG

CAS NO.	COMPOUND	MDL	RL	CONC	Q	
67-64-1	Acetone	4.3	21	21U ~~8.1~~	~~J~~	BL
71-43-2	Benzene	1.0	21		U	
75-27-4	Bromodichloromethane	0.64	21		U	
75-25-2	Bromoform	2.1	21		U	
74-83-9	Bromomethane	1.5	21		U	
78-93-3	2-Butanone	3.0	21		U	
75-15-0	Carbon disulfide	2.8	21		U	
56-23-5	Carbon tetrachloride	1.9	21		U	
108-90-7	Chlorobenzene	0.72	21		U	
75-00-3	Chloroethane	2.3	21		U	
67-66-3	Chloroform	1.2	21		U	
74-87-3	Chloromethane	1.1	21		~~J~~ UJ	CU
110-82-7	Cyclohexane	1.2	21		U	
124-48-1	Dibromochloromethane	0.72	21		U	
96-12-8	1,2-Dibromo-3-chloropropane	2.6	11		U	
106-93-4	1,2-Dibromoethane	0.92	21		U	
95-50-1	1,2-Dichlorobenzene	0.79	21		U	
541-73-1	1,3-Dichlorobenzene	1.8	21		U	
106-46-7	1,4-Dichlorobenzene	1.2	21		U	
75-71-8	Dichlorodifluoromethane	2.3	21		~~J~~ UJ	CU
75-34-3	1,1-Dichloroethane	1.2	21		U	
107-06-2	1,2-Dichloroethane	0.98	21		U	
75-35-4	1,1-Dichloroethene	2.6	21		U	
156-59-2	cis-1,2-Dichloroethene	2.6	21		U	
156-60-5	trans-1,2-Dichloroethene	2.3	21		U	
78-87-5	1,2-Dichloropropane	0.98	21		U	
10061-01-5	cis-1,3-Dichloropropene	1.1	21		U	
10061-02-6	trans-1,3-Dichloropropene	0.68	21		U	
100-41-4	Ethylbenzene	1.6	21		U	
591-78-6	2-Hexanone	4.9	21		U	
98-82-8	Isopropylbenzene	1.9	21		U	
79-20-9	Methyl acetate	3.4	21		U	
75-09-2	Methylene chloride	1.3	21		U	
108-87-2	Methyl cyclohexane	0.64	21		U	
1634-04-4	Methyl tert-butyl ether	0.68	21		U	
108-10-1	4-Methyl-2-pentanone	1.2	21		U	
100-42-5	Styrene	0.74	21		U	
79-34-5	1,1,2,2-Tetrachloroethane	0.92	21		U	
127-18-4	Tetrachloroethene	2.1	21		U	

FORM I VOA

lw 2/27/09

FORM 1
VOLATILE ORGANICS ANALYSIS DATA SHEET

CLIENT SAMPLE NO. 16

MR08-SS129D-08D

Lab Name: EMPIRICAL LABS Contract: CH2MHILL

Lab Code: NA Case No.: NA SAS No.: NA SDG No.: LEJEUNE028

Matrix: (soil/water) SOIL Lab Sample ID: 0812166-16

Sample wt/vol: 2.5 (g/mL) G Lab File ID: 1216616A

Level: (low/med) LOW Date Sampled: 12/09/08 14:40

% Moisture: not dec. 5 Date Analyzed: 12/21/08 23:12

GC Column: RTX-VRX ID: 0.25 (mm) Dilution Factor: 1.0

Soil Extract Volume:_____(uL) Soil Aliquot Volume: _____(uL)

CONCENTRATION UNITS: (ug/L or ug/Kg) UG/KG

CAS NO.	COMPOUND	MDL	RL	CONC	Q
108-88-3	Toluene	1.8	21		U
120-82-1	1,2,4-Trichlorobenzene	0.38	21		U
71-55-6	1,1,1-Trichloroethane	1.9	21		U
79-00-5	1,1,2-Trichloroethane	0.74	21		U
79-01-6	Trichloroethene	1.8	21		U
76-13-1	Trichlorotrifluoroethane	1.2	21		U
75-69-4	Trichlorofluoromethane	2.0	21		U
75-01-4	Vinyl chloride	2.3	21		~~U~~ UJ BSL
1330-20-7	Xylene(total)	1.5	21		U

FORM I VOA

JW 2/27/09

FORM 1
VOLATILE ORGANICS ANALYSIS DATA SHEET

CLIENT SAMPLE NO. 17

MR08-IS12
9-2-3-08D

Lab Name: EMPIRICAL LABS Contract: CH2MHILL

Lab Code: NA Case No.: NA SAS No.: NA SDG No.: LEJEUNE028

Matrix: (soil/water) SOIL Lab Sample ID: 0812166-17

Sample wt/vol: 4.7 (g/mL) G Lab File ID: 1216617A

Level: (low/med) LOW Date Sampled: 12/09/08 14:50

% Moisture: not dec. 7 Date Analyzed: 12/21/08 23:50

GC Column: RTX-VRX ID: 0.25 (mm) Dilution Factor: 1.0

Soil Extract Volume:_____(uL) Soil Aliquot Volume: _____(uL)

CONCENTRATION UNITS: (ug/L or ug/Kg) UG/KG

CAS NO.	COMPOUND	MDL	RL	CONC	Q	
67-64-1	Acetone	2.3	11	11u ~~26~~	~~J~~	BL
71-43-2	Benzene	0.54	11		U	
75-27-4	Bromodichloromethane	0.34	11		U	
75-25-2	Bromoform	1.1	11		U	
74-83-9	Bromomethane	0.82	11		U	
78-93-3	2-Butanone	1.6	11		U	
75-15-0	Carbon disulfide	1.5	11		U	
56-23-5	Carbon tetrachloride	1.0	11		U	
108-90-7	Chlorobenzene	0.39	11		U	
75-00-3	Chloroethane	1.2	11		U	
67-66-3	Chloroform	0.63	11		U	
74-87-3	Chloromethane	0.59	11		~~U~~ UJ	CC
110-82-7	Cyclohexane	0.62	11		U	
124-48-1	Dibromochloromethane	0.39	11		U	
96-12-8	1,2-Dibromo-3-chloropropane	1.4	5.7		U	
106-93-4	1,2-Dibromoethane	0.49	11		U	
95-50-1	1,2-Dichlorobenzene	0.42	11		U	
541-73-1	1,3-Dichlorobenzene	0.96	11		U	
106-46-7	1,4-Dichlorobenzene	0.63	11		U	
75-71-8	Dichlorodifluoromethane	1.2	11		~~U~~ UJ	CC
75-34-3	1,1-Dichloroethane	0.62	11		U	
107-06-2	1,2-Dichloroethane	0.52	11		U	
75-35-4	1,1-Dichloroethene	1.4	11		U	
156-59-2	cis-1,2-Dichloroethene	1.4	11		U	
156-60-5	trans-1,2-Dichloroethene	1.2	11		U	
78-87-5	1,2-Dichloropropane	0.52	11		U	
10061-01-5	cis-1,3-Dichloropropene	0.57	11		U	
10061-02-6	trans-1,3-Dichloropropene	0.36	11		U	
100-41-4	Ethylbenzene	0.85	11		U	
591-78-6	2-Hexanone	2.6	11		U	
98-82-8	Isopropylbenzene	1.0	11		U	
79-20-9	Methyl acetate	1.8	11		U	
75-09-2	Methylene chloride	0.71	11		U	
108-87-2	Methyl cyclohexane	0.34	11		U	
1634-04-4	Methyl tert-butyl ether	0.36	11		U	
108-10-1	4-Methyl-2-pentanone	0.66	11		U	
100-42-5	Styrene	0.40	11		U	
79-34-5	1,1,2,2-Tetrachloroethane	0.49	11		U	
127-18-4	Tetrachloroethene	1.1	11		U	

FORM I VOA

2/27/09

FORM 1
VOLATILE ORGANICS ANALYSIS DATA SHEET

CLIENT SAMPLE NO. 17

MR08-IS12
9-2-3-08D

Lab Name: EMPIRICAL LABS Contract: CH2MHILL

Lab Code: NA Case No.: NA SAS No.: NA SDG No.: LEJEUNE028

Matrix: (soil/water) SOIL Lab Sample ID: 0812166-17

Sample wt/vol: 4.7 (g/mL) G Lab File ID: 1216617A

Level: (low/med) LOW Date Sampled: 12/09/08 14:50

% Moisture: not dec. 7 Date Analyzed: 12/21/08 23:50

GC Column: RTX-VRX ID: 0.25 (mm) Dilution Factor: 1.0

Soil Extract Volume:_____(uL) Soil Aliquot Volume: _____(uL)

CONCENTRATION UNITS: (ug/L or ug/Kg) UG/KG

CAS NO.	COMPOUND	MDL	RL	CONC	Q
108-88-3	Toluene	0.98	11		U
120-82-1	1,2,4-Trichlorobenzene	0.20	11		U
71-55-6	1,1,1-Trichloroethane	1.0	11		U
79-00-5	1,1,2-Trichloroethane	0.40	11		U
79-01-6	Trichloroethene	0.97	11		U
76-13-1	Trichlorotrifluoroethane	0.63	11		U
75-69-4	Trichlorofluoromethane	1.1	11		U
75-01-4	Vinyl chloride	1.2	11		~~U~~ UJ BSI
1330-20-7	Xylene(total)	0.80	11		U

FORM I VOA

JW
2/27/09

FORM 1
VOLATILE ORGANICS ANALYSIS DATA SHEET

CLIENT SAMPLE NO.

MR08-IS12
9D-2-3-08D

18

Lab Name: EMPIRICAL LABS Contract: CH2MHILL

Lab Code: NA Case No.: NA SAS No.: NA SDG No.: LEJEUNE028

Matrix: (soil/water) SOIL Lab Sample ID: 0812166-18

Sample wt/vol: 2.9 (g/mL) G Lab File ID: 1216618A

Level: (low/med) LOW Date Sampled: 12/09/08 15:00

% Moisture: not dec. 6 Date Analyzed: 12/22/08 00:29

GC Column: RTX-VRX ID: 0.25 (mm) Dilution Factor: 1.0

Soil Extract Volume:_____(uL) Soil Aliquot Volume: _____(uL)

CONCENTRATION UNITS: (ug/L or ug/Kg) UG/KG

CAS NO.	COMPOUND	MDL	RL	CONC	Q	
67-64-1	Acetone	3.7	19	19u ~~4.8~~	~~J~~	BL
71-43-2	Benzene	0.87	19		U	
75-27-4	Bromodichloromethane	0.56	19		U	
75-25-2	Bromoform	1.9	19		U	
74-83-9	Bromomethane	1.3	19		U	
78-93-3	2-Butanone	2.6	19		U	
75-15-0	Carbon disulfide	2.4	19		U	
56-23-5	Carbon tetrachloride	1.6	19		U	
108-90-7	Chlorobenzene	0.63	19		U	
75-00-3	Chloroethane	2.0	19		U	
67-66-3	Chloroform	1.0	19		U	
74-87-3	Chloromethane	0.97	19		~~U~~ UJ	CC
110-82-7	Cyclohexane	1.0	19		U	
124-48-1	Dibromochloromethane	0.63	19		U	
96-12-8	1,2-Dibromo-3-chloropropane	2.2	9.3		U	
106-93-4	1,2-Dibromoethane	0.80	19		U	
95-50-1	1,2-Dichlorobenzene	0.69	19		U	
541-73-1	1,3-Dichlorobenzene	1.6	19		U	
106-46-7	1,4-Dichlorobenzene	1.0	19		U	
75-71-8	Dichlorodifluoromethane	2.0	19		~~U~~ UJ	CC
75-34-3	1,1-Dichloroethane	1.0	19		U	
107-06-2	1,2-Dichloroethane	0.86	19		U	
75-35-4	1,1-Dichloroethene	2.2	19		U	
156-59-2	cis-1,2-Dichloroethene	2.2	19		U	
156-60-5	trans-1,2-Dichloroethene	2.0	19		U	
78-87-5	1,2-Dichloropropane	0.86	19		U	
10061-01-5	cis-1,3-Dichloropropene	0.93	19		U	
10061-02-6	trans-1,3-Dichloropropene	0.60	19		U	
100-41-4	Ethylbenzene	1.4	19		U	
591-78-6	2-Hexanone	4.3	19		U	
98-82-8	Isopropylbenzene	1.6	19		U	
79-20-9	Methyl acetate	3.0	19		U	
75-09-2	Methylene chloride	1.2	19		U	
108-87-2	Methyl cyclohexane	0.56	19		U	
1634-04-4	Methyl tert-butyl ether	0.60	19		U	
108-10-1	4-Methyl-2-pentanone	1.1	19		U	
100-42-5	Styrene	0.65	19		U	
79-34-5	1,1,2,2-Tetrachloroethane	0.80	19		U	
127-18-4	Tetrachloroethene	1.8	19		U	

FORM I VOA

lw
2/27/09

FORM 1
VOLATILE ORGANICS ANALYSIS DATA SHEET

CLIENT SAMPLE NO.

MR08-IS12
9D-2-3-08D

18

Lab Name: EMPIRICAL LABS Contract: CH2MHILL

Lab Code: NA Case No.: NA SAS No.: NA SDG No.: LEJEUNE028

Matrix: (soil/water) SOIL Lab Sample ID: 0812166-18

Sample wt/vol: 2.9 (g/mL) G Lab File ID: 1216618A

Level: (low/med) LOW Date Sampled: 12/09/08 15:00

% Moisture: not dec. 6 Date Analyzed: 12/22/08 00:29

GC Column: RTX-VRX ID: 0.25 (mm) Dilution Factor: 1.0

Soil Extract Volume:_____(uL) Soil Aliquot Volume: _____(uL)

CONCENTRATION UNITS: (ug/L or ug/Kg) UG/KG

CAS NO.	COMPOUND	MDL	RL	CONC	Q
108-88-3	Toluene	1.6	19		U
120-82-1	1,2,4-Trichlorobenzene	0.33	19		U
71-55-6	1,1,1-Trichloroethane	1.7	19		U
79-00-5	1,1,2-Trichloroethane	0.65	19		U
79-01-6	Trichloroethene	1.6	19		U
76-13-1	Trichlorotrifluoroethane	1.0	19		U
75-69-4	Trichlorofluoromethane	1.8	19		U
75-01-4	Vinyl chloride	2.0	19		~~UJ~~ BSL
1330-20-7	Xylene(total)	1.3	19		U

FORM I VOA

MW
2/27/09

FORM 1
VOLATILE ORGANICS ANALYSIS DATA SHEET

CLIENT SAMPLE NO. 19

MR08-SS128-08D

Lab Name: EMPIRICAL LABS Contract: CH2MHILL

Lab Code: NA Case No.: NA SAS No.: NA SDG No.: LEJEUNE028

Matrix: (soil/water) SOIL Lab Sample ID: 0812166-19

Sample wt/vol: 2.2 (g/mL) G Lab File ID: 1216619A

Level: (low/med) LOW Date Sampled: 12/09/08 15:20

% Moisture: not dec. 6 Date Analyzed: 12/22/08 01:08

GC Column: RTX-VRX ID: 0.25 (mm) Dilution Factor: 1.0

Soil Extract Volume:_____(uL) Soil Aliquot Volume: _____(uL)

CONCENTRATION UNITS: (ug/L or ug/Kg) UG/KG

CAS NO.	COMPOUND	MDL	RL	CONC	Q	
67-64-1	Acetone	4.8	24	25	u	BL
71-43-2	Benzene	1.1	24	2.2	J	
75-27-4	Bromodichloromethane	0.73	24		U	
75-25-2	Bromoform	2.4	24		U	
74-83-9	Bromomethane	1.7	24		U	
78-93-3	2-Butanone	3.4	24		U	
75-15-0	Carbon disulfide	3.2	24	9.0	J	
56-23-5	Carbon tetrachloride	2.1	24		U	
108-90-7	Chlorobenzene	0.82	24		U	
75-00-3	Chloroethane	2.7	24		U	
67-66-3	Chloroform	1.3	24		U	
74-87-3	Chloromethane	1.3	24		~~U~~ UJ	CC
110-82-7	Cyclohexane	1.3	24		U	
124-48-1	Dibromochloromethane	0.82	24		U	
96-12-8	1,2-Dibromo-3-chloropropane	2.9	12		U	
106-93-4	1,2-Dibromoethane	1.0	24		U	
95-50-1	1,2-Dichlorobenzene	0.90	24		U	
541-73-1	1,3-Dichlorobenzene	2.0	24		U	
106-46-7	1,4-Dichlorobenzene	1.3	24		U	
75-71-8	Dichlorodifluoromethane	2.7	24		~~U~~ UJ	CI
75-34-3	1,1-Dichloroethane	1.3	24		U	
107-06-2	1,2-Dichloroethane	1.1	24		U	
75-35-4	1,1-Dichloroethene	2.9	24		U	
156-59-2	cis-1,2-Dichloroethene	2.9	24		U	
156-60-5	trans-1,2-Dichloroethene	2.7	24		U	
78-87-5	1,2-Dichloropropane	1.1	24		U	
10061-01-5	cis-1,3-Dichloropropene	1.2	24		U	
10061-02-6	trans-1,3-Dichloropropene	0.78	24		U	
100-41-4	Ethylbenzene	1.8	24	2.4	J	
591-78-6	2-Hexanone	5.6	24		U	
98-82-8	Isopropylbenzene	2.1	24		U	
79-20-9	Methyl acetate	3.9	24		U	
75-09-2	Methylene chloride	1.5	24		U	
108-87-2	Methyl cyclohexane	0.73	24	0.77	J	
1634-04-4	Methyl tert-butyl ether	0.78	24		U	
108-10-1	4-Methyl-2-pentanone	1.4	24		U	
100-42-5	Styrene	0.85	24		U	
79-34-5	1,1,2,2-Tetrachloroethane	1.0	24		U	
127-18-4	Tetrachloroethene	2.4	24		U	

FORM I VOA

JW 2/27/09

FORM 1
VOLATILE ORGANICS ANALYSIS DATA SHEET

CLIENT SAMPLE NO.

19

MR08-SS128-08D

Lab Name: EMPIRICAL LABS Contract: CH2MHILL

Lab Code: NA Case No.: NA SAS No.: NA SDG No.: LEJEUNE028

Matrix: (soil/water) SOIL Lab Sample ID: 0812166-19

Sample wt/vol: 2.2 (g/mL) G Lab File ID: 1216619A

Level: (low/med) LOW Date Sampled: 12/09/08 15:20

% Moisture: not dec. 6 Date Analyzed: 12/22/08 01:08

GC Column: RTX-VRX ID: 0.25 (mm) Dilution Factor: 1.0

Soil Extract Volume:_____(uL) Soil Aliquot Volume: _____(uL)

CONCENTRATION UNITS: (ug/L or ug/Kg) UG/KG

CAS NO.	COMPOUND	MDL	RL	CONC	Q
108-88-3	Toluene	2.1	24	3.2	J
120-82-1	1,2,4-Trichlorobenzene	0.44	24		U
71-55-6	1,1,1-Trichloroethane	2.2	24		U
79-00-5	1,1,2-Trichloroethane	0.85	24		U
79-01-6	Trichloroethene	2.1	24		U
76-13-1	Trichlorotrifluoroethane	1.3	24		U
75-69-4	Trichlorofluoromethane	2.3	24		U
75-01-4	Vinyl chloride	2.7	24		~~U~~ UJ BSL
1330-20-7	Xylene(total)	1.7	24		U

fw 2/27/09

FORM 1
VOLATILE ORGANICS ANALYSIS DATA SHEET

CLIENT SAMPLE NO.

MR08-IS12
8-2-3-08D

20

Lab Name: EMPIRICAL LABS Contract: CH2MHILL

Lab Code: NA Case No.: NA SAS No.: NA SDG No.: LEJEUNE028

Matrix: (soil/water) SOIL Lab Sample ID: 0812166-20

Sample wt/vol: 4.9 (g/mL) G Lab File ID: 1216620A

Level: (low/med) LOW Date Sampled: 12/09/08 15:40

% Moisture: not dec. 7 Date Analyzed: 12/22/08 01:47

GC Column: RTX-VRX ID: 0.25 (mm) Dilution Factor: 1.0

Soil Extract Volume:_____(uL) Soil Aliquot Volume: _____(uL)

CONCENTRATION UNITS: (ug/L or ug/Kg) UG/KG

CAS NO.	COMPOUND	MDL	RL	CONC	Q	
67-64-1	Acetone	2.2	11	11	~~J~~ U	D
71-43-2	Benzene	0.52	11		U	
75-27-4	Bromodichloromethane	0.33	11		U	
75-25-2	Bromoform	1.1	11		U	
74-83-9	Bromomethane	0.80	11		U	
78-93-3	2-Butanone	1.5	11		U	
75-15-0	Carbon disulfide	1.4	11		U	
56-23-5	Carbon tetrachloride	0.97	11		U	
108-90-7	Chlorobenzene	0.38	11		U	
75-00-3	Chloroethane	1.2	11		U	
67-66-3	Chloroform	0.61	11		U	
74-87-3	Chloromethane	0.58	11		~~U~~ UJ	CCV
110-82-7	Cyclohexane	0.60	11		U	
124-48-1	Dibromochloromethane	0.38	11		U	
96-12-8	1,2-Dibromo-3-chloropropane	1.3	5.5		U	
106-93-4	1,2-Dibromoethane	0.48	11		U	
95-50-1	1,2-Dichlorobenzene	0.41	11		U	
541-73-1	1,3-Dichlorobenzene	0.93	11		U	
106-46-7	1,4-Dichlorobenzene	0.61	11		U	
75-71-8	Dichlorodifluoromethane	1.2	11		~~U~~ UJ	CCV
75-34-3	1,1-Dichloroethane	0.60	11		U	
107-06-2	1,2-Dichloroethane	0.51	11		U	
75-35-4	1,1-Dichloroethene	1.3	11		U	
156-59-2	cis-1,2-Dichloroethene	1.3	11		U	
156-60-5	trans-1,2-Dichloroethene	1.2	11		U	
78-87-5	1,2-Dichloropropane	0.51	11		U	
10061-01-5	cis-1,3-Dichloropropene	0.55	11		U	
10061-02-6	trans-1,3-Dichloropropene	0.35	11		U	
100-41-4	Ethylbenzene	0.83	11		U	
591-78-6	2-Hexanone	2.5	11		U	
98-82-8	Isopropylbenzene	0.97	11		U	
79-20-9	Methyl acetate	1.8	11		U	
75-09-2	Methylene chloride	0.69	11		U	
108-87-2	Methyl cyclohexane	0.33	11		U	
1634-04-4	Methyl tert-butyl ether	0.35	11		U	
108-10-1	4-Methyl-2-pentanone	0.64	11		U	
100-42-5	Styrene	0.39	11		U	
79-34-5	1,1,2,2-Tetrachloroethane	0.48	11		U	
127-18-4	Tetrachloroethene	1.1	11		U	

lw
2/27/09

FORM 1
VOLATILE ORGANICS ANALYSIS DATA SHEET

CLIENT SAMPLE NO.

MR08-IS12
8-2-3-08D

20

Lab Name: EMPIRICAL LABS Contract: CH2MHILL

Lab Code: NA Case No.: NA SAS No.: NA SDG No.: LEJEUNE028

Matrix: (soil/water) SOIL Lab Sample ID: 0812166-20

Sample wt/vol: 4.9 (g/mL) G Lab File ID: 1216620A

Level: (low/med) LOW Date Sampled: 12/09/08 15:40

% Moisture: not dec. 7 Date Analyzed: 12/22/08 01:47

GC Column: RTX-VRX ID: 0.25 (mm) Dilution Factor: 1.0

Soil Extract Volume:_____(uL) Soil Aliquot Volume: _____(uL)

CONCENTRATION UNITS: (ug/L or ug/Kg) UG/KG

CAS NO.	COMPOUND	MDL	RL	CONC	Q
108-88-3	Toluene	0.95	11		U
120-82-1	1,2,4-Trichlorobenzene	0.20	11		U
71-55-6	1,1,1-Trichloroethane	1.00	11		U
79-00-5	1,1,2-Trichloroethane	0.39	11		U
79-01-6	Trichloroethene	0.94	11		U
76-13-1	Trichlorotrifluoroethane	0.61	11		U
75-69-4	Trichlorofluoromethane	1.0	11		U
75-01-4	Vinyl chloride	1.2	11		~~U~~ UJ
1330-20-7	Xylene(total)	0.77	11		U

BS

FORM I VOA

LW
2/27/09

FORM 1
VOLATILE ORGANICS ANALYSIS DATA SHEET

CLIENT SAMPLE NO. 21

MR08-EB01
120908-SS

Lab Name: EMPIRICAL LABS Contract: CH2MHILL

Lab Code: NA Case No.: NA SAS No.: NA SDG No.: LEJEUNE028

Matrix: (soil/water) WATER Lab Sample ID: 0812166-21

Sample wt/vol: 5.000 (g/mL) ML Lab File ID: 1216621

Level: (low/med) LOW Date Sampled: 12/09/08 09:30

% Moisture: not dec. _____ Date Analyzed: 12/19/08 10:22

GC Column: RTX-VRX ID: 0.25 (mm) Dilution Factor: 1.0

Soil Extract Volume:_____(uL) Soil Aliquot Volume: _____(uL)

CONCENTRATION UNITS: (ug/L or ug/Kg) UG/L

CAS NO.	COMPOUND	MDL	RL	CONC	Q
67-64-1	Acetone	0.84	2.5	5.4	
71-43-2	Benzene	0.11	1.0		U
75-27-4	Bromodichloromethane	0.10	1.0		U
75-25-2	Bromoform	0.10	1.0		U
74-83-9	Bromomethane	0.32	1.0		U
78-93-3	2-Butanone	1.0	3.0		U
75-15-0	Carbon disulfide	0.13	1.0		U
56-23-5	Carbon tetrachloride	0.15	1.0		U
108-90-7	Chlorobenzene	0.10	1.0		U
75-00-3	Chloroethane	0.18	1.0		~~U~~ UJ EG
67-66-3	Chloroform	0.11	1.0	1.4	
74-87-3	Chloromethane	0.29	1.0		U
110-82-7	Cyclohexane	0.20	1.0	0.25	J
124-48-1	Dibromochloromethane	0.10	1.0		U
96-12-8	1,2-Dibromo-3-chloropropane	0.11	1.0		U
106-93-4	1,2-Dibromoethane	0.10	1.0		U
95-50-1	1,2-Dichlorobenzene	0.10	1.0		U
541-73-1	1,3-Dichlorobenzene	0.13	1.0		U
106-46-7	1,4-Dichlorobenzene	0.10	1.0		U
75-71-8	Dichlorodifluoromethane	0.22	1.0		U
75-34-3	1,1-Dichloroethane	0.12	1.0		U
107-06-2	1,2-Dichloroethane	0.10	1.0		U
75-35-4	1,1-Dichloroethene	0.15	1.0		U
156-59-2	cis-1,2-Dichloroethene	0.13	1.0		U
156-60-5	trans-1,2-Dichloroethene	0.13	1.0		U
78-87-5	1,2-Dichloropropane	0.10	1.0		U
10061-01-5	cis-1,3-Dichloropropene	0.11	1.0		U
10061-02-6	trans-1,3-Dichloropropene	0.10	1.0		U
100-41-4	Ethylbenzene	0.13	1.0		U
591-78-6	2-Hexanone	0.30	1.0		U
98-82-8	Isopropylbenzene	0.15	1.0		U
79-20-9	Methyl acetate	0.30	1.0		U
75-09-2	Methylene chloride	0.14	1.0	1.04 ~~0.91~~ ~~JB~~	B
108-87-2	Methyl cyclohexane	0.17	1.0		U
1634-04-4	Methyl tert-butyl ether	0.10	1.0		U
108-10-1	4-Methyl-2-pentanone	0.29	1.0		U
100-42-5	Styrene	0.10	1.0		U
79-34-5	1,1,2,2-Tetrachloroethane	0.10	1.0		U
127-18-4	Tetrachloroethene	0.15	1.0		U

FORM I VOA

AW 2/27/09

FORM 1
VOLATILE ORGANICS ANALYSIS DATA SHEET

CLIENT SAMPLE NO.

MR08-EB01
120908-SS

21

Lab Name: EMPIRICAL LABS Contract: CH2MHILL

Lab Code: NA Case No.: NA SAS No.: NA SDG No.: LEJEUNE028

Matrix: (soil/water) WATER Lab Sample ID: 0812166-21

Sample wt/vol: 5.000 (g/mL) ML Lab File ID: 1216621

Level: (low/med) LOW Date Sampled: 12/09/08 09:30

% Moisture: not dec. _____ Date Analyzed: 12/19/08 10:22

GC Column: RTX-VRX ID: 0.25 (mm) Dilution Factor: 1.0

Soil Extract Volume:_____(uL) Soil Aliquot Volume: _____(uL)

CONCENTRATION UNITS: (ug/L or ug/Kg) UG/L

CAS NO.	COMPOUND	MDL	RL	CONC	Q
108-88-3	Toluene	0.10	1.0	0.17	J
120-82-1	1,2,4-Trichlorobenzene	0.10	1.0		U
71-55-6	1,1,1-Trichloroethane	0.17	1.0		U
79-00-5	1,1,2-Trichloroethane	0.10	1.0		U
79-01-6	Trichloroethene	0.13	1.0		U
76-13-1	Trichlorotrifluoroethane	0.18	1.0		U
75-69-4	Trichlorofluoromethane	0.17	1.0		U
75-01-4	Vinyl chloride	0.18	1.0		U
1330-20-7	Xylene(total)	0.22	1.0		U

hw
2/27/09

FORM 1
VOLATILE ORGANICS ANALYSIS DATA SHEET

CLIENT SAMPLE NO. 22

MR08-EB01
120908-IS

Lab Name: EMPIRICAL LABS Contract: CH2MHILL

Lab Code: NA Case No.: NA SAS No.: NA SDG No.: LEJEUNE028

Matrix: (soil/water) WATER Lab Sample ID: 0812166-22

Sample wt/vol: 5.000 (g/mL) ML Lab File ID: 1216622

Level: (low/med) LOW Date Sampled: 12/09/08 10:00

% Moisture: not dec. _____ Date Analyzed: 12/19/08 10:53

GC Column: RTX-VRX ID: 0.25 (mm) Dilution Factor: 1.0

Soil Extract Volume:_____(uL) Soil Aliquot Volume: _____(uL)

CONCENTRATION UNITS: (ug/L or ug/Kg) UG/L

CAS NO.	COMPOUND	MDL	RL	CONC	Q
67-64-1	Acetone	0.84	2.5	4.4	
71-43-2	Benzene	0.11	1.0		U
75-27-4	Bromodichloromethane	0.10	1.0		U
75-25-2	Bromoform	0.10	1.0		U
74-83-9	Bromomethane	0.32	1.0		U
78-93-3	2-Butanone	1.0	3.0		U
75-15-0	Carbon disulfide	0.13	1.0		U
56-23-5	Carbon tetrachloride	0.15	1.0		U
108-90-7	Chlorobenzene	0.10	1.0		U
75-00-3	Chloroethane	0.18	1.0		~~U~~ UJ CU
67-66-3	Chloroform	0.11	1.0	0.63	J
74-87-3	Chloromethane	0.29	1.0		U
110-82-7	Cyclohexane	0.20	1.0	0.23	J
124-48-1	Dibromochloromethane	0.10	1.0		U
96-12-8	1,2-Dibromo-3-chloropropane	0.11	1.0		U
106-93-4	1,2-Dibromoethane	0.10	1.0		U
95-50-1	1,2-Dichlorobenzene	0.10	1.0		U
541-73-1	1,3-Dichlorobenzene	0.13	1.0		U
106-46-7	1,4-Dichlorobenzene	0.10	1.0		U
75-71-8	Dichlorodifluoromethane	0.22	1.0		U
75-34-3	1,1-Dichloroethane	0.12	1.0		U
107-06-2	1,2-Dichloroethane	0.10	1.0		U
75-35-4	1,1-Dichloroethene	0.15	1.0		U
156-59-2	cis-1,2-Dichloroethene	0.13	1.0		U
156-60-5	trans-1,2-Dichloroethene	0.13	1.0		U
78-87-5	1,2-Dichloropropane	0.10	1.0		U
10061-01-5	cis-1,3-Dichloropropene	0.11	1.0		U
10061-02-6	trans-1,3-Dichloropropene	0.10	1.0		U
100-41-4	Ethylbenzene	0.13	1.0		U
591-78-6	2-Hexanone	0.30	1.0		U
98-82-8	Isopropylbenzene	0.15	1.0		U
79-20-9	Methyl acetate	0.30	1.0		U
75-09-2	Methylene chloride	0.14	1.0	1.0U ~~0.90~~	~~JB~~ B
108-87-2	Methyl cyclohexane	0.17	1.0		U
1634-04-4	Methyl tert-butyl ether	0.10	1.0		U
108-10-1	4-Methyl-2-pentanone	0.29	1.0		U
100-42-5	Styrene	0.10	1.0		U
79-34-5	1,1,2,2-Tetrachloroethane	0.10	1.0		U
127-18-4	Tetrachloroethene	0.15	1.0		U

FORM I VOA

LW 2/27/09

FORM 1
VOLATILE ORGANICS ANALYSIS DATA SHEET

CLIENT SAMPLE NO. 22

MR08-EB01
120908-IS

Lab Name: EMPIRICAL LABS Contract: CH2MHILL

Lab Code: NA Case No.: NA SAS No.: NA SDG No.: LEJEUNE028

Matrix: (soil/water) WATER Lab Sample ID: 0812166-22

Sample wt/vol: 5.000 (g/mL) ML Lab File ID: 1216622

Level: (low/med) LOW Date Sampled: 12/09/08 10:00

% Moisture: not dec. _____ Date Analyzed: 12/19/08 10:53

GC Column: RTX-VRX ID: 0.25 (mm) Dilution Factor: 1.0

Soil Extract Volume:_____(uL) Soil Aliquot Volume: _____(uL)

CONCENTRATION UNITS: (ug/L or ug/Kg) UG/L

CAS NO.	COMPOUND	MDL	RL	CONC	Q
108-88-3	Toluene	0.10	1.0		U
120-82-1	1,2,4-Trichlorobenzene	0.10	1.0		U
71-55-6	1,1,1-Trichloroethane	0.17	1.0		U
79-00-5	1,1,2-Trichloroethane	0.10	1.0		U
79-01-6	Trichloroethene	0.13	1.0		U
76-13-1	Trichlorotrifluoroethane	0.18	1.0		U
75-69-4	Trichlorofluoromethane	0.17	1.0		U
75-01-4	Vinyl chloride	0.18	1.0		U
1330-20-7	Xylene(total)	0.22	1.0		U

fw
2/27/09

FORM 1
VOLATILE ORGANICS ANALYSIS DATA SHEET

CLIENT SAMPLE NO. 23

MR08-TB01120908

Lab Name: EMPIRICAL LABS Contract: CH2MHILL

Lab Code: NA Case No.: NA SAS No.: NA SDG No.: LEJEUNE028

Matrix: (soil/water) WATER Lab Sample ID: 0812166-23

Sample wt/vol: 5.000 (g/mL) ML Lab File ID: 1216623

Level: (low/med) LOW Date Sampled: 12/09/08 10:30

% Moisture: not dec. _____ Date Analyzed: 12/19/08 05:25

GC Column: RTX-VRX ID: 0.25 (mm) Dilution Factor: 1.0

Soil Extract Volume:_____(uL) Soil Aliquot Volume: _____(uL)

CONCENTRATION UNITS: (ug/L or ug/Kg) UG/L

CAS NO.	COMPOUND	MDL	RL	CONC	Q	
67-64-1	Acetone	0.84	2.5		U	
71-43-2	Benzene	0.11	1.0		U	
75-27-4	Bromodichloromethane	0.10	1.0		U	
75-25-2	Bromoform	0.10	1.0		U	
74-83-9	Bromomethane	0.32	1.0		U	
78-93-3	2-Butanone	1.0	3.0		U	
75-15-0	Carbon disulfide	0.13	1.0		U	
56-23-5	Carbon tetrachloride	0.15	1.0		U	
108-90-7	Chlorobenzene	0.10	1.0		U	
75-00-3	Chloroethane	0.18	1.0		~~U~~ UJ	CC
67-66-3	Chloroform	0.11	1.0		U	
74-87-3	Chloromethane	0.29	1.0		U	
110-82-7	Cyclohexane	0.20	1.0		U	
124-48-1	Dibromochloromethane	0.10	1.0		U	
96-12-8	1,2-Dibromo-3-chloropropane	0.11	1.0		U	
106-93-4	1,2-Dibromoethane	0.10	1.0		U	
95-50-1	1,2-Dichlorobenzene	0.10	1.0		U	
541-73-1	1,3-Dichlorobenzene	0.13	1.0		U	
106-46-7	1,4-Dichlorobenzene	0.10	1.0		U	
75-71-8	Dichlorodifluoromethane	0.22	1.0		U	
75-34-3	1,1-Dichloroethane	0.12	1.0		U	
107-06-2	1,2-Dichloroethane	0.10	1.0		U	
75-35-4	1,1-Dichloroethene	0.15	1.0		U	
156-59-2	cis-1,2-Dichloroethene	0.13	1.0		U	
156-60-5	trans-1,2-Dichloroethene	0.13	1.0		U	
78-87-5	1,2-Dichloropropane	0.10	1.0		U	
10061-01-5	cis-1,3-Dichloropropene	0.11	1.0		U	
10061-02-6	trans-1,3-Dichloropropene	0.10	1.0		U	
100-41-4	Ethylbenzene	0.13	1.0		U	
591-78-6	2-Hexanone	0.30	1.0		U	
98-82-8	Isopropylbenzene	0.15	1.0		U	
79-20-9	Methyl acetate	0.30	1.0		U	
75-09-2	Methylene chloride	0.14	1.0	1.3	~~B~~ U	B
108-87-2	Methyl cyclohexane	0.17	1.0		U	
1634-04-4	Methyl tert-butyl ether	0.10	1.0		U	
108-10-1	4-Methyl-2-pentanone	0.29	1.0		U	
100-42-5	Styrene	0.10	1.0		U	
79-34-5	1,1,2,2-Tetrachloroethane	0.10	1.0		U	
127-18-4	Tetrachloroethene	0.15	1.0		U	

FORM I VOA

LW
2/27/09

FORM 1
VOLATILE ORGANICS ANALYSIS DATA SHEET

CLIENT SAMPLE NO.

23

MR08-TB01120908

Lab Name: EMPIRICAL LABS Contract: CH2MHILL

Lab Code: NA Case No.: NA SAS No.: NA SDG No.: LEJEUNE028

Matrix: (soil/water) WATER Lab Sample ID: 0812166-23

Sample wt/vol: 5.000 (g/mL) ML Lab File ID: 1216623

Level: (low/med) LOW Date Sampled: 12/09/08 10:30

% Moisture: not dec. _____ Date Analyzed: 12/19/08 05:25

GC Column: RTX-VRX ID: 0.25 (mm) Dilution Factor: 1.0

Soil Extract Volume:_____(uL) Soil Aliquot Volume: _____(uL)

CONCENTRATION UNITS: (ug/L or ug/Kg) UG/L

CAS NO.	COMPOUND	MDL	RL	CONC	Q
108-88-3	Toluene	0.10	1.0		U
120-82-1	1,2,4-Trichlorobenzene	0.10	1.0		U
71-55-6	1,1,1-Trichloroethane	0.17	1.0		U
79-00-5	1,1,2-Trichloroethane	0.10	1.0		U
79-01-6	Trichloroethene	0.13	1.0		U
76-13-1	Trichlorotrifluoroethane	0.18	1.0		U
75-69-4	Trichlorofluoromethane	0.17	1.0		U
75-01-4	Vinyl chloride	0.18	1.0		U
1330-20-7	Xylene(total)	0.22	1.0		U

fcw
2/27/09

ENVIRONMENTAL
Data Services, Inc.

VOLATILE ORGANIC COMPOUNDS
USEPA Region IV - Level IV Review

Site: MCB Camp Lejeune, TO-09 SDG #: LEJEUNE029

Client: CH2M HILL, Inc., Virginia Beach, Virginia Date: February 28, 2009

Laboratory: Empirical Laboratories, Nashville, Tennessee Reviewer: Nancy Weaver

EDS ID	Client Sample ID	Laboratory Sample ID	Matrix
1	MR08-SS098-08D	0812176-01	Soil
2	MR08-IS098-3-4-08D	0812176-02	Soil
3	MR08-SS121-08D	0812176-03	Soil
3RE	MR08-SS121-08DRE	0812176-03RE	Soil
4	MR08-IS121-2-3-08D	0812176-04	Soil
5	MR08-SS124-08D	0812176-05	Soil
6	MR08-IS124-2-3-08D	0812176-06	Soil
7	MR08-SS099-08D	0812176-07	Soil
8	MR08-SS099D-08D	0812176-08	Soil
8RE	MR08-SS099D-08DRE	0812176-08RE	Soil
9	MR08-IS099-2-3-08D	0812176-09	Soil
10	MR08-IS099D-2-3-08D	0812176-10	Soil
11	MR08-SS100-08D	0812176-11	Soil
12	MR08-IS100-2-3-08D	0812176-12	Soil
12RE	MR08-IS100-2-3-08DRE	0812176-12RE	Soil
13	MR08-SS101-08D	0812176-13	Soil
14	MR08-IS101-2-3-08D	0812176-14	Soil
15	MR08-EB01121008-SS	0812176-15	Water
16	MR08-TB01121008	0812176-16	Water

The USEPA "Contract Laboratory Program National Functional Guidelines for Organic Data Review," October 1999, and professional judgement were used in evaluating the data in this summary report.

Holding Times - All samples were analyzed within 14 days for preserved water and soil samples except the following.

Sample	Date Sampled	Date Analyzed	# of Days	Qualifier
3RE	12/10/08	01/03/08	24	J/UJ
8RE	12/10/08	01/03/08	24	J/UJ
12RE	12/10/08	01/03/08	24	J/UJ

GC/MS Tuning - All of the BFB tunes in the initial and continuing calibrations met the percent relative abundance criteria.

Initial Calibration - The initial calibrations exhibited acceptable %RSD and mean RRF values.

Continuing Calibration - The continuing calibrations exhibited acceptable %D and RRF values except the following.

CCAL Date	Compound	%D/RRF	Qualifier	Affected Samples
12/19/08	Chloroethane	37.0%	J/UJ	15,16
01/03/09	Chloromethane	31.8%	None	Already qualified due to HT
	Dichlorodifluoromethane	29.7%	None	Already qualified due to HT
	1,2-Dichloroethane	30.6%	None	Already qualified due to HT
	Methyl acetate	26.1%	None	Already qualified due to HT
	Methylene chloride	33.7%	None	Already qualified due to HT
	Trichlorotrifluoromethane	34.2%	None	Already qualified due to HT
	Vinyl chloride	31.3%	None	Already qualified due to HT

Surrogates - All samples exhibited acceptable surrogate recoveries except the following.

Sample ID	Surrogate	%R	Qualifier
11	1,2-Dichloroethane-d4	69%	J/UJ

MS/MSD - A MS/MSD sample was not analyzed from this data package.

Laboratory Control Sample - The LCS samples exhibited acceptable %R values except the following.

LCS ID	Compound	%R	Qualifier	Affected Samples
V3BLK1218E	Isopropylbenzene	126%	None	All ND
V1BLK0106G	1,2-Dichloroethane	126%	None	All ND

Internal Standard (IS) Area Performance - All internal standards met response and retention time (RT) criteria except the following.

Sample ID	Internal Standard	Area Count	Qualifier
3	IS3-1,4-Dichlorobenzene-d4	Low	J/UJ
8	IS3-1,4-Dichlorobenzene-d4	Low	J/UJ
12	IS1-Fluorobenzene	Low	J/UJ
	IS2-Chlorobenzene-d5	Low	J/UJ
	IS3-1,4-Dichlorobenzene-d4	Low	J/UJ

Method Blank - The method blanks exhibited the following contamination.

Blank ID	Compound	Conc.	Action Level	Qualifier	Affected Samples
V3BLK1218E	Methylene chloride	0.53 ug/L	5.3 ug/L	U	15, 16
	1,2,4-Trichlorobenzene	0.25 ug/L	1.25 ug/L	None	All ND
V1BLK1224	Methylene chloride	2.2 ug/kg	22 ug/kg	U	1, 3-14
	1,2,4-Trichlorobenzene	0.42 ug/kg	2.1 ug/kg	None	All ND
V1BLK0101G	Methylene chloride	4.2 ug/kg	42 ug/kg	U	3RE, 8RE, 12RE

Trip, Field, Equipment Blank - Field QC results are summarized below.

Blank ID	Compound	Conc. ug/L	Action Level ug/L or ug/kg	Qualifier	Affected Samples
MR08-EB01121008-SS	Chlorobenzene	0.22	1.1	None	All ND
	Cyclohexane	0.32	1.6	U	1, 5, 7
MR8-FB01120608	Acetone	3.8	38	U	1-3, 3RE, 4-8, 8RE, 9-12, 12RE, 13, 14
	Bromodichloromethane	0.2	1.0	None	All ND
	Chloroform	3.0	15.0	None	All ND
	Toluene	0.35	1.75	U	3RE, 8
MR08-TB01121008	None - ND	-	-	-	-

Field Duplicates - Field duplicate results are summarized below.

Compound	MR08-SS099-08D ug/kg	MR08-SS099D-08D ug/kg	RPD	Qualifier
Benzene	2.2	0.64	110%	None
2-Butanone	7.4	3.0	85%	None
Ethylbenzene	5.7	2.4	81%	None
Methyl cyclohexane	1.7	0.39	125%	None
4-Methyl-2-pentanone	20 U	0.53	NC	None
Toluene	4.0	8.2 U	NC	None

Compound	MR08-IS099-2-3-08D ug/kg	MR08-IS099D-2-3-08D ug/kg	RPD	Qualifier
None	ND	ND	-	-

Tentatively Identified Compounds (TICs) - TICs were not reported.

Compound Quantitation - Several samples exhibited internal standard and/or surrogate deficiencies. These samples were reanalyzed. Refer to Form Is for which were used for reporting purposes.

FORM 1
VOLATILE ORGANICS ANALYSIS DATA SHEET

CLIENT SAMPLE NO. 1

MR08-SS098-08D

Lab Name: EMPIRICAL LABS Contract: CH2MHILL

Lab Code: NA Case No.: NA SAS No.: NA SDG No.: LEJEUNE029

Matrix: (soil/water) SOIL Lab Sample ID: 0812176-01

Sample wt/vol: 3.7 (g/mL) G Lab File ID: 1217601A

Level: (low/med) LOW Date Sampled: 12/10/08 08:35

% Moisture: not dec. 7 Date Analyzed: 12/24/08 10:45

GC Column: RTX-VRX ID: 0.25 (mm) Dilution Factor: 1.0

Soil Extract Volume:_____(uL) Soil Aliquot Volume: _____(uL)

CONCENTRATION UNITS: (ug/L or ug/Kg) UG/KG

CAS NO.	COMPOUND	MDL	RL	CONC	Q	
67-64-1	Acetone	2.9	15	19	u	B
71-43-2	Benzene	0.69	15	1.4	J	
75-27-4	Bromodichloromethane	0.44	15		U	
75-25-2	Bromoform	1.5	15		U	
74-83-9	Bromomethane	1.0	15		U	
78-93-3	2-Butanone	2.0	15		U	
75-15-0	Carbon disulfide	1.9	15		U	
56-23-5	Carbon tetrachloride	1.3	15		U	
108-90-7	Chlorobenzene	0.50	15		U	
75-00-3	Chloroethane	1.6	15		U	
67-66-3	Chloroform	0.80	15		U	
74-87-3	Chloromethane	0.76	15		U	
110-82-7	Cyclohexane	0.79	15	15u	~~0.94~~ ~~J~~	B
124-48-1	Dibromochloromethane	0.50	15		U	
96-12-8	1,2-Dibromo-3-chloropropane	1.8	7.3		U	
106-93-4	1,2-Dibromoethane	0.63	15		U	
95-50-1	1,2-Dichlorobenzene	0.54	15		U	
541-73-1	1,3-Dichlorobenzene	1.2	15		U	
106-46-7	1,4-Dichlorobenzene	0.80	15		U	
75-71-8	Dichlorodifluoromethane	1.6	15		U	
75-34-3	1,1-Dichloroethane	0.79	15		U	
107-06-2	1,2-Dichloroethane	0.67	15		U	
75-35-4	1,1-Dichloroethene	1.8	15		U	
156-59-2	cis-1,2-Dichloroethene	1.8	15		U	
156-60-5	trans-1,2-Dichloroethene	1.6	15		U	
78-87-5	1,2-Dichloropropane	0.67	15		U	
10061-01-5	cis-1,3-Dichloropropene	0.73	15		U	
10061-02-6	trans-1,3-Dichloropropene	0.47	15		U	
100-41-4	Ethylbenzene	1.1	15	2.7	J	
591-78-6	2-Hexanone	3.4	15		U	
98-82-8	Isopropylbenzene	1.3	15		U	
79-20-9	Methyl acetate	2.3	15		U	
75-09-2	Methylene chloride	0.91	15	15u	~~1.4~~ ~~JB~~	BL
108-87-2	Methyl cyclohexane	0.44	15	1.4	J	
1634-04-4	Methyl tert-butyl ether	0.47	15		U	
108-10-1	4-Methyl-2-pentanone	0.85	15		U	
100-42-5	Styrene	0.51	15		U	
79-34-5	1,1,2,2-Tetrachloroethane	0.63	15		U	
127-18-4	Tetrachloroethene	1.4	15		U	

FORM I VOA

LW 2/28/09

FORM 1
VOLATILE ORGANICS ANALYSIS DATA SHEET

CLIENT SAMPLE NO.

MR08-SS098-08D

Lab Name: EMPIRICAL LABS Contract: CH2MHILL

Lab Code: NA Case No.: NA SAS No.: NA SDG No.: LEJEUNE029

Matrix: (soil/water) SOIL Lab Sample ID: 0812176-01

Sample wt/vol: 3.7 (g/mL) G Lab File ID: 1217601A

Level: (low/med) LOW Date Sampled: 12/10/08 08:35

% Moisture: not dec. 7 Date Analyzed: 12/24/08 10:45

GC Column: RTX-VRX ID: 0.25 (mm) Dilution Factor: 1.0

Soil Extract Volume:_____(uL) Soil Aliquot Volume: _____(uL)

CONCENTRATION UNITS: (ug/L or ug/Kg) UG/KG

CAS NO.	COMPOUND	MDL	RL	CONC	Q
108-88-3	Toluene	1.2	15	2.0	J
120-82-1	1,2,4-Trichlorobenzene	0.26	15		U
71-55-6	1,1,1-Trichloroethane	1.3	15		U
79-00-5	1,1,2-Trichloroethane	0.51	15		U
79-01-6	Trichloroethene	1.2	15		U
76-13-1	Trichlorotrifluoroethane	0.80	15		U
75-69-4	Trichlorofluoromethane	1.4	15		U
75-01-4	Vinyl chloride	1.6	15		U
1330-20-7	Xylene(total)	1.0	15		U

kw 2/28/09

FORM 1
VOLATILE ORGANICS ANALYSIS DATA SHEET

CLIENT SAMPLE NO. 2

MR08-IS09
8-3-4-08D

Lab Name: EMPIRICAL LABS Contract: CH2MHILL

Lab Code: NA Case No.: NA SAS No.: NA SDG No.: LEJEUNE029

Matrix: (soil/water) SOIL Lab Sample ID: 0812176-02

Sample wt/vol: 6.1 (g/mL) G Lab File ID: 1217602A

Level: (low/med) LOW Date Sampled: 12/10/08 08:50

% Moisture: not dec. 15 Date Analyzed: 12/24/08 11:24

GC Column: RTX-VRX ID: 0.25 (mm) Dilution Factor: 1.0

Soil Extract Volume:_____(uL) Soil Aliquot Volume: _____(uL)

CONCENTRATION UNITS: (ug/L or ug/Kg) UG/KG

CAS NO.	COMPOUND	MDL	RL	CONC	Q
67-64-1	Acetone	1.9	9.6	25	U B
71-43-2	Benzene	0.45	9.6		U
75-27-4	Bromodichloromethane	0.29	9.6		U
75-25-2	Bromoform	0.96	9.6		U
74-83-9	Bromomethane	0.69	9.6		U
78-93-3	2-Butanone	1.3	9.6	2.1	J
75-15-0	Carbon disulfide	1.2	9.6	1.3	J
56-23-5	Carbon tetrachloride	0.84	9.6		U
108-90-7	Chlorobenzene	0.33	9.6		U
75-00-3	Chloroethane	1.0	9.6		U
67-66-3	Chloroform	0.53	9.6		U
74-87-3	Chloromethane	0.50	9.6		U
110-82-7	Cyclohexane	0.52	9.6		U
124-48-1	Dibromochloromethane	0.33	9.6		U
96-12-8	1,2-Dibromo-3-chloropropane	1.2	4.8		U
106-93-4	1,2-Dibromoethane	0.41	9.6		U
95-50-1	1,2-Dichlorobenzene	0.35	9.6		U
541-73-1	1,3-Dichlorobenzene	0.80	9.6		U
106-46-7	1,4-Dichlorobenzene	0.53	9.6		U
75-71-8	Dichlorodifluoromethane	1.0	9.6		U
75-34-3	1,1-Dichloroethane	0.52	9.6		U
107-06-2	1,2-Dichloroethane	0.44	9.6		U
75-35-4	1,1-Dichloroethene	1.2	9.6		U
156-59-2	cis-1,2-Dichloroethene	1.2	9.6		U
156-60-5	trans-1,2-Dichloroethene	1.0	9.6		U
78-87-5	1,2-Dichloropropane	0.44	9.6		U
10061-01-5	cis-1,3-Dichloropropene	0.48	9.6		U
10061-02-6	trans-1,3-Dichloropropene	0.31	9.6		U
100-41-4	Ethylbenzene	0.72	9.6		U
591-78-6	2-Hexanone	2.2	9.6		U
98-82-8	Isopropylbenzene	0.84	9.6		U
79-20-9	Methyl acetate	1.5	9.6		U
75-09-2	Methylene chloride	0.59	9.6	1.0	J
108-87-2	Methyl cyclohexane	0.29	9.6		U
1634-04-4	Methyl tert-butyl ether	0.31	9.6		U
108-10-1	4-Methyl-2-pentanone	0.56	9.6		U
100-42-5	Styrene	0.34	9.6		U
79-34-5	1,1,2,2-Tetrachloroethane	0.41	9.6		U
127-18-4	Tetrachloroethene	0.93	9.6		U

QW 2/28/09

FORM 1
VOLATILE ORGANICS ANALYSIS DATA SHEET

CLIENT SAMPLE NO. 2

MR08-IS09
8-3-4-08D

Lab Name: EMPIRICAL LABS Contract: CH2MHILL

Lab Code: NA Case No.: NA SAS No.: NA SDG No.: LEJEUNE029

Matrix: (soil/water) SOIL Lab Sample ID: 0812176-02

Sample wt/vol: 6.1 (g/mL) G Lab File ID: 1217602A

Level: (low/med) LOW Date Sampled: 12/10/08 08:50

% Moisture: not dec. 15 Date Analyzed: 12/24/08 11:24

GC Column: RTX-VRX ID: 0.25 (mm) Dilution Factor: 1.0

Soil Extract Volume:_____(uL) Soil Aliquot Volume: _____(uL)

CONCENTRATION UNITS: (ug/L or ug/Kg) UG/KG

CAS NO.	COMPOUND	MDL	RL	CONC	Q
108-88-3	Toluene	0.82	9.6		U
120-82-1	1,2,4-Trichlorobenzene	0.17	9.6		U
71-55-6	1,1,1-Trichloroethane	0.86	9.6		U
79-00-5	1,1,2-Trichloroethane	0.34	9.6		U
79-01-6	Trichloroethene	0.82	9.6		U
76-13-1	Trichlorotrifluoroethane	0.53	9.6		U
75-69-4	Trichlorofluoromethane	0.91	9.6		U
75-01-4	Vinyl chloride	1.0	9.6		U
1330-20-7	Xylene(total)	0.67	9.6		U

RW
2/28/09

3

FORM 1
VOLATILE ORGANICS ANALYSIS DATA SHEET

CLIENT SAMPLE NO.

MR08-SS121-08D

Lab Name: EMPIRICAL LABS Contract: CH2MHILL

Lab Code: NA Case No.: NA SAS No.: NA SDG No.: LEJEUNE029

Matrix: (soil/water) SOIL Lab Sample ID: 0812176-03

Sample wt/vol: 3.9 (g/mL) G Lab File ID: 1217603A

Level: (low/med) LOW Date Sampled: 12/10/08 09:45

% Moisture: not dec. 8 Date Analyzed: 12/24/08 12:03

GC Column: RTX-VRX ID: 0.25 (mm) Dilution Factor: 1.0

Soil Extract Volume:_____(uL) Soil Aliquot Volume: _____(uL)

CONCENTRATION UNITS: (ug/L or ug/Kg) UG/KG

CAS NO.	COMPOUND	MDL	RL	CONC	Q	
67-64-1	Acetone	2.8	14	37	u	BL
71-43-2	Benzene	0.65	14	1.4	J	
75-27-4	Bromodichloromethane	0.42	14		U	
75-25-2	Bromoform	1.4	14		U	
74-83-9	Bromomethane	1.00	14		U	
78-93-3	2-Butanone	1.9	14	4.8	J	
75-15-0	Carbon disulfide	1.8	14		U	
56-23-5	Carbon tetrachloride	1.2	14		U	
108-90-7	Chlorobenzene	0.47	14		U	
75-00-3	Chloroethane	1.5	14		U	
67-66-3	Chloroform	0.76	14		U	
74-87-3	Chloromethane	0.72	14		U	
110-82-7	Cyclohexane	0.75	14		U	
124-48-1	Dibromochloromethane	0.47	14		U	
96-12-8	1,2-Dibromo-3-chloropropane	1.7	6.9		~~U~~ UJ	ISL
106-93-4	1,2-Dibromoethane	0.60	14		U	
95-50-1	1,2-Dichlorobenzene	0.51	14		~~U~~ UJ	ISL
541-73-1	1,3-Dichlorobenzene	1.2	14		~~U~~	
106-46-7	1,4-Dichlorobenzene	0.76	14		~~U~~	
75-71-8	Dichlorodifluoromethane	1.5	14		U	
75-34-3	1,1-Dichloroethane	0.75	14		U	
107-06-2	1,2-Dichloroethane	0.64	14		U	
75-35-4	1,1-Dichloroethene	1.7	14		U	
156-59-2	cis-1,2-Dichloroethene	1.7	14		U	
156-60-5	trans-1,2-Dichloroethene	1.5	14		U	
78-87-5	1,2-Dichloropropane	0.64	14		U	
10061-01-5	cis-1,3-Dichloropropene	0.69	14		U	
10061-02-6	trans-1,3-Dichloropropene	0.44	14		U	
100-41-4	Ethylbenzene	1.0	14	3.1	J	
591-78-6	2-Hexanone	3.2	14		U	
98-82-8	Isopropylbenzene	1.2	14		U	
79-20-9	Methyl acetate	2.2	14		U	
75-09-2	Methylene chloride	0.86	14	14u ~~1.8~~	~~JB~~	BL
108-87-2	Methyl cyclohexane	0.42	14	0.63	J	
1634-04-4	Methyl tert-butyl ether	0.44	14		U	
108-10-1	4-Methyl-2-pentanone	0.80	14		U	
100-42-5	Styrene	0.48	14		U	
79-34-5	1,1,2,2-Tetrachloroethane	0.60	14		~~U~~ UJ	ISL
127-18-4	Tetrachloroethene	1.3	14		U	

FORM I VOA

MW
2/28/09

3

FORM 1
VOLATILE ORGANICS ANALYSIS DATA SHEET

CLIENT SAMPLE NO.

MR08-SS121-08D

Lab Name: EMPIRICAL LABS Contract: CH2MHILL

Lab Code: NA Case No.: NA SAS No.: NA SDG No.: LEJEUNE029

Matrix: (soil/water) SOIL Lab Sample ID: 0812176-03

Sample wt/vol: 3.9 (g/mL) G Lab File ID: 1217603A

Level: (low/med) LOW Date Sampled: 12/10/08 09:45

% Moisture: not dec. 8 Date Analyzed: 12/24/08 12:03

GC Column: RTX-VRX ID: 0.25 (mm) Dilution Factor: 1.0

Soil Extract Volume:_____(uL) Soil Aliquot Volume: _____(uL)

CONCENTRATION UNITS: (ug/L or ug/Kg) UG/KG

CAS NO.	COMPOUND	MDL	RL	CONC	Q
108-88-3	Toluene	1.2	14	2.3	J
120-82-1	1,2,4-Trichlorobenzene	0.25	14		~~U~~ UJ ISL
71-55-6	1,1,1-Trichloroethane	1.2	14		U
79-00-5	1,1,2-Trichloroethane	0.48	14		U
79-01-6	Trichloroethene	1.2	14		U
76-13-1	Trichlorotrifluoroethane	0.76	14		U
75-69-4	Trichlorofluoromethane	1.3	14		U
75-01-4	Vinyl chloride	1.5	14		U
1330-20-7	Xylene(total)	0.97	14		U

FORM I VOA

JLW 2/28/09

FORM 1
VOLATILE ORGANICS ANALYSIS DATA SHEET

CLIENT SAMPLE NO. 3RS

MR08-SS121-08DR

Lab Name: EMPIRICAL LABS Contract: CH2MHILL

Lab Code: NA Case No.: NA SAS No.: NA SDG No.: LEJEUNE029

Matrix: (soil/water) SOIL Lab Sample ID: 0812176-03R

Sample wt/vol: 3.9 (g/mL) G Lab File ID: 1217603B

Level: (low/med) LOW Date Sampled: 12/10/08 09:45

% Moisture: not dec. 8 Date Analyzed: 01/03/09 13:35 Use original

GC Column: RTX-VRX ID: 0.25 (mm) Dilution Factor: 1.0

Soil Extract Volume:_____(uL) Soil Aliquot Volume: _____(uL)

CONCENTRATION UNITS: (ug/L or ug/Kg) UG/KG

CAS NO.	COMPOUND	MDL	RL	CONC	Q
67-64-1	Acetone	2.8	14	20	UJ HTB
71-43-2	Benzene	0.66	14	1.2	J J HT
75-27-4	Bromodichloromethane	0.42	14		U UJ
75-25-2	Bromoform	1.4	14		U
74-83-9	Bromomethane	1.0	14		U
78-93-3	2-Butanone	2.0	14	3.3	J J
75-15-0	Carbon disulfide	1.8	14		U UJ
56-23-5	Carbon tetrachloride	1.2	14		U
108-90-7	Chlorobenzene	0.48	14		U
75-00-3	Chloroethane	1.5	14		U
67-66-3	Chloroform	0.77	14		U
74-87-3	Chloromethane	0.73	14		U
110-82-7	Cyclohexane	0.76	14		U
124-48-1	Dibromochloromethane	0.48	14		U
96-12-8	1,2-Dibromo-3-chloropropane	1.7	7.0		U
106-93-4	1,2-Dibromoethane	0.60	14		U
95-50-1	1,2-Dichlorobenzene	0.52	14		U
541-73-1	1,3-Dichlorobenzene	1.2	14		U
106-46-7	1,4-Dichlorobenzene	0.77	14		U
75-71-8	Dichlorodifluoromethane	1.5	14		U
75-34-3	1,1-Dichloroethane	0.76	14		U
107-06-2	1,2-Dichloroethane	0.65	14		U
75-35-4	1,1-Dichloroethene	1.7	14		U
156-59-2	cis-1,2-Dichloroethene	1.7	14		U
156-60-5	trans-1,2-Dichloroethene	1.5	14		U
78-87-5	1,2-Dichloropropane	0.65	14		U
10061-01-5	cis-1,3-Dichloropropene	0.70	14		U
10061-02-6	trans-1,3-Dichloropropene	0.45	14		U
100-41-4	Ethylbenzene	1.0	14		U
591-78-6	2-Hexanone	3.2	14		U
98-82-8	Isopropylbenzene	1.2	14		U
79-20-9	Methyl acetate	2.2	14		U
75-09-2	Methylene chloride	0.87	14	14UJ ~~2.5 JB~~	HTB
108-87-2	Methyl cyclohexane	0.42	14		U UJ
1634-04-4	Methyl tert-butyl ether	0.45	14		U H
108-10-1	4-Methyl-2-pentanone	0.82	14		U
100-42-5	Styrene	0.49	14		U
79-34-5	1,1,2,2-Tetrachloroethane	0.60	14		U
127-18-4	Tetrachloroethene	1.4	14		U

FORM I VOA

2/28/09

FORM 1
VOLATILE ORGANICS ANALYSIS DATA SHEET

CLIENT SAMPLE NO. 3RE

MR08-SS121-08DR

Lab Name: EMPIRICAL LABS Contract: CH2MHILL

Lab Code: NA Case No.: NA SAS No.: NA SDG No.: LEJEUNE029

Matrix: (soil/water) SOIL Lab Sample ID: 0812176-03R

Sample wt/vol: 3.9 (g/mL) G Lab File ID: 1217603B

Level: (low/med) LOW Date Sampled: 12/10/08 09:45

% Moisture: not dec. 8 Date Analyzed: 01/03/09 13:35 use original

GC Column: RTX-VRX ID: 0.25 (mm) Dilution Factor: 1.0

Soil Extract Volume:_____(uL) Soil Aliquot Volume: _____(uL)

CONCENTRATION UNITS: (ug/L or ug/Kg) UG/KG

CAS NO.	COMPOUND	MDL	RL	CONC	Q
108-88-3	Toluene	1.2	14	14 ~~1.5~~	J HTB
120-82-1	1,2,4-Trichlorobenzene	0.25	14		U UJ HT
71-55-6	1,1,1-Trichloroethane	1.3	14		U
79-00-5	1,1,2-Trichloroethane	0.49	14		U
79-01-6	Trichloroethene	1.2	14		U
76-13-1	Trichlorotrifluoroethane	0.77	14		U
75-69-4	Trichlorofluoromethane	1.3	14		U
75-01-4	Vinyl chloride	1.5	14		U
1330-20-7	Xylene(total)	0.98	14		U

R RE

FORM I VOA

lw 2/28/09

FORM 1
VOLATILE ORGANICS ANALYSIS DATA SHEET

CLIENT SAMPLE NO. 4

MR08-IS12
1-2-3-08D

Lab Name: EMPIRICAL LABS Contract: CH2MHILL

Lab Code: NA Case No.: NA SAS No.: NA SDG No.: LEJEUNE029

Matrix: (soil/water) SOIL Lab Sample ID: 0812176-04

Sample wt/vol: 5.1 (g/mL) G Lab File ID: 1217604A

Level: (low/med) LOW Date Sampled: 12/10/08 10:15

% Moisture: not dec. 17 Date Analyzed: 12/24/08 12:43

GC Column: RTX-VRX ID: 0.25 (mm) Dilution Factor: 1.0

Soil Extract Volume:_____(uL) Soil Aliquot Volume: _____(uL)

CONCENTRATION UNITS: (ug/L or ug/Kg) UG/KG

CAS NO.	COMPOUND	MDL	RL	CONC	Q
67-64-1	Acetone	2.4	12	16	U
71-43-2	Benzene	0.56	12		U
75-27-4	Bromodichloromethane	0.35	12		U
75-25-2	Bromoform	1.2	12		U
74-83-9	Bromomethane	0.85	12		U
78-93-3	2-Butanone	1.6	12		U
75-15-0	Carbon disulfide	1.5	12		U
56-23-5	Carbon tetrachloride	1.0	12		U
108-90-7	Chlorobenzene	0.40	12		U
75-00-3	Chloroethane	1.3	12		U
67-66-3	Chloroform	0.65	12		U
74-87-3	Chloromethane	0.61	12		U
110-82-7	Cyclohexane	0.64	12		U
124-48-1	Dibromochloromethane	0.40	12		U
96-12-8	1,2-Dibromo-3-chloropropane	1.4	5.9		U
106-93-4	1,2-Dibromoethane	0.51	12		U
95-50-1	1,2-Dichlorobenzene	0.44	12		U
541-73-1	1,3-Dichlorobenzene	0.99	12		U
106-46-7	1,4-Dichlorobenzene	0.65	12		U
75-71-8	Dichlorodifluoromethane	1.3	12		U
75-34-3	1,1-Dichloroethane	0.64	12		U
107-06-2	1,2-Dichloroethane	0.54	12		U
75-35-4	1,1-Dichloroethene	1.4	12		U
156-59-2	cis-1,2-Dichloroethene	1.4	12		U
156-60-5	trans-1,2-Dichloroethene	1.3	12		U
78-87-5	1,2-Dichloropropane	0.54	12		U
10061-01-5	cis-1,3-Dichloropropene	0.59	12		U
10061-02-6	trans-1,3-Dichloropropene	0.38	12		U
100-41-4	Ethylbenzene	0.89	12		U
591-78-6	2-Hexanone	2.7	12		U
98-82-8	Isopropylbenzene	1.0	12		U
79-20-9	Methyl acetate	1.9	12		U
75-09-2	Methylene chloride	0.73	12	12u	~~6.8 JB~~ BL
108-87-2	Methyl cyclohexane	0.35	12		U
1634-04-4	Methyl tert-butyl ether	0.38	12		U
108-10-1	4-Methyl-2-pentanone	0.68	12		U
100-42-5	Styrene	0.41	12		U
79-34-5	1,1,2,2-Tetrachloroethane	0.51	12		U
127-18-4	Tetrachloroethene	1.1	12		U

FORM I VOA

lew 2/28/09

FORM 1
VOLATILE ORGANICS ANALYSIS DATA SHEET

CLIENT SAMPLE NO. 4

MR08-IS12
1-2-3-08D

Lab Name: EMPIRICAL LABS Contract: CH2MHILL

Lab Code: NA Case No.: NA SAS No.: NA SDG No.: LEJEUNE029

Matrix: (soil/water) SOIL Lab Sample ID: 0812176-04

Sample wt/vol: 5.1 (g/mL) G Lab File ID: 1217604A

Level: (low/med) LOW Date Sampled: 12/10/08 10:15

% Moisture: not dec. 17 Date Analyzed: 12/24/08 12:43

GC Column: RTX-VRX ID: 0.25 (mm) Dilution Factor: 1.0

Soil Extract Volume:_____(uL) Soil Aliquot Volume: _____(uL)

CONCENTRATION UNITS: (ug/L or ug/Kg) UG/KG

CAS NO.	COMPOUND	MDL	RL	CONC	Q
108-88-3	Toluene	1.0	12		U
120-82-1	1,2,4-Trichlorobenzene	0.21	12		U
71-55-6	1,1,1-Trichloroethane	1.1	12		U
79-00-5	1,1,2-Trichloroethane	0.41	12		U
79-01-6	Trichloroethene	1.0	12		U
76-13-1	Trichlorotrifluoroethane	0.65	12		U
75-69-4	Trichlorofluoromethane	1.1	12		U
75-01-4	Vinyl chloride	1.3	12		U
1330-20-7	Xylene(total)	0.83	12		U

2/28/09

FORM 1
VOLATILE ORGANICS ANALYSIS DATA SHEET

CLIENT SAMPLE NO. 5

MR08-SS124-08D

Lab Name: EMPIRICAL LABS Contract: CH2MHILL

Lab Code: NA Case No.: NA SAS No.: NA SDG No.: LEJEUNE029

Matrix: (soil/water) SOIL Lab Sample ID: 0812176-05

Sample wt/vol: 4.8 (g/mL) G Lab File ID: 1217605B

Level: (low/med) LOW Date Sampled: 12/10/08 10:35

% Moisture: not dec. 7 Date Analyzed: 12/24/08 13:22

GC Column: RTX-VRX ID: 0.25 (mm) Dilution Factor: 1.0

Soil Extract Volume:_____(uL) Soil Aliquot Volume: _____(uL)

CONCENTRATION UNITS: (ug/L or ug/Kg) UG/KG

CAS NO.	COMPOUND	MDL	RL	CONC	Q	
67-64-1	Acetone	2.2	11	24	U	B
71-43-2	Benzene	0.53	11	2.0	J	
75-27-4	Bromodichloromethane	0.34	11		U	
75-25-2	Bromoform	1.1	11		U	
74-83-9	Bromomethane	0.81	11		U	
78-93-3	2-Butanone	1.6	11	3.5	J	
75-15-0	Carbon disulfide	1.5	11		U	
56-23-5	Carbon tetrachloride	0.99	11		U	
108-90-7	Chlorobenzene	0.38	11		U	
75-00-3	Chloroethane	1.2	11		U	
67-66-3	Chloroform	0.62	11		U	
74-87-3	Chloromethane	0.58	11		U	
110-82-7	Cyclohexane	0.61	11	114 ~~0.62~~	~~J~~	B1
124-48-1	Dibromochloromethane	0.38	11		U	
96-12-8	1,2-Dibromo-3-chloropropane	1.3	5.6		U	
106-93-4	1,2-Dibromoethane	0.48	11		U	
95-50-1	1,2-Dichlorobenzene	0.42	11		U	
541-73-1	1,3-Dichlorobenzene	0.94	11		U	
106-46-7	1,4-Dichlorobenzene	0.62	11		U	
75-71-8	Dichlorodifluoromethane	1.2	11		U	
75-34-3	1,1-Dichloroethane	0.61	11		U	
107-06-2	1,2-Dichloroethane	0.52	11		U	
75-35-4	1,1-Dichloroethene	1.3	11		U	
156-59-2	cis-1,2-Dichloroethene	1.3	11		U	
156-60-5	trans-1,2-Dichloroethene	1.2	11		U	
78-87-5	1,2-Dichloropropane	0.52	11		U	
10061-01-5	cis-1,3-Dichloropropene	0.56	11		U	
10061-02-6	trans-1,3-Dichloropropene	0.36	11		U	
100-41-4	Ethylbenzene	0.84	11	1.6	J	
591-78-6	2-Hexanone	2.6	11		U	
98-82-8	Isopropylbenzene	0.99	11		U	
79-20-9	Methyl acetate	1.8	11		U	
75-09-2	Methylene chloride	0.70	11	114 ~~1.3~~	~~JB~~	B1
108-87-2	Methyl cyclohexane	0.34	11	0.66	J	
1634-04-4	Methyl tert-butyl ether	0.36	11		U	
108-10-1	4-Methyl-2-pentanone	0.65	11		U	
100-42-5	Styrene	0.39	11		U	
79-34-5	1,1,2,2-Tetrachloroethane	0.48	11		U	
127-18-4	Tetrachloroethene	1.1	11		U	

FORM I VOA

DW 2/28/09

FORM 1
VOLATILE ORGANICS ANALYSIS DATA SHEET

CLIENT SAMPLE NO.

MR08-SS124-08D

Lab Name: EMPIRICAL LABS Contract: CH2MHILL

Lab Code: NA Case No.: NA SAS No.: NA SDG No.: LEJEUNE029

Matrix: (soil/water) SOIL Lab Sample ID: 0812176-05

Sample wt/vol: 4.8 (g/mL) G Lab File ID: 1217605B

Level: (low/med) LOW Date Sampled: 12/10/08 10:35

% Moisture: not dec. 7 Date Analyzed: 12/24/08 13:22

GC Column: RTX-VRX ID: 0.25 (mm) Dilution Factor: 1.0

Soil Extract Volume:_____(uL) Soil Aliquot Volume: _____(uL)

CONCENTRATION UNITS: (ug/L or ug/Kg) UG/KG

CAS NO.	COMPOUND	MDL	RL	CONC	Q
108-88-3	Toluene	0.97	11	2.1	J
120-82-1	1,2,4-Trichlorobenzene	0.20	11		U
71-55-6	1,1,1-Trichloroethane	1.0	11		U
79-00-5	1,1,2-Trichloroethane	0.39	11		U
79-01-6	Trichloroethene	0.96	11		U
76-13-1	Trichlorotrifluoroethane	0.62	11		U
75-69-4	Trichlorofluoromethane	1.1	11		U
75-01-4	Vinyl chloride	1.2	11		U
1330-20-7	Xylene(total)	0.79	11		U

lw
2/28/09

FORM 1
VOLATILE ORGANICS ANALYSIS DATA SHEET

CLIENT SAMPLE NO.

MR08-IS12
4-2-3-08D

Lab Name: EMPIRICAL LABS Contract: CH2MHILL

Lab Code: NA Case No.: NA SAS No.: NA SDG No.: LEJEUNE029

Matrix: (soil/water) SOIL Lab Sample ID: 0812176-06

Sample wt/vol: 3.9 (g/mL) G Lab File ID: 1217606A

Level: (low/med) LOW Date Sampled: 12/10/08 10:50

% Moisture: not dec. 8 Date Analyzed: 12/24/08 14:01

GC Column: RTX-VRX ID: 0.25 (mm) Dilution Factor: 1.0

Soil Extract Volume:_____(uL) Soil Aliquot Volume: _____(uL)

CONCENTRATION UNITS: (ug/L or ug/Kg) UG/KG

CAS NO.	COMPOUND	MDL	RL	CONC	Q
67-64-1	Acetone	2.8	14	14u ~~11~~ ~~J~~	B
71-43-2	Benzene	0.66	14		U
75-27-4	Bromodichloromethane	0.42	14		U
75-25-2	Bromoform	1.4	14		U
74-83-9	Bromomethane	1.0	14		U
78-93-3	2-Butanone	2.0	14		U
75-15-0	Carbon disulfide	1.8	14		U
56-23-5	Carbon tetrachloride	1.2	14		U
108-90-7	Chlorobenzene	0.48	14		U
75-00-3	Chloroethane	1.5	14		U
67-66-3	Chloroform	0.77	14		U
74-87-3	Chloromethane	0.73	14		U
110-82-7	Cyclohexane	0.76	14		U
124-48-1	Dibromochloromethane	0.48	14		U
96-12-8	1,2-Dibromo-3-chloropropane	1.7	7.0		U
106-93-4	1,2-Dibromoethane	0.60	14		U
95-50-1	1,2-Dichlorobenzene	0.52	14		U
541-73-1	1,3-Dichlorobenzene	1.2	14		U
106-46-7	1,4-Dichlorobenzene	0.77	14		U
75-71-8	Dichlorodifluoromethane	1.5	14		U
75-34-3	1,1-Dichloroethane	0.76	14		U
107-06-2	1,2-Dichloroethane	0.64	14		U
75-35-4	1,1-Dichloroethene	1.7	14		U
156-59-2	cis-1,2-Dichloroethene	1.7	14		U
156-60-5	trans-1,2-Dichloroethene	1.5	14		U
78-87-5	1,2-Dichloropropane	0.64	14		U
10061-01-5	cis-1,3-Dichloropropene	0.70	14		U
10061-02-6	trans-1,3-Dichloropropene	0.45	14		U
100-41-4	Ethylbenzene	1.0	14		U
591-78-6	2-Hexanone	3.2	14		U
98-82-8	Isopropylbenzene	1.2	14		U
79-20-9	Methyl acetate	2.2	14		U
75-09-2	Methylene chloride	0.87	14	14u ~~1.6~~ ~~JB~~	B
108-87-2	Methyl cyclohexane	0.42	14		U
1634-04-4	Methyl tert-butyl ether	0.45	14		U
108-10-1	4-Methyl-2-pentanone	0.81	14		U
100-42-5	Styrene	0.49	14		U
79-34-5	1,1,2,2-Tetrachloroethane	0.60	14		U
127-18-4	Tetrachloroethene	1.4	14		U

FORM I VOA

2/28/09

6

FORM 1
VOLATILE ORGANICS ANALYSIS DATA SHEET

CLIENT SAMPLE NO.

MR08-IS12
4-2-3-08D

Lab Name: EMPIRICAL LABS Contract: CH2MHILL

Lab Code: NA Case No.: NA SAS No.: NA SDG No.: LEJEUNE029

Matrix: (soil/water) SOIL Lab Sample ID: 0812176-06

Sample wt/vol: 3.9 (g/mL) G Lab File ID: 1217606A

Level: (low/med) LOW Date Sampled: 12/10/08 10:50

% Moisture: not dec. 8 Date Analyzed: 12/24/08 14:01

GC Column: RTX-VRX ID: 0.25 (mm) Dilution Factor: 1.0

Soil Extract Volume:_____(uL) Soil Aliquot Volume: _____(uL)

CONCENTRATION UNITS: (ug/L or ug/Kg) UG/KG

CAS NO.	COMPOUND	MDL	RL	CONC	Q
108-88-3	Toluene	1.2	14		U
120-82-1	1,2,4-Trichlorobenzene	0.25	14		U
71-55-6	1,1,1-Trichloroethane	1.2	14		U
79-00-5	1,1,2-Trichloroethane	0.49	14		U
79-01-6	Trichloroethene	1.2	14		U
76-13-1	Trichlorotrifluoroethane	0.77	14		U
75-69-4	Trichlorofluoromethane	1.3	14		U
75-01-4	Vinyl chloride	1.5	14		U
1330-20-7	Xylene(total)	0.98	14		U

lw
2128109

7

FORM 1
VOLATILE ORGANICS ANALYSIS DATA SHEET

CLIENT SAMPLE NO.

MR08-SS099-08D

Lab Name: EMPIRICAL LABS Contract: CH2MHILL

Lab Code: NA Case No.: NA SAS No.: NA SDG No.: LEJEUNE029

Matrix: (soil/water) SOIL Lab Sample ID: 0812176-07

Sample wt/vol: 2.6 (g/mL) G Lab File ID: 1217607A

Level: (low/med) LOW Date Sampled: 12/10/08 11:25

% Moisture: not dec. 6 Date Analyzed: 12/24/08 14:41

GC Column: RTX-VRX ID: 0.25 (mm) Dilution Factor: 1.0

Soil Extract Volume:_____(uL) Soil Aliquot Volume: _____(uL)

CONCENTRATION UNITS: (ug/L or ug/Kg) UG/KG

CAS NO.	COMPOUND	MDL	RL	CONC	Q	
67-64-1	Acetone	4.1	20	36	U	BL
71-43-2	Benzene	0.96	20	2.2	J	
75-27-4	Bromodichloromethane	0.61	20		U	
75-25-2	Bromoform	2.0	20		U	
74-83-9	Bromomethane	1.5	20		U	
78-93-3	2-Butanone	2.8	20	7.4	J	
75-15-0	Carbon disulfide	2.6	20		U	
56-23-5	Carbon tetrachloride	1.8	20		U	
108-90-7	Chlorobenzene	0.69	20		U	
75-00-3	Chloroethane	2.2	20		U	
67-66-3	Chloroform	1.1	20		U	
74-87-3	Chloromethane	1.0	20		U	
110-82-7	Cyclohexane	1.1	20	20U ~~1.2~~	~~J~~	BL
124-48-1	Dibromochloromethane	0.69	20		U	
96-12-8	1,2-Dibromo-3-chloropropane	2.4	10		U	
106-93-4	1,2-Dibromoethane	0.88	20		U	
95-50-1	1,2-Dichlorobenzene	0.75	20		U	
541-73-1	1,3-Dichlorobenzene	1.7	20		U	
106-46-7	1,4-Dichlorobenzene	1.1	20		U	
75-71-8	Dichlorodifluoromethane	2.2	20		U	
75-34-3	1,1-Dichloroethane	1.1	20		U	
107-06-2	1,2-Dichloroethane	0.94	20		U	
75-35-4	1,1-Dichloroethene	2.4	20		U	
156-59-2	cis-1,2-Dichloroethene	2.4	20		U	
156-60-5	trans-1,2-Dichloroethene	2.2	20		U	
78-87-5	1,2-Dichloropropane	0.94	20		U	
10061-01-5	cis-1,3-Dichloropropene	1.0	20		U	
10061-02-6	trans-1,3-Dichloropropene	0.65	20		U	
100-41-4	Ethylbenzene	1.5	20	5.7	J	
591-78-6	2-Hexanone	4.7	20		U	
98-82-8	Isopropylbenzene	1.8	20		U	
79-20-9	Methyl acetate	3.3	20		U	
75-09-2	Methylene chloride	1.3	20	20U ~~2.3~~	~~JB~~	BL
108-87-2	Methyl cyclohexane	0.61	20	1.7	J	
1634-04-4	Methyl tert-butyl ether	0.65	20		U	
108-10-1	4-Methyl-2-pentanone	1.2	20		U	
100-42-5	Styrene	0.71	20		U	
79-34-5	1,1,2,2-Tetrachloroethane	0.88	20		U	
127-18-4	Tetrachloroethene	2.0	20		U	

lw 2/28/09

FORM 1
VOLATILE ORGANICS ANALYSIS DATA SHEET

CLIENT SAMPLE NO. 7

MR08-SS099-08D

Lab Name: EMPIRICAL LABS Contract: CH2MHILL

Lab Code: NA Case No.: NA SAS No.: NA SDG No.: LEJEUNE029

Matrix: (soil/water) SOIL Lab Sample ID: 0812176-07

Sample wt/vol: 2.6 (g/mL) G Lab File ID: 1217607A

Level: (low/med) LOW Date Sampled: 12/10/08 11:25

% Moisture: not dec. 6 Date Analyzed: 12/24/08 14:41

GC Column: RTX-VRX ID: 0.25 (mm) Dilution Factor: 1.0

Soil Extract Volume:_____(uL) Soil Aliquot Volume: _____(uL)

CONCENTRATION UNITS: (ug/L or ug/Kg) UG/KG

CAS NO.	COMPOUND	MDL	RL	CONC	Q
108-88-3	Toluene	1.8	20	4.0	J
120-82-1	1,2,4-Trichlorobenzene	0.37	20		U
71-55-6	1,1,1-Trichloroethane	1.8	20		U
79-00-5	1,1,2-Trichloroethane	0.71	20		U
79-01-6	Trichloroethene	1.7	20		U
76-13-1	Trichlorotrifluoroethane	1.1	20		U
75-69-4	Trichlorofluoromethane	1.9	20		U
75-01-4	Vinyl chloride	2.2	20		U
1330-20-7	Xylene(total)	1.4	20		U

Qw
2/28/09

8

FORM 1
VOLATILE ORGANICS ANALYSIS DATA SHEET

CLIENT SAMPLE NO.

MR08-SS099D-08D

Lab Name: EMPIRICAL LABS Contract: CH2MHILL

Lab Code: NA Case No.: NA SAS No.: NA SDG No.: LEJEUNE029

Matrix: (soil/water) SOIL Lab Sample ID: 0812176-08

Sample wt/vol: 6.5 (g/mL) G Lab File ID: 1217608A

Level: (low/med) LOW Date Sampled: 12/10/08 11:35

% Moisture: not dec. 5 Date Analyzed: 12/24/08 15:20

GC Column: RTX-VRX ID: 0.25 (mm) Dilution Factor: 1.0

Soil Extract Volume:_____(uL) Soil Aliquot Volume: _____(uL)

CONCENTRATION UNITS: (ug/L or ug/Kg) UG/KG

CAS NO.	COMPOUND	MDL	RL	CONC	Q	
67-64-1	Acetone	1.6	8.2	16	~~U~~	BL
71-43-2	Benzene	0.38	8.2	0.64	J	
75-27-4	Bromodichloromethane	0.24	8.2		U	
75-25-2	Bromoform	0.82	8.2		U	
74-83-9	Bromomethane	0.59	8.2		U	
78-93-3	2-Butanone	1.1	8.2	3.0	J	
75-15-0	Carbon disulfide	1.1	8.2		U	
56-23-5	Carbon tetrachloride	0.72	8.2		U	
108-90-7	Chlorobenzene	0.28	8.2		U	
75-00-3	Chloroethane	0.90	8.2		U	
67-66-3	Chloroform	0.45	8.2		U	
74-87-3	Chloromethane	0.42	8.2		U	
110-82-7	Cyclohexane	0.44	8.2		U	
124-48-1	Dibromochloromethane	0.28	8.2		U	
96-12-8	1,2-Dibromo-3-chloropropane	0.98	4.1		~~U~~ UJ	ISL
106-93-4	1,2-Dibromoethane	0.35	8.2		U	
95-50-1	1,2-Dichlorobenzene	0.30	8.2		~~U~~ UJ	ISL
541-73-1	1,3-Dichlorobenzene	0.68	8.2		U	
106-46-7	1,4-Dichlorobenzene	0.45	8.2		U	
75-71-8	Dichlorodifluoromethane	0.90	8.2		U	
75-34-3	1,1-Dichloroethane	0.44	8.2		U	
107-06-2	1,2-Dichloroethane	0.38	8.2		U	
75-35-4	1,1-Dichloroethene	0.98	8.2		U	
156-59-2	cis-1,2-Dichloroethene	0.98	8.2		U	
156-60-5	trans-1,2-Dichloroethene	0.90	8.2		U	
78-87-5	1,2-Dichloropropane	0.38	8.2		U	
10061-01-5	cis-1,3-Dichloropropene	0.41	8.2		U	
10061-02-6	trans-1,3-Dichloropropene	0.26	8.2		U	
100-41-4	Ethylbenzene	0.61	8.2	2.4	J	
591-78-6	2-Hexanone	1.9	8.2		U	
98-82-8	Isopropylbenzene	0.72	8.2		U	
79-20-9	Methyl acetate	1.3	8.2		U	
75-09-2	Methylene chloride	0.51	8.2	8.2 ~~0.84~~	~~JB~~	BL
108-87-2	Methyl cyclohexane	0.24	8.2	0.39	J	
1634-04-4	Methyl tert-butyl ether	0.26	8.2		U	
108-10-1	4-Methyl-2-pentanone	0.47	8.2	0.53	J	
100-42-5	Styrene	0.28	8.2		U	
79-34-5	1,1,2,2-Tetrachloroethane	0.35	8.2		~~U~~ UJ	ISL
127-18-4	Tetrachloroethene	0.79	8.2		U	

RW
2/28/09

8

FORM 1
VOLATILE ORGANICS ANALYSIS DATA SHEET

CLIENT SAMPLE NO.

MR08-SS099D-08D

Lab Name: EMPIRICAL LABS Contract: CH2MHILL

Lab Code: NA Case No.: NA SAS No.: NA SDG No.: LEJEUNE029

Matrix: (soil/water) SOIL Lab Sample ID: 0812176-08

Sample wt/vol: 6.5 (g/mL) G Lab File ID: 1217608A

Level: (low/med) LOW Date Sampled: 12/10/08 11:35

% Moisture: not dec. 5 Date Analyzed: 12/24/08 15:20

GC Column: RTX-VRX ID: 0.25 (mm) Dilution Factor: 1.0

Soil Extract Volume:_____(uL) Soil Aliquot Volume: _____(uL)

CONCENTRATION UNITS: (ug/L or ug/Kg) UG/KG

CAS NO.	COMPOUND	MDL	RL	CONC	Q
108-88-3	Toluene	0.70	8.2	8.2 ~~1.5~~	~~J~~ 1BL
120-82-1	1,2,4-Trichlorobenzene	0.15	8.2		~~U~~ UJ ISL
71-55-6	1,1,1-Trichloroethane	0.73	8.2		U
79-00-5	1,1,2-Trichloroethane	0.28	8.2		U
79-01-6	Trichloroethene	0.69	8.2		U
76-13-1	Trichlorotrifluoroethane	0.45	8.2		U
75-69-4	Trichlorofluoromethane	0.78	8.2		U
75-01-4	Vinyl chloride	0.90	8.2		U
1330-20-7	Xylene(total)	0.57	8.2		U

FORM I VOA

MW 2/28/09

8RE

FORM 1
VOLATILE ORGANICS ANALYSIS DATA SHEET

CLIENT SAMPLE NO.

MR08-SS0
99D-08DR

Lab Name: EMPIRICAL LABS Contract: CH2MHILL

Lab Code: NA Case No.: NA SAS No.: NA SDG No.: LEJEUNE029

Matrix: (soil/water) SOIL Lab Sample ID: 0812176-08R

Sample wt/vol: 4.2 (g/mL) G Lab File ID: 1217608B

Level: (low/med) LOW Date Sampled: 12/10/08 11:35

% Moisture: not dec. 5 Date Analyzed: 01/03/09 14:15 use orig. WPM

GC Column: RTX-VRX ID: 0.25 (mm) Dilution Factor: 1.0

Soil Extract Volume:_____(uL) Soil Aliquot Volume: _____(uL)

CONCENTRATION UNITS: (ug/L or ug/Kg) UG/KG

CAS NO.	COMPOUND	MDL	RL	CONC	Q
67-64-1	Acetone	2.5	12	14	UJ HT B
71-43-2	Benzene	0.59	12	1.1	J J HT
75-27-4	Bromodichloromethane	0.38	12		U UJ HT
75-25-2	Bromoform	1.2	12		U
74-83-9	Bromomethane	0.90	12		U
78-93-3	2-Butanone	1.8	12	2.7	J J
75-15-0	Carbon disulfide	1.6	12		U UJ
56-23-5	Carbon tetrachloride	1.1	12		U
108-90-7	Chlorobenzene	0.42	12		U
75-00-3	Chloroethane	1.4	12		U
67-66-3	Chloroform	0.69	12		U
74-87-3	Chloromethane	0.65	12		U
110-82-7	Cyclohexane	0.68	12		U
124-48-1	Dibromochloromethane	0.42	12		U
96-12-8	1,2-Dibromo-3-chloropropane	1.5	6.3		U
106-93-4	1,2-Dibromoethane	0.54	12		U
95-50-1	1,2-Dichlorobenzene	0.46	12		U
541-73-1	1,3-Dichlorobenzene	1.0	12		U
106-46-7	1,4-Dichlorobenzene	0.69	12		U
75-71-8	Dichlorodifluoromethane	1.4	12		U
75-34-3	1,1-Dichloroethane	0.68	12		U
107-06-2	1,2-Dichloroethane	0.58	12		U
75-35-4	1,1-Dichloroethene	1.5	12		U
156-59-2	cis-1,2-Dichloroethene	1.5	12		U
156-60-5	trans-1,2-Dichloroethene	1.4	12		U
78-87-5	1,2-Dichloropropane	0.58	12		U
10061-01-5	cis-1,3-Dichloropropene	0.63	12		U
10061-02-6	trans-1,3-Dichloropropene	0.40	12		U
100-41-4	Ethylbenzene	0.94	12	3.4	J J
591-78-6	2-Hexanone	2.9	12		U UJ
98-82-8	Isopropylbenzene	1.1	12		U
79-20-9	Methyl acetate	2.0	12		U
75-09-2	Methylene chloride	0.78	12	12 UJ ~~2.5~~	~~JB~~ HT B
108-87-2	Methyl cyclohexane	0.38	12	0.94	J J
1634-04-4	Methyl tert-butyl ether	0.40	12		U UJ
108-10-1	4-Methyl-2-pentanone	0.73	12		U
100-42-5	Styrene	0.44	12		U
79-34-5	1,1,2,2-Tetrachloroethane	0.54	12		U
127-18-4	Tetrachloroethene	1.2	12		U

RE

FORM I VOA

LW 2/28/09

FORM 1
VOLATILE ORGANICS ANALYSIS DATA SHEET

CLIENT SAMPLE NO. 8RE

MR08-SS0
99D-08DR

Lab Name: EMPIRICAL LABS Contract: CH2MHILL

Lab Code: NA Case No.: NA SAS No.: NA SDG No.: LEJEUNE029

Matrix: (soil/water) SOIL Lab Sample ID: 0812176-08R

Sample wt/vol: 4.2 (g/mL) G Lab File ID: 1217608B

Level: (low/med) LOW Date Sampled: 12/10/08 11:35 use only NF

% Moisture: not dec. 5 Date Analyzed: 01/03/09 14:15

GC Column: RTX-VRX ID: 0.25 (mm) Dilution Factor: 1.0

Soil Extract Volume:_____(uL) Soil Aliquot Volume: _____(uL)

CONCENTRATION UNITS: (ug/L or ug/Kg) UG/KG

CAS NO.	COMPOUND	MDL	RL	CONC	Q
108-88-3	Toluene	1.1	12	2.4	~~J~~ J
120-82-1	1,2,4-Trichlorobenzene	0.22	12		U UJ
71-55-6	1,1,1-Trichloroethane	1.1	12		U
79-00-5	1,1,2-Trichloroethane	0.44	12		U
79-01-6	Trichloroethene	1.1	12		U
76-13-1	Trichlorotrifluoroethane	0.69	12		U
75-69-4	Trichlorofluoromethane	1.2	12		U
75-01-4	Vinyl chloride	1.4	12		U
1330-20-7	Xylene(total)	0.88	12		U

H

R RE

FORM I VOA

lw 2/28/09

FORM 1
VOLATILE ORGANICS ANALYSIS DATA SHEET

CLIENT SAMPLE NO.

MR08-IS09
9-2-3-08D

9

Lab Name: EMPIRICAL LABS Contract: CH2MHILL

Lab Code: NA Case No.: NA SAS No.: NA SDG No.: LEJEUNE029

Matrix: (soil/water) SOIL Lab Sample ID: 0812176-09

Sample wt/vol: 3.7 (g/mL) G Lab File ID: 1217609A

Level: (low/med) LOW Date Sampled: 12/10/08 12:00

% Moisture: not dec. 8 Date Analyzed: 12/24/08 15:59

GC Column: RTX-VRX ID: 0.25 (mm) Dilution Factor: 1.0

Soil Extract Volume:_____(uL) Soil Aliquot Volume: _____(uL)

CONCENTRATION UNITS: (ug/L or ug/Kg) UG/KG

CAS NO.	COMPOUND	MDL	RL	CONC	Q	
67-64-1	Acetone	2.9	14	15	u	B
71-43-2	Benzene	0.68	14		U	
75-27-4	Bromodichloromethane	0.44	14		U	
75-25-2	Bromoform	1.4	14		U	
74-83-9	Bromomethane	1.0	14		U	
78-93-3	2-Butanone	2.0	14		U	
75-15-0	Carbon disulfide	1.9	14		U	
56-23-5	Carbon tetrachloride	1.3	14		U	
108-90-7	Chlorobenzene	0.50	14		U	
75-00-3	Chloroethane	1.6	14		U	
67-66-3	Chloroform	0.80	14		U	
74-87-3	Chloromethane	0.76	14		U	
110-82-7	Cyclohexane	0.79	14		U	
124-48-1	Dibromochloromethane	0.50	14		U	
96-12-8	1,2-Dibromo-3-chloropropane	1.8	7.3		U	
106-93-4	1,2-Dibromoethane	0.63	14		U	
95-50-1	1,2-Dichlorobenzene	0.54	14		U	
541-73-1	1,3-Dichlorobenzene	1.2	14		U	
106-46-7	1,4-Dichlorobenzene	0.80	14		U	
75-71-8	Dichlorodifluoromethane	1.6	14		U	
75-34-3	1,1-Dichloroethane	0.79	14		U	
107-06-2	1,2-Dichloroethane	0.67	14		U	
75-35-4	1,1-Dichloroethene	1.8	14		U	
156-59-2	cis-1,2-Dichloroethene	1.8	14		U	
156-60-5	trans-1,2-Dichloroethene	1.6	14		U	
78-87-5	1,2-Dichloropropane	0.67	14		U	
10061-01-5	cis-1,3-Dichloropropene	0.73	14		U	
10061-02-6	trans-1,3-Dichloropropene	0.47	14		U	
100-41-4	Ethylbenzene	1.1	14		U	
591-78-6	2-Hexanone	3.4	14		U	
98-82-8	Isopropylbenzene	1.3	14		U	
79-20-9	Methyl acetate	2.3	14		U	
75-09-2	Methylene chloride	0.90	14	14u	~~1.7 JB~~	Bu
108-87-2	Methyl cyclohexane	0.44	14		U	
1634-04-4	Methyl tert-butyl ether	0.47	14		U	
108-10-1	4-Methyl-2-pentanone	0.85	14		U	
100-42-5	Styrene	0.51	14		U	
79-34-5	1,1,2,2-Tetrachloroethane	0.63	14		U	
127-18-4	Tetrachloroethene	1.4	14		U	

FORM I VOA

lw 2/28/09

FORM 1
VOLATILE ORGANICS ANALYSIS DATA SHEET

CLIENT SAMPLE NO. 9

MR08-IS09
9-2-3-08D

Lab Name: EMPIRICAL LABS Contract: CH2MHILL

Lab Code: NA Case No.: NA SAS No.: NA SDG No.: LEJEUNE029

Matrix: (soil/water) SOIL Lab Sample ID: 0812176-09

Sample wt/vol: 3.7 (g/mL) G Lab File ID: 1217609A

Level: (low/med) LOW Date Sampled: 12/10/08 12:00

% Moisture: not dec. 8 Date Analyzed: 12/24/08 15:59

GC Column: RTX-VRX ID: 0.25 (mm) Dilution Factor: 1.0

Soil Extract Volume:_____(uL) Soil Aliquot Volume: _____(uL)

CONCENTRATION UNITS: (ug/L or ug/Kg) UG/KG

CAS NO.	COMPOUND	MDL	RL	CONC	Q
108-88-3	Toluene	1.2	14		U
120-82-1	1,2,4-Trichlorobenzene	0.26	14		U
71-55-6	1,1,1-Trichloroethane	1.3	14		U
79-00-5	1,1,2-Trichloroethane	0.51	14		U
79-01-6	Trichloroethene	1.2	14		U
76-13-1	Trichlorotrifluoroethane	0.80	14		U
75-69-4	Trichlorofluoromethane	1.4	14		U
75-01-4	Vinyl chloride	1.6	14		U
1330-20-7	Xylene(total)	1.0	14		U

lw 2/28/09

FORM 1
VOLATILE ORGANICS ANALYSIS DATA SHEET

CLIENT SAMPLE NO. 10

MR08-IS09
9D-2-3-08D

Lab Name: EMPIRICAL LABS Contract: CH2MHILL

Lab Code: NA Case No.: NA SAS No.: NA SDG No.: LEJEUNE029

Matrix: (soil/water) SOIL Lab Sample ID: 0812176-10

Sample wt/vol: 5.9 (g/mL) G Lab File ID: 1217610A

Level: (low/med) LOW Date Sampled: 12/10/08 12:25

% Moisture: not dec. 12 Date Analyzed: 12/24/08 16:39

GC Column: RTX-VRX ID: 0.25 (mm) Dilution Factor: 1.0

Soil Extract Volume:_____(uL) Soil Aliquot Volume: _____(uL)

CONCENTRATION UNITS: (ug/L or ug/Kg) UG/KG

CAS NO.	COMPOUND	MDL	RL	CONC	Q
67-64-1	Acetone	1.9	9.6	9.6 u ~~6.9~~	~~J~~ B
71-43-2	Benzene	0.45	9.6		U
75-27-4	Bromodichloromethane	0.29	9.6		U
75-25-2	Bromoform	0.96	9.6		U
74-83-9	Bromomethane	0.69	9.6		U
78-93-3	2-Butanone	1.3	9.6		U
75-15-0	Carbon disulfide	1.2	9.6		U
56-23-5	Carbon tetrachloride	0.84	9.6		U
108-90-7	Chlorobenzene	0.33	9.6		U
75-00-3	Chloroethane	1.0	9.6		U
67-66-3	Chloroform	0.53	9.6		U
74-87-3	Chloromethane	0.50	9.6		U
110-82-7	Cyclohexane	0.52	9.6		U
124-48-1	Dibromochloromethane	0.33	9.6		U
96-12-8	1,2-Dibromo-3-chloropropane	1.2	4.8		U
106-93-4	1,2-Dibromoethane	0.41	9.6		U
95-50-1	1,2-Dichlorobenzene	0.36	9.6		U
541-73-1	1,3-Dichlorobenzene	0.81	9.6		U
106-46-7	1,4-Dichlorobenzene	0.53	9.6		U
75-71-8	Dichlorodifluoromethane	1.0	9.6		U
75-34-3	1,1-Dichloroethane	0.52	9.6		U
107-06-2	1,2-Dichloroethane	0.44	9.6		U
75-35-4	1,1-Dichloroethene	1.2	9.6		U
156-59-2	cis-1,2-Dichloroethene	1.2	9.6		U
156-60-5	trans-1,2-Dichloroethene	1.0	9.6		U
78-87-5	1,2-Dichloropropane	0.44	9.6		U
10061-01-5	cis-1,3-Dichloropropene	0.48	9.6		U
10061-02-6	trans-1,3-Dichloropropene	0.31	9.6		U
100-41-4	Ethylbenzene	0.72	9.6		U
591-78-6	2-Hexanone	2.2	9.6		U
98-82-8	Isopropylbenzene	0.84	9.6		U
79-20-9	Methyl acetate	1.5	9.6		U
75-09-2	Methylene chloride	0.60	9.6	9.6u ~~1.5~~	~~JB~~ B
108-87-2	Methyl cyclohexane	0.29	9.6		U
1634-04-4	Methyl tert-butyl ether	0.31	9.6		U
108-10-1	4-Methyl-2-pentanone	0.56	9.6		U
100-42-5	Styrene	0.34	9.6		U
79-34-5	1,1,2,2-Tetrachloroethane	0.41	9.6		U
127-18-4	Tetrachloroethene	0.93	9.6		U

LWS 2/28/09

FORM 1
VOLATILE ORGANICS ANALYSIS DATA SHEET

CLIENT SAMPLE NO. 10

MR08-IS09
9D-2-3-08D

Lab Name: EMPIRICAL LABS Contract: CH2MHILL

Lab Code: NA Case No.: NA SAS No.: NA SDG No.: LEJEUNE029

Matrix: (soil/water) SOIL Lab Sample ID: 0812176-10

Sample wt/vol: 5.9 (g/mL) G Lab File ID: 1217610A

Level: (low/med) LOW Date Sampled: 12/10/08 12:25

% Moisture: not dec. 12 Date Analyzed: 12/24/08 16:39

GC Column: RTX-VRX ID: 0.25 (mm) Dilution Factor: 1.0

Soil Extract Volume:_____(uL) Soil Aliquot Volume: _____(uL)

CONCENTRATION UNITS: (ug/L or ug/Kg) UG/KG

CAS NO.	COMPOUND	MDL	RL	CONC	Q
108-88-3	Toluene	0.82	9.6		U
120-82-1	1,2,4-Trichlorobenzene	0.17	9.6		U
71-55-6	1,1,1-Trichloroethane	0.86	9.6		U
79-00-5	1,1,2-Trichloroethane	0.34	9.6		U
79-01-6	Trichloroethene	0.82	9.6		U
76-13-1	Trichlorotrifluoroethane	0.53	9.6		U
75-69-4	Trichlorofluoromethane	0.91	9.6		U
75-01-4	Vinyl chloride	1.0	9.6		U
1330-20-7	Xylene(total)	0.67	9.6		U

2/28/09

FORM 1
VOLATILE ORGANICS ANALYSIS DATA SHEET

CLIENT SAMPLE NO. 11

MR08-SS100-08D

Lab Name: EMPIRICAL LABS Contract: CH2MHILL

Lab Code: NA Case No.: NA SAS No.: NA SDG No.: LEJEUNE029

Matrix: (soil/water) SOIL Lab Sample ID: 0812176-11

Sample wt/vol: 2.7 (g/mL) G Lab File ID: 1217611A

Level: (low/med) LOW Date Sampled: 12/10/08 13:15

% Moisture: not dec. 6 Date Analyzed: 12/24/08 17:18

GC Column: RTX-VRX ID: 0.25 (mm) Dilution Factor: 1.0

Soil Extract Volume:_____(uL) Soil Aliquot Volume: _____(uL)

CONCENTRATION UNITS: (ug/L or ug/Kg) UG/KG

CAS NO.	COMPOUND	MDL	RL	CONC	Q
67-64-1	Acetone	4.0	20	23	UJ ~~BE~~ SS1
71-43-2	Benzene	0.93	20		U UJ SS
75-27-4	Bromodichloromethane	0.60	20		U
75-25-2	Bromoform	2.0	20		U
74-83-9	Bromomethane	1.4	20		U
78-93-3	2-Butanone	2.8	20		U
75-15-0	Carbon disulfide	2.6	20	4.6	J J
56-23-5	Carbon tetrachloride	1.7	20		U UJ
108-90-7	Chlorobenzene	0.68	20		U
75-00-3	Chloroethane	2.2	20		U
67-66-3	Chloroform	1.1	20		U
74-87-3	Chloromethane	1.0	20		U
110-82-7	Cyclohexane	1.1	20		U
124-48-1	Dibromochloromethane	0.68	20		U
96-12-8	1,2-Dibromo-3-chloropropane	2.4	9.9		U
106-93-4	1,2-Dibromoethane	0.85	20		U
95-50-1	1,2-Dichlorobenzene	0.74	20		U
541-73-1	1,3-Dichlorobenzene	1.7	20		U
106-46-7	1,4-Dichlorobenzene	1.1	20		U
75-71-8	Dichlorodifluoromethane	2.2	20		U
75-34-3	1,1-Dichloroethane	1.1	20		U
107-06-2	1,2-Dichloroethane	0.91	20		U
75-35-4	1,1-Dichloroethene	2.4	20		U
156-59-2	cis-1,2-Dichloroethene	2.4	20		U
156-60-5	trans-1,2-Dichloroethene	2.2	20		U
78-87-5	1,2-Dichloropropane	0.91	20		U
10061-01-5	cis-1,3-Dichloropropene	0.99	20		U
10061-02-6	trans-1,3-Dichloropropene	0.64	20		U
100-41-4	Ethylbenzene	1.5	20	1.8	J J
591-78-6	2-Hexanone	4.6	20		U UJ
98-82-8	Isopropylbenzene	1.7	20		U
79-20-9	Methyl acetate	3.2	20		U
75-09-2	Methylene chloride	1.2	20	20UJ 2.0	~~JB~~ ~~SS1B~~
108-87-2	Methyl cyclohexane	0.60	20		U UJ SS
1634-04-4	Methyl tert-butyl ether	0.64	20		U
108-10-1	4-Methyl-2-pentanone	1.2	20		U
100-42-5	Styrene	0.70	20		U
79-34-5	1,1,2,2-Tetrachloroethane	0.85	20		U
127-18-4	Tetrachloroethene	1.9	20		U

FORM I VOA

LW 2/28/09

FORM 1
VOLATILE ORGANICS ANALYSIS DATA SHEET

CLIENT SAMPLE NO. 11

MR08-SS100-08D

Lab Name: EMPIRICAL LABS Contract: CH2MHILL

Lab Code: NA Case No.: NA SAS No.: NA SDG No.: LEJEUNE029

Matrix: (soil/water) SOIL Lab Sample ID: 0812176-11

Sample wt/vol: 2.7 (g/mL) G Lab File ID: 1217611A

Level: (low/med) LOW Date Sampled: 12/10/08 13:15

% Moisture: not dec. 6 Date Analyzed: 12/24/08 17:18

GC Column: RTX-VRX ID: 0.25 (mm) Dilution Factor: 1.0

Soil Extract Volume:_____(uL) Soil Aliquot Volume: _____(uL)

CONCENTRATION UNITS: (ug/L or ug/Kg) UG/KG

CAS NO.	COMPOUND	MDL	RL	CONC	Q
108-88-3	Toluene	1.7	20		~~U~~ UJ SSI
120-82-1	1,2,4-Trichlorobenzene	0.36	20		~~U~~
71-55-6	1,1,1-Trichloroethane	1.8	20		~~U~~
79-00-5	1,1,2-Trichloroethane	0.70	20		~~U~~
79-01-6	Trichloroethene	1.7	20		~~U~~
76-13-1	Trichlorotrifluoroethane	1.1	20		~~U~~
75-69-4	Trichlorofluoromethane	1.9	20		~~U~~
75-01-4	Vinyl chloride	2.2	20		~~U~~
1330-20-7	Xylene(total)	1.4	20		~~U~~

lw 2/28/09

12

FORM 1
VOLATILE ORGANICS ANALYSIS DATA SHEET

CLIENT SAMPLE NO.

MR08-IS10
0-2-3-08D

Lab Name: EMPIRICAL LABS Contract: CH2MHILL

Lab Code: NA Case No.: NA SAS No.: NA SDG No.: LEJEUNE029

Matrix: (soil/water) SOIL Lab Sample ID: 0812176-12

Sample wt/vol: 3.2 (g/mL) G Lab File ID: 1217612A

Level: (low/med) LOW Date Sampled: 12/10/08 13:40

% Moisture: not dec. 13 Date Analyzed: 12/24/08 17:57

GC Column: RTX-VRX ID: 0.25 (mm) Dilution Factor: 1.0

Soil Extract Volume:_____(uL) Soil Aliquot Volume: _____(uL)

CONCENTRATION UNITS: (ug/L or ug/Kg) UG/KG

CAS NO.	COMPOUND	MDL	RL	CONC	Q	
67-64-1	Acetone	3.6	18	18UJ	~~6.7 J~~	ISL BL
71-43-2	Benzene	0.85	18		U UJ	ISL
75-27-4	Bromodichloromethane	0.54	18		U	
75-25-2	Bromoform	1.8	18		U	
74-83-9	Bromomethane	1.3	18		U	
78-93-3	2-Butanone	2.5	18		U	
75-15-0	Carbon disulfide	2.4	18		U	
56-23-5	Carbon tetrachloride	1.6	18		U	
108-90-7	Chlorobenzene	0.62	18		U	
75-00-3	Chloroethane	2.0	18		U	
67-66-3	Chloroform	1.0	18		U	
74-87-3	Chloromethane	0.94	18		U	
110-82-7	Cyclohexane	0.98	18		U	
124-48-1	Dibromochloromethane	0.62	18		U	
96-12-8	1,2-Dibromo-3-chloropropane	2.2	9.1		U	
106-93-4	1,2-Dibromoethane	0.78	18		U	
95-50-1	1,2-Dichlorobenzene	0.67	18		U	
541-73-1	1,3-Dichlorobenzene	1.5	18		U	
106-46-7	1,4-Dichlorobenzene	1.0	18		U	
75-71-8	Dichlorodifluoromethane	2.0	18		U	
75-34-3	1,1-Dichloroethane	0.98	18		U	
107-06-2	1,2-Dichloroethane	0.84	18		U	
75-35-4	1,1-Dichloroethene	2.2	18		U	
156-59-2	cis-1,2-Dichloroethene	2.2	18		U	
156-60-5	trans-1,2-Dichloroethene	2.0	18		U	
78-87-5	1,2-Dichloropropane	0.84	18		U	
10061-01-5	cis-1,3-Dichloropropene	0.91	18		U	
10061-02-6	trans-1,3-Dichloropropene	0.58	18		U	
100-41-4	Ethylbenzene	1.4	18		U	
591-78-6	2-Hexanone	4.2	18		U	
98-82-8	Isopropylbenzene	1.6	18		U	
79-20-9	Methyl acetate	2.9	18		U	
75-09-2	Methylene chloride	1.1	18	18UJ	~~1.8 JB~~	ISL BL
108-87-2	Methyl cyclohexane	0.54	18		U UJ	ISL
1634-04-4	Methyl tert-butyl ether	0.58	18		U	
108-10-1	4-Methyl-2-pentanone	1.0	18		U	
100-42-5	Styrene	0.64	18		U	
79-34-5	1,1,2,2-Tetrachloroethane	0.78	18		U	
127-18-4	Tetrachloroethene	1.8	18		U	

FORM 1
VOLATILE ORGANICS ANALYSIS DATA SHEET

CLIENT SAMPLE NO. 12

MR08-IS10
0-2-3-08D

Lab Name: EMPIRICAL LABS Contract: CH2MHILL

Lab Code: NA Case No.: NA SAS No.: NA SDG No.: LEJEUNE029

Matrix: (soil/water) SOIL Lab Sample ID: 0812176-12

Sample wt/vol: 3.2 (g/mL) G Lab File ID: 1217612A

Level: (low/med) LOW Date Sampled: 12/10/08 13:40

% Moisture: not dec. 13 Date Analyzed: 12/24/08 17:57

GC Column: RTX-VRX ID: 0.25 (mm) Dilution Factor: 1.0

Soil Extract Volume:_____(uL) Soil Aliquot Volume: _____(uL)

CONCENTRATION UNITS: (ug/L or ug/Kg) UG/KG

CAS NO.	COMPOUND	MDL	RL	CONC	Q
108-88-3	Toluene	1.6	18		U UJ IS
120-82-1	1,2,4-Trichlorobenzene	0.33	18		U
71-55-6	1,1,1-Trichloroethane	1.6	18		U
79-00-5	1,1,2-Trichloroethane	0.64	18		U
79-01-6	Trichloroethene	1.5	18		U
76-13-1	Trichlorotrifluoroethane	1.0	18		U
75-69-4	Trichlorofluoromethane	1.7	18		U
75-01-4	Vinyl chloride	2.0	18		U
1330-20-7	Xylene(total)	1.3	18		U

FORM I VOA

RW
2/28/09

FORM 1
VOLATILE ORGANICS ANALYSIS DATA SHEET

CLIENT SAMPLE NO. 12RE

MR08-IS10
0-2-3-08DR

Lab Name: EMPIRICAL LABS Contract: CH2MHILL

Lab Code: NA Case No.: NA SAS No.: NA SDG No.: LEJEUNE029

Matrix: (soil/water) SOIL Lab Sample ID: 0812176-12R

Sample wt/vol: 3.1 (g/mL) G Lab File ID: 1217612B

Level: (low/med) LOW Date Sampled: 12/10/08 13:40 Use ORGANIC

% Moisture: not dec. 13 Date Analyzed: 01/03/09 14:54

GC Column: RTX-VRX ID: 0.25 (mm) Dilution Factor: 1.0

Soil Extract Volume:_____(uL) Soil Aliquot Volume: _____(uL)

CONCENTRATION UNITS: (ug/L or ug/Kg) UG/KG

CAS NO.	COMPOUND	MDL	RL	CONC	Q
67-64-1	Acetone	3.8	19	19UJ ~~8.0~~ ~~J~~	HT B
71-43-2	Benzene	0.88	19		U UJ H
75-27-4	Bromodichloromethane	0.56	19		U
75-25-2	Bromoform	1.9	19		U
74-83-9	Bromomethane	1.4	19		U
78-93-3	2-Butanone	2.6	19		U
75-15-0	Carbon disulfide	2.4	19		U
56-23-5	Carbon tetrachloride	1.6	19		U
108-90-7	Chlorobenzene	0.64	19		U
75-00-3	Chloroethane	2.1	19		U
67-66-3	Chloroform	1.0	19		U
74-87-3	Chloromethane	0.98	19		U
110-82-7	Cyclohexane	1.0	19		U
124-48-1	Dibromochloromethane	0.64	19		U
96-12-8	1,2-Dibromo-3-chloropropane	2.2	9.4		U
106-93-4	1,2-Dibromoethane	0.81	19		U
95-50-1	1,2-Dichlorobenzene	0.69	19		U
541-73-1	1,3-Dichlorobenzene	1.6	19		U
106-46-7	1,4-Dichlorobenzene	1.0	19		U
75-71-8	Dichlorodifluoromethane	2.1	19		U
75-34-3	1,1-Dichloroethane	1.0	19		U
107-06-2	1,2-Dichloroethane	0.86	19		U
75-35-4	1,1-Dichloroethene	2.2	19		U
156-59-2	cis-1,2-Dichloroethene	2.2	19		U
156-60-5	trans-1,2-Dichloroethene	2.1	19		U
78-87-5	1,2-Dichloropropane	0.86	19		U
10061-01-5	cis-1,3-Dichloropropene	0.94	19		U
10061-02-6	trans-1,3-Dichloropropene	0.60	19		U
100-41-4	Ethylbenzene	1.4	19		U
591-78-6	2-Hexanone	4.3	19		U
98-82-8	Isopropylbenzene	1.6	19		U
79-20-9	Methyl acetate	3.0	19		U
75-09-2	Methylene chloride	1.2	19	19UJ ~~1.6~~ ~~JB~~	HT B
108-87-2	Methyl cyclohexane	0.56	19		U UJ H
1634-04-4	Methyl tert-butyl ether	0.60	19		U
108-10-1	4-Methyl-2-pentanone	1.1	19		U
100-42-5	Styrene	0.66	19		U
79-34-5	1,1,2,2-Tetrachloroethane	0.81	19		U
127-18-4	Tetrachloroethene	1.8	19		U

RE

FORM I VOA

2/28/09

FORM 1
VOLATILE ORGANICS ANALYSIS DATA SHEET

CLIENT SAMPLE NO. 12RE

MR08-IS10
0-2-3-08DR

Lab Name: EMPIRICAL LABS Contract: CH2MHILL

Lab Code: NA Case No.: NA SAS No.: NA SDG No.: LEJEUNE029

Matrix: (soil/water) SOIL Lab Sample ID: 0812176-12R

Sample wt/vol: 3.1 (g/mL) G Lab File ID: 1217612B

Level: (low/med) LOW Date Sampled: 12/10/08 13:40 use 029, NA

% Moisture: not dec. 13 Date Analyzed: 01/03/09 14:54

GC Column: RTX-VRX ID: 0.25 (mm) Dilution Factor: 1.0

Soil Extract Volume:_____(uL) Soil Aliquot Volume:_____(uL)

CONCENTRATION UNITS: (ug/L or ug/Kg) UG/KG

CAS NO.	COMPOUND	MDL	RL	CONC	Q
108-88-3	Toluene	1.6	19		UWJ HT
120-82-1	1,2,4-Trichlorobenzene	0.34	19		U
71-55-6	1,1,1-Trichloroethane	1.7	19		U
79-00-5	1,1,2-Trichloroethane	0.66	19		U
79-01-6	Trichloroethene	1.6	19		U
76-13-1	Trichlorotrifluoroethane	1.0	19		U
75-69-4	Trichlorofluoromethane	1.8	19		U
75-01-4	Vinyl chloride	2.1	19		U
1330-20-7	Xylene(total)	1.3	19		U

R RE

FORM I VOA

CW
2/28/09

FORM 1
VOLATILE ORGANICS ANALYSIS DATA SHEET

CLIENT SAMPLE NO. 13

MR08-SS101-08D

Lab Name: EMPIRICAL LABS Contract: CH2MHILL

Lab Code: NA Case No.: NA SAS No.: NA SDG No.: LEJEUNE029

Matrix: (soil/water) SOIL Lab Sample ID: 0812176-13

Sample wt/vol: 2.4 (g/mL) G Lab File ID: 1217613A

Level: (low/med) LOW Date Sampled: 12/10/08 14:10

% Moisture: not dec. 7 Date Analyzed: 12/24/08 18:36

GC Column: RTX-VRX ID: 0.25 (mm) Dilution Factor: 1.0

Soil Extract Volume:_____(uL) Soil Aliquot Volume: _____(uL)

CONCENTRATION UNITS: (ug/L or ug/Kg) UG/KG

CAS NO.	COMPOUND	MDL	RL	CONC	Q	
67-64-1	Acetone	4.5	22	22U ~~22~~	~~J~~	B
71-43-2	Benzene	1.0	22	1.2	J	
75-27-4	Bromodichloromethane	0.67	22		U	
75-25-2	Bromoform	2.2	22		U	
74-83-9	Bromomethane	1.6	22		U	
78-93-3	2-Butanone	3.1	22		U	
75-15-0	Carbon disulfide	2.9	22		U	
56-23-5	Carbon tetrachloride	2.0	22		U	
108-90-7	Chlorobenzene	0.76	22		U	
75-00-3	Chloroethane	2.5	22		U	
67-66-3	Chloroform	1.2	22		U	
74-87-3	Chloromethane	1.2	22		U	
110-82-7	Cyclohexane	1.2	22		U	
124-48-1	Dibromochloromethane	0.76	22		U	
96-12-8	1,2-Dibromo-3-chloropropane	2.7	11		U	
106-93-4	1,2-Dibromoethane	0.96	22		U	
95-50-1	1,2-Dichlorobenzene	0.83	22		U	
541-73-1	1,3-Dichlorobenzene	1.9	22		U	
106-46-7	1,4-Dichlorobenzene	1.2	22		U	
75-71-8	Dichlorodifluoromethane	2.5	22		U	
75-34-3	1,1-Dichloroethane	1.2	22		U	
107-06-2	1,2-Dichloroethane	1.0	22		U	
75-35-4	1,1-Dichloroethene	2.7	22		U	
156-59-2	cis-1,2-Dichloroethene	2.7	22		U	
156-60-5	trans-1,2-Dichloroethene	2.5	22		U	
78-87-5	1,2-Dichloropropane	1.0	22		U	
10061-01-5	cis-1,3-Dichloropropene	1.1	22		U	
10061-02-6	trans-1,3-Dichloropropene	0.72	22		U	
100-41-4	Ethylbenzene	1.7	22		U	
591-78-6	2-Hexanone	5.2	22		U	
98-82-8	Isopropylbenzene	2.0	22		U	
79-20-9	Methyl acetate	3.6	22		U	
75-09-2	Methylene chloride	1.4	22	22U ~~2.3~~	~~JB~~	B
108-87-2	Methyl cyclohexane	0.67	22		U	
1634-04-4	Methyl tert-butyl ether	0.72	22		U	
108-10-1	4-Methyl-2-pentanone	1.3	22		U	
100-42-5	Styrene	0.78	22		U	
79-34-5	1,1,2,2-Tetrachloroethane	0.96	22		U	
127-18-4	Tetrachloroethene	2.2	22		U	

FORM I VOA

AW
2/28/09

FORM 1
VOLATILE ORGANICS ANALYSIS DATA SHEET

CLIENT SAMPLE NO. 13

MR08-SS101-08D

Lab Name: EMPIRICAL LABS Contract: CH2MHILL

Lab Code: NA Case No.: NA SAS No.: NA SDG No.: LEJEUNE029

Matrix: (soil/water) SOIL Lab Sample ID: 0812176-13

Sample wt/vol: 2.4 (g/mL) G Lab File ID: 1217613A

Level: (low/med) LOW Date Sampled: 12/10/08 14:10

% Moisture: not dec. 7 Date Analyzed: 12/24/08 18:36

GC Column: RTX-VRX ID: 0.25 (mm) Dilution Factor: 1.0

Soil Extract Volume:_____(uL) Soil Aliquot Volume: _____(uL)

CONCENTRATION UNITS: (ug/L or ug/Kg) UG/KG

CAS NO.	COMPOUND	MDL	RL	CONC	Q
108-88-3	Toluene	1.9	22		U
120-82-1	1,2,4-Trichlorobenzene	0.40	22		U
71-55-6	1,1,1-Trichloroethane	2.0	22		U
79-00-5	1,1,2-Trichloroethane	0.78	22		U
79-01-6	Trichloroethene	1.9	22		U
76-13-1	Trichlorotrifluoroethane	1.2	22		U
75-69-4	Trichlorofluoromethane	2.1	22		U
75-01-4	Vinyl chloride	2.5	22		U
1330-20-7	Xylene(total)	1.6	22		U

fw
2/28/09

FORM 1
VOLATILE ORGANICS ANALYSIS DATA SHEET

CLIENT SAMPLE NO.

14

MR08-IS10
1-2-3-08D

Lab Name: EMPIRICAL LABS Contract: CH2MHILL

Lab Code: NA Case No.: NA SAS No.: NA SDG No.: LEJEUNE029

Matrix: (soil/water) SOIL Lab Sample ID: 0812176-14

Sample wt/vol: 4.7 (g/mL) G Lab File ID: 1217614A

Level: (low/med) LOW Date Sampled: 12/10/08 14:30

% Moisture: not dec. 10 Date Analyzed: 12/24/08 19:16

GC Column: RTX-VRX ID: 0.25 (mm) Dilution Factor: 1.0

Soil Extract Volume:_____(uL) Soil Aliquot Volume: _____(uL)

CONCENTRATION UNITS: (ug/L or ug/Kg) UG/KG

CAS NO.	COMPOUND	MDL	RL	CONC	Q
67-64-1	Acetone	2.4	12	12U ~~9.7~~	~~J~~
71-43-2	Benzene	0.56	12		U
75-27-4	Bromodichloromethane	0.36	12		U
75-25-2	Bromoform	1.2	12		U
74-83-9	Bromomethane	0.85	12		U
78-93-3	2-Butanone	1.6	12		U
75-15-0	Carbon disulfide	1.5	12		U
56-23-5	Carbon tetrachloride	1.0	12		U
108-90-7	Chlorobenzene	0.40	12		U
75-00-3	Chloroethane	1.3	12		U
67-66-3	Chloroform	0.65	12		U
74-87-3	Chloromethane	0.62	12		U
110-82-7	Cyclohexane	0.64	12		U
124-48-1	Dibromochloromethane	0.40	12		U
96-12-8	1,2-Dibromo-3-chloropropane	1.4	5.9		U
106-93-4	1,2-Dibromoethane	0.51	12		U
95-50-1	1,2-Dichlorobenzene	0.44	12		U
541-73-1	1,3-Dichlorobenzene	0.99	12		U
106-46-7	1,4-Dichlorobenzene	0.65	12		U
75-71-8	Dichlorodifluoromethane	1.3	12		U
75-34-3	1,1-Dichloroethane	0.64	12		U
107-06-2	1,2-Dichloroethane	0.54	12		U
75-35-4	1,1-Dichloroethene	1.4	12		U
156-59-2	cis-1,2-Dichloroethene	1.4	12		U
156-60-5	trans-1,2-Dichloroethene	1.3	12		U
78-87-5	1,2-Dichloropropane	0.54	12		U
10061-01-5	cis-1,3-Dichloropropene	0.59	12		U
10061-02-6	trans-1,3-Dichloropropene	0.38	12		U
100-41-4	Ethylbenzene	0.89	12		U
591-78-6	2-Hexanone	2.7	12		U
98-82-8	Isopropylbenzene	1.0	12		U
79-20-9	Methyl acetate	1.9	12		U
75-09-2	Methylene chloride	0.73	12	12U ~~1.2~~	~~JB~~ B
108-87-2	Methyl cyclohexane	0.36	12		U
1634-04-4	Methyl tert-butyl ether	0.38	12		U
108-10-1	4-Methyl-2-pentanone	0.69	12		U
100-42-5	Styrene	0.41	12		U
79-34-5	1,1,2,2-Tetrachloroethane	0.51	12		U
127-18-4	Tetrachloroethene	1.1	12		U

2/28/09

FORM 1
VOLATILE ORGANICS ANALYSIS DATA SHEET

CLIENT SAMPLE NO. 14

MR08-IS10
1-2-3-08D

Lab Name: EMPIRICAL LABS Contract: CH2MHILL

Lab Code: NA Case No.: NA SAS No.: NA SDG No.: LEJEUNE029

Matrix: (soil/water) SOIL Lab Sample ID: 0812176-14

Sample wt/vol: 4.7 (g/mL) G Lab File ID: 1217614A

Level: (low/med) LOW Date Sampled: 12/10/08 14:30

% Moisture: not dec. 10 Date Analyzed: 12/24/08 19:16

GC Column: RTX-VRX ID: 0.25 (mm) Dilution Factor: 1.0

Soil Extract Volume:_____(uL) Soil Aliquot Volume: _____(uL)

CONCENTRATION UNITS: (ug/L or ug/Kg) UG/KG

CAS NO.	COMPOUND	MDL	RL	CONC	Q
108-88-3	Toluene	1.0	12		U
120-82-1	1,2,4-Trichlorobenzene	0.21	12		U
71-55-6	1,1,1-Trichloroethane	1.1	12		U
79-00-5	1,1,2-Trichloroethane	0.41	12		U
79-01-6	Trichloroethene	1.0	12		U
76-13-1	Trichlorotrifluoroethane	0.65	12		U
75-69-4	Trichlorofluoromethane	1.1	12		U
75-01-4	Vinyl chloride	1.3	12		U
1330-20-7	Xylene(total)	0.83	12		U

MW 2/28/09

FORM 1
VOLATILE ORGANICS ANALYSIS DATA SHEET

CLIENT SAMPLE NO. 15

MR08-EB01
121008-SS

Lab Name: EMPIRICAL LABS Contract: CH2MHILL

Lab Code: NA Case No.: NA SAS No.: NA SDG No.: LEJEUNE029

Matrix: (soil/water) WATER Lab Sample ID: 0812176-15

Sample wt/vol: 5.000 (g/mL) ML Lab File ID: 1217615

Level: (low/med) LOW Date Sampled: 12/10/08 09:00

% Moisture: not dec. _____ Date Analyzed: 12/19/08 11:23

GC Column: RTX-VRX ID: 0.25 (mm) Dilution Factor: 1.0

Soil Extract Volume:_____(uL) Soil Aliquot Volume: _____(uL)

CONCENTRATION UNITS: (ug/L or ug/Kg) UG/L

CAS NO.	COMPOUND	MDL	RL	CONC	Q
67-64-1	Acetone	0.84	2.5		U
71-43-2	Benzene	0.11	1.0		U
75-27-4	Bromodichloromethane	0.10	1.0		U
75-25-2	Bromoform	0.10	1.0		U
74-83-9	Bromomethane	0.32	1.0		U
78-93-3	2-Butanone	1.0	3.0		U
75-15-0	Carbon disulfide	0.13	1.0		U
56-23-5	Carbon tetrachloride	0.15	1.0		U
108-90-7	Chlorobenzene	0.10	1.0	0.22	J
75-00-3	Chloroethane	0.18	1.0		~~U~~ UJ C
67-66-3	Chloroform	0.11	1.0		U
74-87-3	Chloromethane	0.29	1.0		U
110-82-7	Cyclohexane	0.20	1.0	~~0.32~~	~~J~~ U
124-48-1	Dibromochloromethane	0.10	1.0		U
96-12-8	1,2-Dibromo-3-chloropropane	0.11	1.0		U
106-93-4	1,2-Dibromoethane	0.10	1.0		U
95-50-1	1,2-Dichlorobenzene	0.10	1.0		U
541-73-1	1,3-Dichlorobenzene	0.13	1.0		U
106-46-7	1,4-Dichlorobenzene	0.10	1.0		U
75-71-8	Dichlorodifluoromethane	0.22	1.0		U
75-34-3	1,1-Dichloroethane	0.12	1.0		U
107-06-2	1,2-Dichloroethane	0.10	1.0		U
75-35-4	1,1-Dichloroethene	0.15	1.0		U
156-59-2	cis-1,2-Dichloroethene	0.13	1.0		U
156-60-5	trans-1,2-Dichloroethene	0.13	1.0		U
78-87-5	1,2-Dichloropropane	0.10	1.0		U
10061-01-5	cis-1,3-Dichloropropene	0.11	1.0		U
10061-02-6	trans-1,3-Dichloropropene	0.10	1.0		U
100-41-4	Ethylbenzene	0.13	1.0		U
591-78-6	2-Hexanone	0.30	1.0		U
98-82-8	Isopropylbenzene	0.15	1.0		U
79-20-9	Methyl acetate	0.30	1.0		U
75-09-2	Methylene chloride	0.14	1.0	1.04	~~0.92~~ ~~JB~~ B
108-87-2	Methyl cyclohexane	0.17	1.0		U
1634-04-4	Methyl tert-butyl ether	0.10	1.0		U
108-10-1	4-Methyl-2-pentanone	0.29	1.0		U
100-42-5	Styrene	0.10	1.0		U
79-34-5	1,1,2,2-Tetrachloroethane	0.10	1.0		U
127-18-4	Tetrachloroethene	0.15	1.0		U

LWS 2/28/09

FORM 1
VOLATILE ORGANICS ANALYSIS DATA SHEET

CLIENT SAMPLE NO. 15

MR08-EB01
121008-SS

Lab Name: EMPIRICAL LABS Contract: CH2MHILL

Lab Code: NA Case No.: NA SAS No.: NA SDG No.: LEJEUNE029

Matrix: (soil/water) WATER Lab Sample ID: 0812176-15

Sample wt/vol: 5.000 (g/mL) ML Lab File ID: 1217615

Level: (low/med) LOW Date Sampled: 12/10/08 09:00

% Moisture: not dec. _____ Date Analyzed: 12/19/08 11:23

GC Column: RTX-VRX ID: 0.25 (mm) Dilution Factor: 1.0

Soil Extract Volume:_____(uL) Soil Aliquot Volume: _____(uL)

CONCENTRATION UNITS: (ug/L or ug/Kg) UG/L

CAS NO.	COMPOUND	MDL	RL	CONC	Q
108-88-3	Toluene	0.10	1.0		U
120-82-1	1,2,4-Trichlorobenzene	0.10	1.0		U
71-55-6	1,1,1-Trichloroethane	0.17	1.0		U
79-00-5	1,1,2-Trichloroethane	0.10	1.0		U
79-01-6	Trichloroethene	0.13	1.0		U
76-13-1	Trichlorotrifluoroethane	0.18	1.0		U
75-69-4	Trichlorofluoromethane	0.17	1.0		U
75-01-4	Vinyl chloride	0.18	1.0		U
1330-20-7	Xylene(total)	0.22	1.0		U

LW
2/28/09

FORM 1
VOLATILE ORGANICS ANALYSIS DATA SHEET

CLIENT SAMPLE NO. 16

MR08-TB01121008

Lab Name: EMPIRICAL LABS Contract: CH2MHILL

Lab Code: NA Case No.: NA SAS No.: NA SDG No.: LEJEUNE029

Matrix: (soil/water) WATER Lab Sample ID: 0812176-16

Sample wt/vol: 5.000 (g/mL) ML Lab File ID: 1217616

Level: (low/med) LOW Date Sampled: 12/10/08 09:30

% Moisture: not dec. _____ Date Analyzed: 12/19/08 05:54

GC Column: RTX-VRX ID: 0.25 (mm) Dilution Factor: 1.0

Soil Extract Volume:_____(uL) Soil Aliquot Volume: _____(uL)

CONCENTRATION UNITS: (ug/L or ug/Kg) UG/L

CAS NO.	COMPOUND	MDL	RL	CONC	Q
67-64-1	Acetone	0.84	2.5		U
71-43-2	Benzene	0.11	1.0		U
75-27-4	Bromodichloromethane	0.10	1.0		U
75-25-2	Bromoform	0.10	1.0		U
74-83-9	Bromomethane	0.32	1.0		U
78-93-3	2-Butanone	1.0	3.0		U
75-15-0	Carbon disulfide	0.13	1.0		U
56-23-5	Carbon tetrachloride	0.15	1.0		U
108-90-7	Chlorobenzene	0.10	1.0		U
75-00-3	Chloroethane	0.18	1.0		~~U~~ UJ CC
67-66-3	Chloroform	0.11	1.0		U
74-87-3	Chloromethane	0.29	1.0		U
110-82-7	Cyclohexane	0.20	1.0		U
124-48-1	Dibromochloromethane	0.10	1.0		U
96-12-8	1,2-Dibromo-3-chloropropane	0.11	1.0		U
106-93-4	1,2-Dibromoethane	0.10	1.0		U
95-50-1	1,2-Dichlorobenzene	0.10	1.0		U
541-73-1	1,3-Dichlorobenzene	0.13	1.0		U
106-46-7	1,4-Dichlorobenzene	0.10	1.0		U
75-71-8	Dichlorodifluoromethane	0.22	1.0		U
75-34-3	1,1-Dichloroethane	0.12	1.0		U
107-06-2	1,2-Dichloroethane	0.10	1.0		U
75-35-4	1,1-Dichloroethene	0.15	1.0		U
156-59-2	cis-1,2-Dichloroethene	0.13	1.0		U
156-60-5	trans-1,2-Dichloroethene	0.13	1.0		U
78-87-5	1,2-Dichloropropane	0.10	1.0		U
10061-01-5	cis-1,3-Dichloropropene	0.11	1.0		U
10061-02-6	trans-1,3-Dichloropropene	0.10	1.0		U
100-41-4	Ethylbenzene	0.13	1.0		U
591-78-6	2-Hexanone	0.30	1.0		U
98-82-8	Isopropylbenzene	0.15	1.0		U
79-20-9	Methyl acetate	0.30	1.0		U
75-09-2	Methylene chloride	0.14	1.0	1.1	~~U~~ BL BL
108-87-2	Methyl cyclohexane	0.17	1.0		U
1634-04-4	Methyl tert-butyl ether	0.10	1.0		U
108-10-1	4-Methyl-2-pentanone	0.29	1.0		U
100-42-5	Styrene	0.10	1.0		U
79-34-5	1,1,2,2-Tetrachloroethane	0.10	1.0		U
127-18-4	Tetrachloroethene	0.15	1.0		U

FORM I VOA

2/28/09

FORM 1
VOLATILE ORGANICS ANALYSIS DATA SHEET

CLIENT SAMPLE NO. 16

MR08-TB01121008

Lab Name: EMPIRICAL LABS Contract: CH2MHILL

Lab Code: NA Case No.: NA SAS No.: NA SDG No.: LEJEUNE029

Matrix: (soil/water) WATER Lab Sample ID: 0812176-16

Sample wt/vol: 5.000 (g/mL) ML Lab File ID: 1217616

Level: (low/med) LOW Date Sampled: 12/10/08 09:30

% Moisture: not dec. _____ Date Analyzed: 12/19/08 05:54

GC Column: RTX-VRX ID: 0.25 (mm) Dilution Factor: 1.0

Soil Extract Volume:_____(uL) Soil Aliquot Volume: _____(uL)

CONCENTRATION UNITS: (ug/L or ug/Kg) UG/L

CAS NO.	COMPOUND	MDL	RL	CONC	Q
108-88-3	Toluene	0.10	1.0		U
120-82-1	1,2,4-Trichlorobenzene	0.10	1.0		U
71-55-6	1,1,1-Trichloroethane	0.17	1.0		U
79-00-5	1,1,2-Trichloroethane	0.10	1.0		U
79-01-6	Trichloroethene	0.13	1.0		U
76-13-1	Trichlorotrifluoroethane	0.18	1.0		U
75-69-4	Trichlorofluoromethane	0.17	1.0		U
75-01-4	Vinyl chloride	0.18	1.0		U
1330-20-7	Xylene(total)	0.22	1.0		U

lw 2/28/09

ENVIRONMENTAL
Data Services, Inc.

VOLATILE ORGANIC COMPOUNDS
USEPA Region IV - Level IV Review

Site: MCB Camp Lejeune, TO-09 SDG #: LEJEUNE034

Client: CH2M HILL, Inc., Virginia Beach, Virginia Date: February 28, 2009

Laboratory: Empirical Laboratories, Nashville, Tennessee Reviewer: Nancy Weaver

EDS ID	Client Sample ID	Laboratory Sample ID	Matrix
1	MR08-SS102-08D	0812230-01	Soil
2	MR08-IS102-2-3-08D	0812230-02	Soil
3	MR08-SS119-08D	0812230-03	Soil
4	MR08-SS119D-08D	0812230-04	Soil
5	MR08-IS119-4.5-5.5-08D	0812230-05	Soil
6	MR08-IS119D-4.5-5.5-08D	0812230-06	Soil
6RE	MR08-IS119D-4.5-5.5-08DRE	0812230-06RE	Soil
7	MR08-SS120-08D	0812230-07	Soil
8	MR08-IS120-1.5-2.5-08D	0812230-08	Soil
9	MR08-SS122-08D	0812230-09	Soil
9MS	MR08-SS122-08DMS	0812230-09MS	Soil
9MSD	MR08-SS122-08DMSD	0812230-09MSD	Soil
9RE	MR08-SS122-08DRE	0812230-09RE	Soil
10	MR08-IS122-6.5-8-08D	0812230-10	Soil
10MS	MR08-IS122-6.5-8-08DMS	0812230-10MS	Soil
10MSD	MR08-IS122-6.5-8-08DMSD	0812230-10MSD	Soil
11	MR08-SS118-08D	0812230-11	Soil
12	MR08-IS118-08D	0812230-12	Soil
13	MR08-EB01121508-SS	0812230-13	Water
14	MR08-TB01121608-SS	0812230-14	Water
15	MR08-SS127-08D	0812230-15	Soil
16	MR08-IS127-1.5-3-08D	0812230-16	Soil
16RE	MR08-IS127-1.5-3-08DRE	0812230-16RE	Soil

The USEPA "Contract Laboratory Program National Functional Guidelines for Organic Data Review," October 1999, and professional judgement were used in evaluating the data in this summary report.

Holding Times - All samples were analyzed within 14 days for preserved water and soil samples except the following.

Sample	Date Sampled	Date Analyzed	# of Days	Qualifier
3	12/15/08	12/30/08	15	J/UJ

Sample	Date Sampled	Date Analyzed	# of Days	Qualifier
6RE	12/15/08	01/03/09	19	J/UJ
9RE	12/15/08	01/03/09	19	J/UJ
16RE	12/16/08	01/05/08	20	J/UJ

GC/MS Tuning - All of the BFB tunes in the initial and continuing calibrations met the percent relative abundance criteria.

Initial Calibration - The initial calibrations exhibited acceptable %RSD and mean RRF values.

Continuing Calibration - The continuing calibrations exhibited acceptable %D and RRF values except the following.

CCAL Date	Compound	%D/RRF	Qualifier	Affected Samples
12/23/08	Acetone	28.6%	J/UJ	13, 14
	Bromomethane	41.4%	J/UJ	13, 14
12/28/08	2-Hexanone	30.2%	J/UJ	1, 2
12/29/08 (0901)	Chloromethane	33.4%	J/UJ	4, 5, 7-12
	Vinyl chloride	28.6%	J/UJ	4, 5, 7-12
12/29/08 (2151)	Acetone	27.4%	J/UJ	16
	Chloromethane	32.1%	J/UJ	16
	Vinyl chloride	26.5%	J/UJ	16
01/03/09	Chloromethane	26.8%	J/UJ	6RE, 9RE

Surrogates - All samples exhibited acceptable surrogate recoveries except the following.

Sample ID	Surrogate	%R	Qualifier
6	1,2-Dichloroethane-d4	71%	J/UJ - unless (R) due to IS
	Bromofluorobenzene	79%	

MS/MSD - The MS/MSD sample exhibited acceptable %R and RPD values except the following.

MS/MSD Sample ID	Compound	MS/MSD %R/RPD	Qualifier
9	Chlorobenzene	58%/70%/Ok	J/UJ
	Cyclohexane	63%/Ok/Ok	J/UJ
	1,2-Dichlorobenzene	43%67%/42	None - Already qualified due to IS
	1,3-Dichlorobenzene	43%67%/42	None - Already qualified due to IS
	1,4-Dichlorobenzene	42%62%/38	None - Already qualified due to IS
	Ethylbenzene	59%/73%/Ok	J/UJ
	Isopropylbenzene	53%65%/Ok	J/UJ
	Methyl cyclohexane	51%/51%/Ok	J/UJ
	Styrene	57%/70%/Ok	J/UJ
	Tetrachloroethene	50%/62%/Ok	J/UJ

MS/MSD Sample ID	Compound	MS/MSD %R/RPD	Qualifier
9	Toluene	67%/Ok/Ok	J/UJ
	1,2,4-Trichlorobenzene	19%/26%/Ok	None - Already qualified due to IS
	Trichloroethene	68%/72%/Ok	J/UJ
	Xylene (total)	56%/Ok/Ok	J/UJ
10	Chlorobenzene	73%/Ok/Ok	J/UJ
	1,2-Dichlorobenzene	71%/Ok/Ok	J/UJ
	1,3-Dichlorobenzene	67%/68%/Ok	J/UJ
	1,4-Dichlorobenzene	66%/Ok/Ok	J/UJ
	Methyl acetate	6%/7%/Ok	J/R
	1,2,4-Trichlorobenzene	54%/54%/Ok	J/UJ

Laboratory Control Sample - The LCS samples exhibited acceptable %R values except the following.

LCS ID	Compound	%R	Qualifier	Affected Samples
V3BLK1223	2-Butanone	163%	None	All ND
V1BLK0101H	Vinyl chloride	59%	None	Already qualified due to HT

Internal Standard (IS) Area Performance - All internal standards met response and retention time (RT) criteria except the following.

Sample ID	Internal Standard	Area Count	Qualifier
6	IS1-Fluorobenzene	Severely Low	J/R
	IS2-Chlorobenzene-d5	Severely Low	J/R
	IS3-1,4-Dichlorobenzene-d4	Severely Low	J/R
9	IS3-1,4-Dichlorobenzene-d4	Low	J/UJ - All associated compounds
16	IS2-Chlorobenzene-d5	Low	J/UJ - All associated compounds
	IS3-1,4-Dichlorobenzene-d4	Low	J/UJ - All associated compounds
16RE	IS3-1,4-Dichlorobenzene-d4	Low	J/UJ - All associated compounds

Method Blank - The method blanks exhibited the following contamination.

Blank ID	Compound	Conc.	Action Level	Qualifier	Affected Samples
V3BLK1223	Methylene chloride	0.66 ug/L	6.6 ug/L	U	13, 14
	1,2,4-Trichlorobenzene	0.18 ug/L	0.90 ug/L	None	All ND
V1BLK1228	Methylene chloride	1.6 ug/kg	16 ug/kg	U	1, 2
V1BLK1229	Methylene chloride	2.1 ug/kg	21 ug/kg	U	4-12, 15
V1BLK1229E	Methylene chloride	1.9 ug/kg	19 ug/kg	U	16
V1BLK1230	Methylene chloride	3.0 ug/kg	30 ug/kg	U	3
V1BLK0101H	Methylene chloride	4.2 ug/kg	42 ug/kg	U	6RE, 9RE
	1,2,4-Trichlorobenzene	0.24 ug/kg	1.2 ug/kg	None	All ND
V1BLK0104F	Methylene chloride	1.0 ug/kg	10 ug/kg	U	16RE

Trip, Field, Equipment Blank - Field QC results are summarized below.

Blank ID	Compound	Conc. ug/L	Action Level ug/L or ug/kg	Qualifier	Affected Samples
MR08-EB01-121508-SS	Acetone	69	690	U	1-6, 8, 9, 9RE, 10-12
	Chloroform	0.18	0.90	None	See FB
MR08-FB12192008	None - ND	-	-	-	-
MR08-FB1120608	Acetone	3.8	380	U	15, 16, 16RE
	Bromodichloromethane	0.2	1.0	None	All ND
	Chloroform	3.0	15.0	None	All ND
	Toluene	0.35	1.75	U	3, 4
MR08-TB01121608-SS	None - ND	-	-	-	-

Field Duplicates - Field duplicate results are summarized below.

Compound	MR08-SS119-08D ug/kg	MR08-SS119D-08D ug/kg	RPD	Qualifier
Benzene	0.94	12 U	NC	None
2-Butanone	10 U	1.9	NC	None
Cyclohexane	0.58	12 U	NC	None
Ethylbenzene	1.8	2.8	43%	None
Methyl cyclohexane	0.85	12 U	NC	None

Compound	MR08-IS119-4.5-5.5-08D ug/kg	MR08-IS119D-4.5-5.5-08D ug/kg	RPD	Qualifier
Benzene	13 U	6.5	NC	None
2-Butanone	13 U	2.6	NC	None
Carbon disulfide	2.2	17	154%	None
Chloromethane	13 U	0.64	NC	None
Cyclohexane	13 U	1.6	NC	None
1,2-Dichlorobenzene	13 U	0.98	NC	None
1,-4Dichlorobenzene	13 U	2.1	NC	None
Ethylbenzene	13 U	3.0	NC	None
Methyl cyclohexane	13 U	1.4	NC	None
Toluene	13 U	6.8	NC	None
Xylene (total)	13 U	2.3	NC	None
1,2,4-Trichlorobenzene	13 U	2.2	NC	None

Tentatively Identified Compounds (TICs) - TICs were not reported.

Compound Quantitation - Several samples exhibited internal standard and/or surrogate deficiencies. These samples were reanalyzed. Refer to Form Is for which were used for reporting purposes.

FORM 1
VOLATILE ORGANICS ANALYSIS DATA SHEET

CLIENT SAMPLE NO.

MR08-SS102-08D

Lab Name: EMPIRICAL LABS Contract: CH2MHILL

Lab Code: NA Case No.: NA SAS No.: NA SDG No.: LEJEUNE034

Matrix: (soil/water) SOIL Lab Sample ID: 0812230-01

Sample wt/vol: 3.6 (g/mL) G Lab File ID: 1223001A

Level: (low/med) LOW Date Sampled: 12/15/08 10:00

% Moisture: not dec. 6 Date Analyzed: 12/28/08 13:51

GC Column: RTX-VRX ID: 0.25 (mm) Dilution Factor: 1.0

Soil Extract Volume:_____(uL) Soil Aliquot Volume: _____(uL)

CONCENTRATION UNITS: (ug/L or ug/Kg) UG/KG

CAS NO.	COMPOUND	MDL	RL	CONC	Q
67-64-1	Acetone	3.0	15	16	U BL
71-43-2	Benzene	0.70	15	0.87	J
75-27-4	Bromodichloromethane	0.45	15		U
75-25-2	Bromoform	1.5	15		U
74-83-9	Bromomethane	1.1	15		U
78-93-3	2-Butanone	2.1	15		U
75-15-0	Carbon disulfide	1.9	15		U
56-23-5	Carbon tetrachloride	1.3	15		U
108-90-7	Chlorobenzene	0.51	15		U
75-00-3	Chloroethane	1.6	15		U
67-66-3	Chloroform	0.82	15		U
74-87-3	Chloromethane	0.78	15		U
110-82-7	Cyclohexane	0.81	15		U
124-48-1	Dibromochloromethane	0.51	15		U
96-12-8	1,2-Dibromo-3-chloropropane	1.8	7.5		U
106-93-4	1,2-Dibromoethane	0.64	15		U
95-50-1	1,2-Dichlorobenzene	0.55	15		U
541-73-1	1,3-Dichlorobenzene	1.2	15		U
106-46-7	1,4-Dichlorobenzene	0.82	15		U
75-71-8	Dichlorodifluoromethane	1.6	15		U
75-34-3	1,1-Dichloroethane	0.81	15		U
107-06-2	1,2-Dichloroethane	0.69	15		U
75-35-4	1,1-Dichloroethene	1.8	15		U
156-59-2	cis-1,2-Dichloroethene	1.8	15		U
156-60-5	trans-1,2-Dichloroethene	1.6	15		U
78-87-5	1,2-Dichloropropane	0.69	15		U
10061-01-5	cis-1,3-Dichloropropene	0.75	15		U
10061-02-6	trans-1,3-Dichloropropene	0.48	15		U
100-41-4	Ethylbenzene	1.1	15	4.7	J
591-78-6	2-Hexanone	3.4	15		~~U~~ UJ cc
98-82-8	Isopropylbenzene	1.3	15		U
79-20-9	Methyl acetate	2.4	15		U
75-09-2	Methylene chloride	0.92	15	15u ~~4.0~~	JB
108-87-2	Methyl cyclohexane	0.45	15	0.77	J
1634-04-4	Methyl tert-butyl ether	0.48	15		U
108-10-1	4-Methyl-2-pentanone	0.87	15		U
100-42-5	Styrene	0.52	15		U
79-34-5	1,1,2,2-Tetrachloroethane	0.64	15		U
127-18-4	Tetrachloroethene	1.4	15		U

FORM I VOA

lw 2/28/09

FORM 1
VOLATILE ORGANICS ANALYSIS DATA SHEET

CLIENT SAMPLE NO.

MR08-SS102-08D

Lab Name: EMPIRICAL LABS Contract: CH2MHILL

Lab Code: NA Case No.: NA SAS No.: NA SDG No.: LEJEUNE034

Matrix: (soil/water) SOIL Lab Sample ID: 0812230-01

Sample wt/vol: 3.6 (g/mL) G Lab File ID: 1223001A

Level: (low/med) LOW Date Sampled: 12/15/08 10:00

% Moisture: not dec. 6 Date Analyzed: 12/28/08 13:51

GC Column: RTX-VRX ID: 0.25 (mm) Dilution Factor: 1.0

Soil Extract Volume:_____(uL) Soil Aliquot Volume: _____(uL)

CONCENTRATION UNITS: (ug/L or ug/Kg) UG/KG

CAS NO.	COMPOUND	MDL	RL	CONC	Q
108-88-3	Toluene	1.3	15	2.2	J
120-82-1	1,2,4-Trichlorobenzene	0.27	15		U
71-55-6	1,1,1-Trichloroethane	1.3	15		U
79-00-5	1,1,2-Trichloroethane	0.52	15		U
79-01-6	Trichloroethene	1.3	15		U
76-13-1	Trichlorotrifluoroethane	0.82	15		U
75-69-4	Trichlorofluoromethane	1.4	15		U
75-01-4	Vinyl chloride	1.6	15		U
1330-20-7	Xylene(total)	1.0	15		U

FORM I VOA

MW
2/28/09

FORM 1
VOLATILE ORGANICS ANALYSIS DATA SHEET

CLIENT SAMPLE NO. 2

MR08-IS10
2-2-3-08D

Lab Name: EMPIRICAL LABS Contract: CH2MHILL

Lab Code: NA Case No.: NA SAS No.: NA SDG No.: LEJEUNE034

Matrix: (soil/water) SOIL Lab Sample ID: 0812230-02

Sample wt/vol: 6.5 (g/mL) G Lab File ID: 1223002A

Level: (low/med) LOW Date Sampled: 12/15/08 10:15

% Moisture: not dec. 11 Date Analyzed: 12/28/08 14:30

GC Column: RTX-VRX ID: 0.25 (mm) Dilution Factor: 1.0

Soil Extract Volume:_____(uL) Soil Aliquot Volume: _____(uL)

CONCENTRATION UNITS: (ug/L or ug/Kg) UG/KG

CAS NO.	COMPOUND	MDL	RL	CONC	Q
67-64-1	Acetone	1.7	8.7	8.7U ~~3.6~~ ~~J~~	B
71-43-2	Benzene	0.41	8.7		U
75-27-4	Bromodichloromethane	0.26	8.7		U
75-25-2	Bromoform	0.87	8.7		U
74-83-9	Bromomethane	0.63	8.7		U
78-93-3	2-Butanone	1.2	8.7		U
75-15-0	Carbon disulfide	1.1	8.7		U
56-23-5	Carbon tetrachloride	0.76	8.7		U
108-90-7	Chlorobenzene	0.30	8.7		U
75-00-3	Chloroethane	0.96	8.7		U
67-66-3	Chloroform	0.48	8.7		U
74-87-3	Chloromethane	0.45	8.7		U
110-82-7	Cyclohexane	0.47	8.7		U
124-48-1	Dibromochloromethane	0.30	8.7		U
96-12-8	1,2-Dibromo-3-chloropropane	1.0	4.3		U
106-93-4	1,2-Dibromoethane	0.37	8.7		U
95-50-1	1,2-Dichlorobenzene	0.32	8.7		U
541-73-1	1,3-Dichlorobenzene	0.73	8.7		U
106-46-7	1,4-Dichlorobenzene	0.48	8.7		U
75-71-8	Dichlorodifluoromethane	0.96	8.7		U
75-34-3	1,1-Dichloroethane	0.47	8.7		U
107-06-2	1,2-Dichloroethane	0.40	8.7		U
75-35-4	1,1-Dichloroethene	1.0	8.7		U
156-59-2	cis-1,2-Dichloroethene	1.0	8.7		U
156-60-5	trans-1,2-Dichloroethene	0.96	8.7		U
78-87-5	1,2-Dichloropropane	0.40	8.7		U
10061-01-5	cis-1,3-Dichloropropene	0.43	8.7		U
10061-02-6	trans-1,3-Dichloropropene	0.28	8.7		U
100-41-4	Ethylbenzene	0.65	8.7		U
591-78-6	2-Hexanone	2.0	8.7		~~U~~ UJ CI
98-82-8	Isopropylbenzene	0.76	8.7		U
79-20-9	Methyl acetate	1.4	8.7		U
75-09-2	Methylene chloride	0.54	8.7	8.7U ~~1.2~~ ~~JB~~	B
108-87-2	Methyl cyclohexane	0.26	8.7		U
1634-04-4	Methyl tert-butyl ether	0.28	8.7		U
108-10-1	4-Methyl-2-pentanone	0.50	8.7		U
100-42-5	Styrene	0.30	8.7		U
79-34-5	1,1,2,2-Tetrachloroethane	0.37	8.7		U
127-18-4	Tetrachloroethene	0.84	8.7		U

lw 2/28/09

FORM 1
VOLATILE ORGANICS ANALYSIS DATA SHEET

CLIENT SAMPLE NO. 2

MR08-IS10
2-2-3-08D

Lab Name: EMPIRICAL LABS Contract: CH2MHILL

Lab Code: NA Case No.: NA SAS No.: NA SDG No.: LEJEUNE034

Matrix: (soil/water) SOIL Lab Sample ID: 0812230-02

Sample wt/vol: 6.5 (g/mL) G Lab File ID: 1223002A

Level: (low/med) LOW Date Sampled: 12/15/08 10:15

% Moisture: not dec. 11 Date Analyzed: 12/28/08 14:30

GC Column: RTX-VRX ID: 0.25 (mm) Dilution Factor: 1.0

Soil Extract Volume:_____(uL) Soil Aliquot Volume: _____(uL)

CONCENTRATION UNITS: (ug/L or ug/Kg) UG/KG

CAS NO.	COMPOUND	MDL	RL	CONC	Q
108-88-3	Toluene	0.75	8.7		U
120-82-1	1,2,4-Trichlorobenzene	0.16	8.7		U
71-55-6	1,1,1-Trichloroethane	0.78	8.7		U
79-00-5	1,1,2-Trichloroethane	0.30	8.7		U
79-01-6	Trichloroethene	0.74	8.7		U
76-13-1	Trichlorotrifluoroethane	0.48	8.7		U
75-69-4	Trichlorofluoromethane	0.83	8.7		U
75-01-4	Vinyl chloride	0.96	8.7		U
1330-20-7	Xylene(total)	0.61	8.7		U

Qw
12/28/09

FORM 1
VOLATILE ORGANICS ANALYSIS DATA SHEET

CLIENT SAMPLE NO. 3

MR08-SS119-08D

Lab Name: EMPIRICAL LABS Contract: CH2MHILL

Lab Code: NA Case No.: NA SAS No.: NA SDG No.: LEJEUNE034

Matrix: (soil/water) SOIL Lab Sample ID: 0812230-03

Sample wt/vol: 5.3 (g/mL) G Lab File ID: 1223003B

Level: (low/med) LOW Date Sampled: 12/15/08 10:45

% Moisture: not dec. 8 Date Analyzed: 12/30/08 15:34

GC Column: RTX-VRX ID: 0.25 (mm) Dilution Factor: 1.0

Soil Extract Volume:_____(uL) Soil Aliquot Volume: _____(uL)

CONCENTRATION UNITS: (ug/L or ug/Kg) UG/KG

CAS NO.	COMPOUND	MDL	RL	CONC	Q
67-64-1	Acetone	2.0	10	10	~~U~~ UJ BL
71-43-2	Benzene	0.48	10	0.94	~~U~~ J HT
75-27-4	Bromodichloromethane	0.30	10		U UJ
75-25-2	Bromoform	1.0	10		U
74-83-9	Bromomethane	0.73	10		U
78-93-3	2-Butanone	1.4	10		U
75-15-0	Carbon disulfide	1.3	10		U
56-23-5	Carbon tetrachloride	0.89	10		U
108-90-7	Chlorobenzene	0.34	10		U
75-00-3	Chloroethane	1.1	10		U
67-66-3	Chloroform	0.56	10		U
74-87-3	Chloromethane	0.53	10		U
110-82-7	Cyclohexane	0.55	10	0.58	J J
124-48-1	Dibromochloromethane	0.34	10		U UJ
96-12-8	1,2-Dibromo-3-chloropropane	1.2	5.1		U
106-93-4	1,2-Dibromoethane	0.44	10		U
95-50-1	1,2-Dichlorobenzene	0.37	10		U
541-73-1	1,3-Dichlorobenzene	0.85	10		U
106-46-7	1,4-Dichlorobenzene	0.56	10		U
75-71-8	Dichlorodifluoromethane	1.1	10		U
75-34-3	1,1-Dichloroethane	0.55	10		U
107-06-2	1,2-Dichloroethane	0.47	10		U
75-35-4	1,1-Dichloroethene	1.2	10		U
156-59-2	cis-1,2-Dichloroethene	1.2	10		U
156-60-5	trans-1,2-Dichloroethene	1.1	10		U
78-87-5	1,2-Dichloropropane	0.47	10		U
10061-01-5	cis-1,3-Dichloropropene	0.51	10		U
10061-02-6	trans-1,3-Dichloropropene	0.32	10		U
100-41-4	Ethylbenzene	0.76	10	1.8	J J
591-78-6	2-Hexanone	2.3	10		U UJ
98-82-8	Isopropylbenzene	0.89	10		U
79-20-9	Methyl acetate	1.6	10		U
75-09-2	Methylene chloride	0.63	10	10 UJ ~~1.4~~ ~~JB~~	HT BL
108-87-2	Methyl cyclohexane	0.30	10	0.85	J J HT
1634-04-4	Methyl tert-butyl ether	0.32	10		U UJ
108-10-1	4-Methyl-2-pentanone	0.59	10		U
100-42-5	Styrene	0.35	10		U
79-34-5	1,1,2,2-Tetrachloroethane	0.44	10		U
127-18-4	Tetrachloroethene	0.98	10		U

lew 2/28/09

FORM 1
VOLATILE ORGANICS ANALYSIS DATA SHEET

CLIENT SAMPLE NO. 3

MR08-SS119-08D

Lab Name: EMPIRICAL LABS Contract: CH2MHILL

Lab Code: NA Case No.: NA SAS No.: NA SDG No.: LEJEUNE034

Matrix: (soil/water) SOIL Lab Sample ID: 0812230-03

Sample wt/vol: 5.3 (g/mL) G Lab File ID: 1223003B

Level: (low/med) LOW Date Sampled: 12/15/08 10:45

% Moisture: not dec. 8 Date Analyzed: 12/30/08 15:34

GC Column: RTX-VRX ID: 0.25 (mm) Dilution Factor: 1.0

Soil Extract Volume:_____(uL) Soil Aliquot Volume: _____(uL)

CONCENTRATION UNITS: (ug/L or ug/Kg) UG/KG

CAS NO.	COMPOUND	MDL	RL	CONC	Q
108-88-3	Toluene	0.87	10	10UJ ~~1.2~~	~~J~~ HT B
120-82-1	1,2,4-Trichlorobenzene	0.18	10		U UJ H
71-55-6	1,1,1-Trichloroethane	0.91	10		U
79-00-5	1,1,2-Trichloroethane	0.35	10		U
79-01-6	Trichloroethene	0.86	10		U
76-13-1	Trichlorotrifluoroethane	0.56	10		U
75-69-4	Trichlorofluoromethane	0.96	10		U
75-01-4	Vinyl chloride	1.1	10		U
1330-20-7	Xylene(total)	0.71	10		U

lew
2/28/09

FORM 1
VOLATILE ORGANICS ANALYSIS DATA SHEET

CLIENT SAMPLE NO. 4

MR08-SS119D-08D

Lab Name: EMPIRICAL LABS Contract: CH2MHILL

Lab Code: NA Case No.: NA SAS No.: NA SDG No.: LEJEUNE034

Matrix: (soil/water) SOIL Lab Sample ID: 0812230-04

Sample wt/vol: 4.6 (g/mL) G Lab File ID: 1223004B

Level: (low/med) LOW Date Sampled: 12/15/08 10:45

% Moisture: not dec. 7 Date Analyzed: 12/29/08 11:37

GC Column: RTX-VRX ID: 0.25 (mm) Dilution Factor: 1.0

Soil Extract Volume:_____(uL) Soil Aliquot Volume: _____(uL)

CONCENTRATION UNITS: (ug/L or ug/Kg) UG/KG

CAS NO.	COMPOUND	MDL	RL	CONC	Q
67-64-1	Acetone	2.4	12	12u ~~11~~	~~J~~ BL
71-43-2	Benzene	0.55	12		U
75-27-4	Bromodichloromethane	0.35	12		U
75-25-2	Bromoform	1.2	12		U
74-83-9	Bromomethane	0.85	12		U
78-93-3	2-Butanone	1.6	12	1.9	J
75-15-0	Carbon disulfide	1.5	12		U
56-23-5	Carbon tetrachloride	1.0	12		U
108-90-7	Chlorobenzene	0.40	12		U
75-00-3	Chloroethane	1.3	12		U
67-66-3	Chloroform	0.65	12		U
74-87-3	Chloromethane	0.61	12		~~J~~ UJ CU
110-82-7	Cyclohexane	0.64	12		U
124-48-1	Dibromochloromethane	0.40	12		U
96-12-8	1,2-Dibromo-3-chloropropane	1.4	5.9		U
106-93-4	1,2-Dibromoethane	0.51	12		U
95-50-1	1,2-Dichlorobenzene	0.44	12		U
541-73-1	1,3-Dichlorobenzene	0.99	12		U
106-46-7	1,4-Dichlorobenzene	0.65	12		U
75-71-8	Dichlorodifluoromethane	1.3	12		U
75-34-3	1,1-Dichloroethane	0.64	12		U
107-06-2	1,2-Dichloroethane	0.54	12		U
75-35-4	1,1-Dichloroethene	1.4	12		U
156-59-2	cis-1,2-Dichloroethene	1.4	12		U
156-60-5	trans-1,2-Dichloroethene	1.3	12		U
78-87-5	1,2-Dichloropropane	0.54	12		U
10061-01-5	cis-1,3-Dichloropropene	0.59	12		U
10061-02-6	trans-1,3-Dichloropropene	0.38	12		U
100-41-4	Ethylbenzene	0.88	12	2.8	J
591-78-6	2-Hexanone	2.7	12		U
98-82-8	Isopropylbenzene	1.0	12		U
79-20-9	Methyl acetate	1.9	12		U
75-09-2	Methylene chloride	0.73	12	12u ~~3.8~~	~~JB~~ BL
108-87-2	Methyl cyclohexane	0.35	12		U
1634-04-4	Methyl tert-butyl ether	0.38	12		U
108-10-1	4-Methyl-2-pentanone	0.68	12		U
100-42-5	Styrene	0.41	12		U
79-34-5	1,1,2,2-Tetrachloroethane	0.51	12		U
127-18-4	Tetrachloroethene	1.1	12		U

lw 2/28/09

FORM 1
VOLATILE ORGANICS ANALYSIS DATA SHEET

CLIENT SAMPLE NO. 4

MR08-SS119D-08D

Lab Name: EMPIRICAL LABS Contract: CH2MHILL

Lab Code: NA Case No.: NA SAS No.: NA SDG No.: LEJEUNE034

Matrix: (soil/water) SOIL Lab Sample ID: 0812230-04

Sample wt/vol: 4.6 (g/mL) G Lab File ID: 1223004B

Level: (low/med) LOW Date Sampled: 12/15/08 10:45

% Moisture: not dec. 7 Date Analyzed: 12/29/08 11:37

GC Column: RTX-VRX ID: 0.25 (mm) Dilution Factor: 1.0

Soil Extract Volume:_____(uL) Soil Aliquot Volume: _____(uL)

CONCENTRATION UNITS: (ug/L or ug/Kg) UG/KG

CAS NO.	COMPOUND	MDL	RL	CONC	Q
108-88-3	Toluene	1.0	12	12u ~~1.2~~	~~J~~ B
120-82-1	1,2,4-Trichlorobenzene	0.21	12		U
71-55-6	1,1,1-Trichloroethane	1.0	12		U
79-00-5	1,1,2-Trichloroethane	0.41	12		U
79-01-6	Trichloroethene	1.0	12		U
76-13-1	Trichlorotrifluoroethane	0.65	12		U
75-69-4	Trichlorofluoromethane	1.1	12		U
75-01-4	Vinyl chloride	1.3	12		~~U~~ UJ C4
1330-20-7	Xylene(total)	0.82	12		U

FORM I VOA

LW 2/28/09

FORM 1
VOLATILE ORGANICS ANALYSIS DATA SHEET

CLIENT SAMPLE NO. 5

MR08-IS11
9-4.5-5.5-08D

Lab Name: EMPIRICAL LABS Contract: CH2MHILL

Lab Code: NA Case No.: NA SAS No.: NA SDG No.: LEJEUNE034

Matrix: (soil/water) SOIL Lab Sample ID: 0812230-05

Sample wt/vol: 4.4 (g/mL) G Lab File ID: 1223005A

Level: (low/med) LOW Date Sampled: 12/15/08 12:35

% Moisture: not dec. 14 Date Analyzed: 12/29/08 12:15

GC Column: RTX-VRX ID: 0.25 (mm) Dilution Factor: 1.0

Soil Extract Volume:_____(uL) Soil Aliquot Volume: _____(uL)

CONCENTRATION UNITS: (ug/L or ug/Kg) UG/KG

CAS NO.	COMPOUND	MDL	RL	CONC	Q
67-64-1	Acetone	2.6	13	13u ~~9.4~~	~~J~~ BL
71-43-2	Benzene	0.62	13		U
75-27-4	Bromodichloromethane	0.40	13		U
75-25-2	Bromoform	1.3	13		U
74-83-9	Bromomethane	0.95	13		U
78-93-3	2-Butanone	1.8	13		U
75-15-0	Carbon disulfide	1.7	13	2.2	J
56-23-5	Carbon tetrachloride	1.2	13		U
108-90-7	Chlorobenzene	0.45	13		U
75-00-3	Chloroethane	1.4	13		U
67-66-3	Chloroform	0.73	13		U
74-87-3	Chloromethane	0.69	13		~~U~~ UJ CH
110-82-7	Cyclohexane	0.72	13		U
124-48-1	Dibromochloromethane	0.45	13		U
96-12-8	1,2-Dibromo-3-chloropropane	1.6	6.6		U
106-93-4	1,2-Dibromoethane	0.57	13		U
95-50-1	1,2-Dichlorobenzene	0.49	13		U
541-73-1	1,3-Dichlorobenzene	1.1	13		U
106-46-7	1,4-Dichlorobenzene	0.73	13		U
75-71-8	Dichlorodifluoromethane	1.4	13		U
75-34-3	1,1-Dichloroethane	0.72	13		U
107-06-2	1,2-Dichloroethane	0.61	13		U
75-35-4	1,1-Dichloroethene	1.6	13		U
156-59-2	cis-1,2-Dichloroethene	1.6	13		U
156-60-5	trans-1,2-Dichloroethene	1.4	13		U
78-87-5	1,2-Dichloropropane	0.61	13		U
10061-01-5	cis-1,3-Dichloropropene	0.66	13		U
10061-02-6	trans-1,3-Dichloropropene	0.42	13		U
100-41-4	Ethylbenzene	0.99	13		U
591-78-6	2-Hexanone	3.0	13		U
98-82-8	Isopropylbenzene	1.2	13		U
79-20-9	Methyl acetate	2.1	13		U
75-09-2	Methylene chloride	0.82	13	13u ~~1.8~~	~~JB~~ BI
108-87-2	Methyl cyclohexane	0.40	13		U
1634-04-4	Methyl tert-butyl ether	0.42	13		U
108-10-1	4-Methyl-2-pentanone	0.77	13		U
100-42-5	Styrene	0.46	13		U
79-34-5	1,1,2,2-Tetrachloroethane	0.57	13		U
127-18-4	Tetrachloroethene	1.3	13		U

RW 2/28/09

FORM 1
VOLATILE ORGANICS ANALYSIS DATA SHEET

CLIENT SAMPLE NO. 5

MR08-IS11
9-4.5-5.5-08D

Lab Name: EMPIRICAL LABS Contract: CH2MHILL

Lab Code: NA Case No.: NA SAS No.: NA SDG No.: LEJEUNE034

Matrix: (soil/water) SOIL Lab Sample ID: 0812230-05

Sample wt/vol: 4.4 (g/mL) G Lab File ID: 1223005A

Level: (low/med) LOW Date Sampled: 12/15/08 12:35

% Moisture: not dec. 14 Date Analyzed: 12/29/08 12:15

GC Column: RTX-VRX ID: 0.25 (mm) Dilution Factor: 1.0

Soil Extract Volume:_____(uL) Soil Aliquot Volume: _____(uL)

CONCENTRATION UNITS: (ug/L or ug/Kg) UG/KG

CAS NO.	COMPOUND	MDL	RL	CONC	Q
108-88-3	Toluene	1.1	13		U
120-82-1	1,2,4-Trichlorobenzene	0.24	13		U
71-55-6	1,1,1-Trichloroethane	1.2	13		U
79-00-5	1,1,2-Trichloroethane	0.46	13		U
79-01-6	Trichloroethene	1.1	13		U
76-13-1	Trichlorotrifluoroethane	0.73	13		U
75-69-4	Trichlorofluoromethane	1.2	13		U
75-01-4	Vinyl chloride	1.4	13		~~U~~ UJ CA
1330-20-7	Xylene(total)	0.93	13		U

FORM I VOA

EW
2/28/09

6

FORM 1
VOLATILE ORGANICS ANALYSIS DATA SHEET

CLIENT SAMPLE NO.

MR08-IS119D
-4.5-5.5-08D

Lab Name: EMPIRICAL LABS Contract: CH2MHILL

Lab Code: NA Case No.: NA SAS No.: NA SDG No.: LEJEUNE034

Matrix: (soil/water) SOIL Lab Sample ID: 0812230-06

Sample wt/vol: 5.8 (g/mL) G Lab File ID: 1223006A

Level: (low/med) LOW Date Sampled: 12/15/08 12:35

% Moisture: not dec. 14 Date Analyzed: 12/29/08 12:54

GC Column: RTX-VRX ID: 0.25 (mm) Dilution Factor: 1.0

Soil Extract Volume:_____(uL) Soil Aliquot Volume: _____(uL)

CONCENTRATION UNITS: (ug/L or ug/Kg) UG/KG

CAS NO.	COMPOUND	MDL	RL	CONC	Q
67-64-1	Acetone	2.0	10	53	~~U~~ R ISLB
71-43-2	Benzene	0.47	10	6.5	~~U~~ J
75-27-4	Bromodichloromethane	0.30	10		~~U~~ R
75-25-2	Bromoform	1.00	10		~~U~~
74-83-9	Bromomethane	0.72	10		~~U~~
78-93-3	2-Butanone	1.4	10	2.6	~~U~~ J
75-15-0	Carbon disulfide	1.3	10	17	J
56-23-5	Carbon tetrachloride	0.88	10		~~U~~ R
108-90-7	Chlorobenzene	0.34	10		~~U~~
75-00-3	Chloroethane	1.1	10		~~U~~
67-66-3	Chloroform	0.55	10		~~U~~
74-87-3	Chloromethane	0.52	10	0.64	~~U~~ J
110-82-7	Cyclohexane	0.54	10	1.6	~~U~~ J
124-48-1	Dibromochloromethane	0.34	10		~~U~~ R
96-12-8	1,2-Dibromo-3-chloropropane	1.2	5.0		~~U~~
106-93-4	1,2-Dibromoethane	0.43	10		~~U~~
95-50-1	1,2-Dichlorobenzene	0.37	10	0.98	~~U~~ J
541-73-1	1,3-Dichlorobenzene	0.84	10		~~U~~ R
106-46-7	1,4-Dichlorobenzene	0.55	10	2.1	~~U~~ J
75-71-8	Dichlorodifluoromethane	1.1	10		~~U~~ R
75-34-3	1,1-Dichloroethane	0.54	10		~~U~~
107-06-2	1,2-Dichloroethane	0.46	10		~~U~~
75-35-4	1,1-Dichloroethene	1.2	10		~~U~~
156-59-2	cis-1,2-Dichloroethene	1.2	10		~~U~~
156-60-5	trans-1,2-Dichloroethene	1.1	10		~~U~~
78-87-5	1,2-Dichloropropane	0.46	10		~~U~~
10061-01-5	cis-1,3-Dichloropropene	0.50	10		~~U~~
10061-02-6	trans-1,3-Dichloropropene	0.32	10		~~U~~
100-41-4	Ethylbenzene	0.75	10	3.0	~~U~~ J
591-78-6	2-Hexanone	2.3	10		~~U~~ R
98-82-8	Isopropylbenzene	0.88	10		~~U~~
79-20-9	Methyl acetate	1.6	10		~~U~~
75-09-2	Methylene chloride	0.62	10	10U	~~1.7~~ ~~JB~~ R ISLB
108-87-2	Methyl cyclohexane	0.30	10	1.4	~~U~~ J
1634-04-4	Methyl tert-butyl ether	0.32	10		~~U~~ R
108-10-1	4-Methyl-2-pentanone	0.58	10		~~U~~
100-42-5	Styrene	0.35	10		~~U~~
79-34-5	1,1,2,2-Tetrachloroethane	0.43	10		~~U~~
127-18-4	Tetrachloroethene	0.97	10		~~U~~

lw
2/28/09

FORM 1
VOLATILE ORGANICS ANALYSIS DATA SHEET

CLIENT SAMPLE NO.

6

MR08-IS119D
-4.5-5.5-08D

Lab Name: EMPIRICAL LABS Contract: CH2MHILL

Lab Code: NA Case No.: NA SAS No.: NA SDG No.: LEJEUNE034

Matrix: (soil/water) SOIL Lab Sample ID: 0812230-06

Sample wt/vol: 5.8 (g/mL) G Lab File ID: 1223006A

Level: (low/med) LOW Date Sampled: 12/15/08 12:35

% Moisture: not dec. 14 Date Analyzed: 12/29/08 12:54

GC Column: RTX-VRX ID: 0.25 (mm) Dilution Factor: 1.0

Soil Extract Volume:_____(uL) Soil Aliquot Volume: _____(uL)

CONCENTRATION UNITS: (ug/L or ug/Kg) UG/KG

CAS NO.	COMPOUND	MDL	RL	CONC	Q
108-88-3	Toluene	0.86	10	6.8	~~J~~ J ISL
120-82-1	1,2,4-Trichlorobenzene	0.18	10	2.2	~~J~~ J
71-55-6	1,1,1-Trichloroethane	0.90	10		~~U~~ R
79-00-5	1,1,2-Trichloroethane	0.35	10		~~U~~
79-01-6	Trichloroethene	0.85	10		~~U~~
76-13-1	Trichlorotrifluoroethane	0.55	10		~~U~~
75-69-4	Trichlorofluoromethane	0.95	10		~~U~~
75-01-4	Vinyl chloride	1.1	10		~~U~~
1330-20-7	Xylene(total)	0.70	10	2.3	~~J~~ J

fcw
2/28/09

FORM 1
VOLATILE ORGANICS ANALYSIS DATA SHEET

CLIENT SAMPLE NO. 6RE

MR08-IS11
9D-4.5-5.5-08DR

Lab Name: EMPIRICAL LABS Contract: CH2MHILL

Lab Code: NA Case No.: NA SAS No.: NA SDG No.: LEJEUNE034

Matrix: (soil/water) SOIL Lab Sample ID: 0812230-06R

Sample wt/vol: 5.8 (g/mL) G Lab File ID: 1223006B

Level: (low/med) LOW Date Sampled: 12/15/08 12:35

% Moisture: not dec. 14 Date Analyzed: 01/03/09 21:16 use DMG, INBR

GC Column: RTX-VRX ID: 0.25 (mm) Dilution Factor: 1.0

Soil Extract Volume:_____(uL) Soil Aliquot Volume: _____(uL)

CONCENTRATION UNITS: (ug/L or ug/Kg) UG/KG

CAS NO.	COMPOUND	MDL	RL	CONC	Q
67-64-1	Acetone	2.0	10		U UJ H
71-43-2	Benzene	0.47	10		U
75-27-4	Bromodichloromethane	0.30	10		U
75-25-2	Bromoform	1.00	10		U
74-83-9	Bromomethane	0.72	10		U
78-93-3	2-Butanone	1.4	10		U
75-15-0	Carbon disulfide	1.3	10		U
56-23-5	Carbon tetrachloride	0.88	10		U
108-90-7	Chlorobenzene	0.34	10		U
75-00-3	Chloroethane	1.1	10		U
67-66-3	Chloroform	0.55	10		U
74-87-3	Chloromethane	0.52	10		U
110-82-7	Cyclohexane	0.54	10		U
124-48-1	Dibromochloromethane	0.34	10		U
96-12-8	1,2-Dibromo-3-chloropropane	1.2	5.0		U
106-93-4	1,2-Dibromoethane	0.43	10		U
95-50-1	1,2-Dichlorobenzene	0.37	10		U
541-73-1	1,3-Dichlorobenzene	0.84	10		U
106-46-7	1,4-Dichlorobenzene	0.55	10		U
75-71-8	Dichlorodifluoromethane	1.1	10		U
75-34-3	1,1-Dichloroethane	0.54	10		U
107-06-2	1,2-Dichloroethane	0.46	10		U
75-35-4	1,1-Dichloroethene	1.2	10		U
156-59-2	cis-1,2-Dichloroethene	1.2	10		U
156-60-5	trans-1,2-Dichloroethene	1.1	10		U
78-87-5	1,2-Dichloropropane	0.46	10		U
10061-01-5	cis-1,3-Dichloropropene	0.50	10		U
10061-02-6	trans-1,3-Dichloropropene	0.32	10		U
100-41-4	Ethylbenzene	0.75	10		U
591-78-6	2-Hexanone	2.3	10		U
98-82-8	Isopropylbenzene	0.88	10		U
79-20-9	Methyl acetate	1.6	10		U
75-09-2	Methylene chloride	0.62	10	10 UJ ~~2.8 JB~~	HTB
108-87-2	Methyl cyclohexane	0.30	10		U UJ H
1634-04-4	Methyl tert-butyl ether	0.32	10		U
108-10-1	4-Methyl-2-pentanone	0.58	10		U
100-42-5	Styrene	0.35	10		U
79-34-5	1,1,2,2-Tetrachloroethane	0.43	10		U
127-18-4	Tetrachloroethene	0.97	10		U

FORM I VOA

LW 2/28/09

FORM 1
VOLATILE ORGANICS ANALYSIS DATA SHEET

CLIENT SAMPLE NO. 6RE

MR08-IS11
9D-4.5-5.5-08DR

Lab Name: EMPIRICAL LABS Contract: CH2MHILL

Lab Code: NA Case No.: NA SAS No.: NA SDG No.: LEJEUNE034

Matrix: (soil/water) SOIL Lab Sample ID: 0812230-06R

Sample wt/vol: 5.8 (g/mL) G Lab File ID: 1223006B

Level: (low/med) LOW Date Sampled: 12/15/08 12:35

% Moisture: not dec. 14 Date Analyzed: 01/03/09 21:16

GC Column: RTX-VRX ID: 0.25 (mm) Dilution Factor: 1.0

Soil Extract Volume:_____(uL) Soil Aliquot Volume: _____(uL)

CONCENTRATION UNITS: (ug/L or ug/Kg) UG/KG

CAS NO.	COMPOUND	MDL	RL	CONC	Q
108-88-3	Toluene	0.86	10		U UJ H1
120-82-1	1,2,4-Trichlorobenzene	0.18	10		U
71-55-6	1,1,1-Trichloroethane	0.90	10		U
79-00-5	1,1,2-Trichloroethane	0.35	10		U
79-01-6	Trichloroethene	0.85	10		U
76-13-1	Trichlorotrifluoroethane	0.55	10		U
75-69-4	Trichlorofluoromethane	0.95	10		U
75-01-4	Vinyl chloride	1.1	10		U
1330-20-7	Xylene(total)	0.70	10		U

Lab Orig NA

RE

FORM I VOA

2128109

FORM 1
VOLATILE ORGANICS ANALYSIS DATA SHEET

CLIENT SAMPLE NO. 7

MR08-SS120-08D

Lab Name: EMPIRICAL LABS Contract: CH2MHILL

Lab Code: NA Case No.: NA SAS No.: NA SDG No.: LEJEUNE034

Matrix: (soil/water) SOIL Lab Sample ID: 0812230-07

Sample wt/vol: 3.9 (g/mL) G Lab File ID: 1223007A

Level: (low/med) LOW Date Sampled: 12/15/08 13:40

% Moisture: not dec. 9 Date Analyzed: 12/29/08 13:33

GC Column: RTX-VRX ID: 0.25 (mm) Dilution Factor: 1.0

Soil Extract Volume:_____(uL) Soil Aliquot Volume: _____(uL)

CONCENTRATION UNITS: (ug/L or ug/Kg) UG/KG

CAS NO.	COMPOUND	MDL	RL	CONC	Q
67-64-1	Acetone	2.8	14		U
71-43-2	Benzene	0.66	14		U
75-27-4	Bromodichloromethane	0.42	14		U
75-25-2	Bromoform	1.4	14		U
74-83-9	Bromomethane	1.0	14		U
78-93-3	2-Butanone	2.0	14		U
75-15-0	Carbon disulfide	1.8	14		U
56-23-5	Carbon tetrachloride	1.2	14		U
108-90-7	Chlorobenzene	0.48	14		U
75-00-3	Chloroethane	1.6	14		U
67-66-3	Chloroform	0.78	14		U
74-87-3	Chloromethane	0.74	14		~~U~~ UJ CCH
110-82-7	Cyclohexane	0.76	14		U
124-48-1	Dibromochloromethane	0.48	14		U
96-12-8	1,2-Dibromo-3-chloropropane	1.7	7.1		U
106-93-4	1,2-Dibromoethane	0.61	14		U
95-50-1	1,2-Dichlorobenzene	0.52	14		U
541-73-1	1,3-Dichlorobenzene	1.2	14		U
106-46-7	1,4-Dichlorobenzene	0.78	14		U
75-71-8	Dichlorodifluoromethane	1.6	14		U
75-34-3	1,1-Dichloroethane	0.76	14		U
107-06-2	1,2-Dichloroethane	0.65	14		U
75-35-4	1,1-Dichloroethene	1.7	14		U
156-59-2	cis-1,2-Dichloroethene	1.7	14		U
156-60-5	trans-1,2-Dichloroethene	1.6	14		U
78-87-5	1,2-Dichloropropane	0.65	14		U
10061-01-5	cis-1,3-Dichloropropene	0.71	14		U
10061-02-6	trans-1,3-Dichloropropene	0.45	14		U
100-41-4	Ethylbenzene	1.1	14		U
591-78-6	2-Hexanone	3.2	14		U
98-82-8	Isopropylbenzene	1.2	14		U
79-20-9	Methyl acetate	2.3	14		U
75-09-2	Methylene chloride	0.88	14	14u ~~3.3 JB~~	B
108-87-2	Methyl cyclohexane	0.42	14		U
1634-04-4	Methyl tert-butyl ether	0.45	14		U
108-10-1	4-Methyl-2-pentanone	0.82	14		U
100-42-5	Styrene	0.50	14		U
79-34-5	1,1,2,2-Tetrachloroethane	0.61	14		U
127-18-4	Tetrachloroethene	1.4	14		U

JW 2/28/09

FORM 1
VOLATILE ORGANICS ANALYSIS DATA SHEET

CLIENT SAMPLE NO. 7

MR08-SS120-08D

Lab Name: EMPIRICAL LABS Contract: CH2MHILL

Lab Code: NA Case No.: NA SAS No.: NA SDG No.: LEJEUNE034

Matrix: (soil/water) SOIL Lab Sample ID: 0812230-07

Sample wt/vol: 3.9 (g/mL) G Lab File ID: 1223007A

Level: (low/med) LOW Date Sampled: 12/15/08 13:40

% Moisture: not dec. 9 Date Analyzed: 12/29/08 13:33

GC Column: RTX-VRX ID: 0.25 (mm) Dilution Factor: 1.0

Soil Extract Volume:_____(uL) Soil Aliquot Volume: _____(uL)

CONCENTRATION UNITS: (ug/L or ug/Kg) UG/KG

CAS NO.	COMPOUND	MDL	RL	CONC	Q
108-88-3	Toluene	1.2	14		U
120-82-1	1,2,4-Trichlorobenzene	0.25	14		U
71-55-6	1,1,1-Trichloroethane	1.3	14		U
79-00-5	1,1,2-Trichloroethane	0.50	14		U
79-01-6	Trichloroethene	1.2	14		U
76-13-1	Trichlorotrifluoroethane	0.78	14		U
75-69-4	Trichlorofluoromethane	1.3	14		U
75-01-4	Vinyl chloride	1.6	14		~~U~~ UJ cc
1330-20-7	Xylene(total)	0.99	14		U

FORM I VOA

lw
2/28/09

FORM 1
VOLATILE ORGANICS ANALYSIS DATA SHEET

CLIENT SAMPLE NO. 8

MR08-IS12
0-1.5-2.5-08D

Lab Name: EMPIRICAL LABS Contract: CH2MHILL

Lab Code: NA Case No.: NA SAS No.: NA SDG No.: LEJEUNE034

Matrix: (soil/water) SOIL Lab Sample ID: 0812230-08

Sample wt/vol: 5.3 (g/mL) G Lab File ID: 1223008A

Level: (low/med) LOW Date Sampled: 12/15/08 14:00

% Moisture: not dec. 9 Date Analyzed: 12/29/08 14:12

GC Column: RTX-VRX ID: 0.25 (mm) Dilution Factor: 1.0

Soil Extract Volume:_____(uL) Soil Aliquot Volume: _____(uL)

CONCENTRATION UNITS: (ug/L or ug/Kg) UG/KG

CAS NO.	COMPOUND	MDL	RL	CONC	Q
67-64-1	Acetone	2.1	10	16	u BL
71-43-2	Benzene	0.49	10		U
75-27-4	Bromodichloromethane	0.31	10		U
75-25-2	Bromoform	1.0	10		U
74-83-9	Bromomethane	0.75	10		U
78-93-3	2-Butanone	1.5	10		U
75-15-0	Carbon disulfide	1.4	10		U
56-23-5	Carbon tetrachloride	0.92	10		U
108-90-7	Chlorobenzene	0.36	10		U
75-00-3	Chloroethane	1.2	10		U
67-66-3	Chloroform	0.58	10		U
74-87-3	Chloromethane	0.54	10		~~U~~ UJ CU
110-82-7	Cyclohexane	0.56	10		U
124-48-1	Dibromochloromethane	0.36	10		U
96-12-8	1,2-Dibromo-3-chloropropane	1.2	5.2		U
106-93-4	1,2-Dibromoethane	0.45	10		U
95-50-1	1,2-Dichlorobenzene	0.39	10		U
541-73-1	1,3-Dichlorobenzene	0.88	10		U
106-46-7	1,4-Dichlorobenzene	0.58	10		U
75-71-8	Dichlorodifluoromethane	1.2	10		U
75-34-3	1,1-Dichloroethane	0.56	10		U
107-06-2	1,2-Dichloroethane	0.48	10		U
75-35-4	1,1-Dichloroethene	1.2	10		U
156-59-2	cis-1,2-Dichloroethene	1.2	10		U
156-60-5	trans-1,2-Dichloroethene	1.2	10		U
78-87-5	1,2-Dichloropropane	0.48	10		U
10061-01-5	cis-1,3-Dichloropropene	0.52	10		U
10061-02-6	trans-1,3-Dichloropropene	0.33	10		U
100-41-4	Ethylbenzene	0.78	10		U
591-78-6	2-Hexanone	2.4	10		U
98-82-8	Isopropylbenzene	0.92	10		U
79-20-9	Methyl acetate	1.7	10		U
75-09-2	Methylene chloride	0.65	10	10u	~~1.4 JB~~ BL
108-87-2	Methyl cyclohexane	0.31	10		U
1634-04-4	Methyl tert-butyl ether	0.33	10		U
108-10-1	4-Methyl-2-pentanone	0.61	10		U
100-42-5	Styrene	0.37	10		U
79-34-5	1,1,2,2-Tetrachloroethane	0.45	10		U
127-18-4	Tetrachloroethene	1.0	10		U

FORM I VOA

hw 2/28/09

FORM 1
VOLATILE ORGANICS ANALYSIS DATA SHEET

CLIENT SAMPLE NO. 8

MR08-IS12
0-1.5-2.5-08D

Lab Name: EMPIRICAL LABS Contract: CH2MHILL

Lab Code: NA Case No.: NA SAS No.: NA SDG No.: LEJEUNE034

Matrix: (soil/water) SOIL Lab Sample ID: 0812230-08

Sample wt/vol: 5.3 (g/mL) G Lab File ID: 1223008A

Level: (low/med) LOW Date Sampled: 12/15/08 14:00

% Moisture: not dec. 9 Date Analyzed: 12/29/08 14:12

GC Column: RTX-VRX ID: 0.25 (mm) Dilution Factor: 1.0

Soil Extract Volume:_____(uL) Soil Aliquot Volume: _____(uL)

CONCENTRATION UNITS: (ug/L or ug/Kg) UG/KG

CAS NO.	COMPOUND	MDL	RL	CONC	Q
108-88-3	Toluene	0.90	10		U
120-82-1	1,2,4-Trichlorobenzene	0.19	10		U
71-55-6	1,1,1-Trichloroethane	0.94	10		U
79-00-5	1,1,2-Trichloroethane	0.37	10		U
79-01-6	Trichloroethene	0.89	10		U
76-13-1	Trichlorotrifluoroethane	0.58	10		U
75-69-4	Trichlorofluoromethane	0.99	10		U
75-01-4	Vinyl chloride	1.2	10		~~U~~ UJ CCH
1330-20-7	Xylene(total)	0.73	10		U

FORM I VOA

JW
2/23/09

FORM 1
VOLATILE ORGANICS ANALYSIS DATA SHEET

CLIENT SAMPLE NO. 9

MR08-SS122-08D

Lab Name: EMPIRICAL LABS Contract: CH2MHILL

Lab Code: NA Case No.: NA SAS No.: NA SDG No.: LEJEUNE034

Matrix: (soil/water) SOIL Lab Sample ID: 0812230-09

Sample wt/vol: 6.8 (g/mL) G Lab File ID: 1223009A

Level: (low/med) LOW Date Sampled: 12/15/08 14:25

% Moisture: not dec. 7 Date Analyzed: 12/29/08 14:52

GC Column: RTX-VRX ID: 0.25 (mm) Dilution Factor: 1.0

Soil Extract Volume:_____(uL) Soil Aliquot Volume: _____(uL)

CONCENTRATION UNITS: (ug/L or ug/Kg) UG/KG

CAS NO.	COMPOUND	MDL	RL	CONC	Q
67-64-1	Acetone	1.6	7.9	26	u BL
71-43-2	Benzene	0.37	7.9	1.2	J
75-27-4	Bromodichloromethane	0.24	7.9		U
75-25-2	Bromoform	0.79	7.9		U
74-83-9	Bromomethane	0.57	7.9		U
78-93-3	2-Butanone	1.1	7.9	4.1	J
75-15-0	Carbon disulfide	1.0	7.9	1.6	J
56-23-5	Carbon tetrachloride	0.70	7.9		U
108-90-7	Chlorobenzene	0.27	7.9		~~U~~ UJ MS
75-00-3	Chloroethane	0.87	7.9		U
67-66-3	Chloroform	0.44	7.9		U
74-87-3	Chloromethane	0.41	7.9		~~U~~ UJ CU
110-82-7	Cyclohexane	0.43	7.9	0.48	~~J~~ J MS
124-48-1	Dibromochloromethane	0.27	7.9		U
96-12-8	1,2-Dibromo-3-chloropropane	0.95	4.0		~~U~~ UJ IS
106-93-4	1,2-Dibromoethane	0.34	7.9		U
95-50-1	1,2-Dichlorobenzene	0.29	7.9		~~U~~ UJ IS
541-73-1	1,3-Dichlorobenzene	0.66	7.9		~~U~~ ↓ ↓
106-46-7	1,4-Dichlorobenzene	0.44	7.9		~~U~~
75-71-8	Dichlorodifluoromethane	0.87	7.9		U
75-34-3	1,1-Dichloroethane	0.43	7.9		U
107-06-2	1,2-Dichloroethane	0.36	7.9		U
75-35-4	1,1-Dichloroethene	0.95	7.9		U
156-59-2	cis-1,2-Dichloroethene	0.95	7.9		U
156-60-5	trans-1,2-Dichloroethene	0.87	7.9		U
78-87-5	1,2-Dichloropropane	0.36	7.9		U
10061-01-5	cis-1,3-Dichloropropene	0.40	7.9		U
10061-02-6	trans-1,3-Dichloropropene	0.25	7.9		U
100-41-4	Ethylbenzene	0.59	7.9	3.2	~~J~~ J MS
591-78-6	2-Hexanone	1.8	7.9		U
98-82-8	Isopropylbenzene	0.70	7.9		~~U~~ UJ MS
79-20-9	Methyl acetate	1.3	7.9		U
75-09-2	Methylene chloride	0.49	7.9	7.9u ~~1.1~~	~~JB~~ BL
108-87-2	Methyl cyclohexane	0.24	7.9	0.42	~~J~~ J MS
1634-04-4	Methyl tert-butyl ether	0.25	7.9		U
108-10-1	4-Methyl-2-pentanone	0.46	7.9	0.85	J
100-42-5	Styrene	0.28	7.9		~~U~~ UJ MS
79-34-5	1,1,2,2-Tetrachloroethane	0.34	7.9		~~U~~ UJ IS
127-18-4	Tetrachloroethene	0.77	7.9		~~U~~ UJ MS

RW 2/28/09

9

FORM 1
VOLATILE ORGANICS ANALYSIS DATA SHEET

CLIENT SAMPLE NO.

MR08-SS122-08D

Lab Name: EMPIRICAL LABS Contract: CH2MHILL

Lab Code: NA Case No.: NA SAS No.: NA SDG No.: LEJEUNE034

Matrix: (soil/water) SOIL Lab Sample ID: 0812230-09

Sample wt/vol: 6.8 (g/mL) G Lab File ID: 1223009A

Level: (low/med) LOW Date Sampled: 12/15/08 14:25

% Moisture: not dec. 7 Date Analyzed: 12/29/08 14:52

GC Column: RTX-VRX ID: 0.25 (mm) Dilution Factor: 1.0

Soil Extract Volume:_____(uL) Soil Aliquot Volume: _____(uL)

CONCENTRATION UNITS: (ug/L or ug/Kg) UG/KG

CAS NO.	COMPOUND	MDL	RL	CONC	Q
108-88-3	Toluene	0.68	7.9	2.1	~~U~~ J MS
120-82-1	1,2,4-Trichlorobenzene	0.14	7.9		~~U~~ UJ IS
71-55-6	1,1,1-Trichloroethane	0.71	7.9		U
79-00-5	1,1,2-Trichloroethane	0.28	7.9		U
79-01-6	Trichloroethene	0.67	7.9		~~U~~ UJ MS
76-13-1	Trichlorotrifluoroethane	0.44	7.9		U
75-69-4	Trichlorofluoromethane	0.75	7.9		U
75-01-4	Vinyl chloride	0.87	7.9		~~U~~ UJ CC
1330-20-7	Xylene(total)	0.55	7.9		~~U~~ UJ MS

FORM I VOA

lw 2/28/09

FORM 1
VOLATILE ORGANICS ANALYSIS DATA SHEET

CLIENT SAMPLE NO. 9RE

MR08-SS122-08DR

Lab Name: EMPIRICAL LABS Contract: CH2MHILL

Lab Code: NA Case No.: NA SAS No.: NA SDG No.: LEJEUNE034

Matrix: (soil/water) SOIL Lab Sample ID: 0812230-09R

Sample wt/vol: 5.8 (g/mL) G Lab File ID: 1223009B

Level: (low/med) LOW Date Sampled: 12/15/08 14:25

% Moisture: not dec. 7 Date Analyzed: 01/03/09 21:56 Use Orig. NA

GC Column: RTX-VRX ID: 0.25 (mm) Dilution Factor: 1.0

Soil Extract Volume:_____(uL) Soil Aliquot Volume: _____(uL)

CONCENTRATION UNITS: (ug/L or ug/Kg) UG/KG

CAS NO.	COMPOUND	MDL	RL	CONC	Q
67-64-1	Acetone	1.8	9.2	9.2 ~~JB 2 J~~	HT B
71-43-2	Benzene	0.43	9.2		U UJ H
75-27-4	Bromodichloromethane	0.28	9.2		U
75-25-2	Bromoform	0.92	9.2		U
74-83-9	Bromomethane	0.66	9.2		U
78-93-3	2-Butanone	1.3	9.2		U
75-15-0	Carbon disulfide	1.2	9.2		U
56-23-5	Carbon tetrachloride	0.81	9.2		U
108-90-7	Chlorobenzene	0.31	9.2		U
75-00-3	Chloroethane	1.0	9.2		U
67-66-3	Chloroform	0.51	9.2		U
74-87-3	Chloromethane	0.48	9.2		U UJ HT
110-82-7	Cyclohexane	0.50	9.2		U
124-48-1	Dibromochloromethane	0.31	9.2		U
96-12-8	1,2-Dibromo-3-chloropropane	1.1	4.6		U
106-93-4	1,2-Dibromoethane	0.40	9.2		U
95-50-1	1,2-Dichlorobenzene	0.34	9.2		U
541-73-1	1,3-Dichlorobenzene	0.77	9.2		U
106-46-7	1,4-Dichlorobenzene	0.51	9.2		U
75-71-8	Dichlorodifluoromethane	1.0	9.2		U
75-34-3	1,1-Dichloroethane	0.50	9.2		U
107-06-2	1,2-Dichloroethane	0.42	9.2		U
75-35-4	1,1-Dichloroethene	1.1	9.2		U
156-59-2	cis-1,2-Dichloroethene	1.1	9.2		U
156-60-5	trans-1,2-Dichloroethene	1.0	9.2		U
78-87-5	1,2-Dichloropropane	0.42	9.2		U
10061-01-5	cis-1,3-Dichloropropene	0.46	9.2		U
10061-02-6	trans-1,3-Dichloropropene	0.29	9.2		U
100-41-4	Ethylbenzene	0.69	9.2		U
591-78-6	2-Hexanone	2.1	9.2		U
98-82-8	Isopropylbenzene	0.81	9.2		U
79-20-9	Methyl acetate	1.5	9.2		U
75-09-2	Methylene chloride	0.57	9.2	9.2 ~~JB 2.8~~	HT B
108-87-2	Methyl cyclohexane	0.28	9.2		U UJ H
1634-04-4	Methyl tert-butyl ether	0.29	9.2		U
108-10-1	4-Methyl-2-pentanone	0.53	9.2		U
100-42-5	Styrene	0.32	9.2		U
79-34-5	1,1,2,2-Tetrachloroethane	0.40	9.2		U
127-18-4	Tetrachloroethene	0.89	9.2		U

2/28/09

FORM 1
VOLATILE ORGANICS ANALYSIS DATA SHEET

CLIENT SAMPLE NO. 9RE

MR08-SS122-08DR

Lab Name: EMPIRICAL LABS Contract: CH2MHILL

Lab Code: NA Case No.: NA SAS No.: NA SDG No.: LEJEUNE034

Matrix: (soil/water) SOIL Lab Sample ID: 0812230-09R

Sample wt/vol: 5.8 (g/mL) G Lab File ID: 1223009B

Level: (low/med) LOW Date Sampled: 12/15/08 14:25

% Moisture: not dec. 7 Date Analyzed: 01/03/09 21:56 Use ORIGINAL

GC Column: RTX-VRX ID: 0.25 (mm) Dilution Factor: 1.0

Soil Extract Volume:_____(uL) Soil Aliquot Volume: _____(uL)

CONCENTRATION UNITS: (ug/L or ug/Kg) UG/KG

CAS NO.	COMPOUND	MDL	RL	CONC	Q
108-88-3	Toluene	0.79	9.2		U UJ
120-82-1	1,2,4-Trichlorobenzene	0.16	9.2		U
71-55-6	1,1,1-Trichloroethane	0.83	9.2		U
79-00-5	1,1,2-Trichloroethane	0.32	9.2		U
79-01-6	Trichloroethene	0.78	9.2		U
76-13-1	Trichlorotrifluoroethane	0.51	9.2		U
75-69-4	Trichlorofluoromethane	0.88	9.2		U
75-01-4	Vinyl chloride	1.0	9.2		U UJ
1330-20-7	Xylene(total)	0.64	9.2		U

HT

R RE

FORM I VOA

MW
2/28/09

FORM 1
VOLATILE ORGANICS ANALYSIS DATA SHEET

CLIENT SAMPLE NO. 10

MR08-IS122
-6.5-8-08D

Lab Name: EMPIRICAL LABS Contract: CH2MHILL

Lab Code: NA Case No.: NA SAS No.: NA SDG No.: LEJEUNE034

Matrix: (soil/water) SOIL Lab Sample ID: 0812230-10

Sample wt/vol: 4.9 (g/mL) G Lab File ID: 1223010A

Level: (low/med) LOW Date Sampled: 12/15/08 15:00

% Moisture: not dec. 10 Date Analyzed: 12/29/08 15:31

GC Column: RTX-VRX ID: 0.25 (mm) Dilution Factor: 1.0

Soil Extract Volume:_____(uL) Soil Aliquot Volume: _____(uL)

CONCENTRATION UNITS: (ug/L or ug/Kg) UG/KG

CAS NO.	COMPOUND	MDL	RL	CONC	Q
67-64-1	Acetone	2.3	11	11u ~~4.8~~	J B1
71-43-2	Benzene	0.53	11		U
75-27-4	Bromodichloromethane	0.34	11		U
75-25-2	Bromoform	1.1	11		U
74-83-9	Bromomethane	0.82	11		U
78-93-3	2-Butanone	1.6	11		U
75-15-0	Carbon disulfide	1.5	11		U
56-23-5	Carbon tetrachloride	1.00	11		U
108-90-7	Chlorobenzene	0.38	11		~~U~~ UJ MS
75-00-3	Chloroethane	1.2	11		U
67-66-3	Chloroform	0.62	11		U
74-87-3	Chloromethane	0.59	11		~~U~~ UJ CC
110-82-7	Cyclohexane	0.61	11		U
124-48-1	Dibromochloromethane	0.38	11		U
96-12-8	1,2-Dibromo-3-chloropropane	1.4	5.7		U
106-93-4	1,2-Dibromoethane	0.49	11		U
95-50-1	1,2-Dichlorobenzene	0.42	11		~~U~~ UJ MS
541-73-1	1,3-Dichlorobenzene	0.95	11		U
106-46-7	1,4-Dichlorobenzene	0.62	11		U
75-71-8	Dichlorodifluoromethane	1.2	11		U
75-34-3	1,1-Dichloroethane	0.61	11		U
107-06-2	1,2-Dichloroethane	0.52	11		U
75-35-4	1,1-Dichloroethene	1.4	11		U
156-59-2	cis-1,2-Dichloroethene	1.4	11		U
156-60-5	trans-1,2-Dichloroethene	1.2	11		U
78-87-5	1,2-Dichloropropane	0.52	11		U
10061-01-5	cis-1,3-Dichloropropene	0.57	11		U
10061-02-6	trans-1,3-Dichloropropene	0.36	11		U
100-41-4	Ethylbenzene	0.85	11		U
591-78-6	2-Hexanone	2.6	11		U
98-82-8	Isopropylbenzene	1.00	11		U
79-20-9	Methyl acetate	1.8	11		~~U~~ R MS
75-09-2	Methylene chloride	0.70	11	11u ~~1.9~~	JB B1
108-87-2	Methyl cyclohexane	0.34	11		U
1634-04-4	Methyl tert-butyl ether	0.36	11		U
108-10-1	4-Methyl-2-pentanone	0.66	11		U
100-42-5	Styrene	0.40	11		U
79-34-5	1,1,2,2-Tetrachloroethane	0.49	11		U
127-18-4	Tetrachloroethene	1.1	11		U

lw
2/28/09

FORM 1
VOLATILE ORGANICS ANALYSIS DATA SHEET

CLIENT SAMPLE NO. 10

MR08-IS122
-6.5-8-08D

Lab Name: EMPIRICAL LABS Contract: CH2MHILL

Lab Code: NA Case No.: NA SAS No.: NA SDG No.: LEJEUNE034

Matrix: (soil/water) SOIL Lab Sample ID: 0812230-10

Sample wt/vol: 4.9 (g/mL) G Lab File ID: 1223010A

Level: (low/med) LOW Date Sampled: 12/15/08 15:00

% Moisture: not dec. 10 Date Analyzed: 12/29/08 15:31

GC Column: RTX-VRX ID: 0.25 (mm) Dilution Factor: 1.0

Soil Extract Volume:_____(uL) Soil Aliquot Volume: _____(uL)

CONCENTRATION UNITS: (ug/L or ug/Kg) UG/KG

CAS NO.	COMPOUND	MDL	RL	CONC	Q
108-88-3------	Toluene	0.97	11		U
120-82-1------	1,2,4-Trichlorobenzene	0.20	11		~~U~~ UJ MS
71-55-6-------	1,1,1-Trichloroethane	1.0	11		U
79-00-5-------	1,1,2-Trichloroethane	0.40	11		U
79-01-6-------	Trichloroethene	0.96	11		U
76-13-1-------	Trichlorotrifluoroethane	0.62	11		U
75-69-4-------	Trichlorofluoromethane	1.1	11		U
75-01-4-------	Vinyl chloride	1.2	11		~~U~~ UJ CC
1330-20-7-----	Xylene(total)	0.79	11		U

FORM I VOA

2128/09

FORM 1
VOLATILE ORGANICS ANALYSIS DATA SHEET

CLIENT SAMPLE NO. 11

MR08-SS118-08D

Lab Name: EMPIRICAL LABS Contract: CH2MHILL

Lab Code: NA Case No.: NA SAS No.: NA SDG No.: LEJEUNE034

Matrix: (soil/water) SOIL Lab Sample ID: 0812230-11

Sample wt/vol: 4.0 (g/mL) G Lab File ID: 1223011A

Level: (low/med) LOW Date Sampled: 12/15/08 15:50

% Moisture: not dec. 14 Date Analyzed: 12/29/08 16:10

GC Column: RTX-VRX ID: 0.25 (mm) Dilution Factor: 1.0

Soil Extract Volume:_____(uL) Soil Aliquot Volume: _____(uL)

CONCENTRATION UNITS: (ug/L or ug/Kg) UG/KG

CAS NO.	COMPOUND	MDL	RL	CONC	Q
67-64-1	Acetone	2.9	14	16	U BL
71-43-2	Benzene	0.68	14	1.6	J
75-27-4	Bromodichloromethane	0.44	14		U
75-25-2	Bromoform	1.4	14		U
74-83-9	Bromomethane	1.0	14		U
78-93-3	2-Butanone	2.0	14	4.0	J
75-15-0	Carbon disulfide	1.9	14		U
56-23-5	Carbon tetrachloride	1.3	14		U
108-90-7	Chlorobenzene	0.50	14		U
75-00-3	Chloroethane	1.6	14		U
67-66-3	Chloroform	0.80	14		U
74-87-3	Chloromethane	0.76	14		~~J~~ UJ CU
110-82-7	Cyclohexane	0.79	14	1.1	J
124-48-1	Dibromochloromethane	0.50	14		U
96-12-8	1,2-Dibromo-3-chloropropane	1.7	7.3		U
106-93-4	1,2-Dibromoethane	0.63	14		U
95-50-1	1,2-Dichlorobenzene	0.54	14		U
541-73-1	1,3-Dichlorobenzene	1.2	14		U
106-46-7	1,4-Dichlorobenzene	0.80	14		U
75-71-8	Dichlorodifluoromethane	1.6	14		U
75-34-3	1,1-Dichloroethane	0.79	14		U
107-06-2	1,2-Dichloroethane	0.67	14		U
75-35-4	1,1-Dichloroethene	1.7	14		U
156-59-2	cis-1,2-Dichloroethene	1.7	14		U
156-60-5	trans-1,2-Dichloroethene	1.6	14		U
78-87-5	1,2-Dichloropropane	0.67	14		U
10061-01-5	cis-1,3-Dichloropropene	0.73	14		U
10061-02-6	trans-1,3-Dichloropropene	0.47	14		U
100-41-4	Ethylbenzene	1.1	14	3.5	J
591-78-6	2-Hexanone	3.4	14		U
98-82-8	Isopropylbenzene	1.3	14		U
79-20-9	Methyl acetate	2.3	14		U
75-09-2	Methylene chloride	0.90	14	14u	~~2.3 JB~~ B
108-87-2	Methyl cyclohexane	0.44	14	1.4	J
1634-04-4	Methyl tert-butyl ether	0.47	14		U
108-10-1	4-Methyl-2-pentanone	0.84	14		U
100-42-5	Styrene	0.51	14		U
79-34-5	1,1,2,2-Tetrachloroethane	0.63	14		U
127-18-4	Tetrachloroethene	1.4	14		U

FORM I VOA

LW
2/28/09

FORM 1
VOLATILE ORGANICS ANALYSIS DATA SHEET

CLIENT SAMPLE NO. 11

MR08-SS118-08D

Lab Name: EMPIRICAL LABS Contract: CH2MHILL

Lab Code: NA Case No.: NA SAS No.: NA SDG No.: LEJEUNE034

Matrix: (soil/water) SOIL Lab Sample ID: 0812230-11

Sample wt/vol: 4.0 (g/mL) G Lab File ID: 1223011A

Level: (low/med) LOW Date Sampled: 12/15/08 15:50

% Moisture: not dec. 14 Date Analyzed: 12/29/08 16:10

GC Column: RTX-VRX ID: 0.25 (mm) Dilution Factor: 1.0

Soil Extract Volume:_____(uL) Soil Aliquot Volume: _____(uL)

CONCENTRATION UNITS: (ug/L or ug/Kg) UG/KG

CAS NO.	COMPOUND	MDL	RL	CONC	Q
108-88-3	Toluene	1.2	14	2.2	J
120-82-1	1,2,4-Trichlorobenzene	0.26	14		U
71-55-6	1,1,1-Trichloroethane	1.3	14		U
79-00-5	1,1,2-Trichloroethane	0.51	14		U
79-01-6	Trichloroethene	1.2	14		U
76-13-1	Trichlorotrifluoroethane	0.80	14		U
75-69-4	Trichlorofluoromethane	1.4	14		U
75-01-4	Vinyl chloride	1.6	14		~~U~~ UJ CC
1330-20-7	Xylene(total)	1.0	14		U

FORM I VOA

RW 2/28/09

FORM 1
VOLATILE ORGANICS ANALYSIS DATA SHEET

CLIENT SAMPLE NO. 12

MR08-IS118-08D

Lab Name: EMPIRICAL LABS Contract: CH2MHILL

Lab Code: NA Case No.: NA SAS No.: NA SDG No.: LEJEUNE034

Matrix: (soil/water) SOIL Lab Sample ID: 0812230-12

Sample wt/vol: 5.6 (g/mL) G Lab File ID: 1223012A

Level: (low/med) LOW Date Sampled: 12/15/08 16:00

% Moisture: not dec. 11 Date Analyzed: 12/29/08 16:49

GC Column: RTX-VRX ID: 0.25 (mm) Dilution Factor: 1.0

Soil Extract Volume:_____(uL) Soil Aliquot Volume: _____(uL)

CONCENTRATION UNITS: (ug/L or ug/Kg) UG/KG

CAS NO.	COMPOUND	MDL	RL	CONC	Q
67-64-1	Acetone	2.0	10	10U ~~4.7~~	~~J~~ B1
71-43-2	Benzene	0.47	10		U
75-27-4	Bromodichloromethane	0.30	10		U
75-25-2	Bromoform	1.0	10		U
74-83-9	Bromomethane	0.72	10		U
78-93-3	2-Butanone	1.4	10		U
75-15-0	Carbon disulfide	1.3	10		U
56-23-5	Carbon tetrachloride	0.88	10		U
108-90-7	Chlorobenzene	0.34	10		U
75-00-3	Chloroethane	1.1	10		U
67-66-3	Chloroform	0.55	10		U
74-87-3	Chloromethane	0.52	10		~~U~~ UJ CCH
110-82-7	Cyclohexane	0.54	10		U
124-48-1	Dibromochloromethane	0.34	10		U
96-12-8	1,2-Dibromo-3-chloropropane	1.2	5.0		U
106-93-4	1,2-Dibromoethane	0.43	10		U
95-50-1	1,2-Dichlorobenzene	0.37	10		U
541-73-1	1,3-Dichlorobenzene	0.84	10		U
106-46-7	1,4-Dichlorobenzene	0.55	10		U
75-71-8	Dichlorodifluoromethane	1.1	10		U
75-34-3	1,1-Dichloroethane	0.54	10		U
107-06-2	1,2-Dichloroethane	0.46	10		U
75-35-4	1,1-Dichloroethene	1.2	10		U
156-59-2	cis-1,2-Dichloroethene	1.2	10		U
156-60-5	trans-1,2-Dichloroethene	1.1	10		U
78-87-5	1,2-Dichloropropane	0.46	10		U
10061-01-5	cis-1,3-Dichloropropene	0.50	10		U
10061-02-6	trans-1,3-Dichloropropene	0.32	10		U
100-41-4	Ethylbenzene	0.75	10		U
591-78-6	2-Hexanone	2.3	10		U
98-82-8	Isopropylbenzene	0.88	10		U
79-20-9	Methyl acetate	1.6	10		U
75-09-2	Methylene chloride	0.62	10	10U ~~1.7~~	~~JB~~ B
108-87-2	Methyl cyclohexane	0.30	10		U
1634-04-4	Methyl tert-butyl ether	0.32	10		U
108-10-1	4-Methyl-2-pentanone	0.58	10		U
100-42-5	Styrene	0.35	10		U
79-34-5	1,1,2,2-Tetrachloroethane	0.43	10		U
127-18-4	Tetrachloroethene	0.97	10		U

FORM I VOA

lw
2/28/09

FORM 1
VOLATILE ORGANICS ANALYSIS DATA SHEET

CLIENT SAMPLE NO. 12

MR08-IS118-08D

Lab Name: EMPIRICAL LABS Contract: CH2MHILL

Lab Code: NA Case No.: NA SAS No.: NA SDG No.: LEJEUNE034

Matrix: (soil/water) SOIL Lab Sample ID: 0812230-12

Sample wt/vol: 5.6 (g/mL) G Lab File ID: 1223012A

Level: (low/med) LOW Date Sampled: 12/15/08 16:00

% Moisture: not dec. 11 Date Analyzed: 12/29/08 16:49

GC Column: RTX-VRX ID: 0.25 (mm) Dilution Factor: 1.0

Soil Extract Volume:_____(uL) Soil Aliquot Volume: _____(uL)

CONCENTRATION UNITS: (ug/L or ug/Kg) UG/KG

CAS NO.	COMPOUND	MDL	RL	CONC	Q
108-88-3	Toluene	0.86	10		U
120-82-1	1,2,4-Trichlorobenzene	0.18	10		U
71-55-6	1,1,1-Trichloroethane	0.90	10		U
79-00-5	1,1,2-Trichloroethane	0.35	10		U
79-01-6	Trichloroethene	0.85	10		U
76-13-1	Trichlorotrifluoroethane	0.55	10		U
75-69-4	Trichlorofluoromethane	0.95	10		U
75-01-4	Vinyl chloride	1.1	10		UUJ CC
1330-20-7	Xylene(total)	0.70	10		U

hw
2/28/09

FORM 1
VOLATILE ORGANICS ANALYSIS DATA SHEET

CLIENT SAMPLE NO. 13

MR08-EB01
121508-SS

Lab Name: EMPIRICAL LABS Contract: CH2MHILL

Lab Code: NA Case No.: NA SAS No.: NA SDG No.: LEJEUNE034

Matrix: (soil/water) WATER Lab Sample ID: 0812230-13

Sample wt/vol: 5.000 (g/mL) ML Lab File ID: 1223013

Level: (low/med) LOW Date Sampled: 12/16/08 08:00

% Moisture: not dec. _____ Date Analyzed: 12/23/08 15:36

GC Column: RTX-VRX ID: 0.25 (mm) Dilution Factor: 1.0

Soil Extract Volume:_____(uL) Soil Aliquot Volume: _____(uL)

CONCENTRATION UNITS: (ug/L or ug/Kg) UG/L

CAS NO.	COMPOUND	MDL	RL	CONC	Q
67-64-1	Acetone	0.84	10	69	J CCH
71-43-2	Benzene	0.11	10		U
75-27-4	Bromodichloromethane	0.10	10		U
75-25-2	Bromoform	0.10	10		U
74-83-9	Bromomethane	0.32	10		~~U~~ UJ CC
78-93-3	2-Butanone	1.0	10		U
75-15-0	Carbon disulfide	0.13	10		U
56-23-5	Carbon tetrachloride	0.15	10		U
108-90-7	Chlorobenzene	0.10	10		U
75-00-3	Chloroethane	0.18	10		U
67-66-3	Chloroform	0.11	10	0.18	J
74-87-3	Chloromethane	0.29	10		U
110-82-7	Cyclohexane	0.20	10		U
124-48-1	Dibromochloromethane	0.10	10		U
96-12-8	1,2-Dibromo-3-chloropropane	0.11	5.0		U
106-93-4	1,2-Dibromoethane	0.10	10		U
95-50-1	1,2-Dichlorobenzene	0.10	10		U
541-73-1	1,3-Dichlorobenzene	0.13	10		U
106-46-7	1,4-Dichlorobenzene	0.10	10		U
75-71-8	Dichlorodifluoromethane	0.22	10		U
75-34-3	1,1-Dichloroethane	0.12	10		U
107-06-2	1,2-Dichloroethane	0.10	10		U
75-35-4	1,1-Dichloroethene	0.15	10		U
156-59-2	cis-1,2-Dichloroethene	0.13	10		U
156-60-5	trans-1,2-Dichloroethene	0.13	10		U
78-87-5	1,2-Dichloropropane	0.10	10		U
10061-01-5	cis-1,3-Dichloropropene	0.11	10		U
10061-02-6	trans-1,3-Dichloropropene	0.10	10		U
100-41-4	Ethylbenzene	0.13	10		U
591-78-6	2-Hexanone	0.30	10		U
98-82-8	Isopropylbenzene	0.15	10		U
79-20-9	Methyl acetate	0.30	10		U
75-09-2	Methylene chloride	0.14	10	10U	~~2.4 JB~~ BC
108-87-2	Methyl cyclohexane	0.17	10		U
1634-04-4	Methyl tert-butyl ether	0.10	10		U
108-10-1	4-Methyl-2-pentanone	0.29	10		U
100-42-5	Styrene	0.10	10		U
79-34-5	1,1,2,2-Tetrachloroethane	0.10	10		U
127-18-4	Tetrachloroethene	0.15	10		U

FORM I VOA

dw
2/28/09

FORM 1
VOLATILE ORGANICS ANALYSIS DATA SHEET

CLIENT SAMPLE NO. 13

MR08-EB01
121508-SS

Lab Name: EMPIRICAL LABS Contract: CH2MHILL

Lab Code: NA Case No.: NA SAS No.: NA SDG No.: LEJEUNE034

Matrix: (soil/water) WATER Lab Sample ID: 0812230-13

Sample wt/vol: 5.000 (g/mL) ML Lab File ID: 1223013

Level: (low/med) LOW Date Sampled: 12/16/08 08:00

% Moisture: not dec. _____ Date Analyzed: 12/23/08 15:36

GC Column: RTX-VRX ID: 0.25 (mm) Dilution Factor: 1.0

Soil Extract Volume:_____(uL) Soil Aliquot Volume: _____(uL)

CONCENTRATION UNITS: (ug/L or ug/Kg) UG/L

CAS NO.	COMPOUND	MDL	RL	CONC	Q
108-88-3	Toluene	0.10	10		U
120-82-1	1,2,4-Trichlorobenzene	0.10	10		U
71-55-6	1,1,1-Trichloroethane	0.17	10		U
79-00-5	1,1,2-Trichloroethane	0.10	10		U
79-01-6	Trichloroethene	0.13	10		U
76-13-1	Trichlorotrifluoroethane	0.18	10		U
75-69-4	Trichlorofluoromethane	0.17	10		U
75-01-4	Vinyl chloride	0.18	10		U
1330-20-7	Xylene(total)	0.22	10		U

lw
2/28/09

FORM 1
VOLATILE ORGANICS ANALYSIS DATA SHEET

CLIENT SAMPLE NO. 14

MR08-TB01
121608-SS

Lab Name: EMPIRICAL LABS Contract: CH2MHILL

Lab Code: NA Case No.: NA SAS No.: NA SDG No.: LEJEUNE034

Matrix: (soil/water) WATER Lab Sample ID: 0812230-14

Sample wt/vol: 5.000 (g/mL) ML Lab File ID: 1223014

Level: (low/med) LOW Date Sampled: 12/16/08 :

% Moisture: not dec. _____ Date Analyzed: 12/23/08 14:05

GC Column: RTX-VRX ID: 0.25 (mm) Dilution Factor: 1.0

Soil Extract Volume:_____(uL) Soil Aliquot Volume: _____(uL)

CONCENTRATION UNITS: (ug/L or ug/Kg) UG/L

CAS NO.	COMPOUND	MDL	RL	CONC	Q
67-64-1	Acetone	0.84	10		~~U~~ UJ CC
71-43-2	Benzene	0.11	10		U
75-27-4	Bromodichloromethane	0.10	10		U
75-25-2	Bromoform	0.10	10		U
74-83-9	Bromomethane	0.32	10		~~U~~ UJ CC
78-93-3	2-Butanone	1.0	10		U
75-15-0	Carbon disulfide	0.13	10		U
56-23-5	Carbon tetrachloride	0.15	10		U
108-90-7	Chlorobenzene	0.10	10		U
75-00-3	Chloroethane	0.18	10		U
67-66-3	Chloroform	0.11	10		U
74-87-3	Chloromethane	0.29	10		U
110-82-7	Cyclohexane	0.20	10		U
124-48-1	Dibromochloromethane	0.10	10		U
96-12-8	1,2-Dibromo-3-chloropropane	0.11	5.0		U
106-93-4	1,2-Dibromoethane	0.10	10		U
95-50-1	1,2-Dichlorobenzene	0.10	10		U
541-73-1	1,3-Dichlorobenzene	0.13	10		U
106-46-7	1,4-Dichlorobenzene	0.10	10		U
75-71-8	Dichlorodifluoromethane	0.22	10		U
75-34-3	1,1-Dichloroethane	0.12	10		U
107-06-2	1,2-Dichloroethane	0.10	10		U
75-35-4	1,1-Dichloroethene	0.15	10		U
156-59-2	cis-1,2-Dichloroethene	0.13	10		U
156-60-5	trans-1,2-Dichloroethene	0.13	10		U
78-87-5	1,2-Dichloropropane	0.10	10		U
10061-01-5	cis-1,3-Dichloropropene	0.11	10		U
10061-02-6	trans-1,3-Dichloropropene	0.10	10		U
100-41-4	Ethylbenzene	0.13	10		U
591-78-6	2-Hexanone	0.30	10		U
98-82-8	Isopropylbenzene	0.15	10		U
79-20-9	Methyl acetate	0.30	10		U
75-09-2	Methylene chloride	0.14	10	10 u	~~2.0 JB~~ BL
108-87-2	Methyl cyclohexane	0.17	10		U
1634-04-4	Methyl tert-butyl ether	0.10	10		U
108-10-1	4-Methyl-2-pentanone	0.29	10		U
100-42-5	Styrene	0.10	10		U
79-34-5	1,1,2,2-Tetrachloroethane	0.10	10		U
127-18-4	Tetrachloroethene	0.15	10		U

FORM I VOA

HW
2/28/09

FORM 1
VOLATILE ORGANICS ANALYSIS DATA SHEET

CLIENT SAMPLE NO. 14

MR08-TB01
121608-SS

Lab Name: EMPIRICAL LABS Contract: CH2MHILL

Lab Code: NA Case No.: NA SAS No.: NA SDG No.: LEJEUNE034

Matrix: (soil/water) WATER Lab Sample ID: 0812230-14

Sample wt/vol: 5.000 (g/mL) ML Lab File ID: 1223014

Level: (low/med) LOW Date Sampled: 12/16/08 :

% Moisture: not dec. _____ Date Analyzed: 12/23/08 14:05

GC Column: RTX-VRX ID: 0.25 (mm) Dilution Factor: 1.0

Soil Extract Volume:_____(uL) Soil Aliquot Volume: _____(uL)

CONCENTRATION UNITS: (ug/L or ug/Kg) UG/L

CAS NO.	COMPOUND	MDL	RL	CONC	Q
108-88-3	Toluene	0.10	10		U
120-82-1	1,2,4-Trichlorobenzene	0.10	10		U
71-55-6	1,1,1-Trichloroethane	0.17	10		U
79-00-5	1,1,2-Trichloroethane	0.10	10		U
79-01-6	Trichloroethene	0.13	10		U
76-13-1	Trichlorotrifluoroethane	0.18	10		U
75-69-4	Trichlorofluoromethane	0.17	10		U
75-01-4	Vinyl chloride	0.18	10		U
1330-20-7	Xylene(total)	0.22	10		U

lew
2/28/09

FORM 1
VOLATILE ORGANICS ANALYSIS DATA SHEET

CLIENT SAMPLE NO. 15

MR08-SS127-08D

Lab Name: EMPIRICAL LABS Contract: CH2MHILL

Lab Code: NA Case No.: NA SAS No.: NA SDG No.: LEJEUNE034

Matrix: (soil/water) SOIL Lab Sample ID: 0812230-15

Sample wt/vol: 3.7 (g/mL) G Lab File ID: 1223015A

Level: (low/med) LOW Date Sampled: 12/16/08 08:50

% Moisture: not dec. 6 Date Analyzed: 12/29/08 17:28

GC Column: RTX-VRX ID: 0.25 (mm) Dilution Factor: 1.0

Soil Extract Volume:_____(uL) Soil Aliquot Volume: _____(uL)

CONCENTRATION UNITS: (ug/L or ug/Kg) UG/KG

CAS NO.	COMPOUND	MDL	RL	CONC	Q
67-64-1	Acetone	2.9	14	26	U
71-43-2	Benzene	0.68	14		U
75-27-4	Bromodichloromethane	0.43	14		U
75-25-2	Bromoform	1.4	14		U
74-83-9	Bromomethane	1.0	14		U
78-93-3	2-Butanone	2.0	14	2.1	J
75-15-0	Carbon disulfide	1.9	14		U
56-23-5	Carbon tetrachloride	1.3	14		U
108-90-7	Chlorobenzene	0.49	14		U
75-00-3	Chloroethane	1.6	14		U
67-66-3	Chloroform	0.79	14		U
74-87-3	Chloromethane	0.75	14		U
110-82-7	Cyclohexane	0.78	14		U
124-48-1	Dibromochloromethane	0.49	14		U
96-12-8	1,2-Dibromo-3-chloropropane	1.7	7.2		U
106-93-4	1,2-Dibromoethane	0.62	14		U
95-50-1	1,2-Dichlorobenzene	0.53	14		U
541-73-1	1,3-Dichlorobenzene	1.2	14		U
106-46-7	1,4-Dichlorobenzene	0.79	14		U
75-71-8	Dichlorodifluoromethane	1.6	14		U
75-34-3	1,1-Dichloroethane	0.78	14		U
107-06-2	1,2-Dichloroethane	0.66	14		U
75-35-4	1,1-Dichloroethene	1.7	14		U
156-59-2	cis-1,2-Dichloroethene	1.7	14		U
156-60-5	trans-1,2-Dichloroethene	1.6	14		U
78-87-5	1,2-Dichloropropane	0.66	14		U
10061-01-5	cis-1,3-Dichloropropene	0.72	14		U
10061-02-6	trans-1,3-Dichloropropene	0.46	14		U
100-41-4	Ethylbenzene	1.1	14	1.8	J
591-78-6	2-Hexanone	3.3	14		U
98-82-8	Isopropylbenzene	1.3	14		U
79-20-9	Methyl acetate	2.3	14		U
75-09-2	Methylene chloride	0.89	14	14u ~~6.7~~	~~JB~~ C
108-87-2	Methyl cyclohexane	0.43	14		U
1634-04-4	Methyl tert-butyl ether	0.46	14		U
108-10-1	4-Methyl-2-pentanone	0.83	14		U
100-42-5	Styrene	0.50	14		U
79-34-5	1,1,2,2-Tetrachloroethane	0.62	14		U
127-18-4	Tetrachloroethene	1.4	14		U

FORM I VOA

21281 59

FORM 1
VOLATILE ORGANICS ANALYSIS DATA SHEET

CLIENT SAMPLE NO.

15

MR08-SS127-08D

Lab Name: EMPIRICAL LABS Contract: CH2MHILL

Lab Code: NA Case No.: NA SAS No.: NA SDG No.: LEJEUNE034

Matrix: (soil/water) SOIL Lab Sample ID: 0812230-15

Sample wt/vol: 3.7 (g/mL) G Lab File ID: 1223015A

Level: (low/med) LOW Date Sampled: 12/16/08 08:50

% Moisture: not dec. 6 Date Analyzed: 12/29/08 17:28

GC Column: RTX-VRX ID: 0.25 (mm) Dilution Factor: 1.0

Soil Extract Volume:_____(uL) Soil Aliquot Volume: _____(uL)

CONCENTRATION UNITS: (ug/L or ug/Kg) UG/KG

CAS NO.	COMPOUND	MDL	RL	CONC	Q
108-88-3	Toluene	1.2	14		U
120-82-1	1,2,4-Trichlorobenzene	0.26	14		U
71-55-6	1,1,1-Trichloroethane	1.3	14		U
79-00-5	1,1,2-Trichloroethane	0.50	14		U
79-01-6	Trichloroethene	1.2	14		U
76-13-1	Trichlorotrifluoroethane	0.79	14		U
75-69-4	Trichlorofluoromethane	1.4	14		U
75-01-4	Vinyl chloride	1.6	14		U
1330-20-7	Xylene(total)	1.0	14		U

lw
2/28/09

FORM 1
VOLATILE ORGANICS ANALYSIS DATA SHEET

CLIENT SAMPLE NO.

MR08-IS12
7-1.5-3-08D

16

Lab Name: EMPIRICAL LABS Contract: CH2MHILL

Lab Code: NA Case No.: NA SAS No.: NA SDG No.: LEJEUNE034

Matrix: (soil/water) SOIL Lab Sample ID: 0812230-16

Sample wt/vol: 3.8 (g/mL) G Lab File ID: 1223016A

Level: (low/med) LOW Date Sampled: 12/16/08 09:05

% Moisture: not dec. 13 Date Analyzed: 12/30/08 01:06

GC Column: RTX-VRX ID: 0.25 (mm) Dilution Factor: 1.0

Soil Extract Volume:_____(uL) Soil Aliquot Volume: _____(uL)

CONCENTRATION UNITS: (ug/L or ug/Kg) UG/KG

CAS NO.	COMPOUND	MDL	RL	CONC	Q
67-64-1	Acetone	3.0	15	120	~~J~~ UJ
71-43-2	Benzene	0.71	15	1.4	J
75-27-4	Bromodichloromethane	0.45	15		U
75-25-2	Bromoform	1.5	15		U
74-83-9	Bromomethane	1.1	15		U
78-93-3	2-Butanone	2.1	15	15	J
75-15-0	Carbon disulfide	2.0	15		U
56-23-5	Carbon tetrachloride	1.3	15		U
108-90-7	Chlorobenzene	0.51	15		U
75-00-3	Chloroethane	1.6	15		U
67-66-3	Chloroform	0.83	15		U
74-87-3	Chloromethane	0.78	15		~~J~~ UJ
110-82-7	Cyclohexane	0.81	15	0.96	J
124-48-1	Dibromochloromethane	0.51	15		U
96-12-8	1,2-Dibromo-3-chloropropane	1.8	7.5		~~J~~ UJ
106-93-4	1,2-Dibromoethane	0.65	15		U
95-50-1	1,2-Dichlorobenzene	0.56	15		~~J~~ UJ
541-73-1	1,3-Dichlorobenzene	1.3	15		U
106-46-7	1,4-Dichlorobenzene	0.83	15		U
75-71-8	Dichlorodifluoromethane	1.6	15		U
75-34-3	1,1-Dichloroethane	0.81	15		U
107-06-2	1,2-Dichloroethane	0.69	15		U
75-35-4	1,1-Dichloroethene	1.8	15		U
156-59-2	cis-1,2-Dichloroethene	1.8	15		U
156-60-5	trans-1,2-Dichloroethene	1.6	15		U
78-87-5	1,2-Dichloropropane	0.69	15		U
10061-01-5	cis-1,3-Dichloropropene	0.75	15		U
10061-02-6	trans-1,3-Dichloropropene	0.48	15		U
100-41-4	Ethylbenzene	1.1	15	6.8	J
591-78-6	2-Hexanone	3.5	15		U
98-82-8	Isopropylbenzene	1.3	15		U
79-20-9	Methyl acetate	2.4	15		U
75-09-2	Methylene chloride	0.93	15	15u ~~3.3~~	~~JB~~ B
108-87-2	Methyl cyclohexane	0.45	15	0.87	J
1634-04-4	Methyl tert-butyl ether	0.48	15		U
108-10-1	4-Methyl-2-pentanone	0.87	15	1.7	J
100-42-5	Styrene	0.53	15		U
79-34-5	1,1,2,2-Tetrachloroethane	0.65	15		~~J~~ UJ
127-18-4	Tetrachloroethene	1.5	15		U

LW 7/28/09

FORM 1
VOLATILE ORGANICS ANALYSIS DATA SHEET

CLIENT SAMPLE NO. 16

MR08-IS12
7-1.5-3-08D

Lab Name: EMPIRICAL LABS Contract: CH2MHILL

Lab Code: NA Case No.: NA SAS No.: NA SDG No.: LEJEUNE034

Matrix: (soil/water) SOIL Lab Sample ID: 0812230-16

Sample wt/vol: 3.8 (g/mL) G Lab File ID: 1223016A

Level: (low/med) LOW Date Sampled: 12/16/08 09:05

% Moisture: not dec. 13 Date Analyzed: 12/30/08 01:06

GC Column: RTX-VRX ID: 0.25 (mm) Dilution Factor: 1.0

Soil Extract Volume:_____(uL) Soil Aliquot Volume: _____(uL)

CONCENTRATION UNITS: (ug/L or ug/Kg) UG/KG

CAS NO.	COMPOUND	MDL	RL	CONC	Q
108-88-3	Toluene	1.3	15	3.6	J
120-82-1	1,2,4-Trichlorobenzene	0.27	15		~~U~~ UJ IS
71-55-6	1,1,1-Trichloroethane	1.4	15		U
79-00-5	1,1,2-Trichloroethane	0.53	15		U
79-01-6	Trichloroethene	1.3	15		U
76-13-1	Trichlorotrifluoroethane	0.83	15		U
75-69-4	Trichlorofluoromethane	1.4	15		U
75-01-4	Vinyl chloride	1.6	15		~~U~~ UJ CC
1330-20-7	Xylene(total)	1.0	15		U

FORM I VOA

JCW
2/28/09

FORM 1
VOLATILE ORGANICS ANALYSIS DATA SHEET

CLIENT SAMPLE NO. 16RE

MR08-IS12
7-1.5-3-08DR

Lab Name: EMPIRICAL LABS Contract: CH2MHILL

Lab Code: NA Case No.: NA SAS No.: NA SDG No.: LEJEUNE034

Matrix: (soil/water) SOIL Lab Sample ID: 0812230-16R

Sample wt/vol: 5.4 (g/mL) G Lab File ID: 1223016B

Level: (low/med) LOW Date Sampled: 12/16/08 09:05

% Moisture: not dec. 13 Date Analyzed: 01/05/09 20:33 Use ONLY, NA

GC Column: RTX-VRX ID: 0.25 (mm) Dilution Factor: 1.0

Soil Extract Volume:_____(uL) Soil Aliquot Volume: _____(uL)

CONCENTRATION UNITS: (ug/L or ug/Kg) UG/KG

CAS NO.	COMPOUND	MDL	RL	CONC	Q
67-64-1	Acetone	2.1	11	13	UJ HT
71-43-2	Benzene	0.50	11		U UJ HT
75-27-4	Bromodichloromethane	0.32	11		U
75-25-2	Bromoform	1.1	11		U
74-83-9	Bromomethane	0.77	11		U
78-93-3	2-Butanone	1.5	11		U
75-15-0	Carbon disulfide	1.4	11		U
56-23-5	Carbon tetrachloride	0.94	11		U
108-90-7	Chlorobenzene	0.36	11		U
75-00-3	Chloroethane	1.2	11		U
67-66-3	Chloroform	0.59	11		U
74-87-3	Chloromethane	0.56	11		U
110-82-7	Cyclohexane	0.58	11		U
124-48-1	Dibromochloromethane	0.36	11		U
96-12-8	1,2-Dibromo-3-chloropropane	1.3	5.4		U UJ IS
106-93-4	1,2-Dibromoethane	0.46	11		U UJ H
95-50-1	1,2-Dichlorobenzene	0.40	11		U UJ IS
541-73-1	1,3-Dichlorobenzene	0.90	11		U
106-46-7	1,4-Dichlorobenzene	0.59	11		U
75-71-8	Dichlorodifluoromethane	1.2	11		U UJ HT
75-34-3	1,1-Dichloroethane	0.58	11		U
107-06-2	1,2-Dichloroethane	0.49	11		U
75-35-4	1,1-Dichloroethene	1.3	11		U
156-59-2	cis-1,2-Dichloroethene	1.3	11		U
156-60-5	trans-1,2-Dichloroethene	1.2	11		U
78-87-5	1,2-Dichloropropane	0.49	11		U
10061-01-5	cis-1,3-Dichloropropene	0.54	11		U
10061-02-6	trans-1,3-Dichloropropene	0.34	11		U
100-41-4	Ethylbenzene	0.80	11		U
591-78-6	2-Hexanone	2.5	11		U
98-82-8	Isopropylbenzene	0.94	11		U
79-20-9	Methyl acetate	1.7	11		U
75-09-2	Methylene chloride	0.66	11	11 UJ	~~2.6 JB~~ HT BE
108-87-2	Methyl cyclohexane	0.32	11		U UJ H
1634-04-4	Methyl tert-butyl ether	0.34	11		U
108-10-1	4-Methyl-2-pentanone	0.62	11		U
100-42-5	Styrene	0.38	11		U
79-34-5	1,1,2,2-Tetrachloroethane	0.46	11		U UJ I
127-18-4	Tetrachloroethene	1.0	11		U H

FORM I VOA

2/28/09

FORM 1
VOLATILE ORGANICS ANALYSIS DATA SHEET

CLIENT SAMPLE NO. 16RE

MR08-IS12
7-1.5-3-08DR

Lab Name: EMPIRICAL LABS Contract: CH2MHILL

Lab Code: NA Case No.: NA SAS No.: NA SDG No.: LEJEUNE034

Matrix: (soil/water) SOIL Lab Sample ID: 0812230-16R

Sample wt/vol: 5.4 (g/mL) G Lab File ID: 1223016B

Level: (low/med) LOW Date Sampled: 12/16/08 09:05

% Moisture: not dec. 13 Date Analyzed: 01/05/09 20:33 Use orig MPA

GC Column: RTX-VRX ID: 0.25 (mm) Dilution Factor: 1.0

Soil Extract Volume:_____(uL) Soil Aliquot Volume:_____(uL)

CONCENTRATION UNITS: (ug/L or ug/Kg) UG/KG

CAS NO.	COMPOUND	MDL	RL	CONC	Q
108-88-3	Toluene	0.92	11		~~U~~ UJ HT
120-82-1	1,2,4-Trichlorobenzene	0.19	11		~~U~~ UJ ISC
71-55-6	1,1,1-Trichloroethane	0.97	11		U HT
79-00-5	1,1,2-Trichloroethane	0.38	11		U
79-01-6	Trichloroethene	0.91	11		U
76-13-1	Trichlorotrifluoroethane	0.59	11		U
75-69-4	Trichlorofluoromethane	1.0	11		U
75-01-4	Vinyl chloride	1.2	11		U
1330-20-7	Xylene(total)	0.75	11		U

R RE

FORM I VOA

lw 2/28/09

ENVIRONMENTAL
Data Services, Inc.

VOLATILE ORGANIC COMPOUNDS
USEPA Region IV - Level IV Review

Site: MCB Camp Lejeune, TO-09 SDG #: LEJEUNE036

Client: CH2M HILL, Inc., Virginia Beach, Virginia Date: February 28, 2009

Laboratory: Empirical Laboratories, Nashville, Tennessee Reviewer: Nancy Weaver

EDS ID	Client Sample ID	Laboratory Sample ID	Matrix
1	MR08-SS126-08D	0812281-01	Soil
2	MR08-IS126-1.5-2.508D	0812281-02	Soil
3	MR08-SS130-08D	0812281-03	Soil
4	MR08-IS130-1.5-3-08D	0812281-04	Soil
5	MR08-SS132-08D	0812281-05	Soil
6	MR08-IS132-08D	0812281-06	Soil
7	MR08-SS131-08D	0812281-07	Soil
8	MR08-SS111-08D	0812281-08	Soil
9	MR08-SS112-08D	0812281-09	Soil
9RE	MR08-SS112-08DRE	0812281-09RE	Soil
10	MR08-EB121708	0812281-10	Water
11	MR08-SS133-08D	0812281-11	Soil
12	MR08-IS133-08D	0812281-12	Soil
13	MR08-SS110-08D	0812281-13	Soil
13RE	MR08-SS110-08DRE	0812281-13RE	Soil
14	MR08-IS110-08D	0812281-14	Soil
15	MR08-SS134-08D	0812281-15	Soil
16	MR08-IS134-08D	0812281-16	Soil
17	TB121708	0812281-17	Water
18	MR08-EB01-121808	0812281-18	Water

The USEPA "Contract Laboratory Program National Functional Guidelines for Organic Data Review," October 1999, and professional judgement were used in evaluating the data in this summary report.

Holding Times - All samples were analyzed within 14 days for preserved water and soil samples except the following.

Sample	Date Sampled	Date Analyzed	# of Days	Qualifier
1	12/16/08	01/09/09	24	J/UJ
2	12/16/08	01/09/09	24	J/UJ
3	12/16/08	01/09/09	24	J/UJ
4	12/16/08	01/09/09	24	J/UJ

Sample	Date Sampled	Date Analyzed	# of Days	Qualifier
5	12/16/08	01/09/09	24	J/UJ
6	12/16/08	01/09/09	24	J/UJ
7	12/16/08	01/09/09	24	J/UJ
8	12/16/08	01/09/09	24	J/UJ
9	12/16/08	01/09/09	24	J/UJ
9RE	12/16/08	01/12/09	27	J/UJ
13RE	12/17/08	01/07/09	21	J/UJ

GC/MS Tuning - All of the BFB tunes in the initial and continuing calibrations met the percent relative abundance criteria.

Initial Calibration - The initial calibrations exhibited acceptable %RSD and mean RRF values.

Continuing Calibration - The continuing calibrations exhibited acceptable %D and RRF values except the following.

CCAL Date	Compound	%D/RRF	Qualifier	Affected Samples
12/30/08	Bromomethane	27.2%	J/UJ	10, 17, 18
01/09/09	Chloromethane	27.7%	None	Already qualified due to HT
	Dichlorodifluoromethane	28.2%	None	Already qualified due to HT
	Vinyl chloride	26.7%	None	Already qualified due to HT

Surrogates - All samples exhibited acceptable surrogate recoveries except the following.

Sample ID	Surrogate	%R	Qualifier
9	Dibromofluoromethane	127%	J - All positives

MS/MSD - A MS/MSD sample was not analyzed from this data package.

Laboratory Control Sample - The LCS samples exhibited acceptable %R values.

Internal Standard (IS) Area Performance - All internal standards met response and retention time (RT) criteria except the following.

Sample ID	Internal Standard	Area Count	Qualifier
9	IS1-Fluorobenzene	Severely Low	J/R
	IS2-Chlorobenzene	Severely Low	J/R
	IS3-1,4-Dichlorobenzene	Severely Low	J/R
13	IS1-Fluorobenzene	Low	J/UJ
	IS2-Chlorobenzene	Low	J/UJ
	IS3-1,4-Dichlorobenzene	Severely Low	J/R

Method Blank - The method blanks exhibited the following contamination.

Blank ID	Compound	Conc.	Action Level	Qualifier	Affected Samples
V3BLK1230E	Methylene chloride	0.34 ug/L	3.4 ug/L	U	10, 17, 18
	1,2,4-Trichlorobenzene	0.18 ug/L	0.90 ug/L	None	All ND
V4BLK1231	Methylene chloride	1.5 ug/kg	15 ug/kg	U	11-14
	1,2,4-Trichlorobenzene	0.23 ug/kg	1.15 ug/kg	U	13
V1BLK0106	Methylene chloride	4.8 ug/kg	48 ug/kg	U	13RE
V1BLK0109	Methylene chloride	3.5 ug/kg	35 ug/kg	U	1-9
V1BLK0112	Methylene chloride	3.1 ug/kg	31 ug/kg	U	9RE
	1,2,4-Trichlorobenzene	0.19 ug/kg	0.95 ug/kg	None	All ND

Trip, Field, Equipment Blank - Field QC results are summarized below.

Blank ID	Compound	Conc. ug/L	Action Level ug/L	Qualifier	Affected Samples
MR08-EB121708	Acetone	75	750	U	11-13, 13RE, 15, 16
	Chloroform	0.13	0.65	None	All ND
MR08-FB12192008	None - ND	-	-	-	-
MR08-TB121708	None - ND	-	-	-	-

Field Duplicates - Field duplicate samples were not included in this data package.

Tentatively Identified Compounds (TICs) - TICs were not reported.

Compound Quantitation - Several samples exhibited internal standard and/or surrogate deficiencies. These samples were reanalyzed. Refer to Form Is for which were used for reporting purposes.

FORM 1
VOLATILE ORGANICS ANALYSIS DATA SHEET

CLIENT SAMPLE NO.

MR08-SS126-08D

Lab Name: EMPIRICAL LABS Contract: CH2MHILL

Lab Code: NA Case No.: NA SAS No.: NA SDG No.: LEJEUNE036

Matrix: (soil/water) SOIL Lab Sample ID: 0812281-01

Sample wt/vol: 4.6 (g/mL) G Lab File ID: 1228101A

Level: (low/med) LOW Date Sampled: 12/16/08 09:25

% Moisture: not dec. 6 Date Analyzed: 01/09/09 14:38

GC Column: RTX-VRX ID: 0.25 (mm) Dilution Factor: 1.0

Soil Extract Volume:_____(uL) Soil Aliquot Volume: _____(uL)

CONCENTRATION UNITS: (ug/L or ug/Kg) UG/KG

CAS NO.	COMPOUND	MDL	RL	CONC	Q	
67-64-1	Acetone	2.3	12	10	J	J
71-43-2	Benzene	0.54	12		U	UJ
75-27-4	Bromodichloromethane	0.34	12		U	
75-25-2	Bromoform	1.2	12		U	
74-83-9	Bromomethane	0.83	12		U	
78-93-3	2-Butanone	1.6	12		U	
75-15-0	Carbon disulfide	1.5	12		U	
56-23-5	Carbon tetrachloride	1.0	12		U	
108-90-7	Chlorobenzene	0.39	12		U	
75-00-3	Chloroethane	1.3	12		U	
67-66-3	Chloroform	0.63	12		U	
74-87-3	Chloromethane	0.60	12		U	
110-82-7	Cyclohexane	0.62	12		U	
124-48-1	Dibromochloromethane	0.39	12		U	
96-12-8	1,2-Dibromo-3-chloropropane	1.4	5.8		U	
106-93-4	1,2-Dibromoethane	0.50	12		U	
95-50-1	1,2-Dichlorobenzene	0.43	12		U	
541-73-1	1,3-Dichlorobenzene	0.97	12		U	
106-46-7	1,4-Dichlorobenzene	0.63	12		U	
75-71-8	Dichlorodifluoromethane	1.3	12		U	
75-34-3	1,1-Dichloroethane	0.62	12		U	
107-06-2	1,2-Dichloroethane	0.53	12		U	
75-35-4	1,1-Dichloroethene	1.4	12		U	
156-59-2	cis-1,2-Dichloroethene	1.4	12		U	
156-60-5	trans-1,2-Dichloroethene	1.3	12		U	
78-87-5	1,2-Dichloropropane	0.53	12		U	
10061-01-5	cis-1,3-Dichloropropene	0.58	12		U	
10061-02-6	trans-1,3-Dichloropropene	0.37	12		U	
100-41-4	Ethylbenzene	0.86	12	1.9	J	J
591-78-6	2-Hexanone	2.6	12		U	UJ
98-82-8	Isopropylbenzene	1.0	12		U	
79-20-9	Methyl acetate	1.8	12		U	
75-09-2	Methylene chloride	0.71	12	124J ~~1.4~~	~~JB~~	HT
108-87-2	Methyl cyclohexane	0.34	12	0.48	J	J
1634-04-4	Methyl tert-butyl ether	0.37	12		U	UJ
108-10-1	4-Methyl-2-pentanone	0.67	12		U	
100-42-5	Styrene	0.40	12		U	
79-34-5	1,1,2,2-Tetrachloroethane	0.50	12		U	
127-18-4	Tetrachloroethene	1.1	12		U	

FORM I VOA

lw 2/28/09

FORM 1
VOLATILE ORGANICS ANALYSIS DATA SHEET

CLIENT SAMPLE NO.

MR08-SS126-08D

Lab Name: EMPIRICAL LABS Contract: CH2MHILL

Lab Code: NA Case No.: NA SAS No.: NA SDG No.: LEJEUNE036

Matrix: (soil/water) SOIL Lab Sample ID: 0812281-01

Sample wt/vol: 4.6 (g/mL) G Lab File ID: 1228101A

Level: (low/med) LOW Date Sampled: 12/16/08 09:25

% Moisture: not dec. 6 Date Analyzed: 01/09/09 14:38

GC Column: RTX-VRX ID: 0.25 (mm) Dilution Factor: 1.0

Soil Extract Volume:_____(uL) Soil Aliquot Volume: _____(uL)

CONCENTRATION UNITS: (ug/L or ug/Kg) UG/KG

CAS NO.	COMPOUND	MDL	RL	CONC	Q
108-88-3	Toluene	0.99	12	1.1	~~U~~ J
120-82-1	1,2,4-Trichlorobenzene	0.21	12		U UJ
71-55-6	1,1,1-Trichloroethane	1.0	12		U
79-00-5	1,1,2-Trichloroethane	0.40	12		U
79-01-6	Trichloroethene	0.98	12		U
76-13-1	Trichlorotrifluoroethane	0.63	12		U
75-69-4	Trichlorofluoromethane	1.1	12		U
75-01-4	Vinyl chloride	1.3	12		U
1330-20-7	Xylene(total)	0.81	12		U

2/28/09

FORM 1
VOLATILE ORGANICS ANALYSIS DATA SHEET

CLIENT SAMPLE NO.

2

MR08-IS12
6-1.5-2.5-08D

Lab Name: EMPIRICAL LABS Contract: CH2MHILL

Lab Code: NA Case No.: NA SAS No.: NA SDG No.: LEJEUNE036

Matrix: (soil/water) SOIL Lab Sample ID: 0812281-02

Sample wt/vol: 5.0 (g/mL) G Lab File ID: 1228102A

Level: (low/med) LOW Date Sampled: 12/16/08 09:40

% Moisture: not dec. 10 Date Analyzed: 01/09/09 15:17

GC Column: RTX-VRX ID: 0.25 (mm) Dilution Factor: 1.0

Soil Extract Volume:_____(uL) Soil Aliquot Volume: _____(uL)

CONCENTRATION UNITS: (ug/L or ug/Kg) UG/KG

CAS NO.	COMPOUND	MDL	RL	CONC	Q	
67-64-1	Acetone	2.2	11	14	J	HT
71-43-2	Benzene	0.52	11	1.3	~~J~~ J	
75-27-4	Bromodichloromethane	0.33	11		U UJ	
75-25-2	Bromoform	1.1	11		U	
74-83-9	Bromomethane	0.80	11		U	
78-93-3	2-Butanone	1.6	11	3.1	J J	
75-15-0	Carbon disulfide	1.4	11		U UJ	
56-23-5	Carbon tetrachloride	0.98	11		U	
108-90-7	Chlorobenzene	0.38	11		U	
75-00-3	Chloroethane	1.2	11		U	
67-66-3	Chloroform	0.61	11		U	
74-87-3	Chloromethane	0.58	11		U	
110-82-7	Cyclohexane	0.60	11	0.68	J J	
124-48-1	Dibromochloromethane	0.38	11		U UJ	
96-12-8	1,2-Dibromo-3-chloropropane	1.3	5.6		U	
106-93-4	1,2-Dibromoethane	0.48	11		U	
95-50-1	1,2-Dichlorobenzene	0.41	11		U	
541-73-1	1,3-Dichlorobenzene	0.94	11		U	
106-46-7	1,4-Dichlorobenzene	0.61	11		U	
75-71-8	Dichlorodifluoromethane	1.2	11		U	
75-34-3	1,1-Dichloroethane	0.60	11		U	
107-06-2	1,2-Dichloroethane	0.51	11		U	
75-35-4	1,1-Dichloroethene	1.3	11		U	
156-59-2	cis-1,2-Dichloroethene	1.3	11		U	
156-60-5	trans-1,2-Dichloroethene	1.2	11		U	
78-87-5	1,2-Dichloropropane	0.51	11		U	
10061-01-5	cis-1,3-Dichloropropene	0.56	11		U	
10061-02-6	trans-1,3-Dichloropropene	0.36	11		U	
100-41-4	Ethylbenzene	0.84	11	3.4	J J	
591-78-6	2-Hexanone	2.6	11		U UJ	
98-82-8	Isopropylbenzene	0.98	11		U	
79-20-9	Methyl acetate	1.8	11		U	
75-09-2	Methylene chloride	0.69	11	11UJ	~~1.8 JB~~ HT	~~B~~
108-87-2	Methyl cyclohexane	0.33	11	0.86	J J	H
1634-04-4	Methyl tert-butyl ether	0.36	11		U UJ	
108-10-1	4-Methyl-2-pentanone	0.65	11		U	
100-42-5	Styrene	0.39	11		U	
79-34-5	1,1,2,2-Tetrachloroethane	0.48	11		U	
127-18-4	Tetrachloroethene	1.1	11		U	

FORM I VOA

KW 7/28/09

FORM 1
VOLATILE ORGANICS ANALYSIS DATA SHEET

CLIENT SAMPLE NO. 2

MR08-IS12
6-1.5-2.5-08D

Lab Name: EMPIRICAL LABS Contract: CH2MHILL

Lab Code: NA Case No.: NA SAS No.: NA SDG No.: LEJEUNE036

Matrix: (soil/water) SOIL Lab Sample ID: 0812281-02

Sample wt/vol: 5.0 (g/mL) G Lab File ID: 1228102A

Level: (low/med) LOW Date Sampled: 12/16/08 09:40

% Moisture: not dec. 10 Date Analyzed: 01/09/09 15:17

GC Column: RTX-VRX ID: 0.25 (mm) Dilution Factor: 1.0

Soil Extract Volume:_____(uL) Soil Aliquot Volume: _____(uL)

CONCENTRATION UNITS: (ug/L or ug/Kg) UG/KG

CAS NO.	COMPOUND	MDL	RL	CONC	Q	
108-88-3	Toluene	0.96	11	2.1	~~U~~ J	H
120-82-1	1,2,4-Trichlorobenzene	0.20	11		U UJ	
71-55-6	1,1,1-Trichloroethane	1.0	11		U	
79-00-5	1,1,2-Trichloroethane	0.39	11		U	
79-01-6	Trichloroethene	0.95	11		U	
76-13-1	Trichlorotrifluoroethane	0.61	11		U	
75-69-4	Trichlorofluoromethane	1.0	11		U	
75-01-4	Vinyl chloride	1.2	11		U	
1330-20-7	Xylene(total)	0.78	11		U	

lw 2/28/09

FORM 1
VOLATILE ORGANICS ANALYSIS DATA SHEET

CLIENT SAMPLE NO.

MR08-SS130-08D

3

Lab Name: EMPIRICAL LABS Contract: CH2MHILL

Lab Code: NA Case No.: NA SAS No.: NA SDG No.: LEJEUNE036

Matrix: (soil/water) SOIL Lab Sample ID: 0812281-03

Sample wt/vol: 5.2 (g/mL) G Lab File ID: 1228103A

Level: (low/med) LOW Date Sampled: 12/16/08 10:30

% Moisture: not dec. 4 Date Analyzed: 01/09/09 15:57

GC Column: RTX-VRX ID: 0.25 (mm) Dilution Factor: 1.0

Soil Extract Volume:_____(uL) Soil Aliquot Volume: _____(uL)

CONCENTRATION UNITS: (ug/L or ug/Kg) UG/KG

CAS NO.	COMPOUND	MDL	RL	CONC	Q
67-64-1	Acetone	2.0	10	13	J
71-43-2	Benzene	0.48	10	1.0	~~U~~ J
75-27-4	Bromodichloromethane	0.30	10		U UJ
75-25-2	Bromoform	1.0	10		U
74-83-9	Bromomethane	0.73	10		U
78-93-3	2-Butanone	1.4	10		U
75-15-0	Carbon disulfide	1.3	10		U
56-23-5	Carbon tetrachloride	0.89	10		U
108-90-7	Chlorobenzene	0.34	10		U
75-00-3	Chloroethane	1.1	10		U
67-66-3	Chloroform	0.56	10		U
74-87-3	Chloromethane	0.53	10		U
110-82-7	Cyclohexane	0.55	10	0.71	J J
124-48-1	Dibromochloromethane	0.34	10		U UJ
96-12-8	1,2-Dibromo-3-chloropropane	1.2	5.0		U
106-93-4	1,2-Dibromoethane	0.44	10		U
95-50-1	1,2-Dichlorobenzene	0.37	10		U
541-73-1	1,3-Dichlorobenzene	0.85	10		U
106-46-7	1,4-Dichlorobenzene	0.56	10		U
75-71-8	Dichlorodifluoromethane	1.1	10		U
75-34-3	1,1-Dichloroethane	0.55	10		U
107-06-2	1,2-Dichloroethane	0.46	10		U
75-35-4	1,1-Dichloroethene	1.2	10		U
156-59-2	cis-1,2-Dichloroethene	1.2	10		U
156-60-5	trans-1,2-Dichloroethene	1.1	10		U
78-87-5	1,2-Dichloropropane	0.46	10		U
10061-01-5	cis-1,3-Dichloropropene	0.50	10		U
10061-02-6	trans-1,3-Dichloropropene	0.32	10		U
100-41-4	Ethylbenzene	0.76	10	1.7	J J
591-78-6	2-Hexanone	2.3	10		U UJ
98-82-8	Isopropylbenzene	0.89	10		U
79-20-9	Methyl acetate	1.6	10		U
75-09-2	Methylene chloride	0.63	10	10u J ~~1.0~~	~~JB~~ HT
108-87-2	Methyl cyclohexane	0.30	10	0.86	J J
1634-04-4	Methyl tert-butyl ether	0.32	10		U UJ
108-10-1	4-Methyl-2-pentanone	0.59	10		U
100-42-5	Styrene	0.35	10		U
79-34-5	1,1,2,2-Tetrachloroethane	0.44	10		U
127-18-4	Tetrachloroethene	0.98	10		U

FORM I VOA

RW 2/28/09

FORM 1
VOLATILE ORGANICS ANALYSIS DATA SHEET

CLIENT SAMPLE NO.

3

MR08-SS130-08D

Lab Name: EMPIRICAL LABS Contract: CH2MHILL

Lab Code: NA Case No.: NA SAS No.: NA SDG No.: LEJEUNE036

Matrix: (soil/water) SOIL Lab Sample ID: 0812281-03

Sample wt/vol: 5.2 (g/mL) G Lab File ID: 1228103A

Level: (low/med) LOW Date Sampled: 12/16/08 10:30

% Moisture: not dec. 4 Date Analyzed: 01/09/09 15:57

GC Column: RTX-VRX ID: 0.25 (mm) Dilution Factor: 1.0

Soil Extract Volume:_____(uL) Soil Aliquot Volume: _____(uL)

CONCENTRATION UNITS: (ug/L or ug/Kg) UG/KG

CAS NO.	COMPOUND	MDL	RL	CONC	Q
108-88-3	Toluene	0.87	10	1.7	~~J~~ J
120-82-1	1,2,4-Trichlorobenzene	0.18	10		~~U~~ UJ
71-55-6	1,1,1-Trichloroethane	0.91	10		~~U~~
79-00-5	1,1,2-Trichloroethane	0.35	10		~~U~~
79-01-6	Trichloroethene	0.86	10		~~U~~
76-13-1	Trichlorotrifluoroethane	0.56	10		~~U~~
75-69-4	Trichlorofluoromethane	0.96	10		~~U~~
75-01-4	Vinyl chloride	1.1	10		~~U~~
1330-20-7	Xylene(total)	0.71	10		~~U~~

H

fw 2/28/09

FORM 1
VOLATILE ORGANICS ANALYSIS DATA SHEET

CLIENT SAMPLE NO. 4

MR08-IS13
0-1.5-3-0D

Lab Name: EMPIRICAL LABS Contract: CH2MHILL

Lab Code: NA Case No.: NA SAS No.: NA SDG No.: LEJEUNE036

Matrix: (soil/water) SOIL Lab Sample ID: 0812281-04

Sample wt/vol: 4.7 (g/mL) G Lab File ID: 1228104B

Level: (low/med) LOW Date Sampled: 12/16/08 10:45

% Moisture: not dec. 14 Date Analyzed: 01/09/09 16:36

GC Column: RTX-VRX ID: 0.25 (mm) Dilution Factor: 1.0

Soil Extract Volume:_____(uL) Soil Aliquot Volume: _____(uL)

CONCENTRATION UNITS: (ug/L or ug/Kg) UG/KG

CAS NO.	COMPOUND	MDL	RL	CONC	Q	
67-64-1	Acetone	2.5	12	27	J	H
71-43-2	Benzene	0.58	12	1.4	J J	
75-27-4	Bromodichloromethane	0.37	12		U UJ	
75-25-2	Bromoform	1.2	12		U	
74-83-9	Bromomethane	0.90	12		U	
78-93-3	2-Butanone	1.7	12	2.8	J J	
75-15-0	Carbon disulfide	1.6	12	2.1	J J	
56-23-5	Carbon tetrachloride	1.1	12		U UJ	
108-90-7	Chlorobenzene	0.42	12		U	
75-00-3	Chloroethane	1.4	12		U	
67-66-3	Chloroform	0.68	12		U	
74-87-3	Chloromethane	0.65	12		U	
110-82-7	Cyclohexane	0.67	12	0.78	J J	
124-48-1	Dibromochloromethane	0.42	12		U UJ	
96-12-8	1,2-Dibromo-3-chloropropane	1.5	6.2		U	
106-93-4	1,2-Dibromoethane	0.54	12		U	
95-50-1	1,2-Dichlorobenzene	0.46	12		U	
541-73-1	1,3-Dichlorobenzene	1.0	12		U	
106-46-7	1,4-Dichlorobenzene	0.68	12		U	
75-71-8	Dichlorodifluoromethane	1.4	12		U	
75-34-3	1,1-Dichloroethane	0.67	12		U	
107-06-2	1,2-Dichloroethane	0.57	12		U	
75-35-4	1,1-Dichloroethene	1.5	12		U	
156-59-2	cis-1,2-Dichloroethene	1.5	12		U	
156-60-5	trans-1,2-Dichloroethene	1.4	12		U	
78-87-5	1,2-Dichloropropane	0.57	12		U	
10061-01-5	cis-1,3-Dichloropropene	0.62	12		U	
10061-02-6	trans-1,3-Dichloropropene	0.40	12		U	
100-41-4	Ethylbenzene	0.93	12	2.2	J J	
591-78-6	2-Hexanone	2.9	12		U UJ	
98-82-8	Isopropylbenzene	1.1	12		U	
79-20-9	Methyl acetate	2.0	12		U	
75-09-2	Methylene chloride	0.77	12	12U J ~~1.1~~ ~~JB~~	HT	B
108-87-2	Methyl cyclohexane	0.37	12	0.96	J J	
1634-04-4	Methyl tert-butyl ether	0.40	12		U UJ	H
108-10-1	4-Methyl-2-pentanone	0.72	12		U	
100-42-5	Styrene	0.44	12		U	
79-34-5	1,1,2,2-Tetrachloroethane	0.54	12		U	
127-18-4	Tetrachloroethene	1.2	12		U	

FORM I VOA

LW
2/28/09

FORM 1
VOLATILE ORGANICS ANALYSIS DATA SHEET

CLIENT SAMPLE NO. 4

MR08-IS13
0-1.5-3-08D

Lab Name: EMPIRICAL LABS Contract: CH2MHILL

Lab Code: NA Case No.: NA SAS No.: NA SDG No.: LEJEUNE036

Matrix: (soil/water) SOIL Lab Sample ID: 0812281-04

Sample wt/vol: 4.7 (g/mL) G Lab File ID: 1228104B

Level: (low/med) LOW Date Sampled: 12/16/08 10:45

% Moisture: not dec. 14 Date Analyzed: 01/09/09 16:36

GC Column: RTX-VRX ID: 0.25 (mm) Dilution Factor: 1.0

Soil Extract Volume:_____(uL) Soil Aliquot Volume: _____(uL)

CONCENTRATION UNITS: (ug/L or ug/Kg) UG/KG

CAS NO.	COMPOUND	MDL	RL	CONC	Q
108-88-3	Toluene	1.1	12	2.1	~~J~~ J
120-82-1	1,2,4-Trichlorobenzene	0.22	12		U UJ
71-55-6	1,1,1-Trichloroethane	1.1	12		U
79-00-5	1,1,2-Trichloroethane	0.44	12		U
79-01-6	Trichloroethene	1.0	12		U
76-13-1	Trichlorotrifluoroethane	0.68	12		U
75-69-4	Trichlorofluoromethane	1.2	12		U
75-01-4	Vinyl chloride	1.4	12		U
1330-20-7	Xylene(total)	0.87	12		U

H

FORM I VOA

lw 2/28/09

FORM 1
VOLATILE ORGANICS ANALYSIS DATA SHEET

CLIENT SAMPLE NO. 5

MR08-SS132-08D

Lab Name: EMPIRICAL LABS Contract: CH2MHILL

Lab Code: NA Case No.: NA SAS No.: NA SDG No.: LEJEUNE036

Matrix: (soil/water) SOIL Lab Sample ID: 0812281-05

Sample wt/vol: 5.4 (g/mL) G Lab File ID: 1228105A

Level: (low/med) LOW Date Sampled: 12/16/08 11:50

% Moisture: not dec. 5 Date Analyzed: 01/09/09 17:15

GC Column: RTX-VRX ID: 0.25 (mm) Dilution Factor: 1.0

Soil Extract Volume:_____(uL) Soil Aliquot Volume: _____(uL)

CONCENTRATION UNITS: (ug/L or ug/Kg) UG/KG

CAS NO.	COMPOUND	MDL	RL	CONC	Q
67-64-1	Acetone	2.0	9.8		U UJ H
71-43-2	Benzene	0.46	9.8		U
75-27-4	Bromodichloromethane	0.29	9.8		U
75-25-2	Bromoform	0.98	9.8		U
74-83-9	Bromomethane	0.70	9.8		U
78-93-3	2-Butanone	1.4	9.8		U
75-15-0	Carbon disulfide	1.3	9.8		U
56-23-5	Carbon tetrachloride	0.86	9.8		U
108-90-7	Chlorobenzene	0.33	9.8		U
75-00-3	Chloroethane	1.1	9.8		U
67-66-3	Chloroform	0.54	9.8		U
74-87-3	Chloromethane	0.51	9.8		U
110-82-7	Cyclohexane	0.53	9.8		U
124-48-1	Dibromochloromethane	0.33	9.8		U
96-12-8	1,2-Dibromo-3-chloropropane	1.2	4.9		U
106-93-4	1,2-Dibromoethane	0.42	9.8		U
95-50-1	1,2-Dichlorobenzene	0.36	9.8		U
541-73-1	1,3-Dichlorobenzene	0.82	9.8		U
106-46-7	1,4-Dichlorobenzene	0.54	9.8		U
75-71-8	Dichlorodifluoromethane	1.1	9.8		U
75-34-3	1,1-Dichloroethane	0.53	9.8		U
107-06-2	1,2-Dichloroethane	0.45	9.8		U
75-35-4	1,1-Dichloroethene	1.2	9.8		U
156-59-2	cis-1,2-Dichloroethene	1.2	9.8		U
156-60-5	trans-1,2-Dichloroethene	1.1	9.8		U
78-87-5	1,2-Dichloropropane	0.45	9.8		U
10061-01-5	cis-1,3-Dichloropropene	0.49	9.8		U
10061-02-6	trans-1,3-Dichloropropene	0.31	9.8		U
100-41-4	Ethylbenzene	0.73	9.8		U
591-78-6	2-Hexanone	2.2	9.8		U
98-82-8	Isopropylbenzene	0.86	9.8		U
79-20-9	Methyl acetate	1.6	9.8		U
75-09-2	Methylene chloride	0.60	9.8	9.8UJ ~~1.9 JB~~	HT B
108-87-2	Methyl cyclohexane	0.29	9.8		U UJ H
1634-04-4	Methyl tert-butyl ether	0.31	9.8		U
108-10-1	4-Methyl-2-pentanone	0.57	9.8		U
100-42-5	Styrene	0.34	9.8		U
79-34-5	1,1,2,2-Tetrachloroethane	0.42	9.8		U
127-18-4	Tetrachloroethene	0.95	9.8		U

FORM I VOA

lw 2/28/09

FORM 1
VOLATILE ORGANICS ANALYSIS DATA SHEET

CLIENT SAMPLE NO.

5

MR08-SS132-08D

Lab Name: EMPIRICAL LABS Contract: CH2MHILL

Lab Code: NA Case No.: NA SAS No.: NA SDG No.: LEJEUNE036

Matrix: (soil/water) SOIL Lab Sample ID: 0812281-05

Sample wt/vol: 5.4 (g/mL) G Lab File ID: 1228105A

Level: (low/med) LOW Date Sampled: 12/16/08 11:50

% Moisture: not dec. 5 Date Analyzed: 01/09/09 17:15

GC Column: RTX-VRX ID: 0.25 (mm) Dilution Factor: 1.0

Soil Extract Volume:_____(uL) Soil Aliquot Volume: _____(uL)

CONCENTRATION UNITS: (ug/L or ug/Kg) UG/KG

CAS NO.	COMPOUND	MDL	RL	CONC	Q
108-88-3	Toluene	0.84	9.8		~~U~~ UJ
120-82-1	1,2,4-Trichlorobenzene	0.18	9.8		~~U~~
71-55-6	1,1,1-Trichloroethane	0.88	9.8		~~U~~
79-00-5	1,1,2-Trichloroethane	0.34	9.8		~~U~~
79-01-6	Trichloroethene	0.83	9.8		~~U~~
76-13-1	Trichlorotrifluoroethane	0.54	9.8		~~U~~
75-69-4	Trichlorofluoromethane	0.93	9.8		~~U~~
75-01-4	Vinyl chloride	1.1	9.8		~~U~~
1330-20-7	Xylene(total)	0.68	9.8		~~U~~

H

FORM I VOA

lw 2/28/09

FORM 1
VOLATILE ORGANICS ANALYSIS DATA SHEET

CLIENT SAMPLE NO. 6

MR08-IS132-08D

Lab Name: EMPIRICAL LABS Contract: CH2MHILL

Lab Code: NA Case No.: NA SAS No.: NA SDG No.: LEJEUNE036

Matrix: (soil/water) SOIL Lab Sample ID: 0812281-06

Sample wt/vol: 5.4 (g/mL) G Lab File ID: 1228106A

Level: (low/med) LOW Date Sampled: 12/16/08 11:40

% Moisture: not dec. 8 Date Analyzed: 01/09/09 17:54

GC Column: RTX-VRX ID: 0.25 (mm) Dilution Factor: 1.0

Soil Extract Volume:_____(uL) Soil Aliquot Volume: _____(uL)

CONCENTRATION UNITS: (ug/L or ug/Kg) UG/KG

CAS NO.	COMPOUND	MDL	RL	CONC	Q	
67-64-1	Acetone	2.0	10	7.3	~~U~~ J	H
71-43-2	Benzene	0.47	10		U UJ	
75-27-4	Bromodichloromethane	0.30	10		U	
75-25-2	Bromoform	1.0	10		U	
74-83-9	Bromomethane	0.72	10		U	
78-93-3	2-Butanone	1.4	10		U	
75-15-0	Carbon disulfide	1.3	10		U	
56-23-5	Carbon tetrachloride	0.88	10		U	
108-90-7	Chlorobenzene	0.34	10		U	
75-00-3	Chloroethane	1.1	10		U	
67-66-3	Chloroform	0.55	10		U	
74-87-3	Chloromethane	0.52	10		U	
110-82-7	Cyclohexane	0.54	10		U	
124-48-1	Dibromochloromethane	0.34	10		U	
96-12-8	1,2-Dibromo-3-chloropropane	1.2	5.0		U	
106-93-4	1,2-Dibromoethane	0.43	10		U	
95-50-1	1,2-Dichlorobenzene	0.37	10		U	
541-73-1	1,3-Dichlorobenzene	0.84	10		U	
106-46-7	1,4-Dichlorobenzene	0.55	10		U	
75-71-8	Dichlorodifluoromethane	1.1	10		U	
75-34-3	1,1-Dichloroethane	0.54	10		U	
107-06-2	1,2-Dichloroethane	0.46	10		U	
75-35-4	1,1-Dichloroethene	1.2	10		U	
156-59-2	cis-1,2-Dichloroethene	1.2	10		U	
156-60-5	trans-1,2-Dichloroethene	1.1	10		U	
78-87-5	1,2-Dichloropropane	0.46	10		U	
10061-01-5	cis-1,3-Dichloropropene	0.50	10		U	
10061-02-6	trans-1,3-Dichloropropene	0.32	10		U	
100-41-4	Ethylbenzene	0.75	10		U	
591-78-6	2-Hexanone	2.3	10		U	
98-82-8	Isopropylbenzene	0.88	10		U	
79-20-9	Methyl acetate	1.6	10		U	
75-09-2	Methylene chloride	0.62	10	10UJ	~~1.0 JB~~ HT	B H
108-87-2	Methyl cyclohexane	0.30	10		U UJ	
1634-04-4	Methyl tert-butyl ether	0.32	10		U	
108-10-1	4-Methyl-2-pentanone	0.58	10		U	
100-42-5	Styrene	0.35	10		U	
79-34-5	1,1,2,2-Tetrachloroethane	0.43	10		U	
127-18-4	Tetrachloroethene	0.97	10		U	

FORM I VOA

lmw 2/28/09

FORM 1
VOLATILE ORGANICS ANALYSIS DATA SHEET

CLIENT SAMPLE NO. 6

MR08-IS132-08D

Lab Name: EMPIRICAL LABS Contract: CH2MHILL

Lab Code: NA Case No.: NA SAS No.: NA SDG No.: LEJEUNE036

Matrix: (soil/water) SOIL Lab Sample ID: 0812281-06

Sample wt/vol: 5.4 (g/mL) G Lab File ID: 1228106A

Level: (low/med) LOW Date Sampled: 12/16/08 11:40

% Moisture: not dec. 8 Date Analyzed: 01/09/09 17:54

GC Column: RTX-VRX ID: 0.25 (mm) Dilution Factor: 1.0

Soil Extract Volume:_____(uL) Soil Aliquot Volume: _____(uL)

CONCENTRATION UNITS: (ug/L or ug/Kg) UG/KG

CAS NO.	COMPOUND	MDL	RL	CONC	Q
108-88-3	Toluene	0.86	10		~~U~~ UJ H
120-82-1	1,2,4-Trichlorobenzene	0.18	10		~~U~~
71-55-6	1,1,1-Trichloroethane	0.90	10		~~U~~
79-00-5	1,1,2-Trichloroethane	0.35	10		~~U~~
79-01-6	Trichloroethene	0.85	10		~~U~~
76-13-1	Trichlorotrifluoroethane	0.55	10		~~U~~
75-69-4	Trichlorofluoromethane	0.95	10		~~U~~
75-01-4	Vinyl chloride	1.1	10		~~U~~
1330-20-7	Xylene(total)	0.70	10		~~U~~

LW
2/28/09

FORM 1
VOLATILE ORGANICS ANALYSIS DATA SHEET

CLIENT SAMPLE NO. 7

MR08-SS131-08D

Lab Name: EMPIRICAL LABS Contract: CH2MHILL

Lab Code: NA Case No.: NA SAS No.: NA SDG No.: LEJEUNE036

Matrix: (soil/water) SOIL Lab Sample ID: 0812281-07

Sample wt/vol: 5.0 (g/mL) G Lab File ID: 1228107A

Level: (low/med) LOW Date Sampled: 12/16/08 13:15

% Moisture: not dec. 10 Date Analyzed: 01/09/09 18:33

GC Column: RTX-VRX ID: 0.25 (mm) Dilution Factor: 1.0

Soil Extract Volume:_____(uL) Soil Aliquot Volume: _____(uL)

CONCENTRATION UNITS: (ug/L or ug/Kg) UG/KG

CAS NO.	COMPOUND	MDL	RL	CONC	Q	
67-64-1	Acetone	2.2	11	43	J	H
71-43-2	Benzene	0.52	11		U UJ	
75-27-4	Bromodichloromethane	0.33	11		U	
75-25-2	Bromoform	1.1	11		U	
74-83-9	Bromomethane	0.80	11		U	
78-93-3	2-Butanone	1.6	11	1.7	J J	
75-15-0	Carbon disulfide	1.4	11		U UJ	
56-23-5	Carbon tetrachloride	0.97	11		U	
108-90-7	Chlorobenzene	0.38	11		U	
75-00-3	Chloroethane	1.2	11		U	
67-66-3	Chloroform	0.61	11		U	
74-87-3	Chloromethane	0.58	11		U	
110-82-7	Cyclohexane	0.60	11		U	
124-48-1	Dibromochloromethane	0.38	11		U	
96-12-8	1,2-Dibromo-3-chloropropane	1.3	5.5		U	
106-93-4	1,2-Dibromoethane	0.48	11		U	
95-50-1	1,2-Dichlorobenzene	0.41	11		U	
541-73-1	1,3-Dichlorobenzene	0.93	11		U	
106-46-7	1,4-Dichlorobenzene	0.61	11		U	
75-71-8	Dichlorodifluoromethane	1.2	11		U	
75-34-3	1,1-Dichloroethane	0.60	11		U	
107-06-2	1,2-Dichloroethane	0.51	11		U	
75-35-4	1,1-Dichloroethene	1.3	11		U	
156-59-2	cis-1,2-Dichloroethene	1.3	11		U	
156-60-5	trans-1,2-Dichloroethene	1.2	11		U	
78-87-5	1,2-Dichloropropane	0.51	11		U	
10061-01-5	cis-1,3-Dichloropropene	0.55	11		U	
10061-02-6	trans-1,3-Dichloropropene	0.35	11		U	
100-41-4	Ethylbenzene	0.83	11		U	
591-78-6	2-Hexanone	2.5	11		U	
98-82-8	Isopropylbenzene	0.97	11		U	
79-20-9	Methyl acetate	1.8	11		U	
75-09-2	Methylene chloride	0.69	11	11 UJ	~~1.2 JB~~ U	HT B
108-87-2	Methyl cyclohexane	0.33	11		U UJ	H
1634-04-4	Methyl tert-butyl ether	0.35	11		U	
108-10-1	4-Methyl-2-pentanone	0.64	11		U	
100-42-5	Styrene	0.39	11		U	
79-34-5	1,1,2,2-Tetrachloroethane	0.48	11		U	
127-18-4	Tetrachloroethene	1.1	11		U	

FORM I VOA

MW
2/28/09

FORM 1
VOLATILE ORGANICS ANALYSIS DATA SHEET

CLIENT SAMPLE NO.

7

MR08-SS131-08D

Lab Name: EMPIRICAL LABS Contract: CH2MHILL

Lab Code: NA Case No.: NA SAS No.: NA SDG No.: LEJEUNE036

Matrix: (soil/water) SOIL Lab Sample ID: 0812281-07

Sample wt/vol: 5.0 (g/mL) G Lab File ID: 1228107A

Level: (low/med) LOW Date Sampled: 12/16/08 13:15

% Moisture: not dec. 10 Date Analyzed: 01/09/09 18:33

GC Column: RTX-VRX ID: 0.25 (mm) Dilution Factor: 1.0

Soil Extract Volume:_____(uL) Soil Aliquot Volume: _____(uL)

CONCENTRATION UNITS: (ug/L or ug/Kg) UG/KG

CAS NO.	COMPOUND	MDL	RL	CONC	Q
108-88-3	Toluene	0.95	11		U UJ H
120-82-1	1,2,4-Trichlorobenzene	0.20	11		U
71-55-6	1,1,1-Trichloroethane	1.00	11		U
79-00-5	1,1,2-Trichloroethane	0.39	11		U
79-01-6	Trichloroethene	0.94	11		U
76-13-1	Trichlorotrifluoroethane	0.61	11		U
75-69-4	Trichlorofluoromethane	1.0	11		U
75-01-4	Vinyl chloride	1.2	11		U
1330-20-7	Xylene(total)	0.78	11		U

lw 2/28/09

FORM 1
VOLATILE ORGANICS ANALYSIS DATA SHEET

CLIENT SAMPLE NO.

8

MR08-SS111-08D

Lab Name: EMPIRICAL LABS Contract: CH2MHILL

Lab Code: NA Case No.: NA SAS No.: NA SDG No.: LEJEUNE036

Matrix: (soil/water) SOIL Lab Sample ID: 0812281-08

Sample wt/vol: 5.1 (g/mL) G Lab File ID: 1228108A

Level: (low/med) LOW Date Sampled: 12/16/08 13:50

% Moisture: not dec. 5 Date Analyzed: 01/09/09 19:12

GC Column: RTX-VRX ID: 0.25 (mm) Dilution Factor: 1.0

Soil Extract Volume:_____(uL) Soil Aliquot Volume: _____(uL)

CONCENTRATION UNITS: (ug/L or ug/Kg) UG/KG

CAS NO.	COMPOUND	MDL	RL	CONC	Q	
67-64-1	Acetone	2.0	10	6.9	J J	HT
71-43-2	Benzene	0.48	10	0.80	J J	
75-27-4	Bromodichloromethane	0.31	10		U UJ	
75-25-2	Bromoform	1.0	10		U	
74-83-9	Bromomethane	0.74	10		U	
78-93-3	2-Butanone	1.4	10		U	
75-15-0	Carbon disulfide	1.3	10		U	
56-23-5	Carbon tetrachloride	0.90	10		U	
108-90-7	Chlorobenzene	0.35	10		U	
75-00-3	Chloroethane	1.1	10		U	
67-66-3	Chloroform	0.56	10		U	
74-87-3	Chloromethane	0.53	10		U	
110-82-7	Cyclohexane	0.56	10		U	
124-48-1	Dibromochloromethane	0.35	10		U	
96-12-8	1,2-Dibromo-3-chloropropane	1.2	5.1		U	
106-93-4	1,2-Dibromoethane	0.44	10		U	
95-50-1	1,2-Dichlorobenzene	0.38	10		U	
541-73-1	1,3-Dichlorobenzene	0.86	10		U	
106-46-7	1,4-Dichlorobenzene	0.56	10		U	
75-71-8	Dichlorodifluoromethane	1.1	10		U	
75-34-3	1,1-Dichloroethane	0.56	10		U	
107-06-2	1,2-Dichloroethane	0.47	10		U	
75-35-4	1,1-Dichloroethene	1.2	10		U	
156-59-2	cis-1,2-Dichloroethene	1.2	10		U	
156-60-5	trans-1,2-Dichloroethene	1.1	10		U	
78-87-5	1,2-Dichloropropane	0.47	10		U	
10061-01-5	cis-1,3-Dichloropropene	0.51	10		U	
10061-02-6	trans-1,3-Dichloropropene	0.33	10		U	
100-41-4	Ethylbenzene	0.77	10	2.3	J J	
591-78-6	2-Hexanone	2.4	10		U UJ	
98-82-8	Isopropylbenzene	0.90	10		U	
79-20-9	Methyl acetate	1.6	10		U	
75-09-2	Methylene chloride	0.64	10	10UJ ~~1.6~~	~~JB~~ HT	B
108-87-2	Methyl cyclohexane	0.31	10	0.63	J J	H
1634-04-4	Methyl tert-butyl ether	0.33	10		U UJ	
108-10-1	4-Methyl-2-pentanone	0.60	10		U	
100-42-5	Styrene	0.36	10		U	
79-34-5	1,1,2,2-Tetrachloroethane	0.44	10		U	
127-18-4	Tetrachloroethene	1.00	10		U	

FORM I VOA

MW 2/28/09

FORM 1
VOLATILE ORGANICS ANALYSIS DATA SHEET

CLIENT SAMPLE NO.

8

MR08-SS111-08D

Lab Name: EMPIRICAL LABS Contract: CH2MHILL

Lab Code: NA Case No.: NA SAS No.: NA SDG No.: LEJEUNE036

Matrix: (soil/water) SOIL Lab Sample ID: 0812281-08

Sample wt/vol: 5.1 (g/mL) G Lab File ID: 1228108A

Level: (low/med) LOW Date Sampled: 12/16/08 13:50

% Moisture: not dec. 5 Date Analyzed: 01/09/09 19:12

GC Column: RTX-VRX ID: 0.25 (mm) Dilution Factor: 1.0

Soil Extract Volume:_____(uL) Soil Aliquot Volume: _____(uL)

CONCENTRATION UNITS: (ug/L or ug/Kg) UG/KG

CAS NO.	COMPOUND	MDL	RL	CONC	Q
108-88-3	Toluene	0.88	10	1.3	~~J~~ J
120-82-1	1,2,4-Trichlorobenzene	0.18	10		~~U~~ UJ
71-55-6	1,1,1-Trichloroethane	0.92	10		~~U~~
79-00-5	1,1,2-Trichloroethane	0.36	10		~~U~~
79-01-6	Trichloroethene	0.87	10		~~U~~
76-13-1	Trichlorotrifluoroethane	0.56	10		~~U~~
75-69-4	Trichlorofluoromethane	0.98	10		~~U~~
75-01-4	Vinyl chloride	1.1	10		~~U~~
1330-20-7	Xylene(total)	0.72	10		~~U~~

H

FORM I VOA

lw
2/28/09

FORM 1
VOLATILE ORGANICS ANALYSIS DATA SHEET

CLIENT SAMPLE NO. 9

MR08-SS112-08D

Lab Name: EMPIRICAL LABS Contract: CH2MHILL

Lab Code: NA Case No.: NA SAS No.: NA SDG No.: LEJEUNE036

Matrix: (soil/water) SOIL Lab Sample ID: 0812281-09

Sample wt/vol: 3.3 (g/mL) G Lab File ID: 1228109A

Level: (low/med) LOW Date Sampled: 12/16/08 14:40

% Moisture: not dec. 13 Date Analyzed: 01/09/09 19:52

GC Column: RTX-VRX ID: 0.25 (mm) Dilution Factor: 1.0

Soil Extract Volume:_____(uL) Soil Aliquot Volume: _____(uL)

CONCENTRATION UNITS: (ug/L or ug/Kg) UG/KG

CAS NO.	COMPOUND	MDL	RL	CONC	Q	
67-64-1	Acetone	3.5	17	56	J	S
71-43-2	Benzene	0.82	17		U UJ	H
75-27-4	Bromodichloromethane	0.52	17		U	
75-25-2	Bromoform	1.7	17		U	
74-83-9	Bromomethane	1.2	17		U	
78-93-3	2-Butanone	2.4	17		U	
75-15-0	Carbon disulfide	2.3	17		U	
56-23-5	Carbon tetrachloride	1.5	17		U	
108-90-7	Chlorobenzene	0.59	17		U	
75-00-3	Chloroethane	1.9	17		U	
67-66-3	Chloroform	0.96	17		U	
74-87-3	Chloromethane	0.91	17		U	
110-82-7	Cyclohexane	0.94	17		U	
124-48-1	Dibromochloromethane	0.59	17		U	
96-12-8	1,2-Dibromo-3-chloropropane	2.1	8.7		U	
106-93-4	1,2-Dibromoethane	0.75	17		U	
95-50-1	1,2-Dichlorobenzene	0.65	17		U	
541-73-1	1,3-Dichlorobenzene	1.5	17		U	
106-46-7	1,4-Dichlorobenzene	0.96	17		U	
75-71-8	Dichlorodifluoromethane	1.9	17		U	
75-34-3	1,1-Dichloroethane	0.94	17		U	
107-06-2	1,2-Dichloroethane	0.80	17		U	
75-35-4	1,1-Dichloroethene	2.1	17		U	
156-59-2	cis-1,2-Dichloroethene	2.1	17		U	
156-60-5	trans-1,2-Dichloroethene	1.9	17		U	
78-87-5	1,2-Dichloropropane	0.80	17		U	
10061-01-5	cis-1,3-Dichloropropene	0.87	17		U	
10061-02-6	trans-1,3-Dichloropropene	0.56	17		U	
100-41-4	Ethylbenzene	1.3	17		U	
591-78-6	2-Hexanone	4.0	17		U	
98-82-8	Isopropylbenzene	1.5	17		U	
79-20-9	Methyl acetate	2.8	17		U	
75-09-2	Methylene chloride	1.1	17	17uJ	~~16 JB~~	HT B
108-87-2	Methyl cyclohexane	0.52	17		U UJ	H
1634-04-4	Methyl tert-butyl ether	0.56	17		U	
108-10-1	4-Methyl-2-pentanone	1.0	17		U	
100-42-5	Styrene	0.61	17		U	
79-34-5	1,1,2,2-Tetrachloroethane	0.75	17		U	
127-18-4	Tetrachloroethene	1.7	17		U	

FORM I VOA

lw 2/28/09

FORM 1
VOLATILE ORGANICS ANALYSIS DATA SHEET

CLIENT SAMPLE NO. 9

MR08-SS112-08D

Lab Name: EMPIRICAL LABS Contract: CH2MHILL

Lab Code: NA Case No.: NA SAS No.: NA SDG No.: LEJEUNE036

Matrix: (soil/water) SOIL Lab Sample ID: 0812281-09

Sample wt/vol: 3.3 (g/mL) G Lab File ID: 1228109A

Level: (low/med) LOW Date Sampled: 12/16/08 14:40

% Moisture: not dec. 13 Date Analyzed: 01/09/09 19:52

GC Column: RTX-VRX ID: 0.25 (mm) Dilution Factor: 1.0

Soil Extract Volume:_____(uL) Soil Aliquot Volume: _____(uL)

CONCENTRATION UNITS: (ug/L or ug/Kg) UG/KG

CAS NO.	COMPOUND	MDL	RL	CONC	Q	
108-88-3	Toluene	1.5	17		U UJ	H
120-82-1	1,2,4-Trichlorobenzene	0.31	17		U	
71-55-6	1,1,1-Trichloroethane	1.6	17		U	
79-00-5	1,1,2-Trichloroethane	0.61	17		U	
79-01-6	Trichloroethene	1.5	17		U	
76-13-1	Trichlorotrifluoroethane	0.96	17		U	
75-69-4	Trichlorofluoromethane	1.7	17		U	
75-01-4	Vinyl chloride	1.9	17		U	
1330-20-7	Xylene(total)	1.2	17		U	

lw
2/28/09

FORM 1
VOLATILE ORGANICS ANALYSIS DATA SHEET

CLIENT SAMPLE NO. 9RE

MR08-SS112-08DR

Lab Name: EMPIRICAL LABS Contract: CH2MHILL

Lab Code: NA Case No.: NA SAS No.: NA SDG No.: LEJEUNE036

Matrix: (soil/water) SOIL Lab Sample ID: 0812281-09R

Sample wt/vol: 3.9 (g/mL) G Lab File ID: 1228109B

Level: (low/med) LOW Date Sampled: 12/16/08 14:40

% Moisture: not dec. 13 Date Analyzed: 01/12/09 14:38

GC Column: RTX-VRX ID: 0.25 (mm) Dilution Factor: 1.0 use origi

Soil Extract Volume:_____(uL) Soil Aliquot Volume: _____(uL)

CONCENTRATION UNITS: (ug/L or ug/Kg) UG/KG

CAS NO.	COMPOUND	MDL	RL	CONC	Q	
67-64-1	Acetone	3.0	15	11	J J	H
71-43-2	Benzene	0.70	15	1.7	J J	
75-27-4	Bromodichloromethane	0.44	15		U UJ	
75-25-2	Bromoform	1.5	15		U UJ	
74-83-9	Bromomethane	1.1	15		U UJ	
78-93-3	2-Butanone	2.1	15		U	
75-15-0	Carbon disulfide	1.9	15		U	
56-23-5	Carbon tetrachloride	1.3	15		U	
108-90-7	Chlorobenzene	0.50	15		U	
75-00-3	Chloroethane	1.6	15		U	
67-66-3	Chloroform	0.82	15		U	
74-87-3	Chloromethane	0.77	15		U	
110-82-7	Cyclohexane	0.80	15	0.81	J J	
124-48-1	Dibromochloromethane	0.50	15		U UJ	
96-12-8	1,2-Dibromo-3-chloropropane	1.8	7.4		U	
106-93-4	1,2-Dibromoethane	0.64	15		U	
95-50-1	1,2-Dichlorobenzene	0.55	15		U	
541-73-1	1,3-Dichlorobenzene	1.2	15		U	
106-46-7	1,4-Dichlorobenzene	0.82	15		U	
75-71-8	Dichlorodifluoromethane	1.6	15		U	
75-34-3	1,1-Dichloroethane	0.80	15		U	
107-06-2	1,2-Dichloroethane	0.68	15		U	
75-35-4	1,1-Dichloroethene	1.8	15		U	
156-59-2	cis-1,2-Dichloroethene	1.8	15		U	
156-60-5	trans-1,2-Dichloroethene	1.6	15		U	
78-87-5	1,2-Dichloropropane	0.68	15		U	
10061-01-5	cis-1,3-Dichloropropene	0.74	15		U	
10061-02-6	trans-1,3-Dichloropropene	0.47	15		U	
100-41-4	Ethylbenzene	1.1	15	1.2	J J	
591-78-6	2-Hexanone	3.4	15		U UJ	
98-82-8	Isopropylbenzene	1.3	15		U	
79-20-9	Methyl acetate	2.4	15		U	
75-09-2	Methylene chloride	0.92	15	15UJ ~~1.9~~	~~JB~~ HT	~~B~~
108-87-2	Methyl cyclohexane	0.44	15	1.3	J J	
1634-04-4	Methyl tert-butyl ether	0.47	15		U UJ	
108-10-1	4-Methyl-2-pentanone	0.86	15		U	
100-42-5	Styrene	0.52	15		U	
79-34-5	1,1,2,2-Tetrachloroethane	0.64	15		U	
127-18-4	Tetrachloroethene	1.4	15		U	

FORM I VOA

lcw 2/28/09

FORM 1
VOLATILE ORGANICS ANALYSIS DATA SHEET

CLIENT SAMPLE NO. 4RE

MR08-SS112-08DR

Lab Name: EMPIRICAL LABS Contract: CH2MHILL

Lab Code: NA Case No.: NA SAS No.: NA SDG No.: LEJEUNE036

Matrix: (soil/water) SOIL Lab Sample ID: 0812281-09R

Sample wt/vol: 3.9 (g/mL) G Lab File ID: 1228109B

Level: (low/med) LOW Date Sampled: 12/16/08 14:40

% Moisture: not dec. 13 Date Analyzed: 01/12/09 14:38 use original

GC Column: RTX-VRX ID: 0.25 (mm) Dilution Factor: 1.0

Soil Extract Volume:_____(uL) Soil Aliquot Volume: _____(uL)

CONCENTRATION UNITS: (ug/L or ug/Kg) UG/KG

CAS NO.	COMPOUND	MDL	RL	CONC	Q
108-88-3	Toluene	1.3	15	1.6	~~J~~ J
120-82-1	1,2,4-Trichlorobenzene	0.27	15		~~U~~ UJ
71-55-6	1,1,1-Trichloroethane	1.3	15		~~U~~
79-00-5	1,1,2-Trichloroethane	0.52	15		~~U~~
79-01-6	Trichloroethene	1.3	15		~~U~~
76-13-1	Trichlorotrifluoroethane	0.82	15		~~U~~
75-69-4	Trichlorofluoromethane	1.4	15		~~U~~
75-01-4	Vinyl chloride	1.6	15		~~U~~
1330-20-7	Xylene(total)	1.0	15		~~U~~

H

R RE

FORM I VOA

lus
2/28/09

FORM 1
VOLATILE ORGANICS ANALYSIS DATA SHEET

CLIENT SAMPLE NO. 10

MR08-EB121708

Lab Name: EMPIRICAL LABS Contract: CH2MHILL

Lab Code: NA Case No.: NA SAS No.: NA SDG No.: LEJEUNE036

Matrix: (soil/water) WATER Lab Sample ID: 0812281-10

Sample wt/vol: 5.000 (g/mL) ML Lab File ID: 1228110

Level: (low/med) LOW Date Sampled: 12/17/08 07:30

% Moisture: not dec. _____ Date Analyzed: 12/31/08 01:14

GC Column: RTX-VRX ID: 0.25 (mm) Dilution Factor: 1.0

Soil Extract Volume:_____(uL) Soil Aliquot Volume: _____(uL)

CONCENTRATION UNITS: (ug/L or ug/Kg) UG/L

CAS NO.	COMPOUND	MDL	RL	CONC	Q
67-64-1	Acetone	0.84	2.5	75	
71-43-2	Benzene	0.11	1.0		U
75-27-4	Bromodichloromethane	0.10	1.0		U
75-25-2	Bromoform	0.10	1.0		U
74-83-9	Bromomethane	0.32	1.0		~~U~~ UJ CU
78-93-3	2-Butanone	1.0	3.0		U
75-15-0	Carbon disulfide	0.13	1.0		U
56-23-5	Carbon tetrachloride	0.15	1.0		U
108-90-7	Chlorobenzene	0.10	1.0		U
75-00-3	Chloroethane	0.18	1.0		U
67-66-3	Chloroform	0.11	1.0	0.13	J
74-87-3	Chloromethane	0.29	1.0		U
110-82-7	Cyclohexane	0.20	1.0		U
124-48-1	Dibromochloromethane	0.10	1.0		U
96-12-8	1,2-Dibromo-3-chloropropane	0.11	1.0		U
106-93-4	1,2-Dibromoethane	0.10	1.0		U
95-50-1	1,2-Dichlorobenzene	0.10	1.0		U
541-73-1	1,3-Dichlorobenzene	0.13	1.0		U
106-46-7	1,4-Dichlorobenzene	0.10	1.0		U
75-71-8	Dichlorodifluoromethane	0.22	1.0		U
75-34-3	1,1-Dichloroethane	0.12	1.0		U
107-06-2	1,2-Dichloroethane	0.10	1.0		U
75-35-4	1,1-Dichloroethene	0.15	1.0		U
156-59-2	cis-1,2-Dichloroethene	0.13	1.0		U
156-60-5	trans-1,2-Dichloroethene	0.13	1.0		U
78-87-5	1,2-Dichloropropane	0.10	1.0		U
10061-01-5	cis-1,3-Dichloropropene	0.11	1.0		U
10061-02-6	trans-1,3-Dichloropropene	0.10	1.0		U
100-41-4	Ethylbenzene	0.13	1.0		U
591-78-6	2-Hexanone	0.30	1.0		U
98-82-8	Isopropylbenzene	0.15	1.0		U
79-20-9	Methyl acetate	0.30	1.0		U
75-09-2	Methylene chloride	0.14	1.0	1.8	~~B~~ U B
108-87-2	Methyl cyclohexane	0.17	1.0		U
1634-04-4	Methyl tert-butyl ether	0.10	1.0		U
108-10-1	4-Methyl-2-pentanone	0.29	1.0		U
100-42-5	Styrene	0.10	1.0		U
79-34-5	1,1,2,2-Tetrachloroethane	0.10	1.0		U
127-18-4	Tetrachloroethene	0.15	1.0		U

FORM I VOA

LW 2/28/09

FORM 1
VOLATILE ORGANICS ANALYSIS DATA SHEET

CLIENT SAMPLE NO.

10

MR08-EB121708

Lab Name: EMPIRICAL LABS Contract: CH2MHILL

Lab Code: NA Case No.: NA SAS No.: NA SDG No.: LEJEUNE036

Matrix: (soil/water) WATER Lab Sample ID: 0812281-10

Sample wt/vol: 5.000 (g/mL) ML Lab File ID: 1228110

Level: (low/med) LOW Date Sampled: 12/17/08 07:30

% Moisture: not dec. _____ Date Analyzed: 12/31/08 01:14

GC Column: RTX-VRX ID: 0.25 (mm) Dilution Factor: 1.0

Soil Extract Volume:_____(uL) Soil Aliquot Volume: _____(uL)

CONCENTRATION UNITS: (ug/L or ug/Kg) UG/L

CAS NO.	COMPOUND	MDL	RL	CONC	Q
108-88-3	Toluene	0.10	1.0		U
120-82-1	1,2,4-Trichlorobenzene	0.10	1.0		U
71-55-6	1,1,1-Trichloroethane	0.17	1.0		U
79-00-5	1,1,2-Trichloroethane	0.10	1.0		U
79-01-6	Trichloroethene	0.13	1.0		U
76-13-1	Trichlorotrifluoroethane	0.18	1.0		U
75-69-4	Trichlorofluoromethane	0.17	1.0		U
75-01-4	Vinyl chloride	0.18	1.0		U
1330-20-7	Xylene(total)	0.22	1.0		U

lw
2/28/09

FORM 1
VOLATILE ORGANICS ANALYSIS DATA SHEET

CLIENT SAMPLE NO.

MR08-SS133-08D

11

Lab Name: EMPIRICAL LABS Contract: CH2MHILL

Lab Code: NA Case No.: NA SAS No.: NA SDG No.: LEJEUNE036

Matrix: (soil/water) SOIL Lab Sample ID: 0812281-11

Sample wt/vol: 5.2 (g/mL) G Lab File ID: 1228111A

Level: (low/med) LOW Date Sampled: 12/17/08 08:35

% Moisture: not dec. 11 Date Analyzed: 12/31/08 13:15

GC Column: RTX-VRX ID: 0.25 (mm) Dilution Factor: 1.0

Soil Extract Volume:_____(uL) Soil Aliquot Volume: _____(uL)

CONCENTRATION UNITS: (ug/L or ug/Kg) UG/KG

CAS NO.	COMPOUND	MDL	RL	CONC	Q
67-64-1	Acetone	2.2	11	12	U BL
71-43-2	Benzene	0.51	11		U
75-27-4	Bromodichloromethane	0.32	11		U
75-25-2	Bromoform	1.1	11		U
74-83-9	Bromomethane	0.78	11		U
78-93-3	2-Butanone	1.5	11		U
75-15-0	Carbon disulfide	1.4	11		U
56-23-5	Carbon tetrachloride	0.95	11		U
108-90-7	Chlorobenzene	0.37	11		U
75-00-3	Chloroethane	1.2	11		U
67-66-3	Chloroform	0.59	11		U
74-87-3	Chloromethane	0.56	11		U
110-82-7	Cyclohexane	0.58	11		U
124-48-1	Dibromochloromethane	0.37	11		U
96-12-8	1,2-Dibromo-3-chloropropane	1.3	5.4		U
106-93-4	1,2-Dibromoethane	0.46	11		U
95-50-1	1,2-Dichlorobenzene	0.40	11		U
541-73-1	1,3-Dichlorobenzene	0.91	11		U
106-46-7	1,4-Dichlorobenzene	0.59	11		U
75-71-8	Dichlorodifluoromethane	1.2	11		U
75-34-3	1,1-Dichloroethane	0.58	11		U
107-06-2	1,2-Dichloroethane	0.50	11		U
75-35-4	1,1-Dichloroethene	1.3	11		U
156-59-2	cis-1,2-Dichloroethene	1.3	11		U
156-60-5	trans-1,2-Dichloroethene	1.2	11		U
78-87-5	1,2-Dichloropropane	0.50	11		U
10061-01-5	cis-1,3-Dichloropropene	0.54	11		U
10061-02-6	trans-1,3-Dichloropropene	0.34	11		U
100-41-4	Ethylbenzene	0.81	11		U
591-78-6	2-Hexanone	2.5	11		U
98-82-8	Isopropylbenzene	0.95	11		U
79-20-9	Methyl acetate	1.7	11		U
75-09-2	Methylene chloride	0.67	11	11U	~~0.86 JB~~ B
108-87-2	Methyl cyclohexane	0.32	11		U
1634-04-4	Methyl tert-butyl ether	0.34	11		U
108-10-1	4-Methyl-2-pentanone	0.63	11		U
100-42-5	Styrene	0.38	11		U
79-34-5	1,1,2,2-Tetrachloroethane	0.46	11		U
127-18-4	Tetrachloroethene	1.0	11		U

FORM I VOA

Rev 2/28/09

FORM 1
VOLATILE ORGANICS ANALYSIS DATA SHEET

CLIENT SAMPLE NO. 11

MR08-SS133-08D

Lab Name: EMPIRICAL LABS Contract: CH2MHILL

Lab Code: NA Case No.: NA SAS No.: NA SDG No.: LEJEUNE036

Matrix: (soil/water) SOIL Lab Sample ID: 0812281-11

Sample wt/vol: 5.2 (g/mL) G Lab File ID: 1228111A

Level: (low/med) LOW Date Sampled: 12/17/08 08:35

% Moisture: not dec. 11 Date Analyzed: 12/31/08 13:15

GC Column: RTX-VRX ID: 0.25 (mm) Dilution Factor: 1.0

Soil Extract Volume:_____(uL) Soil Aliquot Volume: _____(uL)

CONCENTRATION UNITS: (ug/L or ug/Kg) UG/KG

CAS NO.	COMPOUND	MDL	RL	CONC	Q
108-88-3	Toluene	0.93	11		U
120-82-1	1,2,4-Trichlorobenzene	0.19	11		U
71-55-6	1,1,1-Trichloroethane	0.97	11		U
79-00-5	1,1,2-Trichloroethane	0.38	11		U
79-01-6	Trichloroethene	0.92	11		U
76-13-1	Trichlorotrifluoroethane	0.59	11		U
75-69-4	Trichlorofluoromethane	1.0	11		U
75-01-4	Vinyl chloride	1.2	11		U
1330-20-7	Xylene(total)	0.76	11		U

LW
2/28/09

FORM 1
VOLATILE ORGANICS ANALYSIS DATA SHEET

CLIENT SAMPLE NO.

12

MR08-IS133-08D

Lab Name: EMPIRICAL LABS Contract: CH2MHILL

Lab Code: NA Case No.: NA SAS No.: NA SDG No.: LEJEUNE036

Matrix: (soil/water) SOIL Lab Sample ID: 0812281-12

Sample wt/vol: 5.0 (g/mL) G Lab File ID: 1228112A

Level: (low/med) LOW Date Sampled: 12/17/08 08:50

% Moisture: not dec. 10 Date Analyzed: 12/31/08 13:46

GC Column: RTX-VRX ID: 0.25 (mm) Dilution Factor: 1.0

Soil Extract Volume:_____(uL) Soil Aliquot Volume: _____(uL)

CONCENTRATION UNITS: (ug/L or ug/Kg) UG/KG

CAS NO.	COMPOUND	MDL	RL	CONC	Q	
67-64-1	Acetone	2.2	11	11u ~~4.2~~	~~J~~	E
71-43-2	Benzene	0.52	11		U	
75-27-4	Bromodichloromethane	0.33	11		U	
75-25-2	Bromoform	1.1	11		U	
74-83-9	Bromomethane	0.80	11		U	
78-93-3	2-Butanone	1.6	11		U	
75-15-0	Carbon disulfide	1.4	11		U	
56-23-5	Carbon tetrachloride	0.98	11		U	
108-90-7	Chlorobenzene	0.38	11		U	
75-00-3	Chloroethane	1.2	11		U	
67-66-3	Chloroform	0.61	11		U	
74-87-3	Chloromethane	0.58	11		U	
110-82-7	Cyclohexane	0.60	11		U	
124-48-1	Dibromochloromethane	0.38	11		U	
96-12-8	1,2-Dibromo-3-chloropropane	1.3	5.6		U	
106-93-4	1,2-Dibromoethane	0.48	11		U	
95-50-1	1,2-Dichlorobenzene	0.41	11		U	
541-73-1	1,3-Dichlorobenzene	0.94	11		U	
106-46-7	1,4-Dichlorobenzene	0.61	11		U	
75-71-8	Dichlorodifluoromethane	1.2	11		U	
75-34-3	1,1-Dichloroethane	0.60	11		U	
107-06-2	1,2-Dichloroethane	0.51	11		U	
75-35-4	1,1-Dichloroethene	1.3	11		U	
156-59-2	cis-1,2-Dichloroethene	1.3	11		U	
156-60-5	trans-1,2-Dichloroethene	1.2	11		U	
78-87-5	1,2-Dichloropropane	0.51	11		U	
10061-01-5	cis-1,3-Dichloropropene	0.56	11		U	
10061-02-6	trans-1,3-Dichloropropene	0.36	11		U	
100-41-4	Ethylbenzene	0.84	11		U	
591-78-6	2-Hexanone	2.6	11		U	
98-82-8	Isopropylbenzene	0.98	11		U	
79-20-9	Methyl acetate	1.8	11		U	
75-09-2	Methylene chloride	0.69	11	11u ~~0.80~~	~~JB~~	B
108-87-2	Methyl cyclohexane	0.33	11		U	
1634-04-4	Methyl tert-butyl ether	0.36	11		U	
108-10-1	4-Methyl-2-pentanone	0.65	11		U	
100-42-5	Styrene	0.39	11		U	
79-34-5	1,1,2,2-Tetrachloroethane	0.48	11		U	
127-18-4	Tetrachloroethene	1.1	11		U	

FORM I VOA

gw 2/28/09

FORM 1
VOLATILE ORGANICS ANALYSIS DATA SHEET

CLIENT SAMPLE NO.

12

MR08-IS133-08D

Lab Name: EMPIRICAL LABS Contract: CH2MHILL

Lab Code: NA Case No.: NA SAS No.: NA SDG No.: LEJEUNE036

Matrix: (soil/water) SOIL Lab Sample ID: 0812281-12

Sample wt/vol: 5.0 (g/mL) G Lab File ID: 1228112A

Level: (low/med) LOW Date Sampled: 12/17/08 08:50

% Moisture: not dec. 10 Date Analyzed: 12/31/08 13:46

GC Column: RTX-VRX ID: 0.25 (mm) Dilution Factor: 1.0

Soil Extract Volume:_____(uL) Soil Aliquot Volume: _____(uL)

CONCENTRATION UNITS: (ug/L or ug/Kg) UG/KG

CAS NO.	COMPOUND	MDL	RL	CONC	Q
108-88-3	Toluene	0.96	11		U
120-82-1	1,2,4-Trichlorobenzene	0.20	11		U
71-55-6	1,1,1-Trichloroethane	1.0	11		U
79-00-5	1,1,2-Trichloroethane	0.39	11		U
79-01-6	Trichloroethene	0.95	11		U
76-13-1	Trichlorotrifluoroethane	0.61	11		U
75-69-4	Trichlorofluoromethane	1.0	11		U
75-01-4	Vinyl chloride	1.2	11		U
1330-20-7	Xylene(total)	0.78	11		U

lw
2/28/09

FORM 1
VOLATILE ORGANICS ANALYSIS DATA SHEET

CLIENT SAMPLE NO. 13

MR08-SS110-08D

Lab Name: EMPIRICAL LABS Contract: CH2MHILL

Lab Code: NA Case No.: NA SAS No.: NA SDG No.: LEJEUNE036

Matrix: (soil/water) SOIL Lab Sample ID: 0812281-13

Sample wt/vol: 3.0 (g/mL) G Lab File ID: 1228113A

Level: (low/med) LOW Date Sampled: 12/17/08 09:25

% Moisture: not dec. 6 Date Analyzed: 12/31/08 14:16 Use reanalysis

GC Column: RTX-VRX ID: 0.25 (mm) Dilution Factor: 1.0

Soil Extract Volume:_____(uL) Soil Aliquot Volume: _____(uL)

CONCENTRATION UNITS: (ug/L or ug/Kg) UG/KG

CAS NO.	COMPOUND	MDL	RL	CONC	Q
67-64-1	Acetone	3.5	18	18UJ ~~16 J~~	ISL B
71-43-2	Benzene	0.83	18		U UJ ISL
75-27-4	Bromodichloromethane	0.53	18		U
75-25-2	Bromoform	1.8	18		U
74-83-9	Bromomethane	1.3	18		U
78-93-3	2-Butanone	2.5	18		U
75-15-0	Carbon disulfide	2.3	18		U
56-23-5	Carbon tetrachloride	1.5	18		U
108-90-7	Chlorobenzene	0.60	18		U
75-00-3	Chloroethane	1.9	18		U
67-66-3	Chloroform	0.97	18		U
74-87-3	Chloromethane	0.91	18		U
110-82-7	Cyclohexane	0.95	18		U
124-48-1	Dibromochloromethane	0.60	18		U
96-12-8	1,2-Dibromo-3-chloropropane	2.1	8.8		~~U~~ R
106-93-4	1,2-Dibromoethane	0.76	18		~~U~~ UJ
95-50-1	1,2-Dichlorobenzene	0.65	18		U R ISL
541-73-1	1,3-Dichlorobenzene	1.5	18		U
106-46-7	1,4-Dichlorobenzene	0.97	18		U
75-71-8	Dichlorodifluoromethane	1.9	18		U UJ
75-34-3	1,1-Dichloroethane	0.95	18		U
107-06-2	1,2-Dichloroethane	0.81	18		U
75-35-4	1,1-Dichloroethene	2.1	18		U
156-59-2	cis-1,2-Dichloroethene	2.1	18		U
156-60-5	trans-1,2-Dichloroethene	1.9	18		U
78-87-5	1,2-Dichloropropane	0.81	18		U
10061-01-5	cis-1,3-Dichloropropene	0.88	18		U
10061-02-6	trans-1,3-Dichloropropene	0.56	18		U
100-41-4	Ethylbenzene	1.3	18		U
591-78-6	2-Hexanone	4.0	18		U
98-82-8	Isopropylbenzene	1.5	18		U
79-20-9	Methyl acetate	2.8	18		U
75-09-2	Methylene chloride	1.1	18	18UJ ~~6.4 JB~~	ISL B
108-87-2	Methyl cyclohexane	0.53	18		U UJ ISL
1634-04-4	Methyl tert-butyl ether	0.56	18		U
108-10-1	4-Methyl-2-pentanone	1.0	18		U
100-42-5	Styrene	0.62	18		U
79-34-5	1,1,2,2-Tetrachloroethane	0.76	18		~~U~~ R
127-18-4	Tetrachloroethene	1.7	18		~~U~~ UJ

FORM I VOA

lw 2/28/09

FORM 1
VOLATILE ORGANICS ANALYSIS DATA SHEET

CLIENT SAMPLE NO.

13

MR08-SS110-08D

Lab Name: EMPIRICAL LABS Contract: CH2MHILL

Lab Code: NA Case No.: NA SAS No.: NA SDG No.: LEJEUNE036

Matrix: (soil/water) SOIL Lab Sample ID: 0812281-13

Sample wt/vol: 3.0 (g/mL) G Lab File ID: 1228113A

Level: (low/med) LOW Date Sampled: 12/17/08 09:25

% Moisture: not dec. 6 Date Analyzed: 12/31/08 14:16 use reanalysis

GC Column: RTX-VRX ID: 0.25 (mm) Dilution Factor: 1.0

Soil Extract Volume:_____(uL) Soil Aliquot Volume: _____(uL)

CONCENTRATION UNITS: (ug/L or ug/Kg) UG/KG

CAS NO.	COMPOUND	MDL	RL	CONC	Q
108-88-3	Toluene	1.5	18		~~U~~ UJ IS
120-82-1	1,2,4-Trichlorobenzene	0.32	18	184 ~~R 0.60~~	~~JB~~ IS
71-55-6	1,1,1-Trichloroethane	1.6	18		~~U~~ UJ IS
79-00-5	1,1,2-Trichloroethane	0.62	18		~~U~~
79-01-6	Trichloroethene	1.5	18		~~U~~
76-13-1	Trichlorotrifluoroethane	0.97	18		~~U~~
75-69-4	Trichlorofluoromethane	1.7	18		~~U~~
75-01-4	Vinyl chloride	1.9	18		~~U~~
1330-20-7	Xylene(total)	1.2	18		~~U~~

R

FORM I VOA

MW
2/28/09

FORM 1
VOLATILE ORGANICS ANALYSIS DATA SHEET

CLIENT SAMPLE NO.

MR08-SS110-08DR

13R

Lab Name: EMPIRICAL LABS Contract: CH2MHILL

Lab Code: NA Case No.: NA SAS No.: NA SDG No.: LEJEUNE036

Matrix: (soil/water) SOIL Lab Sample ID: 0812281-13R

Sample wt/vol: 4.0 (g/mL) G Lab File ID: 1228113B

Level: (low/med) LOW Date Sampled: 12/17/08 09:25

% Moisture: not dec. 6 Date Analyzed: 01/07/09 02:39

GC Column: RTX-VRX ID: 0.25 (mm) Dilution Factor: 1.0

Soil Extract Volume:_____(uL) Soil Aliquot Volume: _____(uL)

CONCENTRATION UNITS: (ug/L or ug/Kg) UG/KG

CAS NO.	COMPOUND	MDL	RL	CONC	Q
67-64-1	Acetone	2.7	13	13	UJ HT BK
71-43-2	Benzene	0.63	13	0.94	J J HT
75-27-4	Bromodichloromethane	0.40	13		U UJ
75-25-2	Bromoform	1.3	13		U
74-83-9	Bromomethane	0.96	13		U
78-93-3	2-Butanone	1.9	13		U
75-15-0	Carbon disulfide	1.7	13		U
56-23-5	Carbon tetrachloride	1.2	13		U
108-90-7	Chlorobenzene	0.46	13		U
75-00-3	Chloroethane	1.5	13		U
67-66-3	Chloroform	0.74	13		U
74-87-3	Chloromethane	0.70	13		U
110-82-7	Cyclohexane	0.72	13		U
124-48-1	Dibromochloromethane	0.46	13		U
96-12-8	1,2-Dibromo-3-chloropropane	1.6	6.7		U
106-93-4	1,2-Dibromoethane	0.58	13		U
95-50-1	1,2-Dichlorobenzene	0.50	13		U
541-73-1	1,3-Dichlorobenzene	1.1	13		U
106-46-7	1,4-Dichlorobenzene	0.74	13		U
75-71-8	Dichlorodifluoromethane	1.5	13		U
75-34-3	1,1-Dichloroethane	0.72	13		U
107-06-2	1,2-Dichloroethane	0.62	13		U
75-35-4	1,1-Dichloroethene	1.6	13		U
156-59-2	cis-1,2-Dichloroethene	1.6	13		U
156-60-5	trans-1,2-Dichloroethene	1.5	13		U
78-87-5	1,2-Dichloropropane	0.62	13		U
10061-01-5	cis-1,3-Dichloropropene	0.67	13		U
10061-02-6	trans-1,3-Dichloropropene	0.43	13		U
100-41-4	Ethylbenzene	1.0	13		U
591-78-6	2-Hexanone	3.1	13		U
98-82-8	Isopropylbenzene	1.2	13		U
79-20-9	Methyl acetate	2.1	13		U
75-09-2	Methylene chloride	0.83	13	13 UJ ~~4.9 JB~~	HT B
108-87-2	Methyl cyclohexane	0.40	13	0.86	J J HT
1634-04-4	Methyl tert-butyl ether	0.43	13		U UJ
108-10-1	4-Methyl-2-pentanone	0.78	13		U
100-42-5	Styrene	0.47	13		U
79-34-5	1,1,2,2-Tetrachloroethane	0.58	13		U
127-18-4	Tetrachloroethene	1.3	13		U

FORM I VOA

MW 7/28/09

FORM 1
VOLATILE ORGANICS ANALYSIS DATA SHEET

CLIENT SAMPLE NO. 13RE

MR08-SS110-08DR

Lab Name: EMPIRICAL LABS Contract: CH2MHILL

Lab Code: NA Case No.: NA SAS No.: NA SDG No.: LEJEUNE036

Matrix: (soil/water) SOIL Lab Sample ID: 0812281-13R

Sample wt/vol: 4.0 (g/mL) G Lab File ID: 1228113B

Level: (low/med) LOW Date Sampled: 12/17/08 09:25

% Moisture: not dec. 6 Date Analyzed: 01/07/09 02:39

GC Column: RTX-VRX ID: 0.25 (mm) Dilution Factor: 1.0

Soil Extract Volume:_____(uL) Soil Aliquot Volume: _____(uL)

CONCENTRATION UNITS: (ug/L or ug/Kg) UG/KG

CAS NO.	COMPOUND	MDL	RL	CONC	Q
108-88-3	Toluene	1.2	13		U UJ
120-82-1	1,2,4-Trichlorobenzene	0.24	13		U
71-55-6	1,1,1-Trichloroethane	1.2	13		U
79-00-5	1,1,2-Trichloroethane	0.47	13		U
79-01-6	Trichloroethene	1.1	13		U
76-13-1	Trichlorotrifluoroethane	0.74	13		U
75-69-4	Trichlorofluoromethane	1.3	13		U
75-01-4	Vinyl chloride	1.5	13		U
1330-20-7	Xylene(total)	0.94	13		U

FORM I VOA

LW 2/28/09

FORM 1
VOLATILE ORGANICS ANALYSIS DATA SHEET

CLIENT SAMPLE NO. 14

MR08-IS110-08D

Lab Name: EMPIRICAL LABS Contract: CH2MHILL

Lab Code: NA Case No.: NA SAS No.: NA SDG No.: LEJEUNE036

Matrix: (soil/water) SOIL Lab Sample ID: 0812281-14

Sample wt/vol: 6.5 (g/mL) G Lab File ID: 1228114A

Level: (low/med) LOW Date Sampled: 12/17/08 09:35

% Moisture: not dec. 10 Date Analyzed: 12/31/08 14:47

GC Column: RTX-VRX ID: 0.25 (mm) Dilution Factor: 1.0

Soil Extract Volume:_____(uL) Soil Aliquot Volume: _____(uL)

CONCENTRATION UNITS: (ug/L or ug/Kg) UG/KG

CAS NO.	COMPOUND	MDL	RL	CONC	Q
67-64-1	Acetone	1.7	8.5		U
71-43-2	Benzene	0.40	8.5		U
75-27-4	Bromodichloromethane	0.26	8.5		U
75-25-2	Bromoform	0.85	8.5		U
74-83-9	Bromomethane	0.61	8.5		U
78-93-3	2-Butanone	1.2	8.5		U
75-15-0	Carbon disulfide	1.1	8.5		U
56-23-5	Carbon tetrachloride	0.75	8.5		U
108-90-7	Chlorobenzene	0.29	8.5		U
75-00-3	Chloroethane	0.94	8.5		U
67-66-3	Chloroform	0.47	8.5		U
74-87-3	Chloromethane	0.44	8.5		U
110-82-7	Cyclohexane	0.46	8.5		U
124-48-1	Dibromochloromethane	0.29	8.5		U
96-12-8	1,2-Dibromo-3-chloropropane	1.0	4.3		U
106-93-4	1,2-Dibromoethane	0.37	8.5		U
95-50-1	1,2-Dichlorobenzene	0.32	8.5		U
541-73-1	1,3-Dichlorobenzene	0.72	8.5		U
106-46-7	1,4-Dichlorobenzene	0.47	8.5		U
75-71-8	Dichlorodifluoromethane	0.94	8.5		U
75-34-3	1,1-Dichloroethane	0.46	8.5		U
107-06-2	1,2-Dichloroethane	0.39	8.5		U
75-35-4	1,1-Dichloroethene	1.0	8.5		U
156-59-2	cis-1,2-Dichloroethene	1.0	8.5		U
156-60-5	trans-1,2-Dichloroethene	0.94	8.5		U
78-87-5	1,2-Dichloropropane	0.39	8.5		U
10061-01-5	cis-1,3-Dichloropropene	0.43	8.5		U
10061-02-6	trans-1,3-Dichloropropene	0.27	8.5		U
100-41-4	Ethylbenzene	0.64	8.5		U
591-78-6	2-Hexanone	2.0	8.5		U
98-82-8	Isopropylbenzene	0.75	8.5		U
79-20-9	Methyl acetate	1.4	8.5		U
75-09-2	Methylene chloride	0.53	8.5	8.54 ~~1.1~~ ~~JB~~	B
108-87-2	Methyl cyclohexane	0.26	8.5		U
1634-04-4	Methyl tert-butyl ether	0.27	8.5		U
108-10-1	4-Methyl-2-pentanone	0.49	8.5		U
100-42-5	Styrene	0.30	8.5		U
79-34-5	1,1,2,2-Tetrachloroethane	0.37	8.5		U
127-18-4	Tetrachloroethene	0.83	8.5		U

7/28/09

FORM 1
VOLATILE ORGANICS ANALYSIS DATA SHEET

CLIENT SAMPLE NO.

MR08-IS110-08D

14

Lab Name: EMPIRICAL LABS Contract: CH2MHILL

Lab Code: NA Case No.: NA SAS No.: NA SDG No.: LEJEUNE036

Matrix: (soil/water) SOIL Lab Sample ID: 0812281-14

Sample wt/vol: 6.5 (g/mL) G Lab File ID: 1228114A

Level: (low/med) LOW Date Sampled: 12/17/08 09:35

% Moisture: not dec. 10 Date Analyzed: 12/31/08 14:47

GC Column: RTX-VRX ID: 0.25 (mm) Dilution Factor: 1.0

Soil Extract Volume:_____(uL) Soil Aliquot Volume: _____(uL)

CONCENTRATION UNITS: (ug/L or ug/Kg) UG/KG

CAS NO.	COMPOUND	MDL	RL	CONC	Q
108-88-3	Toluene	0.73	8.5		U
120-82-1	1,2,4-Trichlorobenzene	0.15	8.5		U
71-55-6	1,1,1-Trichloroethane	0.77	8.5		U
79-00-5	1,1,2-Trichloroethane	0.30	8.5		U
79-01-6	Trichloroethene	0.72	8.5		U
76-13-1	Trichlorotrifluoroethane	0.47	8.5		U
75-69-4	Trichlorofluoromethane	0.81	8.5		U
75-01-4	Vinyl chloride	0.94	8.5		U
1330-20-7	Xylene(total)	0.60	8.5		U

MW 7/28/09

FORM 1
VOLATILE ORGANICS ANALYSIS DATA SHEET

CLIENT SAMPLE NO.

15

MR08-SS134-08D

Lab Name: EMPIRICAL LABS Contract: CH2MHILL

Lab Code: NA Case No.: NA SAS No.: NA SDG No.: LEJEUNE036

Matrix: (soil/water) SOIL Lab Sample ID: 0812281-15

Sample wt/vol: 4.2 (g/mL) G Lab File ID: 1228115A

Level: (low/med) LOW Date Sampled: 12/17/08 10:20

% Moisture: not dec. 11 Date Analyzed: 12/31/08 15:17

GC Column: RTX-VRX ID: 0.25 (mm) Dilution Factor: 1.0

Soil Extract Volume:_____(uL) Soil Aliquot Volume: _____(uL)

CONCENTRATION UNITS: (ug/L or ug/Kg) UG/KG

CAS NO.	COMPOUND	MDL	RL	CONC	Q
67-64-1	Acetone	2.6	13	95	U
71-43-2	Benzene	0.62	13		U
75-27-4	Bromodichloromethane	0.40	13		U
75-25-2	Bromoform	1.3	13		U
74-83-9	Bromomethane	0.95	13		U
78-93-3	2-Butanone	1.8	13	24	
75-15-0	Carbon disulfide	1.7	13	2.6	J
56-23-5	Carbon tetrachloride	1.2	13		U
108-90-7	Chlorobenzene	0.45	13		U
75-00-3	Chloroethane	1.4	13		U
67-66-3	Chloroform	0.73	13		U
74-87-3	Chloromethane	0.69	13		U
110-82-7	Cyclohexane	0.71	13		U
124-48-1	Dibromochloromethane	0.45	13		U
96-12-8	1,2-Dibromo-3-chloropropane	1.6	6.6		U
106-93-4	1,2-Dibromoethane	0.57	13		U
95-50-1	1,2-Dichlorobenzene	0.49	13		U
541-73-1	1,3-Dichlorobenzene	1.1	13		U
106-46-7	1,4-Dichlorobenzene	0.73	13		U
75-71-8	Dichlorodifluoromethane	1.4	13		U
75-34-3	1,1-Dichloroethane	0.71	13		U
107-06-2	1,2-Dichloroethane	0.61	13		U
75-35-4	1,1-Dichloroethene	1.6	13		U
156-59-2	cis-1,2-Dichloroethene	1.6	13		U
156-60-5	trans-1,2-Dichloroethene	1.4	13		U
78-87-5	1,2-Dichloropropane	0.61	13		U
10061-01-5	cis-1,3-Dichloropropene	0.66	13		U
10061-02-6	trans-1,3-Dichloropropene	0.42	13		U
100-41-4	Ethylbenzene	0.99	13		U
591-78-6	2-Hexanone	3.0	13		U
98-82-8	Isopropylbenzene	1.2	13		U
79-20-9	Methyl acetate	2.1	13		U
75-09-2	Methylene chloride	0.82	13		U
108-87-2	Methyl cyclohexane	0.40	13		U
1634-04-4	Methyl tert-butyl ether	0.42	13		U
108-10-1	4-Methyl-2-pentanone	0.77	13		U
100-42-5	Styrene	0.46	13		U
79-34-5	1,1,2,2-Tetrachloroethane	0.57	13		U
127-18-4	Tetrachloroethene	1.3	13		U

B

FORM I VOA

lw
2/28/09

FORM 1
VOLATILE ORGANICS ANALYSIS DATA SHEET

CLIENT SAMPLE NO. 15

MR08-SS134-08D

Lab Name: EMPIRICAL LABS Contract: CH2MHILL

Lab Code: NA Case No.: NA SAS No.: NA SDG No.: LEJEUNE036

Matrix: (soil/water) SOIL Lab Sample ID: 0812281-15

Sample wt/vol: 4.2 (g/mL) G Lab File ID: 1228115A

Level: (low/med) LOW Date Sampled: 12/17/08 10:20

% Moisture: not dec. 11 Date Analyzed: 12/31/08 15:17

GC Column: RTX-VRX ID: 0.25 (mm) Dilution Factor: 1.0

Soil Extract Volume:_____(uL) Soil Aliquot Volume: _____(uL)

CONCENTRATION UNITS: (ug/L or ug/Kg) UG/KG

CAS NO.	COMPOUND	MDL	RL	CONC	Q
108-88-3	Toluene	1.1	13		U
120-82-1	1,2,4-Trichlorobenzene	0.24	13		U
71-55-6	1,1,1-Trichloroethane	1.2	13		U
79-00-5	1,1,2-Trichloroethane	0.46	13		U
79-01-6	Trichloroethene	1.1	13		U
76-13-1	Trichlorotrifluoroethane	0.73	13		U
75-69-4	Trichlorofluoromethane	1.2	13		U
75-01-4	Vinyl chloride	1.4	13		U
1330-20-7	Xylene(total)	0.93	13		U

LW
2/28/09

FORM 1
VOLATILE ORGANICS ANALYSIS DATA SHEET

CLIENT SAMPLE NO. 16

MR08-IS134-08D

Lab Name: EMPIRICAL LABS Contract: CH2MHILL

Lab Code: NA Case No.: NA SAS No.: NA SDG No.: LEJEUNE036

Matrix: (soil/water) SOIL Lab Sample ID: 0812281-16

Sample wt/vol: 4.4 (g/mL) G Lab File ID: 1228116A

Level: (low/med) LOW Date Sampled: 12/17/08 10:25

% Moisture: not dec. 8 Date Analyzed: 12/31/08 15:48

GC Column: RTX-VRX ID: 0.25 (mm) Dilution Factor: 1.0

Soil Extract Volume:_____(uL) Soil Aliquot Volume: _____(uL)

CONCENTRATION UNITS: (ug/L or ug/Kg) UG/KG

CAS NO.	COMPOUND	MDL	RL	CONC	Q
67-64-1	Acetone	2.4	12	12u ~~12~~	~~J~~
71-43-2	Benzene	0.57	12		U
75-27-4	Bromodichloromethane	0.37	12		U
75-25-2	Bromoform	1.2	12		U
74-83-9	Bromomethane	0.88	12		U
78-93-3	2-Butanone	1.7	12		U
75-15-0	Carbon disulfide	1.6	12		U
56-23-5	Carbon tetrachloride	1.1	12		U
108-90-7	Chlorobenzene	0.42	12		U
75-00-3	Chloroethane	1.3	12		U
67-66-3	Chloroform	0.67	12		U
74-87-3	Chloromethane	0.64	12		U
110-82-7	Cyclohexane	0.66	12		U
124-48-1	Dibromochloromethane	0.42	12		U
96-12-8	1,2-Dibromo-3-chloropropane	1.5	6.1		U
106-93-4	1,2-Dibromoethane	0.52	12		U
95-50-1	1,2-Dichlorobenzene	0.45	12		U
541-73-1	1,3-Dichlorobenzene	1.0	12		U
106-46-7	1,4-Dichlorobenzene	0.67	12		U
75-71-8	Dichlorodifluoromethane	1.3	12		U
75-34-3	1,1-Dichloroethane	0.66	12		U
107-06-2	1,2-Dichloroethane	0.56	12		U
75-35-4	1,1-Dichloroethene	1.5	12		U
156-59-2	cis-1,2-Dichloroethene	1.5	12		U
156-60-5	trans-1,2-Dichloroethene	1.3	12		U
78-87-5	1,2-Dichloropropane	0.56	12		U
10061-01-5	cis-1,3-Dichloropropene	0.61	12		U
10061-02-6	trans-1,3-Dichloropropene	0.39	12		U
100-41-4	Ethylbenzene	0.92	12		U
591-78-6	2-Hexanone	2.8	12		U
98-82-8	Isopropylbenzene	1.1	12		U
79-20-9	Methyl acetate	2.0	12		U
75-09-2	Methylene chloride	0.76	12		U
108-87-2	Methyl cyclohexane	0.37	12		U
1634-04-4	Methyl tert-butyl ether	0.39	12		U
108-10-1	4-Methyl-2-pentanone	0.71	12		U
100-42-5	Styrene	0.43	12		U
79-34-5	1,1,2,2-Tetrachloroethane	0.52	12		U
127-18-4	Tetrachloroethene	1.2	12		U

FORM I VOA

lw 7/28/09

FORM 1
VOLATILE ORGANICS ANALYSIS DATA SHEET

CLIENT SAMPLE NO. 16

MR08-IS134-08D

Lab Name: EMPIRICAL LABS Contract: CH2MHILL

Lab Code: NA Case No.: NA SAS No.: NA SDG No.: LEJEUNE036

Matrix: (soil/water) SOIL Lab Sample ID: 0812281-16

Sample wt/vol: 4.4 (g/mL) G Lab File ID: 1228116A

Level: (low/med) LOW Date Sampled: 12/17/08 10:25

% Moisture: not dec. 8 Date Analyzed: 12/31/08 15:48

GC Column: RTX-VRX ID: 0.25 (mm) Dilution Factor: 1.0

Soil Extract Volume:_____(uL) Soil Aliquot Volume: _____(uL)

CONCENTRATION UNITS: (ug/L or ug/Kg) UG/KG

CAS NO.	COMPOUND	MDL	RL	CONC	Q
108-88-3	Toluene	1.0	12		U
120-82-1	1,2,4-Trichlorobenzene	0.22	12		U
71-55-6	1,1,1-Trichloroethane	1.1	12		U
79-00-5	1,1,2-Trichloroethane	0.43	12		U
79-01-6	Trichloroethene	1.0	12		U
76-13-1	Trichlorotrifluoroethane	0.67	12		U
75-69-4	Trichlorofluoromethane	1.2	12		U
75-01-4	Vinyl chloride	1.3	12		U
1330-20-7	Xylene(total)	0.86	12		U

RW
2/28/09

FORM 1
VOLATILE ORGANICS ANALYSIS DATA SHEET

CLIENT SAMPLE NO.

17

MR08-TB121708

Lab Name: EMPIRICAL LABS Contract: CH2MHILL

Lab Code: NA Case No.: NA SAS No.: NA SDG No.: LEJEUNE036

Matrix: (soil/water) WATER Lab Sample ID: 0812281-17

Sample wt/vol: 5.000 (g/mL) ML Lab File ID: 1228117

Level: (low/med) LOW Date Sampled: 12/17/08 :

% Moisture: not dec. _____ Date Analyzed: 12/31/08 00:14

GC Column: RTX-VRX ID: 0.25 (mm) Dilution Factor: 1.0

Soil Extract Volume:_____(uL) Soil Aliquot Volume: _____(uL)

CONCENTRATION UNITS: (ug/L or ug/Kg) UG/L

CAS NO.	COMPOUND	MDL	RL	CONC	Q
67-64-1	Acetone	0.84	2.5		U
71-43-2	Benzene	0.11	1.0		U
75-27-4	Bromodichloromethane	0.10	1.0		U
75-25-2	Bromoform	0.10	1.0		U
74-83-9	Bromomethane	0.32	1.0		~~U~~ UJ CC
78-93-3	2-Butanone	1.0	3.0		U
75-15-0	Carbon disulfide	0.13	1.0		U
56-23-5	Carbon tetrachloride	0.15	1.0		U
108-90-7	Chlorobenzene	0.10	1.0		U
75-00-3	Chloroethane	0.18	1.0		U
67-66-3	Chloroform	0.11	1.0		U
74-87-3	Chloromethane	0.29	1.0		U
110-82-7	Cyclohexane	0.20	1.0		U
124-48-1	Dibromochloromethane	0.10	1.0		U
96-12-8	1,2-Dibromo-3-chloropropane	0.11	1.0		U
106-93-4	1,2-Dibromoethane	0.10	1.0		U
95-50-1	1,2-Dichlorobenzene	0.10	1.0		U
541-73-1	1,3-Dichlorobenzene	0.13	1.0		U
106-46-7	1,4-Dichlorobenzene	0.10	1.0		U
75-71-8	Dichlorodifluoromethane	0.22	1.0		U
75-34-3	1,1-Dichloroethane	0.12	1.0		U
107-06-2	1,2-Dichloroethane	0.10	1.0		U
75-35-4	1,1-Dichloroethene	0.15	1.0		U
156-59-2	cis-1,2-Dichloroethene	0.13	1.0		U
156-60-5	trans-1,2-Dichloroethene	0.13	1.0		U
78-87-5	1,2-Dichloropropane	0.10	1.0		U
10061-01-5	cis-1,3-Dichloropropene	0.11	1.0		U
10061-02-6	trans-1,3-Dichloropropene	0.10	1.0		U
100-41-4	Ethylbenzene	0.13	1.0		U
591-78-6	2-Hexanone	0.30	1.0		U
98-82-8	Isopropylbenzene	0.15	1.0		U
79-20-9	Methyl acetate	0.30	1.0		U
75-09-2	Methylene chloride	0.14	1.0	2.3	~~B~~ U
108-87-2	Methyl cyclohexane	0.17	1.0		U
1634-04-4	Methyl tert-butyl ether	0.10	1.0		U
108-10-1	4-Methyl-2-pentanone	0.29	1.0		U
100-42-5	Styrene	0.10	1.0		U
79-34-5	1,1,2,2-Tetrachloroethane	0.10	1.0		U
127-18-4	Tetrachloroethene	0.15	1.0		U

FORM I VOA

lla

FORM 1
VOLATILE ORGANICS ANALYSIS DATA SHEET

CLIENT SAMPLE NO.

17

MR08-TB121708

Lab Name: EMPIRICAL LABS Contract: CH2MHILL

Lab Code: NA Case No.: NA SAS No.: NA SDG No.: LEJEUNE036

Matrix: (soil/water) WATER Lab Sample ID: 0812281-17

Sample wt/vol: 5.000 (g/mL) ML Lab File ID: 1228117

Level: (low/med) LOW Date Sampled: 12/17/08 :

% Moisture: not dec. _____ Date Analyzed: 12/31/08 00:14

GC Column: RTX-VRX ID: 0.25 (mm) Dilution Factor: 1.0

Soil Extract Volume:_____(uL) Soil Aliquot Volume: _____(uL)

CONCENTRATION UNITS: (ug/L or ug/Kg) UG/L

CAS NO.	COMPOUND	MDL	RL	CONC	Q
108-88-3	Toluene	0.10	1.0		U
120-82-1	1,2,4-Trichlorobenzene	0.10	1.0		U
71-55-6	1,1,1-Trichloroethane	0.17	1.0		U
79-00-5	1,1,2-Trichloroethane	0.10	1.0		U
79-01-6	Trichloroethene	0.13	1.0		U
76-13-1	Trichlorotrifluoroethane	0.18	1.0		U
75-69-4	Trichlorofluoromethane	0.17	1.0		U
75-01-4	Vinyl chloride	0.18	1.0		U
1330-20-7	Xylene(total)	0.22	1.0		U

Ques
7/28/09

FORM 1
VOLATILE ORGANICS ANALYSIS DATA SHEET

CLIENT SAMPLE NO. 18

MR08-EB0
1-121808

Lab Name: EMPIRICAL LABS Contract: CH2MHILL

Lab Code: NA Case No.: NA SAS No.: NA SDG No.: LEJEUNE036

Matrix: (soil/water) WATER Lab Sample ID: 0812281-18

Sample wt/vol: 5.000 (g/mL) ML Lab File ID: 1228118

Level: (low/med) LOW Date Sampled: 12/18/08 07:22

% Moisture: not dec. _____ Date Analyzed: 12/31/08 01:44

GC Column: RTX-VRX ID: 0.25 (mm) Dilution Factor: 1.0

Soil Extract Volume:_____(uL) Soil Aliquot Volume: _____(uL)

CONCENTRATION UNITS: (ug/L or ug/Kg) UG/L

CAS NO.	COMPOUND	MDL	RL	CONC	Q
67-64-1	Acetone	0.84	2.5	79	
71-43-2	Benzene	0.11	1.0		U
75-27-4	Bromodichloromethane	0.10	1.0		U
75-25-2	Bromoform	0.10	1.0		U
74-83-9	Bromomethane	0.32	1.0		~~U~~ UJ CCH
78-93-3	2-Butanone	1.0	3.0		U
75-15-0	Carbon disulfide	0.13	1.0		U
56-23-5	Carbon tetrachloride	0.15	1.0		U
108-90-7	Chlorobenzene	0.10	1.0		U
75-00-3	Chloroethane	0.18	1.0		U
67-66-3	Chloroform	0.11	1.0		U
74-87-3	Chloromethane	0.29	1.0		U
110-82-7	Cyclohexane	0.20	1.0		U
124-48-1	Dibromochloromethane	0.10	1.0		U
96-12-8	1,2-Dibromo-3-chloropropane	0.11	1.0		U
106-93-4	1,2-Dibromoethane	0.10	1.0		U
95-50-1	1,2-Dichlorobenzene	0.10	1.0		U
541-73-1	1,3-Dichlorobenzene	0.13	1.0		U
106-46-7	1,4-Dichlorobenzene	0.10	1.0		U
75-71-8	Dichlorodifluoromethane	0.22	1.0		U
75-34-3	1,1-Dichloroethane	0.12	1.0		U
107-06-2	1,2-Dichloroethane	0.10	1.0		U
75-35-4	1,1-Dichloroethene	0.15	1.0		U
156-59-2	cis-1,2-Dichloroethene	0.13	1.0		U
156-60-5	trans-1,2-Dichloroethene	0.13	1.0		U
78-87-5	1,2-Dichloropropane	0.10	1.0		U
10061-01-5	cis-1,3-Dichloropropene	0.11	1.0		U
10061-02-6	trans-1,3-Dichloropropene	0.10	1.0		U
100-41-4	Ethylbenzene	0.13	1.0		U
591-78-6	2-Hexanone	0.30	1.0		U
98-82-8	Isopropylbenzene	0.15	1.0		U
79-20-9	Methyl acetate	0.30	1.0		U
75-09-2	Methylene chloride	0.14	1.0	1.6	~~B~~ U
108-87-2	Methyl cyclohexane	0.17	1.0		U
1634-04-4	Methyl tert-butyl ether	0.10	1.0		U
108-10-1	4-Methyl-2-pentanone	0.29	1.0		U
100-42-5	Styrene	0.10	1.0		U
79-34-5	1,1,2,2-Tetrachloroethane	0.10	1.0		U
127-18-4	Tetrachloroethene	0.15	1.0		U

lw 7/28/09

FORM 1
VOLATILE ORGANICS ANALYSIS DATA SHEET

CLIENT SAMPLE NO.

MR08-EB0
1-121808

18

Lab Name: EMPIRICAL LABS Contract: CH2MHILL

Lab Code: NA Case No.: NA SAS No.: NA SDG No.: LEJEUNE036

Matrix: (soil/water) WATER Lab Sample ID: 0812281-18

Sample wt/vol: 5.000 (g/mL) ML Lab File ID: 1228118

Level: (low/med) LOW Date Sampled: 12/18/08 07:22

% Moisture: not dec. _____ Date Analyzed: 12/31/08 01:44

GC Column: RTX-VRX ID: 0.25 (mm) Dilution Factor: 1.0

Soil Extract Volume:_____(uL) Soil Aliquot Volume: _____(uL)

CONCENTRATION UNITS: (ug/L or ug/Kg) UG/L

CAS NO.	COMPOUND	MDL	RL	CONC	Q
108-88-3	Toluene	0.10	1.0		U
120-82-1	1,2,4-Trichlorobenzene	0.10	1.0		U
71-55-6	1,1,1-Trichloroethane	0.17	1.0		U
79-00-5	1,1,2-Trichloroethane	0.10	1.0		U
79-01-6	Trichloroethene	0.13	1.0		U
76-13-1	Trichlorotrifluoroethane	0.18	1.0		U
75-69-4	Trichlorofluoromethane	0.17	1.0		U
75-01-4	Vinyl chloride	0.18	1.0		U
1330-20-7	Xylene(total)	0.22	1.0		U

fw 2/28/09

ENVIRONMENTAL
Data Services, Inc.

VOLATILE ORGANIC COMPOUNDS
USEPA Region IV - Level IV Review

Site: MCB Camp Lejeune, TO-09 SDG #: LEJEUNE037

Client: CH2M HILL, Inc., Virginia Beach, Virginia Date: February 28, 2008

Laboratory: Empirical Laboratories, Nashville, Tennessee Reviewer: Nancy Weaver

EDS ID	Client Sample ID	Laboratory Sample ID	Matrix
1	MR08-TB0112182008	0812282-01	Water
2	MR08-IS159-4-5-08D	0812282-02	Soil
3	MR08-SS181-08D	0812282-03	Soil
4	MR08-IS181-1-2-08D	0812282-04	Soil
5	MR08-IS157-08D	0812282-05	Soil
6	MR08-SS158-08D	0812282-06	Soil
7	MR08-IS135-1.5-2-08D	0812282-07	Soil
8	MR08-SS135-08D	0812282-08	Soil
9	MR08-SS156-08D	0812282-09	Soil
10	MR08-SS159-08D	0812282-10	Soil
11	MR08-IS156-1.5-2-08D	0812282-11	Soil
12	MR08-SS157-08D	0812282-12	Soil
13	MR08-IS158-4-5-08D	0812282-13	Soil

The USEPA "Contract Laboratory Program National Functional Guidelines for Organic Data Review," October 1999, and professional judgement were used in evaluating the data in this summary report.

Holding Times - All samples were analyzed within 14 days for preserved water and soil samples except the following.

Sample	Date Sampled	Date Analyzed	# of Days	Qualifier
1	12/18/08	01/02/08	15	J/UJ
9	12/17/08	01/03/08	17	J/UJ
10	12/17/08	01/03/08	17	J/UJ
11	12/17/08	01/03/08	17	J/UJ
12	12/17/08	01/03/08	17	J/UJ
13	12/17/08	01/03/08	17	J/UJ

GC/MS Tuning - All of the BFB tunes in the initial and continuing calibrations met the percent relative abundance criteria.

Initial Calibration - The initial calibrations exhibited acceptable %RSD and mean RRF values.

Continuing Calibration - The continuing calibrations exhibited acceptable %D and RRF values except the following.

CCAL Date	Compound	%D/RRF	Qualifier	Affected Samples
12/30/08	Bromomethane	41.4%	J/UJ	2-8
	Chloroethane	26.2%	J/UJ	2-8
01/02/09	Acetone	41.8%	None	Already qualified due to HT
01/03/09	Chloromethane	31.8%	None	Already qualified due to HT
	Dichlorodifluoromethane	29.7%	None	Already qualified due to HT
	1,2-Dichloroethane	30.6%	None	Already qualified due to HT
	Methylene chloride	33.7%	None	Already qualified due to HT
	4-Methyl-2-pentanone	28.3%	None	Already qualified due to HT
	Trichlorofluoromethane	34.2%	None	Already qualified due to HT
	Vinyl chloride	31.3%	None	Already qualified due to HT

Surrogates - All samples exhibited acceptable surrogate recoveries.

MS/MSD - A MS/MSD sample was not analyzed except the following.

Laboratory Control Sample - The LCS samples exhibited acceptable %R values except the following.

LCS ID	Compound	%R	Qualifier	Affected Samples
V1BLK0101G	1,2-Dichloroethane	126%	None	All ND

Internal Standard (IS) Area Performance - All internal standards met response and retention time (RT) criteria.

Method Blank - The method blanks exhibited the following contamination.

Blank ID	Compound	Conc.	Action Level ug/kg	Qualifier	Affected Samples
V1BLK1230E	Methylene chloride	3.2 ug/kg	32	U	2-8
V3BLK0101F	Chloroform	0.16 ug/L	0.80	U	1
	Methylene chloride	0.26 ug/L	2.6	None	All >10X
V1BLK0101G	Methylene chloride	4.2 ug/L	42	U	9-13

Trip, Field, Equipment Blank - Field QC results are summarized below.

Blank ID	Compound	Conc. ug/L	Action Level ug/L or ug/kg	Qualifier	Affected Samples
MR08-TB0112182008	Methylene chloride	2.7	27	None	All qualified due to MB
MR08-EB121708	Acetone	75	750	U	2, 3, 10, 11
	Chloroform	0.13	0.65	None	All ND
MR08-FB12192008	None - ND	-	-	-	-

Field Duplicates - Field duplicate samples were not included in this data package.

Tentatively Identified Compounds (TICs) - TICs were not reported.

Compound Quantitation - No discrepancies were identified.

FORM 1
VOLATILE ORGANICS ANALYSIS DATA SHEET

CLIENT SAMPLE NO.

MR08-TB0
112182008

Lab Name: EMPIRICAL LABS Contract: CH2MHILL

Lab Code: NA Case No.: NA SAS No.: NA SDG No.: LEJEUNE037

Matrix: (soil/water) WATER Lab Sample ID: 0812282-01

Sample wt/vol: 5.000 (g/mL) ML Lab File ID: 1228201

Level: (low/med) LOW Date Sampled: 12/18/08 08:24

% Moisture: not dec. _____ Date Analyzed: 01/02/09 22:58

GC Column: RTX-VRX ID: 0.25 (mm) Dilution Factor: 1.0

Soil Extract Volume:_____(uL) Soil Aliquot Volume: _____(uL)

CONCENTRATION UNITS: (ug/L or ug/Kg) UG/L

CAS NO.	COMPOUND	MDL	RL	CONC	Q	
67-64-1	Acetone	0.84	2.5		U UJ	H
71-43-2	Benzene	0.11	1.0		U	
75-27-4	Bromodichloromethane	0.10	1.0		U	
75-25-2	Bromoform	0.10	1.0		U	
74-83-9	Bromomethane	0.32	1.0		U	
78-93-3	2-Butanone	1.0	3.0		U	
75-15-0	Carbon disulfide	0.13	1.0		U	
56-23-5	Carbon tetrachloride	0.15	1.0		U	
108-90-7	Chlorobenzene	0.10	1.0	1.0 UJ ~~0.55~~	~~JB~~ HT	B
75-00-3	Chloroethane	0.18	1.0		U UJ	H
67-66-3	Chloroform	0.11	1.0		U	
74-87-3	Chloromethane	0.29	1.0		U	
110-82-7	Cyclohexane	0.20	1.0		U	
124-48-1	Dibromochloromethane	0.10	1.0		U	
96-12-8	1,2-Dibromo-3-chloropropane	0.11	1.0		U	
106-93-4	1,2-Dibromoethane	0.10	1.0		U	
95-50-1	1,2-Dichlorobenzene	0.10	1.0		U	
541-73-1	1,3-Dichlorobenzene	0.13	1.0		U	
106-46-7	1,4-Dichlorobenzene	0.10	1.0		U	
75-71-8	Dichlorodifluoromethane	0.22	1.0		U	
75-34-3	1,1-Dichloroethane	0.12	1.0		U	
107-06-2	1,2-Dichloroethane	0.10	1.0		U	
75-35-4	1,1-Dichloroethene	0.15	1.0		U	
156-59-2	cis-1,2-Dichloroethene	0.13	1.0		U	
156-60-5	trans-1,2-Dichloroethene	0.13	1.0		U	
78-87-5	1,2-Dichloropropane	0.10	1.0		U	
10061-01-5	cis-1,3-Dichloropropene	0.11	1.0		U	
10061-02-6	trans-1,3-Dichloropropene	0.10	1.0		U	
100-41-4	Ethylbenzene	0.13	1.0		U	
591-78-6	2-Hexanone	0.30	1.0		U	
98-82-8	Isopropylbenzene	0.15	1.0		U	
79-20-9	Methyl acetate	0.30	1.0		U	
75-09-2	Methylene chloride	0.14	1.0	2.7	~~B~~ J	
108-87-2	Methyl cyclohexane	0.17	1.0		U UJ	
1634-04-4	Methyl tert-butyl ether	0.10	1.0		U	
108-10-1	4-Methyl-2-pentanone	0.29	1.0		U	
100-42-5	Styrene	0.10	1.0		U	
79-34-5	1,1,2,2-Tetrachloroethane	0.10	1.0		U	
127-18-4	Tetrachloroethene	0.15	1.0		U	

FORM I VOA

LW
2/28/09

FORM 1
VOLATILE ORGANICS ANALYSIS DATA SHEET

CLIENT SAMPLE NO.

MR08-TB0
112182008

Lab Name: EMPIRICAL LABS Contract: CH2MHILL

Lab Code: NA Case No.: NA SAS No.: NA SDG No.: LEJEUNE037

Matrix: (soil/water) WATER Lab Sample ID: 0812282-01

Sample wt/vol: 5.000 (g/mL) ML Lab File ID: 1228201

Level: (low/med) LOW Date Sampled: 12/18/08 08:24

% Moisture: not dec. _____ Date Analyzed: 01/02/09 22:58

GC Column: RTX-VRX ID: 0.25 (mm) Dilution Factor: 1.0

Soil Extract Volume:_____(uL) Soil Aliquot Volume: _____(uL)

CONCENTRATION UNITS: (ug/L or ug/Kg) UG/L

CAS NO.	COMPOUND	MDL	RL	CONC	Q	
108-88-3	Toluene	0.10	1.0		~~U~~ UJ	HT
120-82-1	1,2,4-Trichlorobenzene	0.10	1.0		U	
71-55-6	1,1,1-Trichloroethane	0.17	1.0		U	
79-00-5	1,1,2-Trichloroethane	0.10	1.0		U	
79-01-6	Trichloroethene	0.13	1.0		U	
76-13-1	Trichlorotrifluoroethane	0.18	1.0		U	
75-69-4	Trichlorofluoromethane	0.17	1.0		U	
75-01-4	Vinyl chloride	0.18	1.0		U	
1330-20-7	Xylene(total)	0.22	1.0		U	

RW
2/28/09

FORM 1
VOLATILE ORGANICS ANALYSIS DATA SHEET

CLIENT SAMPLE NO. 2

MR08-IS15
9-4-5-08D

Lab Name: EMPIRICAL LABS Contract: CH2MHILL

Lab Code: NA Case No.: NA SAS No.: NA SDG No.: LEJEUNE037

Matrix: (soil/water) SOIL Lab Sample ID: 0812282-02

Sample wt/vol: 4.9 (g/mL) G Lab File ID: 1228202A

Level: (low/med) LOW Date Sampled: 12/17/08 14:15

% Moisture: not dec. 12 Date Analyzed: 12/31/08 04:28

GC Column: RTX-VRX ID: 0.25 (mm) Dilution Factor: 1.0

Soil Extract Volume:_____(uL) Soil Aliquot Volume: _____(uL)

CONCENTRATION UNITS: (ug/L or ug/Kg) UG/KG

CAS NO.	COMPOUND	MDL	RL	CONC	Q	
67-64-1	Acetone	2.3	12	12u ~~3.6~~	~~J~~	Bl
71-43-2	Benzene	0.55	12		U	
75-27-4	Bromodichloromethane	0.35	12		U	
75-25-2	Bromoform	1.2	12		U	
74-83-9	Bromomethane	0.84	12		~~U~~ UJ	CC
78-93-3	2-Butanone	1.6	12		U	
75-15-0	Carbon disulfide	1.5	12		U	
56-23-5	Carbon tetrachloride	1.0	12		U	
108-90-7	Chlorobenzene	0.40	12		U	
75-00-3	Chloroethane	1.3	12		~~U~~ UJ	CC
67-66-3	Chloroform	0.64	12		U	
74-87-3	Chloromethane	0.60	12		U	
110-82-7	Cyclohexane	0.63	12		U	
124-48-1	Dibromochloromethane	0.40	12		U	
96-12-8	1,2-Dibromo-3-chloropropane	1.4	5.8		U	
106-93-4	1,2-Dibromoethane	0.50	12		U	
95-50-1	1,2-Dichlorobenzene	0.43	12		U	
541-73-1	1,3-Dichlorobenzene	0.98	12		U	
106-46-7	1,4-Dichlorobenzene	0.64	12		U	
75-71-8	Dichlorodifluoromethane	1.3	12		U	
75-34-3	1,1-Dichloroethane	0.63	12		U	
107-06-2	1,2-Dichloroethane	0.54	12		U	
75-35-4	1,1-Dichloroethene	1.4	12		U	
156-59-2	cis-1,2-Dichloroethene	1.4	12		U	
156-60-5	trans-1,2-Dichloroethene	1.3	12		U	
78-87-5	1,2-Dichloropropane	0.54	12		U	
10061-01-5	cis-1,3-Dichloropropene	0.58	12		U	
10061-02-6	trans-1,3-Dichloropropene	0.37	12		U	
100-41-4	Ethylbenzene	0.87	12		U	
591-78-6	2-Hexanone	2.7	12		U	
98-82-8	Isopropylbenzene	1.0	12		U	
79-20-9	Methyl acetate	1.9	12		U	
75-09-2	Methylene chloride	0.72	12	15	~~B~~ U	B
108-87-2	Methyl cyclohexane	0.35	12		U	
1634-04-4	Methyl tert-butyl ether	0.37	12		U	
108-10-1	4-Methyl-2-pentanone	0.67	12		U	
100-42-5	Styrene	0.41	12		U	
79-34-5	1,1,2,2-Tetrachloroethane	0.50	12		U	
127-18-4	Tetrachloroethene	1.1	12		U	

lw
2/28/09

FORM 1
VOLATILE ORGANICS ANALYSIS DATA SHEET

CLIENT SAMPLE NO. 2

MR08-IS15
9-4-5-08D

Lab Name: EMPIRICAL LABS Contract: CH2MHILL

Lab Code: NA Case No.: NA SAS No.: NA SDG No.: LEJEUNE037

Matrix: (soil/water) SOIL Lab Sample ID: 0812282-02

Sample wt/vol: 4.9 (g/mL) G Lab File ID: 1228202A

Level: (low/med) LOW Date Sampled: 12/17/08 14:15

% Moisture: not dec. 12 Date Analyzed: 12/31/08 04:28

GC Column: RTX-VRX ID: 0.25 (mm) Dilution Factor: 1.0

Soil Extract Volume:_____(uL) Soil Aliquot Volume: _____(uL)

CONCENTRATION UNITS: (ug/L or ug/Kg) UG/KG

CAS NO.	COMPOUND	MDL	RL	CONC	Q
108-88-3	Toluene	1.0	12		U
120-82-1	1,2,4-Trichlorobenzene	0.21	12		U
71-55-6	1,1,1-Trichloroethane	1.0	12		U
79-00-5	1,1,2-Trichloroethane	0.41	12		U
79-01-6	Trichloroethene	0.99	12		U
76-13-1	Trichlorotrifluoroethane	0.64	12		U
75-69-4	Trichlorofluoromethane	1.1	12		U
75-01-4	Vinyl chloride	1.3	12		U
1330-20-7	Xylene(total)	0.81	12		U

LW
2/28/09

FORM 1
VOLATILE ORGANICS ANALYSIS DATA SHEET

CLIENT SAMPLE NO. 3

MR08-SS181-08D

Lab Name: EMPIRICAL LABS Contract: CH2MHILL

Lab Code: NA Case No.: NA SAS No.: NA SDG No.: LEJEUNE037

Matrix: (soil/water) SOIL Lab Sample ID: 0812282-03

Sample wt/vol: 4.9 (g/mL) G Lab File ID: 1228203A

Level: (low/med) LOW Date Sampled: 12/17/08 16:10

% Moisture: not dec. 17 Date Analyzed: 12/31/08 05:07

GC Column: RTX-VRX ID: 0.25 (mm) Dilution Factor: 1.0

Soil Extract Volume:_____(uL) Soil Aliquot Volume: _____(uL)

CONCENTRATION UNITS: (ug/L or ug/Kg) UG/KG

CAS NO.	COMPOUND	MDL	RL	CONC	Q	
67-64-1	Acetone	2.4	12	12u ~~3.5~~	~~J~~	BL
71-43-2	Benzene	0.58	12		U	
75-27-4	Bromodichloromethane	0.37	12		U	
75-25-2	Bromoform	1.2	12		U	
74-83-9	Bromomethane	0.88	12		~~U~~ UJ	CCL
78-93-3	2-Butanone	1.7	12		U	
75-15-0	Carbon disulfide	1.6	12		U	
56-23-5	Carbon tetrachloride	1.1	12		U	
108-90-7	Chlorobenzene	0.42	12		U	
75-00-3	Chloroethane	1.3	12		~~U~~ UJ	CCL
67-66-3	Chloroform	0.67	12		U	
74-87-3	Chloromethane	0.64	12		U	
110-82-7	Cyclohexane	0.66	12		U	
124-48-1	Dibromochloromethane	0.42	12		U	
96-12-8	1,2-Dibromo-3-chloropropane	1.5	6.1		U	
106-93-4	1,2-Dibromoethane	0.53	12		U	
95-50-1	1,2-Dichlorobenzene	0.45	12		U	
541-73-1	1,3-Dichlorobenzene	1.0	12		U	
106-46-7	1,4-Dichlorobenzene	0.67	12		U	
75-71-8	Dichlorodifluoromethane	1.3	12		U	
75-34-3	1,1-Dichloroethane	0.66	12		U	
107-06-2	1,2-Dichloroethane	0.56	12		U	
75-35-4	1,1-Dichloroethene	1.5	12		U	
156-59-2	cis-1,2-Dichloroethene	1.5	12		U	
156-60-5	trans-1,2-Dichloroethene	1.3	12		U	
78-87-5	1,2-Dichloropropane	0.56	12		U	
10061-01-5	cis-1,3-Dichloropropene	0.61	12		U	
10061-02-6	trans-1,3-Dichloropropene	0.39	12		U	
100-41-4	Ethylbenzene	0.92	12		U	
591-78-6	2-Hexanone	2.8	12		U	
98-82-8	Isopropylbenzene	1.1	12		U	
79-20-9	Methyl acetate	2.0	12		U	
75-09-2	Methylene chloride	0.76	12	12u ~~8.3~~	~~JB~~	B
108-87-2	Methyl cyclohexane	0.37	12		U	
1634-04-4	Methyl tert-butyl ether	0.39	12		U	
108-10-1	4-Methyl-2-pentanone	0.71	12		U	
100-42-5	Styrene	0.43	12		U	
79-34-5	1,1,2,2-Tetrachloroethane	0.53	12		U	
127-18-4	Tetrachloroethene	1.2	12		U	

FORM I VOA

LW
12/28/09

FORM 1
VOLATILE ORGANICS ANALYSIS DATA SHEET

CLIENT SAMPLE NO. 3

MR08-SS181-08D

Lab Name: EMPIRICAL LABS Contract: CH2MHILL

Lab Code: NA Case No.: NA SAS No.: NA SDG No.: LEJEUNE037

Matrix: (soil/water) SOIL Lab Sample ID: 0812282-03

Sample wt/vol: 4.9 (g/mL) G Lab File ID: 1228203A

Level: (low/med) LOW Date Sampled: 12/17/08 16:10

% Moisture: not dec. 17 Date Analyzed: 12/31/08 05:07

GC Column: RTX-VRX ID: 0.25 (mm) Dilution Factor: 1.0

Soil Extract Volume:_____(uL) Soil Aliquot Volume: _____(uL)

CONCENTRATION UNITS: (ug/L or ug/Kg) UG/KG

CAS NO.	COMPOUND	MDL	RL	CONC	Q
108-88-3	Toluene	1.0	12		U
120-82-1	1,2,4-Trichlorobenzene	0.22	12		U
71-55-6	1,1,1-Trichloroethane	1.1	12		U
79-00-5	1,1,2-Trichloroethane	0.43	12		U
79-01-6	Trichloroethene	1.0	12		U
76-13-1	Trichlorotrifluoroethane	0.67	12		U
75-69-4	Trichlorofluoromethane	1.2	12		U
75-01-4	Vinyl chloride	1.3	12		U
1330-20-7	Xylene(total)	0.86	12		U

LW
2/28/09

FORM 1
VOLATILE ORGANICS ANALYSIS DATA SHEET

CLIENT SAMPLE NO. 4

MR08-IS18
1-1-2-08D

Lab Name: EMPIRICAL LABS Contract: CH2MHILL

Lab Code: NA Case No.: NA SAS No.: NA SDG No.: LEJEUNE037

Matrix: (soil/water) SOIL Lab Sample ID: 0812282-04

Sample wt/vol: 5.0 (g/mL) G Lab File ID: 1228204A

Level: (low/med) LOW Date Sampled: 12/17/08 16:30

% Moisture: not dec. 13 Date Analyzed: 12/31/08 05:46

GC Column: RTX-VRX ID: 0.25 (mm) Dilution Factor: 1.0

Soil Extract Volume:_____(uL) Soil Aliquot Volume: _____(uL)

CONCENTRATION UNITS: (ug/L or ug/Kg) UG/KG

CAS NO.	COMPOUND	MDL	RL	CONC	Q
67-64-1	Acetone	2.3	11		U
71-43-2	Benzene	0.54	11		U
75-27-4	Bromodichloromethane	0.34	11		U
75-25-2	Bromoform	1.1	11		U
74-83-9	Bromomethane	0.83	11		~~U~~ UJ CCV
78-93-3	2-Butanone	1.6	11		U
75-15-0	Carbon disulfide	1.5	11		U
56-23-5	Carbon tetrachloride	1.0	11		U
108-90-7	Chlorobenzene	0.39	11		U
75-00-3	Chloroethane	1.3	11		~~U~~ UJ CCV
67-66-3	Chloroform	0.63	11		U
74-87-3	Chloromethane	0.60	11		U
110-82-7	Cyclohexane	0.62	11		U
124-48-1	Dibromochloromethane	0.39	11		U
96-12-8	1,2-Dibromo-3-chloropropane	1.4	5.7		U
106-93-4	1,2-Dibromoethane	0.49	11		U
95-50-1	1,2-Dichlorobenzene	0.42	11		U
541-73-1	1,3-Dichlorobenzene	0.96	11		U
106-46-7	1,4-Dichlorobenzene	0.63	11		U
75-71-8	Dichlorodifluoromethane	1.3	11		U
75-34-3	1,1-Dichloroethane	0.62	11		U
107-06-2	1,2-Dichloroethane	0.53	11		U
75-35-4	1,1-Dichloroethene	1.4	11		U
156-59-2	cis-1,2-Dichloroethene	1.4	11		U
156-60-5	trans-1,2-Dichloroethene	1.3	11		U
78-87-5	1,2-Dichloropropane	0.53	11		U
10061-01-5	cis-1,3-Dichloropropene	0.57	11		U
10061-02-6	trans-1,3-Dichloropropene	0.37	11		U
100-41-4	Ethylbenzene	0.86	11		U
591-78-6	2-Hexanone	2.6	11		U
98-82-8	Isopropylbenzene	1.0	11		U
79-20-9	Methyl acetate	1.8	11		U
75-09-2	Methylene chloride	0.71	11	21	~~U~~ u B
108-87-2	Methyl cyclohexane	0.34	11		U
1634-04-4	Methyl tert-butyl ether	0.37	11		U
108-10-1	4-Methyl-2-pentanone	0.67	11		U
100-42-5	Styrene	0.40	11		U
79-34-5	1,1,2,2-Tetrachloroethane	0.49	11		U
127-18-4	Tetrachloroethene	1.1	11		U

2/28/09

FORM 1
VOLATILE ORGANICS ANALYSIS DATA SHEET

CLIENT SAMPLE NO. 4

MR08-IS18
1-1-2-08D

Lab Name: EMPIRICAL LABS Contract: CH2MHILL

Lab Code: NA Case No.: NA SAS No.: NA SDG No.: LEJEUNE037

Matrix: (soil/water) SOIL Lab Sample ID: 0812282-04

Sample wt/vol: 5.0 (g/mL) G Lab File ID: 1228204A

Level: (low/med) LOW Date Sampled: 12/17/08 16:30

% Moisture: not dec. 13 Date Analyzed: 12/31/08 05:46

GC Column: RTX-VRX ID: 0.25 (mm) Dilution Factor: 1.0

Soil Extract Volume:_____(uL) Soil Aliquot Volume: _____(uL)

CONCENTRATION UNITS: (ug/L or ug/Kg) UG/KG

CAS NO.	COMPOUND	MDL	RL	CONC	Q
108-88-3	Toluene	0.99	11		U
120-82-1	1,2,4-Trichlorobenzene	0.21	11		U
71-55-6	1,1,1-Trichloroethane	1.0	11		U
79-00-5	1,1,2-Trichloroethane	0.40	11		U
79-01-6	Trichloroethene	0.98	11		U
76-13-1	Trichlorotrifluoroethane	0.63	11		U
75-69-4	Trichlorofluoromethane	1.1	11		U
75-01-4	Vinyl chloride	1.3	11		U
1330-20-7	Xylene(total)	0.80	11		U

MW 2/28/09

FORM 1
VOLATILE ORGANICS ANALYSIS DATA SHEET

CLIENT SAMPLE NO. 5

MR08-IS157-08D

Lab Name: EMPIRICAL LABS Contract: CH2MHILL

Lab Code: NA Case No.: NA SAS No.: NA SDG No.: LEJEUNE037

Matrix: (soil/water) SOIL Lab Sample ID: 0812282-05

Sample wt/vol: 5.0 (g/mL) G Lab File ID: 1228205A

Level: (low/med) LOW Date Sampled: 12/17/08 15:45

% Moisture: not dec. 11 Date Analyzed: 12/31/08 06:25

GC Column: RTX-VRX ID: 0.25 (mm) Dilution Factor: 1.0

Soil Extract Volume:_____(uL) Soil Aliquot Volume: _____(uL)

CONCENTRATION UNITS: (ug/L or ug/Kg) UG/KG

CAS NO.	COMPOUND	MDL	RL	CONC	Q
67-64-1	Acetone	2.2	11		U
71-43-2	Benzene	0.53	11		U
75-27-4	Bromodichloromethane	0.34	11		U
75-25-2	Bromoform	1.1	11		U
74-83-9	Bromomethane	0.81	11		~~U~~ UJ CH
78-93-3	2-Butanone	1.6	11		U
75-15-0	Carbon disulfide	1.4	11		U
56-23-5	Carbon tetrachloride	0.99	11		U
108-90-7	Chlorobenzene	0.38	11		U
75-00-3	Chloroethane	1.2	11		~~U~~ UJ CH
67-66-3	Chloroform	0.62	11		U
74-87-3	Chloromethane	0.58	11		U
110-82-7	Cyclohexane	0.60	11		U
124-48-1	Dibromochloromethane	0.38	11		U
96-12-8	1,2-Dibromo-3-chloropropane	1.3	5.6		U
106-93-4	1,2-Dibromoethane	0.48	11		U
95-50-1	1,2-Dichlorobenzene	0.41	11		U
541-73-1	1,3-Dichlorobenzene	0.94	11		U
106-46-7	1,4-Dichlorobenzene	0.62	11		U
75-71-8	Dichlorodifluoromethane	1.2	11		U
75-34-3	1,1-Dichloroethane	0.60	11		U
107-06-2	1,2-Dichloroethane	0.52	11		U
75-35-4	1,1-Dichloroethene	1.3	11		U
156-59-2	cis-1,2-Dichloroethene	1.3	11		U
156-60-5	trans-1,2-Dichloroethene	1.2	11		U
78-87-5	1,2-Dichloropropane	0.52	11		U
10061-01-5	cis-1,3-Dichloropropene	0.56	11		U
10061-02-6	trans-1,3-Dichloropropene	0.36	11		U
100-41-4	Ethylbenzene	0.84	11		U
591-78-6	2-Hexanone	2.6	11		U
98-82-8	Isopropylbenzene	0.99	11		U
79-20-9	Methyl acetate	1.8	11		U
75-09-2	Methylene chloride	0.70	11	17	~~B~~ U B1
108-87-2	Methyl cyclohexane	0.34	11		U
1634-04-4	Methyl tert-butyl ether	0.36	11		U
108-10-1	4-Methyl-2-pentanone	0.65	11		U
100-42-5	Styrene	0.39	11		U
79-34-5	1,1,2,2-Tetrachloroethane	0.48	11		U
127-18-4	Tetrachloroethene	1.1	11		U

FORM I VOA

fw 2/28/09

FORM 1
VOLATILE ORGANICS ANALYSIS DATA SHEET

CLIENT SAMPLE NO. 5

MR08-IS157-08D

Lab Name: EMPIRICAL LABS Contract: CH2MHILL

Lab Code: NA Case No.: NA SAS No.: NA SDG No.: LEJEUNE037

Matrix: (soil/water) SOIL Lab Sample ID: 0812282-05

Sample wt/vol: 5.0 (g/mL) G Lab File ID: 1228205A

Level: (low/med) LOW Date Sampled: 12/17/08 15:45

% Moisture: not dec. 11 Date Analyzed: 12/31/08 06:25

GC Column: RTX-VRX ID: 0.25 (mm) Dilution Factor: 1.0

Soil Extract Volume:_____(uL) Soil Aliquot Volume: _____(uL)

CONCENTRATION UNITS: (ug/L or ug/Kg) UG/KG

CAS NO.	COMPOUND	MDL	RL	CONC	Q
108-88-3	Toluene	0.96	11		U
120-82-1	1,2,4-Trichlorobenzene	0.20	11		U
71-55-6	1,1,1-Trichloroethane	1.0	11		U
79-00-5	1,1,2-Trichloroethane	0.39	11		U
79-01-6	Trichloroethene	0.95	11		U
76-13-1	Trichlorotrifluoroethane	0.62	11		U
75-69-4	Trichlorofluoromethane	1.1	11		U
75-01-4	Vinyl chloride	1.2	11		U
1330-20-7	Xylene(total)	0.78	11		U

lw
2/28/09

6

FORM 1
VOLATILE ORGANICS ANALYSIS DATA SHEET

CLIENT SAMPLE NO.

MR08-SS158-08D

Lab Name: EMPIRICAL LABS Contract: CH2MHILL

Lab Code: NA Case No.: NA SAS No.: NA SDG No.: LEJEUNE037

Matrix: (soil/water) SOIL Lab Sample ID: 0812282-06

Sample wt/vol: 4.8 (g/mL) G Lab File ID: 1228206A

Level: (low/med) LOW Date Sampled: 12/17/08 14:50

% Moisture: not dec. 6 Date Analyzed: 12/31/08 07:04

GC Column: RTX-VRX ID: 0.25 (mm) Dilution Factor: 1.0

Soil Extract Volume:_____(uL) Soil Aliquot Volume: _____(uL)

CONCENTRATION UNITS: (ug/L or ug/Kg) UG/KG

CAS NO.	COMPOUND	MDL	RL	CONC	Q
67-64-1	Acetone	2.2	11		U
71-43-2	Benzene	0.52	11		U
75-27-4	Bromodichloromethane	0.33	11		U
75-25-2	Bromoform	1.1	11		U
74-83-9	Bromomethane	0.80	11		~~U~~ UJ CCH
78-93-3	2-Butanone	1.5	11		U
75-15-0	Carbon disulfide	1.4	11		U
56-23-5	Carbon tetrachloride	0.97	11		U
108-90-7	Chlorobenzene	0.38	11		U
75-00-3	Chloroethane	1.2	11		~~U~~ UJ CCH
67-66-3	Chloroform	0.61	11		U
74-87-3	Chloromethane	0.58	11		U
110-82-7	Cyclohexane	0.60	11		U
124-48-1	Dibromochloromethane	0.38	11		U
96-12-8	1,2-Dibromo-3-chloropropane	1.3	5.5		U
106-93-4	1,2-Dibromoethane	0.48	11		U
95-50-1	1,2-Dichlorobenzene	0.41	11		U
541-73-1	1,3-Dichlorobenzene	0.93	11		U
106-46-7	1,4-Dichlorobenzene	0.61	11		U
75-71-8	Dichlorodifluoromethane	1.2	11		U
75-34-3	1,1-Dichloroethane	0.60	11		U
107-06-2	1,2-Dichloroethane	0.51	11		U
75-35-4	1,1-Dichloroethene	1.3	11		U
156-59-2	cis-1,2-Dichloroethene	1.3	11		U
156-60-5	trans-1,2-Dichloroethene	1.2	11		U
78-87-5	1,2-Dichloropropane	0.51	11		U
10061-01-5	cis-1,3-Dichloropropene	0.55	11		U
10061-02-6	trans-1,3-Dichloropropene	0.35	11		U
100-41-4	Ethylbenzene	0.83	11		U
591-78-6	2-Hexanone	2.5	11		U
98-82-8	Isopropylbenzene	0.97	11		U
79-20-9	Methyl acetate	1.8	11		U
75-09-2	Methylene chloride	0.69	11	18	~~B~~ U B
108-87-2	Methyl cyclohexane	0.33	11		U
1634-04-4	Methyl tert-butyl ether	0.35	11		U
108-10-1	4-Methyl-2-pentanone	0.64	11		U
100-42-5	Styrene	0.39	11		U
79-34-5	1,1,2,2-Tetrachloroethane	0.48	11		U
127-18-4	Tetrachloroethene	1.1	11		U

FORM I VOA

lw 2/28/09

FORM 1
VOLATILE ORGANICS ANALYSIS DATA SHEET

CLIENT SAMPLE NO. 6

MR08-SS158-08D

Lab Name: EMPIRICAL LABS Contract: CH2MHILL

Lab Code: NA Case No.: NA SAS No.: NA SDG No.: LEJEUNE037

Matrix: (soil/water) SOIL Lab Sample ID: 0812282-06

Sample wt/vol: 4.8 (g/mL) G Lab File ID: 1228206A

Level: (low/med) LOW Date Sampled: 12/17/08 14:50

% Moisture: not dec. 6 Date Analyzed: 12/31/08 07:04

GC Column: RTX-VRX ID: 0.25 (mm) Dilution Factor: 1.0

Soil Extract Volume:_____(uL) Soil Aliquot Volume: _____(uL)

CONCENTRATION UNITS: (ug/L or ug/Kg) UG/KG

CAS NO.	COMPOUND	MDL	RL	CONC	Q
108-88-3	Toluene	0.95	11		U
120-82-1	1,2,4-Trichlorobenzene	0.20	11		U
71-55-6	1,1,1-Trichloroethane	1.00	11		U
79-00-5	1,1,2-Trichloroethane	0.39	11		U
79-01-6	Trichloroethene	0.94	11		U
76-13-1	Trichlorotrifluoroethane	0.61	11		U
75-69-4	Trichlorofluoromethane	1.0	11		U
75-01-4	Vinyl chloride	1.2	11		U
1330-20-7	Xylene(total)	0.77	11		U

MW 2/28/09

FORM 1
VOLATILE ORGANICS ANALYSIS DATA SHEET

CLIENT SAMPLE NO. 7

MR08-IS13
5-1.5-2-08D

Lab Name: EMPIRICAL LABS Contract: CH2MHILL

Lab Code: NA Case No.: NA SAS No.: NA SDG No.: LEJEUNE037

Matrix: (soil/water) SOIL Lab Sample ID: 0812282-07

Sample wt/vol: 5.0 (g/mL) G Lab File ID: 1228207A

Level: (low/med) LOW Date Sampled: 12/17/08 11:11

% Moisture: not dec. 10 Date Analyzed: 12/31/08 07:43

GC Column: RTX-VRX ID: 0.25 (mm) Dilution Factor: 1.0

Soil Extract Volume:_____(uL) Soil Aliquot Volume: _____(uL)

CONCENTRATION UNITS: (ug/L or ug/Kg) UG/KG

CAS NO.	COMPOUND	MDL	RL	CONC	Q
67-64-1	Acetone	2.2	11		U
71-43-2	Benzene	0.52	11		U
75-27-4	Bromodichloromethane	0.33	11		U
75-25-2	Bromoform	1.1	11		U
74-83-9	Bromomethane	0.80	11		~~U~~ UNJ CCI
78-93-3	2-Butanone	1.6	11		U
75-15-0	Carbon disulfide	1.4	11		U
56-23-5	Carbon tetrachloride	0.98	11		U
108-90-7	Chlorobenzene	0.38	11		U
75-00-3	Chloroethane	1.2	11		~~U~~ UJ CCI
67-66-3	Chloroform	0.61	11		U
74-87-3	Chloromethane	0.58	11		U
110-82-7	Cyclohexane	0.60	11		U
124-48-1	Dibromochloromethane	0.38	11		U
96-12-8	1,2-Dibromo-3-chloropropane	1.3	5.5		U
106-93-4	1,2-Dibromoethane	0.48	11		U
95-50-1	1,2-Dichlorobenzene	0.41	11		U
541-73-1	1,3-Dichlorobenzene	0.93	11		U
106-46-7	1,4-Dichlorobenzene	0.61	11		U
75-71-8	Dichlorodifluoromethane	1.2	11		U
75-34-3	1,1-Dichloroethane	0.60	11		U
107-06-2	1,2-Dichloroethane	0.51	11		U
75-35-4	1,1-Dichloroethene	1.3	11		U
156-59-2	cis-1,2-Dichloroethene	1.3	11		U
156-60-5	trans-1,2-Dichloroethene	1.2	11		U
78-87-5	1,2-Dichloropropane	0.51	11		U
10061-01-5	cis-1,3-Dichloropropene	0.55	11		U
10061-02-6	trans-1,3-Dichloropropene	0.36	11		U
100-41-4	Ethylbenzene	0.83	11		U
591-78-6	2-Hexanone	2.6	11		U
98-82-8	Isopropylbenzene	0.98	11		U
79-20-9	Methyl acetate	1.8	11		U
75-09-2	Methylene chloride	0.69	11	17	~~B~~ U B
108-87-2	Methyl cyclohexane	0.33	11		U
1634-04-4	Methyl tert-butyl ether	0.36	11		U
108-10-1	4-Methyl-2-pentanone	0.64	11		U
100-42-5	Styrene	0.39	11		U
79-34-5	1,1,2,2-Tetrachloroethane	0.48	11		U
127-18-4	Tetrachloroethene	1.1	11		U

FORM I VOA

LW 2/28/09

FORM 1
VOLATILE ORGANICS ANALYSIS DATA SHEET

CLIENT SAMPLE NO. 7

MR08-IS13
5-1.5-2-08D

Lab Name: EMPIRICAL LABS Contract: CH2MHILL

Lab Code: NA Case No.: NA SAS No.: NA SDG No.: LEJEUNE037

Matrix: (soil/water) SOIL Lab Sample ID: 0812282-07

Sample wt/vol: 5.0 (g/mL) G Lab File ID: 1228207A

Level: (low/med) LOW Date Sampled: 12/17/08 11:11

% Moisture: not dec. 10 Date Analyzed: 12/31/08 07:43

GC Column: RTX-VRX ID: 0.25 (mm) Dilution Factor: 1.0

Soil Extract Volume:_____(uL) Soil Aliquot Volume: _____(uL)

CONCENTRATION UNITS: (ug/L or ug/Kg) UG/KG

CAS NO.	COMPOUND	MDL	RL	CONC	Q
108-88-3	Toluene	0.95	11		U
120-82-1	1,2,4-Trichlorobenzene	0.20	11		U
71-55-6	1,1,1-Trichloroethane	1.00	11		U
79-00-5	1,1,2-Trichloroethane	0.39	11		U
79-01-6	Trichloroethene	0.94	11		U
76-13-1	Trichlorotrifluoroethane	0.61	11		U
75-69-4	Trichlorofluoromethane	1.0	11		U
75-01-4	Vinyl chloride	1.2	11		U
1330-20-7	Xylene(total)	0.78	11		U

2/28/09

FORM 1
VOLATILE ORGANICS ANALYSIS DATA SHEET

CLIENT SAMPLE NO. 8

MR08-SS135-08D

Lab Name: EMPIRICAL LABS Contract: CH2MHILL

Lab Code: NA Case No.: NA SAS No.: NA SDG No.: LEJEUNE037

Matrix: (soil/water) SOIL Lab Sample ID: 0812282-08

Sample wt/vol: 5.0 (g/mL) G Lab File ID: 1228208A

Level: (low/med) LOW Date Sampled: 12/17/08 11:05

% Moisture: not dec. 6 Date Analyzed: 12/31/08 08:23

GC Column: RTX-VRX ID: 0.25 (mm) Dilution Factor: 1.0

Soil Extract Volume:_____(uL) Soil Aliquot Volume: _____(uL)

CONCENTRATION UNITS: (ug/L or ug/Kg) UG/KG

CAS NO.	COMPOUND	MDL	RL	CONC	Q
67-64-1	Acetone	2.1	11		U
71-43-2	Benzene	0.50	11		U
75-27-4	Bromodichloromethane	0.32	11		U
75-25-2	Bromoform	1.1	11		U
74-83-9	Bromomethane	0.77	11		~~U~~ UJ CU
78-93-3	2-Butanone	1.5	11		U
75-15-0	Carbon disulfide	1.4	11		U
56-23-5	Carbon tetrachloride	0.94	11		U
108-90-7	Chlorobenzene	0.36	11		U
75-00-3	Chloroethane	1.2	11		~~U~~ UJ CU
67-66-3	Chloroform	0.59	11		U
74-87-3	Chloromethane	0.56	11		U
110-82-7	Cyclohexane	0.58	11		U
124-48-1	Dibromochloromethane	0.36	11		U
96-12-8	1,2-Dibromo-3-chloropropane	1.3	5.3		U
106-93-4	1,2-Dibromoethane	0.46	11		U
95-50-1	1,2-Dichlorobenzene	0.40	11		U
541-73-1	1,3-Dichlorobenzene	0.90	11		U
106-46-7	1,4-Dichlorobenzene	0.59	11		U
75-71-8	Dichlorodifluoromethane	1.2	11		U
75-34-3	1,1-Dichloroethane	0.58	11		U
107-06-2	1,2-Dichloroethane	0.49	11		U
75-35-4	1,1-Dichloroethene	1.3	11		U
156-59-2	cis-1,2-Dichloroethene	1.3	11		U
156-60-5	trans-1,2-Dichloroethene	1.2	11		U
78-87-5	1,2-Dichloropropane	0.49	11		U
10061-01-5	cis-1,3-Dichloropropene	0.53	11		U
10061-02-6	trans-1,3-Dichloropropene	0.34	11		U
100-41-4	Ethylbenzene	0.80	11		U
591-78-6	2-Hexanone	2.4	11		U
98-82-8	Isopropylbenzene	0.94	11		U
79-20-9	Methyl acetate	1.7	11		U
75-09-2	Methylene chloride	0.66	11	16	~~B~~ U B1
108-87-2	Methyl cyclohexane	0.32	11		U
1634-04-4	Methyl tert-butyl ether	0.34	11		U
108-10-1	4-Methyl-2-pentanone	0.62	11		U
100-42-5	Styrene	0.37	11		U
79-34-5	1,1,2,2-Tetrachloroethane	0.46	11		U
127-18-4	Tetrachloroethene	1.0	11		U

FORM I VOA

LWS
2/28/09

FORM 1
VOLATILE ORGANICS ANALYSIS DATA SHEET

CLIENT SAMPLE NO. 8

MR08-SS135-08D

Lab Name: EMPIRICAL LABS Contract: CH2MHILL

Lab Code: NA Case No.: NA SAS No.: NA SDG No.: LEJEUNE037

Matrix: (soil/water) SOIL Lab Sample ID: 0812282-08

Sample wt/vol: 5.0 (g/mL) G Lab File ID: 1228208A

Level: (low/med) LOW Date Sampled: 12/17/08 11:05

% Moisture: not dec. 6 Date Analyzed: 12/31/08 08:23

GC Column: RTX-VRX ID: 0.25 (mm) Dilution Factor: 1.0

Soil Extract Volume:_____(uL) Soil Aliquot Volume: _____(uL)

CONCENTRATION UNITS: (ug/L or ug/Kg) UG/KG

CAS NO.	COMPOUND	MDL	RL	CONC	Q
108-88-3	Toluene	0.92	11		U
120-82-1	1,2,4-Trichlorobenzene	0.19	11		U
71-55-6	1,1,1-Trichloroethane	0.96	11		U
79-00-5	1,1,2-Trichloroethane	0.37	11		U
79-01-6	Trichloroethene	0.91	11		U
76-13-1	Trichlorotrifluoroethane	0.59	11		U
75-69-4	Trichlorofluoromethane	1.0	11		U
75-01-4	Vinyl chloride	1.2	11		U
1330-20-7	Xylene(total)	0.75	11		U

MW
2/28/09

FORM 1
VOLATILE ORGANICS ANALYSIS DATA SHEET

CLIENT SAMPLE NO. 9

MR08-SS156-08D

Lab Name: EMPIRICAL LABS Contract: CH2MHILL

Lab Code: NA Case No.: NA SAS No.: NA SDG No.: LEJEUNE037

Matrix: (soil/water) SOIL Lab Sample ID: 0812282-09

Sample wt/vol: 4.8 (g/mL) G Lab File ID: 1228209A

Level: (low/med) LOW Date Sampled: 12/17/08 13:00

% Moisture: not dec. 5 Date Analyzed: 01/03/09 07:42

GC Column: RTX-VRX ID: 0.25 (mm) Dilution Factor: 1.0

Soil Extract Volume:_____(uL) Soil Aliquot Volume: _____(uL)

CONCENTRATION UNITS: (ug/L or ug/Kg) UG/KG

CAS NO.	COMPOUND	MDL	RL	CONC	Q	
67-64-1	Acetone	2.2	11		U UJ	H1
71-43-2	Benzene	0.52	11		U	
75-27-4	Bromodichloromethane	0.33	11		U	
75-25-2	Bromoform	1.1	11		U	
74-83-9	Bromomethane	0.79	11		U	
78-93-3	2-Butanone	1.5	11		U	
75-15-0	Carbon disulfide	1.4	11		U	
56-23-5	Carbon tetrachloride	0.97	11		U	
108-90-7	Chlorobenzene	0.37	11		U	
75-00-3	Chloroethane	1.2	11		U	
67-66-3	Chloroform	0.60	11		U	
74-87-3	Chloromethane	0.57	11		U	
110-82-7	Cyclohexane	0.59	11		U	
124-48-1	Dibromochloromethane	0.37	11		U	
96-12-8	1,2-Dibromo-3-chloropropane	1.3	5.5		U	
106-93-4	1,2-Dibromoethane	0.47	11		U	
95-50-1	1,2-Dichlorobenzene	0.41	11		U	
541-73-1	1,3-Dichlorobenzene	0.92	11		U	
106-46-7	1,4-Dichlorobenzene	0.60	11		U	
75-71-8	Dichlorodifluoromethane	1.2	11		U	
75-34-3	1,1-Dichloroethane	0.59	11		U	
107-06-2	1,2-Dichloroethane	0.50	11		U	
75-35-4	1,1-Dichloroethene	1.3	11		U	
156-59-2	cis-1,2-Dichloroethene	1.3	11		U	
156-60-5	trans-1,2-Dichloroethene	1.2	11		U	
78-87-5	1,2-Dichloropropane	0.50	11		U	
10061-01-5	cis-1,3-Dichloropropene	0.55	11		U	
10061-02-6	trans-1,3-Dichloropropene	0.35	11		U	
100-41-4	Ethylbenzene	0.82	11		U	
591-78-6	2-Hexanone	2.5	11		U	
98-82-8	Isopropylbenzene	0.97	11		U	
79-20-9	Methyl acetate	1.8	11		U	
75-09-2	Methylene chloride	0.68	11	20	~~B~~ UJ	H-B
108-87-2	Methyl cyclohexane	0.33	11		U	H
1634-04-4	Methyl tert-butyl ether	0.35	11		U	
108-10-1	4-Methyl-2-pentanone	0.64	11		U	
100-42-5	Styrene	0.38	11		U	
79-34-5	1,1,2,2-Tetrachloroethane	0.47	11		U	
127-18-4	Tetrachloroethene	1.1	11		U	

FORM I VOA

lw
2/28/09

FORM 1
VOLATILE ORGANICS ANALYSIS DATA SHEET

CLIENT SAMPLE NO. 9

MR08-SS156-08D

Lab Name: EMPIRICAL LABS Contract: CH2MHILL

Lab Code: NA Case No.: NA SAS No.: NA SDG No.: LEJEUNE037

Matrix: (soil/water) SOIL Lab Sample ID: 0812282-09

Sample wt/vol: 4.8 (g/mL) G Lab File ID: 1228209A

Level: (low/med) LOW Date Sampled: 12/17/08 13:00

% Moisture: not dec. 5 Date Analyzed: 01/03/09 07:42

GC Column: RTX-VRX ID: 0.25 (mm) Dilution Factor: 1.0

Soil Extract Volume:_____(uL) Soil Aliquot Volume: _____(uL)

CONCENTRATION UNITS: (ug/L or ug/Kg) UG/KG

CAS NO.	COMPOUND	MDL	RL	CONC	Q
108-88-3	Toluene	0.94	11		U UJ
120-82-1	1,2,4-Trichlorobenzene	0.20	11		U
71-55-6	1,1,1-Trichloroethane	0.99	11		U
79-00-5	1,1,2-Trichloroethane	0.38	11		U
79-01-6	Trichloroethene	0.93	11		U
76-13-1	Trichlorotrifluoroethane	0.60	11		U
75-69-4	Trichlorofluoromethane	1.0	11		U
75-01-4	Vinyl chloride	1.2	11		U
1330-20-7	Xylene(total)	0.77	11		U

MW 2/28/09

FORM 1
VOLATILE ORGANICS ANALYSIS DATA SHEET

CLIENT SAMPLE NO. 10

MR08-SS159-08D

Lab Name: EMPIRICAL LABS Contract: CH2MHILL

Lab Code: NA Case No.: NA SAS No.: NA SDG No.: LEJEUNE037

Matrix: (soil/water) SOIL Lab Sample ID: 0812282-10

Sample wt/vol: 5.0 (g/mL) G Lab File ID: 1228210A

Level: (low/med) LOW Date Sampled: 12/17/08 14:10

% Moisture: not dec. 5 Date Analyzed: 01/03/09 08:21

GC Column: RTX-VRX ID: 0.25 (mm) Dilution Factor: 1.0

Soil Extract Volume:_____(uL) Soil Aliquot Volume: _____(uL)

CONCENTRATION UNITS: (ug/L or ug/Kg) UG/KG

CAS NO.	COMPOUND	MDL	RL	CONC	Q
67-64-1	Acetone	2.1	10	10UJ ~~5.0~~	J HT
71-43-2	Benzene	0.50	10		U UJ
75-27-4	Bromodichloromethane	0.32	10		U
75-25-2	Bromoform	1.0	10		U
74-83-9	Bromomethane	0.76	10		U
78-93-3	2-Butanone	1.5	10		U
75-15-0	Carbon disulfide	1.4	10		U
56-23-5	Carbon tetrachloride	0.93	10		U
108-90-7	Chlorobenzene	0.36	10		U
75-00-3	Chloroethane	1.2	10		U
67-66-3	Chloroform	0.58	10		U
74-87-3	Chloromethane	0.55	10		U
110-82-7	Cyclohexane	0.57	10		U
124-48-1	Dibromochloromethane	0.36	10		U
96-12-8	1,2-Dibromo-3-chloropropane	1.3	5.3		U
106-93-4	1,2-Dibromoethane	0.45	10		U
95-50-1	1,2-Dichlorobenzene	0.39	10		U
541-73-1	1,3-Dichlorobenzene	0.88	10		U
106-46-7	1,4-Dichlorobenzene	0.58	10		U
75-71-8	Dichlorodifluoromethane	1.2	10		U
75-34-3	1,1-Dichloroethane	0.57	10		U
107-06-2	1,2-Dichloroethane	0.48	10		U
75-35-4	1,1-Dichloroethene	1.3	10		U
156-59-2	cis-1,2-Dichloroethene	1.3	10		U
156-60-5	trans-1,2-Dichloroethene	1.2	10		U
78-87-5	1,2-Dichloropropane	0.48	10		U
10061-01-5	cis-1,3-Dichloropropene	0.53	10		U
10061-02-6	trans-1,3-Dichloropropene	0.34	10		U
100-41-4	Ethylbenzene	0.79	10		U
591-78-6	2-Hexanone	2.4	10		U
98-82-8	Isopropylbenzene	0.93	10		U
79-20-9	Methyl acetate	1.7	10		U
75-09-2	Methylene chloride	0.65	10	18	~~B~~ UJ
108-87-2	Methyl cyclohexane	0.32	10		U
1634-04-4	Methyl tert-butyl ether	0.34	10		U
108-10-1	4-Methyl-2-pentanone	0.61	10		U
100-42-5	Styrene	0.37	10		U
79-34-5	1,1,2,2-Tetrachloroethane	0.45	10		U
127-18-4	Tetrachloroethene	1.0	10		U

FORM I VOA

MW 2/28/09

FORM 1
VOLATILE ORGANICS ANALYSIS DATA SHEET

CLIENT SAMPLE NO. 10

MR08-SS159-08D

Lab Name: EMPIRICAL LABS Contract: CH2MHILL

Lab Code: NA Case No.: NA SAS No.: NA SDG No.: LEJEUNE037

Matrix: (soil/water) SOIL Lab Sample ID: 0812282-10

Sample wt/vol: 5.0 (g/mL) G Lab File ID: 1228210A

Level: (low/med) LOW Date Sampled: 12/17/08 14:10

% Moisture: not dec. 5 Date Analyzed: 01/03/09 08:21

GC Column: RTX-VRX ID: 0.25 (mm) Dilution Factor: 1.0

Soil Extract Volume:_____(uL) Soil Aliquot Volume: _____(uL)

CONCENTRATION UNITS: (ug/L or ug/Kg) UG/KG

CAS NO.	COMPOUND	MDL	RL	CONC	Q
108-88-3	Toluene	0.91	10		U UJ
120-82-1	1,2,4-Trichlorobenzene	0.19	10		U
71-55-6	1,1,1-Trichloroethane	0.95	10		U
79-00-5	1,1,2-Trichloroethane	0.37	10		U
79-01-6	Trichloroethene	0.90	10		U
76-13-1	Trichlorotrifluoroethane	0.58	10		U
75-69-4	Trichlorofluoromethane	1.0	10		U
75-01-4	Vinyl chloride	1.2	10		U
1330-20-7	Xylene(total)	0.74	10		U

H

lw
7/28/09

FORM 1
VOLATILE ORGANICS ANALYSIS DATA SHEET

CLIENT SAMPLE NO. 11

MR08-IS15
6-1.5-2-08D

Lab Name: EMPIRICAL LABS Contract: CH2MHILL

Lab Code: NA Case No.: NA SAS No.: NA SDG No.: LEJEUNE037

Matrix: (soil/water) SOIL Lab Sample ID: 0812282-11

Sample wt/vol: 5.0 (g/mL) G Lab File ID: 1228211A

Level: (low/med) LOW Date Sampled: 12/17/08 13:10

% Moisture: not dec. 14 Date Analyzed: 01/03/09 09:00

GC Column: RTX-VRX ID: 0.25 (mm) Dilution Factor: 1.0

Soil Extract Volume:_____(uL) Soil Aliquot Volume: _____(uL)

CONCENTRATION UNITS: (ug/L or ug/Kg) UG/KG

CAS NO.	COMPOUND	MDL	RL	CONC	Q
67-64-1	Acetone	2.3	12	79	UJ HT B1
71-43-2	Benzene	0.54	12		U
75-27-4	Bromodichloromethane	0.35	12		U
75-25-2	Bromoform	1.2	12		U
74-83-9	Bromomethane	0.83	12		U
78-93-3	2-Butanone	1.6	12	5.4	J J
75-15-0	Carbon disulfide	1.5	12	2.3	J J
56-23-5	Carbon tetrachloride	1.0	12		U UJ
108-90-7	Chlorobenzene	0.39	12		U
75-00-3	Chloroethane	1.3	12		U
67-66-3	Chloroform	0.64	12		U
74-87-3	Chloromethane	0.60	12		U
110-82-7	Cyclohexane	0.62	12		U
124-48-1	Dibromochloromethane	0.39	12		U
96-12-8	1,2-Dibromo-3-chloropropane	1.4	5.8		U
106-93-4	1,2-Dibromoethane	0.50	12		U
95-50-1	1,2-Dichlorobenzene	0.43	12		U
541-73-1	1,3-Dichlorobenzene	0.97	12		U
106-46-7	1,4-Dichlorobenzene	0.64	12		U
75-71-8	Dichlorodifluoromethane	1.3	12		U
75-34-3	1,1-Dichloroethane	0.62	12		U
107-06-2	1,2-Dichloroethane	0.53	12		U
75-35-4	1,1-Dichloroethene	1.4	12		U
156-59-2	cis-1,2-Dichloroethene	1.4	12		U
156-60-5	trans-1,2-Dichloroethene	1.3	12		U
78-87-5	1,2-Dichloropropane	0.53	12		U
10061-01-5	cis-1,3-Dichloropropene	0.58	12		U
10061-02-6	trans-1,3-Dichloropropene	0.37	12		U
100-41-4	Ethylbenzene	0.87	12		U
591-78-6	2-Hexanone	2.6	12		U
98-82-8	Isopropylbenzene	1.0	12		U
79-20-9	Methyl acetate	1.8	12		U
75-09-2	Methylene chloride	0.72	12	14	B UJ HT B
108-87-2	Methyl cyclohexane	0.35	12		U UJ H
1634-04-4	Methyl tert-butyl ether	0.37	12		U
108-10-1	4-Methyl-2-pentanone	0.67	12		U
100-42-5	Styrene	0.40	12		U
79-34-5	1,1,2,2-Tetrachloroethane	0.50	12		U
127-18-4	Tetrachloroethene	1.1	12		U

FORM I VOA

MW
2/28/09

FORM 1
VOLATILE ORGANICS ANALYSIS DATA SHEET

CLIENT SAMPLE NO. 11

MR08-IS15
6-1.5-2-08D

Lab Name: EMPIRICAL LABS Contract: CH2MHILL

Lab Code: NA Case No.: NA SAS No.: NA SDG No.: LEJEUNE037

Matrix: (soil/water) SOIL Lab Sample ID: 0812282-11

Sample wt/vol: 5.0 (g/mL) G Lab File ID: 1228211A

Level: (low/med) LOW Date Sampled: 12/17/08 13:10

% Moisture: not dec. 14 Date Analyzed: 01/03/09 09:00

GC Column: RTX-VRX ID: 0.25 (mm) Dilution Factor: 1.0

Soil Extract Volume:_____(uL) Soil Aliquot Volume: _____(uL)

CONCENTRATION UNITS: (ug/L or ug/Kg) UG/KG

CAS NO.	COMPOUND	MDL	RL	CONC	Q
108-88-3	Toluene	0.99	12		U UJ H
120-82-1	1,2,4-Trichlorobenzene	0.21	12		U
71-55-6	1,1,1-Trichloroethane	1.0	12		U
79-00-5	1,1,2-Trichloroethane	0.40	12		U
79-01-6	Trichloroethene	0.98	12		U
76-13-1	Trichlorotrifluoroethane	0.64	12		U
75-69-4	Trichlorofluoromethane	1.1	12		U
75-01-4	Vinyl chloride	1.3	12		U
1330-20-7	Xylene(total)	0.81	12		U

RW
2/28/09

FORM 1
VOLATILE ORGANICS ANALYSIS DATA SHEET

CLIENT SAMPLE NO. 12

MR08-SS157-08D

Lab Name: EMPIRICAL LABS Contract: CH2MHILL

Lab Code: NA Case No.: NA SAS No.: NA SDG No.: LEJEUNE037

Matrix: (soil/water) SOIL Lab Sample ID: 0812282-12

Sample wt/vol: 5.1 (g/mL) G Lab File ID: 1228212A

Level: (low/med) LOW Date Sampled: 12/17/08 15:20

% Moisture: not dec. 10 Date Analyzed: 01/03/09 09:39

GC Column: RTX-VRX ID: 0.25 (mm) Dilution Factor: 1.0

Soil Extract Volume:_____(uL) Soil Aliquot Volume: _____(uL)

CONCENTRATION UNITS: (ug/L or ug/Kg) UG/KG

CAS NO.	COMPOUND	MDL	RL	CONC	Q	
67-64-1	Acetone	2.2	11		U UJ	HT
71-43-2	Benzene	0.51	11		U	
75-27-4	Bromodichloromethane	0.33	11		U	
75-25-2	Bromoform	1.1	11		U	
74-83-9	Bromomethane	0.78	11		U	
78-93-3	2-Butanone	1.5	11		U	
75-15-0	Carbon disulfide	1.4	11		U	
56-23-5	Carbon tetrachloride	0.96	11		U	
108-90-7	Chlorobenzene	0.37	11		U	
75-00-3	Chloroethane	1.2	11		U	
67-66-3	Chloroform	0.60	11		U	
74-87-3	Chloromethane	0.57	11		U	
110-82-7	Cyclohexane	0.59	11		U	
124-48-1	Dibromochloromethane	0.37	11		U	
96-12-8	1,2-Dibromo-3-chloropropane	1.3	5.4		U	
106-93-4	1,2-Dibromoethane	0.47	11		U	
95-50-1	1,2-Dichlorobenzene	0.40	11		U	
541-73-1	1,3-Dichlorobenzene	0.92	11		U	
106-46-7	1,4-Dichlorobenzene	0.60	11		U	
75-71-8	Dichlorodifluoromethane	1.2	11		U	
75-34-3	1,1-Dichloroethane	0.59	11		U	
107-06-2	1,2-Dichloroethane	0.50	11		U	
75-35-4	1,1-Dichloroethene	1.3	11		U	
156-59-2	cis-1,2-Dichloroethene	1.3	11		U	
156-60-5	trans-1,2-Dichloroethene	1.2	11		U	
78-87-5	1,2-Dichloropropane	0.50	11		U	
10061-01-5	cis-1,3-Dichloropropene	0.54	11		U	
10061-02-6	trans-1,3-Dichloropropene	0.35	11		U	
100-41-4	Ethylbenzene	0.82	11		U	
591-78-6	2-Hexanone	2.5	11		U	
98-82-8	Isopropylbenzene	0.96	11		U	
79-20-9	Methyl acetate	1.7	11		U	
75-09-2	Methylene chloride	0.68	11	13	~~B~~ UJ	HB
108-87-2	Methyl cyclohexane	0.33	11		U	H
1634-04-4	Methyl tert-butyl ether	0.35	11		U	
108-10-1	4-Methyl-2-pentanone	0.63	11		U	
100-42-5	Styrene	0.38	11		U	
79-34-5	1,1,2,2-Tetrachloroethane	0.47	11		U	
127-18-4	Tetrachloroethene	1.0	11		U	

FORM I VOA

lw 2/28/09

FORM 1
VOLATILE ORGANICS ANALYSIS DATA SHEET

CLIENT SAMPLE NO. 12

MR08-SS157-08D

Lab Name: EMPIRICAL LABS Contract: CH2MHILL

Lab Code: NA Case No.: NA SAS No.: NA SDG No.: LEJEUNE037

Matrix: (soil/water) SOIL Lab Sample ID: 0812282-12

Sample wt/vol: 5.1 (g/mL) G Lab File ID: 1228212A

Level: (low/med) LOW Date Sampled: 12/17/08 15:20

% Moisture: not dec. 10 Date Analyzed: 01/03/09 09:39

GC Column: RTX-VRX ID: 0.25 (mm) Dilution Factor: 1.0

Soil Extract Volume:_____(uL) Soil Aliquot Volume: _____(uL)

CONCENTRATION UNITS: (ug/L or ug/Kg) UG/KG

CAS NO.	COMPOUND	MDL	RL	CONC	Q
108-88-3	Toluene	0.94	11		~~U~~ UJ
120-82-1	1,2,4-Trichlorobenzene	0.20	11		U
71-55-6	1,1,1-Trichloroethane	0.98	11		U
79-00-5	1,1,2-Trichloroethane	0.38	11		U
79-01-6	Trichloroethene	0.92	11		U
76-13-1	Trichlorotrifluoroethane	0.60	11		U
75-69-4	Trichlorofluoromethane	1.0	11		U
75-01-4	Vinyl chloride	1.2	11		U
1330-20-7	Xylene(total)	0.76	11		U

H

lw 2/28/09

FORM 1
VOLATILE ORGANICS ANALYSIS DATA SHEET

CLIENT SAMPLE NO. 13

MR08-IS15
8-4-5-08D

Lab Name: EMPIRICAL LABS Contract: CH2MHILL

Lab Code: NA Case No.: NA SAS No.: NA SDG No.: LEJEUNE037

Matrix: (soil/water) SOIL Lab Sample ID: 0812282-13

Sample wt/vol: 4.9 (g/mL) G Lab File ID: 1228213A

Level: (low/med) LOW Date Sampled: 12/17/08 15:05

% Moisture: not dec. 13 Date Analyzed: 01/03/09 10:19

GC Column: RTX-VRX ID: 0.25 (mm) Dilution Factor: 1.0

Soil Extract Volume:_____(uL) Soil Aliquot Volume: _____(uL)

CONCENTRATION UNITS: (ug/L or ug/Kg) UG/KG

CAS NO.	COMPOUND	MDL	RL	CONC	Q	
67-64-1	Acetone	2.4	12		U UJ	H
71-43-2	Benzene	0.55	12		U	
75-27-4	Bromodichloromethane	0.35	12		U	
75-25-2	Bromoform	1.2	12		U	
74-83-9	Bromomethane	0.85	12		U	
78-93-3	2-Butanone	1.6	12		U	
75-15-0	Carbon disulfide	1.5	12		U	
56-23-5	Carbon tetrachloride	1.0	12		U	
108-90-7	Chlorobenzene	0.40	12		U	
75-00-3	Chloroethane	1.3	12		U	
67-66-3	Chloroform	0.65	12		U	
74-87-3	Chloromethane	0.61	12		U	
110-82-7	Cyclohexane	0.63	12		U	
124-48-1	Dibromochloromethane	0.40	12		U	
96-12-8	1,2-Dibromo-3-chloropropane	1.4	5.9		U	
106-93-4	1,2-Dibromoethane	0.50	12		U	
95-50-1	1,2-Dichlorobenzene	0.43	12		U	
541-73-1	1,3-Dichlorobenzene	0.99	12		U	
106-46-7	1,4-Dichlorobenzene	0.65	12		U	
75-71-8	Dichlorodifluoromethane	1.3	12		U	
75-34-3	1,1-Dichloroethane	0.63	12		U	
107-06-2	1,2-Dichloroethane	0.54	12		U	
75-35-4	1,1-Dichloroethene	1.4	12		U	
156-59-2	cis-1,2-Dichloroethene	1.4	12		U	
156-60-5	trans-1,2-Dichloroethene	1.3	12		U	
78-87-5	1,2-Dichloropropane	0.54	12		U	
10061-01-5	cis-1,3-Dichloropropene	0.59	12		U	
10061-02-6	trans-1,3-Dichloropropene	0.38	12		U	
100-41-4	Ethylbenzene	0.88	12		U	
591-78-6	2-Hexanone	2.7	12		U	
98-82-8	Isopropylbenzene	1.0	12		U	
79-20-9	Methyl acetate	1.9	12		U	
75-09-2	Methylene chloride	0.73	12	16	B UJ	H
108-87-2	Methyl cyclohexane	0.35	12		U	
1634-04-4	Methyl tert-butyl ether	0.38	12		U	
108-10-1	4-Methyl-2-pentanone	0.68	12		U	
100-42-5	Styrene	0.41	12		U	
79-34-5	1,1,2,2-Tetrachloroethane	0.50	12		U	
127-18-4	Tetrachloroethene	1.1	12		U	

FORM I VOA

2/28/09

FORM 1
VOLATILE ORGANICS ANALYSIS DATA SHEET

CLIENT SAMPLE NO. 13

MR08-IS15
8-4-5-08D

Lab Name: EMPIRICAL LABS Contract: CH2MHILL

Lab Code: NA Case No.: NA SAS No.: NA SDG No.: LEJEUNE037

Matrix: (soil/water) SOIL Lab Sample ID: 0812282-13

Sample wt/vol: 4.9 (g/mL) G Lab File ID: 1228213A

Level: (low/med) LOW Date Sampled: 12/17/08 15:05

% Moisture: not dec. 13 Date Analyzed: 01/03/09 10:19

GC Column: RTX-VRX ID: 0.25 (mm) Dilution Factor: 1.0

Soil Extract Volume:_____(uL) Soil Aliquot Volume: _____(uL)

CONCENTRATION UNITS: (ug/L or ug/Kg) UG/KG

CAS NO.	COMPOUND	MDL	RL	CONC	Q
108-88-3	Toluene	1.0	12		~~U~~ UJ
120-82-1	1,2,4-Trichlorobenzene	0.21	12		~~U~~
71-55-6	1,1,1-Trichloroethane	1.0	12		~~U~~
79-00-5	1,1,2-Trichloroethane	0.41	12		~~U~~
79-01-6	Trichloroethene	1.00	12		~~U~~
76-13-1	Trichlorotrifluoroethane	0.65	12		~~U~~
75-69-4	Trichlorofluoromethane	1.1	12		~~U~~
75-01-4	Vinyl chloride	1.3	12		~~U~~
1330-20-7	Xylene(total)	0.82	12		~~U~~

H

FORM I VOA

lw
2/28/09

ENVIRONMENTAL
Data Services, Inc.

VOLATILE ORGANIC COMPOUNDS
USEPA Region IV - Level IV Review

Site: MCB Camp Lejeune, TO-09 SDG #: LEJEUNE040

Client: CH2M HILL, Inc., Virginia Beach, Virginia Date: February 28, 2009

Laboratory: Empirical Laboratories, Nashville, Tennessee Reviewer: Nancy Weaver

EDS ID	Client Sample ID	Laboratory Sample ID	Matrix
1	MR08-IS179-1.5-2-08D	0812301-01	Soil
2	MR08-SS179-08D	0812301-02	Soil
3	MR08-IS160-5-6-08D	0812301-03	Soil
4	MR08-SS160-08D	0812301-04	Soil
5	MR08-IS155-1-2-08D	0812301-05	Soil
6	MR08-SS155-08D	0812301-06	Soil
6RE	MR08-SS155-08DRE	0812301-06RE	Soil
7	MR08-IS136-1-2-08D	0812301-07	Soil
8	MR08-SS136-08D	0812301-08	Soil
8RE	MR08-SS136-08DRE	0812301-08RE	Soil
9	MR08-SS137-08D	0812301-09	Soil
10	MR08-IS137-2.5-3.5-08D	0812301-10	Soil
11	MR08-SS154-08D	0812301-11	Soil
11RE	MR08-SS154-08DRE	0812301-11RE	Soil
12	MR08-SS154D-08D	0812301-12	Soil
13	MR08-EB01-121908	0812301-13	Water
14	MR08-FB01-121908	0812301-14	Water
15	MR08-SS176-08D	0812301-15	Soil
15RE	MR08-SS176-08DRE	0812301-15RE	Soil
16	MR08-IS176-4-5-08D	0812301-16	Soil
17	MR08-SS163-08D	0812301-17	Soil
17RE	MR08-SS163-08DRE	0812301-17RE	Soil
18	MR08-IS163-4-5-08D	0812301-18	Soil
19	MR08-SS152-08D	0812301-19	Soil
20	MR08-IS152-4-5-08D	0812301-20	Soil
21	MR08-SS139-08D	0812301-21	Soil
21RE	MR08-SS139-08DRE	0812301-21RE	Soil
22	MR08-SS139D-08D	0812301-22	Soil
22RE	MR08-SS139D-08DRE	0812301-22RE	Soil
23	MR08-IS139-0.5-1.5-08D	0812301-23	Soil
24	MR08-IS139D-0.5-1.5-08D	0812301-24	Soil
24RE	MR08-IS139D-0.5-1.5-08DRRE	0812301-24RE	Soil
25	MR08-IS154-1-1.5-08D	0812301-25	Soil
26	MR08-SS161-08D	0812301-26	Soil
27	MR08-IS161-1-1.5-08D	0812301-27	Soil

EDS ID	Client Sample ID	Laboratory Sample ID	Matrix
28	MR08-SS178-08D	0812301-28	Soil
29	MR08-IS178-4-5-08D	0812301-29	Soil
30	MR08-SS177-08D	0812301-30	Soil
30RE	MR08-SS177-08DRE	0812301-30RE	Soil
31	MR08-IS177-2-3-08	0812301-31	Soil
32	MR08-IS154D-1-1.5-08D	0812301-32	Soil
33	MR08-SS178D-08D	0812301-33	Soil
34	MR08-IS178D-4-5-08D	0812301-34	Soil
35	MR08-TB01-121908	0812301-35	Water

The USEPA "Contract Laboratory Program National Functional Guidelines for Organic Data Review," October 1999, and professional judgement were used in evaluating the data in this summary report.

Holding Times - All samples were analyzed within 14 days for preserved water and soil samples except the following.

Sample	Date Sampled	Date Analyzed	# of Days	Qualifier
6RE	12/18/08	01/08/09	21	J/UJ
8RE	12/18/08	01/08/09	21	J/UJ
11RE	12/18/08	01/08/09	21	J/UJ
13	12/19/08	01/03/09	15	J/UJ
14	12/19/08	01/03/09	15	J/UJ
15RE	12/18/08	01/06/09	19	J/UJ
17RE	12/18/08	01/08/09	21	J/UJ
21RE	12/18/08	01/09/09	22	J/UJ
22RE	12/18/08	01/09/09	22	J/UJ
24RE	12/18/08	01/09/09	22	J/UJ
30RE	12/18/08	01/08/08	21	J/UJ
35	12/18/08	01/02/08	15	J/UJ

GC/MS Tuning - All of the BFB tunes in the initial and continuing calibrations met the percent relative abundance criteria.

Initial Calibration - The initial calibrations exhibited acceptable %RSD and mean RRF values.

Continuing Calibration - The continuing calibrations exhibited acceptable %D and RRF values except the following.

CCAL Date	Compound	%D/RRF	Qualifier	Affected Samples
01/02/09	Acetone	41.8%	J/UJ	13, 14, 35
01/08/09 (0957)	Chloromethane	35.3%	None	Already qualified due to HT
	Dichlorodifluoromethane	27.%	None	Already qualified due to HT
	Vinyl chloride	28.3%	None	Already qualified due to HT

CCAL Date	Compound	%D/RRF	Qualifier	Affected Samples
01/08/09 (2249)	Acetone	31.8%	None	Already qualified due to HT

Surrogates - All samples exhibited acceptable surrogate recoveries except the following.

Sample ID	Surrogate	%R	Qualifier
6	S3-Toluene-d8	121%	J - All positives
8	S3-Toluene-d8	122%	J - All positives
17	S3-Toluene-d8	122%	J - All positives
17RE	S3-Toluene-d8	121%	J - All positives
22	S3-Toluene-d8	131%	J/UJ
	S4-Bromofluorobenzene	77%	J/UJ
30	S3-Toluene-d8	132%	None - All ND
30RE	S3-Toluene-d8	122%	None - All ND

MS/MSD - A MS/MSD sample was not analyzed from this data package.

Laboratory Control Sample - The LCS samples exhibited acceptable %R values.

Internal Standard (IS) Area Performance - All internal standards met response and retention time (RT) criteria except the following.

Sample ID	Internal Standard	Area Count	Qualifier
6	IS3-1,4-Dichlorobenzene-d4	Low	J/UJ
8	IS3-1,4-Dichlorobenzene-d4	Low	J/UJ
11	IS3-1,4-Dichlorobenzene-d4	Low	J/UJ
15	IS1-Fluorobenzene	Severely Low	J/R
	IS3-1,4-Dichlorobenzene-d4	Low	J/UJ
15RE	IS3-1,4-Dichlorobenzene-d4	Low	J/UJ
17	IS3-1,4-Dichlorobenzene-d4	Low	J/UJ
21	IS3-1,4-Dichlorobenzene-d4	Low	J/UJ
22	IS3-1,4-Dichlorobenzene-d4	Low	None - Already qualified due to surrogates
22RE	IS3-1,4-Dichlorobenzene-d4	Low	J/UJ
24	IS3-1,4-Dichlorobenzene-d4	Low	J/UJ
30	IS3-1,4-Dichlorobenzene-d4	Low	J/UJ

Method Blank - The method blanks exhibited the following contamination.

Blank ID	Compound	Conc.	Action Level	Qualifier	Affected Samples
V4BLK1231	Methylene chloride	1.5 ug/kg	15 ug/kg	None	All associated ND
	1,2,4-Trichlorobenzene	0.23 ug/kg	1.5 ug/kg	None	All associated ND
V4BLK1231E	Methylene chloride	2.1 ug/kg	21 ug/kg	U	9, 25, 26, 28, 29, 31, 33, 34
V4BLK0101	Benzene	0.60 ug/kg	3.0 ug/kg	U	15, 19, 21, 22
	Methylene chloride	2.2 ug/kg	22 ug/kg	U	15-21, 23, 24

Blank ID	Compound	Conc.	Action Level	Qualifier	Affected Samples
V4BLK0101	1,2,4-Trichlorobenzene	0.39 ug/kg	1.95 ug/kg	U	15, 17, 21, 24
V3BLK0101F	Chlorobenzene	0.16 ug/L	0.80 ug/L	U	13, 14, 35
	Methylene chloride	0.26 ug/L	2.6 ug/L	U	13, 14, 35
V1BLK0106	Methylene chloride	4.8 ug/kg	48 ug/kg	U	15RE
V1BLK0108	Methylene chloride	3.7 ug/kg	37 ug/kg	U	6RE, 8RE, 11RE, 17RE, 30RE
V1BLK0108E	Methylene chloride	3.0 ug/kg	30 ug/kg	U	21RE, 22RE, 24RE

Trip, Field, Equipment Blank - Field QC results are summarized below.

Blank ID	Compound	Conc. ug/L	Action Level ug/L	Qualifier	Affected Samples
MR08-EB0112182008	Acetone	75	750	U	1-6, 6RE, 7, 8, 8RE, 9, 11, 11RE, 12, 25-30, 30RE, 31-34
MR08-EB01-121908	None - ND	-	-	-	-
MR08-FB01-121908	None - ND	-	-	-	-

Field Duplicates - Field duplicate results are summarized below.

Compound	MR08-SS154-08D ug/kg	MR08-SS154D-08D ug/kg	RPD	Qualifier
Benzene	2.8	2.1	29%	None
2-Butanone	34	20	52%	None
Carbon disulfide	5.9	4.0	38%	None
4-Methyl-2-pentanone	15 U	0.78	NC	None
Toluene	8.8	3.5	86%	None
Xylene (total)	6.7	11U	NC	None

Compound	MR08-SS139-08D ug/kg	MR08-SS139D-08D ug/kg	RPD	Qualifier
Acetone	150	180	18%	None
Benzene	12 U	1.4	NC	None
2-Butanone	27	8.5	104%	None
Carbon disulfide	9.8	10	2%	None
Cyclohexane	12U	0.66	NC	None
Ethylbenzene	1.2	11U	NC	None
Methyl cyclohexane	0.41	0.37	10%	None
4-Methyl-2-pentanone	0.98	0.91	7%	None
Toluene	4.6	4.8	4%	None
Trichloroethene	1.3	1.7	27%	None

Compound	MR08-IS139-0.5-1.5-08D ug/kg	MR08-IS139D-0.5-1.5-08D ug/kg	RPD	Qualifier
Acetone	12	26	74%	None
2-Butanone	9.4 U	4.1	NC	None

Compound	MR08-IS154-1-1.5-08D ug/kg	MR08-IS154D-1-1.5-08D ug/kg	RPD	Qualifier
Benzene	0.92	1.3	34%	None
Toluene	1.5	6.4	124%	None
Xylene (total)	1.1	7.8	151%	None

Compound	MR08-SS178-08D ug/kg	MR08-SS178D-08D ug/kg	RPD	Qualifier
Benzene	1.2	1.1	9%	None
Ethylbenzene	16 U	1.1	NC	None
2-Hexanone	16 U	2.8	NC	None
Methyl cyclohexane	0.73	0.67	9%	None
Toluene	16 U	1.4	NC	None

Compound	MR08-IS178-4-5-08D ug/kg	MR08-IS178D-4-5-08D ug/kg	RPD	Qualifier
2-Butanone	1.4	12 U	NC	None

Tentatively Identified Compounds (TICs) - TICs were not reported.

Compound Quantitation - Several samples exhibited internal standard and/or surrogate deficiencies. These samples were reanalyzed. Refer to Form Is for which were used for reporting purposes.

FORM 1
VOLATILE ORGANICS ANALYSIS DATA SHEET

CLIENT SAMPLE NO.

MR08-IS17
9-1.5-2-08D

Lab Name: EMPIRICAL LABS Contract: CH2MHILL

Lab Code: NA Case No.: NA SAS No.: NA SDG No.: LEJEUNE040

Matrix: (soil/water) SOIL Lab Sample ID: 0812301-01

Sample wt/vol: 4.9 (g/mL) G Lab File ID: 1230101A

Level: (low/med) LOW Date Sampled: 12/18/08 09:00

% Moisture: not dec. 7 Date Analyzed: 12/31/08 10:43

GC Column: RTX-VRX ID: 0.25 (mm) Dilution Factor: 1.0

Soil Extract Volume:_____(uL) Soil Aliquot Volume: _____(uL)

CONCENTRATION UNITS: (ug/L or ug/Kg) UG/KG

CAS NO.	COMPOUND	MDL	RL	CONC	Q
67-64-1	Acetone	2.2	11	11U ~~8.6~~	~~J~~
71-43-2	Benzene	0.52	11		U
75-27-4	Bromodichloromethane	0.33	11		U
75-25-2	Bromoform	1.1	11		U
74-83-9	Bromomethane	0.79	11		U
78-93-3	2-Butanone	1.5	11		U
75-15-0	Carbon disulfide	1.4	11		U
56-23-5	Carbon tetrachloride	0.97	11		U
108-90-7	Chlorobenzene	0.37	11		U
75-00-3	Chloroethane	1.2	11		U
67-66-3	Chloroform	0.61	11		U
74-87-3	Chloromethane	0.57	11		U
110-82-7	Cyclohexane	0.60	11		U
124-48-1	Dibromochloromethane	0.37	11		U
96-12-8	1,2-Dibromo-3-chloropropane	1.3	5.5		U
106-93-4	1,2-Dibromoethane	0.47	11		U
95-50-1	1,2-Dichlorobenzene	0.41	11		U
541-73-1	1,3-Dichlorobenzene	0.93	11		U
106-46-7	1,4-Dichlorobenzene	0.61	11		U
75-71-8	Dichlorodifluoromethane	1.2	11		U
75-34-3	1,1-Dichloroethane	0.60	11		U
107-06-2	1,2-Dichloroethane	0.51	11		U
75-35-4	1,1-Dichloroethene	1.3	11		U
156-59-2	cis-1,2-Dichloroethene	1.3	11		U
156-60-5	trans-1,2-Dichloroethene	1.2	11		U
78-87-5	1,2-Dichloropropane	0.51	11		U
10061-01-5	cis-1,3-Dichloropropene	0.55	11		U
10061-02-6	trans-1,3-Dichloropropene	0.35	11		U
100-41-4	Ethylbenzene	0.83	11		U
591-78-6	2-Hexanone	2.5	11		U
98-82-8	Isopropylbenzene	0.97	11		U
79-20-9	Methyl acetate	1.8	11		U
75-09-2	Methylene chloride	0.68	11		U
108-87-2	Methyl cyclohexane	0.33	11		U
1634-04-4	Methyl tert-butyl ether	0.35	11		U
108-10-1	4-Methyl-2-pentanone	0.64	11		U
100-42-5	Styrene	0.39	11		U
79-34-5	1,1,2,2-Tetrachloroethane	0.47	11		U
127-18-4	Tetrachloroethene	1.1	11		U

BL

lw

FORM 1
VOLATILE ORGANICS ANALYSIS DATA SHEET

CLIENT SAMPLE NO.

MR08-IS17
9-1.5-2-08D

Lab Name: EMPIRICAL LABS Contract: CH2MHILL

Lab Code: NA Case No.: NA SAS No.: NA SDG No.: LEJEUNE040

Matrix: (soil/water) SOIL Lab Sample ID: 0812301-01

Sample wt/vol: 4.9 (g/mL) G Lab File ID: 1230101A

Level: (low/med) LOW Date Sampled: 12/18/08 09:00

% Moisture: not dec. 7 Date Analyzed: 12/31/08 10:43

GC Column: RTX-VRX ID: 0.25 (mm) Dilution Factor: 1.0

Soil Extract Volume:_____(uL) Soil Aliquot Volume: _____(uL)

CONCENTRATION UNITS: (ug/L or ug/Kg) UG/KG

CAS NO.	COMPOUND	MDL	RL	CONC	Q
108-88-3	Toluene	0.95	11		U
120-82-1	1,2,4-Trichlorobenzene	0.20	11		U
71-55-6	1,1,1-Trichloroethane	0.99	11		U
79-00-5	1,1,2-Trichloroethane	0.39	11		U
79-01-6	Trichloroethene	0.94	11		U
76-13-1	Trichlorotrifluoroethane	0.61	11		U
75-69-4	Trichlorofluoromethane	1.0	11		U
75-01-4	Vinyl chloride	1.2	11		U
1330-20-7	Xylene(total)	0.77	11		U

2128109

FORM 1
VOLATILE ORGANICS ANALYSIS DATA SHEET

CLIENT SAMPLE NO. 2

MR08-SS179
-08D

Lab Name: EMPIRICAL LABS Contract: CH2MHILL

Lab Code: NA Case No.: NA SAS No.: NA SDG No.: LEJEUNE040

Matrix: (soil/water) SOIL Lab Sample ID: 0812301-02

Sample wt/vol: 4.3 (g/mL) G Lab File ID: 1230102A

Level: (low/med) LOW Date Sampled: 12/18/08 09:10

% Moisture: not dec. 8 Date Analyzed: 12/31/08 11:13

GC Column: RTX-VRX ID: 0.25 (mm) Dilution Factor: 1.0

Soil Extract Volume:_____(uL) Soil Aliquot Volume: _____(uL)

CONCENTRATION UNITS: (ug/L or ug/Kg) UG/KG

CAS NO.	COMPOUND	MDL	RL	CONC	Q
67-64-1	Acetone	2.6	13	22	U
71-43-2	Benzene	0.60	13	1.6	J
75-27-4	Bromodichloromethane	0.38	13		U
75-25-2	Bromoform	1.3	13		U
74-83-9	Bromomethane	0.92	13		U
78-93-3	2-Butanone	1.8	13		U
75-15-0	Carbon disulfide	1.7	13	2.1	J
56-23-5	Carbon tetrachloride	1.1	13		U
108-90-7	Chlorobenzene	0.43	13		U
75-00-3	Chloroethane	1.4	13		U
67-66-3	Chloroform	0.70	13		U
74-87-3	Chloromethane	0.66	13		U
110-82-7	Cyclohexane	0.69	13	0.81	J
124-48-1	Dibromochloromethane	0.43	13		U
96-12-8	1,2-Dibromo-3-chloropropane	1.5	6.4		U
106-93-4	1,2-Dibromoethane	0.55	13		U
95-50-1	1,2-Dichlorobenzene	0.47	13		U
541-73-1	1,3-Dichlorobenzene	1.1	13		U
106-46-7	1,4-Dichlorobenzene	0.70	13		U
75-71-8	Dichlorodifluoromethane	1.4	13		U
75-34-3	1,1-Dichloroethane	0.69	13		U
107-06-2	1,2-Dichloroethane	0.59	13		U
75-35-4	1,1-Dichloroethene	1.5	13		U
156-59-2	cis-1,2-Dichloroethene	1.5	13		U
156-60-5	trans-1,2-Dichloroethene	1.4	13		U
78-87-5	1,2-Dichloropropane	0.59	13		U
10061-01-5	cis-1,3-Dichloropropene	0.64	13		U
10061-02-6	trans-1,3-Dichloropropene	0.41	13		U
100-41-4	Ethylbenzene	0.96	13	2.3	J
591-78-6	2-Hexanone	2.9	13		U
98-82-8	Isopropylbenzene	1.1	13		U
79-20-9	Methyl acetate	2.0	13		U
75-09-2	Methylene chloride	0.79	13		U
108-87-2	Methyl cyclohexane	0.38	13	0.92	J
1634-04-4	Methyl tert-butyl ether	0.41	13		U
108-10-1	4-Methyl-2-pentanone	0.74	13		U
100-42-5	Styrene	0.45	13		U
79-34-5	1,1,2,2-Tetrachloroethane	0.55	13		U
127-18-4	Tetrachloroethene	1.2	13		U

B

fw 7/28/09

FORM 1
VOLATILE ORGANICS ANALYSIS DATA SHEET

CLIENT SAMPLE NO. 2

MR08-SS179
-08D

Lab Name: EMPIRICAL LABS Contract: CH2MHILL

Lab Code: NA Case No.: NA SAS No.: NA SDG No.: LEJEUNE040

Matrix: (soil/water) SOIL Lab Sample ID: 0812301-02

Sample wt/vol: 4.3 (g/mL) G Lab File ID: 1230102A

Level: (low/med) LOW Date Sampled: 12/18/08 09:10

% Moisture: not dec. 8 Date Analyzed: 12/31/08 11:13

GC Column: RTX-VRX ID: 0.25 (mm) Dilution Factor: 1.0

Soil Extract Volume:_____(uL) Soil Aliquot Volume: _____(uL)

CONCENTRATION UNITS: (ug/L or ug/Kg) UG/KG

CAS NO.	COMPOUND	MDL	RL	CONC	Q
108-88-3	Toluene	1.1	13	2.2	J
120-82-1	1,2,4-Trichlorobenzene	0.23	13		U
71-55-6	1,1,1-Trichloroethane	1.2	13		U
79-00-5	1,1,2-Trichloroethane	0.45	13		U
79-01-6	Trichloroethene	1.1	13		U
76-13-1	Trichlorotrifluoroethane	0.70	13		U
75-69-4	Trichlorofluoromethane	1.2	13		U
75-01-4	Vinyl chloride	1.4	13		U
1330-20-7	Xylene(total)	0.90	13		U

2/28/09

FORM 1
VOLATILE ORGANICS ANALYSIS DATA SHEET

CLIENT SAMPLE NO. 3

MR08-IS16
0-5-6-08D

Lab Name: EMPIRICAL LABS Contract: CH2MHILL

Lab Code: NA Case No.: NA SAS No.: NA SDG No.: LEJEUNE040

Matrix: (soil/water) SOIL Lab Sample ID: 0812301-03

Sample wt/vol: 5.7 (g/mL) G Lab File ID: 1230103A

Level: (low/med) LOW Date Sampled: 12/18/08 09:40

% Moisture: not dec. 11 Date Analyzed: 12/31/08 11:44

GC Column: RTX-VRX ID: 0.25 (mm) Dilution Factor: 1.0

Soil Extract Volume:_____(uL) Soil Aliquot Volume: _____(uL)

CONCENTRATION UNITS: (ug/L or ug/Kg) UG/KG

CAS NO.	COMPOUND	MDL	RL	CONC	Q
67-64-1	Acetone	2.0	9.9	9.9 ~~8.6~~	J
71-43-2	Benzene	0.47	9.9		U
75-27-4	Bromodichloromethane	0.30	9.9		U
75-25-2	Bromoform	0.99	9.9		U
74-83-9	Bromomethane	0.72	9.9		U
78-93-3	2-Butanone	1.4	9.9		U
75-15-0	Carbon disulfide	1.3	9.9		U
56-23-5	Carbon tetrachloride	0.88	9.9		U
108-90-7	Chlorobenzene	0.34	9.9		U
75-00-3	Chloroethane	1.1	9.9		U
67-66-3	Chloroform	0.55	9.9		U
74-87-3	Chloromethane	0.52	9.9		U
110-82-7	Cyclohexane	0.54	9.9		U
124-48-1	Dibromochloromethane	0.34	9.9		U
96-12-8	1,2-Dibromo-3-chloropropane	1.2	5.0		U
106-93-4	1,2-Dibromoethane	0.43	9.9		U
95-50-1	1,2-Dichlorobenzene	0.37	9.9		U
541-73-1	1,3-Dichlorobenzene	0.84	9.9		U
106-46-7	1,4-Dichlorobenzene	0.55	9.9		U
75-71-8	Dichlorodifluoromethane	1.1	9.9		U
75-34-3	1,1-Dichloroethane	0.54	9.9		U
107-06-2	1,2-Dichloroethane	0.46	9.9		U
75-35-4	1,1-Dichloroethene	1.2	9.9		U
156-59-2	cis-1,2-Dichloroethene	1.2	9.9		U
156-60-5	trans-1,2-Dichloroethene	1.1	9.9		U
78-87-5	1,2-Dichloropropane	0.46	9.9		U
10061-01-5	cis-1,3-Dichloropropene	0.50	9.9		U
10061-02-6	trans-1,3-Dichloropropene	0.32	9.9		U
100-41-4	Ethylbenzene	0.74	9.9		U
591-78-6	2-Hexanone	2.3	9.9		U
98-82-8	Isopropylbenzene	0.88	9.9		U
79-20-9	Methyl acetate	1.6	9.9		U
75-09-2	Methylene chloride	0.62	9.9		U
108-87-2	Methyl cyclohexane	0.30	9.9		U
1634-04-4	Methyl tert-butyl ether	0.32	9.9		U
108-10-1	4-Methyl-2-pentanone	0.58	9.9		U
100-42-5	Styrene	0.35	9.9		U
79-34-5	1,1,2,2-Tetrachloroethane	0.43	9.9		U
127-18-4	Tetrachloroethene	0.96	9.9		U

FORM 1
VOLATILE ORGANICS ANALYSIS DATA SHEET

CLIENT SAMPLE NO. 3

MR08-IS16
0-5-6-08D

Lab Name: EMPIRICAL LABS Contract: CH2MHILL

Lab Code: NA Case No.: NA SAS No.: NA SDG No.: LEJEUNE040

Matrix: (soil/water) SOIL Lab Sample ID: 0812301-03

Sample wt/vol: 5.7 (g/mL) G Lab File ID: 1230103A

Level: (low/med) LOW Date Sampled: 12/18/08 09:40

% Moisture: not dec. 11 Date Analyzed: 12/31/08 11:44

GC Column: RTX-VRX ID: 0.25 (mm) Dilution Factor: 1.0

Soil Extract Volume:_____(uL) Soil Aliquot Volume: _____(uL)

CONCENTRATION UNITS: (ug/L or ug/Kg) UG/KG

CAS NO.	COMPOUND	MDL	RL	CONC	Q
108-88-3	Toluene	0.86	9.9		U
120-82-1	1,2,4-Trichlorobenzene	0.18	9.9		U
71-55-6	1,1,1-Trichloroethane	0.89	9.9		U
79-00-5	1,1,2-Trichloroethane	0.35	9.9		U
79-01-6	Trichloroethene	0.84	9.9		U
76-13-1	Trichlorotrifluoroethane	0.55	9.9		U
75-69-4	Trichlorofluoromethane	0.94	9.9		U
75-01-4	Vinyl chloride	1.1	9.9		U
1330-20-7	Xylene(total)	0.70	9.9		U

QW 12/28/09

FORM 1
VOLATILE ORGANICS ANALYSIS DATA SHEET

CLIENT SAMPLE NO. 4

MR08-SS160-08D

Lab Name: EMPIRICAL LABS Contract: CH2MHILL

Lab Code: NA Case No.: NA SAS No.: NA SDG No.: LEJEUNE040

Matrix: (soil/water) SOIL Lab Sample ID: 0812301-04

Sample wt/vol: 5.5 (g/mL) G Lab File ID: 1230104A

Level: (low/med) LOW Date Sampled: 12/18/08 09:50

% Moisture: not dec. 18 Date Analyzed: 12/31/08 12:14

GC Column: RTX-VRX ID: 0.25 (mm) Dilution Factor: 1.0

Soil Extract Volume:_____(uL) Soil Aliquot Volume: _____(uL)

CONCENTRATION UNITS: (ug/L or ug/Kg) UG/KG

CAS NO.	COMPOUND	MDL	RL	CONC	Q
67-64-1	Acetone	2.2	11	37	u
71-43-2	Benzene	0.52	11		U
75-27-4	Bromodichloromethane	0.33	11		U
75-25-2	Bromoform	1.1	11		U
74-83-9	Bromomethane	0.80	11		U
78-93-3	2-Butanone	1.5	11		U
75-15-0	Carbon disulfide	1.4	11		U
56-23-5	Carbon tetrachloride	0.97	11		U
108-90-7	Chlorobenzene	0.38	11		U
75-00-3	Chloroethane	1.2	11		U
67-66-3	Chloroform	0.61	11		U
74-87-3	Chloromethane	0.58	11		U
110-82-7	Cyclohexane	0.60	11		U
124-48-1	Dibromochloromethane	0.38	11		U
96-12-8	1,2-Dibromo-3-chloropropane	1.3	5.5		U
106-93-4	1,2-Dibromoethane	0.48	11		U
95-50-1	1,2-Dichlorobenzene	0.41	11		U
541-73-1	1,3-Dichlorobenzene	0.93	11		U
106-46-7	1,4-Dichlorobenzene	0.61	11		U
75-71-8	Dichlorodifluoromethane	1.2	11		U
75-34-3	1,1-Dichloroethane	0.60	11		U
107-06-2	1,2-Dichloroethane	0.51	11		U
75-35-4	1,1-Dichloroethene	1.3	11		U
156-59-2	cis-1,2-Dichloroethene	1.3	11		U
156-60-5	trans-1,2-Dichloroethene	1.2	11		U
78-87-5	1,2-Dichloropropane	0.51	11		U
10061-01-5	cis-1,3-Dichloropropene	0.55	11		U
10061-02-6	trans-1,3-Dichloropropene	0.35	11		U
100-41-4	Ethylbenzene	0.83	11		U
591-78-6	2-Hexanone	2.5	11		U
98-82-8	Isopropylbenzene	0.97	11		U
79-20-9	Methyl acetate	1.8	11		U
75-09-2	Methylene chloride	0.69	11		U
108-87-2	Methyl cyclohexane	0.33	11		U
1634-04-4	Methyl tert-butyl ether	0.35	11		U
108-10-1	4-Methyl-2-pentanone	0.64	11		U
100-42-5	Styrene	0.39	11		U
79-34-5	1,1,2,2-Tetrachloroethane	0.48	11		U
127-18-4	Tetrachloroethene	1.1	11		U

B

LW 2/12/09

FORM 1
VOLATILE ORGANICS ANALYSIS DATA SHEET

CLIENT SAMPLE NO. 4

MR08-SS160-08D

Lab Name: EMPIRICAL LABS Contract: CH2MHILL

Lab Code: NA Case No.: NA SAS No.: NA SDG No.: LEJEUNE040

Matrix: (soil/water) SOIL Lab Sample ID: 0812301-04

Sample wt/vol: 5.5 (g/mL) G Lab File ID: 1230104A

Level: (low/med) LOW Date Sampled: 12/18/08 09:50

% Moisture: not dec. 18 Date Analyzed: 12/31/08 12:14

GC Column: RTX-VRX ID: 0.25 (mm) Dilution Factor: 1.0

Soil Extract Volume:_____(uL) Soil Aliquot Volume: _____(uL)

CONCENTRATION UNITS: (ug/L or ug/Kg) UG/KG

CAS NO.	COMPOUND	MDL	RL	CONC	Q
108-88-3	Toluene	0.95	11		U
120-82-1	1,2,4-Trichlorobenzene	0.20	11		U
71-55-6	1,1,1-Trichloroethane	1.00	11		U
79-00-5	1,1,2-Trichloroethane	0.39	11		U
79-01-6	Trichloroethene	0.94	11		U
76-13-1	Trichlorotrifluoroethane	0.61	11		U
75-69-4	Trichlorofluoromethane	1.0	11		U
75-01-4	Vinyl chloride	1.2	11		U
1330-20-7	Xylene(total)	0.77	11		U

lew 2/17/09

FORM 1
VOLATILE ORGANICS ANALYSIS DATA SHEET

CLIENT SAMPLE NO. 5

MR08-IS15
5-1-2-08D

Lab Name: EMPIRICAL LABS Contract: CH2MHILL

Lab Code: NA Case No.: NA SAS No.: NA SDG No.: LEJEUNE040

Matrix: (soil/water) SOIL Lab Sample ID: 0812301-05

Sample wt/vol: 5.5 (g/mL) G Lab File ID: 1230105A

Level: (low/med) LOW Date Sampled: 12/18/08 10:05

% Moisture: not dec. 12 Date Analyzed: 12/31/08 12:45

GC Column: RTX-VRX ID: 0.25 (mm) Dilution Factor: 1.0

Soil Extract Volume:_____(uL) Soil Aliquot Volume: _____(uL)

CONCENTRATION UNITS: (ug/L or ug/Kg) UG/KG

CAS NO.	COMPOUND	MDL	RL	CONC	Q
67-64-1	Acetone	2.0	10	10u ~~9.3~~	~~J~~ BL
71-43-2	Benzene	0.48	10		U
75-27-4	Bromodichloromethane	0.31	10		U
75-25-2	Bromoform	1.0	10		U
74-83-9	Bromomethane	0.74	10		U
78-93-3	2-Butanone	1.4	10		U
75-15-0	Carbon disulfide	1.3	10		U
56-23-5	Carbon tetrachloride	0.90	10		U
108-90-7	Chlorobenzene	0.35	10		U
75-00-3	Chloroethane	1.1	10		U
67-66-3	Chloroform	0.56	10		U
74-87-3	Chloromethane	0.53	10		U
110-82-7	Cyclohexane	0.55	10		U
124-48-1	Dibromochloromethane	0.35	10		U
96-12-8	1,2-Dibromo-3-chloropropane	1.2	5.1		U
106-93-4	1,2-Dibromoethane	0.44	10		U
95-50-1	1,2-Dichlorobenzene	0.38	10		U
541-73-1	1,3-Dichlorobenzene	0.86	10		U
106-46-7	1,4-Dichlorobenzene	0.56	10		U
75-71-8	Dichlorodifluoromethane	1.1	10		U
75-34-3	1,1-Dichloroethane	0.55	10		U
107-06-2	1,2-Dichloroethane	0.47	10		U
75-35-4	1,1-Dichloroethene	1.2	10		U
156-59-2	cis-1,2-Dichloroethene	1.2	10		U
156-60-5	trans-1,2-Dichloroethene	1.1	10		U
78-87-5	1,2-Dichloropropane	0.47	10		U
10061-01-5	cis-1,3-Dichloropropene	0.51	10		U
10061-02-6	trans-1,3-Dichloropropene	0.33	10		U
100-41-4	Ethylbenzene	0.77	10		U
591-78-6	2-Hexanone	2.3	10		U
98-82-8	Isopropylbenzene	0.90	10		U
79-20-9	Methyl acetate	1.6	10		U
75-09-2	Methylene chloride	0.63	10		U
108-87-2	Methyl cyclohexane	0.31	10		U
1634-04-4	Methyl tert-butyl ether	0.33	10		U
108-10-1	4-Methyl-2-pentanone	0.59	10		U
100-42-5	Styrene	0.36	10		U
79-34-5	1,1,2,2-Tetrachloroethane	0.44	10		U
127-18-4	Tetrachloroethene	0.99	10		U

[illegible] 12/8/09

FORM 1
VOLATILE ORGANICS ANALYSIS DATA SHEET

CLIENT SAMPLE NO. 5

MR08-IS15
5-1-2-08D

Lab Name: EMPIRICAL LABS Contract: CH2MHILL

Lab Code: NA Case No.: NA SAS No.: NA SDG No.: LEJEUNE040

Matrix: (soil/water) SOIL Lab Sample ID: 0812301-05

Sample wt/vol: 5.5 (g/mL) G Lab File ID: 1230105A

Level: (low/med) LOW Date Sampled: 12/18/08 10:05

% Moisture: not dec. 12 Date Analyzed: 12/31/08 12:45

GC Column: RTX-VRX ID: 0.25 (mm) Dilution Factor: 1.0

Soil Extract Volume:_____(uL) Soil Aliquot Volume: _____(uL)

CONCENTRATION UNITS: (ug/L or ug/Kg) UG/KG

CAS NO.	COMPOUND	MDL	RL	CONC	Q
108-88-3	Toluene	0.88	10		U
120-82-1	1,2,4-Trichlorobenzene	0.18	10		U
71-55-6	1,1,1-Trichloroethane	0.92	10		U
79-00-5	1,1,2-Trichloroethane	0.36	10		U
79-01-6	Trichloroethene	0.87	10	1.4	J
76-13-1	Trichlorotrifluoroethane	0.56	10		U
75-69-4	Trichlorofluoromethane	0.97	10		U
75-01-4	Vinyl chloride	1.1	10		U
1330-20-7	Xylene(total)	0.72	10		U

LW
2/28/09

FORM 1
VOLATILE ORGANICS ANALYSIS DATA SHEET

CLIENT SAMPLE NO. 6

MR08-SS155-08D

Lab Name: EMPIRICAL LABS Contract: CH2MHILL

Lab Code: NA Case No.: NA SAS No.: NA SDG No.: LEJEUNE040

Matrix: (soil/water) SOIL Lab Sample ID: 0812301-06

Sample wt/vol: 4.6 (g/mL) G Lab File ID: 1230106A

Level: (low/med) LOW Date Sampled: 12/18/08 10:30

% Moisture: not dec. 24 Date Analyzed: 12/31/08 16:18

GC Column: RTX-VRX ID: 0.25 (mm) Dilution Factor: 1.0

Soil Extract Volume:_____(uL) Soil Aliquot Volume: _____(uL)

CONCENTRATION UNITS: (ug/L or ug/Kg) UG/KG

CAS NO.	COMPOUND	MDL	RL	CONC	Q	
67-64-1	Acetone	2.9	14	130	U	B
71-43-2	Benzene	0.68	14	1.6	~~J~~ J	SS
75-27-4	Bromodichloromethane	0.43	14		U	
75-25-2	Bromoform	1.4	14		U	
74-83-9	Bromomethane	1.0	14		U	
78-93-3	2-Butanone	2.0	14		U	
75-15-0	Carbon disulfide	1.9	14	2.2	~~J~~ J	SS
56-23-5	Carbon tetrachloride	1.3	14		U	
108-90-7	Chlorobenzene	0.49	14		U	
75-00-3	Chloroethane	1.6	14		U	
67-66-3	Chloroform	0.80	14		U	
74-87-3	Chloromethane	0.75	14		U	
110-82-7	Cyclohexane	0.78	14	1.2	~~J~~ J	SS
124-48-1	Dibromochloromethane	0.49	14		U	
96-12-8	1,2-Dibromo-3-chloropropane	1.7	7.2		~~U~~ UJ	IS
106-93-4	1,2-Dibromoethane	0.62	14		U	
95-50-1	1,2-Dichlorobenzene	0.54	14		U UJ	IS
541-73-1	1,3-Dichlorobenzene	1.2	14		U	
106-46-7	1,4-Dichlorobenzene	0.80	14		U	
75-71-8	Dichlorodifluoromethane	1.6	14		U	
75-34-3	1,1-Dichloroethane	0.78	14		U	
107-06-2	1,2-Dichloroethane	0.66	14		U	
75-35-4	1,1-Dichloroethene	1.7	14		U	
156-59-2	cis-1,2-Dichloroethene	1.7	14		U	
156-60-5	trans-1,2-Dichloroethene	1.6	14		U	
78-87-5	1,2-Dichloropropane	0.66	14		U	
10061-01-5	cis-1,3-Dichloropropene	0.72	14		U	
10061-02-6	trans-1,3-Dichloropropene	0.46	14		U	
100-41-4	Ethylbenzene	1.1	14	2.2	~~J~~ J	SS
591-78-6	2-Hexanone	3.3	14		U	
98-82-8	Isopropylbenzene	1.3	14		U	
79-20-9	Methyl acetate	2.3	14		U	
75-09-2	Methylene chloride	0.90	14		U	
108-87-2	Methyl cyclohexane	0.43	14	1.3	~~J~~ J	SS
1634-04-4	Methyl tert-butyl ether	0.46	14		U	
108-10-1	4-Methyl-2-pentanone	0.84	14	0.87	~~J~~ J	SS
100-42-5	Styrene	0.51	14		U	
79-34-5	1,1,2,2-Tetrachloroethane	0.62	14		~~U~~ UJ	IS
127-18-4	Tetrachloroethene	1.4	14		U	

hw

FORM 1
VOLATILE ORGANICS ANALYSIS DATA SHEET

CLIENT SAMPLE NO. 6

MR08-SS155-08D

Lab Name: EMPIRICAL LABS Contract: CH2MHILL

Lab Code: NA Case No.: NA SAS No.: NA SDG No.: LEJEUNE040

Matrix: (soil/water) SOIL Lab Sample ID: 0812301-06

Sample wt/vol: 4.6 (g/mL) G Lab File ID: 1230106A

Level: (low/med) LOW Date Sampled: 12/18/08 10:30

% Moisture: not dec. 24 Date Analyzed: 12/31/08 16:18

GC Column: RTX-VRX ID: 0.25 (mm) Dilution Factor: 1.0

Soil Extract Volume:_____(uL) Soil Aliquot Volume: _____(uL)

CONCENTRATION UNITS: (ug/L or ug/Kg) UG/KG

CAS NO.	COMPOUND	MDL	RL	CONC	Q
108-88-3	Toluene	1.2	14	2.8	~~J~~ J SS
120-82-1	1,2,4-Trichlorobenzene	0.26	14		~~U~~ UJ IS
71-55-6	1,1,1-Trichloroethane	1.3	14		U
79-00-5	1,1,2-Trichloroethane	0.51	14		U
79-01-6	Trichloroethene	1.2	14		U
76-13-1	Trichlorotrifluoroethane	0.80	14		U
75-69-4	Trichlorofluoromethane	1.4	14		U
75-01-4	Vinyl chloride	1.6	14		U
1330-20-7	Xylene(total)	1.0	14		U

QW 7/28/09

FORM 1
VOLATILE ORGANICS ANALYSIS DATA SHEET

CLIENT SAMPLE NO. 6 RE

MR08-SS155-08DR

Lab Name: EMPIRICAL LABS Contract: CH2MHILL

Lab Code: NA Case No.: NA SAS No.: NA SDG No.: LEJEUNE040

Matrix: (soil/water) SOIL Lab Sample ID: 0812301-06R

Sample wt/vol: 3.9 (g/mL) G Lab File ID: 1230106B

Level: (low/med) LOW Date Sampled: 12/18/08 10:30 use original

% Moisture: not dec. 24 Date Analyzed: 01/08/09 18:25

GC Column: RTX-VRX ID: 0.25 (mm) Dilution Factor: 1.0

Soil Extract Volume:_____(uL) Soil Aliquot Volume: _____(uL)

CONCENTRATION UNITS: (ug/L or ug/Kg) UG/KG

CAS NO.	COMPOUND	MDL	RL	CONC	Q
67-64-1	Acetone	3.4	17	160	UJ HT B
71-43-2	Benzene	0.79	17	1.9	~~U~~ J H
75-27-4	Bromodichloromethane	0.51	17		U UJ
75-25-2	Bromoform	1.7	17		U
74-83-9	Bromomethane	1.2	17		U
78-93-3	2-Butanone	2.4	17	7.7	~~U~~ J
75-15-0	Carbon disulfide	2.2	17	10	~~U~~ J
56-23-5	Carbon tetrachloride	1.5	17		U UJ
108-90-7	Chlorobenzene	0.58	17		U
75-00-3	Chloroethane	1.9	17		U
67-66-3	Chloroform	0.93	17		U
74-87-3	Chloromethane	0.88	17		U
110-82-7	Cyclohexane	0.91	17	1.4	~~U~~ J
124-48-1	Dibromochloromethane	0.58	17		U UJ
96-12-8	1,2-Dibromo-3-chloropropane	2.0	8.4		U
106-93-4	1,2-Dibromoethane	0.73	17		U
95-50-1	1,2-Dichlorobenzene	0.62	17		U
541-73-1	1,3-Dichlorobenzene	1.4	17		U
106-46-7	1,4-Dichlorobenzene	0.93	17		U
75-71-8	Dichlorodifluoromethane	1.9	17		U
75-34-3	1,1-Dichloroethane	0.91	17		U
107-06-2	1,2-Dichloroethane	0.78	17		U
75-35-4	1,1-Dichloroethene	2.0	17		U
156-59-2	cis-1,2-Dichloroethene	2.0	17		U
156-60-5	trans-1,2-Dichloroethene	1.9	17		U
78-87-5	1,2-Dichloropropane	0.78	17		U
10061-01-5	cis-1,3-Dichloropropene	0.84	17		U
10061-02-6	trans-1,3-Dichloropropene	0.54	17		U
100-41-4	Ethylbenzene	1.3	17	2.3	~~U~~ J
591-78-6	2-Hexanone	3.9	17		U UJ
98-82-8	Isopropylbenzene	1.5	17		U
79-20-9	Methyl acetate	2.7	17		U
75-09-2	Methylene chloride	1.0	17	17 UJ ~~1.4 JB~~	HT B
108-87-2	Methyl cyclohexane	0.51	17	1.6	~~U~~ J H
1634-04-4	Methyl tert-butyl ether	0.54	17		U UJ
108-10-1	4-Methyl-2-pentanone	0.98	17		U
100-42-5	Styrene	0.59	17		U
79-34-5	1,1,2,2-Tetrachloroethane	0.73	17		U
127-18-4	Tetrachloroethene	1.6	17		U

FORM I VOA

2/28/09

FORM 1
VOLATILE ORGANICS ANALYSIS DATA SHEET

CLIENT SAMPLE NO. 6RE

MR08-SS155-08DR

Lab Name: EMPIRICAL LABS Contract: CH2MHILL

Lab Code: NA Case No.: NA SAS No.: NA SDG No.: LEJEUNE040

Matrix: (soil/water) SOIL Lab Sample ID: 0812301-06R

Sample wt/vol: 3.9 (g/mL) G Lab File ID: 1230106B

Level: (low/med) LOW Date Sampled: 12/18/08 10:30 lede

% Moisture: not dec. 24 Date Analyzed: 01/08/09 18:25 origina

GC Column: RTX-VRX ID: 0.25 (mm) Dilution Factor: 1.0

Soil Extract Volume:_____(uL) Soil Aliquot Volume: _____(uL)

CONCENTRATION UNITS: (ug/L or ug/Kg) UG/KG

CAS NO.	COMPOUND	MDL	RL	CONC	Q
108-88-3	Toluene	1.4	17	4.2	~~J~~ J
120-82-1	1,2,4-Trichlorobenzene	0.30	17		~~U~~ UJ
71-55-6	1,1,1-Trichloroethane	1.5	17		~~U~~
79-00-5	1,1,2-Trichloroethane	0.59	17		~~U~~
79-01-6	Trichloroethene	1.4	17		~~U~~
76-13-1	Trichlorotrifluoroethane	0.93	17		~~U~~
75-69-4	Trichlorofluoromethane	1.6	17		~~U~~
75-01-4	Vinyl chloride R	1.9	17		~~U~~
1330-20-7	Xylene(total) R	1.2	17		~~U~~

Hi

FORM I VOA

lw
2/28/09

FORM 1
VOLATILE ORGANICS ANALYSIS DATA SHEET

CLIENT SAMPLE NO. 7

MR08-IS13
6-1-2-08D

Lab Name: EMPIRICAL LABS Contract: CH2MHILL

Lab Code: NA Case No.: NA SAS No.: NA SDG No.: LEJEUNE040

Matrix: (soil/water) SOIL Lab Sample ID: 0812301-07

Sample wt/vol: 6.2 (g/mL) G Lab File ID: 1230107A

Level: (low/med) LOW Date Sampled: 12/18/08 10:55

% Moisture: not dec. 11 Date Analyzed: 12/31/08 16:49

GC Column: RTX-VRX ID: 0.25 (mm) Dilution Factor: 1.0

Soil Extract Volume:_____(uL) Soil Aliquot Volume: _____(uL)

CONCENTRATION UNITS: (ug/L or ug/Kg) UG/KG

CAS NO.	COMPOUND	MDL	RL	CONC	Q
67-64-1	Acetone	1.8	9.1	14	U
71-43-2	Benzene	0.43	9.1		U
75-27-4	Bromodichloromethane	0.27	9.1		U
75-25-2	Bromoform	0.91	9.1		U
74-83-9	Bromomethane	0.65	9.1		U
78-93-3	2-Butanone	1.3	9.1		U
75-15-0	Carbon disulfide	1.2	9.1		U
56-23-5	Carbon tetrachloride	0.80	9.1		U
108-90-7	Chlorobenzene	0.31	9.1		U
75-00-3	Chloroethane	1.00	9.1		U
67-66-3	Chloroform	0.50	9.1		U
74-87-3	Chloromethane	0.47	9.1		U
110-82-7	Cyclohexane	0.49	9.1		U
124-48-1	Dibromochloromethane	0.31	9.1		U
96-12-8	1,2-Dibromo-3-chloropropane	1.1	4.5		U
106-93-4	1,2-Dibromoethane	0.39	9.1		U
95-50-1	1,2-Dichlorobenzene	0.34	9.1		U
541-73-1	1,3-Dichlorobenzene	0.76	9.1		U
106-46-7	1,4-Dichlorobenzene	0.50	9.1		U
75-71-8	Dichlorodifluoromethane	1.00	9.1		U
75-34-3	1,1-Dichloroethane	0.49	9.1		U
107-06-2	1,2-Dichloroethane	0.42	9.1		U
75-35-4	1,1-Dichloroethene	1.1	9.1		U
156-59-2	cis-1,2-Dichloroethene	1.1	9.1		U
156-60-5	trans-1,2-Dichloroethene	1.00	9.1		U
78-87-5	1,2-Dichloropropane	0.42	9.1		U
10061-01-5	cis-1,3-Dichloropropene	0.45	9.1		U
10061-02-6	trans-1,3-Dichloropropene	0.29	9.1		U
100-41-4	Ethylbenzene	0.68	9.1		U
591-78-6	2-Hexanone	2.1	9.1		U
98-82-8	Isopropylbenzene	0.80	9.1		U
79-20-9	Methyl acetate	1.4	9.1		U
75-09-2	Methylene chloride	0.56	9.1		U
108-87-2	Methyl cyclohexane	0.27	9.1		U
1634-04-4	Methyl tert-butyl ether	0.29	9.1		U
108-10-1	4-Methyl-2-pentanone	0.53	9.1		U
100-42-5	Styrene	0.32	9.1		U
79-34-5	1,1,2,2-Tetrachloroethane	0.39	9.1		U
127-18-4	Tetrachloroethene	0.88	9.1		U

B

FORM 1
VOLATILE ORGANICS ANALYSIS DATA SHEET

CLIENT SAMPLE NO. 7

MR08-IS13
6-1-2-08D

Lab Name: EMPIRICAL LABS Contract: CH2MHILL

Lab Code: NA Case No.: NA SAS No.: NA SDG No.: LEJEUNE040

Matrix: (soil/water) SOIL Lab Sample ID: 0812301-07

Sample wt/vol: 6.2 (g/mL) G Lab File ID: 1230107A

Level: (low/med) LOW Date Sampled: 12/18/08 10:55

% Moisture: not dec. 11 Date Analyzed: 12/31/08 16:49

GC Column: RTX-VRX ID: 0.25 (mm) Dilution Factor: 1.0

Soil Extract Volume:_____(uL) Soil Aliquot Volume: _____(uL)

CONCENTRATION UNITS: (ug/L or ug/Kg) UG/KG

CAS NO.	COMPOUND	MDL	RL	CONC	Q
108-88-3	Toluene	0.78	9.1		U
120-82-1	1,2,4-Trichlorobenzene	0.16	9.1		U
71-55-6	1,1,1-Trichloroethane	0.82	9.1		U
79-00-5	1,1,2-Trichloroethane	0.32	9.1		U
79-01-6	Trichloroethene	0.77	9.1		U
76-13-1	Trichlorotrifluoroethane	0.50	9.1		U
75-69-4	Trichlorofluoromethane	0.86	9.1		U
75-01-4	Vinyl chloride	1.00	9.1		U
1330-20-7	Xylene(total)	0.64	9.1		U

MW 7/28/09

FORM 1
VOLATILE ORGANICS ANALYSIS DATA SHEET

CLIENT SAMPLE NO. 8

MR08-SS136-08D

Lab Name: EMPIRICAL LABS Contract: CH2MHILL

Lab Code: NA Case No.: NA SAS No.: NA SDG No.: LEJEUNE040

Matrix: (soil/water) SOIL Lab Sample ID: 0812301-08

Sample wt/vol: 5.0 (g/mL) G Lab File ID: 1230108A

Level: (low/med) LOW Date Sampled: 12/18/08 11:05

% Moisture: not dec. 16 Date Analyzed: 12/31/08 17:20

GC Column: RTX-VRX ID: 0.25 (mm) Dilution Factor: 1.0

Soil Extract Volume:_____(uL) Soil Aliquot Volume: _____(uL)

CONCENTRATION UNITS: (ug/L or ug/Kg) UG/KG

CAS NO.	COMPOUND	MDL	RL	CONC	Q	
67-64-1	Acetone	2.4	12	140	U	BL
71-43-2	Benzene	0.56	12		U	
75-27-4	Bromodichloromethane	0.36	12		U	
75-25-2	Bromoform	1.2	12		U	
74-83-9	Bromomethane	0.86	12		U	
78-93-3	2-Butanone	1.7	12	10	~~J~~ J	SS
75-15-0	Carbon disulfide	1.6	12		U	
56-23-5	Carbon tetrachloride	1.0	12		U	
108-90-7	Chlorobenzene	0.41	12		U	
75-00-3	Chloroethane	1.3	12		U	
67-66-3	Chloroform	0.66	12		U	
74-87-3	Chloromethane	0.62	12		U	
110-82-7	Cyclohexane	0.65	12		U	
124-48-1	Dibromochloromethane	0.41	12		U	
96-12-8	1,2-Dibromo-3-chloropropane	1.4	6.0		~~U~~ UJ	ISL
106-93-4	1,2-Dibromoethane	0.51	12		U	
95-50-1	1,2-Dichlorobenzene	0.44	12		~~U~~ UJ	ISL
541-73-1	1,3-Dichlorobenzene	1.0	12		U	↓
106-46-7	1,4-Dichlorobenzene	0.66	12		U	↓
75-71-8	Dichlorodifluoromethane	1.3	12		U	
75-34-3	1,1-Dichloroethane	0.65	12		U	
107-06-2	1,2-Dichloroethane	0.55	12		U	
75-35-4	1,1-Dichloroethene	1.4	12		U	
156-59-2	cis-1,2-Dichloroethene	1.4	12		U	
156-60-5	trans-1,2-Dichloroethene	1.3	12		U	
78-87-5	1,2-Dichloropropane	0.55	12		U	
10061-01-5	cis-1,3-Dichloropropene	0.60	12		U	
10061-02-6	trans-1,3-Dichloropropene	0.38	12		U	
100-41-4	Ethylbenzene	0.90	12		U	
591-78-6	2-Hexanone	2.8	12		U	
98-82-8	Isopropylbenzene	1.0	12		U	
79-20-9	Methyl acetate	1.9	12		U	
75-09-2	Methylene chloride	0.74	12		U	
108-87-2	Methyl cyclohexane	0.36	12		U	
1634-04-4	Methyl tert-butyl ether	0.38	12		U	
108-10-1	4-Methyl-2-pentanone	0.69	12		U	
100-42-5	Styrene	0.42	12		U	
79-34-5	1,1,2,2-Tetrachloroethane	0.51	12		~~U~~ UJ	ISL
127-18-4	Tetrachloroethene	1.2	12		U	

FORM I VOA

LiW 2/12/09

FORM 1
VOLATILE ORGANICS ANALYSIS DATA SHEET

CLIENT SAMPLE NO. 8

MR08-SS136-08D

Lab Name: EMPIRICAL LABS Contract: CH2MHILL

Lab Code: NA Case No.: NA SAS No.: NA SDG No.: LEJEUNE040

Matrix: (soil/water) SOIL Lab Sample ID: 0812301-08

Sample wt/vol: 5.0 (g/mL) G Lab File ID: 1230108A

Level: (low/med) LOW Date Sampled: 12/18/08 11:05

% Moisture: not dec. 16 Date Analyzed: 12/31/08 17:20

GC Column: RTX-VRX ID: 0.25 (mm) Dilution Factor: 1.0

Soil Extract Volume:_____(uL) Soil Aliquot Volume: _____(uL)

CONCENTRATION UNITS: (ug/L or ug/Kg) UG/KG

CAS NO.	COMPOUND	MDL	RL	CONC	Q
108-88-3	Toluene	1.0	12	2.3	~~J~~ J
120-82-1	1,2,4-Trichlorobenzene	0.22	12		~~U~~ UJ
71-55-6	1,1,1-Trichloroethane	1.1	12		U
79-00-5	1,1,2-Trichloroethane	0.42	12		U
79-01-6	Trichloroethene	1.0	12		U
76-13-1	Trichlorotrifluoroethane	0.66	12		U
75-69-4	Trichlorofluoromethane	1.1	12		U
75-01-4	Vinyl chloride	1.3	12		U
1330-20-7	Xylene(total)	0.84	12		U

SS
#:

FORM I VOA

GW
2/28/09

FORM 1
VOLATILE ORGANICS ANALYSIS DATA SHEET

CLIENT SAMPLE NO. 8RE

MR08-SS136-08DR

Lab Name: EMPIRICAL LABS Contract: CH2MHILL

Lab Code: NA Case No.: NA SAS No.: NA SDG No.: LEJEUNE040

Matrix: (soil/water) SOIL Lab Sample ID: 0812301-08R

Sample wt/vol: 4.9 (g/mL) G Lab File ID: 1230108B

Level: (low/med) LOW Date Sampled: 12/18/08 11:05

% Moisture: not dec. 16 Date Analyzed: 01/08/09 19:04 lee. orig inal

GC Column: RTX-VRX ID: 0.25 (mm) Dilution Factor: 1.0

Soil Extract Volume:_____(uL) Soil Aliquot Volume:_____(uL)

CONCENTRATION UNITS: (ug/L or ug/Kg) UG/KG

CAS NO.	COMPOUND	MDL	RL	CONC	Q
67-64-1	Acetone	2.4	12	140	~~U~~ UJ HT
71-43-2	Benzene	0.58	12		~~U~~ UJ
75-27-4	Bromodichloromethane	0.37	12		U
75-25-2	Bromoform	1.2	12		U
74-83-9	Bromomethane	0.88	12		U
78-93-3	2-Butanone	1.7	12	4.3	J J
75-15-0	Carbon disulfide	1.6	12		~~U~~ UJ
56-23-5	Carbon tetrachloride	1.1	12		U
108-90-7	Chlorobenzene	0.42	12		U
75-00-3	Chloroethane	1.3	12		U
67-66-3	Chloroform	0.67	12		U
74-87-3	Chloromethane	0.64	12		U
110-82-7	Cyclohexane	0.66	12		U
124-48-1	Dibromochloromethane	0.42	12		U
96-12-8	1,2-Dibromo-3-chloropropane	1.5	6.1		U
106-93-4	1,2-Dibromoethane	0.53	12		U
95-50-1	1,2-Dichlorobenzene	0.45	12		U
541-73-1	1,3-Dichlorobenzene	1.0	12		U
106-46-7	1,4-Dichlorobenzene	0.67	12		U
75-71-8	Dichlorodifluoromethane	1.3	12		U
75-34-3	1,1-Dichloroethane	0.66	12		U
107-06-2	1,2-Dichloroethane	0.56	12		U
75-35-4	1,1-Dichloroethene	1.5	12		U
156-59-2	cis-1,2-Dichloroethene	1.5	12		U
156-60-5	trans-1,2-Dichloroethene	1.3	12		U
78-87-5	1,2-Dichloropropane	0.56	12		U
10061-01-5	cis-1,3-Dichloropropene	0.61	12		U
10061-02-6	trans-1,3-Dichloropropene	0.39	12		U
100-41-4	Ethylbenzene	0.92	12		U
591-78-6	2-Hexanone	2.8	12		U
98-82-8	Isopropylbenzene	1.1	12		U
79-20-9	Methyl acetate	2.0	12		U
75-09-2	Methylene chloride	0.76	12	12UJ	~~1.1~~ ~~JB~~ HT
108-87-2	Methyl cyclohexane	0.37	12		~~U~~ UJ
1634-04-4	Methyl tert-butyl ether	0.39	12		U
108-10-1	4-Methyl-2-pentanone	0.71	12		U
100-42-5	Styrene	0.43	12		U
79-34-5	1,1,2,2-Tetrachloroethane	0.53	12		U
127-18-4	Tetrachloroethene	1.2	12		U

FORM I VOA

lw 7/28/09

FORM 1
VOLATILE ORGANICS ANALYSIS DATA SHEET

CLIENT SAMPLE NO. 8RE

MR08-SS136-08DR

Lab Name: EMPIRICAL LABS Contract: CH2MHILL

Lab Code: NA Case No.: NA SAS No.: NA SDG No.: LEJEUNE040

Matrix: (soil/water) SOIL Lab Sample ID: 0812301-08R

Sample wt/vol: 4.9 (g/mL) G Lab File ID: 1230108B

Level: (low/med) LOW Date Sampled: 12/18/08 11:05

% Moisture: not dec. 16 Date Analyzed: 01/08/09 19:04

GC Column: RTX-VRX ID: 0.25 (mm) Dilution Factor: 1.0

use original

Soil Extract Volume:_____(uL) Soil Aliquot Volume: _____(uL)

CONCENTRATION UNITS: (ug/L or ug/Kg) UG/KG

CAS NO.	COMPOUND	MDL	RL	CONC	Q
108-88-3	Toluene	1.0	12	2.5	~~J~~ J
120-82-1	1,2,4-Trichlorobenzene	0.22	12		~~U~~ UJ
71-55-6	1,1,1-Trichloroethane	1.1	12		~~U~~
79-00-5	1,1,2-Trichloroethane	0.43	12		~~U~~
79-01-6	Trichloroethene	1.0	12		~~U~~
76-13-1	Trichlorotrifluoroethane	0.67	12		~~U~~
75-69-4	Trichlorofluoromethane	1.2	12		~~U~~
75-01-4	Vinyl chloride	1.3	12		~~U~~
1330-20-7	Xylene(total)	0.86	12		~~U~~

R

FORM I VOA

hw
2/28/09

FORM 1
VOLATILE ORGANICS ANALYSIS DATA SHEET

CLIENT SAMPLE NO. 9

MR08-SS137-08D

Lab Name: EMPIRICAL LABS Contract: CH2MHILL

Lab Code: NA Case No.: NA SAS No.: NA SDG No.: LEJEUNE040

Matrix: (soil/water) SOIL Lab Sample ID: 0812301-09

Sample wt/vol: 4.2 (g/mL) G Lab File ID: 1230109A

Level: (low/med) LOW Date Sampled: 12/18/08 12:35

% Moisture: not dec. 8 Date Analyzed: 12/31/08 20:53

GC Column: RTX-VRX ID: 0.25 (mm) Dilution Factor: 1.0

Soil Extract Volume:_____(uL) Soil Aliquot Volume: _____(uL)

CONCENTRATION UNITS: (ug/L or ug/Kg) UG/KG

CAS NO.	COMPOUND	MDL	RL	CONC	Q	
67-64-1	Acetone	2.6	13	44	u	B
71-43-2	Benzene	0.61	13		U	
75-27-4	Bromodichloromethane	0.39	13		U	
75-25-2	Bromoform	1.3	13		U	
74-83-9	Bromomethane	0.94	13		U	
78-93-3	2-Butanone	1.8	13		U	
75-15-0	Carbon disulfide	1.7	13	1.9	J	
56-23-5	Carbon tetrachloride	1.1	13		U	
108-90-7	Chlorobenzene	0.44	13		U	
75-00-3	Chloroethane	1.4	13		U	
67-66-3	Chloroform	0.72	13		U	
74-87-3	Chloromethane	0.68	13		U	
110-82-7	Cyclohexane	0.70	13		U	
124-48-1	Dibromochloromethane	0.44	13		U	
96-12-8	1,2-Dibromo-3-chloropropane	1.6	6.5		U	
106-93-4	1,2-Dibromoethane	0.56	13		U	
95-50-1	1,2-Dichlorobenzene	0.48	13		U	
541-73-1	1,3-Dichlorobenzene	1.1	13		U	
106-46-7	1,4-Dichlorobenzene	0.72	13		U	
75-71-8	Dichlorodifluoromethane	1.4	13		U	
75-34-3	1,1-Dichloroethane	0.70	13		U	
107-06-2	1,2-Dichloroethane	0.60	13		U	
75-35-4	1,1-Dichloroethene	1.6	13		U	
156-59-2	cis-1,2-Dichloroethene	1.6	13		U	
156-60-5	trans-1,2-Dichloroethene	1.4	13		U	
78-87-5	1,2-Dichloropropane	0.60	13		U	
10061-01-5	cis-1,3-Dichloropropene	0.65	13		U	
10061-02-6	trans-1,3-Dichloropropene	0.42	13		U	
100-41-4	Ethylbenzene	0.98	13	1.2	J	
591-78-6	2-Hexanone	3.0	13		U	
98-82-8	Isopropylbenzene	1.1	13		U	
79-20-9	Methyl acetate	2.1	13		U	
75-09-2	Methylene chloride	0.81	13	13u	~~12~~ ~~JB~~	B
108-87-2	Methyl cyclohexane	0.39	13		U	
1634-04-4	Methyl tert-butyl ether	0.42	13		U	
108-10-1	4-Methyl-2-pentanone	0.76	13		U	
100-42-5	Styrene	0.46	13		U	
79-34-5	1,1,2,2-Tetrachloroethane	0.56	13		U	
127-18-4	Tetrachloroethene	1.3	13		U	

LW
2/28/09

FORM 1
VOLATILE ORGANICS ANALYSIS DATA SHEET

CLIENT SAMPLE NO. 9

MR08-SS137-08D

Lab Name: EMPIRICAL LABS Contract: CH2MHILL

Lab Code: NA Case No.: NA SAS No.: NA SDG No.: LEJEUNE040

Matrix: (soil/water) SOIL Lab Sample ID: 0812301-09

Sample wt/vol: 4.2 (g/mL) G Lab File ID: 1230109A

Level: (low/med) LOW Date Sampled: 12/18/08 12:35

% Moisture: not dec. 8 Date Analyzed: 12/31/08 20:53

GC Column: RTX-VRX ID: 0.25 (mm) Dilution Factor: 1.0

Soil Extract Volume:_____(uL) Soil Aliquot Volume: _____(uL)

CONCENTRATION UNITS: (ug/L or ug/Kg) UG/KG

CAS NO.	COMPOUND	MDL	RL	CONC	Q
108-88-3	Toluene	1.1	13	1.2	J
120-82-1	1,2,4-Trichlorobenzene	0.23	13		U
71-55-6	1,1,1-Trichloroethane	1.2	13		U
79-00-5	1,1,2-Trichloroethane	0.46	13		U
79-01-6	Trichloroethene	1.1	13		U
76-13-1	Trichlorotrifluoroethane	0.72	13		U
75-69-4	Trichlorofluoromethane	1.2	13		U
75-01-4	Vinyl chloride	1.4	13		U
1330-20-7	Xylene(total)	0.91	13		U

lw
2/28/09

FORM 1
VOLATILE ORGANICS ANALYSIS DATA SHEET

CLIENT SAMPLE NO. 10

MR08-IS13
7-2.5-3.5-08D

Lab Name: EMPIRICAL LABS Contract: CH2MHILL

Lab Code: NA Case No.: NA SAS No.: NA SDG No.: LEJEUNE040

Matrix: (soil/water) SOIL Lab Sample ID: 0812301-10

Sample wt/vol: 4.9 (g/mL) G Lab File ID: 1230110A

Level: (low/med) LOW Date Sampled: 12/18/08 12:40

% Moisture: not dec. 8 Date Analyzed: 12/31/08 21:23

GC Column: RTX-VRX ID: 0.25 (mm) Dilution Factor: 1.0

Soil Extract Volume:_____(uL) Soil Aliquot Volume: _____(uL)

CONCENTRATION UNITS: (ug/L or ug/Kg) UG/KG

CAS NO.	COMPOUND	MDL	RL	CONC	Q
67-64-1	Acetone	2.2	11	114 ~~6.8~~	~~J~~ B
71-43-2	Benzene	0.52	11		U
75-27-4	Bromodichloromethane	0.33	11		U
75-25-2	Bromoform	1.1	11		U
74-83-9	Bromomethane	0.79	11		U
78-93-3	2-Butanone	1.5	11		U
75-15-0	Carbon disulfide	1.4	11		U
56-23-5	Carbon tetrachloride	0.97	11		U
108-90-7	Chlorobenzene	0.37	11		U
75-00-3	Chloroethane	1.2	11		U
67-66-3	Chloroform	0.60	11		U
74-87-3	Chloromethane	0.57	11		U
110-82-7	Cyclohexane	0.59	11		U
124-48-1	Dibromochloromethane	0.37	11		U
96-12-8	1,2-Dibromo-3-chloropropane	1.3	5.5		U
106-93-4	1,2-Dibromoethane	0.47	11		U
95-50-1	1,2-Dichlorobenzene	0.41	11		U
541-73-1	1,3-Dichlorobenzene	0.92	11		U
106-46-7	1,4-Dichlorobenzene	0.60	11		U
75-71-8	Dichlorodifluoromethane	1.2	11		U
75-34-3	1,1-Dichloroethane	0.59	11		U
107-06-2	1,2-Dichloroethane	0.50	11		U
75-35-4	1,1-Dichloroethene	1.3	11		U
156-59-2	cis-1,2-Dichloroethene	1.3	11		U
156-60-5	trans-1,2-Dichloroethene	1.2	11		U
78-87-5	1,2-Dichloropropane	0.50	11		U
10061-01-5	cis-1,3-Dichloropropene	0.55	11		U
10061-02-6	trans-1,3-Dichloropropene	0.35	11		U
100-41-4	Ethylbenzene	0.82	11		U
591-78-6	2-Hexanone	2.5	11		U
98-82-8	Isopropylbenzene	0.97	11		U
79-20-9	Methyl acetate	1.8	11		U
75-09-2	Methylene chloride	0.68	11		U
108-87-2	Methyl cyclohexane	0.33	11		U
1634-04-4	Methyl tert-butyl ether	0.35	11		U
108-10-1	4-Methyl-2-pentanone	0.64	11		U
100-42-5	Styrene	0.38	11		U
79-34-5	1,1,2,2-Tetrachloroethane	0.47	11		U
127-18-4	Tetrachloroethene	1.1	11		U

lw
1/28/09

FORM 1
VOLATILE ORGANICS ANALYSIS DATA SHEET

CLIENT SAMPLE NO. 10

MR08-IS13
7-2.5-3.5-08D

Lab Name: EMPIRICAL LABS Contract: CH2MHILL

Lab Code: NA Case No.: NA SAS No.: NA SDG No.: LEJEUNE040

Matrix: (soil/water) SOIL Lab Sample ID: 0812301-10

Sample wt/vol: 4.9 (g/mL) G Lab File ID: 1230110A

Level: (low/med) LOW Date Sampled: 12/18/08 12:40

% Moisture: not dec. 8 Date Analyzed: 12/31/08 21:23

GC Column: RTX-VRX ID: 0.25 (mm) Dilution Factor: 1.0

Soil Extract Volume:_____(uL) Soil Aliquot Volume: _____(uL)

CONCENTRATION UNITS: (ug/L or ug/Kg) UG/KG

CAS NO.	COMPOUND	MDL	RL	CONC	Q
108-88-3	Toluene	0.94	11		U
120-82-1	1,2,4-Trichlorobenzene	0.20	11		U
71-55-6	1,1,1-Trichloroethane	0.99	11		U
79-00-5	1,1,2-Trichloroethane	0.38	11		U
79-01-6	Trichloroethene	0.93	11		U
76-13-1	Trichlorotrifluoroethane	0.60	11		U
75-69-4	Trichlorofluoromethane	1.0	11		U
75-01-4	Vinyl chloride	1.2	11		U
1330-20-7	Xylene(total)	0.77	11		U

QW 7/28/09

FORM 1
VOLATILE ORGANICS ANALYSIS DATA SHEET

CLIENT SAMPLE NO. 11

MR08-SS154-08D

Lab Name: EMPIRICAL LABS Contract: CH2MHILL

Lab Code: NA Case No.: NA SAS No.: NA SDG No.: LEJEUNE040

Matrix: (soil/water) SOIL Lab Sample ID: 0812301-11

Sample wt/vol: 4.1 (g/mL) G Lab File ID: 1230111A

Level: (low/med) LOW Date Sampled: 12/18/08 13:10

% Moisture: not dec. 21 Date Analyzed: 12/31/08 21:54

GC Column: RTX-VRX ID: 0.25 (mm) Dilution Factor: 1.0

Soil Extract Volume:_____(uL) Soil Aliquot Volume: _____(uL)

CONCENTRATION UNITS: (ug/L or ug/Kg) UG/KG

CAS NO.	COMPOUND	MDL	RL	CONC	Q
67-64-1	Acetone	3.1	15	460	u B1
71-43-2	Benzene	0.73	15	2.8	J
75-27-4	Bromodichloromethane	0.46	15		U
75-25-2	Bromoform	1.5	15		U
74-83-9	Bromomethane	1.1	15		U
78-93-3	2-Butanone	2.2	15	34	
75-15-0	Carbon disulfide	2.0	15	5.9	J
56-23-5	Carbon tetrachloride	1.4	15		U
108-90-7	Chlorobenzene	0.53	15		U
75-00-3	Chloroethane	1.7	15		U
67-66-3	Chloroform	0.85	15		U
74-87-3	Chloromethane	0.80	15		U
110-82-7	Cyclohexane	0.84	15		U
124-48-1	Dibromochloromethane	0.53	15		U
96-12-8	1,2-Dibromo-3-chloropropane	1.8	7.7		UJ IS
106-93-4	1,2-Dibromoethane	0.67	15		U
95-50-1	1,2-Dichlorobenzene	0.57	15		UJ IS
541-73-1	1,3-Dichlorobenzene	1.3	15		U
106-46-7	1,4-Dichlorobenzene	0.85	15		U
75-71-8	Dichlorodifluoromethane	1.7	15		U
75-34-3	1,1-Dichloroethane	0.84	15		U
107-06-2	1,2-Dichloroethane	0.71	15		U
75-35-4	1,1-Dichloroethene	1.8	15		U
156-59-2	cis-1,2-Dichloroethene	1.8	15		U
156-60-5	trans-1,2-Dichloroethene	1.7	15		U
78-87-5	1,2-Dichloropropane	0.71	15		U
10061-01-5	cis-1,3-Dichloropropene	0.77	15		U
10061-02-6	trans-1,3-Dichloropropene	0.50	15		U
100-41-4	Ethylbenzene	1.2	15		U
591-78-6	2-Hexanone	3.6	15		U
98-82-8	Isopropylbenzene	1.4	15		U
79-20-9	Methyl acetate	2.5	15		U
75-09-2	Methylene chloride	0.96	15		U
108-87-2	Methyl cyclohexane	0.46	15		U
1634-04-4	Methyl tert-butyl ether	0.50	15		U
108-10-1	4-Methyl-2-pentanone	0.90	15		U
100-42-5	Styrene	0.54	15		U
79-34-5	1,1,2,2-Tetrachloroethane	0.67	15		UJ IS
127-18-4	Tetrachloroethene	1.5	15		U

7/28/09

FORM 1
VOLATILE ORGANICS ANALYSIS DATA SHEET

CLIENT SAMPLE NO. 11

MR08-SS154-08D

Lab Name: EMPIRICAL LABS Contract: CH2MHILL

Lab Code: NA Case No.: NA SAS No.: NA SDG No.: LEJEUNE040

Matrix: (soil/water) SOIL Lab Sample ID: 0812301-11

Sample wt/vol: 4.1 (g/mL) G Lab File ID: 1230111A

Level: (low/med) LOW Date Sampled: 12/18/08 13:10

% Moisture: not dec. 21 Date Analyzed: 12/31/08 21:54

GC Column: RTX-VRX ID: 0.25 (mm) Dilution Factor: 1.0

Soil Extract Volume:_____(uL) Soil Aliquot Volume: _____(uL)

CONCENTRATION UNITS: (ug/L or ug/Kg) UG/KG

CAS NO.	COMPOUND	MDL	RL	CONC	Q
108-88-3	Toluene	1.3	15	8.8	J
120-82-1	1,2,4-Trichlorobenzene	0.28	15		~~U~~ UJ JS
71-55-6	1,1,1-Trichloroethane	1.4	15		U
79-00-5	1,1,2-Trichloroethane	0.54	15		U
79-01-6	Trichloroethene	1.3	15		U
76-13-1	Trichlorotrifluoroethane	0.85	15		U
75-69-4	Trichlorofluoromethane	1.5	15		U
75-01-4	Vinyl chloride	1.7	15		U
1330-20-7	Xylene(total)	1.1	15	6.7	J

hw
2/28/09

FORM 1
VOLATILE ORGANICS ANALYSIS DATA SHEET

CLIENT SAMPLE NO. 11RE

MR08-SS154-08DR

Lab Name: EMPIRICAL LABS Contract: CH2MHILL

Lab Code: NA Case No.: NA SAS No.: NA SDG No.: LEJEUNE040

Matrix: (soil/water) SOIL Lab Sample ID: 0812301-11R

Sample wt/vol: 4.2 (g/mL) G Lab File ID: 1230111B

Level: (low/med) LOW Date Sampled: 12/18/08 13:10 Use Original

% Moisture: not dec. 21 Date Analyzed: 01/08/09 19:43

GC Column: RTX-VRX ID: 0.25 (mm) Dilution Factor: 1.0

Soil Extract Volume:_____(uL) Soil Aliquot Volume: _____(uL)

CONCENTRATION UNITS: (ug/L or ug/Kg) UG/KG

CAS NO.	COMPOUND	MDL	RL	CONC	Q	
67-64-1	Acetone	3.0	15	340	UJ HT	B HT
71-43-2	Benzene	0.71	15	2.8	J J	
75-27-4	Bromodichloromethane	0.45	15		U UJ	
75-25-2	Bromoform	1.5	15		U	
74-83-9	Bromomethane	1.1	15		U	
78-93-3	2-Butanone	2.1	15		U	
75-15-0	Carbon disulfide	2.0	15	5.7	J J	
56-23-5	Carbon tetrachloride	1.3	15		U UJ	
108-90-7	Chlorobenzene	0.51	15		U	
75-00-3	Chloroethane	1.6	15		U	
67-66-3	Chloroform	0.83	15		U	
74-87-3	Chloromethane	0.78	15		U	
110-82-7	Cyclohexane	0.81	15		U	
124-48-1	Dibromochloromethane	0.51	15		U	
96-12-8	1,2-Dibromo-3-chloropropane	1.8	7.5		U	
106-93-4	1,2-Dibromoethane	0.65	15		U	
95-50-1	1,2-Dichlorobenzene	0.56	15		U	
541-73-1	1,3-Dichlorobenzene	1.3	15		U	
106-46-7	1,4-Dichlorobenzene	0.83	15		U	
75-71-8	Dichlorodifluoromethane	1.6	15		U	
75-34-3	1,1-Dichloroethane	0.81	15		U	
107-06-2	1,2-Dichloroethane	0.69	15		U	
75-35-4	1,1-Dichloroethene	1.8	15		U	
156-59-2	cis-1,2-Dichloroethene	1.8	15		U	
156-60-5	trans-1,2-Dichloroethene	1.6	15		U	
78-87-5	1,2-Dichloropropane	0.69	15		U	
10061-01-5	cis-1,3-Dichloropropene	0.75	15		U	
10061-02-6	trans-1,3-Dichloropropene	0.48	15		U	
100-41-4	Ethylbenzene	1.1	15	1.2	J J	
591-78-6	2-Hexanone	3.5	15		U UJ	
98-82-8	Isopropylbenzene	1.3	15		U	
79-20-9	Methyl acetate	2.4	15		U	
75-09-2	Methylene chloride	0.94	15	15UJ ~~4.8~~	~~JB~~ HT	B
108-87-2	Methyl cyclohexane	0.45	15	0.55	J J	HT
1634-04-4	Methyl tert-butyl ether	0.48	15		U UJ	
108-10-1	4-Methyl-2-pentanone	0.87	15	1.1	J J	
100-42-5	Styrene	0.53	15		U UJ	
79-34-5	1,1,2,2-Tetrachloroethane	0.65	15		U	
127-18-4	Tetrachloroethene	1.5	15		U	

FORM I VOA

RW 7/28/09

FORM 1
VOLATILE ORGANICS ANALYSIS DATA SHEET

CLIENT SAMPLE NO. 11RE

MR08-SS154-08DR

Lab Name: EMPIRICAL LABS Contract: CH2MHILL

Lab Code: NA Case No.: NA SAS No.: NA SDG No.: LEJEUNE040

Matrix: (soil/water) SOIL Lab Sample ID: 0812301-11R

Sample wt/vol: 4.2 (g/mL) G Lab File ID: 1230111B

Level: (low/med) LOW Date Sampled: 12/18/08 13:10

% Moisture: not dec. 21 Date Analyzed: 01/08/09 19:43 use original

GC Column: RTX-VRX ID: 0.25 (mm) Dilution Factor: 1.0

Soil Extract Volume:_____(uL) Soil Aliquot Volume: _____(uL)

CONCENTRATION UNITS: (ug/L or ug/Kg) UG/KG

CAS NO.	COMPOUND	MDL	RL	CONC	Q
108-88-3	Toluene	1.3	15	11	~~J~~ J
120-82-1	1,2,4-Trichlorobenzene	0.27	15		~~U~~ UJ
71-55-6	1,1,1-Trichloroethane	1.4	15		~~U~~
79-00-5	1,1,2-Trichloroethane	0.53	15		~~U~~
79-01-6	Trichloroethene	1.3	15		~~U~~
76-13-1	Trichlorotrifluoroethane	0.83	15		~~U~~
75-69-4	Trichlorofluoromethane	1.4	15		~~U~~
75-01-4	Vinyl chloride	1.6	15		~~U~~
1330-20-7	Xylene(total)	1.0	15	7.7	~~J~~ J

FORM I VOA

LWO
2/28/09

FORM 1
VOLATILE ORGANICS ANALYSIS DATA SHEET

CLIENT SAMPLE NO. 12

MR08-SS154D-08D

Lab Name: EMPIRICAL LABS Contract: CH2MHILL

Lab Code: NA Case No.: NA SAS No.: NA SDG No.: LEJEUNE040

Matrix: (soil/water) SOIL Lab Sample ID: 0812301-12

Sample wt/vol: 5.2 (g/mL) G Lab File ID: 1230112A

Level: (low/med) LOW Date Sampled: 12/18/08 13:10

% Moisture: not dec. 12 Date Analyzed: 12/31/08 22:24

GC Column: RTX-VRX ID: 0.25 (mm) Dilution Factor: 1.0

Soil Extract Volume:_____(uL) Soil Aliquot Volume: _____(uL)

CONCENTRATION UNITS: (ug/L or ug/Kg) UG/KG

CAS NO.	COMPOUND	MDL	RL	CONC	Q
67-64-1	Acetone	2.2	11	260	U
71-43-2	Benzene	0.51	11	2.1	J
75-27-4	Bromodichloromethane	0.32	11		U
75-25-2	Bromoform	1.1	11		U
74-83-9	Bromomethane	0.78	11		U
78-93-3	2-Butanone	1.5	11	20	
75-15-0	Carbon disulfide	1.4	11	4.0	J
56-23-5	Carbon tetrachloride	0.95	11		U
108-90-7	Chlorobenzene	0.37	11		U
75-00-3	Chloroethane	1.2	11		U
67-66-3	Chloroform	0.60	11		U
74-87-3	Chloromethane	0.56	11		U
110-82-7	Cyclohexane	0.58	11		U
124-48-1	Dibromochloromethane	0.37	11		U
96-12-8	1,2-Dibromo-3-chloropropane	1.3	5.4		U
106-93-4	1,2-Dibromoethane	0.46	11		U
95-50-1	1,2-Dichlorobenzene	0.40	11		U
541-73-1	1,3-Dichlorobenzene	0.91	11		U
106-46-7	1,4-Dichlorobenzene	0.60	11		U
75-71-8	Dichlorodifluoromethane	1.2	11		U
75-34-3	1,1-Dichloroethane	0.58	11		U
107-06-2	1,2-Dichloroethane	0.50	11		U
75-35-4	1,1-Dichloroethene	1.3	11		U
156-59-2	cis-1,2-Dichloroethene	1.3	11		U
156-60-5	trans-1,2-Dichloroethene	1.2	11		U
78-87-5	1,2-Dichloropropane	0.50	11		U
10061-01-5	cis-1,3-Dichloropropene	0.54	11		U
10061-02-6	trans-1,3-Dichloropropene	0.35	11		U
100-41-4	Ethylbenzene	0.81	11		U
591-78-6	2-Hexanone	2.5	11		U
98-82-8	Isopropylbenzene	0.95	11		U
79-20-9	Methyl acetate	1.7	11		U
75-09-2	Methylene chloride	0.67	11		U
108-87-2	Methyl cyclohexane	0.32	11		U
1634-04-4	Methyl tert-butyl ether	0.35	11		U
108-10-1	4-Methyl-2-pentanone	0.63	11	0.78	J
100-42-5	Styrene	0.38	11		U
79-34-5	1,1,2,2-Tetrachloroethane	0.46	11		U
127-18-4	Tetrachloroethene	1.0	11		U

B1

lw
7/28/09

FORM 1
VOLATILE ORGANICS ANALYSIS DATA SHEET

CLIENT SAMPLE NO. 12

MR08-SS154D-08D

Lab Name: EMPIRICAL LABS Contract: CH2MHILL

Lab Code: NA Case No.: NA SAS No.: NA SDG No.: LEJEUNE040

Matrix: (soil/water) SOIL Lab Sample ID: 0812301-12

Sample wt/vol: 5.2 (g/mL) G Lab File ID: 1230112A

Level: (low/med) LOW Date Sampled: 12/18/08 13:10

% Moisture: not dec. 12 Date Analyzed: 12/31/08 22:24

GC Column: RTX-VRX ID: 0.25 (mm) Dilution Factor: 1.0

Soil Extract Volume:_____(uL) Soil Aliquot Volume: _____(uL)

CONCENTRATION UNITS: (ug/L or ug/Kg) UG/KG

CAS NO.	COMPOUND	MDL	RL	CONC	Q
108-88-3	Toluene	0.93	11	3.5	J
120-82-1	1,2,4-Trichlorobenzene	0.19	11		U
71-55-6	1,1,1-Trichloroethane	0.97	11		U
79-00-5	1,1,2-Trichloroethane	0.38	11		U
79-01-6	Trichloroethene	0.92	11		U
76-13-1	Trichlorotrifluoroethane	0.60	11		U
75-69-4	Trichlorofluoromethane	1.0	11		U
75-01-4	Vinyl chloride	1.2	11		U
1330-20-7	Xylene(total)	0.76	11		U

LW
7/28/09

FORM 1
VOLATILE ORGANICS ANALYSIS DATA SHEET

CLIENT SAMPLE NO.

MR08-EB0
1-121908

13

Lab Name: EMPIRICAL LABS Contract: CH2MHILL

Lab Code: NA Case No.: NA SAS No.: NA SDG No.: LEJEUNE040

Matrix: (soil/water) WATER Lab Sample ID: 0812301-13

Sample wt/vol: 5.000 (g/mL) ML Lab File ID: 1230113

Level: (low/med) LOW Date Sampled: 12/19/08 07:10

% Moisture: not dec. _____ Date Analyzed: 01/03/09 00:28

GC Column: RTX-VRX ID: 0.25 (mm) Dilution Factor: 1.0

Soil Extract Volume:_____(uL) Soil Aliquot Volume: _____(uL)

CONCENTRATION UNITS: (ug/L or ug/Kg) UG/L

CAS NO.	COMPOUND	MDL	RL	CONC	Q
67-64-1	Acetone	0.84	2.5		~~U~~ UJ
71-43-2	Benzene	0.11	1.0		U UJ
75-27-4	Bromodichloromethane	0.10	1.0		U
75-25-2	Bromoform	0.10	1.0		U
74-83-9	Bromomethane	0.32	1.0		U
78-93-3	2-Butanone	1.0	3.0		U
75-15-0	Carbon disulfide	0.13	1.0		U
56-23-5	Carbon tetrachloride	0.15	1.0		U
108-90-7	Chlorobenzene	0.10	1.0	1.0 UJ ~~0.29~~	~~JB~~ HT
75-00-3	Chloroethane	0.18	1.0		U UJ
67-66-3	Chloroform	0.11	1.0		U
74-87-3	Chloromethane	0.29	1.0		U
110-82-7	Cyclohexane	0.20	1.0		U
124-48-1	Dibromochloromethane	0.10	1.0		U
96-12-8	1,2-Dibromo-3-chloropropane	0.11	1.0		U
106-93-4	1,2-Dibromoethane	0.10	1.0		U
95-50-1	1,2-Dichlorobenzene	0.10	1.0		U
541-73-1	1,3-Dichlorobenzene	0.13	1.0		U
106-46-7	1,4-Dichlorobenzene	0.10	1.0		U
75-71-8	Dichlorodifluoromethane	0.22	1.0		U
75-34-3	1,1-Dichloroethane	0.12	1.0		U
107-06-2	1,2-Dichloroethane	0.10	1.0		U
75-35-4	1,1-Dichloroethene	0.15	1.0		U
156-59-2	cis-1,2-Dichloroethene	0.13	1.0		U
156-60-5	trans-1,2-Dichloroethene	0.13	1.0		U
78-87-5	1,2-Dichloropropane	0.10	1.0		U
10061-01-5	cis-1,3-Dichloropropene	0.11	1.0		U
10061-02-6	trans-1,3-Dichloropropene	0.10	1.0		U
100-41-4	Ethylbenzene	0.13	1.0		U
591-78-6	2-Hexanone	0.30	1.0		U
98-82-8	Isopropylbenzene	0.15	1.0		U
79-20-9	Methyl acetate	0.30	1.0		U
75-09-2	Methylene chloride	0.14	1.0	1.0 UJ ~~0.44~~	~~JB~~ HT
108-87-2	Methyl cyclohexane	0.17	1.0		U UJ
1634-04-4	Methyl tert-butyl ether	0.10	1.0		U
108-10-1	4-Methyl-2-pentanone	0.29	1.0		U
100-42-5	Styrene	0.10	1.0		U
79-34-5	1,1,2,2-Tetrachloroethane	0.10	1.0		U
127-18-4	Tetrachloroethene	0.15	1.0		U

7/28/09

FORM 1
VOLATILE ORGANICS ANALYSIS DATA SHEET

CLIENT SAMPLE NO. 13

MR08-EB0
1-121908

Lab Name: EMPIRICAL LABS Contract: CH2MHILL

Lab Code: NA Case No.: NA SAS No.: NA SDG No.: LEJEUNE040

Matrix: (soil/water) WATER Lab Sample ID: 0812301-13

Sample wt/vol: 5.000 (g/mL) ML Lab File ID: 1230113

Level: (low/med) LOW Date Sampled: 12/19/08 07:10

% Moisture: not dec. _____ Date Analyzed: 01/03/09 00:28

GC Column: RTX-VRX ID: 0.25 (mm) Dilution Factor: 1.0

Soil Extract Volume:_____(uL) Soil Aliquot Volume: _____(uL)

CONCENTRATION UNITS: (ug/L or ug/Kg) UG/L

CAS NO.	COMPOUND	MDL	RL	CONC	Q
108-88-3	Toluene	0.10	1.0		U UJ H
120-82-1	1,2,4-Trichlorobenzene	0.10	1.0		U
71-55-6	1,1,1-Trichloroethane	0.17	1.0		U
79-00-5	1,1,2-Trichloroethane	0.10	1.0		U
79-01-6	Trichloroethene	0.13	1.0		U
76-13-1	Trichlorotrifluoroethane	0.18	1.0		U
75-69-4	Trichlorofluoromethane	0.17	1.0		U
75-01-4	Vinyl chloride	0.18	1.0		U
1330-20-7	Xylene(total)	0.22	1.0		U

DW
2/28/09

FORM 1
VOLATILE ORGANICS ANALYSIS DATA SHEET

CLIENT SAMPLE NO. 14

MR08-FB0
1-121908

Lab Name: EMPIRICAL LABS Contract: CH2MHILL

Lab Code: NA Case No.: NA SAS No.: NA SDG No.: LEJEUNE040

Matrix: (soil/water) WATER Lab Sample ID: 0812301-14

Sample wt/vol: 5.000 (g/mL) ML Lab File ID: 1230114

Level: (low/med) LOW Date Sampled: 12/19/08 08:10

% Moisture: not dec. _____ Date Analyzed: 01/03/09 00:59

GC Column: RTX-VRX ID: 0.25 (mm) Dilution Factor: 1.0

Soil Extract Volume:_____(uL) Soil Aliquot Volume: _____(uL)

CONCENTRATION UNITS: (ug/L or ug/Kg) UG/L

CAS NO.	COMPOUND	MDL	RL	CONC	Q
67-64-1	Acetone	0.84	2.5		UUJ CL
71-43-2	Benzene	0.11	1.0		U UJ HT
75-27-4	Bromodichloromethane	0.10	1.0		U
75-25-2	Bromoform	0.10	1.0		U
74-83-9	Bromomethane	0.32	1.0		U
78-93-3	2-Butanone	1.0	3.0		U
75-15-0	Carbon disulfide	0.13	1.0		U
56-23-5	Carbon tetrachloride	0.15	1.0		U
108-90-7	Chlorobenzene	0.10	1.0	1.0UJ ~~0.31 JB~~	HT BC
75-00-3	Chloroethane	0.18	1.0		U UJ HT
67-66-3	Chloroform	0.11	1.0		U
74-87-3	Chloromethane	0.29	1.0		U
110-82-7	Cyclohexane	0.20	1.0		U
124-48-1	Dibromochloromethane	0.10	1.0		U
96-12-8	1,2-Dibromo-3-chloropropane	0.11	1.0		U
106-93-4	1,2-Dibromoethane	0.10	1.0		U
95-50-1	1,2-Dichlorobenzene	0.10	1.0		U
541-73-1	1,3-Dichlorobenzene	0.13	1.0		U
106-46-7	1,4-Dichlorobenzene	0.10	1.0		U
75-71-8	Dichlorodifluoromethane	0.22	1.0		U
75-34-3	1,1-Dichloroethane	0.12	1.0		U
107-06-2	1,2-Dichloroethane	0.10	1.0		U
75-35-4	1,1-Dichloroethene	0.15	1.0		U
156-59-2	cis-1,2-Dichloroethene	0.13	1.0		U
156-60-5	trans-1,2-Dichloroethene	0.13	1.0		U
78-87-5	1,2-Dichloropropane	0.10	1.0		U
10061-01-5	cis-1,3-Dichloropropene	0.11	1.0		U
10061-02-6	trans-1,3-Dichloropropene	0.10	1.0		U
100-41-4	Ethylbenzene	0.13	1.0		U
591-78-6	2-Hexanone	0.30	1.0		U
98-82-8	Isopropylbenzene	0.15	1.0		U
79-20-9	Methyl acetate	0.30	1.0		U
75-09-2	Methylene chloride	0.14	1.0	1.0UJ ~~0.58 JB~~	HT BC
108-87-2	Methyl cyclohexane	0.17	1.0		U UJ H
1634-04-4	Methyl tert-butyl ether	0.10	1.0		U
108-10-1	4-Methyl-2-pentanone	0.29	1.0		U
100-42-5	Styrene	0.10	1.0		U
79-34-5	1,1,2,2-Tetrachloroethane	0.10	1.0		U
127-18-4	Tetrachloroethene	0.15	1.0		U

2/28/09

FORM 1
VOLATILE ORGANICS ANALYSIS DATA SHEET

CLIENT SAMPLE NO. 14

MR08-FB0
1-121908

Lab Name: EMPIRICAL LABS Contract: CH2MHILL

Lab Code: NA Case No.: NA SAS No.: NA SDG No.: LEJEUNE040

Matrix: (soil/water) WATER Lab Sample ID: 0812301-14

Sample wt/vol: 5.000 (g/mL) ML Lab File ID: 1230114

Level: (low/med) LOW Date Sampled: 12/19/08 08:10

% Moisture: not dec. _____ Date Analyzed: 01/03/09 00:59

GC Column: RTX-VRX ID: 0.25 (mm) Dilution Factor: 1.0

Soil Extract Volume:_____(uL) Soil Aliquot Volume: _____(uL)

CONCENTRATION UNITS: (ug/L or ug/Kg) UG/L

CAS NO.	COMPOUND	MDL	RL	CONC	Q
108-88-3	Toluene	0.10	1.0		U UJ H
120-82-1	1,2,4-Trichlorobenzene	0.10	1.0		U
71-55-6	1,1,1-Trichloroethane	0.17	1.0		U
79-00-5	1,1,2-Trichloroethane	0.10	1.0		U
79-01-6	Trichloroethene	0.13	1.0		U
76-13-1	Trichlorotrifluoroethane	0.18	1.0		U
75-69-4	Trichlorofluoromethane	0.17	1.0		U
75-01-4	Vinyl chloride	0.18	1.0		U
1330-20-7	Xylene(total)	0.22	1.0		U

LW
2/28/09

FORM 1
VOLATILE ORGANICS ANALYSIS DATA SHEET

CLIENT SAMPLE NO. 15

MR08-SS176-08D

Lab Name: EMPIRICAL LABS Contract: CH2MHILL

Lab Code: NA Case No.: NA SAS No.: NA SDG No.: LEJEUNE040

Matrix: (soil/water) SOIL Lab Sample ID: 0812301-15

Sample wt/vol: 4.6 (g/mL) G Lab File ID: 1230115A

Level: (low/med) LOW Date Sampled: 12/18/08 08:20

% Moisture: not dec. 17 Date Analyzed: 01/01/09 13:40

GC Column: RTX-VRX ID: 0.25 (mm) Dilution Factor: 1.0

Soil Extract Volume:_____(uL) Soil Aliquot Volume: _____(uL)

CONCENTRATION UNITS: (ug/L or ug/Kg) UG/KG

CAS NO.	COMPOUND	MDL	RL	CONC	Q
67-64-1	Acetone	2.6	13	290	J ISL
71-43-2	Benzene	0.62	13	13U R ~~1.6~~	~~JB~~ ISL BK
75-27-4	Bromodichloromethane	0.40	13		U
75-25-2	Bromoform	1.3	13		U
74-83-9	Bromomethane	0.95	13		~~U~~ R ISL
78-93-3	2-Butanone	1.8	13	49	J ISL
75-15-0	Carbon disulfide	1.7	13		~~U~~ R ISL
56-23-5	Carbon tetrachloride	1.2	13		~~U~~ R ISL
108-90-7	Chlorobenzene	0.45	13		U
75-00-3	Chloroethane	1.4	13		~~U~~ R ISL
67-66-3	Chloroform	0.72	13		~~U~~ R ISL
74-87-3	Chloromethane	0.68	13	0.83	~~U~~ J ISL
110-82-7	Cyclohexane	0.71	13		~~U~~ R ISL
124-48-1	Dibromochloromethane	0.45	13		U
96-12-8	1,2-Dibromo-3-chloropropane	1.6	6.6		~~U~~ UJ ISL
106-93-4	1,2-Dibromoethane	0.57	13		U
95-50-1	1,2-Dichlorobenzene	0.49	13		~~U~~ UJ ISL
541-73-1	1,3-Dichlorobenzene	1.1	13		~~U~~
106-46-7	1,4-Dichlorobenzene	0.72	13		~~U~~
75-71-8	Dichlorodifluoromethane	1.4	13		~~U~~ R ISL
75-34-3	1,1-Dichloroethane	0.71	13		~~U~~ R ISL
107-06-2	1,2-Dichloroethane	0.61	13		U
75-35-4	1,1-Dichloroethene	1.6	13		U
156-59-2	cis-1,2-Dichloroethene	1.6	13		U
156-60-5	trans-1,2-Dichloroethene	1.4	13		U
78-87-5	1,2-Dichloropropane	0.61	13		U
10061-01-5	cis-1,3-Dichloropropene	0.66	13		U
10061-02-6	trans-1,3-Dichloropropene	0.42	13		U
100-41-4	Ethylbenzene	0.99	13	5.2	J
591-78-6	2-Hexanone	3.0	13		U
98-82-8	Isopropylbenzene	1.2	13		U
79-20-9	Methyl acetate	2.1	13		~~U~~ R ISL
75-09-2	Methylene chloride	0.82	13	13U R ~~2.4~~	~~JB~~ ISL BK
108-87-2	Methyl cyclohexane	0.40	13	0.64	~~U~~ J ISL
1634-04-4	Methyl tert-butyl ether	0.42	13		U
108-10-1	4-Methyl-2-pentanone	0.76	13	33	
100-42-5	Styrene	0.46	13		U
79-34-5	1,1,2,2-Tetrachloroethane	0.57	13		~~U~~ UJ ISL
127-18-4	Tetrachloroethene	1.3	13		U

FORM I VOA

LW 2/28/09

FORM 1
VOLATILE ORGANICS ANALYSIS DATA SHEET

CLIENT SAMPLE NO. 15

MR08-SS176-08D

Lab Name: EMPIRICAL LABS Contract: CH2MHILL

Lab Code: NA Case No.: NA SAS No.: NA SDG No.: LEJEUNE040

Matrix: (soil/water) SOIL Lab Sample ID: 0812301-15

Sample wt/vol: 4.6 (g/mL) G Lab File ID: 1230115A

Level: (low/med) LOW Date Sampled: 12/18/08 08:20

% Moisture: not dec. 17 Date Analyzed: 01/01/09 13:40

GC Column: RTX-VRX ID: 0.25 (mm) Dilution Factor: 1.0

Soil Extract Volume:_____(uL) Soil Aliquot Volume: _____(uL)

CONCENTRATION UNITS: (ug/L or ug/Kg) UG/KG

CAS NO.	COMPOUND	MDL	RL	CONC	Q
108-88-3	Toluene	1.1	13	2.6	J
120-82-1	1,2,4-Trichlorobenzene	0.24	13	13UJ ~~0.49~~	~~JB~~ ISL
71-55-6	1,1,1-Trichloroethane	1.2	13		~~U~~ R ISL
79-00-5	1,1,2-Trichloroethane	0.46	13		U
79-01-6	Trichloroethene	1.1	13		~~U~~ R ISL
76-13-1	Trichlorotrifluoroethane	0.72	13		~~U~~ R ISL
75-69-4	Trichlorofluoromethane	1.2	13		~~U~~ R ISL
75-01-4	Vinyl chloride	1.4	13		~~U~~ R ↓
1330-20-7	Xylene(total)	0.92	13	6.9	J

FORM I VOA

2/28/09

FORM 1
VOLATILE ORGANICS ANALYSIS DATA SHEET

CLIENT SAMPLE NO. 15RE

MR08-SS176-08DR

Lab Name: EMPIRICAL LABS Contract: CH2MHILL

Lab Code: NA Case No.: NA SAS No.: NA SDG No.: LEJEUNE040

Matrix: (soil/water) SOIL Lab Sample ID: 0812301-15R

Sample wt/vol: 4.8 (g/mL) G Lab File ID: 1230115B

Level: (low/med) LOW Date Sampled: 12/18/08 08:20

% Moisture: not dec. 17 Date Analyzed: 01/06/09 22:42

GC Column: RTX-VRX ID: 0.25 (mm) Dilution Factor: 1.0

Soil Extract Volume:_____(uL) Soil Aliquot Volume: _____(uL)

Use original

CONCENTRATION UNITS: (ug/L or ug/Kg) UG/KG

CAS NO.	COMPOUND	MDL	RL	CONC	Q
67-64-1	Acetone	2.5	12	85	J
71-43-2	Benzene	0.58	12	1.2	J J
75-27-4	Bromodichloromethane	0.37	12		U UJ
75-25-2	Bromoform	1.2	12		U
74-83-9	Bromomethane	0.90	12		U
78-93-3	2-Butanone	1.7	12	5.7	J J
75-15-0	Carbon disulfide	1.6	12		U UJ
56-23-5	Carbon tetrachloride	1.1	12		U
108-90-7	Chlorobenzene	0.42	12		U
75-00-3	Chloroethane	1.4	12		U
67-66-3	Chloroform	0.68	12		U
74-87-3	Chloromethane	0.65	12		U
110-82-7	Cyclohexane	0.67	12	0.95	J J
124-48-1	Dibromochloromethane	0.42	12		U UJ
96-12-8	1,2-Dibromo-3-chloropropane	1.5	6.2		U UJ
106-93-4	1,2-Dibromoethane	0.54	12		U
95-50-1	1,2-Dichlorobenzene	0.46	12		U UJ
541-73-1	1,3-Dichlorobenzene	1.0	12		U
106-46-7	1,4-Dichlorobenzene	0.68	12		U
75-71-8	Dichlorodifluoromethane	1.4	12		U UJ
75-34-3	1,1-Dichloroethane	0.67	12		U
107-06-2	1,2-Dichloroethane	0.57	12		U
75-35-4	1,1-Dichloroethene	1.5	12		U
156-59-2	cis-1,2-Dichloroethene	1.5	12		U
156-60-5	trans-1,2-Dichloroethene	1.4	12		U
78-87-5	1,2-Dichloropropane	0.57	12		U
10061-01-5	cis-1,3-Dichloropropene	0.62	12		U
10061-02-6	trans-1,3-Dichloropropene	0.40	12		U
100-41-4	Ethylbenzene	0.94	12	3.4	J J
591-78-6	2-Hexanone	2.9	12		U UJ
98-82-8	Isopropylbenzene	1.1	12		U
79-20-9	Methyl acetate	2.0	12		U
75-09-2	Methylene chloride	0.77	12	12UJ ~~1.1~~	~~JB~~ HTB
108-87-2	Methyl cyclohexane	0.37	12	1.1	J J
1634-04-4	Methyl tert-butyl ether	0.40	12		U UJ
108-10-1	4-Methyl-2-pentanone	0.72	12	3.8	J J
100-42-5	Styrene	0.44	12		U UJ
79-34-5	1,1,2,2-Tetrachloroethane	0.54	12		U UJ
127-18-4	Tetrachloroethene	1.2	12		U

lw 2/28/09

FORM 1
VOLATILE ORGANICS ANALYSIS DATA SHEET

CLIENT SAMPLE NO.

MR08-SS176-08DR

Lab Name: EMPIRICAL LABS Contract: CH2MHILL

Lab Code: NA Case No.: NA SAS No.: NA SDG No.: LEJEUNE040

Matrix: (soil/water) SOIL Lab Sample ID: 0812301-15R

Sample wt/vol: 4.8 (g/mL) G Lab File ID: 1230115B

Level: (low/med) LOW Date Sampled: 12/18/08 08:20

% Moisture: not dec. 17 Date Analyzed: 01/06/09 22:42

GC Column: RTX-VRX ID: 0.25 (mm) Dilution Factor: 1.0

Soil Extract Volume:_____(uL) Soil Aliquot Volume: _____(uL)

CONCENTRATION UNITS: (ug/L or ug/Kg) UG/KG

CAS NO.	COMPOUND	MDL	RL	CONC	Q
108-88-3	Toluene	1.1	12	2.1	J
120-82-1	1,2,4-Trichlorobenzene	0.22	12		U
71-55-6	1,1,1-Trichloroethane	1.1	12		U
79-00-5	1,1,2-Trichloroethane	0.44	12		U
79-01-6	Trichloroethene	1.0	12		U
76-13-1	Trichlorotrifluoroethane	0.68	12		U
75-69-4	Trichlorofluoromethane	1.2	12		U
75-01-4	Vinyl chloride	1.4	12		U
1330-20-7	Xylene(total)	0.87	12		U

FORM I VOA

FORM 1
VOLATILE ORGANICS ANALYSIS DATA SHEET

CLIENT SAMPLE NO. 16

MR08-IS17
6-4-5-08D

Lab Name: EMPIRICAL LABS Contract: CH2MHILL

Lab Code: NA Case No.: NA SAS No.: NA SDG No.: LEJEUNE040

Matrix: (soil/water) SOIL Lab Sample ID: 0812301-16

Sample wt/vol: 4.3 (g/mL) G Lab File ID: 1230116A

Level: (low/med) LOW Date Sampled: 12/18/08 08:30

% Moisture: not dec. 7 Date Analyzed: 01/01/09 14:10

GC Column: RTX-VRX ID: 0.25 (mm) Dilution Factor: 1.0

Soil Extract Volume:_____(uL) Soil Aliquot Volume: _____(uL)

CONCENTRATION UNITS: (ug/L or ug/Kg) UG/KG

CAS NO.	COMPOUND	MDL	RL	CONC	Q
67-64-1	Acetone	2.5	12		U
71-43-2	Benzene	0.58	12		U
75-27-4	Bromodichloromethane	0.37	12		U
75-25-2	Bromoform	1.2	12		U
74-83-9	Bromomethane	0.89	12		U
78-93-3	2-Butanone	1.7	12		U
75-15-0	Carbon disulfide	1.6	12		U
56-23-5	Carbon tetrachloride	1.1	12		U
108-90-7	Chlorobenzene	0.42	12		U
75-00-3	Chloroethane	1.4	12		U
67-66-3	Chloroform	0.68	12		U
74-87-3	Chloromethane	0.64	12		U
110-82-7	Cyclohexane	0.67	12		U
124-48-1	Dibromochloromethane	0.42	12		U
96-12-8	1,2-Dibromo-3-chloropropane	1.5	6.2		U
106-93-4	1,2-Dibromoethane	0.53	12		U
95-50-1	1,2-Dichlorobenzene	0.46	12		U
541-73-1	1,3-Dichlorobenzene	1.0	12		U
106-46-7	1,4-Dichlorobenzene	0.68	12		U
75-71-8	Dichlorodifluoromethane	1.4	12		U
75-34-3	1,1-Dichloroethane	0.67	12		U
107-06-2	1,2-Dichloroethane	0.57	12		U
75-35-4	1,1-Dichloroethene	1.5	12		U
156-59-2	cis-1,2-Dichloroethene	1.5	12		U
156-60-5	trans-1,2-Dichloroethene	1.4	12		U
78-87-5	1,2-Dichloropropane	0.57	12		U
10061-01-5	cis-1,3-Dichloropropene	0.62	12		U
10061-02-6	trans-1,3-Dichloropropene	0.39	12		U
100-41-4	Ethylbenzene	0.92	12		U
591-78-6	2-Hexanone	2.8	12		U
98-82-8	Isopropylbenzene	1.1	12		U
79-20-9	Methyl acetate	2.0	12		U
75-09-2	Methylene chloride	0.76	12	12U ~~2.0 JB~~	B1
108-87-2	Methyl cyclohexane	0.37	12		U
1634-04-4	Methyl tert-butyl ether	0.39	12		U
108-10-1	4-Methyl-2-pentanone	0.72	12		U
100-42-5	Styrene	0.43	12		U
79-34-5	1,1,2,2-Tetrachloroethane	0.53	12		U
127-18-4	Tetrachloroethene	1.2	12		U

lcw 2/28/09

FORM 1
VOLATILE ORGANICS ANALYSIS DATA SHEET

CLIENT SAMPLE NO. 16

MR08-IS17
6-4-5-08D

Lab Name: EMPIRICAL LABS Contract: CH2MHILL

Lab Code: NA Case No.: NA SAS No.: NA SDG No.: LEJEUNE040

Matrix: (soil/water) SOIL Lab Sample ID: 0812301-16

Sample wt/vol: 4.3 (g/mL) G Lab File ID: 1230116A

Level: (low/med) LOW Date Sampled: 12/18/08 08:30

% Moisture: not dec. 7 Date Analyzed: 01/01/09 14:10

GC Column: RTX-VRX ID: 0.25 (mm) Dilution Factor: 1.0

Soil Extract Volume:_____(uL) Soil Aliquot Volume: _____(uL)

CONCENTRATION UNITS: (ug/L or ug/Kg) UG/KG

CAS NO.	COMPOUND	MDL	RL	CONC	Q
108-88-3	Toluene	1.1	12		U
120-82-1	1,2,4-Trichlorobenzene	0.22	12		U
71-55-6	1,1,1-Trichloroethane	1.1	12		U
79-00-5	1,1,2-Trichloroethane	0.43	12		U
79-01-6	Trichloroethene	1.0	12		U
76-13-1	Trichlorotrifluoroethane	0.68	12		U
75-69-4	Trichlorofluoromethane	1.2	12		U
75-01-4	Vinyl chloride	1.4	12		U
1330-20-7	Xylene(total)	0.86	12		U

LW
2/28/09

FORM 1
VOLATILE ORGANICS ANALYSIS DATA SHEET

CLIENT SAMPLE NO. 17

MR08-SS163-08D

Lab Name: EMPIRICAL LABS Contract: CH2MHILL

Lab Code: NA Case No.: NA SAS No.: NA SDG No.: LEJEUNE040

Matrix: (soil/water) SOIL Lab Sample ID: 0812301-17

Sample wt/vol: 5.0 (g/mL) G Lab File ID: 1230117A

Level: (low/med) LOW Date Sampled: 12/18/08 09:10

% Moisture: not dec. 16 Date Analyzed: 01/01/09 14:41

GC Column: RTX-VRX ID: 0.25 (mm) Dilution Factor: 1.0

Soil Extract Volume:_____(uL) Soil Aliquot Volume: _____(uL)

CONCENTRATION UNITS: (ug/L or ug/Kg) UG/KG

CAS NO.	COMPOUND	MDL	RL	CONC	Q	
67-64-1	Acetone	2.4	12	98	J	SS
71-43-2	Benzene	0.56	12		U	
75-27-4	Bromodichloromethane	0.36	12		U	
75-25-2	Bromoform	1.2	12		U	
74-83-9	Bromomethane	0.87	12		U	
78-93-3	2-Butanone	1.7	12	16	J	SS
75-15-0	Carbon disulfide	1.6	12		U	
56-23-5	Carbon tetrachloride	1.0	12		U	
108-90-7	Chlorobenzene	0.41	12		U	
75-00-3	Chloroethane	1.3	12		U	
67-66-3	Chloroform	0.66	12		U	
74-87-3	Chloromethane	0.63	12		U	
110-82-7	Cyclohexane	0.65	12		U	
124-48-1	Dibromochloromethane	0.41	12		U	
96-12-8	1,2-Dibromo-3-chloropropane	1.4	6.0		~~U~~ UJ	ISL
106-93-4	1,2-Dibromoethane	0.52	12		U	
95-50-1	1,2-Dichlorobenzene	0.44	12		~~U~~ UJ	ISL
541-73-1	1,3-Dichlorobenzene	1.0	12		U	
106-46-7	1,4-Dichlorobenzene	0.66	12		U	
75-71-8	Dichlorodifluoromethane	1.3	12		U	
75-34-3	1,1-Dichloroethane	0.65	12		U	
107-06-2	1,2-Dichloroethane	0.55	12		U	
75-35-4	1,1-Dichloroethene	1.4	12		U	
156-59-2	cis-1,2-Dichloroethene	1.4	12		U	
156-60-5	trans-1,2-Dichloroethene	1.3	12		U	
78-87-5	1,2-Dichloropropane	0.55	12		U	
10061-01-5	cis-1,3-Dichloropropene	0.60	12		U	
10061-02-6	trans-1,3-Dichloropropene	0.38	12		U	
100-41-4	Ethylbenzene	0.90	12		U	
591-78-6	2-Hexanone	2.8	12		U	
98-82-8	Isopropylbenzene	1.0	12		U	
79-20-9	Methyl acetate	1.9	12		U	
75-09-2	Methylene chloride	0.75	12	12U	~~Q 82~~ ~~JB~~	B
108-87-2	Methyl cyclohexane	0.36	12		U	
1634-04-4	Methyl tert-butyl ether	0.38	12		U	
108-10-1	4-Methyl-2-pentanone	0.70	12		U	
100-42-5	Styrene	0.42	12		U	
79-34-5	1,1,2,2-Tetrachloroethane	0.52	12		~~U~~ UJ	ISL
127-18-4	Tetrachloroethene	1.2	12		U	

lw 2/28/09

FORM 1
VOLATILE ORGANICS ANALYSIS DATA SHEET

CLIENT SAMPLE NO. 17

MR08-SS163-08D

Lab Name: EMPIRICAL LABS Contract: CH2MHILL

Lab Code: NA Case No.: NA SAS No.: NA SDG No.: LEJEUNE040

Matrix: (soil/water) SOIL Lab Sample ID: 0812301-17

Sample wt/vol: 5.0 (g/mL) G Lab File ID: 1230117A

Level: (low/med) LOW Date Sampled: 12/18/08 09:10

% Moisture: not dec. 16 Date Analyzed: 01/01/09 14:41

GC Column: RTX-VRX ID: 0.25 (mm) Dilution Factor: 1.0

Soil Extract Volume:_____(uL) Soil Aliquot Volume: _____(uL)

CONCENTRATION UNITS: (ug/L or ug/Kg) UG/KG

CAS NO.	COMPOUND	MDL	RL	CONC	Q
108-88-3	Toluene	1.0	12	1.2	~~J~~ J SS
120-82-1	1,2,4-Trichlorobenzene	0.22	12	12UJ ~~0.30~~ ~~JB~~ JSL	
71-55-6	1,1,1-Trichloroethane	1.1	12		U
79-00-5	1,1,2-Trichloroethane	0.42	12		U
79-01-6	Trichloroethene	1.0	12		U
76-13-1	Trichlorotrifluoroethane	0.66	12		U
75-69-4	Trichlorofluoromethane	1.1	12		U
75-01-4	Vinyl chloride	1.3	12		U
1330-20-7	Xylene(total)	0.84	12		U

2/28/09

FORM 1
VOLATILE ORGANICS ANALYSIS DATA SHEET

CLIENT SAMPLE NO. 17RE

MR08-SS163-08DR

Lab Name: EMPIRICAL LABS Contract: CH2MHILL

Lab Code: NA Case No.: NA SAS No.: NA SDG No.: LEJEUNE040

Matrix: (soil/water) SOIL Lab Sample ID: 0812301-17R

Sample wt/vol: 4.8 (g/mL) G Lab File ID: 1230117B

Level: (low/med) LOW Date Sampled: 12/18/08 09:10

% Moisture: not dec. 16 Date Analyzed: 01/08/09 21:02 use original

GC Column: RTX-VRX ID: 0.25 (mm) Dilution Factor: 1.0

Soil Extract Volume:_____(uL) Soil Aliquot Volume: _____(uL)

CONCENTRATION UNITS: (ug/L or ug/Kg) UG/KG

CAS NO.	COMPOUND	MDL	RL	CONC	Q	
67-64-1	Acetone	2.5	12	84	J	SS
71-43-2	Benzene	0.58	12		U UJ	H
75-27-4	Bromodichloromethane	0.37	12		U	
75-25-2	Bromoform	1.2	12		U	
74-83-9	Bromomethane	0.89	12		U	
78-93-3	2-Butanone	1.7	12	4.1	~~J~~ J	SS
75-15-0	Carbon disulfide	1.6	12		U UJ	H
56-23-5	Carbon tetrachloride	1.1	12		U	
108-90-7	Chlorobenzene	0.42	12		U	
75-00-3	Chloroethane	1.4	12		U	
67-66-3	Chloroform	0.68	12		U	
74-87-3	Chloromethane	0.64	12		U	
110-82-7	Cyclohexane	0.67	12		U	
124-48-1	Dibromochloromethane	0.42	12		U	
96-12-8	1,2-Dibromo-3-chloropropane	1.5	6.2		U	
106-93-4	1,2-Dibromoethane	0.53	12		U	
95-50-1	1,2-Dichlorobenzene	0.46	12		U	
541-73-1	1,3-Dichlorobenzene	1.0	12		U	
106-46-7	1,4-Dichlorobenzene	0.68	12		U	
75-71-8	Dichlorodifluoromethane	1.4	12		U	
75-34-3	1,1-Dichloroethane	0.67	12		U	
107-06-2	1,2-Dichloroethane	0.57	12		U	
75-35-4	1,1-Dichloroethene	1.5	12		U	
156-59-2	cis-1,2-Dichloroethene	1.5	12		U	
156-60-5	trans-1,2-Dichloroethene	1.4	12		U	
78-87-5	1,2-Dichloropropane	0.57	12		U	
10061-01-5	cis-1,3-Dichloropropene	0.62	12		U	
10061-02-6	trans-1,3-Dichloropropene	0.39	12		U	
100-41-4	Ethylbenzene	0.92	12		U	
591-78-6	2-Hexanone	2.8	12		U	
98-82-8	Isopropylbenzene	1.1	12		U	
79-20-9	Methyl acetate	2.0	12		U	
75-09-2	Methylene chloride	0.76	12	12UJ ~~1.3~~	~~JB~~	HT B
108-87-2	Methyl cyclohexane	0.37	12		U UJ	H
1634-04-4	Methyl tert-butyl ether	0.39	12		U	
108-10-1	4-Methyl-2-pentanone	0.72	12		U	
100-42-5	Styrene	0.43	12		U	
79-34-5	1,1,2,2-Tetrachloroethane	0.53	12		U	
127-18-4	Tetrachloroethene	1.2	12		U	

FORM I VOA

2/28/09

FORM 1
VOLATILE ORGANICS ANALYSIS DATA SHEET

CLIENT SAMPLE NO. 17RE

MR08-SS163-08DR

Lab Name: EMPIRICAL LABS Contract: CH2MHILL

Lab Code: NA Case No.: NA SAS No.: NA SDG No.: LEJEUNE040

Matrix: (soil/water) SOIL Lab Sample ID: 0812301-17R

Sample wt/vol: 4.8 (g/mL) G Lab File ID: 1230117B

Level: (low/med) LOW Date Sampled: 12/18/08 09:10 Lab

% Moisture: not dec. 16 Date Analyzed: 01/08/09 21:02 ORIGINAL

GC Column: RTX-VRX ID: 0.25 (mm) Dilution Factor: 1.0

Soil Extract Volume:_____(uL) Soil Aliquot Volume: _____(uL)

CONCENTRATION UNITS: (ug/L or ug/Kg) UG/KG

CAS NO.	COMPOUND	MDL	RL	CONC	Q
108-88-3	Toluene	1.1	12	1.1	~~U~~ J
120-82-1	1,2,4-Trichlorobenzene	0.22	12		U UJ
71-55-6	1,1,1-Trichloroethane	1.1	12		U
79-00-5	1,1,2-Trichloroethane	0.43	12		U
79-01-6	Trichloroethene	1.0	12		U
76-13-1	Trichlorotrifluoroethane	0.68	12		U
75-69-4	Trichlorofluoromethane	1.2	12		U
75-01-4	Vinyl chloride	1.4	12		U
1330-20-7	Xylene(total)	0.86	12		U

SS
H

R RE

FORM I VOA

2/28/09

FORM 1
VOLATILE ORGANICS ANALYSIS DATA SHEET

CLIENT SAMPLE NO. 18

MR08-IS16
3-4-5-08D

Lab Name: EMPIRICAL LABS Contract: CH2MHILL

Lab Code: NA Case No.: NA SAS No.: NA SDG No.: LEJEUNE040

Matrix: (soil/water) SOIL Lab Sample ID: 0812301-18

Sample wt/vol: 5.7 (g/mL) G Lab File ID: 1230118A

Level: (low/med) LOW Date Sampled: 12/18/08 09:20

% Moisture: not dec. 12 Date Analyzed: 01/01/09 15:11

GC Column: RTX-VRX ID: 0.25 (mm) Dilution Factor: 1.0

Soil Extract Volume:_____(uL) Soil Aliquot Volume: _____(uL)

CONCENTRATION UNITS: (ug/L or ug/Kg) UG/KG

CAS NO.	COMPOUND	MDL	RL	CONC	Q
67-64-1	Acetone	2.0	10	13	
71-43-2	Benzene	0.47	10		U
75-27-4	Bromodichloromethane	0.30	10		U
75-25-2	Bromoform	1.00	10		U
74-83-9	Bromomethane	0.72	10		U
78-93-3	2-Butanone	1.4	10		U
75-15-0	Carbon disulfide	1.3	10		U
56-23-5	Carbon tetrachloride	0.88	10		U
108-90-7	Chlorobenzene	0.34	10		U
75-00-3	Chloroethane	1.1	10		U
67-66-3	Chloroform	0.55	10		U
74-87-3	Chloromethane	0.52	10		U
110-82-7	Cyclohexane	0.54	10		U
124-48-1	Dibromochloromethane	0.34	10		U
96-12-8	1,2-Dibromo-3-chloropropane	1.2	5.0		U
106-93-4	1,2-Dibromoethane	0.43	10		U
95-50-1	1,2-Dichlorobenzene	0.37	10		U
541-73-1	1,3-Dichlorobenzene	0.84	10		U
106-46-7	1,4-Dichlorobenzene	0.55	10		U
75-71-8	Dichlorodifluoromethane	1.1	10		U
75-34-3	1,1-Dichloroethane	0.54	10		U
107-06-2	1,2-Dichloroethane	0.46	10		U
75-35-4	1,1-Dichloroethene	1.2	10		U
156-59-2	cis-1,2-Dichloroethene	1.2	10		U
156-60-5	trans-1,2-Dichloroethene	1.1	10		U
78-87-5	1,2-Dichloropropane	0.46	10		U
10061-01-5	cis-1,3-Dichloropropene	0.50	10		U
10061-02-6	trans-1,3-Dichloropropene	0.32	10		U
100-41-4	Ethylbenzene	0.75	10		U
591-78-6	2-Hexanone	2.3	10		U
98-82-8	Isopropylbenzene	0.88	10		U
79-20-9	Methyl acetate	1.6	10		U
75-09-2	Methylene chloride	0.62	10	10u ~~0.73~~	~~JB~~ B
108-87-2	Methyl cyclohexane	0.30	10		U
1634-04-4	Methyl tert-butyl ether	0.32	10		U
108-10-1	4-Methyl-2-pentanone	0.58	10		U
100-42-5	Styrene	0.35	10		U
79-34-5	1,1,2,2-Tetrachloroethane	0.43	10		U
127-18-4	Tetrachloroethene	0.97	10		U

hw
2/28/09

FORM 1
VOLATILE ORGANICS ANALYSIS DATA SHEET

CLIENT SAMPLE NO.

MR08-IS16
3-4-5-08D

18

Lab Name: EMPIRICAL LABS Contract: CH2MHILL

Lab Code: NA Case No.: NA SAS No.: NA SDG No.: LEJEUNE040

Matrix: (soil/water) SOIL Lab Sample ID: 0812301-18

Sample wt/vol: 5.7 (g/mL) G Lab File ID: 1230118A

Level: (low/med) LOW Date Sampled: 12/18/08 09:20

% Moisture: not dec. 12 Date Analyzed: 01/01/09 15:11

GC Column: RTX-VRX ID: 0.25 (mm) Dilution Factor: 1.0

Soil Extract Volume:_____(uL) Soil Aliquot Volume: _____(uL)

CONCENTRATION UNITS: (ug/L or ug/Kg) UG/KG

CAS NO.	COMPOUND	MDL	RL	CONC	Q
108-88-3	Toluene	0.86	10		U
120-82-1	1,2,4-Trichlorobenzene	0.18	10		U
71-55-6	1,1,1-Trichloroethane	0.90	10		U
79-00-5	1,1,2-Trichloroethane	0.35	10		U
79-01-6	Trichloroethene	0.85	10		U
76-13-1	Trichlorotrifluoroethane	0.55	10		U
75-69-4	Trichlorofluoromethane	0.95	10		U
75-01-4	Vinyl chloride	1.1	10		U
1330-20-7	Xylene(total)	0.70	10		U

kw
2/28/09

FORM 1
VOLATILE ORGANICS ANALYSIS DATA SHEET

CLIENT SAMPLE NO. 19

MR08-SS152-08D

Lab Name: EMPIRICAL LABS Contract: CH2MHILL

Lab Code: NA Case No.: NA SAS No.: NA SDG No.: LEJEUNE040

Matrix: (soil/water) SOIL Lab Sample ID: 0812301-19

Sample wt/vol: 5.8 (g/mL) G Lab File ID: 1230119A

Level: (low/med) LOW Date Sampled: 12/18/08 09:55

% Moisture: not dec. 11 Date Analyzed: 01/01/09 15:42

GC Column: RTX-VRX ID: 0.25 (mm) Dilution Factor: 1.0

Soil Extract Volume:_____(uL) Soil Aliquot Volume: _____(uL)

CONCENTRATION UNITS: (ug/L or ug/Kg) UG/KG

CAS NO.	COMPOUND	MDL	RL	CONC	Q
67-64-1	Acetone	1.9	9.7	53	
71-43-2	Benzene	0.46	9.7	9.7U ~~0.95~~	~~JB~~ B
75-27-4	Bromodichloromethane	0.29	9.7		U
75-25-2	Bromoform	0.97	9.7		U
74-83-9	Bromomethane	0.70	9.7		U
78-93-3	2-Butanone	1.4	9.7	17	
75-15-0	Carbon disulfide	1.3	9.7	3.0	J
56-23-5	Carbon tetrachloride	0.86	9.7		U
108-90-7	Chlorobenzene	0.33	9.7		U
75-00-3	Chloroethane	1.1	9.7		U
67-66-3	Chloroform	0.54	9.7	0.73	J
74-87-3	Chloromethane	0.51	9.7		U
110-82-7	Cyclohexane	0.52	9.7		U
124-48-1	Dibromochloromethane	0.33	9.7		U
96-12-8	1,2-Dibromo-3-chloropropane	1.2	4.9		U
106-93-4	1,2-Dibromoethane	0.42	9.7		U
95-50-1	1,2-Dichlorobenzene	0.36	9.7		U
541-73-1	1,3-Dichlorobenzene	0.82	9.7		U
106-46-7	1,4-Dichlorobenzene	0.54	9.7		U
75-71-8	Dichlorodifluoromethane	1.1	9.7		U
75-34-3	1,1-Dichloroethane	0.52	9.7		U
107-06-2	1,2-Dichloroethane	0.45	9.7		U
75-35-4	1,1-Dichloroethene	1.2	9.7		U
156-59-2	cis-1,2-Dichloroethene	1.2	9.7		U
156-60-5	trans-1,2-Dichloroethene	1.1	9.7		U
78-87-5	1,2-Dichloropropane	0.45	9.7		U
10061-01-5	cis-1,3-Dichloropropene	0.49	9.7		U
10061-02-6	trans-1,3-Dichloropropene	0.31	9.7		U
100-41-4	Ethylbenzene	0.73	9.7		U
591-78-6	2-Hexanone	2.2	9.7		U
98-82-8	Isopropylbenzene	0.86	9.7		U
79-20-9	Methyl acetate	1.6	9.7		U
75-09-2	Methylene chloride	0.60	9.7	9.7U ~~0.73~~	~~JB~~ B
108-87-2	Methyl cyclohexane	0.29	9.7	0.34	J
1634-04-4	Methyl tert-butyl ether	0.31	9.7		U
108-10-1	4-Methyl-2-pentanone	0.56	9.7	0.59	J
100-42-5	Styrene	0.34	9.7		U
79-34-5	1,1,2,2-Tetrachloroethane	0.42	9.7		U
127-18-4	Tetrachloroethene	0.94	9.7		U

nw 2/28/09

FORM 1
VOLATILE ORGANICS ANALYSIS DATA SHEET

CLIENT SAMPLE NO. 19

MR08-SS152-08D

Lab Name: EMPIRICAL LABS Contract: CH2MHILL

Lab Code: NA Case No.: NA SAS No.: NA SDG No.: LEJEUNE040

Matrix: (soil/water) SOIL Lab Sample ID: 0812301-19

Sample wt/vol: 5.8 (g/mL) G Lab File ID: 1230119A

Level: (low/med) LOW Date Sampled: 12/18/08 09:55

% Moisture: not dec. 11 Date Analyzed: 01/01/09 15:42

GC Column: RTX-VRX ID: 0.25 (mm) Dilution Factor: 1.0

Soil Extract Volume:_____(uL) Soil Aliquot Volume: _____(uL)

CONCENTRATION UNITS: (ug/L or ug/Kg) UG/KG

CAS NO.	COMPOUND	MDL	RL	CONC	Q
108-88-3	Toluene	0.84	9.7	1.8	J
120-82-1	1,2,4-Trichlorobenzene	0.18	9.7		U
71-55-6	1,1,1-Trichloroethane	0.88	9.7		U
79-00-5	1,1,2-Trichloroethane	0.34	9.7		U
79-01-6	Trichloroethene	0.83	9.7		U
76-13-1	Trichlorotrifluoroethane	0.54	9.7		U
75-69-4	Trichlorofluoromethane	0.92	9.7		U
75-01-4	Vinyl chloride	1.1	9.7		U
1330-20-7	Xylene(total)	0.68	9.7		U

2/28/09

FORM 1
VOLATILE ORGANICS ANALYSIS DATA SHEET

CLIENT SAMPLE NO. 20

MR08-IS15
2-4-5-08D

Lab Name: EMPIRICAL LABS Contract: CH2MHILL

Lab Code: NA Case No.: NA SAS No.: NA SDG No.: LEJEUNE040

Matrix: (soil/water) SOIL Lab Sample ID: 0812301-20

Sample wt/vol: 6.4 (g/mL) G Lab File ID: 1230120A

Level: (low/med) LOW Date Sampled: 12/18/08 10:00

% Moisture: not dec. 14 Date Analyzed: 01/01/09 16:12

GC Column: RTX-VRX ID: 0.25 (mm) Dilution Factor: 1.0

Soil Extract Volume:_____(uL) Soil Aliquot Volume: _____(uL)

CONCENTRATION UNITS: (ug/L or ug/Kg) UG/KG

CAS NO.	COMPOUND	MDL	RL	CONC	Q
67-64-1	Acetone	1.8	9.0	14	
71-43-2	Benzene	0.42	9.0		U
75-27-4	Bromodichloromethane	0.27	9.0		U
75-25-2	Bromoform	0.90	9.0		U
74-83-9	Bromomethane	0.65	9.0		U
78-93-3	2-Butanone	1.3	9.0		U
75-15-0	Carbon disulfide	1.2	9.0		U
56-23-5	Carbon tetrachloride	0.80	9.0		U
108-90-7	Chlorobenzene	0.31	9.0		U
75-00-3	Chloroethane	1.00	9.0		U
67-66-3	Chloroform	0.50	9.0		U
74-87-3	Chloromethane	0.47	9.0		U
110-82-7	Cyclohexane	0.49	9.0		U
124-48-1	Dibromochloromethane	0.31	9.0		U
96-12-8	1,2-Dibromo-3-chloropropane	1.1	4.5		U
106-93-4	1,2-Dibromoethane	0.39	9.0		U
95-50-1	1,2-Dichlorobenzene	0.34	9.0		U
541-73-1	1,3-Dichlorobenzene	0.76	9.0		U
106-46-7	1,4-Dichlorobenzene	0.50	9.0		U
75-71-8	Dichlorodifluoromethane	1.00	9.0		U
75-34-3	1,1-Dichloroethane	0.49	9.0		U
107-06-2	1,2-Dichloroethane	0.42	9.0		U
75-35-4	1,1-Dichloroethene	1.1	9.0		U
156-59-2	cis-1,2-Dichloroethene	1.1	9.0		U
156-60-5	trans-1,2-Dichloroethene	1.00	9.0		U
78-87-5	1,2-Dichloropropane	0.42	9.0		U
10061-01-5	cis-1,3-Dichloropropene	0.45	9.0		U
10061-02-6	trans-1,3-Dichloropropene	0.29	9.0		U
100-41-4	Ethylbenzene	0.68	9.0		U
591-78-6	2-Hexanone	2.1	9.0		U
98-82-8	Isopropylbenzene	0.80	9.0		U
79-20-9	Methyl acetate	1.4	9.0		U
75-09-2	Methylene chloride	0.56	9.0	9.04 0.68	~~JB~~ B
108-87-2	Methyl cyclohexane	0.27	9.0		U
1634-04-4	Methyl tert-butyl ether	0.29	9.0		U
108-10-1	4-Methyl-2-pentanone	0.52	9.0		U
100-42-5	Styrene	0.32	9.0		U
79-34-5	1,1,2,2-Tetrachloroethane	0.39	9.0		U
127-18-4	Tetrachloroethene	0.88	9.0		U

FORM I VOA

lw
2/28/09

FORM 1
VOLATILE ORGANICS ANALYSIS DATA SHEET

CLIENT SAMPLE NO. 20

MR08-IS15
2-4-5-08D

Lab Name: EMPIRICAL LABS Contract: CH2MHILL

Lab Code: NA Case No.: NA SAS No.: NA SDG No.: LEJEUNE040

Matrix: (soil/water) SOIL Lab Sample ID: 0812301-20

Sample wt/vol: 6.4 (g/mL) G Lab File ID: 1230120A

Level: (low/med) LOW Date Sampled: 12/18/08 10:00

% Moisture: not dec. 14 Date Analyzed: 01/01/09 16:12

GC Column: RTX-VRX ID: 0.25 (mm) Dilution Factor: 1.0

Soil Extract Volume:_____(uL) Soil Aliquot Volume: _____(uL)

CONCENTRATION UNITS: (ug/L or ug/Kg) UG/KG

CAS NO.	COMPOUND	MDL	RL	CONC	Q
108-88-3	Toluene	0.78	9.0		U
120-82-1	1,2,4-Trichlorobenzene	0.16	9.0		U
71-55-6	1,1,1-Trichloroethane	0.82	9.0		U
79-00-5	1,1,2-Trichloroethane	0.32	9.0		U
79-01-6	Trichloroethene	0.77	9.0		U
76-13-1	Trichlorotrifluoroethane	0.50	9.0		U
75-69-4	Trichlorofluoromethane	0.86	9.0		U
75-01-4	Vinyl chloride	1.00	9.0		U
1330-20-7	Xylene(total)	0.63	9.0		U

RCJ
2/28/09

FORM 1
VOLATILE ORGANICS ANALYSIS DATA SHEET

CLIENT SAMPLE NO. 21

MR08-SS139-08D

Lab Name: EMPIRICAL LABS Contract: CH2MHILL

Lab Code: NA Case No.: NA SAS No.: NA SDG No.: LEJEUNE040

Matrix: (soil/water) SOIL Lab Sample ID: 0812301-21

Sample wt/vol: 4.8 (g/mL) G Lab File ID: 1230121A

Level: (low/med) LOW Date Sampled: 12/18/08 10:30

% Moisture: not dec. 13 Date Analyzed: 01/01/09 16:43

GC Column: RTX-VRX ID: 0.25 (mm) Dilution Factor: 1.0

Soil Extract Volume:_____(uL) Soil Aliquot Volume: _____(uL)

CONCENTRATION UNITS: (ug/L or ug/Kg) UG/KG

CAS NO.	COMPOUND	MDL	RL	CONC	Q	
67-64-1	Acetone	2.4	12	150		
71-43-2	Benzene	0.57	12	12u ~~1.4~~	~~JB~~	BL
75-27-4	Bromodichloromethane	0.36	12		U	
75-25-2	Bromoform	1.2	12		U	
74-83-9	Bromomethane	0.87	12		U	
78-93-3	2-Butanone	1.7	12	27		
75-15-0	Carbon disulfide	1.6	12	9.8	J	
56-23-5	Carbon tetrachloride	1.1	12		U	
108-90-7	Chlorobenzene	0.41	12		U	
75-00-3	Chloroethane	1.3	12		U	
67-66-3	Chloroform	0.66	12		U	
74-87-3	Chloromethane	0.63	12		U	
110-82-7	Cyclohexane	0.65	12		U	
124-48-1	Dibromochloromethane	0.41	12		U	
96-12-8	1,2-Dibromo-3-chloropropane	1.4	6.0		~~U~~ UJ	JL
106-93-4	1,2-Dibromoethane	0.52	12		U	
95-50-1	1,2-Dichlorobenzene	0.45	12		~~U~~ UJ	JSL
541-73-1	1,3-Dichlorobenzene	1.0	12		~~U~~	
106-46-7	1,4-Dichlorobenzene	0.66	12		~~U~~	
75-71-8	Dichlorodifluoromethane	1.3	12		U	
75-34-3	1,1-Dichloroethane	0.65	12		U	
107-06-2	1,2-Dichloroethane	0.56	12		U	
75-35-4	1,1-Dichloroethene	1.4	12		U	
156-59-2	cis-1,2-Dichloroethene	1.4	12		U	
156-60-5	trans-1,2-Dichloroethene	1.3	12		U	
78-87-5	1,2-Dichloropropane	0.56	12		U	
10061-01-5	cis-1,3-Dichloropropene	0.60	12		U	
10061-02-6	trans-1,3-Dichloropropene	0.39	12		U	
100-41-4	Ethylbenzene	0.91	12	1.2	J	
591-78-6	2-Hexanone	2.8	12		U	
98-82-8	Isopropylbenzene	1.1	12		U	
79-20-9	Methyl acetate	1.9	12		U	
75-09-2	Methylene chloride	0.75	12	12u ~~0.84~~	~~JB~~	BL
108-87-2	Methyl cyclohexane	0.36	12	0.41	J	
1634-04-4	Methyl tert-butyl ether	0.39	12		U	
108-10-1	4-Methyl-2-pentanone	0.70	12	0.98	J	
100-42-5	Styrene	0.42	12		U	
79-34-5	1,1,2,2-Tetrachloroethane	0.52	12		~~U~~ UJ	JSL
127-18-4	Tetrachloroethene	1.2	12		U	

FORM I VOA

LW
2/28/09

FORM 1
VOLATILE ORGANICS ANALYSIS DATA SHEET

CLIENT SAMPLE NO. 21

MR08-SS139-08D

Lab Name: EMPIRICAL LABS Contract: CH2MHILL

Lab Code: NA Case No.: NA SAS No.: NA SDG No.: LEJEUNE040

Matrix: (soil/water) SOIL Lab Sample ID: 0812301-21

Sample wt/vol: 4.8 (g/mL) G Lab File ID: 1230121A

Level: (low/med) LOW Date Sampled: 12/18/08 10:30

% Moisture: not dec. 13 Date Analyzed: 01/01/09 16:43

GC Column: RTX-VRX ID: 0.25 (mm) Dilution Factor: 1.0

Soil Extract Volume:_____(uL) Soil Aliquot Volume: _____(uL)

CONCENTRATION UNITS: (ug/L or ug/Kg) UG/KG

CAS NO.	COMPOUND	MDL	RL	CONC	Q
108-88-3	Toluene	1.0	12	4.6	J
120-82-1	1,2,4-Trichlorobenzene	0.22	12	12UJ ~~0.29~~ ~~JB~~ JSL	B
71-55-6	1,1,1-Trichloroethane	1.1	12		U
79-00-5	1,1,2-Trichloroethane	0.42	12		U
79-01-6	Trichloroethene	1.0	12	1.3	J
76-13-1	Trichlorotrifluoroethane	0.66	12		U
75-69-4	Trichlorofluoromethane	1.1	12		U
75-01-4	Vinyl chloride	1.3	12		U
1330-20-7	Xylene(total)	0.85	12		U

MW 2/28/09

FORM 1
VOLATILE ORGANICS ANALYSIS DATA SHEET

CLIENT SAMPLE NO. 21RE

MR08-SS139-08DR

Lab Name: EMPIRICAL LABS Contract: CH2MHILL

Lab Code: NA Case No.: NA SAS No.: NA SDG No.: LEJEUNE040

Matrix: (soil/water) SOIL Lab Sample ID: 0812301-21R

Sample wt/vol: 5.1 (g/mL) G Lab File ID: 1230121B

Level: (low/med) LOW Date Sampled: 12/18/08 10:30

% Moisture: not dec. 13 Date Analyzed: 01/09/09 02:05 Use ORIGINAL

GC Column: RTX-VRX ID: 0.25 (mm) Dilution Factor: 1.0

Soil Extract Volume:_____(uL) Soil Aliquot Volume: _____(uL)

CONCENTRATION UNITS: (ug/L or ug/Kg) UG/KG

CAS NO.	COMPOUND	MDL	RL	CONC	Q	
67-64-1	Acetone	2.3	11	170	J	H
71-43-2	Benzene	0.53	11	1.2	J J	
75-27-4	Bromodichloromethane	0.34	11		U UJ	
75-25-2	Bromoform	1.1	11		U	
74-83-9	Bromomethane	0.82	11		U	
78-93-3	2-Butanone	1.6	11	8.9	J J	
75-15-0	Carbon disulfide	1.5	11	11	J J	
56-23-5	Carbon tetrachloride	1.00	11		U UJ	
108-90-7	Chlorobenzene	0.39	11		U	
75-00-3	Chloroethane	1.2	11		U	
67-66-3	Chloroform	0.62	11		U	
74-87-3	Chloromethane	0.59	11		U	
110-82-7	Cyclohexane	0.61	11		U	
124-48-1	Dibromochloromethane	0.39	11		U	
96-12-8	1,2-Dibromo-3-chloropropane	1.4	5.7		U	
106-93-4	1,2-Dibromoethane	0.49	11		U	
95-50-1	1,2-Dichlorobenzene	0.42	11		U	
541-73-1	1,3-Dichlorobenzene	0.95	11		U	
106-46-7	1,4-Dichlorobenzene	0.62	11		U	
75-71-8	Dichlorodifluoromethane	1.2	11		U	
75-34-3	1,1-Dichloroethane	0.61	11		U	
107-06-2	1,2-Dichloroethane	0.52	11		U	
75-35-4	1,1-Dichloroethene	1.4	11		U	
156-59-2	cis-1,2-Dichloroethene	1.4	11		U	
156-60-5	trans-1,2-Dichloroethene	1.2	11		U	
78-87-5	1,2-Dichloropropane	0.52	11		U	
10061-01-5	cis-1,3-Dichloropropene	0.57	11		U	
10061-02-6	trans-1,3-Dichloropropene	0.36	11		U	
100-41-4	Ethylbenzene	0.85	11		U	
591-78-6	2-Hexanone	2.6	11		U	
98-82-8	Isopropylbenzene	1.00	11		U	
79-20-9	Methyl acetate	1.8	11		U	
75-09-2	Methylene chloride	0.70	11	11UJ ~~1.2~~	~~JB~~	H+B
108-87-2	Methyl cyclohexane	0.34	11	0.35	J J	H
1634-04-4	Methyl tert-butyl ether	0.36	11		U UJ	
108-10-1	4-Methyl-2-pentanone	0.66	11	0.74	J J	
100-42-5	Styrene	0.40	11		U UJ	
79-34-5	1,1,2,2-Tetrachloroethane	0.49	11		U	
127-18-4	Tetrachloroethene	1.1	11		U	

FORM I VOA

LW 2/28/09

FORM 1
VOLATILE ORGANICS ANALYSIS DATA SHEET

CLIENT SAMPLE NO. 21RE

MR08-SS139-08DR

Lab Name: EMPIRICAL LABS Contract: CH2MHILL

Lab Code: NA Case No.: NA SAS No.: NA SDG No.: LEJEUNE040

Matrix: (soil/water) SOIL Lab Sample ID: 0812301-21R

Sample wt/vol: 5.1 (g/mL) G Lab File ID: 1230121B

Level: (low/med) LOW Date Sampled: 12/18/08 10:30

% Moisture: not dec. 13 Date Analyzed: 01/09/09 02:05 Use original

GC Column: RTX-VRX ID: 0.25 (mm) Dilution Factor: 1.0

Soil Extract Volume:_____(uL) Soil Aliquot Volume: _____(uL)

CONCENTRATION UNITS: (ug/L or ug/Kg) UG/KG

CAS NO.	COMPOUND	MDL	RL	CONC	Q
108-88-3	Toluene	0.98	11	3.8	~~J~~ J
120-82-1	1,2,4-Trichlorobenzene	0.20	11		U UJ
71-55-6	1,1,1-Trichloroethane	1.0	11		U
79-00-5	1,1,2-Trichloroethane	0.40	11		U
79-01-6	Trichloroethene	0.96	11	1.0	J J
76-13-1	Trichlorotrifluoroethane	0.62	11		U UJ
75-69-4	Trichlorofluoromethane	1.1	11		U
75-01-4	Vinyl chloride	1.2	11		U
1330-20-7	Xylene(total)	0.80	11		U

R

FORM I VOA

2/28/09

FORM 1
VOLATILE ORGANICS ANALYSIS DATA SHEET

CLIENT SAMPLE NO. 22

MR08-SS139D-08D

Lab Name: EMPIRICAL LABS Contract: CH2MHILL

Lab Code: NA Case No.: NA SAS No.: NA SDG No.: LEJEUNE040

Matrix: (soil/water) SOIL Lab Sample ID: 0812301-22

Sample wt/vol: 5.0 (g/mL) G Lab File ID: 1230122A

Level: (low/med) LOW Date Sampled: 12/18/08 10:30 use reanalysis

% Moisture: not dec. 15 Date Analyzed: 01/01/09 17:13

GC Column: RTX-VRX ID: 0.25 (mm) Dilution Factor: 1.0

Soil Extract Volume:_____(uL) Soil Aliquot Volume:_____(uL)

CONCENTRATION UNITS: (ug/L or ug/Kg) UG/KG

CAS NO.	COMPOUND	MDL	RL	CONC	Q
67-64-1	Acetone	2.3	12	130	J
71-43-2	Benzene	0.55	12	12UJ ~~1.2~~	~~JB~~ SSL
75-27-4	Bromodichloromethane	0.35	12		U UJ
75-25-2	Bromoform	1.2	12		U
74-83-9	Bromomethane	0.84	12		U
78-93-3	2-Butanone	1.6	12	26	J
75-15-0	Carbon disulfide	1.5	12		U UJ
56-23-5	Carbon tetrachloride	1.0	12		U
108-90-7	Chlorobenzene	0.40	12		U
75-00-3	Chloroethane	1.3	12		U
67-66-3	Chloroform	0.64	12		U
74-87-3	Chloromethane	0.61	12		U
110-82-7	Cyclohexane	0.63	12		U
124-48-1	Dibromochloromethane	0.40	12		U
96-12-8	1,2-Dibromo-3-chloropropane	1.4	5.8		U
106-93-4	1,2-Dibromoethane	0.50	12		U
95-50-1	1,2-Dichlorobenzene	0.43	12		U
541-73-1	1,3-Dichlorobenzene	0.98	12		U
106-46-7	1,4-Dichlorobenzene	0.64	12		U
75-71-8	Dichlorodifluoromethane	1.3	12		U
75-34-3	1,1-Dichloroethane	0.63	12		U
107-06-2	1,2-Dichloroethane	0.54	12		U
75-35-4	1,1-Dichloroethene	1.4	12		U
156-59-2	cis-1,2-Dichloroethene	1.4	12		U
156-60-5	trans-1,2-Dichloroethene	1.3	12		U
78-87-5	1,2-Dichloropropane	0.54	12		U
10061-01-5	cis-1,3-Dichloropropene	0.58	12		U
10061-02-6	trans-1,3-Dichloropropene	0.37	12		U
100-41-4	Ethylbenzene	0.88	12		U
591-78-6	2-Hexanone	2.7	12		U
98-82-8	Isopropylbenzene	1.0	12		U
79-20-9	Methyl acetate	1.9	12		U
75-09-2	Methylene chloride	0.72	12		U
108-87-2	Methyl cyclohexane	0.35	12	0.36	J J
1634-04-4	Methyl tert-butyl ether	0.37	12		U UJ
108-10-1	4-Methyl-2-pentanone	0.68	12	0.80	J J
100-42-5	Styrene	0.41	12		U UJ
79-34-5	1,1,2,2-Tetrachloroethane	0.50	12		U
127-18-4	Tetrachloroethene	1.1	12		U

SS
SSL B
SS

FORM I VOA

Qw 2/28/09

FORM 1
VOLATILE ORGANICS ANALYSIS DATA SHEET

CLIENT SAMPLE NO. 22

MR08-SS139D-08D

Lab Name: EMPIRICAL LABS Contract: CH2MHILL

Lab Code: NA Case No.: NA SAS No.: NA SDG No.: LEJEUNE040

Matrix: (soil/water) SOIL Lab Sample ID: 0812301-22

Sample wt/vol: 5.0 (g/mL) G Lab File ID: 1230122A

Level: (low/med) LOW Date Sampled: 12/18/08 10:30

% Moisture: not dec. 15 Date Analyzed: 01/01/09 17:13 Use reanalysis

GC Column: RTX-VRX ID: 0.25 (mm) Dilution Factor: 1.0

Soil Extract Volume:_____(uL) Soil Aliquot Volume: _____(uL)

CONCENTRATION UNITS: (ug/L or ug/Kg) UG/KG

CAS NO.	COMPOUND	MDL	RL	CONC	Q
108-88-3	Toluene	1.0	12	4.2	~~J~~ J
120-82-1	1,2,4-Trichlorobenzene	0.21	12		U UJ
71-55-6	1,1,1-Trichloroethane	1.0	12		U
79-00-5	1,1,2-Trichloroethane	0.41	12		U
79-01-6	Trichloroethene	0.99	12	1.5	J J
76-13-1	Trichlorotrifluoroethane	0.64	12		U UJ
75-69-4	Trichlorofluoromethane	1.1	12		U
75-01-4	Vinyl chloride	1.3	12		U
1330-20-7	Xylene(total)	0.82	12		U

FORM I VOA

LW
2/28/09

FORM 1
VOLATILE ORGANICS ANALYSIS DATA SHEET

CLIENT SAMPLE NO. 22RE

MR08-SS1
39D-08DR

Lab Name: EMPIRICAL LABS Contract: CH2MHILL

Lab Code: NA Case No.: NA SAS No.: NA SDG No.: LEJEUNE040

Matrix: (soil/water) SOIL Lab Sample ID: 0812301-22R

Sample wt/vol: 5.1 (g/mL) G Lab File ID: 1230122B

Level: (low/med) LOW Date Sampled: 12/18/08 10:30

% Moisture: not dec. 15 Date Analyzed: 01/09/09 02:44

GC Column: RTX-VRX ID: 0.25 (mm) Dilution Factor: 1.0

Soil Extract Volume:_____(uL) Soil Aliquot Volume: _____(uL)

CONCENTRATION UNITS: (ug/L or ug/Kg) UG/KG

CAS NO.	COMPOUND	MDL	RL	CONC	Q	
67-64-1	Acetone	2.3	11	180	J	H
71-43-2	Benzene	0.54	11	1.4	J J	
75-27-4	Bromodichloromethane	0.34	11		U UJ	
75-25-2	Bromoform	1.1	11		U	
74-83-9	Bromomethane	0.82	11		U	
78-93-3	2-Butanone	1.6	11	8.5	J J	
75-15-0	Carbon disulfide	1.5	11	10	J J	
56-23-5	Carbon tetrachloride	1.0	11		U UJ	
108-90-7	Chlorobenzene	0.39	11		U	
75-00-3	Chloroethane	1.2	11		U	
67-66-3	Chloroform	0.63	11		U	
74-87-3	Chloromethane	0.60	11		U	
110-82-7	Cyclohexane	0.62	11	0.66	J J	
124-48-1	Dibromochloromethane	0.39	11		U UJ	
96-12-8	1,2-Dibromo-3-chloropropane	1.4	5.7		U UJ	I
106-93-4	1,2-Dibromoethane	0.49	11		U UJ	H
95-50-1	1,2-Dichlorobenzene	0.42	11		U UJ	I
541-73-1	1,3-Dichlorobenzene	0.96	11		U	
106-46-7	1,4-Dichlorobenzene	0.63	11		U	
75-71-8	Dichlorodifluoromethane	1.2	11		U	H
75-34-3	1,1-Dichloroethane	0.62	11		U	
107-06-2	1,2-Dichloroethane	0.53	11		U	
75-35-4	1,1-Dichloroethene	1.4	11		U	
156-59-2	cis-1,2-Dichloroethene	1.4	11		U	
156-60-5	trans-1,2-Dichloroethene	1.2	11		U	
78-87-5	1,2-Dichloropropane	0.53	11		U	
10061-01-5	cis-1,3-Dichloropropene	0.57	11		U	
10061-02-6	trans-1,3-Dichloropropene	0.37	11		U	
100-41-4	Ethylbenzene	0.86	11		U	
591-78-6	2-Hexanone	2.6	11		U	
98-82-8	Isopropylbenzene	1.0	11		U	
79-20-9	Methyl acetate	1.8	11		U	
75-09-2	Methylene chloride	0.71	11	11 UJ	~~1.2 JB~~ HT	B
108-87-2	Methyl cyclohexane	0.34	11	0.37	J J	H
1634-04-4	Methyl tert-butyl ether	0.37	11		U UJ	
108-10-1	4-Methyl-2-pentanone	0.66	11	0.91	J J	
100-42-5	Styrene	0.40	11		U UJ	
79-34-5	1,1,2,2-Tetrachloroethane	0.49	11		U UJ	I
127-18-4	Tetrachloroethene	1.1	11		U UJ	H

FORM I VOA

2/28/09

FORM 1
VOLATILE ORGANICS ANALYSIS DATA SHEET

CLIENT SAMPLE NO. 22RE

MR08-SS1
39D-08DR

Lab Name: EMPIRICAL LABS Contract: CH2MHILL

Lab Code: NA Case No.: NA SAS No.: NA SDG No.: LEJEUNE040

Matrix: (soil/water) SOIL Lab Sample ID: 0812301-22R

Sample wt/vol: 5.1 (g/mL) G Lab File ID: 1230122B

Level: (low/med) LOW Date Sampled: 12/18/08 10:30

% Moisture: not dec. 15 Date Analyzed: 01/09/09 02:44

GC Column: RTX-VRX ID: 0.25 (mm) Dilution Factor: 1.0

Soil Extract Volume:_____(uL) Soil Aliquot Volume: _____(uL)

CONCENTRATION UNITS: (ug/L or ug/Kg) UG/KG

CAS NO.	COMPOUND	MDL	RL	CONC	Q	
108-88-3	Toluene	0.98	11	4.8	~~U~~ J	H
120-82-1	1,2,4-Trichlorobenzene	0.20	11		~~U~~ UJ	IS
71-55-6	1,1,1-Trichloroethane	1.0	11		~~U~~ UJ	H
79-00-5	1,1,2-Trichloroethane	0.40	11		U	
79-01-6	Trichloroethene	0.97	11	1.7	~~U~~ J	
76-13-1	Trichlorotrifluoroethane	0.63	11		~~U~~ UJ	
75-69-4	Trichlorofluoromethane	1.1	11		U	
75-01-4	Vinyl chloride	1.2	11		U	
1330-20-7	Xylene(total)	0.80	11		U	

FORM I VOA

fw
2/28/09

FORM 1
VOLATILE ORGANICS ANALYSIS DATA SHEET

CLIENT SAMPLE NO. 23

MR08-IS139
-0.5-1.5-08D

Lab Name: EMPIRICAL LABS Contract: CH2MHILL

Lab Code: NA Case No.: NA SAS No.: NA SDG No.: LEJEUNE040

Matrix: (soil/water) SOIL Lab Sample ID: 0812301-23

Sample wt/vol: 5.9 (g/mL) G Lab File ID: 1230123A

Level: (low/med) LOW Date Sampled: 12/18/08 10:55

% Moisture: not dec. 9 Date Analyzed: 01/01/09 17:44

GC Column: RTX-VRX ID: 0.25 (mm) Dilution Factor: 1.0

Soil Extract Volume:_____(uL) Soil Aliquot Volume: _____(uL)

CONCENTRATION UNITS: (ug/L or ug/Kg) UG/KG

CAS NO.	COMPOUND	MDL	RL	CONC	Q
67-64-1	Acetone	1.9	9.4	12	
71-43-2	Benzene	0.44	9.4		U
75-27-4	Bromodichloromethane	0.28	9.4		U
75-25-2	Bromoform	0.94	9.4		U
74-83-9	Bromomethane	0.68	9.4		U
78-93-3	2-Butanone	1.3	9.4		U
75-15-0	Carbon disulfide	1.2	9.4		U
56-23-5	Carbon tetrachloride	0.82	9.4		U
108-90-7	Chlorobenzene	0.32	9.4		U
75-00-3	Chloroethane	1.0	9.4		U
67-66-3	Chloroform	0.52	9.4		U
74-87-3	Chloromethane	0.49	9.4		U
110-82-7	Cyclohexane	0.51	9.4		U
124-48-1	Dibromochloromethane	0.32	9.4		U
96-12-8	1,2-Dibromo-3-chloropropane	1.1	4.7		U
106-93-4	1,2-Dibromoethane	0.40	9.4		U
95-50-1	1,2-Dichlorobenzene	0.35	9.4		U
541-73-1	1,3-Dichlorobenzene	0.79	9.4		U
106-46-7	1,4-Dichlorobenzene	0.52	9.4		U
75-71-8	Dichlorodifluoromethane	1.0	9.4		U
75-34-3	1,1-Dichloroethane	0.51	9.4		U
107-06-2	1,2-Dichloroethane	0.43	9.4		U
75-35-4	1,1-Dichloroethene	1.1	9.4		U
156-59-2	cis-1,2-Dichloroethene	1.1	9.4		U
156-60-5	trans-1,2-Dichloroethene	1.0	9.4		U
78-87-5	1,2-Dichloropropane	0.43	9.4		U
10061-01-5	cis-1,3-Dichloropropene	0.47	9.4		U
10061-02-6	trans-1,3-Dichloropropene	0.30	9.4		U
100-41-4	Ethylbenzene	0.70	9.4		U
591-78-6	2-Hexanone	2.2	9.4		U
98-82-8	Isopropylbenzene	0.82	9.4		U
79-20-9	Methyl acetate	1.5	9.4		U
75-09-2	Methylene chloride	0.58	9.4	9.44 ~~0.89~~ ~~JB~~	B
108-87-2	Methyl cyclohexane	0.28	9.4		U
1634-04-4	Methyl tert-butyl ether	0.30	9.4		U
108-10-1	4-Methyl-2-pentanone	0.54	9.4		U
100-42-5	Styrene	0.33	9.4		U
79-34-5	1,1,2,2-Tetrachloroethane	0.40	9.4		U
127-18-4	Tetrachloroethene	0.91	9.4		U

2/28/09

FORM 1
VOLATILE ORGANICS ANALYSIS DATA SHEET

CLIENT SAMPLE NO.

MR08-IS139
-0.5-1.5-08D

23

Lab Name: EMPIRICAL LABS Contract: CH2MHILL

Lab Code: NA Case No.: NA SAS No.: NA SDG No.: LEJEUNE040

Matrix: (soil/water) SOIL Lab Sample ID: 0812301-23

Sample wt/vol: 5.9 (g/mL) G Lab File ID: 1230123A

Level: (low/med) LOW Date Sampled: 12/18/08 10:55

% Moisture: not dec. 9 Date Analyzed: 01/01/09 17:44

GC Column: RTX-VRX ID: 0.25 (mm) Dilution Factor: 1.0

Soil Extract Volume:_____(uL) Soil Aliquot Volume: _____(uL)

CONCENTRATION UNITS: (ug/L or ug/Kg) UG/KG

CAS NO.	COMPOUND	MDL	RL	CONC	Q
108-88-3	Toluene	0.81	9.4		U
120-82-1	1,2,4-Trichlorobenzene	0.17	9.4		U
71-55-6	1,1,1-Trichloroethane	0.84	9.4		U
79-00-5	1,1,2-Trichloroethane	0.33	9.4		U
79-01-6	Trichloroethene	0.80	9.4		U
76-13-1	Trichlorotrifluoroethane	0.52	9.4		U
75-69-4	Trichlorofluoromethane	0.89	9.4		U
75-01-4	Vinyl chloride	1.0	9.4		U
1330-20-7	Xylene(total)	0.66	9.4		U

lw
2/28/09

FORM 1
VOLATILE ORGANICS ANALYSIS DATA SHEET

CLIENT SAMPLE NO. 24

MR08-IS139
D-0.5-1.5-08D

Lab Name: EMPIRICAL LABS Contract: CH2MHILL

Lab Code: NA Case No.: NA SAS No.: NA SDG No.: LEJEUNE040

Matrix: (soil/water) SOIL Lab Sample ID: 0812301-24

Sample wt/vol: 5.2 (g/mL) G Lab File ID: 1230124A

Level: (low/med) LOW Date Sampled: 12/18/08 10:55

% Moisture: not dec. 12 Date Analyzed: 01/01/09 18:14

GC Column: RTX-VRX ID: 0.25 (mm) Dilution Factor: 1.0

Soil Extract Volume:_____(uL) Soil Aliquot Volume: _____(uL)

CONCENTRATION UNITS: (ug/L or ug/Kg) UG/KG

CAS NO.	COMPOUND	MDL	RL	CONC	Q
67-64-1	Acetone	2.2	11	26	
71-43-2	Benzene	0.52	11		U
75-27-4	Bromodichloromethane	0.33	11		U
75-25-2	Bromoform	1.1	11		U
74-83-9	Bromomethane	0.79	11		U
78-93-3	2-Butanone	1.5	11	4.1	J
75-15-0	Carbon disulfide	1.4	11		U
56-23-5	Carbon tetrachloride	0.96	11		U
108-90-7	Chlorobenzene	0.37	11		U
75-00-3	Chloroethane	1.2	11		U
67-66-3	Chloroform	0.60	11		U
74-87-3	Chloromethane	0.57	11		U
110-82-7	Cyclohexane	0.59	11		U
124-48-1	Dibromochloromethane	0.37	11		U
96-12-8	1,2-Dibromo-3-chloropropane	1.3	5.5		~~U~~ UJ ISL
106-93-4	1,2-Dibromoethane	0.47	11		U
95-50-1	1,2-Dichlorobenzene	0.40	11		~~U~~ UJ ISL
541-73-1	1,3-Dichlorobenzene	0.92	11		~~U~~ ↓ ↓
106-46-7	1,4-Dichlorobenzene	0.60	11		~~U~~
75-71-8	Dichlorodifluoromethane	1.2	11		U
75-34-3	1,1-Dichloroethane	0.59	11		U
107-06-2	1,2-Dichloroethane	0.50	11		U
75-35-4	1,1-Dichloroethene	1.3	11		U
156-59-2	cis-1,2-Dichloroethene	1.3	11		U
156-60-5	trans-1,2-Dichloroethene	1.2	11		U
78-87-5	1,2-Dichloropropane	0.50	11		U
10061-01-5	cis-1,3-Dichloropropene	0.55	11		U
10061-02-6	trans-1,3-Dichloropropene	0.35	11		U
100-41-4	Ethylbenzene	0.82	11		U
591-78-6	2-Hexanone	2.5	11		U
98-82-8	Isopropylbenzene	0.96	11		U
79-20-9	Methyl acetate	1.8	11		U
75-09-2	Methylene chloride	0.68	11	11u ~~0.91~~	~~JB~~
108-87-2	Methyl cyclohexane	0.33	11		U
1634-04-4	Methyl tert-butyl ether	0.35	11		U
108-10-1	4-Methyl-2-pentanone	0.64	11		U
100-42-5	Styrene	0.38	11		U
79-34-5	1,1,2,2-Tetrachloroethane	0.47	11		~~U~~ UJ IS
127-18-4	Tetrachloroethene	1.1	11		U

FORM I VOA

2/28/09

FORM 1
VOLATILE ORGANICS ANALYSIS DATA SHEET

CLIENT SAMPLE NO.

24

MR08-IS139
D-0.5-1.5-08D

Lab Name: EMPIRICAL LABS Contract: CH2MHILL

Lab Code: NA Case No.: NA SAS No.: NA SDG No.: LEJEUNE040

Matrix: (soil/water) SOIL Lab Sample ID: 0812301-24

Sample wt/vol: 5.2 (g/mL) G Lab File ID: 1230124A

Level: (low/med) LOW Date Sampled: 12/18/08 10:55

% Moisture: not dec. 12 Date Analyzed: 01/01/09 18:14

GC Column: RTX-VRX ID: 0.25 (mm) Dilution Factor: 1.0

Soil Extract Volume:_____(uL) Soil Aliquot Volume: _____(uL)

CONCENTRATION UNITS: (ug/L or ug/Kg) UG/KG

CAS NO.	COMPOUND	MDL	RL	CONC	Q
108-88-3	Toluene	0.94	11		U
120-82-1	1,2,4-Trichlorobenzene	0.20	11	114 J ~~0.22~~ ~~JB~~ BLB	
71-55-6	1,1,1-Trichloroethane	0.99	11		U
79-00-5	1,1,2-Trichloroethane	0.38	11		U
79-01-6	Trichloroethene	0.93	11		U
76-13-1	Trichlorotrifluoroethane	0.60	11		U
75-69-4	Trichlorofluoromethane	1.0	11		U
75-01-4	Vinyl chloride	1.2	11		U
1330-20-7	Xylene(total)	0.77	11		U

FORM I VOA

gw
2/28/09

FORM 1
VOLATILE ORGANICS ANALYSIS DATA SHEET

CLIENT SAMPLE NO. 24R

MR08-IS139
D-0.5-1.5-08DR

Lab Name: EMPIRICAL LABS Contract: CH2MHILL

Lab Code: NA Case No.: NA SAS No.: NA SDG No.: LEJEUNE040

Matrix: (soil/water) SOIL Lab Sample ID: 0812301-24R

Sample wt/vol: 6.1 (g/mL) G Lab File ID: 1230124B

Level: (low/med) LOW Date Sampled: 12/18/08 10:55

% Moisture: not dec. 12 Date Analyzed: 01/09/09 03:23 Use orig. NA

GC Column: RTX-VRX ID: 0.25 (mm) Dilution Factor: 1.0

Soil Extract Volume:_____(uL) Soil Aliquot Volume: _____(uL)

CONCENTRATION UNITS: (ug/L or ug/Kg) UG/KG

CAS NO.	COMPOUND	MDL	RL	CONC	Q	
67-64-1	Acetone	1.9	9.4	26	J	H
71-43-2	Benzene	0.44	9.4		U UJ	
75-27-4	Bromodichloromethane	0.28	9.4		U	
75-25-2	Bromoform	0.94	9.4		U	
74-83-9	Bromomethane	0.68	9.4		U	
78-93-3	2-Butanone	1.3	9.4		U	
75-15-0	Carbon disulfide	1.2	9.4		U	
56-23-5	Carbon tetrachloride	0.82	9.4		U	
108-90-7	Chlorobenzene	0.32	9.4		U	
75-00-3	Chloroethane	1.0	9.4		U	
67-66-3	Chloroform	0.52	9.4		U	
74-87-3	Chloromethane	0.49	9.4		U	
110-82-7	Cyclohexane	0.51	9.4		U	
124-48-1	Dibromochloromethane	0.32	9.4		U	
96-12-8	1,2-Dibromo-3-chloropropane	1.1	4.7		U	
106-93-4	1,2-Dibromoethane	0.40	9.4		U	
95-50-1	1,2-Dichlorobenzene	0.35	9.4		U	
541-73-1	1,3-Dichlorobenzene	0.79	9.4		U	
106-46-7	1,4-Dichlorobenzene	0.52	9.4		U	
75-71-8	Dichlorodifluoromethane	1.0	9.4		U	
75-34-3	1,1-Dichloroethane	0.51	9.4		U	
107-06-2	1,2-Dichloroethane	0.43	9.4		U	
75-35-4	1,1-Dichloroethene	1.1	9.4		U	
156-59-2	cis-1,2-Dichloroethene	1.1	9.4		U	
156-60-5	trans-1,2-Dichloroethene	1.0	9.4		U	
78-87-5	1,2-Dichloropropane	0.43	9.4		U	
10061-01-5	cis-1,3-Dichloropropene	0.47	9.4		U	
10061-02-6	trans-1,3-Dichloropropene	0.30	9.4		U	
100-41-4	Ethylbenzene	0.70	9.4		U	
591-78-6	2-Hexanone	2.2	9.4		U	
98-82-8	Isopropylbenzene	0.82	9.4		U	
79-20-9	Methyl acetate	1.5	9.4		U	
75-09-2	Methylene chloride	0.58	9.4	9.4UB ~~95~~	~~JB~~ HT	B
108-87-2	Methyl cyclohexane	0.28	9.4		U UJ	H
1634-04-4	Methyl tert-butyl ether	0.30	9.4		U	
108-10-1	4-Methyl-2-pentanone	0.54	9.4		U	
100-42-5	Styrene	0.33	9.4		U	
79-34-5	1,1,2,2-Tetrachloroethane	0.40	9.4		U	
127-18-4	Tetrachloroethene	0.91	9.4		U	

FORM I VOA

LWO
2/28/09

FORM 1
VOLATILE ORGANICS ANALYSIS DATA SHEET

CLIENT SAMPLE NO. 24RE

MR08-IS139
D-0.5-1.5-08DR

Lab Name: EMPIRICAL LABS Contract: CH2MHILL

Lab Code: NA Case No.: NA SAS No.: NA SDG No.: LEJEUNE040

Matrix: (soil/water) SOIL Lab Sample ID: 0812301-24R

Sample wt/vol: 6.1 (g/mL) G Lab File ID: 1230124B

Level: (low/med) LOW Date Sampled: 12/18/08 10:55

% Moisture: not dec. 12 Date Analyzed: 01/09/09 03:23 Use orig. NA

GC Column: RTX-VRX ID: 0.25 (mm) Dilution Factor: 1.0

Soil Extract Volume:_____(uL) Soil Aliquot Volume: _____(uL)

CONCENTRATION UNITS: (ug/L or ug/Kg) UG/KG

CAS NO.	COMPOUND	MDL	RL	CONC	Q
108-88-3	Toluene	0.81	9.4		~~U~~ UJ
120-82-1	1,2,4-Trichlorobenzene	0.17	9.4		~~U~~
71-55-6	1,1,1-Trichloroethane	0.84	9.4		~~U~~
79-00-5	1,1,2-Trichloroethane	0.33	9.4		~~U~~
79-01-6	Trichloroethene	0.80	9.4		~~U~~
76-13-1	Trichlorotrifluoroethane	0.52	9.4		~~U~~
75-69-4	Trichlorofluoromethane	0.89	9.4		~~U~~
75-01-4	Vinyl chloride	1.0	9.4		~~U~~
1330-20-7	Xylene(total)	0.66	9.4		~~U~~

H

R

FORM I VOA

2/28/09

FORM 1
VOLATILE ORGANICS ANALYSIS DATA SHEET

CLIENT SAMPLE NO. 25

MR08-IS15
4-1-1.5-08D

Lab Name: EMPIRICAL LABS Contract: CH2MHILL

Lab Code: NA Case No.: NA SAS No.: NA SDG No.: LEJEUNE040

Matrix: (soil/water) SOIL Lab Sample ID: 0812301-25

Sample wt/vol: 6.0 (g/mL) G Lab File ID: 1230125A

Level: (low/med) LOW Date Sampled: 12/18/08 13:20

% Moisture: not dec. 12 Date Analyzed: 12/31/08 22:55

GC Column: RTX-VRX ID: 0.25 (mm) Dilution Factor: 1.0

Soil Extract Volume:_____(uL) Soil Aliquot Volume: _____(uL)

CONCENTRATION UNITS: (ug/L or ug/Kg) UG/KG

CAS NO.	COMPOUND	MDL	RL	CONC	Q	
67-64-1	Acetone	1.9	9.5	19	u	B
71-43-2	Benzene	0.45	9.5	0.92	J	
75-27-4	Bromodichloromethane	0.28	9.5		U	
75-25-2	Bromoform	0.95	9.5		U	
74-83-9	Bromomethane	0.68	9.5		U	
78-93-3	2-Butanone	1.3	9.5		U	
75-15-0	Carbon disulfide	1.2	9.5		U	
56-23-5	Carbon tetrachloride	0.84	9.5		U	
108-90-7	Chlorobenzene	0.32	9.5		U	
75-00-3	Chloroethane	1.0	9.5		U	
67-66-3	Chloroform	0.52	9.5		U	
74-87-3	Chloromethane	0.49	9.5		U	
110-82-7	Cyclohexane	0.51	9.5		U	
124-48-1	Dibromochloromethane	0.32	9.5		U	
96-12-8	1,2-Dibromo-3-chloropropane	1.1	4.8		U	
106-93-4	1,2-Dibromoethane	0.41	9.5		U	
95-50-1	1,2-Dichlorobenzene	0.35	9.5		U	
541-73-1	1,3-Dichlorobenzene	0.80	9.5		U	
106-46-7	1,4-Dichlorobenzene	0.52	9.5		U	
75-71-8	Dichlorodifluoromethane	1.0	9.5		U	
75-34-3	1,1-Dichloroethane	0.51	9.5		U	
107-06-2	1,2-Dichloroethane	0.44	9.5		U	
75-35-4	1,1-Dichloroethene	1.1	9.5		U	
156-59-2	cis-1,2-Dichloroethene	1.1	9.5		U	
156-60-5	trans-1,2-Dichloroethene	1.0	9.5		U	
78-87-5	1,2-Dichloropropane	0.44	9.5		U	
10061-01-5	cis-1,3-Dichloropropene	0.48	9.5		U	
10061-02-6	trans-1,3-Dichloropropene	0.30	9.5		U	
100-41-4	Ethylbenzene	0.71	9.5		U	
591-78-6	2-Hexanone	2.2	9.5		U	
98-82-8	Isopropylbenzene	0.84	9.5		U	
79-20-9	Methyl acetate	1.5	9.5		U	
75-09-2	Methylene chloride	0.59	9.5	9.5u ~~0.60~~	~~JB~~	B
108-87-2	Methyl cyclohexane	0.28	9.5		U	
1634-04-4	Methyl tert-butyl ether	0.30	9.5		U	
108-10-1	4-Methyl-2-pentanone	0.55	9.5		U	
100-42-5	Styrene	0.33	9.5		U	
79-34-5	1,1,2,2-Tetrachloroethane	0.41	9.5		U	
127-18-4	Tetrachloroethene	0.92	9.5		U	

LW
212809

FORM 1
VOLATILE ORGANICS ANALYSIS DATA SHEET

CLIENT SAMPLE NO. 25

MR08-IS15
4-1-1.5-08D

Lab Name: EMPIRICAL LABS Contract: CH2MHILL

Lab Code: NA Case No.: NA SAS No.: NA SDG No.: LEJEUNE040

Matrix: (soil/water) SOIL Lab Sample ID: 0812301-25

Sample wt/vol: 6.0 (g/mL) G Lab File ID: 1230125A

Level: (low/med) LOW Date Sampled: 12/18/08 13:20

% Moisture: not dec. 12 Date Analyzed: 12/31/08 22:55

GC Column: RTX-VRX ID: 0.25 (mm) Dilution Factor: 1.0

Soil Extract Volume:_____(uL) Soil Aliquot Volume: _____(uL)

CONCENTRATION UNITS: (ug/L or ug/Kg) UG/KG

CAS NO.	COMPOUND	MDL	RL	CONC	Q
108-88-3	Toluene	0.82	9.5	1.5	J
120-82-1	1,2,4-Trichlorobenzene	0.17	9.5		U
71-55-6	1,1,1-Trichloroethane	0.86	9.5		U
79-00-5	1,1,2-Trichloroethane	0.33	9.5		U
79-01-6	Trichloroethene	0.81	9.5		U
76-13-1	Trichlorotrifluoroethane	0.52	9.5		U
75-69-4	Trichlorofluoromethane	0.90	9.5		U
75-01-4	Vinyl chloride	1.0	9.5		U
1330-20-7	Xylene(total)	0.66	9.5	1.1	J

2/28/09

FORM 1
VOLATILE ORGANICS ANALYSIS DATA SHEET

CLIENT SAMPLE NO. 26

MR08-SS161-08D

Lab Name: EMPIRICAL LABS Contract: CH2MHILL

Lab Code: NA Case No.: NA SAS No.: NA SDG No.: LEJEUNE040

Matrix: (soil/water) SOIL Lab Sample ID: 0812301-26

Sample wt/vol: 5.0 (g/mL) G Lab File ID: 1230126A

Level: (low/med) LOW Date Sampled: 12/18/08 14:00

% Moisture: not dec. 10 Date Analyzed: 12/31/08 23:25

GC Column: RTX-VRX ID: 0.25 (mm) Dilution Factor: 1.0

Soil Extract Volume:_____(uL) Soil Aliquot Volume: _____(uL)

CONCENTRATION UNITS: (ug/L or ug/Kg) UG/KG

CAS NO.	COMPOUND	MDL	RL	CONC	Q	
67-64-1	Acetone	2.2	11	11U ~~6.7~~ ~~J~~		B
71-43-2	Benzene	0.52	11		U	
75-27-4	Bromodichloromethane	0.33	11		U	
75-25-2	Bromoform	1.1	11		U	
74-83-9	Bromomethane	0.80	11		U	
78-93-3	2-Butanone	1.6	11		U	
75-15-0	Carbon disulfide	1.4	11		U	
56-23-5	Carbon tetrachloride	0.98	11		U	
108-90-7	Chlorobenzene	0.38	11		U	
75-00-3	Chloroethane	1.2	11		U	
67-66-3	Chloroform	0.61	11		U	
74-87-3	Chloromethane	0.58	11		U	
110-82-7	Cyclohexane	0.60	11		U	
124-48-1	Dibromochloromethane	0.38	11		U	
96-12-8	1,2-Dibromo-3-chloropropane	1.3	5.6		U	
106-93-4	1,2-Dibromoethane	0.48	11		U	
95-50-1	1,2-Dichlorobenzene	0.41	11		U	
541-73-1	1,3-Dichlorobenzene	0.93	11		U	
106-46-7	1,4-Dichlorobenzene	0.61	11		U	
75-71-8	Dichlorodifluoromethane	1.2	11		U	
75-34-3	1,1-Dichloroethane	0.60	11		U	
107-06-2	1,2-Dichloroethane	0.51	11		U	
75-35-4	1,1-Dichloroethene	1.3	11		U	
156-59-2	cis-1,2-Dichloroethene	1.3	11		U	
156-60-5	trans-1,2-Dichloroethene	1.2	11		U	
78-87-5	1,2-Dichloropropane	0.51	11		U	
10061-01-5	cis-1,3-Dichloropropene	0.56	11		U	
10061-02-6	trans-1,3-Dichloropropene	0.36	11		U	
100-41-4	Ethylbenzene	0.83	11		U	
591-78-6	2-Hexanone	2.6	11		U	
98-82-8	Isopropylbenzene	0.98	11		U	
79-20-9	Methyl acetate	1.8	11		U	
75-09-2	Methylene chloride	0.69	11	11U ~~0.71~~	~~JB~~	B
108-87-2	Methyl cyclohexane	0.33	11		U	
1634-04-4	Methyl tert-butyl ether	0.36	11		U	
108-10-1	4-Methyl-2-pentanone	0.64	11		U	
100-42-5	Styrene	0.39	11		U	
79-34-5	1,1,2,2-Tetrachloroethane	0.48	11		U	
127-18-4	Tetrachloroethene	1.1	11		U	

FORM I VOA

LW
2/28/09

FORM 1
VOLATILE ORGANICS ANALYSIS DATA SHEET

CLIENT SAMPLE NO. 26

MR08-SS161-08D

Lab Name: EMPIRICAL LABS Contract: CH2MHILL

Lab Code: NA Case No.: NA SAS No.: NA SDG No.: LEJEUNE040

Matrix: (soil/water) SOIL Lab Sample ID: 0812301-26

Sample wt/vol: 5.0 (g/mL) G Lab File ID: 1230126A

Level: (low/med) LOW Date Sampled: 12/18/08 14:00

% Moisture: not dec. 10 Date Analyzed: 12/31/08 23:25

GC Column: RTX-VRX ID: 0.25 (mm) Dilution Factor: 1.0

Soil Extract Volume:_____(uL) Soil Aliquot Volume: _____(uL)

CONCENTRATION UNITS: (ug/L or ug/Kg) UG/KG

CAS NO.	COMPOUND	MDL	RL	CONC	Q
108-88-3	Toluene	0.96	11		U
120-82-1	1,2,4-Trichlorobenzene	0.20	11		U
71-55-6	1,1,1-Trichloroethane	1.0	11		U
79-00-5	1,1,2-Trichloroethane	0.39	11		U
79-01-6	Trichloroethene	0.94	11		U
76-13-1	Trichlorotrifluoroethane	0.61	11		U
75-69-4	Trichlorofluoromethane	1.0	11		U
75-01-4	Vinyl chloride	1.2	11		U
1330-20-7	Xylene(total)	0.78	11		U

LW
2128109

FORM 1
VOLATILE ORGANICS ANALYSIS DATA SHEET

CLIENT SAMPLE NO. 27

MR08-IS16
1-1-1.5-08D

Lab Name: EMPIRICAL LABS Contract: CH2MHILL

Lab Code: NA Case No.: NA SAS No.: NA SDG No.: LEJEUNE040

Matrix: (soil/water) SOIL Lab Sample ID: 0812301-27

Sample wt/vol: 4.9 (g/mL) G Lab File ID: 1230127A

Level: (low/med) LOW Date Sampled: 12/18/08 14:10

% Moisture: not dec. 10 Date Analyzed: 12/31/08 23:56

GC Column: RTX-VRX ID: 0.25 (mm) Dilution Factor: 1.0

Soil Extract Volume:_____(uL) Soil Aliquot Volume: _____(uL)

CONCENTRATION UNITS: (ug/L or ug/Kg) UG/KG

CAS NO.	COMPOUND	MDL	RL	CONC	Q
67-64-1	Acetone	2.3	11	120	u
71-43-2	Benzene	0.53	11	1.1	J
75-27-4	Bromodichloromethane	0.34	11		U
75-25-2	Bromoform	1.1	11		U
74-83-9	Bromomethane	0.81	11		U
78-93-3	2-Butanone	1.6	11	12	
75-15-0	Carbon disulfide	1.5	11	5.3	J
56-23-5	Carbon tetrachloride	0.99	11		U
108-90-7	Chlorobenzene	0.38	11		U
75-00-3	Chloroethane	1.2	11		U
67-66-3	Chloroform	0.62	11		U
74-87-3	Chloromethane	0.59	11		U
110-82-7	Cyclohexane	0.61	11		U
124-48-1	Dibromochloromethane	0.38	11		U
96-12-8	1,2-Dibromo-3-chloropropane	1.4	5.6		U
106-93-4	1,2-Dibromoethane	0.48	11		U
95-50-1	1,2-Dichlorobenzene	0.42	11		U
541-73-1	1,3-Dichlorobenzene	0.95	11		U
106-46-7	1,4-Dichlorobenzene	0.62	11		U
75-71-8	Dichlorodifluoromethane	1.2	11		U
75-34-3	1,1-Dichloroethane	0.61	11		U
107-06-2	1,2-Dichloroethane	0.52	11		U
75-35-4	1,1-Dichloroethene	1.4	11		U
156-59-2	cis-1,2-Dichloroethene	1.4	11		U
156-60-5	trans-1,2-Dichloroethene	1.2	11		U
78-87-5	1,2-Dichloropropane	0.52	11		U
10061-01-5	cis-1,3-Dichloropropene	0.56	11		U
10061-02-6	trans-1,3-Dichloropropene	0.36	11		U
100-41-4	Ethylbenzene	0.85	11		U
591-78-6	2-Hexanone	2.6	11		U
98-82-8	Isopropylbenzene	0.99	11		U
79-20-9	Methyl acetate	1.8	11		U
75-09-2	Methylene chloride	0.70	11		U
108-87-2	Methyl cyclohexane	0.34	11		U
1634-04-4	Methyl tert-butyl ether	0.36	11		U
108-10-1	4-Methyl-2-pentanone	0.66	11	0.90	J
100-42-5	Styrene	0.40	11		U
79-34-5	1,1,2,2-Tetrachloroethane	0.48	11		U
127-18-4	Tetrachloroethene	1.1	11		U

B

FORM I VOA

LW 2/28/09

FORM 1
VOLATILE ORGANICS ANALYSIS DATA SHEET

CLIENT SAMPLE NO. 27

MR08-IS16
1-1-1.5-08D

Lab Name: EMPIRICAL LABS Contract: CH2MHILL

Lab Code: NA Case No.: NA SAS No.: NA SDG No.: LEJEUNE040

Matrix: (soil/water) SOIL Lab Sample ID: 0812301-27

Sample wt/vol: 4.9 (g/mL) G Lab File ID: 1230127A

Level: (low/med) LOW Date Sampled: 12/18/08 14:10

% Moisture: not dec. 10 Date Analyzed: 12/31/08 23:56

GC Column: RTX-VRX ID: 0.25 (mm) Dilution Factor: 1.0

Soil Extract Volume:_____(uL) Soil Aliquot Volume: _____(uL)

CONCENTRATION UNITS: (ug/L or ug/Kg) UG/KG

CAS NO.	COMPOUND	MDL	RL	CONC	Q
108-88-3	Toluene	0.97	11	1.6	J
120-82-1	1,2,4-Trichlorobenzene	0.20	11		U
71-55-6	1,1,1-Trichloroethane	1.0	11		U
79-00-5	1,1,2-Trichloroethane	0.40	11		U
79-01-6	Trichloroethene	0.96	11		U
76-13-1	Trichlorotrifluoroethane	0.62	11		U
75-69-4	Trichlorofluoromethane	1.1	11		U
75-01-4	Vinyl chloride	1.2	11		U
1330-20-7	Xylene(total)	0.79	11		U

2128109

FORM 1
VOLATILE ORGANICS ANALYSIS DATA SHEET

CLIENT SAMPLE NO. 28

MR08-SS178-08D

Lab Name: EMPIRICAL LABS Contract: CH2MHILL

Lab Code: NA Case No.: NA SAS No.: NA SDG No.: LEJEUNE040

Matrix: (soil/water) SOIL Lab Sample ID: 0812301-28

Sample wt/vol: 3.3 (g/mL) G Lab File ID: 1230128B

Level: (low/med) LOW Date Sampled: 12/18/08 14:40

% Moisture: not dec. 8 Date Analyzed: 01/01/09 00:26

GC Column: RTX-VRX ID: 0.25 (mm) Dilution Factor: 1.0

Soil Extract Volume:_____(uL) Soil Aliquot Volume: _____(uL)

CONCENTRATION UNITS: (ug/L or ug/Kg) UG/KG

CAS NO.	COMPOUND	MDL	RL	CONC	Q	
67-64-1	Acetone	3.3	16	29	u	B
71-43-2	Benzene	0.77	16	1.2	J	
75-27-4	Bromodichloromethane	0.49	16		U	
75-25-2	Bromoform	1.6	16		U	
74-83-9	Bromomethane	1.2	16		U	
78-93-3	2-Butanone	2.3	16		U	
75-15-0	Carbon disulfide	2.1	16		U	
56-23-5	Carbon tetrachloride	1.4	16		U	
108-90-7	Chlorobenzene	0.56	16		U	
75-00-3	Chloroethane	1.8	16		U	
67-66-3	Chloroform	0.91	16		U	
74-87-3	Chloromethane	0.86	16		U	
110-82-7	Cyclohexane	0.89	16		U	
124-48-1	Dibromochloromethane	0.56	16		U	
96-12-8	1,2-Dibromo-3-chloropropane	2.0	8.2		U	
106-93-4	1,2-Dibromoethane	0.71	16		U	
95-50-1	1,2-Dichlorobenzene	0.61	16		U	
541-73-1	1,3-Dichlorobenzene	1.4	16		U	
106-46-7	1,4-Dichlorobenzene	0.91	16		U	
75-71-8	Dichlorodifluoromethane	1.8	16		U	
75-34-3	1,1-Dichloroethane	0.89	16		U	
107-06-2	1,2-Dichloroethane	0.76	16		U	
75-35-4	1,1-Dichloroethene	2.0	16		U	
156-59-2	cis-1,2-Dichloroethene	2.0	16		U	
156-60-5	trans-1,2-Dichloroethene	1.8	16		U	
78-87-5	1,2-Dichloropropane	0.76	16		U	
10061-01-5	cis-1,3-Dichloropropene	0.82	16		U	
10061-02-6	trans-1,3-Dichloropropene	0.53	16		U	
100-41-4	Ethylbenzene	1.2	16		U	
591-78-6	2-Hexanone	3.8	16		U	
98-82-8	Isopropylbenzene	1.4	16		U	
79-20-9	Methyl acetate	2.6	16		U	
75-09-2	Methylene chloride	1.0	16	16u ~~1.7~~	~~JB~~	B
108-87-2	Methyl cyclohexane	0.49	16	0.73	J	
1634-04-4	Methyl tert-butyl ether	0.53	16		U	
108-10-1	4-Methyl-2-pentanone	0.96	16		U	
100-42-5	Styrene	0.58	16		U	
79-34-5	1,1,2,2-Tetrachloroethane	0.71	16		U	
127-18-4	Tetrachloroethene	1.6	16		U	

FORM I VOA

NW 2/28/09

FORM 1
VOLATILE ORGANICS ANALYSIS DATA SHEET

CLIENT SAMPLE NO.

28

MR08-SS178-08D

Lab Name: EMPIRICAL LABS Contract: CH2MHILL

Lab Code: NA Case No.: NA SAS No.: NA SDG No.: LEJEUNE040

Matrix: (soil/water) SOIL Lab Sample ID: 0812301-28

Sample wt/vol: 3.3 (g/mL) G Lab File ID: 1230128B

Level: (low/med) LOW Date Sampled: 12/18/08 14:40

% Moisture: not dec. 8 Date Analyzed: 01/01/09 00:26

GC Column: RTX-VRX ID: 0.25 (mm) Dilution Factor: 1.0

Soil Extract Volume:_____(uL) Soil Aliquot Volume: _____(uL)

CONCENTRATION UNITS: (ug/L or ug/Kg) UG/KG

CAS NO.	COMPOUND	MDL	RL	CONC	Q
108-88-3	Toluene	1.4	16		U
120-82-1	1,2,4-Trichlorobenzene	0.30	16		U
71-55-6	1,1,1-Trichloroethane	1.5	16		U
79-00-5	1,1,2-Trichloroethane	0.58	16		U
79-01-6	Trichloroethene	1.4	16		U
76-13-1	Trichlorotrifluoroethane	0.91	16		U
75-69-4	Trichlorofluoromethane	1.6	16		U
75-01-4	Vinyl chloride	1.8	16		U
1330-20-7	Xylene(total)	1.2	16		U

lw
2/28/09

FORM 1
VOLATILE ORGANICS ANALYSIS DATA SHEET

CLIENT SAMPLE NO. 29

MR08-IS17
8-4-5-08D

Lab Name: EMPIRICAL LABS Contract: CH2MHILL

Lab Code: NA Case No.: NA SAS No.: NA SDG No.: LEJEUNE040

Matrix: (soil/water) SOIL Lab Sample ID: 0812301-29

Sample wt/vol: 5.6 (g/mL) G Lab File ID: 1230129A

Level: (low/med) LOW Date Sampled: 12/18/08 14:50

% Moisture: not dec. 9 Date Analyzed: 01/01/09 00:57

GC Column: RTX-VRX ID: 0.25 (mm) Dilution Factor: 1.0

Soil Extract Volume:_____(uL) Soil Aliquot Volume: _____(uL)

CONCENTRATION UNITS: (ug/L or ug/Kg) UG/KG

CAS NO.	COMPOUND	MDL	RL	CONC	Q	
67-64-1	Acetone	1.9	9.7	27	u	B
71-43-2	Benzene	0.46	9.7		U	
75-27-4	Bromodichloromethane	0.29	9.7		U	
75-25-2	Bromoform	0.97	9.7		U	
74-83-9	Bromomethane	0.70	9.7		U	
78-93-3	2-Butanone	1.4	9.7	1.4	J	
75-15-0	Carbon disulfide	1.3	9.7		U	
56-23-5	Carbon tetrachloride	0.86	9.7		U	
108-90-7	Chlorobenzene	0.33	9.7		U	
75-00-3	Chloroethane	1.1	9.7		U	
67-66-3	Chloroform	0.54	9.7		U	
74-87-3	Chloromethane	0.51	9.7		U	
110-82-7	Cyclohexane	0.52	9.7		U	
124-48-1	Dibromochloromethane	0.33	9.7		U	
96-12-8	1,2-Dibromo-3-chloropropane	1.2	4.9		U	
106-93-4	1,2-Dibromoethane	0.42	9.7		U	
95-50-1	1,2-Dichlorobenzene	0.36	9.7		U	
541-73-1	1,3-Dichlorobenzene	0.82	9.7		U	
106-46-7	1,4-Dichlorobenzene	0.54	9.7		U	
75-71-8	Dichlorodifluoromethane	1.1	9.7		U	
75-34-3	1,1-Dichloroethane	0.52	9.7		U	
107-06-2	1,2-Dichloroethane	0.45	9.7		U	
75-35-4	1,1-Dichloroethene	1.2	9.7		U	
156-59-2	cis-1,2-Dichloroethene	1.2	9.7		U	
156-60-5	trans-1,2-Dichloroethene	1.1	9.7		U	
78-87-5	1,2-Dichloropropane	0.45	9.7		U	
10061-01-5	cis-1,3-Dichloropropene	0.49	9.7		U	
10061-02-6	trans-1,3-Dichloropropene	0.31	9.7		U	
100-41-4	Ethylbenzene	0.73	9.7		U	
591-78-6	2-Hexanone	2.2	9.7		U	
98-82-8	Isopropylbenzene	0.86	9.7		U	
79-20-9	Methyl acetate	1.6	9.7		U	
75-09-2	Methylene chloride	0.60	9.7	9.7u ~~2.3~~	~~JB~~	B
108-87-2	Methyl cyclohexane	0.29	9.7		U	
1634-04-4	Methyl tert-butyl ether	0.31	9.7		U	
108-10-1	4-Methyl-2-pentanone	0.56	9.7		U	
100-42-5	Styrene	0.34	9.7		U	
79-34-5	1,1,2,2-Tetrachloroethane	0.42	9.7		U	
127-18-4	Tetrachloroethene	0.94	9.7		U	

FORM I VOA

Rev 2/28/09

FORM 1
VOLATILE ORGANICS ANALYSIS DATA SHEET

CLIENT SAMPLE NO.

29

MR08-IS17
8-4-5-08D

Lab Name: EMPIRICAL LABS Contract: CH2MHILL

Lab Code: NA Case No.: NA SAS No.: NA SDG No.: LEJEUNE040

Matrix: (soil/water) SOIL Lab Sample ID: 0812301-29

Sample wt/vol: 5.6 (g/mL) G Lab File ID: 1230129A

Level: (low/med) LOW Date Sampled: 12/18/08 14:50

% Moisture: not dec. 9 Date Analyzed: 01/01/09 00:57

GC Column: RTX-VRX ID: 0.25 (mm) Dilution Factor: 1.0

Soil Extract Volume:_____(uL) Soil Aliquot Volume: _____(uL)

CONCENTRATION UNITS: (ug/L or ug/Kg) UG/KG

CAS NO.	COMPOUND	MDL	RL	CONC	Q
108-88-3	Toluene	0.84	9.7		U
120-82-1	1,2,4-Trichlorobenzene	0.18	9.7		U
71-55-6	1,1,1-Trichloroethane	0.88	9.7		U
79-00-5	1,1,2-Trichloroethane	0.34	9.7		U
79-01-6	Trichloroethene	0.83	9.7		U
76-13-1	Trichlorotrifluoroethane	0.54	9.7		U
75-69-4	Trichlorofluoromethane	0.92	9.7		U
75-01-4	Vinyl chloride	1.1	9.7		U
1330-20-7	Xylene(total)	0.68	9.7		U

2128/09

FORM 1
VOLATILE ORGANICS ANALYSIS DATA SHEET

CLIENT SAMPLE NO. 30

MR08-SS177-08D

Lab Name: EMPIRICAL LABS Contract: CH2MHILL

Lab Code: NA Case No.: NA SAS No.: NA SDG No.: LEJEUNE040

Matrix: (soil/water) SOIL Lab Sample ID: 0812301-30

Sample wt/vol: 5.2 (g/mL) G Lab File ID: 1230130A

Level: (low/med) LOW Date Sampled: 12/18/08 15:30

% Moisture: not dec. 15 Date Analyzed: 01/01/09 01:27

GC Column: RTX-VRX ID: 0.25 (mm) Dilution Factor: 1.0

Soil Extract Volume:_____(uL) Soil Aliquot Volume: _____(uL)

CONCENTRATION UNITS: (ug/L or ug/Kg) UG/KG

CAS NO.	COMPOUND	MDL	RL	CONC	Q	
67-64-1	Acetone	2.2	11	17	U	B
71-43-2	Benzene	0.53	11		U	
75-27-4	Bromodichloromethane	0.34	11		U	
75-25-2	Bromoform	1.1	11		U	
74-83-9	Bromomethane	0.81	11		U	
78-93-3	2-Butanone	1.6	11		U	
75-15-0	Carbon disulfide	1.4	11		U	
56-23-5	Carbon tetrachloride	0.99	11		U	
108-90-7	Chlorobenzene	0.38	11		U	
75-00-3	Chloroethane	1.2	11		U	
67-66-3	Chloroform	0.62	11		U	
74-87-3	Chloromethane	0.58	11		U	
110-82-7	Cyclohexane	0.60	11		U	
124-48-1	Dibromochloromethane	0.38	11		U	
96-12-8	1,2-Dibromo-3-chloropropane	1.3	5.6		~~U~~ UJ	ISL
106-93-4	1,2-Dibromoethane	0.48	11		U	
95-50-1	1,2-Dichlorobenzene	0.42	11		~~U~~ UJ	IS
541-73-1	1,3-Dichlorobenzene	0.94	11		~~U~~	
106-46-7	1,4-Dichlorobenzene	0.62	11		~~U~~	
75-71-8	Dichlorodifluoromethane	1.2	11		U	
75-34-3	1,1-Dichloroethane	0.60	11		U	
107-06-2	1,2-Dichloroethane	0.52	11		U	
75-35-4	1,1-Dichloroethene	1.3	11		U	
156-59-2	cis-1,2-Dichloroethene	1.3	11		U	
156-60-5	trans-1,2-Dichloroethene	1.2	11		U	
78-87-5	1,2-Dichloropropane	0.52	11		U	
10061-01-5	cis-1,3-Dichloropropene	0.56	11		U	
10061-02-6	trans-1,3-Dichloropropene	0.36	11		U	
100-41-4	Ethylbenzene	0.84	11		U	
591-78-6	2-Hexanone	2.6	11		U	
98-82-8	Isopropylbenzene	0.99	11		U	
79-20-9	Methyl acetate	1.8	11		U	
75-09-2	Methylene chloride	0.70	11		U	
108-87-2	Methyl cyclohexane	0.34	11		U	
1634-04-4	Methyl tert-butyl ether	0.36	11		U	
108-10-1	4-Methyl-2-pentanone	0.65	11		U	
100-42-5	Styrene	0.39	11		U	
79-34-5	1,1,2,2-Tetrachloroethane	0.48	11		~~U~~ UJ	ISL
127-18-4	Tetrachloroethene	1.1	11		U	

FORM I VOA

2/28/09

FORM 1
VOLATILE ORGANICS ANALYSIS DATA SHEET

CLIENT SAMPLE NO. 30

MR08-SS177-08D

Lab Name: EMPIRICAL LABS Contract: CH2MHILL

Lab Code: NA Case No.: NA SAS No.: NA SDG No.: LEJEUNE040

Matrix: (soil/water) SOIL Lab Sample ID: 0812301-30

Sample wt/vol: 5.2 (g/mL) G Lab File ID: 1230130A

Level: (low/med) LOW Date Sampled: 12/18/08 15:30

% Moisture: not dec. 15 Date Analyzed: 01/01/09 01:27

GC Column: RTX-VRX ID: 0.25 (mm) Dilution Factor: 1.0

Soil Extract Volume:_____(uL) Soil Aliquot Volume: _____(uL)

CONCENTRATION UNITS: (ug/L or ug/Kg) UG/KG

CAS NO.	COMPOUND	MDL	RL	CONC	Q
108-88-3	Toluene	0.96	11		U
120-82-1	1,2,4-Trichlorobenzene	0.20	11		~~U~~ UJ JSL
71-55-6	1,1,1-Trichloroethane	1.0	11		U
79-00-5	1,1,2-Trichloroethane	0.39	11		U
79-01-6	Trichloroethene	0.95	11		U
76-13-1	Trichlorotrifluoroethane	0.62	11		U
75-69-4	Trichlorofluoromethane	1.1	11		U
75-01-4	Vinyl chloride	1.2	11		U
1330-20-7	Xylene(total)	0.78	11		U

LW 2/28/09

FORM 1
VOLATILE ORGANICS ANALYSIS DATA SHEET

CLIENT SAMPLE NO. 30RE

MR08-SS177-08DR

Lab Name: EMPIRICAL LABS Contract: CH2MHILL

Lab Code: NA Case No.: NA SAS No.: NA SDG No.: LEJEUNE040

Matrix: (soil/water) SOIL Lab Sample ID: 0812301-30R

Sample wt/vol: 4.5 (g/mL) G Lab File ID: 1230130B

Level: (low/med) LOW Date Sampled: 12/18/08 15:30

% Moisture: not dec. 15 Date Analyzed: 01/08/09 20:23 use original

GC Column: RTX-VRX ID: 0.25 (mm) Dilution Factor: 1.0

Soil Extract Volume:_____(uL) Soil Aliquot Volume: _____(uL)

CONCENTRATION UNITS: (ug/L or ug/Kg) UG/KG

CAS NO.	COMPOUND	MDL	RL	CONC	Q
67-64-1	Acetone	2.6	13	18	UJ HT
71-43-2	Benzene	0.62	13		U UJ
75-27-4	Bromodichloromethane	0.39	13		U
75-25-2	Bromoform	1.3	13		U
74-83-9	Bromomethane	0.94	13		U
78-93-3	2-Butanone	1.8	13		U
75-15-0	Carbon disulfide	1.7	13		U
56-23-5	Carbon tetrachloride	1.2	13		U
108-90-7	Chlorobenzene	0.45	13		U
75-00-3	Chloroethane	1.4	13		U
67-66-3	Chloroform	0.72	13		U
74-87-3	Chloromethane	0.68	13		U
110-82-7	Cyclohexane	0.71	13		U
124-48-1	Dibromochloromethane	0.45	13		U
96-12-8	1,2-Dibromo-3-chloropropane	1.6	6.6		U
106-93-4	1,2-Dibromoethane	0.56	13		U
95-50-1	1,2-Dichlorobenzene	0.48	13		U
541-73-1	1,3-Dichlorobenzene	1.1	13		U
106-46-7	1,4-Dichlorobenzene	0.72	13		U
75-71-8	Dichlorodifluoromethane	1.4	13		U
75-34-3	1,1-Dichloroethane	0.71	13		U
107-06-2	1,2-Dichloroethane	0.60	13		U
75-35-4	1,1-Dichloroethene	1.6	13		U
156-59-2	cis-1,2-Dichloroethene	1.6	13		U
156-60-5	trans-1,2-Dichloroethene	1.4	13		U
78-87-5	1,2-Dichloropropane	0.60	13		U
10061-01-5	cis-1,3-Dichloropropene	0.66	13		U
10061-02-6	trans-1,3-Dichloropropene	0.42	13		U
100-41-4	Ethylbenzene	0.98	13		U
591-78-6	2-Hexanone	3.0	13		U
98-82-8	Isopropylbenzene	1.2	13		U
79-20-9	Methyl acetate	2.1	13		U
75-09-2	Methylene chloride	0.81	13	13 UJ ~~1.1~~	~~JB~~ HT
108-87-2	Methyl cyclohexane	0.39	13		U UJ
1634-04-4	Methyl tert-butyl ether	0.42	13		U
108-10-1	4-Methyl-2-pentanone	0.76	13		U
100-42-5	Styrene	0.46	13		U
79-34-5	1,1,2,2-Tetrachloroethane	0.56	13		U
127-18-4	Tetrachloroethene	1.3	13		U

FORM I VOA

LW 7/28/09

FORM 1
VOLATILE ORGANICS ANALYSIS DATA SHEET

CLIENT SAMPLE NO. 3.RE

MR08-SS177-08DR

Lab Name: EMPIRICAL LABS Contract: CH2MHILL

Lab Code: NA Case No.: NA SAS No.: NA SDG No.: LEJEUNE040

Matrix: (soil/water) SOIL Lab Sample ID: 0812301-30R

Sample wt/vol: 4.5 (g/mL) G Lab File ID: 1230130B

Level: (low/med) LOW Date Sampled: 12/18/08 15:30

% Moisture: not dec. 15 Date Analyzed: 01/08/09 20:23 Use original

GC Column: RTX-VRX ID: 0.25 (mm) Dilution Factor: 1.0

Soil Extract Volume: ____ (uL) Soil Aliquot Volume: _____ (uL)

CONCENTRATION UNITS: (ug/L or ug/Kg) UG/KG

CAS NO.	COMPOUND	MDL	RL	CONC	Q
108-88-3	Toluene	1.1	13		U UJ
120-82-1	1,2,4-Trichlorobenzene	0.24	13		U
71-55-6	1,1,1-Trichloroethane	1.2	13		U
79-00-5	1,1,2-Trichloroethane	0.46	13		U
79-01-6	Trichloroethene	1.1	13		U
76-13-1	Trichlorotrifluoroethane	0.72	13		U
75-69-4	Trichlorofluoromethane	1.2	13		U
75-01-4	Vinyl chloride	1.4	13		U
1330-20-7	Xylene(total)	0.92	13		U

HT

FORM I VOA

lw 2/28/09

FORM 1
VOLATILE ORGANICS ANALYSIS DATA SHEET

CLIENT SAMPLE NO. 31

MR08-IS17
7-2-3-08D

Lab Name: EMPIRICAL LABS Contract: CH2MHILL

Lab Code: NA Case No.: NA SAS No.: NA SDG No.: LEJEUNE040

Matrix: (soil/water) SOIL Lab Sample ID: 0812301-31

Sample wt/vol: 5.6 (g/mL) G Lab File ID: 1230131A

Level: (low/med) LOW Date Sampled: 12/18/08 15:40

% Moisture: not dec. 14 Date Analyzed: 01/01/09 01:58

GC Column: RTX-VRX ID: 0.25 (mm) Dilution Factor: 1.0

Soil Extract Volume:_____(uL) Soil Aliquot Volume: _____(uL)

CONCENTRATION UNITS: (ug/L or ug/Kg) UG/KG

CAS NO.	COMPOUND	MDL	RL	CONC	Q	
67-64-1	Acetone	2.1	10	104 ~~3.6~~	~~J~~	B
71-43-2	Benzene	0.49	10		U	
75-27-4	Bromodichloromethane	0.31	10		U	
75-25-2	Bromoform	1.0	10		U	
74-83-9	Bromomethane	0.75	10		U	
78-93-3	2-Butanone	1.4	10		U	
75-15-0	Carbon disulfide	1.4	10		U	
56-23-5	Carbon tetrachloride	0.92	10		U	
108-90-7	Chlorobenzene	0.35	10		U	
75-00-3	Chloroethane	1.1	10		U	
67-66-3	Chloroform	0.57	10		U	
74-87-3	Chloromethane	0.54	10		U	
110-82-7	Cyclohexane	0.56	10		U	
124-48-1	Dibromochloromethane	0.35	10		U	
96-12-8	1,2-Dibromo-3-chloropropane	1.2	5.2		U	
106-93-4	1,2-Dibromoethane	0.45	10		U	
95-50-1	1,2-Dichlorobenzene	0.38	10		U	
541-73-1	1,3-Dichlorobenzene	0.87	10		U	
106-46-7	1,4-Dichlorobenzene	0.57	10		U	
75-71-8	Dichlorodifluoromethane	1.1	10		U	
75-34-3	1,1-Dichloroethane	0.56	10		U	
107-06-2	1,2-Dichloroethane	0.48	10		U	
75-35-4	1,1-Dichloroethene	1.2	10		U	
156-59-2	cis-1,2-Dichloroethene	1.2	10		U	
156-60-5	trans-1,2-Dichloroethene	1.1	10		U	
78-87-5	1,2-Dichloropropane	0.48	10		U	
10061-01-5	cis-1,3-Dichloropropene	0.52	10		U	
10061-02-6	trans-1,3-Dichloropropene	0.33	10		U	
100-41-4	Ethylbenzene	0.78	10		U	
591-78-6	2-Hexanone	2.4	10		U	
98-82-8	Isopropylbenzene	0.92	10		U	
79-20-9	Methyl acetate	1.7	10		U	
75-09-2	Methylene chloride	0.64	10	104 ~~2.4~~	~~JB~~	B
108-87-2	Methyl cyclohexane	0.31	10		U	
1634-04-4	Methyl tert-butyl ether	0.33	10		U	
108-10-1	4-Methyl-2-pentanone	0.60	10		U	
100-42-5	Styrene	0.36	10		U	
79-34-5	1,1,2,2-Tetrachloroethane	0.45	10		U	
127-18-4	Tetrachloroethene	1.0	10		U	

MW 2/28/09

FORM 1
VOLATILE ORGANICS ANALYSIS DATA SHEET

CLIENT SAMPLE NO. 31

MR08-IS17
7-2-3-08D

Lab Name: EMPIRICAL LABS Contract: CH2MHILL

Lab Code: NA Case No.: NA SAS No.: NA SDG No.: LEJEUNE040

Matrix: (soil/water) SOIL Lab Sample ID: 0812301-31

Sample wt/vol: 5.6 (g/mL) G Lab File ID: 1230131A

Level: (low/med) LOW Date Sampled: 12/18/08 15:40

% Moisture: not dec. 14 Date Analyzed: 01/01/09 01:58

GC Column: RTX-VRX ID: 0.25 (mm) Dilution Factor: 1.0

Soil Extract Volume:_____(uL) Soil Aliquot Volume: _____(uL)

CONCENTRATION UNITS: (ug/L or ug/Kg) UG/KG

CAS NO.	COMPOUND	MDL	RL	CONC	Q
108-88-3	Toluene	0.89	10		U
120-82-1	1,2,4-Trichlorobenzene	0.19	10		U
71-55-6	1,1,1-Trichloroethane	0.94	10		U
79-00-5	1,1,2-Trichloroethane	0.36	10		U
79-01-6	Trichloroethene	0.88	10		U
76-13-1	Trichlorotrifluoroethane	0.57	10		U
75-69-4	Trichlorofluoromethane	0.99	10		U
75-01-4	Vinyl chloride	1.1	10		U
1330-20-7	Xylene(total)	0.73	10		U

LeO
2/28/09

FORM 1
VOLATILE ORGANICS ANALYSIS DATA SHEET

CLIENT SAMPLE NO. 32

MR08-IS15
4D-1-1.5-08D

Lab Name: EMPIRICAL LABS Contract: CH2MHILL

Lab Code: NA Case No.: NA SAS No.: NA SDG No.: LEJEUNE040

Matrix: (soil/water) SOIL Lab Sample ID: 0812301-32

Sample wt/vol: 5.3 (g/mL) G Lab File ID: 1230132A

Level: (low/med) LOW Date Sampled: 12/18/08 13:20

% Moisture: not dec. 12 Date Analyzed: 01/01/09 02:28

GC Column: RTX-VRX ID: 0.25 (mm) Dilution Factor: 1.0

Soil Extract Volume:_____(uL) Soil Aliquot Volume: _____(uL)

CONCENTRATION UNITS: (ug/L or ug/Kg) UG/KG

CAS NO.	COMPOUND	MDL	RL	CONC	Q
67-64-1	Acetone	2.1	11	28	u B
71-43-2	Benzene	0.50	11	1.3	J
75-27-4	Bromodichloromethane	0.32	11		U
75-25-2	Bromoform	1.1	11		U
74-83-9	Bromomethane	0.77	11		U
78-93-3	2-Butanone	1.5	11		U
75-15-0	Carbon disulfide	1.4	11		U
56-23-5	Carbon tetrachloride	0.94	11		U
108-90-7	Chlorobenzene	0.36	11		U
75-00-3	Chloroethane	1.2	11		U
67-66-3	Chloroform	0.59	11		U
74-87-3	Chloromethane	0.56	11		U
110-82-7	Cyclohexane	0.58	11		U
124-48-1	Dibromochloromethane	0.36	11		U
96-12-8	1,2-Dibromo-3-chloropropane	1.3	5.4		U
106-93-4	1,2-Dibromoethane	0.46	11		U
95-50-1	1,2-Dichlorobenzene	0.40	11		U
541-73-1	1,3-Dichlorobenzene	0.90	11		U
106-46-7	1,4-Dichlorobenzene	0.59	11		U
75-71-8	Dichlorodifluoromethane	1.2	11		U
75-34-3	1,1-Dichloroethane	0.58	11		U
107-06-2	1,2-Dichloroethane	0.49	11		U
75-35-4	1,1-Dichloroethene	1.3	11		U
156-59-2	cis-1,2-Dichloroethene	1.3	11		U
156-60-5	trans-1,2-Dichloroethene	1.2	11		U
78-87-5	1,2-Dichloropropane	0.49	11		U
10061-01-5	cis-1,3-Dichloropropene	0.54	11		U
10061-02-6	trans-1,3-Dichloropropene	0.34	11		U
100-41-4	Ethylbenzene	0.80	11		U
591-78-6	2-Hexanone	2.5	11		U
98-82-8	Isopropylbenzene	0.94	11		U
79-20-9	Methyl acetate	1.7	11		U
75-09-2	Methylene chloride	0.66	11		U
108-87-2	Methyl cyclohexane	0.32	11		U
1634-04-4	Methyl tert-butyl ether	0.34	11		U
108-10-1	4-Methyl-2-pentanone	0.62	11		U
100-42-5	Styrene	0.38	11		U
79-34-5	1,1,2,2-Tetrachloroethane	0.46	11		U
127-18-4	Tetrachloroethene	1.0	11		U

FORM I VOA

RW
2/28/09

FORM 1
VOLATILE ORGANICS ANALYSIS DATA SHEET

CLIENT SAMPLE NO. 32

MR08-IS15
4D-1-1.5-08D

Lab Name: EMPIRICAL LABS Contract: CH2MHILL

Lab Code: NA Case No.: NA SAS No.: NA SDG No.: LEJEUNE040

Matrix: (soil/water) SOIL Lab Sample ID: 0812301-32

Sample wt/vol: 5.3 (g/mL) G Lab File ID: 1230132A

Level: (low/med) LOW Date Sampled: 12/18/08 13:20

% Moisture: not dec. 12 Date Analyzed: 01/01/09 02:28

GC Column: RTX-VRX ID: 0.25 (mm) Dilution Factor: 1.0

Soil Extract Volume:_____(uL) Soil Aliquot Volume: _____(uL)

CONCENTRATION UNITS: (ug/L or ug/Kg) UG/KG

CAS NO.	COMPOUND	MDL	RL	CONC	Q
108-88-3	Toluene	0.92	11	6.4	J
120-82-1	1,2,4-Trichlorobenzene	0.19	11		U
71-55-6	1,1,1-Trichloroethane	0.96	11		U
79-00-5	1,1,2-Trichloroethane	0.38	11		U
79-01-6	Trichloroethene	0.91	11		U
76-13-1	Trichlorotrifluoroethane	0.59	11		U
75-69-4	Trichlorofluoromethane	1.0	11		U
75-01-4	Vinyl chloride	1.2	11		U
1330-20-7	Xylene(total)	0.75	11	7.8	J

lw
2/28/09

FORM 1
VOLATILE ORGANICS ANALYSIS DATA SHEET

CLIENT SAMPLE NO.

MR08-SS178D-08D

33

Lab Name: EMPIRICAL LABS Contract: CH2MHILL

Lab Code: NA Case No.: NA SAS No.: NA SDG No.: LEJEUNE040

Matrix: (soil/water) SOIL Lab Sample ID: 0812301-33

Sample wt/vol: 4.8 (g/mL) G Lab File ID: 1230133A

Level: (low/med) LOW Date Sampled: 12/18/08 14:40

% Moisture: not dec. 8 Date Analyzed: 01/01/09 02:59

GC Column: RTX-VRX ID: 0.25 (mm) Dilution Factor: 1.0

Soil Extract Volume:_____(uL) Soil Aliquot Volume: _____(uL)

CONCENTRATION UNITS: (ug/L or ug/Kg) UG/KG

CAS NO.	COMPOUND	MDL	RL	CONC	Q	
67-64-1	Acetone	2.3	11	14	U	B
71-43-2	Benzene	0.53	11	1.1	J	
75-27-4	Bromodichloromethane	0.34	11		U	
75-25-2	Bromoform	1.1	11		U	
74-83-9	Bromomethane	0.82	11		U	
78-93-3	2-Butanone	1.6	11		U	
75-15-0	Carbon disulfide	1.5	11		U	
56-23-5	Carbon tetrachloride	1.0	11		U	
108-90-7	Chlorobenzene	0.39	11		U	
75-00-3	Chloroethane	1.2	11		U	
67-66-3	Chloroform	0.62	11		U	
74-87-3	Chloromethane	0.59	11		U	
110-82-7	Cyclohexane	0.61	11		U	
124-48-1	Dibromochloromethane	0.39	11		U	
96-12-8	1,2-Dibromo-3-chloropropane	1.4	5.7		U	
106-93-4	1,2-Dibromoethane	0.49	11		U	
95-50-1	1,2-Dichlorobenzene	0.42	11		U	
541-73-1	1,3-Dichlorobenzene	0.96	11		U	
106-46-7	1,4-Dichlorobenzene	0.62	11		U	
75-71-8	Dichlorodifluoromethane	1.2	11		U	
75-34-3	1,1-Dichloroethane	0.61	11		U	
107-06-2	1,2-Dichloroethane	0.52	11		U	
75-35-4	1,1-Dichloroethene	1.4	11		U	
156-59-2	cis-1,2-Dichloroethene	1.4	11		U	
156-60-5	trans-1,2-Dichloroethene	1.2	11		U	
78-87-5	1,2-Dichloropropane	0.52	11		U	
10061-01-5	cis-1,3-Dichloropropene	0.57	11		U	
10061-02-6	trans-1,3-Dichloropropene	0.36	11		U	
100-41-4	Ethylbenzene	0.85	11	1.1	J	
591-78-6	2-Hexanone	2.6	11	2.8	J	
98-82-8	Isopropylbenzene	1.0	11		U	
79-20-9	Methyl acetate	1.8	11		U	
75-09-2	Methylene chloride	0.70	11	114 ~~1.8~~	~~JB~~	B
108-87-2	Methyl cyclohexane	0.34	11	0.67	J	
1634-04-4	Methyl tert-butyl ether	0.36	11		U	
108-10-1	4-Methyl-2-pentanone	0.66	11		U	
100-42-5	Styrene	0.40	11		U	
79-34-5	1,1,2,2-Tetrachloroethane	0.49	11		U	
127-18-4	Tetrachloroethene	1.1	11		U	

FORM I VOA

LW
7/28/09

FORM 1
VOLATILE ORGANICS ANALYSIS DATA SHEET

CLIENT SAMPLE NO.

MR08-SS178D-08D

33

Lab Name: EMPIRICAL LABS Contract: CH2MHILL

Lab Code: NA Case No.: NA SAS No.: NA SDG No.: LEJEUNE040

Matrix: (soil/water) SOIL Lab Sample ID: 0812301-33

Sample wt/vol: 4.8 (g/mL) G Lab File ID: 1230133A

Level: (low/med) LOW Date Sampled: 12/18/08 14:40

% Moisture: not dec. 8 Date Analyzed: 01/01/09 02:59

GC Column: RTX-VRX ID: 0.25 (mm) Dilution Factor: 1.0

Soil Extract Volume:_____(uL) Soil Aliquot Volume: _____(uL)

CONCENTRATION UNITS: (ug/L or ug/Kg) UG/KG

CAS NO.	COMPOUND	MDL	RL	CONC	Q
108-88-3	Toluene	0.98	11	1.4	J
120-82-1	1,2,4-Trichlorobenzene	0.20	11		U
71-55-6	1,1,1-Trichloroethane	1.0	11		U
79-00-5	1,1,2-Trichloroethane	0.40	11		U
79-01-6	Trichloroethene	0.97	11		U
76-13-1	Trichlorotrifluoroethane	0.62	11		U
75-69-4	Trichlorofluoromethane	1.1	11		U
75-01-4	Vinyl chloride	1.2	11		U
1330-20-7	Xylene(total)	0.80	11		U

2/28/09

FORM 1
VOLATILE ORGANICS ANALYSIS DATA SHEET

CLIENT SAMPLE NO.

MR08-IS17
8D-4-5-08D

34

Lab Name: EMPIRICAL LABS Contract: CH2MHILL

Lab Code: NA Case No.: NA SAS No.: NA SDG No.: LEJEUNE040

Matrix: (soil/water) SOIL Lab Sample ID: 0812301-34

Sample wt/vol: 4.7 (g/mL) G Lab File ID: 1230134A

Level: (low/med) LOW Date Sampled: 12/18/08 14:50

% Moisture: not dec. 8 Date Analyzed: 01/01/09 03:29

GC Column: RTX-VRX ID: 0.25 (mm) Dilution Factor: 1.0

Soil Extract Volume:_____(uL) Soil Aliquot Volume: _____(uL)

CONCENTRATION UNITS: (ug/L or ug/Kg) UG/KG

CAS NO.	COMPOUND	MDL	RL	CONC	Q
67-64-1	Acetone	2.3	12	12U ~~5.5~~	~~J~~ B
71-43-2	Benzene	0.55	12		U
75-27-4	Bromodichloromethane	0.35	12		U
75-25-2	Bromoform	1.2	12		U
74-83-9	Bromomethane	0.84	12		U
78-93-3	2-Butanone	1.6	12		U
75-15-0	Carbon disulfide	1.5	12		U
56-23-5	Carbon tetrachloride	1.0	12		U
108-90-7	Chlorobenzene	0.40	12		U
75-00-3	Chloroethane	1.3	12		U
67-66-3	Chloroform	0.64	12		U
74-87-3	Chloromethane	0.60	12		U
110-82-7	Cyclohexane	0.63	12		U
124-48-1	Dibromochloromethane	0.40	12		U
96-12-8	1,2-Dibromo-3-chloropropane	1.4	5.8		U
106-93-4	1,2-Dibromoethane	0.50	12		U
95-50-1	1,2-Dichlorobenzene	0.43	12		U
541-73-1	1,3-Dichlorobenzene	0.98	12		U
106-46-7	1,4-Dichlorobenzene	0.64	12		U
75-71-8	Dichlorodifluoromethane	1.3	12		U
75-34-3	1,1-Dichloroethane	0.63	12		U
107-06-2	1,2-Dichloroethane	0.54	12		U
75-35-4	1,1-Dichloroethene	1.4	12		U
156-59-2	cis-1,2-Dichloroethene	1.4	12		U
156-60-5	trans-1,2-Dichloroethene	1.3	12		U
78-87-5	1,2-Dichloropropane	0.54	12		U
10061-01-5	cis-1,3-Dichloropropene	0.58	12		U
10061-02-6	trans-1,3-Dichloropropene	0.37	12		U
100-41-4	Ethylbenzene	0.87	12		U
591-78-6	2-Hexanone	2.7	12		U
98-82-8	Isopropylbenzene	1.0	12		U
79-20-9	Methyl acetate	1.9	12		U
75-09-2	Methylene chloride	0.72	12	12U ~~3.0~~	~~JB~~ BU
108-87-2	Methyl cyclohexane	0.35	12		U
1634-04-4	Methyl tert-butyl ether	0.37	12		U
108-10-1	4-Methyl-2-pentanone	0.68	12		U
100-42-5	Styrene	0.41	12		U
79-34-5	1,1,2,2-Tetrachloroethane	0.50	12		U
127-18-4	Tetrachloroethene	1.1	12		U

FORM I VOA

new 12/8/09

FORM 1
VOLATILE ORGANICS ANALYSIS DATA SHEET

CLIENT SAMPLE NO.

MR08-IS17
8D-4-5-08D

34

Lab Name: EMPIRICAL LABS Contract: CH2MHILL

Lab Code: NA Case No.: NA SAS No.: NA SDG No.: LEJEUNE040

Matrix: (soil/water) SOIL Lab Sample ID: 0812301-34

Sample wt/vol: 4.7 (g/mL) G Lab File ID: 1230134A

Level: (low/med) LOW Date Sampled: 12/18/08 14:50

% Moisture: not dec. 8 Date Analyzed: 01/01/09 03:29

GC Column: RTX-VRX ID: 0.25 (mm) Dilution Factor: 1.0

Soil Extract Volume:_____(uL) Soil Aliquot Volume: _____(uL)

CONCENTRATION UNITS: (ug/L or ug/Kg) UG/KG

CAS NO.	COMPOUND	MDL	RL	CONC	Q
108-88-3	Toluene	1.0	12		U
120-82-1	1,2,4-Trichlorobenzene	0.21	12		U
71-55-6	1,1,1-Trichloroethane	1.0	12		U
79-00-5	1,1,2-Trichloroethane	0.41	12		U
79-01-6	Trichloroethene	0.99	12		U
76-13-1	Trichlorotrifluoroethane	0.64	12		U
75-69-4	Trichlorofluoromethane	1.1	12		U
75-01-4	Vinyl chloride	1.3	12		U
1330-20-7	Xylene(total)	0.82	12		U

LW
2/28/09

FORM 1
VOLATILE ORGANICS ANALYSIS DATA SHEET

CLIENT SAMPLE NO. 35

MR08-TB0
1-121908

Lab Name: EMPIRICAL LABS Contract: CH2MHILL

Lab Code: NA Case No.: NA SAS No.: NA SDG No.: LEJEUNE040

Matrix: (soil/water) WATER Lab Sample ID: 0812301-35

Sample wt/vol: 5.000 (g/mL) ML Lab File ID: 1230135

Level: (low/med) LOW Date Sampled: 12/18/08 :

% Moisture: not dec. _____ Date Analyzed: 01/02/09 23:28

GC Column: RTX-VRX ID: 0.25 (mm) Dilution Factor: 1.0

Soil Extract Volume:_____(uL) Soil Aliquot Volume: _____(uL)

CONCENTRATION UNITS: (ug/L or ug/Kg) UG/L

CAS NO.	COMPOUND	MDL	RL	CONC	Q
67-64-1	Acetone	0.84	2.5		~~U~~ UJ CU
71-43-2	Benzene	0.11	1.0		U UJ H
75-27-4	Bromodichloromethane	0.10	1.0		U
75-25-2	Bromoform	0.10	1.0		U
74-83-9	Bromomethane	0.32	1.0		U
78-93-3	2-Butanone	1.0	3.0		U
75-15-0	Carbon disulfide	0.13	1.0		U
56-23-5	Carbon tetrachloride	0.15	1.0		U
108-90-7	Chlorobenzene	0.10	1.0	1.0 J ~~0.52 JB~~	HT B
75-00-3	Chloroethane	0.18	1.0		U UJ H
67-66-3	Chloroform	0.11	1.0		U
74-87-3	Chloromethane	0.29	1.0		U
110-82-7	Cyclohexane	0.20	1.0		U
124-48-1	Dibromochloromethane	0.10	1.0		U
96-12-8	1,2-Dibromo-3-chloropropane	0.11	1.0		U
106-93-4	1,2-Dibromoethane	0.10	1.0		U
95-50-1	1,2-Dichlorobenzene	0.10	1.0		U
541-73-1	1,3-Dichlorobenzene	0.13	1.0		U
106-46-7	1,4-Dichlorobenzene	0.10	1.0		U
75-71-8	Dichlorodifluoromethane	0.22	1.0		U
75-34-3	1,1-Dichloroethane	0.12	1.0		U
107-06-2	1,2-Dichloroethane	0.10	1.0		U
75-35-4	1,1-Dichloroethene	0.15	1.0		U
156-59-2	cis-1,2-Dichloroethene	0.13	1.0		U
156-60-5	trans-1,2-Dichloroethene	0.13	1.0		U
78-87-5	1,2-Dichloropropane	0.10	1.0		U
10061-01-5	cis-1,3-Dichloropropene	0.11	1.0		U
10061-02-6	trans-1,3-Dichloropropene	0.10	1.0		U
100-41-4	Ethylbenzene	0.13	1.0		U
591-78-6	2-Hexanone	0.30	1.0		U
98-82-8	Isopropylbenzene	0.15	1.0		U
79-20-9	Methyl acetate	0.30	1.0		U
75-09-2	Methylene chloride	0.14	1.0	2.1 UJ ~~2.1 B~~	HT B
108-87-2	Methyl cyclohexane	0.17	1.0		U UJ H
1634-04-4	Methyl tert-butyl ether	0.10	1.0		U
108-10-1	4-Methyl-2-pentanone	0.29	1.0		U
100-42-5	Styrene	0.10	1.0		U
79-34-5	1,1,2,2-Tetrachloroethane	0.10	1.0		U
127-18-4	Tetrachloroethene	0.15	1.0		U

FORM I VOA

7/28/09

FORM 1
VOLATILE ORGANICS ANALYSIS DATA SHEET

CLIENT SAMPLE NO. 35

MR08-TB0
1-121908

Lab Name: EMPIRICAL LABS Contract: CH2MHILL

Lab Code: NA Case No.: NA SAS No.: NA SDG No.: LEJEUNE040

Matrix: (soil/water) WATER Lab Sample ID: 0812301-35

Sample wt/vol: 5.000 (g/mL) ML Lab File ID: 1230135

Level: (low/med) LOW Date Sampled: 12/18/08 :

% Moisture: not dec. _____ Date Analyzed: 01/02/09 23:28

GC Column: RTX-VRX ID: 0.25 (mm) Dilution Factor: 1.0

Soil Extract Volume:_____(uL) Soil Aliquot Volume: _____(uL)

CONCENTRATION UNITS: (ug/L or ug/Kg) UG/L

CAS NO.	COMPOUND	MDL	RL	CONC	Q
108-88-3	Toluene	0.10	1.0		~~U~~ UJ
120-82-1	1,2,4-Trichlorobenzene	0.10	1.0	0.17	~~J~~ J
71-55-6	1,1,1-Trichloroethane	0.17	1.0		~~U~~ UJ
79-00-5	1,1,2-Trichloroethane	0.10	1.0		U
79-01-6	Trichloroethene	0.13	1.0		U
76-13-1	Trichlorotrifluoroethane	0.18	1.0		U
75-69-4	Trichlorofluoromethane	0.17	1.0		U
75-01-4	Vinyl chloride	0.18	1.0		U
1330-20-7	Xylene(total)	0.22	1.0		U

H1

FORM I VOA

JW 7/28/09

ENVIRONMENTAL
Data Services, Inc.

VOLATILE ORGANIC COMPOUNDS
USEPA Region IV - Level IV Review

Site: MCB Camp Lejeune, TO-09 SDG #: LEJEUNE041

Client: CH2M HILL, Inc., Virginia Beach, Virginia Date: April 8, 2009

Laboratory: Empirical Laboratories, Nashville, Tennessee Reviewer: Nancy Weaver

EDS ID	Client Sample ID	Laboratory Sample ID	Matrix
1	MR08-SS138-08D	0812343-01	Soil
2	MR08-IS138-2-3-08D	0812343-02	Soil
3	MR08-SS187-08D	0812343-03	Soil
4	MR08-IS187-4-5-08D	0812343-04	Soil
5	MR08-SS188-08D	0812343-05	Soil
6	MR08-IS188-1-2-08D	0812343-06	Soil
7	MR08-SS175-08D	0812343-07	Soil
8	MR08-IS175-2-3-08D	0812343-08	Soil
9	MR08-EB01-122008	0812343-09	Soil
10*	MR08-FB-122008	0812343-10	Soil
11	MR08-SS164-08D	0812343-11	Soil
12	MR08-IS164-5-6-08D	0812343-12	Soil
13	MR08-SS165-08D	0812343-13	Soil
14	MR08-IS165-5-6-08D	0812343-14	Soil
15	MR08-SS166-08D	0812343-15	Soil
16	MR08-IS166-5-6-08D	0812343-16	Soil
16RE	MR08-IS166-5-6-08DRE	0812343-16RE	Soil
17	MR08-SS173-08D	0812343-17	Soil
18	MR08-IS173-5-6-08D	0812343-18	Soil
19	MR08-SS174-08D	0812343-19	Soil
19RE	MR08-SS174-08DRE	0812343-19RE	Soil
20	MR08-IS174-5-6-08D	0812343-20	Soil
21	MR08-SS167-08D	0812343-21	Soil
22	MR08-IS167-2-3-08D	0812343-22	Soil
23	MR08-SS172-08D	0812343-23	Soil
24	MR08-IS172-1-2-08D	0812343-24	Soil
25	MR08-SS191-08D	0812343-25	Soil
26	MR08-IS191-2-3-08D	0812343-26	Soil
27	MR08-SS190-08D	0812343-27	Soil
28	MR08-IS190-1-2-08D	0812343-28	Soil
29	MR08-SS189-08D	0812343-29	Soil
30	MR08-SS189D-08D	0812343-30	Soil
31	MR08-IS189-3-4-08D	0812343-31	Soil
32	MR08-IS189D-3-4-08D	0812343-32	Soil
32RE	MR08-IS189D-3-4-08DRE	0812343-32RE	Soil

EDS ID	Client Sample ID	Laboratory Sample ID	Matrix
33	MR08-EB01-122108	0812343-33	Soil
34	MR08-SS199-08D	0812343-34	Soil
35	MR08-SS199D-08D	0812343-35	Soil
36	MR08-IS199-1-2-08D	0812343-36	Soil
36RE	MR08-IS199-1-2-08DRE	0812343-36RE	Soil
37	MR08-IS199D-1-2-08D	0812343-37	Soil
38	MR08-SS198-08D	0812343-38	Soil
39	MR08-IS198-5-6-08D	0812343-39	Soil
40	MR08-SS197-08D	0812343-40	Soil
41	MR08-IS197-5-6-08D	0812343-41	Soil
42	MR08-SS196-08D	0812343-42	Soil
43	MR08- IS196-1-2-08D	0812343-43	Soil
43RE	MR08- IS196-1-2-08DRE	0812343-43RE	Soil
44	MR08-SS200-08D	0812343-44	Soil
44RE	MR08-SS200-08DRE	0812343-44RE	Soil
45	MR08-IS200-2-3-08D	0812343-45	Soil
46	MR08-SS224-08D	0812343-46	Soil
47	MR08-IS224-1-2-08D	0812343-47	Soil
48	MR08-SS235-08D	0812343-48	Soil
49	MR08-IS235-1-2-08D	0812343-49	Soil
49RE	MR08-IS235-1-2-08DRE	0812343-49RE	Soil
50	MR08-SS211-08D	0812343-50	Soil
51	MR08-IS221-1-2-08D	0812343-51	Soil
52	MR08-EB01-122208	0812343-52	Soil
52RE	MR08-EB01-122208RE	0812343-52RE	Soil
53	MR08-SS202-08D	0812343-53	Soil
54	MR08-IS202-4-5-08D	0812343-54	Soil
55	MR08-SS185-08D	0812343-55	Soil
56	MR08-IS185-4-5-08D	0812343-56	Soil
57	MR08-SS186-08D	0812343-57	Soil
58	MR08-IS186-4-5-08D	0812343-58	Soil
59	MR08-SS201-08D	0812343-59	Soil
60	MR08-IS201-4-5-08D	0812343-60	Soil
61	MR08-TB01-122008	0812343-61	Soil
62	MR08-TB01-122208	0812343-62	Soil
63	MR08-TB02-122208	0812343-63	Soil

* Sample not received by the laboratory.

The USEPA "Contract Laboratory Program National Functional Guidelines for Organic Data Review," October 1999, and professional judgement were used in evaluating the data in this summary report.

Holding Times - All samples were analyzed within 14 days for preserved water and soil samples except the following.

Sample	Date Sampled	Date Analyzed	# of Days	Qualifier
16RE	12/20/08	01/06/09	17	J/UJ

Sample	Date Sampled	Date Analyzed	# of Days	Qualifier
17	12/20/08	01/22/09	33	J/R
19RE	12/20/08	01/16/09	17	J/UJ
27	12/20/08	01/22/09	33	J/R
32RE	12/20/08	01/07/09	18	J/UJ
36RE	12/21/08	01/07/09	17	None - Already qualified due to IS
43RE	12/21/08	01/06/09	16	J/UJ
44RE	12/21/08	01/06/09	16	J/UJ
52RE	12/22/08	01/07/09	16	J/UJ

GC/MS Tuning - All of the BFB tunes in the initial and continuing calibrations met the percent relative abundance criteria.

Initial Calibration - The initial calibrations exhibited acceptable %RSD and mean RRF values.

Continuing Calibration - The continuing calibrations exhibited acceptable %D and RRF values except the following.

CCAL Date	Compound	%D/RRF	Qualifier	Affected Samples
01/01/09 (1257)	Dichlorodifluoromethane	25.5%	J/UJ	25, 26, 28-32, 34-39
01/01/09 (2350)	Bromomethane	39.0%	J/UJ	11-15, 18, 20-24
	1,2,4-Trichlorobenzene	32.8%	J/UJ	11-15, 18, 20-24
01/02/09 (0148)	Chloromethane	27.9%	J/UJ	40-42, 45-49
	Dichorodifluoromethane	39.0%	J/UJ	40-42, 45-49
	Vinyl chloride	26.3%	J/UJ	40-42, 45-49
01/02/09 (1532)	Chloromethane	34.4%	J/UJ	50, 53-60
	Dichlorodifluoromethane	40.4%	J/UJ	50, 53-60
	Trichlorofluoromethane	28.4%	J/UJ	50, 53-60
	Vinyl chloride	28.0%	J/UJ	50, 53-60
01/03/09	Acetone	37.7%	J/UJ	61-63

Surrogates - All samples exhibited acceptable surrogate recoveries except the following.

Sample ID	Surrogate	%R	Qualifier
36	Toluene-d8	124%	J/UJ
	Bromofluorobenzene	72%	
36RE	Dibromofluoromethane	79%	None - Already qualified due to IS
	1,2-Dichloroethane-d4	70%	
	Toluene-d8	133%	
	Bromofluorobenzene	78%	
43	Toluene-d8	132%	None - Already qualified due to IS
	Bromofluorobenzene	71%	
44	Toluene-d8	48%	None - Already qualified due to IS
	Bromofluorobenzene	68%	
51	1,2-Dichloroethane-d4	58%	None - Already qualified due to IS
52	Bromofluorobenzene	83%	J/UJ

MS/MSD - A MS/MSD sample was not analyzed from this data package.

Laboratory Control Sample - The LCS samples exhibited acceptable %R values except the following.

LCS ID	Compound	%R	Qualifier	Affected Samples
V3BLK0103	Acetone	145%	J	9
V3BLK0107	Acetone	141%	None	All ND
	2-Butanone	176%	None	All ND

Internal Standard (IS) Area Performance - All internal standards met response and retention time (RT) criteria except the following.

Sample ID	Internal Standard	Area Count	Qualifier
16	IS1-Fluorobenzene	Severely Low	J/R
	IS2-Chlorobenzene-d5	Severely Low	J/R
	IS3-1,4-Dichlorobenzene-d4	Severely Low	J/R
19	IS1-Fluorobenzene	Severely Low	J/R
	IS2-Chlorobenzene-d5	Severely Low	J/R
	IS3-1,4-Dichlorobenzene-d4	Severely Low	J/R
31	IS3-1,4-Dichlorobenzene-d4	Low	J/UJ
32	IS3-1,4-Dichlorobenzene-d4	Low	J/UJ
36	IS3-1,4-Dichlorobenzene-d4	Low	J/UJ
36RE	IS1-Fluorobenzene	Low	J/UJ
	IS2-Chlorobenzene-d5	Low	J/UJ
	IS3-1,4-Dichlorobenzene-d4	Severely Low	J/R
43	IS1-Fluorobenzene	Severely Low	J/R
	IS2-Chlorobenzene-d5	Severely Low	J/R
	IS3-1,4-Dichlorobenzene-d4	Severely Low	J/R
43RE	IS3-1,4-Dichlorobenzene-d4	Low	J/UJ
44	IS1-Fluorobenzene	Severely Low	J/R
	IS2-Chlorobenzene-d5	Severely Low	J/R
	IS3-1,4-Dichlorobenzene-d4	Severely Low	J/R
44RE	IS3-1,4-Dichlorobenzene-d4	Low	J/UJ
46	IS3-1,4-Dichlorobenzene-d4	Low	J/UJ
48	IS3-1,4-Dichlorobenzene-d4	Low	J/UJ
51	IS1-Fluorobenzene	Severely Low	J/R
	IS2-Chlorobenzene-d5	Severely Low	J/R
	IS3-1,4-Dichlorobenzene-d4	Severely Low	J/R

Method Blank - The method blanks exhibited the following contamination.

Blank ID	Compound	Conc. ug/kg	Action Level ug/kg	Qualifier	Affected Samples
V1BLK0101	Benzene	0.60	3.0	U	25, 29, 30, 34-38

Blank ID	Compound	Conc. ug/kg	Action Level ug/kg	Qualifier	Affected Samples
V1BLK0101	Methylene chloride	2.8	28	U	25, 26, 28-32, 34-39
	Trichloroethene	1.8	9.0	U	25, 26, 28-32, 34, 35, 37, 38
V4BLK0101	Benzene	0.60	3.0	U	1, 5, 7
	Methylene chloride	2.2	22	U	1-3, 6, 7
	1,2,4-Trichlorobenzene	0.39	1.95	None	All ND
V1BLK0101E	Benzene	0.59	2.95	U	40, 42, 44, 46, 48
	Methylene chloride	3.0	30	U	40-49
	1,2,4-Trichlorobenzene	0.33	1.65	None	All ND
V4BLK0101E	Benzene	0.50	2.5	U	13, 21, 23
	Methylene chloride	2.2	22	U	11, 13-16, 18-24
	1,2,4-Trichlorobenzene	0.24	1.2	None	All ND
V1BLK0101F	Methylene chloride	3.8	38	U	50, 51, 53-60
V3BLK0103	Methylene chloride	0.32	3.2	U	9, 33, 52, 61-63
	1,2,4-Trichlorobenzene	0.30	15	U	61
V1BLK0104	Methylene chloride	1.8	18	U	49RE
V1BLK0106	Methylene chloride	4.8	48	U	16RE, 19RE, 43RE, 44RE
V1BLK0106F	Methylene chloride	4.2	42	U	32RE, 36RE
	Toluene	1.3	6.5	None	All ND
V3BLK0107	Methylene chloride	0.44	4.4	U	52RE
	1,2,4-Trichlorobenzene	0.21	10.5	None	All ND
V5MBLK0121F	Methylene chloride	130	1300	U	17,27
	1,2,4-Trichlorobenzene	15	75	U	17

Trip, Field, Equipment Blank - Field QC results are summarized below.

Blank ID	Compound	Conc. ug/L	Action Level ug/kg	Qualifier	Affected Samples
MR08-EB01-122008	Acetone	0.94	9.4	U	1, 6, 12, 13, 15, 19RE, 29
	Chlorobenzene	0.27	1.35	None	All ND
MR08-FB-122008	*	-	-	-	-
MR08-EB01-122108	None - ND	-	-	-	-
MR08-EB01-122208	Acetone	0.93	9.3	U	53, 55-57, 60
	Chlorobenzene	0.28	1.4	None	All ND
MR08-TB01-122008	Chlorobenzene	0.11	0.55	None	All ND
MR08-TB01-122208	None - ND	-	-	-	-
MR08-TB02-122208	None - ND	-	-	-	-

* Cancelled - No sample received by the laboratory.

Field Duplicates - Field duplicate results are summarized below.

Compound	MR08-SS189-08D ug/kg	MR08-SS189D-08D ug/kg	RPD	Qualifier
Acetone	9.5 U	15	NC	None
2-Butanone	1.9	2.2	15%	None
Carbon disulfide	9.5 U	2.4	NC	None
Cyclohexane	0.57	0.71	22%	None
Ethylbenzene	1.5	0.88	52%	None

Compound	MR08-SS189-08D ug/kg	MR08-SS189D-08D ug/kg	RPD	Qualifier
Methylcyclohexane	0.85	0.84	1%	None
Toluene	1.0	11 U	NC	None

Compound	MR08-IS189-3-4-08D ug/kg	MR08-IS189D-3-4-08D ug/kg	RPD	Qualifier
Acetone	12	14	15%	None

Compound	MR08-SS199-08D ug/kg	MR08-SS199D-08D ug/kg	RPD	Qualifier
Acetone	150	29	135%	None
2-Butanone	9.2	4.4	71%	None
Cyclohexane	0.65	1.0	42%	None
Ethylbenzene	1.5	2.6	54%	None
Methylcyclohexane	0.79	1.2	41%	None
4-Methyl-2-pentanone	1.0	13 U	NC	None
Toluene	1.6	2.6	48%	None

Compound	MR08-IS199-1-2-08D ug/kg	MR08-IS199D-1-2-08D ug/kg	RPD	Qualifier
Acetone	32	15	72%	None
2-Butanone	12 U	1.6	NC	None
Carbon disulfide	12 U	1.6	NC	None
Ethylbenzene	12 U	1.3	NC	None
Methylcyclohexane	12 U	0.46	NC	None
Toluene	12 U	1.0	NC	None

Tentatively Identified Compounds (TICs) - TICs were not reported.

Compound Quantitation - Several samples exhibited internal standard and/or surrogate deficiencies. These samples were reanalyzed at various dilutions. Refer to Form Is for which were used for reporting purposes.

FORM 1
VOLATILE ORGANICS ANALYSIS DATA SHEET

CLIENT SAMPLE NO.

MR08-SS138-08D

1

Lab Name: EMPIRICAL LABS Contract: CH2MHILL

Lab Code: NA Case No.: NA SAS No.: NA SDG No.: LEJEUNE041

Matrix: (soil/water) SOIL Lab Sample ID: 0812343-01

Sample wt/vol: 5.2 (g/mL) G Lab File ID: 1234301A

Level: (low/med) LOW Date Sampled: 12/19/08 13:20

% Moisture: not dec. 6 Date Analyzed: 01/01/09 18:45

GC Column: RTX-VRX ID: 0.25 (mm) Dilution Factor: 1.0

Soil Extract Volume:_____(uL) Soil Aliquot Volume: _____(uL)

CONCENTRATION UNITS: (ug/L or ug/Kg) UG/KG

CAS NO.	COMPOUND	MDL	RL	CONC	Q	
67-64-1	Acetone	2.0	10	10u ~~5.5~~	~~J~~	BL
71-43-2	Benzene	0.48	10	10u ~~0.71~~	~~JB~~	BL
75-27-4	Bromodichloromethane	0.31	10		U	
75-25-2	Bromoform	1.0	10		U	
74-83-9	Bromomethane	0.74	10		U	
78-93-3	2-Butanone	1.4	10		U	
75-15-0	Carbon disulfide	1.3	10		U	
56-23-5	Carbon tetrachloride	0.90	10		U	
108-90-7	Chlorobenzene	0.35	10		U	
75-00-3	Chloroethane	1.1	10		U	
67-66-3	Chloroform	0.56	10		U	
74-87-3	Chloromethane	0.53	10		U	
110-82-7	Cyclohexane	0.55	10		U	
124-48-1	Dibromochloromethane	0.35	10		U	
96-12-8	1,2-Dibromo-3-chloropropane	1.2	5.1		U	
106-93-4	1,2-Dibromoethane	0.44	10		U	
95-50-1	1,2-Dichlorobenzene	0.38	10		U	
541-73-1	1,3-Dichlorobenzene	0.86	10		U	
106-46-7	1,4-Dichlorobenzene	0.56	10		U	
75-71-8	Dichlorodifluoromethane	1.1	10		U	
75-34-3	1,1-Dichloroethane	0.55	10		U	
107-06-2	1,2-Dichloroethane	0.47	10		U	
75-35-4	1,1-Dichloroethene	1.2	10		U	
156-59-2	cis-1,2-Dichloroethene	1.2	10		U	
156-60-5	trans-1,2-Dichloroethene	1.1	10		U	
78-87-5	1,2-Dichloropropane	0.47	10		U	
10061-01-5	cis-1,3-Dichloropropene	0.51	10		U	
10061-02-6	trans-1,3-Dichloropropene	0.33	10		U	
100-41-4	Ethylbenzene	0.77	10	4.5	J	
591-78-6	2-Hexanone	2.4	10		U	
98-82-8	Isopropylbenzene	0.90	10		U	
79-20-9	Methyl acetate	1.6	10		U	
75-09-2	Methylene chloride	0.64	10	10u ~~0.67~~	~~JB~~	B
108-87-2	Methyl cyclohexane	0.31	10	0.51	J	
1634-04-4	Methyl tert-butyl ether	0.33	10		U	
108-10-1	4-Methyl-2-pentanone	0.59	10		U	
100-42-5	Styrene	0.36	10		U	
79-34-5	1,1,2,2-Tetrachloroethane	0.44	10		U	
127-18-4	Tetrachloroethene	0.99	10		U	

FORM I VOA

lew 4/8/09

FORM 1
VOLATILE ORGANICS ANALYSIS DATA SHEET

CLIENT SAMPLE NO.

MR08-SS138-08D

Lab Name: EMPIRICAL LABS Contract: CH2MHILL

Lab Code: NA Case No.: NA SAS No.: NA SDG No.: LEJEUNE041

Matrix: (soil/water) SOIL Lab Sample ID: 0812343-01

Sample wt/vol: 5.2 (g/mL) G Lab File ID: 1234301A

Level: (low/med) LOW Date Sampled: 12/19/08 13:20

% Moisture: not dec. 6 Date Analyzed: 01/01/09 18:45

GC Column: RTX-VRX ID: 0.25 (mm) Dilution Factor: 1.0

Soil Extract Volume:_____(uL) Soil Aliquot Volume: _____(uL)

CONCENTRATION UNITS: (ug/L or ug/Kg) UG/KG

CAS NO.	COMPOUND	MDL	RL	CONC	Q
108-88-3	Toluene	0.88	10	1.9	J
120-82-1	1,2,4-Trichlorobenzene	0.18	10		U
71-55-6	1,1,1-Trichloroethane	0.92	10		U
79-00-5	1,1,2-Trichloroethane	0.36	10		U
79-01-6	Trichloroethene	0.87	10		U
76-13-1	Trichlorotrifluoroethane	0.56	10		U
75-69-4	Trichlorofluoromethane	0.97	10		U
75-01-4	Vinyl chloride	1.1	10		U
1330-20-7	Xylene(total)	0.72	10		U

FORM I VOA

lw
4/8/09

FORM 1
VOLATILE ORGANICS ANALYSIS DATA SHEET

CLIENT SAMPLE NO. 2

MR08-IS13
8-2-3-08D

Lab Name: EMPIRICAL LABS Contract: CH2MHILL

Lab Code: NA Case No.: NA SAS No.: NA SDG No.: LEJEUNE041

Matrix: (soil/water) SOIL Lab Sample ID: 0812343-02

Sample wt/vol: 6.4 (g/mL) G Lab File ID: 1234302A

Level: (low/med) LOW Date Sampled: 12/19/08 13:30

% Moisture: not dec. 11 Date Analyzed: 01/01/09 19:15

GC Column: RTX-VRX ID: 0.25 (mm) Dilution Factor: 1.0

Soil Extract Volume:_____(uL) Soil Aliquot Volume: _____(uL)

CONCENTRATION UNITS: (ug/L or ug/Kg) UG/KG

CAS NO.	COMPOUND	MDL	RL	CONC	Q
67-64-1	Acetone	1.7	8.7	20	
71-43-2	Benzene	0.41	8.7		U
75-27-4	Bromodichloromethane	0.26	8.7		U
75-25-2	Bromoform	0.87	8.7		U
74-83-9	Bromomethane	0.63	8.7		U
78-93-3	2-Butanone	1.2	8.7		U
75-15-0	Carbon disulfide	1.1	8.7	2.4	J
56-23-5	Carbon tetrachloride	0.76	8.7		U
108-90-7	Chlorobenzene	0.30	8.7		U
75-00-3	Chloroethane	0.96	8.7		U
67-66-3	Chloroform	0.48	8.7		U
74-87-3	Chloromethane	0.45	8.7		U
110-82-7	Cyclohexane	0.47	8.7		U
124-48-1	Dibromochloromethane	0.30	8.7		U
96-12-8	1,2-Dibromo-3-chloropropane	1.0	4.4		U
106-93-4	1,2-Dibromoethane	0.37	8.7		U
95-50-1	1,2-Dichlorobenzene	0.32	8.7		U
541-73-1	1,3-Dichlorobenzene	0.73	8.7		U
106-46-7	1,4-Dichlorobenzene	0.48	8.7		U
75-71-8	Dichlorodifluoromethane	0.96	8.7		U
75-34-3	1,1-Dichloroethane	0.47	8.7		U
107-06-2	1,2-Dichloroethane	0.40	8.7		U
75-35-4	1,1-Dichloroethene	1.0	8.7		U
156-59-2	cis-1,2-Dichloroethene	1.0	8.7		U
156-60-5	trans-1,2-Dichloroethene	0.96	8.7		U
78-87-5	1,2-Dichloropropane	0.40	8.7		U
10061-01-5	cis-1,3-Dichloropropene	0.44	8.7		U
10061-02-6	trans-1,3-Dichloropropene	0.28	8.7		U
100-41-4	Ethylbenzene	0.65	8.7		U
591-78-6	2-Hexanone	2.0	8.7		U
98-82-8	Isopropylbenzene	0.76	8.7		U
79-20-9	Methyl acetate	1.4	8.7		U
75-09-2	Methylene chloride	0.54	8.7	8.7u ~~0.55~~ ~~JB~~	BU
108-87-2	Methyl cyclohexane	0.26	8.7		U
1634-04-4	Methyl tert-butyl ether	0.28	8.7		U
108-10-1	4-Methyl-2-pentanone	0.50	8.7		U
100-42-5	Styrene	0.30	8.7		U
79-34-5	1,1,2,2-Tetrachloroethane	0.37	8.7		U
127-18-4	Tetrachloroethene	0.84	8.7		U

FORM I VOA

aw
4/8/09

FORM 1
VOLATILE ORGANICS ANALYSIS DATA SHEET

CLIENT SAMPLE NO. 2

MR08-IS13
8-2-3-08D

Lab Name: EMPIRICAL LABS Contract: CH2MHILL

Lab Code: NA Case No.: NA SAS No.: NA SDG No.: LEJEUNE041

Matrix: (soil/water) SOIL Lab Sample ID: 0812343-02

Sample wt/vol: 6.4 (g/mL) G Lab File ID: 1234302A

Level: (low/med) LOW Date Sampled: 12/19/08 13:30

% Moisture: not dec. 11 Date Analyzed: 01/01/09 19:15

GC Column: RTX-VRX ID: 0.25 (mm) Dilution Factor: 1.0

Soil Extract Volume:_____(uL) Soil Aliquot Volume: _____(uL)

CONCENTRATION UNITS: (ug/L or ug/Kg) UG/KG

CAS NO.	COMPOUND	MDL	RL	CONC	Q
108-88-3	Toluene	0.75	8.7		U
120-82-1	1,2,4-Trichlorobenzene	0.16	8.7		U
71-55-6	1,1,1-Trichloroethane	0.78	8.7		U
79-00-5	1,1,2-Trichloroethane	0.30	8.7		U
79-01-6	Trichloroethene	0.74	8.7		U
76-13-1	Trichlorotrifluoroethane	0.48	8.7		U
75-69-4	Trichlorofluoromethane	0.83	8.7		U
75-01-4	Vinyl chloride	0.96	8.7		U
1330-20-7	Xylene(total)	0.61	8.7		U

FORM I VOA

CLW
4/8/09

FORM 1
VOLATILE ORGANICS ANALYSIS DATA SHEET

CLIENT SAMPLE NO.

3

MR08-SS187-08D

Lab Name: EMPIRICAL LABS Contract: CH2MHILL

Lab Code: NA Case No.: NA SAS No.: NA SDG No.: LEJEUNE041

Matrix: (soil/water) SOIL Lab Sample ID: 0812343-03

Sample wt/vol: 4.1 (g/mL) G Lab File ID: 1234303A

Level: (low/med) LOW Date Sampled: 12/19/08 14:50

% Moisture: not dec. 11 Date Analyzed: 01/01/09 19:46

GC Column: RTX-VRX ID: 0.25 (mm) Dilution Factor: 1.0

Soil Extract Volume:_____(uL) Soil Aliquot Volume: _____(uL)

CONCENTRATION UNITS: (ug/L or ug/Kg) UG/KG

CAS NO.	COMPOUND	MDL	RL	CONC	Q
67-64-1	Acetone	2.7	14	95	
71-43-2	Benzene	0.64	14		U
75-27-4	Bromodichloromethane	0.41	14		U
75-25-2	Bromoform	1.4	14		U
74-83-9	Bromomethane	0.98	14		U
78-93-3	2-Butanone	1.9	14	14	J
75-15-0	Carbon disulfide	1.8	14		U
56-23-5	Carbon tetrachloride	1.2	14		U
108-90-7	Chlorobenzene	0.46	14		U
75-00-3	Chloroethane	1.5	14		U
67-66-3	Chloroform	0.75	14		U
74-87-3	Chloromethane	0.71	14		U
110-82-7	Cyclohexane	0.73	14		U
124-48-1	Dibromochloromethane	0.46	14		U
96-12-8	1,2-Dibromo-3-chloropropane	1.6	6.8		U
106-93-4	1,2-Dibromoethane	0.58	14		U
95-50-1	1,2-Dichlorobenzene	0.50	14		U
541-73-1	1,3-Dichlorobenzene	1.1	14		U
106-46-7	1,4-Dichlorobenzene	0.75	14		U
75-71-8	Dichlorodifluoromethane	1.5	14		U
75-34-3	1,1-Dichloroethane	0.73	14		U
107-06-2	1,2-Dichloroethane	0.62	14		U
75-35-4	1,1-Dichloroethene	1.6	14		U
156-59-2	cis-1,2-Dichloroethene	1.6	14		U
156-60-5	trans-1,2-Dichloroethene	1.5	14		U
78-87-5	1,2-Dichloropropane	0.62	14		U
10061-01-5	cis-1,3-Dichloropropene	0.68	14		U
10061-02-6	trans-1,3-Dichloropropene	0.43	14		U
100-41-4	Ethylbenzene	1.0	14		U
591-78-6	2-Hexanone	3.1	14		U
98-82-8	Isopropylbenzene	1.2	14		U
79-20-9	Methyl acetate	2.2	14		U
75-09-2	Methylene chloride	0.84	14	14U ~~0.92~~	~~JB~~ BL
108-87-2	Methyl cyclohexane	0.41	14		U
1634-04-4	Methyl tert-butyl ether	0.43	14		U
108-10-1	4-Methyl-2-pentanone	0.79	14		U
100-42-5	Styrene	0.48	14		U
79-34-5	1,1,2,2-Tetrachloroethane	0.58	14		U
127-18-4	Tetrachloroethene	1.3	14		U

FORM I VOA

lw 4/8/09

FORM 1
VOLATILE ORGANICS ANALYSIS DATA SHEET

CLIENT SAMPLE NO. 3

MR08-SS187-08D

Lab Name: EMPIRICAL LABS Contract: CH2MHILL

Lab Code: NA Case No.: NA SAS No.: NA SDG No.: LEJEUNE041

Matrix: (soil/water) SOIL Lab Sample ID: 0812343-03

Sample wt/vol: 4.1 (g/mL) G Lab File ID: 1234303A

Level: (low/med) LOW Date Sampled: 12/19/08 14:50

% Moisture: not dec. 11 Date Analyzed: 01/01/09 19:46

GC Column: RTX-VRX ID: 0.25 (mm) Dilution Factor: 1.0

Soil Extract Volume:_____(uL) Soil Aliquot Volume: _____(uL)

CONCENTRATION UNITS: (ug/L or ug/Kg) UG/KG

CAS NO.	COMPOUND	MDL	RL	CONC	Q
108-88-3	Toluene	1.2	14		U
120-82-1	1,2,4-Trichlorobenzene	0.24	14		U
71-55-6	1,1,1-Trichloroethane	1.2	14		U
79-00-5	1,1,2-Trichloroethane	0.48	14		U
79-01-6	Trichloroethene	1.2	14		U
76-13-1	Trichlorotrifluoroethane	0.75	14		U
75-69-4	Trichlorofluoromethane	1.3	14		U
75-01-4	Vinyl chloride	1.5	14		U
1330-20-7	Xylene(total)	0.95	14		U

lw
4/8/09

FORM 1
VOLATILE ORGANICS ANALYSIS DATA SHEET

CLIENT SAMPLE NO.

MR08-IS18
7-4-5-08D

4

Lab Name: EMPIRICAL LABS Contract: CH2MHILL

Lab Code: NA Case No.: NA SAS No.: NA SDG No.: LEJEUNE041

Matrix: (soil/water) SOIL Lab Sample ID: 0812343-04

Sample wt/vol: 4.4 (g/mL) G Lab File ID: 1234304B

Level: (low/med) LOW Date Sampled: 12/19/08 15:00

% Moisture: not dec. 0 Date Analyzed: 01/01/09 20:16

GC Column: RTX-VRX ID: 0.25 (mm) Dilution Factor: 1.0

Soil Extract Volume:_____(uL) Soil Aliquot Volume: _____(uL)

CONCENTRATION UNITS: (ug/L or ug/Kg) UG/KG

CAS NO.	COMPOUND	MDL	RL	CONC	Q
67-64-1	Acetone	2.3	11	76	
71-43-2	Benzene	0.53	11		U
75-27-4	Bromodichloromethane	0.34	11		U
75-25-2	Bromoform	1.1	11		U
74-83-9	Bromomethane	0.81	11		U
78-93-3	2-Butanone	1.6	11	16	
75-15-0	Carbon disulfide	1.5	11	2.3	J
56-23-5	Carbon tetrachloride	1.00	11		U
108-90-7	Chlorobenzene	0.38	11		U
75-00-3	Chloroethane	1.2	11		U
67-66-3	Chloroform	0.62	11		U
74-87-3	Chloromethane	0.59	11		U
110-82-7	Cyclohexane	0.61	11		U
124-48-1	Dibromochloromethane	0.38	11		U
96-12-8	1,2-Dibromo-3-chloropropane	1.4	5.6		U
106-93-4	1,2-Dibromoethane	0.49	11		U
95-50-1	1,2-Dichlorobenzene	0.42	11		U
541-73-1	1,3-Dichlorobenzene	0.95	11		U
106-46-7	1,4-Dichlorobenzene	0.62	11		U
75-71-8	Dichlorodifluoromethane	1.2	11		U
75-34-3	1,1-Dichloroethane	0.61	11		U
107-06-2	1,2-Dichloroethane	0.52	11		U
75-35-4	1,1-Dichloroethene	1.4	11		U
156-59-2	cis-1,2-Dichloroethene	1.4	11		U
156-60-5	trans-1,2-Dichloroethene	1.2	11		U
78-87-5	1,2-Dichloropropane	0.52	11		U
10061-01-5	cis-1,3-Dichloropropene	0.56	11		U
10061-02-6	trans-1,3-Dichloropropene	0.36	11		U
100-41-4	Ethylbenzene	0.85	11		U
591-78-6	2-Hexanone	2.6	11		U
98-82-8	Isopropylbenzene	1.00	11		U
79-20-9	Methyl acetate	1.8	11		U
75-09-2	Methylene chloride	0.70	11		U
108-87-2	Methyl cyclohexane	0.34	11		U
1634-04-4	Methyl tert-butyl ether	0.36	11		U
108-10-1	4-Methyl-2-pentanone	0.66	11	9.1	J
100-42-5	Styrene	0.40	11		U
79-34-5	1,1,2,2-Tetrachloroethane	0.49	11		U
127-18-4	Tetrachloroethene	1.1	11		U

FORM I VOA

LW
4/8/09

FORM 1
VOLATILE ORGANICS ANALYSIS DATA SHEET

CLIENT SAMPLE NO.

MR08-IS18
7-4-5-08D

4

Lab Name: EMPIRICAL LABS Contract: CH2MHILL

Lab Code: NA Case No.: NA SAS No.: NA SDG No.: LEJEUNE041

Matrix: (soil/water) SOIL Lab Sample ID: 0812343-04

Sample wt/vol: 4.4 (g/mL) G Lab File ID: 1234304B

Level: (low/med) LOW Date Sampled: 12/19/08 15:00

% Moisture: not dec. 0 Date Analyzed: 01/01/09 20:16

GC Column: RTX-VRX ID: 0.25 (mm) Dilution Factor: 1.0

Soil Extract Volume:_____(uL) Soil Aliquot Volume: _____(uL)

CONCENTRATION UNITS: (ug/L or ug/Kg) UG/KG

CAS NO.	COMPOUND	MDL	RL	CONC	Q
108-88-3	Toluene	0.97	11		U
120-82-1	1,2,4-Trichlorobenzene	0.20	11		U
71-55-6	1,1,1-Trichloroethane	1.0	11		U
79-00-5	1,1,2-Trichloroethane	0.40	11		U
79-01-6	Trichloroethene	0.96	11		U
76-13-1	Trichlorotrifluoroethane	0.62	11		U
75-69-4	Trichlorofluoromethane	1.1	11		U
75-01-4	Vinyl chloride	1.2	11		U
1330-20-7	Xylene(total)	0.79	11		U

lcw
4/8/09

FORM 1
VOLATILE ORGANICS ANALYSIS DATA SHEET

CLIENT SAMPLE NO.

MR08-SS188-08D

5

Lab Name: EMPIRICAL LABS Contract: CH2MHILL

Lab Code: NA Case No.: NA SAS No.: NA SDG No.: LEJEUNE041

Matrix: (soil/water) SOIL Lab Sample ID: 0812343-05

Sample wt/vol: 3.9 (g/mL) G Lab File ID: 1234305A

Level: (low/med) LOW Date Sampled: 12/19/08 15:40

% Moisture: not dec. 14 Date Analyzed: 01/01/09 20:47

GC Column: RTX-VRX ID: 0.25 (mm) Dilution Factor: 1.0

Soil Extract Volume:_____(uL) Soil Aliquot Volume: _____(uL)

CONCENTRATION UNITS: (ug/L or ug/Kg) UG/KG

CAS NO.	COMPOUND	MDL	RL	CONC	Q
67-64-1	Acetone	3.0	15	45	
71-43-2	Benzene	0.70	15	15U ~~2.4 JB~~ BL	
75-27-4	Bromodichloromethane	0.44	15		U
75-25-2	Bromoform	1.5	15		U
74-83-9	Bromomethane	1.1	15		U
78-93-3	2-Butanone	2.1	15		U
75-15-0	Carbon disulfide	1.9	15		U
56-23-5	Carbon tetrachloride	1.3	15		U
108-90-7	Chlorobenzene	0.50	15		U
75-00-3	Chloroethane	1.6	15		U
67-66-3	Chloroform	0.81	15		U
74-87-3	Chloromethane	0.77	15		U
110-82-7	Cyclohexane	0.80	15	1.2	J
124-48-1	Dibromochloromethane	0.50	15		U
96-12-8	1,2-Dibromo-3-chloropropane	1.8	7.4		U
106-93-4	1,2-Dibromoethane	0.64	15		U
95-50-1	1,2-Dichlorobenzene	0.55	15		U
541-73-1	1,3-Dichlorobenzene	1.2	15		U
106-46-7	1,4-Dichlorobenzene	0.81	15		U
75-71-8	Dichlorodifluoromethane	1.6	15		U
75-34-3	1,1-Dichloroethane	0.80	15		U
107-06-2	1,2-Dichloroethane	0.68	15		U
75-35-4	1,1-Dichloroethene	1.8	15		U
156-59-2	cis-1,2-Dichloroethene	1.8	15		U
156-60-5	trans-1,2-Dichloroethene	1.6	15		U
78-87-5	1,2-Dichloropropane	0.68	15		U
10061-01-5	cis-1,3-Dichloropropene	0.74	15		U
10061-02-6	trans-1,3-Dichloropropene	0.47	15		U
100-41-4	Ethylbenzene	1.1	15	3.0	J
591-78-6	2-Hexanone	3.4	15	25	
98-82-8	Isopropylbenzene	1.3	15		U
79-20-9	Methyl acetate	2.4	15		U
75-09-2	Methylene chloride	0.92	15		U
108-87-2	Methyl cyclohexane	0.44	15	1.6	J
1634-04-4	Methyl tert-butyl ether	0.47	15		U
108-10-1	4-Methyl-2-pentanone	0.86	15	0.96	J
100-42-5	Styrene	0.52	15		U
79-34-5	1,1,2,2-Tetrachloroethane	0.64	15		U
127-18-4	Tetrachloroethene	1.4	15		U

MW 4/28/09

FORM 1
VOLATILE ORGANICS ANALYSIS DATA SHEET

CLIENT SAMPLE NO.

5

MR08-SS188-08D

Lab Name: EMPIRICAL LABS Contract: CH2MHILL

Lab Code: NA Case No.: NA SAS No.: NA SDG No.: LEJEUNE041

Matrix: (soil/water) SOIL Lab Sample ID: 0812343-05

Sample wt/vol: 3.9 (g/mL) G Lab File ID: 1234305A

Level: (low/med) LOW Date Sampled: 12/19/08 15:40

% Moisture: not dec. 14 Date Analyzed: 01/01/09 20:47

GC Column: RTX-VRX ID: 0.25 (mm) Dilution Factor: 1.0

Soil Extract Volume:_____(uL) Soil Aliquot Volume: _____(uL)

CONCENTRATION UNITS: (ug/L or ug/Kg) UG/KG

CAS NO.	COMPOUND	MDL	RL	CONC	Q
108-88-3	Toluene	1.3	15	2.8	J
120-82-1	1,2,4-Trichlorobenzene	0.27	15		U
71-55-6	1,1,1-Trichloroethane	1.3	15		U
79-00-5	1,1,2-Trichloroethane	0.52	15		U
79-01-6	Trichloroethene	1.2	15		U
76-13-1	Trichlorotrifluoroethane	0.81	15		U
75-69-4	Trichlorofluoromethane	1.4	15		U
75-01-4	Vinyl chloride	1.6	15		U
1330-20-7	Xylene(total)	1.0	15		U

lew
4/8/09

FORM 1
VOLATILE ORGANICS ANALYSIS DATA SHEET

CLIENT SAMPLE NO. 6

MR08-IS18
8-1-2-08D

Lab Name: EMPIRICAL LABS Contract: CH2MHILL

Lab Code: NA Case No.: NA SAS No.: NA SDG No.: LEJEUNE041

Matrix: (soil/water) SOIL Lab Sample ID: 0812343-06

Sample wt/vol: 5.2 (g/mL) G Lab File ID: 1234306A

Level: (low/med) LOW Date Sampled: 12/19/08 15:50

% Moisture: not dec. 8 Date Analyzed: 01/01/09 21:18

GC Column: RTX-VRX ID: 0.25 (mm) Dilution Factor: 1.0

Soil Extract Volume:_____(uL) Soil Aliquot Volume: _____(uL)

CONCENTRATION UNITS: (ug/L or ug/Kg) UG/KG

CAS NO.	COMPOUND	MDL	RL	CONC	Q
67-64-1	Acetone	2.1	10	10U ~~5.9~~	~~J~~ BL
71-43-2	Benzene	0.49	10		U
75-27-4	Bromodichloromethane	0.31	10		U
75-25-2	Bromoform	1.0	10		U
74-83-9	Bromomethane	0.76	10		U
78-93-3	2-Butanone	1.5	10		U
75-15-0	Carbon disulfide	1.4	10		U
56-23-5	Carbon tetrachloride	0.92	10		U
108-90-7	Chlorobenzene	0.36	10		U
75-00-3	Chloroethane	1.2	10		U
67-66-3	Chloroform	0.58	10		U
74-87-3	Chloromethane	0.54	10		U
110-82-7	Cyclohexane	0.57	10		U
124-48-1	Dibromochloromethane	0.36	10		U
96-12-8	1,2-Dibromo-3-chloropropane	1.2	5.2		U
106-93-4	1,2-Dibromoethane	0.45	10		U
95-50-1	1,2-Dichlorobenzene	0.39	10		U
541-73-1	1,3-Dichlorobenzene	0.88	10		U
106-46-7	1,4-Dichlorobenzene	0.58	10		U
75-71-8	Dichlorodifluoromethane	1.2	10		U
75-34-3	1,1-Dichloroethane	0.57	10		U
107-06-2	1,2-Dichloroethane	0.48	10		U
75-35-4	1,1-Dichloroethene	1.2	10		U
156-59-2	cis-1,2-Dichloroethene	1.2	10		U
156-60-5	trans-1,2-Dichloroethene	1.2	10		U
78-87-5	1,2-Dichloropropane	0.48	10		U
10061-01-5	cis-1,3-Dichloropropene	0.52	10		U
10061-02-6	trans-1,3-Dichloropropene	0.34	10		U
100-41-4	Ethylbenzene	0.79	10		U
591-78-6	2-Hexanone	2.4	10		U
98-82-8	Isopropylbenzene	0.92	10		U
79-20-9	Methyl acetate	1.7	10		U
75-09-2	Methylene chloride	0.65	10	10U ~~0.71~~	~~JB~~ BL
108-87-2	Methyl cyclohexane	0.31	10		U
1634-04-4	Methyl tert-butyl ether	0.34	10		U
108-10-1	4-Methyl-2-pentanone	0.61	10		U
100-42-5	Styrene	0.37	10		U
79-34-5	1,1,2,2-Tetrachloroethane	0.45	10		U
127-18-4	Tetrachloroethene	1.0	10		U

FORM I VOA

kw
4/8/09

FORM 1
VOLATILE ORGANICS ANALYSIS DATA SHEET

CLIENT SAMPLE NO. 6

MR08-IS18
8-1-2-08D

Lab Name: EMPIRICAL LABS Contract: CH2MHILL

Lab Code: NA Case No.: NA SAS No.: NA SDG No.: LEJEUNE041

Matrix: (soil/water) SOIL Lab Sample ID: 0812343-06

Sample wt/vol: 5.2 (g/mL) G Lab File ID: 1234306A

Level: (low/med) LOW Date Sampled: 12/19/08 15:50

% Moisture: not dec. 8 Date Analyzed: 01/01/09 21:18

GC Column: RTX-VRX ID: 0.25 (mm) Dilution Factor: 1.0

Soil Extract Volume:_____(uL) Soil Aliquot Volume: _____(uL)

CONCENTRATION UNITS: (ug/L or ug/Kg) UG/KG

CAS NO.	COMPOUND	MDL	RL	CONC	Q
108-88-3	Toluene	0.90	10		U
120-82-1	1,2,4-Trichlorobenzene	0.19	10		U
71-55-6	1,1,1-Trichloroethane	0.94	10		U
79-00-5	1,1,2-Trichloroethane	0.37	10		U
79-01-6	Trichloroethene	0.89	10		U
76-13-1	Trichlorotrifluoroethane	0.58	10		U
75-69-4	Trichlorofluoromethane	1.00	10		U
75-01-4	Vinyl chloride	1.2	10		U
1330-20-7	Xylene(total)	0.73	10		U

lw
4/8/09

FORM 1
VOLATILE ORGANICS ANALYSIS DATA SHEET

CLIENT SAMPLE NO. 7

MR08-SS175-08D

Lab Name: EMPIRICAL LABS Contract: CH2MHILL

Lab Code: NA Case No.: NA SAS No.: NA SDG No.: LEJEUNE041

Matrix: (soil/water) SOIL Lab Sample ID: 0812343-07

Sample wt/vol: 4.4 (g/mL) G Lab File ID: 1234307A

Level: (low/med) LOW Date Sampled: 12/19/08 16:00

% Moisture: not dec. 7 Date Analyzed: 01/01/09 21:48

GC Column: RTX-VRX ID: 0.25 (mm) Dilution Factor: 1.0

Soil Extract Volume:_____(uL) Soil Aliquot Volume: _____(uL)

CONCENTRATION UNITS: (ug/L or ug/Kg) UG/KG

CAS NO.	COMPOUND	MDL	RL	CONC	Q
67-64-1	Acetone	2.4	12	12	~~J~~
71-43-2	Benzene	0.57	12	12u ~~1.5~~	~~JB~~ B
75-27-4	Bromodichloromethane	0.36	12		U
75-25-2	Bromoform	1.2	12		U
74-83-9	Bromomethane	0.87	12		U
78-93-3	2-Butanone	1.7	12		U
75-15-0	Carbon disulfide	1.6	12		U
56-23-5	Carbon tetrachloride	1.1	12		U
108-90-7	Chlorobenzene	0.41	12		U
75-00-3	Chloroethane	1.3	12		U
67-66-3	Chloroform	0.67	12		U
74-87-3	Chloromethane	0.63	12		U
110-82-7	Cyclohexane	0.66	12	0.79	J
124-48-1	Dibromochloromethane	0.41	12		U
96-12-8	1,2-Dibromo-3-chloropropane	1.4	6.1		U
106-93-4	1,2-Dibromoethane	0.52	12		U
95-50-1	1,2-Dichlorobenzene	0.45	12		U
541-73-1	1,3-Dichlorobenzene	1.0	12		U
106-46-7	1,4-Dichlorobenzene	0.67	12		U
75-71-8	Dichlorodifluoromethane	1.3	12		U
75-34-3	1,1-Dichloroethane	0.66	12		U
107-06-2	1,2-Dichloroethane	0.56	12		U
75-35-4	1,1-Dichloroethene	1.4	12		U
156-59-2	cis-1,2-Dichloroethene	1.4	12		U
156-60-5	trans-1,2-Dichloroethene	1.3	12		U
78-87-5	1,2-Dichloropropane	0.56	12		U
10061-01-5	cis-1,3-Dichloropropene	0.61	12		U
10061-02-6	trans-1,3-Dichloropropene	0.39	12		U
100-41-4	Ethylbenzene	0.91	12	4.1	J
591-78-6	2-Hexanone	2.8	12		U
98-82-8	Isopropylbenzene	1.1	12		U
79-20-9	Methyl acetate	1.9	12		U
75-09-2	Methylene chloride	0.75	12	12u ~~0.82~~	~~JB~~ B
108-87-2	Methyl cyclohexane	0.36	12	0.98	J
1634-04-4	Methyl tert-butyl ether	0.39	12		U
108-10-1	4-Methyl-2-pentanone	0.70	12	0.94	J
100-42-5	Styrene	0.42	12		U
79-34-5	1,1,2,2-Tetrachloroethane	0.52	12		U
127-18-4	Tetrachloroethene	1.2	12		U

lw
4/8/09

FORM 1
VOLATILE ORGANICS ANALYSIS DATA SHEET

CLIENT SAMPLE NO.

7

MR08-SS175-08D

Lab Name: EMPIRICAL LABS Contract: CH2MHILL

Lab Code: NA Case No.: NA SAS No.: NA SDG No.: LEJEUNE041

Matrix: (soil/water) SOIL Lab Sample ID: 0812343-07

Sample wt/vol: 4.4 (g/mL) G Lab File ID: 1234307A

Level: (low/med) LOW Date Sampled: 12/19/08 16:00

% Moisture: not dec. 7 Date Analyzed: 01/01/09 21:48

GC Column: RTX-VRX ID: 0.25 (mm) Dilution Factor: 1.0

Soil Extract Volume:_____(uL) Soil Aliquot Volume: _____(uL)

CONCENTRATION UNITS: (ug/L or ug/Kg) UG/KG

CAS NO.	COMPOUND	MDL	RL	CONC	Q
108-88-3	Toluene	1.0	12	2.4	J
120-82-1	1,2,4-Trichlorobenzene	0.22	12		U
71-55-6	1,1,1-Trichloroethane	1.1	12		U
79-00-5	1,1,2-Trichloroethane	0.42	12		U
79-01-6	Trichloroethene	1.0	12		U
76-13-1	Trichlorotrifluoroethane	0.67	12		U
75-69-4	Trichlorofluoromethane	1.2	12		U
75-01-4	Vinyl chloride	1.3	12		U
1330-20-7	Xylene(total)	0.85	12		U

uw 4/8/09

FORM 1
VOLATILE ORGANICS ANALYSIS DATA SHEET

CLIENT SAMPLE NO. 8

MR08-IS17
5-2-3-08D

Lab Name: EMPIRICAL LABS Contract: CH2MHILL

Lab Code: NA Case No.: NA SAS No.: NA SDG No.: LEJEUNE041

Matrix: (soil/water) SOIL Lab Sample ID: 0812343-08

Sample wt/vol: 4.7 (g/mL) G Lab File ID: 1234308A

Level: (low/med) LOW Date Sampled: 12/19/08 16:10

% Moisture: not dec. 7 Date Analyzed: 01/01/09 22:19

GC Column: RTX-VRX ID: 0.25 (mm) Dilution Factor: 1.0

Soil Extract Volume:_____(uL) Soil Aliquot Volume: _____(uL)

CONCENTRATION UNITS: (ug/L or ug/Kg) UG/KG

CAS NO.	COMPOUND	MDL	RL	CONC	Q
67-64-1	Acetone	2.3	11	44	
71-43-2	Benzene	0.53	11		U
75-27-4	Bromodichloromethane	0.34	11		U
75-25-2	Bromoform	1.1	11		U
74-83-9	Bromomethane	0.82	11		U
78-93-3	2-Butanone	1.6	11		U
75-15-0	Carbon disulfide	1.5	11		U
56-23-5	Carbon tetrachloride	1.0	11		U
108-90-7	Chlorobenzene	0.39	11		U
75-00-3	Chloroethane	1.2	11		U
67-66-3	Chloroform	0.62	11		U
74-87-3	Chloromethane	0.59	11		U
110-82-7	Cyclohexane	0.61	11		U
124-48-1	Dibromochloromethane	0.39	11		U
96-12-8	1,2-Dibromo-3-chloropropane	1.4	5.7		U
106-93-4	1,2-Dibromoethane	0.49	11		U
95-50-1	1,2-Dichlorobenzene	0.42	11		U
541-73-1	1,3-Dichlorobenzene	0.95	11		U
106-46-7	1,4-Dichlorobenzene	0.62	11		U
75-71-8	Dichlorodifluoromethane	1.2	11		U
75-34-3	1,1-Dichloroethane	0.61	11		U
107-06-2	1,2-Dichloroethane	0.52	11		U
75-35-4	1,1-Dichloroethene	1.4	11		U
156-59-2	cis-1,2-Dichloroethene	1.4	11		U
156-60-5	trans-1,2-Dichloroethene	1.2	11		U
78-87-5	1,2-Dichloropropane	0.52	11		U
10061-01-5	cis-1,3-Dichloropropene	0.57	11		U
10061-02-6	trans-1,3-Dichloropropene	0.36	11		U
100-41-4	Ethylbenzene	0.85	11		U
591-78-6	2-Hexanone	2.6	11		U
98-82-8	Isopropylbenzene	1.0	11		U
79-20-9	Methyl acetate	1.8	11		U
75-09-2	Methylene chloride	0.70	11		U
108-87-2	Methyl cyclohexane	0.34	11		U
1634-04-4	Methyl tert-butyl ether	0.36	11		U
108-10-1	4-Methyl-2-pentanone	0.66	11		U
100-42-5	Styrene	0.40	11		U
79-34-5	1,1,2,2-Tetrachloroethane	0.49	11		U
127-18-4	Tetrachloroethene	1.1	11		U

LW
4/8/09

FORM 1
VOLATILE ORGANICS ANALYSIS DATA SHEET

CLIENT SAMPLE NO. 8

MR08-IS17
5-2-3-08D

Lab Name: EMPIRICAL LABS Contract: CH2MHILL

Lab Code: NA Case No.: NA SAS No.: NA SDG No.: LEJEUNE041

Matrix: (soil/water) SOIL Lab Sample ID: 0812343-08

Sample wt/vol: 4.7 (g/mL) G Lab File ID: 1234308A

Level: (low/med) LOW Date Sampled: 12/19/08 16:10

% Moisture: not dec. 7 Date Analyzed: 01/01/09 22:19

GC Column: RTX-VRX ID: 0.25 (mm) Dilution Factor: 1.0

Soil Extract Volume:_____(uL) Soil Aliquot Volume: _____(uL)

CONCENTRATION UNITS: (ug/L or ug/Kg) UG/KG

CAS NO.	COMPOUND	MDL	RL	CONC	Q
108-88-3	Toluene	0.98	11		U
120-82-1	1,2,4-Trichlorobenzene	0.20	11		U
71-55-6	1,1,1-Trichloroethane	1.0	11		U
79-00-5	1,1,2-Trichloroethane	0.40	11		U
79-01-6	Trichloroethene	0.97	11		U
76-13-1	Trichlorotrifluoroethane	0.62	11		U
75-69-4	Trichlorofluoromethane	1.1	11		U
75-01-4	Vinyl chloride	1.2	11		U
1330-20-7	Xylene(total)	0.80	11		U

lw
4/8/09

FORM 1
VOLATILE ORGANICS ANALYSIS DATA SHEET

CLIENT SAMPLE NO. 9

MR08-EB0
1-122008

Lab Name: EMPIRICAL LABS Contract: CH2MHILL

Lab Code: NA Case No.: NA SAS No.: NA SDG No.: LEJEUNE041

Matrix: (soil/water) WATER Lab Sample ID: 0812343-09

Sample wt/vol: 5.000 (g/mL) ML Lab File ID: 1234309

Level: (low/med) LOW Date Sampled: 12/20/08 07:40

% Moisture: not dec. _____ Date Analyzed: 01/03/09 21:52

GC Column: RTX-VRX ID: 0.25 (mm) Dilution Factor: 1.0

Soil Extract Volume:_____(uL) Soil Aliquot Volume: _____(uL)

CONCENTRATION UNITS: (ug/L or ug/Kg) UG/L

CAS NO.	COMPOUND	MDL	RL	CONC	Q	
67-64-1	Acetone	0.84	2.5	0.94	~~J~~ J	B
71-43-2	Benzene	0.11	1.0		U	
75-27-4	Bromodichloromethane	0.10	1.0		U	
75-25-2	Bromoform	0.10	1.0		U	
74-83-9	Bromomethane	0.32	1.0		U	
78-93-3	2-Butanone	1.0	3.0		U	
75-15-0	Carbon disulfide	0.13	1.0		U	
56-23-5	Carbon tetrachloride	0.15	1.0		U	
108-90-7	Chlorobenzene	0.10	1.0	0.27	J	
75-00-3	Chloroethane	0.18	1.0		U	
67-66-3	Chloroform	0.11	1.0		U	
74-87-3	Chloromethane	0.29	1.0		U	
110-82-7	Cyclohexane	0.20	1.0		U	
124-48-1	Dibromochloromethane	0.10	1.0		U	
96-12-8	1,2-Dibromo-3-chloropropane	0.11	1.0		U	
106-93-4	1,2-Dibromoethane	0.10	1.0		U	
95-50-1	1,2-Dichlorobenzene	0.10	1.0		U	
541-73-1	1,3-Dichlorobenzene	0.13	1.0		U	
106-46-7	1,4-Dichlorobenzene	0.10	1.0		U	
75-71-8	Dichlorodifluoromethane	0.22	1.0		U	
75-34-3	1,1-Dichloroethane	0.12	1.0		U	
107-06-2	1,2-Dichloroethane	0.10	1.0		U	
75-35-4	1,1-Dichloroethene	0.15	1.0		U	
156-59-2	cis-1,2-Dichloroethene	0.13	1.0		U	
156-60-5	trans-1,2-Dichloroethene	0.13	1.0		U	
78-87-5	1,2-Dichloropropane	0.10	1.0		U	
10061-01-5	cis-1,3-Dichloropropene	0.11	1.0		U	
10061-02-6	trans-1,3-Dichloropropene	0.10	1.0		U	
100-41-4	Ethylbenzene	0.13	1.0		U	
591-78-6	2-Hexanone	0.30	1.0		U	
98-82-8	Isopropylbenzene	0.15	1.0		U	
79-20-9	Methyl acetate	0.30	1.0		U	
75-09-2	Methylene chloride	0.14	1.0	1.04 0.24	~~JB~~	B
108-87-2	Methyl cyclohexane	0.17	1.0		U	
1634-04-4	Methyl tert-butyl ether	0.10	1.0		U	
108-10-1	4-Methyl-2-pentanone	0.29	1.0		U	
100-42-5	Styrene	0.10	1.0		U	
79-34-5	1,1,2,2-Tetrachloroethane	0.10	1.0		U	
127-18-4	Tetrachloroethene	0.15	1.0		U	

FORM I VOA

lw 4/8/09

FORM 1
VOLATILE ORGANICS ANALYSIS DATA SHEET

CLIENT SAMPLE NO. 9

MR08-EB0
1-122008

Lab Name: EMPIRICAL LABS Contract: CH2MHILL

Lab Code: NA Case No.: NA SAS No.: NA SDG No.: LEJEUNE041

Matrix: (soil/water) WATER Lab Sample ID: 0812343-09

Sample wt/vol: 5.000 (g/mL) ML Lab File ID: 1234309

Level: (low/med) LOW Date Sampled: 12/20/08 07:40

% Moisture: not dec. _____ Date Analyzed: 01/03/09 21:52

GC Column: RTX-VRX ID: 0.25 (mm) Dilution Factor: 1.0

Soil Extract Volume:_____(uL) Soil Aliquot Volume: _____(uL)

CONCENTRATION UNITS: (ug/L or ug/Kg) UG/L

CAS NO.	COMPOUND	MDL	RL	CONC	Q
108-88-3	Toluene	0.10	1.0		U
120-82-1	1,2,4-Trichlorobenzene	0.10	1.0		U
71-55-6	1,1,1-Trichloroethane	0.17	1.0		U
79-00-5	1,1,2-Trichloroethane	0.10	1.0		U
79-01-6	Trichloroethene	0.13	1.0		U
76-13-1	Trichlorotrifluoroethane	0.18	1.0		U
75-69-4	Trichlorofluoromethane	0.17	1.0		U
75-01-4	Vinyl chloride	0.18	1.0		U
1330-20-7	Xylene(total)	0.22	1.0		U

lw
4/8/09

FORM 1
VOLATILE ORGANICS ANALYSIS DATA SHEET

CLIENT SAMPLE NO. 11

MR08-SS164-08D

Lab Name: EMPIRICAL LABS Contract: CH2MHILL

Lab Code: NA Case No.: NA SAS No.: NA SDG No.: LEJEUNE041

Matrix: (soil/water) SOIL Lab Sample ID: 0812343-11

Sample wt/vol: 3.8 (g/mL) G Lab File ID: 1234311A

Level: (low/med) LOW Date Sampled: 12/20/08 08:40

% Moisture: not dec. 14 Date Analyzed: 01/02/09 01:52

GC Column: RTX-VRX ID: 0.25 (mm) Dilution Factor: 1.0

Soil Extract Volume:_____(uL) Soil Aliquot Volume: _____(uL)

CONCENTRATION UNITS: (ug/L or ug/Kg) UG/KG

CAS NO.	COMPOUND	MDL	RL	CONC	Q
67-64-1	Acetone	3.1	16	130	
71-43-2	Benzene	0.73	16	2.6	~~JB~~
75-27-4	Bromodichloromethane	0.46	16		U
75-25-2	Bromoform	1.6	16		U
74-83-9	Bromomethane	1.1	16		~~U~~ UJ CCL
78-93-3	2-Butanone	2.2	16	43	
75-15-0	Carbon disulfide	2.0	16		U
56-23-5	Carbon tetrachloride	1.4	16		U
108-90-7	Chlorobenzene	0.53	16		U
75-00-3	Chloroethane	1.7	16		U
67-66-3	Chloroform	0.85	16		U
74-87-3	Chloromethane	0.81	16		U
110-82-7	Cyclohexane	0.84	16	1.2	J
124-48-1	Dibromochloromethane	0.53	16		U
96-12-8	1,2-Dibromo-3-chloropropane	1.9	7.8		U
106-93-4	1,2-Dibromoethane	0.67	16		U
95-50-1	1,2-Dichlorobenzene	0.57	16		U
541-73-1	1,3-Dichlorobenzene	1.3	16		U
106-46-7	1,4-Dichlorobenzene	0.85	16		U
75-71-8	Dichlorodifluoromethane	1.7	16		U
75-34-3	1,1-Dichloroethane	0.84	16		U
107-06-2	1,2-Dichloroethane	0.71	16		U
75-35-4	1,1-Dichloroethene	1.9	16		U
156-59-2	cis-1,2-Dichloroethene	1.9	16		U
156-60-5	trans-1,2-Dichloroethene	1.7	16		U
78-87-5	1,2-Dichloropropane	0.71	16		U
10061-01-5	cis-1,3-Dichloropropene	0.78	16		U
10061-02-6	trans-1,3-Dichloropropene	0.50	16		U
100-41-4	Ethylbenzene	1.2	16	3.6	J
591-78-6	2-Hexanone	3.6	16		U
98-82-8	Isopropylbenzene	1.4	16		U
79-20-9	Methyl acetate	2.5	16		U
75-09-2	Methylene chloride	0.96	16	164	~~1.0~~ ~~JB~~ BL
108-87-2	Methyl cyclohexane	0.46	16	1.2	J
1634-04-4	Methyl tert-butyl ether	0.50	16		U
108-10-1	4-Methyl-2-pentanone	0.90	16	0.91	J
100-42-5	Styrene	0.54	16		U
79-34-5	1,1,2,2-Tetrachloroethane	0.67	16		U
127-18-4	Tetrachloroethene	1.5	16		U

FORM I VOA

DLW 4/8/09

FORM 1
VOLATILE ORGANICS ANALYSIS DATA SHEET

CLIENT SAMPLE NO.

MR08-SS164-08D

11

Lab Name: EMPIRICAL LABS Contract: CH2MHILL

Lab Code: NA Case No.: NA SAS No.: NA SDG No.: LEJEUNE041

Matrix: (soil/water) SOIL Lab Sample ID: 0812343-11

Sample wt/vol: 3.8 (g/mL) G Lab File ID: 1234311A

Level: (low/med) LOW Date Sampled: 12/20/08 08:40

% Moisture: not dec. 14 Date Analyzed: 01/02/09 01:52

GC Column: RTX-VRX ID: 0.25 (mm) Dilution Factor: 1.0

Soil Extract Volume:_____(uL) Soil Aliquot Volume: _____(uL)

CONCENTRATION UNITS: (ug/L or ug/Kg) UG/KG

CAS NO.	COMPOUND	MDL	RL	CONC	Q
108-88-3	Toluene	1.3	16	4.3	J
120-82-1	1,2,4-Trichlorobenzene	0.28	16		~~U~~ UJ CC
71-55-6	1,1,1-Trichloroethane	1.4	16		U
79-00-5	1,1,2-Trichloroethane	0.54	16		U
79-01-6	Trichloroethene	1.3	16		U
76-13-1	Trichlorotrifluoroethane	0.85	16		U
75-69-4	Trichlorofluoromethane	1.5	16		U
75-01-4	Vinyl chloride	1.7	16		U
1330-20-7	Xylene(total)	1.1	16		U

FORM I VOA

lw
4/8/09

FORM 1
VOLATILE ORGANICS ANALYSIS DATA SHEET

CLIENT SAMPLE NO. 12

MR08-IS16
4-5-6-08D

Lab Name: EMPIRICAL LABS Contract: CH2MHILL

Lab Code: NA Case No.: NA SAS No.: NA SDG No.: LEJEUNE041

Matrix: (soil/water) SOIL Lab Sample ID: 0812343-12

Sample wt/vol: 5.6 (g/mL) G Lab File ID: 1234312A

Level: (low/med) LOW Date Sampled: 12/20/08 08:45

% Moisture: not dec. 13 Date Analyzed: 01/02/09 02:23

GC Column: RTX-VRX ID: 0.25 (mm) Dilution Factor: 1.0

Soil Extract Volume:_____(uL) Soil Aliquot Volume: _____(uL)

CONCENTRATION UNITS: (ug/L or ug/Kg) UG/KG

CAS NO.	COMPOUND	MDL	RL	CONC	Q
67-64-1	Acetone	2.0	10	10U ~~8.2~~ ~~J~~	B
71-43-2	Benzene	0.48	10		U
75-27-4	Bromodichloromethane	0.31	10		U
75-25-2	Bromoform	1.0	10		U
74-83-9	Bromomethane	0.74	10		UJ CH
78-93-3	2-Butanone	1.4	10		U
75-15-0	Carbon disulfide	1.3	10		U
56-23-5	Carbon tetrachloride	0.90	10		U
108-90-7	Chlorobenzene	0.35	10		U
75-00-3	Chloroethane	1.1	10		U
67-66-3	Chloroform	0.56	10		U
74-87-3	Chloromethane	0.53	10		U
110-82-7	Cyclohexane	0.55	10		U
124-48-1	Dibromochloromethane	0.35	10		U
96-12-8	1,2-Dibromo-3-chloropropane	1.2	5.1		U
106-93-4	1,2-Dibromoethane	0.44	10		U
95-50-1	1,2-Dichlorobenzene	0.38	10		U
541-73-1	1,3-Dichlorobenzene	0.86	10		U
106-46-7	1,4-Dichlorobenzene	0.56	10		U
75-71-8	Dichlorodifluoromethane	1.1	10		U
75-34-3	1,1-Dichloroethane	0.55	10		U
107-06-2	1,2-Dichloroethane	0.47	10		U
75-35-4	1,1-Dichloroethene	1.2	10		U
156-59-2	cis-1,2-Dichloroethene	1.2	10		U
156-60-5	trans-1,2-Dichloroethene	1.1	10		U
78-87-5	1,2-Dichloropropane	0.47	10		U
10061-01-5	cis-1,3-Dichloropropene	0.51	10		U
10061-02-6	trans-1,3-Dichloropropene	0.33	10		U
100-41-4	Ethylbenzene	0.77	10		U
591-78-6	2-Hexanone	2.3	10		U
98-82-8	Isopropylbenzene	0.90	10		U
79-20-9	Methyl acetate	1.6	10		U
75-09-2	Methylene chloride	0.63	10		U
108-87-2	Methyl cyclohexane	0.31	10		U
1634-04-4	Methyl tert-butyl ether	0.33	10		U
108-10-1	4-Methyl-2-pentanone	0.59	10		U
100-42-5	Styrene	0.36	10		U
79-34-5	1,1,2,2-Tetrachloroethane	0.44	10		U
127-18-4	Tetrachloroethene	0.99	10		U

LW
4/8/09

FORM 1
VOLATILE ORGANICS ANALYSIS DATA SHEET

CLIENT SAMPLE NO. 12

MR08-IS16
4-5-6-08D

Lab Name: EMPIRICAL LABS Contract: CH2MHILL

Lab Code: NA Case No.: NA SAS No.: NA SDG No.: LEJEUNE041

Matrix: (soil/water) SOIL Lab Sample ID: 0812343-12

Sample wt/vol: 5.6 (g/mL) G Lab File ID: 1234312A

Level: (low/med) LOW Date Sampled: 12/20/08 08:45

% Moisture: not dec. 13 Date Analyzed: 01/02/09 02:23

GC Column: RTX-VRX ID: 0.25 (mm) Dilution Factor: 1.0

Soil Extract Volume:_____(uL) Soil Aliquot Volume: _____(uL)

CONCENTRATION UNITS: (ug/L or ug/Kg) UG/KG

CAS NO.	COMPOUND	MDL	RL	CONC	Q
108-88-3	Toluene	0.88	10		U
120-82-1	1,2,4-Trichlorobenzene	0.18	10		~~U~~ U1 CCH
71-55-6	1,1,1-Trichloroethane	0.92	10		U
79-00-5	1,1,2-Trichloroethane	0.36	10		U
79-01-6	Trichloroethene	0.87	10		U
76-13-1	Trichlorotrifluoroethane	0.56	10		U
75-69-4	Trichlorofluoromethane	0.97	10		U
75-01-4	Vinyl chloride	1.1	10		U
1330-20-7	Xylene(total)	0.71	10		U

FORM I VOA

lcw
4/8/09

FORM 1
VOLATILE ORGANICS ANALYSIS DATA SHEET

CLIENT SAMPLE NO. 13

MR08-SS165-08D

Lab Name: EMPIRICAL LABS Contract: CH2MHILL

Lab Code: NA Case No.: NA SAS No.: NA SDG No.: LEJEUNE041

Matrix: (soil/water) SOIL Lab Sample ID: 0812343-13

Sample wt/vol: 5.5 (g/mL) G Lab File ID: 1234313A

Level: (low/med) LOW Date Sampled: 12/20/08 09:15

% Moisture: not dec. 8 Date Analyzed: 01/02/09 02:53

GC Column: RTX-VRX ID: 0.25 (mm) Dilution Factor: 1.0

Soil Extract Volume:_____(uL) Soil Aliquot Volume: _____(uL)

CONCENTRATION UNITS: (ug/L or ug/Kg) UG/KG

CAS NO.	COMPOUND	MDL	RL	CONC	Q
67-64-1	Acetone	2.0	9.9	9.9u ~~5.1~~	~~J~~ BL
71-43-2	Benzene	0.46	9.9	9.9u ~~1.8~~	~~JB~~ BL
75-27-4	Bromodichloromethane	0.30	9.9		U
75-25-2	Bromoform	0.99	9.9		U
74-83-9	Bromomethane	0.71	9.9		~~U~~ UJ CCH
78-93-3	2-Butanone	1.4	9.9		U
75-15-0	Carbon disulfide	1.3	9.9		U
56-23-5	Carbon tetrachloride	0.87	9.9		U
108-90-7	Chlorobenzene	0.34	9.9		U
75-00-3	Chloroethane	1.1	9.9		U
67-66-3	Chloroform	0.54	9.9		U
74-87-3	Chloromethane	0.51	9.9		U
110-82-7	Cyclohexane	0.53	9.9	0.83	J
124-48-1	Dibromochloromethane	0.34	9.9		U
96-12-8	1,2-Dibromo-3-chloropropane	1.2	4.9		U
106-93-4	1,2-Dibromoethane	0.42	9.9		U
95-50-1	1,2-Dichlorobenzene	0.36	9.9		U
541-73-1	1,3-Dichlorobenzene	0.83	9.9		U
106-46-7	1,4-Dichlorobenzene	0.54	9.9		U
75-71-8	Dichlorodifluoromethane	1.1	9.9		U
75-34-3	1,1-Dichloroethane	0.53	9.9		U
107-06-2	1,2-Dichloroethane	0.45	9.9		U
75-35-4	1,1-Dichloroethene	1.2	9.9		U
156-59-2	cis-1,2-Dichloroethene	1.2	9.9		U
156-60-5	trans-1,2-Dichloroethene	1.1	9.9		U
78-87-5	1,2-Dichloropropane	0.45	9.9		U
10061-01-5	cis-1,3-Dichloropropene	0.49	9.9		U
10061-02-6	trans-1,3-Dichloropropene	0.32	9.9		U
100-41-4	Ethylbenzene	0.74	9.9	2.3	J
591-78-6	2-Hexanone	2.3	9.9	2.4	J
98-82-8	Isopropylbenzene	0.87	9.9		U
79-20-9	Methyl acetate	1.6	9.9		U
75-09-2	Methylene chloride	0.61	9.9	9.9u ~~0.64~~	~~JB~~ BL
108-87-2	Methyl cyclohexane	0.30	9.9	1.2	J
1634-04-4	Methyl tert-butyl ether	0.32	9.9		U
108-10-1	4-Methyl-2-pentanone	0.57	9.9		U
100-42-5	Styrene	0.34	9.9		U
79-34-5	1,1,2,2-Tetrachloroethane	0.42	9.9		U
127-18-4	Tetrachloroethene	0.96	9.9		U

FORM I VOA

kW 4/8/09

FORM 1
VOLATILE ORGANICS ANALYSIS DATA SHEET

CLIENT SAMPLE NO.

13

MR08-SS165-08D

Lab Name: EMPIRICAL LABS Contract: CH2MHILL

Lab Code: NA Case No.: NA SAS No.: NA SDG No.: LEJEUNE041

Matrix: (soil/water) SOIL Lab Sample ID: 0812343-13

Sample wt/vol: 5.5 (g/mL) G Lab File ID: 1234313A

Level: (low/med) LOW Date Sampled: 12/20/08 09:15

% Moisture: not dec. 8 Date Analyzed: 01/02/09 02:53

GC Column: RTX-VRX ID: 0.25 (mm) Dilution Factor: 1.0

Soil Extract Volume:_____(uL) Soil Aliquot Volume: _____(uL)

CONCENTRATION UNITS: (ug/L or ug/Kg) UG/KG

CAS NO.	COMPOUND	MDL	RL	CONC	Q
108-88-3	Toluene	0.85	9.9	1.8	J
120-82-1	1,2,4-Trichlorobenzene	0.18	9.9		~~U~~ UJ CCV
71-55-6	1,1,1-Trichloroethane	0.89	9.9		U
79-00-5	1,1,2-Trichloroethane	0.34	9.9		U
79-01-6	Trichloroethene	0.84	9.9		U
76-13-1	Trichlorotrifluoroethane	0.54	9.9		U
75-69-4	Trichlorofluoromethane	0.94	9.9		U
75-01-4	Vinyl chloride	1.1	9.9		U
1330-20-7	Xylene(total)	0.69	9.9		U

FORM I VOA

lw
4/8/09

FORM 1
VOLATILE ORGANICS ANALYSIS DATA SHEET

CLIENT SAMPLE NO. 14

MR08-IS16
5-5-6-08D

Lab Name: EMPIRICAL LABS Contract: CH2MHILL

Lab Code: NA Case No.: NA SAS No.: NA SDG No.: LEJEUNE041

Matrix: (soil/water) SOIL Lab Sample ID: 0812343-14

Sample wt/vol: 5.4 (g/mL) G Lab File ID: 1234314A

Level: (low/med) LOW Date Sampled: 12/20/08 09:20

% Moisture: not dec. 15 Date Analyzed: 01/02/09 03:24

GC Column: RTX-VRX ID: 0.25 (mm) Dilution Factor: 1.0

Soil Extract Volume:_____(uL) Soil Aliquot Volume: _____(uL)

CONCENTRATION UNITS: (ug/L or ug/Kg) UG/KG

CAS NO.	COMPOUND	MDL	RL	CONC	Q
67-64-1	Acetone	2.2	11	14	
71-43-2	Benzene	0.51	11		U
75-27-4	Bromodichloromethane	0.32	11		U
75-25-2	Bromoform	1.1	11		U
74-83-9	Bromomethane	0.78	11		~~U~~ UJ CCH
78-93-3	2-Butanone	1.5	11		U
75-15-0	Carbon disulfide	1.4	11		U
56-23-5	Carbon tetrachloride	0.96	11		U
108-90-7	Chlorobenzene	0.37	11		U
75-00-3	Chloroethane	1.2	11		U
67-66-3	Chloroform	0.60	11		U
74-87-3	Chloromethane	0.56	11		U
110-82-7	Cyclohexane	0.59	11		U
124-48-1	Dibromochloromethane	0.37	11		U
96-12-8	1,2-Dibromo-3-chloropropane	1.3	5.4		U
106-93-4	1,2-Dibromoethane	0.47	11		U
95-50-1	1,2-Dichlorobenzene	0.40	11		U
541-73-1	1,3-Dichlorobenzene	0.91	11		U
106-46-7	1,4-Dichlorobenzene	0.60	11		U
75-71-8	Dichlorodifluoromethane	1.2	11		U
75-34-3	1,1-Dichloroethane	0.59	11		U
107-06-2	1,2-Dichloroethane	0.50	11		U
75-35-4	1,1-Dichloroethene	1.3	11		U
156-59-2	cis-1,2-Dichloroethene	1.3	11		U
156-60-5	trans-1,2-Dichloroethene	1.2	11		U
78-87-5	1,2-Dichloropropane	0.50	11		U
10061-01-5	cis-1,3-Dichloropropene	0.54	11		U
10061-02-6	trans-1,3-Dichloropropene	0.35	11		U
100-41-4	Ethylbenzene	0.81	11		U
591-78-6	2-Hexanone	2.5	11		U
98-82-8	Isopropylbenzene	0.96	11		U
79-20-9	Methyl acetate	1.7	11		U
75-09-2	Methylene chloride	0.67	11	11U	~~0.79~~ ~~JB~~ BL
108-87-2	Methyl cyclohexane	0.32	11		U
1634-04-4	Methyl tert-butyl ether	0.35	11		U
108-10-1	4-Methyl-2-pentanone	0.63	11		U
100-42-5	Styrene	0.38	11		U
79-34-5	1,1,2,2-Tetrachloroethane	0.47	11		U
127-18-4	Tetrachloroethene	1.0	11		U

MW 4/8/09

FORM 1
VOLATILE ORGANICS ANALYSIS DATA SHEET

CLIENT SAMPLE NO. 14

MR08-IS16
5-5-6-08D

Lab Name: EMPIRICAL LABS Contract: CH2MHILL

Lab Code: NA Case No.: NA SAS No.: NA SDG No.: LEJEUNE041

Matrix: (soil/water) SOIL Lab Sample ID: 0812343-14

Sample wt/vol: 5.4 (g/mL) G Lab File ID: 1234314A

Level: (low/med) LOW Date Sampled: 12/20/08 09:20

% Moisture: not dec. 15 Date Analyzed: 01/02/09 03:24

GC Column: RTX-VRX ID: 0.25 (mm) Dilution Factor: 1.0

Soil Extract Volume:_____(uL) Soil Aliquot Volume: _____(uL)

CONCENTRATION UNITS: (ug/L or ug/Kg) UG/KG

CAS NO.	COMPOUND	MDL	RL	CONC	Q
108-88-3	Toluene	0.93	11		U
120-82-1	1,2,4-Trichlorobenzene	0.20	11		~~U~~ UJ CCH
71-55-6	1,1,1-Trichloroethane	0.98	11		U
79-00-5	1,1,2-Trichloroethane	0.38	11		U
79-01-6	Trichloroethene	0.92	11		U
76-13-1	Trichlorotrifluoroethane	0.60	11		U
75-69-4	Trichlorofluoromethane	1.0	11		U
75-01-4	Vinyl chloride	1.2	11		U
1330-20-7	Xylene(total)	0.76	11		U

FORM I VOA

KW
4/8/09

FORM 1
VOLATILE ORGANICS ANALYSIS DATA SHEET

CLIENT SAMPLE NO. 15

MR08-SS166-08D

Lab Name: EMPIRICAL LABS Contract: CH2MHILL

Lab Code: NA Case No.: NA SAS No.: NA SDG No.: LEJEUNE041

Matrix: (soil/water) SOIL Lab Sample ID: 0812343-15

Sample wt/vol: 5.9 (g/mL) G Lab File ID: 1234315A

Level: (low/med) LOW Date Sampled: 12/20/08 09:50

% Moisture: not dec. 15 Date Analyzed: 01/02/09 03:54

GC Column: RTX-VRX ID: 0.25 (mm) Dilution Factor: 1.0

Soil Extract Volume:_____(uL) Soil Aliquot Volume: _____(uL)

CONCENTRATION UNITS: (ug/L or ug/Kg) UG/KG

CAS NO.	COMPOUND	MDL	RL	CONC	Q
67-64-1	Acetone	2.0	9.9	9.9u ~~5.2~~	~~J~~ BL
71-43-2	Benzene	0.47	9.9		U
75-27-4	Bromodichloromethane	0.30	9.9		U
75-25-2	Bromoform	0.99	9.9		U
74-83-9	Bromomethane	0.72	9.9		~~U~~ UJ CCV
78-93-3	2-Butanone	1.4	9.9		U
75-15-0	Carbon disulfide	1.3	9.9		U
56-23-5	Carbon tetrachloride	0.88	9.9		U
108-90-7	Chlorobenzene	0.34	9.9		U
75-00-3	Chloroethane	1.1	9.9		U
67-66-3	Chloroform	0.55	9.9		U
74-87-3	Chloromethane	0.52	9.9		U
110-82-7	Cyclohexane	0.54	9.9		U
124-48-1	Dibromochloromethane	0.34	9.9		U
96-12-8	1,2-Dibromo-3-chloropropane	1.2	5.0		U
106-93-4	1,2-Dibromoethane	0.43	9.9		U
95-50-1	1,2-Dichlorobenzene	0.37	9.9		U
541-73-1	1,3-Dichlorobenzene	0.84	9.9		U
106-46-7	1,4-Dichlorobenzene	0.55	9.9		U
75-71-8	Dichlorodifluoromethane	1.1	9.9		U
75-34-3	1,1-Dichloroethane	0.54	9.9		U
107-06-2	1,2-Dichloroethane	0.46	9.9		U
75-35-4	1,1-Dichloroethene	1.2	9.9		U
156-59-2	cis-1,2-Dichloroethene	1.2	9.9		U
156-60-5	trans-1,2-Dichloroethene	1.1	9.9		U
78-87-5	1,2-Dichloropropane	0.46	9.9		U
10061-01-5	cis-1,3-Dichloropropene	0.50	9.9		U
10061-02-6	trans-1,3-Dichloropropene	0.32	9.9		U
100-41-4	Ethylbenzene	0.75	9.9		U
591-78-6	2-Hexanone	2.3	9.9		U
98-82-8	Isopropylbenzene	0.88	9.9		U
79-20-9	Methyl acetate	1.6	9.9		U
75-09-2	Methylene chloride	0.62	9.9	9.9u ~~0.62~~	~~JB~~ B1
108-87-2	Methyl cyclohexane	0.30	9.9		U
1634-04-4	Methyl tert-butyl ether	0.32	9.9		U
108-10-1	4-Methyl-2-pentanone	0.58	9.9		U
100-42-5	Styrene	0.35	9.9		U
79-34-5	1,1,2,2-Tetrachloroethane	0.43	9.9		U
127-18-4	Tetrachloroethene	0.96	9.9		U

lw
4/8/09

FORM 1
VOLATILE ORGANICS ANALYSIS DATA SHEET

CLIENT SAMPLE NO. 15

MR08-SS166-08D

Lab Name: EMPIRICAL LABS Contract: CH2MHILL

Lab Code: NA Case No.: NA SAS No.: NA SDG No.: LEJEUNE041

Matrix: (soil/water) SOIL Lab Sample ID: 0812343-15

Sample wt/vol: 5.9 (g/mL) G Lab File ID: 1234315A

Level: (low/med) LOW Date Sampled: 12/20/08 09:50

% Moisture: not dec. 15 Date Analyzed: 01/02/09 03:54

GC Column: RTX-VRX ID: 0.25 (mm) Dilution Factor: 1.0

Soil Extract Volume:_____(uL) Soil Aliquot Volume: _____(uL)

CONCENTRATION UNITS: (ug/L or ug/Kg) UG/KG

CAS NO.	COMPOUND	MDL	RL	CONC	Q
108-88-3	Toluene	0.86	9.9		U
120-82-1	1,2,4-Trichlorobenzene	0.18	9.9		~~U~~ UJ CCI
71-55-6	1,1,1-Trichloroethane	0.90	9.9		U
79-00-5	1,1,2-Trichloroethane	0.35	9.9		U
79-01-6	Trichloroethene	0.84	9.9		U
76-13-1	Trichlorotrifluoroethane	0.55	9.9		U
75-69-4	Trichlorofluoromethane	0.94	9.9		U
75-01-4	Vinyl chloride	1.1	9.9		U
1330-20-7	Xylene(total)	0.70	9.9		U

FORM I VOA

MW
4/8/09

FORM 1
VOLATILE ORGANICS ANALYSIS DATA SHEET

CLIENT SAMPLE NO. 16

MR08-IS16
6-5-6-08D

Lab Name: EMPIRICAL LABS Contract: CH2MHILL

Lab Code: NA Case No.: NA SAS No.: NA SDG No.: LEJEUNE041

Matrix: (soil/water) SOIL Lab Sample ID: 0812343-16

Sample wt/vol: 4.0 (g/mL) G Lab File ID: 1234316A

Level: (low/med) LOW Date Sampled: 12/20/08 10:00

% Moisture: not dec. 9 Date Analyzed: 01/02/09 04:25

GC Column: RTX-VRX ID: 0.25 (mm) Dilution Factor: 1.0

Soil Extract Volume:_____(uL) Soil Aliquot Volume: _____(uL)

CONCENTRATION UNITS: (ug/L or ug/Kg) UG/KG

CAS NO.	COMPOUND	MDL	RL	CONC	Q
67-64-1	Acetone	2.8	14		U R ISL
71-43-2	Benzene	0.65	14		U
75-27-4	Bromodichloromethane	0.42	14		U
75-25-2	Bromoform	1.4	14		U
74-83-9	Bromomethane	1.00	14		U
78-93-3	2-Butanone	1.9	14		U
75-15-0	Carbon disulfide	1.8	14		U
56-23-5	Carbon tetrachloride	1.2	14		U
108-90-7	Chlorobenzene	0.47	14		U
75-00-3	Chloroethane	1.5	14		U
67-66-3	Chloroform	0.76	14		U
74-87-3	Chloromethane	0.72	14		U
110-82-7	Cyclohexane	0.75	14		U
124-48-1	Dibromochloromethane	0.47	14		U
96-12-8	1,2-Dibromo-3-chloropropane	1.7	6.9		U
106-93-4	1,2-Dibromoethane	0.60	14		U
95-50-1	1,2-Dichlorobenzene	0.51	14	1.0	J J
541-73-1	1,3-Dichlorobenzene	1.2	14	1.8	J
106-46-7	1,4-Dichlorobenzene	0.76	14	1.8	J
75-71-8	Dichlorodifluoromethane	1.5	14		U R
75-34-3	1,1-Dichloroethane	0.75	14		U
107-06-2	1,2-Dichloroethane	0.64	14		U
75-35-4	1,1-Dichloroethene	1.7	14		U
156-59-2	cis-1,2-Dichloroethene	1.7	14		U
156-60-5	trans-1,2-Dichloroethene	1.5	14		U
78-87-5	1,2-Dichloropropane	0.64	14		U
10061-01-5	cis-1,3-Dichloropropene	0.69	14		U
10061-02-6	trans-1,3-Dichloropropene	0.44	14		U
100-41-4	Ethylbenzene	1.0	14	2.3	J J
591-78-6	2-Hexanone	3.2	14		U R
98-82-8	Isopropylbenzene	1.2	14		U
79-20-9	Methyl acetate	2.2	14		U
75-09-2	Methylene chloride	0.86	14	14 ~~R 3.2~~	~~JB~~ BC
108-87-2	Methyl cyclohexane	0.42	14		U R
1634-04-4	Methyl tert-butyl ether	0.44	14		U
108-10-1	4-Methyl-2-pentanone	0.80	14		U
100-42-5	Styrene	0.48	14	1.5	J J
79-34-5	1,1,2,2-Tetrachloroethane	0.60	14		U R
127-18-4	Tetrachloroethene	1.3	14		U R

FORM I VOA

NW
4/8/09

FORM 1
VOLATILE ORGANICS ANALYSIS DATA SHEET

CLIENT SAMPLE NO. 16

MR08-IS16
6-5-6-08D

Lab Name: EMPIRICAL LABS Contract: CH2MHILL

Lab Code: NA Case No.: NA SAS No.: NA SDG No.: LEJEUNE041

Matrix: (soil/water) SOIL Lab Sample ID: 0812343-16

Sample wt/vol: 4.0 (g/mL) G Lab File ID: 1234316A

Level: (low/med) LOW Date Sampled: 12/20/08 10:00

% Moisture: not dec. 9 Date Analyzed: 01/02/09 04:25

GC Column: RTX-VRX ID: 0.25 (mm) Dilution Factor: 1.0

Soil Extract Volume:_____(uL) Soil Aliquot Volume: _____(uL)

CONCENTRATION UNITS: (ug/L or ug/Kg) UG/KG

CAS NO.	COMPOUND	MDL	RL	CONC	Q
108-88-3	Toluene	1.2	14		~~U~~ R ISL
120-82-1	1,2,4-Trichlorobenzene	0.25	14		U
71-55-6	1,1,1-Trichloroethane	1.2	14		U
79-00-5	1,1,2-Trichloroethane	0.48	14		U
79-01-6	Trichloroethene	1.2	14		U
76-13-1	Trichlorotrifluoroethane	0.76	14		U
75-69-4	Trichlorofluoromethane	1.3	14		U
75-01-4	Vinyl chloride	1.5	14		U
1330-20-7	Xylene(total)	0.97	14	3.1	~~U~~ J

FORM I VOA

lw
4/8/09

FORM 1
VOLATILE ORGANICS ANALYSIS DATA SHEET

CLIENT SAMPLE NO. 16RE

MR08-IS16
6-5-6-08DR

Lab Name: EMPIRICAL LABS Contract: CH2MHILL

Lab Code: NA Case No.: NA SAS No.: NA SDG No.: LEJEUNE041

Matrix: (soil/water) SOIL Lab Sample ID: 0812343-16R

Sample wt/vol: 5.0 (g/mL) G Lab File ID: 1234316B

Level: (low/med) LOW Date Sampled: 12/20/08 10:00

% Moisture: not dec. 9 Date Analyzed: 01/06/09 18:07 use original

GC Column: RTX-VRX ID: 0.25 (mm) Dilution Factor: 1.0

Soil Extract Volume:_____(uL) Soil Aliquot Volume: _____(uL)

CONCENTRATION UNITS: (ug/L or ug/Kg) UG/KG

CAS NO.	COMPOUND	MDL	RL	CONC	Q
67-64-1	Acetone	2.2	11		U UJ HT
71-43-2	Benzene	0.52	11		U
75-27-4	Bromodichloromethane	0.33	11		U
75-25-2	Bromoform	1.1	11		U
74-83-9	Bromomethane	0.79	11		U
78-93-3	2-Butanone	1.5	11		U
75-15-0	Carbon disulfide	1.4	11		U
56-23-5	Carbon tetrachloride	0.97	11		U
108-90-7	Chlorobenzene	0.38	11		U
75-00-3	Chloroethane	1.2	11		U
67-66-3	Chloroform	0.61	11		U
74-87-3	Chloromethane	0.57	11		U
110-82-7	Cyclohexane	0.60	11		U
124-48-1	Dibromochloromethane	0.38	11		U
96-12-8	1,2-Dibromo-3-chloropropane	1.3	5.5		U
106-93-4	1,2-Dibromoethane	0.47	11		U
95-50-1	1,2-Dichlorobenzene	0.41	11		U
541-73-1	1,3-Dichlorobenzene	0.93	11		U
106-46-7	1,4-Dichlorobenzene	0.61	11		U
75-71-8	Dichlorodifluoromethane	1.2	11		U
75-34-3	1,1-Dichloroethane	0.60	11		U
107-06-2	1,2-Dichloroethane	0.51	11		U
75-35-4	1,1-Dichloroethene	1.3	11		U
156-59-2	cis-1,2-Dichloroethene	1.3	11		U
156-60-5	trans-1,2-Dichloroethene	1.2	11		U
78-87-5	1,2-Dichloropropane	0.51	11		U
10061-01-5	cis-1,3-Dichloropropene	0.55	11		U
10061-02-6	trans-1,3-Dichloropropene	0.35	11		U
100-41-4	Ethylbenzene	0.83	11		U
591-78-6	2-Hexanone	2.5	11		U
98-82-8	Isopropylbenzene	0.97	11		U
79-20-9	Methyl acetate	1.8	11		U
75-09-2	Methylene chloride	0.68	11	11UJ ~~3.9~~ JB	~~B~~
108-87-2	Methyl cyclohexane	0.33	11		U UJ
1634-04-4	Methyl tert-butyl ether	0.35	11		U
108-10-1	4-Methyl-2-pentanone	0.64	11		U
100-42-5	Styrene	0.39	11		U
79-34-5	1,1,2,2-Tetrachloroethane	0.47	11		U
127-18-4	Tetrachloroethene	1.1	11		U

FORM I VOA

lw
4/8/09

FORM 1
VOLATILE ORGANICS ANALYSIS DATA SHEET

CLIENT SAMPLE NO. 16RE

MR08-IS16
6-5-6-08DR

Lab Name: EMPIRICAL LABS Contract: CH2MHILL

Lab Code: NA Case No.: NA SAS No.: NA SDG No.: LEJEUNE041

Matrix: (soil/water) SOIL Lab Sample ID: 0812343-16R

Sample wt/vol: 5.0 (g/mL) G Lab File ID: 1234316B

Level: (low/med) LOW Date Sampled: 12/20/08 10:00

% Moisture: not dec. 9 Date Analyzed: 01/06/09 18:07

GC Column: RTX-VRX ID: 0.25 (mm) Dilution Factor: 1.0

Soil Extract Volume:_____(uL) Soil Aliquot Volume: _____(uL)

use original

CONCENTRATION UNITS: (ug/L or ug/Kg) UG/KG

CAS NO.	COMPOUND	MDL	RL	CONC	Q
108-88-3	Toluene	0.95	11		~~U~~ UJ
120-82-1	1,2,4-Trichlorobenzene	0.20	11		~~U~~
71-55-6	1,1,1-Trichloroethane	0.99	11		~~U~~
79-00-5	1,1,2-Trichloroethane	0.39	11		~~U~~
79-01-6	Trichloroethene	0.94	11		~~U~~
76-13-1	Trichlorotrifluoroethane	0.61	11		~~U~~
75-69-4	Trichlorofluoromethane	1.0	11		~~U~~
75-01-4	Vinyl chloride	1.2	11		~~U~~
1330-20-7	Xylene(total)	0.77	11		~~U~~

HT

R RE

FORM I VOA

LW
4/8/09

FORM 1
VOLATILE ORGANICS ANALYSIS DATA SHEET

CLIENT SAMPLE NO. 17

MR08-SS173-08D

Lab Name: EMPIRICAL LABS Contract: CH2MHILL

Lab Code: NA Case No.: NA SAS No.: NA SDG No.: LEJEUNE041

Matrix: (soil/water) SOIL Lab Sample ID: 0812343-17

Sample wt/vol: 4.8 (g/mL) G Lab File ID: 1234317D

Level: (low/med) MED Date Sampled: 12/20/08 10:30

% Moisture: not dec. 6 Date Analyzed: 01/22/09 14:11

GC Column: RTX-VRX ID: 0.25 (mm) Dilution Factor: 1.0

Soil Extract Volume: 5000(uL) Soil Aliquot Volume: 100(uL)

CONCENTRATION UNITS: (ug/L or ug/Kg) UG/KG

CAS NO.	COMPOUND	MDL	RL	CONC	Q
67-64-1	Acetone	110	550		U R HT
71-43-2	Benzene	26	550		U
75-27-4	Bromodichloromethane	16	550		U
75-25-2	Bromoform	55	550		U
74-83-9	Bromomethane	40	550		U
78-93-3	2-Butanone	77	550		U
75-15-0	Carbon disulfide	71	550		U
56-23-5	Carbon tetrachloride	48	550		U
108-90-7	Chlorobenzene	19	550		U
75-00-3	Chloroethane	60	550		U
67-66-3	Chloroform	30	550		U
74-87-3	Chloromethane	28	550	43	J J
110-82-7	Cyclohexane	30	550		U R
124-48-1	Dibromochloromethane	19	550		U
96-12-8	1,2-Dibromo-3-chloropropane	66	270		U
106-93-4	1,2-Dibromoethane	24	550		U
95-50-1	1,2-Dichlorobenzene	20	550		U
541-73-1	1,3-Dichlorobenzene	46	550		U
106-46-7	1,4-Dichlorobenzene	30	550		U
75-71-8	Dichlorodifluoromethane	60	550		U
75-34-3	1,1-Dichloroethane	30	550		U
107-06-2	1,2-Dichloroethane	25	550		U
75-35-4	1,1-Dichloroethene	66	550		U
156-59-2	cis-1,2-Dichloroethene	66	550		U
156-60-5	trans-1,2-Dichloroethene	60	550		U
78-87-5	1,2-Dichloropropane	25	550		U
10061-01-5	cis-1,3-Dichloropropene	27	550		U
10061-02-6	trans-1,3-Dichloropropene	18	550		U
100-41-4	Ethylbenzene	41	550		U
591-78-6	2-Hexanone	130	550		U
98-82-8	Isopropylbenzene	48	550		U
79-20-9	Methyl acetate	88	550		U
75-09-2	Methylene chloride	34	550	620	~~BLR~~ BL
108-87-2	Methyl cyclohexane	16	550		U
1634-04-4	Methyl tert-butyl ether	18	550		U
108-10-1	4-Methyl-2-pentanone	32	550		U
100-42-5	Styrene	19	550		U
79-34-5	1,1,2,2-Tetrachloroethane	24	550		U
127-18-4	Tetrachloroethene	53	550		U

FORM I VOA

CW
1/21/09

17

FORM 1
VOLATILE ORGANICS ANALYSIS DATA SHEET

CLIENT SAMPLE NO.

MR08-SS173-08D

Lab Name: EMPIRICAL LABS Contract: CH2MHILL

Lab Code: NA Case No.: NA SAS No.: NA SDG No.: LEJEUNE041

Matrix: (soil/water) SOIL Lab Sample ID: 0812343-17

Sample wt/vol: 4.8 (g/mL) G Lab File ID: 1234317D

Level: (low/med) MED Date Sampled: 12/20/08 10:30

% Moisture: not dec. 6 Date Analyzed: 01/22/09 14:11

GC Column: RTX-VRX ID: 0.25 (mm) Dilution Factor: 1.0

Soil Extract Volume: 5000(uL) Soil Aliquot Volume: 100(uL)

CONCENTRATION UNITS: (ug/L or ug/Kg) UG/KG

CAS NO.	COMPOUND	MDL	RL	CONC	Q
108-88-3	Toluene	47	550		~~U~~ R HT
120-82-1	1,2,4-Trichlorobenzene	9.9	550	550X10	~~JB~~ BC
71-55-6	1,1,1-Trichloroethane	49	550		U
79-00-5	1,1,2-Trichloroethane	19	550		U
79-01-6	Trichloroethene	47	550		U
76-13-1	Trichlorotrifluoroethane	30	550		U
75-69-4	Trichlorofluoromethane	52	550		U
75-01-4	Vinyl chloride	60	550		U
1330-20-7	Xylene(total)	38	550		U

FORM I VOA

4/8/09

FORM 1
VOLATILE ORGANICS ANALYSIS DATA SHEET

CLIENT SAMPLE NO. 18

MR08-IS17
3-5-6-08D

Lab Name: EMPIRICAL LABS Contract: CH2MHILL

Lab Code: NA Case No.: NA SAS No.: NA SDG No.: LEJEUNE041

Matrix: (soil/water) SOIL Lab Sample ID: 0812343-18

Sample wt/vol: 5.0 (g/mL) G Lab File ID: 1234318A

Level: (low/med) LOW Date Sampled: 12/20/08 10:35

% Moisture: not dec. 6 Date Analyzed: 01/02/09 05:26

GC Column: RTX-VRX ID: 0.25 (mm) Dilution Factor: 1.0

Soil Extract Volume:_____(uL) Soil Aliquot Volume: _____(uL)

CONCENTRATION UNITS: (ug/L or ug/Kg) UG/KG

CAS NO.	COMPOUND	MDL	RL	CONC	Q
67-64-1	Acetone	2.1	10	9.5	J
71-43-2	Benzene	0.49	10		U
75-27-4	Bromodichloromethane	0.32	10		U
75-25-2	Bromoform	1.0	10		U
74-83-9	Bromomethane	0.76	10		~~U~~ UJ CCH
78-93-3	2-Butanone	1.5	10		U
75-15-0	Carbon disulfide	1.4	10		U
56-23-5	Carbon tetrachloride	0.92	10		U
108-90-7	Chlorobenzene	0.36	10		U
75-00-3	Chloroethane	1.2	10		U
67-66-3	Chloroform	0.58	10		U
74-87-3	Chloromethane	0.55	10		U
110-82-7	Cyclohexane	0.57	10		U
124-48-1	Dibromochloromethane	0.36	10		U
96-12-8	1,2-Dibromo-3-chloropropane	1.3	5.3		U
106-93-4	1,2-Dibromoethane	0.45	10		U
95-50-1	1,2-Dichlorobenzene	0.39	10		U
541-73-1	1,3-Dichlorobenzene	0.88	10		U
106-46-7	1,4-Dichlorobenzene	0.58	10		U
75-71-8	Dichlorodifluoromethane	1.2	10		U
75-34-3	1,1-Dichloroethane	0.57	10		U
107-06-2	1,2-Dichloroethane	0.48	10		U
75-35-4	1,1-Dichloroethene	1.3	10		U
156-59-2	cis-1,2-Dichloroethene	1.3	10		U
156-60-5	trans-1,2-Dichloroethene	1.2	10		U
78-87-5	1,2-Dichloropropane	0.48	10		U
10061-01-5	cis-1,3-Dichloropropene	0.53	10		U
10061-02-6	trans-1,3-Dichloropropene	0.34	10		U
100-41-4	Ethylbenzene	0.79	10		U
591-78-6	2-Hexanone	2.4	10		U
98-82-8	Isopropylbenzene	0.92	10		U
79-20-9	Methyl acetate	1.7	10		U
75-09-2	Methylene chloride	0.65	10	10U	~~0.85~~ ~~JB~~ BC
108-87-2	Methyl cyclohexane	0.32	10		U
1634-04-4	Methyl tert-butyl ether	0.34	10		U
108-10-1	4-Methyl-2-pentanone	0.61	10		U
100-42-5	Styrene	0.37	10		U
79-34-5	1,1,2,2-Tetrachloroethane	0.45	10		U
127-18-4	Tetrachloroethene	1.0	10		U

FORM I VOA

4/8/09

FORM 1
VOLATILE ORGANICS ANALYSIS DATA SHEET

CLIENT SAMPLE NO. 18

MR08-IS17
3-5-6-08D

Lab Name: EMPIRICAL LABS Contract: CH2MHILL

Lab Code: NA Case No.: NA SAS No.: NA SDG No.: LEJEUNE041

Matrix: (soil/water) SOIL Lab Sample ID: 0812343-18

Sample wt/vol: 5.0 (g/mL) G Lab File ID: 1234318A

Level: (low/med) LOW Date Sampled: 12/20/08 10:35

% Moisture: not dec. 6 Date Analyzed: 01/02/09 05:26

GC Column: RTX-VRX ID: 0.25 (mm) Dilution Factor: 1.0

Soil Extract Volume:_____(uL) Soil Aliquot Volume: _____(uL)

CONCENTRATION UNITS: (ug/L or ug/Kg) UG/KG

CAS NO.	COMPOUND	MDL	RL	CONC	Q
108-88-3	Toluene	0.90	10		U
120-82-1	1,2,4-Trichlorobenzene	0.19	10		~~U~~ UJ CCA
71-55-6	1,1,1-Trichloroethane	0.95	10		U
79-00-5	1,1,2-Trichloroethane	0.37	10		U
79-01-6	Trichloroethene	0.89	10		U
76-13-1	Trichlorotrifluoroethane	0.58	10		U
75-69-4	Trichlorofluoromethane	1.00	10		U
75-01-4	Vinyl chloride	1.2	10		U
1330-20-7	Xylene(total)	0.74	10		U

lw
4/8/09

FORM 1
VOLATILE ORGANICS ANALYSIS DATA SHEET

CLIENT SAMPLE NO. 19

MR08-SS174-08D

Lab Name: EMPIRICAL LABS Contract: CH2MHILL

Lab Code: NA Case No.: NA SAS No.: NA SDG No.: LEJEUNE041

Matrix: (soil/water) SOIL Lab Sample ID: 0812343-19

Sample wt/vol: 3.0 (g/mL) G Lab File ID: 1234319A

Level: (low/med) LOW Date Sampled: 12/20/08 11:25

% Moisture: not dec. 5 Date Analyzed: 01/02/09 05:56

GC Column: RTX-VRX ID: 0.25 (mm) Dilution Factor: 1.0

Soil Extract Volume:_____(uL) Soil Aliquot Volume: _____(uL)

Use reanalysis

CONCENTRATION UNITS: (ug/L or ug/Kg) UG/KG

CAS NO.	COMPOUND	MDL	RL	CONC	Q
67-64-1	Acetone	3.5	18		U R ISL
71-43-2	Benzene	0.83	18		U
75-27-4	Bromodichloromethane	0.53	18		U
75-25-2	Bromoform	1.8	18		U
74-83-9	Bromomethane	1.3	18		U
78-93-3	2-Butanone	2.5	18		U
75-15-0	Carbon disulfide	2.3	18		U
56-23-5	Carbon tetrachloride	1.6	18		U
108-90-7	Chlorobenzene	0.60	18		U
75-00-3	Chloroethane	1.9	18		U
67-66-3	Chloroform	0.97	18		U
74-87-3	Chloromethane	0.92	18		U
110-82-7	Cyclohexane	0.95	18		U
124-48-1	Dibromochloromethane	0.60	18		U
96-12-8	1,2-Dibromo-3-chloropropane	2.1	8.8		U
106-93-4	1,2-Dibromoethane	0.76	18		U
95-50-1	1,2-Dichlorobenzene	0.65	18		U
541-73-1	1,3-Dichlorobenzene	1.5	18		U
106-46-7	1,4-Dichlorobenzene	0.97	18		U
75-71-8	Dichlorodifluoromethane	1.9	18		U
75-34-3	1,1-Dichloroethane	0.95	18		U
107-06-2	1,2-Dichloroethane	0.81	18		U
75-35-4	1,1-Dichloroethene	2.1	18		U
156-59-2	cis-1,2-Dichloroethene	2.1	18		U
156-60-5	trans-1,2-Dichloroethene	1.9	18		U
78-87-5	1,2-Dichloropropane	0.81	18		U
10061-01-5	cis-1,3-Dichloropropene	0.88	18		U
10061-02-6	trans-1,3-Dichloropropene	0.56	18		U
100-41-4	Ethylbenzene	1.3	18		U
591-78-6	2-Hexanone	4.1	18		U
98-82-8	Isopropylbenzene	1.6	18		U
79-20-9	Methyl acetate	2.8	18		U
75-09-2	Methylene chloride	1.1	18	18 R ~~5.5 JB ISL BC~~	
108-87-2	Methyl cyclohexane	0.53	18		U R ISL
1634-04-4	Methyl tert-butyl ether	0.56	18		U
108-10-1	4-Methyl-2-pentanone	1.0	18		U
100-42-5	Styrene	0.62	18		U
79-34-5	1,1,2,2-Tetrachloroethane	0.76	18		U
127-18-4	Tetrachloroethene	1.7	18		U

FORM I VOA

MW 4/8/19

FORM 1
VOLATILE ORGANICS ANALYSIS DATA SHEET

CLIENT SAMPLE NO. 19

MR08-SS174-08D

Lab Name: EMPIRICAL LABS Contract: CH2MHILL

Lab Code: NA Case No.: NA SAS No.: NA SDG No.: LEJEUNE041

Matrix: (soil/water) SOIL Lab Sample ID: 0812343-19

Sample wt/vol: 3.0 (g/mL) G Lab File ID: 1234319A

Level: (low/med) LOW Date Sampled: 12/20/08 11:25

% Moisture: not dec. 5 Date Analyzed: 01/02/09 05:56 dilse reanalysis

GC Column: RTX-VRX ID: 0.25 (mm) Dilution Factor: 1.0

Soil Extract Volume:_____(uL) Soil Aliquot Volume: _____(uL)

CONCENTRATION UNITS: (ug/L or ug/Kg) UG/KG

CAS NO.	COMPOUND	MDL	RL	CONC	Q
108-88-3	Toluene	1.5	18		U R ISL
120-82-1	1,2,4-Trichlorobenzene	0.32	18		U
71-55-6	1,1,1-Trichloroethane	1.6	18		U
79-00-5	1,1,2-Trichloroethane	0.62	18		U
79-01-6	Trichloroethene	1.5	18		U
76-13-1	Trichlorotrifluoroethane	0.97	18		U
75-69-4	Trichlorofluoromethane	1.7	18		U
75-01-4	Vinyl chloride	1.9	18		U
1330-20-7	Xylene(total)	1.2	18		U

R RE

FORM I VOA

MW
4/8/09

FORM 1
VOLATILE ORGANICS ANALYSIS DATA SHEET

CLIENT SAMPLE NO. 19RE

MR08-SS174-08DR

Lab Name: EMPIRICAL LABS Contract: CH2MHILL

Lab Code: NA Case No.: NA SAS No.: NA SDG No.: LEJEUNE041

Matrix: (soil/water) SOIL Lab Sample ID: 0812343-19R

Sample wt/vol: 4.5 (g/mL) G Lab File ID: 1234319B

Level: (low/med) LOW Date Sampled: 12/20/08 11:25

% Moisture: not dec. 5 Date Analyzed: 01/06/09 19:25

GC Column: RTX-VRX ID: 0.25 (mm) Dilution Factor: 1.0

Soil Extract Volume:_____(uL) Soil Aliquot Volume: _____(uL)

CONCENTRATION UNITS: (ug/L or ug/Kg) UG/KG

CAS NO.	COMPOUND	MDL	RL	CONC	Q
67-64-1	Acetone	2.3	12	12	U ~~5.7 J~~ HTBC
71-43-2	Benzene	0.55	12	0.63	J J HT
75-27-4	Bromodichloromethane	0.35	12		U UJ
75-25-2	Bromoform	1.2	12		U
74-83-9	Bromomethane	0.84	12		U
78-93-3	2-Butanone	1.6	12		U
75-15-0	Carbon disulfide	1.5	12		U
56-23-5	Carbon tetrachloride	1.0	12		U
108-90-7	Chlorobenzene	0.40	12		U
75-00-3	Chloroethane	1.3	12		U
67-66-3	Chloroform	0.64	12		U
74-87-3	Chloromethane	0.61	12		U
110-82-7	Cyclohexane	0.63	12		U
124-48-1	Dibromochloromethane	0.40	12		U
96-12-8	1,2-Dibromo-3-chloropropane	1.4	5.8		U
106-93-4	1,2-Dibromoethane	0.50	12		U
95-50-1	1,2-Dichlorobenzene	0.43	12		U
541-73-1	1,3-Dichlorobenzene	0.98	12		U
106-46-7	1,4-Dichlorobenzene	0.64	12		U
75-71-8	Dichlorodifluoromethane	1.3	12		U
75-34-3	1,1-Dichloroethane	0.63	12		U
107-06-2	1,2-Dichloroethane	0.54	12		U
75-35-4	1,1-Dichloroethene	1.4	12		U
156-59-2	cis-1,2-Dichloroethene	1.4	12		U
156-60-5	trans-1,2-Dichloroethene	1.3	12		U
78-87-5	1,2-Dichloropropane	0.54	12		U
10061-01-5	cis-1,3-Dichloropropene	0.58	12		U
10061-02-6	trans-1,3-Dichloropropene	0.37	12		U
100-41-4	Ethylbenzene	0.88	12	3.6	J J
591-78-6	2-Hexanone	2.7	12		U UJ
98-82-8	Isopropylbenzene	1.0	12		U
79-20-9	Methyl acetate	1.9	12		U
75-09-2	Methylene chloride	0.72	12	12	U ~~1.8 JB~~ BC
108-87-2	Methyl cyclohexane	0.35	12	0.42	J J
1634-04-4	Methyl tert-butyl ether	0.37	12		U UJ
108-10-1	4-Methyl-2-pentanone	0.68	12		U
100-42-5	Styrene	0.41	12		U
79-34-5	1,1,2,2-Tetrachloroethane	0.50	12		U
127-18-4	Tetrachloroethene	1.1	12		U

LW
4/8/09

FORM 1
VOLATILE ORGANICS ANALYSIS DATA SHEET

CLIENT SAMPLE NO. 19RE

MR08-SS174-08DR

Lab Name: EMPIRICAL LABS Contract: CH2MHILL

Lab Code: NA Case No.: NA SAS No.: NA SDG No.: LEJEUNE041

Matrix: (soil/water) SOIL Lab Sample ID: 0812343-19R

Sample wt/vol: 4.5 (g/mL) G Lab File ID: 1234319B

Level: (low/med) LOW Date Sampled: 12/20/08 11:25

% Moisture: not dec. 5 Date Analyzed: 01/06/09 19:25

GC Column: RTX-VRX ID: 0.25 (mm) Dilution Factor: 1.0

Soil Extract Volume:_____(uL) Soil Aliquot Volume: _____(uL)

CONCENTRATION UNITS: (ug/L or ug/Kg) UG/KG

CAS NO.	COMPOUND	MDL	RL	CONC	Q
108-88-3	Toluene	1.0	12	1.7	~~J~~ J HT
120-82-1	1,2,4-Trichlorobenzene	0.21	12		~~U~~ UJ
71-55-6	1,1,1-Trichloroethane	1.0	12		~~U~~
79-00-5	1,1,2-Trichloroethane	0.41	12		~~U~~
79-01-6	Trichloroethene	0.99	12		~~U~~
76-13-1	Trichlorotrifluoroethane	0.64	12		~~U~~
75-69-4	Trichlorofluoromethane	1.1	12		~~U~~
75-01-4	Vinyl chloride	1.3	12		~~U~~
1330-20-7	Xylene(total)	0.82	12		~~U~~

FORM I VOA

LW
4/8/09

FORM 1
VOLATILE ORGANICS ANALYSIS DATA SHEET

CLIENT SAMPLE NO. 20

MR08-IS17
4-5-6-08D

Lab Name: EMPIRICAL LABS Contract: CH2MHILL

Lab Code: NA Case No.: NA SAS No.: NA SDG No.: LEJEUNE041

Matrix: (soil/water) SOIL Lab Sample ID: 0812343-20

Sample wt/vol: 4.8 (g/mL) G Lab File ID: 1234320A

Level: (low/med) LOW Date Sampled: 12/20/08 11:30

% Moisture: not dec. 9 Date Analyzed: 01/02/09 06:27

GC Column: RTX-VRX ID: 0.25 (mm) Dilution Factor: 1.0

Soil Extract Volume:_____(uL) Soil Aliquot Volume: _____(uL)

CONCENTRATION UNITS: (ug/L or ug/Kg) UG/KG

CAS NO.	COMPOUND	MDL	RL	CONC	Q
67-64-1	Acetone	2.3	11		U
71-43-2	Benzene	0.54	11		U
75-27-4	Bromodichloromethane	0.34	11		U
75-25-2	Bromoform	1.1	11		U
74-83-9	Bromomethane	0.82	11		~~U~~ UJ CCH
78-93-3	2-Butanone	1.6	11		U
75-15-0	Carbon disulfide	1.5	11		U
56-23-5	Carbon tetrachloride	1.0	11		U
108-90-7	Chlorobenzene	0.39	11		U
75-00-3	Chloroethane	1.2	11		U
67-66-3	Chloroform	0.63	11		U
74-87-3	Chloromethane	0.59	11		U
110-82-7	Cyclohexane	0.61	11		U
124-48-1	Dibromochloromethane	0.39	11		U
96-12-8	1,2-Dibromo-3-chloropropane	1.4	5.7		U
106-93-4	1,2-Dibromoethane	0.49	11		U
95-50-1	1,2-Dichlorobenzene	0.42	11		U
541-73-1	1,3-Dichlorobenzene	0.96	11		U
106-46-7	1,4-Dichlorobenzene	0.63	11		U
75-71-8	Dichlorodifluoromethane	1.2	11		U
75-34-3	1,1-Dichloroethane	0.61	11		U
107-06-2	1,2-Dichloroethane	0.52	11		U
75-35-4	1,1-Dichloroethene	1.4	11		U
156-59-2	cis-1,2-Dichloroethene	1.4	11		U
156-60-5	trans-1,2-Dichloroethene	1.2	11		U
78-87-5	1,2-Dichloropropane	0.52	11		U
10061-01-5	cis-1,3-Dichloropropene	0.57	11		U
10061-02-6	trans-1,3-Dichloropropene	0.36	11		U
100-41-4	Ethylbenzene	0.85	11		U
591-78-6	2-Hexanone	2.6	11		U
98-82-8	Isopropylbenzene	1.0	11		U
79-20-9	Methyl acetate	1.8	11		U
75-09-2	Methylene chloride	0.70	11	11u	~~0.79 JB~~ B
108-87-2	Methyl cyclohexane	0.34	11		U
1634-04-4	Methyl tert-butyl ether	0.36	11		U
108-10-1	4-Methyl-2-pentanone	0.66	11		U
100-42-5	Styrene	0.40	11		U
79-34-5	1,1,2,2-Tetrachloroethane	0.49	11		U
127-18-4	Tetrachloroethene	1.1	11		U

FORM I VOA

11u
4/8/09

FORM 1
VOLATILE ORGANICS ANALYSIS DATA SHEET

CLIENT SAMPLE NO. 20

MR08-IS17
4-5-6-08D

Lab Name: EMPIRICAL LABS Contract: CH2MHILL

Lab Code: NA Case No.: NA SAS No.: NA SDG No.: LEJEUNE041

Matrix: (soil/water) SOIL Lab Sample ID: 0812343-20

Sample wt/vol: 4.8 (g/mL) G Lab File ID: 1234320A

Level: (low/med) LOW Date Sampled: 12/20/08 11:30

% Moisture: not dec. 9 Date Analyzed: 01/02/09 06:27

GC Column: RTX-VRX ID: 0.25 (mm) Dilution Factor: 1.0

Soil Extract Volume:_____(uL) Soil Aliquot Volume: _____(uL)

CONCENTRATION UNITS: (ug/L or ug/Kg) UG/KG

CAS NO.	COMPOUND	MDL	RL	CONC	Q
108-88-3	Toluene	0.98	11		U
120-82-1	1,2,4-Trichlorobenzene	0.20	11		~~U~~ UJ CU
71-55-6	1,1,1-Trichloroethane	1.0	11		U
79-00-5	1,1,2-Trichloroethane	0.40	11		U
79-01-6	Trichloroethene	0.97	11		U
76-13-1	Trichlorotrifluoroethane	0.63	11		U
75-69-4	Trichlorofluoromethane	1.1	11		U
75-01-4	Vinyl chloride	1.2	11		U
1330-20-7	Xylene(total)	0.80	11		U

FORM I VOA

4/8/09

FORM 1
VOLATILE ORGANICS ANALYSIS DATA SHEET

CLIENT SAMPLE NO. 21

MR08-SS167-08D

Lab Name: EMPIRICAL LABS Contract: CH2MHILL

Lab Code: NA Case No.: NA SAS No.: NA SDG No.: LEJEUNE041

Matrix: (soil/water) SOIL Lab Sample ID: 0812343-21

Sample wt/vol: 4.6 (g/mL) G Lab File ID: 1234321A

Level: (low/med) LOW Date Sampled: 12/20/08 12:55

% Moisture: not dec. 11 Date Analyzed: 01/02/09 06:57

GC Column: RTX-VRX ID: 0.25 (mm) Dilution Factor: 1.0

Soil Extract Volume:_____(uL) Soil Aliquot Volume: _____(uL)

CONCENTRATION UNITS: (ug/L or ug/Kg) UG/KG

CAS NO.	COMPOUND	MDL	RL	CONC	Q
67-64-1	Acetone	2.4	12	150	
71-43-2	Benzene	0.57	12	124 ~~2.1~~	~~JB~~ BL
75-27-4	Bromodichloromethane	0.36	12		U
75-25-2	Bromoform	1.2	12		U
74-83-9	Bromomethane	0.88	12		UUJ CCV
78-93-3	2-Butanone	1.7	12	36	
75-15-0	Carbon disulfide	1.6	12	2.9	J
56-23-5	Carbon tetrachloride	1.1	12		U
108-90-7	Chlorobenzene	0.41	12		U
75-00-3	Chloroethane	1.3	12		U
67-66-3	Chloroform	0.67	12		U
74-87-3	Chloromethane	0.63	12		U
110-82-7	Cyclohexane	0.66	12	1.3	J
124-48-1	Dibromochloromethane	0.41	12		U
96-12-8	1,2-Dibromo-3-chloropropane	1.5	6.1		U
106-93-4	1,2-Dibromoethane	0.52	12		U
95-50-1	1,2-Dichlorobenzene	0.45	12		U
541-73-1	1,3-Dichlorobenzene	1.0	12		U
106-46-7	1,4-Dichlorobenzene	0.67	12		U
75-71-8	Dichlorodifluoromethane	1.3	12		U
75-34-3	1,1-Dichloroethane	0.66	12		U
107-06-2	1,2-Dichloroethane	0.56	12		U
75-35-4	1,1-Dichloroethene	1.5	12		U
156-59-2	cis-1,2-Dichloroethene	1.5	12		U
156-60-5	trans-1,2-Dichloroethene	1.3	12		U
78-87-5	1,2-Dichloropropane	0.56	12		U
10061-01-5	cis-1,3-Dichloropropene	0.61	12		U
10061-02-6	trans-1,3-Dichloropropene	0.39	12		U
100-41-4	Ethylbenzene	0.91	12	1.7	J
591-78-6	2-Hexanone	2.8	12		U
98-82-8	Isopropylbenzene	1.1	12		U
79-20-9	Methyl acetate	1.9	12		U
75-09-2	Methylene chloride	0.76	12	124 ~~0.89~~	~~JB~~ BL
108-87-2	Methyl cyclohexane	0.36	12	1.2	J
1634-04-4	Methyl tert-butyl ether	0.39	12		U
108-10-1	4-Methyl-2-pentanone	0.71	12	1.2	J
100-42-5	Styrene	0.43	12		U
79-34-5	1,1,2,2-Tetrachloroethane	0.52	12		U
127-18-4	Tetrachloroethene	1.2	12		U

FORM I VOA

4/8/09

FORM 1
VOLATILE ORGANICS ANALYSIS DATA SHEET

CLIENT SAMPLE NO. 21

MR08-SS167-08D

Lab Name: EMPIRICAL LABS Contract: CH2MHILL

Lab Code: NA Case No.: NA SAS No.: NA SDG No.: LEJEUNE041

Matrix: (soil/water) SOIL Lab Sample ID: 0812343-21

Sample wt/vol: 4.6 (g/mL) G Lab File ID: 1234321A

Level: (low/med) LOW Date Sampled: 12/20/08 12:55

% Moisture: not dec. 11 Date Analyzed: 01/02/09 06:57

GC Column: RTX-VRX ID: 0.25 (mm) Dilution Factor: 1.0

Soil Extract Volume:_____(uL) Soil Aliquot Volume: _____(uL)

CONCENTRATION UNITS: (ug/L or ug/Kg) UG/KG

CAS NO.	COMPOUND	MDL	RL	CONC	Q
108-88-3	Toluene	1.0	12	2.6	J
120-82-1	1,2,4-Trichlorobenzene	0.22	12		~~U~~ UJ CH
71-55-6	1,1,1-Trichloroethane	1.1	12		U
79-00-5	1,1,2-Trichloroethane	0.43	12		U
79-01-6	Trichloroethene	1.0	12	1.3	J
76-13-1	Trichlorotrifluoroethane	0.67	12		U
75-69-4	Trichlorofluoromethane	1.2	12		U
75-01-4	Vinyl chloride	1.3	12		U
1330-20-7	Xylene(total)	0.85	12		U

MW
4/8/09

FORM 1
VOLATILE ORGANICS ANALYSIS DATA SHEET

CLIENT SAMPLE NO. 22

MR08-IS16
7-2-3-08D

Lab Name: EMPIRICAL LABS Contract: CH2MHILL

Lab Code: NA Case No.: NA SAS No.: NA SDG No.: LEJEUNE041

Matrix: (soil/water) SOIL Lab Sample ID: 0812343-22

Sample wt/vol: 4.9 (g/mL) G Lab File ID: 1234322A

Level: (low/med) LOW Date Sampled: 12/20/08 13:00

% Moisture: not dec. 10 Date Analyzed: 01/02/09 07:28

GC Column: RTX-VRX ID: 0.25 (mm) Dilution Factor: 1.0

Soil Extract Volume:_____(uL) Soil Aliquot Volume: _____(uL)

CONCENTRATION UNITS: (ug/L or ug/Kg) UG/KG

CAS NO.	COMPOUND	MDL	RL	CONC	Q
67-64-1	Acetone	2.3	11	9.7	J
71-43-2	Benzene	0.54	11		U
75-27-4	Bromodichloromethane	0.34	11		U
75-25-2	Bromoform	1.1	11		U
74-83-9	Bromomethane	0.82	11		~~U~~ UJ CCH
78-93-3	2-Butanone	1.6	11		U
75-15-0	Carbon disulfide	1.5	11		U
56-23-5	Carbon tetrachloride	1.0	11		U
108-90-7	Chlorobenzene	0.39	11		U
75-00-3	Chloroethane	1.2	11		U
67-66-3	Chloroform	0.63	11		U
74-87-3	Chloromethane	0.59	11		U
110-82-7	Cyclohexane	0.61	11		U
124-48-1	Dibromochloromethane	0.39	11		U
96-12-8	1,2-Dibromo-3-chloropropane	1.4	5.7		U
106-93-4	1,2-Dibromoethane	0.49	11		U
95-50-1	1,2-Dichlorobenzene	0.42	11		U
541-73-1	1,3-Dichlorobenzene	0.96	11		U
106-46-7	1,4-Dichlorobenzene	0.63	11		U
75-71-8	Dichlorodifluoromethane	1.2	11		U
75-34-3	1,1-Dichloroethane	0.61	11		U
107-06-2	1,2-Dichloroethane	0.52	11		U
75-35-4	1,1-Dichloroethene	1.4	11		U
156-59-2	cis-1,2-Dichloroethene	1.4	11		U
156-60-5	trans-1,2-Dichloroethene	1.2	11		U
78-87-5	1,2-Dichloropropane	0.52	11		U
10061-01-5	cis-1,3-Dichloropropene	0.57	11		U
10061-02-6	trans-1,3-Dichloropropene	0.36	11		U
100-41-4	Ethylbenzene	0.85	11		U
591-78-6	2-Hexanone	2.6	11		U
98-82-8	Isopropylbenzene	1.0	11		U
79-20-9	Methyl acetate	1.8	11		U
75-09-2	Methylene chloride	0.71	11	11u	~~0.75 JB~~ BL
108-87-2	Methyl cyclohexane	0.34	11		U
1634-04-4	Methyl tert-butyl ether	0.36	11		U
108-10-1	4-Methyl-2-pentanone	0.66	11		U
100-42-5	Styrene	0.40	11		U
79-34-5	1,1,2,2-Tetrachloroethane	0.49	11		U
127-18-4	Tetrachloroethene	1.1	11		U

FORM I VOA

UW 4/8/09

FORM 1
VOLATILE ORGANICS ANALYSIS DATA SHEET

CLIENT SAMPLE NO. 22

MR08-IS16
7-2-3-08D

Lab Name: EMPIRICAL LABS Contract: CH2MHILL

Lab Code: NA Case No.: NA SAS No.: NA SDG No.: LEJEUNE041

Matrix: (soil/water) SOIL Lab Sample ID: 0812343-22

Sample wt/vol: 4.9 (g/mL) G Lab File ID: 1234322A

Level: (low/med) LOW Date Sampled: 12/20/08 13:00

% Moisture: not dec. 10 Date Analyzed: 01/02/09 07:28

GC Column: RTX-VRX ID: 0.25 (mm) Dilution Factor: 1.0

Soil Extract Volume:_____(uL) Soil Aliquot Volume: _____(uL)

CONCENTRATION UNITS: (ug/L or ug/Kg) UG/KG

CAS NO.	COMPOUND	MDL	RL	CONC	Q
108-88-3	Toluene	0.98	11		U
120-82-1	1,2,4-Trichlorobenzene	0.20	11		~~U~~ UJ CH
71-55-6	1,1,1-Trichloroethane	1.0	11		U
79-00-5	1,1,2-Trichloroethane	0.40	11		U
79-01-6	Trichloroethene	0.97	11		U
76-13-1	Trichlorotrifluoroethane	0.63	11		U
75-69-4	Trichlorofluoromethane	1.1	11		U
75-01-4	Vinyl chloride	1.2	11		U
1330-20-7	Xylene(total)	0.80	11		U

lw
4/8/09

FORM 1
VOLATILE ORGANICS ANALYSIS DATA SHEET

CLIENT SAMPLE NO. 23

MR08-SS172-08D

Lab Name: EMPIRICAL LABS Contract: CH2MHILL

Lab Code: NA Case No.: NA SAS No.: NA SDG No.: LEJEUNE041

Matrix: (soil/water) SOIL Lab Sample ID: 0812343-23

Sample wt/vol: 4.3 (g/mL) G Lab File ID: 1234323A

Level: (low/med) LOW Date Sampled: 12/20/08 13:40

% Moisture: not dec. 9 Date Analyzed: 01/02/09 07:58

GC Column: RTX-VRX ID: 0.25 (mm) Dilution Factor: 1.0

Soil Extract Volume:_____(uL) Soil Aliquot Volume: _____(uL)

CONCENTRATION UNITS: (ug/L or ug/Kg) UG/KG

CAS NO.	COMPOUND	MDL	RL	CONC	Q
67-64-1	Acetone	2.5	13	120	
71-43-2	Benzene	0.60	13	13U ~~1.9~~	~~JB~~ BL
75-27-4	Bromodichloromethane	0.38	13		U
75-25-2	Bromoform	1.3	13		U
74-83-9	Bromomethane	0.92	13		~~U~~ UJ CH
78-93-3	2-Butanone	1.8	13	18	
75-15-0	Carbon disulfide	1.6	13		U
56-23-5	Carbon tetrachloride	1.1	13		U
108-90-7	Chlorobenzene	0.43	13		U
75-00-3	Chloroethane	1.4	13		U
67-66-3	Chloroform	0.70	13		U
74-87-3	Chloromethane	0.66	13		U
110-82-7	Cyclohexane	0.69	13	1.1	J
124-48-1	Dibromochloromethane	0.43	13		U
96-12-8	1,2-Dibromo-3-chloropropane	1.5	6.4		U
106-93-4	1,2-Dibromoethane	0.55	13		U
95-50-1	1,2-Dichlorobenzene	0.47	13		U
541-73-1	1,3-Dichlorobenzene	1.1	13		U
106-46-7	1,4-Dichlorobenzene	0.70	13		U
75-71-8	Dichlorodifluoromethane	1.4	13		U
75-34-3	1,1-Dichloroethane	0.69	13		U
107-06-2	1,2-Dichloroethane	0.59	13		U
75-35-4	1,1-Dichloroethene	1.5	13		U
156-59-2	cis-1,2-Dichloroethene	1.5	13		U
156-60-5	trans-1,2-Dichloroethene	1.4	13		U
78-87-5	1,2-Dichloropropane	0.59	13		U
10061-01-5	cis-1,3-Dichloropropene	0.64	13		U
10061-02-6	trans-1,3-Dichloropropene	0.41	13		U
100-41-4	Ethylbenzene	0.96	13	2.2	J
591-78-6	2-Hexanone	2.9	13		U
98-82-8	Isopropylbenzene	1.1	13		U
79-20-9	Methyl acetate	2.0	13		U
75-09-2	Methylene chloride	0.79	13	13U ~~0.83~~	~~JB~~ BI
108-87-2	Methyl cyclohexane	0.38	13	1.3	J
1634-04-4	Methyl tert-butyl ether	0.41	13		U
108-10-1	4-Methyl-2-pentanone	0.74	13		U
100-42-5	Styrene	0.45	13		U
79-34-5	1,1,2,2-Tetrachloroethane	0.55	13		U
127-18-4	Tetrachloroethene	1.2	13		U

FORM I VOA

LW
4/8/09

FORM 1
VOLATILE ORGANICS ANALYSIS DATA SHEET

CLIENT SAMPLE NO. 23

MR08-SS172-08D

Lab Name: EMPIRICAL LABS Contract: CH2MHILL

Lab Code: NA Case No.: NA SAS No.: NA SDG No.: LEJEUNE041

Matrix: (soil/water) SOIL Lab Sample ID: 0812343-23

Sample wt/vol: 4.3 (g/mL) G Lab File ID: 1234323A

Level: (low/med) LOW Date Sampled: 12/20/08 13:40

% Moisture: not dec. 9 Date Analyzed: 01/02/09 07:58

GC Column: RTX-VRX ID: 0.25 (mm) Dilution Factor: 1.0

Soil Extract Volume:_____(uL) Soil Aliquot Volume: _____(uL)

CONCENTRATION UNITS: (ug/L or ug/Kg) UG/KG

CAS NO.	COMPOUND	MDL	RL	CONC	Q
108-88-3	Toluene	1.1	13	1.8	J
120-82-1	1,2,4-Trichlorobenzene	0.23	13		U
71-55-6	1,1,1-Trichloroethane	1.1	13		U
79-00-5	1,1,2-Trichloroethane	0.45	13		U
79-01-6	Trichloroethene	1.1	13		U
76-13-1	Trichlorotrifluoroethane	0.70	13		U
75-69-4	Trichlorofluoromethane	1.2	13		U
75-01-4	Vinyl chloride	1.4	13		U
1330-20-7	Xylene(total)	0.89	13		U

FORM I VOA

lew
4/8/09

FORM 1
VOLATILE ORGANICS ANALYSIS DATA SHEET

CLIENT SAMPLE NO. 24

MR08-IS17
2-1-2-08D

Lab Name: EMPIRICAL LABS Contract: CH2MHILL

Lab Code: NA Case No.: NA SAS No.: NA SDG No.: LEJEUNE041

Matrix: (soil/water) SOIL Lab Sample ID: 0812343-24

Sample wt/vol: 5.1 (g/mL) G Lab File ID: 1234324A

Level: (low/med) LOW Date Sampled: 12/20/08 13:45

% Moisture: not dec. 8 Date Analyzed: 01/02/09 08:29

GC Column: RTX-VRX ID: 0.25 (mm) Dilution Factor: 1.0

Soil Extract Volume:_____(uL) Soil Aliquot Volume: _____(uL)

CONCENTRATION UNITS: (ug/L or ug/Kg) UG/KG

CAS NO.	COMPOUND	MDL	RL	CONC	Q
67-64-1	Acetone	2.1	10	21	
71-43-2	Benzene	0.50	10		U
75-27-4	Bromodichloromethane	0.32	10		U
75-25-2	Bromoform	1.0	10		U
74-83-9	Bromomethane	0.76	10		~~U~~ UJ CCH
78-93-3	2-Butanone	1.5	10	5.0	J
75-15-0	Carbon disulfide	1.4	10		U
56-23-5	Carbon tetrachloride	0.93	10		U
108-90-7	Chlorobenzene	0.36	10		U
75-00-3	Chloroethane	1.2	10		U
67-66-3	Chloroform	0.58	10		U
74-87-3	Chloromethane	0.55	10		U
110-82-7	Cyclohexane	0.57	10		U
124-48-1	Dibromochloromethane	0.36	10		U
96-12-8	1,2-Dibromo-3-chloropropane	1.3	5.3		U
106-93-4	1,2-Dibromoethane	0.46	10		U
95-50-1	1,2-Dichlorobenzene	0.39	10		U
541-73-1	1,3-Dichlorobenzene	0.89	10		U
106-46-7	1,4-Dichlorobenzene	0.58	10		U
75-71-8	Dichlorodifluoromethane	1.2	10		U
75-34-3	1,1-Dichloroethane	0.57	10		U
107-06-2	1,2-Dichloroethane	0.49	10		U
75-35-4	1,1-Dichloroethene	1.3	10		U
156-59-2	cis-1,2-Dichloroethene	1.3	10		U
156-60-5	trans-1,2-Dichloroethene	1.2	10		U
78-87-5	1,2-Dichloropropane	0.49	10		U
10061-01-5	cis-1,3-Dichloropropene	0.53	10		U
10061-02-6	trans-1,3-Dichloropropene	0.34	10		U
100-41-4	Ethylbenzene	0.79	10		U
591-78-6	2-Hexanone	2.4	10		U
98-82-8	Isopropylbenzene	0.93	10		U
79-20-9	Methyl acetate	1.7	10		U
75-09-2	Methylene chloride	0.66	10	10u 0.74	~~JB~~ BL
108-87-2	Methyl cyclohexane	0.32	10		U
1634-04-4	Methyl tert-butyl ether	0.34	10		U
108-10-1	4-Methyl-2-pentanone	0.61	10		U
100-42-5	Styrene	0.37	10		U
79-34-5	1,1,2,2-Tetrachloroethane	0.46	10		U
127-18-4	Tetrachloroethene	1.0	10		U

FORM I VOA

LW
4/8/09

FORM 1
VOLATILE ORGANICS ANALYSIS DATA SHEET

CLIENT SAMPLE NO. 24

MR08-IS17
2-1-2-08D

Lab Name: EMPIRICAL LABS Contract: CH2MHILL

Lab Code: NA Case No.: NA SAS No.: NA SDG No.: LEJEUNE041

Matrix: (soil/water) SOIL Lab Sample ID: 0812343-24

Sample wt/vol: 5.1 (g/mL) G Lab File ID: 1234324A

Level: (low/med) LOW Date Sampled: 12/20/08 13:45

% Moisture: not dec. 8 Date Analyzed: 01/02/09 08:29

GC Column: RTX-VRX ID: 0.25 (mm) Dilution Factor: 1.0

Soil Extract Volume:_____(uL) Soil Aliquot Volume: _____(uL)

CONCENTRATION UNITS: (ug/L or ug/Kg) UG/KG

CAS NO.	COMPOUND	MDL	RL	CONC	Q
108-88-3	Toluene	0.91	10		U
120-82-1	1,2,4-Trichlorobenzene	0.19	10		~~U~~ UJ CQ
71-55-6	1,1,1-Trichloroethane	0.95	10		U
79-00-5	1,1,2-Trichloroethane	0.37	10		U
79-01-6	Trichloroethene	0.90	10		U
76-13-1	Trichlorotrifluoroethane	0.58	10		U
75-69-4	Trichlorofluoromethane	1.0	10		U
75-01-4	Vinyl chloride	1.2	10		U
1330-20-7	Xylene(total)	0.74	10		U

lw
4/8/09

FORM 1
VOLATILE ORGANICS ANALYSIS DATA SHEET

CLIENT SAMPLE NO. 25

MR08-SS191-08D

Lab Name: EMPIRICAL LABS Contract: CH2MHILL

Lab Code: NA Case No.: NA SAS No.: NA SDG No.: LEJEUNE041

Matrix: (soil/water) SOIL Lab Sample ID: 0812343-25

Sample wt/vol: 4.4 (g/mL) G Lab File ID: 1234325B

Level: (low/med) LOW Date Sampled: 12/20/08 14:15

% Moisture: not dec. 12 Date Analyzed: 01/01/09 15:33

GC Column: RTX-VRX ID: 0.25 (mm) Dilution Factor: 1.0

Soil Extract Volume:_____(uL) Soil Aliquot Volume: _____(uL)

CONCENTRATION UNITS: (ug/L or ug/Kg) UG/KG

CAS NO.	COMPOUND	MDL	RL	CONC	Q
67-64-1	Acetone	2.6	13	79	
71-43-2	Benzene	0.61	13	13u ~~2.8~~ ~~JB~~	BL
75-27-4	Bromodichloromethane	0.39	13		U
75-25-2	Bromoform	1.3	13		U
74-83-9	Bromomethane	0.93	13		U
78-93-3	2-Butanone	1.8	13	10	J
75-15-0	Carbon disulfide	1.7	13		U
56-23-5	Carbon tetrachloride	1.1	13		U
108-90-7	Chlorobenzene	0.44	13		U
75-00-3	Chloroethane	1.4	13		U
67-66-3	Chloroform	0.71	13	1.4	J
74-87-3	Chloromethane	0.67	13		U
110-82-7	Cyclohexane	0.70	13	1.4	J
124-48-1	Dibromochloromethane	0.44	13		U
96-12-8	1,2-Dibromo-3-chloropropane	1.6	6.5		U
106-93-4	1,2-Dibromoethane	0.56	13		U
95-50-1	1,2-Dichlorobenzene	0.48	13		U
541-73-1	1,3-Dichlorobenzene	1.1	13		U
106-46-7	1,4-Dichlorobenzene	0.71	13		U
75-71-8	Dichlorodifluoromethane	1.4	13		~~J~~ UJ CCH
75-34-3	1,1-Dichloroethane	0.70	13		U
107-06-2	1,2-Dichloroethane	0.60	13		U
75-35-4	1,1-Dichloroethene	1.6	13		U
156-59-2	cis-1,2-Dichloroethene	1.6	13		U
156-60-5	trans-1,2-Dichloroethene	1.4	13		U
78-87-5	1,2-Dichloropropane	0.60	13		U
10061-01-5	cis-1,3-Dichloropropene	0.65	13		U
10061-02-6	trans-1,3-Dichloropropene	0.42	13		U
100-41-4	Ethylbenzene	0.97	13	4.5	J
591-78-6	2-Hexanone	3.0	13		U
98-82-8	Isopropylbenzene	1.1	13		U
79-20-9	Methyl acetate	2.1	13		U
75-09-2	Methylene chloride	0.80	13	13u ~~1.6~~ ~~JB~~	BL
108-87-2	Methyl cyclohexane	0.39	13	1.8	J
1634-04-4	Methyl tert-butyl ether	0.42	13		U
108-10-1	4-Methyl-2-pentanone	0.75	13	0.79	J
100-42-5	Styrene	0.45	13		U
79-34-5	1,1,2,2-Tetrachloroethane	0.56	13		U
127-18-4	Tetrachloroethene	1.2	13		U

FORM I VOA

lw
4/8/09

FORM 1
VOLATILE ORGANICS ANALYSIS DATA SHEET

CLIENT SAMPLE NO. 25

MR08-SS191-08D

Lab Name: EMPIRICAL LABS Contract: CH2MHILL

Lab Code: NA Case No.: NA SAS No.: NA SDG No.: LEJEUNE041

Matrix: (soil/water) SOIL Lab Sample ID: 0812343-25

Sample wt/vol: 4.4 (g/mL) G Lab File ID: 1234325B

Level: (low/med) LOW Date Sampled: 12/20/08 14:15

% Moisture: not dec. 12 Date Analyzed: 01/01/09 15:33

GC Column: RTX-VRX ID: 0.25 (mm) Dilution Factor: 1.0

Soil Extract Volume:_____(uL) Soil Aliquot Volume: _____(uL)

CONCENTRATION UNITS: (ug/L or ug/Kg) UG/KG

CAS NO.	COMPOUND	MDL	RL	CONC	Q
108-88-3	Toluene	1.1	13	4.0	J
120-82-1	1,2,4-Trichlorobenzene	0.23	13		U
71-55-6	1,1,1-Trichloroethane	1.2	13		U
79-00-5	1,1,2-Trichloroethane	0.45	13		U
79-01-6	Trichloroethene	1.1	13	13u ~~3.9~~	~~JB~~ BL
76-13-1	Trichlorotrifluoroethane	0.71	13		U
75-69-4	Trichlorofluoromethane	1.2	13		U
75-01-4	Vinyl chloride	1.4	13		U
1330-20-7	Xylene(total)	0.91	13		U

FORM I VOA

MW 4/8/09

FORM 1
VOLATILE ORGANICS ANALYSIS DATA SHEET

CLIENT SAMPLE NO. 26

MR08-IS19
1-2-3-08D

Lab Name: EMPIRICAL LABS Contract: CH2MHILL

Lab Code: NA Case No.: NA SAS No.: NA SDG No.: LEJEUNE041

Matrix: (soil/water) SOIL Lab Sample ID: 0812343-26

Sample wt/vol: 5.7 (g/mL) G Lab File ID: 1234326B

Level: (low/med) LOW Date Sampled: 12/20/08 14:20

% Moisture: not dec. 9 Date Analyzed: 01/01/09 16:12

GC Column: RTX-VRX ID: 0.25 (mm) Dilution Factor: 1.0

Soil Extract Volume:_____(uL) Soil Aliquot Volume: _____(uL)

CONCENTRATION UNITS: (ug/L or ug/Kg) UG/KG

CAS NO.	COMPOUND	MDL	RL	CONC	Q
67-64-1	Acetone	1.9	9.6	9.8	
71-43-2	Benzene	0.45	9.6		U
75-27-4	Bromodichloromethane	0.29	9.6		U
75-25-2	Bromoform	0.96	9.6		U
74-83-9	Bromomethane	0.69	9.6		U
78-93-3	2-Butanone	1.3	9.6		U
75-15-0	Carbon disulfide	1.2	9.6		U
56-23-5	Carbon tetrachloride	0.85	9.6		U
108-90-7	Chlorobenzene	0.33	9.6		U
75-00-3	Chloroethane	1.1	9.6		U
67-66-3	Chloroform	0.53	9.6		U
74-87-3	Chloromethane	0.50	9.6		U
110-82-7	Cyclohexane	0.52	9.6		U
124-48-1	Dibromochloromethane	0.33	9.6		U
96-12-8	1,2-Dibromo-3-chloropropane	1.2	4.8		U
106-93-4	1,2-Dibromoethane	0.41	9.6		U
95-50-1	1,2-Dichlorobenzene	0.36	9.6		U
541-73-1	1,3-Dichlorobenzene	0.81	9.6		U
106-46-7	1,4-Dichlorobenzene	0.53	9.6		U
75-71-8	Dichlorodifluoromethane	1.1	9.6		~~U~~ UJ CCH
75-34-3	1,1-Dichloroethane	0.52	9.6		U
107-06-2	1,2-Dichloroethane	0.44	9.6		U
75-35-4	1,1-Dichloroethene	1.2	9.6		U
156-59-2	cis-1,2-Dichloroethene	1.2	9.6		U
156-60-5	trans-1,2-Dichloroethene	1.1	9.6		U
78-87-5	1,2-Dichloropropane	0.44	9.6		U
10061-01-5	cis-1,3-Dichloropropene	0.48	9.6		U
10061-02-6	trans-1,3-Dichloropropene	0.31	9.6		U
100-41-4	Ethylbenzene	0.72	9.6		U
591-78-6	2-Hexanone	2.2	9.6		U
98-82-8	Isopropylbenzene	0.85	9.6		U
79-20-9	Methyl acetate	1.5	9.6		U
75-09-2	Methylene chloride	0.60	9.6	9.6u	~~1.1 JB~~ Bc
108-87-2	Methyl cyclohexane	0.29	9.6		U
1634-04-4	Methyl tert-butyl ether	0.31	9.6		U
108-10-1	4-Methyl-2-pentanone	0.56	9.6		U
100-42-5	Styrene	0.34	9.6		U
79-34-5	1,1,2,2-Tetrachloroethane	0.41	9.6		U
127-18-4	Tetrachloroethene	0.93	9.6		U

FORM I VOA

NW
4/8/09

FORM 1
VOLATILE ORGANICS ANALYSIS DATA SHEET

CLIENT SAMPLE NO. 26

MR08-IS19
1-2-3-08D

Lab Name: EMPIRICAL LABS Contract: CH2MHILL

Lab Code: NA Case No.: NA SAS No.: NA SDG No.: LEJEUNE041

Matrix: (soil/water) SOIL Lab Sample ID: 0812343-26

Sample wt/vol: 5.7 (g/mL) G Lab File ID: 1234326B

Level: (low/med) LOW Date Sampled: 12/20/08 14:20

% Moisture: not dec. 9 Date Analyzed: 01/01/09 16:12

GC Column: RTX-VRX ID: 0.25 (mm) Dilution Factor: 1.0

Soil Extract Volume:_____(uL) Soil Aliquot Volume: _____(uL)

CONCENTRATION UNITS: (ug/L or ug/Kg) UG/KG

CAS NO.	COMPOUND	MDL	RL	CONC	Q
108-88-3	Toluene	0.83	9.6		U
120-82-1	1,2,4-Trichlorobenzene	0.17	9.6		U
71-55-6	1,1,1-Trichloroethane	0.87	9.6		U
79-00-5	1,1,2-Trichloroethane	0.34	9.6		U
79-01-6	Trichloroethene	0.82	9.6	9.6u ~~1.6~~	~~JB~~ BL
76-13-1	Trichlorotrifluoroethane	0.53	9.6		U
75-69-4	Trichlorofluoromethane	0.92	9.6		U
75-01-4	Vinyl chloride	1.1	9.6		U
1330-20-7	Xylene(total)	0.67	9.6		U

FORM I VOA

RW
4/8/09

FORM 1
VOLATILE ORGANICS ANALYSIS DATA SHEET

CLIENT SAMPLE NO. 27

MR08-SS190-08D

Lab Name: EMPIRICAL LABS Contract: CH2MHILL

Lab Code: NA Case No.: NA SAS No.: NA SDG No.: LEJEUNE041

Matrix: (soil/water) SOIL Lab Sample ID: 0812343-27

Sample wt/vol: 4.9 (g/mL) G Lab File ID: 1234327D

Level: (low/med) MED Date Sampled: 12/20/08 15:00

% Moisture: not dec. 6 Date Analyzed: 01/22/09 14:42

GC Column: RTX-VRX ID: 0.25 (mm) Dilution Factor: 1.0

Soil Extract Volume: 5000(uL) Soil Aliquot Volume: 100(uL)

CONCENTRATION UNITS: (ug/L or ug/Kg) UG/KG

CAS NO.	COMPOUND	MDL	RL	CONC	Q
67-64-1	Acetone	110	540		U R H T
71-43-2	Benzene	26	540		U
75-27-4	Bromodichloromethane	16	540		U
75-25-2	Bromoform	54	540		U
74-83-9	Bromomethane	39	540		U
78-93-3	2-Butanone	76	540		U
75-15-0	Carbon disulfide	71	540		U
56-23-5	Carbon tetrachloride	48	540		U
108-90-7	Chlorobenzene	18	540		U
75-00-3	Chloroethane	60	540		U
67-66-3	Chloroform	30	540		U
74-87-3	Chloromethane	28	540	45	J J
110-82-7	Cyclohexane	29	540		U R
124-48-1	Dibromochloromethane	18	540		U
96-12-8	1,2-Dibromo-3-chloropropane	65	270		U
106-93-4	1,2-Dibromoethane	23	540		U
95-50-1	1,2-Dichlorobenzene	20	540		U
541-73-1	1,3-Dichlorobenzene	46	540		U
106-46-7	1,4-Dichlorobenzene	30	540		U
75-71-8	Dichlorodifluoromethane	60	540		U
75-34-3	1,1-Dichloroethane	29	540		U
107-06-2	1,2-Dichloroethane	25	540		U
75-35-4	1,1-Dichloroethene	65	540		U
156-59-2	cis-1,2-Dichloroethene	65	540		U
156-60-5	trans-1,2-Dichloroethene	60	540		U
78-87-5	1,2-Dichloropropane	25	540		U
10061-01-5	cis-1,3-Dichloropropene	27	540		U
10061-02-6	trans-1,3-Dichloropropene	17	540		U
100-41-4	Ethylbenzene	41	540		U
591-78-6	2-Hexanone	120	540		U
98-82-8	Isopropylbenzene	48	540		U
79-20-9	Methyl acetate	87	540		U R
75-09-2	Methylene chloride	34	540	750	~~B~~ U BC
108-87-2	Methyl cyclohexane	16	540		U
1634-04-4	Methyl tert-butyl ether	17	540		U
108-10-1	4-Methyl-2-pentanone	32	540		U
100-42-5	Styrene	19	540		U
79-34-5	1,1,2,2-Tetrachloroethane	23	540		U
127-18-4	Tetrachloroethene	53	540		U

FORM I VOA

lw 4/8/09

FORM 1
VOLATILE ORGANICS ANALYSIS DATA SHEET

CLIENT SAMPLE NO. 27

MR08-SS190-08D

Lab Name: EMPIRICAL LABS Contract: CH2MHILL

Lab Code: NA Case No.: NA SAS No.: NA SDG No.: LEJEUNE041

Matrix: (soil/water) SOIL Lab Sample ID: 0812343-27

Sample wt/vol: 4.9 (g/mL) G Lab File ID: 1234327D

Level: (low/med) MED Date Sampled: 12/20/08 15:00

% Moisture: not dec. 6 Date Analyzed: 01/22/09 14:42

GC Column: RTX-VRX ID: 0.25 (mm) Dilution Factor: 1.0

Soil Extract Volume: 5000(uL) Soil Aliquot Volume: 100(uL)

CONCENTRATION UNITS: (ug/L or ug/Kg) UG/KG

CAS NO.	COMPOUND	MDL	RL	CONC	Q
108-88-3	Toluene	47	540		U R HT
120-82-1	1,2,4-Trichlorobenzene	9.8	540		U
71-55-6	1,1,1-Trichloroethane	49	540		U
79-00-5	1,1,2-Trichloroethane	19	540		U
79-01-6	Trichloroethene	46	540		U
76-13-1	Trichlorotrifluoroethane	30	540		U
75-69-4	Trichlorofluoromethane	52	540		U
75-01-4	Vinyl chloride	60	540		U
1330-20-7	Xylene(total)	38	540		U

LW
4/8/09

FORM 1
VOLATILE ORGANICS ANALYSIS DATA SHEET

CLIENT SAMPLE NO. 28

MR08-IS19
0-1-2-08D

Lab Name: EMPIRICAL LABS Contract: CH2MHILL

Lab Code: NA Case No.: NA SAS No.: NA SDG No.: LEJEUNE041

Matrix: (soil/water) SOIL Lab Sample ID: 0812343-28

Sample wt/vol: 5.0 (g/mL) G Lab File ID: 1234328A

Level: (low/med) LOW Date Sampled: 12/20/08 15:10

% Moisture: not dec. 6 Date Analyzed: 01/01/09 17:30

GC Column: RTX-VRX ID: 0.25 (mm) Dilution Factor: 1.0

Soil Extract Volume:_____(uL) Soil Aliquot Volume: _____(uL)

CONCENTRATION UNITS: (ug/L or ug/Kg) UG/KG

CAS NO.	COMPOUND	MDL	RL	CONC	Q
67-64-1	Acetone	2.1	11	21	
71-43-2	Benzene	0.50	11		U
75-27-4	Bromodichloromethane	0.32	11		U
75-25-2	Bromoform	1.1	11		U
74-83-9	Bromomethane	0.77	11		U
78-93-3	2-Butanone	1.5	11		U
75-15-0	Carbon disulfide	1.4	11		U
56-23-5	Carbon tetrachloride	0.94	11		U
108-90-7	Chlorobenzene	0.36	11		U
75-00-3	Chloroethane	1.2	11		U
67-66-3	Chloroform	0.59	11		U
74-87-3	Chloromethane	0.56	11		U
110-82-7	Cyclohexane	0.58	11		U
124-48-1	Dibromochloromethane	0.36	11		U
96-12-8	1,2-Dibromo-3-chloropropane	1.3	5.3		U
106-93-4	1,2-Dibromoethane	0.46	11		U
95-50-1	1,2-Dichlorobenzene	0.40	11		U
541-73-1	1,3-Dichlorobenzene	0.90	11		U
106-46-7	1,4-Dichlorobenzene	0.59	11		U
75-71-8	Dichlorodifluoromethane	1.2	11		~~U~~ UNJ CU
75-34-3	1,1-Dichloroethane	0.58	11		U
107-06-2	1,2-Dichloroethane	0.49	11		U
75-35-4	1,1-Dichloroethene	1.3	11		U
156-59-2	cis-1,2-Dichloroethene	1.3	11		U
156-60-5	trans-1,2-Dichloroethene	1.2	11		U
78-87-5	1,2-Dichloropropane	0.49	11		U
10061-01-5	cis-1,3-Dichloropropene	0.53	11		U
10061-02-6	trans-1,3-Dichloropropene	0.34	11		U
100-41-4	Ethylbenzene	0.80	11		U
591-78-6	2-Hexanone	2.4	11		U
98-82-8	Isopropylbenzene	0.94	11		U
79-20-9	Methyl acetate	1.7	11		U
75-09-2	Methylene chloride	0.66	11	11u ~~1.1~~ ~~JB~~	BL
108-87-2	Methyl cyclohexane	0.32	11		U
1634-04-4	Methyl tert-butyl ether	0.34	11		U
108-10-1	4-Methyl-2-pentanone	0.62	11		U
100-42-5	Styrene	0.37	11		U
79-34-5	1,1,2,2-Tetrachloroethane	0.46	11		U
127-18-4	Tetrachloroethene	1.0	11		U

FORM I VOA

MW
4/8/09

FORM 1
VOLATILE ORGANICS ANALYSIS DATA SHEET

CLIENT SAMPLE NO. 28

MR08-IS19
0-1-2-08D

Lab Name: EMPIRICAL LABS Contract: CH2MHILL

Lab Code: NA Case No.: NA SAS No.: NA SDG No.: LEJEUNE041

Matrix: (soil/water) SOIL Lab Sample ID: 0812343-28

Sample wt/vol: 5.0 (g/mL) G Lab File ID: 1234328A

Level: (low/med) LOW Date Sampled: 12/20/08 15:10

% Moisture: not dec. 6 Date Analyzed: 01/01/09 17:30

GC Column: RTX-VRX ID: 0.25 (mm) Dilution Factor: 1.0

Soil Extract Volume:_____(uL) Soil Aliquot Volume: _____(uL)

CONCENTRATION UNITS: (ug/L or ug/Kg) UG/KG

CAS NO.	COMPOUND	MDL	RL	CONC	Q
108-88-3	Toluene	0.92	11		U
120-82-1	1,2,4-Trichlorobenzene	0.19	11		U
71-55-6	1,1,1-Trichloroethane	0.96	11		U
79-00-5	1,1,2-Trichloroethane	0.37	11		U
79-01-6	Trichloroethene	0.91	11	11u 1.8	~~JB~~ BL
76-13-1	Trichlorotrifluoroethane	0.59	11		U
75-69-4	Trichlorofluoromethane	1.0	11		U
75-01-4	Vinyl chloride	1.2	11		U
1330-20-7	Xylene(total)	0.75	11		U

FORM I VOA

lw
4/8/09

FORM 1
VOLATILE ORGANICS ANALYSIS DATA SHEET

CLIENT SAMPLE NO. 29

MR08-SS189-08D

Lab Name: EMPIRICAL LABS Contract: CH2MHILL

Lab Code: NA Case No.: NA SAS No.: NA SDG No.: LEJEUNE041

Matrix: (soil/water) SOIL Lab Sample ID: 0812343-29

Sample wt/vol: 5.5 (g/mL) G Lab File ID: 1234329A

Level: (low/med) LOW Date Sampled: 12/20/08 15:30

% Moisture: not dec. 5 Date Analyzed: 01/01/09 18:09

GC Column: RTX-VRX ID: 0.25 (mm) Dilution Factor: 1.0

Soil Extract Volume:_____(uL) Soil Aliquot Volume: _____(uL)

CONCENTRATION UNITS: (ug/L or ug/Kg) UG/KG

CAS NO.	COMPOUND	MDL	RL	CONC	Q
67-64-1	Acetone	1.9	9.5	9.5u ~~9.1~~	~~J~~ BL
71-43-2	Benzene	0.45	9.5	9.5u ~~0.81~~	~~JB~~ BL
75-27-4	Bromodichloromethane	0.28	9.5		U
75-25-2	Bromoform	0.95	9.5		U
74-83-9	Bromomethane	0.68	9.5		U
78-93-3	2-Butanone	1.3	9.5	1.9	J
75-15-0	Carbon disulfide	1.2	9.5		U
56-23-5	Carbon tetrachloride	0.84	9.5		U
108-90-7	Chlorobenzene	0.32	9.5		U
75-00-3	Chloroethane	1.0	9.5		U
67-66-3	Chloroform	0.52	9.5		U
74-87-3	Chloromethane	0.50	9.5		U
110-82-7	Cyclohexane	0.51	9.5	0.57	J
124-48-1	Dibromochloromethane	0.32	9.5		U
96-12-8	1,2-Dibromo-3-chloropropane	1.1	4.8		U
106-93-4	1,2-Dibromoethane	0.41	9.5		U
95-50-1	1,2-Dichlorobenzene	0.35	9.5		U
541-73-1	1,3-Dichlorobenzene	0.80	9.5		U
106-46-7	1,4-Dichlorobenzene	0.52	9.5		U
75-71-8	Dichlorodifluoromethane	1.0	9.5		~~U~~ UJ CCA
75-34-3	1,1-Dichloroethane	0.51	9.5		U
107-06-2	1,2-Dichloroethane	0.44	9.5		U
75-35-4	1,1-Dichloroethene	1.1	9.5		U
156-59-2	cis-1,2-Dichloroethene	1.1	9.5		U
156-60-5	trans-1,2-Dichloroethene	1.0	9.5		U
78-87-5	1,2-Dichloropropane	0.44	9.5		U
10061-01-5	cis-1,3-Dichloropropene	0.48	9.5		U
10061-02-6	trans-1,3-Dichloropropene	0.30	9.5		U
100-41-4	Ethylbenzene	0.71	9.5	1.5	J
591-78-6	2-Hexanone	2.2	9.5		U
98-82-8	Isopropylbenzene	0.84	9.5		U
79-20-9	Methyl acetate	1.5	9.5		U
75-09-2	Methylene chloride	0.59	9.5	9.5u ~~1.0~~	~~JB~~ BL
108-87-2	Methyl cyclohexane	0.28	9.5	0.85	J
1634-04-4	Methyl tert-butyl ether	0.30	9.5		U
108-10-1	4-Methyl-2-pentanone	0.55	9.5		U
100-42-5	Styrene	0.33	9.5		U
79-34-5	1,1,2,2-Tetrachloroethane	0.41	9.5		U
127-18-4	Tetrachloroethene	0.92	9.5		U

LW
4/8/09

FORM 1
VOLATILE ORGANICS ANALYSIS DATA SHEET

CLIENT SAMPLE NO. 29

MR08-SS189-08D

Lab Name: EMPIRICAL LABS Contract: CH2MHILL

Lab Code: NA Case No.: NA SAS No.: NA SDG No.: LEJEUNE041

Matrix: (soil/water) SOIL Lab Sample ID: 0812343-29

Sample wt/vol: 5.5 (g/mL) G Lab File ID: 1234329A

Level: (low/med) LOW Date Sampled: 12/20/08 15:30

% Moisture: not dec. 5 Date Analyzed: 01/01/09 18:09

GC Column: RTX-VRX ID: 0.25 (mm) Dilution Factor: 1.0

Soil Extract Volume:_____(uL) Soil Aliquot Volume: _____(uL)

CONCENTRATION UNITS: (ug/L or ug/Kg) UG/KG

CAS NO.	COMPOUND	MDL	RL	CONC	Q
108-88-3	Toluene	0.82	9.5	1.0	J
120-82-1	1,2,4-Trichlorobenzene	0.17	9.5		U
71-55-6	1,1,1-Trichloroethane	0.86	9.5		U
79-00-5	1,1,2-Trichloroethane	0.33	9.5		U
79-01-6	Trichloroethene	0.81	9.5	9.5u ~~1.6~~ ~~JB~~	U BL
76-13-1	Trichlorotrifluoroethane	0.52	9.5		U
75-69-4	Trichlorofluoromethane	0.90	9.5		U
75-01-4	Vinyl chloride	1.0	9.5		U
1330-20-7	Xylene(total)	0.67	9.5		U

FORM I VOA

MW
4/8/09

FORM 1
VOLATILE ORGANICS ANALYSIS DATA SHEET

CLIENT SAMPLE NO. 30

MR08-SS189D-08D

Lab Name: EMPIRICAL LABS Contract: CH2MHILL

Lab Code: NA Case No.: NA SAS No.: NA SDG No.: LEJEUNE041

Matrix: (soil/water) SOIL Lab Sample ID: 0812343-30

Sample wt/vol: 4.6 (g/mL) G Lab File ID: 1234330A

Level: (low/med) LOW Date Sampled: 12/20/08 15:30

% Moisture: not dec. 4 Date Analyzed: 01/01/09 18:48

GC Column: RTX-VRX ID: 0.25 (mm) Dilution Factor: 1.0

Soil Extract Volume:_____(uL) Soil Aliquot Volume: _____(uL)

CONCENTRATION UNITS: (ug/L or ug/Kg) UG/KG

CAS NO.	COMPOUND	MDL	RL	CONC	Q
67-64-1	Acetone	2.3	11	15	
71-43-2	Benzene	0.53	11	0.98	~~JB~~ BL
75-27-4	Bromodichloromethane	0.34	11		U
75-25-2	Bromoform	1.1	11		U
74-83-9	Bromomethane	0.82	11		U
78-93-3	2-Butanone	1.6	11	2.2	J
75-15-0	Carbon disulfide	1.5	11	2.4	J
56-23-5	Carbon tetrachloride	1.00	11		U
108-90-7	Chlorobenzene	0.38	11		U
75-00-3	Chloroethane	1.2	11		U
67-66-3	Chloroform	0.62	11		U
74-87-3	Chloromethane	0.59	11		U
110-82-7	Cyclohexane	0.61	11	0.71	J
124-48-1	Dibromochloromethane	0.38	11		U
96-12-8	1,2-Dibromo-3-chloropropane	1.4	5.7		U
106-93-4	1,2-Dibromoethane	0.49	11		U
95-50-1	1,2-Dichlorobenzene	0.42	11		U
541-73-1	1,3-Dichlorobenzene	0.95	11		U
106-46-7	1,4-Dichlorobenzene	0.62	11		U
75-71-8	Dichlorodifluoromethane	1.2	11		~~U~~ UJ CCV
75-34-3	1,1-Dichloroethane	0.61	11		U
107-06-2	1,2-Dichloroethane	0.52	11		U
75-35-4	1,1-Dichloroethene	1.4	11		U
156-59-2	cis-1,2-Dichloroethene	1.4	11		U
156-60-5	trans-1,2-Dichloroethene	1.2	11		U
78-87-5	1,2-Dichloropropane	0.52	11		U
10061-01-5	cis-1,3-Dichloropropene	0.57	11		U
10061-02-6	trans-1,3-Dichloropropene	0.36	11		U
100-41-4	Ethylbenzene	0.85	11	0.88	J
591-78-6	2-Hexanone	2.6	11		U
98-82-8	Isopropylbenzene	1.00	11		U
79-20-9	Methyl acetate	1.8	11		U
75-09-2	Methylene chloride	0.70	11	1.3	~~JB~~ BL
108-87-2	Methyl cyclohexane	0.34	11	0.84	J
1634-04-4	Methyl tert-butyl ether	0.36	11		U
108-10-1	4-Methyl-2-pentanone	0.66	11		U
100-42-5	Styrene	0.40	11		U
79-34-5	1,1,2,2-Tetrachloroethane	0.49	11		U
127-18-4	Tetrachloroethene	1.1	11		U

LW 4/8/09

FORM 1
VOLATILE ORGANICS ANALYSIS DATA SHEET

CLIENT SAMPLE NO. 30

MR08-SS189D-08D

Lab Name: EMPIRICAL LABS Contract: CH2MHILL

Lab Code: NA Case No.: NA SAS No.: NA SDG No.: LEJEUNE041

Matrix: (soil/water) SOIL Lab Sample ID: 0812343-30

Sample wt/vol: 4.6 (g/mL) G Lab File ID: 1234330A

Level: (low/med) LOW Date Sampled: 12/20/08 15:30

% Moisture: not dec. 4 Date Analyzed: 01/01/09 18:48

GC Column: RTX-VRX ID: 0.25 (mm) Dilution Factor: 1.0

Soil Extract Volume:_____(uL) Soil Aliquot Volume: _____(uL)

CONCENTRATION UNITS: (ug/L or ug/Kg) UG/KG

CAS NO.	COMPOUND	MDL	RL	CONC	Q
108-88-3	Toluene	0.98	11		U
120-82-1	1,2,4-Trichlorobenzene	0.20	11		U
71-55-6	1,1,1-Trichloroethane	1.0	11		U
79-00-5	1,1,2-Trichloroethane	0.40	11		U
79-01-6	Trichloroethene	0.96	11	114	~~2.4 JB~~ BL
76-13-1	Trichlorotrifluoroethane	0.62	11		U
75-69-4	Trichlorofluoromethane	1.1	11		U
75-01-4	Vinyl chloride	1.2	11		U
1330-20-7	Xylene(total)	0.79	11		U

FORM I VOA

lw 1/8/09

FORM 1
VOLATILE ORGANICS ANALYSIS DATA SHEET

CLIENT SAMPLE NO. 31

MR08-IS18
9-3-4-08D

Lab Name: EMPIRICAL LABS Contract: CH2MHILL

Lab Code: NA Case No.: NA SAS No.: NA SDG No.: LEJEUNE041

Matrix: (soil/water) SOIL Lab Sample ID: 0812343-31

Sample wt/vol: 4.4 (g/mL) G Lab File ID: 1234331A

Level: (low/med) LOW Date Sampled: 12/20/08 15:40

% Moisture: not dec. 11 Date Analyzed: 01/01/09 19:28

GC Column: RTX-VRX ID: 0.25 (mm) Dilution Factor: 1.0

Soil Extract Volume:_____(uL) Soil Aliquot Volume: _____(uL)

CONCENTRATION UNITS: (ug/L or ug/Kg) UG/KG

CAS NO.	COMPOUND	MDL	RL	CONC	Q
67-64-1	Acetone	2.5	13	12	J
71-43-2	Benzene	0.60	13		U
75-27-4	Bromodichloromethane	0.38	13		U
75-25-2	Bromoform	1.3	13		U
74-83-9	Bromomethane	0.92	13		U
78-93-3	2-Butanone	1.8	13		U
75-15-0	Carbon disulfide	1.6	13		U
56-23-5	Carbon tetrachloride	1.1	13		U
108-90-7	Chlorobenzene	0.43	13		U
75-00-3	Chloroethane	1.4	13		U
67-66-3	Chloroform	0.70	13		U
74-87-3	Chloromethane	0.66	13		U
110-82-7	Cyclohexane	0.69	13		U
124-48-1	Dibromochloromethane	0.43	13		U
96-12-8	1,2-Dibromo-3-chloropropane	1.5	6.4		~~U~~ UJ IS
106-93-4	1,2-Dibromoethane	0.55	13		U
95-50-1	1,2-Dichlorobenzene	0.47	13		~~U~~ UJ IS
541-73-1	1,3-Dichlorobenzene	1.1	13		~~U~~
106-46-7	1,4-Dichlorobenzene	0.70	13		~~U~~
75-71-8	Dichlorodifluoromethane	1.4	13		~~U~~ UJ CCV
75-34-3	1,1-Dichloroethane	0.69	13		U
107-06-2	1,2-Dichloroethane	0.58	13		U
75-35-4	1,1-Dichloroethene	1.5	13		U
156-59-2	cis-1,2-Dichloroethene	1.5	13		U
156-60-5	trans-1,2-Dichloroethene	1.4	13		U
78-87-5	1,2-Dichloropropane	0.58	13		U
10061-01-5	cis-1,3-Dichloropropene	0.64	13		U
10061-02-6	trans-1,3-Dichloropropene	0.41	13		U
100-41-4	Ethylbenzene	0.95	13		U
591-78-6	2-Hexanone	2.9	13		U
98-82-8	Isopropylbenzene	1.1	13		U
79-20-9	Methyl acetate	2.0	13		U
75-09-2	Methylene chloride	0.79	13	13u ~~1.4~~	~~JB~~ BL
108-87-2	Methyl cyclohexane	0.38	13		U
1634-04-4	Methyl tert-butyl ether	0.41	13		U
108-10-1	4-Methyl-2-pentanone	0.74	13		U
100-42-5	Styrene	0.44	13		U
79-34-5	1,1,2,2-Tetrachloroethane	0.55	13		~~U~~ UJ IS
127-18-4	Tetrachloroethene	1.2	13		U

FORM I VOA

NW
4/8/09

FORM 1
VOLATILE ORGANICS ANALYSIS DATA SHEET

CLIENT SAMPLE NO. 31

MR08-IS18
9-3-4-08D

Lab Name: EMPIRICAL LABS Contract: CH2MHILL

Lab Code: NA Case No.: NA SAS No.: NA SDG No.: LEJEUNE041

Matrix: (soil/water) SOIL Lab Sample ID: 0812343-31

Sample wt/vol: 4.4 (g/mL) G Lab File ID: 1234331A

Level: (low/med) LOW Date Sampled: 12/20/08 15:40

% Moisture: not dec. 11 Date Analyzed: 01/01/09 19:28

GC Column: RTX-VRX ID: 0.25 (mm) Dilution Factor: 1.0

Soil Extract Volume:_____(uL) Soil Aliquot Volume: _____(uL)

CONCENTRATION UNITS: (ug/L or ug/Kg) UG/KG

CAS NO.	COMPOUND	MDL	RL	CONC	Q
108-88-3	Toluene	1.1	13		U
120-82-1	1,2,4-Trichlorobenzene	0.23	13		~~U~~ UJ ISL
71-55-6	1,1,1-Trichloroethane	1.1	13		U
79-00-5	1,1,2-Trichloroethane	0.44	13		U
79-01-6	Trichloroethene	1.1	13	13U ~~1.6 JB~~	BL
76-13-1	Trichlorotrifluoroethane	0.70	13		U
75-69-4	Trichlorofluoromethane	1.2	13		U
75-01-4	Vinyl chloride	1.4	13		U
1330-20-7	Xylene(total)	0.89	13		U

LW
4/8/09

FORM 1
VOLATILE ORGANICS ANALYSIS DATA SHEET

CLIENT SAMPLE NO. 32

MR08-IS18
9D-3-4-08D

Lab Name: EMPIRICAL LABS Contract: CH2MHILL

Lab Code: NA Case No.: NA SAS No.: NA SDG No.: LEJEUNE041

Matrix: (soil/water) SOIL Lab Sample ID: 0812343-32

Sample wt/vol: 4.5 (g/mL) G Lab File ID: 1234332A

Level: (low/med) LOW Date Sampled: 12/20/08 15:40

% Moisture: not dec. 10 Date Analyzed: 01/01/09 20:07

GC Column: RTX-VRX ID: 0.25 (mm) Dilution Factor: 1.0

Soil Extract Volume:_____(uL) Soil Aliquot Volume: _____(uL)

CONCENTRATION UNITS: (ug/L or ug/Kg) UG/KG

CAS NO.	COMPOUND	MDL	RL	CONC	Q
67-64-1	Acetone	2.5	12	14	
71-43-2	Benzene	0.58	12		U
75-27-4	Bromodichloromethane	0.37	12		U
75-25-2	Bromoform	1.2	12		U
74-83-9	Bromomethane	0.90	12		U
78-93-3	2-Butanone	1.7	12		U
75-15-0	Carbon disulfide	1.6	12		U
56-23-5	Carbon tetrachloride	1.1	12		U
108-90-7	Chlorobenzene	0.42	12		U
75-00-3	Chloroethane	1.4	12		U
67-66-3	Chloroform	0.68	12		U
74-87-3	Chloromethane	0.65	12		U
110-82-7	Cyclohexane	0.67	12		U
124-48-1	Dibromochloromethane	0.42	12		U
96-12-8	1,2-Dibromo-3-chloropropane	1.5	6.2		~~U~~ UJ ISL
106-93-4	1,2-Dibromoethane	0.54	12		U
95-50-1	1,2-Dichlorobenzene	0.46	12		~~U~~ UJ ISL
541-73-1	1,3-Dichlorobenzene	1.0	12		U
106-46-7	1,4-Dichlorobenzene	0.68	12		U
75-71-8	Dichlorodifluoromethane	1.4	12		~~U~~ UJ CCL
75-34-3	1,1-Dichloroethane	0.67	12		U
107-06-2	1,2-Dichloroethane	0.57	12		U
75-35-4	1,1-Dichloroethene	1.5	12		U
156-59-2	cis-1,2-Dichloroethene	1.5	12		U
156-60-5	trans-1,2-Dichloroethene	1.4	12		U
78-87-5	1,2-Dichloropropane	0.57	12		U
10061-01-5	cis-1,3-Dichloropropene	0.62	12		U
10061-02-6	trans-1,3-Dichloropropene	0.40	12		U
100-41-4	Ethylbenzene	0.93	12		U
591-78-6	2-Hexanone	2.9	12		U
98-82-8	Isopropylbenzene	1.1	12		U
79-20-9	Methyl acetate	2.0	12		U
75-09-2	Methylene chloride	0.77	12	12U	~~1.4 JB~~ BL
108-87-2	Methyl cyclohexane	0.37	12		U
1634-04-4	Methyl tert-butyl ether	0.40	12		U
108-10-1	4-Methyl-2-pentanone	0.72	12		U
100-42-5	Styrene	0.44	12		U
79-34-5	1,1,2,2-Tetrachloroethane	0.54	12		~~U~~ UJ IS
127-18-4	Tetrachloroethene	1.2	12		U

MW 4/8/09

FORM 1
VOLATILE ORGANICS ANALYSIS DATA SHEET

CLIENT SAMPLE NO.

32

MR08-IS18
9D-3-4-08D

Lab Name: EMPIRICAL LABS Contract: CH2MHILL

Lab Code: NA Case No.: NA SAS No.: NA SDG No.: LEJEUNE041

Matrix: (soil/water) SOIL Lab Sample ID: 0812343-32

Sample wt/vol: 4.5 (g/mL) G Lab File ID: 1234332A

Level: (low/med) LOW Date Sampled: 12/20/08 15:40

% Moisture: not dec. 10 Date Analyzed: 01/01/09 20:07

GC Column: RTX-VRX ID: 0.25 (mm) Dilution Factor: 1.0

Soil Extract Volume:_____(uL) Soil Aliquot Volume: _____(uL)

CONCENTRATION UNITS: (ug/L or ug/Kg) UG/KG

CAS NO.	COMPOUND	MDL	RL	CONC	Q
108-88-3	Toluene	1.1	12		U
120-82-1	1,2,4-Trichlorobenzene	0.22	12		~~U~~ UJ ISI
71-55-6	1,1,1-Trichloroethane	1.1	12		U
79-00-5	1,1,2-Trichloroethane	0.44	12		U
79-01-6	Trichloroethene	1.0	12	12U ~~1.3~~ ~~JB~~	BL
76-13-1	Trichlorotrifluoroethane	0.68	12		U
75-69-4	Trichlorofluoromethane	1.2	12		U
75-01-4	Vinyl chloride	1.4	12		U
1330-20-7	Xylene(total)	0.87	12		U

FORM I VOA

LW
4/8/09

FORM 1
VOLATILE ORGANICS ANALYSIS DATA SHEET

CLIENT SAMPLE NO. 32RE

MR08-IS18
9D-3-4-08DR

Lab Name: EMPIRICAL LABS Contract: CH2MHILL

Lab Code: NA Case No.: NA SAS No.: NA SDG No.: LEJEUNE041

Matrix: (soil/water) SOIL Lab Sample ID: 0812343-32R

Sample wt/vol: 4.5 (g/mL) G Lab File ID: 1234332B

Level: (low/med) LOW Date Sampled: 12/20/08 15:40 use original

% Moisture: not dec. 10 Date Analyzed: 01/07/09 21:56

GC Column: RTX-VRX ID: 0.25 (mm) Dilution Factor: 1.0

Soil Extract Volume:_____(uL) Soil Aliquot Volume: _____(uL)

CONCENTRATION UNITS: (ug/L or ug/Kg) UG/KG

CAS NO.	COMPOUND	MDL	RL	CONC	Q
67-64-1	Acetone	2.5	12	32	J HT
71-43-2	Benzene	0.58	12		U UJ
75-27-4	Bromodichloromethane	0.37	12		U
75-25-2	Bromoform	1.2	12		U
74-83-9	Bromomethane	0.89	12		U
78-93-3	2-Butanone	1.7	12	2.7	J J
75-15-0	Carbon disulfide	1.6	12		U UJ
56-23-5	Carbon tetrachloride	1.1	12		U
108-90-7	Chlorobenzene	0.42	12		U
75-00-3	Chloroethane	1.4	12		U
67-66-3	Chloroform	0.68	12		U
74-87-3	Chloromethane	0.64	12		U
110-82-7	Cyclohexane	0.67	12		U
124-48-1	Dibromochloromethane	0.42	12		U
96-12-8	1,2-Dibromo-3-chloropropane	1.5	6.2		U
106-93-4	1,2-Dibromoethane	0.53	12		U
95-50-1	1,2-Dichlorobenzene	0.46	12		U
541-73-1	1,3-Dichlorobenzene	1.0	12		U
106-46-7	1,4-Dichlorobenzene	0.68	12		U
75-71-8	Dichlorodifluoromethane	1.4	12		U
75-34-3	1,1-Dichloroethane	0.67	12		U
107-06-2	1,2-Dichloroethane	0.57	12		U
75-35-4	1,1-Dichloroethene	1.5	12		U
156-59-2	cis-1,2-Dichloroethene	1.5	12		U
156-60-5	trans-1,2-Dichloroethene	1.4	12		U
78-87-5	1,2-Dichloropropane	0.57	12		U
10061-01-5	cis-1,3-Dichloropropene	0.62	12		U
10061-02-6	trans-1,3-Dichloropropene	0.40	12		U
100-41-4	Ethylbenzene	0.93	12		U
591-78-6	2-Hexanone	2.8	12		U
98-82-8	Isopropylbenzene	1.1	12		U
79-20-9	Methyl acetate	2.0	12	2.8	J J
75-09-2	Methylene chloride	0.77	12	12UJ ~~1.8~~	~~JB~~ HTBC
108-87-2	Methyl cyclohexane	0.37	12		U UJ HT
1634-04-4	Methyl tert-butyl ether	0.40	12		U
108-10-1	4-Methyl-2-pentanone	0.72	12		U
100-42-5	Styrene	0.43	12		U
79-34-5	1,1,2,2-Tetrachloroethane	0.53	12		U
127-18-4	Tetrachloroethene	1.2	12		U

FORM I VOA

MW
4/8/09

FORM 1
VOLATILE ORGANICS ANALYSIS DATA SHEET

CLIENT SAMPLE NO. 32RE

MR08-IS18
9D-3-4-08DR

Lab Name: EMPIRICAL LABS Contract: CH2MHILL

Lab Code: NA Case No.: NA SAS No.: NA SDG No.: LEJEUNE041

Matrix: (soil/water) SOIL Lab Sample ID: 0812343-32R

Sample wt/vol: 4.5 (g/mL) G Lab File ID: 1234332B

Level: (low/med) LOW Date Sampled: 12/20/08 15:40

% Moisture: not dec. 10 Date Analyzed: 01/07/09 21:56 use original

GC Column: RTX-VRX ID: 0.25 (mm) Dilution Factor: 1.0

Soil Extract Volume:_____(uL) Soil Aliquot Volume: _____(uL)

CONCENTRATION UNITS: (ug/L or ug/Kg) UG/KG

CAS NO.	COMPOUND	MDL	RL	CONC	Q
108-88-3	Toluene	1.1	12		U
120-82-1	1,2,4-Trichlorobenzene	0.22	12		U
71-55-6	1,1,1-Trichloroethane	1.1	12		U
79-00-5	1,1,2-Trichloroethane	0.43	12		U
79-01-6	Trichloroethene	1.0	12		U
76-13-1	Trichlorotrifluoroethane	0.68	12		U
75-69-4	Trichlorofluoromethane	1.2	12		U
75-01-4	Vinyl chloride	1.4	12		U
1330-20-7	Xylene(total)	0.87	12		U

U→H

R RE

FORM I VOA

hw
4/8/09

FORM 1
VOLATILE ORGANICS ANALYSIS DATA SHEET

CLIENT SAMPLE NO.

MR08-EB0
1-122108

33

Lab Name: EMPIRICAL LABS Contract: CH2MHILL

Lab Code: NA Case No.: NA SAS No.: NA SDG No.: LEJEUNE041

Matrix: (soil/water) WATER Lab Sample ID: 0812343-33

Sample wt/vol: 5.000 (g/mL) ML Lab File ID: 1234333

Level: (low/med) LOW Date Sampled: 12/21/08 08:00

% Moisture: not dec. _____ Date Analyzed: 01/03/09 22:22

GC Column: RTX-VRX ID: 0.25 (mm) Dilution Factor: 1.0

Soil Extract Volume:_____(uL) Soil Aliquot Volume: _____(uL)

CONCENTRATION UNITS: (ug/L or ug/Kg) UG/L

CAS NO.	COMPOUND	MDL	RL	CONC	Q
67-64-1	Acetone	0.84	2.5		U
71-43-2	Benzene	0.11	1.0		U
75-27-4	Bromodichloromethane	0.10	1.0		U
75-25-2	Bromoform	0.10	1.0		U
74-83-9	Bromomethane	0.32	1.0		U
78-93-3	2-Butanone	1.0	3.0		U
75-15-0	Carbon disulfide	0.13	1.0		U
56-23-5	Carbon tetrachloride	0.15	1.0		U
108-90-7	Chlorobenzene	0.10	1.0		U
75-00-3	Chloroethane	0.18	1.0		U
67-66-3	Chloroform	0.11	1.0		U
74-87-3	Chloromethane	0.29	1.0		U
110-82-7	Cyclohexane	0.20	1.0		U
124-48-1	Dibromochloromethane	0.10	1.0		U
96-12-8	1,2-Dibromo-3-chloropropane	0.11	1.0		U
106-93-4	1,2-Dibromoethane	0.10	1.0		U
95-50-1	1,2-Dichlorobenzene	0.10	1.0		U
541-73-1	1,3-Dichlorobenzene	0.13	1.0		U
106-46-7	1,4-Dichlorobenzene	0.10	1.0		U
75-71-8	Dichlorodifluoromethane	0.22	1.0		U
75-34-3	1,1-Dichloroethane	0.12	1.0		U
107-06-2	1,2-Dichloroethane	0.10	1.0		U
75-35-4	1,1-Dichloroethene	0.15	1.0		U
156-59-2	cis-1,2-Dichloroethene	0.13	1.0		U
156-60-5	trans-1,2-Dichloroethene	0.13	1.0		U
78-87-5	1,2-Dichloropropane	0.10	1.0		U
10061-01-5	cis-1,3-Dichloropropene	0.11	1.0		U
10061-02-6	trans-1,3-Dichloropropene	0.10	1.0		U
100-41-4	Ethylbenzene	0.13	1.0		U
591-78-6	2-Hexanone	0.30	1.0		U
98-82-8	Isopropylbenzene	0.15	1.0		U
79-20-9	Methyl acetate	0.30	1.0		U
75-09-2	Methylene chloride	0.14	1.0	1.1	~~B~~ BL
108-87-2	Methyl cyclohexane	0.17	1.0		U
1634-04-4	Methyl tert-butyl ether	0.10	1.0		U
108-10-1	4-Methyl-2-pentanone	0.29	1.0		U
100-42-5	Styrene	0.10	1.0		U
79-34-5	1,1,2,2-Tetrachloroethane	0.10	1.0		U
127-18-4	Tetrachloroethene	0.15	1.0		U

4/8/09

FORM 1
VOLATILE ORGANICS ANALYSIS DATA SHEET

CLIENT SAMPLE NO.

33

MR08-EB0
1-122108

Lab Name: EMPIRICAL LABS Contract: CH2MHILL

Lab Code: NA Case No.: NA SAS No.: NA SDG No.: LEJEUNE041

Matrix: (soil/water) WATER Lab Sample ID: 0812343-33

Sample wt/vol: 5.000 (g/mL) ML Lab File ID: 1234333

Level: (low/med) LOW Date Sampled: 12/21/08 08:00

% Moisture: not dec. _____ Date Analyzed: 01/03/09 22:22

GC Column: RTX-VRX ID: 0.25 (mm) Dilution Factor: 1.0

Soil Extract Volume:_____(uL) Soil Aliquot Volume: _____(uL)

CONCENTRATION UNITS: (ug/L or ug/Kg) UG/L

CAS NO.	COMPOUND	MDL	RL	CONC	Q
108-88-3	Toluene	0.10	1.0		U
120-82-1	1,2,4-Trichlorobenzene	0.10	1.0		U
71-55-6	1,1,1-Trichloroethane	0.17	1.0		U
79-00-5	1,1,2-Trichloroethane	0.10	1.0		U
79-01-6	Trichloroethene	0.13	1.0		U
76-13-1	Trichlorotrifluoroethane	0.18	1.0		U
75-69-4	Trichlorofluoromethane	0.17	1.0		U
75-01-4	Vinyl chloride	0.18	1.0		U
1330-20-7	Xylene(total)	0.22	1.0		U

lw
9/8/09

FORM 1
VOLATILE ORGANICS ANALYSIS DATA SHEET

CLIENT SAMPLE NO. 34

MR08-SS199-08D

Lab Name: EMPIRICAL LABS Contract: CH2MHILL

Lab Code: NA Case No.: NA SAS No.: NA SDG No.: LEJEUNE041

Matrix: (soil/water) SOIL Lab Sample ID: 0812343-34

Sample wt/vol: 5.5 (g/mL) G Lab File ID: 1234334A

Level: (low/med) LOW Date Sampled: 12/21/08 08:55

% Moisture: not dec. 9 Date Analyzed: 01/01/09 20:46

GC Column: RTX-VRX ID: 0.25 (mm) Dilution Factor: 1.0

Soil Extract Volume:_____(uL) Soil Aliquot Volume: _____(uL)

CONCENTRATION UNITS: (ug/L or ug/Kg) UG/KG

CAS NO.	COMPOUND	MDL	RL	CONC	Q
67-64-1	Acetone	2.0	9.9	150	
71-43-2	Benzene	0.46	9.9	9.9u ~~1.4~~ ~~JB~~	BL
75-27-4	Bromodichloromethane	0.30	9.9		U
75-25-2	Bromoform	0.99	9.9		U
74-83-9	Bromomethane	0.71	9.9		U
78-93-3	2-Butanone	1.4	9.9	9.2	J
75-15-0	Carbon disulfide	1.3	9.9		U
56-23-5	Carbon tetrachloride	0.87	9.9		U
108-90-7	Chlorobenzene	0.34	9.9		U
75-00-3	Chloroethane	1.1	9.9		U
67-66-3	Chloroform	0.54	9.9		U
74-87-3	Chloromethane	0.51	9.9		U
110-82-7	Cyclohexane	0.53	9.9	0.65	J
124-48-1	Dibromochloromethane	0.34	9.9		U
96-12-8	1,2-Dibromo-3-chloropropane	1.2	4.9		U
106-93-4	1,2-Dibromoethane	0.42	9.9		U
95-50-1	1,2-Dichlorobenzene	0.37	9.9		U
541-73-1	1,3-Dichlorobenzene	0.83	9.9		U
106-46-7	1,4-Dichlorobenzene	0.54	9.9		U
75-71-8	Dichlorodifluoromethane	1.1	9.9		~~U~~ UJ CCH
75-34-3	1,1-Dichloroethane	0.53	9.9		U
107-06-2	1,2-Dichloroethane	0.46	9.9		U
75-35-4	1,1-Dichloroethene	1.2	9.9		U
156-59-2	cis-1,2-Dichloroethene	1.2	9.9		U
156-60-5	trans-1,2-Dichloroethene	1.1	9.9		U
78-87-5	1,2-Dichloropropane	0.46	9.9		U
10061-01-5	cis-1,3-Dichloropropene	0.49	9.9		U
10061-02-6	trans-1,3-Dichloropropene	0.32	9.9		U
100-41-4	Ethylbenzene	0.74	9.9	1.5	J
591-78-6	2-Hexanone	2.3	9.9		U
98-82-8	Isopropylbenzene	0.87	9.9		U
79-20-9	Methyl acetate	1.6	9.9		U
75-09-2	Methylene chloride	0.61	9.9	9.9u ~~1.1~~ ~~JB~~	BL
108-87-2	Methyl cyclohexane	0.30	9.9	0.79	J
1634-04-4	Methyl tert-butyl ether	0.32	9.9		U
108-10-1	4-Methyl-2-pentanone	0.57	9.9	1.0	J
100-42-5	Styrene	0.35	9.9		U
79-34-5	1,1,2,2-Tetrachloroethane	0.42	9.9		U
127-18-4	Tetrachloroethene	0.96	9.9		U

FORM I VOA

LW
4/8/09

FORM 1
VOLATILE ORGANICS ANALYSIS DATA SHEET

CLIENT SAMPLE NO. 34

MR08-SS199-08D

Lab Name: EMPIRICAL LABS Contract: CH2MHILL

Lab Code: NA Case No.: NA SAS No.: NA SDG No.: LEJEUNE041

Matrix: (soil/water) SOIL Lab Sample ID: 0812343-34

Sample wt/vol: 5.5 (g/mL) G Lab File ID: 1234334A

Level: (low/med) LOW Date Sampled: 12/21/08 08:55

% Moisture: not dec. 9 Date Analyzed: 01/01/09 20:46

GC Column: RTX-VRX ID: 0.25 (mm) Dilution Factor: 1.0

Soil Extract Volume:_____(uL) Soil Aliquot Volume: _____(uL)

CONCENTRATION UNITS: (ug/L or ug/Kg) UG/KG

CAS NO.	COMPOUND	MDL	RL	CONC	Q
108-88-3	Toluene	0.85	9.9	1.6	J
120-82-1	1,2,4-Trichlorobenzene	0.18	9.9		U
71-55-6	1,1,1-Trichloroethane	0.89	9.9		U
79-00-5	1,1,2-Trichloroethane	0.35	9.9		U
79-01-6	Trichloroethene	0.84	9.9	9.9u ~~1.4~~	~~JB~~ Bc
76-13-1	Trichlorotrifluoroethane	0.54	9.9		U
75-69-4	Trichlorofluoromethane	0.94	9.9		U
75-01-4	Vinyl chloride	1.1	9.9		U
1330-20-7	Xylene(total)	0.69	9.9		U

FORM I VOA

NLO
4/8/09

FORM 1
VOLATILE ORGANICS ANALYSIS DATA SHEET

CLIENT SAMPLE NO. 35

MR08-SS199D-08D

Lab Name: EMPIRICAL LABS Contract: CH2MHILL

Lab Code: NA Case No.: NA SAS No.: NA SDG No.: LEJEUNE041

Matrix: (soil/water) SOIL Lab Sample ID: 0812343-35

Sample wt/vol: 4.1 (g/mL) G Lab File ID: 1234335A

Level: (low/med) LOW Date Sampled: 12/21/08 08:55

% Moisture: not dec. 9 Date Analyzed: 01/01/09 21:25

GC Column: RTX-VRX ID: 0.25 (mm) Dilution Factor: 1.0

Soil Extract Volume:_____(uL) Soil Aliquot Volume: _____(uL)

CONCENTRATION UNITS: (ug/L or ug/Kg) UG/KG

CAS NO.	COMPOUND	MDL	RL	CONC	Q
67-64-1	Acetone	2.7	13	29	
71-43-2	Benzene	0.63	13	13u ~~2.0~~ ~~JB~~ BL	
75-27-4	Bromodichloromethane	0.40	13		U
75-25-2	Bromoform	1.3	13		U
74-83-9	Bromomethane	0.96	13		U
78-93-3	2-Butanone	1.9	13	4.4	J
75-15-0	Carbon disulfide	1.7	13		U
56-23-5	Carbon tetrachloride	1.2	13		U
108-90-7	Chlorobenzene	0.45	13		U
75-00-3	Chloroethane	1.5	13		U
67-66-3	Chloroform	0.73	13		U
74-87-3	Chloromethane	0.69	13		U
110-82-7	Cyclohexane	0.72	13	1.0	J
124-48-1	Dibromochloromethane	0.45	13		U
96-12-8	1,2-Dibromo-3-chloropropane	1.6	6.7		U
106-93-4	1,2-Dibromoethane	0.57	13		U
95-50-1	1,2-Dichlorobenzene	0.49	13		U
541-73-1	1,3-Dichlorobenzene	1.1	13		U
106-46-7	1,4-Dichlorobenzene	0.73	13		U
75-71-8	Dichlorodifluoromethane	1.5	13		~~U~~ UJ CCH
75-34-3	1,1-Dichloroethane	0.72	13		U
107-06-2	1,2-Dichloroethane	0.61	13		U
75-35-4	1,1-Dichloroethene	1.6	13		U
156-59-2	cis-1,2-Dichloroethene	1.6	13		U
156-60-5	trans-1,2-Dichloroethene	1.5	13		U
78-87-5	1,2-Dichloropropane	0.61	13		U
10061-01-5	cis-1,3-Dichloropropene	0.67	13		U
10061-02-6	trans-1,3-Dichloropropene	0.43	13		U
100-41-4	Ethylbenzene	1.0	13	2.6	J
591-78-6	2-Hexanone	3.1	13		U
98-82-8	Isopropylbenzene	1.2	13		U
79-20-9	Methyl acetate	2.1	13		U
75-09-2	Methylene chloride	0.83	13	13u ~~1.4~~ ~~JB~~ BL	
108-87-2	Methyl cyclohexane	0.40	13	1.2	J
1634-04-4	Methyl tert-butyl ether	0.43	13		U
108-10-1	4-Methyl-2-pentanone	0.77	13		U
100-42-5	Styrene	0.47	13		U
79-34-5	1,1,2,2-Tetrachloroethane	0.57	13		U
127-18-4	Tetrachloroethene	1.3	13		U

FORM I VOA

4/8/09

FORM 1
VOLATILE ORGANICS ANALYSIS DATA SHEET

CLIENT SAMPLE NO. 35

MR08-SS199D-08D

Lab Name: EMPIRICAL LABS Contract: CH2MHILL

Lab Code: NA Case No.: NA SAS No.: NA SDG No.: LEJEUNE041

Matrix: (soil/water) SOIL Lab Sample ID: 0812343-35

Sample wt/vol: 4.1 (g/mL) G Lab File ID: 1234335A

Level: (low/med) LOW Date Sampled: 12/21/08 08:55

% Moisture: not dec. 9 Date Analyzed: 01/01/09 21:25

GC Column: RTX-VRX ID: 0.25 (mm) Dilution Factor: 1.0

Soil Extract Volume:_____(uL) Soil Aliquot Volume: _____(uL)

CONCENTRATION UNITS: (ug/L or ug/Kg) UG/KG

CAS NO.	COMPOUND	MDL	RL	CONC	Q
108-88-3	Toluene	1.1	13	2.6	J
120-82-1	1,2,4-Trichlorobenzene	0.24	13		U
71-55-6	1,1,1-Trichloroethane	1.2	13		U
79-00-5	1,1,2-Trichloroethane	0.47	13		U
79-01-6	Trichloroethene	1.1	13	13u ~~1.8~~	~~JB~~ BL
76-13-1	Trichlorotrifluoroethane	0.73	13		U
75-69-4	Trichlorofluoromethane	1.3	13		U
75-01-4	Vinyl chloride	1.5	13		U
1330-20-7	Xylene(total)	0.93	13		U

L.W
4/8/09

FORM 1
VOLATILE ORGANICS ANALYSIS DATA SHEET

CLIENT SAMPLE NO. 36

MR08-IS19
9-1-2-08D

Lab Name: EMPIRICAL LABS Contract: CH2MHILL

Lab Code: NA Case No.: NA SAS No.: NA SDG No.: LEJEUNE041

Matrix: (soil/water) SOIL Lab Sample ID: 0812343-36

Sample wt/vol: 4.9 (g/mL) G Lab File ID: 1234336A

Level: (low/med) LOW Date Sampled: 12/21/08 09:00

% Moisture: not dec. 12 Date Analyzed: 01/01/09 22:04

GC Column: RTX-VRX ID: 0.25 (mm) Dilution Factor: 1.0

Soil Extract Volume:_____(uL) Soil Aliquot Volume: _____(uL)

CONCENTRATION UNITS: (ug/L or ug/Kg) UG/KG

CAS NO.	COMPOUND	MDL	RL	CONC	Q
67-64-1	Acetone	2.3	12	32	J SSL
71-43-2	Benzene	0.55	12	12 UJ ~~0.70~~ ~~JB~~	~~BC~~ SSL
75-27-4	Bromodichloromethane	0.35	12		U UJ SSL
75-25-2	Bromoform	1.2	12		U
74-83-9	Bromomethane	0.84	12		U
78-93-3	2-Butanone	1.6	12		U
75-15-0	Carbon disulfide	1.5	12		U
56-23-5	Carbon tetrachloride	1.0	12		U
108-90-7	Chlorobenzene	0.40	12		U
75-00-3	Chloroethane	1.3	12		U
67-66-3	Chloroform	0.64	12		U
74-87-3	Chloromethane	0.60	12		U
110-82-7	Cyclohexane	0.63	12		U
124-48-1	Dibromochloromethane	0.40	12		U
96-12-8	1,2-Dibromo-3-chloropropane	1.4	5.8		~~U~~ UJ ISL
106-93-4	1,2-Dibromoethane	0.50	12		~~U~~ UJ SSL
95-50-1	1,2-Dichlorobenzene	0.43	12		~~U~~ UJ ISL
541-73-1	1,3-Dichlorobenzene	0.98	12		U
106-46-7	1,4-Dichlorobenzene	0.64	12		U SSL
75-71-8	Dichlorodifluoromethane	1.3	12		U
75-34-3	1,1-Dichloroethane	0.63	12		U
107-06-2	1,2-Dichloroethane	0.54	12		U
75-35-4	1,1-Dichloroethene	1.4	12		U
156-59-2	cis-1,2-Dichloroethene	1.4	12		U
156-60-5	trans-1,2-Dichloroethene	1.3	12		U
78-87-5	1,2-Dichloropropane	0.54	12		U
10061-01-5	cis-1,3-Dichloropropene	0.58	12		U
10061-02-6	trans-1,3-Dichloropropene	0.37	12		U
100-41-4	Ethylbenzene	0.87	12		U
591-78-6	2-Hexanone	2.7	12		U
98-82-8	Isopropylbenzene	1.0	12		U
79-20-9	Methyl acetate	1.9	12		U
75-09-2	Methylene chloride	0.72	12	12 UJ ~~1.5~~ ~~JB~~	~~BC~~
108-87-2	Methyl cyclohexane	0.35	12		U UJ
1634-04-4	Methyl tert-butyl ether	0.37	12		U
108-10-1	4-Methyl-2-pentanone	0.68	12		U
100-42-5	Styrene	0.41	12		U
79-34-5	1,1,2,2-Tetrachloroethane	0.50	12		~~U~~ UJ ISL
127-18-4	Tetrachloroethene	1.1	12		~~U~~ ↓ SSL

FORM I VOA

41869

FORM 1
VOLATILE ORGANICS ANALYSIS DATA SHEET

CLIENT SAMPLE NO. 36

MR08-IS19
9-1-2-08D

Lab Name: EMPIRICAL LABS Contract: CH2MHILL

Lab Code: NA Case No.: NA SAS No.: NA SDG No.: LEJEUNE041

Matrix: (soil/water) SOIL Lab Sample ID: 0812343-36

Sample wt/vol: 4.9 (g/mL) G Lab File ID: 1234336A

Level: (low/med) LOW Date Sampled: 12/21/08 09:00

% Moisture: not dec. 12 Date Analyzed: 01/01/09 22:04

GC Column: RTX-VRX ID: 0.25 (mm) Dilution Factor: 1.0

Soil Extract Volume:_____(uL) Soil Aliquot Volume: _____(uL)

CONCENTRATION UNITS: (ug/L or ug/Kg) UG/KG

CAS NO.	COMPOUND	MDL	RL	CONC	Q
108-88-3	Toluene	1.0	12		U UJ SSL
120-82-1	1,2,4-Trichlorobenzene	0.21	12		U UJ ISL
71-55-6	1,1,1-Trichloroethane	1.0	12		U UJ SSL
79-00-5	1,1,2-Trichloroethane	0.41	12		U
79-01-6	Trichloroethene	0.99	12		U
76-13-1	Trichlorotrifluoroethane	0.64	12		U
75-69-4	Trichlorofluoromethane	1.1	12		U
75-01-4	Vinyl chloride	1.3	12		U
1330-20-7	Xylene(total)	0.82	12		U

FORM I VOA

NW
4/8/09

FORM 1
VOLATILE ORGANICS ANALYSIS DATA SHEET

CLIENT SAMPLE NO. 36RE

MR08-IS19
9-1-2-08DR

Lab Name: EMPIRICAL LABS Contract: CH2MHILL

Lab Code: NA Case No.: NA SAS No.: NA SDG No.: LEJEUNE041

Matrix: (soil/water) SOIL Lab Sample ID: 0812343-36R

Sample wt/vol: 5.0 (g/mL) G Lab File ID: 1234336B

Level: (low/med) LOW Date Sampled: 12/21/08 09:00

% Moisture: not dec. 12 Date Analyzed: 01/07/09 22:36

GC Column: RTX-VRX ID: 0.25 (mm) Dilution Factor: 1.0

Soil Extract Volume:_____(uL) Soil Aliquot Volume:_____(uL)

Use original

CONCENTRATION UNITS: (ug/L or ug/Kg) UG/KG

CAS NO.	COMPOUND	MDL	RL	CONC	Q
67-64-1	Acetone	2.3	12	12	J ISL
71-43-2	Benzene	0.54	12		U UJ
75-27-4	Bromodichloromethane	0.34	12		U
75-25-2	Bromoform	1.2	12		U
74-83-9	Bromomethane	0.83	12		U
78-93-3	2-Butanone	1.6	12		U
75-15-0	Carbon disulfide	1.5	12		U
56-23-5	Carbon tetrachloride	1.0	12		U
108-90-7	Chlorobenzene	0.39	12		U
75-00-3	Chloroethane	1.3	12		U
67-66-3	Chloroform	0.63	12		U
74-87-3	Chloromethane	0.60	12	0.89	J J
110-82-7	Cyclohexane	0.62	12		U UJ
124-48-1	Dibromochloromethane	0.39	12		U UJ
96-12-8	1,2-Dibromo-3-chloropropane	1.4	5.8		U R ISL
106-93-4	1,2-Dibromoethane	0.50	12		U UJ
95-50-1	1,2-Dichlorobenzene	0.43	12	0.48	J J ISL
541-73-1	1,3-Dichlorobenzene	0.97	12		U R
106-46-7	1,4-Dichlorobenzene	0.63	12		U R
75-71-8	Dichlorodifluoromethane	1.3	12		U UJ
75-34-3	1,1-Dichloroethane	0.62	12		U
107-06-2	1,2-Dichloroethane	0.53	12		U
75-35-4	1,1-Dichloroethene	1.4	12		U
156-59-2	cis-1,2-Dichloroethene	1.4	12		U
156-60-5	trans-1,2-Dichloroethene	1.3	12		U
78-87-5	1,2-Dichloropropane	0.53	12		U
10061-01-5	cis-1,3-Dichloropropene	0.58	12		U
10061-02-6	trans-1,3-Dichloropropene	0.37	12		U
100-41-4	Ethylbenzene	0.86	12		U
591-78-6	2-Hexanone	2.6	12		U
98-82-8	Isopropylbenzene	1.0	12		U
79-20-9	Methyl acetate	1.8	12		U
75-09-2	Methylene chloride	0.71	12	12 ~~1.3~~	UJ ~~JB~~ BE
108-87-2	Methyl cyclohexane	0.34	12		U UJ ISL
1634-04-4	Methyl tert-butyl ether	0.37	12		U
108-10-1	4-Methyl-2-pentanone	0.67	12		U
100-42-5	Styrene	0.40	12		U
79-34-5	1,1,2,2-Tetrachloroethane	0.50	12		U R ISL
127-18-4	Tetrachloroethene	1.1	12		U UJ

FORM I VOA

MW 4/8/09

FORM 1
VOLATILE ORGANICS ANALYSIS DATA SHEET

CLIENT SAMPLE NO.

36RE

MR08-IS19
9-1-2-08DR

Lab Name: EMPIRICAL LABS Contract: CH2MHILL

Lab Code: NA Case No.: NA SAS No.: NA SDG No.: LEJEUNE041

Matrix: (soil/water) SOIL Lab Sample ID: 0812343-36R

Sample wt/vol: 5.0 (g/mL) G Lab File ID: 1234336B

Level: (low/med) LOW Date Sampled: 12/21/08 09:00

% Moisture: not dec. 12 Date Analyzed: 01/07/09 22:36

GC Column: RTX-VRX ID: 0.25 (mm) Dilution Factor: 1.0

Soil Extract Volume:_____(uL) Soil Aliquot Volume: _____(uL)

use original

CONCENTRATION UNITS: (ug/L or ug/Kg) UG/KG

CAS NO.	COMPOUND	MDL	RL	CONC	Q
108-88-3	Toluene	0.99	12		~~U~~ UJ IS
120-82-1	1,2,4-Trichlorobenzene	0.21	12		~~U~~ R ISL
71-55-6	1,1,1-Trichloroethane	1.0	12		U UJ
79-00-5	1,1,2-Trichloroethane	0.40	12		U
79-01-6	Trichloroethene	0.98	12		U
76-13-1	Trichlorotrifluoroethane	0.63	12		U
75-69-4	Trichlorofluoromethane	1.1	12		U
75-01-4	Vinyl chloride	1.3	12		U
1330-20-7	Xylene(total)	0.81	12		U

R RE

FORM I VOA

kw 4/8/09

FORM 1
VOLATILE ORGANICS ANALYSIS DATA SHEET

CLIENT SAMPLE NO.

37

MR08-IS19
9D-1-2-08D

Lab Name: EMPIRICAL LABS Contract: CH2MHILL

Lab Code: NA Case No.: NA SAS No.: NA SDG No.: LEJEUNE041

Matrix: (soil/water) SOIL Lab Sample ID: 0812343-37

Sample wt/vol: 5.9 (g/mL) G Lab File ID: 1234337A

Level: (low/med) LOW Date Sampled: 12/21/08 09:00

% Moisture: not dec. 13 Date Analyzed: 01/01/09 22:44

GC Column: RTX-VRX ID: 0.25 (mm) Dilution Factor: 1.0

Soil Extract Volume:_____(uL) Soil Aliquot Volume: _____(uL)

CONCENTRATION UNITS: (ug/L or ug/Kg) UG/KG

CAS NO.	COMPOUND	MDL	RL	CONC	Q
67-64-1	Acetone	2.0	9.8	15	
71-43-2	Benzene	0.46	9.8	9.8u ~~0.71~~ ~~JB~~	BL
75-27-4	Bromodichloromethane	0.29	9.8		U
75-25-2	Bromoform	0.98	9.8		U
74-83-9	Bromomethane	0.70	9.8		U
78-93-3	2-Butanone	1.4	9.8	1.6	J
75-15-0	Carbon disulfide	1.3	9.8	1.6	J
56-23-5	Carbon tetrachloride	0.86	9.8		U
108-90-7	Chlorobenzene	0.33	9.8		U
75-00-3	Chloroethane	1.1	9.8		U
67-66-3	Chloroform	0.54	9.8		U
74-87-3	Chloromethane	0.51	9.8		U
110-82-7	Cyclohexane	0.53	9.8		U
124-48-1	Dibromochloromethane	0.33	9.8		U
96-12-8	1,2-Dibromo-3-chloropropane	1.2	4.9		U
106-93-4	1,2-Dibromoethane	0.42	9.8		U
95-50-1	1,2-Dichlorobenzene	0.36	9.8		U
541-73-1	1,3-Dichlorobenzene	0.82	9.8		U
106-46-7	1,4-Dichlorobenzene	0.54	9.8		U
75-71-8	Dichlorodifluoromethane	1.1	9.8		~~U~~ UJ CCL
75-34-3	1,1-Dichloroethane	0.53	9.8		U
107-06-2	1,2-Dichloroethane	0.45	9.8		U
75-35-4	1,1-Dichloroethene	1.2	9.8		U
156-59-2	cis-1,2-Dichloroethene	1.2	9.8		U
156-60-5	trans-1,2-Dichloroethene	1.1	9.8		U
78-87-5	1,2-Dichloropropane	0.45	9.8		U
10061-01-5	cis-1,3-Dichloropropene	0.49	9.8		U
10061-02-6	trans-1,3-Dichloropropene	0.31	9.8		U
100-41-4	Ethylbenzene	0.73	9.8	1.3	J
591-78-6	2-Hexanone	2.2	9.8		U
98-82-8	Isopropylbenzene	0.86	9.8		U
79-20-9	Methyl acetate	1.6	9.8		U
75-09-2	Methylene chloride	0.60	9.8	9.8u ~~1.0~~ ~~JB~~	BL
108-87-2	Methyl cyclohexane	0.29	9.8	0.46	J
1634-04-4	Methyl tert-butyl ether	0.31	9.8		U
108-10-1	4-Methyl-2-pentanone	0.57	9.8		U
100-42-5	Styrene	0.34	9.8		U
79-34-5	1,1,2,2-Tetrachloroethane	0.42	9.8		U
127-18-4	Tetrachloroethene	0.95	9.8		U

lew
4/8/09

FORM 1
VOLATILE ORGANICS ANALYSIS DATA SHEET

CLIENT SAMPLE NO. 37

MR08-IS19
9D-1-2-08D

Lab Name: EMPIRICAL LABS Contract: CH2MHILL

Lab Code: NA Case No.: NA SAS No.: NA SDG No.: LEJEUNE041

Matrix: (soil/water) SOIL Lab Sample ID: 0812343-37

Sample wt/vol: 5.9 (g/mL) G Lab File ID: 1234337A

Level: (low/med) LOW Date Sampled: 12/21/08 09:00

% Moisture: not dec. 13 Date Analyzed: 01/01/09 22:44

GC Column: RTX-VRX ID: 0.25 (mm) Dilution Factor: 1.0

Soil Extract Volume:_____(uL) Soil Aliquot Volume: _____(uL)

CONCENTRATION UNITS: (ug/L or ug/Kg) UG/KG

CAS NO.	COMPOUND	MDL	RL	CONC	Q
108-88-3	Toluene	0.84	9.8	1.0	J
120-82-1	1,2,4-Trichlorobenzene	0.18	9.8		U
71-55-6	1,1,1-Trichloroethane	0.88	9.8		U
79-00-5	1,1,2-Trichloroethane	0.34	9.8		U
79-01-6	Trichloroethene	0.83	9.8	9.8u ~~0.99~~	~~JB~~ BL
76-13-1	Trichlorotrifluoroethane	0.54	9.8		U
75-69-4	Trichlorofluoromethane	0.93	9.8		U
75-01-4	Vinyl chloride	1.1	9.8		U
1330-20-7	Xylene(total)	0.68	9.8		U

NCO
4/8/09

FORM 1
VOLATILE ORGANICS ANALYSIS DATA SHEET

CLIENT SAMPLE NO. 38

MR08-SS198-08D

Lab Name: EMPIRICAL LABS Contract: CH2MHILL

Lab Code: NA Case No.: NA SAS No.: NA SDG No.: LEJEUNE041

Matrix: (soil/water) SOIL Lab Sample ID: 0812343-38

Sample wt/vol: 6.6 (g/mL) G Lab File ID: 1234338A

Level: (low/med) LOW Date Sampled: 12/21/08 10:00

% Moisture: not dec. 7 Date Analyzed: 01/01/09 23:23

GC Column: RTX-VRX ID: 0.25 (mm) Dilution Factor: 1.0

Soil Extract Volume:_____(uL) Soil Aliquot Volume: _____(uL)

CONCENTRATION UNITS: (ug/L or ug/Kg) UG/KG

CAS NO.	COMPOUND	MDL	RL	CONC	Q
67-64-1	Acetone	1.6	8.1	18	
71-43-2	Benzene	0.38	8.1	8.1u ~~1.3~~	~~JB~~ BL
75-27-4	Bromodichloromethane	0.24	8.1		U
75-25-2	Bromoform	0.81	8.1		U
74-83-9	Bromomethane	0.58	8.1		U
78-93-3	2-Butanone	1.1	8.1	2.8	J
75-15-0	Carbon disulfide	1.0	8.1		U
56-23-5	Carbon tetrachloride	0.72	8.1		U
108-90-7	Chlorobenzene	0.28	8.1		U
75-00-3	Chloroethane	0.89	8.1		U
67-66-3	Chloroform	0.45	8.1		U
74-87-3	Chloromethane	0.42	8.1		U
110-82-7	Cyclohexane	0.44	8.1	0.63	J
124-48-1	Dibromochloromethane	0.28	8.1		U
96-12-8	1,2-Dibromo-3-chloropropane	0.98	4.1		U
106-93-4	1,2-Dibromoethane	0.35	8.1		U
95-50-1	1,2-Dichlorobenzene	0.30	8.1		U
541-73-1	1,3-Dichlorobenzene	0.68	8.1		U
106-46-7	1,4-Dichlorobenzene	0.45	8.1		U
75-71-8	Dichlorodifluoromethane	0.89	8.1		~~J~~ UJ CCL
75-34-3	1,1-Dichloroethane	0.44	8.1		U
107-06-2	1,2-Dichloroethane	0.37	8.1		U
75-35-4	1,1-Dichloroethene	0.98	8.1		U
156-59-2	cis-1,2-Dichloroethene	0.98	8.1		U
156-60-5	trans-1,2-Dichloroethene	0.89	8.1		U
78-87-5	1,2-Dichloropropane	0.37	8.1		U
10061-01-5	cis-1,3-Dichloropropene	0.41	8.1		U
10061-02-6	trans-1,3-Dichloropropene	0.26	8.1		U
100-41-4	Ethylbenzene	0.61	8.1	2.6	J
591-78-6	2-Hexanone	1.9	8.1		U
98-82-8	Isopropylbenzene	0.72	8.1		U
79-20-9	Methyl acetate	1.3	8.1		U
75-09-2	Methylene chloride	0.50	8.1	8.1u ~~0.83~~	~~JB~~ BL
108-87-2	Methyl cyclohexane	0.24	8.1	0.78	J
1634-04-4	Methyl tert-butyl ether	0.26	8.1		U
108-10-1	4-Methyl-2-pentanone	0.47	8.1		U
100-42-5	Styrene	0.28	8.1		U
79-34-5	1,1,2,2-Tetrachloroethane	0.35	8.1		U
127-18-4	Tetrachloroethene	0.79	8.1		U

fw 4/8/09

FORM 1
VOLATILE ORGANICS ANALYSIS DATA SHEET

CLIENT SAMPLE NO. 38

MR08-SS198-08D

Lab Name: EMPIRICAL LABS Contract: CH2MHILL

Lab Code: NA Case No.: NA SAS No.: NA SDG No.: LEJEUNE041

Matrix: (soil/water) SOIL Lab Sample ID: 0812343-38

Sample wt/vol: 6.6 (g/mL) G Lab File ID: 1234338A

Level: (low/med) LOW Date Sampled: 12/21/08 10:00

% Moisture: not dec. 7 Date Analyzed: 01/01/09 23:23

GC Column: RTX-VRX ID: 0.25 (mm) Dilution Factor: 1.0

Soil Extract Volume:_____(uL) Soil Aliquot Volume: _____(uL)

CONCENTRATION UNITS: (ug/L or ug/Kg) UG/KG

CAS NO.	COMPOUND	MDL	RL	CONC	Q
108-88-3	Toluene	0.70	8.1	2.0	J
120-82-1	1,2,4-Trichlorobenzene	0.15	8.1		U
71-55-6	1,1,1-Trichloroethane	0.73	8.1		U
79-00-5	1,1,2-Trichloroethane	0.28	8.1		U
79-01-6	Trichloroethene	0.69	8.1	8.1U 0.~~90~~	~~JB~~ BL
76-13-1	Trichlorotrifluoroethane	0.45	8.1		U
75-69-4	Trichlorofluoromethane	0.77	8.1		U
75-01-4	Vinyl chloride	0.89	8.1		U
1330-20-7	Xylene(total)	0.57	8.1		U

FORM I VOA

dw
4/8/09

FORM 1
VOLATILE ORGANICS ANALYSIS DATA SHEET

CLIENT SAMPLE NO. 39

MR08-IS19
8-5-6-08D

Lab Name: EMPIRICAL LABS Contract: CH2MHILL

Lab Code: NA Case No.: NA SAS No.: NA SDG No.: LEJEUNE041

Matrix: (soil/water) SOIL Lab Sample ID: 0812343-39

Sample wt/vol: 4.9 (g/mL) G Lab File ID: 1234339A

Level: (low/med) LOW Date Sampled: 12/21/08 10:05

% Moisture: not dec. 8 Date Analyzed: 01/02/09 00:02

GC Column: RTX-VRX ID: 0.25 (mm) Dilution Factor: 1.0

Soil Extract Volume:_____(uL) Soil Aliquot Volume: _____(uL)

CONCENTRATION UNITS: (ug/L or ug/Kg) UG/KG

CAS NO.	COMPOUND	MDL	RL	CONC	Q
67-64-1	Acetone	2.2	11		U
71-43-2	Benzene	0.52	11		U
75-27-4	Bromodichloromethane	0.33	11		U
75-25-2	Bromoform	1.1	11		U
74-83-9	Bromomethane	0.80	11		U
78-93-3	2-Butanone	1.6	11		U
75-15-0	Carbon disulfide	1.4	11		U
56-23-5	Carbon tetrachloride	0.98	11		U
108-90-7	Chlorobenzene	0.38	11		U
75-00-3	Chloroethane	1.2	11		U
67-66-3	Chloroform	0.61	11		U
74-87-3	Chloromethane	0.58	11		U
110-82-7	Cyclohexane	0.60	11		U
124-48-1	Dibromochloromethane	0.38	11		U
96-12-8	1,2-Dibromo-3-chloropropane	1.3	5.6		U
106-93-4	1,2-Dibromoethane	0.48	11		U
95-50-1	1,2-Dichlorobenzene	0.41	11		U
541-73-1	1,3-Dichlorobenzene	0.93	11		U
106-46-7	1,4-Dichlorobenzene	0.61	11		U
75-71-8	Dichlorodifluoromethane	1.2	11		~~U~~ UJ CC
75-34-3	1,1-Dichloroethane	0.60	11		U
107-06-2	1,2-Dichloroethane	0.51	11		U
75-35-4	1,1-Dichloroethene	1.3	11		U
156-59-2	cis-1,2-Dichloroethene	1.3	11		U
156-60-5	trans-1,2-Dichloroethene	1.2	11		U
78-87-5	1,2-Dichloropropane	0.51	11		U
10061-01-5	cis-1,3-Dichloropropene	0.56	11		U
10061-02-6	trans-1,3-Dichloropropene	0.36	11		U
100-41-4	Ethylbenzene	0.83	11		U
591-78-6	2-Hexanone	2.6	11		U
98-82-8	Isopropylbenzene	0.98	11		U
79-20-9	Methyl acetate	1.8	11		U
75-09-2	Methylene chloride	0.69	11	11u	~~1.2 JB~~ BL
108-87-2	Methyl cyclohexane	0.33	11		U
1634-04-4	Methyl tert-butyl ether	0.36	11		U
108-10-1	4-Methyl-2-pentanone	0.64	11		U
100-42-5	Styrene	0.39	11		U
79-34-5	1,1,2,2-Tetrachloroethane	0.48	11		U
127-18-4	Tetrachloroethene	1.1	11		U

FORM I VOA

LW
4/9/09

FORM 1
VOLATILE ORGANICS ANALYSIS DATA SHEET

CLIENT SAMPLE NO. 39

MR08-IS19
8-5-6-08D

Lab Name: EMPIRICAL LABS Contract: CH2MHILL

Lab Code: NA Case No.: NA SAS No.: NA SDG No.: LEJEUNE041

Matrix: (soil/water) SOIL Lab Sample ID: 0812343-39

Sample wt/vol: 4.9 (g/mL) G Lab File ID: 1234339A

Level: (low/med) LOW Date Sampled: 12/21/08 10:05

% Moisture: not dec. 8 Date Analyzed: 01/02/09 00:02

GC Column: RTX-VRX ID: 0.25 (mm) Dilution Factor: 1.0

Soil Extract Volume:_____(uL) Soil Aliquot Volume: _____(uL)

CONCENTRATION UNITS: (ug/L or ug/Kg) UG/KG

CAS NO.	COMPOUND	MDL	RL	CONC	Q
108-88-3	Toluene	0.96	11		U
120-82-1	1,2,4-Trichlorobenzene	0.20	11		U
71-55-6	1,1,1-Trichloroethane	1.0	11		U
79-00-5	1,1,2-Trichloroethane	0.39	11		U
79-01-6	Trichloroethene	0.94	11		U
76-13-1	Trichlorotrifluoroethane	0.61	11		U
75-69-4	Trichlorofluoromethane	1.0	11		U
75-01-4	Vinyl chloride	1.2	11		U
1330-20-7	Xylene(total)	0.78	11		U

LEW
4/8/09

FORM 1
VOLATILE ORGANICS ANALYSIS DATA SHEET

CLIENT SAMPLE NO. 40

MR08-SS197-08D

Lab Name: EMPIRICAL LABS Contract: CH2MHILL

Lab Code: NA Case No.: NA SAS No.: NA SDG No.: LEJEUNE041

Matrix: (soil/water) SOIL Lab Sample ID: 0812343-40

Sample wt/vol: 6.7 (g/mL) G Lab File ID: 1234340A

Level: (low/med) LOW Date Sampled: 12/21/08 10:30

% Moisture: not dec. 9 Date Analyzed: 01/02/09 04:25

GC Column: RTX-VRX ID: 0.25 (mm) Dilution Factor: 1.0

Soil Extract Volume:_____(uL) Soil Aliquot Volume: _____(uL)

CONCENTRATION UNITS: (ug/L or ug/Kg) UG/KG

CAS NO.	COMPOUND	MDL	RL	CONC	Q
67-64-1	Acetone	1.6	8.1	4.3	J
71-43-2	Benzene	0.38	8.1	8.1u ~~0.97~~	~~JB~~ BL
75-27-4	Bromodichloromethane	0.24	8.1		U
75-25-2	Bromoform	0.81	8.1		U
74-83-9	Bromomethane	0.58	8.1		U
78-93-3	2-Butanone	1.1	8.1		U
75-15-0	Carbon disulfide	1.0	8.1		U
56-23-5	Carbon tetrachloride	0.72	8.1		U
108-90-7	Chlorobenzene	0.28	8.1		U
75-00-3	Chloroethane	0.89	8.1		U
67-66-3	Chloroform	0.45	8.1		U
74-87-3	Chloromethane	0.42	8.1		~~U~~ UJ CCH
110-82-7	Cyclohexane	0.44	8.1	0.45	J
124-48-1	Dibromochloromethane	0.28	8.1		U
96-12-8	1,2-Dibromo-3-chloropropane	0.98	4.1		U
106-93-4	1,2-Dibromoethane	0.35	8.1		U
95-50-1	1,2-Dichlorobenzene	0.30	8.1		U
541-73-1	1,3-Dichlorobenzene	0.68	8.1		U
106-46-7	1,4-Dichlorobenzene	0.45	8.1		U
75-71-8	Dichlorodifluoromethane	0.89	8.1		~~U~~ UJ CCH
75-34-3	1,1-Dichloroethane	0.44	8.1		U
107-06-2	1,2-Dichloroethane	0.37	8.1		U
75-35-4	1,1-Dichloroethene	0.98	8.1		U
156-59-2	cis-1,2-Dichloroethene	0.98	8.1		U
156-60-5	trans-1,2-Dichloroethene	0.89	8.1		U
78-87-5	1,2-Dichloropropane	0.37	8.1		U
10061-01-5	cis-1,3-Dichloropropene	0.41	8.1		U
10061-02-6	trans-1,3-Dichloropropene	0.26	8.1		U
100-41-4	Ethylbenzene	0.61	8.1	2.9	J
591-78-6	2-Hexanone	1.9	8.1		U
98-82-8	Isopropylbenzene	0.72	8.1		U
79-20-9	Methyl acetate	1.3	8.1		U
75-09-2	Methylene chloride	0.50	8.1	8.1u ~~0.87~~	~~JB~~ BL
108-87-2	Methyl cyclohexane	0.24	8.1	0.65	J
1634-04-4	Methyl tert-butyl ether	0.26	8.1		U
108-10-1	4-Methyl-2-pentanone	0.47	8.1		U
100-42-5	Styrene	0.28	8.1		U
79-34-5	1,1,2,2-Tetrachloroethane	0.35	8.1		U
127-18-4	Tetrachloroethene	0.79	8.1		U

NW
4/8/09

FORM 1
VOLATILE ORGANICS ANALYSIS DATA SHEET

CLIENT SAMPLE NO. 40

MR08-SS197-08D

Lab Name: EMPIRICAL LABS Contract: CH2MHILL

Lab Code: NA Case No.: NA SAS No.: NA SDG No.: LEJEUNE041

Matrix: (soil/water) SOIL Lab Sample ID: 0812343-40

Sample wt/vol: 6.7 (g/mL) G Lab File ID: 1234340A

Level: (low/med) LOW Date Sampled: 12/21/08 10:30

% Moisture: not dec. 9 Date Analyzed: 01/02/09 04:25

GC Column: RTX-VRX ID: 0.25 (mm) Dilution Factor: 1.0

Soil Extract Volume:_____(uL) Soil Aliquot Volume: _____(uL)

CONCENTRATION UNITS: (ug/L or ug/Kg) UG/KG

CAS NO.	COMPOUND	MDL	RL	CONC	Q
108-88-3	Toluene	0.70	8.1	1.7	J
120-82-1	1,2,4-Trichlorobenzene	0.15	8.1		U
71-55-6	1,1,1-Trichloroethane	0.73	8.1		U
79-00-5	1,1,2-Trichloroethane	0.28	8.1		U
79-01-6	Trichloroethene	0.69	8.1		U
76-13-1	Trichlorotrifluoroethane	0.45	8.1		U
75-69-4	Trichlorofluoromethane	0.77	8.1		U
75-01-4	Vinyl chloride	0.89	8.1		~~U~~ MUSCH
1330-20-7	Xylene(total)	0.57	8.1		U

FORM I VOA

4/8/09

FORM 1
VOLATILE ORGANICS ANALYSIS DATA SHEET

CLIENT SAMPLE NO. 41

MR08-IS19
7-5-6-08D

Lab Name: EMPIRICAL LABS Contract: CH2MHILL

Lab Code: NA Case No.: NA SAS No.: NA SDG No.: LEJEUNE041

Matrix: (soil/water) SOIL Lab Sample ID: 0812343-41

Sample wt/vol: 5.1 (g/mL) G Lab File ID: 1234341A

Level: (low/med) LOW Date Sampled: 12/21/08 10:35

% Moisture: not dec. 4 Date Analyzed: 01/02/09 08:32

GC Column: RTX-VRX ID: 0.25 (mm) Dilution Factor: 1.0

Soil Extract Volume:_____(uL) Soil Aliquot Volume: _____(uL)

CONCENTRATION UNITS: (ug/L or ug/Kg) UG/KG

CAS NO.	COMPOUND	MDL	RL	CONC	Q
67-64-1	Acetone	2.0	10	14	
71-43-2	Benzene	0.48	10		U
75-27-4	Bromodichloromethane	0.30	10		U
75-25-2	Bromoform	1.0	10		U
74-83-9	Bromomethane	0.73	10		U
78-93-3	2-Butanone	1.4	10		U
75-15-0	Carbon disulfide	1.3	10		U
56-23-5	Carbon tetrachloride	0.90	10		U
108-90-7	Chlorobenzene	0.34	10		U
75-00-3	Chloroethane	1.1	10		U
67-66-3	Chloroform	0.56	10		U
74-87-3	Chloromethane	0.53	10		~~U~~ UJ CU
110-82-7	Cyclohexane	0.55	10		U
124-48-1	Dibromochloromethane	0.34	10		U
96-12-8	1,2-Dibromo-3-chloropropane	1.2	5.1		U
106-93-4	1,2-Dibromoethane	0.44	10		U
95-50-1	1,2-Dichlorobenzene	0.38	10		U
541-73-1	1,3-Dichlorobenzene	0.85	10		U
106-46-7	1,4-Dichlorobenzene	0.56	10		U
75-71-8	Dichlorodifluoromethane	1.1	10		~~U~~ UJ CCH
75-34-3	1,1-Dichloroethane	0.55	10		U
107-06-2	1,2-Dichloroethane	0.47	10		U
75-35-4	1,1-Dichloroethene	1.2	10		U
156-59-2	cis-1,2-Dichloroethene	1.2	10		U
156-60-5	trans-1,2-Dichloroethene	1.1	10		U
78-87-5	1,2-Dichloropropane	0.47	10		U
10061-01-5	cis-1,3-Dichloropropene	0.51	10		U
10061-02-6	trans-1,3-Dichloropropene	0.32	10		U
100-41-4	Ethylbenzene	0.76	10		U
591-78-6	2-Hexanone	2.3	10		U
98-82-8	Isopropylbenzene	0.90	10		U
79-20-9	Methyl acetate	1.6	10		U
75-09-2	Methylene chloride	0.63	10	10U	~~1.1 JB~~ BL
108-87-2	Methyl cyclohexane	0.30	10		U
1634-04-4	Methyl tert-butyl ether	0.32	10		U
108-10-1	4-Methyl-2-pentanone	0.59	10		U
100-42-5	Styrene	0.36	10		U
79-34-5	1,1,2,2-Tetrachloroethane	0.44	10		U
127-18-4	Tetrachloroethene	0.99	10		U

FORM I VOA

4/8/09

FORM 1
VOLATILE ORGANICS ANALYSIS DATA SHEET

CLIENT SAMPLE NO. 41

MR08-IS19
7-5-6-08D

Lab Name: EMPIRICAL LABS Contract: CH2MHILL

Lab Code: NA Case No.: NA SAS No.: NA SDG No.: LEJEUNE041

Matrix: (soil/water) SOIL Lab Sample ID: 0812343-41

Sample wt/vol: 5.1 (g/mL) G Lab File ID: 1234341A

Level: (low/med) LOW Date Sampled: 12/21/08 10:35

% Moisture: not dec. 4 Date Analyzed: 01/02/09 08:32

GC Column: RTX-VRX ID: 0.25 (mm) Dilution Factor: 1.0

Soil Extract Volume:_____(uL) Soil Aliquot Volume: _____(uL)

CONCENTRATION UNITS: (ug/L or ug/Kg) UG/KG

CAS NO.	COMPOUND	MDL	RL	CONC	Q
108-88-3	Toluene	0.88	10		U
120-82-1	1,2,4-Trichlorobenzene	0.18	10		U
71-55-6	1,1,1-Trichloroethane	0.92	10		U
79-00-5	1,1,2-Trichloroethane	0.36	10		U
79-01-6	Trichloroethene	0.86	10		U
76-13-1	Trichlorotrifluoroethane	0.56	10		U
75-69-4	Trichlorofluoromethane	0.97	10		U
75-01-4	Vinyl chloride	1.1	10		~~U~~ UJ CCI
1330-20-7	Xylene(total)	0.71	10		U

FORM I VOA

MW 4/8/09

FORM 1
VOLATILE ORGANICS ANALYSIS DATA SHEET

CLIENT SAMPLE NO.

42

MR08-SS196-08D

Lab Name: EMPIRICAL LABS Contract: CH2MHILL

Lab Code: NA Case No.: NA SAS No.: NA SDG No.: LEJEUNE041

Matrix: (soil/water) SOIL Lab Sample ID: 0812343-42

Sample wt/vol: 4.3 (g/mL) G Lab File ID: 1234342A

Level: (low/med) LOW Date Sampled: 12/21/08 11:10

% Moisture: not dec. 9 Date Analyzed: 01/02/09 09:11

GC Column: RTX-VRX ID: 0.25 (mm) Dilution Factor: 1.0

Soil Extract Volume:_____(uL) Soil Aliquot Volume: _____(uL)

CONCENTRATION UNITS: (ug/L or ug/Kg) UG/KG

CAS NO.	COMPOUND	MDL	RL	CONC	Q
67-64-1	Acetone	2.5	13	7.0	J
71-43-2	Benzene	0.60	13	13u ~~1.3~~	~~JB~~ BL
75-27-4	Bromodichloromethane	0.38	13		U
75-25-2	Bromoform	1.3	13		U
74-83-9	Bromomethane	0.92	13		U
78-93-3	2-Butanone	1.8	13		U
75-15-0	Carbon disulfide	1.6	13		U
56-23-5	Carbon tetrachloride	1.1	13		U
108-90-7	Chlorobenzene	0.43	13		U
75-00-3	Chloroethane	1.4	13		U
67-66-3	Chloroform	0.70	13		U
74-87-3	Chloromethane	0.66	13		~~J~~ UJ CCH
110-82-7	Cyclohexane	0.69	13	0.70	J
124-48-1	Dibromochloromethane	0.43	13		U
96-12-8	1,2-Dibromo-3-chloropropane	1.5	6.4		U
106-93-4	1,2-Dibromoethane	0.55	13		U
95-50-1	1,2-Dichlorobenzene	0.47	13		U
541-73-1	1,3-Dichlorobenzene	1.1	13		U
106-46-7	1,4-Dichlorobenzene	0.70	13		U
75-71-8	Dichlorodifluoromethane	1.4	13		~~J~~ UJ CCH
75-34-3	1,1-Dichloroethane	0.69	13		U
107-06-2	1,2-Dichloroethane	0.58	13		U
75-35-4	1,1-Dichloroethene	1.5	13		U
156-59-2	cis-1,2-Dichloroethene	1.5	13		U
156-60-5	trans-1,2-Dichloroethene	1.4	13		U
78-87-5	1,2-Dichloropropane	0.58	13		U
10061-01-5	cis-1,3-Dichloropropene	0.64	13		U
10061-02-6	trans-1,3-Dichloropropene	0.41	13		U
100-41-4	Ethylbenzene	0.95	13	8.7	J
591-78-6	2-Hexanone	2.9	13		U
98-82-8	Isopropylbenzene	1.1	13		U
79-20-9	Methyl acetate	2.0	13		U
75-09-2	Methylene chloride	0.79	13	13u 1.3	JB BL
108-87-2	Methyl cyclohexane	0.38	13	0.97	J
1634-04-4	Methyl tert-butyl ether	0.41	13		U
108-10-1	4-Methyl-2-pentanone	0.74	13		U
100-42-5	Styrene	0.44	13		U
79-34-5	1,1,2,2-Tetrachloroethane	0.55	13		U
127-18-4	Tetrachloroethene	1.2	13		U

FORM I VOA

LW 4/8/09

FORM 1
VOLATILE ORGANICS ANALYSIS DATA SHEET

CLIENT SAMPLE NO. 42

MR08-SS196-08D

Lab Name: EMPIRICAL LABS Contract: CH2MHILL

Lab Code: NA Case No.: NA SAS No.: NA SDG No.: LEJEUNE041

Matrix: (soil/water) SOIL Lab Sample ID: 0812343-42

Sample wt/vol: 4.3 (g/mL) G Lab File ID: 1234342A

Level: (low/med) LOW Date Sampled: 12/21/08 11:10

% Moisture: not dec. 9 Date Analyzed: 01/02/09 09:11

GC Column: RTX-VRX ID: 0.25 (mm) Dilution Factor: 1.0

Soil Extract Volume:_____(uL) Soil Aliquot Volume: _____(uL)

CONCENTRATION UNITS: (ug/L or ug/Kg) UG/KG

CAS NO.	COMPOUND	MDL	RL	CONC	Q
108-88-3	Toluene	1.1	13	3.7	J
120-82-1	1,2,4-Trichlorobenzene	0.23	13		U
71-55-6	1,1,1-Trichloroethane	1.1	13		U
79-00-5	1,1,2-Trichloroethane	0.44	13		U
79-01-6	Trichloroethene	1.1	13		U
76-13-1	Trichlorotrifluoroethane	0.70	13		U
75-69-4	Trichlorofluoromethane	1.2	13		U
75-01-4	Vinyl chloride	1.4	13		~~U~~ UJ CH
1330-20-7	Xylene(total)	0.89	13		U

FORM I VOA

lw
4/8/09

FORM 1
VOLATILE ORGANICS ANALYSIS DATA SHEET

CLIENT SAMPLE NO. 43

MR08-IS19
6-1-2-08D

Lab Name: EMPIRICAL LABS Contract: CH2MHILL

Lab Code: NA Case No.: NA SAS No.: NA SDG No.: LEJEUNE041

Matrix: (soil/water) SOIL Lab Sample ID: 0812343-43

Sample wt/vol: 5.7 (g/mL) G Lab File ID: 1234343A

Level: (low/med) LOW Date Sampled: 12/21/08 11:20 Use reanalysis

% Moisture: not dec. 11 Date Analyzed: 01/02/09 09:50

GC Column: RTX-VRX ID: 0.25 (mm) Dilution Factor: 1.0

Soil Extract Volume:_____(uL) Soil Aliquot Volume:_____(uL)

CONCENTRATION UNITS: (ug/L or ug/Kg) UG/KG

CAS NO.	COMPOUND	MDL	RL	CONC	Q
67-64-1	Acetone	2.0	9.8		U R ISL
71-43-2	Benzene	0.46	9.8		U
75-27-4	Bromodichloromethane	0.30	9.8		U
75-25-2	Bromoform	0.98	9.8		U
74-83-9	Bromomethane	0.71	9.8		U
78-93-3	2-Butanone	1.4	9.8		U
75-15-0	Carbon disulfide	1.3	9.8		U
56-23-5	Carbon tetrachloride	0.86	9.8		U
108-90-7	Chlorobenzene	0.33	9.8		U
75-00-3	Chloroethane	1.1	9.8		U
67-66-3	Chloroform	0.54	9.8		U
74-87-3	Chloromethane	0.51	9.8		U
110-82-7	Cyclohexane	0.53	9.8		U
124-48-1	Dibromochloromethane	0.33	9.8		U
96-12-8	1,2-Dibromo-3-chloropropane	1.2	4.9		U
106-93-4	1,2-Dibromoethane	0.42	9.8		U
95-50-1	1,2-Dichlorobenzene	0.36	9.8		U
541-73-1	1,3-Dichlorobenzene	0.83	9.8		U
106-46-7	1,4-Dichlorobenzene	0.54	9.8		U
75-71-8	Dichlorodifluoromethane	1.1	9.8		U
75-34-3	1,1-Dichloroethane	0.53	9.8		U
107-06-2	1,2-Dichloroethane	0.45	9.8		U
75-35-4	1,1-Dichloroethene	1.2	9.8		U
156-59-2	cis-1,2-Dichloroethene	1.2	9.8		U
156-60-5	trans-1,2-Dichloroethene	1.1	9.8		U
78-87-5	1,2-Dichloropropane	0.45	9.8		U
10061-01-5	cis-1,3-Dichloropropene	0.49	9.8		U
10061-02-6	trans-1,3-Dichloropropene	0.31	9.8		U
100-41-4	Ethylbenzene	0.74	9.8		U
591-78-6	2-Hexanone	2.3	9.8		U
98-82-8	Isopropylbenzene	0.86	9.8		U
79-20-9	Methyl acetate	1.6	9.8		U
75-09-2	Methylene chloride	0.61	9.8	9.8 ~~0.87 JB~~	ISL BE
108-87-2	Methyl cyclohexane	0.30	9.8		U R ISL
1634-04-4	Methyl tert-butyl ether	0.31	9.8		U
108-10-1	4-Methyl-2-pentanone	0.57	9.8		U
100-42-5	Styrene	0.34	9.8		U
79-34-5	1,1,2,2-Tetrachloroethane	0.42	9.8		U
127-18-4	Tetrachloroethene	0.95	9.8		U

FORM I VOA

WW 4/8/09

FORM 1
VOLATILE ORGANICS ANALYSIS DATA SHEET

CLIENT SAMPLE NO. 43

MR08-IS19
6-1-2-08D

Lab Name: EMPIRICAL LABS Contract: CH2MHILL

Lab Code: NA Case No.: NA SAS No.: NA SDG No.: LEJEUNE041

Matrix: (soil/water) SOIL Lab Sample ID: 0812343-43

Sample wt/vol: 5.7 (g/mL) G Lab File ID: 1234343A

Level: (low/med) LOW Date Sampled: 12/21/08 11:20

% Moisture: not dec. 11 Date Analyzed: 01/02/09 09:50

GC Column: RTX-VRX ID: 0.25 (mm) Dilution Factor: 1.0

Soil Extract Volume:_____(uL) Soil Aliquot Volume: _____(uL)

use reanalysis

CONCENTRATION UNITS: (ug/L or ug/Kg) UG/KG

CAS NO.	COMPOUND	MDL	RL	CONC	Q
108-88-3	Toluene	0.85	9.8		~~U~~ R ISL
120-82-1	1,2,4-Trichlorobenzene	0.18	9.8		~~U~~
71-55-6	1,1,1-Trichloroethane	0.88	9.8		~~U~~
79-00-5	1,1,2-Trichloroethane	0.34	9.8		~~U~~
79-01-6	Trichloroethene	0.84	9.8	1.7	~~U~~ J
76-13-1	Trichlorotrifluoroethane	0.54	9.8		~~U~~ R
75-69-4	Trichlorofluoromethane	0.93	9.8		~~U~~
75-01-4	Vinyl chloride	1.1	9.8		~~U~~
1330-20-7	Xylene(total)	0.69	9.8		~~U~~

R RE

FORM I VOA

lw
4/8/09

43RE

FORM 1
VOLATILE ORGANICS ANALYSIS DATA SHEET

CLIENT SAMPLE NO.

MR08-IS19
6-1-2-08DR

Lab Name: EMPIRICAL LABS Contract: CH2MHILL

Lab Code: NA Case No.: NA SAS No.: NA SDG No.: LEJEUNE041

Matrix: (soil/water) SOIL Lab Sample ID: 0812343-43R

Sample wt/vol: 5.7 (g/mL) G Lab File ID: 1234343B

Level: (low/med) LOW Date Sampled: 12/21/08 11:20

% Moisture: not dec. 11 Date Analyzed: 01/06/09 20:44

GC Column: RTX-VRX ID: 0.25 (mm) Dilution Factor: 1.0

Soil Extract Volume:_____(uL) Soil Aliquot Volume: _____(uL)

CONCENTRATION UNITS: (ug/L or ug/Kg) UG/KG

CAS NO.	COMPOUND	MDL	RL	CONC	Q	
67-64-1	Acetone	2.0	9.8	15	J	HT
71-43-2	Benzene	0.46	9.8		U UJ	
75-27-4	Bromodichloromethane	0.29	9.8		U	
75-25-2	Bromoform	0.98	9.8		U	
74-83-9	Bromomethane	0.71	9.8		U	
78-93-3	2-Butanone	1.4	9.8		U	
75-15-0	Carbon disulfide	1.3	9.8		U	
56-23-5	Carbon tetrachloride	0.86	9.8		U	
108-90-7	Chlorobenzene	0.33	9.8		U	
75-00-3	Chloroethane	1.1	9.8		U	
67-66-3	Chloroform	0.54	9.8		U	
74-87-3	Chloromethane	0.51	9.8		U	
110-82-7	Cyclohexane	0.53	9.8		U	
124-48-1	Dibromochloromethane	0.33	9.8		U	
96-12-8	1,2-Dibromo-3-chloropropane	1.2	4.9		~~U~~ UJ	ISL
106-93-4	1,2-Dibromoethane	0.42	9.8		U	HT
95-50-1	1,2-Dichlorobenzene	0.36	9.8		U UJ	ISL
541-73-1	1,3-Dichlorobenzene	0.82	9.8		U	
106-46-7	1,4-Dichlorobenzene	0.54	9.8		U	
75-71-8	Dichlorodifluoromethane	1.1	9.8		U	HT
75-34-3	1,1-Dichloroethane	0.53	9.8		U	
107-06-2	1,2-Dichloroethane	0.45	9.8		U	
75-35-4	1,1-Dichloroethene	1.2	9.8		U	
156-59-2	cis-1,2-Dichloroethene	1.2	9.8		U	
156-60-5	trans-1,2-Dichloroethene	1.1	9.8		U	
78-87-5	1,2-Dichloropropane	0.45	9.8		U	
10061-01-5	cis-1,3-Dichloropropene	0.49	9.8		U	
10061-02-6	trans-1,3-Dichloropropene	0.31	9.8		U	
100-41-4	Ethylbenzene	0.74	9.8		U	
591-78-6	2-Hexanone	2.2	9.8		U	
98-82-8	Isopropylbenzene	0.86	9.8		U	
79-20-9	Methyl acetate	1.6	9.8		U	
75-09-2	Methylene chloride	0.61	9.8	9.84 ~~J 0.80~~	~~JB~~	~~BL~~
108-87-2	Methyl cyclohexane	0.29	9.8		U	
1634-04-4	Methyl tert-butyl ether	0.31	9.8		U	
108-10-1	4-Methyl-2-pentanone	0.57	9.8		U	
100-42-5	Styrene	0.34	9.8		U	
79-34-5	1,1,2,2-Tetrachloroethane	0.42	9.8		~~U~~ UJ	ISL
127-18-4	Tetrachloroethene	0.95	9.8		U	HT

FORM I VOA

MW
4/8/09

43RE

FORM 1
VOLATILE ORGANICS ANALYSIS DATA SHEET

CLIENT SAMPLE NO.

MR08-IS19
6-1-2-08DR

Lab Name: EMPIRICAL LABS Contract: CH2MHILL

Lab Code: NA Case No.: NA SAS No.: NA SDG No.: LEJEUNE041

Matrix: (soil/water) SOIL Lab Sample ID: 0812343-43R

Sample wt/vol: 5.7 (g/mL) G Lab File ID: 1234343B

Level: (low/med) LOW Date Sampled: 12/21/08 11:20

% Moisture: not dec. 11 Date Analyzed: 01/06/09 20:44

GC Column: RTX-VRX ID: 0.25 (mm) Dilution Factor: 1.0

Soil Extract Volume:_____(uL) Soil Aliquot Volume: _____(uL)

CONCENTRATION UNITS: (ug/L or ug/Kg) UG/KG

CAS NO.	COMPOUND	MDL	RL	CONC	Q	
108-88-3	Toluene	0.84	9.8		~~U~~ UJ	HT
120-82-1	1,2,4-Trichlorobenzene	0.18	9.8		~~U~~ UJ	ISL
71-55-6	1,1,1-Trichloroethane	0.88	9.8		U	HT
79-00-5	1,1,2-Trichloroethane	0.34	9.8		U	
79-01-6	Trichloroethene	0.83	9.8		U	
76-13-1	Trichlorotrifluoroethane	0.54	9.8		U	
75-69-4	Trichlorofluoromethane	0.93	9.8		U	
75-01-4	Vinyl chloride	1.1	9.8		U	
1330-20-7	Xylene(total)	0.69	9.8		U	

FORM I VOA

lw
4/8/09

FORM 1
VOLATILE ORGANICS ANALYSIS DATA SHEET

CLIENT SAMPLE NO. 44

MR08-SS200-08D

Lab Name: EMPIRICAL LABS Contract: CH2MHILL

Lab Code: NA Case No.: NA SAS No.: NA SDG No.: LEJEUNE041

Matrix: (soil/water) SOIL Lab Sample ID: 0812343-44

Sample wt/vol: 3.4 (g/mL) G Lab File ID: 1234344A

Level: (low/med) LOW Date Sampled: 12/21/08 13:10

% Moisture: not dec. 15 Date Analyzed: 01/02/09 10:29

GC Column: RTX-VRX ID: 0.25 (mm) Dilution Factor: 1.0

Soil Extract Volume:_____(uL) Soil Aliquot Volume: _____(uL)

use reanalysis

CONCENTRATION UNITS: (ug/L or ug/Kg) UG/KG

CAS NO.	COMPOUND	MDL	RL	CONC	Q
67-64-1	Acetone	3.4	17	160	J ISL
71-43-2	Benzene	0.81	17	17 ~~2.4~~	~~JB~~ BC ISL
75-27-4	Bromodichloromethane	0.51	17		UR ISL
75-25-2	Bromoform	1.7	17		U
74-83-9	Bromomethane	1.2	17		U
78-93-3	2-Butanone	2.4	17	15	J
75-15-0	Carbon disulfide	2.2	17	11	J
56-23-5	Carbon tetrachloride	1.5	17		U
108-90-7	Chlorobenzene	0.58	17		U
75-00-3	Chloroethane	1.9	17	2.8	J
67-66-3	Chloroform	0.94	17		U
74-87-3	Chloromethane	0.89	17	1.0	J
110-82-7	Cyclohexane	0.93	17	0.97	J
124-48-1	Dibromochloromethane	0.58	17		U
96-12-8	1,2-Dibromo-3-chloropropane	2.0	8.6		U
106-93-4	1,2-Dibromoethane	0.74	17		U
95-50-1	1,2-Dichlorobenzene	0.63	17	0.64	J
541-73-1	1,3-Dichlorobenzene	1.4	17		U
106-46-7	1,4-Dichlorobenzene	0.94	17	1.1	J
75-71-8	Dichlorodifluoromethane	1.9	17		U
75-34-3	1,1-Dichloroethane	0.93	17		U
107-06-2	1,2-Dichloroethane	0.79	17		U
75-35-4	1,1-Dichloroethene	2.0	17		U
156-59-2	cis-1,2-Dichloroethene	2.0	17		U
156-60-5	trans-1,2-Dichloroethene	1.9	17		U
78-87-5	1,2-Dichloropropane	0.79	17		U
10061-01-5	cis-1,3-Dichloropropene	0.86	17		U
10061-02-6	trans-1,3-Dichloropropene	0.55	17		U
100-41-4	Ethylbenzene	1.3	17		U
591-78-6	2-Hexanone	3.9	17		U
98-82-8	Isopropylbenzene	1.5	17		U
79-20-9	Methyl acetate	2.7	17	7.0	J
75-09-2	Methylene chloride	1.1	17	17 ~~2.0~~	~~JB~~ ISL BC
108-87-2	Methyl cyclohexane	0.51	17		UR ISL
1634-04-4	Methyl tert-butyl ether	0.55	17		U
108-10-1	4-Methyl-2-pentanone	1.00	17		U
100-42-5	Styrene	0.60	17		U
79-34-5	1,1,2,2-Tetrachloroethane	0.74	17		U
127-18-4	Tetrachloroethene	1.7	17		U

FORM I VOA

LW
4/8/09

FORM 1
VOLATILE ORGANICS ANALYSIS DATA SHEET

CLIENT SAMPLE NO. 44

MR08-SS200-08D

Lab Name: EMPIRICAL LABS Contract: CH2MHILL

Lab Code: NA Case No.: NA SAS No.: NA SDG No.: LEJEUNE041

Matrix: (soil/water) SOIL Lab Sample ID: 0812343-44

Use reanalysis

Sample wt/vol: 3.4 (g/mL) G Lab File ID: 1234344A

Level: (low/med) LOW Date Sampled: 12/21/08 13:10

% Moisture: not dec. 15 Date Analyzed: 01/02/09 10:29

GC Column: RTX-VRX ID: 0.25 (mm) Dilution Factor: 1.0

Soil Extract Volume:_____(uL) Soil Aliquot Volume: _____(uL)

CONCENTRATION UNITS: (ug/L or ug/Kg) UG/KG

CAS NO.	COMPOUND	MDL	RL	CONC	Q
108-88-3	Toluene	1.5	17	7.5	~~J~~ J ISQ
120-82-1	1,2,4-Trichlorobenzene	0.31	17	2.6	~~J~~ J
71-55-6	1,1,1-Trichloroethane	1.5	17		~~U~~ R
79-00-5	1,1,2-Trichloroethane	0.60	17		~~U~~ R
79-01-6	Trichloroethene	1.4	17	3.0	~~J~~ J
76-13-1	Trichlorotrifluoroethane	0.94	17		~~U~~ R
75-69-4	Trichlorofluoromethane	1.6	17		~~U~~ ↓
75-01-4	Vinyl chloride	1.9	17		~~U~~ ↓
1330-20-7	Xylene(total)	1.2	17	3.0	~~J~~ J ↓

R

FORM I VOA

LW
4/8/09

FORM 1
VOLATILE ORGANICS ANALYSIS DATA SHEET

CLIENT SAMPLE NO. 44RE

MR08-SS200-08DR

Lab Name: EMPIRICAL LABS Contract: CH2MHILL

Lab Code: NA Case No.: NA SAS No.: NA SDG No.: LEJEUNE041

Matrix: (soil/water) SOIL Lab Sample ID: 0812343-44R

Sample wt/vol: 4.5 (g/mL) G Lab File ID: 1234344B

Level: (low/med) LOW Date Sampled: 12/21/08 13:10

% Moisture: not dec. 15 Date Analyzed: 01/06/09 21:23

GC Column: RTX-VRX ID: 0.25 (mm) Dilution Factor: 1.0

Soil Extract Volume:_____(uL) Soil Aliquot Volume: _____(uL)

CONCENTRATION UNITS: (ug/L or ug/Kg) UG/KG

CAS NO.	COMPOUND	MDL	RL	CONC	Q
67-64-1	Acetone	2.6	13	420	J HT
71-43-2	Benzene	0.61	13	1.8	J J
75-27-4	Bromodichloromethane	0.39	13		U UJ
75-25-2	Bromoform	1.3	13		U
74-83-9	Bromomethane	0.93	13		U
78-93-3	2-Butanone	1.8	13	18	J
75-15-0	Carbon disulfide	1.7	13	3.7	J J
56-23-5	Carbon tetrachloride	1.1	13		U UJ
108-90-7	Chlorobenzene	0.44	13		U
75-00-3	Chloroethane	1.4	13		U
67-66-3	Chloroform	0.71	13		U
74-87-3	Chloromethane	0.67	13		U
110-82-7	Cyclohexane	0.70	13		U
124-48-1	Dibromochloromethane	0.44	13		U
96-12-8	1,2-Dibromo-3-chloropropane	1.6	6.5		~~U~~ UJ ISL
106-93-4	1,2-Dibromoethane	0.56	13		U UJ HT
95-50-1	1,2-Dichlorobenzene	0.48	13		U UJ ISL
541-73-1	1,3-Dichlorobenzene	1.1	13		U
106-46-7	1,4-Dichlorobenzene	0.71	13		U
75-71-8	Dichlorodifluoromethane	1.4	13		U HT
75-34-3	1,1-Dichloroethane	0.70	13		U
107-06-2	1,2-Dichloroethane	0.60	13		U
75-35-4	1,1-Dichloroethene	1.6	13		U
156-59-2	cis-1,2-Dichloroethene	1.6	13		U
156-60-5	trans-1,2-Dichloroethene	1.4	13		U
78-87-5	1,2-Dichloropropane	0.60	13		U
10061-01-5	cis-1,3-Dichloropropene	0.65	13		U
10061-02-6	trans-1,3-Dichloropropene	0.42	13		U
100-41-4	Ethylbenzene	0.97	13		U
591-78-6	2-Hexanone	3.0	13		U
98-82-8	Isopropylbenzene	1.1	13		U
79-20-9	Methyl acetate	2.1	13		U
75-09-2	Methylene chloride	0.80	13	13 ~~1.1~~	UJ ~~JB~~ BL
108-87-2	Methyl cyclohexane	0.39	13	0.39	J J
1634-04-4	Methyl tert-butyl ether	0.42	13		U UJ
108-10-1	4-Methyl-2-pentanone	0.75	13	1.9	J J
100-42-5	Styrene	0.45	13		U UJ
79-34-5	1,1,2,2-Tetrachloroethane	0.56	13		~~U~~ UJ ISL
127-18-4	Tetrachloroethene	1.2	13		U HT

FORM I VOA

lw 4/8/09

FORM 1
VOLATILE ORGANICS ANALYSIS DATA SHEET

CLIENT SAMPLE NO.

MR08-SS200-08DR

4RE

Lab Name: EMPIRICAL LABS Contract: CH2MHILL

Lab Code: NA Case No.: NA SAS No.: NA SDG No.: LEJEUNE041

Matrix: (soil/water) SOIL Lab Sample ID: 0812343-44R

Sample wt/vol: 4.5 (g/mL) G Lab File ID: 1234344B

Level: (low/med) LOW Date Sampled: 12/21/08 13:10

% Moisture: not dec. 15 Date Analyzed: 01/06/09 21:23

GC Column: RTX-VRX ID: 0.25 (mm) Dilution Factor: 1.0

Soil Extract Volume:_____(uL) Soil Aliquot Volume: _____(uL)

CONCENTRATION UNITS: (ug/L or ug/Kg) UG/KG

CAS NO.	COMPOUND	MDL	RL	CONC	Q
108-88-3	Toluene	1.1	13	4.9	~~J~~ J HT
120-82-1	1,2,4-Trichlorobenzene	0.23	13		~~U~~ UJ JSL
71-55-6	1,1,1-Trichloroethane	1.2	13		U HT
79-00-5	1,1,2-Trichloroethane	0.45	13		U
79-01-6	Trichloroethene	1.1	13		U
76-13-1	Trichlorotrifluoroethane	0.71	13		U
75-69-4	Trichlorofluoromethane	1.2	13		U
75-01-4	Vinyl chloride	1.4	13		U
1330-20-7	Xylene(total)	0.91	13		U

MW
4/8/09

FORM 1
VOLATILE ORGANICS ANALYSIS DATA SHEET

CLIENT SAMPLE NO.

MR08-IS20
0-2-3-08D

45

Lab Name: EMPIRICAL LABS Contract: CH2MHILL

Lab Code: NA Case No.: NA SAS No.: NA SDG No.: LEJEUNE041

Matrix: (soil/water) SOIL Lab Sample ID: 0812343-45

Sample wt/vol: 5.0 (g/mL) G Lab File ID: 1234345A

Level: (low/med) LOW Date Sampled: 12/21/08 13:15

% Moisture: not dec. 9 Date Analyzed: 01/02/09 11:08

GC Column: RTX-VRX ID: 0.25 (mm) Dilution Factor: 1.0

Soil Extract Volume:_____(uL) Soil Aliquot Volume: _____(uL)

CONCENTRATION UNITS: (ug/L or ug/Kg) UG/KG

CAS NO.	COMPOUND	MDL	RL	CONC	Q
67-64-1	Acetone	2.2	11	58	
71-43-2	Benzene	0.52	11		U
75-27-4	Bromodichloromethane	0.33	11		U
75-25-2	Bromoform	1.1	11		U
74-83-9	Bromomethane	0.80	11		U
78-93-3	2-Butanone	1.6	11	1.8	J
75-15-0	Carbon disulfide	1.4	11		U
56-23-5	Carbon tetrachloride	0.98	11		U
108-90-7	Chlorobenzene	0.38	11		U
75-00-3	Chloroethane	1.2	11		U
67-66-3	Chloroform	0.61	11		U
74-87-3	Chloromethane	0.58	11		~~U~~ UJ CC
110-82-7	Cyclohexane	0.60	11		U
124-48-1	Dibromochloromethane	0.38	11		U
96-12-8	1,2-Dibromo-3-chloropropane	1.3	5.6		U
106-93-4	1,2-Dibromoethane	0.48	11		U
95-50-1	1,2-Dichlorobenzene	0.41	11		U
541-73-1	1,3-Dichlorobenzene	0.94	11		U
106-46-7	1,4-Dichlorobenzene	0.61	11		U
75-71-8	Dichlorodifluoromethane	1.2	11		~~U~~ UJ CC
75-34-3	1,1-Dichloroethane	0.60	11		U
107-06-2	1,2-Dichloroethane	0.51	11		U
75-35-4	1,1-Dichloroethene	1.3	11		U
156-59-2	cis-1,2-Dichloroethene	1.3	11		U
156-60-5	trans-1,2-Dichloroethene	1.2	11		U
78-87-5	1,2-Dichloropropane	0.51	11		U
10061-01-5	cis-1,3-Dichloropropene	0.56	11		U
10061-02-6	trans-1,3-Dichloropropene	0.36	11		U
100-41-4	Ethylbenzene	0.84	11		U
591-78-6	2-Hexanone	2.6	11		U
98-82-8	Isopropylbenzene	0.98	11		U
79-20-9	Methyl acetate	1.8	11		U
75-09-2	Methylene chloride	0.69	11	114	~~1.2 JB~~ BL
108-87-2	Methyl cyclohexane	0.33	11		U
1634-04-4	Methyl tert-butyl ether	0.36	11		U
108-10-1	4-Methyl-2-pentanone	0.64	11		U
100-42-5	Styrene	0.39	11		U
79-34-5	1,1,2,2-Tetrachloroethane	0.48	11		U
127-18-4	Tetrachloroethene	1.1	11		U

FORM I VOA

LW 4/8/09

FORM 1
VOLATILE ORGANICS ANALYSIS DATA SHEET

CLIENT SAMPLE NO.

45

MR08-IS20
0-2-3-08D

Lab Name: EMPIRICAL LABS Contract: CH2MHILL

Lab Code: NA Case No.: NA SAS No.: NA SDG No.: LEJEUNE041

Matrix: (soil/water) SOIL Lab Sample ID: 0812343-45

Sample wt/vol: 5.0 (g/mL) G Lab File ID: 1234345A

Level: (low/med) LOW Date Sampled: 12/21/08 13:15

% Moisture: not dec. 9 Date Analyzed: 01/02/09 11:08

GC Column: RTX-VRX ID: 0.25 (mm) Dilution Factor: 1.0

Soil Extract Volume:_____(uL) Soil Aliquot Volume: _____(uL)

CONCENTRATION UNITS: (ug/L or ug/Kg) UG/KG

CAS NO.	COMPOUND	MDL	RL	CONC	Q
108-88-3	Toluene	0.96	11		U
120-82-1	1,2,4-Trichlorobenzene	0.20	11		U
71-55-6	1,1,1-Trichloroethane	1.0	11		U
79-00-5	1,1,2-Trichloroethane	0.39	11		U
79-01-6	Trichloroethene	0.95	11		U
76-13-1	Trichlorotrifluoroethane	0.61	11		U
75-69-4	Trichlorofluoromethane	1.0	11		U
75-01-4	Vinyl chloride	1.2	11		~~U~~ UJ CCH
1330-20-7	Xylene(total)	0.78	11		U

DW
4/8/09

FORM 1
VOLATILE ORGANICS ANALYSIS DATA SHEET

CLIENT SAMPLE NO. 46

MR08-SS224-08D

Lab Name: EMPIRICAL LABS Contract: CH2MHILL

Lab Code: NA Case No.: NA SAS No.: NA SDG No.: LEJEUNE041

Matrix: (soil/water) SOIL Lab Sample ID: 0812343-46

Sample wt/vol: 4.6 (g/mL) G Lab File ID: 1234346A

Level: (low/med) LOW Date Sampled: 12/21/08 13:45

% Moisture: not dec. 18 Date Analyzed: 01/02/09 11:48

GC Column: RTX-VRX ID: 0.25 (mm) Dilution Factor: 1.0

Soil Extract Volume:_____(uL) Soil Aliquot Volume: _____(uL)

CONCENTRATION UNITS: (ug/L or ug/Kg) UG/KG

CAS NO.	COMPOUND	MDL	RL	CONC	Q
67-64-1	Acetone	2.6	13	290	
71-43-2	Benzene	0.62	13	134 ~~0.73~~	~~JB~~ BL
75-27-4	Bromodichloromethane	0.39	13		U
75-25-2	Bromoform	1.3	13		U
74-83-9	Bromomethane	0.95	13		U
78-93-3	2-Butanone	1.8	13	14	
75-15-0	Carbon disulfide	1.7	13	2.4	J
56-23-5	Carbon tetrachloride	1.2	13		U
108-90-7	Chlorobenzene	0.45	13		U
75-00-3	Chloroethane	1.4	13		U
67-66-3	Chloroform	0.72	13		U
74-87-3	Chloromethane	0.68	13		~~U~~ UJ CCH
110-82-7	Cyclohexane	0.71	13		U
124-48-1	Dibromochloromethane	0.45	13		U
96-12-8	1,2-Dibromo-3-chloropropane	1.6	6.6		~~U~~ UJ ISL
106-93-4	1,2-Dibromoethane	0.56	13		U
95-50-1	1,2-Dichlorobenzene	0.49	13		~~U~~ UJ ISL
541-73-1	1,3-Dichlorobenzene	1.1	13		~~U~~ ↓ ↓
106-46-7	1,4-Dichlorobenzene	0.72	13		~~U~~
75-71-8	Dichlorodifluoromethane	1.4	13		~~U~~ UJ CCH
75-34-3	1,1-Dichloroethane	0.71	13		U
107-06-2	1,2-Dichloroethane	0.60	13		U
75-35-4	1,1-Dichloroethene	1.6	13		U
156-59-2	cis-1,2-Dichloroethene	1.6	13		U
156-60-5	trans-1,2-Dichloroethene	1.4	13		U
78-87-5	1,2-Dichloropropane	0.60	13		U
10061-01-5	cis-1,3-Dichloropropene	0.66	13		U
10061-02-6	trans-1,3-Dichloropropene	0.42	13		U
100-41-4	Ethylbenzene	0.99	13		U
591-78-6	2-Hexanone	3.0	13		U
98-82-8	Isopropylbenzene	1.2	13		U
79-20-9	Methyl acetate	2.1	13		U
75-09-2	Methylene chloride	0.82	13	134 ~~1.4~~	~~JB~~ BL
108-87-2	Methyl cyclohexane	0.39	13		U
1634-04-4	Methyl tert-butyl ether	0.42	13		U
108-10-1	4-Methyl-2-pentanone	0.76	13		U
100-42-5	Styrene	0.46	13		U
79-34-5	1,1,2,2-Tetrachloroethane	0.56	13		~~U~~ UJ ISL
127-18-4	Tetrachloroethene	1.3	13		U

MW
4/01/09

FORM 1
VOLATILE ORGANICS ANALYSIS DATA SHEET

CLIENT SAMPLE NO.

46

MR08-SS224-08D

Lab Name: EMPIRICAL LABS Contract: CH2MHILL

Lab Code: NA Case No.: NA SAS No.: NA SDG No.: LEJEUNE041

Matrix: (soil/water) SOIL Lab Sample ID: 0812343-46

Sample wt/vol: 4.6 (g/mL) G Lab File ID: 1234346A

Level: (low/med) LOW Date Sampled: 12/21/08 13:45

% Moisture: not dec. 18 Date Analyzed: 01/02/09 11:48

GC Column: RTX-VRX ID: 0.25 (mm) Dilution Factor: 1.0

Soil Extract Volume:_____(uL) Soil Aliquot Volume: _____(uL)

CONCENTRATION UNITS: (ug/L or ug/Kg) UG/KG

CAS NO.	COMPOUND	MDL	RL	CONC	Q
108-88-3	Toluene	1.1	13	1.6	J
120-82-1	1,2,4-Trichlorobenzene	0.24	13		~~U~~ UJ JSL
71-55-6	1,1,1-Trichloroethane	1.2	13		U
79-00-5	1,1,2-Trichloroethane	0.46	13		U
79-01-6	Trichloroethene	1.1	13		U
76-13-1	Trichlorotrifluoroethane	0.72	13		U
75-69-4	Trichlorofluoromethane	1.2	13		U
75-01-4	Vinyl chloride	1.4	13		~~U~~ UJ CCH
1330-20-7	Xylene(total)	0.92	13		U

FORM I VOA

JW
41809

FORM 1
VOLATILE ORGANICS ANALYSIS DATA SHEET

CLIENT SAMPLE NO. 47

MR08-IS22
4-1-2-08D

Lab Name: EMPIRICAL LABS Contract: CH2MHILL

Lab Code: NA Case No.: NA SAS No.: NA SDG No.: LEJEUNE041

Matrix: (soil/water) SOIL Lab Sample ID: 0812343-47

Sample wt/vol: 6.2 (g/mL) G Lab File ID: 1234347A

Level: (low/med) LOW Date Sampled: 12/21/08 13:50

% Moisture: not dec. 12 Date Analyzed: 01/02/09 12:27

GC Column: RTX-VRX ID: 0.25 (mm) Dilution Factor: 1.0

Soil Extract Volume:_____(uL) Soil Aliquot Volume: _____(uL)

CONCENTRATION UNITS: (ug/L or ug/Kg) UG/KG

CAS NO.	COMPOUND	MDL	RL	CONC	Q
67-64-1	Acetone	1.8	9.1	27	
71-43-2	Benzene	0.43	9.1		U
75-27-4	Bromodichloromethane	0.27	9.1		U
75-25-2	Bromoform	0.91	9.1		U
74-83-9	Bromomethane	0.66	9.1		U
78-93-3	2-Butanone	1.3	9.1		U
75-15-0	Carbon disulfide	1.2	9.1		U
56-23-5	Carbon tetrachloride	0.80	9.1		U
108-90-7	Chlorobenzene	0.31	9.1		U
75-00-3	Chloroethane	1.0	9.1		U
67-66-3	Chloroform	0.50	9.1		U
74-87-3	Chloromethane	0.48	9.1		~~U~~ UJ CCH
110-82-7	Cyclohexane	0.49	9.1		U
124-48-1	Dibromochloromethane	0.31	9.1		U
96-12-8	1,2-Dibromo-3-chloropropane	1.1	4.6		U
106-93-4	1,2-Dibromoethane	0.39	9.1		U
95-50-1	1,2-Dichlorobenzene	0.34	9.1		U
541-73-1	1,3-Dichlorobenzene	0.77	9.1		U
106-46-7	1,4-Dichlorobenzene	0.50	9.1		U
75-71-8	Dichlorodifluoromethane	1.0	9.1		~~U~~ UJ CCH
75-34-3	1,1-Dichloroethane	0.49	9.1		U
107-06-2	1,2-Dichloroethane	0.42	9.1		U
75-35-4	1,1-Dichloroethene	1.1	9.1		U
156-59-2	cis-1,2-Dichloroethene	1.1	9.1		U
156-60-5	trans-1,2-Dichloroethene	1.0	9.1		U
78-87-5	1,2-Dichloropropane	0.42	9.1		U
10061-01-5	cis-1,3-Dichloropropene	0.46	9.1		U
10061-02-6	trans-1,3-Dichloropropene	0.29	9.1		U
100-41-4	Ethylbenzene	0.68	9.1		U
591-78-6	2-Hexanone	2.1	9.1		U
98-82-8	Isopropylbenzene	0.80	9.1		U
79-20-9	Methyl acetate	1.5	9.1		U
75-09-2	Methylene chloride	0.57	9.1	9.1u ~~1.1~~ ~~JB~~	BL
108-87-2	Methyl cyclohexane	0.27	9.1		U
1634-04-4	Methyl tert-butyl ether	0.29	9.1		U
108-10-1	4-Methyl-2-pentanone	0.53	9.1		U
100-42-5	Styrene	0.32	9.1		U
79-34-5	1,1,2,2-Tetrachloroethane	0.39	9.1		U
127-18-4	Tetrachloroethene	0.89	9.1		U

FORM I VOA

HW
4/8/09

FORM 1
VOLATILE ORGANICS ANALYSIS DATA SHEET

CLIENT SAMPLE NO. 47

MR08-IS22
4-1-2-08D

Lab Name: EMPIRICAL LABS Contract: CH2MHILL

Lab Code: NA Case No.: NA SAS No.: NA SDG No.: LEJEUNE041

Matrix: (soil/water) SOIL Lab Sample ID: 0812343-47

Sample wt/vol: 6.2 (g/mL) G Lab File ID: 1234347A

Level: (low/med) LOW Date Sampled: 12/21/08 13:50

% Moisture: not dec. 12 Date Analyzed: 01/02/09 12:27

GC Column: RTX-VRX ID: 0.25 (mm) Dilution Factor: 1.0

Soil Extract Volume:_____(uL) Soil Aliquot Volume: _____(uL)

CONCENTRATION UNITS: (ug/L or ug/Kg) UG/KG

CAS NO.	COMPOUND	MDL	RL	CONC	Q
108-88-3	Toluene	0.79	9.1		U
120-82-1	1,2,4-Trichlorobenzene	0.16	9.1		U
71-55-6	1,1,1-Trichloroethane	0.82	9.1		U
79-00-5	1,1,2-Trichloroethane	0.32	9.1		U
79-01-6	Trichloroethene	0.78	9.1		U
76-13-1	Trichlorotrifluoroethane	0.50	9.1		U
75-69-4	Trichlorofluoromethane	0.87	9.1		U
75-01-4	Vinyl chloride	1.0	9.1		~~U~~ UJ CCH
1330-20-7	Xylene(total)	0.64	9.1		U

FORM I VOA

MW
4/8/09

FORM 1
VOLATILE ORGANICS ANALYSIS DATA SHEET

CLIENT SAMPLE NO. 48

MR08-SS235-08D

Lab Name: EMPIRICAL LABS Contract: CH2MHILL

Lab Code: NA Case No.: NA SAS No.: NA SDG No.: LEJEUNE041

Matrix: (soil/water) SOIL Lab Sample ID: 0812343-48

Sample wt/vol: 4.1 (g/mL) G Lab File ID: 1234348A

Level: (low/med) LOW Date Sampled: 12/21/08 14:15

% Moisture: not dec. 14 Date Analyzed: 01/02/09 13:06

GC Column: RTX-VRX ID: 0.25 (mm) Dilution Factor: 1.0

Soil Extract Volume:_____(uL) Soil Aliquot Volume: _____(uL)

CONCENTRATION UNITS: (ug/L or ug/Kg) UG/KG

CAS NO.	COMPOUND	MDL	RL	CONC	Q
67-64-1	Acetone	2.9	14	380	
71-43-2	Benzene	0.67	14	14u ~~2.1~~ ~~JB~~	BL
75-27-4	Bromodichloromethane	0.43	14		U
75-25-2	Bromoform	1.4	14		U
74-83-9	Bromomethane	1.0	14		U
78-93-3	2-Butanone	2.0	14	21	
75-15-0	Carbon disulfide	1.9	14	4.5	J
56-23-5	Carbon tetrachloride	1.3	14		U
108-90-7	Chlorobenzene	0.49	14		U
75-00-3	Chloroethane	1.6	14		U
67-66-3	Chloroform	0.79	14		U
74-87-3	Chloromethane	0.75	14		~~U~~ UJ CH
110-82-7	Cyclohexane	0.78	14		U
124-48-1	Dibromochloromethane	0.49	14		U
96-12-8	1,2-Dibromo-3-chloropropane	1.7	7.2		~~U~~ UJ IS
106-93-4	1,2-Dibromoethane	0.62	14		U
95-50-1	1,2-Dichlorobenzene	0.53	14		~~U~~ UJ IS
541-73-1	1,3-Dichlorobenzene	1.2	14		U
106-46-7	1,4-Dichlorobenzene	0.79	14		U
75-71-8	Dichlorodifluoromethane	1.6	14		~~U~~ UJ CC
75-34-3	1,1-Dichloroethane	0.78	14		U
107-06-2	1,2-Dichloroethane	0.66	14		U
75-35-4	1,1-Dichloroethene	1.7	14		U
156-59-2	cis-1,2-Dichloroethene	1.7	14		U
156-60-5	trans-1,2-Dichloroethene	1.6	14		U
78-87-5	1,2-Dichloropropane	0.66	14		U
10061-01-5	cis-1,3-Dichloropropene	0.72	14		U
10061-02-6	trans-1,3-Dichloropropene	0.46	14		U
100-41-4	Ethylbenzene	1.1	14		U
591-78-6	2-Hexanone	3.3	14	3.9	J
98-82-8	Isopropylbenzene	1.3	14		U
79-20-9	Methyl acetate	2.3	14		U
75-09-2	Methylene chloride	0.89	14	14u ~~1.7~~ ~~JB~~	BL
108-87-2	Methyl cyclohexane	0.43	14	0.63	J
1634-04-4	Methyl tert-butyl ether	0.46	14		U
108-10-1	4-Methyl-2-pentanone	0.83	14	1.2	J
100-42-5	Styrene	0.50	14		U
79-34-5	1,1,2,2-Tetrachloroethane	0.62	14		~~U~~ UJ IS
127-18-4	Tetrachloroethene	1.4	14		U

FORM I VOA

NW 4/8/09

FORM 1
VOLATILE ORGANICS ANALYSIS DATA SHEET

CLIENT SAMPLE NO. 48

MR08-SS235-08D

Lab Name: EMPIRICAL LABS Contract: CH2MHILL

Lab Code: NA Case No.: NA SAS No.: NA SDG No.: LEJEUNE041

Matrix: (soil/water) SOIL Lab Sample ID: 0812343-48

Sample wt/vol: 4.1 (g/mL) G Lab File ID: 1234348A

Level: (low/med) LOW Date Sampled: 12/21/08 14:15

% Moisture: not dec. 14 Date Analyzed: 01/02/09 13:06

GC Column: RTX-VRX ID: 0.25 (mm) Dilution Factor: 1.0

Soil Extract Volume:_____(uL) Soil Aliquot Volume: _____(uL)

CONCENTRATION UNITS: (ug/L or ug/Kg) UG/KG

CAS NO.	COMPOUND	MDL	RL	CONC	Q
108-88-3	Toluene	1.2	14	2.8	J
120-82-1	1,2,4-Trichlorobenzene	0.26	14		~~U~~ UJ ISA
71-55-6	1,1,1-Trichloroethane	1.3	14		U
79-00-5	1,1,2-Trichloroethane	0.50	14		U
79-01-6	Trichloroethene	1.2	14		U
76-13-1	Trichlorotrifluoroethane	0.79	14		U
75-69-4	Trichlorofluoromethane	1.4	14		U
75-01-4	Vinyl chloride	1.6	14		~~U~~ UJ CCA
1330-20-7	Xylene(total)	1.0	14		U

FORM I VOA

lw
4/8/09

FORM 1
VOLATILE ORGANICS ANALYSIS DATA SHEET

CLIENT SAMPLE NO.

MR08-IS23
5-1-2-08D

49

Lab Name: EMPIRICAL LABS Contract: CH2MHILL

Lab Code: NA Case No.: NA SAS No.: NA SDG No.: LEJEUNE041

Matrix: (soil/water) SOIL Lab Sample ID: 0812343-49

Sample wt/vol: 5.5 (g/mL) G Lab File ID: 1234349A

Level: (low/med) LOW Date Sampled: 12/21/08 14:25

% Moisture: not dec. 9 Date Analyzed: 01/02/09 13:46

GC Column: RTX-VRX ID: 0.25 (mm) Dilution Factor: 1.0

Soil Extract Volume:_____(uL) Soil Aliquot Volume: _____(uL)

CONCENTRATION UNITS: (ug/L or ug/Kg) UG/KG

CAS NO.	COMPOUND	MDL	RL	CONC	Q
67-64-1	Acetone	2.0	10	17	
71-43-2	Benzene	0.47	10		U
75-27-4	Bromodichloromethane	0.30	10		U
75-25-2	Bromoform	1.0	10		U
74-83-9	Bromomethane	0.72	10		U
78-93-3	2-Butanone	1.4	10		U
75-15-0	Carbon disulfide	1.3	10		U
56-23-5	Carbon tetrachloride	0.89	10		U
108-90-7	Chlorobenzene	0.34	10		U
75-00-3	Chloroethane	1.1	10		U
67-66-3	Chloroform	0.55	10		U
74-87-3	Chloromethane	0.52	10		~~U~~ UJ CCH
110-82-7	Cyclohexane	0.54	10		U
124-48-1	Dibromochloromethane	0.34	10		U
96-12-8	1,2-Dibromo-3-chloropropane	1.2	5.0		U
106-93-4	1,2-Dibromoethane	0.43	10		U
95-50-1	1,2-Dichlorobenzene	0.37	10		U
541-73-1	1,3-Dichlorobenzene	0.85	10		U
106-46-7	1,4-Dichlorobenzene	0.55	10		U
75-71-8	Dichlorodifluoromethane	1.1	10		~~U~~ UJ CCH
75-34-3	1,1-Dichloroethane	0.54	10		U
107-06-2	1,2-Dichloroethane	0.46	10		U
75-35-4	1,1-Dichloroethene	1.2	10		U
156-59-2	cis-1,2-Dichloroethene	1.2	10		U
156-60-5	trans-1,2-Dichloroethene	1.1	10		U
78-87-5	1,2-Dichloropropane	0.46	10		U
10061-01-5	cis-1,3-Dichloropropene	0.50	10		U
10061-02-6	trans-1,3-Dichloropropene	0.32	10		U
100-41-4	Ethylbenzene	0.76	10		U
591-78-6	2-Hexanone	2.3	10		U
98-82-8	Isopropylbenzene	0.89	10		U
79-20-9	Methyl acetate	1.6	10		U
75-09-2	Methylene chloride	0.62	10	10H	~~1.2 JB~~ BL
108-87-2	Methyl cyclohexane	0.30	10		U
1634-04-4	Methyl tert-butyl ether	0.32	10		U
108-10-1	4-Methyl-2-pentanone	0.58	10		U
100-42-5	Styrene	0.35	10		U
79-34-5	1,1,2,2-Tetrachloroethane	0.43	10		U
127-18-4	Tetrachloroethene	0.98	10		U

FORM I VOA

LW
4/8/09

FORM 1
VOLATILE ORGANICS ANALYSIS DATA SHEET

CLIENT SAMPLE NO.

MR08-IS23
5-1-2-08D

49

Lab Name: EMPIRICAL LABS Contract: CH2MHILL

Lab Code: NA Case No.: NA SAS No.: NA SDG No.: LEJEUNE041

Matrix: (soil/water) SOIL Lab Sample ID: 0812343-49

Sample wt/vol: 5.5 (g/mL) G Lab File ID: 1234349A

Level: (low/med) LOW Date Sampled: 12/21/08 14:25

% Moisture: not dec. 9 Date Analyzed: 01/02/09 13:46

GC Column: RTX-VRX ID: 0.25 (mm) Dilution Factor: 1.0

Soil Extract Volume:_____(uL) Soil Aliquot Volume: _____(uL)

CONCENTRATION UNITS: (ug/L or ug/Kg) UG/KG

CAS NO.	COMPOUND	MDL	RL	CONC	Q
108-88-3	Toluene	0.87	10		U
120-82-1	1,2,4-Trichlorobenzene	0.18	10		U
71-55-6	1,1,1-Trichloroethane	0.91	10		U
79-00-5	1,1,2-Trichloroethane	0.35	10		U
79-01-6	Trichloroethene	0.86	10		U
76-13-1	Trichlorotrifluoroethane	0.55	10		U
75-69-4	Trichlorofluoromethane	0.96	10		U
75-01-4	Vinyl chloride	1.1	10		~~U~~ UJ CCH
1330-20-7	Xylene(total)	0.70	10		U

FORM I VOA

4/8/09

FORM 1
VOLATILE ORGANICS ANALYSIS DATA SHEET

CLIENT SAMPLE NO.

MR08-IS23
5-1-2-08DR

49RE

Lab Name: EMPIRICAL LABS Contract: CH2MHILL

Lab Code: NA Case No.: NA SAS No.: NA SDG No.: LEJEUNE041

Matrix: (soil/water) SOIL Lab Sample ID: 0812343-49R

Sample wt/vol: 5.8 (g/mL) G Lab File ID: 1234349B

Level: (low/med) LOW Date Sampled: 12/21/08 14:25

% Moisture: not dec. 9 Date Analyzed: 01/04/09 14:46

GC Column: RTX-VRX ID: 0.25 (mm) Dilution Factor: 1.0

Soil Extract Volume:_____(uL) Soil Aliquot Volume: _____(uL)

Use ORIGINAL

CONCENTRATION UNITS: (ug/L or ug/Kg) UG/KG

CAS NO.	COMPOUND	MDL	RL	CONC	Q
67-64-1	Acetone	1.9	9.5	12	
71-43-2	Benzene	0.45	9.5		U
75-27-4	Bromodichloromethane	0.28	9.5		U
75-25-2	Bromoform	0.95	9.5		U
74-83-9	Bromomethane	0.68	9.5		U
78-93-3	2-Butanone	1.3	9.5		U
75-15-0	Carbon disulfide	1.2	9.5		U
56-23-5	Carbon tetrachloride	0.84	9.5		U
108-90-7	Chlorobenzene	0.32	9.5		U
75-00-3	Chloroethane	1.0	9.5		U
67-66-3	Chloroform	0.52	9.5		U
74-87-3	Chloromethane	0.49	9.5		U
110-82-7	Cyclohexane	0.51	9.5		U
124-48-1	Dibromochloromethane	0.32	9.5		U
96-12-8	1,2-Dibromo-3-chloropropane	1.1	4.8		U
106-93-4	1,2-Dibromoethane	0.41	9.5		U
95-50-1	1,2-Dichlorobenzene	0.35	9.5		U
541-73-1	1,3-Dichlorobenzene	0.80	9.5		U
106-46-7	1,4-Dichlorobenzene	0.52	9.5		U
75-71-8	Dichlorodifluoromethane	1.0	9.5		U
75-34-3	1,1-Dichloroethane	0.51	9.5		U
107-06-2	1,2-Dichloroethane	0.44	9.5		U
75-35-4	1,1-Dichloroethene	1.1	9.5		U
156-59-2	cis-1,2-Dichloroethene	1.1	9.5		U
156-60-5	trans-1,2-Dichloroethene	1.0	9.5		U
78-87-5	1,2-Dichloropropane	0.44	9.5		U
10061-01-5	cis-1,3-Dichloropropene	0.48	9.5		U
10061-02-6	trans-1,3-Dichloropropene	0.30	9.5		U
100-41-4	Ethylbenzene	0.71	9.5		U
591-78-6	2-Hexanone	2.2	9.5		U
98-82-8	Isopropylbenzene	0.84	9.5		U
79-20-9	Methyl acetate	1.5	9.5		U
75-09-2	Methylene chloride	0.59	9.5	9.5 ~~0.90~~	~~JB~~ BL
108-87-2	Methyl cyclohexane	0.28	9.5		U
1634-04-4	Methyl tert-butyl ether	0.30	9.5		U
108-10-1	4-Methyl-2-pentanone	0.55	9.5		U
100-42-5	Styrene	0.33	9.5		U
79-34-5	1,1,2,2-Tetrachloroethane	0.41	9.5		U
127-18-4	Tetrachloroethene	0.92	9.5		U

RE

FORM I VOA

LW
4/8/09

FORM 1
VOLATILE ORGANICS ANALYSIS DATA SHEET

CLIENT SAMPLE NO.

MR08-IS23
5-1-2-08DR

49RE

Lab Name: EMPIRICAL LABS Contract: CH2MHILL

Lab Code: NA Case No.: NA SAS No.: NA SDG No.: LEJEUNE041

Matrix: (soil/water) SOIL Lab Sample ID: 0812343-49R

Sample wt/vol: 5.8 (g/mL) G Lab File ID: 1234349B

Level: (low/med) LOW Date Sampled: 12/21/08 14:25

Use ORIGINAL

% Moisture: not dec. 9 Date Analyzed: 01/04/09 14:46

GC Column: RTX-VRX ID: 0.25 (mm) Dilution Factor: 1.0

Soil Extract Volume:_____(uL) Soil Aliquot Volume: _____(uL)

CONCENTRATION UNITS: (ug/L or ug/Kg) UG/KG

CAS NO.	COMPOUND	MDL	RL	CONC	Q
108-88-3	Toluene	0.82	9.5		U
120-82-1	1,2,4-Trichlorobenzene	0.17	9.5		U
71-55-6	1,1,1-Trichloroethane	0.86	9.5		U
79-00-5	1,1,2-Trichloroethane	0.33	9.5		U
79-01-6	Trichloroethene	0.81	9.5		U
76-13-1	Trichlorotrifluoroethane	0.52	9.5		U
75-69-4	Trichlorofluoromethane	0.90	9.5		U
75-01-4	Vinyl chloride	1.0	9.5		U
1330-20-7	Xylene(total)	0.66	9.5		U

RRE

FORM I VOA

luo
4/8/09

FORM 1
VOLATILE ORGANICS ANALYSIS DATA SHEET

CLIENT SAMPLE NO. 50

MR08-SS211-08D

Lab Name: EMPIRICAL LABS Contract: CH2MHILL

Lab Code: NA Case No.: NA SAS No.: NA SDG No.: LEJEUNE041

Matrix: (soil/water) SOIL Lab Sample ID: 0812343-50

Sample wt/vol: 4.0 (g/mL) G Lab File ID: 1234350A

Level: (low/med) LOW Date Sampled: 12/21/08 14:45

% Moisture: not dec. 19 Date Analyzed: 01/02/09 18:08

GC Column: RTX-VRX ID: 0.25 (mm) Dilution Factor: 1.0

Soil Extract Volume:_____(uL) Soil Aliquot Volume: _____(uL)

CONCENTRATION UNITS: (ug/L or ug/Kg) UG/KG

CAS NO.	COMPOUND	MDL	RL	CONC	Q
67-64-1	Acetone	3.1	16	290	
71-43-2	Benzene	0.73	16	1.1	J
75-27-4	Bromodichloromethane	0.46	16		U
75-25-2	Bromoform	1.6	16		U
74-83-9	Bromomethane	1.1	16		U
78-93-3	2-Butanone	2.2	16	15	J
75-15-0	Carbon disulfide	2.0	16	2.8	J
56-23-5	Carbon tetrachloride	1.4	16		U
108-90-7	Chlorobenzene	0.53	16		U
75-00-3	Chloroethane	1.7	16		U
67-66-3	Chloroform	0.85	16		U
74-87-3	Chloromethane	0.81	16		~~U~~ UJ CCH
110-82-7	Cyclohexane	0.84	16		U
124-48-1	Dibromochloromethane	0.53	16		U
96-12-8	1,2-Dibromo-3-chloropropane	1.9	7.8		U
106-93-4	1,2-Dibromoethane	0.67	16		U
95-50-1	1,2-Dichlorobenzene	0.57	16		U
541-73-1	1,3-Dichlorobenzene	1.3	16		U
106-46-7	1,4-Dichlorobenzene	0.85	16		U
75-71-8	Dichlorodifluoromethane	1.7	16		~~U~~ UJ CCH
75-34-3	1,1-Dichloroethane	0.84	16		U
107-06-2	1,2-Dichloroethane	0.71	16		U
75-35-4	1,1-Dichloroethene	1.9	16		U
156-59-2	cis-1,2-Dichloroethene	1.9	16		U
156-60-5	trans-1,2-Dichloroethene	1.7	16		U
78-87-5	1,2-Dichloropropane	0.71	16		U
10061-01-5	cis-1,3-Dichloropropene	0.78	16		U
10061-02-6	trans-1,3-Dichloropropene	0.50	16		U
100-41-4	Ethylbenzene	1.2	16		U
591-78-6	2-Hexanone	3.6	16		U
98-82-8	Isopropylbenzene	1.4	16		U
79-20-9	Methyl acetate	2.5	16		U
75-09-2	Methylene chloride	0.96	16	16u	~~1.7 JB~~ BL
108-87-2	Methyl cyclohexane	0.46	16		U
1634-04-4	Methyl tert-butyl ether	0.50	16		U
108-10-1	4-Methyl-2-pentanone	0.90	16		U
100-42-5	Styrene	0.54	16		U
79-34-5	1,1,2,2-Tetrachloroethane	0.67	16		U
127-18-4	Tetrachloroethene	1.5	16		U

FORM I VOA

tw
01/01/09

FORM 1
VOLATILE ORGANICS ANALYSIS DATA SHEET

CLIENT SAMPLE NO. 50

MR08-SS211-08D

Lab Name: EMPIRICAL LABS Contract: CH2MHILL

Lab Code: NA Case No.: NA SAS No.: NA SDG No.: LEJEUNE041

Matrix: (soil/water) SOIL Lab Sample ID: 0812343-50

Sample wt/vol: 4.0 (g/mL) G Lab File ID: 1234350A

Level: (low/med) LOW Date Sampled: 12/21/08 14:45

% Moisture: not dec. 19 Date Analyzed: 01/02/09 18:08

GC Column: RTX-VRX ID: 0.25 (mm) Dilution Factor: 1.0

Soil Extract Volume:_____(uL) Soil Aliquot Volume: _____(uL)

CONCENTRATION UNITS: (ug/L or ug/Kg) UG/KG

CAS NO.	COMPOUND	MDL	RL	CONC	Q
108-88-3	Toluene	1.3	16	3.6	J
120-82-1	1,2,4-Trichlorobenzene	0.28	16		U
71-55-6	1,1,1-Trichloroethane	1.4	16		U
79-00-5	1,1,2-Trichloroethane	0.54	16		U
79-01-6	Trichloroethene	1.3	16		U
76-13-1	Trichlorotrifluoroethane	0.85	16		U
75-69-4	Trichlorofluoromethane	1.5	16		~~U~~ UJ CCH
75-01-4	Vinyl chloride	1.7	16		~~U~~ UJ CCH
1330-20-7	Xylene(total)	1.1	16		U

FORM I VOA

lew
4/8/09

FORM 1
VOLATILE ORGANICS ANALYSIS DATA SHEET

CLIENT SAMPLE NO. 51

MR08-IS21
1-1-2-08D

Lab Name: EMPIRICAL LABS Contract: CH2MHILL

Lab Code: NA Case No.: NA SAS No.: NA SDG No.: LEJEUNE041

Matrix: (soil/water) SOIL Lab Sample ID: 0812343-51

Sample wt/vol: 5.2 (g/mL) G Lab File ID: 1234351A

Level: (low/med) LOW Date Sampled: 12/21/08 15:05

% Moisture: not dec. 10 Date Analyzed: 01/02/09 18:48

GC Column: RTX-VRX ID: 0.25 (mm) Dilution Factor: 1.0

Soil Extract Volume:_____(uL) Soil Aliquot Volume: _____(uL)

CONCENTRATION UNITS: (ug/L or ug/Kg) UG/KG

CAS NO.	COMPOUND	MDL	RL	CONC	Q
67-64-1	Acetone	2.1	11		U R ISL
71-43-2	Benzene	0.50	11		U
75-27-4	Bromodichloromethane	0.32	11		U
75-25-2	Bromoform	1.1	11		U
74-83-9	Bromomethane	0.77	11		U
78-93-3	2-Butanone	1.5	11		U
75-15-0	Carbon disulfide	1.4	11		U
56-23-5	Carbon tetrachloride	0.94	11		U
108-90-7	Chlorobenzene	0.36	11		U
75-00-3	Chloroethane	1.2	11		U
67-66-3	Chloroform	0.59	11		U
74-87-3	Chloromethane	0.55	11	0.58	J J
110-82-7	Cyclohexane	0.58	11		U R
124-48-1	Dibromochloromethane	0.36	11		U
96-12-8	1,2-Dibromo-3-chloropropane	1.3	5.3		U
106-93-4	1,2-Dibromoethane	0.46	11		U
95-50-1	1,2-Dichlorobenzene	0.39	11	0.89	J J
541-73-1	1,3-Dichlorobenzene	0.90	11		U R
106-46-7	1,4-Dichlorobenzene	0.59	11		U
75-71-8	Dichlorodifluoromethane	1.2	11		U
75-34-3	1,1-Dichloroethane	0.58	11		U
107-06-2	1,2-Dichloroethane	0.49	11		U
75-35-4	1,1-Dichloroethene	1.3	11		U
156-59-2	cis-1,2-Dichloroethene	1.3	11		U
156-60-5	trans-1,2-Dichloroethene	1.2	11		U
78-87-5	1,2-Dichloropropane	0.49	11		U
10061-01-5	cis-1,3-Dichloropropene	0.53	11		U
10061-02-6	trans-1,3-Dichloropropene	0.34	11		U
100-41-4	Ethylbenzene	0.80	11		U
591-78-6	2-Hexanone	2.4	11		U
98-82-8	Isopropylbenzene	0.94	11		U
79-20-9	Methyl acetate	1.7	11		U
75-09-2	Methylene chloride	0.66	11	11 x R ~~2.5 JB~~	BT
108-87-2	Methyl cyclohexane	0.32	11		U R ISL
1634-04-4	Methyl tert-butyl ether	0.34	11		U
108-10-1	4-Methyl-2-pentanone	0.62	11		U
100-42-5	Styrene	0.37	11		U
79-34-5	1,1,2,2-Tetrachloroethane	0.46	11		U
127-18-4	Tetrachloroethene	1.0	11		U

FORM I VOA

lew
1/18/09

FORM 1
VOLATILE ORGANICS ANALYSIS DATA SHEET

CLIENT SAMPLE NO. 51

MR08-IS21
1-1-2-08D

Lab Name: EMPIRICAL LABS Contract: CH2MHILL

Lab Code: NA Case No.: NA SAS No.: NA SDG No.: LEJEUNE041

Matrix: (soil/water) SOIL Lab Sample ID: 0812343-51

Sample wt/vol: 5.2 (g/mL) G Lab File ID: 1234351A

Level: (low/med) LOW Date Sampled: 12/21/08 15:05

% Moisture: not dec. 10 Date Analyzed: 01/02/09 18:48

GC Column: RTX-VRX ID: 0.25 (mm) Dilution Factor: 1.0

Soil Extract Volume:_____(uL) Soil Aliquot Volume: _____(uL)

CONCENTRATION UNITS: (ug/L or ug/Kg) UG/KG

CAS NO.	COMPOUND	MDL	RL	CONC	Q
108-88-3	Toluene	0.92	11		~~U~~ R ISL
120-82-1	1,2,4-Trichlorobenzene	0.19	11	1.6	~~U~~ J
71-55-6	1,1,1-Trichloroethane	0.96	11		~~U~~ R
79-00-5	1,1,2-Trichloroethane	0.37	11		~~U~~
79-01-6	Trichloroethene	0.90	11		~~U~~
76-13-1	Trichlorotrifluoroethane	0.59	11		~~U~~
75-69-4	Trichlorofluoromethane	1.0	11		~~U~~
75-01-4	Vinyl chloride	1.2	11		~~U~~
1330-20-7	Xylene(total)	0.74	11		U

LW
4/8/09

FORM 1
VOLATILE ORGANICS ANALYSIS DATA SHEET

CLIENT SAMPLE NO. 52

MR08-EB0
1-122208

Lab Name: EMPIRICAL LABS Contract: CH2MHILL

Lab Code: NA Case No.: NA SAS No.: NA SDG No.: LEJEUNE041

Matrix: (soil/water) WATER Lab Sample ID: 0812343-52

Sample wt/vol: 5.000 (g/mL) ML Lab File ID: 1234352

Level: (low/med) LOW Date Sampled: 12/22/08 07:15

% Moisture: not dec. _____ Date Analyzed: 01/03/09 22:52

GC Column: RTX-VRX ID: 0.25 (mm) Dilution Factor: 1.0

Soil Extract Volume:_____(uL) Soil Aliquot Volume: _____(uL)

CONCENTRATION UNITS: (ug/L or ug/Kg) UG/L

CAS NO.	COMPOUND	MDL	RL	CONC	Q
67-64-1	Acetone	0.84	2.5	~~0.93~~	~~J~~ SSL
71-43-2	Benzene	0.11	1.0		U UJ
75-27-4	Bromodichloromethane	0.10	1.0		U
75-25-2	Bromoform	0.10	1.0		U
74-83-9	Bromomethane	0.32	1.0		U
78-93-3	2-Butanone	1.0	3.0		U
75-15-0	Carbon disulfide	0.13	1.0		U
56-23-5	Carbon tetrachloride	0.15	1.0		U
108-90-7	Chlorobenzene	0.10	1.0	0.28	U J
75-00-3	Chloroethane	0.18	1.0		U UJ
67-66-3	Chloroform	0.11	1.0		U
74-87-3	Chloromethane	0.29	1.0		U
110-82-7	Cyclohexane	0.20	1.0		U
124-48-1	Dibromochloromethane	0.10	1.0		U
96-12-8	1,2-Dibromo-3-chloropropane	0.11	1.0		U
106-93-4	1,2-Dibromoethane	0.10	1.0		U
95-50-1	1,2-Dichlorobenzene	0.10	1.0		U
541-73-1	1,3-Dichlorobenzene	0.13	1.0		U
106-46-7	1,4-Dichlorobenzene	0.10	1.0		U
75-71-8	Dichlorodifluoromethane	0.22	1.0		U
75-34-3	1,1-Dichloroethane	0.12	1.0		U
107-06-2	1,2-Dichloroethane	0.10	1.0		U
75-35-4	1,1-Dichloroethene	0.15	1.0		U
156-59-2	cis-1,2-Dichloroethene	0.13	1.0		U
156-60-5	trans-1,2-Dichloroethene	0.13	1.0		U
78-87-5	1,2-Dichloropropane	0.10	1.0		U
10061-01-5	cis-1,3-Dichloropropene	0.11	1.0		U
10061-02-6	trans-1,3-Dichloropropene	0.10	1.0		U
100-41-4	Ethylbenzene	0.13	1.0		U
591-78-6	2-Hexanone	0.30	1.0		U
98-82-8	Isopropylbenzene	0.15	1.0		U
79-20-9	Methyl acetate	0.30	1.0		U
75-09-2	Methylene chloride	0.14	1.0	1.04 ~~J0.78~~	~~JB~~ B
108-87-2	Methyl cyclohexane	0.17	1.0		U UJSSL
1634-04-4	Methyl tert-butyl ether	0.10	1.0		U
108-10-1	4-Methyl-2-pentanone	0.29	1.0		U
100-42-5	Styrene	0.10	1.0		U
79-34-5	1,1,2,2-Tetrachloroethane	0.10	1.0		U
127-18-4	Tetrachloroethene	0.15	1.0		U

FORM I VOA

LW 4/8/09

FORM 1
VOLATILE ORGANICS ANALYSIS DATA SHEET

CLIENT SAMPLE NO. 52

MR08-EB0
1-122208

Lab Name: EMPIRICAL LABS Contract: CH2MHILL

Lab Code: NA Case No.: NA SAS No.: NA SDG No.: LEJEUNE041

Matrix: (soil/water) WATER Lab Sample ID: 0812343-52

Sample wt/vol: 5.000 (g/mL) ML Lab File ID: 1234352

Level: (low/med) LOW Date Sampled: 12/22/08 07:15

% Moisture: not dec. _____ Date Analyzed: 01/03/09 22:52

GC Column: RTX-VRX ID: 0.25 (mm) Dilution Factor: 1.0

Soil Extract Volume:_____(uL) Soil Aliquot Volume: _____(uL)

CONCENTRATION UNITS: (ug/L or ug/Kg) UG/L

CAS NO.	COMPOUND	MDL	RL	CONC	Q
108-88-3	Toluene	0.10	1.0		~~U~~ UJ SSL
120-82-1	1,2,4-Trichlorobenzene	0.10	1.0		~~U~~
71-55-6	1,1,1-Trichloroethane	0.17	1.0		~~U~~
79-00-5	1,1,2-Trichloroethane	0.10	1.0		~~U~~
79-01-6	Trichloroethene	0.13	1.0		~~U~~
76-13-1	Trichlorotrifluoroethane	0.18	1.0		~~U~~
75-69-4	Trichlorofluoromethane	0.17	1.0		~~U~~
75-01-4	Vinyl chloride	0.18	1.0		~~U~~
1330-20-7	Xylene(total)	0.22	1.0		~~U~~

MW
4/8/09

FORM 1
VOLATILE ORGANICS ANALYSIS DATA SHEET

CLIENT SAMPLE NO. 52RE

MR08-EB0
1-122208R

Lab Name: EMPIRICAL LABS Contract: CH2MHILL

Lab Code: NA Case No.: NA SAS No.: NA SDG No.: LEJEUNE041

Matrix: (soil/water) WATER Lab Sample ID: 0812343-52R

Sample wt/vol: 5.000 (g/mL) ML Lab File ID: 1234352 use original

Level: (low/med) LOW Date Sampled: 12/22/08 07:15

% Moisture: not dec. _____ Date Analyzed: 01/07/09 22:58

GC Column: RTX-VRX ID: 0.25 (mm) Dilution Factor: 1.0

Soil Extract Volume:_____(uL) Soil Aliquot Volume: _____(uL)

CONCENTRATION UNITS: (ug/L or ug/Kg) UG/L

CAS NO.	COMPOUND	MDL	RL	CONC	Q
67-64-1	Acetone	0.84	2.5		U UJ HT
71-43-2	Benzene	0.11	1.0		U
75-27-4	Bromodichloromethane	0.10	1.0		U
75-25-2	Bromoform	0.10	1.0		U
74-83-9	Bromomethane	0.32	1.0		U
78-93-3	2-Butanone	1.0	3.0		U
75-15-0	Carbon disulfide	0.13	1.0		U
56-23-5	Carbon tetrachloride	0.15	1.0		U
108-90-7	Chlorobenzene	0.10	1.0	0.13	J
75-00-3	Chloroethane	0.18	1.0		U UJ
67-66-3	Chloroform	0.11	1.0		U
74-87-3	Chloromethane	0.29	1.0		U
110-82-7	Cyclohexane	0.20	1.0		U
124-48-1	Dibromochloromethane	0.10	1.0		U
96-12-8	1,2-Dibromo-3-chloropropane	0.11	1.0		U
106-93-4	1,2-Dibromoethane	0.10	1.0		U
95-50-1	1,2-Dichlorobenzene	0.10	1.0		U
541-73-1	1,3-Dichlorobenzene	0.13	1.0		U
106-46-7	1,4-Dichlorobenzene	0.10	1.0		U
75-71-8	Dichlorodifluoromethane	0.22	1.0		U
75-34-3	1,1-Dichloroethane	0.12	1.0		U
107-06-2	1,2-Dichloroethane	0.10	1.0		U
75-35-4	1,1-Dichloroethene	0.15	1.0		U
156-59-2	cis-1,2-Dichloroethene	0.13	1.0		U
156-60-5	trans-1,2-Dichloroethene	0.13	1.0		U
78-87-5	1,2-Dichloropropane	0.10	1.0		U
10061-01-5	cis-1,3-Dichloropropene	0.11	1.0		U
10061-02-6	trans-1,3-Dichloropropene	0.10	1.0		U
100-41-4	Ethylbenzene	0.13	1.0		U
591-78-6	2-Hexanone	0.30	1.0		U
98-82-8	Isopropylbenzene	0.15	1.0		U
79-20-9	Methyl acetate	0.30	1.0		U
75-09-2	Methylene chloride	0.14	1.0	1.2	~~B~~ UJ BL
108-87-2	Methyl cyclohexane	0.17	1.0		U
1634-04-4	Methyl tert-butyl ether	0.10	1.0		U
108-10-1	4-Methyl-2-pentanone	0.29	1.0		U
100-42-5	Styrene	0.10	1.0		U
79-34-5	1,1,2,2-Tetrachloroethane	0.10	1.0		U
127-18-4	Tetrachloroethene	0.15	1.0		U

FORM I VOA

hw
4/8/09

FORM 1
VOLATILE ORGANICS ANALYSIS DATA SHEET

CLIENT SAMPLE NO.

MR08-EB0
1-122208R

52RE

Lab Name: EMPIRICAL LABS Contract: CH2MHILL

Lab Code: NA Case No.: NA SAS No.: NA SDG No.: LEJEUNE041

Matrix: (soil/water) WATER Lab Sample ID: 0812343-52R

Sample wt/vol: 5.000 (g/mL) ML Lab File ID: 1234352

Level: (low/med) LOW Date Sampled: 12/22/08 07:15 use orig. NN

% Moisture: not dec. _____ Date Analyzed: 01/07/09 22:58

GC Column: RTX-VRX ID: 0.25 (mm) Dilution Factor: 1.0

Soil Extract Volume:_____(uL) Soil Aliquot Volume: _____(uL)

CONCENTRATION UNITS: (ug/L or ug/Kg) UG/L

CAS NO.	COMPOUND	MDL	RL	CONC	Q
108-88-3	Toluene	0.10	1.0		U UJ HT
120-82-1	1,2,4-Trichlorobenzene	0.10	1.0		U
71-55-6	1,1,1-Trichloroethane	0.17	1.0		U
79-00-5	1,1,2-Trichloroethane	0.10	1.0		U
79-01-6	Trichloroethene	0.13	1.0		U
76-13-1	Trichlorotrifluoroethane	0.18	1.0		U
75-69-4	Trichlorofluoromethane	0.17	1.0		U
75-01-4	Vinyl chloride	0.18	1.0		U
1330-20-7	Xylene(total)	0.22	1.0		U

R RE

FORM I VOA

NW
4/8/09

FORM 1
VOLATILE ORGANICS ANALYSIS DATA SHEET

CLIENT SAMPLE NO. 53

MR08-SS202-08D

Lab Name: EMPIRICAL LABS Contract: CH2MHILL

Lab Code: NA Case No.: NA SAS No.: NA SDG No.: LEJEUNE041

Matrix: (soil/water) SOIL Lab Sample ID: 0812343-53

Sample wt/vol: 5.0 (g/mL) G Lab File ID: 1234353A

Level: (low/med) LOW Date Sampled: 12/22/08 08:10

% Moisture: not dec. 6 Date Analyzed: 01/02/09 19:27

GC Column: RTX-VRX ID: 0.25 (mm) Dilution Factor: 1.0

Soil Extract Volume:_____(uL) Soil Aliquot Volume: _____(uL)

CONCENTRATION UNITS: (ug/L or ug/Kg) UG/KG

CAS NO.	COMPOUND	MDL	RL	CONC	Q
67-64-1	Acetone	2.1	11	11u ~~7.2~~	~~J~~ BL
71-43-2	Benzene	0.50	11	0.89	J
75-27-4	Bromodichloromethane	0.32	11		U
75-25-2	Bromoform	1.1	11		U
74-83-9	Bromomethane	0.77	11		U
78-93-3	2-Butanone	1.5	11	1.9	J
75-15-0	Carbon disulfide	1.4	11		U
56-23-5	Carbon tetrachloride	0.94	11		U
108-90-7	Chlorobenzene	0.36	11		U
75-00-3	Chloroethane	1.2	11		U
67-66-3	Chloroform	0.58	11		U
74-87-3	Chloromethane	0.55	11		~~U~~ UJ CA
110-82-7	Cyclohexane	0.57	11		U
124-48-1	Dibromochloromethane	0.36	11		U
96-12-8	1,2-Dibromo-3-chloropropane	1.3	5.3		U
106-93-4	1,2-Dibromoethane	0.46	11		U
95-50-1	1,2-Dichlorobenzene	0.39	11		U
541-73-1	1,3-Dichlorobenzene	0.89	11		U
106-46-7	1,4-Dichlorobenzene	0.58	11		U
75-71-8	Dichlorodifluoromethane	1.2	11		~~U~~ UJ CA
75-34-3	1,1-Dichloroethane	0.57	11		U
107-06-2	1,2-Dichloroethane	0.49	11		U
75-35-4	1,1-Dichloroethene	1.3	11		U
156-59-2	cis-1,2-Dichloroethene	1.3	11		U
156-60-5	trans-1,2-Dichloroethene	1.2	11		U
78-87-5	1,2-Dichloropropane	0.49	11		U
10061-01-5	cis-1,3-Dichloropropene	0.53	11		U
10061-02-6	trans-1,3-Dichloropropene	0.34	11		U
100-41-4	Ethylbenzene	0.80	11	8.5	J
591-78-6	2-Hexanone	2.4	11		U
98-82-8	Isopropylbenzene	0.94	11		U
79-20-9	Methyl acetate	1.7	11		U
75-09-2	Methylene chloride	0.66	11	11u ~~1.1~~	~~JB~~ BI
108-87-2	Methyl cyclohexane	0.32	11	0.58	J
1634-04-4	Methyl tert-butyl ether	0.34	11		U
108-10-1	4-Methyl-2-pentanone	0.62	11		U
100-42-5	Styrene	0.37	11		U
79-34-5	1,1,2,2-Tetrachloroethane	0.46	11		U
127-18-4	Tetrachloroethene	1.0	11		U

FORM I VOA

uw 4/8/09

FORM 1
VOLATILE ORGANICS ANALYSIS DATA SHEET

CLIENT SAMPLE NO. 53

MR08-SS202-08D

Lab Name: EMPIRICAL LABS Contract: CH2MHILL

Lab Code: NA Case No.: NA SAS No.: NA SDG No.: LEJEUNE041

Matrix: (soil/water) SOIL Lab Sample ID: 0812343-53

Sample wt/vol: 5.0 (g/mL) G Lab File ID: 1234353A

Level: (low/med) LOW Date Sampled: 12/22/08 08:10

% Moisture: not dec. 6 Date Analyzed: 01/02/09 19:27

GC Column: RTX-VRX ID: 0.25 (mm) Dilution Factor: 1.0

Soil Extract Volume:_____(uL) Soil Aliquot Volume: _____(uL)

CONCENTRATION UNITS: (ug/L or ug/Kg) UG/KG

CAS NO.	COMPOUND	MDL	RL	CONC	Q
108-88-3	Toluene	0.92	11	3.3	J
120-82-1	1,2,4-Trichlorobenzene	0.19	11		U
71-55-6	1,1,1-Trichloroethane	0.96	11		U
79-00-5	1,1,2-Trichloroethane	0.37	11		U
79-01-6	Trichloroethene	0.90	11		U
76-13-1	Trichlorotrifluoroethane	0.58	11		U
75-69-4	Trichlorofluoromethane	1.0	11		~~U~~ UJ CCV
75-01-4	Vinyl chloride	1.2	11		~~U~~ UJ CCV
1330-20-7	Xylene(total)	0.74	11		U

FORM I VOA

dw 4/8/09

FORM 1
VOLATILE ORGANICS ANALYSIS DATA SHEET

CLIENT SAMPLE NO.

MR08-IS20
2-4-5-08D

54

Lab Name: EMPIRICAL LABS Contract: CH2MHILL

Lab Code: NA Case No.: NA SAS No.: NA SDG No.: LEJEUNE041

Matrix: (soil/water) SOIL Lab Sample ID: 0812343-54

Sample wt/vol: 5.1 (g/mL) G Lab File ID: 1234354A

Level: (low/med) LOW Date Sampled: 12/22/08 08:20

% Moisture: not dec. 11 Date Analyzed: 01/02/09 20:06

GC Column: RTX-VRX ID: 0.25 (mm) Dilution Factor: 1.0

Soil Extract Volume:_____(uL) Soil Aliquot Volume: _____(uL)

CONCENTRATION UNITS: (ug/L or ug/Kg) UG/KG

CAS NO.	COMPOUND	MDL	RL	CONC	Q
67-64-1	Acetone	2.2	11	28	
71-43-2	Benzene	0.52	11	0.62	J
75-27-4	Bromodichloromethane	0.33	11		U
75-25-2	Bromoform	1.1	11		U
74-83-9	Bromomethane	0.80	11		U
78-93-3	2-Butanone	1.6	11	2.7	J
75-15-0	Carbon disulfide	1.4	11		U
56-23-5	Carbon tetrachloride	0.97	11		U
108-90-7	Chlorobenzene	0.38	11		U
75-00-3	Chloroethane	1.2	11		U
67-66-3	Chloroform	0.61	11		U
74-87-3	Chloromethane	0.58	11		~~U~~ UJ CCH
110-82-7	Cyclohexane	0.60	11		U
124-48-1	Dibromochloromethane	0.38	11		U
96-12-8	1,2-Dibromo-3-chloropropane	1.3	5.5		U
106-93-4	1,2-Dibromoethane	0.48	11		U
95-50-1	1,2-Dichlorobenzene	0.41	11		U
541-73-1	1,3-Dichlorobenzene	0.93	11		U
106-46-7	1,4-Dichlorobenzene	0.61	11		U
75-71-8	Dichlorodifluoromethane	1.2	11		~~U~~ UJ CCH
75-34-3	1,1-Dichloroethane	0.60	11		U
107-06-2	1,2-Dichloroethane	0.51	11		U
75-35-4	1,1-Dichloroethene	1.3	11		U
156-59-2	cis-1,2-Dichloroethene	1.3	11		U
156-60-5	trans-1,2-Dichloroethene	1.2	11		U
78-87-5	1,2-Dichloropropane	0.51	11		U
10061-01-5	cis-1,3-Dichloropropene	0.55	11		U
10061-02-6	trans-1,3-Dichloropropene	0.35	11		U
100-41-4	Ethylbenzene	0.83	11	1.0	J
591-78-6	2-Hexanone	2.5	11		U
98-82-8	Isopropylbenzene	0.97	11		U
79-20-9	Methyl acetate	1.8	11		U
75-09-2	Methylene chloride	0.69	11	~~1.2~~ ~~JB~~	BL
108-87-2	Methyl cyclohexane	0.33	11	0.38	J
1634-04-4	Methyl tert-butyl ether	0.35	11		U
108-10-1	4-Methyl-2-pentanone	0.64	11		U
100-42-5	Styrene	0.39	11		U
79-34-5	1,1,2,2-Tetrachloroethane	0.48	11		U
127-18-4	Tetrachloroethene	1.1	11		U

4/8/09

FORM 1
VOLATILE ORGANICS ANALYSIS DATA SHEET

CLIENT SAMPLE NO.

MR08-IS20
2-4-5-08D

54

Lab Name: EMPIRICAL LABS Contract: CH2MHILL

Lab Code: NA Case No.: NA SAS No.: NA SDG No.: LEJEUNE041

Matrix: (soil/water) SOIL Lab Sample ID: 0812343-54

Sample wt/vol: 5.1 (g/mL) G Lab File ID: 1234354A

Level: (low/med) LOW Date Sampled: 12/22/08 08:20

% Moisture: not dec. 11 Date Analyzed: 01/02/09 20:06

GC Column: RTX-VRX ID: 0.25 (mm) Dilution Factor: 1.0

Soil Extract Volume:_____(uL) Soil Aliquot Volume: _____(uL)

CONCENTRATION UNITS: (ug/L or ug/Kg) UG/KG

CAS NO.	COMPOUND	MDL	RL	CONC	Q
108-88-3	Toluene	0.95	11		U
120-82-1	1,2,4-Trichlorobenzene	0.20	11		U
71-55-6	1,1,1-Trichloroethane	1.00	11		U
79-00-5	1,1,2-Trichloroethane	0.39	11		U
79-01-6	Trichloroethene	0.94	11		U
76-13-1	Trichlorotrifluoroethane	0.61	11		U
75-69-4	Trichlorofluoromethane	1.0	11		~~U~~ UJ CCV
75-01-4	Vinyl chloride	1.2	11		~~U~~ UJ CCV
1330-20-7	Xylene(total)	0.78	11		U

FORM I VOA

JW 4/8/09

FORM 1
VOLATILE ORGANICS ANALYSIS DATA SHEET

CLIENT SAMPLE NO.

55

MR08-SS185-08D

Lab Name: EMPIRICAL LABS Contract: CH2MHILL

Lab Code: NA Case No.: NA SAS No.: NA SDG No.: LEJEUNE041

Matrix: (soil/water) SOIL Lab Sample ID: 0812343-55

Sample wt/vol: 5.2 (g/mL) G Lab File ID: 1234355A

Level: (low/med) LOW Date Sampled: 12/22/08 08:45

% Moisture: not dec. 6 Date Analyzed: 01/02/09 20:45

GC Column: RTX-VRX ID: 0.25 (mm) Dilution Factor: 1.0

Soil Extract Volume:_____(uL) Soil Aliquot Volume: _____(uL)

CONCENTRATION UNITS: (ug/L or ug/Kg) UG/KG

CAS NO.	COMPOUND	MDL	RL	CONC	Q
67-64-1	Acetone	2.0	10	10U ~~6.6~~ ~~J~~	B
71-43-2	Benzene	0.48	10	0.81	J
75-27-4	Bromodichloromethane	0.30	10		U
75-25-2	Bromoform	1.0	10		U
74-83-9	Bromomethane	0.73	10		U
78-93-3	2-Butanone	1.4	10		U
75-15-0	Carbon disulfide	1.3	10		U
56-23-5	Carbon tetrachloride	0.90	10		U
108-90-7	Chlorobenzene	0.35	10		U
75-00-3	Chloroethane	1.1	10		U
67-66-3	Chloroform	0.56	10		U
74-87-3	Chloromethane	0.53	10		~~U~~ UJ CCH
110-82-7	Cyclohexane	0.55	10		U
124-48-1	Dibromochloromethane	0.35	10		U
96-12-8	1,2-Dibromo-3-chloropropane	1.2	5.1		U
106-93-4	1,2-Dibromoethane	0.44	10		U
95-50-1	1,2-Dichlorobenzene	0.38	10		U
541-73-1	1,3-Dichlorobenzene	0.86	10		U
106-46-7	1,4-Dichlorobenzene	0.56	10		U
75-71-8	Dichlorodifluoromethane	1.1	10		~~U~~ UJ CCH
75-34-3	1,1-Dichloroethane	0.55	10		U
107-06-2	1,2-Dichloroethane	0.47	10		U
75-35-4	1,1-Dichloroethene	1.2	10		U
156-59-2	cis-1,2-Dichloroethene	1.2	10		U
156-60-5	trans-1,2-Dichloroethene	1.1	10		U
78-87-5	1,2-Dichloropropane	0.47	10		U
10061-01-5	cis-1,3-Dichloropropene	0.51	10		U
10061-02-6	trans-1,3-Dichloropropene	0.32	10		U
100-41-4	Ethylbenzene	0.76	10	6.6	J
591-78-6	2-Hexanone	2.3	10		U
98-82-8	Isopropylbenzene	0.90	10		U
79-20-9	Methyl acetate	1.6	10		U
75-09-2	Methylene chloride	0.63	10	10U ~~1.0~~ ~~JB~~	B1
108-87-2	Methyl cyclohexane	0.30	10	0.51	J
1634-04-4	Methyl tert-butyl ether	0.32	10		U
108-10-1	4-Methyl-2-pentanone	0.59	10		U
100-42-5	Styrene	0.36	10		U
79-34-5	1,1,2,2-Tetrachloroethane	0.44	10		U
127-18-4	Tetrachloroethene	0.99	10		U

FORM I VOA

LW
4/8/09

FORM 1
VOLATILE ORGANICS ANALYSIS DATA SHEET

CLIENT SAMPLE NO.

55

MR08-SS185-08D

Lab Name: EMPIRICAL LABS Contract: CH2MHILL

Lab Code: NA Case No.: NA SAS No.: NA SDG No.: LEJEUNE041

Matrix: (soil/water) SOIL Lab Sample ID: 0812343-55

Sample wt/vol: 5.2 (g/mL) G Lab File ID: 1234355A

Level: (low/med) LOW Date Sampled: 12/22/08 08:45

% Moisture: not dec. 6 Date Analyzed: 01/02/09 20:45

GC Column: RTX-VRX ID: 0.25 (mm) Dilution Factor: 1.0

Soil Extract Volume:_____(uL) Soil Aliquot Volume: _____(uL)

CONCENTRATION UNITS: (ug/L or ug/Kg) UG/KG

CAS NO.	COMPOUND	MDL	RL	CONC	Q
108-88-3	Toluene	0.88	10	2.5	J
120-82-1	1,2,4-Trichlorobenzene	0.18	10		U
71-55-6	1,1,1-Trichloroethane	0.92	10		U
79-00-5	1,1,2-Trichloroethane	0.36	10		U
79-01-6	Trichloroethene	0.86	10		U
76-13-1	Trichlorotrifluoroethane	0.56	10		U
75-69-4	Trichlorofluoromethane	0.97	10		~~U~~ UJ CCH
75-01-4	Vinyl chloride	1.1	10		~~U~~ UJ CCH
1330-20-7	Xylene(total)	0.71	10		U

FORM I VOA

MW
4/8/09

FORM 1
VOLATILE ORGANICS ANALYSIS DATA SHEET

CLIENT SAMPLE NO.

MR08-IS18
5-4-5-08D

56

Lab Name: EMPIRICAL LABS Contract: CH2MHILL

Lab Code: NA Case No.: NA SAS No.: NA SDG No.: LEJEUNE041

Matrix: (soil/water) SOIL Lab Sample ID: 0812343-56

Sample wt/vol: 5.1 (g/mL) G Lab File ID: 1234356A

Level: (low/med) LOW Date Sampled: 12/22/08 09:00

% Moisture: not dec. 6 Date Analyzed: 01/02/09 21:25

GC Column: RTX-VRX ID: 0.25 (mm) Dilution Factor: 1.0

Soil Extract Volume:_____(uL) Soil Aliquot Volume: _____(uL)

CONCENTRATION UNITS: (ug/L or ug/Kg) UG/KG

CAS NO.	COMPOUND	MDL	RL	CONC	Q
67-64-1	Acetone	2.1	10	10U ~~4.4~~ ~~J~~ BL	
71-43-2	Benzene	0.49	10		U
75-27-4	Bromodichloromethane	0.31	10		U
75-25-2	Bromoform	1.0	10		U
74-83-9	Bromomethane	0.75	10		U
78-93-3	2-Butanone	1.5	10		U
75-15-0	Carbon disulfide	1.4	10		U
56-23-5	Carbon tetrachloride	0.92	10		U
108-90-7	Chlorobenzene	0.36	10		U
75-00-3	Chloroethane	1.2	10		U
67-66-3	Chloroform	0.58	10		U
74-87-3	Chloromethane	0.54	10		~~U~~ UJ CCH
110-82-7	Cyclohexane	0.56	10		U
124-48-1	Dibromochloromethane	0.36	10		U
96-12-8	1,2-Dibromo-3-chloropropane	1.2	5.2		U
106-93-4	1,2-Dibromoethane	0.45	10		U
95-50-1	1,2-Dichlorobenzene	0.39	10		U
541-73-1	1,3-Dichlorobenzene	0.88	10		U
106-46-7	1,4-Dichlorobenzene	0.58	10		U
75-71-8	Dichlorodifluoromethane	1.2	10		~~U~~ UJ CCH
75-34-3	1,1-Dichloroethane	0.56	10		U
107-06-2	1,2-Dichloroethane	0.48	10		U
75-35-4	1,1-Dichloroethene	1.2	10		U
156-59-2	cis-1,2-Dichloroethene	1.2	10		U
156-60-5	trans-1,2-Dichloroethene	1.2	10		U
78-87-5	1,2-Dichloropropane	0.48	10		U
10061-01-5	cis-1,3-Dichloropropene	0.52	10		U
10061-02-6	trans-1,3-Dichloropropene	0.34	10		U
100-41-4	Ethylbenzene	0.78	10		U
591-78-6	2-Hexanone	2.4	10		U
98-82-8	Isopropylbenzene	0.92	10		U
79-20-9	Methyl acetate	1.7	10		U
75-09-2	Methylene chloride	0.65	10	10U ~~1.0~~ ~~JB~~ BL	
108-87-2	Methyl cyclohexane	0.31	10		U
1634-04-4	Methyl tert-butyl ether	0.34	10		U
108-10-1	4-Methyl-2-pentanone	0.61	10		U
100-42-5	Styrene	0.37	10		U
79-34-5	1,1,2,2-Tetrachloroethane	0.45	10		U
127-18-4	Tetrachloroethene	1.0	10		U

MW
4/8/09

FORM 1
VOLATILE ORGANICS ANALYSIS DATA SHEET

CLIENT SAMPLE NO. 56

MR08-IS18
5-4-5-08D

Lab Name: EMPIRICAL LABS Contract: CH2MHILL

Lab Code: NA Case No.: NA SAS No.: NA SDG No.: LEJEUNE041

Matrix: (soil/water) SOIL Lab Sample ID: 0812343-56

Sample wt/vol: 5.1 (g/mL) G Lab File ID: 1234356A

Level: (low/med) LOW Date Sampled: 12/22/08 09:00

% Moisture: not dec. 6 Date Analyzed: 01/02/09 21:25

GC Column: RTX-VRX ID: 0.25 (mm) Dilution Factor: 1.0

Soil Extract Volume:_____(uL) Soil Aliquot Volume: _____(uL)

CONCENTRATION UNITS: (ug/L or ug/Kg) UG/KG

CAS NO.	COMPOUND	MDL	RL	CONC	Q
108-88-3	Toluene	0.90	10		U
120-82-1	1,2,4-Trichlorobenzene	0.19	10		U
71-55-6	1,1,1-Trichloroethane	0.94	10		U
79-00-5	1,1,2-Trichloroethane	0.37	10		U
79-01-6	Trichloroethene	0.89	10		U
76-13-1	Trichlorotrifluoroethane	0.58	10		U
75-69-4	Trichlorofluoromethane	1.00	10		~~U~~ UJ CCH
75-01-4	Vinyl chloride	1.2	10		~~U~~ UJ CCH
1330-20-7	Xylene(total)	0.73	10		U

FORM I VOA

lw 9/8/09

FORM 1
VOLATILE ORGANICS ANALYSIS DATA SHEET

CLIENT SAMPLE NO. 57

MR08-SS186-08D

Lab Name: EMPIRICAL LABS Contract: CH2MHILL

Lab Code: NA Case No.: NA SAS No.: NA SDG No.: LEJEUNE041

Matrix: (soil/water) SOIL Lab Sample ID: 0812343-57

Sample wt/vol: 4.9 (g/mL) G Lab File ID: 1234357A

Level: (low/med) LOW Date Sampled: 12/22/08 09:45

% Moisture: not dec. 4 Date Analyzed: 01/02/09 22:04

GC Column: RTX-VRX ID: 0.25 (mm) Dilution Factor: 1.0

Soil Extract Volume:_____(uL) Soil Aliquot Volume: _____(uL)

CONCENTRATION UNITS: (ug/L or ug/Kg) UG/KG

CAS NO.	COMPOUND	MDL	RL	CONC	Q
67-64-1	Acetone	2.1	10	10	~~J~~U BL
71-43-2	Benzene	0.50	10	0.94	J
75-27-4	Bromodichloromethane	0.32	10		U
75-25-2	Bromoform	1.0	10		U
74-83-9	Bromomethane	0.76	10		U
78-93-3	2-Butanone	1.5	10	2.2	J
75-15-0	Carbon disulfide	1.4	10		U
56-23-5	Carbon tetrachloride	0.93	10		U
108-90-7	Chlorobenzene	0.36	10		U
75-00-3	Chloroethane	1.2	10		U
67-66-3	Chloroform	0.58	10		U
74-87-3	Chloromethane	0.55	10		~~J~~UJ CCI
110-82-7	Cyclohexane	0.57	10		U
124-48-1	Dibromochloromethane	0.36	10		U
96-12-8	1,2-Dibromo-3-chloropropane	1.3	5.3		U
106-93-4	1,2-Dibromoethane	0.46	10		U
95-50-1	1,2-Dichlorobenzene	0.39	10		U
541-73-1	1,3-Dichlorobenzene	0.89	10		U
106-46-7	1,4-Dichlorobenzene	0.58	10		U
75-71-8	Dichlorodifluoromethane	1.2	10		~~J~~UJ CCH
75-34-3	1,1-Dichloroethane	0.57	10		U
107-06-2	1,2-Dichloroethane	0.49	10		U
75-35-4	1,1-Dichloroethene	1.3	10		U
156-59-2	cis-1,2-Dichloroethene	1.3	10		U
156-60-5	trans-1,2-Dichloroethene	1.2	10		U
78-87-5	1,2-Dichloropropane	0.49	10		U
10061-01-5	cis-1,3-Dichloropropene	0.53	10		U
10061-02-6	trans-1,3-Dichloropropene	0.34	10		U
100-41-4	Ethylbenzene	0.79	10	5.8	J
591-78-6	2-Hexanone	2.4	10		U
98-82-8	Isopropylbenzene	0.93	10		U
79-20-9	Methyl acetate	1.7	10		U
75-09-2	Methylene chloride	0.66	10	10U ~~1.2~~ ~~JB~~	BL
108-87-2	Methyl cyclohexane	0.32	10	0.54	J
1634-04-4	Methyl tert-butyl ether	0.34	10		U
108-10-1	4-Methyl-2-pentanone	0.61	10		U
100-42-5	Styrene	0.37	10		U
79-34-5	1,1,2,2-Tetrachloroethane	0.46	10		U
127-18-4	Tetrachloroethene	1.0	10		U

FORM I VOA

4/8/09

FORM 1
VOLATILE ORGANICS ANALYSIS DATA SHEET

CLIENT SAMPLE NO.

MR08-SS186-08D

57

Lab Name: EMPIRICAL LABS Contract: CH2MHILL

Lab Code: NA Case No.: NA SAS No.: NA SDG No.: LEJEUNE041

Matrix: (soil/water) SOIL Lab Sample ID: 0812343-57

Sample wt/vol: 4.9 (g/mL) G Lab File ID: 1234357A

Level: (low/med) LOW Date Sampled: 12/22/08 09:45

% Moisture: not dec. 4 Date Analyzed: 01/02/09 22:04

GC Column: RTX-VRX ID: 0.25 (mm) Dilution Factor: 1.0

Soil Extract Volume:_____(uL) Soil Aliquot Volume: _____(uL)

CONCENTRATION UNITS: (ug/L or ug/Kg) UG/KG

CAS NO.	COMPOUND	MDL	RL	CONC	Q
108-88-3	Toluene	0.91	10	2.7	J
120-82-1	1,2,4-Trichlorobenzene	0.19	10		U
71-55-6	1,1,1-Trichloroethane	0.95	10		U
79-00-5	1,1,2-Trichloroethane	0.37	10		U
79-01-6	Trichloroethene	0.90	10		U
76-13-1	Trichlorotrifluoroethane	0.58	10		U
75-69-4	Trichlorofluoromethane	1.0	10		~~U~~UJ CCH
75-01-4	Vinyl chloride	1.2	10		~~U~~UJ CCH
1330-20-7	Xylene(total)	0.74	10		U

FORM I VOA

hw
4/8/09

FORM 1
VOLATILE ORGANICS ANALYSIS DATA SHEET

CLIENT SAMPLE NO.

MR08-IS18
6-4-5-08D

58

Lab Name: EMPIRICAL LABS Contract: CH2MHILL

Lab Code: NA Case No.: NA SAS No.: NA SDG No.: LEJEUNE041

Matrix: (soil/water) SOIL Lab Sample ID: 0812343-58

Sample wt/vol: 5.1 (g/mL) G Lab File ID: 1234358A

Level: (low/med) LOW Date Sampled: 12/22/08 09:55

% Moisture: not dec. 11 Date Analyzed: 01/02/09 22:43

GC Column: RTX-VRX ID: 0.25 (mm) Dilution Factor: 1.0

Soil Extract Volume:_____(uL) Soil Aliquot Volume: _____(uL)

CONCENTRATION UNITS: (ug/L or ug/Kg) UG/KG

CAS NO.	COMPOUND	MDL	RL	CONC	Q
67-64-1	Acetone	2.2	11	26	
71-43-2	Benzene	0.52	11		U
75-27-4	Bromodichloromethane	0.33	11		U
75-25-2	Bromoform	1.1	11		U
74-83-9	Bromomethane	0.79	11		U
78-93-3	2-Butanone	1.5	11	2.1	J
75-15-0	Carbon disulfide	1.4	11		U
56-23-5	Carbon tetrachloride	0.97	11		U
108-90-7	Chlorobenzene	0.37	11		U
75-00-3	Chloroethane	1.2	11		U
67-66-3	Chloroform	0.61	11		U
74-87-3	Chloromethane	0.57	11		~~U~~ UJ CH
110-82-7	Cyclohexane	0.60	11		U
124-48-1	Dibromochloromethane	0.37	11		U
96-12-8	1,2-Dibromo-3-chloropropane	1.3	5.5		U
106-93-4	1,2-Dibromoethane	0.47	11		U
95-50-1	1,2-Dichlorobenzene	0.41	11		U
541-73-1	1,3-Dichlorobenzene	0.93	11		U
106-46-7	1,4-Dichlorobenzene	0.61	11		U
75-71-8	Dichlorodifluoromethane	1.2	11		~~U~~ UJ CH
75-34-3	1,1-Dichloroethane	0.60	11		U
107-06-2	1,2-Dichloroethane	0.51	11		U
75-35-4	1,1-Dichloroethene	1.3	11		U
156-59-2	cis-1,2-Dichloroethene	1.3	11		U
156-60-5	trans-1,2-Dichloroethene	1.2	11		U
78-87-5	1,2-Dichloropropane	0.51	11		U
10061-01-5	cis-1,3-Dichloropropene	0.55	11		U
10061-02-6	trans-1,3-Dichloropropene	0.35	11		U
100-41-4	Ethylbenzene	0.83	11		U
591-78-6	2-Hexanone	2.5	11		U
98-82-8	Isopropylbenzene	0.97	11		U
79-20-9	Methyl acetate	1.8	11		U
75-09-2	Methylene chloride	0.68	11	11u	~~1.0 JB~~ BL
108-87-2	Methyl cyclohexane	0.33	11		U
1634-04-4	Methyl tert-butyl ether	0.35	11		U
108-10-1	4-Methyl-2-pentanone	0.64	11		U
100-42-5	Styrene	0.38	11		U
79-34-5	1,1,2,2-Tetrachloroethane	0.47	11		U
127-18-4	Tetrachloroethene	1.1	11		U

FORM I VOA

lw 1/11/09

FORM 1
VOLATILE ORGANICS ANALYSIS DATA SHEET

CLIENT SAMPLE NO.

58

MR08-IS18
6-4-5-08D

Lab Name: EMPIRICAL LABS Contract: CH2MHILL

Lab Code: NA Case No.: NA SAS No.: NA SDG No.: LEJEUNE041

Matrix: (soil/water) SOIL Lab Sample ID: 0812343-58

Sample wt/vol: 5.1 (g/mL) G Lab File ID: 1234358A

Level: (low/med) LOW Date Sampled: 12/22/08 09:55

% Moisture: not dec. 11 Date Analyzed: 01/02/09 22:43

GC Column: RTX-VRX ID: 0.25 (mm) Dilution Factor: 1.0

Soil Extract Volume:_____(uL) Soil Aliquot Volume: _____(uL)

CONCENTRATION UNITS: (ug/L or ug/Kg) UG/KG

CAS NO.	COMPOUND	MDL	RL	CONC	Q
108-88-3	Toluene	0.95	11		U
120-82-1	1,2,4-Trichlorobenzene	0.20	11		U
71-55-6	1,1,1-Trichloroethane	0.99	11		U
79-00-5	1,1,2-Trichloroethane	0.38	11		U
79-01-6	Trichloroethene	0.94	11		U
76-13-1	Trichlorotrifluoroethane	0.61	11		U
75-69-4	Trichlorofluoromethane	1.0	11		~~U~~ UJ CCH
75-01-4	Vinyl chloride	1.2	11		~~U~~ UJ CCH
1330-20-7	Xylene(total)	0.77	11		U

FORM I VOA

MW 4/8/09

FORM 1
VOLATILE ORGANICS ANALYSIS DATA SHEET

CLIENT SAMPLE NO.

59

MR08-SS201-08D

Lab Name: EMPIRICAL LABS Contract: CH2MHILL

Lab Code: NA Case No.: NA SAS No.: NA SDG No.: LEJEUNE041

Matrix: (soil/water) SOIL Lab Sample ID: 0812343-59

Sample wt/vol: 4.5 (g/mL) G Lab File ID: 1234359A

Level: (low/med) LOW Date Sampled: 12/22/08 11:00

% Moisture: not dec. 6 Date Analyzed: 01/02/09 23:22

GC Column: RTX-VRX ID: 0.25 (mm) Dilution Factor: 1.0

Soil Extract Volume:_____(uL) Soil Aliquot Volume: _____(uL)

CONCENTRATION UNITS: (ug/L or ug/Kg) UG/KG

CAS NO.	COMPOUND	MDL	RL	CONC	Q
67-64-1	Acetone	2.4	12	16	
71-43-2	Benzene	0.55	12	0.90	J
75-27-4	Bromodichloromethane	0.35	12		U
75-25-2	Bromoform	1.2	12		U
74-83-9	Bromomethane	0.85	12		U
78-93-3	2-Butanone	1.6	12		U
75-15-0	Carbon disulfide	1.5	12		U
56-23-5	Carbon tetrachloride	1.0	12		U
108-90-7	Chlorobenzene	0.40	12		U
75-00-3	Chloroethane	1.3	12		U
67-66-3	Chloroform	0.65	12		U
74-87-3	Chloromethane	0.61	12		U ~~U~~ CCH
110-82-7	Cyclohexane	0.64	12		U
124-48-1	Dibromochloromethane	0.40	12		U
96-12-8	1,2-Dibromo-3-chloropropane	1.4	5.9		U
106-93-4	1,2-Dibromoethane	0.51	12		U
95-50-1	1,2-Dichlorobenzene	0.44	12		U
541-73-1	1,3-Dichlorobenzene	0.99	12		U
106-46-7	1,4-Dichlorobenzene	0.65	12		U
75-71-8	Dichlorodifluoromethane	1.3	12		U ~~U~~ CCH
75-34-3	1,1-Dichloroethane	0.64	12		U
107-06-2	1,2-Dichloroethane	0.54	12		U
75-35-4	1,1-Dichloroethene	1.4	12		U
156-59-2	cis-1,2-Dichloroethene	1.4	12		U
156-60-5	trans-1,2-Dichloroethene	1.3	12		U
78-87-5	1,2-Dichloropropane	0.54	12		U
10061-01-5	cis-1,3-Dichloropropene	0.59	12		U
10061-02-6	trans-1,3-Dichloropropene	0.38	12		U
100-41-4	Ethylbenzene	0.88	12	4.8	J
591-78-6	2-Hexanone	2.7	12		U
98-82-8	Isopropylbenzene	1.0	12		U
79-20-9	Methyl acetate	1.9	12		U
75-09-2	Methylene chloride	0.73	12	12u ~~1.1~~ ~~JB~~ BL	
108-87-2	Methyl cyclohexane	0.35	12	0.52	J
1634-04-4	Methyl tert-butyl ether	0.38	12		U
108-10-1	4-Methyl-2-pentanone	0.68	12		U
100-42-5	Styrene	0.41	12		U
79-34-5	1,1,2,2-Tetrachloroethane	0.51	12		U
127-18-4	Tetrachloroethene	1.1	12		U

FORM I VOA

lw 4/8/09

FORM 1
VOLATILE ORGANICS ANALYSIS DATA SHEET

CLIENT SAMPLE NO.

59

MR08-SS201-08D

Lab Name: EMPIRICAL LABS Contract: CH2MHILL

Lab Code: NA Case No.: NA SAS No.: NA SDG No.: LEJEUNE041

Matrix: (soil/water) SOIL Lab Sample ID: 0812343-59

Sample wt/vol: 4.5 (g/mL) G Lab File ID: 1234359A

Level: (low/med) LOW Date Sampled: 12/22/08 11:00

% Moisture: not dec. 6 Date Analyzed: 01/02/09 23:22

GC Column: RTX-VRX ID: 0.25 (mm) Dilution Factor: 1.0

Soil Extract Volume:_____(uL) Soil Aliquot Volume: _____(uL)

CONCENTRATION UNITS: (ug/L or ug/Kg) UG/KG

CAS NO.	COMPOUND	MDL	RL	CONC	Q
108-88-3	Toluene	1.0	12	2.4	J
120-82-1	1,2,4-Trichlorobenzene	0.21	12		U
71-55-6	1,1,1-Trichloroethane	1.1	12		U
79-00-5	1,1,2-Trichloroethane	0.41	12		U
79-01-6	Trichloroethene	1.0	12		U
76-13-1	Trichlorotrifluoroethane	0.65	12		U
75-69-4	Trichlorofluoromethane	1.1	12		~~U~~ UJ CCH
75-01-4	Vinyl chloride	1.3	12		~~U~~ UJ CCH
1330-20-7	Xylene(total)	0.82	12		U

FORM I VOA

JCW
4/8/09

FORM 1
VOLATILE ORGANICS ANALYSIS DATA SHEET

CLIENT SAMPLE NO.

MR08-IS20
1-4-5-08D

60

Lab Name: EMPIRICAL LABS Contract: CH2MHILL

Lab Code: NA Case No.: NA SAS No.: NA SDG No.: LEJEUNE041

Matrix: (soil/water) SOIL Lab Sample ID: 0812343-60

Sample wt/vol: 5.3 (g/mL) G Lab File ID: 1234360A

Level: (low/med) LOW Date Sampled: 12/22/08 11:10

% Moisture: not dec. 24 Date Analyzed: 01/03/09 00:02

GC Column: RTX-VRX ID: 0.25 (mm) Dilution Factor: 1.0

Soil Extract Volume:_____(uL) Soil Aliquot Volume: _____(uL)

CONCENTRATION UNITS: (ug/L or ug/Kg) UG/KG

CAS NO.	COMPOUND	MDL	RL	CONC	Q
67-64-1	Acetone	2.5	12	12U ~~7.1~~	~~J~~ BL
71-43-2	Benzene	0.58	12		U
75-27-4	Bromodichloromethane	0.37	12		U
75-25-2	Bromoform	1.2	12		U
74-83-9	Bromomethane	0.89	12		U
78-93-3	2-Butanone	1.7	12		U
75-15-0	Carbon disulfide	1.6	12		U
56-23-5	Carbon tetrachloride	1.1	12		U
108-90-7	Chlorobenzene	0.42	12		U
75-00-3	Chloroethane	1.4	12		U
67-66-3	Chloroform	0.68	12		U
74-87-3	Chloromethane	0.64	12		~~U~~ UJ CCH
110-82-7	Cyclohexane	0.67	12		U
124-48-1	Dibromochloromethane	0.42	12		U
96-12-8	1,2-Dibromo-3-chloropropane	1.5	6.2		U
106-93-4	1,2-Dibromoethane	0.53	12		U
95-50-1	1,2-Dichlorobenzene	0.46	12		U
541-73-1	1,3-Dichlorobenzene	1.0	12		U
106-46-7	1,4-Dichlorobenzene	0.68	12		U
75-71-8	Dichlorodifluoromethane	1.4	12		~~U~~ UJ CCH
75-34-3	1,1-Dichloroethane	0.67	12		U
107-06-2	1,2-Dichloroethane	0.57	12		U
75-35-4	1,1-Dichloroethene	1.5	12		U
156-59-2	cis-1,2-Dichloroethene	1.5	12		U
156-60-5	trans-1,2-Dichloroethene	1.4	12		U
78-87-5	1,2-Dichloropropane	0.57	12		U
10061-01-5	cis-1,3-Dichloropropene	0.62	12		U
10061-02-6	trans-1,3-Dichloropropene	0.40	12		U
100-41-4	Ethylbenzene	0.93	12		U
591-78-6	2-Hexanone	2.8	12		U
98-82-8	Isopropylbenzene	1.1	12		U
79-20-9	Methyl acetate	2.0	12		U
75-09-2	Methylene chloride	0.77	12	12U ~~1.6~~	~~JB~~ BL
108-87-2	Methyl cyclohexane	0.37	12		U
1634-04-4	Methyl tert-butyl ether	0.40	12		U
108-10-1	4-Methyl-2-pentanone	0.72	12		U
100-42-5	Styrene	0.43	12		U
79-34-5	1,1,2,2-Tetrachloroethane	0.53	12		U
127-18-4	Tetrachloroethene	1.2	12		U

FORM I VOA

LW
4/8/09

FORM 1
VOLATILE ORGANICS ANALYSIS DATA SHEET

CLIENT SAMPLE NO.

MR08-IS20
1-4-5-08D

60

Lab Name: EMPIRICAL LABS Contract: CH2MHILL

Lab Code: NA Case No.: NA SAS No.: NA SDG No.: LEJEUNE041

Matrix: (soil/water) SOIL Lab Sample ID: 0812343-60

Sample wt/vol: 5.3 (g/mL) G Lab File ID: 1234360A

Level: (low/med) LOW Date Sampled: 12/22/08 11:10

% Moisture: not dec. 24 Date Analyzed: 01/03/09 00:02

GC Column: RTX-VRX ID: 0.25 (mm) Dilution Factor: 1.0

Soil Extract Volume:_____(uL) Soil Aliquot Volume: _____(uL)

CONCENTRATION UNITS: (ug/L or ug/Kg) UG/KG

CAS NO.	COMPOUND	MDL	RL	CONC	Q
108-88-3	Toluene	1.1	12		U
120-82-1	1,2,4-Trichlorobenzene	0.22	12		U
71-55-6	1,1,1-Trichloroethane	1.1	12		U
79-00-5	1,1,2-Trichloroethane	0.43	12		U
79-01-6	Trichloroethene	1.0	12		U
76-13-1	Trichlorotrifluoroethane	0.68	12		U
75-69-4	Trichlorofluoromethane	1.2	12		~~U~~ UJ CU
75-01-4	Vinyl chloride	1.4	12		~~U~~ UJ CU
1330-20-7	Xylene(total)	0.86	12		U

FORM I VOA

Lee 4/8/09

FORM 1
VOLATILE ORGANICS ANALYSIS DATA SHEET

CLIENT SAMPLE NO.

MR08-TB0
1-122008

61

Lab Name: EMPIRICAL LABS Contract: CH2MHILL

Lab Code: NA Case No.: NA SAS No.: NA SDG No.: LEJEUNE041

Matrix: (soil/water) WATER Lab Sample ID: 0812343-61

Sample wt/vol: 5.000 (g/mL) ML Lab File ID: 1234361

Level: (low/med) LOW Date Sampled: 12/20/08 :

% Moisture: not dec. _____ Date Analyzed: 01/03/09 18:51

GC Column: RTX-VRX ID: 0.25 (mm) Dilution Factor: 1.0

Soil Extract Volume:_____(uL) Soil Aliquot Volume: _____(uL)

CONCENTRATION UNITS: (ug/L or ug/Kg) UG/L

CAS NO.	COMPOUND	MDL	RL	CONC	Q
67-64-1	Acetone	0.84	2.5		~~U~~ UJ CU
71-43-2	Benzene	0.11	1.0		U
75-27-4	Bromodichloromethane	0.10	1.0		U
75-25-2	Bromoform	0.10	1.0		U
74-83-9	Bromomethane	0.32	1.0		U
78-93-3	2-Butanone	1.0	3.0		U
75-15-0	Carbon disulfide	0.13	1.0		U
56-23-5	Carbon tetrachloride	0.15	1.0		U
108-90-7	Chlorobenzene	0.10	1.0	0.11	J
75-00-3	Chloroethane	0.18	1.0		U
67-66-3	Chloroform	0.11	1.0		U
74-87-3	Chloromethane	0.29	1.0		U
110-82-7	Cyclohexane	0.20	1.0		U
124-48-1	Dibromochloromethane	0.10	1.0		U
96-12-8	1,2-Dibromo-3-chloropropane	0.11	1.0		U
106-93-4	1,2-Dibromoethane	0.10	1.0		U
95-50-1	1,2-Dichlorobenzene	0.10	1.0		U
541-73-1	1,3-Dichlorobenzene	0.13	1.0		U
106-46-7	1,4-Dichlorobenzene	0.10	1.0		U
75-71-8	Dichlorodifluoromethane	0.22	1.0		U
75-34-3	1,1-Dichloroethane	0.12	1.0		U
107-06-2	1,2-Dichloroethane	0.10	1.0		U
75-35-4	1,1-Dichloroethene	0.15	1.0		U
156-59-2	cis-1,2-Dichloroethene	0.13	1.0		U
156-60-5	trans-1,2-Dichloroethene	0.13	1.0		U
78-87-5	1,2-Dichloropropane	0.10	1.0		U
10061-01-5	cis-1,3-Dichloropropene	0.11	1.0		U
10061-02-6	trans-1,3-Dichloropropene	0.10	1.0		U
100-41-4	Ethylbenzene	0.13	1.0		U
591-78-6	2-Hexanone	0.30	1.0		U
98-82-8	Isopropylbenzene	0.15	1.0		U
79-20-9	Methyl acetate	0.30	1.0		U
75-09-2	Methylene chloride	0.14	1.0	1.2	~~B~~ U BL
108-87-2	Methyl cyclohexane	0.17	1.0		U
1634-04-4	Methyl tert-butyl ether	0.10	1.0		U
108-10-1	4-Methyl-2-pentanone	0.29	1.0		U
100-42-5	Styrene	0.10	1.0		U
79-34-5	1,1,2,2-Tetrachloroethane	0.10	1.0		U
127-18-4	Tetrachloroethene	0.15	1.0		U

LW
4/8/09

FORM 1
VOLATILE ORGANICS ANALYSIS DATA SHEET

CLIENT SAMPLE NO. 61

MR08-TB0
1-122008

Lab Name: EMPIRICAL LABS Contract: CH2MHILL

Lab Code: NA Case No.: NA SAS No.: NA SDG No.: LEJEUNE041

Matrix: (soil/water) WATER Lab Sample ID: 0812343-61

Sample wt/vol: 5.000 (g/mL) ML Lab File ID: 1234361

Level: (low/med) LOW Date Sampled: 12/20/08 :

% Moisture: not dec. _____ Date Analyzed: 01/03/09 18:51

GC Column: RTX-VRX ID: 0.25 (mm) Dilution Factor: 1.0

Soil Extract Volume:_____(uL) Soil Aliquot Volume: _____(uL)

CONCENTRATION UNITS: (ug/L or ug/Kg) UG/L

CAS NO.	COMPOUND	MDL	RL	CONC	Q
108-88-3------	Toluene	0.10	1.0		U
120-82-1------	1,2,4-Trichlorobenzene	0.10	1.0	1.0U ~~0.15~~ ~~JB~~	BL
71-55-6-------	1,1,1-Trichloroethane	0.17	1.0		U
79-00-5-------	1,1,2-Trichloroethane	0.10	1.0		U
79-01-6-------	Trichloroethene	0.13	1.0		U
76-13-1-------	Trichlorotrifluoroethane	0.18	1.0		U
75-69-4-------	Trichlorofluoromethane	0.17	1.0		U
75-01-4-------	Vinyl chloride	0.18	1.0		U
1330-20-7-----	Xylene(total)	0.22	1.0		U

MW
4/8/09

FORM 1
VOLATILE ORGANICS ANALYSIS DATA SHEET

CLIENT SAMPLE NO.

MR08-TB0
1-122208

62

Lab Name: EMPIRICAL LABS Contract: CH2MHILL

Lab Code: NA Case No.: NA SAS No.: NA SDG No.: LEJEUNE041

Matrix: (soil/water) WATER Lab Sample ID: 0812343-62

Sample wt/vol: 5.000 (g/mL) ML Lab File ID: 1234362

Level: (low/med) LOW Date Sampled: 12/22/08 :

% Moisture: not dec. _____ Date Analyzed: 01/03/09 19:21

GC Column: RTX-VRX ID: 0.25 (mm) Dilution Factor: 1.0

Soil Extract Volume:_____(uL) Soil Aliquot Volume: _____(uL)

CONCENTRATION UNITS: (ug/L or ug/Kg) UG/L

CAS NO.	COMPOUND	MDL	RL	CONC	Q
67-64-1	Acetone	0.84	2.5		~~U~~ U3 CCH
71-43-2	Benzene	0.11	1.0		U
75-27-4	Bromodichloromethane	0.10	1.0		U
75-25-2	Bromoform	0.10	1.0		U
74-83-9	Bromomethane	0.32	1.0		U
78-93-3	2-Butanone	1.0	3.0		U
75-15-0	Carbon disulfide	0.13	1.0		U
56-23-5	Carbon tetrachloride	0.15	1.0		U
108-90-7	Chlorobenzene	0.10	1.0		U
75-00-3	Chloroethane	0.18	1.0		U
67-66-3	Chloroform	0.11	1.0		U
74-87-3	Chloromethane	0.29	1.0		U
110-82-7	Cyclohexane	0.20	1.0		U
124-48-1	Dibromochloromethane	0.10	1.0		U
96-12-8	1,2-Dibromo-3-chloropropane	0.11	1.0		U
106-93-4	1,2-Dibromoethane	0.10	1.0		U
95-50-1	1,2-Dichlorobenzene	0.10	1.0		U
541-73-1	1,3-Dichlorobenzene	0.13	1.0		U
106-46-7	1,4-Dichlorobenzene	0.10	1.0		U
75-71-8	Dichlorodifluoromethane	0.22	1.0		U
75-34-3	1,1-Dichloroethane	0.12	1.0		U
107-06-2	1,2-Dichloroethane	0.10	1.0		U
75-35-4	1,1-Dichloroethene	0.15	1.0		U
156-59-2	cis-1,2-Dichloroethene	0.13	1.0		U
156-60-5	trans-1,2-Dichloroethene	0.13	1.0		U
78-87-5	1,2-Dichloropropane	0.10	1.0		U
10061-01-5	cis-1,3-Dichloropropene	0.11	1.0		U
10061-02-6	trans-1,3-Dichloropropene	0.10	1.0		U
100-41-4	Ethylbenzene	0.13	1.0		U
591-78-6	2-Hexanone	0.30	1.0		U
98-82-8	Isopropylbenzene	0.15	1.0		U
79-20-9	Methyl acetate	0.30	1.0		U
75-09-2	Methylene chloride	0.14	1.0	1.0U ~~0.94~~	~~JB~~ B1
108-87-2	Methyl cyclohexane	0.17	1.0		U
1634-04-4	Methyl tert-butyl ether	0.10	1.0		U
108-10-1	4-Methyl-2-pentanone	0.29	1.0		U
100-42-5	Styrene	0.10	1.0		U
79-34-5	1,1,2,2-Tetrachloroethane	0.10	1.0		U
127-18-4	Tetrachloroethene	0.15	1.0		U

MW 4/8/09

FORM 1
VOLATILE ORGANICS ANALYSIS DATA SHEET

CLIENT SAMPLE NO. 62

MR08-TB0
1-122208

Lab Name: EMPIRICAL LABS Contract: CH2MHILL

Lab Code: NA Case No.: NA SAS No.: NA SDG No.: LEJEUNE041

Matrix: (soil/water) WATER Lab Sample ID: 0812343-62

Sample wt/vol: 5.000 (g/mL) ML Lab File ID: 1234362

Level: (low/med) LOW Date Sampled: 12/22/08 :

% Moisture: not dec. _____ Date Analyzed: 01/03/09 19:21

GC Column: RTX-VRX ID: 0.25 (mm) Dilution Factor: 1.0

Soil Extract Volume:_____(uL) Soil Aliquot Volume: _____(uL)

CONCENTRATION UNITS: (ug/L or ug/Kg) UG/L

CAS NO.	COMPOUND	MDL	RL	CONC	Q
108-88-3	Toluene	0.10	1.0		U
120-82-1	1,2,4-Trichlorobenzene	0.10	1.0		U
71-55-6	1,1,1-Trichloroethane	0.17	1.0		U
79-00-5	1,1,2-Trichloroethane	0.10	1.0		U
79-01-6	Trichloroethene	0.13	1.0		U
76-13-1	Trichlorotrifluoroethane	0.18	1.0		U
75-69-4	Trichlorofluoromethane	0.17	1.0		U
75-01-4	Vinyl chloride	0.18	1.0		U
1330-20-7	Xylene(total)	0.22	1.0		U

4/8/09

FORM 1
VOLATILE ORGANICS ANALYSIS DATA SHEET

CLIENT SAMPLE NO. 63

MR08-TB0
2-122208

Lab Name: EMPIRICAL LABS Contract: CH2MHILL

Lab Code: NA Case No.: NA SAS No.: NA SDG No.: LEJEUNE041

Matrix: (soil/water) WATER Lab Sample ID: 0812343-63

Sample wt/vol: 5.000 (g/mL) ML Lab File ID: 1234363

Level: (low/med) LOW Date Sampled: 12/22/08 :

% Moisture: not dec. _____ Date Analyzed: 01/03/09 19:50

GC Column: RTX-VRX ID: 0.25 (mm) Dilution Factor: 1.0

Soil Extract Volume: _____(uL) Soil Aliquot Volume: _____(uL)

CONCENTRATION UNITS: (ug/L or ug/Kg) UG/L

CAS NO.	COMPOUND	MDL	RL	CONC	Q
67-64-1	Acetone	0.84	2.5		~~U~~ UJ CCH
71-43-2	Benzene	0.11	1.0		U
75-27-4	Bromodichloromethane	0.10	1.0		U
75-25-2	Bromoform	0.10	1.0		U
74-83-9	Bromomethane	0.32	1.0		U
78-93-3	2-Butanone	1.0	3.0		U
75-15-0	Carbon disulfide	0.13	1.0		U
56-23-5	Carbon tetrachloride	0.15	1.0		U
108-90-7	Chlorobenzene	0.10	1.0		U
75-00-3	Chloroethane	0.18	1.0		U
67-66-3	Chloroform	0.11	1.0		U
74-87-3	Chloromethane	0.29	1.0		U
110-82-7	Cyclohexane	0.20	1.0		U
124-48-1	Dibromochloromethane	0.10	1.0		U
96-12-8	1,2-Dibromo-3-chloropropane	0.11	1.0		U
106-93-4	1,2-Dibromoethane	0.10	1.0		U
95-50-1	1,2-Dichlorobenzene	0.10	1.0		U
541-73-1	1,3-Dichlorobenzene	0.13	1.0		U
106-46-7	1,4-Dichlorobenzene	0.10	1.0		U
75-71-8	Dichlorodifluoromethane	0.22	1.0		U
75-34-3	1,1-Dichloroethane	0.12	1.0		U
107-06-2	1,2-Dichloroethane	0.10	1.0		U
75-35-4	1,1-Dichloroethene	0.15	1.0		U
156-59-2	cis-1,2-Dichloroethene	0.13	1.0		U
156-60-5	trans-1,2-Dichloroethene	0.13	1.0		U
78-87-5	1,2-Dichloropropane	0.10	1.0		U
10061-01-5	cis-1,3-Dichloropropene	0.11	1.0		U
10061-02-6	trans-1,3-Dichloropropene	0.10	1.0		U
100-41-4	Ethylbenzene	0.13	1.0		U
591-78-6	2-Hexanone	0.30	1.0		U
98-82-8	Isopropylbenzene	0.15	1.0		U
79-20-9	Methyl acetate	0.30	1.0		U
75-09-2	Methylene chloride	0.14	1.0	1.9	~~B~~ U BL
108-87-2	Methyl cyclohexane	0.17	1.0		U
1634-04-4	Methyl tert-butyl ether	0.10	1.0		U
108-10-1	4-Methyl-2-pentanone	0.29	1.0		U
100-42-5	Styrene	0.10	1.0		U
79-34-5	1,1,2,2-Tetrachloroethane	0.10	1.0		U
127-18-4	Tetrachloroethene	0.15	1.0		U

FORM I VOA

MEO 3/2/09

FORM 1
VOLATILE ORGANICS ANALYSIS DATA SHEET

CLIENT SAMPLE NO.

MR08-TB0
2-122208

63

Lab Name: EMPIRICAL LABS Contract: CH2MHILL

Lab Code: NA Case No.: NA SAS No.: NA SDG No.: LEJEUNE041

Matrix: (soil/water) WATER Lab Sample ID: 0812343-63

Sample wt/vol: 5.000 (g/mL) ML Lab File ID: 1234363

Level: (low/med) LOW Date Sampled: 12/22/08 :

% Moisture: not dec. _____ Date Analyzed: 01/03/09 19:50

GC Column: RTX-VRX ID: 0.25 (mm) Dilution Factor: 1.0

Soil Extract Volume:_____(uL) Soil Aliquot Volume: _____(uL)

CONCENTRATION UNITS: (ug/L or ug/Kg) UG/L

CAS NO.	COMPOUND	MDL	RL	CONC	Q
108-88-3	Toluene	0.10	1.0		U
120-82-1	1,2,4-Trichlorobenzene	0.10	1.0		U
71-55-6	1,1,1-Trichloroethane	0.17	1.0		U
79-00-5	1,1,2-Trichloroethane	0.10	1.0		U
79-01-6	Trichloroethene	0.13	1.0		U
76-13-1	Trichlorotrifluoroethane	0.18	1.0		U
75-69-4	Trichlorofluoromethane	0.17	1.0		U
75-01-4	Vinyl chloride	0.18	1.0		U
1330-20-7	Xylene(total)	0.22	1.0		U

lw
4/8/09

ENVIRONMENTAL
Data Services, Inc.

PERCHLORATE

USEPA Region IV - Level IV Review

Site: MCB Camp Lejeune, TO-09 SDG #: R2847557

Client: CH2M HILL, Inc., Virginia Beach, Virginia Date: March 11, 2009

Laboratory: Columbia Analytical Services, Inc., Rochester, NY Reviewer: Nancy Weaver

EDS ID	Client Sample ID	Laboratory Sample ID	Matrix
1	MR08-SS051-08D	1159533	Soil
2	MR08-IS051-5-6-08D	1159534	Soil
3	MR08-SS050-08D	1159535	Soil
4	MR08-IS050-5-6-08D	1159535	Soil
5	MR08-SS052-08D	1159540	Soil
6	MR08-IS052-0-5-6-08D	1159544	Soil
7	MR08-SS053-08D	1159550	Soil
8	MR08-IS053-5-6-08D	1159559	Soil
9	MR08-SS054-08D	1159563	Soil
10	MR08-IS054-5-6-08D	1159564	Soil
11	MR08-SS055-08D	1159565	Soil
12	MR08-IS055-4-5-08D	1159567	Soil
13	MR08-EB120208-IS	1159569	Water
14	MR08-EB120208-SS	1159570	Water

The USEPA "Contract Laboratory Program National Functional Guidelines for Inorganic Data Review," October 2004, and professional judgement were used in evaluating the data in this summary report.

Holding Times - All samples were prepared and analyzed within 28 days for perchlorate.

Calibration - The ICAL & CCAL exhibited acceptable %RSD and %D values respectively.

Method and Calibration Blanks - The method blanks and continuing calibration blanks were free of contamination.

Field and Equipment Blank - Field QC results are summarized below.

Blank ID	Compound	Conc. ug/L	Action Level ug/L	Qualifier	Affected Samples
MR08-EB120208-IS	None - ND	-	-	-	-
MR08-EB120208-SS	None - ND	-	-	-	-
MR08-FB01120608	None - ND	-	-	-	-
MR08-FB01120608	None - ND	-	-	-	-

Matrix Spike/Duplicate - The matrix spike/duplicate sample exhibited acceptable %R and RPD values.

LCS - The LCS samples exhibited acceptable %R values.

Field Duplicates - Field duplicate samples were not included in this data package.

Compound Quantitation - No discrepancies were identified.

COLUMBIA ANALYTICAL SERVICES

EXTRACTABLE ORGANICS
METHOD 6850
Reported: 12/18/08

Microbac Laboratories, Inc.
Project Reference: CH2M HILL - CAMP LEJEUNE
Client Sample ID : MR08-SS051-08D

Date Sampled : 12/02/08 10:25 **Order #:** 1159533 **Sample Matrix:** SOIL/SEDIMENT
Date Received: 12/04/08 **Submission #:** R2847557 **Percent Solid:** 58.4

ANALYTE	PQL	RESULT	UNITS
DATE EXTRACTED : 12/10/08			
DATE ANALYZED : 12/11/08			
ANALYTICAL DILUTION: 10.00			Dry Weight
PERCHLORATE	0.20	3.4 U	UG/KG

COLUMBIA ANALYTICAL SERVICES

EXTRACTABLE ORGANICS
METHOD 6850
Reported: 12/18/08

Microbac Laboratories, Inc.
Project Reference: CH2M HILL - CAMP LEJEUNE
Client Sample ID : MR08-IS051-5-6-08D

Date Sampled : 12/02/08 10:50 **Order #:** 1159534 **Sample Matrix:** SOIL/SEDIMENT
Date Received: 12/04/08 **Submission #:** R2847557 **Percent Solid:** 83.1

ANALYTE	PQL	RESULT	UNITS
DATE EXTRACTED : 12/10/08			
DATE ANALYZED : 12/11/08			
ANALYTICAL DILUTION: 10.00			Dry Weight
PERCHLORATE	0.20	2.4 U	UG/KG

COLUMBIA ANALYTICAL SERVICES

EXTRACTABLE ORGANICS
METHOD 6850
Reported: 12/18/08

Microbac Laboratories, Inc.
Project Reference: CH2M HILL - CAMP LEJEUNE
Client Sample ID : MR08-SS050-08D

Date Sampled : 12/02/08 11:25 **Order #:** 1159535 **Sample Matrix:** SOIL/SEDIMENT
Date Received: 12/04/08 **Submission #:** R2847557 **Percent Solid:** 81.7

ANALYTE	PQL	RESULT	UNITS
DATE EXTRACTED : 12/10/08			
DATE ANALYZED : 12/11/08			
ANALYTICAL DILUTION: 10.00			Dry Weight
PERCHLORATE	0.20	4.2	UG/KG

COLUMBIA ANALYTICAL SERVICES

EXTRACTABLE ORGANICS
METHOD 6850
Reported: 12/18/08

Microbac Laboratories, Inc.
Project Reference: CH2M HILL - CAMP LEJEUNE
Client Sample ID : MR08-IS050-5-6-08D

Date Sampled : 12/02/08 11:50 **Order #:** 1159540 **Sample Matrix:** SOIL/SEDIMENT
Date Received: 12/04/08 **Submission #:** R2847557 **Percent Solid:** 78.3

ANALYTE	PQL	RESULT	UNITS
DATE EXTRACTED : 12/10/08			
DATE ANALYZED : 12/11/08			
ANALYTICAL DILUTION: 10.00			Dry Weight
PERCHLORATE	0.20	2.6 U	UG/KG

COLUMBIA ANALYTICAL SERVICES

EXTRACTABLE ORGANICS
METHOD 6850
Reported: 12/18/08

Microbac Laboratories, Inc.
Project Reference: CH2M HILL - CAMP LEJEUNE
Client Sample ID : MR08-SS052-08D

Date Sampled : 12/02/08 13:20 **Order #:** 1159544 **Sample Matrix:** SOIL/SEDIMENT
Date Received: 12/04/08 **Submission #:** R2847557 **Percent Solid:** 71.6

ANALYTE	PQL	RESULT	UNITS
DATE EXTRACTED : 12/10/08			
DATE ANALYZED : 12/11/08			
ANALYTICAL DILUTION: 10.00			Dry Weight
PERCHLORATE	0.20	2.8 U	UG/KG

COLUMBIA ANALYTICAL SERVICES

EXTRACTABLE ORGANICS
METHOD 6850
Reported: 12/18/08

Microbac Laboratories, Inc.
Project Reference: CH2M HILL - CAMP LEJEUNE
Client Sample ID : MR08-IS052-5-6-08D

Date Sampled : 12/02/08 13:45 **Order #:** 1159550 **Sample Matrix:** SOIL/SEDIMENT
Date Received: 12/04/08 **Submission #:** R2847557 **Percent Solid:** 86.2

ANALYTE	PQL	RESULT	UNITS
DATE EXTRACTED : 12/10/08			
DATE ANALYZED : 12/11/08			
ANALYTICAL DILUTION: 10.00			Dry Weight
PERCHLORATE	0.20	2.3 U	UG/KG

COLUMBIA ANALYTICAL SERVICES

EXTRACTABLE ORGANICS
METHOD 6850
Reported: 12/18/08

Microbac Laboratories, Inc.
Project Reference: CH2M HILL - CAMP LEJEUNE
Client Sample ID : MR08-SS053-08D

Date Sampled : 12/02/08 14:05 **Order #:** 1159552 **Sample Matrix:** SOIL/SEDIMENT
Date Received: 12/04/08 **Submission #:** R2847557 **Percent Solid:** 76.6

ANALYTE	PQL	RESULT	UNITS
DATE EXTRACTED : 12/10/08			
DATE ANALYZED : 12/11/08			
ANALYTICAL DILUTION: 10.00			Dry Weight
PERCHLORATE	0.20	2.6 U	UG/KG

COLUMBIA ANALYTICAL SERVICES

EXTRACTABLE ORGANICS
METHOD 6850
Reported: 12/18/08

Microbac Laboratories, Inc.
Project Reference: CH2M HILL - CAMP LEJEUNE
Client Sample ID : MR08-IS053-5-6-08D

Date Sampled : 12/02/08 14:15 **Order #:** 1159559 **Sample Matrix:** SOIL/SEDIMENT
Date Received: 12/04/08 **Submission #:** R2847557 **Percent Solid:** 82.4

ANALYTE	PQL	RESULT	UNITS
DATE EXTRACTED : 12/10/08			
DATE ANALYZED : 12/11/08			
ANALYTICAL DILUTION: 10.00			Dry Weight
PERCHLORATE	0.20	2.4 U	UG/KG

COLUMBIA ANALYTICAL SERVICES

EXTRACTABLE ORGANICS
METHOD 6850
Reported: 12/18/08

Microbac Laboratories, Inc.
Project Reference: CH2M HILL - CAMP LEJEUNE
Client Sample ID : MR08-SS054-08D

Date Sampled : 12/02/08 15:10 **Order #:** 1159563 **Sample Matrix:** SOIL/SEDIMENT
Date Received: 12/04/08 **Submission #:** R2847557 **Percent Solid:** 61.9

ANALYTE	PQL	RESULT	UNITS
DATE EXTRACTED : 12/10/08			
DATE ANALYZED : 12/11/08			
ANALYTICAL DILUTION: 10.00			Dry Weight
PERCHLORATE	0.20	1.5 J	UG/KG

COLUMBIA ANALYTICAL SERVICES

EXTRACTABLE ORGANICS
METHOD 6850
Reported: 12/18/08

Microbac Laboratories, Inc.
Project Reference: CH2M HILL - CAMP LEJEUNE
Client Sample ID : MR08-IS054-5-6-08D

Date Sampled : 12/02/08 15:30 **Order #:** 1159564 **Sample Matrix:** SOIL/SEDIMENT
Date Received: 12/04/08 **Submission #:** R2847557 **Percent Solid:** 81.9

ANALYTE	PQL	RESULT	UNITS
DATE EXTRACTED : 12/10/08			
DATE ANALYZED : 12/11/08			
ANALYTICAL DILUTION: 10.00			Dry Weight
PERCHLORATE	0.20	2.4 U	UG/KG

COLUMBIA ANALYTICAL SERVICES

EXTRACTABLE ORGANICS
METHOD 6850
Reported: 12/18/08

Microbac Laboratories, Inc.
Project Reference: CH2M HILL - CAMP LEJEUNE
Client Sample ID : MR08-SS055-08D

Date Sampled : 12/02/08 15:55 **Order #:** 1159565 **Sample Matrix:** SOIL/SEDIMENT
Date Received: 12/04/08 **Submission #:** R2847557 **Percent Solid:** 59.4

ANALYTE	PQL	RESULT	UNITS
DATE EXTRACTED : 12/10/08			
DATE ANALYZED : 12/11/08			
ANALYTICAL DILUTION: 10.00			Dry Weight
PERCHLORATE	0.20	3.4 U	UG/KG

COLUMBIA ANALYTICAL SERVICES

EXTRACTABLE ORGANICS
METHOD 6850
Reported: 12/18/08

Microbac Laboratories, Inc.
Project Reference: CH2M HILL - CAMP LEJEUNE
Client Sample ID : MR08-IS055-4-5-08D

Date Sampled : 12/02/08 16:15 **Order #:** 1159567 **Sample Matrix:** SOIL/SEDIMENT
Date Received: 12/04/08 **Submission #:** R2847557 **Percent Solid:** 83.7

ANALYTE	PQL	RESULT	UNITS
DATE EXTRACTED : 12/10/08			
DATE ANALYZED : 12/11/08			
ANALYTICAL DILUTION: 10.00			Dry Weight
PERCHLORATE	0.20	2.4 U	UG/KG

COLUMBIA ANALYTICAL SERVICES

EXTRACTABLE ORGANICS
METHOD 6850
Reported: 12/18/08

Microbac Laboratories, Inc.
Project Reference: CH2M HILL - CAMP LEJEUNE
Client Sample ID : MR08-EB-120208-IS

Date Sampled : 12/02/08 15:30 **Order #:** 1159569 **Sample Matrix:** WATER
Date Received: 12/04/08 **Submission #:** R2847557 **Analytical Run** 171471

ANALYTE	PQL	RESULT	UNITS
DATE EXTRACTED : 12/15/08			
DATE ANALYZED : 12/15/08			
ANALYTICAL DILUTION: 1.00			
PERCHLORATE	0.20	0.20 U	UG/L

COLUMBIA ANALYTICAL SERVICES

EXTRACTABLE ORGANICS
METHOD 6850
Reported: 12/18/08

Microbac Laboratories, Inc.
Project Reference: CH2M HILL - CAMP LEJEUNE
Client Sample ID : MR08-EB-120208-SS

Date Sampled : 12/02/08 15:50 **Order #:** 1159570 **Sample Matrix:** WATER
Date Received: 12/04/08 **Submission #:** R2847557 **Analytical Run** 171471

ANALYTE	PQL	RESULT	UNITS
DATE EXTRACTED : 12/15/08			
DATE ANALYZED : 12/15/08			
ANALYTICAL DILUTION: 1.00			
PERCHLORATE	0.20	0.20 U	UG/L

ENVIRONMENTAL
Data Services, Inc.

PERCHLORATE

USEPA Region IV - Level IV Review

Site: MCB Camp Lejeune, TO-09 SDG #: R2847625

Client: CH2M HILL, Inc., Virginia Beach, Virginia Date: March 11, 2009

Laboratory: Columbia Analytical Services, Inc., Rochester, NY Reviewer: Linda Sulkowski

EDS ID	Client Sample ID	Laboratory Sample ID	Matrix
1	MR08-SS074-08D	1160333	Soil
2	MR08-IS074-7-8-08D	1160334	Soil
3	MR08-SS075-08D	1160335	Soil
4	MR08-IS075-6-7-08D	1160336	Soil
5	MR08-SS076-08D	1160337	Soil
6	MR08-IS076-6-7-08D	1160338	Soil
7	MR08-SS077-08D	1160339	Soil
8	MR08-IS077-6-7-08D	1160340	Soil
9	MR08-SS078-08D	1160342	Soil
10	MR08-IS078-6-7-08D	1160345	Soil
11	MR08-SS079-08D	1160348	Soil
12	MR08-SS079D-08D	1160350	Soil
13	MR08-IS079-6-7-08D	1160351	Soil
14	MR08-IS079D-6-7-08D	1160353	Soil
15	MR08-SS097-08D	1160354	Soil
16	MR08-IS097-6-7-08D	1160355	Soil
17	MR08-SS096-08D	1160356	Soil
18	MR08-IS096-6-7-08D	1160357	Soil
19	MR08-SS095-08D	1160358	Soil
20	MR08-IS095-6-7-08D	1160359	Soil
21	MR08-SS094-08D	1160360	Soil
22	MR08-IS094-5-6-08D	1160361	Soil
23	MR08-SS092-08D	1160362	Soil
24	MR08-IS092-4-5-08D	1160363	Soil
25	MR08-EB01120408-SS	1160364	Water
26	MR08-EB01120408-IS	1160365	Water

The USEPA "Contract Laboratory Program National Functional Guidelines for Inorganic Data Review," October 2004, and professional judgement were used in evaluating the data in this summary report.

Holding Times - All samples were prepared and analyzed within 28 days for perchlorate.

Calibration - The ICAL & CCAL exhibited acceptable %RSD and %D values respectively.

Method and Calibration Blanks - The method blanks and continuing calibration blanks were free of contamination.

Field and Equipment Blank - Field QC results are summarized below.

Blank ID	Compound	Conc. ug/L	Action Level ug/L	Qualifier	Affected Samples
MR08-EB01120408-SS	None - ND	-	-	-	-
MR08-EB01120408-IS	None - ND	-	-	-	-
MR08-FB01120608	None - ND	-	-	-	-

Matrix Spike/Duplicate - The matrix spike/duplicate sample exhibited acceptable %R and RPD values.

LCS - The LCS samples exhibited acceptable %R values.

Field Duplicates - Field duplicate results are summarized below.

Compound	MR08-SS079-08D ug/kg	MR08-SS079D-08D ug/kg	RPD	Qualifier
None	ND	ND	-	-

Compound	MR08-IS079-6-7-08D ug/kg	MR08-IS079D-6-7-08D ug/kg	RPD	Qualifier
None	ND	ND	-	-

Compound Quantitation - No discrepancies were identified.

COLUMBIA ANALYTICAL SERVICES

EXTRACTABLE ORGANICS
METHOD 6850
Reported: 12/24/08

Microbac Laboratories, Inc.
Project Reference: CH2M HILL - CAMP LEJEUNE
Client Sample ID : MR08-SS074-08D

Date Sampled : 12/04/08 08:45 **Order #:** 1160333 **Sample Matrix:** SOIL/SEDIMENT
Date Received: 12/06/08 **Submission #:** R2847625 **Percent Solid:** 77.7

ANALYTE	PQL	RESULT	UNITS
DATE EXTRACTED : 12/15/08			
DATE ANALYZED : 12/16/08			
ANALYTICAL DILUTION: 10.00			Dry Weight
PERCHLORATE	0.20	2.6 U	UG/KG

lw 3/11/09

2

COLUMBIA ANALYTICAL SERVICES

EXTRACTABLE ORGANICS
METHOD 6850
Reported: 12/24/08

Microbac Laboratories, Inc.
Project Reference: CH2M HILL - CAMP LEJEUNE
Client Sample ID : MR08-IS074-7-8-08D

Date Sampled : 12/04/08 09:05 **Order #:** 1160334 **Sample Matrix:** SOIL/SEDIMENT
Date Received: 12/06/08 **Submission #:** R2847625 **Percent Solid:** 94.5

ANALYTE	PQL	RESULT	UNITS
DATE EXTRACTED : 12/15/08			
DATE ANALYZED : 12/16/08			
ANALYTICAL DILUTION: 10.00			Dry Weight
PERCHLORATE	0.20	2.1 U	UG/KG

lw
3/11/09

3

COLUMBIA ANALYTICAL SERVICES

EXTRACTABLE ORGANICS
METHOD 6850
Reported: 12/24/08

Microbac Laboratories, Inc.
Project Reference: CH2M HILL - CAMP LEJEUNE
Client Sample ID : MR08-SS075-08D

Date Sampled : 12/04/08 09:20 **Order #:** 1160335 **Sample Matrix:** SOIL/SEDIMENT
Date Received: 12/06/08 **Submission #:** R2847625 **Percent Solid:** 84.2

ANALYTE	PQL	RESULT	UNITS
DATE EXTRACTED : 12/15/08			
DATE ANALYZED : 12/16/08			
ANALYTICAL DILUTION: 10.00			Dry Weight
PERCHLORATE	0.20	2.4 U	UG/KG

hw
3/11/09

4

COLUMBIA ANALYTICAL SERVICES

EXTRACTABLE ORGANICS
METHOD 6850
Reported: 12/24/08

Microbac Laboratories, Inc.
Project Reference: CH2M HILL - CAMP LEJEUNE
Client Sample ID : MR08-IS075-6-7-08D

Date Sampled : 12/04/08 09:35 **Order #:** 1160336 **Sample Matrix:** SOIL/SEDIMENT
Date Received: 12/06/08 **Submission #:** R2847625 **Percent Solid:** 91.6

ANALYTE	PQL	RESULT	UNITS
DATE EXTRACTED : 12/15/08			
DATE ANALYZED : 12/16/08			
ANALYTICAL DILUTION: 10.00			Dry Weight
PERCHLORATE	0.20	2.2 U	UG/KG

DW 3/11/09

COLUMBIA ANALYTICAL SERVICES

EXTRACTABLE ORGANICS
METHOD 6850
Reported: 12/24/08

Microbac Laboratories, Inc.
Project Reference: CH2M HILL - CAMP LEJEUNE
Client Sample ID : MR08-SS076-08D

Date Sampled : 12/04/08 09:50 **Order #:** 1160337 **Sample Matrix:** SOIL/SEDIMENT
Date Received: 12/06/08 **Submission #:** R2847625 **Percent Solid:** 83.2

ANALYTE	PQL	RESULT	UNITS
DATE EXTRACTED : 12/15/08			
DATE ANALYZED : 12/16/08			
ANALYTICAL DILUTION: 10.00			Dry Weight
PERCHLORATE	0.20	2.4 U	UG/KG

lw
3/11/09

6

COLUMBIA ANALYTICAL SERVICES

EXTRACTABLE ORGANICS
METHOD 6850
Reported: 12/24/08

Microbac Laboratories, Inc.
Project Reference: CH2M HILL - CAMP LEJEUNE
Client Sample ID : MR08-IS076-6-7-08D

Date Sampled : 12/04/08 10:05 **Order #:** 1160338 **Sample Matrix:** SOIL/SEDIMENT
Date Received: 12/06/08 **Submission #:** R2847625 **Percent Solid:** 93.9

ANALYTE	PQL	RESULT	UNITS
DATE EXTRACTED : 12/15/08			
DATE ANALYZED : 12/16/08			
ANALYTICAL DILUTION: 10.00			Dry Weight
PERCHLORATE	0.20	2.1 U	UG/KG

kw
3/11/09

COLUMBIA ANALYTICAL SERVICES

EXTRACTABLE ORGANICS
METHOD 6850
Reported: 12/24/08

Microbac Laboratories, Inc.
Project Reference: CH2M HILL - CAMP LEJEUNE
Client Sample ID : MR08-SS077-08D

Date Sampled : 12/04/08 10:20 **Order #:** 1160339 **Sample Matrix:** SOIL/SEDIMENT
Date Received: 12/06/08 **Submission #:** R2847625 **Percent Solid:** 84.5

ANALYTE	PQL	RESULT	UNITS
DATE EXTRACTED : 12/15/08			
DATE ANALYZED : 12/16/08			
ANALYTICAL DILUTION: 10.00			Dry Weight
PERCHLORATE	0.20	2.4 U	UG/KG

MW 3/4/09

8

COLUMBIA ANALYTICAL SERVICES

EXTRACTABLE ORGANICS
METHOD 6850
Reported: 12/24/08

Microbac Laboratories, Inc.
Project Reference: CH2M HILL - CAMP LEJEUNE
Client Sample ID : MR08-IS077-6-7-08D

Date Sampled : 12/04/08 10:30 **Order #:** 1160340 **Sample Matrix:** SOIL/SEDIMENT
Date Received: 12/06/08 **Submission #:** R2847625 **Percent Solid:** 87.6

ANALYTE	PQL	RESULT	UNITS
DATE EXTRACTED : 12/15/08			
DATE ANALYZED : 12/16/08			
ANALYTICAL DILUTION: 10.00			Dry Weight
PERCHLORATE	0.20	2.3 U	UG/KG

lw
3/11/09

COLUMBIA ANALYTICAL SERVICES

EXTRACTABLE ORGANICS
METHOD 6850
Reported: 12/24/08

Microbac Laboratories, Inc.
Project Reference: CH2M HILL - CAMP LEJEUNE
Client Sample ID : MR08-SS078-08D

Date Sampled : 12/04/08 10:45 **Order #:** 1160342 **Sample Matrix:** SOIL/SEDIMENT
Date Received: 12/06/08 **Submission #:** R2847625 **Percent Solid:** 84.2

ANALYTE	PQL	RESULT	UNITS
DATE EXTRACTED : 12/15/08			
DATE ANALYZED : 12/16/08			
ANALYTICAL DILUTION: 10.00			Dry Weight
PERCHLORATE	0.20	2.4 U	UG/KG

lw
3/11/09

COLUMBIA ANALYTICAL SERVICES

EXTRACTABLE ORGANICS
METHOD 6850
Reported: 12/24/08

Microbac Laboratories, Inc.
Project Reference: CH2M HILL - CAMP LEJEUNE
Client Sample ID : MR08-IS078-6-7-08D

Date Sampled : 12/04/08 10:55 **Order #:** 1160345 **Sample Matrix:** SOIL/SEDIMENT
Date Received: 12/06/08 **Submission #:** R2847625 **Percent Solid:** 85.8

ANALYTE	PQL	RESULT	UNITS
DATE EXTRACTED : 12/15/08			
DATE ANALYZED : 12/16/08			
ANALYTICAL DILUTION: 10.00			Dry Weight
PERCHLORATE	0.20	2.3 U	UG/KG

lw
3/11/09

COLUMBIA ANALYTICAL SERVICES

11

EXTRACTABLE ORGANICS
METHOD 6850
Reported: 12/24/08

Microbac Laboratories, Inc.
Project Reference: CH2M HILL - CAMP LEJEUNE
Client Sample ID : MR08-SS079-08D

Date Sampled : 12/04/08 11:20 **Order #:** 1160348 **Sample Matrix:** SOIL/SEDIMENT
Date Received: 12/06/08 **Submission #:** R2847625 **Percent Solid:** 85.5

ANALYTE	PQL	RESULT	UNITS
DATE EXTRACTED : 12/15/08			
DATE ANALYZED : 12/16/08			
ANALYTICAL DILUTION: 10.00			Dry Weight
PERCHLORATE	0.20	2.3 U	UG/KG

JW 3/4/09

COLUMBIA ANALYTICAL SERVICES

EXTRACTABLE ORGANICS
METHOD 6850
Reported: 12/24/08

Microbac Laboratories, Inc.
Project Reference: CH2M HILL - CAMP LEJEUNE
Client Sample ID : MR08-SS079D-08D

Date Sampled : 12/04/08 11:25 **Order #:** 1160350 **Sample Matrix:** SOIL/SEDIMENT
Date Received: 12/06/08 **Submission #:** R2847625 **Percent Solid:** 82.9

ANALYTE	PQL	RESULT	UNITS
DATE EXTRACTED : 12/15/08			
DATE ANALYZED : 12/16/08			
ANALYTICAL DILUTION: 10.00			Dry Weight
PERCHLORATE	0.20	2.4 U	UG/KG

MW
3/11/09

COLUMBIA ANALYTICAL SERVICES

13

EXTRACTABLE ORGANICS
METHOD 6850
Reported: 12/24/08

Microbac Laboratories, Inc.
Project Reference: CH2M HILL - CAMP LEJEUNE
Client Sample ID : MR08-IS079-6-7-08D

Date Sampled : 12/04/08 11:45 **Order #:** 1160351 **Sample Matrix:** SOIL/SEDIMENT
Date Received: 12/06/08 **Submission #:** R2847625 **Percent Solid:** 88.0

ANALYTE	PQL	RESULT	UNITS
DATE EXTRACTED : 12/15/08			
DATE ANALYZED : 12/16/08			
ANALYTICAL DILUTION: 10.00			Dry Weight
PERCHLORATE	0.20	2.3 U	UG/KG

hw
3/11/09

COLUMBIA ANALYTICAL SERVICES

14

EXTRACTABLE ORGANICS
METHOD 6850
Reported: 12/24/08

Microbac Laboratories, Inc.
Project Reference: CH2M HILL - CAMP LEJEUNE
Client Sample ID : MR08-IS079D-6-7-08D

Date Sampled : 12/04/08 11:55 **Order #:** 1160353 **Sample Matrix:** SOIL/SEDIMENT
Date Received: 12/06/08 **Submission #:** R2847625 **Percent Solid:** 82.7

ANALYTE	PQL	RESULT	UNITS
DATE EXTRACTED : 12/15/08			
DATE ANALYZED : 12/16/08			
ANALYTICAL DILUTION: 10.00			Dry Weight
PERCHLORATE	0.20	2.4 U	UG/KG

LW
3/4/09

COLUMBIA ANALYTICAL SERVICES

EXTRACTABLE ORGANICS
METHOD 6850
Reported: 12/24/08

Microbac Laboratories, Inc.
Project Reference: CH2M HILL - CAMP LEJEUNE
Client Sample ID : MR08-SS097-08D

Date Sampled : 12/04/08 13:40 **Order #:** 1160354 **Sample Matrix:** SOIL/SEDIMENT
Date Received: 12/06/08 **Submission #:** R2847625 **Percent Solid:** 85.7

ANALYTE	PQL	RESULT	UNITS
DATE EXTRACTED : 12/15/08			
DATE ANALYZED : 12/16/08			
ANALYTICAL DILUTION: 10.00			Dry Weight
PERCHLORATE	0.20	2.3 U	UG/KG

lw 3/11/09

COLUMBIA ANALYTICAL SERVICES

EXTRACTABLE ORGANICS
METHOD 6850
Reported: 12/24/08

Microbac Laboratories, Inc.
Project Reference: CH2M HILL - CAMP LEJEUNE
Client Sample ID : MR08-IS097-6-7-08D

Date Sampled : 12/04/08 13:50 **Order #:** 1160355 **Sample Matrix:** SOIL/SEDIMENT
Date Received: 12/06/08 **Submission #:** R2847625 **Percent Solid:** 80.3

ANALYTE	PQL	RESULT	UNITS
DATE EXTRACTED : 12/15/08			
DATE ANALYZED : 12/16/08			
ANALYTICAL DILUTION: 10.00			Dry Weight
PERCHLORATE	0.20	2.5 U	UG/KG

RW 3/11/09

COLUMBIA ANALYTICAL SERVICES

EXTRACTABLE ORGANICS
METHOD 6850
Reported: 12/24/08

Microbac Laboratories, Inc.
Project Reference: CH2M HILL - CAMP LEJEUNE
Client Sample ID : MR08-SS096-08D

Date Sampled : 12/04/08 14:05 **Order #:** 1160356 **Sample Matrix:** SOIL/SEDIMENT
Date Received: 12/06/08 **Submission #:** R2847625 **Percent Solid:** 69.4

ANALYTE	PQL	RESULT	UNITS
DATE EXTRACTED : 12/15/08			
DATE ANALYZED : 12/16/08			
ANALYTICAL DILUTION: 10.00			Dry Weight
PERCHLORATE	0.20	2.9 U	UG/KG

lw
3/11/09

COLUMBIA ANALYTICAL SERVICES

EXTRACTABLE ORGANICS
METHOD 6850
Reported: 12/24/08

Microbac Laboratories, Inc.
Project Reference: CH2M HILL - CAMP LEJEUNE
Client Sample ID : MR08-IS096-6-7-08D

Date Sampled : 12/04/08 14:20 **Order #:** 1160357 **Sample Matrix:** SOIL/SEDIMENT
Date Received: 12/06/08 **Submission #:** R2847625 **Percent Solid:** 87.0

ANALYTE	PQL	RESULT	UNITS
DATE EXTRACTED : 12/15/08			
DATE ANALYZED : 12/16/08			
ANALYTICAL DILUTION: 10.00			Dry Weight
PERCHLORATE	0.20	2.3 U	UG/KG

hw
3/4/09

COLUMBIA ANALYTICAL SERVICES

EXTRACTABLE ORGANICS
METHOD 6850
Reported: 12/24/08

Microbac Laboratories, Inc.
Project Reference: CH2M HILL - CAMP LEJEUNE
Client Sample ID : MR08-SS095-08D

Date Sampled : 12/04/08 14:35 **Order #:** 1160358 **Sample Matrix:** SOIL/SEDIMENT
Date Received: 12/06/08 **Submission #:** R2847625 **Percent Solid:** 77.0

ANALYTE	PQL	RESULT	UNITS
DATE EXTRACTED : 12/15/08			
DATE ANALYZED : 12/16/08			
ANALYTICAL DILUTION: 10.00			Dry Weight
PERCHLORATE	0.20	2.6 U	UG/KG

hes
3/11/09

COLUMBIA ANALYTICAL SERVICES

EXTRACTABLE ORGANICS
METHOD 6850
Reported: 12/24/08

Microbac Laboratories, Inc.
Project Reference: CH2M HILL - CAMP LEJEUNE
Client Sample ID : MR08-IS095-6-7-08D

Date Sampled : 12/04/08 14:45 **Order #:** 1160359 **Sample Matrix:** SOIL/SEDIMENT
Date Received: 12/06/08 **Submission #:** R2847625 **Percent Solid:** 83.0

ANALYTE	PQL	RESULT	UNITS
DATE EXTRACTED : 12/15/08			
DATE ANALYZED : 12/16/08			
ANALYTICAL DILUTION: 10.00			Dry Weight
PERCHLORATE	0.20	2.4 U	UG/KG

LW
3/4/09

COLUMBIA ANALYTICAL SERVICES

EXTRACTABLE ORGANICS
METHOD 6850
Reported: 12/24/08

Microbac Laboratories, Inc.
Project Reference: CH2M HILL - CAMP LEJEUNE
Client Sample ID : MR08-SS094-08D

Date Sampled : 12/04/08 15:05 **Order #:** 1160360 **Sample Matrix:** SOIL/SEDIMENT
Date Received: 12/06/08 **Submission #:** R2847625 **Percent Solid:** 77.2

ANALYTE	PQL	RESULT	UNITS
DATE EXTRACTED : 12/16/08			
DATE ANALYZED : 12/16/08			
ANALYTICAL DILUTION: 10.00			Dry Weight
PERCHLORATE	0.20	2.6 U	UG/KG

MW 3/11/09

COLUMBIA ANALYTICAL SERVICES

EXTRACTABLE ORGANICS
METHOD 6850
Reported: 12/24/08

Microbac Laboratories, Inc.
Project Reference: CH2M HILL - CAMP LEJEUNE
Client Sample ID : MR08-IS094-5-6-08D

Date Sampled : 12/04/08 15:15 **Order #:** 1160361 **Sample Matrix:** SOIL/SEDIMENT
Date Received: 12/06/08 **Submission #:** R2847625 **Percent Solid:** 91.7

ANALYTE	PQL	RESULT	UNITS
DATE EXTRACTED : 12/16/08			
DATE ANALYZED : 12/16/08			
ANALYTICAL DILUTION: 10.00			Dry Weight
PERCHLORATE	0.20	2.2 U	UG/KG

MW
3/11/09

COLUMBIA ANALYTICAL SERVICES

EXTRACTABLE ORGANICS
METHOD 6850
Reported: 12/24/08

Microbac Laboratories, Inc.
Project Reference: CH2M HILL - CAMP LEJEUNE
Client Sample ID : MR08-SS092-08D

Date Sampled : 12/04/08 15:30 **Order #:** 1160362 **Sample Matrix:** SOIL/SEDIMENT
Date Received: 12/06/08 **Submission #:** R2847625 **Percent Solid:** 86.1

ANALYTE	PQL	RESULT	UNITS
DATE EXTRACTED : 12/16/08			
DATE ANALYZED : 12/16/08			
ANALYTICAL DILUTION: 10.00			Dry Weight
PERCHLORATE	0.20	2.3 U	UG/KG

Leo
3/11/09

COLUMBIA ANALYTICAL SERVICES

EXTRACTABLE ORGANICS
METHOD 6850
Reported: 12/24/08

Microbac Laboratories, Inc.
Project Reference: CH2M HILL - CAMP LEJEUNE
Client Sample ID : MR08-IS092-4-5-08D

Date Sampled : 12/04/08 15:45 **Order #:** 1160363 **Sample Matrix:** SOIL/SEDIMENT
Date Received: 12/06/08 **Submission #:** R2847625 **Percent Solid:** 87.6

ANALYTE	PQL	RESULT	UNITS
DATE EXTRACTED : 12/16/08			
DATE ANALYZED : 12/17/08			
ANALYTICAL DILUTION: 10.00			Dry Weight
PERCHLORATE	0.20	2.3 U	UG/KG

RW
3/4/09

COLUMBIA ANALYTICAL SERVICES

EXTRACTABLE ORGANICS
METHOD 6850
Reported: 12/24/08

Microbac Laboratories, Inc.
Project Reference: CH2M HILL - CAMP LEJEUNE
Client Sample ID : MR08-EB01120408-SS

Date Sampled : 12/04/08 12:50 **Order #:** 1160364 **Sample Matrix:** WATER
Date Received: 12/06/08 **Submission #:** R2847625 **Analytical Run** 171471

ANALYTE	PQL	RESULT	UNITS
DATE EXTRACTED : 12/15/08			
DATE ANALYZED : 12/15/08			
ANALYTICAL DILUTION: 1.00			
PERCHLORATE	0.20	0.20 U	UG/L

lw
3/11/09

COLUMBIA ANALYTICAL SERVICES

24

EXTRACTABLE ORGANICS
METHOD 6850
Reported: 12/24/08

Microbac Laboratories, Inc.
Project Reference: CH2M HILL - CAMP LEJEUNE
Client Sample ID : MR08-EB01120408-IS

Date Sampled : 12/04/08 13:30 **Order #:** 1160365 **Sample Matrix:** WATER
Date Received: 12/06/08 **Submission #:** R2847625 **Analytical Run** 171471

ANALYTE	PQL	RESULT	UNITS
DATE EXTRACTED : 12/15/08			
DATE ANALYZED : 12/15/08			
ANALYTICAL DILUTION: 1.00			
PERCHLORATE	0.20	0.20 U	UG/L

aw
3/11/09

ENVIRONMENTAL
Data Services, Inc.

PERCHLORATE

USEPA Region IV - Level IV Review

Site: MCB Camp Lejeune, TO-09 SDG #: R2847638

Client: CH2M HILL, Inc., Virginia Beach, Virginia Date: March 11, 2009

Laboratory: Columbia Analytical Services, Inc., Rochester, NY Reviewer: Linda Sulkowski

EDS ID	Client Sample ID	Laboratory Sample ID	Matrix
1	MR08-SS067-08D	1160537	Soil
2	MR08-IS067-6-7-08D	1160538	Soil
3	MR08-SS068-08D	1160539	Soil
4	MR08-IS068-8-9-08D	1160540	Soil
5	MR08-SS069-08D	1160541	Soil
5MS	MR08-SS069-08DMS	1160541MS	Soil
5MSD	MR08-SS069-08DMSD	1160541MSD	Soil
6	MR08-SS069D-08D	1160542	Soil
7	MR08-IS069-6-7-08D	1160543	Soil
8	MR08-IS069D-6-7-08D	1160544	Soil
9	MR08-SS070-08D	1160545	Soil
10	MR08-IS070-8-9-08D	1160546	Soil
11	MR08-SS071-08D	1160547	Soil
12	MR08-IS071-6-7-08D	1160548	Soil
13	MR08-SS072-08D	1160549	Soil
14	MR08-IS072-6-7-08D	1160550	Soil
15	MR08-SS073-08D	1160551	Soil
16	MR08-IS073-6-7-08D	1160552	Soil
17	MR08-EB01120308-SS	1160553	Water
18	MR08-EB01120308-IS	1160554	Water

The USEPA "Contract Laboratory Program National Functional Guidelines for Inorganic Data Review," October 2004, and professional judgement were used in evaluating the data in this summary report.

Holding Times - All samples were prepared and analyzed within 28 days for perchlorate.

Calibration - The ICAL & CCAL exhibited acceptable %RSD and %D values respectively.

Method and Calibration Blanks - The method blanks and continuing calibration blanks were free of contamination.

Field and Equipment Blank - Field QC results are summarized below.

Blank ID	Compound	Conc. ug/L	Action Level ug/L	Qualifier	Affected Samples
MR08-EB01120308-SS	None - ND	-	-	-	-
MR08-EB01120308-IS	None - ND	-	-	-	-
MR08-FB01120608	None - ND	-	-	-	-

Matrix Spike/Duplicate - The matrix spike/duplicate sample exhibited acceptable %R and RPD values except the following.

MS/MSD Sample ID	Compound	%R	Qualifier	Affected Samples
5	Perchlorate	135%/135%/Ok	None	Samples ND

LCS - The LCS samples exhibited acceptable %R values.

Field Duplicates - Field duplicate results are summarized below.

Compound	MR08-SS069-08D ug/kg	MR08-SS069D-08D ug/kg	RPD	Qualifier
None	ND	ND	-	-

Compound	MR08-IS069-6-7-08D ug/kg	MR08-IS069D-6-7-08D ug/kg	RPD	Qualifier
None	ND	ND	-	-

Compound Quantitation - No discrepancies were identified.

COLUMBIA ANALYTICAL SERVICES

EXTRACTABLE ORGANICS
METHOD 6850
Reported: 12/29/08

Microbac Laboratories, Inc.
Project Reference: CH2M HILL - CAMP LEJEUNE
Client Sample ID : MR08-SS067-08D

Date Sampled : 12/03/08 08:30 **Order #:** 1160537 **Sample Matrix:** SOIL/SEDIMENT
Date Received: 12/06/08 **Submission #:** R2847638 **Percent Solid:** 71.6

ANALYTE	PQL	RESULT	UNITS
DATE EXTRACTED : 12/16/08			
DATE ANALYZED : 12/17/08			
ANALYTICAL DILUTION: 10.00			Dry Weight
PERCHLORATE	0.20	1.3 J	UG/KG

lw
3/11/09

2

COLUMBIA ANALYTICAL SERVICES

EXTRACTABLE ORGANICS
METHOD 6850
Reported: 12/29/08

Microbac Laboratories, Inc.
Project Reference: CH2M HILL - CAMP LEJEUNE
Client Sample ID : MR08-IS067-6-7-08D

Date Sampled : 12/03/08 08:55 **Order #:** 1160538 **Sample Matrix:** SOIL/SEDIMENT
Date Received: 12/06/08 **Submission #:** R2847638 **Percent Solid:** 82.6

ANALYTE	PQL	RESULT	UNITS
DATE EXTRACTED : 12/16/08			
DATE ANALYZED : 12/17/08			
ANALYTICAL DILUTION: 10.00			Dry Weight
PERCHLORATE	0.20	2.4 U	UG/KG

LCW
3/11/09

3

COLUMBIA ANALYTICAL SERVICES

EXTRACTABLE ORGANICS
METHOD 6850
Reported: 12/29/08

Microbac Laboratories, Inc.
Project Reference: CH2M HILL - CAMP LEJEUNE
Client Sample ID : MR08-SS068-08D

Date Sampled : 12/03/08 09:35 **Order #:** 1160539 **Sample Matrix:** SOIL/SEDIMENT
Date Received: 12/06/08 **Submission #:** R2847638 **Percent Solid:** 48.8

ANALYTE	PQL	RESULT	UNITS
DATE EXTRACTED : 12/16/08			
DATE ANALYZED : 12/17/08			
ANALYTICAL DILUTION: 10.00			Dry Weight
PERCHLORATE	0.20	4.1 U	UG/KG

MW
3/4/09

4

COLUMBIA ANALYTICAL SERVICES

EXTRACTABLE ORGANICS
METHOD 6850
Reported: 12/29/08

Microbac Laboratories, Inc.
Project Reference: CH2M HILL - CAMP LEJEUNE
Client Sample ID : MR08-IS068-8-9-08D

Date Sampled : 12/03/08 10:15 **Order #:** 1160540 **Sample Matrix:** SOIL/SEDIMENT
Date Received: 12/06/08 **Submission #:** R2847638 **Percent Solid:** 79.6

ANALYTE	PQL	RESULT	UNITS
DATE EXTRACTED : 12/16/08			
DATE ANALYZED : 12/17/08			
ANALYTICAL DILUTION: 10.00			Dry Weight
PERCHLORATE	0.20	2.5 U	UG/KG

hw
3/11/09

COLUMBIA ANALYTICAL SERVICES

EXTRACTABLE ORGANICS
METHOD 6850
Reported: 12/29/08

Microbac Laboratories, Inc.
Project Reference: CH2M HILL - CAMP LEJEUNE
Client Sample ID : MR08-SS069-08D

Date Sampled : 12/03/08 11:20 **Order #:** 1160541 **Sample Matrix:** SOIL/SEDIMENT
Date Received: 12/06/08 **Submission #:** R2847638 **Percent Solid:** 61.4

ANALYTE	PQL	RESULT	UNITS
DATE EXTRACTED : 12/16/08			
DATE ANALYZED : 12/17/08			
ANALYTICAL DILUTION: 10.00			Dry Weight
PERCHLORATE	0.20	3.3 U	UG/KG

MW
3/11/09

6

COLUMBIA ANALYTICAL SERVICES

EXTRACTABLE ORGANICS
METHOD 6850
Reported: 12/29/08

Microbac Laboratories, Inc.
Project Reference: CH2M HILL - CAMP LEJEUNE
Client Sample ID : MR08-SS069D-08D

Date Sampled : 12/03/08 11:30 **Order #:** 1160542 **Sample Matrix:** SOIL/SEDIMENT
Date Received: 12/06/08 **Submission #:** R2847638 **Percent Solid:** 60.9

ANALYTE	PQL	RESULT	UNITS
DATE EXTRACTED : 12/16/08			
DATE ANALYZED : 12/17/08			
ANALYTICAL DILUTION: 10.00			Dry Weight
PERCHLORATE	0.20	3.3 U	UG/KG

MW
3/11/09

7

COLUMBIA ANALYTICAL SERVICES

EXTRACTABLE ORGANICS
METHOD 6850
Reported: 12/29/08

Microbac Laboratories, Inc.
Project Reference: CH2M HILL - CAMP LEJEUNE
Client Sample ID : MR08-IS069-6-7-08D

Date Sampled : 12/03/08 11:55 **Order #:** 1160543 **Sample Matrix:** SOIL/SEDIMENT
Date Received: 12/06/08 **Submission #:** R2847638 **Percent Solid:** 71.1

ANALYTE	PQL	RESULT	UNITS
DATE EXTRACTED : 12/16/08			
DATE ANALYZED : 12/17/08			
ANALYTICAL DILUTION: 10.00			Dry Weight
PERCHLORATE	0.20	2.8 U	UG/KG

lw
3/11/09

COLUMBIA ANALYTICAL SERVICES

EXTRACTABLE ORGANICS
METHOD 6850
Reported: 12/29/08

Microbac Laboratories, Inc.
Project Reference: CH2M HILL - CAMP LEJEUNE
Client Sample ID : MR08-IS069D-6-7-08D

Date Sampled : 12/03/08 12:05 **Order #:** 1160544 **Sample Matrix:** SOIL/SEDIMENT
Date Received: 12/06/08 **Submission #:** R2847638 **Percent Solid:** 73.9

ANALYTE	PQL	RESULT	UNITS
DATE EXTRACTED : 12/16/08			
DATE ANALYZED : 12/17/08			
ANALYTICAL DILUTION: 10.00			Dry Weight
PERCHLORATE	0.20	2.7 U	UG/KG

lw 3/11/09

COLUMBIA ANALYTICAL SERVICES

EXTRACTABLE ORGANICS
METHOD 6850
Reported: 12/29/08

Microbac Laboratories, Inc.
Project Reference: CH2M HILL - CAMP LEJEUNE
Client Sample ID : MR08-SS070-08D

Date Sampled : 12/03/08 13:50 **Order #:** 1160545 **Sample Matrix:** SOIL/SEDIMENT
Date Received: 12/06/08 **Submission #:** R2847638 **Percent Solid:** 80.9

ANALYTE	PQL	RESULT	UNITS
DATE EXTRACTED : 12/16/08			
DATE ANALYZED : 12/17/08			
ANALYTICAL DILUTION: 10.00			Dry Weight
PERCHLORATE	0.20	2.5 U	UG/KG

MW
3/11/09

10

COLUMBIA ANALYTICAL SERVICES

EXTRACTABLE ORGANICS
METHOD 6850
Reported: 12/29/08

Microbac Laboratories, Inc.
Project Reference: CH2M HILL - CAMP LEJEUNE
Client Sample ID : MR08-IS070-8-9-08D

Date Sampled : 12/03/08 14:20 **Order #:** 1160546 **Sample Matrix:** SOIL/SEDIMENT
Date Received: 12/06/08 **Submission #:** R2847638 **Percent Solid:** 93.1

ANALYTE	PQL	RESULT	UNITS
DATE EXTRACTED : 12/16/08			
DATE ANALYZED : 12/17/08			
ANALYTICAL DILUTION: 10.00			Dry Weight
PERCHLORATE	0.20	2.1 U	UG/KG

lw
3/4/09

COLUMBIA ANALYTICAL SERVICES

11

EXTRACTABLE ORGANICS
METHOD 6850
Reported: 12/29/08

Microbac Laboratories, Inc.
Project Reference: CH2M HILL - CAMP LEJEUNE
Client Sample ID : MR08-SS071-08D

Date Sampled : 12/03/08 14:35 **Order #:** 1160547 **Sample Matrix:** SOIL/SEDIMENT
Date Received: 12/06/08 **Submission #:** R2847638 **Percent Solid:** 77.3

ANALYTE	PQL	RESULT	UNITS
DATE EXTRACTED : 12/16/08			
DATE ANALYZED : 12/17/08			
ANALYTICAL DILUTION: 10.00			Dry Weight
PERCHLORATE	0.20	2.6 U	UG/KG

lw
3/11/09

12

COLUMBIA ANALYTICAL SERVICES

EXTRACTABLE ORGANICS
METHOD 6850
Reported: 12/29/08

Microbac Laboratories, Inc.
Project Reference: CH2M HILL - CAMP LEJEUNE
Client Sample ID : MR08-IS071-6-7-08D

Date Sampled : 12/03/08 14:50 **Order #:** 1160548 **Sample Matrix:** SOIL/SEDIMENT
Date Received: 12/06/08 **Submission #:** R2847638 **Percent Solid:** 88.4

ANALYTE	PQL	RESULT	UNITS
DATE EXTRACTED : 12/16/08			
DATE ANALYZED : 12/17/08			
ANALYTICAL DILUTION: 10.00			Dry Weight
PERCHLORATE	0.20	2.3 U	UG/KG

MW
3/4/09

COLUMBIA ANALYTICAL SERVICES

EXTRACTABLE ORGANICS
METHOD 6850
Reported: 12/29/08

Microbac Laboratories, Inc.
Project Reference: CH2M HILL - CAMP LEJEUNE
Client Sample ID : MR08-SS072-08D

Date Sampled : 12/03/08 15:05 **Order #:** 1160549 **Sample Matrix:** SOIL/SEDIMENT
Date Received: 12/06/08 **Submission #:** R2847638 **Percent Solid:** 79.5

ANALYTE	PQL	RESULT	UNITS
DATE EXTRACTED : 12/16/08			
DATE ANALYZED : 12/17/08			
ANALYTICAL DILUTION: 10.00			Dry Weight
PERCHLORATE	0.20	2.5 U	UG/KG

MW
3/1/09

COLUMBIA ANALYTICAL SERVICES

EXTRACTABLE ORGANICS
METHOD 6850
Reported: 12/29/08

Microbac Laboratories, Inc.
Project Reference: CH2M HILL - CAMP LEJEUNE
Client Sample ID : MR08-IS072-6-7-08D

Date Sampled : 12/03/08 15:25 **Order #:** 1160550 **Sample Matrix:** SOIL/SEDIMENT
Date Received: 12/06/08 **Submission #:** R2847638 **Percent Solid:** 92.5

ANALYTE	PQL	RESULT	UNITS
DATE EXTRACTED : 12/16/08			
DATE ANALYZED : 12/17/08			
ANALYTICAL DILUTION: 10.00			Dry Weight
PERCHLORATE	0.20	2.2 U	UG/KG

MW
3/11/09

COLUMBIA ANALYTICAL SERVICES

EXTRACTABLE ORGANICS
METHOD 6850
Reported: 12/29/08

Microbac Laboratories, Inc.
Project Reference: CH2M HILL - CAMP LEJEUNE
Client Sample ID : MR08-SS073-08D

Date Sampled : 12/03/08 15:40 **Order #:** 1160551 **Sample Matrix:** SOIL/SEDIMENT
Date Received: 12/06/08 **Submission #:** R2847638 **Percent Solid:** 81.1

ANALYTE	PQL	RESULT	UNITS
DATE EXTRACTED : 12/16/08			
DATE ANALYZED : 12/17/08			
ANALYTICAL DILUTION: 10.00			Dry Weight
PERCHLORATE	0.20	2.5 U	UG/KG

lw
3/11/09

16

COLUMBIA ANALYTICAL SERVICES

EXTRACTABLE ORGANICS
METHOD 6850
Reported: 12/29/08

Microbac Laboratories, Inc.
Project Reference: CH2M HILL - CAMP LEJEUNE
Client Sample ID : MR08-IS073-6-7-08D

Date Sampled : 12/03/08 16:00 **Order #:** 1160552 **Sample Matrix:** SOIL/SEDIMENT
Date Received: 12/06/08 **Submission #:** R2847638 **Percent Solid:** 91.8

ANALYTE	PQL	RESULT	UNITS
DATE EXTRACTED : 12/16/08			
DATE ANALYZED : 12/17/08			
ANALYTICAL DILUTION: 10.00			Dry Weight
PERCHLORATE	0.20	2.2 U	UG/KG

LW
3/11/09

COLUMBIA ANALYTICAL SERVICES

EXTRACTABLE ORGANICS
METHOD 6850
Reported: 12/29/08

Microbac Laboratories, Inc.
Project Reference: CH2M HILL - CAMP LEJEUNE
Client Sample ID : MR08-EB01120308-SS

Date Sampled : 12/03/08 13:00 **Order #:** 1160553 **Sample Matrix:** WATER
Date Received: 12/06/08 **Submission #:** R2847638 **Analytical Run** 171471

ANALYTE	PQL	RESULT	UNITS
DATE EXTRACTED : 12/15/08			
DATE ANALYZED : 12/15/08			
ANALYTICAL DILUTION: 1.00			
PERCHLORATE	0.20	0.20 U	UG/L

RW 3/11/09

18

COLUMBIA ANALYTICAL SERVICES

EXTRACTABLE ORGANICS
METHOD 6850
Reported: 12/29/08

Microbac Laboratories, Inc.
Project Reference: CH2M HILL - CAMP LEJEUNE
Client Sample ID : MR08-EB01120308-IS

Date Sampled : 12/03/08 13:30 **Order #:** 1160554 **Sample Matrix:** WATER
Date Received: 12/06/08 **Submission #:** R2847638 **Analytical Run** 171471

ANALYTE	PQL	RESULT	UNITS
DATE EXTRACTED : 12/15/08			
DATE ANALYZED : 12/15/08			
ANALYTICAL DILUTION: 1.00			
PERCHLORATE	0.20	0.20 U	UG/L

Lw 3/11/09

ENVIRONMENTAL
Data Services, Inc.

PERCHLORATE

USEPA Region IV - Level IV Review

Site: MCB Camp Lejeune, TO-09 SDG #: R2847652

Client: CH2M HILL, Inc., Virginia Beach, Virginia Date: March 11, 2009

Laboratory: Columbia Analytical Services, Inc., Rochester, NY Reviewer: Linda Sulkowski

EDS ID	Client Sample ID	Laboratory Sample ID	Matrix
1	MR08-SS091-08D	1160803	Soil
2	MR08-IS091-2-3-08D	1160804	Soil
3	MR08-SS093-08D	1160805	Soil
4	MR08-IS093-2-3-08D	1160806	Soil
5	MR08-SS103-08D	1160807	Soil
6	MR08-IS103-3-4-08D	1160808	Soil
7	MR08-SS116-08D	1160809	Soil
8	MR08-IS116-3-4-08D	1160810	Soil
9	MR08-SS117-08D	1160811	Soil
10	MR08-IS117-2-3-08D	1160813	Soil
11	MR08-SS125-08D	1160816	Soil
12	MR08-IS125-4-5-08D	1160818	Soil
13	MR08-SS123-08D	1160820	Soil
14	MR08-IS123-6-7-08D	1160824	Soil
15	MR08-EB01120508-SS	1160840	Water
16	MR08-EB01120508-IS	1160842	Water

The USEPA "Contract Laboratory Program National Functional Guidelines for Inorganic Data Review," October 2004, and professional judgement were used in evaluating the data in this summary report.

Holding Times - All samples were prepared and analyzed within 28 days for perchlorate.

Calibration - The ICAL & CCAL exhibited acceptable %RSD and %D values respectively.

Method and Calibration Blanks - The method blanks and continuing calibration blanks were free of contamination.

Field and Equipment Blank - Field QC results are summarized below.

Blank ID	Compound	Conc. ug/L	Action Level ug/L	Qualifier	Affected Samples
MR08-EB01120508-SS	None - ND	-	-	-	-
MR08-EB01120508-IS	None - ND	-	-	-	-
MR08-FB01120608	None - ND	-	-	-	-

Matrix Spike/Duplicate - A MS/MSD sample was not analyzed.

LCS - The LCS samples exhibited acceptable %R values.

Field Duplicates - Field duplicate samples were not included in this data package.

Compound Quantitation - No discrepancies were identified.

COLUMBIA ANALYTICAL SERVICES

EXTRACTABLE ORGANICS
METHOD 6850
Reported: 01/05/09

Microbac Laboratories, Inc.
Project Reference: CH2M HILL - CAMP LEJEUNE
Client Sample ID : MR08-SS091-08D

Date Sampled : 12/05/08 08:35 **Order #:** 1160803 **Sample Matrix:** SOIL/SEDIMENT
Date Received: 12/09/08 **Submission #:** R2847652 **Percent Solid:** 75.5

ANALYTE	PQL	RESULT	UNITS
DATE EXTRACTED : 12/16/08			
DATE ANALYZED : 12/17/08			
ANALYTICAL DILUTION: 10.00			Dry Weight
PERCHLORATE	0.20	2.6 U	UG/KG

hW 3/11/09

COLUMBIA ANALYTICAL SERVICES

EXTRACTABLE ORGANICS
METHOD 6850
Reported: 01/05/09

Microbac Laboratories, Inc.
Project Reference: CH2M HILL - CAMP LEJEUNE
Client Sample ID : MR08-IS091-2-3-08D

Date Sampled : 12/05/08 08:45 **Order #:** 1160804 **Sample Matrix:** SOIL/SEDIMENT
Date Received: 12/09/08 **Submission #:** R2847652 **Percent Solid:** 75.0

ANALYTE	PQL	RESULT	UNITS
DATE EXTRACTED : 12/16/08			
DATE ANALYZED : 12/17/08			
ANALYTICAL DILUTION: 10.00			Dry Weight
PERCHLORATE	0.20	2.7 U	UG/KG

aw
3/11/09

COLUMBIA ANALYTICAL SERVICES

EXTRACTABLE ORGANICS
METHOD 6850
Reported: 01/05/09

Microbac Laboratories, Inc.
Project Reference: CH2M HILL - CAMP LEJEUNE
Client Sample ID : MR08-SS093-08D

Date Sampled : 12/05/08 09:25 **Order #:** 1160805 **Sample Matrix:** SOIL/SEDIMENT
Date Received: 12/09/08 **Submission #:** R2847652 **Percent Solid:** 88.4

ANALYTE	PQL	RESULT	UNITS
DATE EXTRACTED : 12/16/08			
DATE ANALYZED : 12/17/08			
ANALYTICAL DILUTION: 10.00			Dry Weight
PERCHLORATE	0.20	2.3 U	UG/KG

lw 3/11/09

COLUMBIA ANALYTICAL SERVICES

EXTRACTABLE ORGANICS
METHOD 6850
Reported: 01/05/09

Microbac Laboratories, Inc.
Project Reference: CH2M HILL - CAMP LEJEUNE
Client Sample ID : MR08-IS093-2-3-08D

Date Sampled : 12/05/08 09:50 **Order #:** 1160806 **Sample Matrix:** SOIL/SEDIMENT
Date Received: 12/09/08 **Submission #:** R2847652 **Percent Solid:** 81.8

ANALYTE	PQL	RESULT	UNITS
DATE EXTRACTED : 12/16/08			
DATE ANALYZED : 12/17/08			
ANALYTICAL DILUTION: 10.00			Dry Weight
PERCHLORATE	0.20	2.4 U	UG/KG

MW 3/11/09

COLUMBIA ANALYTICAL SERVICES

EXTRACTABLE ORGANICS
METHOD 6850
Reported: 01/05/09

Microbac Laboratories, Inc.
Project Reference: CH2M HILL - CAMP LEJEUNE
Client Sample ID : MR08-SS103-08D

Date Sampled : 12/05/08 10:10 **Order #:** 1160807 **Sample Matrix:** SOIL/SEDIMENT
Date Received: 12/09/08 **Submission #:** R2847652 **Percent Solid:** 86.0

ANALYTE	PQL	RESULT	UNITS
DATE EXTRACTED : 12/16/08			
DATE ANALYZED : 12/17/08			
ANALYTICAL DILUTION: 10.00			Dry Weight
PERCHLORATE	0.20	2.3 U	UG/KG

MW
3/11/09

COLUMBIA ANALYTICAL SERVICES

EXTRACTABLE ORGANICS
METHOD 6850
Reported: 01/05/09

Microbac Laboratories, Inc.
Project Reference: CH2M HILL - CAMP LEJEUNE
Client Sample ID : MR08-IS103-3-4-08D

Date Sampled : 12/05/08 10:30 **Order #:** 1160808 **Sample Matrix:** SOIL/SEDIMENT
Date Received: 12/09/08 **Submission #:** R2847652 **Percent Solid:** 85.7

ANALYTE	PQL	RESULT	UNITS
DATE EXTRACTED : 12/16/08			
DATE ANALYZED : 12/17/08			
ANALYTICAL DILUTION: 10.00			Dry Weight
PERCHLORATE	0.20	2.3 U	UG/KG

QCW 3/11/09

COLUMBIA ANALYTICAL SERVICES

7

EXTRACTABLE ORGANICS
METHOD 6850
Reported: 01/05/09

Microbac Laboratories, Inc.
Project Reference: CH2M HILL - CAMP LEJEUNE
Client Sample ID : MR08-SS116-08D

Date Sampled : 12/05/08 11:00 **Order #:** 1160809 **Sample Matrix:** SOIL/SEDIMENT
Date Received: 12/09/08 **Submission #:** R2847652 **Percent Solid:** 88.7

ANALYTE	PQL	RESULT	UNITS
DATE EXTRACTED : 12/16/08			
DATE ANALYZED : 12/17/08			
ANALYTICAL DILUTION: 10.00			Dry Weight
PERCHLORATE	0.20	2.3 U	UG/KG

lw 3/11/09

COLUMBIA ANALYTICAL SERVICES

EXTRACTABLE ORGANICS
METHOD 6850
Reported: 01/05/09

Microbac Laboratories, Inc.
Project Reference: CH2M HILL - CAMP LEJEUNE
Client Sample ID : MR08-IS116-3-4-08D

Date Sampled : 12/05/08 11:15 **Order #:** 1160810 **Sample Matrix:** SOIL/SEDIMENT
Date Received: 12/09/08 **Submission #:** R2847652 **Percent Solid:** 86.4

ANALYTE	PQL	RESULT	UNITS
DATE EXTRACTED : 12/16/08			
DATE ANALYZED : 12/17/08			
ANALYTICAL DILUTION: 10.00			Dry Weight
PERCHLORATE	0.20	2.3 U	UG/KG

MW 3/11/09

COLUMBIA ANALYTICAL SERVICES

EXTRACTABLE ORGANICS
METHOD 6850
Reported: 01/05/09

Microbac Laboratories, Inc.
Project Reference: CH2M HILL - CAMP LEJEUNE
Client Sample ID : MR08-SS117-08D

Date Sampled : 12/05/08 13:00 **Order #:** 1160811 **Sample Matrix:** SOIL/SEDIMENT
Date Received: 12/09/08 **Submission #:** R2847652 **Percent Solid:** 90.0

ANALYTE	PQL	RESULT	UNITS
DATE EXTRACTED : 12/16/08			
DATE ANALYZED : 12/17/08			
ANALYTICAL DILUTION: 10.00			Dry Weight
PERCHLORATE	0.20	2.2 U	UG/KG

RW 3/11/09

COLUMBIA ANALYTICAL SERVICES

EXTRACTABLE ORGANICS
METHOD 6850
Reported: 01/05/09

Microbac Laboratories, Inc.
Project Reference: CH2M HILL - CAMP LEJEUNE
Client Sample ID : MR08-IS117-2-3-08D

Date Sampled : 12/05/08 13:20 **Order #:** 1160813 **Sample Matrix:** SOIL/SEDIMENT
Date Received: 12/09/08 **Submission #:** R2847652 **Percent Solid:** 87.9

ANALYTE	PQL	RESULT	UNITS
DATE EXTRACTED : 12/16/08			
DATE ANALYZED : 12/17/08			
ANALYTICAL DILUTION: 10.00			Dry Weight
PERCHLORATE	0.20	2.3 U	UG/KG

lw
3/11/09

COLUMBIA ANALYTICAL SERVICES

11

EXTRACTABLE ORGANICS
METHOD 6850
Reported: 01/05/09

Microbac Laboratories, Inc.
Project Reference: CH2M HILL - CAMP LEJEUNE
Client Sample ID : MR08-SS125-08D

Date Sampled : 12/05/08 13:35 **Order #:** 1160816 **Sample Matrix:** SOIL/SEDIMENT
Date Received: 12/09/08 **Submission #:** R2847652 **Percent Solid:** 87.0

ANALYTE	PQL	RESULT	UNITS
DATE EXTRACTED : 12/16/08			
DATE ANALYZED : 12/17/08			
ANALYTICAL DILUTION: 10.00			Dry Weight
PERCHLORATE	0.20	2.3 U	UG/KG

ew
3/11/09

COLUMBIA ANALYTICAL SERVICES

EXTRACTABLE ORGANICS
METHOD 6850
Reported: 01/05/09

Microbac Laboratories, Inc.
Project Reference: CH2M HILL - CAMP LEJEUNE
Client Sample ID : MR08-IS125-4-5-08D

Date Sampled : 12/05/08 13:50 **Order #:** 1160818 **Sample Matrix:** SOIL/SEDIMENT
Date Received: 12/09/08 **Submission #:** R2847652 **Percent Solid:** 85.3

ANALYTE	PQL	RESULT	UNITS
DATE EXTRACTED : 12/16/08			
DATE ANALYZED : 12/17/08			
ANALYTICAL DILUTION: 10.00			Dry Weight
PERCHLORATE	0.20	2.3 U	UG/KG

hrw
3/11/09

COLUMBIA ANALYTICAL SERVICES

EXTRACTABLE ORGANICS
METHOD 6850
Reported: 01/05/09

Microbac Laboratories, Inc.
Project Reference: CH2M HILL - CAMP LEJEUNE
Client Sample ID : MR08-SS123-08D

Date Sampled : 12/05/08 14:20 **Order #:** 1160820 **Sample Matrix:** SOIL/SEDIMENT
Date Received: 12/09/08 **Submission #:** R2847652 **Percent Solid:** 91.6

ANALYTE	PQL	RESULT	UNITS
DATE EXTRACTED : 12/16/08			
DATE ANALYZED : 12/17/08			
ANALYTICAL DILUTION: 10.00			Dry Weight
PERCHLORATE	0.20	2.2 U	UG/KG

lus
3/11/09

COLUMBIA ANALYTICAL SERVICES

EXTRACTABLE ORGANICS
METHOD 6850
Reported: 01/05/09

Microbac Laboratories, Inc.
Project Reference: CH2M HILL - CAMP LEJEUNE
Client Sample ID : MR08-IS123-6-7-08D

Date Sampled : 12/05/08 14:30 **Order #:** 1160824 **Sample Matrix:** SOIL/SEDIMENT
Date Received: 12/09/08 **Submission #:** R2847652 **Percent Solid:** 88.3

ANALYTE	PQL	RESULT	UNITS
DATE EXTRACTED : 12/16/08			
DATE ANALYZED : 12/17/08			
ANALYTICAL DILUTION: 10.00			Dry Weight
PERCHLORATE	0.20	2.3 U	UG/KG

RW
3/4/09

15

COLUMBIA ANALYTICAL SERVICES

EXTRACTABLE ORGANICS
METHOD 6850
Reported: 01/05/09

Microbac Laboratories, Inc.
Project Reference: CH2M HILL - CAMP LEJEUNE
Client Sample ID : MR08-EB01120508-SS

Date Sampled : 12/05/08 13:20 **Order #:** 1160840 **Sample Matrix:** WATER
Date Received: 12/09/08 **Submission #:** R2847652 **Analytical Run** 171471

ANALYTE	PQL	RESULT	UNITS
DATE EXTRACTED : 12/15/08			
DATE ANALYZED : 12/15/08			
ANALYTICAL DILUTION: 1.00			
PERCHLORATE	0.20	0.20 U	UG/L

lew 3/11/09

COLUMBIA ANALYTICAL SERVICES

EXTRACTABLE ORGANICS
METHOD 6850
Reported: 01/05/09

Microbac Laboratories, Inc.
Project Reference: CH2M HILL - CAMP LEJEUNE
Client Sample ID : MR08-EB01120508-IS

Date Sampled : 12/05/08 14:00 **Order #:** 1160842 **Sample Matrix:** WATER
Date Received: 12/09/08 **Submission #:** R2847652 **Analytical Run** 171471

ANALYTE	PQL	RESULT	UNITS
DATE EXTRACTED : 12/15/08			
DATE ANALYZED : 12/15/08			
ANALYTICAL DILUTION: 1.00			
PERCHLORATE	0.20	0.20 U	UG/L

LW
3/11/09

ENVIRONMENTAL
Data Services, Inc.

PERCHLORATE

USEPA Region IV - Level IV Review

Site: MCB Camp Lejeune, TO-09 SDG #: R2847707

Client: CH2M HILL, Inc., Virginia Beach, Virginia Date: March 11, 2009

Laboratory: Columbia Analytical Services, Inc., Rochester, NY Reviewer: Linda Sulkowski

EDS ID	Client Sample ID	Laboratory Sample ID	Matrix
1	MR08-SS056-08D	1161749	Soil
2	MR08-SS056-2-3-08D	1161751	Soil
3	MR08-SS057-08D	1161752	Soil
4	MR08-IS057-2-3-08D	1161753	Soil
5	MR08-SS058-08D	1161754	Soil
6	MR08-IS058-2-3-08D	1161755	Soil
7	MR08-SS059-08D	1161756	Soil
7MS	MR08-SS059-08DMS	1161756MS	Soil
7MSD	MR08-SS059-08DMSD	1161756MSD	Soil
8	MR08-SS059D-08D	1161758	Soil
9	MR08-IS059-3-4-08D	1161760	Soil
9DL	MR08-IS059-3-4-08DDL	1161760DL	Soil
10	MR08-IS059D-3-4-08D	1161761	Soil
11	MR08-SS060-08D	1161763	Soil
12	MR08-IS060-2-3-08D	1161765	Soil
12DL	MR08-IS060-2-3-08DDL	1161765DL	Soil
13	MR08-SS061-08D	1161767	Soil
14	MR08-IS061-2-3-08D	1161769	Soil
14DL	MR08-IS061-2-3-08DDL	1161769DL	Soil
15	MR08-SS062-08D	1161770	Soil
15DL	MR08-SS062-08DDL	1161770DL	Soil
16	MR08-IS062-2-3-08D	1161771	Soil
17	MR08-SS063-08D	1161772	Soil
18	MR08-IS063-2-3-08D	1161773	Soil
19	MR08-SS064-08D	1161774	Soil
20	MR08-IS064-2-3-08D	1161776	Soil
21	MR08-SS065-08D	1161778	Soil
22	MR08-IS065-1-2-08D	1161780	Soil
23	MR08-SS066-08D	1161781	Soil
24	MR08-IS066-2-3-08D	1161783	Soil
25	MR08-SS080-08D	1161785	Soil
26	MR08-IS080-5-6-08D	1161786	Soil
27	MR08-SS081-08D	1161788	Soil
28	MR08-IS081-6-7-08D	1161789	Soil
29	MR08-SS082-08D	1161790	Soil

EDS ID	Client Sample ID	Laboratory Sample ID	Matrix
30	MR08-IS082-5-6-08D	1161791	Soil
31	MR08-SS083-08D	1161792	Soil
32	MR08-IS083-6-7-08D	1161793	Soil
33	MR08-SS084-08D	1161794	Soil
34	MR08-IS084-4-5-08D	1161795	Soil
35	MR08-SS085-08D	1161796	Soil
36	MR08-IS085-1-2-08D	1161797	Soil
36DL	MR08-IS085-1-2-08DDL	1161797DL	Soil
37	MR08-SS107-08D	1161798	Soil
38	MR08-IS107-2-3-08D	1161799	Soil
39	MR08-SS108-08D	1161800	Soil
40	MR08-IS108-2-3-08D	1161801	Soil
41	MR08-IS109-2-308D	1161802	Soil
42	MR08-IS109D-2-308D	1161803	Soil
43	MR08-SS109-08D	1161804	Soil
43MS	MR08-SS109-08DMS	1161804MS	Soil
43MSD	MR08-SS109-08DMSD	1161804MSD	Soil
43DL	MR08-SS109-08DDL	1161804DL	Soil
44	MR08-SS109D-08D	1161805	Soil
44DL	MR08-SS109D-08DDL	1161805DL	Soil
45	MR08-SS104-08D	1161806	Soil
46	MR08-SS105-08D	1161807	Soil
47	MR08-SS106-08D	1161808	Soil
48	MR08-IS104-1-2-08D	1161809	Soil
49	MR08-IS105-2-3-08D	1161810	Soil
50	MR08-IS106-2-3-08D	1161811	Soil
51	MR08-SS087-08D	1161812	Soil
52	MR08-IS087-2-3-08D	1161813	Soil
53	MR08-SS086-08D	1161814	Soil
53DL	MR08-SS086-08DDL	1161814DL	Soil
54	MR08-IS086-2-3-08D	1161815	Water
55	MR08-EB01120608-SS	1161816	Water
56	MR08-EB01120608-IS	1161817	Water
57	MR08-FB01120608	1161818	Water
58	MR08-EB01120708-SS	1161819	Water
59	MR08-EB01120708-IS	1161820	Water
60	MR08-EB01120808-SS	1161821	Water
61	MR08-EB01120808-IS	1161822	Water

The USEPA "Contract Laboratory Program National Functional Guidelines for Inorganic Data Review," October 2004, and professional judgement were used in evaluating the data in this summary report.

Holding Times - All samples were prepared and analyzed within 28 days for perchlorate.

Calibration - The ICAL & CCAL exhibited acceptable %RSD and %D values respectively.

Method and Calibration Blanks - The method blanks and continuing calibration blanks were free of contamination.

Field and Equipment Blank - Field QC results are summarized below.

Blank ID	Compound	Conc. ug/L	Action Level ug/L	Qualifier	Affected Samples
MR08-EB01120608-SS	None - ND	-	-	-	-
MR08-EB01120608-IS	None - ND	-	-	-	-
MR08-EB01120708-SS	None - ND	-	-	-	-
MR08-EB01120708-IS	None - ND	-	-	-	-
MR08-EB01120808-SS	None - ND	-	-	-	-
MR08-EB01120808-IS	None - ND	-	-	-	-
MR08-FB01120608	None - ND	-	-	-	-

Matrix Spike/Duplicate - The matrix spike/duplicate sample exhibited acceptable %R and RPD values except the following.

MS/MSD Sample ID	Compound	MS%R/MSD%R/RPD	Qualifier	Affected Samples
7	Perchlorate	130%/130%/Ok	None	Sample ND
42	Perchlorate	NC/NC/Ok	None	Sample ND

LCS - The LCS samples exhibited acceptable %R values.

Field Duplicates - Field duplicate results are summarized below.

Compound	MR08-SS059-08D ug/kg	MR08-SS059D-08D ug/kg	RPD	Qualifier
None	ND	ND	-	-

Compound	MR08-IS059-3-4-08D ug/kg	MR08-IS059D-3-4-08D ug/kg	RPD	Qualifier
Perchlorate	58	54	7%	None

Compound	MR08-IS109-2-3-08D ug/kg	MR08-IS109D-2-3-08D ug/kg	RPD	Qualifier
Perchlorate	5.1	2.2 U	NC	None

Compound	MR08-SS109-08D ug/kg	MR08-SS109D-08D ug/kg	RPD	Qualifier
Perchlorate	200	300	40%	None

Compound Quantitation - There were several dilutions. Refer to Form Is for which to use for reporting purposes.

COLUMBIA ANALYTICAL SERVICES

EXTRACTABLE ORGANICS
METHOD 6850
Reported: 01/07/09

Microbac Laboratories, Inc.
Project Reference: CH2M HILL - CAMP LEJEUNE
Client Sample ID : MR08-SS056-08D

Date Sampled : 12/06/08 08:30 **Order #:** 1161749 **Sample Matrix:** SOIL/SEDIMENT
Date Received: 12/11/08 **Submission #:** R2847707 **Percent Solid:** 67.0

ANALYTE	PQL	RESULT	UNITS
DATE EXTRACTED : 12/17/08			
DATE ANALYZED : 12/17/08			
ANALYTICAL DILUTION: 10.00			Dry Weight
PERCHLORATE	0.20	2.7 J	UG/KG

lw 3/11/09

COLUMBIA ANALYTICAL SERVICES

EXTRACTABLE ORGANICS
METHOD 6850
Reported: 01/07/09

Microbac Laboratories, Inc.
Project Reference: CH2M HILL - CAMP LEJEUNE
Client Sample ID : MR08-SS056-2-3-08D

Date Sampled : 12/06/08 08:45 **Order #:** 1161751 **Sample Matrix:** SOIL/SEDIMENT
Date Received: 12/11/08 **Submission #:** R2847707 **Percent Solid:** 79.4

ANALYTE	PQL	RESULT	UNITS
DATE EXTRACTED : 12/17/08			
DATE ANALYZED : 12/17/08			
ANALYTICAL DILUTION: 10.00			Dry Weight
PERCHLORATE	0.20	2.5	UG/KG

lw 3/11/09

3

COLUMBIA ANALYTICAL SERVICES

EXTRACTABLE ORGANICS
METHOD 6850
Reported: 01/07/09

Microbac Laboratories, Inc.
Project Reference: CH2M HILL - CAMP LEJEUNE
Client Sample ID : MR08-SS057-08D

Date Sampled : 12/06/08 09:25 **Order #:** 1161752 **Sample Matrix:** SOIL/SEDIMENT
Date Received: 12/11/08 **Submission #:** R2847707 **Percent Solid:** 69.4

ANALYTE	PQL	RESULT	UNITS
DATE EXTRACTED : 12/17/08			
DATE ANALYZED : 12/17/08			
ANALYTICAL DILUTION: 10.00			Dry Weight
PERCHLORATE	0.20	2.9 U	UG/KG

lew 3/11/09

COLUMBIA ANALYTICAL SERVICES

EXTRACTABLE ORGANICS
METHOD 6850
Reported: 01/07/09

Microbac Laboratories, Inc.
Project Reference: CH2M HILL - CAMP LEJEUNE
Client Sample ID : MR08-IS057-2-3-08D

Date Sampled : 12/06/08 09:40 **Order #:** 1161753 **Sample Matrix:** SOIL/SEDIMENT
Date Received: 12/11/08 **Submission #:** R2847707 **Percent Solid:** 85.4

ANALYTE	PQL	RESULT	UNITS
DATE EXTRACTED : 12/17/08			
DATE ANALYZED : 12/17/08			
ANALYTICAL DILUTION: 10.00			Dry Weight
PERCHLORATE	0.20	2.3 U	UG/KG

lew 3/11/09

COLUMBIA ANALYTICAL SERVICES

EXTRACTABLE ORGANICS
METHOD 6850
Reported: 01/07/09

Microbac Laboratories, Inc.
Project Reference: CH2M HILL - CAMP LEJEUNE
Client Sample ID : MR08-SS058-08D

Date Sampled : 12/06/08 10:05 **Order #:** 1161754 **Sample Matrix:** SOIL/SEDIMENT
Date Received: 12/11/08 **Submission #:** R2847707 **Percent Solid:** 87.1

ANALYTE	PQL	RESULT	UNITS
DATE EXTRACTED : 12/17/08			
DATE ANALYZED : 12/17/08			
ANALYTICAL DILUTION: 10.00			Dry Weight
PERCHLORATE	0.20	2.3 U	UG/KG

JEW 3/11/09

6

COLUMBIA ANALYTICAL SERVICES

EXTRACTABLE ORGANICS
METHOD 6850
Reported: 01/07/09

Microbac Laboratories, Inc.
Project Reference: CH2M HILL - CAMP LEJEUNE
Client Sample ID : MR08-IS058-2-3-08D

Date Sampled : 12/06/08 10:20 **Order #:** 1161755 **Sample Matrix:** SOIL/SEDIMENT
Date Received: 12/11/08 **Submission #:** R2847707 **Percent Solid:** 86.3

ANALYTE	PQL	RESULT	UNITS
DATE EXTRACTED : 12/17/08			
DATE ANALYZED : 12/18/08			
ANALYTICAL DILUTION: 10.00			Dry Weight
PERCHLORATE	0.20	28	UG/KG

AW 3/11/09

7

COLUMBIA ANALYTICAL SERVICES

EXTRACTABLE ORGANICS
METHOD 6850
Reported: 01/07/09

Microbac Laboratories, Inc.
Project Reference: CH2M HILL - CAMP LEJEUNE
Client Sample ID : MR08-SS059-08D

Date Sampled : 12/06/08 10:40 **Order #:** 1161756 **Sample Matrix:** SOIL/SEDIMENT
Date Received: 12/11/08 **Submission #:** R2847707 **Percent Solid:** 87.1

ANALYTE	PQL	RESULT	UNITS
DATE EXTRACTED : 12/17/08			
DATE ANALYZED : 12/18/08			
ANALYTICAL DILUTION: 10.00			Dry Weight
PERCHLORATE	0.20	2.3 U	UG/KG

LW 3/11/09

COLUMBIA ANALYTICAL SERVICES

EXTRACTABLE ORGANICS
METHOD 6850
Reported: 01/07/09

Microbac Laboratories, Inc.
Project Reference: CH2M HILL - CAMP LEJEUNE
Client Sample ID : MR08-SS059D-08D

Date Sampled : 12/06/08 10:45 **Order #:** 1161758 **Sample Matrix:** SOIL/SEDIMENT
Date Received: 12/11/08 **Submission #:** R2847707 **Percent Solid:** 87.3

ANALYTE	PQL	RESULT	UNITS
DATE EXTRACTED : 12/17/08			
DATE ANALYZED : 12/18/08			
ANALYTICAL DILUTION: 10.00			Dry Weight
PERCHLORATE	0.20	2.3 U	UG/KG

DW 3/11/09

COLUMBIA ANALYTICAL SERVICES

EXTRACTABLE ORGANICS
METHOD 6850
Reported: 01/07/09

Microbac Laboratories, Inc.
Project Reference: CH2M HILL - CAMP LEJEUNE
Client Sample ID : MR08-IS059-3-4-08D

Date Sampled : 12/06/08 10:50 **Order #:** 1161760 **Sample Matrix:** SOIL/SEDIMENT
Date Received: 12/11/08 **Submission #:** R2847707 **Percent Solid:** 88.0

ANALYTE	PQL	RESULT	UNITS
DATE EXTRACTED : 12/17/08			
DATE ANALYZED : 12/18/08			
ANALYTICAL DILUTION: 10.00			Dry Weight
PERCHLORATE	0.20	~~62~~ ~~E~~ R DL	UG/KG

R DL
Don't Report

Aw
3/11/09

9DL

COLUMBIA ANALYTICAL SERVICES

EXTRACTABLE ORGANICS
METHOD 6850
Reported: 01/07/09

Microbac Laboratories, Inc.
Project Reference: CH2M HILL - CAMP LEJEUNE
Client Sample ID : MR08-IS059-3-4-08D

Date Sampled : 12/06/08 10:50 **Order #:** 1161760 **Sample Matrix:** SOIL/SEDIMENT
Date Received: 12/11/08 **Submission #:** R2847707 **Percent Solid:** 88.0

ANALYTE	PQL	RESULT	UNITS
DATE EXTRACTED :			
DATE ANALYZED : 12/18/08			
ANALYTICAL DILUTION: 20.00			Dry Weight
PERCHLORATE	0.20	58 ~~D~~	UG/KG

lw 3/11/09

COLUMBIA ANALYTICAL SERVICES

EXTRACTABLE ORGANICS
METHOD 6850
Reported: 01/07/09

Microbac Laboratories, Inc.
Project Reference: CH2M HILL - CAMP LEJEUNE
Client Sample ID : MR08-IS059D-3-4-08D

Date Sampled : 12/06/08 11:00 **Order #:** 1161761 **Sample Matrix:** SOIL/SEDIMENT
Date Received: 12/11/08 **Submission #:** R2847707 **Percent Solid:** 85.2

ANALYTE	PQL	RESULT	UNITS
DATE EXTRACTED : 12/17/08			
DATE ANALYZED : 12/18/08			
ANALYTICAL DILUTION: 10.00			Dry Weight
PERCHLORATE	0.20	54	UG/KG

lw 3/11/09

11

COLUMBIA ANALYTICAL SERVICES

EXTRACTABLE ORGANICS
METHOD 6850
Reported: 01/07/09

Microbac Laboratories, Inc.
Project Reference: CH2M HILL - CAMP LEJEUNE
Client Sample ID : MR08-SS060-08D

Date Sampled : 12/06/08 11:20 **Order #:** 1161763 **Sample Matrix:** SOIL/SEDIMENT
Date Received: 12/11/08 **Submission #:** R2847707 **Percent Solid:** 88.1

ANALYTE	PQL	RESULT	UNITS
DATE EXTRACTED : 12/17/08			
DATE ANALYZED : 12/18/08			
ANALYTICAL DILUTION: 10.00			Dry Weight
PERCHLORATE	0.20	26	UG/KG

RW
3/11/09

12

COLUMBIA ANALYTICAL SERVICES

EXTRACTABLE ORGANICS
METHOD 6850
Reported: 01/07/09

Microbac Laboratories, Inc.
Project Reference: CH2M HILL - CAMP LEJEUNE
Client Sample ID : MR08-IS060-2-3-08D

Date Sampled : 12/06/08 12:45 **Order #:** 1161765 **Sample Matrix:** SOIL/SEDIMENT
Date Received: 12/11/08 **Submission #:** R2847707 **Percent Solid:** 84.2

ANALYTE	PQL	RESULT	UNITS
DATE EXTRACTED : 12/17/08			
DATE ANALYZED : 12/18/08			
ANALYTICAL DILUTION: 10.00			Dry Weight
PERCHLORATE	0.20	~~76 E~~ R DL	UG/KG

R DL
Don't Report

Jw 3/11/09

12DL

COLUMBIA ANALYTICAL SERVICES

EXTRACTABLE ORGANICS
METHOD 6850
Reported: 01/07/09

Microbac Laboratories, Inc.
Project Reference: CH2M HILL - CAMP LEJEUNE
Client Sample ID : MR08-IS060-2-3-08D

Date Sampled : 12/06/08 12:45 **Order #:** 1161765 **Sample Matrix:** SOIL/SEDIMENT
Date Received: 12/11/08 **Submission #:** R2847707 **Percent Solid:** 84.2

ANALYTE	PQL	RESULT	UNITS
DATE EXTRACTED : 12/17/08			
DATE ANALYZED : 12/18/08			
ANALYTICAL DILUTION: 20.00			Dry Weight
PERCHLORATE	0.20	66 ~~D~~	UG/KG

lw 3/11/09

COLUMBIA ANALYTICAL SERVICES

EXTRACTABLE ORGANICS
METHOD 6850
Reported: 01/07/09

Microbac Laboratories, Inc.
Project Reference: CH2M HILL - CAMP LEJEUNE
Client Sample ID : MR08-SS061-08D

Date Sampled : 12/06/08 13:20 **Order #:** 1161767 **Sample Matrix:** SOIL/SEDIMENT
Date Received: 12/11/08 **Submission #:** R2847707 **Percent Solid:** 76.1

ANALYTE	PQL	RESULT	UNITS
DATE EXTRACTED : 12/17/08			
DATE ANALYZED : 12/18/08			
ANALYTICAL DILUTION: 10.00			Dry Weight
PERCHLORATE	0.20	17	UG/KG

lw 3/11/09

14

COLUMBIA ANALYTICAL SERVICES

EXTRACTABLE ORGANICS
METHOD 6850
Reported: 01/07/09

Microbac Laboratories, Inc.
Project Reference: CH2M HILL - CAMP LEJEUNE
Client Sample ID : MR08-IS061-2-3-08D

Date Sampled : 12/06/08 13:30 **Order #:** 1161769 **Sample Matrix:** SOIL/SEDIMENT
Date Received: 12/11/08 **Submission #:** R2847707 **Percent Solid:** 85.4

ANALYTE	PQL	RESULT	UNITS
DATE EXTRACTED : 12/17/08			
DATE ANALYZED : 12/18/08			
ANALYTICAL DILUTION: 10.00			Dry Weight
PERCHLORATE	0.20	~~90 E~~ R DL	UG/KG

R DL
Don't Report

lw 3/11/09

14 D2

COLUMBIA ANALYTICAL SERVICES

EXTRACTABLE ORGANICS
METHOD 6850
Reported: 01/07/09

Microbac Laboratories, Inc.
Project Reference: CH2M HILL - CAMP LEJEUNE
Client Sample ID : MR08-IS061-2-3-08D

Date Sampled : 12/06/08 13:30 **Order #:** 1161769 **Sample Matrix:** SOIL/SEDIMENT
Date Received: 12/11/08 **Submission #:** R2847707 **Percent Solid:** 85.4

ANALYTE	PQL	RESULT	UNITS
DATE EXTRACTED : 12/17/08			
DATE ANALYZED : 12/18/08			
ANALYTICAL DILUTION: 20.00			Dry Weight
PERCHLORATE	0.20	84 D	UG/KG

lw 3/11/09

15

COLUMBIA ANALYTICAL SERVICES

EXTRACTABLE ORGANICS
METHOD 6850
Reported: 01/07/09

Microbac Laboratories, Inc.
Project Reference: CH2M HILL - CAMP LEJEUNE
Client Sample ID : MR08-SS062-08D

Date Sampled : 12/06/08 14:00 **Order #:** 1161770 **Sample Matrix:** SOIL/SEDIMENT
Date Received: 12/11/08 **Submission #:** R2847707 **Percent Solid:** 86.0

ANALYTE	PQL	RESULT	UNITS
DATE EXTRACTED : 12/17/08			
DATE ANALYZED : 12/18/08			
ANALYTICAL DILUTION: 10.00			Dry Weight
PERCHLORATE	0.20	~~79 E~~ R	DLUG/KG

R DL

Don't Report

lew 3/11/09

15 DL

COLUMBIA ANALYTICAL SERVICES

EXTRACTABLE ORGANICS
METHOD 6850
Reported: 01/07/09

Microbac Laboratories, Inc.
Project Reference: CH2M HILL - CAMP LEJEUNE
Client Sample ID : MR08-SS062-08D

Date Sampled : 12/06/08 14:00 **Order #:** 1161770 **Sample Matrix:** SOIL/SEDIMENT
Date Received: 12/11/08 **Submission #:** R2847707 **Percent Solid:** 86.0

ANALYTE	PQL	RESULT	UNITS
DATE EXTRACTED : 12/17/08			
DATE ANALYZED : 12/18/08			
ANALYTICAL DILUTION: 20.00			Dry Weight
PERCHLORATE	0.20	73 ~~D~~	UG/KG

RW
3/4/09

COLUMBIA ANALYTICAL SERVICES

EXTRACTABLE ORGANICS
METHOD 6850
Reported: 01/07/09

Microbac Laboratories, Inc.
Project Reference: CH2M HILL - CAMP LEJEUNE
Client Sample ID : MR08-IS062-2-3-08D

Date Sampled : 12/06/08 14:15 **Order #:** 1161771 **Sample Matrix:** SOIL/SEDIMENT
Date Received: 12/11/08 **Submission #:** R2847707 **Percent Solid:** 88.1

ANALYTE	PQL	RESULT	UNITS
DATE EXTRACTED : 12/17/08			
DATE ANALYZED : 12/18/08			
ANALYTICAL DILUTION: 10.00			Dry Weight
PERCHLORATE	0.20	42	UG/KG

lw
3/11/09

COLUMBIA ANALYTICAL SERVICES

EXTRACTABLE ORGANICS
METHOD 6850
Reported: 01/07/09

Microbac Laboratories, Inc.
Project Reference: CH2M HILL - CAMP LEJEUNE
Client Sample ID : MR08-SS063-08D

Date Sampled : 12/06/08 14:45 **Order #:** 1161772 **Sample Matrix:** SOIL/SEDIMENT
Date Received: 12/11/08 **Submission #:** R2847707 **Percent Solid:** 84.4

ANALYTE	PQL	RESULT	UNITS
DATE EXTRACTED : 12/17/08			
DATE ANALYZED : 12/18/08			
ANALYTICAL DILUTION: 10.00			Dry Weight
PERCHLORATE	0.20	1.1 J	UG/KG

lew
3/11/09

18

COLUMBIA ANALYTICAL SERVICES

EXTRACTABLE ORGANICS
METHOD 6850
Reported: 01/07/09

Microbac Laboratories, Inc.
Project Reference: CH2M HILL - CAMP LEJEUNE
Client Sample ID : MR08-IS063-2-3-08D

Date Sampled : 12/06/08 14:55 **Order #:** 1161773 **Sample Matrix:** SOIL/SEDIMENT
Date Received: 12/11/08 **Submission #:** R2847707 **Percent Solid:** 86.2

ANALYTE	PQL	RESULT	UNITS
DATE EXTRACTED : 12/17/08			
DATE ANALYZED : 12/18/08			
ANALYTICAL DILUTION: 50.00			Dry Weight
PERCHLORATE	0.20	110	UG/KG

LW 3/11/09

COLUMBIA ANALYTICAL SERVICES

EXTRACTABLE ORGANICS
METHOD 6850
Reported: 01/07/09

Microbac Laboratories, Inc.
Project Reference: CH2M HILL - CAMP LEJEUNE
Client Sample ID : MR08-SS064-08D

Date Sampled : 12/06/08 15:05 **Order #:** 1161774 **Sample Matrix:** SOIL/SEDIMENT
Date Received: 12/11/08 **Submission #:** R2847707 **Percent Solid:** 86.6

ANALYTE	PQL	RESULT	UNITS
DATE EXTRACTED : 12/17/08			
DATE ANALYZED : 12/18/08			
ANALYTICAL DILUTION: 10.00			Dry Weight
PERCHLORATE	0.20	5.1	UG/KG

AW
3/11/09

COLUMBIA ANALYTICAL SERVICES

EXTRACTABLE ORGANICS
METHOD 6850
Reported: 01/07/09

Microbac Laboratories, Inc.
Project Reference: CH2M HILL - CAMP LEJEUNE
Client Sample ID : MR08-IS064-2-3-08D

Date Sampled : 12/06/08 15:25 **Order #:** 1161776 **Sample Matrix:** SOIL/SEDIMENT
Date Received: 12/11/08 **Submission #:** R2847707 **Percent Solid:** 89.5

ANALYTE	PQL	RESULT	UNITS
DATE EXTRACTED : 12/17/08			
DATE ANALYZED : 12/18/08			
ANALYTICAL DILUTION: 10.00			Dry Weight
PERCHLORATE	0.20	26	UG/KG

lew
3/11/09

COLUMBIA ANALYTICAL SERVICES

EXTRACTABLE ORGANICS
METHOD 6850
Reported: 01/07/09

Microbac Laboratories, Inc.
Project Reference: CH2M HILL - CAMP LEJEUNE
Client Sample ID : MR08-SS065-08D

Date Sampled : 12/06/08 15:35 **Order #:** 1161778 **Sample Matrix:** SOIL/SEDIMENT
Date Received: 12/11/08 **Submission #:** R2847707 **Percent Solid:** 76.7

ANALYTE	PQL	RESULT	UNITS
DATE EXTRACTED : 12/17/08			
DATE ANALYZED : 12/18/08			
ANALYTICAL DILUTION: 10.00			Dry Weight
PERCHLORATE	0.20	1.4 J	UG/KG

lw
3/11/09

COLUMBIA ANALYTICAL SERVICES

EXTRACTABLE ORGANICS
METHOD 6850
Reported: 01/07/09

Microbac Laboratories, Inc.
Project Reference: CH2M HILL - CAMP LEJEUNE
Client Sample ID : MR08-IS065-1-2-08D

Date Sampled : 12/06/08 15:45 **Order #:** 1161780 **Sample Matrix:** SOIL/SEDIMENT
Date Received: 12/11/08 **Submission #:** R2847707 **Percent Solid:** 84.2

ANALYTE	PQL	RESULT	UNITS
DATE EXTRACTED : 12/17/08			
DATE ANALYZED : 12/18/08			
ANALYTICAL DILUTION: 10.00			Dry Weight
PERCHLORATE	0.20	1.2 J	UG/KG

lew
3/11/09

COLUMBIA ANALYTICAL SERVICES

EXTRACTABLE ORGANICS
METHOD 6850
Reported: 01/07/09

Microbac Laboratories, Inc.
Project Reference: CH2M HILL - CAMP LEJEUNE
Client Sample ID : MR08-SS066-08D

Date Sampled : 12/06/08 16:05 **Order #:** 1161781 **Sample Matrix:** SOIL/SEDIMENT
Date Received: 12/11/08 **Submission #:** R2847707 **Percent Solid:** 83.0

ANALYTE	PQL	RESULT	UNITS
DATE EXTRACTED : 12/17/08			
DATE ANALYZED : 12/18/08			
ANALYTICAL DILUTION: 10.00			Dry Weight
PERCHLORATE	0.20	2.4 U	UG/KG

Dw 3/11/09

COLUMBIA ANALYTICAL SERVICES

EXTRACTABLE ORGANICS
METHOD 6850
Reported: 01/07/09

Microbac Laboratories, Inc.
Project Reference: CH2M HILL - CAMP LEJEUNE
Client Sample ID : MR08-IS066-2-3-08D

Date Sampled : 12/06/08 16:25 **Order #:** 1161783 **Sample Matrix:** SOIL/SEDIMENT
Date Received: 12/11/08 **Submission #:** R2847707 **Percent Solid:** 64.9

ANALYTE	PQL	RESULT	UNITS
DATE EXTRACTED : 12/17/08			
DATE ANALYZED : 12/18/08			
ANALYTICAL DILUTION: 10.00			Dry Weight
PERCHLORATE	0.20	10	UG/KG

lw
3/11/09

COLUMBIA ANALYTICAL SERVICES

EXTRACTABLE ORGANICS
METHOD 6850
Reported: 01/07/09

Microbac Laboratories, Inc.
Project Reference: CH2M HILL - CAMP LEJEUNE
Client Sample ID : MR08-SS080-08D

Date Sampled : 12/07/08 08:20 **Order #:** 1161785 **Sample Matrix:** SOIL/SEDIMENT
Date Received: 12/11/08 **Submission #:** R2847707 **Percent Solid:** 71.9

ANALYTE	PQL	RESULT	UNITS
DATE EXTRACTED : 12/17/08			
DATE ANALYZED : 12/18/08			
ANALYTICAL DILUTION: 10.00			Dry Weight
PERCHLORATE	0.20	2.8 U	UG/KG

lw 3/11/09

COLUMBIA ANALYTICAL SERVICES

EXTRACTABLE ORGANICS
METHOD 6850
Reported: 01/07/09

Microbac Laboratories, Inc.
Project Reference: CH2M HILL - CAMP LEJEUNE
Client Sample ID : MR08-IS080-5-6-08D

Date Sampled : 12/07/08 08:40 **Order #:** 1161786 **Sample Matrix:** SOIL/SEDIMENT
Date Received: 12/11/08 **Submission #:** R2847707 **Percent Solid:** 89.0

ANALYTE	PQL	RESULT	UNITS
DATE EXTRACTED : 12/17/08			
DATE ANALYZED : 12/18/08			
ANALYTICAL DILUTION: 10.00			Dry Weight
PERCHLORATE	0.20	2.2 U	UG/KG

DW 3/11/09

COLUMBIA ANALYTICAL SERVICES

EXTRACTABLE ORGANICS
METHOD 6850
Reported: 01/07/09

Microbac Laboratories, Inc.
Project Reference: CH2M HILL - CAMP LEJEUNE
Client Sample ID : MR08-SS081-08D

Date Sampled : 12/07/08 09:00 **Order #:** 1161788 **Sample Matrix:** SOIL/SEDIMENT
Date Received: 12/11/08 **Submission #:** R2847707 **Percent Solid:** 63.4

ANALYTE	PQL	RESULT	UNITS
DATE EXTRACTED : 12/17/08			
DATE ANALYZED : 12/18/08			
ANALYTICAL DILUTION: 10.00			Dry Weight
PERCHLORATE	0.20	2.2 J	UG/KG

lew 3/11/09

COLUMBIA ANALYTICAL SERVICES

EXTRACTABLE ORGANICS
METHOD 6850
Reported: 01/07/09

Microbac Laboratories, Inc.
Project Reference: CH2M HILL - CAMP LEJEUNE
Client Sample ID : MR08-IS081-6-7-08D

Date Sampled : 12/07/08 09:20 **Order #:** 1161789 **Sample Matrix:** SOIL/SEDIMENT
Date Received: 12/11/08 **Submission #:** R2847707 **Percent Solid:** 90.4

ANALYTE	PQL	RESULT	UNITS
DATE EXTRACTED : 12/17/08			
DATE ANALYZED : 12/18/08			
ANALYTICAL DILUTION: 10.00			Dry Weight
PERCHLORATE	0.20	2.2 U	UG/KG

hw 3/11/09

COLUMBIA ANALYTICAL SERVICES

29

EXTRACTABLE ORGANICS
METHOD 6850
Reported: 01/07/09

Microbac Laboratories, Inc.
Project Reference: CH2M HILL - CAMP LEJEUNE
Client Sample ID : MR08-SS082-08D

Date Sampled : 12/07/08 09:35 **Order #:** 1161790 **Sample Matrix:** SOIL/SEDIMENT
Date Received: 12/11/08 **Submission #:** R2847707 **Percent Solid:** 80.2

ANALYTE	PQL	RESULT	UNITS
DATE EXTRACTED : 12/17/08			
DATE ANALYZED : 12/18/08			
ANALYTICAL DILUTION: 10.00			Dry Weight
PERCHLORATE	0.20	1.5 J	UG/KG

lew
3/11/09

COLUMBIA ANALYTICAL SERVICES

30

EXTRACTABLE ORGANICS
METHOD 6850
Reported: 01/07/09

Microbac Laboratories, Inc.
Project Reference: CH2M HILL - CAMP LEJEUNE
Client Sample ID : MR08-IS082-5-6-08D

Date Sampled : 12/07/08 09:50 **Order #:** 1161791 **Sample Matrix:** SOIL/SEDIMENT
Date Received: 12/11/08 **Submission #:** R2847707 **Percent Solid:** 97.2

ANALYTE	PQL	RESULT	UNITS
DATE EXTRACTED : 12/17/08			
DATE ANALYZED : 12/18/08			
ANALYTICAL DILUTION: 10.00			Dry Weight
PERCHLORATE	0.20	2.1 U	UG/KG

lw 3/11/09

COLUMBIA ANALYTICAL SERVICES

EXTRACTABLE ORGANICS
METHOD 6850
Reported: 01/07/09

Microbac Laboratories, Inc.
Project Reference: CH2M HILL - CAMP LEJEUNE
Client Sample ID : MR08-SS083-08D

Date Sampled : 12/07/08 10:20 **Order #:** 1161792 **Sample Matrix:** SOIL/SEDIMENT
Date Received: 12/11/08 **Submission #:** R2847707 **Percent Solid:** 84.6

ANALYTE	PQL	RESULT	UNITS
DATE EXTRACTED : 12/17/08			
DATE ANALYZED : 12/18/08			
ANALYTICAL DILUTION: 10.00			Dry Weight
PERCHLORATE	0.20	14	UG/KG

lw 3/11/09

COLUMBIA ANALYTICAL SERVICES

EXTRACTABLE ORGANICS
METHOD 6850
Reported: 01/07/09

Microbac Laboratories, Inc.
Project Reference: CH2M HILL - CAMP LEJEUNE
Client Sample ID : MR08-IS083-6-7-08D

Date Sampled : 12/07/08 10:30 **Order #:** 1161793 **Sample Matrix:** SOIL/SEDIMENT
Date Received: 12/11/08 **Submission #:** R2847707 **Percent Solid:** 94.8

ANALYTE	PQL	RESULT	UNITS
DATE EXTRACTED : 12/17/08			
DATE ANALYZED : 12/18/08			
ANALYTICAL DILUTION: 10.00			Dry Weight
PERCHLORATE	0.20	2.1 U	UG/KG

lw
3/11/09

COLUMBIA ANALYTICAL SERVICES

EXTRACTABLE ORGANICS
METHOD 6850
Reported: 01/07/09

Microbac Laboratories, Inc.
Project Reference: CH2M HILL - CAMP LEJEUNE
Client Sample ID : MR08-SS084-08D

Date Sampled : 12/07/08 10:50 **Order #:** 1161794 **Sample Matrix:** SOIL/SEDIMENT
Date Received: 12/11/08 **Submission #:** R2847707 **Percent Solid:** 85.6

ANALYTE	PQL	RESULT	UNITS
DATE EXTRACTED : 12/17/08			
DATE ANALYZED : 12/18/08			
ANALYTICAL DILUTION: 10.00			Dry Weight
PERCHLORATE	0.20	33	UG/KG

lrw
3/11/09

COLUMBIA ANALYTICAL SERVICES

EXTRACTABLE ORGANICS
METHOD 6850
Reported: 01/07/09

Microbac Laboratories, Inc.
Project Reference: CH2M HILL - CAMP LEJEUNE
Client Sample ID : MR08-IS084-4-5-08D

Date Sampled : 12/07/08 11:00 **Order #:** 1161795 **Sample Matrix:** SOIL/SEDIMENT
Date Received: 12/11/08 **Submission #:** R2847707 **Percent Solid:** 90.8

ANALYTE	PQL	RESULT	UNITS
DATE EXTRACTED : 12/17/08			
DATE ANALYZED : 12/18/08			
ANALYTICAL DILUTION: 10.00			Dry Weight
PERCHLORATE	0.20	2.2 U	UG/KG

fw
3/11/09

COLUMBIA ANALYTICAL SERVICES

EXTRACTABLE ORGANICS
METHOD 6850
Reported: 01/07/09

Microbac Laboratories, Inc.
Project Reference: CH2M HILL - CAMP LEJEUNE
Client Sample ID : MR08-SS085-08D

Date Sampled : 12/07/08 11:25 **Order #:** 1161796 **Sample Matrix:** SOIL/SEDIMENT
Date Received: 12/11/08 **Submission #:** R2847707 **Percent Solid:** 80.8

ANALYTE	PQL	RESULT	UNITS
DATE EXTRACTED : 12/19/08			
DATE ANALYZED : 12/22/08			
ANALYTICAL DILUTION: 10.00			Dry Weight
PERCHLORATE	0.20	12	UG/KG

RW
3/11/09

36

COLUMBIA ANALYTICAL SERVICES

EXTRACTABLE ORGANICS
METHOD 6850
Reported: 01/07/09

Microbac Laboratories, Inc.
Project Reference: CH2M HILL - CAMP LEJEUNE
Client Sample ID : MR08-IS085-1-2-08D

Date Sampled : 12/07/08 11:45 **Order #:** 1161797 **Sample Matrix:** SOIL/SEDIMENT
Date Received: 12/11/08 **Submission #:** R2847707 **Percent Solid:** 87.2

ANALYTE	PQL	RESULT	UNITS
DATE EXTRACTED : 12/19/08			
DATE ANALYZED : 12/22/08			
ANALYTICAL DILUTION: 10.00			Dry Weight
PERCHLORATE	0.20	3~~90 E~~ R DL	UG/KG

R DL
Don't Report

lw
3/11/09

3bDL

COLUMBIA ANALYTICAL SERVICES

EXTRACTABLE ORGANICS
METHOD 6850
Reported: 01/07/09

Microbac Laboratories, Inc.
Project Reference: CH2M HILL - CAMP LEJEUNE
Client Sample ID : MR08-IS085-1-2-08D

Date Sampled : 12/07/08 11:45 **Order #:** 1161797 **Sample Matrix:** SOIL/SEDIMENT
Date Received: 12/11/08 **Submission #:** R2847707 **Percent Solid:** 87.2

ANALYTE	PQL	RESULT	UNITS
DATE EXTRACTED : 12/19/08			
DATE ANALYZED : 12/23/08			
ANALYTICAL DILUTION: 100.00			Dry Weight
PERCHLORATE	0.20	350 D	UG/KG

kw
3/11/09

37

COLUMBIA ANALYTICAL SERVICES

EXTRACTABLE ORGANICS
METHOD 6850
Reported: 01/07/09

Microbac Laboratories, Inc.
Project Reference: CH2M HILL - CAMP LEJEUNE
Client Sample ID : MR08-SS107-08D

Date Sampled : 12/07/08 14:15 **Order #:** 1161798 **Sample Matrix:** SOIL/SEDIMENT
Date Received: 12/11/08 **Submission #:** R2847707 **Percent Solid:** 91.3

ANALYTE	PQL	RESULT	UNITS
DATE EXTRACTED : 12/19/08			
DATE ANALYZED : 12/22/08			
ANALYTICAL DILUTION: 10.00			Dry Weight
PERCHLORATE	0.20	2.2 U	UG/KG

RW
3/11/09

COLUMBIA ANALYTICAL SERVICES

EXTRACTABLE ORGANICS
METHOD 6850
Reported: 01/07/09

Microbac Laboratories, Inc.
Project Reference: CH2M HILL - CAMP LEJEUNE
Client Sample ID : MR08-IS107-2-3-08D

Date Sampled : 12/07/08 15:00 **Order #:** 1161799 **Sample Matrix:** SOIL/SEDIMENT
Date Received: 12/11/08 **Submission #:** R2847707 **Percent Solid:** 88.9

ANALYTE	PQL	RESULT	UNITS
DATE EXTRACTED : 12/19/08			
DATE ANALYZED : 12/22/08			
ANALYTICAL DILUTION: 10.00			Dry Weight
PERCHLORATE	0.20	2.2 U	UG/KG

lw
3/11/09

COLUMBIA ANALYTICAL SERVICES

EXTRACTABLE ORGANICS
METHOD 6850
Reported: 01/07/09

Microbac Laboratories, Inc.
Project Reference: CH2M HILL - CAMP LEJEUNE
Client Sample ID : MR08-SS108-08D

Date Sampled : 12/07/08 15:45 **Order #:** 1161800 **Sample Matrix:** SOIL/SEDIMENT
Date Received: 12/11/08 **Submission #:** R2847707 **Percent Solid:** 93.9

ANALYTE	PQL	RESULT	UNITS
DATE EXTRACTED : 12/19/08			
DATE ANALYZED : 12/22/08			
ANALYTICAL DILUTION: 10.00			Dry Weight
PERCHLORATE	0.20	2.4	UG/KG

lw
3/11/09

COLUMBIA ANALYTICAL SERVICES

EXTRACTABLE ORGANICS
METHOD 6850
Reported: 01/07/09

Microbac Laboratories, Inc.
Project Reference: CH2M HILL - CAMP LEJEUNE
Client Sample ID : MR08-IS108-2-3-08D

Date Sampled : 12/07/08 15:55 **Order #:** 1161801 **Sample Matrix:** SOIL/SEDIMENT
Date Received: 12/11/08 **Submission #:** R2847707 **Percent Solid:** 83.5

ANALYTE	PQL	RESULT	UNITS
DATE EXTRACTED : 12/19/08			
DATE ANALYZED : 12/22/08			
ANALYTICAL DILUTION: 10.00			Dry Weight
PERCHLORATE	0.20	2.4 U	UG/KG

lw
3/4/09

COLUMBIA ANALYTICAL SERVICES

EXTRACTABLE ORGANICS
METHOD 6850
Reported: 01/07/09

Microbac Laboratories, Inc.
Project Reference: CH2M HILL - CAMP LEJEUNE
Client Sample ID : MR08-IS109-2-3-08D

Date Sampled : 12/07/08 16:30 **Order #:** 1161802 **Sample Matrix:** SOIL/SEDIMENT
Date Received: 12/11/08 **Submission #:** R2847707 **Percent Solid:** 84.8

ANALYTE	PQL	RESULT	UNITS
DATE EXTRACTED : 12/19/08			
DATE ANALYZED : 12/22/08			
ANALYTICAL DILUTION: 10.00			Dry Weight
PERCHLORATE	0.20	5.1	UG/KG

lew
3/11/09

COLUMBIA ANALYTICAL SERVICES

EXTRACTABLE ORGANICS
METHOD 6850
Reported: 01/07/09

Microbac Laboratories, Inc.
Project Reference: CH2M HILL - CAMP LEJEUNE
Client Sample ID : MR08-IS109D-2-3-08D

Date Sampled : 12/07/08 16:45 **Order #:** 1161803 **Sample Matrix:** SOIL/SEDIMENT
Date Received: 12/11/08 **Submission #:** R2847707 **Percent Solid:** 88.9

ANALYTE	PQL	RESULT	UNITS
DATE EXTRACTED : 12/19/08			
DATE ANALYZED : 12/22/08			
ANALYTICAL DILUTION: 10.00			Dry Weight
PERCHLORATE	0.20	2.2 U	UG/KG

lw
3/11/09

43

COLUMBIA ANALYTICAL SERVICES

EXTRACTABLE ORGANICS
METHOD 6850
Reported: 01/07/09

Microbac Laboratories, Inc.
Project Reference: CH2M HILL - CAMP LEJEUNE
Client Sample ID : MR08-SS109-08D

Date Sampled : 12/08/08 08:45 **Order #:** 1161804 **Sample Matrix:** SOIL/SEDIMENT
Date Received: 12/11/08 **Submission #:** R2847707 **Percent Solid:** 94.5

ANALYTE	PQL	RESULT	UNITS
DATE EXTRACTED : 12/19/08			
DATE ANALYZED : 12/22/08			
ANALYTICAL DILUTION: 10.00			Dry Weight
PERCHLORATE	0.20	~~230 E~~ R	DL UG/KG

R DL

Don't Report

lw
3/11/09

43DL

COLUMBIA ANALYTICAL SERVICES

EXTRACTABLE ORGANICS
METHOD 6850
Reported: 01/07/09

Microbac Laboratories, Inc.
Project Reference: CH2M HILL - CAMP LEJEUNE
Client Sample ID : MR08-SS109-08D

Date Sampled : 12/08/08 08:45 **Order #:** 1161804 **Sample Matrix:** SOIL/SEDIMENT
Date Received: 12/11/08 **Submission #:** R2847707 **Percent Solid:** 94.5

ANALYTE	PQL	RESULT	UNITS
DATE EXTRACTED : 12/19/08			
DATE ANALYZED : 12/23/08			
ANALYTICAL DILUTION: 50.00			Dry Weight
PERCHLORATE	0.20	200 ~~D~~	UG/KG

lw
3/11/09

COLUMBIA ANALYTICAL SERVICES

EXTRACTABLE ORGANICS
METHOD 6850
Reported: 01/07/09

Microbac Laboratories, Inc.
Project Reference: CH2M HILL - CAMP LEJEUNE
Client Sample ID : MR08-SS109D-08D

Date Sampled : 12/08/08 09:00 **Order #:** 1161805 **Sample Matrix:** SOIL/SEDIMENT
Date Received: 12/11/08 **Submission #:** R2847707 **Percent Solid:** 94.8

ANALYTE	PQL	RESULT	UNITS
DATE EXTRACTED : 12/19/08			
DATE ANALYZED : 12/22/08			
ANALYTICAL DILUTION: 10.00			Dry Weight
PERCHLORATE	0.20	~~330 E~~ R DL	UG/KG

R DL
Don't Report

LW
3/11/09

44DL

COLUMBIA ANALYTICAL SERVICES

EXTRACTABLE ORGANICS
METHOD 6850
Reported: 01/07/09

Microbac Laboratories, Inc.
Project Reference: CH2M HILL - CAMP LEJEUNE
Client Sample ID : MR08-SS109D-08D

Date Sampled : 12/08/08 09:00 **Order #:** 1161805 **Sample Matrix:** SOIL/SEDIMENT
Date Received: 12/11/08 **Submission #:** R2847707 **Percent Solid:** 94.8

ANALYTE	PQL	RESULT	UNITS
DATE EXTRACTED : 12/19/08			
DATE ANALYZED : 12/23/08			
ANALYTICAL DILUTION: 100.00			Dry Weight
PERCHLORATE	0.20	300 D	UG/KG

lw
3/11/09

COLUMBIA ANALYTICAL SERVICES

EXTRACTABLE ORGANICS
METHOD 6850
Reported: 01/07/09

Microbac Laboratories, Inc.
Project Reference: CH2M HILL - CAMP LEJEUNE
Client Sample ID : MR08-SS104-08D

Date Sampled : 12/08/08 10:00 **Order #:** 1161806 **Sample Matrix:** SOIL/SEDIMENT
Date Received: 12/11/08 **Submission #:** R2847707 **Percent Solid:** 84.5

ANALYTE	PQL	RESULT	UNITS
DATE EXTRACTED : 12/19/08			
DATE ANALYZED : 12/22/08			
ANALYTICAL DILUTION: 10.00			Dry Weight
PERCHLORATE	0.20	2.4 U	UG/KG

MW
3/11/09

COLUMBIA ANALYTICAL SERVICES

EXTRACTABLE ORGANICS
METHOD 6850
Reported: 01/07/09

Microbac Laboratories, Inc.
Project Reference: CH2M HILL - CAMP LEJEUNE
Client Sample ID : MR08-SS105-08D

Date Sampled : 12/08/08 11:00 **Order #:** 1161807 **Sample Matrix:** SOIL/SEDIMENT
Date Received: 12/11/08 **Submission #:** R2847707 **Percent Solid:** 93.8

ANALYTE	PQL	RESULT	UNITS
DATE EXTRACTED : 12/19/08			
DATE ANALYZED : 12/22/08			
ANALYTICAL DILUTION: 10.00			Dry Weight
PERCHLORATE	0.20	2.1 U	UG/KG

LW
3/11/09

COLUMBIA ANALYTICAL SERVICES

EXTRACTABLE ORGANICS
METHOD 6850
Reported: 01/07/09

Microbac Laboratories, Inc.
Project Reference: CH2M HILL - CAMP LEJEUNE
Client Sample ID : MR08-SS106-08D

Date Sampled : 12/08/08 11:30 **Order #:** 1161808 **Sample Matrix:** SOIL/SEDIMENT
Date Received: 12/11/08 **Submission #:** R2847707 **Percent Solid:** 88.7

ANALYTE	PQL	RESULT	UNITS
DATE EXTRACTED : 12/19/08			
DATE ANALYZED : 12/22/08			
ANALYTICAL DILUTION: 10.00			Dry Weight
PERCHLORATE	0.20	2.3 U	UG/KG

lw
3/4/09

48

COLUMBIA ANALYTICAL SERVICES

EXTRACTABLE ORGANICS
METHOD 6850
Reported: 01/07/09

Microbac Laboratories, Inc.
Project Reference: CH2M HILL - CAMP LEJEUNE
Client Sample ID : MR08-IS104-1-2-08D

Date Sampled : 12/08/08 12:20 **Order #:** 1161809 **Sample Matrix:** SOIL/SEDIMENT
Date Received: 12/11/08 **Submission #:** R2847707 **Percent Solid:** 84.5

ANALYTE	PQL	RESULT	UNITS
DATE EXTRACTED : 12/19/08			
DATE ANALYZED : 12/22/08			
ANALYTICAL DILUTION: 10.00			Dry Weight
PERCHLORATE	0.20	2.4 U	UG/KG

RW
3/4/09

COLUMBIA ANALYTICAL SERVICES

EXTRACTABLE ORGANICS
METHOD 6850
Reported: 01/07/09

Microbac Laboratories, Inc.
Project Reference: CH2M HILL - CAMP LEJEUNE
Client Sample ID : MR08-IS105-2-3-08D

Date Sampled : 12/08/08 12:55 **Order #:** 1161810 **Sample Matrix:** SOIL/SEDIMENT
Date Received: 12/11/08 **Submission #:** R2847707 **Percent Solid:** 88.6

ANALYTE	PQL	RESULT	UNITS
DATE EXTRACTED : 12/19/08			
DATE ANALYZED : 12/22/08			
ANALYTICAL DILUTION: 10.00			Dry Weight
PERCHLORATE	0.20	2.3 U	UG/KG

Qw 3/11/09

COLUMBIA ANALYTICAL SERVICES

EXTRACTABLE ORGANICS
METHOD 6850
Reported: 01/07/09

Microbac Laboratories, Inc.
Project Reference: CH2M HILL - CAMP LEJEUNE
Client Sample ID : MR08-IS106-2-3-08D

Date Sampled : 12/08/08 13:30 **Order #:** 1161811 **Sample Matrix:** SOIL/SEDIMENT
Date Received: 12/11/08 **Submission #:** R2847707 **Percent Solid:** 88.6

ANALYTE	PQL	RESULT	UNITS
DATE EXTRACTED : 12/19/08			
DATE ANALYZED : 12/22/08			
ANALYTICAL DILUTION: 10.00			Dry Weight
PERCHLORATE	0.20	2.3 U	UG/KG

JW
3/11/09

COLUMBIA ANALYTICAL SERVICES

EXTRACTABLE ORGANICS
METHOD 6850
Reported: 01/07/09

Microbac Laboratories, Inc.
Project Reference: CH2M HILL - CAMP LEJEUNE
Client Sample ID : MR08-SS087-08D

Date Sampled : 12/08/08 14:20 **Order #:** 1161812 **Sample Matrix:** SOIL/SEDIMENT
Date Received: 12/11/08 **Submission #:** R2847707 **Percent Solid:** 91.8

ANALYTE	PQL	RESULT	UNITS
DATE EXTRACTED : 12/19/08			
DATE ANALYZED : 12/22/08			
ANALYTICAL DILUTION: 10.00			Dry Weight
PERCHLORATE	0.20	19	UG/KG

lw
3/11/09

COLUMBIA ANALYTICAL SERVICES

EXTRACTABLE ORGANICS
METHOD 6850
Reported: 01/07/09

Microbac Laboratories, Inc.
Project Reference: CH2M HILL - CAMP LEJEUNE
Client Sample ID : MR08-IS087-2-3-08D

Date Sampled : 12/08/08 14:45 **Order #:** 1161813 **Sample Matrix:** SOIL/SEDIMENT
Date Received: 12/11/08 **Submission #:** R2847707 **Percent Solid:** 87.3

ANALYTE	PQL	RESULT	UNITS
DATE EXTRACTED : 12/19/08			
DATE ANALYZED : 12/22/08			
ANALYTICAL DILUTION: 10.00			Dry Weight
PERCHLORATE	0.20	2.3 U	UG/KG

hw
3/11/09

COLUMBIA ANALYTICAL SERVICES

EXTRACTABLE ORGANICS
METHOD 6850
Reported: 01/07/09

Microbac Laboratories, Inc.
Project Reference: CH2M HILL - CAMP LEJEUNE
Client Sample ID : MR08-SS086-08D

Date Sampled : 12/08/08 15:15 **Order #:** 1161814 **Sample Matrix:** SOIL/SEDIMENT
Date Received: 12/11/08 **Submission #:** R2847707 **Percent Solid:** 90.8

ANALYTE	PQL	RESULT	UNITS
DATE EXTRACTED : 12/19/08			
DATE ANALYZED : 12/22/08			
ANALYTICAL DILUTION: 10.00			Dry Weight
PERCHLORATE	0.20	130 ~~E~~ R DL	UG/KG

R DL
DUN't Report

RW
3/4/09

53DL

COLUMBIA ANALYTICAL SERVICES

EXTRACTABLE ORGANICS
METHOD 6850
Reported: 01/07/09

Microbac Laboratories, Inc.
Project Reference: CH2M HILL - CAMP LEJEUNE
Client Sample ID : MR08-SS086-08D

Date Sampled : 12/08/08 15:15 **Order #:** 1161814 **Sample Matrix:** SOIL/SEDIMENT
Date Received: 12/11/08 **Submission #:** R2847707 **Percent Solid:** 90.8

ANALYTE	PQL	RESULT	UNITS
DATE EXTRACTED : 12/19/08			
DATE ANALYZED : 12/23/08			
ANALYTICAL DILUTION: 50.00			Dry Weight
PERCHLORATE	0.20	130 ~~D~~	UG/KG

lew
3/11/09

COLUMBIA ANALYTICAL SERVICES

EXTRACTABLE ORGANICS
METHOD 6850
Reported: 01/07/09

Microbac Laboratories, Inc.
Project Reference: CH2M HILL - CAMP LEJEUNE
Client Sample ID : MR08-IS086-2-3-08D

Date Sampled : 12/08/08 15:30 **Order #:** 1161815 **Sample Matrix:** SOIL/SEDIMENT
Date Received: 12/11/08 **Submission #:** R2847707 **Percent Solid:** 82.7

ANALYTE	PQL	RESULT	UNITS
DATE EXTRACTED : 12/19/08			
DATE ANALYZED : 12/22/08			
ANALYTICAL DILUTION: 10.00			Dry Weight
PERCHLORATE	0.20	2.4 U	UG/KG

lw
3/11/09

COLUMBIA ANALYTICAL SERVICES

EXTRACTABLE ORGANICS
METHOD 6850
Reported: 01/07/09

Microbac Laboratories, Inc.
Project Reference: CH2M HILL - CAMP LEJEUNE
Client Sample ID : MR08-EB01120608-SS

Date Sampled : 12/06/08 13:00 **Order #:** 1161816 **Sample Matrix:** WATER
Date Received: 12/11/08 **Submission #:** R2847707 **Analytical Run** 171471

ANALYTE	PQL	RESULT	UNITS
DATE EXTRACTED : 12/15/08			
DATE ANALYZED : 12/15/08			
ANALYTICAL DILUTION: 1.00			
PERCHLORATE	0.20	0.20 U	UG/L

fcw
3/11/09

56

COLUMBIA ANALYTICAL SERVICES

EXTRACTABLE ORGANICS
METHOD 6850
Reported: 01/07/09

Microbac Laboratories, Inc.
Project Reference: CH2M HILL - CAMP LEJEUNE
Client Sample ID : MR08-EB01120608-IS

Date Sampled : 12/06/08 13:30 **Order #:** 1161817 **Sample Matrix:** WATER
Date Received: 12/11/08 **Submission #:** R2847707 **Analytical Run** 171471

ANALYTE	PQL	RESULT	UNITS
DATE EXTRACTED : 12/15/08			
DATE ANALYZED : 12/15/08			
ANALYTICAL DILUTION: 1.00			
PERCHLORATE	0.20	0.20 U	UG/L

lw
3/11/09

COLUMBIA ANALYTICAL SERVICES

EXTRACTABLE ORGANICS
METHOD 6850
Reported: 01/07/09

Microbac Laboratories, Inc.
Project Reference: CH2M HILL - CAMP LEJEUNE
Client Sample ID : MR08-FB01120608

Date Sampled : 12/06/08 15:20 **Order #:** 1161818 **Sample Matrix:** WATER
Date Received: 12/11/08 **Submission #:** R2847707 **Analytical Run** 171471

ANALYTE	PQL	RESULT	UNITS
DATE EXTRACTED : 12/15/08			
DATE ANALYZED : 12/15/08			
ANALYTICAL DILUTION: 1.00			
PERCHLORATE	0.20	0.20 U	UG/L

lw
3/4/09

COLUMBIA ANALYTICAL SERVICES

EXTRACTABLE ORGANICS
METHOD 6850
Reported: 01/07/09

Microbac Laboratories, Inc.
Project Reference: CH2M HILL - CAMP LEJEUNE
Client Sample ID : MR08-EB01120708-SS

Date Sampled : 12/06/08 15:00 **Order #:** 1161819 **Sample Matrix:** WATER
Date Received: 12/11/08 **Submission #:** R2847707 **Analytical Run** 171471

ANALYTE	PQL	RESULT	UNITS
DATE EXTRACTED : 12/15/08			
DATE ANALYZED : 12/15/08			
ANALYTICAL DILUTION: 1.00			
PERCHLORATE	0.20	0.20 U	UG/L

LW
3/11/09

COLUMBIA ANALYTICAL SERVICES

EXTRACTABLE ORGANICS
METHOD 6850
Reported: 01/07/09

Microbac Laboratories, Inc.
Project Reference: CH2M HILL - CAMP LEJEUNE
Client Sample ID : MR08-EB01120708-IS

Date Sampled : 12/06/08 15:30 **Order #:** 1161820 **Sample Matrix:** WATER
Date Received: 12/11/08 **Submission #:** R2847707 **Analytical Run** 171471

ANALYTE	PQL	RESULT	UNITS
DATE EXTRACTED : 12/15/08			
DATE ANALYZED : 12/15/08			
ANALYTICAL DILUTION: 1.00			
PERCHLORATE	0.20	0.20 U	UG/L

lw
3/11/09

60

COLUMBIA ANALYTICAL SERVICES

EXTRACTABLE ORGANICS
METHOD 6850
Reported: 01/07/09

Microbac Laboratories, Inc.
Project Reference: CH2M HILL - CAMP LEJEUNE
Client Sample ID : MR08-EB01120808-SS

Date Sampled : 12/06/08 : **Order #:** 1161821 **Sample Matrix:** WATER
Date Received: 12/11/08 **Submission #:** R2847707 **Analytical Run** 171471

ANALYTE	PQL	RESULT	UNITS
DATE EXTRACTED : 12/15/08			
DATE ANALYZED : 12/16/08			
ANALYTICAL DILUTION: 1.00			
PERCHLORATE	0.20	0.20 U	UG/L

lw
3/11/09

COLUMBIA ANALYTICAL SERVICES

EXTRACTABLE ORGANICS
METHOD 6850
Reported: 01/07/09

Microbac Laboratories, Inc.
Project Reference: CH2M HILL - CAMP LEJEUNE
Client Sample ID : MR08-EB01120808-IS

Date Sampled : 12/06/08 : **Order #:** 1161822 **Sample Matrix:** WATER
Date Received: 12/11/08 **Submission #:** R2847707 **Analytical Run** 171471

ANALYTE	PQL	RESULT	UNITS
DATE EXTRACTED : 12/15/08			
DATE ANALYZED : 12/16/08			
ANALYTICAL DILUTION: 1.00			
PERCHLORATE	0.20	0.20 U	UG/L

lew
3/11/09

ENVIRONMENTAL
Data Services, Inc.

PERCHLORATE

USEPA Region IV - Level IV Review

Site: MCB Camp Lejeune, TO-09 SDG #: R2847747

Client: CH2M HILL, Inc., Virginia Beach, Virginia Date: March 11, 2009

Laboratory: Columbia Analytical Services, Inc., Rochester, NY Reviewer: Linda Sulkowski

EDS ID	Client Sample ID	Laboratory Sample ID	Matrix
1	MR08-SS088-08D	1162423	Soil
2	MR08-IS088-2-3-08D	1162424	Soil
3	MR08-SS089-08D	1162425	Soil
4	MR08-SS089D-08D	1162426	Soil
5	MR08-IS089-2-3-08D	1162427	Soil
6	MR08-IS089D-2-3-08D	1162428	Soil
7	MR08-SS090-08D	1162429	Soil
8	MR08-IS090-2-3-08D	1162430	Soil
9	MR08-SS115-08D	1162431	Soil
10	MR08-IS115-2-3-08D	1162432	Soil
11	MR08-SS114-08D	1162433	Soil
12	MR08-IS114-2-3-08D	1162434	Soil
13	MR08-SS113-08D	1162435	Soil
14	MR08-IS113-2-3-08D	1162436	Soil
15	MR08-SS129-08D	1162437	Soil
16	MR08-SS129D-08D	1162438	Soil
17	MR08-IS129-2-3-08D	1162439	Soil
18	MR08-IS129D-2-3-08D	1162440	Soil
19	MR08-SS128-08D	1162441	Soil
20	MR08-IS128-08D	1162442	Soil
21	MR08-SS098-08D	1162443	Soil
22	MR08-IS098-3-4-08D	1162444	Soil
23	MR08-SS121-08D	1162445	Soil
24	MR08-IS121-2-3-08D	1162446	Soil
25	MR08-SS124-08D	1162447	Soil
26	MR08-IS124-2-3-08D	1162448	Soil
27	MR08-SS099-08D	1162449	Soil
28	MR08-SS099D-08D	1162450	Soil
29	MR08-IS099-2-3-08D	1162451	Soil
30	MR08-IS099D-2-3-08D	1162452	Soil
31	MR08-SS100-08D	1162453	Soil
32	MR08-IS100-2-3-08D	1162454	Soil
33	MR08-SS101-08D	1162455	Soil
34	MR08-IS101-2-3-08D	1162456	Soil
35	MR08-EB01120908-SS	1162457	Water

EDS ID	Client Sample ID	Laboratory Sample ID	Matrix
36	MR08-EB01120908-IS	1162458	Water
37	MR08-EB01121008-SS	1162459	Water

The USEPA "Contract Laboratory Program National Functional Guidelines for Inorganic Data Review," October 2004, and professional judgement were used in evaluating the data in this summary report.

Holding Times - All samples were prepared and analyzed within 28 days for perchlorate.

Calibration - The ICAL & CCAL exhibited acceptable %RSD and %D values respectively.

Method and Calibration Blanks - The method blanks and continuing calibration blanks were free of contamination.

Field and Equipment Blank - Field QC results are summarized below.

Blank ID	Compound	Conc. ug/L	Action Level ug/L	Qualifier	Affected Samples
MR08-EB01120908-SS	None - ND	-	-	-	-
MR08-EB01120908-IS	None - ND	-	-	-	-
MR08-EB01121008-SS	None - ND	-	-	-	-
MR08-FB01120608	None - ND	-	-	-	-

Matrix Spike/Duplicate - The matrix spike/duplicate samples exhibited acceptable %R and RPD values.

LCS - The LCS samples exhibited acceptable %R values.

Field Duplicates - Field duplicate results are summarized below.

Compound	MR08-SS089-08D ug/kg	MR08-SS089D-08D ug/kg	RPD	Qualifier
Perchlorate	6.6	7.4	11%	None

Compound	MR08-IS089-2-3-08D ug/kg	MR08-IS089D-2-3-08D ug/kg	RPD	Qualifier
None	ND	ND	-	-

Compound	MR08-SS129-08D ug/kg	MR08-SS129D-08D ug/kg	RPD	Qualifier
None	ND	ND	-	-

Compound	MR08-IS129-2-3-08D ug/kg	MR08-IS129D-2-3-08D ug/kg	RPD	Qualifier
None	ND	ND	-	-

Compound	MR08-SS099-08D ug/kg	MR08-SS099D-08D ug/kg	RPD	Qualifier
None	ND	ND	-	-

Compound	MR08-IS099-2-3-08D ug/kg	MR08-IS099D-2-3-08D ug/kg	RPD	Qualifier
None	ND	ND	-	-

Compound Quantitation - No discrepancies were identified.

COLUMBIA ANALYTICAL SERVICES

EXTRACTABLE ORGANICS
METHOD 6850
Reported: 01/05/09

Microbac Laboratories, Inc.
Project Reference: CH2M HILL - CAMP LEJEUNE
Client Sample ID : MR08-SS088-08D

Date Sampled : 12/09/08 08:25 **Order #:** 1162423 **Sample Matrix:** SOIL/SEDIMENT
Date Received: 12/12/08 **Submission #:** R2847747 **Percent Solid:** 88.6

ANALYTE	PQL	RESULT	UNITS
DATE EXTRACTED : 12/22/08			
DATE ANALYZED : 12/23/08			
ANALYTICAL DILUTION: 10.00			Dry Weight
PERCHLORATE	0.20	3.3	UG/KG

les 3/11/09

COLUMBIA ANALYTICAL SERVICES

EXTRACTABLE ORGANICS
METHOD 6850
Reported: 01/05/09

Microbac Laboratories, Inc.
Project Reference: CH2M HILL - CAMP LEJEUNE
Client Sample ID : MR08-IS088-2-3-08D

Date Sampled : 12/09/08 08:50 **Order #:** 1162424 **Sample Matrix:** SOIL/SEDIMENT
Date Received: 12/12/08 **Submission #:** R2847747 **Percent Solid:** 91.1

ANALYTE	PQL	RESULT	UNITS
DATE EXTRACTED : 12/22/08			
DATE ANALYZED : 12/24/08			
ANALYTICAL DILUTION: 10.00			Dry Weight
PERCHLORATE	0.20	1.4 J	UG/KG

kw
3/11/09

3

COLUMBIA ANALYTICAL SERVICES

EXTRACTABLE ORGANICS
METHOD 6850
Reported: 01/05/09

Microbac Laboratories, Inc.
Project Reference: CH2M HILL - CAMP LEJEUNE
Client Sample ID : MR08-SS089-08D

Date Sampled : 12/09/08 09:25 **Order #:** 1162425 **Sample Matrix:** SOIL/SEDIMENT
Date Received: 12/12/08 **Submission #:** R2847747 **Percent Solid:** 89.1

ANALYTE	PQL	RESULT	UNITS
DATE EXTRACTED : 12/22/08			
DATE ANALYZED : 12/23/08			
ANALYTICAL DILUTION: 10.00			Dry Weight
PERCHLORATE	0.20	6.6	UG/KG

lw 3/11/09

COLUMBIA ANALYTICAL SERVICES

EXTRACTABLE ORGANICS
METHOD 6850
Reported: 01/05/09

Microbac Laboratories, Inc.
Project Reference: CH2M HILL - CAMP LEJEUNE
Client Sample ID : MR08-SS089D-08D

Date Sampled : 12/09/08 09:35 **Order #:** 1162426 **Sample Matrix:** SOIL/SEDIMENT
Date Received: 12/12/08 **Submission #:** R2847747 **Percent Solid:** 89.5

ANALYTE	PQL	RESULT	UNITS
DATE EXTRACTED : 12/22/08			
DATE ANALYZED : 12/23/08			
ANALYTICAL DILUTION: 10.00			Dry Weight
PERCHLORATE	0.20	7.4	UG/KG

JEW 3/11/09

5

COLUMBIA ANALYTICAL SERVICES

EXTRACTABLE ORGANICS
METHOD 6850
Reported: 01/05/09

Microbac Laboratories, Inc.
Project Reference: CH2M HILL - CAMP LEJEUNE
Client Sample ID : MR08-IS089-2-3-08D

Date Sampled : 12/09/08 09:50 **Order #:** 1162427 **Sample Matrix:** SOIL/SEDIMENT
Date Received: 12/12/08 **Submission #:** R2847747 **Percent Solid:** 90.1

ANALYTE	PQL	RESULT	UNITS
DATE EXTRACTED : 12/24/08			
DATE ANALYZED : 12/23/08			
ANALYTICAL DILUTION: 10.00			Dry Weight
PERCHLORATE	0.20	2.2 U	UG/KG

JCW 3/11/09

6

COLUMBIA ANALYTICAL SERVICES

EXTRACTABLE ORGANICS
METHOD 6850
Reported: 01/05/09

Microbac Laboratories, Inc.
Project Reference: CH2M HILL - CAMP LEJEUNE
Client Sample ID : MR08-IS089D-2-3-08D

Date Sampled : 12/09/08 10:00 **Order #:** 1162428 **Sample Matrix:** SOIL/SEDIMENT
Date Received: 12/12/08 **Submission #:** R2847747 **Percent Solid:** 88.5

ANALYTE	PQL	RESULT	UNITS
DATE EXTRACTED : 12/24/08			
DATE ANALYZED : 12/23/08			
ANALYTICAL DILUTION: 10.00			Dry Weight
PERCHLORATE	0.20	2.3 U	UG/KG

Ow
3/11/09

7

COLUMBIA ANALYTICAL SERVICES

EXTRACTABLE ORGANICS
METHOD 6850
Reported: 01/05/09

Microbac Laboratories, Inc.
Project Reference: CH2M HILL - CAMP LEJEUNE
Client Sample ID : MR08-SS090-08D

Date Sampled : 12/09/08 10:55 **Order #:** 1162429 **Sample Matrix:** SOIL/SEDIMENT
Date Received: 12/12/08 **Submission #:** R2847747 **Percent Solid:** 89.4

ANALYTE	PQL	RESULT	UNITS
DATE EXTRACTED : 12/22/08			
DATE ANALYZED : 12/23/08			
ANALYTICAL DILUTION: 10.00			Dry Weight
PERCHLORATE	0.20	2.2 U	UG/KG

MW
3/11/09

8

COLUMBIA ANALYTICAL SERVICES

EXTRACTABLE ORGANICS
METHOD 6850
Reported: 01/05/09

Microbac Laboratories, Inc.
Project Reference: CH2M HILL - CAMP LEJEUNE
Client Sample ID : MR08-IS090-2-3-08D

Date Sampled : 12/09/08 11:05 **Order #:** 1162430 **Sample Matrix:** SOIL/SEDIMENT
Date Received: 12/12/08 **Submission #:** R2847747 **Percent Solid:** 90.9

ANALYTE	PQL	RESULT	UNITS
DATE EXTRACTED : 12/22/08			
DATE ANALYZED : 12/23/08			
ANALYTICAL DILUTION: 10.00			Dry Weight
PERCHLORATE	0.20	2.2 U	UG/KG

lw 3/4/09

COLUMBIA ANALYTICAL SERVICES

EXTRACTABLE ORGANICS
METHOD 6850
Reported: 01/05/09

Microbac Laboratories, Inc.
Project Reference: CH2M HILL - CAMP LEJEUNE
Client Sample ID : MR08-SS115-08D

Date Sampled : 12/09/08 11:45 **Order #:** 1162431 **Sample Matrix:** SOIL/SEDIMENT
Date Received: 12/12/08 **Submission #:** R2847747 **Percent Solid:** 94.1

ANALYTE	PQL	RESULT	UNITS
DATE EXTRACTED : 12/22/08			
DATE ANALYZED : 12/23/08			
ANALYTICAL DILUTION: 10.00			Dry Weight
PERCHLORATE	0.20	2.1 U	UG/KG

LW 3/11/09

COLUMBIA ANALYTICAL SERVICES

EXTRACTABLE ORGANICS
METHOD 6850
Reported: 01/05/09

Microbac Laboratories, Inc.
Project Reference: CH2M HILL - CAMP LEJEUNE
Client Sample ID : MR08-IS115-2-3-08D

Date Sampled : 12/09/08 12:00 **Order #:** 1162432 **Sample Matrix:** SOIL/SEDIMENT
Date Received: 12/12/08 **Submission #:** R2847747 **Percent Solid:** 86.4

ANALYTE	PQL	RESULT	UNITS
DATE EXTRACTED : 12/22/08			
DATE ANALYZED : 12/23/08			
ANALYTICAL DILUTION: 10.00			Dry Weight
PERCHLORATE	0.20	2.3 U	UG/KG

lcw
3/11/09

COLUMBIA ANALYTICAL SERVICES

11

EXTRACTABLE ORGANICS
METHOD 6850
Reported: 01/05/09

Microbac Laboratories, Inc.
Project Reference: CH2M HILL - CAMP LEJEUNE
Client Sample ID : MR08-SS114-08D

Date Sampled : 12/09/08 13:15 **Order #:** 1162433 **Sample Matrix:** SOIL/SEDIMENT
Date Received: 12/12/08 **Submission #:** R2847747 **Percent Solid:** 93.2

ANALYTE	PQL	RESULT	UNITS
DATE EXTRACTED : 12/22/08			
DATE ANALYZED : 12/23/08			
ANALYTICAL DILUTION: 10.00			Dry Weight
PERCHLORATE	0.20	2.1 U	UG/KG

lew 3/11/09

COLUMBIA ANALYTICAL SERVICES

EXTRACTABLE ORGANICS
METHOD 6850
Reported: 01/05/09

Microbac Laboratories, Inc.
Project Reference: CH2M HILL - CAMP LEJEUNE
Client Sample ID : MR08-IS114-2-3-08D

Date Sampled : 12/09/08 13:30 **Order #:** 1162434 **Sample Matrix:** SOIL/SEDIMENT
Date Received: 12/12/08 **Submission #:** R2847747 **Percent Solid:** 91.3

ANALYTE	PQL	RESULT	UNITS
DATE EXTRACTED : 12/22/08			
DATE ANALYZED : 12/23/08			
ANALYTICAL DILUTION: 10.00			Dry Weight
PERCHLORATE	0.20	2.2 U	UG/KG

lew
3/11/09

COLUMBIA ANALYTICAL SERVICES

13

EXTRACTABLE ORGANICS
METHOD 6850
Reported: 01/05/09

Microbac Laboratories, Inc.
Project Reference: CH2M HILL - CAMP LEJEUNE
Client Sample ID : MR08-SS113-08D

Date Sampled : 12/09/08 13:40 **Order #:** 1162435 **Sample Matrix:** SOIL/SEDIMENT
Date Received: 12/12/08 **Submission #:** R2847747 **Percent Solid:** 93.0

ANALYTE	PQL	RESULT	UNITS
DATE EXTRACTED : 12/22/08			
DATE ANALYZED : 12/23/08			
ANALYTICAL DILUTION: 10.00			Dry Weight
PERCHLORATE	0.20	2.2 U	UG/KG

lw
3/11/09

COLUMBIA ANALYTICAL SERVICES

EXTRACTABLE ORGANICS
METHOD 6850
Reported: 01/05/09

Microbac Laboratories, Inc.
Project Reference: CH2M HILL - CAMP LEJEUNE
Client Sample ID : MR08-IS113-2-3-08D

Date Sampled : 12/09/08 13:55 **Order #:** 1162436 **Sample Matrix:** SOIL/SEDIMENT
Date Received: 12/12/08 **Submission #:** R2847747 **Percent Solid:** 89.3

ANALYTE	PQL	RESULT	UNITS
DATE EXTRACTED : 12/22/08			
DATE ANALYZED : 12/23/08			
ANALYTICAL DILUTION: 10.00			Dry Weight
PERCHLORATE	0.20	2.2 U	UG/KG

lw
3/11/09

COLUMBIA ANALYTICAL SERVICES

EXTRACTABLE ORGANICS
METHOD 6850
Reported: 01/05/09

Microbac Laboratories, Inc.
Project Reference: CH2M HILL - CAMP LEJEUNE
Client Sample ID : MR08-SS129-08D

Date Sampled : 12/09/08 14:30 **Order #:** 1162437 **Sample Matrix:** SOIL/SEDIMENT
Date Received: 12/12/08 **Submission #:** R2847747 **Percent Solid:** 94.9

ANALYTE	PQL	RESULT	UNITS
DATE EXTRACTED : 12/22/08			
DATE ANALYZED : 12/23/08			
ANALYTICAL DILUTION: 10.00			Dry Weight
PERCHLORATE	0.20	2.1 U	UG/KG

lcr
3/11/09

COLUMBIA ANALYTICAL SERVICES

EXTRACTABLE ORGANICS
METHOD 6850
Reported: 01/05/09

Microbac Laboratories, Inc.
Project Reference: CH2M HILL - CAMP LEJEUNE
Client Sample ID : MR08-SS129D-08D

Date Sampled : 12/09/08 14:40 **Order #:** 1162438 **Sample Matrix:** SOIL/SEDIMENT
Date Received: 12/12/08 **Submission #:** R2847747 **Percent Solid:** 94.0

ANALYTE	PQL	RESULT	UNITS
DATE EXTRACTED : 12/22/08			
DATE ANALYZED : 12/23/08			
ANALYTICAL DILUTION: 10.00			Dry Weight
PERCHLORATE	0.20	2.1 U	UG/KG

lew 3/11/09

COLUMBIA ANALYTICAL SERVICES

EXTRACTABLE ORGANICS
METHOD 6850
Reported: 01/05/09

Microbac Laboratories, Inc.
Project Reference: CH2M HILL - CAMP LEJEUNE
Client Sample ID : MR08-IS129-2-3-08D

Date Sampled : 12/09/08 14:50 **Order #:** 1162439 **Sample Matrix:** SOIL/SEDIMENT
Date Received: 12/12/08 **Submission #:** R2847747 **Percent Solid:** 94.1

ANALYTE	PQL	RESULT	UNITS
DATE EXTRACTED : 12/22/08			
DATE ANALYZED : 12/23/08			
ANALYTICAL DILUTION: 10.00			Dry Weight
PERCHLORATE	0.20	2.1 U	UG/KG

lew
3/11/09

COLUMBIA ANALYTICAL SERVICES

EXTRACTABLE ORGANICS
METHOD 6850
Reported: 01/05/09

Microbac Laboratories, Inc.
Project Reference: CH2M HILL - CAMP LEJEUNE
Client Sample ID : MR08-IS129D-2-3-08D

Date Sampled : 12/09/08 15:00 **Order #:** 1162440 **Sample Matrix:** SOIL/SEDIMENT
Date Received: 12/12/08 **Submission #:** R2847747 **Percent Solid:** 93.1

ANALYTE	PQL	RESULT	UNITS
DATE EXTRACTED : 12/22/08			
DATE ANALYZED : 12/23/08			
ANALYTICAL DILUTION: 10.00			Dry Weight
PERCHLORATE	0.20	2.1 U	UG/KG

lcw 3/11/09

COLUMBIA ANALYTICAL SERVICES

EXTRACTABLE ORGANICS
METHOD 6850
Reported: 01/05/09

Microbac Laboratories, Inc.
Project Reference: CH2M HILL - CAMP LEJEUNE
Client Sample ID : MR08-SS128-08D

Date Sampled : 12/09/08 15:20 **Order #:** 1162441 **Sample Matrix:** SOIL/SEDIMENT
Date Received: 12/12/08 **Submission #:** R2847747 **Percent Solid:** 93.1

ANALYTE	PQL	RESULT	UNITS
DATE EXTRACTED : 12/22/08			
DATE ANALYZED : 12/23/08			
ANALYTICAL DILUTION: 10.00			Dry Weight
PERCHLORATE	0.20	2.1 U	UG/KG

lew
3/1/09

COLUMBIA ANALYTICAL SERVICES

EXTRACTABLE ORGANICS
METHOD 6850
Reported: 01/05/09

Microbac Laboratories, Inc.
Project Reference: CH2M HILL - CAMP LEJEUNE
Client Sample ID : MR08-IS128-08D

Date Sampled : 12/09/08 15:40 **Order #:** 1162442 **Sample Matrix:** SOIL/SEDIMENT
Date Received: 12/12/08 **Submission #:** R2847747 **Percent Solid:** 88.8

ANALYTE	PQL	RESULT	UNITS
DATE EXTRACTED : 12/22/08			
DATE ANALYZED : 12/23/08			
ANALYTICAL DILUTION: 10.00			Dry Weight
PERCHLORATE	0.20	2.3 U	UG/KG

lee
3/11/09

COLUMBIA ANALYTICAL SERVICES

EXTRACTABLE ORGANICS
METHOD 6850
Reported: 01/05/09

Microbac Laboratories, Inc.
Project Reference: CH2M HILL - CAMP LEJEUNE
Client Sample ID : MR08-SS098-08D

Date Sampled : 12/10/08 08:35 **Order #:** 1162443 **Sample Matrix:** SOIL/SEDIMENT
Date Received: 12/12/08 **Submission #:** R2847747 **Percent Solid:** 93.8

ANALYTE	PQL	RESULT	UNITS
DATE EXTRACTED : 12/22/08			
DATE ANALYZED : 12/29/08			
ANALYTICAL DILUTION: 10.00			Dry Weight
PERCHLORATE	0.20	2.1 U	UG/KG

lew
3/11/09

COLUMBIA ANALYTICAL SERVICES

EXTRACTABLE ORGANICS
METHOD 6850
Reported: 01/05/09

Microbac Laboratories, Inc.
Project Reference: CH2M HILL - CAMP LEJEUNE
Client Sample ID : MR08-IS098-3-4-08D

Date Sampled : 12/10/08 08:50 **Order #:** 1162444 **Sample Matrix:** SOIL/SEDIMENT
Date Received: 12/12/08 **Submission #:** R2847747 **Percent Solid:** 89.6

ANALYTE	PQL	RESULT	UNITS
DATE EXTRACTED : 12/22/08			
DATE ANALYZED : 12/29/08			
ANALYTICAL DILUTION: 10.00			Dry Weight
PERCHLORATE	0.20	2.2 U	UG/KG

JEW
3/11/09

23

COLUMBIA ANALYTICAL SERVICES

EXTRACTABLE ORGANICS
METHOD 6850
Reported: 01/05/09

Microbac Laboratories, Inc.
Project Reference: CH2M HILL - CAMP LEJEUNE
Client Sample ID : MR08-SS121-08D

Date Sampled : 12/10/08 09:10 **Order #:** 1162445 **Sample Matrix:** SOIL/SEDIMENT
Date Received: 12/12/08 **Submission #:** R2847747 **Percent Solid:** 90.3

ANALYTE	PQL	RESULT	UNITS
DATE EXTRACTED : 12/22/08			
DATE ANALYZED : 12/29/08			
ANALYTICAL DILUTION: 10.00			Dry Weight
PERCHLORATE	0.20	2.2 U	UG/KG

Mes
3/11/09

COLUMBIA ANALYTICAL SERVICES

EXTRACTABLE ORGANICS
METHOD 6850
Reported: 01/05/09

Microbac Laboratories, Inc.
Project Reference: CH2M HILL - CAMP LEJEUNE
Client Sample ID : MR08-IS121-2-3-08D

Date Sampled : 12/10/08 10:15 **Order #:** 1162446 **Sample Matrix:** SOIL/SEDIMENT
Date Received: 12/12/08 **Submission #:** R2847747 **Percent Solid:** 89.9

ANALYTE	PQL	RESULT	UNITS
DATE EXTRACTED : 12/22/08			
DATE ANALYZED : 12/29/08			
ANALYTICAL DILUTION: 10.00			Dry Weight
PERCHLORATE	0.20	2.2 U	UG/KG

lcw
3/4/09

COLUMBIA ANALYTICAL SERVICES

EXTRACTABLE ORGANICS
METHOD 6850
Reported: 01/05/09

Microbac Laboratories, Inc.
Project Reference: CH2M HILL - CAMP LEJEUNE
Client Sample ID : MR08-SS124-08D

Date Sampled : 12/10/08 10:35 **Order #:** 1162447 **Sample Matrix:** SOIL/SEDIMENT
Date Received: 12/12/08 **Submission #:** R2847747 **Percent Solid:** 94.5

ANALYTE	PQL	RESULT	UNITS
DATE EXTRACTED : 12/22/08			
DATE ANALYZED : 12/29/08			
ANALYTICAL DILUTION: 10.00			Dry Weight
PERCHLORATE	0.20	2.1 U	UG/KG

lew
3/11/09

COLUMBIA ANALYTICAL SERVICES

EXTRACTABLE ORGANICS
METHOD 6850
Reported: 01/05/09

Microbac Laboratories, Inc.
Project Reference: CH2M HILL - CAMP LEJEUNE
Client Sample ID : MR08-IS124-2-3-08D

Date Sampled : 12/10/08 10:50 **Order #:** 1162448 **Sample Matrix:** SOIL/SEDIMENT
Date Received: 12/12/08 **Submission #:** R2847747 **Percent Solid:** 90.9

ANALYTE	PQL	RESULT	UNITS
DATE EXTRACTED : 12/22/08			
DATE ANALYZED : 12/29/08			
ANALYTICAL DILUTION: 10.00			Dry Weight
PERCHLORATE	0.20	2.2 U	UG/KG

lew
3/11/09

27

COLUMBIA ANALYTICAL SERVICES

EXTRACTABLE ORGANICS
METHOD 6850
Reported: 01/05/09

Microbac Laboratories, Inc.
Project Reference: CH2M HILL - CAMP LEJEUNE
Client Sample ID : MR08-SS099-08D

Date Sampled : 12/10/08 11:25 **Order #:** 1162449 **Sample Matrix:** SOIL/SEDIMENT
Date Received: 12/12/08 **Submission #:** R2847747 **Percent Solid:** 93.8

ANALYTE	PQL	RESULT	UNITS
DATE EXTRACTED : 12/22/08			
DATE ANALYZED : 12/29/08			
ANALYTICAL DILUTION: 10.00			Dry Weight
PERCHLORATE	0.20	2.1 U	UG/KG

New 3/11/09

COLUMBIA ANALYTICAL SERVICES

EXTRACTABLE ORGANICS
METHOD 6850
Reported: 01/05/09

Microbac Laboratories, Inc.
Project Reference: CH2M HILL - CAMP LEJEUNE
Client Sample ID : MR08-SS099D-08D

Date Sampled : 12/10/08 11:35 **Order #:** 1162450 **Sample Matrix:** SOIL/SEDIMENT
Date Received: 12/12/08 **Submission #:** R2847747 **Percent Solid:** 93.8

ANALYTE	PQL	RESULT	UNITS
DATE EXTRACTED : 12/22/08			
DATE ANALYZED : 12/29/08			
ANALYTICAL DILUTION: 10.00			Dry Weight
PERCHLORATE	0.20	2.1 U	UG/KG

Rev
3/11/09

COLUMBIA ANALYTICAL SERVICES

EXTRACTABLE ORGANICS
METHOD 6850
Reported: 01/05/09

Microbac Laboratories, Inc.
Project Reference: CH2M HILL - CAMP LEJEUNE
Client Sample ID : MR08-IS099-2-3-08D

Date Sampled : 12/10/08 12:00 **Order #:** 1162451 **Sample Matrix:** SOIL/SEDIMENT
Date Received: 12/12/08 **Submission #:** R2847747 **Percent Solid:** 88.6

ANALYTE	PQL	RESULT	UNITS
DATE EXTRACTED : 12/22/08			
DATE ANALYZED : 12/29/08			
ANALYTICAL DILUTION: 10.00			Dry Weight
PERCHLORATE	0.20	2.3 U	UG/KG

lew
3/4/09

COLUMBIA ANALYTICAL SERVICES

EXTRACTABLE ORGANICS
METHOD 6850
Reported: 01/05/09

Microbac Laboratories, Inc.
Project Reference: CH2M HILL - CAMP LEJEUNE
Client Sample ID : MR08-IS099D-2-3-08D

Date Sampled : 12/10/08 12:25 **Order #:** 1162452 **Sample Matrix:** SOIL/SEDIMENT
Date Received: 12/12/08 **Submission #:** R2847747 **Percent Solid:** 90.6

ANALYTE	PQL	RESULT	UNITS
DATE EXTRACTED : 12/22/08			
DATE ANALYZED : 12/29/08			
ANALYTICAL DILUTION: 10.00			Dry Weight
PERCHLORATE	0.20	2.2 U	UG/KG

lles 3/11/09

COLUMBIA ANALYTICAL SERVICES

EXTRACTABLE ORGANICS
METHOD 6850
Reported: 01/05/09

Microbac Laboratories, Inc.
Project Reference: CH2M HILL - CAMP LEJEUNE
Client Sample ID : MR08-SS100-08D

Date Sampled : 12/10/08 13:15 **Order #:** 1162453 **Sample Matrix:** SOIL/SEDIMENT
Date Received: 12/12/08 **Submission #:** R2847747 **Percent Solid:** 85.9

ANALYTE	PQL	RESULT	UNITS
DATE EXTRACTED : 12/22/08			
DATE ANALYZED : 12/29/08			
ANALYTICAL DILUTION: 10.00			Dry Weight
PERCHLORATE	0.20	2.3 U	UG/KG

KW
3/4/09

COLUMBIA ANALYTICAL SERVICES

EXTRACTABLE ORGANICS
METHOD 6850
Reported: 01/05/09

Microbac Laboratories, Inc.
Project Reference: CH2M HILL - CAMP LEJEUNE
Client Sample ID : MR08-IS100-2-3-08D

Date Sampled : 12/10/08 13:40 **Order #:** 1162454 **Sample Matrix:** SOIL/SEDIMENT
Date Received: 12/12/08 **Submission #:** R2847747 **Percent Solid:** 85.9

ANALYTE	PQL	RESULT	UNITS
DATE EXTRACTED : 12/22/08			
DATE ANALYZED : 12/29/08			
ANALYTICAL DILUTION: 10.00			Dry Weight
PERCHLORATE	0.20	2.3 U	UG/KG

lew
3/11/09

COLUMBIA ANALYTICAL SERVICES

EXTRACTABLE ORGANICS
METHOD 6850
Reported: 01/05/09

Microbac Laboratories, Inc.
Project Reference: CH2M HILL - CAMP LEJEUNE
Client Sample ID : MR08-SS101-08D

Date Sampled : 12/10/08 14:10 **Order #:** 1162455 **Sample Matrix:** SOIL/SEDIMENT
Date Received: 12/12/08 **Submission #:** R2847747 **Percent Solid:** 89.9

ANALYTE	PQL	RESULT	UNITS
DATE EXTRACTED : 12/22/08			
DATE ANALYZED : 12/29/08			
ANALYTICAL DILUTION: 10.00			Dry Weight
PERCHLORATE	0.20	2.2 U	UG/KG

Dew
3/11/09

COLUMBIA ANALYTICAL SERVICES

EXTRACTABLE ORGANICS
METHOD 6850
Reported: 01/05/09

Microbac Laboratories, Inc.
Project Reference: CH2M HILL - CAMP LEJEUNE
Client Sample ID : MR08-IS101-2-3-08D

Date Sampled : 12/10/08 14:30 **Order #:** 1162456 **Sample Matrix:** SOIL/SEDIMENT
Date Received: 12/12/08 **Submission #:** R2847747 **Percent Solid:** 90.0

ANALYTE	PQL	RESULT	UNITS
DATE EXTRACTED : 12/22/08			
DATE ANALYZED : 12/29/08			
ANALYTICAL DILUTION: 10.00			Dry Weight
PERCHLORATE	0.20	2.2 U	UG/KG

MEW
3/11/09

COLUMBIA ANALYTICAL SERVICES

EXTRACTABLE ORGANICS
METHOD 6850
Reported: 01/05/09

Microbac Laboratories, Inc.
Project Reference: CH2M HILL - CAMP LEJEUNE
Client Sample ID : MR08-EB01120908-SS

Date Sampled : 12/09/08 09:30 **Order #:** 1162457 **Sample Matrix:** WATER
Date Received: 12/12/08 **Submission #:** R2847747 **Analytical Run** 171471

ANALYTE	PQL	RESULT	UNITS
DATE EXTRACTED : 12/15/08			
DATE ANALYZED : 12/16/08			
ANALYTICAL DILUTION: 1.00			
PERCHLORATE	0.20	0.20 U	UG/L

MW
3/4/09

COLUMBIA ANALYTICAL SERVICES

EXTRACTABLE ORGANICS
METHOD 6850
Reported: 01/05/09

Microbac Laboratories, Inc.
Project Reference: CH2M HILL - CAMP LEJEUNE
Client Sample ID : MR08-EB01120908-IS

Date Sampled : 12/09/08 10:00 **Order #:** 1162458 **Sample Matrix:** WATER
Date Received: 12/12/08 **Submission #:** R2847747 **Analytical Run** 171471

ANALYTE	PQL	RESULT	UNITS
DATE EXTRACTED : 12/15/08			
DATE ANALYZED : 12/16/08			
ANALYTICAL DILUTION: 1.00			
PERCHLORATE	0.20	0.20 U	UG/L

MW 3/11/09

37

COLUMBIA ANALYTICAL SERVICES

EXTRACTABLE ORGANICS
METHOD 6850
Reported: 01/05/09

Microbac Laboratories, Inc.
Project Reference: CH2M HILL - CAMP LEJEUNE
Client Sample ID : MR08-EB01121008-SS

Date Sampled : 12/10/08 09:00 **Order #:** 1162459 **Sample Matrix:** WATER
Date Received: 12/12/08 **Submission #:** R2847747 **Analytical Run** 171471

ANALYTE	PQL	RESULT	UNITS
DATE EXTRACTED : 12/15/08			
DATE ANALYZED : 12/16/08			
ANALYTICAL DILUTION: 1.00			
PERCHLORATE	0.20	0.20 U	UG/L

kew
3/11/09

ENVIRONMENTAL
Data Services, Inc.

PERCHLORATE

USEPA Region IV - Level IV Review

Site: MCB Camp Lejeune, TO-09 SDG #: R2847832

Client: CH2M HILL, Inc., Virginia Beach, Virginia Date: March 11, 2009

Laboratory: Columbia Analytical Services, Inc., Rochester, NY Reviewer: Linda Sulkowski

EDS ID	Client Sample ID	Laboratory Sample ID	Matrix
1	MR08-SS102-08D	1163916	Soil
2	MR08-IS102-08D	1163917	Soil
3	MR08-SS119-08D	1163918	Soil
4	MR08-IS119-08D	1163945	Soil
5	MR08-SS19D-08D	1163946	Soil
6	MR08-IS119D-08D	1163947	Soil
7	MR08-SS120-08D	1163949	Soil
8	MR08-IS120-08D	1163951	Soil
9	MR08-SS122-08D	1163954	Soil
10	MR08-IS122-08D	1163955	Soil
11	MR08-SS118-08D	1163958	Soil
12	MR08-IS118-08D	1163959	Soil
13	MR08-SS127-08D	1163960	Soil
14	MR08-IS127-08D	1163961	Soil
15	MR08-SS126-08D	1163962	Soil
16	MR08-IS126-08D	1163963	Soil
17	EB01-121508-SS	1163971	Water

The USEPA "Contract Laboratory Program National Functional Guidelines for Inorganic Data Review," October 2004, and professional judgement were used in evaluating the data in this summary report.

Holding Times - All samples were prepared and analyzed within 28 days for perchlorate.

Calibration - The ICAL & CCAL exhibited acceptable %RSD and %D values respectively.

Method and Calibration Blanks - The method blanks and continuing calibration blanks were free of contamination.

Field and Equipment Blank - Field QC results are summarized below.

Blank ID	Compound	Conc. ug/L	Action Level ug/L	Qualifier	Affected Samples
MR08-EB01-121508-SS	None - ND	-	-	-	-
MR08-FB01120608	None - ND	-	-	-	-

Matrix Spike/Duplicate - The matrix spike/duplicate sample exhibited acceptable %R and RPD values.

LCS - The LCS samples exhibited acceptable %R values.

Field Duplicates - Field duplicate results are summarized below.

Compound	MR08-SS119-08D ug/kg	MR08-SS119D-08D ug/kg	RPD	Qualifier
None	ND	ND	-	-

Compound	MR08-IS119-08D ug/kg	MR08-IS119D-08D ug/kg	RPD	Qualifier
None	ND	ND	-	-

Compound Quantitation - No discrepancies were identified.

COLUMBIA ANALYTICAL SERVICES

EXTRACTABLE ORGANICS
METHOD 6850
Reported: 01/08/09

Microbac Laboratories, Inc.
Project Reference: CH2M HILL - CAMP LEJEUNE
Client Sample ID : MR08-SS102-08D

Date Sampled : 12/15/08 10:00 **Order #:** 1163916 **Sample Matrix:** SOIL/SEDIMENT
Date Received: 12/18/08 **Submission #:** R2847832 **Percent Solid:** 94.0

ANALYTE	PQL	RESULT	UNITS
DATE EXTRACTED : 12/29/08			
DATE ANALYZED : 12/30/08			
ANALYTICAL DILUTION: 10.00			Dry Weight
PERCHLORATE	0.20	2.1 U	UG/KG

RW 3/11/09

2

COLUMBIA ANALYTICAL SERVICES

EXTRACTABLE ORGANICS
METHOD 6850
Reported: 01/08/09

Microbac Laboratories, Inc.
Project Reference: CH2M HILL - CAMP LEJEUNE
Client Sample ID : MR08-IS102-2-3-08D

Date Sampled : 12/15/08 10:15 **Order #:** 1163917 **Sample Matrix:** SOIL/SEDIMENT
Date Received: 12/18/08 **Submission #:** R2847832 **Percent Solid:** 88.7

ANALYTE	PQL	RESULT	UNITS
DATE EXTRACTED : 12/29/08			
DATE ANALYZED : 12/30/08			
ANALYTICAL DILUTION: 10.00			Dry Weight
PERCHLORATE	0.20	2.3 U	UG/KG

lw
4/11/09

3

COLUMBIA ANALYTICAL SERVICES

EXTRACTABLE ORGANICS
METHOD 6850
Reported: 01/08/09

Microbac Laboratories, Inc.
Project Reference: CH2M HILL - CAMP LEJEUNE
Client Sample ID : MR08-SS119-08D

Date Sampled : 12/15/08 10:45 **Order #:** 1163918 **Sample Matrix:** SOIL/SEDIMENT
Date Received: 12/18/08 **Submission #:** R2847832 **Percent Solid:** 93.0

ANALYTE	PQL	RESULT	UNITS
DATE EXTRACTED : 12/29/08			
DATE ANALYZED : 12/30/08			
ANALYTICAL DILUTION: 10.00			Dry Weight
PERCHLORATE	0.20	2.2 U	UG/KG

KW
3/11/09

4

COLUMBIA ANALYTICAL SERVICES

EXTRACTABLE ORGANICS
METHOD 6850
Reported: 01/08/09

Microbac Laboratories, Inc.
Project Reference: CH2M HILL - CAMP LEJEUNE
Client Sample ID : MR08-IS119-4.5-5.5-08D

Date Sampled : 12/15/08 12:35 **Order #:** 1163945 **Sample Matrix:** SOIL/SEDIMENT
Date Received: 12/18/08 **Submission #:** R2847832 **Percent Solid:** 84.9

ANALYTE	PQL	RESULT	UNITS
DATE EXTRACTED : 12/29/08			
DATE ANALYZED : 12/30/08			
ANALYTICAL DILUTION: 10.00			Dry Weight
PERCHLORATE	0.20	2.4 U	UG/KG

MW 4/11/09

5

COLUMBIA ANALYTICAL SERVICES

EXTRACTABLE ORGANICS
METHOD 6850
Reported: 01/08/09

Microbac Laboratories, Inc.
Project Reference: CH2M HILL - CAMP LEJEUNE
Client Sample ID : MR08-SS119D-08D

Date Sampled : 12/15/08 13:40 **Order #:** 1163946 **Sample Matrix:** SOIL/SEDIMENT
Date Received: 12/18/08 **Submission #:** R2847832 **Percent Solid:** 90.5

ANALYTE	PQL	RESULT	UNITS
DATE EXTRACTED : 12/29/08			
DATE ANALYZED : 12/30/08			
ANALYTICAL DILUTION: 10.00			Dry Weight
PERCHLORATE	0.20	2.2 U	UG/KG

lw 3/11/09

6

COLUMBIA ANALYTICAL SERVICES

EXTRACTABLE ORGANICS
METHOD 6850
Reported: 01/08/09

Microbac Laboratories, Inc.
Project Reference: CH2M HILL - CAMP LEJEUNE
Client Sample ID : MR08-IS119D-4.5-5.5-08D

Date Sampled : 12/15/08 12:35 **Order #:** 1163947 **Sample Matrix:** SOIL/SEDIMENT
Date Received: 12/18/08 **Submission #:** R2847832 **Percent Solid:** 86.2

ANALYTE	PQL	RESULT	UNITS
DATE EXTRACTED : 12/29/08			
DATE ANALYZED : 12/30/08			
ANALYTICAL DILUTION: 10.00			Dry Weight
PERCHLORATE	0.20	2.3 U	UG/KG

AW 4/1/09

COLUMBIA ANALYTICAL SERVICES

EXTRACTABLE ORGANICS
METHOD 6850
Reported: 01/08/09

Microbac Laboratories, Inc.
Project Reference: CH2M HILL - CAMP LEJEUNE
Client Sample ID : MR08-SS120-08D

Date Sampled : 12/15/08 13:40 **Order #:** 1163949 **Sample Matrix:** SOIL/SEDIMENT
Date Received: 12/18/08 **Submission #:** R2847832 **Percent Solid:** 91.4

ANALYTE	PQL	RESULT	UNITS
DATE EXTRACTED : 12/29/08			
DATE ANALYZED : 12/30/08			
ANALYTICAL DILUTION: 10.00			Dry Weight
PERCHLORATE	0.20	2.2 U	UG/KG

lw 3/11/09

8

COLUMBIA ANALYTICAL SERVICES

EXTRACTABLE ORGANICS
METHOD 6850
Reported: 01/08/09

Microbac Laboratories, Inc.
Project Reference: CH2M HILL - CAMP LEJEUNE
Client Sample ID : MR08-IS120-1.5-2.5-08D

Date Sampled : 12/15/08 14:00 **Order #:** 1163951 **Sample Matrix:** SOIL/SEDIMENT
Date Received: 12/18/08 **Submission #:** R2847832 **Percent Solid:** 89.3

ANALYTE	PQL	RESULT	UNITS
DATE EXTRACTED : 12/29/08			
DATE ANALYZED : 12/30/08			
ANALYTICAL DILUTION: 10.00			Dry Weight
PERCHLORATE	0.20	2.2 U	UG/KG

lw
4/11/09

COLUMBIA ANALYTICAL SERVICES

EXTRACTABLE ORGANICS
METHOD 6850
Reported: 01/08/09

Microbac Laboratories, Inc.
Project Reference: CH2M HILL - CAMP LEJEUNE
Client Sample ID : MR08-SS122-08D

Date Sampled : 12/15/08 14:25 **Order #:** 1163954 **Sample Matrix:** SOIL/SEDIMENT
Date Received: 12/18/08 **Submission #:** R2847832 **Percent Solid:** 88.0

ANALYTE	PQL	RESULT	UNITS
DATE EXTRACTED : 12/29/08			
DATE ANALYZED : 12/30/08			
ANALYTICAL DILUTION: 10.00			Dry Weight
PERCHLORATE	0.20	2.3 U	UG/KG

lw
3/11/09

COLUMBIA ANALYTICAL SERVICES

EXTRACTABLE ORGANICS
METHOD 6850
Reported: 01/08/09

Microbac Laboratories, Inc.
Project Reference: CH2M HILL - CAMP LEJEUNE
Client Sample ID : MR08-IS122-6.5-8-08D

Date Sampled : 12/15/08 15:00 **Order #:** 1163955 **Sample Matrix:** SOIL/SEDIMENT
Date Received: 12/18/08 **Submission #:** R2847832 **Percent Solid:** 88.9

ANALYTE	PQL	RESULT	UNITS
DATE EXTRACTED : 12/29/08			
DATE ANALYZED : 12/30/08			
ANALYTICAL DILUTION: 10.00			Dry Weight
PERCHLORATE	0.20	2.2 U	UG/KG

AW
4/11/09

11

COLUMBIA ANALYTICAL SERVICES

EXTRACTABLE ORGANICS
METHOD 6850
Reported: 01/08/09

Microbac Laboratories, Inc.
Project Reference: CH2M HILL - CAMP LEJEUNE
Client Sample ID : MR08-SS118-08D

Date Sampled : 12/15/08 15:50 **Order #:** 1163958 **Sample Matrix:** SOIL/SEDIMENT
Date Received: 12/18/08 **Submission #:** R2847832 **Percent Solid:** 89.3

ANALYTE	PQL	RESULT	UNITS
DATE EXTRACTED : 12/29/08			
DATE ANALYZED : 12/30/08			
ANALYTICAL DILUTION: 10.00			Dry Weight
PERCHLORATE	0.20	2.2 U	UG/KG

Rev 3/11/09

12

COLUMBIA ANALYTICAL SERVICES

EXTRACTABLE ORGANICS
METHOD 6850
Reported: 01/08/09

Microbac Laboratories, Inc.
Project Reference: CH2M HILL - CAMP LEJEUNE
Client Sample ID : MR08-IS118-08D

Date Sampled : 12/15/08 16:00 **Order #:** 1163959 **Sample Matrix:** SOIL/SEDIMENT
Date Received: 12/18/08 **Submission #:** R2847832 **Percent Solid:** 87.8

ANALYTE	PQL	RESULT	UNITS
DATE EXTRACTED : 12/29/08			
DATE ANALYZED : 12/30/08			
ANALYTICAL DILUTION: 10.00			Dry Weight
PERCHLORATE	0.20	2.3 U	UG/KG

lw 3/11/09

13

COLUMBIA ANALYTICAL SERVICES

EXTRACTABLE ORGANICS
METHOD 6850
Reported: 01/08/09

Microbac Laboratories, Inc.
Project Reference: CH2M HILL - CAMP LEJEUNE
Client Sample ID : MR08-SS127-08D

Date Sampled : 12/16/08 08:50 **Order #:** 1163960 **Sample Matrix:** SOIL/SEDIMENT
Date Received: 12/18/08 **Submission #:** R2847832 **Percent Solid:** 89.1

ANALYTE	PQL	RESULT	UNITS
DATE EXTRACTED : 12/29/08			
DATE ANALYZED : 12/30/08			
ANALYTICAL DILUTION: 10.00			Dry Weight
PERCHLORATE	0.20	2.2 U	UG/KG

Rew 3/11/09

COLUMBIA ANALYTICAL SERVICES

EXTRACTABLE ORGANICS
METHOD 6850
Reported: 01/08/09

Microbac Laboratories, Inc.
Project Reference: CH2M HILL - CAMP LEJEUNE
Client Sample ID : MR08-IS127-1.5-3-08D

Date Sampled : 12/16/08 09:05 **Order #:** 1163961 **Sample Matrix:** SOIL/SEDIMENT
Date Received: 12/18/08 **Submission #:** R2847832 **Percent Solid:** 86.2

ANALYTE	PQL	RESULT	UNITS
DATE EXTRACTED : 12/29/08			
DATE ANALYZED : 12/30/08			
ANALYTICAL DILUTION: 10.00			Dry Weight
PERCHLORATE	0.20	2.3 U	UG/KG

lw
4/11/09

COLUMBIA ANALYTICAL SERVICES

EXTRACTABLE ORGANICS
METHOD 6850
Reported: 01/08/09

Microbac Laboratories, Inc.
Project Reference: CH2M HILL - CAMP LEJEUNE
Client Sample ID : MR08-SS126-08D

Date Sampled : 12/16/08 09:25 **Order #:** 1163962 **Sample Matrix:** SOIL/SEDIMENT
Date Received: 12/18/08 **Submission #:** R2847832 **Percent Solid:** 94.7

ANALYTE	PQL	RESULT	UNITS
DATE EXTRACTED : 12/29/08			
DATE ANALYZED : 12/30/08			
ANALYTICAL DILUTION: 10.00			Dry Weight
PERCHLORATE	0.20	2.1 U	UG/KG

LW
3/11/09

16

COLUMBIA ANALYTICAL SERVICES

EXTRACTABLE ORGANICS
METHOD 6850
Reported: 01/08/09

Microbac Laboratories, Inc.
Project Reference: CH2M HILL - CAMP LEJEUNE
Client Sample ID : MR08-IS126-1.5-2.5-08D

Date Sampled : 12/16/08 09:40 **Order #:** 1163963 **Sample Matrix:** SOIL/SEDIMENT
Date Received: 12/18/08 **Submission #:** R2847832 **Percent Solid:** 87.2

ANALYTE	PQL	RESULT	UNITS
DATE EXTRACTED : 12/29/08			
DATE ANALYZED : 12/30/08			
ANALYTICAL DILUTION: 10.00			Dry Weight
PERCHLORATE	0.20	2.3 U	UG/KG

RW
4/11/09

COLUMBIA ANALYTICAL SERVICES

EXTRACTABLE ORGANICS
METHOD 6850
Reported: 01/08/09

Microbac Laboratories, Inc.
Project Reference: CH2M HILL - CAMP LEJEUNE
Client Sample ID : EB01-121508-SS

Date Sampled : 12/16/08 08:00 **Order #:** 1163971 **Sample Matrix:** WATER
Date Received: 12/18/08 **Submission #:** R2847832 **Analytical Run** 172112

ANALYTE	PQL	RESULT	UNITS
DATE EXTRACTED : 01/05/09			
DATE ANALYZED : 01/05/09			
ANALYTICAL DILUTION: 1.00			
PERCHLORATE	0.20	0.20 U	UG/L

lw 3/11/09

ENVIRONMENTAL
Data Services, Inc.

PERCHLORATE

USEPA Region IV - Level IV Review

Site: MCB Camp Lejeune, TO-09 SDG #: R2847898

Client: CH2M HILL, Inc., Virginia Beach, Virginia Date: March 11, 2009

Laboratory: Columbia Analytical Services, Inc., Rochester, NY Reviewer: Linda Sulkowski

EDS ID	Client Sample ID	Laboratory Sample ID	Matrix
1	MR08-SS130-08D	1165260	Soil
2	MR08-IS130-08D	1165262	Soil
3	MR08-SS132-08D	1165263	Soil
4	MR08-IS132-08D	1165264	Soil
5	MR08-SS131-08D	1165265	Soil
6	MR08-SS111-08D	1165266	Soil
7	MR08-SS112-08D	1165267	Soil
8	MR08-SS133-08D	1165268	Soil
9	MR08-IS133-08D	1165269	Soil
10	MR08-SS110-08D	1165270	Soil
11	MR08-IS110-08D	1165271	Soil
12	MR08-EB121708	1165274	Water
13	MR08-EB121808	1165276	Water

The USEPA "Contract Laboratory Program National Functional Guidelines for Inorganic Data Review," October 2004, and professional judgement were used in evaluating the data in this summary report.

Holding Times - All samples were prepared and analyzed within 28 days for perchlorate.

Calibration - The ICAL & CCAL exhibited acceptable %RSD and %D values respectively.

Method and Calibration Blanks - The method blanks and continuing calibration blanks were free of contamination.

Field and Equipment Blank - Field QC results are summarized below.

Blank ID	Compound	Conc. ug/L	Action Level ug/L	Qualifier	Affected Samples
MR08-EB121708	None - ND	-	-	-	-

Blank ID	Compound	Conc. ug/L	Action Level ug/L	Qualifier	Affected Samples
MR08-EB121808	None - ND	-	-	-	-
MR08-FB01120608	None - ND	-	-	-	-

Matrix Spike/Duplicate - A MS/MSD sample was not analyzed.

LCS - The LCS samples exhibited acceptable %R values.

Field Duplicates - Field duplicate samples were not included in this data package.

Compound Quantitation - No discrepancies were identified.

COLUMBIA ANALYTICAL SERVICES

EXTRACTABLE ORGANICS
METHOD 6850
Reported: 01/08/09

Microbac Laboratories, Inc.
Project Reference: CH2M HILL - CAMP LEJEUNE
Client Sample ID : MR08-SS130-08D

Date Sampled : 12/16/08 10:30 **Order #:** 1165260 **Sample Matrix:** SOIL/SEDIMENT
Date Received: 12/23/08 **Submission #:** R2847898 **Percent Solid:** 63.5

ANALYTE	PQL	RESULT	UNITS
DATE EXTRACTED : 12/29/08			
DATE ANALYZED : 12/30/08			
ANALYTICAL DILUTION: 10.00			Dry Weight
PERCHLORATE	0.20	3.1 U	UG/KG

MW 3/11/09

2

COLUMBIA ANALYTICAL SERVICES

EXTRACTABLE ORGANICS
METHOD 6850
Reported: 01/08/09

Microbac Laboratories, Inc.
Project Reference: CH2M HILL - CAMP LEJEUNE
Client Sample ID : MR08-IS130~~-1.5-3~~08D

Date Sampled : 12/16/08 10:45 **Order #:** 1165262 **Sample Matrix:** SOIL/SEDIMENT
Date Received: 12/23/08 **Submission #:** R2847898 **Percent Solid:** 82.0

ANALYTE	PQL	RESULT	UNITS
DATE EXTRACTED : 12/29/08			
DATE ANALYZED : 12/30/08			
ANALYTICAL DILUTION: 10.00			Dry Weight
PERCHLORATE	0.20	2.4 U	UG/KG

RW 3/11/09

3

COLUMBIA ANALYTICAL SERVICES

EXTRACTABLE ORGANICS
METHOD 6850
Reported: 01/08/09

Microbac Laboratories, Inc.
Project Reference: CH2M HILL - CAMP LEJEUNE
Client Sample ID : MR08-SS132-08D

Date Sampled : 12/16/08 11:40 **Order #:** 1165263 **Sample Matrix:** SOIL/SEDIMENT
Date Received: 12/23/08 **Submission #:** R2847898 **Percent Solid:** 85.4

ANALYTE	PQL	RESULT	UNITS
DATE EXTRACTED : 12/29/08			
DATE ANALYZED : 12/30/08			
ANALYTICAL DILUTION: 10.00			Dry Weight
PERCHLORATE	0.20	2.3 U	UG/KG

lw 3/11/09

4

COLUMBIA ANALYTICAL SERVICES

EXTRACTABLE ORGANICS
METHOD 6850
Reported: 01/08/09

Microbac Laboratories, Inc.
Project Reference: CH2M HILL - CAMP LEJEUNE
Client Sample ID : MR08-IS132-08D

Date Sampled : 12/16/08 11:50 **Order #:** 1165264 **Sample Matrix:** SOIL/SEDIMENT
Date Received: 12/23/08 **Submission #:** R2847898 **Percent Solid:** 90.9

ANALYTE	PQL	RESULT	UNITS
DATE EXTRACTED : 12/29/08			
DATE ANALYZED : 12/30/08			
ANALYTICAL DILUTION: 10.00			Dry Weight
PERCHLORATE	0.20	2.2 U	UG/KG

hw
3/11/09

COLUMBIA ANALYTICAL SERVICES

EXTRACTABLE ORGANICS
METHOD 6850
Reported: 01/08/09

Microbac Laboratories, Inc.
Project Reference: CH2M HILL - CAMP LEJEUNE
Client Sample ID : MR08-SS131-08D

Date Sampled : 12/16/08 13:15 **Order #:** 1165265 **Sample Matrix:** SOIL/SEDIMENT
Date Received: 12/23/08 **Submission #:** R2847898 **Percent Solid:** 79.4

ANALYTE	PQL	RESULT	UNITS
DATE EXTRACTED : 12/29/08			
DATE ANALYZED : 12/30/08			
ANALYTICAL DILUTION: 10.00			Dry Weight
PERCHLORATE	0.20	2.5 U	UG/KG

lew
3/11/09

6

COLUMBIA ANALYTICAL SERVICES

EXTRACTABLE ORGANICS
METHOD 6850
Reported: 01/08/09

Microbac Laboratories, Inc.
Project Reference: CH2M HILL - CAMP LEJEUNE
Client Sample ID : MR08-SS111-08D

Date Sampled : 12/16/08 13:50 **Order #:** 1165266 **Sample Matrix:** SOIL/SEDIMENT
Date Received: 12/23/08 **Submission #:** R2847898 **Percent Solid:** 87.6

ANALYTE	PQL	RESULT	UNITS
DATE EXTRACTED : 12/29/08			
DATE ANALYZED : 12/31/08			
ANALYTICAL DILUTION: 10.00			Dry Weight
PERCHLORATE	0.20	2.3 U	UG/KG

LEW 3/11/09

COLUMBIA ANALYTICAL SERVICES

EXTRACTABLE ORGANICS
METHOD 6850
Reported: 01/08/09

Microbac Laboratories, Inc.
Project Reference: CH2M HILL - CAMP LEJEUNE
Client Sample ID : MR08-SS112-08D

Date Sampled : 12/16/08 14:30 **Order #:** 1165267 **Sample Matrix:** SOIL/SEDIMENT
Date Received: 12/23/08 **Submission #:** R2847898 **Percent Solid:** 89.1

ANALYTE	PQL	RESULT	UNITS
DATE EXTRACTED : 12/29/08			
DATE ANALYZED : 12/31/08			
ANALYTICAL DILUTION: 10.00			Dry Weight
PERCHLORATE	0.20	2.2 U	UG/KG

Dew
3/4/09

COLUMBIA ANALYTICAL SERVICES

EXTRACTABLE ORGANICS
METHOD 6850
Reported: 01/08/09

Microbac Laboratories, Inc.
Project Reference: CH2M HILL - CAMP LEJEUNE
Client Sample ID : MR08-SS133-08D

Date Sampled : 12/17/08 08:35 **Order #:** 1165268 **Sample Matrix:** SOIL/SEDIMENT
Date Received: 12/23/08 **Submission #:** R2847898 **Percent Solid:** 79.1

ANALYTE	PQL	RESULT	UNITS
DATE EXTRACTED : 12/29/08			
DATE ANALYZED : 12/31/08			
ANALYTICAL DILUTION: 10.00			Dry Weight
PERCHLORATE	0.20	2.5 U	UG/KG

3/11/09

COLUMBIA ANALYTICAL SERVICES

EXTRACTABLE ORGANICS
METHOD 6850
Reported: 01/08/09

Microbac Laboratories, Inc.
Project Reference: CH2M HILL - CAMP LEJEUNE
Client Sample ID : MR08-IS133-08D

Date Sampled : 12/17/08 08:50 **Order #:** 1165269 **Sample Matrix:** SOIL/SEDIMENT
Date Received: 12/23/08 **Submission #:** R2847898 **Percent Solid:** 89.7

ANALYTE	PQL	RESULT	UNITS
DATE EXTRACTED : 12/29/08			
DATE ANALYZED : 12/31/08			
ANALYTICAL DILUTION: 10.00			Dry Weight
PERCHLORATE	0.20	2.2 U	UG/KG

MW
3/11/09

COLUMBIA ANALYTICAL SERVICES

EXTRACTABLE ORGANICS
METHOD 6850
Reported: 01/08/09

Microbac Laboratories, Inc.
Project Reference: CH2M HILL - CAMP LEJEUNE
Client Sample ID : MR08-SS110-08D

Date Sampled : 12/17/08 09:25 **Order #:** 1165270 **Sample Matrix:** SOIL/SEDIMENT
Date Received: 12/23/08 **Submission #:** R2847898 **Percent Solid:** 80.0

ANALYTE	PQL	RESULT	UNITS
DATE EXTRACTED : 12/29/08			
DATE ANALYZED : 12/31/08			
ANALYTICAL DILUTION: 10.00			Dry Weight
PERCHLORATE	0.20	38	UG/KG

Qw 3/11/09

11

COLUMBIA ANALYTICAL SERVICES

EXTRACTABLE ORGANICS
METHOD 6850
Reported: 01/08/09

Microbac Laboratories, Inc.
Project Reference: CH2M HILL - CAMP LEJEUNE
Client Sample ID : MR08-IS110-08D

Date Sampled : 12/17/08 09:35 **Order #:** 1165271 **Sample Matrix:** SOIL/SEDIMENT
Date Received: 12/23/08 **Submission #:** R2847898 **Percent Solid:** 85.0

ANALYTE	PQL	RESULT	UNITS
DATE EXTRACTED : 12/29/08			
DATE ANALYZED : 12/31/08			
ANALYTICAL DILUTION: 10.00			Dry Weight
PERCHLORATE	0.20	4.0	UG/KG

lus
3/11/09

COLUMBIA ANALYTICAL SERVICES

EXTRACTABLE ORGANICS
METHOD 6850
Reported: 01/08/09

Microbac Laboratories, Inc.
Project Reference: CH2M HILL - CAMP LEJEUNE
Client Sample ID : MR08-EB121808

Date Sampled : 12/18/08 07:20 **Order #:** 1165276 **Sample Matrix:** WATER
Date Received: 12/23/08 **Submission #:** R2847898 **Analytical Run** 172112

ANALYTE	PQL	RESULT	UNITS
DATE EXTRACTED : 01/05/09			
DATE ANALYZED : 01/05/09			
ANALYTICAL DILUTION: 1.00			
PERCHLORATE	0.20	0.20 U	UG/L

Lew
3/11/09

ENVIRONMENTAL
Data Services, Inc.

POLYNUCLEAR AROMATIC COMPOUNDS BY 8270SIM

USEPA Region IV - Level IV Review

Site: MCB Camp Lejeune, TO-09 SDG #: TO9-10

Client: CH2M HILL, Inc., Virginia Beach, Virginia Date: March 1, 2009

Laboratory: Katahdin Analytical Services, Scarborough, Maine Reviewer: Nancy Weaver

EDS ID	Client Sample ID	Laboratory Sample ID	Matrix
1	MR08-EB-120208-SS	SB6919-3	Water
2	MR08-EB-120208-IS	SB6919-4	Water
3	MR08-EB01120308-SS	SB6966-2	Water
4	MR08-EB01120308-IS	SB6966-4	Water
5	MR08-EB01120408-SS	SB7004-2	Water
6	MR08-EB01120408-IS	SB7004-4	Water
7	MR08-EB01120508-SS	SB7034-2	Water
8	MR08-EB0120508-IS	SB7034-4	Water
9	MR08-EB01120608-SS	SB7057-2	Water
10	MR08-EB01120608-IS	SB7057-4	Water
11	MR08-FB01120608	SB7057-6	Water
12	MR08-EB01120708-SS	SB7057-8	Water
13	MR08-EB01120708-IS	SB7057-10	Water
14	MR08-EB01120808-SS	SB7057-12	Water
15	MR08-EB01120808-IS	SB7057-14	Water
16	MR08-EB-01120908-SS	SB7082-2	Water
17	MR08-EB-01120908-IS	SB7082-4	Water
18	MR08-EB01121008-SS	SB7128-2	Water

The USEPA "Contract Laboratory Program National Functional Guidelines for Organic Data Review," October 1999, and professional judgement were used in evaluating the data in this summary report.

Holding Times - All samples were extracted within 7 days for water samples and analyzed within 40 days for all samples.

GC/MS Tuning - All of the DFTPP tunes in the initial and continuing calibrations met the percent relative abundance criteria.

Initial Calibration - The initial calibrations exhibited acceptable %RSD and mean RRF values.

Continuing Calibration - The continuing calibrations exhibited acceptable %D and RRF values except the following.

CCAL Date	Compound	%D/RRF	Qualifier	Affected Samples
12/15/08	Indeno (1,2,3-cd) pyrene	25.68%	J/UJ	1-4
	Hexachlorobutadiene	47.85%	J/UJ	1-4
	Hexachlorocyclopentadiene	43.70%	J/UJ	1-4
01/02/09	Hexachlorobenzene	43.99%	J/UJ	5-9
	Hexachlorocyclopentadiene	34.52%	J/UJ	5-9
01/05/09	Pyrene	25.41%	J/UJ	10-13
	Benzo (b) fluoroanthene	25.67%	J/UJ	10-13
	Benzo (k) fluoroanthene	36.90%	J/UJ	10-13
	Indeno (1,2,3-cd) pyrene	26.78%	J/UJ	10-13

Surrogates - All samples exhibited acceptable surrogate recoveries.

MS/MSD - A MS/MSD sample was not analyzed.

Laboratory Control Sample - The LCS samples exhibited acceptable %R values except the following.

LCS ID	Compound	%R	Qualifier	Affected Samples
WG58760-LCS	Hexachlorobutadiene	17%	None	Already qualified due to CCAL
	Hexachlorocyclopentadiene	25%	None	Already qualified due to CCAL

Internal Standard (IS) Area Performance - All internal standards met response and retention time (RT) criteria.

Method Blank - The method blanks were free of contamination.

Field, Equipment Blank - Field QC results are summarized below.

Blank ID	Compound	Conc. ug/L	Action Level ug/L	Qualifier	Affected Samples
MR08-EB-120208-SS	None - ND	-	-	-	To be applied to other data packages.
MR08-EB-120208-IS	None - ND	-	-	-	To be applied to other data packages.
MR08-EB01120308-SS	None - ND	-	-	-	To be applied to other data packages.
MR08-EB01120308-IS	None - ND	-	-	-	To be applied to other data packages.

Blank ID	Compound	Conc. ug/L	Action Level ug/L	Qualifier	Affected Samples
MR08-EB01120408-SS	None - ND	-	-	-	To be applied to other data packages.
MR08-EB01120408-IS	None - ND	-	-	-	To be applied to other data packages.
MR08-EB01120508-SS	None - ND	-	-	-	To be applied to other data packages.
MR08-EB0120508-IS	None - ND	-	-	-	To be applied to other data packages.
MR08-EB01120608-SS	None - ND	-	-	-	To be applied to other data packages.
MR08-EB01120608-IS	None - ND	-	-	-	To be applied to other data packages.
MR08-FB01120608	None - ND	-	-	-	To be applied to other data packages.
MR08-EB01120708-SS	None - ND	-	-	-	To be applied to other data packages.
MR08-EB01120708-IS	None - ND	-	-	-	To be applied to other data packages.
MR08-EB01120808-SS	Indeno-1,2,3-cd pyrene	0.063	-	None	To be applied to other data packages.
	Benzo (g,h,i) perylene	0.076		None	To be applied to other data packages.
MR08-EB01120808-IS	Indeno-1,2,3-cd pyrene	0.11	-	None	To be applied to other data packages.
	Dibenzo (a,h) anthracene	0.11		None	To be applied to other data packages.
	Benzo (g,h,i) perylene	0.16		None	To be applied to other data packages.
MR08-EB-01120908-SS	None - ND	-	-	-	To be applied to other data packages.
MR08-EB-01120908-IS	None - ND	-	-	-	To be applied to other data packages.
MR08-EB01121008-SS	Benzo (a) anthracene	0.068	-	None	To be applied to other data packages.
	Benzo (b) fluoranthene	0.12		None	To be applied to other data packages.
	Benzo (k) fluoranthene	0.11		None	To be applied to other data packages.
	Indeno-1,2,3-cd pyrene	0.18		None	To be applied to other data packages.
	Dibenzo (a,h) anthracene	0.16		None	To be applied to other data packages.
	Benzo (g,h,i) perylene	0.22		None	To be applied to other data packages.

Field Duplicates - Field duplicate samples were not included in this data package.

Tentatively Identified Compounds (TICs) - TICs were not reported.

KATAHDIN ANALYTICAL SERVICES
Report of Analytical Results

Client: CH2MHill
Project: TO-009 Lejeune
PO No:
Sample Date: 12/02/08
Received Date: 12/03/08
Extraction Date: 12/04/08
Analysis Date: 16-DEC-2008 04:22
Report Date: 01/08/2009
Matrix: WATER
% Solids: NA

Lab ID: SB6919-3
Client ID: MR08-EB-120208-SS
SDG: TO9-10
Extracted by: CB
Extraction Method: SW846 3510
Analyst: JLP
Analysis Method: SW846 M8270C
Lab Prep Batch: WG58760
Units: ug/L

CAS#	Compound	Flags	Results	DF	PQL	Adj.PQL	Adj.MDL	
91-20-3	Naphthalene	U	0.25	1.0	0.25	0.25	0.064	
91-57-6	2-Methylnaphthalene	U	0.25	1.0	0.25	0.25	0.077	
86-73-7	Fluorene	U	0.25	1.0	0.25	0.25	0.061	
85-01-8	Phenanthrene	U	0.25	1.0	0.25	0.25	0.051	
206-44-0	Fluoranthene	U	0.25	1.0	0.25	0.25	0.073	
129-00-0	Pyrene	U	0.25	1.0	0.25	0.25	0.059	
56-55-3	Benzo(a)anthracene	U	0.25	1.0	0.25	0.25	0.046	
205-99-2	Benzo(b)fluoranthene	U	0.27	1.0	0.27	0.27	0.089	
207-08-9	Benzo(k)fluoranthene	U	0.25	1.0	0.25	0.25	0.049	
50-32-8	Benzo(a)pyrene	U	0.25	1.0	0.25	0.25	0.066	
193-39-5	Indeno(1,2,3-cd)pyrene	~~U~~ UJ	0.25	1.0	0.25	0.25	0.052	CCH
53-70-3	Dibenzo(a,h)anthracene	U	0.25	1.0	0.25	0.25	0.070	
191-24-2	Benzo(g,h,i)perylene	U	0.25	1.0	0.25	0.25	0.065	
118-74-1	Hexachlorobenzene	U	0.25	1.0	0.25	0.25	0.055	
87-68-3	Hexachlorobutadiene	~~U~~ UJ	0.27	1.0	0.27	0.27	0.087	CCH
77-47-4	Hexachlorocyclopentadiene	~~U~~ UJ	0.25	1.0	0.25	0.25	0.067	CCH
7297-45-2	2-Methylnaphthalene-D10		68%					
367-12-4	2,4-Dibromophenol		122%					
81103-79-9	Fluorene-d10		65%					
1718-51-1	Pyrene-D10		83%					

lw 3/1/09

2

KATAHDIN ANALYTICAL SERVICES
Report of Analytical Results

Client: CH2MHill
Project: TO-009 Lejeune
PO No:
Sample Date: 12/02/08
Received Date: 12/03/08
Extraction Date: 12/04/08
Analysis Date: 16-DEC-2008 05:05
Report Date: 01/08/2009
Matrix: WATER
% Solids: NA

Lab ID: SB6919-4
Client ID: MR08-EB-120208-IS
SDG: TO9-10
Extracted by: CB
Extraction Method: SW846 3510
Analyst: JLP
Analysis Method: SW846 M8270C
Lab Prep Batch: WG58760
Units: ug/L

CAS#	Compound	Flags	Results	DF	PQL	Adj.PQL	Adj.MDL	
91-20-3	Naphthalene	U	0.25	1.0	0.25	0.25	0.064	
91-57-6	2-Methylnaphthalene	U	0.25	1.0	0.25	0.25	0.077	
86-73-7	Fluorene	U	0.25	1.0	0.25	0.25	0.061	
85-01-8	Phenanthrene	U	0.25	1.0	0.25	0.25	0.051	
206-44-0	Fluoranthene	U	0.25	1.0	0.25	0.25	0.073	
129-00-0	Pyrene	U	0.25	1.0	0.25	0.25	0.059	
56-55-3	Benzo(a)anthracene	U	0.25	1.0	0.25	0.25	0.046	
205-99-2	Benzo(b)fluoranthene	U	0.27	1.0	0.27	0.27	0.089	
207-08-9	Benzo(k)fluoranthene	U	0.25	1.0	0.25	0.25	0.049	
50-32-8	Benzo(a)pyrene	U	0.25	1.0	0.25	0.25	0.066	
193-39-5	Indeno(1,2,3-cd)pyrene	~~U~~ UJ	0.25	1.0	0.25	0.25	0.052	CCH
53-70-3	Dibenzo(a,h)anthracene	U	0.25	1.0	0.25	0.25	0.070	
191-24-2	Benzo(g,h,i)perylene	U	0.25	1.0	0.25	0.25	0.065	
118-74-1	Hexachlorobenzene	U	0.25	1.0	0.25	0.25	0.055	
87-68-3	Hexachlorobutadiene	~~U~~ UJ	0.27	1.0	0.27	0.27	0.087	CCH
77-47-4	Hexachlorocyclopentadiene	~~U~~ UJ	0.25	1.0	0.25	0.25	0.067	CCH
7297-45-2	2-Methylnaphthalene-D10		64%					
367-12-4	2,4-Dibromophenol		120%					
81103-79-9	Fluorene-d10		62%					
1718-51-1	Pyrene-D10		81%					

GW 3/1/09

3

KATAHDIN ANALYTICAL SERVICES
Report of Analytical Results

Client: CH2MHill
Project: TO-009 Lejeune
PO No:
Sample Date: 12/03/08
Received Date: 12/04/08
Extraction Date: 12/05/08
Analysis Date: 16-DEC-2008 00:47
Report Date: 01/08/2009
Matrix: WATER
% Solids: NA

Lab ID: SB6966-2
Client ID: MR08-EB01120308-SS
SDG: TO9-10
Extracted by: CB
Extraction Method: SW846 3510
Analyst: JLP
Analysis Method: SW846 M8270C
Lab Prep Batch: WG58809
Units: ug/L

CAS#	Compound	Flags	Results	DF	PQL	Adj.PQL	Adj.MDL	
91-20-3	Naphthalene	U	0.24	1.0	0.25	0.24	0.061	
91-57-6	2-Methylnaphthalene	U	0.24	1.0	0.25	0.24	0.073	
86-73-7	Fluorene	U	0.24	1.0	0.25	0.24	0.058	
85-01-8	Phenanthrene	U	0.24	1.0	0.25	0.24	0.048	
206-44-0	Fluoranthene	U	0.24	1.0	0.25	0.24	0.070	
129-00-0	Pyrene	U	0.24	1.0	0.25	0.24	0.056	
56-55-3	Benzo(a)anthracene	U	0.24	1.0	0.25	0.24	0.044	
205-99-2	Benzo(b)fluoranthene	U	0.26	1.0	0.27	0.26	0.085	
207-08-9	Benzo(k)fluoranthene	U	0.24	1.0	0.25	0.24	0.047	
50-32-8	Benzo(a)pyrene	U	0.24	1.0	0.25	0.24	0.063	
193-39-5	Indeno(1,2,3-cd)pyrene	~~U~~ UJ	0.24	1.0	0.25	0.24	0.050	CCH
53-70-3	Dibenzo(a,h)anthracene	U	0.24	1.0	0.25	0.24	0.067	
191-24-2	Benzo(g,h,i)perylene	U	0.24	1.0	0.25	0.24	0.062	
118-74-1	Hexachlorobenzene	U	0.24	1.0	0.25	0.24	0.052	
87-68-3	Hexachlorobutadiene	~~U~~ UJ	0.26	1.0	0.27	0.26	0.083	CCH
77-47-4	Hexachlorocyclopentadiene	~~U~~ UJ	0.24	1.0	0.25	0.24	0.064	CCH
7297-45-2	2-Methylnaphthalene-D10		77%					
367-12-4	2,4-Dibromophenol		129%					
81103-79-9	Fluorene-d10		64%					
1718-51-1	Pyrene-D10		83%					

fwd 3/1/09

KATAHDIN ANALYTICAL SERVICES
Report of Analytical Results

Client: CH2MHill
Project: TO-009 Lejeune
PO No:
Sample Date: 12/03/08
Received Date: 12/04/08
Extraction Date: 12/05/08
Analysis Date: 16-DEC-2008 01:30
Report Date: 01/08/2009
Matrix: WATER
% Solids: NA

Lab ID: SB6966-4
Client ID: MR08-EB01120308-IS
SDG: TO9-10
Extracted by: CB
Extraction Method: SW846 3510
Analyst: JLP
Analysis Method: SW846 M8270C
Lab Prep Batch: WG58809
Units: ug/L

CAS#	Compound	Flags	Results	DF	PQL	Adj.PQL	Adj.MDL	
91-20-3	Naphthalene	U	0.24	1.0	0.25	0.24	0.060	
91-57-6	2-Methylnaphthalene	U	0.24	1.0	0.25	0.24	0.073	
86-73-7	Fluorene	U	0.24	1.0	0.25	0.24	0.058	
85-01-8	Phenanthrene	U	0.24	1.0	0.25	0.24	0.048	
206-44-0	Fluoranthene	U	0.24	1.0	0.25	0.24	0.069	
129-00-0	Pyrene	U	0.24	1.0	0.25	0.24	0.056	
56-55-3	Benzo(a)anthracene	U	0.24	1.0	0.25	0.24	0.043	
205-99-2	Benzo(b)fluoranthene	U	0.25	1.0	0.27	0.25	0.084	
207-08-9	Benzo(k)fluoranthene	U	0.24	1.0	0.25	0.24	0.046	
50-32-8	Benzo(a)pyrene	U	0.24	1.0	0.25	0.24	0.062	
193-39-5	Indeno(1,2,3-cd)pyrene	~~U~~ UJ	0.24	1.0	0.25	0.24	0.049	CCH
53-70-3	Dibenzo(a,h)anthracene	U	0.24	1.0	0.25	0.24	0.066	
191-24-2	Benzo(g,h,i)perylene	U	0.24	1.0	0.25	0.24	0.061	
118-74-1	Hexachlorobenzene	U	0.24	1.0	0.25	0.24	0.052	
87-68-3	Hexachlorobutadiene	~~U~~ UJ	0.25	1.0	0.27	0.25	0.082	CCH
77-47-4	Hexachlorocyclopentadiene	~~U~~ UJ	0.24	1.0	0.25	0.24	0.063	CCH
7297-45-2	2-Methylnaphthalene-D10		75%					
367-12-4	2,4-Dibromophenol		133%					
81103-79-9	Fluorene-d10		72%					
1718-51-1	Pyrene-D10		94%					

MW
3/1/09

KATAHDIN ANALYTICAL SERVICES
Report of Analytical Results

Client: CH2MHill
Project: TO-009 Lejeune
PO No:
Sample Date: 12/04/08
Received Date: 12/05/08
Extraction Date: 12/09/08
Analysis Date: 02-JAN-2009 18:43
Report Date: 01/08/2009
Matrix: WATER
% Solids: NA

Lab ID: SB7004-2
Client ID: MR08-EB01120408-SS
SDG: TO9-10
Extracted by: KF
Extraction Method: SW846 3510
Analyst: JCG
Analysis Method: SW846 M8270C
Lab Prep Batch: WG58923
Units: ug/L

CAS#	Compound	Flags	Results	DF	PQL	Adj.PQL	Adj.MDL	
91-20-3	Naphthalene	U	0.24	1.0	0.25	0.24	0.060	
91-57-6	2-Methylnaphthalene	U	0.24	1.0	0.25	0.24	0.073	
86-73-7	Fluorene	U	0.24	1.0	0.25	0.24	0.058	
85-01-8	Phenanthrene	U	0.24	1.0	0.25	0.24	0.048	
206-44-0	Fluoranthene	U	0.24	1.0	0.25	0.24	0.069	
129-00-0	Pyrene	U	0.24	1.0	0.25	0.24	0.056	
56-55-3	Benzo(a)anthracene	U	0.24	1.0	0.25	0.24	0.043	
205-99-2	Benzo(b)fluoranthene	U	0.25	1.0	0.27	0.25	0.084	
207-08-9	Benzo(k)fluoranthene	U	0.24	1.0	0.25	0.24	0.046	
50-32-8	Benzo(a)pyrene	U	0.24	1.0	0.25	0.24	0.062	
193-39-5	Indeno(1,2,3-cd)pyrene	U	0.24	1.0	0.25	0.24	0.049	
53-70-3	Dibenzo(a,h)anthracene	U	0.24	1.0	0.25	0.24	0.066	
191-24-2	Benzo(g,h,i)perylene	U	0.24	1.0	0.25	0.24	0.061	
118-74-1	Hexachlorobenzene	~~U~~ UJ	0.24	1.0	0.25	0.24	0.052	CCH
87-68-3	Hexachlorobutadiene	U	0.25	1.0	0.27	0.25	0.082	CCH
77-47-4	Hexachlorocyclopentadiene	~~U~~ UJ	0.24	1.0	0.25	0.24	0.063	CCH
7297-45-2	2-Methylnaphthalene-D10		77%					
367-12-4	2,4-Dibromophenol		96%					
81103-79-9	Fluorene-d10		70%					
1718-51-1	Pyrene-D10		104%					

LW 3/1/09

6

KATAHDIN ANALYTICAL SERVICES
Report of Analytical Results

Client: CH2MHill
Project: TO-009 Lejeune
PO No:
Sample Date: 12/04/08
Received Date: 12/05/08
Extraction Date: 12/09/08
Analysis Date: 02-JAN-2009 19:24
Report Date: 01/08/2009
Matrix: WATER
% Solids: NA

Lab ID: SB7004-4
Client ID: MR08-EB01120408-IS
SDG: TO9-10
Extracted by: KF
Extraction Method: SW846 3510
Analyst: JCG
Analysis Method: SW846 M8270C
Lab Prep Batch: WG58923
Units: ug/L

CAS#	Compound	Flags	Results	DF	PQL	Adj.PQL	Adj.MDL	
91-20-3	Naphthalene	U	0.24	1.0	0.25	0.24	0.060	
91-57-6	2-Methylnaphthalene	U	0.24	1.0	0.25	0.24	0.073	
86-73-7	Fluorene	U	0.24	1.0	0.25	0.24	0.058	
85-01-8	Phenanthrene	U	0.24	1.0	0.25	0.24	0.048	
206-44-0	Fluoranthene	U	0.24	1.0	0.25	0.24	0.069	
129-00-0	Pyrene	U	0.24	1.0	0.25	0.24	0.056	
56-55-3	Benzo(a)anthracene	U	0.24	1.0	0.25	0.24	0.043	
205-99-2	Benzo(b)fluoranthene	U	0.25	1.0	0.27	0.25	0.084	
207-08-9	Benzo(k)fluoranthene	U	0.24	1.0	0.25	0.24	0.046	
50-32-8	Benzo(a)pyrene	U	0.24	1.0	0.25	0.24	0.062	
193-39-5	Indeno(1,2,3-cd)pyrene	U	0.24	1.0	0.25	0.24	0.049	
53-70-3	Dibenzo(a,h)anthracene	U	0.24	1.0	0.25	0.24	0.066	
191-24-2	Benzo(g,h,i)perylene	U	0.24	1.0	0.25	0.24	0.061	
118-74-1	Hexachlorobenzene	~~U~~ UJ	0.24	1.0	0.25	0.24	0.052	CCH
87-68-3	Hexachlorobutadiene	U	0.25	1.0	0.27	0.25	0.082	
77-47-4	Hexachlorocyclopentadiene	~~U~~ UJ	0.24	1.0	0.25	0.24	0.063	CCH
7297-45-2	2-Methylnaphthalene-D10		73%					
367-12-4	2,4-Dibromophenol		108%					
81103-79-9	Fluorene-d10		76%					
1718-51-1	Pyrene-D10		105%					

lw 3/1/09

7

KATAHDIN ANALYTICAL SERVICES
Report of Analytical Results

Client: CH2MHill
Project: TO-009 Lejeune
PO No:
Sample Date: 12/05/08
Received Date: 12/06/08
Extraction Date: 12/09/08
Analysis Date: 02-JAN-2009 20:05
Report Date: 01/08/2009
Matrix: WATER
% Solids: NA

Lab ID: SB7034-2
Client ID: MR08-EB01120508-SS
SDG: TO9-10
Extracted by: KF
Extraction Method: SW846 3510
Analyst: JCG
Analysis Method: SW846 M8270C
Lab Prep Batch: WG58923
Units: ug/L

CAS#	Compound	Flags	Results	DF	PQL	Adj.PQL	Adj.MDL	
91-20-3	Naphthalene	U	0.24	1.0	0.25	0.24	0.060	
91-57-6	2-Methylnaphthalene	U	0.24	1.0	0.25	0.24	0.073	
86-73-7	Fluorene	U	0.24	1.0	0.25	0.24	0.058	
85-01-8	Phenanthrene	U	0.24	1.0	0.25	0.24	0.048	
206-44-0	Fluoranthene	U	0.24	1.0	0.25	0.24	0.069	
129-00-0	Pyrene	U	0.24	1.0	0.25	0.24	0.056	
56-55-3	Benzo(a)anthracene	U	0.24	1.0	0.25	0.24	0.043	
205-99-2	Benzo(b)fluoranthene	U	0.25	1.0	0.27	0.25	0.084	
207-08-9	Benzo(k)fluoranthene	U	0.24	1.0	0.25	0.24	0.046	
50-32-8	Benzo(a)pyrene	U	0.24	1.0	0.25	0.24	0.062	
193-39-5	Indeno(1,2,3-cd)pyrene	U	0.24	1.0	0.25	0.24	0.049	
53-70-3	Dibenzo(a,h)anthracene	U	0.24	1.0	0.25	0.24	0.066	
191-24-2	Benzo(g,h,i)perylene	U	0.24	1.0	0.25	0.24	0.061	
118-74-1	Hexachlorobenzene	~~U~~ UJ	0.24	1.0	0.25	0.24	0.052	CCH
87-68-3	Hexachlorobutadiene	U	0.25	1.0	0.27	0.25	0.082	
77-47-4	Hexachlorocyclopentadiene	~~U~~ UJ	0.24	1.0	0.25	0.24	0.063	CCH
7297-45-2	2-Methylnaphthalene-D10		66%					
367-12-4	2,4-Dibromophenol		104%					
81103-79-9	Fluorene-d10		69%					
1718-51-1	Pyrene-D10		101%					

lw 3/1/09

8

KATAHDIN ANALYTICAL SERVICES
Report of Analytical Results

Client: CH2MHill
Project: TO-009 Lejeune
PO No:
Sample Date: 12/05/08
Received Date: 12/06/08
Extraction Date: 12/09/08
Analysis Date: 02-JAN-2009 20:46
Report Date: 01/08/2009
Matrix: WATER
% Solids: NA

Lab ID: SB7034-4
Client ID: MR08-EB0120508-IS
SDG: TO9-10
Extracted by: KF
Extraction Method: SW846 3510
Analyst: JCG
Analysis Method: SW846 M8270C
Lab Prep Batch: WG58923
Units: ug/L

CAS#	Compound	Flags	Results	DF	PQL	Adj.PQL	Adj.MDL	
91-20-3	Naphthalene	U	0.24	1.0	0.25	0.24	0.060	
91-57-6	2-Methylnaphthalene	U	0.24	1.0	0.25	0.24	0.073	
86-73-7	Fluorene	U	0.24	1.0	0.25	0.24	0.058	
85-01-8	Phenanthrene	U	0.24	1.0	0.25	0.24	0.048	
206-44-0	Fluoranthene	U	0.24	1.0	0.25	0.24	0.069	
129-00-0	Pyrene	U	0.24	1.0	0.25	0.24	0.056	
56-55-3	Benzo(a)anthracene	U	0.24	1.0	0.25	0.24	0.043	
205-99-2	Benzo(b)fluoranthene	U	0.25	1.0	0.27	0.25	0.084	
207-08-9	Benzo(k)fluoranthene	U	0.24	1.0	0.25	0.24	0.046	
50-32-8	Benzo(a)pyrene	U	0.24	1.0	0.25	0.24	0.062	
193-39-5	Indeno(1,2,3-cd)pyrene	U	0.24	1.0	0.25	0.24	0.049	
53-70-3	Dibenzo(a,h)anthracene	U	0.24	1.0	0.25	0.24	0.066	
191-24-2	Benzo(g,h,i)perylene	U	0.24	1.0	0.25	0.24	0.061	
118-74-1	Hexachlorobenzene	~~U~~ UJ	0.24	1.0	0.25	0.24	0.052	CCH
87-68-3	Hexachlorobutadiene	U	0.25	1.0	0.27	0.25	0.082	
77-47-4	Hexachlorocyclopentadiene	~~U~~ UJ	0.24	1.0	0.25	0.24	0.063	CCH
7297-45-2	2-Methylnaphthalene-D10		77%					
367-12-4	2,4-Dibromophenol		114%					
81103-79-9	Fluorene-d10		75%					
1718-51-1	Pyrene-D10		105%					

lw 3/1/09

9

KATAHDIN ANALYTICAL SERVICES
Report of Analytical Results

Client: CH2MHill
Project: TO-009 Lejeune
PO No:
Sample Date: 12/06/08
Received Date: 12/09/08
Extraction Date: 12/10/08
Analysis Date: 02-JAN-2009 22:49
Report Date: 01/08/2009
Matrix: WATER
% Solids: NA

Lab ID: SB7057-2
Client ID: MR08-EB01120608-SS
SDG: TO9-10
Extracted by: KF
Extraction Method: SW846 3510
Analyst: JCG
Analysis Method: SW846 M8270C
Lab Prep Batch: WG58971
Units: ug/L

CAS#	Compound	Flags	Results	DF	PQL	Adj.PQL	Adj.MDL	
91-20-3	Naphthalene	U	0.24	1.0	0.25	0.24	0.060	
91-57-6	2-Methylnaphthalene	U	0.24	1.0	0.25	0.24	0.073	
86-73-7	Fluorene	U	0.24	1.0	0.25	0.24	0.058	
85-01-8	Phenanthrene	U	0.24	1.0	0.25	0.24	0.048	
206-44-0	Fluoranthene	U	0.24	1.0	0.25	0.24	0.069	
129-00-0	Pyrene	U	0.24	1.0	0.25	0.24	0.056	
56-55-3	Benzo(a)anthracene	U	0.24	1.0	0.25	0.24	0.043	
205-99-2	Benzo(b)fluoranthene	U	0.25	1.0	0.27	0.25	0.084	
207-08-9	Benzo(k)fluoranthene	U	0.24	1.0	0.25	0.24	0.046	
50-32-8	Benzo(a)pyrene	U	0.24	1.0	0.25	0.24	0.062	
193-39-5	Indeno(1,2,3-cd)pyrene	U	0.24	1.0	0.25	0.24	0.049	
53-70-3	Dibenzo(a,h)anthracene	U	0.24	1.0	0.25	0.24	0.066	
191-24-2	Benzo(g,h,i)perylene	U	0.24	1.0	0.25	0.24	0.061	
118-74-1	Hexachlorobenzene	~~U~~ UJ	0.24	1.0	0.25	0.24	0.052	CCH
87-68-3	Hexachlorobutadiene	U	0.25	1.0	0.27	0.25	0.082	
77-47-4	Hexachlorocyclopentadiene	~~U~~ UJ	0.24	1.0	0.25	0.24	0.063	CCH
7297-45-2	2-Methylnaphthalene-D10		69%					
367-12-4	2,4-Dibromophenol		108%					
81103-79-9	Fluorene-d10		72%					
1718-51-1	Pyrene-D10		101%					

lw
3/1/09

10

KATAHDIN ANALYTICAL SERVICES
Report of Analytical Results

Client: CH2MHill
Project: TO-009 Lejeune
PO No:
Sample Date: 12/06/08
Received Date: 12/09/08
Extraction Date: 12/10/08
Analysis Date: 05-JAN-2009 13:31
Report Date: 01/08/2009
Matrix: WATER
% Solids: NA

Lab ID: SB7057-4
Client ID: MR08-EB01120608-IS
SDG: TO9-10
Extracted by: KF
Extraction Method: SW846 3510
Analyst: JLP
Analysis Method: SW846 M8270C
Lab Prep Batch: WG58971
Units: ug/L

CAS#	Compound	Flags	Results	DF	PQL	Adj.PQL	Adj.MDL	
91-20-3	Naphthalene	U	0.24	1.0	0.25	0.24	0.060	
91-57-6	2-Methylnaphthalene	U	0.24	1.0	0.25	0.24	0.073	
86-73-7	Fluorene	U	0.24	1.0	0.25	0.24	0.058	
85-01-8	Phenanthrene	U	0.24	1.0	0.25	0.24	0.048	
206-44-0	Fluoranthene	U	0.24	1.0	0.25	0.24	0.069	
129-00-0	Pyrene	~~U~~ UJ	0.24	1.0	0.25	0.24	0.056	CCH
56-55-3	Benzo(a)anthracene	U	0.24	1.0	0.25	0.24	0.043	
205-99-2	Benzo(b)fluoranthene	~~U~~ UJ	0.25	1.0	0.27	0.25	0.084	CCH
207-08-9	Benzo(k)fluoranthene	~~U~~ UJ	0.24	1.0	0.25	0.24	0.046	CCH
50-32-8	Benzo(a)pyrene	U	0.24	1.0	0.25	0.24	0.062	
193-39-5	Indeno(1,2,3-cd)pyrene	~~U~~ UJ	0.24	1.0	0.25	0.24	0.049	CCH
53-70-3	Dibenzo(a,h)anthracene	U	0.24	1.0	0.25	0.24	0.066	
191-24-2	Benzo(g,h,i)perylene	U	0.24	1.0	0.25	0.24	0.061	
118-74-1	Hexachlorobenzene	U	0.24	1.0	0.25	0.24	0.052	
87-68-3	Hexachlorobutadiene	U	0.25	1.0	0.27	0.25	0.082	
77-47-4	Hexachlorocyclopentadiene	U	0.24	1.0	0.25	0.24	0.063	
7297-45-2	2-Methylnaphthalene-D10		75%					
367-12-4	2,4-Dibromophenol		106%					
81103-79-9	Fluorene-d10		70%					
1718-51-1	Pyrene-D10		102%					

MW 3/1/09

11

KATAHDIN ANALYTICAL SERVICES
Report of Analytical Results

Client: CH2MHill
Project: TO-009 Lejeune
PO No:
Sample Date: 12/06/08
Received Date: 12/09/08
Extraction Date: 12/10/08
Analysis Date: 05-JAN-2009 14:20
Report Date: 01/08/2009
Matrix: WATER
% Solids: NA

Lab ID: SB7057-6
Client ID: MR08-FB01120608
SDG: TO9-10
Extracted by: KF
Extraction Method: SW846 3510
Analyst: JLP
Analysis Method: SW846 M8270C
Lab Prep Batch: WG58971
Units: ug/L

CAS#	Compound	Flags	Results	DF	PQL	Adj.PQL	Adj.MDL	
91-20-3	Naphthalene	U	0.24	1.0	0.25	0.24	0.060	
91-57-6	2-Methylnaphthalene	U	0.24	1.0	0.25	0.24	0.073	
86-73-7	Fluorene	U	0.24	1.0	0.25	0.24	0.058	
85-01-8	Phenanthrene	U	0.24	1.0	0.25	0.24	0.048	
206-44-0	Fluoranthene	U	0.24	1.0	0.25	0.24	0.069	
129-00-0	Pyrene	~~U~~ UJ	0.24	1.0	0.25	0.24	0.056	CCH
56-55-3	Benzo(a)anthracene	U	0.24	1.0	0.25	0.24	0.043	
205-99-2	Benzo(b)fluoranthene	~~U~~ UJ	0.25	1.0	0.27	0.25	0.084	CCH
207-08-9	Benzo(k)fluoranthene	~~U~~ UJ	0.24	1.0	0.25	0.24	0.046	CCH
50-32-8	Benzo(a)pyrene	U	0.24	1.0	0.25	0.24	0.062	
193-39-5	Indeno(1,2,3-cd)pyrene	~~U~~ UJ	0.24	1.0	0.25	0.24	0.049	CCH
53-70-3	Dibenzo(a,h)anthracene	U	0.24	1.0	0.25	0.24	0.066	
191-24-2	Benzo(g,h,i)perylene	U	0.24	1.0	0.25	0.24	0.061	
118-74-1	Hexachlorobenzene	U	0.24	1.0	0.25	0.24	0.052	
87-68-3	Hexachlorobutadiene	U	0.25	1.0	0.27	0.25	0.082	
77-47-4	Hexachlorocyclopentadiene	U	0.24	1.0	0.25	0.24	0.063	
7297-45-2	2-Methylnaphthalene-D10		64%					
367-12-4	2,4-Dibromophenol		91%					
81103-79-9	Fluorene-d10		60%					
1718-51-1	Pyrene-D10		94%					

lw
3/1/09

12

KATAHDIN ANALYTICAL SERVICES
Report of Analytical Results

Client: CH2MHill
Project: TO-009 Lejeune
PO No:
Sample Date: 12/07/08
Received Date: 12/09/08
Extraction Date: 12/10/08
Analysis Date: 05-JAN-2009 15:08
Report Date: 01/08/2009
Matrix: WATER
% Solids: NA

Lab ID: SB7057-8
Client ID: MR08-EB01120708-SS
SDG: TO9-10
Extracted by: KF
Extraction Method: SW846 3510
Analyst: JLP
Analysis Method: SW846 M8270C
Lab Prep Batch: WG58971
Units: ug/L

CAS#	Compound	Flags	Results	DF	PQL	Adj.PQL	Adj.MDL	
91-20-3	Naphthalene	U	0.24	1.0	0.25	0.24	0.060	
91-57-6	2-Methylnaphthalene	U	0.24	1.0	0.25	0.24	0.073	
86-73-7	Fluorene	U	0.24	1.0	0.25	0.24	0.058	
85-01-8	Phenanthrene	U	0.24	1.0	0.25	0.24	0.048	
206-44-0	Fluoranthene	U	0.24	1.0	0.25	0.24	0.069	
129-00-0	Pyrene	~~U~~ UJ	0.24	1.0	0.25	0.24	0.056	CCH
56-55-3	Benzo(a)anthracene	U	0.24	1.0	0.25	0.24	0.043	
205-99-2	Benzo(b)fluoranthene	~~U~~ UJ	0.25	1.0	0.27	0.25	0.084	CCH
207-08-9	Benzo(k)fluoranthene	~~U~~ UJ	0.24	1.0	0.25	0.24	0.046	CCH
50-32-8	Benzo(a)pyrene	U	0.24	1.0	0.25	0.24	0.062	
193-39-5	Indeno(1,2,3-cd)pyrene	~~U~~ UJ	0.24	1.0	0.25	0.24	0.049	CCH
53-70-3	Dibenzo(a,h)anthracene	U	0.24	1.0	0.25	0.24	0.066	
191-24-2	Benzo(g,h,i)perylene	U	0.24	1.0	0.25	0.24	0.061	
118-74-1	Hexachlorobenzene	U	0.24	1.0	0.25	0.24	0.052	
87-68-3	Hexachlorobutadiene	U	0.25	1.0	0.27	0.25	0.082	
77-47-4	Hexachlorocyclopentadiene	U	0.24	1.0	0.25	0.24	0.063	
7297-45-2	2-Methylnaphthalene-D10		62%					
367-12-4	2,4-Dibromophenol		89%					
81103-79-9	Fluorene-d10		66%					
1718-51-1	Pyrene-D10		87%					

lw 3/1/09

KATAHDIN ANALYTICAL SERVICES
Report of Analytical Results

Client: CH2MHill
Project: TO-009 Lejeune
PO No:
Sample Date: 12/07/08
Received Date: 12/09/08
Extraction Date: 12/10/08
Analysis Date: 05-JAN-2009 15:58
Report Date: 01/08/2009
Matrix: WATER
% Solids: NA

Lab ID: SB7057-10
Client ID: MR08-EB01120708-IS
SDG: TO9-10
Extracted by: KF
Extraction Method: SW846 3510
Analyst: JLP
Analysis Method: SW846 M8270C
Lab Prep Batch: WG58971
Units: ug/L

CAS#	Compound	Flags	Results	DF	PQL	Adj.PQL	Adj.MDL	
91-20-3	Naphthalene	U	0.24	1.0	0.25	0.24	0.060	
91-57-6	2-Methylnaphthalene	U	0.24	1.0	0.25	0.24	0.073	
86-73-7	Fluorene	U	0.24	1.0	0.25	0.24	0.058	
85-01-8	Phenanthrene	U	0.24	1.0	0.25	0.24	0.048	
206-44-0	Fluoranthene	U	0.24	1.0	0.25	0.24	0.069	
129-00-0	Pyrene	~~U~~ UJ	0.24	1.0	0.25	0.24	0.056	CCH
56-55-3	Benzo(a)anthracene	U	0.24	1.0	0.25	0.24	0.043	
205-99-2	Benzo(b)fluoranthene	~~U~~ UJ	0.25	1.0	0.27	0.25	0.084	CCH
207-08-9	Benzo(k)fluoranthene	~~U~~ UJ	0.24	1.0	0.25	0.24	0.046	CCH
50-32-8	Benzo(a)pyrene	U	0.24	1.0	0.25	0.24	0.062	
193-39-5	Indeno(1,2,3-cd)pyrene	~~U~~ UJ	0.24	1.0	0.25	0.24	0.049	CCH
53-70-3	Dibenzo(a,h)anthracene	U	0.24	1.0	0.25	0.24	0.066	
191-24-2	Benzo(g,h,i)perylene	U	0.24	1.0	0.25	0.24	0.061	
118-74-1	Hexachlorobenzene	U	0.24	1.0	0.25	0.24	0.052	
87-68-3	Hexachlorobutadiene	U	0.25	1.0	0.27	0.25	0.082	
77-47-4	Hexachlorocyclopentadiene	U	0.24	1.0	0.25	0.24	0.063	
7297-45-2	2-Methylnaphthalene-D10		70%					
367-12-4	2,4-Dibromophenol		91%					
81103-79-9	Fluorene-d10		63%					
1718-51-1	Pyrene-D10		94%					

LW
3/1/09

KATAHDIN ANALYTICAL SERVICES
Report of Analytical Results

Client: CH2MHill
Project: TO-009 Lejeune
PO No:
Sample Date: 12/08/08
Received Date: 12/09/08
Extraction Date: 12/10/08
Analysis Date: 07-JAN-2009 18:12
Report Date: 01/08/2009
Matrix: WATER
% Solids: NA

Lab ID: SB7057-12
Client ID: MR08-EB01120808-SS
SDG: TO9-10
Extracted by: KF
Extraction Method: SW846 3510
Analyst: JCG
Analysis Method: SW846 M8270C
Lab Prep Batch: WG58971
Units: ug/L

CAS#	Compound	Flags	Results	DF	PQL	Adj.PQL	Adj.MDL
91-20-3	Naphthalene	U	0.26	1.0	0.25	0.26	0.067
91-57-6	2-Methylnaphthalene	U	0.26	1.0	0.25	0.26	0.081
86-73-7	Fluorene	U	0.26	1.0	0.25	0.26	0.064
85-01-8	Phenanthrene	U	0.26	1.0	0.25	0.26	0.054
206-44-0	Fluoranthene	U	0.26	1.0	0.25	0.26	0.077
129-00-0	Pyrene	U	0.26	1.0	0.25	0.26	0.062
56-55-3	Benzo(a)anthracene	U	0.26	1.0	0.25	0.26	0.048
205-99-2	Benzo(b)fluoranthene	U	0.28	1.0	0.27	0.28	0.094
207-08-9	Benzo(k)fluoranthene	U	0.26	1.0	0.25	0.26	0.052
50-32-8	Benzo(a)pyrene	U	0.26	1.0	0.25	0.26	0.069
193-39-5	Indeno(1,2,3-cd)pyrene	J	0.063	1.0	0.25	0.26	0.055
53-70-3	Dibenzo(a,h)anthracene	U	0.26	1.0	0.25	0.26	0.074
191-24-2	Benzo(g,h,i)perylene	J	0.076	1.0	0.25	0.26	0.068
118-74-1	Hexachlorobenzene	U	0.26	1.0	0.25	0.26	0.058
87-68-3	Hexachlorobutadiene	U	0.28	1.0	0.27	0.28	0.092
77-47-4	Hexachlorocyclopentadiene	U	0.26	1.0	0.25	0.26	0.070
7297-45-2	2-Methylnaphthalene-D10		72%				
367-12-4	2,4-Dibromophenol		76%				
81103-79-9	Fluorene-d10		67%				
1718-51-1	Pyrene-D10		93%				

lw
3/1/09

KATAHDIN ANALYTICAL SERVICES
Report of Analytical Results

Client: CH2MHill
Project: TO-009 Lejeune
PO No:
Sample Date: 12/08/08
Received Date: 12/09/08
Extraction Date: 12/10/08
Analysis Date: 07-JAN-2009 18:54
Report Date: 01/08/2009
Matrix: WATER
% Solids: NA

Lab ID: SB7057-14
Client ID: MR08-EB01120808-IS
SDG: TO9-10
Extracted by: KF
Extraction Method: SW846 3510
Analyst: JCG
Analysis Method: SW846 M8270C
Lab Prep Batch: WG58971
Units: ug/L

CAS#	Compound	Flags	Results	DF	PQL	Adj.PQL	Adj.MDL
91-20-3	Naphthalene	U	0.24	1.0	0.25	0.24	0.063
91-57-6	2-Methylnaphthalene	U	0.24	1.0	0.25	0.24	0.075
86-73-7	Fluorene	U	0.24	1.0	0.25	0.24	0.060
85-01-8	Phenanthrene	U	0.24	1.0	0.25	0.24	0.050
206-44-0	Fluoranthene	U	0.24	1.0	0.25	0.24	0.072
129-00-0	Pyrene	U	0.24	1.0	0.25	0.24	0.058
56-55-3	Benzo(a)anthracene	U	0.24	1.0	0.25	0.24	0.045
205-99-2	Benzo(b)fluoranthene	U	0.26	1.0	0.27	0.26	0.087
207-08-9	Benzo(k)fluoranthene	U	0.24	1.0	0.25	0.24	0.048
50-32-8	Benzo(a)pyrene	U	0.24	1.0	0.25	0.24	0.065
193-39-5	Indeno(1,2,3-cd)pyrene	J	0.11	1.0	0.25	0.24	0.051
53-70-3	Dibenzo(a,h)anthracene	J	0.11	1.0	0.25	0.24	0.069
191-24-2	Benzo(g,h,i)perylene	J	0.16	1.0	0.25	0.24	0.064
118-74-1	Hexachlorobenzene	U	0.24	1.0	0.25	0.24	0.054
87-68-3	Hexachlorobutadiene	U	0.26	1.0	0.27	0.26	0.085
77-47-4	Hexachlorocyclopentadiene	U	0.24	1.0	0.25	0.24	0.066
7297-45-2	2-Methylnaphthalene-D10		60%				
367-12-4	2,4-Dibromophenol		71%				
81103-79-9	Fluorene-d10		62%				
1718-51-1	Pyrene-D10		91%				

lw 3/1/09

KATAHDIN ANALYTICAL SERVICES
Report of Analytical Results

Client: CH2MHill
Project: TO-009 Lejeune
PO No:
Sample Date: 12/09/08
Received Date: 12/10/08
Extraction Date: 12/11/08
Analysis Date: 07-JAN-2009 19:35
Report Date: 01/08/2009
Matrix: WATER
% Solids: NA

Lab ID: SB7082-2
Client ID: EB-01120908-SS
SDG: TO9-10
Extracted by: KF
Extraction Method: SW846 3510
Analyst: JCG
Analysis Method: SW846 M8270C
Lab Prep Batch: WG59001
Units: ug/L

CAS#	Compound	Flags	Results	DF	PQL	Adj.PQL	Adj.MDL
91-20-3	Naphthalene	U	0.24	1.0	0.25	0.24	0.060
91-57-6	2-Methylnaphthalene	U	0.24	1.0	0.25	0.24	0.073
86-73-7	Fluorene	U	0.24	1.0	0.25	0.24	0.058
85-01-8	Phenanthrene	U	0.24	1.0	0.25	0.24	0.048
206-44-0	Fluoranthene	U	0.24	1.0	0.25	0.24	0.069
129-00-0	Pyrene	U	0.24	1.0	0.25	0.24	0.056
56-55-3	Benzo(a)anthracene	U	0.24	1.0	0.25	0.24	0.043
205-99-2	Benzo(b)fluoranthene	U	0.25	1.0	0.27	0.25	0.084
207-08-9	Benzo(k)fluoranthene	U	0.24	1.0	0.25	0.24	0.046
50-32-8	Benzo(a)pyrene	U	0.24	1.0	0.25	0.24	0.062
193-39-5	Indeno(1,2,3-cd)pyrene	U	0.24	1.0	0.25	0.24	0.049
53-70-3	Dibenzo(a,h)anthracene	U	0.24	1.0	0.25	0.24	0.066
191-24-2	Benzo(g,h,i)perylene	U	0.24	1.0	0.25	0.24	0.061
118-74-1	Hexachlorobenzene	U	0.24	1.0	0.25	0.24	0.052
87-68-3	Hexachlorobutadiene	U	0.25	1.0	0.27	0.25	0.082
77-47-4	Hexachlorocyclopentadiene	U	0.24	1.0	0.25	0.24	0.063
7297-45-2	2-Methylnaphthalene-D10		76%				
367-12-4	2,4-Dibromophenol		81%				
81103-79-9	Fluorene-d10		77%				
1718-51-1	Pyrene-D10		103%				

MW
3/1/09

17

KATAHDIN ANALYTICAL SERVICES
Report of Analytical Results

Client: CH2MHill
Project: TO-009 Lejeune
PO No:
Sample Date: 12/09/08
Received Date: 12/10/08
Extraction Date: 12/11/08
Analysis Date: 07-JAN-2009 20:16
Report Date: 01/08/2009
Matrix: WATER
% Solids: NA

Lab ID: SB7082-4
Client ID: EB-01120908-IS
SDG: TO9-10
Extracted by: KF
Extraction Method: SW846 3510
Analyst: JCG
Analysis Method: SW846 M8270C
Lab Prep Batch: WG59001
Units: ug/L

CAS#	Compound	Flags	Results	DF	PQL	Adj.PQL	Adj.MDL
91-20-3	Naphthalene	U	0.24	1.0	0.25	0.24	0.060
91-57-6	2-Methylnaphthalene	U	0.24	1.0	0.25	0.24	0.073
86-73-7	Fluorene	U	0.24	1.0	0.25	0.24	0.058
85-01-8	Phenanthrene	U	0.24	1.0	0.25	0.24	0.048
206-44-0	Fluoranthene	U	0.24	1.0	0.25	0.24	0.069
129-00-0	Pyrene	U	0.24	1.0	0.25	0.24	0.056
56-55-3	Benzo(a)anthracene	U	0.24	1.0	0.25	0.24	0.043
205-99-2	Benzo(b)fluoranthene	U	0.25	1.0	0.27	0.25	0.084
207-08-9	Benzo(k)fluoranthene	U	0.24	1.0	0.25	0.24	0.046
50-32-8	Benzo(a)pyrene	U	0.24	1.0	0.25	0.24	0.062
193-39-5	Indeno(1,2,3-cd)pyrene	U	0.24	1.0	0.25	0.24	0.049
53-70-3	Dibenzo(a,h)anthracene	U	0.24	1.0	0.25	0.24	0.066
191-24-2	Benzo(g,h,i)perylene	U	0.24	1.0	0.25	0.24	0.061
118-74-1	Hexachlorobenzene	U	0.24	1.0	0.25	0.24	0.052
87-68-3	Hexachlorobutadiene	U	0.25	1.0	0.27	0.25	0.082
77-47-4	Hexachlorocyclopentadiene	U	0.24	1.0	0.25	0.24	0.063
7297-45-2	2-Methylnaphthalene-D10		72%				
367-12-4	2,4-Dibromophenol		76%				
81103-79-9	Fluorene-d10		73%				
1718-51-1	Pyrene-D10		99%				

lw 3/1/09

KATAHDIN ANALYTICAL SERVICES
Report of Analytical Results

Client: CH2MHill
Project: TO-009 Lejeune
PO No:
Sample Date: 12/10/08
Received Date: 12/11/08
Extraction Date: 12/16/08
Analysis Date: 07-JAN-2009 23:01
Report Date: 01/08/2009
Matrix: WATER
% Solids: NA

Lab ID: SB7128-2
Client ID: MR08-EB01121008-SS
SDG: TO9-10
Extracted by: KF
Extraction Method: SW846 3510
Analyst: JCG
Analysis Method: SW846 M8270C
Lab Prep Batch: WG59115
Units: ug/L

CAS#	Compound	Flags	Results	DF	PQL	Adj.PQL	Adj.MDL
91-20-3	Naphthalene	U	0.24	1.0	0.25	0.24	0.060
91-57-6	2-Methylnaphthalene	U	0.24	1.0	0.25	0.24	0.073
86-73-7	Fluorene	U	0.24	1.0	0.25	0.24	0.058
85-01-8	Phenanthrene	U	0.24	1.0	0.25	0.24	0.048
206-44-0	Fluoranthene	U	0.24	1.0	0.25	0.24	0.069
129-00-0	Pyrene	U	0.24	1.0	0.25	0.24	0.056
56-55-3	Benzo(a)anthracene	J	0.068	1.0	0.25	0.24	0.043
205-99-2	Benzo(b)fluoranthene	J	0.12	1.0	0.27	0.25	0.084
207-08-9	Benzo(k)fluoranthene	J	0.11	1.0	0.25	0.24	0.046
50-32-8	Benzo(a)pyrene	U	0.24	1.0	0.25	0.24	0.062
193-39-5	Indeno(1,2,3-cd)pyrene	J	0.18	1.0	0.25	0.24	0.049
53-70-3	Dibenzo(a,h)anthracene	J	0.16	1.0	0.25	0.24	0.066
191-24-2	Benzo(g,h,i)perylene	J	0.22	1.0	0.25	0.24	0.061
118-74-1	Hexachlorobenzene	U	0.24	1.0	0.25	0.24	0.052
87-68-3	Hexachlorobutadiene	U	0.25	1.0	0.27	0.25	0.082
77-47-4	Hexachlorocyclopentadiene	U	0.24	1.0	0.25	0.24	0.063
7297-45-2	2-Methylnaphthalene-D10		65%				
367-12-4	2,4-Dibromophenol		79%				
81103-79-9	Fluorene-d10		72%				
1718-51-1	Pyrene-D10		86%				

MW
31/09

ENVIRONMENTAL
Data Services, Inc.

SEMIVOLATILE ORGANIC COMPOUNDS

USEPA Region IV - Level IV Review

Site: MCB Camp Lejeune, TO-09 SDG #: TO9-10

Client: CH2M HILL, Inc., Virginia Beach, Virginia Date: March 1, 2009

Laboratory: Katahdin Analytical Services, Scarborough, Maine Reviewer: Nancy Weaver

EDS ID	Client Sample ID	Laboratory Sample ID	Matrix
1	MR08-EB-120208-SS	SB6919-1	Water
2	MR08-EB-120208-IS	SB6919-2	Water
3	MR08-EB01120308-SS	SB6966-1	Water
4	MR08-EB01120308-IS	SB6966-3	Water
5	MR08-EB01120408-SS	SB7004-1	Water
6	MR08-EB01120408-IS	SB7004-3	Water
7	MR08-EB01120508-SS	SB7034-1	Water
8	MR08-EB01120508-IS	SB7034-3	Water
9	MR08-EB01120608-SS	SB7057-1	Water
10	MR08-EB01120608-IS	SB7057-3	Water
11	MR08-FB01120608	SB7057-5	Water
12	MR08-EB01120708-SS	SB7057-7	Water
13	MR08-EB01120708-IS	SB7057-9	Water
14	MR08-EB01120808-SS	SB7057-11	Water
15	MR08-EB01120808-IS	SB7057-13	Water
16	MR08-EB-01120908-SS	SB7082-1	Water
17	MR08-EB-01120908-IS	SB7082-3	Water
18	MR08-EB01121008-SS	SB7128-1	Water

The USEPA "Contract Laboratory Program National Functional Guidelines for Organic Data Review," October 1999, and professional judgement were used in evaluating the data in this summary report.

Holding Times - All samples were extracted within 7 days for water samples and analyzed within 40 days for all samples.

GC/MS Tuning - All of the DFTPP tunes in the initial and continuing calibrations met the percent relative abundance criteria.

Initial Calibration - The initial calibrations exhibited acceptable %RSD and mean RRF values.

Continuing Calibration - The continuing calibrations exhibited acceptable %D and RRF values except the following.

CCAL Date	Compound	%D/RRF	Qualifier	Affected Samples
01/05/09	Nitrobenzene	53.77%	J/UJ	1-10
	2,4-Dinitrophenol	36.00%	J/UJ	1-10
01/06/09 (0839)	Nitrobenzene	37.08%	J/UJ	11-17
	2,4-Dinitrophenol	27.40%	J/UJ	11-17
01/06/09 (1800)	Benzaldehyde	27.27%	J/UJ	18
	Nitrobenzene	30.15%	J/UJ	18

Surrogates - All samples exhibited acceptable surrogate recoveries.

MS/MSD - A MS/MSD sample was not analyzed.

Laboratory Control Sample - The LCS samples exhibited acceptable %R values except the following.

LCS ID	Compound	%R	Qualifier	Affected Samples
WG58759-LCS	Nitrobenzene	111%	None	All ND
	Caprolactam	8%	J/R	1, 2
WG58808-LCS	Nitrobenzene	117%	None	All ND
	Caprolactam	8%	J/R	3, 4
WG58922-LCS	Nitrobenzene	111%	None	All ND
WG58970-LCS	Nitrobenzene	117%	None	All ND
WG59000-LCS	Nitrobenzene	117%	None	All ND
	Caprolactam	8%	J/R	16, 17

Internal Standard (IS) Area Performance - All internal standards met response and retention time (RT) criteria.

Method Blank - The method blanks were free of contamination.

Field, Equipment Blank - Field QC results are summarized below.

Blank ID	Compound	Conc. ug/L	Action Level ug/L	Qualifier	Affected Samples
MR08-EB-120208-SS	None - ND	-	-	-	To be applied to other data packages.
MR08-EB-120208-IS	None - ND	-	-	-	To be applied to other data packages.

Blank ID	Compound	Conc. ug/L	Action Level ug/L	Qualifier	Affected Samples
MR08-EB01120308-SS	None - ND	-	-	-	To be applied to other data packages.
MR08-EB01120308-IS	None - ND	-	-	-	To be applied to other data packages.
MR08-EB01120408-SS	None - ND	-	-	-	To be applied to other data packages.
MR08-EB01120408-IS	None - ND	-	-	-	To be applied to other data packages.
MR08-EB01120508-SS	None - ND	-	-	-	To be applied to other data packages.
MR08-EB01120508-IS	None - ND	-	-	-	To be applied to other data packages.
MR08-EB01120608-SS	None - ND	-	-	-	To be applied to other data packages.
MR08-EB01120608-IS	None - ND	-	-	-	To be applied to other data packages.
MR08-FB01120608	None - ND	-	-	-	To be applied to other data packages.
MR08-EB01120708-SS	None - ND	-	-	-	To be applied to other data packages.
MR08-EB01120708-IS	None - ND	-	-	-	To be applied to other data packages.
MR08-EB01120808-SS	None - ND	-	-	-	To be applied to other data packages.
MR08-EB01120808-IS	None - ND	-	-	-	To be applied to other data packages.
MR08-EB-01120908-SS	None - ND	-	-	-	To be applied to other data packages.
MR08-EB-01120908-IS	None - ND	-	-	-	To be applied to other data packages.
MR08-EB01121008-SS	None - ND	-	-	-	To be applied to other data packages.

Field Duplicates - Field duplicate samples were not included in this data package.

Tentatively Identified Compounds (TICs) - TICs were not reported.

Compound Quantitation - No discrepancies were identified.

1

KATAHDIN ANALYTICAL SERVICES
Report of Analytical Results

Client: CH2MHill
Project: TO-009 Lejeune
PO No:
Sample Date: 12/02/08
Received Date: 12/03/08
Extraction Date: 12/04/08
Analysis Date: 05-JAN-2009 18:24
Report Date: 01/07/2009
Matrix: WATER
% Solids: NA

Lab ID: SB6919-1
Client ID: MR08-EB-120208-SS
SDG: TO9-10
Extracted by: CB
Extraction Method: SW846 3510
Analyst: JCG
Analysis Method: SW846 8270C
Lab Prep Batch: WG58759
Units: ug/L

CAS#	Compound	Flags	Results	DF	PQL	Adj.PQL	Adj.MDL	
100-52-7	Benzaldehyde	U	10	1.0	10	10	3	
108-95-2	Phenol	U	10	1.0	10	10	2	
111-44-4	Bis(2-Chloroethyl)ether	U	10	1.0	10	10	2	
95-57-8	2-Chlorophenol	U	12	1.0	12	12	3	
95-48-7	2-Methylphenol	U	12	1.0	12	12	4	
108-60-1	2,2'-Oxybis(1-chloropropane)	U	10	1.0	10	10	2	
98-86-2	Acetophenone	U	12	1.0	12	12	4	
621-64-7	N-Nitroso-di-n-propylamine	U	10	1.0	10	10	2	
65794-96-9	3&4-Methylphenol	U	10	1.0	10	10	3	
67-72-1	Hexachloroethane	U	10	1.0	10	10	2	
98-95-3	Nitrobenzene	~~U~~ UJ	10	1.0	10	10	2	CCH
78-59-1	Isophorone	U	10	1.0	10	10	2	
88-75-5	2-Nitrophenol	U	10	1.0	10	10	4	
105-67-9	2,4-Dimethylphenol	U	12	1.0	12	12	4	
111-91-1	Bis(2-Chloroethoxy)methane	U	10	1.0	10	10	2	
120-83-2	2,4-Dichlorophenol	U	12	1.0	12	12	4	
106-47-8	4-Chloroaniline	U	10	1.0	10	10	2	
105-60-2	Caprolactam	~~U~~ R	10	1.0	10	10	0.4	BSL
59-50-7	4-Chloro-3-Methylphenol	U	10	1.0	10	10	2	
88-06-2	2,4,6-Trichlorophenol	U	10	1.0	10	10	3	
95-95-4	2,4,5-Trichlorophenol	U	25	1.0	25	25	4	
91-58-7	2-Chloronaphthalene	U	10	1.0	10	10	2	
92-52-4	1,1'-Biphenyl	U	10	1.0	10	10	2	
88-74-4	2-Nitroaniline	U	25	1.0	25	25	2	
131-11-3	Dimethyl Phthalate	U	10	1.0	10	10	0.8	
606-20-2	2,6-Dinitrotoluene	U	10	1.0	10	10	1	
208-96-8	Acenaphthylene	U	10	1.0	10	10	2	
99-09-2	3-Nitroaniline	U	25	1.0	25	25	1	
83-32-9	Acenaphthene	U	10	1.0	10	10	2	
51-28-5	2,4-Dinitrophenol	~~U~~ UJ	45	1.0	45	45	15	CCH
132-64-9	Dibenzofuran	U	10	1.0	10	10	1	
100-02-7	4-Nitrophenol	U	25	1.0	25	25	6	
121-14-2	2,4-Dinitrotoluene	U	10	1.0	10	10	1	
84-66-2	Diethylphthalate	U	10	1.0	10	10	1	
7005-72-3	4-Chlorophenyl-phenylether	U	10	1.0	10	10	1	
100-01-6	4-Nitroaniline	U	25	1.0	25	25	2	
534-52-1	4,6-Dinitro-2-Methylphenol	U	25	1.0	25	25	6	
86-30-6	N-Nitrosodiphenylamine	U	10	1.0	10	10	2	
101-55-3	4-Bromophenyl-phenylether	U	10	1.0	10	10	1	
1912-24-9	Atrazine	U	10	1.0	10	10	2	
87-86-5	Pentachlorophenol	U	25	1.0	25	25	8	
120-12-7	Anthracene	U	10	1.0	10	10	1	
86-74-8	Carbazole	U	10	1.0	10	10	1	

lw 3/1/09

KATAHDIN ANALYTICAL SERVICES
Report of Analytical Results

Client: CH2MHill
Project: TO-009 Lejeune
PO No:
Sample Date: 12/02/08
Received Date: 12/03/08
Extraction Date: 12/04/08
Analysis Date: 05-JAN-2009 18:24
Report Date: 01/07/2009
Matrix: WATER
% Solids: NA

Lab ID: SB6919-1
Client ID: MR08-EB-120208-SS
SDG: TO9-10
Extracted by: CB
Extraction Method: SW846 3510
Analyst: JCG
Analysis Method: SW846 8270C
Lab Prep Batch: WG58759
Units: ug/L

CAS#	Compound	Flags	Results	DF	PQL	Adj.PQL	Adj.MDL
84-74-2	Di-n-butylphthalate	U	10	1.0	10	10	1
85-68-7	Butylbenzylphthalate	U	10	1.0	10	10	2
91-94-1	3,3'-Dichlorobenzidine	U	10	1.0	10	10	3
218-01-9	Chrysene	U	10	1.0	10	10	1
117-81-7	bis(2-Ethylhexyl)phthalate	U	10	1.0	10	10	2
117-84-0	Di-n-octylphthalate	U	10	1.0	10	10	2
367-12-4	2-Fluorophenol		39%				
13127-88-3	Phenol-D6		14%				
4165-60-0	Nitrobenzene-D5		53%				
321-60-8	2-Fluorobiphenyl		71%				
118-79-6	2,4,6-Tribromophenol		62%				
1718-51-0	Terphenyl-D14		101%				

LW 21.1.09

2

KATAHDIN ANALYTICAL SERVICES
Report of Analytical Results

Client: CH2MHill
Project: TO-009 Lejeune
PO No:
Sample Date: 12/02/08
Received Date: 12/03/08
Extraction Date: 12/04/08
Analysis Date: 05-JAN-2009 19:06
Report Date: 01/07/2009
Matrix: WATER
% Solids: NA

Lab ID: SB6919-2
Client ID: MR08-EB-120208-IS
SDG: TO9-10
Extracted by: CB
Extraction Method: SW846 3510
Analyst: JCG
Analysis Method: SW846 8270C
Lab Prep Batch: WG58759
Units: ug/L

CAS#	Compound	Flags	Results	DF	PQL	Adj.PQL	Adj.MDL
100-52-7	Benzaldehyde	U	10	1.0	10	10	3
108-95-2	Phenol	U	10	1.0	10	10	2
111-44-4	Bis(2-Chloroethyl)ether	U	10	1.0	10	10	2
95-57-8	2-Chlorophenol	U	12	1.0	12	12	3
95-48-7	2-Methylphenol	U	12	1.0	12	12	4
108-60-1	2,2'-Oxybis(1-chloropropane)	U	10	1.0	10	10	2
98-86-2	Acetophenone	U	12	1.0	12	12	4
621-64-7	N-Nitroso-di-n-propylamine	U	10	1.0	10	10	2
65794-96-9	3&4-Methylphenol	U	10	1.0	10	10	3
67-72-1	Hexachloroethane	U	10	1.0	10	10	2
98-95-3	Nitrobenzene	~~U~~ UJ	10	1.0	10	10	2 CCH
78-59-1	Isophorone	U	10	1.0	10	10	2
88-75-5	2-Nitrophenol	U	10	1.0	10	10	4
105-67-9	2,4-Dimethylphenol	U	12	1.0	12	12	4
111-91-1	Bis(2-Chloroethoxy)methane	U	10	1.0	10	10	2
120-83-2	2,4-Dichlorophenol	U	12	1.0	12	12	4
106-47-8	4-Chloroaniline	U	10	1.0	10	10	2
105-60-2	Caprolactam	~~U~~ R	10	1.0	10	10	0.4 BSL
59-50-7	4-Chloro-3-Methylphenol	U	10	1.0	10	10	2
88-06-2	2,4,6-Trichlorophenol	U	10	1.0	10	10	3
95-95-4	2,4,5-Trichlorophenol	U	25	1.0	25	25	4
91-58-7	2-Chloronaphthalene	U	10	1.0	10	10	2
92-52-4	1,1'-Biphenyl	U	10	1.0	10	10	2
88-74-4	2-Nitroaniline	U	25	1.0	25	25	2
131-11-3	Dimethyl Phthalate	U	10	1.0	10	10	0.8
606-20-2	2,6-Dinitrotoluene	U	10	1.0	10	10	1
208-96-8	Acenaphthylene	U	10	1.0	10	10	2
99-09-2	3-Nitroaniline	U	25	1.0	25	25	1
83-32-9	Acenaphthene	U	10	1.0	10	10	2
51-28-5	2,4-Dinitrophenol	~~U~~ UJ	45	1.0	45	45	15 CCH
132-64-9	Dibenzofuran	U	10	1.0	10	10	1
100-02-7	4-Nitrophenol	U	25	1.0	25	25	6
121-14-2	2,4-Dinitrotoluene	U	10	1.0	10	10	1
84-66-2	Diethylphthalate	U	10	1.0	10	10	1
7005-72-3	4-Chlorophenyl-phenylether	U	10	1.0	10	10	1
100-01-6	4-Nitroaniline	U	25	1.0	25	25	2
534-52-1	4,6-Dinitro-2-Methylphenol	U	25	1.0	25	25	6
86-30-6	N-Nitrosodiphenylamine	U	10	1.0	10	10	2
101-55-3	4-Bromophenyl-phenylether	U	10	1.0	10	10	1
1912-24-9	Atrazine	U	10	1.0	10	10	2
87-86-5	Pentachlorophenol	U	25	1.0	25	25	8
120-12-7	Anthracene	U	10	1.0	10	10	1
86-74-8	Carbazole	U	10	1.0	10	10	1

KW 21.109

2

KATAHDIN ANALYTICAL SERVICES
Report of Analytical Results

Client: CH2MHill
Project: TO-009 Lejeune
PO No:
Sample Date: 12/02/08
Received Date: 12/03/08
Extraction Date: 12/04/08
Analysis Date: 05-JAN-2009 19:06
Report Date: 01/07/2009
Matrix: WATER
% Solids: NA

Lab ID: SB6919-2
Client ID: MR08-EB-120208-IS
SDG: TO9-10
Extracted by: CB
Extraction Method: SW846 3510
Analyst: JCG
Analysis Method: SW846 8270C
Lab Prep Batch: WG58759
Units: ug/L

CAS#	Compound	Flags	Results	DF	PQL	Adj.PQL	Adj.MDL
84-74-2	Di-n-butylphthalate	U	10	1.0	10	10	1
85-68-7	Butylbenzylphthalate	U	10	1.0	10	10	2
91-94-1	3,3'-Dichlorobenzidine	U	10	1.0	10	10	3
218-01-9	Chrysene	U	10	1.0	10	10	1
117-81-7	bis(2-Ethylhexyl)phthalate	U	10	1.0	10	10	2
117-84-0	Di-n-octylphthalate	U	10	1.0	10	10	2
367-12-4	2-Fluorophenol		40%				
13127-88-3	Phenol-D6		23%				
4165-60-0	Nitrobenzene-D5		64%				
321-60-8	2-Fluorobiphenyl		67%				
118-79-6	2,4,6-Tribromophenol		63%				
1718-51-0	Terphenyl-D14		100%				

lw 3/1/09

3

KATAHDIN ANALYTICAL SERVICES
Report of Analytical Results

Client: CH2MHill
Project: TO-009 Lejeune
PO No:
Sample Date: 12/03/08
Received Date: 12/04/08
Extraction Date: 12/05/08
Analysis Date: 05-JAN-2009 19:49
Report Date: 01/07/2009
Matrix: WATER
% Solids: NA

Lab ID: SB6966-1
Client ID: MR08-EB01120308-SS
SDG: TO9-10
Extracted by: CB
Extraction Method: SW846 3510
Analyst: JCG
Analysis Method: SW846 8270C
Lab Prep Batch: WG58808
Units: ug/L

CAS#	Compound	Flags	Results	DF	PQL	Adj.PQL	Adj.MDL	
100-52-7	Benzaldehyde	U	10	1.0	10	10	3	
108-95-2	Phenol	U	10	1.0	10	10	2	
111-44-4	Bis(2-Chloroethyl)ether	U	10	1.0	10	10	2	
95-57-8	2-Chlorophenol	U	11	1.0	12	11	3	
95-48-7	2-Methylphenol	U	11	1.0	12	11	4	
108-60-1	2,2'-Oxybis(1-chloropropane)	U	10	1.0	10	10	2	
98-86-2	Acetophenone	U	11	1.0	12	11	4	
621-64-7	N-Nitroso-di-n-propylamine	U	10	1.0	10	10	2	
65794-96-9	3&4-Methylphenol	U	10	1.0	10	10	2	
67-72-1	Hexachloroethane	U	10	1.0	10	10	2	
98-95-3	Nitrobenzene	~~U~~ UJ	10	1.0	10	10	2	CCH
78-59-1	Isophorone	U	10	1.0	10	10	2	
88-75-5	2-Nitrophenol	U	10	1.0	10	10	3	
105-67-9	2,4-Dimethylphenol	U	11	1.0	12	11	4	
111-91-1	Bis(2-Chloroethoxy)methane	U	10	1.0	10	10	2	
120-83-2	2,4-Dichlorophenol	U	11	1.0	12	11	4	
106-47-8	4-Chloroaniline	U	10	1.0	10	10	2	
105-60-2	Caprolactam	~~U~~ R	10	1.0	10	10	0.4	BSL
59-50-7	4-Chloro-3-Methylphenol	U	10	1.0	10	10	2	
88-06-2	2,4,6-Trichlorophenol	U	10	1.0	10	10	3	
95-95-4	2,4,5-Trichlorophenol	U	24	1.0	25	24	4	
91-58-7	2-Chloronaphthalene	U	10	1.0	10	10	2	
92-52-4	1,1'-Biphenyl	U	10	1.0	10	10	2	
88-74-4	2-Nitroaniline	U	24	1.0	25	24	1	
131-11-3	Dimethyl Phthalate	U	10	1.0	10	10	0.8	
606-20-2	2,6-Dinitrotoluene	U	10	1.0	10	10	1	
208-96-8	Acenaphthylene	U	10	1.0	10	10	2	
99-09-2	3-Nitroaniline	U	24	1.0	25	24	1	
83-32-9	Acenaphthene	U	10	1.0	10	10	2	
51-28-5	2,4-Dinitrophenol	~~U~~ UJ	43	1.0	45	43	14	CCH
132-64-9	Dibenzofuran	U	10	1.0	10	10	1	
100-02-7	4-Nitrophenol	U	24	1.0	25	24	5	
121-14-2	2,4-Dinitrotoluene	U	10	1.0	10	10	1	
84-66-2	Diethylphthalate	U	10	1.0	10	10	1	
7005-72-3	4-Chlorophenyl-phenylether	U	10	1.0	10	10	1	
100-01-6	4-Nitroaniline	U	24	1.0	25	24	2	
534-52-1	4,6-Dinitro-2-Methylphenol	U	24	1.0	25	24	6	
86-30-6	N-Nitrosodiphenylamine	U	10	1.0	10	10	2	
101-55-3	4-Bromophenyl-phenylether	U	10	1.0	10	10	1	
1912-24-9	Atrazine	U	10	1.0	10	10	2	
87-86-5	Pentachlorophenol	U	24	1.0	25	24	7	
120-12-7	Anthracene	U	10	1.0	10	10	1	
86-74-8	Carbazole	U	10	1.0	10	10	1	

fw 7.1.09

3

KATAHDIN ANALYTICAL SERVICES
Report of Analytical Results

Client: CH2MHill
Project: TO-009 Lejeune
PO No:
Sample Date: 12/03/08
Received Date: 12/04/08
Extraction Date: 12/05/08
Analysis Date: 05-JAN-2009 19:49
Report Date: 01/07/2009
Matrix: WATER
% Solids: NA

Lab ID: SB6966-1
Client ID: MR08-EB01120308-SS
SDG: TO9-10
Extracted by: CB
Extraction Method: SW846 3510
Analyst: JCG
Analysis Method: SW846 8270C
Lab Prep Batch: WG58808
Units: ug/L

CAS#	Compound	Flags	Results	DF	PQL	Adj.PQL	Adj.MDL
84-74-2	Di-n-butylphthalate	U	10	1.0	10	10	1
85-68-7	Butylbenzylphthalate	U	10	1.0	10	10	1
91-94-1	3,3'-Dichlorobenzidine	U	10	1.0	10	10	3
218-01-9	Chrysene	U	10	1.0	10	10	1
117-81-7	bis(2-Ethylhexyl)phthalate	U	10	1.0	10	10	2
117-84-0	Di-n-octylphthalate	U	10	1.0	10	10	2
367-12-4	2-Fluorophenol		46%				
13127-88-3	Phenol-D6		17%				
4165-60-0	Nitrobenzene-D5		64%				
321-60-8	2-Fluorobiphenyl		66%				
118-79-6	2,4,6-Tribromophenol		58%				
1718-51-0	Terphenyl-D14		97%				

lew 3/1/09

KATAHDIN ANALYTICAL SERVICES
Report of Analytical Results

Client: CH2MHill
Project: TO-009 Lejeune
PO No:
Sample Date: 12/03/08
Received Date: 12/04/08
Extraction Date: 12/05/08
Analysis Date: 05-JAN-2009 20:31
Report Date: 01/07/2009
Matrix: WATER
% Solids: NA

Lab ID: SB6966-3
Client ID: MR08-EB01120308-IS
SDG: TO9-10
Extracted by: CB
Extraction Method: SW846 3510
Analyst: JCG
Analysis Method: SW846 8270C
Lab Prep Batch: WG58808
Units: ug/L

CAS#	Compound	Flags	Results	DF	PQL	Adj.PQL	Adj.MDL	
100-52-7	Benzaldehyde	U	9	1.0	10	9	3	
108-95-2	Phenol	U	9	1.0	10	9	2	
111-44-4	Bis(2-Chloroethyl)ether	U	9	1.0	10	9	2	
95-57-8	2-Chlorophenol	U	11	1.0	12	11	3	
95-48-7	2-Methylphenol	U	11	1.0	12	11	4	
108-60-1	2,2'-Oxybis(1-chloropropane)	U	9	1.0	10	9	2	
98-86-2	Acetophenone	U	11	1.0	12	11	4	
621-64-7	N-Nitroso-di-n-propylamine	U	9	1.0	10	9	2	
65794-96-9	3&4-Methylphenol	U	9	1.0	10	9	2	
67-72-1	Hexachloroethane	U	9	1.0	10	9	2	CCH
98-95-3	Nitrobenzene	~~U~~ UJ	9	1.0	10	9	2	
78-59-1	Isophorone	U	9	1.0	10	9	2	
88-75-5	2-Nitrophenol	U	9	1.0	10	9	3	
105-67-9	2,4-Dimethylphenol	U	11	1.0	12	11	4	
111-91-1	Bis(2-Chloroethoxy)methane	U	9	1.0	10	9	2	
120-83-2	2,4-Dichlorophenol	U	11	1.0	12	11	4	
106-47-8	4-Chloroaniline	U	9	1.0	10	9	2	
105-60-2	Caprolactam	~~U~~ R	9	1.0	10	9	0.4	BSL
59-50-7	4-Chloro-3-Methylphenol	U	9	1.0	10	9	2	
88-06-2	2,4,6-Trichlorophenol	U	9	1.0	10	9	3	
95-95-4	2,4,5-Trichlorophenol	U	24	1.0	25	24	4	
91-58-7	2-Chloronaphthalene	U	9	1.0	10	9	2	
92-52-4	1,1'-Biphenyl	U	9	1.0	10	9	2	
88-74-4	2-Nitroaniline	U	24	1.0	25	24	1	
131-11-3	Dimethyl Phthalate	U	9	1.0	10	9	0.7	
606-20-2	2,6-Dinitrotoluene	U	9	1.0	10	9	1.0	
208-96-8	Acenaphthylene	U	9	1.0	10	9	2	
99-09-2	3-Nitroaniline	U	24	1.0	25	24	1	
83-32-9	Acenaphthene	U	9	1.0	10	9	2	
51-28-5	2,4-Dinitrophenol	~~U~~ UJ	42	1.0	45	42	14	CCH
132-64-9	Dibenzofuran	U	9	1.0	10	9	1	
100-02-7	4-Nitrophenol	U	24	1.0	25	24	5	
121-14-2	2,4-Dinitrotoluene	U	9	1.0	10	9	1	
84-66-2	Diethylphthalate	U	9	1.0	10	9	1	
7005-72-3	4-Chlorophenyl-phenylether	U	9	1.0	10	9	1	
100-01-6	4-Nitroaniline	U	24	1.0	25	24	2	
534-52-1	4,6-Dinitro-2-Methylphenol	U	24	1.0	25	24	6	
86-30-6	N-Nitrosodiphenylamine	U	9	1.0	10	9	2	
101-55-3	4-Bromophenyl-phenylether	U	9	1.0	10	9	1	
1912-24-9	Atrazine	U	9	1.0	10	9	2	
87-86-5	Pentachlorophenol	U	24	1.0	25	24	7	
120-12-7	Anthracene	U	9	1.0	10	9	1	
86-74-8	Carbazole	U	9	1.0	10	9	1	

3/1/09

KATAHDIN ANALYTICAL SERVICES
Report of Analytical Results

Client: CH2MHill
Project: TO-009 Lejeune
PO No:
Sample Date: 12/03/08
Received Date: 12/04/08
Extraction Date: 12/05/08
Analysis Date: 05-JAN-2009 20:31
Report Date: 01/07/2009
Matrix: WATER
% Solids: NA

Lab ID: SB6966-3
Client ID: MR08-EB01120308-IS
SDG: TO9-10
Extracted by: CB
Extraction Method: SW846 3510
Analyst: JCG
Analysis Method: SW846 8270C
Lab Prep Batch: WG58808
Units: ug/L

CAS#	Compound	Flags	Results	DF	PQL	Adj.PQL	Adj.MDL
84-74-2	Di-n-butylphthalate	U	9	1.0	10	9	1
85-68-7	Butylbenzylphthalate	U	9	1.0	10	9	1
91-94-1	3,3'-Dichlorobenzidine	U	9	1.0	10	9	3
218-01-9	Chrysene	U	9	1.0	10	9	1
117-81-7	bis(2-Ethylhexyl)phthalate	U	9	1.0	10	9	2
117-84-0	Di-n-octylphthalate	U	9	1.0	10	9	2
367-12-4	2-Fluorophenol		48%				
13127-88-3	Phenol-D6		19%				
4165-60-0	Nitrobenzene-D5		62%				
321-60-8	2-Fluorobiphenyl		83%				
118-79-6	2,4,6-Tribromophenol		69%				
1718-51-0	Terphenyl-D14		96%				

CW 2/1/09

KATAHDIN ANALYTICAL SERVICES
Report of Analytical Results

Client: CH2MHill
Project: TO-009 Lejeune
PO No:
Sample Date: 12/04/08
Received Date: 12/05/08
Extraction Date: 12/09/08
Analysis Date: 05-JAN-2009 23:20
Report Date: 01/07/2009
Matrix: WATER
% Solids: NA

Lab ID: SB7004-1
Client ID: MR08-EB01120408-SS
SDG: TO9-10
Extracted by: KF
Extraction Method: SW846 3510
Analyst: JCG
Analysis Method: SW846 8270C
Lab Prep Batch: WG58922
Units: ug/L

CAS#	Compound	Flags	Results	DF	PQL	Adj.PQL	Adj.MDL
100-52-7	Benzaldehyde	U	9	1.0	10	9	3
108-95-2	Phenol	U	9	1.0	10	9	2
111-44-4	Bis(2-Chloroethyl)ether	U	9	1.0	10	9	2
95-57-8	2-Chlorophenol	U	11	1.0	12	11	3
95-48-7	2-Methylphenol	U	11	1.0	12	11	4
108-60-1	2,2'-Oxybis(1-chloropropane)	U	9	1.0	10	9	2
98-86-2	Acetophenone	U	11	1.0	12	11	4
621-64-7	N-Nitroso-di-n-propylamine	U	9	1.0	10	9	2
65794-96-9	3&4-Methylphenol	U	9	1.0	10	9	2
67-72-1	Hexachloroethane	U	9	1.0	10	9	2
98-95-3	Nitrobenzene	~~U~~ UJ	9	1.0	10	9	2 CCH
78-59-1	Isophorone	U	9	1.0	10	9	2
88-75-5	2-Nitrophenol	U	9	1.0	10	9	3
105-67-9	2,4-Dimethylphenol	U	11	1.0	12	11	4
111-91-1	Bis(2-Chloroethoxy)methane	U	9	1.0	10	9	2
120-83-2	2,4-Dichlorophenol	U	11	1.0	12	11	4
106-47-8	4-Chloroaniline	U	9	1.0	10	9	2
105-60-2	Caprolactam	U	9	1.0	10	9	0.4
59-50-7	4-Chloro-3-Methylphenol	U	9	1.0	10	9	2
88-06-2	2,4,6-Trichlorophenol	U	9	1.0	10	9	3
95-95-4	2,4,5-Trichlorophenol	U	24	1.0	25	24	4
91-58-7	2-Chloronaphthalene	U	9	1.0	10	9	2
92-52-4	1,1'-Biphenyl	U	9	1.0	10	9	2
88-74-4	2-Nitroaniline	U	24	1.0	25	24	1
131-11-3	Dimethyl Phthalate	U	9	1.0	10	9	0.7
606-20-2	2,6-Dinitrotoluene	U	9	1.0	10	9	1.0
208-96-8	Acenaphthylene	U	9	1.0	10	9	2
99-09-2	3-Nitroaniline	U	24	1.0	25	24	1
83-32-9	Acenaphthene	U	9	1.0	10	9	2
51-28-5	2,4-Dinitrophenol	~~U~~ UJ	42	1.0	45	42	14 CCH
132-64-9	Dibenzofuran	U	9	1.0	10	9	1
100-02-7	4-Nitrophenol	U	24	1.0	25	24	5
121-14-2	2,4-Dinitrotoluene	U	9	1.0	10	9	1
84-66-2	Diethylphthalate	U	9	1.0	10	9	1
7005-72-3	4-Chlorophenyl-phenylether	U	9	1.0	10	9	1
100-01-6	4-Nitroaniline	U	24	1.0	25	24	2
534-52-1	4,6-Dinitro-2-Methylphenol	U	24	1.0	25	24	6
86-30-6	N-Nitrosodiphenylamine	U	9	1.0	10	9	2
101-55-3	4-Bromophenyl-phenylether	U	9	1.0	10	9	1
1912-24-9	Atrazine	U	9	1.0	10	9	2
87-86-5	Pentachlorophenol	U	24	1.0	25	24	7
120-12-7	Anthracene	U	9	1.0	10	9	1
86-74-8	Carbazole	U	9	1.0	10	9	1

ELW 7/1/09

5

KATAHDIN ANALYTICAL SERVICES
Report of Analytical Results

Client: CH2MHill
Project: TO-009 Lejeune
PO No:
Sample Date: 12/04/08
Received Date: 12/05/08
Extraction Date: 12/09/08
Analysis Date: 05-JAN-2009 23:20
Report Date: 01/07/2009
Matrix: WATER
% Solids: NA

Lab ID: SB7004-1
Client ID: MR08-EB01120408-SS
SDG: TO9-10
Extracted by: KF
Extraction Method: SW846 3510
Analyst: JCG
Analysis Method: SW846 8270C
Lab Prep Batch: WG58922
Units: ug/L

CAS#	Compound	Flags	Results	DF	PQL	Adj.PQL	Adj.MDL
84-74-2	Di-n-butylphthalate	U	9	1.0	10	9	1
85-68-7	Butylbenzylphthalate	U	9	1.0	10	9	1
91-94-1	3,3'-Dichlorobenzidine	U	9	1.0	10	9	3
218-01-9	Chrysene	U	9	1.0	10	9	1
117-81-7	bis(2-Ethylhexyl)phthalate	U	9	1.0	10	9	2
117-84-0	Di-n-octylphthalate	U	9	1.0	10	9	2
367-12-4	2-Fluorophenol		46%				
13127-88-3	Phenol-D6		19%				
4165-60-0	Nitrobenzene-D5		62%				
321-60-8	2-Fluorobiphenyl		81%				
118-79-6	2,4,6-Tribromophenol		54%				
1718-51-0	Terphenyl-D14		100%				

lw
3/1/09

6

KATAHDIN ANALYTICAL SERVICES
Report of Analytical Results

Client: CH2MHill
Project: TO-009 Lejeune
PO No:
Sample Date: 12/04/08
Received Date: 12/05/08
Extraction Date: 12/09/08
Analysis Date: 06-JAN-2009 00:01
Report Date: 01/07/2009
Matrix: WATER
% Solids: NA

Lab ID: SB7004-3
Client ID: MR08-EB01120408-IS
SDG: TO9-10
Extracted by: KF
Extraction Method: SW846 3510
Analyst: JCG
Analysis Method: SW846 8270C
Lab Prep Batch: WG58922
Units: ug/L

CAS#	Compound	Flags	Results	DF	PQL	Adj.PQL	Adj.MDL
100-52-7	Benzaldehyde	U	9	1.0	10	9	3
108-95-2	Phenol	U	9	1.0	10	9	2
111-44-4	Bis(2-Chloroethyl)ether	U	9	1.0	10	9	2
95-57-8	2-Chlorophenol	U	11	1.0	12	11	3
95-48-7	2-Methylphenol	U	11	1.0	12	11	4
108-60-1	2,2'-Oxybis(1-chloropropane)	U	9	1.0	10	9	2
98-86-2	Acetophenone	U	11	1.0	12	11	4
621-64-7	N-Nitroso-di-n-propylamine	U	9	1.0	10	9	2
65794-96-9	3&4-Methylphenol	U	9	1.0	10	9	2
67-72-1	Hexachloroethane	U	9	1.0	10	9	2
98-95-3	Nitrobenzene	~~U~~ UJ	9	1.0	10	9	2 CCH
78-59-1	Isophorone	U	9	1.0	10	9	2
88-75-5	2-Nitrophenol	U	9	1.0	10	9	3
105-67-9	2,4-Dimethylphenol	U	11	1.0	12	11	4
111-91-1	Bis(2-Chloroethoxy)methane	U	9	1.0	10	9	2
120-83-2	2,4-Dichlorophenol	U	11	1.0	12	11	4
106-47-8	4-Chloroaniline	U	9	1.0	10	9	2
105-60-2	Caprolactam	U	9	1.0	10	9	0.4
59-50-7	4-Chloro-3-Methylphenol	U	9	1.0	10	9	2
88-06-2	2,4,6-Trichlorophenol	U	9	1.0	10	9	3
95-95-4	2,4,5-Trichlorophenol	U	24	1.0	25	24	4
91-58-7	2-Chloronaphthalene	U	9	1.0	10	9	2
92-52-4	1,1'-Biphenyl	U	9	1.0	10	9	2
88-74-4	2-Nitroaniline	U	24	1.0	25	24	1
131-11-3	Dimethyl Phthalate	U	9	1.0	10	9	0.7
606-20-2	2,6-Dinitrotoluene	U	9	1.0	10	9	1.0
208-96-8	Acenaphthylene	U	9	1.0	10	9	2
99-09-2	3-Nitroaniline	U	24	1.0	25	24	1
83-32-9	Acenaphthene	U	9	1.0	10	9	2
51-28-5	2,4-Dinitrophenol	~~U~~ UJ	42	1.0	45	42	14 CCH
132-64-9	Dibenzofuran	U	9	1.0	10	9	1
100-02-7	4-Nitrophenol	U	24	1.0	25	24	5
121-14-2	2,4-Dinitrotoluene	U	9	1.0	10	9	1
84-66-2	Diethylphthalate	U	9	1.0	10	9	1
7005-72-3	4-Chlorophenyl-phenylether	U	9	1.0	10	9	1
100-01-6	4-Nitroaniline	U	24	1.0	25	24	2
534-52-1	4,6-Dinitro-2-Methylphenol	U	24	1.0	25	24	6
86-30-6	N-Nitrosodiphenylamine	U	9	1.0	10	9	2
101-55-3	4-Bromophenyl-phenylether	U	9	1.0	10	9	1
1912-24-9	Atrazine	U	9	1.0	10	9	2
87-86-5	Pentachlorophenol	U	24	1.0	25	24	7
120-12-7	Anthracene	U	9	1.0	10	9	1
86-74-8	Carbazole	U	9	1.0	10	9	1

LW 2/1/09

6

KATAHDIN ANALYTICAL SERVICES
Report of Analytical Results

Client: CH2MHill
Project: TO-009 Lejeune
PO No:
Sample Date: 12/04/08
Received Date: 12/05/08
Extraction Date: 12/09/08
Analysis Date: 06-JAN-2009 00:01
Report Date: 01/07/2009
Matrix: WATER
% Solids: NA

Lab ID: SB7004-3
Client ID: MR08-EB01120408-IS
SDG: TO9-10
Extracted by: KF
Extraction Method: SW846 3510
Analyst: JCG
Analysis Method: SW846 8270C
Lab Prep Batch: WG58922
Units: ug/L

CAS#	Compound	Flags	Results	DF	PQL	Adj.PQL	Adj.MDL
84-74-2	Di-n-butylphthalate	U	9	1.0	10	9	1
85-68-7	Butylbenzylphthalate	U	9	1.0	10	9	1
91-94-1	3,3'-Dichlorobenzidine	U	9	1.0	10	9	3
218-01-9	Chrysene	U	9	1.0	10	9	1
117-81-7	bis(2-Ethylhexyl)phthalate	U	9	1.0	10	9	2
117-84-0	Di-n-octylphthalate	U	9	1.0	10	9	2
367-12-4	2-Fluorophenol		51%				
13127-88-3	Phenol-D6		20%				
4165-60-0	Nitrobenzene-D5		74%				
321-60-8	2-Fluorobiphenyl		80%				
118-79-6	2,4,6-Tribromophenol		74%				
1718-51-0	Terphenyl-D14		103%				

DW
2/1/09

7

KATAHDIN ANALYTICAL SERVICES
Report of Analytical Results

Client: CH2MHill
Project: TO-009 Lejeune
PO No:
Sample Date: 12/05/08
Received Date: 12/06/08
Extraction Date: 12/09/08
Analysis Date: 06-JAN-2009 00:44
Report Date: 01/07/2009
Matrix: WATER
% Solids: NA

Lab ID: SB7034-1
Client ID: MR08-EB01120508-SS
SDG: TO9-10
Extracted by: KF
Extraction Method: SW846 3510
Analyst: JCG
Analysis Method: SW846 8270C
Lab Prep Batch: WG58922
Units: ug/L

CAS#	Compound	Flags	Results	DF	PQL	Adj.PQL	Adj.MDL	
100-52-7	Benzaldehyde	U	9	1.0	10	9	3	
108-95-2	Phenol	U	9	1.0	10	9	2	
111-44-4	Bis(2-Chloroethyl)ether	U	9	1.0	10	9	2	
95-57-8	2-Chlorophenol	U	11	1.0	12	11	3	
95-48-7	2-Methylphenol	U	11	1.0	12	11	4	
108-60-1	2,2'-Oxybis(1-chloropropane)	U	9	1.0	10	9	2	
98-86-2	Acetophenone	U	11	1.0	12	11	4	
621-64-7	N-Nitroso-di-n-propylamine	U	9	1.0	10	9	2	
65794-96-9	3&4-Methylphenol	U	9	1.0	10	9	2	
67-72-1	Hexachloroethane	U	9	1.0	10	9	2	
98-95-3	Nitrobenzene	~~U~~ UJ	9	1.0	10	9	2	CCH
78-59-1	Isophorone	U	9	1.0	10	9	2	
88-75-5	2-Nitrophenol	U	9	1.0	10	9	3	
105-67-9	2,4-Dimethylphenol	U	11	1.0	12	11	4	
111-91-1	Bis(2-Chloroethoxy)methane	U	9	1.0	10	9	2	
120-83-2	2,4-Dichlorophenol	U	11	1.0	12	11	4	
106-47-8	4-Chloroaniline	U	9	1.0	10	9	2	
105-60-2	Caprolactam	U	9	1.0	10	9	0.4	
59-50-7	4-Chloro-3-Methylphenol	U	9	1.0	10	9	2	
88-06-2	2,4,6-Trichlorophenol	U	9	1.0	10	9	3	
95-95-4	2,4,5-Trichlorophenol	U	24	1.0	25	24	4	
91-58-7	2-Chloronaphthalene	U	9	1.0	10	9	2	
92-52-4	1,1'-Biphenyl	U	9	1.0	10	9	2	
88-74-4	2-Nitroaniline	U	24	1.0	25	24	1	
131-11-3	Dimethyl Phthalate	U	9	1.0	10	9	0.7	
606-20-2	2,6-Dinitrotoluene	U	9	1.0	10	9	1.0	
208-96-8	Acenaphthylene	U	9	1.0	10	9	2	
99-09-2	3-Nitroaniline	U	24	1.0	25	24	1	
83-32-9	Acenaphthene	U	9	1.0	10	9	2	
51-28-5	2,4-Dinitrophenol	~~U~~ UJ	42	1.0	45	42	14	CCH
132-64-9	Dibenzofuran	U	9	1.0	10	9	1	
100-02-7	4-Nitrophenol	U	24	1.0	25	24	5	
121-14-2	2,4-Dinitrotoluene	U	9	1.0	10	9	1	
84-66-2	Diethylphthalate	U	9	1.0	10	9	1	
7005-72-3	4-Chlorophenyl-phenylether	U	9	1.0	10	9	1	
100-01-6	4-Nitroaniline	U	24	1.0	25	24	2	
534-52-1	4,6-Dinitro-2-Methylphenol	U	24	1.0	25	24	6	
86-30-6	N-Nitrosodiphenylamine	U	9	1.0	10	9	2	
101-55-3	4-Bromophenyl-phenylether	U	9	1.0	10	9	1	
1912-24-9	Atrazine	U	9	1.0	10	9	2	
87-86-5	Pentachlorophenol	U	24	1.0	25	24	7	
120-12-7	Anthracene	U	9	1.0	10	9	1	
86-74-8	Carbazole	U	9	1.0	10	9	1	

ACO 3/1/09

7

KATAHDIN ANALYTICAL SERVICES
Report of Analytical Results

Client: CH2MHill
Project: TO-009 Lejeune
PO No:
Sample Date: 12/05/08
Received Date: 12/06/08
Extraction Date: 12/09/08
Analysis Date: 06-JAN-2009 00:44
Report Date: 01/07/2009
Matrix: WATER
% Solids: NA

Lab ID: SB7034-1
Client ID: MR08-EB01120508-SS
SDG: TO9-10
Extracted by: KF
Extraction Method: SW846 3510
Analyst: JCG
Analysis Method: SW846 8270C
Lab Prep Batch: WG58922
Units: ug/L

CAS#	Compound	Flags	Results	DF	PQL	Adj.PQL	Adj.MDL
84-74-2	Di-n-butylphthalate	U	9	1.0	10	9	1
85-68-7	Butylbenzylphthalate	U	9	1.0	10	9	1
91-94-1	3,3'-Dichlorobenzidine	U	9	1.0	10	9	3
218-01-9	Chrysene	U	9	1.0	10	9	1
117-81-7	bis(2-Ethylhexyl)phthalate	U	9	1.0	10	9	2
117-84-0	Di-n-octylphthalate	U	9	1.0	10	9	2
367-12-4	2-Fluorophenol		41%				
13127-88-3	Phenol-D6		15%				
4165-60-0	Nitrobenzene-D5		64%				
321-60-8	2-Fluorobiphenyl		68%				
118-79-6	2,4,6-Tribromophenol		56%				
1718-51-0	Terphenyl-D14		97%				

MED
3/1/09

8

KATAHDIN ANALYTICAL SERVICES
Report of Analytical Results

Client: CH2MHill
Project: TO-009 Lejeune
PO No:
Sample Date: 12/05/08
Received Date: 12/06/08
Extraction Date: 12/09/08
Analysis Date: 06-JAN-2009 01:26
Report Date: 01/07/2009
Matrix: WATER
% Solids: NA

Lab ID: SB7034-3
Client ID: MR08-EB0120508-IS
SDG: TO9-10
Extracted by: KF
Extraction Method: SW846 3510
Analyst: JCG
Analysis Method: SW846 8270C
Lab Prep Batch: WG58922
Units: ug/L

CAS#	Compound	Flags	Results	DF	PQL	Adj.PQL	Adj.MDL	
100-52-7	Benzaldehyde	U	9	1.0	10	9	3	
108-95-2	Phenol	U	9	1.0	10	9	2	
111-44-4	Bis(2-Chloroethyl)ether	U	9	1.0	10	9	2	
95-57-8	2-Chlorophenol	U	11	1.0	12	11	3	
95-48-7	2-Methylphenol	U	11	1.0	12	11	4	
108-60-1	2,2'-Oxybis(1-chloropropane)	U	9	1.0	10	9	2	
98-86-2	Acetophenone	U	11	1.0	12	11	4	
621-64-7	N-Nitroso-di-n-propylamine	U	9	1.0	10	9	2	
65794-96-9	3&4-Methylphenol	U	9	1.0	10	9	2	
67-72-1	Hexachloroethane	U	9	1.0	10	9	2	
98-95-3	Nitrobenzene	~~U~~ UJ	9	1.0	10	9	2	CCH
78-59-1	Isophorone	U	9	1.0	10	9	2	
88-75-5	2-Nitrophenol	U	9	1.0	10	9	3	
105-67-9	2,4-Dimethylphenol	U	11	1.0	12	11	4	
111-91-1	Bis(2-Chloroethoxy)methane	U	9	1.0	10	9	2	
120-83-2	2,4-Dichlorophenol	U	11	1.0	12	11	4	
106-47-8	4-Chloroaniline	U	9	1.0	10	9	2	
105-60-2	Caprolactam	U	9	1.0	10	9	0.4	
59-50-7	4-Chloro-3-Methylphenol	U	9	1.0	10	9	2	
88-06-2	2,4,6-Trichlorophenol	U	9	1.0	10	9	3	
95-95-4	2,4,5-Trichlorophenol	U	24	1.0	25	24	4	
91-58-7	2-Chloronaphthalene	U	9	1.0	10	9	2	
92-52-4	1,1'-Biphenyl	U	9	1.0	10	9	2	
88-74-4	2-Nitroaniline	U	24	1.0	25	24	1	
131-11-3	Dimethyl Phthalate	U	9	1.0	10	9	0.7	
606-20-2	2,6-Dinitrotoluene	U	9	1.0	10	9	1.0	
208-96-8	Acenaphthylene	U	9	1.0	10	9	2	
99-09-2	3-Nitroaniline	U	24	1.0	25	24	1	
83-32-9	Acenaphthene	U	9	1.0	10	9	2	
51-28-5	2,4-Dinitrophenol	~~U~~ UJ	42	1.0	45	42	14	CCH
132-64-9	Dibenzofuran	U	9	1.0	10	9	1	
100-02-7	4-Nitrophenol	U	24	1.0	25	24	5	
121-14-2	2,4-Dinitrotoluene	U	9	1.0	10	9	1	
84-66-2	Diethylphthalate	U	9	1.0	10	9	1	
7005-72-3	4-Chlorophenyl-phenylether	U	9	1.0	10	9	1	
100-01-6	4-Nitroaniline	U	24	1.0	25	24	2	
534-52-1	4,6-Dinitro-2-Methylphenol	U	24	1.0	25	24	6	
86-30-6	N-Nitrosodiphenylamine	U	9	1.0	10	9	2	
101-55-3	4-Bromophenyl-phenylether	U	9	1.0	10	9	1	
1912-24-9	Atrazine	U	9	1.0	10	9	2	
87-86-5	Pentachlorophenol	U	24	1.0	25	24	7	
120-12-7	Anthracene	U	9	1.0	10	9	1	
86-74-8	Carbazole	U	9	1.0	10	9	1	

JW 21.1.09

8

KATAHDIN ANALYTICAL SERVICES
Report of Analytical Results

Client: CH2MHill
Project: TO-009 Lejeune
PO No:
Sample Date: 12/05/08
Received Date: 12/06/08
Extraction Date: 12/09/08
Analysis Date: 06-JAN-2009 01:26
Report Date: 01/07/2009
Matrix: WATER
% Solids: NA

Lab ID: SB7034-3
Client ID: MR08-EB0120508-IS
SDG: TO9-10
Extracted by: KF
Extraction Method: SW846 3510
Analyst: JCG
Analysis Method: SW846 8270C
Lab Prep Batch: WG58922
Units: ug/L

CAS#	Compound	Flags	Results	DF	PQL	Adj.PQL	Adj.MDL
84-74-2	Di-n-butylphthalate	U	9	1.0	10	9	1
85-68-7	Butylbenzylphthalate	U	9	1.0	10	9	1
91-94-1	3,3'-Dichlorobenzidine	U	9	1.0	10	9	3
218-01-9	Chrysene	U	9	1.0	10	9	1
117-81-7	bis(2-Ethylhexyl)phthalate	U	9	1.0	10	9	2
117-84-0	Di-n-octylphthalate	U	9	1.0	10	9	2
367-12-4	2-Fluorophenol		46%				
13127-88-3	Phenol-D6		27%				
4165-60-0	Nitrobenzene-D5		67%				
321-60-8	2-Fluorobiphenyl		81%				
118-79-6	2,4,6-Tribromophenol		66%				
1718-51-0	Terphenyl-D14		102%				

LWD
3/1/09

9

KATAHDIN ANALYTICAL SERVICES
Report of Analytical Results

Client: CH2MHill
Project: TO-009 Lejeune
PO No:
Sample Date: 12/06/08
Received Date: 12/09/08
Extraction Date: 12/10/08
Analysis Date: 06-JAN-2009 04:14
Report Date: 01/07/2009
Matrix: WATER
% Solids: NA

Lab ID: SB7057-1
Client ID: MR08-EB01120608-SS
SDG: TO9-10
Extracted by: KF
Extraction Method: SW846 3510
Analyst: JCG
Analysis Method: SW846 8270C
Lab Prep Batch: WG58970
Units: ug/L

CAS#	Compound	Flags	Results	DF	PQL	Adj.PQL	Adj.MDL	
100-52-7	Benzaldehyde	U	9	1.0	10	9	3	
108-95-2	Phenol	U	9	1.0	10	9	2	
111-44-4	Bis(2-Chloroethyl)ether	U	9	1.0	10	9	2	
95-57-8	2-Chlorophenol	U	11	1.0	12	11	3	
95-48-7	2-Methylphenol	U	11	1.0	12	11	4	
108-60-1	2,2'-Oxybis(1-chloropropane)	U	9	1.0	10	9	2	
98-86-2	Acetophenone	U	11	1.0	12	11	4	
621-64-7	N-Nitroso-di-n-propylamine	U	9	1.0	10	9	2	
65794-96-9	3&4-Methylphenol	U	9	1.0	10	9	2	
67-72-1	Hexachloroethane	U	9	1.0	10	9	2	
98-95-3	Nitrobenzene	~~U~~ UJ	9	1.0	10	9	2	CCH
78-59-1	Isophorone	U	9	1.0	10	9	2	
88-75-5	2-Nitrophenol	U	9	1.0	10	9	3	
105-67-9	2,4-Dimethylphenol	U	11	1.0	12	11	4	
111-91-1	Bis(2-Chloroethoxy)methane	U	9	1.0	10	9	2	
120-83-2	2,4-Dichlorophenol	U	11	1.0	12	11	4	
106-47-8	4-Chloroaniline	U	9	1.0	10	9	2	
105-60-2	Caprolactam	U	9	1.0	10	9	0.4	
59-50-7	4-Chloro-3-Methylphenol	U	9	1.0	10	9	2	
88-06-2	2,4,6-Trichlorophenol	U	9	1.0	10	9	3	
95-95-4	2,4,5-Trichlorophenol	U	24	1.0	25	24	4	
91-58-7	2-Chloronaphthalene	U	9	1.0	10	9	2	
92-52-4	1,1'-Biphenyl	U	9	1.0	10	9	2	
88-74-4	2-Nitroaniline	U	24	1.0	25	24	1	
131-11-3	Dimethyl Phthalate	U	9	1.0	10	9	0.7	
606-20-2	2,6-Dinitrotoluene	U	9	1.0	10	9	1.0	
208-96-8	Acenaphthylene	U	9	1.0	10	9	2	
99-09-2	3-Nitroaniline	U	24	1.0	25	24	1	
83-32-9	Acenaphthene	U	9	1.0	10	9	2	
51-28-5	2,4-Dinitrophenol	~~U~~ UJ	42	1.0	45	42	14	CCH
132-64-9	Dibenzofuran	U	9	1.0	10	9	1	
100-02-7	4-Nitrophenol	U	24	1.0	25	24	5	
121-14-2	2,4-Dinitrotoluene	U	9	1.0	10	9	1	
84-66-2	Diethylphthalate	U	9	1.0	10	9	1	
7005-72-3	4-Chlorophenyl-phenylether	U	9	1.0	10	9	1	
100-01-6	4-Nitroaniline	U	24	1.0	25	24	2	
534-52-1	4,6-Dinitro-2-Methylphenol	U	24	1.0	25	24	6	
86-30-6	N-Nitrosodiphenylamine	U	9	1.0	10	9	2	
101-55-3	4-Bromophenyl-phenylether	U	9	1.0	10	9	1	
1912-24-9	Atrazine	U	9	1.0	10	9	2	
87-86-5	Pentachlorophenol	U	24	1.0	25	24	7	
120-12-7	Anthracene	U	9	1.0	10	9	1	
86-74-8	Carbazole	U	9	1.0	10	9	1	

flw 2/1/09

9

KATAHDIN ANALYTICAL SERVICES
Report of Analytical Results

Client: CH2MHill
Project: TO-009 Lejeune
PO No:
Sample Date: 12/06/08
Received Date: 12/09/08
Extraction Date: 12/10/08
Analysis Date: 06-JAN-2009 04:14
Report Date: 01/07/2009
Matrix: WATER
% Solids: NA

Lab ID: SB7057-1
Client ID: MR08-EB01120608-SS
SDG: TO9-10
Extracted by: KF
Extraction Method: SW846 3510
Analyst: JCG
Analysis Method: SW846 8270C
Lab Prep Batch: WG58970
Units: ug/L

CAS#	Compound	Flags	Results	DF	PQL	Adj.PQL	Adj.MDL
84-74-2	Di-n-butylphthalate	U	9	1.0	10	9	1
85-68-7	Butylbenzylphthalate	U	9	1.0	10	9	1
91-94-1	3,3'-Dichlorobenzidine	U	9	1.0	10	9	3
218-01-9	Chrysene	U	9	1.0	10	9	1
117-81-7	bis(2-Ethylhexyl)phthalate	U	9	1.0	10	9	2
117-84-0	Di-n-octylphthalate	U	9	1.0	10	9	2
367-12-4	2-Fluorophenol		37%				
13127-88-3	Phenol-D6		14%				
4165-60-0	Nitrobenzene-D5		56%				
321-60-8	2-Fluorobiphenyl		64%				
118-79-6	2,4,6-Tribromophenol		57%				
1718-51-0	Terphenyl-D14		92%				

lw 21.1.09

KATAHDIN ANALYTICAL SERVICES
Report of Analytical Results

Client: CH2MHill
Project: TO-009 Lejeune
PO No:
Sample Date: 12/06/08
Received Date: 12/09/08
Extraction Date: 12/10/08
Analysis Date: 06-JAN-2009 04:55
Report Date: 01/07/2009
Matrix: WATER
% Solids: NA

Lab ID: SB7057-3
Client ID: MR08-EB01120608-IS
SDG: TO9-10
Extracted by: KF
Extraction Method: SW846 3510
Analyst: JCG
Analysis Method: SW846 8270C
Lab Prep Batch: WG58970
Units: ug/L

CAS#	Compound	Flags	Results	DF	PQL	Adj.PQL	Adj.MDL
100-52-7	Benzaldehyde	U	9	1.0	10	9	3
108-95-2	Phenol	U	9	1.0	10	9	2
111-44-4	Bis(2-Chloroethyl)ether	U	9	1.0	10	9	2
95-57-8	2-Chlorophenol	U	11	1.0	12	11	3
95-48-7	2-Methylphenol	U	11	1.0	12	11	4
108-60-1	2,2'-Oxybis(1-chloropropane)	U	9	1.0	10	9	2
98-86-2	Acetophenone	U	11	1.0	12	11	4
621-64-7	N-Nitroso-di-n-propylamine	U	9	1.0	10	9	2
65794-96-9	3&4-Methylphenol	U	9	1.0	10	9	2
67-72-1	Hexachloroethane	U	9	1.0	10	9	2
98-95-3	Nitrobenzene	~~U~~ UJ	9	1.0	10	9	2 CCH
78-59-1	Isophorone	U	9	1.0	10	9	2
88-75-5	2-Nitrophenol	U	9	1.0	10	9	3
105-67-9	2,4-Dimethylphenol	U	11	1.0	12	11	4
111-91-1	Bis(2-Chloroethoxy)methane	U	9	1.0	10	9	2
120-83-2	2,4-Dichlorophenol	U	11	1.0	12	11	4
106-47-8	4-Chloroaniline	U	9	1.0	10	9	2
105-60-2	Caprolactam	U	9	1.0	10	9	0.4
59-50-7	4-Chloro-3-Methylphenol	U	9	1.0	10	9	2
88-06-2	2,4,6-Trichlorophenol	U	9	1.0	10	9	3
95-95-4	2,4,5-Trichlorophenol	U	24	1.0	25	24	4
91-58-7	2-Chloronaphthalene	U	9	1.0	10	9	2
92-52-4	1,1'-Biphenyl	U	9	1.0	10	9	2
88-74-4	2-Nitroaniline	U	24	1.0	25	24	1
131-11-3	Dimethyl Phthalate	U	9	1.0	10	9	0.7
606-20-2	2,6-Dinitrotoluene	U	9	1.0	10	9	1.0
208-96-8	Acenaphthylene	U	9	1.0	10	9	2
99-09-2	3-Nitroaniline	U	24	1.0	25	24	1
83-32-9	Acenaphthene	U	9	1.0	10	9	2
51-28-5	2,4-Dinitrophenol	~~U~~ UJ	42	1.0	45	42	14 CCH
132-64-9	Dibenzofuran	U	9	1.0	10	9	1
100-02-7	4-Nitrophenol	U	24	1.0	25	24	5
121-14-2	2,4-Dinitrotoluene	U	9	1.0	10	9	1
84-66-2	Diethylphthalate	U	9	1.0	10	9	1
7005-72-3	4-Chlorophenyl-phenylether	U	9	1.0	10	9	1
100-01-6	4-Nitroaniline	U	24	1.0	25	24	2
534-52-1	4,6-Dinitro-2-Methylphenol	U	24	1.0	25	24	6
86-30-6	N-Nitrosodiphenylamine	U	9	1.0	10	9	2
101-55-3	4-Bromophenyl-phenylether	U	9	1.0	10	9	1
1912-24-9	Atrazine	U	9	1.0	10	9	2
87-86-5	Pentachlorophenol	U	24	1.0	25	24	7
120-12-7	Anthracene	U	9	1.0	10	9	1
86-74-8	Carbazole	U	9	1.0	10	9	1

JWJ 21.1.09

10

KATAHDIN ANALYTICAL SERVICES
Report of Analytical Results

Client: CH2MHill
Project: TO-009 Lejeune
PO No:
Sample Date: 12/06/08
Received Date: 12/09/08
Extraction Date: 12/10/08
Analysis Date: 06-JAN-2009 04:55
Report Date: 01/07/2009
Matrix: WATER
% Solids: NA

Lab ID: SB7057-3
Client ID: MR08-EB01120608-IS
SDG: TO9-10
Extracted by: KF
Extraction Method: SW846 3510
Analyst: JCG
Analysis Method: SW846 8270C
Lab Prep Batch: WG58970
Units: ug/L

CAS#	Compound	Flags	Results	DF	PQL	Adj.PQL	Adj.MDL
84-74-2	Di-n-butylphthalate	U	9	1.0	10	9	1
85-68-7	Butylbenzylphthalate	U	9	1.0	10	9	1
91-94-1	3,3'-Dichlorobenzidine	U	9	1.0	10	9	3
218-01-9	Chrysene	U	9	1.0	10	9	1
117-81-7	bis(2-Ethylhexyl)phthalate	U	9	1.0	10	9	2
117-84-0	Di-n-octylphthalate	U	9	1.0	10	9	2
367-12-4	2-Fluorophenol		38%				
13127-88-3	Phenol-D6		13%				
4165-60-0	Nitrobenzene-D5		84%				
321-60-8	2-Fluorobiphenyl		71%				
118-79-6	2,4,6-Tribromophenol		66%				
1718-51-0	Terphenyl-D14		92%				

luw 3/1/09

11

KATAHDIN ANALYTICAL SERVICES
Report of Analytical Results

Client: CH2MHill
Project: TO-009 Lejeune
PO No:
Sample Date: 12/06/08
Received Date: 12/09/08
Extraction Date: 12/10/08
Analysis Date: 06-JAN-2009 11:38
Report Date: 01/07/2009
Matrix: WATER
% Solids: NA

Lab ID: SB7057-5
Client ID: MR08-FB01120608
SDG: TO9-10
Extracted by: KF
Extraction Method: SW846 3510
Analyst: JLP
Analysis Method: SW846 8270C
Lab Prep Batch: WG58970
Units: ug/L

CAS#	Compound	Flags	Results	DF	PQL	Adj.PQL	Adj.MDL	
100-52-7	Benzaldehyde	U	9	1.0	10	9	3	
108-95-2	Phenol	U	9	1.0	10	9	2	
111-44-4	Bis(2-Chloroethyl)ether	U	9	1.0	10	9	2	
95-57-8	2-Chlorophenol	U	11	1.0	12	11	3	
95-48-7	2-Methylphenol	U	11	1.0	12	11	4	
108-60-1	2,2'-Oxybis(1-chloropropane)	U	9	1.0	10	9	2	
98-86-2	Acetophenone	U	11	1.0	12	11	4	
621-64-7	N-Nitroso-di-n-propylamine	U	9	1.0	10	9	2	
65794-96-9	3&4-Methylphenol	U	9	1.0	10	9	2	
67-72-1	Hexachloroethane	U	9	1.0	10	9	2	
98-95-3	Nitrobenzene	~~U~~ UJ	9	1.0	10	9	2	CCH
78-59-1	Isophorone	U	9	1.0	10	9	2	
88-75-5	2-Nitrophenol	U	9	1.0	10	9	3	
105-67-9	2,4-Dimethylphenol	U	11	1.0	12	11	4	
111-91-1	Bis(2-Chloroethoxy)methane	U	9	1.0	10	9	2	
120-83-2	2,4-Dichlorophenol	U	11	1.0	12	11	4	
106-47-8	4-Chloroaniline	U	9	1.0	10	9	2	
105-60-2	Caprolactam	U	9	1.0	10	9	0.4	
59-50-7	4-Chloro-3-Methylphenol	U	9	1.0	10	9	2	
88-06-2	2,4,6-Trichlorophenol	U	9	1.0	10	9	3	
95-95-4	2,4,5-Trichlorophenol	U	24	1.0	25	24	4	
91-58-7	2-Chloronaphthalene	U	9	1.0	10	9	2	
92-52-4	1,1'-Biphenyl	U	9	1.0	10	9	2	
88-74-4	2-Nitroaniline	U	24	1.0	25	24	1	
131-11-3	Dimethyl Phthalate	U	9	1.0	10	9	0.7	
606-20-2	2,6-Dinitrotoluene	U	9	1.0	10	9	1.0	
208-96-8	Acenaphthylene	U	9	1.0	10	9	2	
99-09-2	3-Nitroaniline	U	24	1.0	25	24	1	
83-32-9	Acenaphthene	U	9	1.0	10	9	2	
51-28-5	2,4-Dinitrophenol	~~U~~ UJ	42	1.0	45	42	14	CCH
132-64-9	Dibenzofuran	U	9	1.0	10	9	1	
100-02-7	4-Nitrophenol	U	24	1.0	25	24	5	
121-14-2	2,4-Dinitrotoluene	U	9	1.0	10	9	1	
84-66-2	Diethylphthalate	U	9	1.0	10	9	1	
7005-72-3	4-Chlorophenyl-phenylether	U	9	1.0	10	9	1	
100-01-6	4-Nitroaniline	U	24	1.0	25	24	2	
534-52-1	4,6-Dinitro-2-Methylphenol	U	24	1.0	25	24	6	
86-30-6	N-Nitrosodiphenylamine	U	9	1.0	10	9	2	
101-55-3	4-Bromophenyl-phenylether	U	9	1.0	10	9	1	
1912-24-9	Atrazine	U	9	1.0	10	9	2	
87-86-5	Pentachlorophenol	U	24	1.0	25	24	7	
120-12-7	Anthracene	U	9	1.0	10	9	1	
86-74-8	Carbazole	U	9	1.0	10	9	1	

3/1/09

11

KATAHDIN ANALYTICAL SERVICES
Report of Analytical Results

Client: CH2MHill
Project: TO-009 Lejeune
PO No:
Sample Date: 12/06/08
Received Date: 12/09/08
Extraction Date: 12/10/08
Analysis Date: 06-JAN-2009 11:38
Report Date: 01/07/2009
Matrix: WATER
% Solids: NA

Lab ID: SB7057-5
Client ID: MR08-FB01120608
SDG: T09-10
Extracted by: KF
Extraction Method: SW846 3510
Analyst: JLP
Analysis Method: SW846 8270C
Lab Prep Batch: WG58970
Units: ug/L

CAS#	Compound	Flags	Results	DF	PQL	Adj.PQL	Adj.MDL
84-74-2	Di-n-butylphthalate	U	9	1.0	10	9	1
85-68-7	Butylbenzylphthalate	U	9	1.0	10	9	1
91-94-1	3,3'-Dichlorobenzidine	U	9	1.0	10	9	3
218-01-9	Chrysene	U	9	1.0	10	9	1
117-81-7	bis(2-Ethylhexyl)phthalate	U	9	1.0	10	9	2
117-84-0	Di-n-octylphthalate	U	9	1.0	10	9	2
367-12-4	2-Fluorophenol		34%				
13127-88-3	Phenol-D6		15%				
4165-60-0	Nitrobenzene-D5		40%				
321-60-8	2-Fluorobiphenyl		54%				
118-79-6	2,4,6-Tribromophenol		52%				
1718-51-0	Terphenyl-D14		86%				

MW 3/1/09

KATAHDIN ANALYTICAL SERVICES
Report of Analytical Results

Client: CH2MHill
Project: TO-009 Lejeune
PO No:
Sample Date: 12/07/08
Received Date: 12/09/08
Extraction Date: 12/10/08
Analysis Date: 06-JAN-2009 12:21
Report Date: 01/07/2009
Matrix: WATER
% Solids: NA

Lab ID: SB7057-7
Client ID: MR08-EB01120708-SS
SDG: TO9-10
Extracted by: KF
Extraction Method: SW846 3510
Analyst: JLP
Analysis Method: SW846 8270C
Lab Prep Batch: WG58970
Units: ug/L

CAS#	Compound	Flags	Results	DF	PQL	Adj.PQL	Adj.MDL	
100-52-7	Benzaldehyde	U	9	1.0	10	9	3	
108-95-2	Phenol	U	9	1.0	10	9	2	
111-44-4	Bis(2-Chloroethyl)ether	U	9	1.0	10	9	2	
95-57-8	2-Chlorophenol	U	11	1.0	12	11	3	
95-48-7	2-Methylphenol	U	11	1.0	12	11	4	
108-60-1	2,2'-Oxybis(1-chloropropane)	U	9	1.0	10	9	2	
98-86-2	Acetophenone	U	11	1.0	12	11	4	
621-64-7	N-Nitroso-di-n-propylamine	U	9	1.0	10	9	2	
65794-96-9	3&4-Methylphenol	U	9	1.0	10	9	2	
67-72-1	Hexachloroethane	U	9	1.0	10	9	2	
98-95-3	Nitrobenzene	~~U~~ UJ	9	1.0	10	9	2	CCH
78-59-1	Isophorone	U	9	1.0	10	9	2	
88-75-5	2-Nitrophenol	U	9	1.0	10	9	3	
105-67-9	2,4-Dimethylphenol	U	11	1.0	12	11	4	
111-91-1	Bis(2-Chloroethoxy)methane	U	9	1.0	10	9	2	
120-83-2	2,4-Dichlorophenol	U	11	1.0	12	11	4	
106-47-8	4-Chloroaniline	U	9	1.0	10	9	2	
105-60-2	Caprolactam	U	9	1.0	10	9	0.4	
59-50-7	4-Chloro-3-Methylphenol	U	9	1.0	10	9	2	
88-06-2	2,4,6-Trichlorophenol	U	9	1.0	10	9	3	
95-95-4	2,4,5-Trichlorophenol	U	24	1.0	25	24	4	
91-58-7	2-Chloronaphthalene	U	9	1.0	10	9	2	
92-52-4	1,1'-Biphenyl	U	9	1.0	10	9	2	
88-74-4	2-Nitroaniline	U	24	1.0	25	24	1	
131-11-3	Dimethyl Phthalate	U	9	1.0	10	9	0.7	
606-20-2	2,6-Dinitrotoluene	U	9	1.0	10	9	1.0	
208-96-8	Acenaphthylene	U	9	1.0	10	9	2	
99-09-2	3-Nitroaniline	U	24	1.0	25	24	1	
83-32-9	Acenaphthene	U	9	1.0	10	9	2	
51-28-5	2,4-Dinitrophenol	~~U~~ UJ	42	1.0	45	42	14	CCH
132-64-9	Dibenzofuran	U	9	1.0	10	9	1	
100-02-7	4-Nitrophenol	U	24	1.0	25	24	5	
121-14-2	2,4-Dinitrotoluene	U	9	1.0	10	9	1	
84-66-2	Diethylphthalate	U	9	1.0	10	9	1	
7005-72-3	4-Chlorophenyl-phenylether	U	9	1.0	10	9	1	
100-01-6	4-Nitroaniline	U	24	1.0	25	24	2	
534-52-1	4,6-Dinitro-2-Methylphenol	U	24	1.0	25	24	6	
86-30-6	N-Nitrosodiphenylamine	U	9	1.0	10	9	2	
101-55-3	4-Bromophenyl-phenylether	U	9	1.0	10	9	1	
1912-24-9	Atrazine	U	9	1.0	10	9	2	
87-86-5	Pentachlorophenol	U	24	1.0	25	24	7	
120-12-7	Anthracene	U	9	1.0	10	9	1	
86-74-8	Carbazole	U	9	1.0	10	9	1	

lw 21.1.09

KATAHDIN ANALYTICAL SERVICES
Report of Analytical Results

Client: CH2MHill
Project: TO-009 Lejeune
PO No:
Sample Date: 12/07/08
Received Date: 12/09/08
Extraction Date: 12/10/08
Analysis Date: 06-JAN-2009 12:21
Report Date: 01/07/2009
Matrix: WATER
% Solids: NA

Lab ID: SB7057-7
Client ID: MR08-EB01120708-SS
SDG: TO9-10
Extracted by: KF
Extraction Method: SW846 3510
Analyst: JLP
Analysis Method: SW846 8270C
Lab Prep Batch: WG58970
Units: ug/L

CAS#	Compound	Flags	Results	DF	PQL	Adj.PQL	Adj.MDL
84-74-2	Di-n-butylphthalate	U	9	1.0	10	9	1
85-68-7	Butylbenzylphthalate	U	9	1.0	10	9	1
91-94-1	3,3'-Dichlorobenzidine	U	9	1.0	10	9	3
218-01-9	Chrysene	U	9	1.0	10	9	1
117-81-7	bis(2-Ethylhexyl)phthalate	U	9	1.0	10	9	2
117-84-0	Di-n-octylphthalate	U	9	1.0	10	9	2
367-12-4	2-Fluorophenol		33%				
13127-88-3	Phenol-D6		25%				
4165-60-0	Nitrobenzene-D5		53%				
321-60-8	2-Fluorobiphenyl		60%				
118-79-6	2,4,6-Tribromophenol		60%				
1718-51-0	Terphenyl-D14		82%				

MW 3/1/09

KATAHDIN ANALYTICAL SERVICES
Report of Analytical Results

Client: CH2MHill
Project: TO-009 Lejeune
PO No:
Sample Date: 12/07/08
Received Date: 12/09/08
Extraction Date: 12/10/08
Analysis Date: 06-JAN-2009 13:03
Report Date: 01/07/2009
Matrix: WATER
% Solids: NA

Lab ID: SB7057-9
Client ID: MR08-EB01120708-IS
SDG: TO9-10
Extracted by: KF
Extraction Method: SW846 3510
Analyst: JLP
Analysis Method: SW846 8270C
Lab Prep Batch: WG58970
Units: ug/L

CAS#	Compound	Flags	Results	DF	PQL	Adj.PQL	Adj.MDL	
100-52-7	Benzaldehyde	U	9	1.0	10	9	3	
108-95-2	Phenol	U	9	1.0	10	9	2	
111-44-4	Bis(2-Chloroethyl)ether	U	9	1.0	10	9	2	
95-57-8	2-Chlorophenol	U	11	1.0	12	11	3	
95-48-7	2-Methylphenol	U	11	1.0	12	11	4	
108-60-1	2,2'-Oxybis(1-chloropropane)	U	9	1.0	10	9	2	
98-86-2	Acetophenone	U	11	1.0	12	11	4	
621-64-7	N-Nitroso-di-n-propylamine	U	9	1.0	10	9	2	
65794-96-9	3&4-Methylphenol	U	9	1.0	10	9	2	
67-72-1	Hexachloroethane	U	9	1.0	10	9	2	
98-95-3	Nitrobenzene	~~U~~ UJ	9	1.0	10	9	2	CCH
78-59-1	Isophorone	U	9	1.0	10	9	2	
88-75-5	2-Nitrophenol	U	9	1.0	10	9	3	
105-67-9	2,4-Dimethylphenol	U	11	1.0	12	11	4	
111-91-1	Bis(2-Chloroethoxy)methane	U	9	1.0	10	9	2	
120-83-2	2,4-Dichlorophenol	U	11	1.0	12	11	4	
106-47-8	4-Chloroaniline	U	9	1.0	10	9	2	
105-60-2	Caprolactam	U	9	1.0	10	9	0.4	
59-50-7	4-Chloro-3-Methylphenol	U	9	1.0	10	9	2	
88-06-2	2,4,6-Trichlorophenol	U	9	1.0	10	9	3	
95-95-4	2,4,5-Trichlorophenol	U	24	1.0	25	24	4	
91-58-7	2-Chloronaphthalene	U	9	1.0	10	9	2	
92-52-4	1,1'-Biphenyl	U	9	1.0	10	9	2	
88-74-4	2-Nitroaniline	U	24	1.0	25	24	1	
131-11-3	Dimethyl Phthalate	U	9	1.0	10	9	0.7	
606-20-2	2,6-Dinitrotoluene	U	9	1.0	10	9	1.0	
208-96-8	Acenaphthylene	U	9	1.0	10	9	2	
99-09-2	3-Nitroaniline	U	24	1.0	25	24	1	
83-32-9	Acenaphthene	U	9	1.0	10	9	2	
51-28-5	2,4-Dinitrophenol	~~U~~ UJ	42	1.0	45	42	14	CCH
132-64-9	Dibenzofuran	U	9	1.0	10	9	1	
100-02-7	4-Nitrophenol	U	24	1.0	25	24	5	
121-14-2	2,4-Dinitrotoluene	U	9	1.0	10	9	1	
84-66-2	Diethylphthalate	U	9	1.0	10	9	1	
7005-72-3	4-Chlorophenyl-phenylether	U	9	1.0	10	9	1	
100-01-6	4-Nitroaniline	U	24	1.0	25	24	2	
534-52-1	4,6-Dinitro-2-Methylphenol	U	24	1.0	25	24	6	
86-30-6	N-Nitrosodiphenylamine	U	9	1.0	10	9	2	
101-55-3	4-Bromophenyl-phenylether	U	9	1.0	10	9	1	
1912-24-9	Atrazine	U	9	1.0	10	9	2	
87-86-5	Pentachlorophenol	U	24	1.0	25	24	7	
120-12-7	Anthracene	U	9	1.0	10	9	1	
86-74-8	Carbazole	U	9	1.0	10	9	1	

MW 2/1/09

KATAHDIN ANALYTICAL SERVICES
Report of Analytical Results

Client: CH2MHill
Project: TO-009 Lejeune
PO No:
Sample Date: 12/07/08
Received Date: 12/09/08
Extraction Date: 12/10/08
Analysis Date: 06-JAN-2009 13:03
Report Date: 01/07/2009
Matrix: WATER
% Solids: NA

Lab ID: SB7057-9
Client ID: MR08-EB01120708-IS
SDG: TO9-10
Extracted by: KF
Extraction Method: SW846 3510
Analyst: JLP
Analysis Method: SW846 8270C
Lab Prep Batch: WG58970
Units: ug/L

CAS#	Compound	Flags	Results	DF	PQL	Adj.PQL	Adj.MDL
84-74-2	Di-n-butylphthalate	U	9	1.0	10	9	1
85-68-7	Butylbenzylphthalate	U	9	1.0	10	9	1
91-94-1	3,3'-Dichlorobenzidine	U	9	1.0	10	9	3
218-01-9	Chrysene	U	9	1.0	10	9	1
117-81-7	bis(2-Ethylhexyl)phthalate	U	9	1.0	10	9	2
117-84-0	Di-n-octylphthalate	U	9	1.0	10	9	2
367-12-4	2-Fluorophenol		40%				
13127-88-3	Phenol-D6		17%				
4165-60-0	Nitrobenzene-D5		50%				
321-60-8	2-Fluorobiphenyl		65%				
118-79-6	2,4,6-Tribromophenol		59%				
1718-51-0	Terphenyl-D14		92%				

3/1/09

KATAHDIN ANALYTICAL SERVICES
Report of Analytical Results

Client: CH2MHill
Project: TO-009 Lejeune
PO No:
Sample Date: 12/08/08
Received Date: 12/09/08
Extraction Date: 12/10/08
Analysis Date: 06-JAN-2009 13:46
Report Date: 01/07/2009
Matrix: WATER
% Solids: NA

Lab ID: SB7057-11
Client ID: MR08-EB01120808-SS
SDG: TO9-10
Extracted by: KF
Extraction Method: SW846 3510
Analyst: JLP
Analysis Method: SW846 8270C
Lab Prep Batch: WG58970
Units: ug/L

CAS#	Compound	Flags	Results	DF	PQL	Adj.PQL	Adj.MDL	
100-52-7	Benzaldehyde	U	10	1.0	10	10	3	
108-95-2	Phenol	U	10	1.0	10	10	2	
111-44-4	Bis(2-Chloroethyl)ether	U	10	1.0	10	10	2	
95-57-8	2-Chlorophenol	U	13	1.0	12	13	4	
95-48-7	2-Methylphenol	U	13	1.0	12	13	4	
108-60-1	2,2'-Oxybis(1-chloropropane)	U	10	1.0	10	10	2	
98-86-2	Acetophenone	U	13	1.0	12	13	4	
621-64-7	N-Nitroso-di-n-propylamine	U	10	1.0	10	10	2	
65794-96-9	3&4-Methylphenol	U	10	1.0	10	10	3	
67-72-1	Hexachloroethane	U	10	1.0	10	10	2	
98-95-3	Nitrobenzene	~~U~~ UJ	10	1.0	10	10	2	CCH
78-59-1	Isophorone	U	10	1.0	10	10	2	
88-75-5	2-Nitrophenol	U	10	1.0	10	10	4	
105-67-9	2,4-Dimethylphenol	U	13	1.0	12	13	4	
111-91-1	Bis(2-Chloroethoxy)methane	U	10	1.0	10	10	2	
120-83-2	2,4-Dichlorophenol	U	13	1.0	12	13	4	
106-47-8	4-Chloroaniline	U	10	1.0	10	10	2	
105-60-2	Caprolactam	U	10	1.0	10	10	0.4	
59-50-7	4-Chloro-3-Methylphenol	U	10	1.0	10	10	3	
88-06-2	2,4,6-Trichlorophenol	U	10	1.0	10	10	3	
95-95-4	2,4,5-Trichlorophenol	U	26	1.0	25	26	4	
91-58-7	2-Chloronaphthalene	U	10	1.0	10	10	2	
92-52-4	1,1'-Biphenyl	U	10	1.0	10	10	2	
88-74-4	2-Nitroaniline	U	26	1.0	25	26	2	
131-11-3	Dimethyl Phthalate	U	10	1.0	10	10	0.8	
606-20-2	2,6-Dinitrotoluene	U	10	1.0	10	10	1	
208-96-8	Acenaphthylene	U	10	1.0	10	10	2	
99-09-2	3-Nitroaniline	U	26	1.0	25	26	1	
83-32-9	Acenaphthene	U	10	1.0	10	10	2	
51-28-5	2,4-Dinitrophenol	~~U~~ UJ	47	1.0	45	47	16	CCH
132-64-9	Dibenzofuran	U	10	1.0	10	10	2	
100-02-7	4-Nitrophenol	U	26	1.0	25	26	6	
121-14-2	2,4-Dinitrotoluene	U	10	1.0	10	10	1	
84-66-2	Diethylphthalate	U	10	1.0	10	10	1	
7005-72-3	4-Chlorophenyl-phenylether	U	10	1.0	10	10	1	
100-01-6	4-Nitroaniline	U	26	1.0	25	26	2	
534-52-1	4,6-Dinitro-2-Methylphenol	U	26	1.0	25	26	6	
86-30-6	N-Nitrosodiphenylamine	U	10	1.0	10	10	2	
101-55-3	4-Bromophenyl-phenylether	U	10	1.0	10	10	1	
1912-24-9	Atrazine	U	10	1.0	10	10	2	
87-86-5	Pentachlorophenol	U	26	1.0	25	26	8	
120-12-7	Anthracene	U	10	1.0	10	10	1	
86-74-8	Carbazole	U	10	1.0	10	10	1	

LW 3/1/09

KATAHDIN ANALYTICAL SERVICES
Report of Analytical Results

Client: CH2MHill
Project: TO-009 Lejeune
PO No:
Sample Date: 12/08/08
Received Date: 12/09/08
Extraction Date: 12/10/08
Analysis Date: 06-JAN-2009 13:46
Report Date: 01/07/2009
Matrix: WATER
% Solids: NA

Lab ID: SB7057-11
Client ID: MR08-EB01120808-SS
SDG: TO9-10
Extracted by: KF
Extraction Method: SW846 3510
Analyst: JLP
Analysis Method: SW846 8270C
Lab Prep Batch: WG58970
Units: ug/L

CAS#	Compound	Flags	Results	DF	PQL	Adj.PQL	Adj.MDL
84-74-2	Di-n-butylphthalate	U	10	1.0	10	10	1
85-68-7	Butylbenzylphthalate	U	10	1.0	10	10	2
91-94-1	3,3'-Dichlorobenzidine	U	10	1.0	10	10	3
218-01-9	Chrysene	U	10	1.0	10	10	1
117-81-7	bis(2-Ethylhexyl)phthalate	U	10	1.0	10	10	2
117-84-0	Di-n-octylphthalate	U	10	1.0	10	10	2
367-12-4	2-Fluorophenol		40%				
13127-88-3	Phenol-D6		20%				
4165-60-0	Nitrobenzene-D5		63%				
321-60-8	2-Fluorobiphenyl		73%				
118-79-6	2,4,6-Tribromophenol		57%				
1718-51-0	Terphenyl-D14		95%				

LAS 3/1/09

15

KATAHDIN ANALYTICAL SERVICES
Report of Analytical Results

Client: CH2MHill
Project: TO-009 Lejeune
PO No:
Sample Date: 12/08/08
Received Date: 12/09/08
Extraction Date: 12/10/08
Analysis Date: 06-JAN-2009 14:28
Report Date: 01/07/2009
Matrix: WATER
% Solids: NA

Lab ID: SB7057-13
Client ID: MR08-EB01120808-IS
SDG: TO9-10
Extracted by: KF
Extraction Method: SW846 3510
Analyst: JLP
Analysis Method: SW846 8270C
Lab Prep Batch: WG58970
Units: ug/L

CAS#	Compound	Flags	Results	DF	PQL	Adj.PQL	Adj.MDL	
100-52-7	Benzaldehyde	U	10	1.0	10	10	3	
108-95-2	Phenol	U	10	1.0	10	10	2	
111-44-4	Bis(2-Chloroethyl)ether	U	10	1.0	10	10	2	
95-57-8	2-Chlorophenol	U	12	1.0	12	12	3	
95-48-7	2-Methylphenol	U	12	1.0	12	12	4	
108-60-1	2,2'-Oxybis(1-chloropropane)	U	10	1.0	10	10	2	
98-86-2	Acetophenone	U	12	1.0	12	12	4	
621-64-7	N-Nitroso-di-n-propylamine	U	10	1.0	10	10	2	
65794-96-9	3&4-Methylphenol	U	10	1.0	10	10	3	
67-72-1	Hexachloroethane	U	10	1.0	10	10	2	
98-95-3	Nitrobenzene	~~U~~ UJ	10	1.0	10	10	2	CCH
78-59-1	Isophorone	U	10	1.0	10	10	2	
88-75-5	2-Nitrophenol	U	10	1.0	10	10	4	
105-67-9	2,4-Dimethylphenol	U	12	1.0	12	12	4	
111-91-1	Bis(2-Chloroethoxy)methane	U	10	1.0	10	10	2	
120-83-2	2,4-Dichlorophenol	U	12	1.0	12	12	4	
106-47-8	4-Chloroaniline	U	10	1.0	10	10	2	
105-60-2	Caprolactam	U	10	1.0	10	10	0.4	
59-50-7	4-Chloro-3-Methylphenol	U	10	1.0	10	10	2	
88-06-2	2,4,6-Trichlorophenol	U	10	1.0	10	10	3	
95-95-4	2,4,5-Trichlorophenol	U	24	1.0	25	24	4	
91-58-7	2-Chloronaphthalene	U	10	1.0	10	10	2	
92-52-4	1,1'-Biphenyl	U	10	1.0	10	10	2	
88-74-4	2-Nitroaniline	U	24	1.0	25	24	2	
131-11-3	Dimethyl Phthalate	U	10	1.0	10	10	0.8	
606-20-2	2,6-Dinitrotoluene	U	10	1.0	10	10	1	
208-96-8	Acenaphthylene	U	10	1.0	10	10	2	
99-09-2	3-Nitroaniline	U	24	1.0	25	24	1	
83-32-9	Acenaphthene	U	10	1.0	10	10	2	
51-28-5	2,4-Dinitrophenol	~~U~~ UJ	44	1.0	45	44	15	CCH
132-64-9	Dibenzofuran	U	10	1.0	10	10	1	
100-02-7	4-Nitrophenol	U	24	1.0	25	24	6	
121-14-2	2,4-Dinitrotoluene	U	10	1.0	10	10	1	
84-66-2	Diethylphthalate	U	10	1.0	10	10	1	
7005-72-3	4-Chlorophenyl-phenylether	U	10	1.0	10	10	1	
100-01-6	4-Nitroaniline	U	24	1.0	25	24	2	
534-52-1	4,6-Dinitro-2-Methylphenol	U	24	1.0	25	24	6	
86-30-6	N-Nitrosodiphenylamine	U	10	1.0	10	10	2	
101-55-3	4-Bromophenyl-phenylether	U	10	1.0	10	10	1	
1912-24-9	Atrazine	U	10	1.0	10	10	2	
87-86-5	Pentachlorophenol	U	24	1.0	25	24	8	
120-12-7	Anthracene	U	10	1.0	10	10	1	
86-74-8	Carbazole	U	10	1.0	10	10	1	

LW 3/1/09

KATAHDIN ANALYTICAL SERVICES
Report of Analytical Results

Client: CH2MHill
Project: TO-009 Lejeune
PO No:
Sample Date: 12/08/08
Received Date: 12/09/08
Extraction Date: 12/10/08
Analysis Date: 06-JAN-2009 14:28
Report Date: 01/07/2009
Matrix: WATER
% Solids: NA

Lab ID: SB7057-13
Client ID: MR08-EB01120808-IS
SDG: TO9-10
Extracted by: KF
Extraction Method: SW846 3510
Analyst: JLP
Analysis Method: SW846 8270C
Lab Prep Batch: WG58970
Units: ug/L

CAS#	Compound	Flags	Results	DF	PQL	Adj.PQL	Adj.MDL
84-74-2	Di-n-butylphthalate	U	10	1.0	10	10	1
85-68-7	Butylbenzylphthalate	U	10	1.0	10	10	1
91-94-1	3,3'-Dichlorobenzidine	U	10	1.0	10	10	3
218-01-9	Chrysene	U	10	1.0	10	10	1
117-81-7	bis(2-Ethylhexyl)phthalate	U	10	1.0	10	10	2
117-84-0	Di-n-octylphthalate	U	10	1.0	10	10	2
367-12-4	2-Fluorophenol		32%				
13127-88-3	Phenol-D6		10%				
4165-60-0	Nitrobenzene-D5		59%				
321-60-8	2-Fluorobiphenyl		64%				
118-79-6	2,4,6-Tribromophenol		59%				
1718-51-0	Terphenyl-D14		92%				

lw 3/1/09

16

KATAHDIN ANALYTICAL SERVICES
Report of Analytical Results

Client: CH2MHill
Project: TO-009 Lejeune
PO No:
Sample Date: 12/09/08
Received Date: 12/10/08
Extraction Date: 12/11/08
Analysis Date: 06-JAN-2009 15:11
Report Date: 01/07/2009
Matrix: WATER
% Solids: NA

Lab ID: SB7082-1
Client ID: EB-01120908-SS
SDG: TO9-10
Extracted by: KF
Extraction Method: SW846 3510
Analyst: JLP
Analysis Method: SW846 8270C
Lab Prep Batch: WG59000
Units: ug/L

CAS#	Compound	Flags	Results	DF	PQL	Adj.PQL	Adj.MDL	
100-52-7	Benzaldehyde	U	9	1.0	10	9	3	
108-95-2	Phenol	U	9	1.0	10	9	2	
111-44-4	Bis(2-Chloroethyl)ether	U	9	1.0	10	9	2	
95-57-8	2-Chlorophenol	U	11	1.0	12	11	3	
95-48-7	2-Methylphenol	U	11	1.0	12	11	4	
108-60-1	2,2'-Oxybis(1-chloropropane)	U	9	1.0	10	9	2	
98-86-2	Acetophenone	U	11	1.0	12	11	4	
621-64-7	N-Nitroso-di-n-propylamine	U	9	1.0	10	9	2	
65794-96-9	3&4-Methylphenol	U	9	1.0	10	9	2	
67-72-1	Hexachloroethane	U	9	1.0	10	9	2	
98-95-3	Nitrobenzene	~~U~~ UJ	9	1.0	10	9	2	CCH
78-59-1	Isophorone	U	9	1.0	10	9	2	
88-75-5	2-Nitrophenol	U	9	1.0	10	9	3	
105-67-9	2,4-Dimethylphenol	U	11	1.0	12	11	4	
111-91-1	Bis(2-Chloroethoxy)methane	U	9	1.0	10	9	2	
120-83-2	2,4-Dichlorophenol	U	11	1.0	12	11	4	
106-47-8	4-Chloroaniline	U	9	1.0	10	9	2	
105-60-2	Caprolactam	~~U~~ R	9	1.0	10	9	0.4	BSL
59-50-7	4-Chloro-3-Methylphenol	U	9	1.0	10	9	2	
88-06-2	2,4,6-Trichlorophenol	U	9	1.0	10	9	3	
95-95-4	2,4,5-Trichlorophenol	U	24	1.0	25	24	4	
91-58-7	2-Chloronaphthalene	U	9	1.0	10	9	2	
92-52-4	1,1'-Biphenyl	U	9	1.0	10	9	2	
88-74-4	2-Nitroaniline	U	24	1.0	25	24	1	
131-11-3	Dimethyl Phthalate	U	9	1.0	10	9	0.7	
606-20-2	2,6-Dinitrotoluene	U	9	1.0	10	9	1.0	
208-96-8	Acenaphthylene	U	9	1.0	10	9	2	
99-09-2	3-Nitroaniline	U	24	1.0	25	24	1	
83-32-9	Acenaphthene	U	9	1.0	10	9	2	
51-28-5	2,4-Dinitrophenol	~~U~~ UJ	42	1.0	45	42	14	CCH
132-64-9	Dibenzofuran	U	9	1.0	10	9	1	
100-02-7	4-Nitrophenol	U	24	1.0	25	24	5	
121-14-2	2,4-Dinitrotoluene	U	9	1.0	10	9	1	
84-66-2	Diethylphthalate	U	9	1.0	10	9	1	
7005-72-3	4-Chlorophenyl-phenylether	U	9	1.0	10	9	1	
100-01-6	4-Nitroaniline	U	24	1.0	25	24	2	
534-52-1	4,6-Dinitro-2-Methylphenol	U	24	1.0	25	24	6	
86-30-6	N-Nitrosodiphenylamine	U	9	1.0	10	9	2	
101-55-3	4-Bromophenyl-phenylether	U	9	1.0	10	9	1	
1912-24-9	Atrazine	U	9	1.0	10	9	2	
87-86-5	Pentachlorophenol	U	24	1.0	25	24	7	
120-12-7	Anthracene	U	9	1.0	10	9	1	
86-74-8	Carbazole	U	9	1.0	10	9	1	

dw 7/1/09

16

KATAHDIN ANALYTICAL SERVICES
Report of Analytical Results

Client: CH2MHill
Project: TO-009 Lejeune
PO No:
Sample Date: 12/09/08
Received Date: 12/10/08
Extraction Date: 12/11/08
Analysis Date: 06-JAN-2009 15:11
Report Date: 01/07/2009
Matrix: WATER
% Solids: NA

Lab ID: SB7082-1
Client ID: EB-01120908-SS
SDG: TO9-10
Extracted by: KF
Extraction Method: SW846 3510
Analyst: JLP
Analysis Method: SW846 8270C
Lab Prep Batch: WG59000
Units: ug/L

CAS#	Compound	Flags	Results	DF	PQL	Adj.PQL	Adj.MDL
84-74-2	Di-n-butylphthalate	U	9	1.0	10	9	1
85-68-7	Butylbenzylphthalate	U	9	1.0	10	9	1
91-94-1	3,3'-Dichlorobenzidine	U	9	1.0	10	9	3
218-01-9	Chrysene	U	9	1.0	10	9	1
117-81-7	bis(2-Ethylhexyl)phthalate	U	9	1.0	10	9	2
117-84-0	Di-n-octylphthalate	U	9	1.0	10	9	2
367-12-4	2-Fluorophenol		45%				
13127-88-3	Phenol-D6		15%				
4165-60-0	Nitrobenzene-D5		65%				
321-60-8	2-Fluorobiphenyl		76%				
118-79-6	2,4,6-Tribromophenol		57%				
1718-51-0	Terphenyl-D14		100%				

MW
3/1/09

17

KATAHDIN ANALYTICAL SERVICES
Report of Analytical Results

Client: CH2MHill
Project: TO-009 Lejeune
PO No:
Sample Date: 12/09/08
Received Date: 12/10/08
Extraction Date: 12/11/08
Analysis Date: 06-JAN-2009 15:54
Report Date: 01/07/2009
Matrix: WATER
% Solids: NA

Lab ID: SB7082-3
Client ID: EB-01120908-IS
SDG: TO9-10
Extracted by: KF
Extraction Method: SW846 3510
Analyst: JLP
Analysis Method: SW846 8270C
Lab Prep Batch: WG59000
Units: ug/L

CAS#	Compound	Flags	Results	DF	PQL	Adj.PQL	Adj.MDL	
100-52-7	Benzaldehyde	U	9	1.0	10	9	3	
108-95-2	Phenol	U	9	1.0	10	9	2	
111-44-4	Bis(2-Chloroethyl)ether	U	9	1.0	10	9	2	
95-57-8	2-Chlorophenol	U	11	1.0	12	11	3	
95-48-7	2-Methylphenol	U	11	1.0	12	11	4	
108-60-1	2,2'-Oxybis(1-chloropropane)	U	9	1.0	10	9	2	
98-86-2	Acetophenone	U	11	1.0	12	11	4	
621-64-7	N-Nitroso-di-n-propylamine	U	9	1.0	10	9	2	
65794-96-9	3&4-Methylphenol	U	9	1.0	10	9	2	
67-72-1	Hexachloroethane	U	9	1.0	10	9	2	
98-95-3	Nitrobenzene	~~U~~ UJ	9	1.0	10	9	2	CCH
78-59-1	Isophorone	U	9	1.0	10	9	2	
88-75-5	2-Nitrophenol	U	9	1.0	10	9	3	
105-67-9	2,4-Dimethylphenol	U	11	1.0	12	11	4	
111-91-1	Bis(2-Chloroethoxy)methane	U	9	1.0	10	9	2	
120-83-2	2,4-Dichlorophenol	U	11	1.0	12	11	4	
106-47-8	4-Chloroaniline	U	9	1.0	10	9	2	
105-60-2	Caprolactam	~~U~~ R	9	1.0	10	9	0.4	BSL
59-50-7	4-Chloro-3-Methylphenol	U	9	1.0	10	9	2	
88-06-2	2,4,6-Trichlorophenol	U	9	1.0	10	9	3	
95-95-4	2,4,5-Trichlorophenol	U	24	1.0	25	24	4	
91-58-7	2-Chloronaphthalene	U	9	1.0	10	9	2	
92-52-4	1,1'-Biphenyl	U	9	1.0	10	9	2	
88-74-4	2-Nitroaniline	U	24	1.0	25	24	1	
131-11-3	Dimethyl Phthalate	U	9	1.0	10	9	0.7	
606-20-2	2,6-Dinitrotoluene	U	9	1.0	10	9	1.0	
208-96-8	Acenaphthylene	U	9	1.0	10	9	2	
99-09-2	3-Nitroaniline	U	24	1.0	25	24	1	
83-32-9	Acenaphthene	U	9	1.0	10	9	2	
51-28-5	2,4-Dinitrophenol	~~U~~ UJ	42	1.0	45	42	14	CCH
132-64-9	Dibenzofuran	U	9	1.0	10	9	1	
100-02-7	4-Nitrophenol	U	24	1.0	25	24	5	
121-14-2	2,4-Dinitrotoluene	U	9	1.0	10	9	1	
84-66-2	Diethylphthalate	U	9	1.0	10	9	1	
7005-72-3	4-Chlorophenyl-phenylether	U	9	1.0	10	9	1	
100-01-6	4-Nitroaniline	U	24	1.0	25	24	2	
534-52-1	4,6-Dinitro-2-Methylphenol	U	24	1.0	25	24	6	
86-30-6	N-Nitrosodiphenylamine	U	9	1.0	10	9	2	
101-55-3	4-Bromophenyl-phenylether	U	9	1.0	10	9	1	
1912-24-9	Atrazine	U	9	1.0	10	9	2	
87-86-5	Pentachlorophenol	U	24	1.0	25	24	7	
120-12-7	Anthracene	U	9	1.0	10	9	1	
86-74-8	Carbazole	U	9	1.0	10	9	1	

MW 3/1/09

KATAHDIN ANALYTICAL SERVICES
Report of Analytical Results

17

Client: CH2MHill
Project: TO-009 Lejeune
PO No:
Sample Date: 12/09/08
Received Date: 12/10/08
Extraction Date: 12/11/08
Analysis Date: 06-JAN-2009 15:54
Report Date: 01/07/2009
Matrix: WATER
% Solids: NA

Lab ID: SB7082-3
Client ID: EB-01120908-IS
SDG: TO9-10
Extracted by: KF
Extraction Method: SW846 3510
Analyst: JLP
Analysis Method: SW846 8270C
Lab Prep Batch: WG59000
Units: ug/L

CAS#	Compound	Flags	Results	DF	PQL	Adj.PQL	Adj.MDL
84-74-2	Di-n-butylphthalate	U	9	1.0	10	9	1
85-68-7	Butylbenzylphthalate	U	9	1.0	10	9	1
91-94-1	3,3'-Dichlorobenzidine	U	9	1.0	10	9	3
218-01-9	Chrysene	U	9	1.0	10	9	1
117-81-7	bis(2-Ethylhexyl)phthalate	U	9	1.0	10	9	2
117-84-0	Di-n-octylphthalate	U	9	1.0	10	9	2
367-12-4	2-Fluorophenol		46%				
13127-88-3	Phenol-D6		14%				
4165-60-0	Nitrobenzene-D5		68%				
321-60-8	2-Fluorobiphenyl		80%				
118-79-6	2,4,6-Tribromophenol		64%				
1718-51-0	Terphenyl-D14		95%				

lcw
3/1/09

18

KATAHDIN ANALYTICAL SERVICES
Report of Analytical Results

Client: CH2MHill
Project: TO-009 Lejeune
PO No:
Sample Date: 12/10/08
Received Date: 12/11/08
Extraction Date: 12/16/08
Analysis Date: 07-JAN-2009 00:20
Report Date: 01/07/2009
Matrix: WATER
% Solids: NA

Lab ID: SB7128-1
Client ID: MR08-EB01121008-SS
SDG: TO9-10
Extracted by: KF
Extraction Method: SW846 3510
Analyst: JCG
Analysis Method: SW846 8270C
Lab Prep Batch: WG59113
Units: ug/L

CAS#	Compound	Flags	Results	DF	PQL	Adj.PQL	Adj.MDL	
100-52-7	Benzaldehyde	~~U~~ UJ	9	1.0	10	9	3	CCH
108-95-2	Phenol	U	9	1.0	10	9	2	
111-44-4	Bis(2-Chloroethyl)ether	U	9	1.0	10	9	2	
95-57-8	2-Chlorophenol	U	11	1.0	12	11	3	
95-48-7	2-Methylphenol	U	11	1.0	12	11	4	
108-60-1	2,2'-Oxybis(1-chloropropane)	U	9	1.0	10	9	2	
98-86-2	Acetophenone	U	11	1.0	12	11	4	
621-64-7	N-Nitroso-di-n-propylamine	U	9	1.0	10	9	2	
65794-96-9	3&4-Methylphenol	U	9	1.0	10	9	2	
67-72-1	Hexachloroethane	U	9	1.0	10	9	2	
98-95-3	Nitrobenzene	~~U~~ UJ	9	1.0	10	9	2	CCH
78-59-1	Isophorone	U	9	1.0	10	9	2	
88-75-5	2-Nitrophenol	U	9	1.0	10	9	3	
105-67-9	2,4-Dimethylphenol	U	11	1.0	12	11	4	
111-91-1	Bis(2-Chloroethoxy)methane	U	9	1.0	10	9	2	
120-83-2	2,4-Dichlorophenol	U	11	1.0	12	11	4	
106-47-8	4-Chloroaniline	U	9	1.0	10	9	2	
105-60-2	Caprolactam	U	9	1.0	10	9	0.4	
59-50-7	4-Chloro-3-Methylphenol	U	9	1.0	10	9	2	
88-06-2	2,4,6-Trichlorophenol	U	9	1.0	10	9	3	
95-95-4	2,4,5-Trichlorophenol	U	24	1.0	25	24	4	
91-58-7	2-Chloronaphthalene	U	9	1.0	10	9	2	
92-52-4	1,1'-Biphenyl	U	9	1.0	10	9	2	
88-74-4	2-Nitroaniline	U	24	1.0	25	24	1	
131-11-3	Dimethyl Phthalate	U	9	1.0	10	9	0.7	
606-20-2	2,6-Dinitrotoluene	U	9	1.0	10	9	1.0	
208-96-8	Acenaphthylene	U	9	1.0	10	9	2	
99-09-2	3-Nitroaniline	U	24	1.0	25	24	1	
83-32-9	Acenaphthene	U	9	1.0	10	9	2	
51-28-5	2,4-Dinitrophenol	U	42	1.0	45	42	14	
132-64-9	Dibenzofuran	U	9	1.0	10	9	1	
100-02-7	4-Nitrophenol	U	24	1.0	25	24	5	
121-14-2	2,4-Dinitrotoluene	U	9	1.0	10	9	1	
84-66-2	Diethylphthalate	U	9	1.0	10	9	1	
7005-72-3	4-Chlorophenyl-phenylether	U	9	1.0	10	9	1	
100-01-6	4-Nitroaniline	U	24	1.0	25	24	2	
534-52-1	4,6-Dinitro-2-Methylphenol	U	24	1.0	25	24	6	
86-30-6	N-Nitrosodiphenylamine	U	9	1.0	10	9	2	
101-55-3	4-Bromophenyl-phenylether	U	9	1.0	10	9	1	
1912-24-9	Atrazine	U	9	1.0	10	9	2	
87-86-5	Pentachlorophenol	U	24	1.0	25	24	7	
120-12-7	Anthracene	U	9	1.0	10	9	1	
86-74-8	Carbazole	U	9	1.0	10	9	1	

LW 3/11/09

KATAHDIN ANALYTICAL SERVICES
Report of Analytical Results

Client: CH2MHill
Project: TO-009 Lejeune
PO No:
Sample Date: 12/10/08
Received Date: 12/11/08
Extraction Date: 12/16/08
Analysis Date: 07-JAN-2009 00:20
Report Date: 01/07/2009
Matrix: WATER
% Solids: NA

Lab ID: SB7128-1
Client ID: MR08-EB01121008-SS
SDG: TO9-10
Extracted by: KF
Extraction Method: SW846 3510
Analyst: JCG
Analysis Method: SW846 8270C
Lab Prep Batch: WG59113
Units: ug/L

CAS#	Compound	Flags	Results	DF	PQL	Adj.PQL	Adj.MDL
84-74-2	Di-n-butylphthalate	U	9	1.0	10	9	1
85-68-7	Butylbenzylphthalate	U	9	1.0	10	9	1
91-94-1	3,3'-Dichlorobenzidine	U	9	1.0	10	9	3
218-01-9	Chrysene	U	9	1.0	10	9	1
117-81-7	bis(2-Ethylhexyl)phthalate	U	9	1.0	10	9	2
117-84-0	Di-n-octylphthalate	U	9	1.0	10	9	2
367-12-4	2-Fluorophenol		47%				
13127-88-3	Phenol-D6		30%				
4165-60-0	Nitrobenzene-D5		73%				
321-60-8	2-Fluorobiphenyl		70%				
118-79-6	2,4,6-Tribromophenol		77%				
1718-51-0	Terphenyl-D14		104%				

MW 3/1/09

ENVIRONMENTAL
Data Services, Inc.

POLYNUCLEAR AROMATIC COMPOUNDS BY 8270SIM

USEPA Region IV - Level IV Review

Site: MCB Camp Lejeune, TO-09 SDG #: TO9-11

Client: CH2M HILL, Inc., Virginia Beach, Virginia Date: March 2, 2009

Laboratory: Katahdin Analytical Services, Scarborough, Maine Reviewer: Nancy Weaver

EDS ID	Client Sample ID	Laboratory Sample ID	Matrix
1	MR08-IS068-8-9-08D	SB6962-2	Soil
1MS	MR08-IS068-8-9-08DMS	SB6962-2MS	Soil
1MSD	MR08-IS068-8-9-08DMSD	SB6962-2MSD	Soil
2	MR08-IS070-8-9-08D	SB6962-4	Soil
3	MR08-SS071-08D	SB6962-6	Soil
4	MR08-IS071-6-7-08D	SB6962-8	Soil
5	MR08-SS072-08D	SB6962-10	Soil
6	MR08-IS072-6-7-08D	SB6962-12	Soil
7	MR08-SS073-08D	SB6962-14	Soil
8	MR08-IS073-6-7-08D	SB6962-16	Soil
9	MR08-SS074-08D	SB7002-2	Soil
10	MR08-IS074-7-8-08D	SB7002-4	Soil
11	MR08-SS075-08D	SB7002-6	Soil
12	MR08-IS075-6-7-08D	SB7002-8	Soil
13	MR08-SS076-08D	SB7002-10	Soil
13RE	MR08-SS076-08DRE	SB7002-10RE	Soil
14	MR08-IS076-6-7-08D	SB7002-12	Soil
15	MR08-SS077-08D	SB7002-14	Soil
15DL	MR08-SS077-08DDL	SB7002-14DL	Soil
16	MR08-IS077-6-7-08D	SB7002-16	Soil
17	MR08-SS078-08D	SB7002-18	Soil
18	MR08-IS078-6-7-08D	SB7002-20	Soil
19	MR08-SS079-08D	SB7002-22	Soil
20	MR08-SS079D-08D	SB7002-24	Soil

The USEPA "Contract Laboratory Program National Functional Guidelines for Organic Data Review," October 1999, and professional judgement were used in evaluating the data in this summary report.

Holding Times - All samples were extracted within 14 days for soil samples and analyzed within 40 days for all samples.

GC/MS Tuning - All of the DFTPP tunes in the initial and continuing calibrations met the percent relative abundance criteria.

Initial Calibration - The initial calibrations exhibited acceptable %RSD and mean RRF values.

Continuing Calibration - The continuing calibrations exhibited acceptable %D and RRF values except the following.

CCAL Date	Compound	%D/RRF	Qualifier	Affected Samples
12/20/08	Naphthalene	33.07%	J/UJ	10
	Phenanthrene	25.38%	J/UJ	10
	Hexachlorobenzene	37.69%	J/UJ	10
12/22/08	Hexachlorocyclopentadiene	66.11%	J/UJ	11, 12, 14, 16, 17
12/23/08	Pyrene	29.64%	J/UJ	6, 18, 20
	Hexachlorocyclopentadiene	39.78%	J/UJ	6, 18, 20
12/24/08	Naphthalene	34.97%	J/UJ	1-5, 8, 9, 13, 13RE, 15, 19
	Hexachlorobenzene	75.07%	J/UJ	1-5, 8, 9, 13, 13RE, 15, 19
	Hexachlorobutadiene	27.89%	J/UJ	1-5, 8, 9, 13, 13RE, 15, 19

Surrogates - All samples exhibited acceptable surrogate recoveries except the following.

Sample ID	Surrogate	%R	Qualifier
9	S2-2,4-Dibromophenol	157%	None for acid surrogate

MS/MSD - The MS/MSD sample exhibited acceptable %R and RPD values.

Laboratory Control Sample - The LCS samples exhibited acceptable %R values except the following.

LCS ID	Compound	%R	Qualifier	Affected Samples
WG58887-LCS	Naphthalene	112%	None	All ND
WG58993-LCS	Naphthalene	107%	None	All ND

Internal Standard (IS) Area Performance - All internal standards met response and retention time (RT) criteria except the following.

Sample ID	Internal Standard	Area Count	Qualifier
13	IS6-Perylene-d12	Low	J/UJ - All associated
13RE	IS4-Phenanthrene-d10	High	J - All associated positive results

Method Blank - The method blanks were free of contamination.

Field, Equipment Blank - Field QC results are summarized below.

Blank ID	Compound	Conc. ug/L	Action Level ug/L	Qualifier	Affected Samples
MR08-EB01120308-SS	None - ND	-	-	-	-
MR08-EB01120308-IS	None - ND	-	-	-	-
MR08-EB01120408-SS	None - ND	-	-	-	-
MR08-EB01120408-IS	None - ND	-	-	-	-
MR08-FB01120608	None - ND	-	-	-	-

Field Duplicates - Field duplicate results are summarized below.

Compound	MR08-SS079-08D ug/kg	MR08-SS079D-08D ug/kg	RPD	Qualifier
Phenanthrene	4.4	13 U	NC	None
Fluoranthene	10	13 U	NC	None
Pyrene	8.0	7.6	5%	None
Benzo (a) anthracene	5.6	4.2	29%	None
Benzo (b) fluoranthene	19	13 U	NC	None
Benzo (g,h,i) perylene	12 U	3.4	NC	None

Tentatively Identified Compounds (TICs) - TICs were not reported.

Compound Quantitation - There were several dilutions and reanalyses. Refer to Form Is for which to use.

1

KATAHDIN ANALYTICAL SERVICES
Report of Analytical Results

Client: CH2MHill
Project: TO-009 Lejeune
PO No:
Sample Date: 12/03/08
Received Date: 12/04/08
Extraction Date: 12/05/08
Analysis Date: 24-DEC-2008 15:17
Report Date: 01/05/2009
Matrix: SOIL
% Solids: 85.9

Lab ID: SB6962-2RA
Client ID: 08-IS068-8-9-08D
SDG: TO9-11
Extracted by: AC
Extraction Method: SW846 3550
Analyst: JCG
Analysis Method: SW846 M8270C
Lab Prep Batch: WG58802
Units: ug/Kgdrywt

CAS#	Compound	Flags	Results	DF	PQL	Adj.PQL	Adj.MDL	
91-20-3	Naphthalene	~~U~~ UJ	12	1.0	10	12	3.0	CCH
91-57-6	2-Methylnaphthalene	U	12	1.0	10	12	2.6	
86-73-7	Fluorene	U	12	1.0	10	12	3.7	
85-01-8	Phenanthrene	U	12	1.0	10	12	2.1	
206-44-0	Fluoranthene	U	12	1.0	10	12	2.1	
129-00-0	Pyrene	U	12	1.0	10	12	2.4	
56-55-3	Benzo(a)anthracene	U	12	1.0	10	12	2.2	
205-99-2	Benzo(b)fluoranthene	U	12	1.0	10	12	2.8	
207-08-9	Benzo(k)fluoranthene	U	12	1.0	10	12	3.6	
50-32-8	Benzo(a)pyrene	U	12	1.0	10	12	3.8	
193-39-5	Indeno(1,2,3-cd)pyrene	U	12	1.0	10	12	2.2	
53-70-3	Dibenzo(a,h)anthracene	U	12	1.0	10	12	2.1	
191-24-2	Benzo(g,h,i)perylene	U	12	1.0	10	12	2.3	
118-74-1	Hexachlorobenzene	~~U~~ UJ	12	1.0	10	12	2.1	CCH
87-68-3	Hexachlorobutadiene	~~U~~ UJ	12	1.0	10	12	2.7	CCH
77-47-4	Hexachlorocyclopentadiene	U	12	1.0	10	12	1.7	
7297-45-2	2-Methylnaphthalene-D10		88%					
367-12-4	2,4-Dibromophenol		88%					
81103-79-9	Fluorene-d10		59%					
1718-51-1	Pyrene-D10		97%					

LW
3/2/09

2

KATAHDIN ANALYTICAL SERVICES
Report of Analytical Results

Client: CH2MHill
Project: TO-009 Lejeune
PO No:
Sample Date: 12/03/08
Received Date: 12/04/08
Extraction Date: 12/11/08
Analysis Date: 24-DEC-2008 16:41
Report Date: 01/05/2009
Matrix: SOIL
% Solids: 84.2

Lab ID: SB6962-4RERA
Client ID: MR08-IS070-8-9-08D
SDG: TO9-11
Extracted by: CB
Extraction Method: SW846 3550
Analyst: JCG
Analysis Method: SW846 8270C
Lab Prep Batch: WG58993
Units: ug/Kgdrywt

CAS#	Compound	Flags	Results	DF	PQL	Adj.PQL	Adj.MDL
91-20-3	Naphthalene	~~U~~ UJ	12	1.0	10	12	3.1 CCH
91-57-6	2-Methylnaphthalene	U	12	1.0	10	12	2.6
86-73-7	Fluorene	U	12	1.0	10	12	3.8
85-01-8	Phenanthrene	U	12	1.0	10	12	2.1
206-44-0	Fluoranthene	U	12	1.0	10	12	2.1
129-00-0	Pyrene	U	12	1.0	10	12	2.5
56-55-3	Benzo(a)anthracene	U	12	1.0	10	12	2.2
205-99-2	Benzo(b)fluoranthene	U	12	1.0	10	12	2.8
207-08-9	Benzo(k)fluoranthene	U	12	1.0	10	12	3.7
50-32-8	Benzo(a)pyrene	U	12	1.0	10	12	3.9
193-39-5	Indeno(1,2,3-cd)pyrene	U	12	1.0	10	12	2.2
53-70-3	Dibenzo(a,h)anthracene	U	12	1.0	10	12	2.1
191-24-2	Benzo(g,h,i)perylene	U	12	1.0	10	12	2.4
118-74-1	Hexachlorobenzene	~~U~~ UJ	12	1.0	10	12	2.1 CCH
87-68-3	Hexachlorobutadiene	~~U~~ UJ	12	1.0	10	12	2.7 CCH
77-47-4	Hexachlorocyclopentadiene	U	12	1.0	10	12	1.8
7297-45-2	2-Methylnaphthalene-D10		68%				
367-12-4	2,4-Dibromophenol		77%				
81103-79-9	Fluorene-d10		59%				
1718-51-1	Pyrene-D10		112%				

lw
3/2/09

3

KATAHDIN ANALYTICAL SERVICES
Report of Analytical Results

Client: CH2MHill
Project: TO-009 Lejeune
PO No:
Sample Date: 12/03/08
Received Date: 12/04/08
Extraction Date: 12/05/08
Analysis Date: 24-DEC-2008 18:06
Report Date: 01/05/2009
Matrix: SOIL
% Solids: 80.2

Lab ID: SB6962-6RA
Client ID: MR08-SS071-08D
SDG: TO9-11
Extracted by: AC
Extraction Method: SW846 3550
Analyst: JCG
Analysis Method: SW846 M8270C
Lab Prep Batch: WG58802
Units: ug/Kgdrywt

CAS#	Compound	Flags	Results	DF	PQL	Adj.PQL	Adj.MDL
91-20-3	Naphthalene	~~U~~ UJ	12	1.0	10	12	3.2 CCH
91-57-6	2-Methylnaphthalene	U	12	1.0	10	12	2.7
86-73-7	Fluorene	U	12	1.0	10	12	4.0
85-01-8	Phenanthrene	J	7.6	1.0	10	12	2.2
206-44-0	Fluoranthene		20	1.0	10	12	2.2
129-00-0	Pyrene		18	1.0	10	12	2.6
56-55-3	Benzo(a)anthracene	J	9.0	1.0	10	12	2.4
205-99-2	Benzo(b)fluoranthene		21	1.0	10	12	3.0
207-08-9	Benzo(k)fluoranthene	J	9.3	1.0	10	12	3.9
50-32-8	Benzo(a)pyrene	J	8.4	1.0	10	12	4.1
193-39-5	Indeno(1,2,3-cd)pyrene	J	6.7	1.0	10	12	2.4
53-70-3	Dibenzo(a,h)anthracene	U	12	1.0	10	12	2.2
191-24-2	Benzo(g,h,i)perylene	J	6.2	1.0	10	12	2.5
118-74-1	Hexachlorobenzene	~~U~~ UJ	12	1.0	10	12	2.2 CCH
87-68-3	Hexachlorobutadiene	~~U~~ UJ	12	1.0	10	12	2.9 CCH
77-47-4	Hexachlorocyclopentadiene	U	12	1.0	10	12	1.9
7297-45-2	2-Methylnaphthalene-D10		89%				
367-12-4	2,4-Dibromophenol		71%				
81103-79-9	Fluorene-d10		58%				
1718-51-1	Pyrene-D10		117%				

lw
3/2/09

KATAHDIN ANALYTICAL SERVICES
Report of Analytical Results

Client: CH2MHill
Project: TO-009 Lejeune
PO No:
Sample Date: 12/03/08
Received Date: 12/04/08
Extraction Date: 12/05/08
Analysis Date: 24-DEC-2008 17:24
Report Date: 01/05/2009
Matrix: SOIL
% Solids: 85.5

Lab ID: SB6962-8RA
Client ID: MR08-IS071-6-7-08D
SDG: TO9-11
Extracted by: AC
Extraction Method: SW846 3550
Analyst: JCG
Analysis Method: SW846 M8270C
Lab Prep Batch: WG58802
Units: ug/Kgdrywt

CAS#	Compound	Flags	Results	DF	PQL	Adj.PQL	Adj.MDL	
91-20-3	Naphthalene	~~U~~ UJ	12	1.0	10	12	3.0	CCH
91-57-6	2-Methylnaphthalene	U	12	1.0	10	12	2.6	
86-73-7	Fluorene	U	12	1.0	10	12	3.7	
85-01-8	Phenanthrene	U	12	1.0	10	12	2.1	
206-44-0	Fluoranthene	U	12	1.0	10	12	2.1	
129-00-0	Pyrene	U	12	1.0	10	12	2.4	
56-55-3	Benzo(a)anthracene	U	12	1.0	10	12	2.2	
205-99-2	Benzo(b)fluoranthene	U	12	1.0	10	12	2.8	
207-08-9	Benzo(k)fluoranthene	U	12	1.0	10	12	3.6	
50-32-8	Benzo(a)pyrene	U	12	1.0	10	12	3.8	
193-39-5	Indeno(1,2,3-cd)pyrene	U	12	1.0	10	12	2.2	
53-70-3	Dibenzo(a,h)anthracene	U	12	1.0	10	12	2.1	
191-24-2	Benzo(g,h,i)perylene	U	12	1.0	10	12	2.3	
118-74-1	Hexachlorobenzene	~~U~~ UJ	12	1.0	10	12	2.1	CCH
87-68-3	Hexachlorobutadiene	~~U~~ UJ	12	1.0	10	12	2.7	CCH
77-47-4	Hexachlorocyclopentadiene	U	12	1.0	10	12	1.8	
7297-45-2	2-Methylnaphthalene-D10		104%					
367-12-4	2,4-Dibromophenol		84%					
81103-79-9	Fluorene-d10		65%					
1718-51-1	Pyrene-D10		102%					

lw 3/2/09

5

KATAHDIN ANALYTICAL SERVICES
Report of Analytical Results

Client: CH2MHill
Project: TO-009 Lejeune
PO No:
Sample Date: 12/03/08
Received Date: 12/04/08
Extraction Date: 12/05/08
Analysis Date: 24-DEC-2008 18:48
Report Date: 01/05/2009
Matrix: SOIL
% Solids: 77.4

Lab ID: SB6962-10RA
Client ID: MR08-SS072-08D
SDG: TO9-11
Extracted by: AC
Extraction Method: SW846 3550
Analyst: JCG
Analysis Method: SW846 M8270C
Lab Prep Batch: WG58802
Units: ug/Kgdrywt

CAS#	Compound	Flags	Results	DF	PQL	Adj.PQL	Adj.MDL	
91-20-3	Naphthalene	~~J~~ UJ	13	1.0	10	13	3.4	CCH
91-57-6	2-Methylnaphthalene	U	13	1.0	10	13	2.8	
86-73-7	Fluorene	U	13	1.0	10	13	4.1	
85-01-8	Phenanthrene	J	3.1	1.0	10	13	2.3	
206-44-0	Fluoranthene	J	6.4	1.0	10	13	2.3	
129-00-0	Pyrene	J	7.1	1.0	10	13	2.7	
56-55-3	Benzo(a)anthracene	J	3.3	1.0	10	13	2.4	
205-99-2	Benzo(b)fluoranthene	U	13	1.0	10	13	3.1	
207-08-9	Benzo(k)fluoranthene	U	13	1.0	10	13	4.0	
50-32-8	Benzo(a)pyrene	U	13	1.0	10	13	4.3	
193-39-5	Indeno(1,2,3-cd)pyrene	U	13	1.0	10	13	2.4	
53-70-3	Dibenzo(a,h)anthracene	U	13	1.0	10	13	2.3	
191-24-2	Benzo(g,h,i)perylene	J	2.8	1.0	10	13	2.6	
118-74-1	Hexachlorobenzene	~~J~~ UJ	13	1.0	10	13	2.3	CCH
87-68-3	Hexachlorobutadiene	~~J~~ UJ	13	1.0	10	13	3.0	CCH
77-47-4	Hexachlorocyclopentadiene	U	13	1.0	10	13	1.9	
7297-45-2	2-Methylnaphthalene-D10		94%					
367-12-4	2,4-Dibromophenol		80%					
81103-79-9	Fluorene-d10		63%					
1718-51-1	Pyrene-D10		104%					

lew
3/2/09

6

KATAHDIN ANALYTICAL SERVICES
Report of Analytical Results

Client: CH2MHill
Project: TO-009 Lejeune
PO No:
Sample Date: 12/03/08
Received Date: 12/04/08
Extraction Date: 12/05/08
Analysis Date: 23-DEC-2008 22:22
Report Date: 01/05/2009
Matrix: SOIL
% Solids: 92.2

Lab ID: SB6962-12
Client ID: MR08-IS072-6-7-08D
SDG: TO9-11
Extracted by: AC
Extraction Method: SW846 3550
Analyst: JCG
Analysis Method: SW846 M8270C
Lab Prep Batch: WG58802
Units: ug/Kgdrywt

CAS#	Compound	Flags	Results	DF	PQL	Adj.PQL	Adj.MDL	
91-20-3	Naphthalene	U	11	1.0	10	11	2.8	
91-57-6	2-Methylnaphthalene	U	11	1.0	10	11	2.4	
86-73-7	Fluorene	U	11	1.0	10	11	3.5	
85-01-8	Phenanthrene	U	11	1.0	10	11	2.0	
206-44-0	Fluoranthene	U	11	1.0	10	11	2.0	
129-00-0	Pyrene	~~U~~ UJ	11	1.0	10	11	2.3	CCH
56-55-3	Benzo(a)anthracene	U	11	1.0	10	11	2.1	
205-99-2	Benzo(b)fluoranthene	U	11	1.0	10	11	2.6	
207-08-9	Benzo(k)fluoranthene	U	11	1.0	10	11	3.4	
50-32-8	Benzo(a)pyrene	U	11	1.0	10	11	3.6	
193-39-5	Indeno(1,2,3-cd)pyrene	U	11	1.0	10	11	2.1	
53-70-3	Dibenzo(a,h)anthracene	U	11	1.0	10	11	2.0	
191-24-2	Benzo(g,h,i)perylene	U	11	1.0	10	11	2.2	
118-74-1	Hexachlorobenzene	U	11	1.0	10	11	2.0	
87-68-3	Hexachlorobutadiene	U	11	1.0	10	11	2.5	
77-47-4	Hexachlorocyclopentadiene	~~U~~ UJ	11	1.0	10	11	1.6	CCH
7297-45-2	2-Methylnaphthalene-D10		79%					
367-12-4	2,4-Dibromophenol		90%					
81103-79-9	Fluorene-d10		59%					
1718-51-1	Pyrene-D10		103%					

lew
3/2/09

7

KATAHDIN ANALYTICAL SERVICES
Report of Analytical Results

Client: CH2MHill
Project: TO-009 Lejeune
PO No:
Sample Date: 12/03/08
Received Date: 12/04/08
Extraction Date: 12/05/08
Analysis Date: 31-DEC-2008 01:27
Report Date: 01/05/2009
Matrix: SOIL
% Solids: 77.4

Lab ID: SB6962-14RA
Client ID: MR08-SS073-08D
SDG: TO9-11
Extracted by: AC
Extraction Method: SW846 3550
Analyst: JCG
Analysis Method: SW846 M8270C
Lab Prep Batch: WG58802
Units: ug/Kgdrywt

CAS#	Compound	Flags	Results	DF	PQL	Adj.PQL	Adj.MDL
91-20-3	Naphthalene	U	13	1.0	10	13	3.4
91-57-6	2-Methylnaphthalene	U	13	1.0	10	13	2.8
86-73-7	Fluorene	U	13	1.0	10	13	4.1
85-01-8	Phenanthrene	U	13	1.0	10	13	2.3
206-44-0	Fluoranthene		28	1.0	10	13	2.3
129-00-0	Pyrene		19	1.0	10	13	2.7
56-55-3	Benzo(a)anthracene		17	1.0	10	13	2.4
205-99-2	Benzo(b)fluoranthene	U	13	1.0	10	13	3.1
207-08-9	Benzo(k)fluoranthene	U	13	1.0	10	13	4.0
50-32-8	Benzo(a)pyrene	J	6.5	1.0	10	13	4.3
193-39-5	Indeno(1,2,3-cd)pyrene	U	13	1.0	10	13	2.4
53-70-3	Dibenzo(a,h)anthracene	U	13	1.0	10	13	2.3
191-24-2	Benzo(g,h,i)perylene	U	13	1.0	10	13	2.6
118-74-1	Hexachlorobenzene	U	13	1.0	10	13	2.3
87-68-3	Hexachlorobutadiene	U	13	1.0	10	13	3.0
77-47-4	Hexachlorocyclopentadiene	U	13	1.0	10	13	1.9
7297-45-2	2-Methylnaphthalene-D10		104%				
367-12-4	2,4-Dibromophenol		88%				
81103-79-9	Fluorene-d10		73%				
1718-51-1	Pyrene-D10		77%				

lew
3/2/09

KATAHDIN ANALYTICAL SERVICES
Report of Analytical Results

Client: CH2MHill
Project: TO-009 Lejeune
PO No:
Sample Date: 12/03/08
Received Date: 12/04/08
Extraction Date: 12/05/08
Analysis Date: 24-DEC-2008 15:59
Report Date: 01/05/2009
Matrix: SOIL
% Solids: 90.8

Lab ID: SB6962-16
Client ID: MR08-IS073-6-7-08D
SDG: TO9-11
Extracted by: AC
Extraction Method: SW846 3550
Analyst: JCG
Analysis Method: SW846 M8270C
Lab Prep Batch: WG58802
Units: ug/Kgdrywt

CAS#	Compound	Flags	Results	DF	PQL	Adj.PQL	Adj.MDL	
91-20-3	Naphthalene	~~U~~ UJ	11	1.0	10	11	2.9	CCH
91-57-6	2-Methylnaphthalene	U	11	1.0	10	11	2.4	
86-73-7	Fluorene	U	11	1.0	10	11	3.5	
85-01-8	Phenanthrene	U	11	1.0	10	11	2.0	
206-44-0	Fluoranthene	U	11	1.0	10	11	2.0	
129-00-0	Pyrene	U	11	1.0	10	11	2.3	
56-55-3	Benzo(a)anthracene	U	11	1.0	10	11	2.1	
205-99-2	Benzo(b)fluoranthene	U	11	1.0	10	11	2.6	
207-08-9	Benzo(k)fluoranthene	U	11	1.0	10	11	3.4	
50-32-8	Benzo(a)pyrene	U	11	1.0	10	11	3.6	
193-39-5	Indeno(1,2,3-cd)pyrene	U	11	1.0	10	11	2.1	
53-70-3	Dibenzo(a,h)anthracene	U	11	1.0	10	11	2.0	
191-24-2	Benzo(g,h,i)perylene	U	11	1.0	10	11	2.2	
118-74-1	Hexachlorobenzene	~~U~~ UJ	11	1.0	10	11	2.0	CCH
87-68-3	Hexachlorobutadiene	~~U~~ UJ	11	1.0	10	11	2.5	CCH
77-47-4	Hexachlorocyclopentadiene	U	11	1.0	10	11	1.6	
7297-45-2	2-Methylnaphthalene-D10		113%					
367-12-4	2,4-Dibromophenol		77%					
81103-79-9	Fluorene-d10		61%					
1718-51-1	Pyrene-D10		103%					

lew
3/2/09

9

KATAHDIN ANALYTICAL SERVICES
Report of Analytical Results

Client: CH2MHill
Project: TO-009 Lejeune
PO No:
Sample Date: 12/04/08
Received Date: 12/05/08
Extraction Date: 12/08/08
Analysis Date: 24-DEC-2008 21:37
Report Date: 01/05/2009
Matrix: SOIL
% Solids: 80.2

Lab ID: SB7002-2RA
Client ID: MR08-SS074-08D
SDG: TO9-11
Extracted by: CB
Extraction Method: SW846 3550
Analyst: JCG
Analysis Method: SW846 M8270C
Lab Prep Batch: WG58887
Units: ug/Kgdrywt

CAS#	Compound	Flags	Results	DF	PQL	Adj.PQL	Adj.MDL	
91-20-3	Naphthalene	~~U~~ UJ	12	1.0	10	12	3.2	CCH
91-57-6	2-Methylnaphthalene	U	12	1.0	10	12	2.7	
86-73-7	Fluorene	U	12	1.0	10	12	4.0	
85-01-8	Phenanthrene		14	1.0	10	12	2.2	
206-44-0	Fluoranthene		31	1.0	10	12	2.2	
129-00-0	Pyrene		30	1.0	10	12	2.6	
56-55-3	Benzo(a)anthracene		21	1.0	10	12	2.4	
205-99-2	Benzo(b)fluoranthene		39	1.0	10	12	3.0	
207-08-9	Benzo(k)fluoranthene		17	1.0	10	12	3.9	
50-32-8	Benzo(a)pyrene		19	1.0	10	12	4.1	
193-39-5	Indeno(1,2,3-cd)pyrene		14	1.0	10	12	2.4	
53-70-3	Dibenzo(a,h)anthracene	U	12	1.0	10	12	2.2	
191-24-2	Benzo(g,h,i)perylene	J	12	1.0	10	12	2.5	
118-74-1	Hexachlorobenzene	~~U~~ UJ	12	1.0	10	12	2.2	CCH
87-68-3	Hexachlorobutadiene	~~U~~ UJ	12	1.0	10	12	2.9	CCH
77-47-4	Hexachlorocyclopentadiene	U	12	1.0	10	12	1.9	
7297-45-2	2-Methylnaphthalene-D10		114%					
367-12-4	2,4-Dibromophenol		*157%					
81103-79-9	Fluorene-d10		92%					
1718-51-1	Pyrene-D10		160%					

lw
3/2/09

KATAHDIN ANALYTICAL SERVICES
Report of Analytical Results

Client: CH2MHill
Project: TO-009 Lejeune
PO No:
Sample Date: 12/04/08
Received Date: 12/05/08
Extraction Date: 12/08/08
Analysis Date: 20-DEC-2008 15:38
Report Date: 01/05/2009
Matrix: SOIL
% Solids: 94.0

Lab ID: SB7002-4
Client ID: MR08-IS074-7-8-08D
SDG: TO9-11
Extracted by: CB
Extraction Method: SW846 3550
Analyst: JCG
Analysis Method: SW846 M8270C
Lab Prep Batch: WG58887
Units: ug/Kgdrywt

CAS#	Compound	Flags	Results	DF	PQL	Adj.PQL	Adj.MDL	
91-20-3	Naphthalene	~~U~~ UJ	11	1.0	10	11	2.8	CCH
91-57-6	2-Methylnaphthalene	U	11	1.0	10	11	2.3	
86-73-7	Fluorene	U	11	1.0	10	11	3.4	
85-01-8	Phenanthrene	~~U~~ UJ	11	1.0	10	11	1.9	CCH
206-44-0	Fluoranthene	U	11	1.0	10	11	1.9	
129-00-0	Pyrene	U	11	1.0	10	11	2.2	
56-55-3	Benzo(a)anthracene	U	11	1.0	10	11	2.0	
205-99-2	Benzo(b)fluoranthene	U	11	1.0	10	11	2.6	
207-08-9	Benzo(k)fluoranthene	U	11	1.0	10	11	3.3	
50-32-8	Benzo(a)pyrene	U	11	1.0	10	11	3.5	
193-39-5	Indeno(1,2,3-cd)pyrene	U	11	1.0	10	11	2.0	
53-70-3	Dibenzo(a,h)anthracene	U	11	1.0	10	11	1.9	
191-24-2	Benzo(g,h,i)perylene	U	11	1.0	10	11	2.1	
118-74-1	Hexachlorobenzene	~~U~~ UJ	11	1.0	10	11	1.9	CCH
87-68-3	Hexachlorobutadiene	U	11	1.0	10	11	2.4	
77-47-4	Hexachlorocyclopentadiene	U	11	1.0	10	11	1.6	
7297-45-2	2-Methylnaphthalene-D10		48%					
367-12-4	2,4-Dibromophenol		84%					
81103-79-9	Fluorene-d10		62%					
1718-51-1	Pyrene-D10		118%					

MW
3/2/09

11

KATAHDIN ANALYTICAL SERVICES
Report of Analytical Results

Client: CH2MHill
Project: TO-009 Lejeune
PO No:
Sample Date: 12/04/08
Received Date: 12/05/08
Extraction Date: 12/08/08
Analysis Date: 22-DEC-2008 18:51
Report Date: 01/05/2009
Matrix: SOIL
% Solids: 80.1

Lab ID: SB7002-6
Client ID: MR08-SS075-08D
SDG: TO9-11
Extracted by: CB
Extraction Method: SW846 3550
Analyst: JCG
Analysis Method: SW846 M8270C
Lab Prep Batch: WG58887
Units: ug/Kgdrywt

CAS#	Compound	Flags	Results	DF	PQL	Adj.PQL	Adj.MDL	
91-20-3	Naphthalene	U	12	1.0	10	12	3.2	
91-57-6	2-Methylnaphthalene	U	12	1.0	10	12	2.7	
86-73-7	Fluorene	U	12	1.0	10	12	4.0	
85-01-8	Phenanthrene	J	3.9	1.0	10	12	2.2	
206-44-0	Fluoranthene	J	11	1.0	10	12	2.2	
129-00-0	Pyrene	J	10	1.0	10	12	2.6	
56-55-3	Benzo(a)anthracene	J	4.7	1.0	10	12	2.4	
205-99-2	Benzo(b)fluoranthene		19	1.0	10	12	3.0	
207-08-9	Benzo(k)fluoranthene	J	6.8	1.0	10	12	3.9	
50-32-8	Benzo(a)pyrene	J	7.5	1.0	10	12	4.1	
193-39-5	Indeno(1,2,3-cd)pyrene	J	5.8	1.0	10	12	2.4	
53-70-3	Dibenzo(a,h)anthracene	U	12	1.0	10	12	2.2	
191-24-2	Benzo(g,h,i)perylene	J	5.1	1.0	10	12	2.5	
118-74-1	Hexachlorobenzene	U	12	1.0	10	12	2.2	
87-68-3	Hexachlorobutadiene	U	12	1.0	10	12	2.9	
77-47-4	Hexachlorocyclopentadiene	~~U~~ UJ	12	1.0	10	12	1.9	CCH
7297-45-2	2-Methylnaphthalene-D10		88%					
367-12-4	2,4-Dibromophenol		97%					
81103-79-9	Fluorene-d10		62%					
1718-51-1	Pyrene-D10		100%					

Rev 3/2/09

KATAHDIN ANALYTICAL SERVICES
Report of Analytical Results

Client: CH2MHill
Project: TO-009 Lejeune
PO No:
Sample Date: 12/04/08
Received Date: 12/05/08
Extraction Date: 12/08/08
Analysis Date: 22-DEC-2008 16:01
Report Date: 01/05/2009
Matrix: SOIL
% Solids: 93.6

Lab ID: SB7002-8RA
Client ID: MR08-IS075-6-7-08D
SDG: TO9-11
Extracted by: CB
Extraction Method: SW846 3550
Analyst: JCG
Analysis Method: SW846 M8270C
Lab Prep Batch: WG58887
Units: ug/Kgdrywt

CAS#	Compound	Flags	Results	DF	PQL	Adj.PQL	Adj.MDL	
91-20-3	Naphthalene	U	11	1.0	10	11	2.8	
91-57-6	2-Methylnaphthalene	U	11	1.0	10	11	2.4	
86-73-7	Fluorene	U	11	1.0	10	11	3.4	
85-01-8	Phenanthrene	U	11	1.0	10	11	1.9	
206-44-0	Fluoranthene	U	11	1.0	10	11	1.9	
129-00-0	Pyrene	U	11	1.0	10	11	2.2	
56-55-3	Benzo(a)anthracene	U	11	1.0	10	11	2.0	
205-99-2	Benzo(b)fluoranthene	U	11	1.0	10	11	2.6	
207-08-9	Benzo(k)fluoranthene	U	11	1.0	10	11	3.3	
50-32-8	Benzo(a)pyrene	U	11	1.0	10	11	3.5	
193-39-5	Indeno(1,2,3-cd)pyrene	U	11	1.0	10	11	2.0	
53-70-3	Dibenzo(a,h)anthracene	U	11	1.0	10	11	1.9	
191-24-2	Benzo(g,h,i)perylene	U	11	1.0	10	11	2.1	
118-74-1	Hexachlorobenzene	U	11	1.0	10	11	1.9	
87-68-3	Hexachlorobutadiene	U	11	1.0	10	11	2.4	
77-47-4	Hexachlorocyclopentadiene	~~U~~ UJ	11	1.0	10	11	1.6	CCH
7297-45-2	2-Methylnaphthalene-D10		81%					
367-12-4	2,4-Dibromophenol		78%					
81103-79-9	Fluorene-d10		54%					
1718-51-1	Pyrene-D10		80%					

lw 3/2/09

13

KATAHDIN ANALYTICAL SERVICES
Report of Analytical Results

Client: CH2MHill
Project: TO-009 Lejeune
PO No:
Sample Date: 12/04/08
Received Date: 12/05/08
Extraction Date: 12/08/08
Analysis Date: 22-DEC-2008 22:22
Report Date: 01/05/2009
Matrix: SOIL
% Solids: 84.0

Lab ID: SB7002-10
Client ID: MR08-SS076-08D
SDG: TO9-11
Extracted by: CB
Extraction Method: SW846 3550
Analyst: JCG
Analysis Method: SW846 M8270C
Lab Prep Batch: WG58887
Units: ug/Kgdrywt

Use reanalysis

CAS#	Compound	Flags	Results	DF	PQL	Adj.PQL	Adj.MDL	
91-20-3	Naphthalene	~~U~~ UJ	12	1.0	10	12	3.1	CCH
91-57-6	2-Methylnaphthalene	U	12	1.0	10	12	2.6	
86-73-7	Fluorene	U	12	1.0	10	12	3.8	
85-01-8	Phenanthrene	J	6.4	1.0	10	12	2.1	
206-44-0	Fluoranthene	J	11	1.0	10	12	2.1	
129-00-0	Pyrene	U	12	1.0	10	12	2.5	
56-55-3	Benzo(a)anthracene	J	7.1	1.0	10	12	2.3	
205-99-2	Benzo(b)fluoranthene	J	19	1.0	10	12	2.8	ISL
207-08-9	Benzo(k)fluoranthene	J J	6.1	1.0	10	12	3.7	
50-32-8	Benzo(a)pyrene	U UJ	12	1.0	10	12	3.9	
193-39-5	Indeno(1,2,3-cd)pyrene	J J	6.8	1.0	10	12	2.3	
53-70-3	Dibenzo(a,h)anthracene	U UJ	12	1.0	10	12	2.1	
191-24-2	Benzo(g,h,i)perylene	U	12	1.0	10	12	2.4	
118-74-1	Hexachlorobenzene	U	12	1.0	10	12	2.1	
87-68-3	Hexachlorobutadiene	U	12	1.0	10	12	2.7	
77-47-4	Hexachlorocyclopentadiene	U	12	1.0	10	12	1.8	
7297-45-2	2-Methylnaphthalene-D10		93%					
367-12-4	2,4-Dibromophenol		103%					
81103-79-9	Fluorene-d10		65%					
1718-51-1	Pyrene-D10		135%					

R RE

lw 3/2/09

13RE

KATAHDIN ANALYTICAL SERVICES
Report of Analytical Results

Client: CH2MHill
Project: TO-009 Lejeune
PO No:
Sample Date: 12/04/08
Received Date: 12/05/08
Extraction Date: 12/08/08
Analysis Date: 24-DEC-2008 19:30
Report Date: 01/05/2009
Matrix: SOIL
% Solids: 84.0

Lab ID: SB7002-10RA
Client ID: MR08-SS076-08D
SDG: TO9-11
Extracted by: CB
Extraction Method: SW846 3550
Analyst: JCG
Analysis Method: SW846 M8270C
Lab Prep Batch: WG58887
Units: ug/Kgdrywt

CAS#	Compound	Flags	Results	DF	PQL	Adj.PQL	Adj.MDL
91-20-3	Naphthalene	~~U~~ UJ	12	1.0	10	12	3.1 CCH
91-57-6	2-Methylnaphthalene	U	12	1.0	10	12	2.6
86-73-7	Fluorene	U	12	1.0	10	12	3.8
85-01-8	Phenanthrene	~~J~~ J	6.1	1.0	10	12	2.1 ISH
206-44-0	Fluoranthene	J	13	1.0	10	12	2.1 ISH
129-00-0	Pyrene		12	1.0	10	12	2.5
56-55-3	Benzo(a)anthracene	J	5.7	1.0	10	12	2.3
205-99-2	Benzo(b)fluoranthene		18	1.0	10	12	2.8
207-08-9	Benzo(k)fluoranthene	J	6.8	1.0	10	12	3.7
50-32-8	Benzo(a)pyrene	J	6.4	1.0	10	12	3.9
193-39-5	Indeno(1,2,3-cd)pyrene	J	5.2	1.0	10	12	2.3
53-70-3	Dibenzo(a,h)anthracene	U	12	1.0	10	12	2.1
191-24-2	Benzo(g,h,i)perylene	J	4.5	1.0	10	12	2.4
118-74-1	Hexachlorobenzene	~~U~~ UJ	12	1.0	10	12	2.1 CCH
87-68-3	Hexachlorobutadiene	~~U~~ UJ	12	1.0	10	12	2.7 CCH
77-47-4	Hexachlorocyclopentadiene	U	12	1.0	10	12	1.8
7297-45-2	2-Methylnaphthalene-D10		85%				
367-12-4	2,4-Dibromophenol		99%				
81103-79-9	Fluorene-d10		65%				
1718-51-1	Pyrene-D10		112%				

fw 3/2/09

14

KATAHDIN ANALYTICAL SERVICES
Report of Analytical Results

Client: CH2MHill
Project: TO-009 Lejeune
PO No:
Sample Date: 12/04/08
Received Date: 12/05/08
Extraction Date: 12/08/08
Analysis Date: 22-DEC-2008 16:43
Report Date: 01/05/2009
Matrix: SOIL
% Solids: 88.7

Lab ID: SB7002-12RA
Client ID: MR08-IS076-6-7-08D
SDG: TO9-11
Extracted by: CB
Extraction Method: SW846 3550
Analyst: JCG
Analysis Method: SW846 M8270C
Lab Prep Batch: WG58887
Units: ug/Kgdrywt

CAS#	Compound	Flags	Results	DF	PQL	Adj.PQL	Adj.MDL
91-20-3	Naphthalene	U	11	1.0	10	11	2.9
91-57-6	2-Methylnaphthalene	U	11	1.0	10	11	2.5
86-73-7	Fluorene	U	11	1.0	10	11	3.6
85-01-8	Phenanthrene	U	11	1.0	10	11	2.0
206-44-0	Fluoranthene	U	11	1.0	10	11	2.0
129-00-0	Pyrene	U	11	1.0	10	11	2.4
56-55-3	Benzo(a)anthracene	U	11	1.0	10	11	2.1
205-99-2	Benzo(b)fluoranthene	U	11	1.0	10	11	2.7
207-08-9	Benzo(k)fluoranthene	U	11	1.0	10	11	3.5
50-32-8	Benzo(a)pyrene	U	11	1.0	10	11	3.7
193-39-5	Indeno(1,2,3-cd)pyrene	U	11	1.0	10	11	2.1
53-70-3	Dibenzo(a,h)anthracene	U	11	1.0	10	11	2.0
191-24-2	Benzo(g,h,i)perylene	U	11	1.0	10	11	2.2
118-74-1	Hexachlorobenzene	U	11	1.0	10	11	2.0
87-68-3	Hexachlorobutadiene	U	11	1.0	10	11	2.6
77-47-4	Hexachlorocyclopentadiene	~~U~~ UJ	11	1.0	10	11	1.7 CCH
7297-45-2	2-Methylnaphthalene-D10		64%				
367-12-4	2,4-Dibromophenol		84%				
81103-79-9	Fluorene-d10		54%				
1718-51-1	Pyrene-D10		87%				

lew
3/2/09

KATAHDIN ANALYTICAL SERVICES
Report of Analytical Results

Client: CH2MHill
Project: TO-009 Lejeune
PO No:
Sample Date: 12/04/08
Received Date: 12/05/08
Extraction Date: 12/08/08
Analysis Date: 24-DEC-2008 20:12
Report Date: 01/05/2009
Matrix: SOIL
% Solids: 84.9

Lab ID: SB7002-14RA
Client ID: MR08-SS077-08D
SDG: TO9-11
Extracted by: CB
Extraction Method: SW846 3550
Analyst: JCG
Analysis Method: SW846 M8270C
Lab Prep Batch: WG58887
Units: ug/Kgdrywt

CAS#	Compound	Flags	Results	DF	PQL	Adj.PQL	Adj.MDL	
91-20-3	Naphthalene	~~U~~ UJ	12	1.0	10	12	3.1	CCH
91-57-6	2-Methylnaphthalene	U	12	1.0	10	12	2.6	
86-73-7	Fluorene	U	12	1.0	10	12	3.8	
85-01-8	Phenanthrene		120	1.0	10	12	2.1	
206-44-0	Fluoranthene	~~E~~ 630	~~580~~	1.0	10	12	2.1	RDL
129-00-0	Pyrene	~~E~~ 460	~~480~~	1.0	10	12	2.5	R DL
56-55-3	Benzo(a)anthracene		130	1.0	10	12	2.2	
205-99-2	Benzo(b)fluoranthene	~~E~~ 410	~~420~~	1.0	10	12	2.8	R DL
207-08-9	Benzo(k)fluoranthene		160	1.0	10	12	3.6	
50-32-8	Benzo(a)pyrene		100	1.0	10	12	3.9	
193-39-5	Indeno(1,2,3-cd)pyrene		86	1.0	10	12	2.2	
53-70-3	Dibenzo(a,h)anthracene		34	1.0	10	12	2.1	
191-24-2	Benzo(g,h,i)perylene		60	1.0	10	12	2.4	
118-74-1	Hexachlorobenzene	~~U~~ UJ	12	1.0	10	12	2.1	CCH
87-68-3	Hexachlorobutadiene	~~U~~ UJ	12	1.0	10	12	2.7	CCH
77-47-4	Hexachlorocyclopentadiene	U	12	1.0	10	12	1.8	
7297-45-2	2-Methylnaphthalene-D10		80%					
367-12-4	2,4-Dibromophenol		102%					
81103-79-9	Fluorene-d10		68%					
1718-51-1	Pyrene-D10		125%					

lw
3/2/09

15DL

KATAHDIN ANALYTICAL SERVICES
Report of Analytical Results

Client: CH2MHill
Project: TO-009 Lejeune
PO No:
Sample Date: 12/04/08
Received Date: 12/05/08
Extraction Date: 12/08/08
Analysis Date: 31-DEC-2008 00:45
Report Date: 01/05/2009
Matrix: SOIL
% Solids: 84.9

Lab ID: SB7002-14DL
Client ID: MR08-SS077-08D
SDG: TO9-11
Extracted by: CB
Extraction Method: SW846 3550
Analyst: JCG
Analysis Method: SW846 M8270C
Lab Prep Batch: WG58887
Units: ug/Kgdrywt

use original

CAS#	Compound	Flags	Results	DF	PQL	Adj.PQL	Adj.MDL
91-20-3	Naphthalene	U	35	3.0	10	35	9.2
91-57-6	2-Methylnaphthalene	U	35	3.0	10	35	7.8
86-73-7	Fluorene	U	35	3.0	10	35	11
85-01-8	Phenanthrene		130	3.0	10	35	6.4
206-44-0	Fluoranthene		630	3.0	10	35	6.4
129-00-0	Pyrene		460	3.0	10	35	7.4
56-55-3	Benzo(a)anthracene		130	3.0	10	35	6.7
205-99-2	Benzo(b)fluoranthene		410	3.0	10	35	8.5
207-08-9	Benzo(k)fluoranthene		200	3.0	10	35	11
50-32-8	Benzo(a)pyrene	U	35	3.0	10	35	12
193-39-5	Indeno(1,2,3-cd)pyrene		75	3.0	10	35	6.7
53-70-3	Dibenzo(a,h)anthracene	U	35	3.0	10	35	6.4
191-24-2	Benzo(g,h,i)perylene		42	3.0	10	35	7.1
118-74-1	Hexachlorobenzene	U	35	3.0	10	35	6.4
87-68-3	Hexachlorobutadiene	U	35	3.0	10	35	8.1
77-47-4	Hexachlorocyclopentadiene	U	35	3.0	10	35	5.3
7297-45-2	2-Methylnaphthalene-D10		75%				
367-12-4	2,4-Dibromophenol		73%				
81103-79-9	Fluorene-d10		66%				
1718-51-1	Pyrene-D10		109%				

R DL

Page 01 of 01 R0469.D

RW 3/2/09

16

KATAHDIN ANALYTICAL SERVICES
Report of Analytical Results

Client: CH2MHill
Project: TO-009 Lejeune
PO No:
Sample Date: 12/04/08
Received Date: 12/05/08
Extraction Date: 12/08/08
Analysis Date: 22-DEC-2008 17:25
Report Date: 01/05/2009
Matrix: SOIL
% Solids: 88.2

Lab ID: SB7002-16RA
Client ID: MR08-IS077-6-7-08D
SDG: TO9-11
Extracted by: CB
Extraction Method: SW846 3550
Analyst: JCG
Analysis Method: SW846 M8270C
Lab Prep Batch: WG58887
Units: ug/Kgdrywt

CAS#	Compound	Flags	Results	DF	PQL	Adj.PQL	Adj.MDL
91-20-3	Naphthalene	U	11	1.0	10	11	2.9
91-57-6	2-Methylnaphthalene	U	11	1.0	10	11	2.5
86-73-7	Fluorene	U	11	1.0	10	11	3.6
85-01-8	Phenanthrene	U	11	1.0	10	11	2.0
206-44-0	Fluoranthene	U	11	1.0	10	11	2.0
129-00-0	Pyrene	U	11	1.0	10	11	2.4
56-55-3	Benzo(a)anthracene	U	11	1.0	10	11	2.2
205-99-2	Benzo(b)fluoranthene	U	11	1.0	10	11	2.7
207-08-9	Benzo(k)fluoranthene	U	11	1.0	10	11	3.5
50-32-8	Benzo(a)pyrene	U	11	1.0	10	11	3.7
193-39-5	Indeno(1,2,3-cd)pyrene	U	11	1.0	10	11	2.2
53-70-3	Dibenzo(a,h)anthracene	U	11	1.0	10	11	2.0
191-24-2	Benzo(g,h,i)perylene	U	11	1.0	10	11	2.3
118-74-1	Hexachlorobenzene	U	11	1.0	10	11	2.0
87-68-3	Hexachlorobutadiene	U	11	1.0	10	11	2.6
77-47-4	Hexachlorocyclopentadiene	~~U~~ UJ	11	1.0	10	11	1.7 CCH
7297-45-2	2-Methylnaphthalene-D10		68%				
367-12-4	2,4-Dibromophenol		85%				
81103-79-9	Fluorene-d10		62%				
1718-51-1	Pyrene-D10		99%				

QW 3/2/09

17

KATAHDIN ANALYTICAL SERVICES
Report of Analytical Results

Client: CH2MHill
Project: TO-009 Lejeune
PO No:
Sample Date: 12/04/08
Received Date: 12/05/08
Extraction Date: 12/08/08
Analysis Date: 22-DEC-2008 18:08
Report Date: 01/05/2009
Matrix: SOIL
% Solids: 84.4

Lab ID: SB7002-18
Client ID: MR08-SS078-08D
SDG: TO9-11
Extracted by: CB
Extraction Method: SW846 3550
Analyst: JCG
Analysis Method: SW846 M8270C
Lab Prep Batch: WG58887
Units: ug/Kgdrywt

CAS#	Compound	Flags	Results	DF	PQL	Adj.PQL	Adj.MDL
91-20-3	Naphthalene	U	12	1.0	10	12	3.1
91-57-6	2-Methylnaphthalene	U	12	1.0	10	12	2.6
86-73-7	Fluorene	U	12	1.0	10	12	3.8
85-01-8	Phenanthrene	J	11	1.0	10	12	2.1
206-44-0	Fluoranthene		23	1.0	10	12	2.1
129-00-0	Pyrene		18	1.0	10	12	2.5
56-55-3	Benzo(a)anthracene	J	9.3	1.0	10	12	2.2
205-99-2	Benzo(b)fluoranthene		25	1.0	10	12	2.8
207-08-9	Benzo(k)fluoranthene	J	8.7	1.0	10	12	3.7
50-32-8	Benzo(a)pyrene	J	9.6	1.0	10	12	3.9
193-39-5	Indeno(1,2,3-cd)pyrene	J	5.7	1.0	10	12	2.2
53-70-3	Dibenzo(a,h)anthracene	U	12	1.0	10	12	2.1
191-24-2	Benzo(g,h,i)perylene	J	5.0	1.0	10	12	2.4
118-74-1	Hexachlorobenzene	U	12	1.0	10	12	2.1
87-68-3	Hexachlorobutadiene	U	12	1.0	10	12	2.7
77-47-4	Hexachlorocyclopentadiene	~~U~~ UJ	12	1.0	10	12	1.8 CCH
7297-45-2	2-Methylnaphthalene-D10		76%				
367-12-4	2,4-Dibromophenol		94%				
81103-79-9	Fluorene-d10		70%				
1718-51-1	Pyrene-D10		97%				

MW 3/2/09

KATAHDIN ANALYTICAL SERVICES
Report of Analytical Results

Client: CH2MHill
Project: TO-009 Lejeune
PO No:
Sample Date: 12/04/08
Received Date: 12/05/08
Extraction Date: 12/08/08
Analysis Date: 23-DEC-2008 16:44
Report Date: 01/05/2009
Matrix: SOIL
% Solids: 87.3

Lab ID: SB7002-20
Client ID: MR08-IS078-6-7-08D
SDG: TO9-11
Extracted by: CB
Extraction Method: SW846 3550
Analyst: JCG
Analysis Method: SW846 M8270C
Lab Prep Batch: WG58887
Units: ug/Kgdrywt

CAS#	Compound	Flags	Results	DF	PQL	Adj.PQL	Adj.MDL	
91-20-3	Naphthalene	U	11	1.0	10	11	3.0	
91-57-6	2-Methylnaphthalene	U	11	1.0	10	11	2.5	
86-73-7	Fluorene	U	11	1.0	10	11	3.7	
85-01-8	Phenanthrene	U	11	1.0	10	11	2.1	
206-44-0	Fluoranthene	U	11	1.0	10	11	2.1	
129-00-0	Pyrene	~~U~~ UJ	11	1.0	10	11	2.4	CCH
56-55-3	Benzo(a)anthracene	U	11	1.0	10	11	2.2	
205-99-2	Benzo(b)fluoranthene	U	11	1.0	10	11	2.7	
207-08-9	Benzo(k)fluoranthene	U	11	1.0	10	11	3.6	
50-32-8	Benzo(a)pyrene	U	11	1.0	10	11	3.8	
193-39-5	Indeno(1,2,3-cd)pyrene	U	11	1.0	10	11	2.2	
53-70-3	Dibenzo(a,h)anthracene	U	11	1.0	10	11	2.1	
191-24-2	Benzo(g,h,i)perylene	U	11	1.0	10	11	2.3	
118-74-1	Hexachlorobenzene	U	11	1.0	10	11	2.1	
87-68-3	Hexachlorobutadiene	U	11	1.0	10	11	2.6	
77-47-4	Hexachlorocyclopentadiene	~~U~~ UJ	11	1.0	10	11	1.7	CCH
7297-45-2	2-Methylnaphthalene-D10		48%					
367-12-4	2,4-Dibromophenol		85%					
81103-79-9	Fluorene-d10		55%					
1718-51-1	Pyrene-D10		98%					

lew
3/2/09

KATAHDIN ANALYTICAL SERVICES
Report of Analytical Results

Client: CH2MHill
Project: TO-009 Lejeune
PO No:
Sample Date: 12/04/08
Received Date: 12/05/08
Extraction Date: 12/08/08
Analysis Date: 24-DEC-2008 20:55
Report Date: 01/05/2009
Matrix: SOIL
% Solids: 79.9

Lab ID: SB7002-22RA
Client ID: MR08-SS079-08D
SDG: TO9-11
Extracted by: CB
Extraction Method: SW846 3550
Analyst: JCG
Analysis Method: SW846 M8270C
Lab Prep Batch: WG58887
Units: ug/Kgdrywt

CAS#	Compound	Flags	Results	DF	PQL	Adj.PQL	Adj.MDL	
91-20-3	Naphthalene	~~U~~ UJ	12	1.0	10	12	3.2	CCH
91-57-6	2-Methylnaphthalene	U	12	1.0	10	12	2.8	
86-73-7	Fluorene	U	12	1.0	10	12	4.0	
85-01-8	Phenanthrene	J	4.4	1.0	10	12	2.2	
206-44-0	Fluoranthene	J	10	1.0	10	12	2.2	
129-00-0	Pyrene	J	8.8	1.0	10	12	2.6	
56-55-3	Benzo(a)anthracene	J	5.6	1.0	10	12	2.4	
205-99-2	Benzo(b)fluoranthene		19	1.0	10	12	3.0	
207-08-9	Benzo(k)fluoranthene	U	12	1.0	10	12	3.9	
50-32-8	Benzo(a)pyrene	U	12	1.0	10	12	4.1	
193-39-5	Indeno(1,2,3-cd)pyrene	U	12	1.0	10	12	2.4	
53-70-3	Dibenzo(a,h)anthracene	U	12	1.0	10	12	2.2	
191-24-2	Benzo(g,h,i)perylene	U	12	1.0	10	12	2.5	
118-74-1	Hexachlorobenzene	~~U~~ UJ	12	1.0	10	12	2.2	CCH
87-68-3	Hexachlorobutadiene	~~U~~ UJ	12	1.0	10	12	2.9	CCH
77-47-4	Hexachlorocyclopentadiene	U	12	1.0	10	12	1.9	
7297-45-2	2-Methylnaphthalene-D10		79%					
367-12-4	2,4-Dibromophenol		93%					
81103-79-9	Fluorene-d10		62%					
1718-51-1	Pyrene-D10		97%					

AW
3/2/09

KATAHDIN ANALYTICAL SERVICES
Report of Analytical Results

Client: CH2MHill
Project: TO-009 Lejeune
PO No:
Sample Date: 12/04/08
Received Date: 12/05/08
Extraction Date: 12/08/08
Analysis Date: 23-DEC-2008 18:08
Report Date: 01/05/2009
Matrix: SOIL
% Solids: 79.3

Lab ID: SB7002-24
Client ID: MR08-SS079D-08D
SDG: TO9-11
Extracted by: CB
Extraction Method: SW846 3550
Analyst: JCG
Analysis Method: SW846 M8270C
Lab Prep Batch: WG58887
Units: ug/Kgdrywt

CAS#	Compound	Flags	Results	DF	PQL	Adj.PQL	Adj.MDL	
91-20-3	Naphthalene	U	13	1.0	10	13	3.3	
91-57-6	2-Methylnaphthalene	U	13	1.0	10	13	2.8	
86-73-7	Fluorene	U	13	1.0	10	13	4.0	
85-01-8	Phenanthrene	U	13	1.0	10	13	2.3	
206-44-0	Fluoranthene	U	13	1.0	10	13	2.3	
129-00-0	Pyrene	~~U~~ J	7.6	1.0	10	13	2.6	CCH
56-55-3	Benzo(a)anthracene	J	4.2	1.0	10	13	2.4	
205-99-2	Benzo(b)fluoranthene	U	13	1.0	10	13	3.0	
207-08-9	Benzo(k)fluoranthene	U	13	1.0	10	13	3.9	
50-32-8	Benzo(a)pyrene	U	13	1.0	10	13	4.2	
193-39-5	Indeno(1,2,3-cd)pyrene	U	13	1.0	10	13	2.4	
53-70-3	Dibenzo(a,h)anthracene	U	13	1.0	10	13	2.3	
191-24-2	Benzo(g,h,i)perylene	J	3.4	1.0	10	13	2.5	
118-74-1	Hexachlorobenzene	U	13	1.0	10	13	2.3	
87-68-3	Hexachlorobutadiene	U	13	1.0	10	13	2.9	
77-47-4	Hexachlorocyclopentadiene	~~U~~ UJ	13	1.0	10	13	1.9	CCH
7297-45-2	2-Methylnaphthalene-D10		74%					
367-12-4	2,4-Dibromophenol		94%					
81103-79-9	Fluorene-d10		70%					
1718-51-1	Pyrene-D10		105%					

MW
3/2/09

ENVIRONMENTAL
Data Services, Inc.

SEMIVOLATILE ORGANIC COMPOUNDS

USEPA Region IV - Level IV Review

Site: MCB Camp Lejeune, TO-09 SDG #: TO9-11

Client: CH2M HILL, Inc., Virginia Beach, Virginia Date: March 2, 2009

Laboratory: Katahdin Analytical Services, Scarborough, Maine Reviewer: Nancy Weaver

EDS ID	Client Sample ID	Laboratory Sample ID	Matrix
1	MR08-IS068-8-9-08D	SB6962-1	Soil
1MS	MR08-IS068-8-9-08DMS	SB6962-2MS	Soil
1MSD	MR08-IS068-8-9-08DMSD	SB6962-2MSD	Soil
2	MR08-IS070-8-9-08D	SB6962-3	Soil
3	MR08-SS071-08D	SB6962-5	Soil
4	MR08-IS071-6-7-08D	SB6962-7	Soil
5	MR08-SS072-08D	SB6962-9	Soil
6	MR08-IS072-6-7-08D	SB6962-11	Soil
7	MR08-SS073-08D	SB6962-13	Soil
8	MR08-SS074-08D	SB7002-1	Soil
9	MR08-IS074-7-8-08D	SB7002-3	Soil
10	MR08-SS075-08D	SB7002-5	Soil
11	MR08-IS075-6-7-08D	SB7002-7	Soil
12	MR08-SS076-08D	SB7002-9	Soil
13	MR08-IS076-6-7-08D	SB7002-11	Soil
14	MR08-SS077-08D	SB7002-13	Soil
15	MR08-IS077-6-7-08D	SB7002-15	Soil
16	MR08-SS078-08D	SB7002-17	Soil
17	MR08-IS078-6-7-08D	SB7002-19	Soil
18	MR08-SS079-08D	SB7002-21	Soil
19	MR08-SS079D-08D	SB7002-23	Soil

The USEPA "Contract Laboratory Program National Functional Guidelines for Organic Data Review," October 1999, and professional judgement were used in evaluating the data in this summary report.

Holding Times - All samples were extracted within 14 days for soil samples and analyzed within 40 days for all samples.

GC/MS Tuning - All of the DFTPP tunes in the initial and continuing calibrations met the percent relative abundance criteria.

Initial Calibration - The initial calibrations exhibited acceptable %RSD and mean RRF values.

Continuing Calibration - The continuing calibrations exhibited acceptable %D and RRF values except the following.

CCAL Date	Compound	%D/RRF	Qualifier	Affected Samples
12/18/08 (0748)	Benzaldehyde	30.69%	J/UJ	8-13, 15, 17
	3,3'-Dichlorobenzidine	36.95%	J/UJ	8-13, 15, 17
12/18/08 (1802)	Benzaldehyde	33.35%	J/UJ	14, 16
	2,4-Dinitrophenol	25.34%	J/UJ	14, 16
	3,3'-Dichlorobenzidine	31.01%	J/UJ	14, 16
12/19/08	Benzaldehyde	60.96%	J/UJ	1-7
	Pentachlorophenol	25.11%	J/UJ	1-7
12/30/08	Benzaldehyde	90.67%	J/UJ	18, 19
	4-Chloroaniline	29.90%	J/UJ	18, 19
	Caprolactam	26.63%	J/UJ	18, 19
	3-Nitroaniline	62.35%	J/UJ	18, 19
	4-Nitroaniline	53.78%	J/UJ	18, 19
	Carbazole	50.57%	J/UJ	18, 19
	3,3'-Dichlorobenzidine	37.99%	J/UJ	18, 19

Surrogates - All samples exhibited acceptable surrogate recoveries except the following.

Sample ID	Surrogate	%R	Qualifier
4	S5-2,4,6-Tribromophenol	26%	None for 1 out

MS/MSD - The MS/MSD sample exhibited acceptable %R and RPD values except the following.

MS/MSD Sample ID	Compound	MS/MSD %R/RPD	Qualifier
1	4-Chloroaniline	8%/Ok/56	J/R
	Caprolactam	16%/Ok/73	J/UJ
	2-Nitroaniline	38%/Ok/89	J/UJ
	3-Nitroaniline	0%/Ok/200	J/R
	4-Nitroaniline	0%/Ok/200	J/R
	4,6-Dinitro-2-methylphenol	0%/Ok/52	J/R
	n-Nitrosodiphenylamine	16%/Ok/130	J/UJ
	Atrazine	52%/Ok/Ok	J/UJ
	3,3'-Dichlorobenzidine	0%/Ok/200	J/R

Laboratory Control Sample - The LCS samples exhibited acceptable %R values except the following.

LCS ID	Compound	%R	Qualifier	Affected Samples
WG58992-LCS	Carbazole	116%	None	All ND

Internal Standard (IS) Area Performance - All internal standards met response and retention time (RT) criteria.

Method Blank - The method blanks were free of contamination.

Field, Equipment Blank - Field QC results are summarized below.

Blank ID	Compound	Conc. ug/L	Action Level ug/L	Qualifier	Affected Samples
MR08-EB01120308-SS	None - ND	-	-	-	-
MR08-EB01120308-IS	None - ND	-	-	-	-
MR08-EB01120408-SS	None - ND	-	-	-	-
MR08-EB01120408-IS	None - ND	-	-	-	-
MR08-FB01120608	None - ND	-	-	-	-

Field Duplicates - Field duplicate results are summarized below.

Compound	MR08-SS079-08D ug/kg	MR08-SS079D-08D ug/kg	RPD	Qualifier
None	ND	ND	-	-

Tentatively Identified Compounds (TICs) - TICs were not reported.

Compound Quantitation - No discrepancies were identified.

KATAHDIN ANALYTICAL SERVICES
Report of Analytical Results

Client: CH2MHill
Project: TO-009 Lejeune
PO No:
Sample Date: 12/03/08
Received Date: 12/04/08
Extraction Date: 12/05/08
Analysis Date: 19-DEC-2008 20:23
Report Date: 12/30/2008
Matrix: SOIL
% Solids: 85.9

Lab ID: SB6962-1
Client ID: IS068-8-9-08D
SDG: TO9-11
Extracted by: AC
Extraction Method: SW846 3550
Analyst: JCG
Analysis Method: SW846 8270C
Lab Prep Batch: WG58801
Units: ug/Kgdrywt

CAS#	Compound	Flags	Results	DF	PQL	Adj.PQL	Adj.MDL	
100-52-7	Benzaldehyde	~~U~~ UJ	580	1.0	500	580	140	CCH
108-95-2	Phenol	U	580	1.0	500	580	180	
111-44-4	Bis(2-Chloroethyl)ether	U	380	1.0	330	380	94	
95-57-8	2-Chlorophenol	U	580	1.0	500	580	190	
95-48-7	2-Methylphenol	U	700	1.0	600	700	230	
108-60-1	2,2'-Oxybis(1-chloropropane)	U	380	1.0	330	380	100	
98-86-2	Acetophenone	U	700	1.0	600	700	210	
621-64-7	N-Nitroso-di-n-propylamine	U	380	1.0	330	380	96	
65794-96-9	3&4-Methylphenol	U	700	1.0	600	700	220	
67-72-1	Hexachloroethane	U	380	1.0	330	380	110	
98-95-3	Nitrobenzene	U	380	1.0	330	380	100	
78-59-1	Isophorone	U	380	1.0	330	380	87	
88-75-5	2-Nitrophenol	U	700	1.0	600	700	190	
105-67-9	2,4-Dimethylphenol	U	580	1.0	500	580	190	
111-91-1	Bis(2-Chloroethoxy)methane	U	380	1.0	330	380	110	
120-83-2	2,4-Dichlorophenol	U	580	1.0	500	580	170	
106-47-8	4-Chloroaniline	~~U~~ R	580	1.0	500	580	140	MSL
105-60-2	Caprolactam	~~U~~ UJ	580	1.0	500	580	170	MSL
59-50-7	4-Chloro-3-Methylphenol	U	580	1.0	500	580	190	
88-06-2	2,4,6-Trichlorophenol	U	580	1.0	500	580	180	
95-95-4	2,4,5-Trichlorophenol	U	580	1.0	500	580	180	
91-58-7	2-Chloronaphthalene	U	380	1.0	330	380	100	
92-52-4	1,1'-Biphenyl	U	380	1.0	330	380	85	
88-74-4	2-Nitroaniline	~~U~~ UJ	580	1.0	500	580	87	MSL
131-11-3	Dimethyl Phthalate	U	380	1.0	330	380	91	
606-20-2	2,6-Dinitrotoluene	U	380	1.0	330	380	92	
208-96-8	Acenaphthylene	U	380	1.0	330	380	81	
99-09-2	3-Nitroaniline	~~U~~ R	580	1.0	500	580	110	MSL
83-32-9	Acenaphthene	U	380	1.0	330	380	76	
51-28-5	2,4-Dinitrophenol	U	1400	1.0	1200	1400	440	
132-64-9	Dibenzofuran	U	380	1.0	330	380	92	
100-02-7	4-Nitrophenol	U	1400	1.0	1200	1400	360	
121-14-2	2,4-Dinitrotoluene	U	380	1.0	330	380	99	
84-66-2	Diethylphthalate	U	380	1.0	330	380	93	
7005-72-3	4-Chlorophenyl-phenylether	U	380	1.0	330	380	91	
100-01-6	4-Nitroaniline	~~U~~ R	580	1.0	500	580	160	MSL
534-52-1	4,6-Dinitro-2-Methylphenol	~~U~~ R	1400	1.0	1200	1400	390	MSL
86-30-6	N-Nitrosodiphenylamine	~~U~~ UJ	770	1.0	660	770	250	MSL
101-55-3	4-Bromophenyl-phenylether	U	380	1.0	330	380	99	
1912-24-9	Atrazine	~~U~~ UJ	380	1.0	330	380	100	MSL
87-86-5	Pentachlorophenol	~~U~~ UJ	950	1.0	820	950	280	CCH
120-12-7	Anthracene	U	380	1.0	330	380	98	
86-74-8	Carbazole	U	580	1.0	500	580	130	

lw 3/2/09

KATAHDIN ANALYTICAL SERVICES
Report of Analytical Results

Client: CH2MHill
Project: TO-009 Lejeune
PO No:
Sample Date: 12/03/08
Received Date: 12/04/08
Extraction Date: 12/05/08
Analysis Date: 19-DEC-2008 20:23
Report Date: 12/30/2008
Matrix: SOIL
% Solids: 85.9

Lab ID: SB6962-1
Client ID: IS068-8-9-08D
SDG: TO9-11
Extracted by: AC
Extraction Method: SW846 3550
Analyst: JCG
Analysis Method: SW846 8270C
Lab Prep Batch: WG58801
Units: ug/Kgdrywt

CAS#	Compound	Flags	Results	DF	PQL	Adj.PQL	Adj.MDL
84-74-2	Di-n-butylphthalate	U	380	1.0	330	380	120
85-68-7	Butylbenzylphthalate	U	380	1.0	330	380	110
91-94-1	3,3'-Dichlorobenzidine	~~U~~ R	580	1.0	500	580	130 MSL
218-01-9	Chrysene	U	380	1.0	330	380	110
117-81-7	bis(2-Ethylhexyl)phthalate	U	380	1.0	330	380	110
117-84-0	Di-n-octylphthalate	U	380	1.0	330	380	240
367-12-4	2-Fluorophenol		71%				
13127-88-3	Phenol-D6		76%				
4165-60-0	Nitrobenzene-D5		82%				
321-60-8	2-Fluorobiphenyl		82%				
118-79-6	2,4,6-Tribromophenol		69%				
1718-51-0	Terphenyl-D14		97%				

LW
3/2/09

2

KATAHDIN ANALYTICAL SERVICES
Report of Analytical Results

Client: CH2MHill
Project: TO-009 Lejeune
PO No:
Sample Date: 12/03/08
Received Date: 12/04/08
Extraction Date: 12/11/08
Analysis Date: 19-DEC-2008 21:05
Report Date: 12/30/2008
Matrix: SOIL
% Solids: 84.2

Lab ID: SB6962-3RE
Client ID: MR08-IS070-8-9-08D
SDG: TO9-11
Extracted by: CB
Extraction Method: SW846 3550
Analyst: JCG
Analysis Method: SW846 8270C
Lab Prep Batch: WG58992
Units: ug/Kgdrywt

CAS#	Compound	Flags	Results	DF	PQL	Adj.PQL	Adj.MDL	
100-52-7	Benzaldehyde	~~U~~ UJ	590	1.0	500	590	140	CCH
108-95-2	Phenol	U	590	1.0	500	590	180	
111-44-4	Bis(2-Chloroethyl)ether	U	390	1.0	330	390	96	
95-57-8	2-Chlorophenol	U	590	1.0	500	590	190	
95-48-7	2-Methylphenol	U	710	1.0	600	710	240	
108-60-1	2,2'-Oxybis(1-chloropropane)	U	390	1.0	330	390	100	
98-86-2	Acetophenone	U	710	1.0	600	710	210	
621-64-7	N-Nitroso-di-n-propylamine	U	390	1.0	330	390	99	
65794-96-9	3&4-Methylphenol	U	710	1.0	600	710	220	
67-72-1	Hexachloroethane	U	390	1.0	330	390	110	
98-95-3	Nitrobenzene	U	390	1.0	330	390	110	
78-59-1	Isophorone	U	390	1.0	330	390	89	
88-75-5	2-Nitrophenol	U	710	1.0	600	710	200	
105-67-9	2,4-Dimethylphenol	U	590	1.0	500	590	200	
111-91-1	Bis(2-Chloroethoxy)methane	U	390	1.0	330	390	110	
120-83-2	2,4-Dichlorophenol	U	590	1.0	500	590	180	
106-47-8	4-Chloroaniline	U	590	1.0	500	590	140	
105-60-2	Caprolactam	U	590	1.0	500	590	170	
59-50-7	4-Chloro-3-Methylphenol	U	590	1.0	500	590	200	
88-06-2	2,4,6-Trichlorophenol	U	590	1.0	500	590	180	
95-95-4	2,4,5-Trichlorophenol	U	590	1.0	500	590	180	
91-58-7	2-Chloronaphthalene	U	390	1.0	330	390	100	
92-52-4	1,1'-Biphenyl	U	390	1.0	330	390	87	
88-74-4	2-Nitroaniline	U	590	1.0	500	590	89	
131-11-3	Dimethyl Phthalate	U	390	1.0	330	390	93	
606-20-2	2,6-Dinitrotoluene	U	390	1.0	330	390	94	
208-96-8	Acenaphthylene	U	390	1.0	330	390	83	
99-09-2	3-Nitroaniline	U	590	1.0	500	590	110	
83-32-9	Acenaphthene	U	390	1.0	330	390	77	
51-28-5	2,4-Dinitrophenol	U	1400	1.0	1200	1400	450	
132-64-9	Dibenzofuran	U	390	1.0	330	390	94	
100-02-7	4-Nitrophenol	U	1400	1.0	1200	1400	370	
121-14-2	2,4-Dinitrotoluene	U	390	1.0	330	390	100	
84-66-2	Diethylphthalate	U	390	1.0	330	390	95	
7005-72-3	4-Chlorophenyl-phenylether	U	390	1.0	330	390	93	
100-01-6	4-Nitroaniline	U	590	1.0	500	590	160	
534-52-1	4,6-Dinitro-2-Methylphenol	U	1400	1.0	1200	1400	400	
86-30-6	N-Nitrosodiphenylamine	U	780	1.0	660	780	260	
101-55-3	4-Bromophenyl-phenylether	U	390	1.0	330	390	100	
1912-24-9	Atrazine	U	390	1.0	330	390	110	
87-86-5	Pentachlorophenol	~~U~~ UJ	970	1.0	820	970	280	CCH
120-12-7	Anthracene	U	390	1.0	330	390	100	
86-74-8	Carbazole	U	590	1.0	500	590	130	

lw
2/6/09

2

KATAHDIN ANALYTICAL SERVICES
Report of Analytical Results

Client: CH2MHill
Project: TO-009 Lejeune
PO No:
Sample Date: 12/03/08
Received Date: 12/04/08
Extraction Date: 12/11/08
Analysis Date: 19-DEC-2008 21:05
Report Date: 12/30/2008
Matrix: SOIL
% Solids: 84.2

Lab ID: SB6962-3RE
Client ID: MR08-IS070-8-9-08D
SDG: TO9-11
Extracted by: CB
Extraction Method: SW846 3550
Analyst: JCG
Analysis Method: SW846 8270C
Lab Prep Batch: WG58992
Units: ug/Kgdrywt

CAS#	Compound	Flags	Results	DF	PQL	Adj.PQL	Adj.MDL
84-74-2	Di-n-butylphthalate	U	390	1.0	330	390	120
85-68-7	Butylbenzylphthalate	U	390	1.0	330	390	110
91-94-1	3,3'-Dichlorobenzidine	U	590	1.0	500	590	140
218-01-9	Chrysene	U	390	1.0	330	390	110
117-81-7	bis(2-Ethylhexyl)phthalate	U	390	1.0	330	390	120
117-84-0	Di-n-octylphthalate	U	390	1.0	330	390	250
367-12-4	2-Fluorophenol		63%				
13127-88-3	Phenol-D6		67%				
4165-60-0	Nitrobenzene-D5		70%				
321-60-8	2-Fluorobiphenyl		73%				
118-79-6	2,4,6-Tribromophenol		76%				
1718-51-0	Terphenyl-D14		95%				

AW
3/2/09

3

KATAHDIN ANALYTICAL SERVICES
Report of Analytical Results

Client: CH2MHill
Project: TO-009 Lejeune
PO No:
Sample Date: 12/03/08
Received Date: 12/04/08
Extraction Date: 12/05/08
Analysis Date: 19-DEC-2008 21:47
Report Date: 12/30/2008
Matrix: SOIL
% Solids: 80.2

Lab ID: SB6962-5
Client ID: MR08-SS071-08D
SDG: TO9-11
Extracted by: AC
Extraction Method: SW846 3550
Analyst: JCG
Analysis Method: SW846 8270C
Lab Prep Batch: WG58801
Units: ug/Kgdrywt

CAS#	Compound	Flags	Results	DF	PQL	Adj.PQL	Adj.MDL	
100-52-7	Benzaldehyde	~~U~~ UJ	620	1.0	500	620	150	CCH
108-95-2	Phenol	U	620	1.0	500	620	190	
111-44-4	Bis(2-Chloroethyl)ether	U	410	1.0	330	410	100	
95-57-8	2-Chlorophenol	U	620	1.0	500	620	200	
95-48-7	2-Methylphenol	U	750	1.0	600	750	250	
108-60-1	2,2'-Oxybis(1-chloropropane)	U	410	1.0	330	410	110	
98-86-2	Acetophenone	U	750	1.0	600	750	220	
621-64-7	N-Nitroso-di-n-propylamine	U	410	1.0	330	410	100	
65794-96-9	3&4-Methylphenol	U	750	1.0	600	750	230	
67-72-1	Hexachloroethane	U	410	1.0	330	410	120	
98-95-3	Nitrobenzene	U	410	1.0	330	410	110	
78-59-1	Isophorone	U	410	1.0	330	410	93	
88-75-5	2-Nitrophenol	U	750	1.0	600	750	210	
105-67-9	2,4-Dimethylphenol	U	620	1.0	500	620	200	
111-91-1	Bis(2-Chloroethoxy)methane	U	410	1.0	330	410	120	
120-83-2	2,4-Dichlorophenol	U	620	1.0	500	620	190	
106-47-8	4-Chloroaniline	U	620	1.0	500	620	150	
105-60-2	Caprolactam	U	620	1.0	500	620	180	
59-50-7	4-Chloro-3-Methylphenol	U	620	1.0	500	620	210	
88-06-2	2,4,6-Trichlorophenol	U	620	1.0	500	620	190	
95-95-4	2,4,5-Trichlorophenol	U	620	1.0	500	620	190	
91-58-7	2-Chloronaphthalene	U	410	1.0	330	410	110	
92-52-4	1,1'-Biphenyl	U	410	1.0	330	410	91	
88-74-4	2-Nitroaniline	U	620	1.0	500	620	93	
131-11-3	Dimethyl Phthalate	U	410	1.0	330	410	97	
606-20-2	2,6-Dinitrotoluene	U	410	1.0	330	410	98	
208-96-8	Acenaphthylene	U	410	1.0	330	410	87	
99-09-2	3-Nitroaniline	U	620	1.0	500	620	120	
83-32-9	Acenaphthene	U	410	1.0	330	410	81	
51-28-5	2,4-Dinitrophenol	U	1500	1.0	1200	1500	470	
132-64-9	Dibenzofuran	U	410	1.0	330	410	98	
100-02-7	4-Nitrophenol	U	1500	1.0	1200	1500	380	
121-14-2	2,4-Dinitrotoluene	U	410	1.0	330	410	100	
84-66-2	Diethylphthalate	U	410	1.0	330	410	100	
7005-72-3	4-Chlorophenyl-phenylether	U	410	1.0	330	410	97	
100-01-6	4-Nitroaniline	U	620	1.0	500	620	170	
534-52-1	4,6-Dinitro-2-Methylphenol	U	1500	1.0	1200	1500	420	
86-30-6	N-Nitrosodiphenylamine	U	820	1.0	660	820	270	
101-55-3	4-Bromophenyl-phenylether	U	410	1.0	330	410	100	
1912-24-9	Atrazine	U	410	1.0	330	410	110	
87-86-5	Pentachlorophenol	~~U~~ UJ	1000	1.0	820	1000	300	CCH
120-12-7	Anthracene	U	410	1.0	330	410	100	
86-74-8	Carbazole	U	620	1.0	500	620	140	

JW 3/2/09

KATAHDIN ANALYTICAL SERVICES
Report of Analytical Results

Client: CH2MHill
Project: TO-009 Lejeune
PO No:
Sample Date: 12/03/08
Received Date: 12/04/08
Extraction Date: 12/05/08
Analysis Date: 19-DEC-2008 21:47
Report Date: 12/30/2008
Matrix: SOIL
% Solids: 80.2

Lab ID: SB6962-5
Client ID: MR08-SS071-08D
SDG: TO9-11
Extracted by: AC
Extraction Method: SW846 3550
Analyst: JCG
Analysis Method: SW846 8270C
Lab Prep Batch: WG58801
Units: ug/Kgdrywt

CAS#	Compound	Flags	Results	DF	PQL	Adj.PQL	Adj.MDL
84-74-2	Di-n-butylphthalate	U	410	1.0	330	410	120
85-68-7	Butylbenzylphthalate	U	410	1.0	330	410	120
91-94-1	3,3'-Dichlorobenzidine	U	620	1.0	500	620	140
218-01-9	Chrysene	U	410	1.0	330	410	120
117-81-7	bis(2-Ethylhexyl)phthalate	J	140	1.0	330	410	120
117-84-0	Di-n-octylphthalate	U	410	1.0	330	410	260
367-12-4	2-Fluorophenol		70%				
13127-88-3	Phenol-D6		75%				
4165-60-0	Nitrobenzene-D5		77%				
321-60-8	2-Fluorobiphenyl		82%				
118-79-6	2,4,6-Tribromophenol		70%				
1718-51-0	Terphenyl-D14		108%				

lw 3/2/09

4

KATAHDIN ANALYTICAL SERVICES
Report of Analytical Results

Client: CH2MHill
Project: TO-009 Lejeune
PO No:
Sample Date: 12/03/08
Received Date: 12/04/08
Extraction Date: 12/05/08
Analysis Date: 19-DEC-2008 22:29
Report Date: 12/30/2008
Matrix: SOIL
% Solids: 85.5

Lab ID: SB6962-7
Client ID: MR08-IS071-6-7-08D
SDG: TO9-11
Extracted by: AC
Extraction Method: SW846 3550
Analyst: JCG
Analysis Method: SW846 8270C
Lab Prep Batch: WG58801
Units: ug/Kgdrywt

CAS#	Compound	Flags	Results	DF	PQL	Adj.PQL	Adj.MDL	
100-52-7	Benzaldehyde	~~U~~ UJ	580	1.0	500	580	140	CCH
108-95-2	Phenol	U	580	1.0	500	580	180	
111-44-4	Bis(2-Chloroethyl)ether	U	380	1.0	330	380	95	
95-57-8	2-Chlorophenol	U	580	1.0	500	580	190	
95-48-7	2-Methylphenol	U	700	1.0	600	700	230	
108-60-1	2,2'-Oxybis(1-chloropropane)	U	380	1.0	330	380	100	
98-86-2	Acetophenone	U	700	1.0	600	700	210	
621-64-7	N-Nitroso-di-n-propylamine	U	380	1.0	330	380	97	
65794-96-9	3&4-Methylphenol	U	700	1.0	600	700	220	
67-72-1	Hexachloroethane	U	380	1.0	330	380	110	
98-95-3	Nitrobenzene	U	380	1.0	330	380	110	
78-59-1	Isophorone	U	380	1.0	330	380	88	
88-75-5	2-Nitrophenol	U	700	1.0	600	700	200	
105-67-9	2,4-Dimethylphenol	U	580	1.0	500	580	190	
111-91-1	Bis(2-Chloroethoxy)methane	U	380	1.0	330	380	110	
120-83-2	2,4-Dichlorophenol	U	580	1.0	500	580	180	
106-47-8	4-Chloroaniline	U	580	1.0	500	580	140	
105-60-2	Caprolactam	U	580	1.0	500	580	170	
59-50-7	4-Chloro-3-Methylphenol	U	580	1.0	500	580	190	
88-06-2	2,4,6-Trichlorophenol	U	580	1.0	500	580	180	
95-95-4	2,4,5-Trichlorophenol	U	580	1.0	500	580	180	
91-58-7	2-Chloronaphthalene	U	380	1.0	330	380	100	
92-52-4	1,1'-Biphenyl	U	380	1.0	330	380	85	
88-74-4	2-Nitroaniline	U	580	1.0	500	580	88	
131-11-3	Dimethyl Phthalate	U	380	1.0	330	380	91	
606-20-2	2,6-Dinitrotoluene	U	380	1.0	330	380	92	
208-96-8	Acenaphthylene	U	380	1.0	330	380	82	
99-09-2	3-Nitroaniline	U	580	1.0	500	580	110	
83-32-9	Acenaphthene	U	380	1.0	330	380	76	
51-28-5	2,4-Dinitrophenol	U	1400	1.0	1200	1400	440	
132-64-9	Dibenzofuran	U	380	1.0	330	380	92	
100-02-7	4-Nitrophenol	U	1400	1.0	1200	1400	360	
121-14-2	2,4-Dinitrotoluene	U	380	1.0	330	380	99	
84-66-2	Diethylphthalate	U	380	1.0	330	380	94	
7005-72-3	4-Chlorophenyl-phenylether	U	380	1.0	330	380	91	
100-01-6	4-Nitroaniline	U	580	1.0	500	580	160	
534-52-1	4,6-Dinitro-2-Methylphenol	U	1400	1.0	1200	1400	390	
86-30-6	N-Nitrosodiphenylamine	U	770	1.0	660	770	260	
101-55-3	4-Bromophenyl-phenylether	U	380	1.0	330	380	99	
1912-24-9	Atrazine	U	380	1.0	330	380	110	
87-86-5	Pentachlorophenol	~~U~~ UJ	960	1.0	820	960	280	CCH
120-12-7	Anthracene	U	380	1.0	330	380	98	
86-74-8	Carbazole	U	580	1.0	500	580	130	

LW 3/2/09

KATAHDIN ANALYTICAL SERVICES
Report of Analytical Results

Client: CH2MHill
Project: TO-009 Lejeune
PO No:
Sample Date: 12/03/08
Received Date: 12/04/08
Extraction Date: 12/05/08
Analysis Date: 19-DEC-2008 22:29
Report Date: 12/30/2008
Matrix: SOIL
% Solids: 85.5

Lab ID: SB6962-7
Client ID: MR08-IS071-6-7-08D
SDG: TO9-11
Extracted by: AC
Extraction Method: SW846 3550
Analyst: JCG
Analysis Method: SW846 8270C
Lab Prep Batch: WG58801
Units: ug/Kgdrywt

CAS#	Compound	Flags	Results	DF	PQL	Adj.PQL	Adj.MDL
84-74-2	Di-n-butylphthalate	U	380	1.0	330	380	120
85-68-7	Butylbenzylphthalate	U	380	1.0	330	380	110
91-94-1	3,3'-Dichlorobenzidine	U	580	1.0	500	580	130
218-01-9	Chrysene	U	380	1.0	330	380	110
117-81-7	bis(2-Ethylhexyl)phthalate	U	380	1.0	330	380	110
117-84-0	Di-n-octylphthalate	U	380	1.0	330	380	250
367-12-4	2-Fluorophenol		44%				
13127-88-3	Phenol-D6		69%				
4165-60-0	Nitrobenzene-D5		80%				
321-60-8	2-Fluorobiphenyl		81%				
118-79-6	2,4,6-Tribromophenol		* 26%				
1718-51-0	Terphenyl-D14		99%				

lw
3/2/09

5

KATAHDIN ANALYTICAL SERVICES
Report of Analytical Results

Client: CH2MHill
Project: TO-009 Lejeune
PO No:
Sample Date: 12/03/08
Received Date: 12/04/08
Extraction Date: 12/05/08
Analysis Date: 19-DEC-2008 23:11
Report Date: 12/30/2008
Matrix: SOIL
% Solids: 77.4

Lab ID: SB6962-9
Client ID: MR08-SS072-08D
SDG: TO9-11
Extracted by: AC
Extraction Method: SW846 3550
Analyst: JCG
Analysis Method: SW846 8270C
Lab Prep Batch: WG58801
Units: ug/Kgdrywt

CAS#	Compound	Flags	Results	DF	PQL	Adj.PQL	Adj.MDL
100-52-7	Benzaldehyde	~~U~~ UJ	650	1.0	500	650	160 CCH
108-95-2	Phenol	U	650	1.0	500	650	200
111-44-4	Bis(2-Chloroethyl)ether	U	430	1.0	330	430	100
95-57-8	2-Chlorophenol	U	650	1.0	500	650	210
95-48-7	2-Methylphenol	U	780	1.0	600	780	260
108-60-1	2,2'-Oxybis(1-chloropropane)	U	430	1.0	330	430	120
98-86-2	Acetophenone	U	780	1.0	600	780	230
621-64-7	N-Nitroso-di-n-propylamine	U	430	1.0	330	430	110
65794-96-9	3&4-Methylphenol	U	780	1.0	600	780	240
67-72-1	Hexachloroethane	U	430	1.0	330	430	120
98-95-3	Nitrobenzene	U	430	1.0	330	430	120
78-59-1	Isophorone	U	430	1.0	330	430	97
88-75-5	2-Nitrophenol	U	780	1.0	600	780	220
105-67-9	2,4-Dimethylphenol	U	650	1.0	500	650	210
111-91-1	Bis(2-Chloroethoxy)methane	U	430	1.0	330	430	120
120-83-2	2,4-Dichlorophenol	U	650	1.0	500	650	190
106-47-8	4-Chloroaniline	U	650	1.0	500	650	150
105-60-2	Caprolactam	U	650	1.0	500	650	190
59-50-7	4-Chloro-3-Methylphenol	U	650	1.0	500	650	210
88-06-2	2,4,6-Trichlorophenol	U	650	1.0	500	650	200
95-95-4	2,4,5-Trichlorophenol	U	650	1.0	500	650	200
91-58-7	2-Chloronaphthalene	U	430	1.0	330	430	110
92-52-4	1,1'-Biphenyl	U	430	1.0	330	430	94
88-74-4	2-Nitroaniline	U	650	1.0	500	650	97
131-11-3	Dimethyl Phthalate	U	430	1.0	330	430	100
606-20-2	2,6-Dinitrotoluene	U	430	1.0	330	430	100
208-96-8	Acenaphthylene	U	430	1.0	330	430	90
99-09-2	3-Nitroaniline	U	650	1.0	500	650	120
83-32-9	Acenaphthene	U	430	1.0	330	430	84
51-28-5	2,4-Dinitrophenol	U	1600	1.0	1200	1600	490
132-64-9	Dibenzofuran	U	430	1.0	330	430	100
100-02-7	4-Nitrophenol	U	1600	1.0	1200	1600	400
121-14-2	2,4-Dinitrotoluene	U	430	1.0	330	430	110
84-66-2	Diethylphthalate	U	430	1.0	330	430	100
7005-72-3	4-Chlorophenyl-phenylether	U	430	1.0	330	430	100
100-01-6	4-Nitroaniline	U	650	1.0	500	650	170
534-52-1	4,6-Dinitro-2-Methylphenol	U	1600	1.0	1200	1600	440
86-30-6	N-Nitrosodiphenylamine	U	850	1.0	660	850	280
101-55-3	4-Bromophenyl-phenylether	U	430	1.0	330	430	110
1912-24-9	Atrazine	U	430	1.0	330	430	120
87-86-5	Pentachlorophenol	~~U~~ UJ	1000	1.0	820	1000	310 CCH
120-12-7	Anthracene	U	430	1.0	330	430	110
86-74-8	Carbazole	U	650	1.0	500	650	140

lw
3/2/09

KATAHDIN ANALYTICAL SERVICES
Report of Analytical Results

Client: CH2MHill
Project: TO-009 Lejeune
PO No:
Sample Date: 12/03/08
Received Date: 12/04/08
Extraction Date: 12/05/08
Analysis Date: 19-DEC-2008 23:11
Report Date: 12/30/2008
Matrix: SOIL
% Solids: 77.4

Lab ID: SB6962-9
Client ID: MR08-SS072-08D
SDG: TO9-11
Extracted by: AC
Extraction Method: SW846 3550
Analyst: JCG
Analysis Method: SW846 8270C
Lab Prep Batch: WG58801
Units: ug/Kgdrywt

CAS#	Compound	Flags	Results	DF	PQL	Adj.PQL	Adj.MDL
84-74-2	Di-n-butylphthalate	U	430	1.0	330	430	130
85-68-7	Butylbenzylphthalate	U	430	1.0	330	430	120
91-94-1	3,3'-Dichlorobenzidine	U	650	1.0	500	650	150
218-01-9	Chrysene	U	430	1.0	330	430	120
117-81-7	bis(2-Ethylhexyl)phthalate	U	430	1.0	330	430	130
117-84-0	Di-n-octylphthalate	U	430	1.0	330	430	270
367-12-4	2-Fluorophenol		70%				
13127-88-3	Phenol-D6		76%				
4165-60-0	Nitrobenzene-D5		75%				
321-60-8	2-Fluorobiphenyl		79%				
118-79-6	2,4,6-Tribromophenol		74%				
1718-51-0	Terphenyl-D14		103%				

lcw 3/2/09

6

KATAHDIN ANALYTICAL SERVICES
Report of Analytical Results

Client: CH2MHill
Project: TO-009 Lejeune
PO No:
Sample Date: 12/03/08
Received Date: 12/04/08
Extraction Date: 12/05/08
Analysis Date: 19-DEC-2008 23:53
Report Date: 12/30/2008
Matrix: SOIL
% Solids: 92.2

Lab ID: SB6962-11
Client ID: MR08-IS072-6-7-08D
SDG: TO9-11
Extracted by: AC
Extraction Method: SW846 3550
Analyst: JCG
Analysis Method: SW846 8270C
Lab Prep Batch: WG58801
Units: ug/Kgdrywt

CAS#	Compound	Flags	Results	DF	PQL	Adj.PQL	Adj.MDL	
100-52-7	Benzaldehyde	~~J~~ UJ	540	1.0	500	540	130	CCH
108-95-2	Phenol	U	540	1.0	500	540	170	
111-44-4	Bis(2-Chloroethyl)ether	U	360	1.0	330	360	88	
95-57-8	2-Chlorophenol	U	540	1.0	500	540	180	
95-48-7	2-Methylphenol	U	650	1.0	600	650	220	
108-60-1	2,2'-Oxybis(1-chloropropane)	U	360	1.0	330	360	96	
98-86-2	Acetophenone	U	650	1.0	600	650	190	
621-64-7	N-Nitroso-di-n-propylamine	U	360	1.0	330	360	90	
65794-96-9	3&4-Methylphenol	U	650	1.0	600	650	200	
67-72-1	Hexachloroethane	U	360	1.0	330	360	100	
98-95-3	Nitrobenzene	U	360	1.0	330	360	99	
78-59-1	Isophorone	U	360	1.0	330	360	81	
88-75-5	2-Nitrophenol	U	650	1.0	600	650	180	
105-67-9	2,4-Dimethylphenol	U	540	1.0	500	540	180	
111-91-1	Bis(2-Chloroethoxy)methane	U	360	1.0	330	360	100	
120-83-2	2,4-Dichlorophenol	U	540	1.0	500	540	160	
106-47-8	4-Chloroaniline	U	540	1.0	500	540	130	
105-60-2	Caprolactam	U	540	1.0	500	540	160	
59-50-7	4-Chloro-3-Methylphenol	U	540	1.0	500	540	180	
88-06-2	2,4,6-Trichlorophenol	U	540	1.0	500	540	170	
95-95-4	2,4,5-Trichlorophenol	U	540	1.0	500	540	170	
91-58-7	2-Chloronaphthalene	U	360	1.0	330	360	94	
92-52-4	1,1'-Biphenyl	U	360	1.0	330	360	79	
88-74-4	2-Nitroaniline	U	540	1.0	500	540	81	
131-11-3	Dimethyl Phthalate	U	360	1.0	330	360	85	
606-20-2	2,6-Dinitrotoluene	U	360	1.0	330	360	86	
208-96-8	Acenaphthylene	U	360	1.0	330	360	76	
99-09-2	3-Nitroaniline	U	540	1.0	500	540	100	
83-32-9	Acenaphthene	U	360	1.0	330	360	70	
51-28-5	2,4-Dinitrophenol	U	1300	1.0	1200	1300	410	
132-64-9	Dibenzofuran	U	360	1.0	330	360	86	
100-02-7	4-Nitrophenol	U	1300	1.0	1200	1300	340	
121-14-2	2,4-Dinitrotoluene	U	360	1.0	330	360	92	
84-66-2	Diethylphthalate	U	360	1.0	330	360	87	
7005-72-3	4-Chlorophenyl-phenylether	U	360	1.0	330	360	85	
100-01-6	4-Nitroaniline	U	540	1.0	500	540	140	
534-52-1	4,6-Dinitro-2-Methylphenol	U	1300	1.0	1200	1300	360	
86-30-6	N-Nitrosodiphenylamine	U	720	1.0	660	720	240	
101-55-3	4-Bromophenyl-phenylether	U	360	1.0	330	360	92	
1912-24-9	Atrazine	U	360	1.0	330	360	99	
87-86-5	Pentachlorophenol	~~J~~ UJ	890	1.0	820	890	260	CCH
120-12-7	Anthracene	U	360	1.0	330	360	91	
86-74-8	Carbazole	U	540	1.0	500	540	120	

RW 3/2/09

6

KATAHDIN ANALYTICAL SERVICES
Report of Analytical Results

Client: CH2MHill
Project: TO-009 Lejeune
PO No:
Sample Date: 12/03/08
Received Date: 12/04/08
Extraction Date: 12/05/08
Analysis Date: 19-DEC-2008 23:53
Report Date: 12/30/2008
Matrix: SOIL
% Solids: 92.2

Lab ID: SB6962-11
Client ID: MR08-IS072-6-7-08D
SDG: TO9-11
Extracted by: AC
Extraction Method: SW846 3550
Analyst: JCG
Analysis Method: SW846 8270C
Lab Prep Batch: WG58801
Units: ug/Kgdrywt

CAS#	Compound	Flags	Results	DF	PQL	Adj.PQL	Adj.MDL
84-74-2	Di-n-butylphthalate	U	360	1.0	330	360	110
85-68-7	Butylbenzylphthalate	U	360	1.0	330	360	100
91-94-1	3,3'-Dichlorobenzidine	U	540	1.0	500	540	120
218-01-9	Chrysene	U	360	1.0	330	360	100
117-81-7	bis(2-Ethylhexyl)phthalate		400	1.0	330	360	110
117-84-0	Di-n-octylphthalate	U	360	1.0	330	360	230
367-12-4	2-Fluorophenol		66%				
13127-88-3	Phenol-D6		75%				
4165-60-0	Nitrobenzene-D5		89%				
321-60-8	2-Fluorobiphenyl		92%				
118-79-6	2,4,6-Tribromophenol		57%				
1718-51-0	Terphenyl-D14		109%				

lw 3/2/09

7

KATAHDIN ANALYTICAL SERVICES
Report of Analytical Results

Client: CH2MHill
Project: TO-009 Lejeune
PO No:
Sample Date: 12/03/08
Received Date: 12/04/08
Extraction Date: 12/05/08
Analysis Date: 20-DEC-2008 01:58
Report Date: 12/30/2008
Matrix: SOIL
% Solids: 77.4

Lab ID: SB6962-13
Client ID: MR08-SS073-08D
SDG: TO9-11
Extracted by: AC
Extraction Method: SW846 3550
Analyst: JCG
Analysis Method: SW846 8270C
Lab Prep Batch: WG58801
Units: ug/Kgdrywt

CAS#	Compound	Flags	Results	DF	PQL	Adj.PQL	Adj.MDL	
100-52-7	Benzaldehyde	~~U~~ UJ	640	1.0	500	640	150	CCH
108-95-2	Phenol	U	640	1.0	500	640	200	
111-44-4	Bis(2-Chloroethyl)ether	U	430	1.0	330	430	100	
95-57-8	2-Chlorophenol	U	640	1.0	500	640	210	
95-48-7	2-Methylphenol	U	770	1.0	600	770	260	
108-60-1	2,2'-Oxybis(1-chloropropane)	U	430	1.0	330	430	110	
98-86-2	Acetophenone	U	770	1.0	600	770	230	
621-64-7	N-Nitroso-di-n-propylamine	U	430	1.0	330	430	110	
65794-96-9	3&4-Methylphenol	U	770	1.0	600	770	240	
67-72-1	Hexachloroethane	U	430	1.0	330	430	120	
98-95-3	Nitrobenzene	U	430	1.0	330	430	120	
78-59-1	Isophorone	U	430	1.0	330	430	97	
88-75-5	2-Nitrophenol	U	770	1.0	600	770	220	
105-67-9	2,4-Dimethylphenol	U	640	1.0	500	640	210	
111-91-1	Bis(2-Chloroethoxy)methane	U	430	1.0	330	430	120	
120-83-2	2,4-Dichlorophenol	U	640	1.0	500	640	190	
106-47-8	4-Chloroaniline	U	640	1.0	500	640	150	
105-60-2	Caprolactam	U	640	1.0	500	640	180	
59-50-7	4-Chloro-3-Methylphenol	U	640	1.0	500	640	210	
88-06-2	2,4,6-Trichlorophenol	U	640	1.0	500	640	200	
95-95-4	2,4,5-Trichlorophenol	U	640	1.0	500	640	200	
91-58-7	2-Chloronaphthalene	U	430	1.0	330	430	110	
92-52-4	1,1'-Biphenyl	U	430	1.0	330	430	94	
88-74-4	2-Nitroaniline	U	640	1.0	500	640	97	
131-11-3	Dimethyl Phthalate	U	430	1.0	330	430	100	
606-20-2	2,6-Dinitrotoluene	U	430	1.0	330	430	100	
208-96-8	Acenaphthylene	U	430	1.0	330	430	90	
99-09-2	3-Nitroaniline	U	640	1.0	500	640	120	
83-32-9	Acenaphthene	U	430	1.0	330	430	84	
51-28-5	2,4-Dinitrophenol	U	1500	1.0	1200	1500	490	
132-64-9	Dibenzofuran	U	430	1.0	330	430	100	
100-02-7	4-Nitrophenol	U	1500	1.0	1200	1500	400	
121-14-2	2,4-Dinitrotoluene	U	430	1.0	330	430	110	
84-66-2	Diethylphthalate	U	430	1.0	330	430	100	
7005-72-3	4-Chlorophenyl-phenylether	U	430	1.0	330	430	100	
100-01-6	4-Nitroaniline	U	640	1.0	500	640	170	
534-52-1	4,6-Dinitro-2-Methylphenol	U	1500	1.0	1200	1500	440	
86-30-6	N-Nitrosodiphenylamine	U	850	1.0	660	850	280	
101-55-3	4-Bromophenyl-phenylether	U	430	1.0	330	430	110	
1912-24-9	Atrazine	U	430	1.0	330	430	120	
87-86-5	Pentachlorophenol	~~U~~ UJ	1000	1.0	820	1000	310	CCH
120-12-7	Anthracene	U	430	1.0	330	430	110	
86-74-8	Carbazole	U	640	1.0	500	640	140	

lw 3/2/09

7

KATAHDIN ANALYTICAL SERVICES
Report of Analytical Results

Client: CH2MHill
Project: TO-009 Lejeune
PO No:
Sample Date: 12/03/08
Received Date: 12/04/08
Extraction Date: 12/05/08
Analysis Date: 20-DEC-2008 01:58
Report Date: 12/30/2008
Matrix: SOIL
% Solids: 77.4

Lab ID: SB6962-13
Client ID: MR08-SS073-08D
SDG: TO9-11
Extracted by: AC
Extraction Method: SW846 3550
Analyst: JCG
Analysis Method: SW846 8270C
Lab Prep Batch: WG58801
Units: ug/Kgdrywt

CAS#	Compound	Flags	Results	DF	PQL	Adj.PQL	Adj.MDL
84-74-2	Di-n-butylphthalate	U	430	1.0	330	430	130
85-68-7	Butylbenzylphthalate	U	430	1.0	330	430	120
91-94-1	3,3'-Dichlorobenzidine	U	640	1.0	500	640	150
218-01-9	Chrysene	U	430	1.0	330	430	120
117-81-7	bis(2-Ethylhexyl)phthalate	U	430	1.0	330	430	130
117-84-0	Di-n-octylphthalate	U	430	1.0	330	430	270
367-12-4	2-Fluorophenol		59%				
13127-88-3	Phenol-D6		60%				
4165-60-0	Nitrobenzene-D5		71%				
321-60-8	2-Fluorobiphenyl		76%				
118-79-6	2,4,6-Tribromophenol		67%				
1718-51-0	Terphenyl-D14		94%				

llw 3/2/09

8

KATAHDIN ANALYTICAL SERVICES
Report of Analytical Results

Client: CH2MHill
Project: TO-009 Lejeune
PO No:
Sample Date: 12/04/08
Received Date: 12/05/08
Extraction Date: 12/08/08
Analysis Date: 18-DEC-2008 14:53
Report Date: 12/30/2008
Matrix: SOIL
% Solids: 80.2

Lab ID: SB7002-1
Client ID: MR08-SS074-08D
SDG: TO9-11
Extracted by: CB
Extraction Method: SW846 3550
Analyst: JLP
Analysis Method: SW846 8270C
Lab Prep Batch: WG58886
Units: ug/Kgdrywt

CAS#	Compound	Flags	Results	DF	PQL	Adj.PQL	Adj.MDL
100-52-7	Benzaldehyde	~~U~~ UJ	620	1.0	500	620	150 CCH
108-95-2	Phenol	U	620	1.0	500	620	190
111-44-4	Bis(2-Chloroethyl)ether	U	410	1.0	330	410	100
95-57-8	2-Chlorophenol	U	620	1.0	500	620	200
95-48-7	2-Methylphenol	U	750	1.0	600	750	250
108-60-1	2,2'-Oxybis(1-chloropropane)	U	410	1.0	330	410	110
98-86-2	Acetophenone	U	750	1.0	600	750	220
621-64-7	N-Nitroso-di-n-propylamine	U	410	1.0	330	410	100
65794-96-9	3&4-Methylphenol	U	750	1.0	600	750	230
67-72-1	Hexachloroethane	U	410	1.0	330	410	120
98-95-3	Nitrobenzene	U	410	1.0	330	410	110
78-59-1	Isophorone	U	410	1.0	330	410	94
88-75-5	2-Nitrophenol	U	750	1.0	600	750	210
105-67-9	2,4-Dimethylphenol	U	620	1.0	500	620	200
111-91-1	Bis(2-Chloroethoxy)methane	U	410	1.0	330	410	120
120-83-2	2,4-Dichlorophenol	U	620	1.0	500	620	190
106-47-8	4-Chloroaniline	U	620	1.0	500	620	150
105-60-2	Caprolactam	U	620	1.0	500	620	180
59-50-7	4-Chloro-3-Methylphenol	U	620	1.0	500	620	210
88-06-2	2,4,6-Trichlorophenol	U	620	1.0	500	620	190
95-95-4	2,4,5-Trichlorophenol	U	620	1.0	500	620	190
91-58-7	2-Chloronaphthalene	U	410	1.0	330	410	110
92-52-4	1,1'-Biphenyl	U	410	1.0	330	410	91
88-74-4	2-Nitroaniline	U	620	1.0	500	620	94
131-11-3	Dimethyl Phthalate	U	410	1.0	330	410	97
606-20-2	2,6-Dinitrotoluene	U	410	1.0	330	410	98
208-96-8	Acenaphthylene	U	410	1.0	330	410	87
99-09-2	3-Nitroaniline	U	620	1.0	500	620	120
83-32-9	Acenaphthene	U	410	1.0	330	410	81
51-28-5	2,4-Dinitrophenol	U	1500	1.0	1200	1500	470
132-64-9	Dibenzofuran	U	410	1.0	330	410	98
100-02-7	4-Nitrophenol	U	1500	1.0	1200	1500	380
121-14-2	2,4-Dinitrotoluene	U	410	1.0	330	410	110
84-66-2	Diethylphthalate	U	410	1.0	330	410	100
7005-72-3	4-Chlorophenyl-phenylether	U	410	1.0	330	410	97
100-01-6	4-Nitroaniline	U	620	1.0	500	620	170
534-52-1	4,6-Dinitro-2-Methylphenol	U	1500	1.0	1200	1500	420
86-30-6	N-Nitrosodiphenylamine	U	820	1.0	660	820	270
101-55-3	4-Bromophenyl-phenylether	U	410	1.0	330	410	110
1912-24-9	Atrazine	U	410	1.0	330	410	110
87-86-5	Pentachlorophenol	U	1000	1.0	820	1000	300
120-12-7	Anthracene	U	410	1.0	330	410	100
86-74-8	Carbazole	U	620	1.0	500	620	140

lw 3/2/09

γ

KATAHDIN ANALYTICAL SERVICES
Report of Analytical Results

Client: CH2MHill
Project: TO-009 Lejeune
PO No:
Sample Date: 12/04/08
Received Date: 12/05/08
Extraction Date: 12/08/08
Analysis Date: 18-DEC-2008 14:53
Report Date: 12/30/2008
Matrix: SOIL
% Solids: 80.2

Lab ID: SB7002-1
Client ID: MR08-SS074-08D
SDG: TO9-11
Extracted by: CB
Extraction Method: SW846 3550
Analyst: JLP
Analysis Method: SW846 8270C
Lab Prep Batch: WG58886
Units: ug/Kgdrywt

CAS#	Compound	Flags	Results	DF	PQL	Adj.PQL	Adj.MDL	
84-74-2	Di-n-butylphthalate	U	410	1.0	330	410	120	
85-68-7	Butylbenzylphthalate	U	410	1.0	330	410	120	
91-94-1	3,3'-Dichlorobenzidine	~~U~~ UJ	620	1.0	500	620	140	C CH
218-01-9	Chrysene	U	410	1.0	330	410	120	
117-81-7	bis(2-Ethylhexyl)phthalate	U	410	1.0	330	410	120	
117-84-0	Di-n-octylphthalate	U	410	1.0	330	410	260	
367-12-4	2-Fluorophenol		74%					
13127-88-3	Phenol-D6		74%					
4165-60-0	Nitrobenzene-D5		76%					
321-60-8	2-Fluorobiphenyl		81%					
118-79-6	2,4,6-Tribromophenol		94%					
1718-51-0	Terphenyl-D14		117%					

lw 3/2/09

9

KATAHDIN ANALYTICAL SERVICES
Report of Analytical Results

Client: CH2MHill
Project: TO-009 Lejeune
PO No:
Sample Date: 12/04/08
Received Date: 12/05/08
Extraction Date: 12/08/08
Analysis Date: 18-DEC-2008 11:21
Report Date: 12/30/2008
Matrix: SOIL
% Solids: 94.0

Lab ID: SB7002-3
Client ID: MR08-IS074-7-8-08D
SDG: TO9-11
Extracted by: CB
Extraction Method: SW846 3550
Analyst: JLP
Analysis Method: SW846 8270C
Lab Prep Batch: WG58886
Units: ug/Kgdrywt

CAS#	Compound	Flags	Results	DF	PQL	Adj.PQL	Adj.MDL
100-52-7	Benzaldehyde	~~J~~ UJ	530	1.0	500	530	130 CCH
108-95-2	Phenol	U	530	1.0	500	530	170
111-44-4	Bis(2-Chloroethyl)ether	U	350	1.0	330	350	86
95-57-8	2-Chlorophenol	U	530	1.0	500	530	170
95-48-7	2-Methylphenol	U	640	1.0	600	640	210
108-60-1	2,2'-Oxybis(1-chloropropane)	U	350	1.0	330	350	95
98-86-2	Acetophenone	U	640	1.0	600	640	190
621-64-7	N-Nitroso-di-n-propylamine	U	350	1.0	330	350	88
65794-96-9	3&4-Methylphenol	U	640	1.0	600	640	200
67-72-1	Hexachloroethane	U	350	1.0	330	350	100
98-95-3	Nitrobenzene	U	350	1.0	330	350	97
78-59-1	Isophorone	U	350	1.0	330	350	80
88-75-5	2-Nitrophenol	U	640	1.0	600	640	180
105-67-9	2,4-Dimethylphenol	U	530	1.0	500	530	180
111-91-1	Bis(2-Chloroethoxy)methane	U	350	1.0	330	350	100
120-83-2	2,4-Dichlorophenol	U	530	1.0	500	530	160
106-47-8	4-Chloroaniline	U	530	1.0	500	530	130
105-60-2	Caprolactam	U	530	1.0	500	530	150
59-50-7	4-Chloro-3-Methylphenol	U	530	1.0	500	530	180
88-06-2	2,4,6-Trichlorophenol	U	530	1.0	500	530	160
95-95-4	2,4,5-Trichlorophenol	U	530	1.0	500	530	160
91-58-7	2-Chloronaphthalene	U	350	1.0	330	350	92
92-52-4	1,1'-Biphenyl	U	350	1.0	330	350	78
88-74-4	2-Nitroaniline	U	530	1.0	500	530	80
131-11-3	Dimethyl Phthalate	U	350	1.0	330	350	83
606-20-2	2,6-Dinitrotoluene	U	350	1.0	330	350	84
208-96-8	Acenaphthylene	U	350	1.0	330	350	74
99-09-2	3-Nitroaniline	U	530	1.0	500	530	100
83-32-9	Acenaphthene	U	350	1.0	330	350	69
51-28-5	2,4-Dinitrophenol	U	1300	1.0	1200	1300	400
132-64-9	Dibenzofuran	U	350	1.0	330	350	84
100-02-7	4-Nitrophenol	U	1300	1.0	1200	1300	330
121-14-2	2,4-Dinitrotoluene	U	350	1.0	330	350	90
84-66-2	Diethylphthalate	U	350	1.0	330	350	85
7005-72-3	4-Chlorophenyl-phenylether	U	350	1.0	330	350	83
100-01-6	4-Nitroaniline	U	530	1.0	500	530	140
534-52-1	4,6-Dinitro-2-Methylphenol	U	1300	1.0	1200	1300	360
86-30-6	N-Nitrosodiphenylamine	U	700	1.0	660	700	230
101-55-3	4-Bromophenyl-phenylether	U	350	1.0	330	350	90
1912-24-9	Atrazine	U	350	1.0	330	350	97
87-86-5	Pentachlorophenol	U	870	1.0	820	870	250
120-12-7	Anthracene	U	350	1.0	330	350	89
86-74-8	Carbazole	U	530	1.0	500	530	120

lw 3/2/09

9

KATAHDIN ANALYTICAL SERVICES
Report of Analytical Results

Client: CH2MHill
Project: TO-009 Lejeune
PO No:
Sample Date: 12/04/08
Received Date: 12/05/08
Extraction Date: 12/08/08
Analysis Date: 18-DEC-2008 11:21
Report Date: 12/30/2008
Matrix: SOIL
% Solids: 94.0

Lab ID: SB7002-3
Client ID: MR08-IS074-7-8-08D
SDG: TO9-11
Extracted by: CB
Extraction Method: SW846 3550
Analyst: JLP
Analysis Method: SW846 8270C
Lab Prep Batch: WG58886
Units: ug/Kgdrywt

CAS#	Compound	Flags	Results	DF	PQL	Adj.PQL	Adj.MDL	
84-74-2	Di-n-butylphthalate	U	350	1.0	330	350	110	
85-68-7	Butylbenzylphthalate	U	350	1.0	330	350	99	
91-94-1	3,3'-Dichlorobenzidine	~~U~~ UJ	530	1.0	500	530	120	CCH
218-01-9	Chrysene	U	350	1.0	330	350	100	
117-81-7	bis(2-Ethylhexyl)phthalate	U	350	1.0	330	350	100	
117-84-0	Di-n-octylphthalate	U	350	1.0	330	350	220	
367-12-4	2-Fluorophenol		62%					
13127-88-3	Phenol-D6		75%					
4165-60-0	Nitrobenzene-D5		80%					
321-60-8	2-Fluorobiphenyl		84%					
118-79-6	2,4,6-Tribromophenol		54%					
1718-51-0	Terphenyl-D14		99%					

lw
3/2/09

10

KATAHDIN ANALYTICAL SERVICES
Report of Analytical Results

Client: CH2MHill
Project: TO-009 Lejeune
PO No:
Sample Date: 12/04/08
Received Date: 12/05/08
Extraction Date: 12/08/08
Analysis Date: 18-DEC-2008 15:36
Report Date: 12/30/2008
Matrix: SOIL
% Solids: 80.1

Lab ID: SB7002-5
Client ID: MR08-SS075-08D
SDG: TO9-11
Extracted by: CB
Extraction Method: SW846 3550
Analyst: JLP
Analysis Method: SW846 8270C
Lab Prep Batch: WG58886
Units: ug/Kgdrywt

CAS#	Compound	Flags	Results	DF	PQL	Adj.PQL	Adj.MDL
100-52-7	Benzaldehyde	~~U~~ UJ	620	1.0	500	620	150 CCH
108-95-2	Phenol	U	620	1.0	500	620	190
111-44-4	Bis(2-Chloroethyl)ether	U	410	1.0	330	410	100
95-57-8	2-Chlorophenol	U	620	1.0	500	620	200
95-48-7	2-Methylphenol	U	750	1.0	600	750	250
108-60-1	2,2'-Oxybis(1-chloropropane)	U	410	1.0	330	410	110
98-86-2	Acetophenone	U	750	1.0	600	750	220
621-64-7	N-Nitroso-di-n-propylamine	U	410	1.0	330	410	100
65794-96-9	3&4-Methylphenol	U	750	1.0	600	750	230
67-72-1	Hexachloroethane	U	410	1.0	330	410	120
98-95-3	Nitrobenzene	U	410	1.0	330	410	110
78-59-1	Isophorone	U	410	1.0	330	410	94
88-75-5	2-Nitrophenol	U	750	1.0	600	750	210
105-67-9	2,4-Dimethylphenol	U	620	1.0	500	620	200
111-91-1	Bis(2-Chloroethoxy)methane	U	410	1.0	330	410	120
120-83-2	2,4-Dichlorophenol	U	620	1.0	500	620	190
106-47-8	4-Chloroaniline	U	620	1.0	500	620	150
105-60-2	Caprolactam	U	620	1.0	500	620	180
59-50-7	4-Chloro-3-Methylphenol	U	620	1.0	500	620	210
88-06-2	2,4,6-Trichlorophenol	U	620	1.0	500	620	190
95-95-4	2,4,5-Trichlorophenol	U	620	1.0	500	620	190
91-58-7	2-Chloronaphthalene	U	410	1.0	330	410	110
92-52-4	1,1'-Biphenyl	U	410	1.0	330	410	91
88-74-4	2-Nitroaniline	U	620	1.0	500	620	94
131-11-3	Dimethyl Phthalate	U	410	1.0	330	410	97
606-20-2	2,6-Dinitrotoluene	U	410	1.0	330	410	99
208-96-8	Acenaphthylene	U	410	1.0	330	410	87
99-09-2	3-Nitroaniline	U	620	1.0	500	620	120
83-32-9	Acenaphthene	U	410	1.0	330	410	81
51-28-5	2,4-Dinitrophenol	U	1500	1.0	1200	1500	470
132-64-9	Dibenzofuran	U	410	1.0	330	410	99
100-02-7	4-Nitrophenol	U	1500	1.0	1200	1500	380
121-14-2	2,4-Dinitrotoluene	U	410	1.0	330	410	110
84-66-2	Diethylphthalate	U	410	1.0	330	410	100
7005-72-3	4-Chlorophenyl-phenylether	U	410	1.0	330	410	97
100-01-6	4-Nitroaniline	U	620	1.0	500	620	170
534-52-1	4,6-Dinitro-2-Methylphenol	U	1500	1.0	1200	1500	420
86-30-6	N-Nitrosodiphenylamine	U	820	1.0	660	820	270
101-55-3	4-Bromophenyl-phenylether	U	410	1.0	330	410	110
1912-24-9	Atrazine	U	410	1.0	330	410	110
87-86-5	Pentachlorophenol	U	1000	1.0	820	1000	300
120-12-7	Anthracene	U	410	1.0	330	410	100
86-74-8	Carbazole	U	620	1.0	500	620	140

lwj 3/2/09

10

KATAHDIN ANALYTICAL SERVICES
Report of Analytical Results

Client: CH2MHill
Project: TO-009 Lejeune
PO No:
Sample Date: 12/04/08
Received Date: 12/05/08
Extraction Date: 12/08/08
Analysis Date: 18-DEC-2008 15:36
Report Date: 12/30/2008
Matrix: SOIL
% Solids: 80.1

Lab ID: SB7002-5
Client ID: MR08-SS075-08D
SDG: TO9-11
Extracted by: CB
Extraction Method: SW846 3550
Analyst: JLP
Analysis Method: SW846 8270C
Lab Prep Batch: WG58886
Units: ug/Kgdrywt

CAS#	Compound	Flags	Results	DF	PQL	Adj.PQL	Adj.MDL
84-74-2	Di-n-butylphthalate	U	410	1.0	330	410	130
85-68-7	Butylbenzylphthalate	U	410	1.0	330	410	120
91-94-1	3,3'-Dichlorobenzidine	~~U~~ UJ	620	1.0	500	620	140 CCH
218-01-9	Chrysene	U	410	1.0	330	410	120
117-81-7	bis(2-Ethylhexyl)phthalate	U	410	1.0	330	410	120
117-84-0	Di-n-octylphthalate	U	410	1.0	330	410	260
367-12-4	2-Fluorophenol		70%				
13127-88-3	Phenol-D6		73%				
4165-60-0	Nitrobenzene-D5		74%				
321-60-8	2-Fluorobiphenyl		79%				
118-79-6	2,4,6-Tribromophenol		92%				
1718-51-0	Terphenyl-D14		111%				

lw 3/2/09

11

KATAHDIN ANALYTICAL SERVICES
Report of Analytical Results

Client: CH2MHill
Project: TO-009 Lejeune
PO No:
Sample Date: 12/04/08
Received Date: 12/05/08
Extraction Date: 12/08/08
Analysis Date: 18-DEC-2008 12:03
Report Date: 12/30/2008
Matrix: SOIL
% Solids: 93.6

Lab ID: SB7002-7
Client ID: MR08-IS075-6-7-08D
SDG: TO9-11
Extracted by: CB
Extraction Method: SW846 3550
Analyst: JLP
Analysis Method: SW846 8270C
Lab Prep Batch: WG58886
Units: ug/Kgdrywt

CAS#	Compound	Flags	Results	DF	PQL	Adj.PQL	Adj.MDL
100-52-7	Benzaldehyde	~~U~~ UJ	530	1.0	500	530	130 CCH
108-95-2	Phenol	U	530	1.0	500	530	170
111-44-4	Bis(2-Chloroethyl)ether	U	350	1.0	330	350	86
95-57-8	2-Chlorophenol	U	530	1.0	500	530	180
95-48-7	2-Methylphenol	U	640	1.0	600	640	210
108-60-1	2,2'-Oxybis(1-chloropropane)	U	350	1.0	330	350	95
98-86-2	Acetophenone	U	640	1.0	600	640	190
621-64-7	N-Nitroso-di-n-propylamine	U	350	1.0	330	350	89
65794-96-9	3&4-Methylphenol	U	640	1.0	600	640	200
67-72-1	Hexachloroethane	U	350	1.0	330	350	100
98-95-3	Nitrobenzene	U	350	1.0	330	350	97
78-59-1	Isophorone	U	350	1.0	330	350	80
88-75-5	2-Nitrophenol	U	640	1.0	600	640	180
105-67-9	2,4-Dimethylphenol	U	530	1.0	500	530	180
111-91-1	Bis(2-Chloroethoxy)methane	U	350	1.0	330	350	100
120-83-2	2,4-Dichlorophenol	U	530	1.0	500	530	160
106-47-8	4-Chloroaniline	U	530	1.0	500	530	130
105-60-2	Caprolactam	U	530	1.0	500	530	150
59-50-7	4-Chloro-3-Methylphenol	U	530	1.0	500	530	180
88-06-2	2,4,6-Trichlorophenol	U	530	1.0	500	530	160
95-95-4	2,4,5-Trichlorophenol	U	530	1.0	500	530	160
91-58-7	2-Chloronaphthalene	U	350	1.0	330	350	93
92-52-4	1,1'-Biphenyl	U	350	1.0	330	350	78
88-74-4	2-Nitroaniline	U	530	1.0	500	530	80
131-11-3	Dimethyl Phthalate	U	350	1.0	330	350	83
606-20-2	2,6-Dinitrotoluene	U	350	1.0	330	350	84
208-96-8	Acenaphthylene	U	350	1.0	330	350	75
99-09-2	3-Nitroaniline	U	530	1.0	500	530	100
83-32-9	Acenaphthene	U	350	1.0	330	350	69
51-28-5	2,4-Dinitrophenol	U	1300	1.0	1200	1300	400
132-64-9	Dibenzofuran	U	350	1.0	330	350	84
100-02-7	4-Nitrophenol	U	1300	1.0	1200	1300	330
121-14-2	2,4-Dinitrotoluene	U	350	1.0	330	350	91
84-66-2	Diethylphthalate	U	350	1.0	330	350	85
7005-72-3	4-Chlorophenyl-phenylether	U	350	1.0	330	350	83
100-01-6	4-Nitroaniline	U	530	1.0	500	530	140
534-52-1	4,6-Dinitro-2-Methylphenol	U	1300	1.0	1200	1300	360
86-30-6	N-Nitrosodiphenylamine	U	700	1.0	660	700	230
101-55-3	4-Bromophenyl-phenylether	U	350	1.0	330	350	91
1912-24-9	Atrazine	U	350	1.0	330	350	97
87-86-5	Pentachlorophenol	U	880	1.0	820	880	250
120-12-7	Anthracene	U	350	1.0	330	350	90
86-74-8	Carbazole	U	530	1.0	500	530	120

RW
3/2/09

11

KATAHDIN ANALYTICAL SERVICES
Report of Analytical Results

Client: CH2MHill
Project: TO-009 Lejeune
PO No:
Sample Date: 12/04/08
Received Date: 12/05/08
Extraction Date: 12/08/08
Analysis Date: 18-DEC-2008 12:03
Report Date: 12/30/2008
Matrix: SOIL
% Solids: 93.6

Lab ID: SB7002-7
Client ID: MR08-IS075-6-7-08D
SDG: TO9-11
Extracted by: CB
Extraction Method: SW846 3550
Analyst: JLP
Analysis Method: SW846 8270C
Lab Prep Batch: WG58886
Units: ug/Kgdrywt

CAS#	Compound	Flags	Results	DF	PQL	Adj.PQL	Adj.MDL	
84-74-2	Di-n-butylphthalate	U	350	1.0	330	350	110	
85-68-7	Butylbenzylphthalate	U	350	1.0	330	350	99	
91-94-1	3,3'-Dichlorobenzidine	~~U~~ UJ	530	1.0	500	530	120	CCH
218-01-9	Chrysene	U	350	1.0	330	350	100	
117-81-7	bis(2-Ethylhexyl)phthalate	U	350	1.0	330	350	100	
117-84-0	Di-n-octylphthalate	U	350	1.0	330	350	220	
367-12-4	2-Fluorophenol		62%					
13127-88-3	Phenol-D6		70%					
4165-60-0	Nitrobenzene-D5		72%					
321-60-8	2-Fluorobiphenyl		73%					
118-79-6	2,4,6-Tribromophenol		46%					
1718-51-0	Terphenyl-D14		97%					

lw
3/2/09

12

KATAHDIN ANALYTICAL SERVICES
Report of Analytical Results

Client: CH2MHill
Project: TO-009 Lejeune
PO No:
Sample Date: 12/04/08
Received Date: 12/05/08
Extraction Date: 12/08/08
Analysis Date: 18-DEC-2008 16:19
Report Date: 12/30/2008
Matrix: SOIL
% Solids: 84.0

Lab ID: SB7002-9
Client ID: MR08-SS076-08D
SDG: TO9-11
Extracted by: CB
Extraction Method: SW846 3550
Analyst: JLP
Analysis Method: SW846 8270C
Lab Prep Batch: WG58886
Units: ug/Kgdrywt

CAS#	Compound	Flags	Results	DF	PQL	Adj.PQL	Adj.MDL
100-52-7	Benzaldehyde	~~U~~ UJ	600	1.0	500	600	140 CCH
108-95-2	Phenol	U	600	1.0	500	600	180
111-44-4	Bis(2-Chloroethyl)ether	U	390	1.0	330	390	96
95-57-8	2-Chlorophenol	U	600	1.0	500	600	200
95-48-7	2-Methylphenol	U	710	1.0	600	710	240
108-60-1	2,2'-Oxybis(1-chloropropane)	U	390	1.0	330	390	100
98-86-2	Acetophenone	U	710	1.0	600	710	210
621-64-7	N-Nitroso-di-n-propylamine	U	390	1.0	330	390	99
65794-96-9	3&4-Methylphenol	U	710	1.0	600	710	220
67-72-1	Hexachloroethane	U	390	1.0	330	390	110
98-95-3	Nitrobenzene	U	390	1.0	330	390	110
78-59-1	Isophorone	U	390	1.0	330	390	89
88-75-5	2-Nitrophenol	U	710	1.0	600	710	200
105-67-9	2,4-Dimethylphenol	U	600	1.0	500	600	200
111-91-1	Bis(2-Chloroethoxy)methane	U	390	1.0	330	390	110
120-83-2	2,4-Dichlorophenol	U	600	1.0	500	600	180
106-47-8	4-Chloroaniline	U	600	1.0	500	600	140
105-60-2	Caprolactam	U	600	1.0	500	600	170
59-50-7	4-Chloro-3-Methylphenol	U	600	1.0	500	600	200
88-06-2	2,4,6-Trichlorophenol	U	600	1.0	500	600	180
95-95-4	2,4,5-Trichlorophenol	U	600	1.0	500	600	180
91-58-7	2-Chloronaphthalene	U	390	1.0	330	390	100
92-52-4	1,1'-Biphenyl	U	390	1.0	330	390	87
88-74-4	2-Nitroaniline	U	600	1.0	500	600	89
131-11-3	Dimethyl Phthalate	U	390	1.0	330	390	93
606-20-2	2,6-Dinitrotoluene	U	390	1.0	330	390	94
208-96-8	Acenaphthylene	U	390	1.0	330	390	83
99-09-2	3-Nitroaniline	U	600	1.0	500	600	110
83-32-9	Acenaphthene	U	390	1.0	330	390	77
51-28-5	2,4-Dinitrophenol	U	1400	1.0	1200	1400	450
132-64-9	Dibenzofuran	U	390	1.0	330	390	94
100-02-7	4-Nitrophenol	U	1400	1.0	1200	1400	370
121-14-2	2,4-Dinitrotoluene	U	390	1.0	330	390	100
84-66-2	Diethylphthalate	U	390	1.0	330	390	95
7005-72-3	4-Chlorophenyl-phenylether	U	390	1.0	330	390	93
100-01-6	4-Nitroaniline	U	600	1.0	500	600	160
534-52-1	4,6-Dinitro-2-Methylphenol	U	1400	1.0	1200	1400	400
86-30-6	N-Nitrosodiphenylamine	U	780	1.0	660	780	260
101-55-3	4-Bromophenyl-phenylether	U	390	1.0	330	390	100
1912-24-9	Atrazine	U	390	1.0	330	390	110
87-86-5	Pentachlorophenol	U	980	1.0	820	980	280
120-12-7	Anthracene	U	390	1.0	330	390	100
86-74-8	Carbazole	U	600	1.0	500	600	130

MW 3/2/09

12

KATAHDIN ANALYTICAL SERVICES
Report of Analytical Results

Client: CH2MHill
Project: TO-009 Lejeune
PO No:
Sample Date: 12/04/08
Received Date: 12/05/08
Extraction Date: 12/08/08
Analysis Date: 18-DEC-2008 16:19
Report Date: 12/30/2008
Matrix: SOIL
% Solids: 84.0

Lab ID: SB7002-9
Client ID: MR08-SS076-08D
SDG: TO9-11
Extracted by: CB
Extraction Method: SW846 3550
Analyst: JLP
Analysis Method: SW846 8270C
Lab Prep Batch: WG58886
Units: ug/Kgdrywt

CAS#	Compound	Flags	Results	DF	PQL	Adj.PQL	Adj.MDL	
84-74-2	Di-n-butylphthalate	U	390	1.0	330	390	120	
85-68-7	Butylbenzylphthalate	U	390	1.0	330	390	110	
91-94-1	3,3'-Dichlorobenzidine	~~U~~ UJ	600	1.0	500	600	140	CCH
218-01-9	Chrysene	U	390	1.0	330	390	110	
117-81-7	bis(2-Ethylhexyl)phthalate	U	390	1.0	330	390	120	
117-84-0	Di-n-octylphthalate	U	390	1.0	330	390	250	
367-12-4	2-Fluorophenol		75%					
13127-88-3	Phenol-D6		77%					
4165-60-0	Nitrobenzene-D5		76%					
321-60-8	2-Fluorobiphenyl		84%					
118-79-6	2,4,6-Tribromophenol		94%					
1718-51-0	Terphenyl-D14		114%					

DW
3/2/09

13

KATAHDIN ANALYTICAL SERVICES
Report of Analytical Results

Client: CH2MHill
Project: TO-009 Lejeune
PO No:
Sample Date: 12/04/08
Received Date: 12/05/08
Extraction Date: 12/08/08
Analysis Date: 18-DEC-2008 12:46
Report Date: 12/30/2008
Matrix: SOIL
% Solids: 88.7

Lab ID: SB7002-11
Client ID: MR08-IS076-6-7-08D
SDG: TO9-11
Extracted by: CB
Extraction Method: SW846 3550
Analyst: JLP
Analysis Method: SW846 8270C
Lab Prep Batch: WG58886
Units: ug/Kgdrywt

CAS#	Compound	Flags	Results	DF	PQL	Adj.PQL	Adj.MDL
100-52-7	Benzaldehyde	~~U~~ UJ	560	1.0	500	560	140 CCH
108-95-2	Phenol	U	560	1.0	500	560	180
111-44-4	Bis(2-Chloroethyl)ether	U	370	1.0	330	370	91
95-57-8	2-Chlorophenol	U	560	1.0	500	560	180
95-48-7	2-Methylphenol	U	680	1.0	600	680	220
108-60-1	2,2'-Oxybis(1-chloropropane)	U	370	1.0	330	370	100
98-86-2	Acetophenone	U	680	1.0	600	680	200
621-64-7	N-Nitroso-di-n-propylamine	U	370	1.0	330	370	94
65794-96-9	3&4-Methylphenol	U	680	1.0	600	680	210
67-72-1	Hexachloroethane	U	370	1.0	330	370	110
98-95-3	Nitrobenzene	U	370	1.0	330	370	100
78-59-1	Isophorone	U	370	1.0	330	370	84
88-75-5	2-Nitrophenol	U	680	1.0	600	680	190
105-67-9	2,4-Dimethylphenol	U	560	1.0	500	560	180
111-91-1	Bis(2-Chloroethoxy)methane	U	370	1.0	330	370	110
120-83-2	2,4-Dichlorophenol	U	560	1.0	500	560	170
106-47-8	4-Chloroaniline	U	560	1.0	500	560	130
105-60-2	Caprolactam	U	560	1.0	500	560	160
59-50-7	4-Chloro-3-Methylphenol	U	560	1.0	500	560	190
88-06-2	2,4,6-Trichlorophenol	U	560	1.0	500	560	170
95-95-4	2,4,5-Trichlorophenol	U	560	1.0	500	560	170
91-58-7	2-Chloronaphthalene	U	370	1.0	330	370	98
92-52-4	1,1'-Biphenyl	U	370	1.0	330	370	82
88-74-4	2-Nitroaniline	U	560	1.0	500	560	84
131-11-3	Dimethyl Phthalate	U	370	1.0	330	370	88
606-20-2	2,6-Dinitrotoluene	U	370	1.0	330	370	89
208-96-8	Acenaphthylene	U	370	1.0	330	370	79
99-09-2	3-Nitroaniline	U	560	1.0	500	560	100
83-32-9	Acenaphthene	U	370	1.0	330	370	73
51-28-5	2,4-Dinitrophenol	U	1400	1.0	1200	1400	420
132-64-9	Dibenzofuran	U	370	1.0	330	370	89
100-02-7	4-Nitrophenol	U	1400	1.0	1200	1400	350
121-14-2	2,4-Dinitrotoluene	U	370	1.0	330	370	96
84-66-2	Diethylphthalate	U	370	1.0	330	370	90
7005-72-3	4-Chlorophenyl-phenylether	U	370	1.0	330	370	88
100-01-6	4-Nitroaniline	U	560	1.0	500	560	150
534-52-1	4,6-Dinitro-2-Methylphenol	U	1400	1.0	1200	1400	380
86-30-6	N-Nitrosodiphenylamine	U	740	1.0	660	740	250
101-55-3	4-Bromophenyl-phenylether	U	370	1.0	330	370	96
1912-24-9	Atrazine	U	370	1.0	330	370	100
87-86-5	Pentachlorophenol	U	920	1.0	820	920	270
120-12-7	Anthracene	U	370	1.0	330	370	95
86-74-8	Carbazole	U	560	1.0	500	560	120

lw 3/2/09

KATAHDIN ANALYTICAL SERVICES
Report of Analytical Results

13

Client: CH2MHill
Project: TO-009 Lejeune
PO No:
Sample Date: 12/04/08
Received Date: 12/05/08
Extraction Date: 12/08/08
Analysis Date: 18-DEC-2008 12:46
Report Date: 12/30/2008
Matrix: SOIL
% Solids: 88.7

Lab ID: SB7002-11
Client ID: MR08-IS076-6-7-08D
SDG: TO9-11
Extracted by: CB
Extraction Method: SW846 3550
Analyst: JLP
Analysis Method: SW846 8270C
Lab Prep Batch: WG58886
Units: ug/Kgdrywt

CAS#	Compound	Flags	Results	DF	PQL	Adj.PQL	Adj.MDL	
84-74-2	Di-n-butylphthalate	U	370	1.0	330	370	110	
85-68-7	Butylbenzylphthalate	U	370	1.0	330	370	100	
91-94-1	3,3'-Dichlorobenzidine	U/UJ	560	1.0	500	560	130	CCH
218-01-9	Chrysene	U	370	1.0	330	370	110	
117-81-7	bis(2-Ethylhexyl)phthalate	U	370	1.0	330	370	110	
117-84-0	Di-n-octylphthalate	U	370	1.0	330	370	240	
367-12-4	2-Fluorophenol		67%					
13127-88-3	Phenol-D6		70%					
4165-60-0	Nitrobenzene-D5		71%					
321-60-8	2-Fluorobiphenyl		73%					
118-79-6	2,4,6-Tribromophenol		75%					
1718-51-0	Terphenyl-D14		99%					

MW 3/2/09

KATAHDIN ANALYTICAL SERVICES
Report of Analytical Results

Client: CH2MHill
Project: TO-009 Lejeune
PO No:
Sample Date: 12/04/08
Received Date: 12/05/08
Extraction Date: 12/08/08
Analysis Date: 19-DEC-2008 04:36
Report Date: 12/30/2008
Matrix: SOIL
% Solids: 84.9

Lab ID: SB7002-13
Client ID: MR08-SS077-08D
SDG: TO9-11
Extracted by: CB
Extraction Method: SW846 3550
Analyst: JCG
Analysis Method: SW846 8270C
Lab Prep Batch: WG58886
Units: ug/Kgdrywt

CAS#	Compound	Flags	Results	DF	PQL	Adj.PQL	Adj.MDL	
100-52-7	Benzaldehyde	~~U~~ UJ	590	1.0	500	590	140	CCH
108-95-2	Phenol	U	590	1.0	500	590	180	
111-44-4	Bis(2-Chloroethyl)ether	U	390	1.0	330	390	95	
95-57-8	2-Chlorophenol	U	590	1.0	500	590	190	
95-48-7	2-Methylphenol	U	710	1.0	600	710	240	
108-60-1	2,2'-Oxybis(1-chloropropane)	U	390	1.0	330	390	100	
98-86-2	Acetophenone	U	710	1.0	600	710	210	
621-64-7	N-Nitroso-di-n-propylamine	U	390	1.0	330	390	98	
65794-96-9	3&4-Methylphenol	U	710	1.0	600	710	220	
67-72-1	Hexachloroethane	U	390	1.0	330	390	110	
98-95-3	Nitrobenzene	U	390	1.0	330	390	110	
78-59-1	Isophorone	U	390	1.0	330	390	88	
88-75-5	2-Nitrophenol	U	710	1.0	600	710	200	
105-67-9	2,4-Dimethylphenol	U	590	1.0	500	590	190	
111-91-1	Bis(2-Chloroethoxy)methane	U	390	1.0	330	390	110	
120-83-2	2,4-Dichlorophenol	U	590	1.0	500	590	180	
106-47-8	4-Chloroaniline	U	590	1.0	500	590	140	
105-60-2	Caprolactam	U	590	1.0	500	590	170	
59-50-7	4-Chloro-3-Methylphenol	U	590	1.0	500	590	200	
88-06-2	2,4,6-Trichlorophenol	U	590	1.0	500	590	180	
95-95-4	2,4,5-Trichlorophenol	U	590	1.0	500	590	180	
91-58-7	2-Chloronaphthalene	U	390	1.0	330	390	100	
92-52-4	1,1'-Biphenyl	U	390	1.0	330	390	86	
88-74-4	2-Nitroaniline	U	590	1.0	500	590	88	
131-11-3	Dimethyl Phthalate	U	390	1.0	330	390	92	
606-20-2	2,6-Dinitrotoluene	U	390	1.0	330	390	93	
208-96-8	Acenaphthylene	U	390	1.0	330	390	82	
99-09-2	3-Nitroaniline	U	590	1.0	500	590	110	
83-32-9	Acenaphthene	U	390	1.0	330	390	76	
51-28-5	2,4-Dinitrophenol	~~U~~ UJ	1400	1.0	1200	1400	440	CCH
132-64-9	Dibenzofuran	U	390	1.0	330	390	93	
100-02-7	4-Nitrophenol	U	1400	1.0	1200	1400	360	
121-14-2	2,4-Dinitrotoluene	U	390	1.0	330	390	100	
84-66-2	Diethylphthalate	U	390	1.0	330	390	94	
7005-72-3	4-Chlorophenyl-phenylether	U	390	1.0	330	390	92	
100-01-6	4-Nitroaniline	U	590	1.0	500	590	160	
534-52-1	4,6-Dinitro-2-Methylphenol	U	1400	1.0	1200	1400	400	
86-30-6	N-Nitrosodiphenylamine	U	780	1.0	660	780	260	
101-55-3	4-Bromophenyl-phenylether	U	390	1.0	330	390	100	
1912-24-9	Atrazine	U	390	1.0	330	390	110	
87-86-5	Pentachlorophenol	U	960	1.0	820	960	280	
120-12-7	Anthracene	U	390	1.0	330	390	99	
86-74-8	Carbazole	U	590	1.0	500	590	130	

MW 3/2/09

KATAHDIN ANALYTICAL SERVICES
Report of Analytical Results

Client: CH2MHill
Project: TO-009 Lejeune
PO No:
Sample Date: 12/04/08
Received Date: 12/05/08
Extraction Date: 12/08/08
Analysis Date: 19-DEC-2008 04:36
Report Date: 12/30/2008
Matrix: SOIL
% Solids: 84.9

Lab ID: SB7002-13
Client ID: MR08-SS077-08D
SDG: TO9-11
Extracted by: CB
Extraction Method: SW846 3550
Analyst: JCG
Analysis Method: SW846 8270C
Lab Prep Batch: WG58886
Units: ug/Kgdrywt

CAS#	Compound	Flags	Results	DF	PQL	Adj.PQL	Adj.MDL	
84-74-2	Di-n-butylphthalate	U	390	1.0	330	390	120	
85-68-7	Butylbenzylphthalate	U	390	1.0	330	390	110	
91-94-1	3,3'-Dichlorobenzidine	~~J~~ UJ	590	1.0	500	590	130	CCH
218-01-9	Chrysene	J	340	1.0	330	390	110	
117-81-7	bis(2-Ethylhexyl)phthalate	U	390	1.0	330	390	120	
117-84-0	Di-n-octylphthalate	U	390	1.0	330	390	250	
367-12-4	2-Fluorophenol		68%					
13127-88-3	Phenol-D6		75%					
4165-60-0	Nitrobenzene-D5		72%					
321-60-8	2-Fluorobiphenyl		80%					
118-79-6	2,4,6-Tribromophenol		96%					
1718-51-0	Terphenyl-D14		106%					

fcw
3/2/09

KATAHDIN ANALYTICAL SERVICES
Report of Analytical Results

Client: CH2MHill
Project: TO-009 Lejeune
PO No:
Sample Date: 12/04/08
Received Date: 12/05/08
Extraction Date: 12/08/08
Analysis Date: 18-DEC-2008 13:28
Report Date: 12/30/2008
Matrix: SOIL
% Solids: 88.2

Lab ID: SB7002-15
Client ID: MR08-IS077-6-7-08D
SDG: TO9-11
Extracted by: CB
Extraction Method: SW846 3550
Analyst: JLP
Analysis Method: SW846 8270C
Lab Prep Batch: WG58886
Units: ug/Kgdrywt

CAS#	Compound	Flags	Results	DF	PQL	Adj.PQL	Adj.MDL
100-52-7	Benzaldehyde	~~U~~ UJ	570	1.0	500	570	140 CM
108-95-2	Phenol	U	570	1.0	500	570	180
111-44-4	Bis(2-Chloroethyl)ether	U	370	1.0	330	370	92
95-57-8	2-Chlorophenol	U	570	1.0	500	570	190
95-48-7	2-Methylphenol	U	680	1.0	600	680	230
108-60-1	2,2'-Oxybis(1-chloropropane)	U	370	1.0	330	370	100
98-86-2	Acetophenone	U	680	1.0	600	680	200
621-64-7	N-Nitroso-di-n-propylamine	U	370	1.0	330	370	94
65794-96-9	3&4-Methylphenol	U	680	1.0	600	680	210
67-72-1	Hexachloroethane	U	370	1.0	330	370	110
98-95-3	Nitrobenzene	U	370	1.0	330	370	100
78-59-1	Isophorone	U	370	1.0	330	370	85
88-75-5	2-Nitrophenol	U	680	1.0	600	680	190
105-67-9	2,4-Dimethylphenol	U	570	1.0	500	570	190
111-91-1	Bis(2-Chloroethoxy)methane	U	370	1.0	330	370	110
120-83-2	2,4-Dichlorophenol	U	570	1.0	500	570	170
106-47-8	4-Chloroaniline	U	570	1.0	500	570	130
105-60-2	Caprolactam	U	570	1.0	500	570	160
59-50-7	4-Chloro-3-Methylphenol	U	570	1.0	500	570	190
88-06-2	2,4,6-Trichlorophenol	U	570	1.0	500	570	180
95-95-4	2,4,5-Trichlorophenol	U	570	1.0	500	570	180
91-58-7	2-Chloronaphthalene	U	370	1.0	330	370	99
92-52-4	1,1'-Biphenyl	U	370	1.0	330	370	83
88-74-4	2-Nitroaniline	U	570	1.0	500	570	85
131-11-3	Dimethyl Phthalate	U	370	1.0	330	370	88
606-20-2	2,6-Dinitrotoluene	U	370	1.0	330	370	90
208-96-8	Acenaphthylene	U	370	1.0	330	370	79
99-09-2	3-Nitroaniline	U	570	1.0	500	570	110
83-32-9	Acenaphthene	U	370	1.0	330	370	74
51-28-5	2,4-Dinitrophenol	U	1400	1.0	1200	1400	430
132-64-9	Dibenzofuran	U	370	1.0	330	370	90
100-02-7	4-Nitrophenol	U	1400	1.0	1200	1400	350
121-14-2	2,4-Dinitrotoluene	U	370	1.0	330	370	96
84-66-2	Diethylphthalate	U	370	1.0	330	370	91
7005-72-3	4-Chlorophenyl-phenylether	U	370	1.0	330	370	88
100-01-6	4-Nitroaniline	U	570	1.0	500	570	150
534-52-1	4,6-Dinitro-2-Methylphenol	U	1400	1.0	1200	1400	380
86-30-6	N-Nitrosodiphenylamine	U	750	1.0	660	750	250
101-55-3	4-Bromophenyl-phenylether	U	370	1.0	330	370	96
1912-24-9	Atrazine	U	370	1.0	330	370	100
87-86-5	Pentachlorophenol	U	930	1.0	820	930	270
120-12-7	Anthracene	U	370	1.0	330	370	95
86-74-8	Carbazole	U	570	1.0	500	570	120

LW
3/2/09

15

KATAHDIN ANALYTICAL SERVICES
Report of Analytical Results

Client: CH2MHill
Project: TO-009 Lejeune
PO No:
Sample Date: 12/04/08
Received Date: 12/05/08
Extraction Date: 12/08/08
Analysis Date: 18-DEC-2008 13:28
Report Date: 12/30/2008
Matrix: SOIL
% Solids: 88.2

Lab ID: SB7002-15
Client ID: MR08-IS077-6-7-08D
SDG: TO9-11
Extracted by: CB
Extraction Method: SW846 3550
Analyst: JLP
Analysis Method: SW846 8270C
Lab Prep Batch: WG58886
Units: ug/Kgdrywt

CAS#	Compound	Flags	Results	DF	PQL	Adj.PQL	Adj.MDL	
84-74-2	Di-n-butylphthalate	U	370	1.0	330	370	110	
85-68-7	Butylbenzylphthalate	U	370	1.0	330	370	100	
91-94-1	3,3'-Dichlorobenzidine	~~U~~ UJ	570	1.0	500	570	130	CCH
218-01-9	Chrysene	U	370	1.0	330	370	110	
117-81-7	bis(2-Ethylhexyl)phthalate	U	370	1.0	330	370	110	
117-84-0	Di-n-octylphthalate	U	370	1.0	330	370	240	
367-12-4	2-Fluorophenol		71%					
13127-88-3	Phenol-D6		77%					
4165-60-0	Nitrobenzene-D5		76%					
321-60-8	2-Fluorobiphenyl		83%					
118-79-6	2,4,6-Tribromophenol		75%					
1718-51-0	Terphenyl-D14		100%					

JW
3/2/09

16

KATAHDIN ANALYTICAL SERVICES
Report of Analytical Results

Client: CH2MHill
Project: TO-009 Lejeune
PO No:
Sample Date: 12/04/08
Received Date: 12/05/08
Extraction Date: 12/08/08
Analysis Date: 19-DEC-2008 05:18
Report Date: 12/30/2008
Matrix: SOIL
% Solids: 84.4

Lab ID: SB7002-17
Client ID: MR08-SS078-08D
SDG: TO9-11
Extracted by: CB
Extraction Method: SW846 3550
Analyst: JCG
Analysis Method: SW846 8270C
Lab Prep Batch: WG58886
Units: ug/Kgdrywt

CAS#	Compound	Flags	Results	DF	PQL	Adj.PQL	Adj.MDL	
100-52-7	Benzaldehyde	~~J~~ UJ	590	1.0	500	590	140	CCH
108-95-2	Phenol	U	590	1.0	500	590	180	
111-44-4	Bis(2-Chloroethyl)ether	U	390	1.0	330	390	96	
95-57-8	2-Chlorophenol	U	590	1.0	500	590	190	
95-48-7	2-Methylphenol	U	710	1.0	600	710	240	
108-60-1	2,2'-Oxybis(1-chloropropane)	U	390	1.0	330	390	100	
98-86-2	Acetophenone	U	710	1.0	600	710	210	
621-64-7	N-Nitroso-di-n-propylamine	U	390	1.0	330	390	98	
65794-96-9	3&4-Methylphenol	U	710	1.0	600	710	220	
67-72-1	Hexachloroethane	U	390	1.0	330	390	110	
98-95-3	Nitrobenzene	U	390	1.0	330	390	110	
78-59-1	Isophorone	U	390	1.0	330	390	89	
88-75-5	2-Nitrophenol	U	710	1.0	600	710	200	
105-67-9	2,4-Dimethylphenol	U	590	1.0	500	590	200	
111-91-1	Bis(2-Chloroethoxy)methane	U	390	1.0	330	390	110	
120-83-2	2,4-Dichlorophenol	U	590	1.0	500	590	180	
106-47-8	4-Chloroaniline	U	590	1.0	500	590	140	
105-60-2	Caprolactam	U	590	1.0	500	590	170	
59-50-7	4-Chloro-3-Methylphenol	U	590	1.0	500	590	200	
88-06-2	2,4,6-Trichlorophenol	U	590	1.0	500	590	180	
95-95-4	2,4,5-Trichlorophenol	U	590	1.0	500	590	180	
91-58-7	2-Chloronaphthalene	U	390	1.0	330	390	100	
92-52-4	1,1'-Biphenyl	U	390	1.0	330	390	86	
88-74-4	2-Nitroaniline	U	590	1.0	500	590	89	
131-11-3	Dimethyl Phthalate	U	390	1.0	330	390	92	
606-20-2	2,6-Dinitrotoluene	U	390	1.0	330	390	94	
208-96-8	Acenaphthylene	U	390	1.0	330	390	83	
99-09-2	3-Nitroaniline	U	590	1.0	500	590	110	
83-32-9	Acenaphthene	U	390	1.0	330	390	77	
51-28-5	2,4-Dinitrophenol	~~J~~ UJ	1400	1.0	1200	1400	450	CCH
132-64-9	Dibenzofuran	U	390	1.0	330	390	94	
100-02-7	4-Nitrophenol	U	1400	1.0	1200	1400	370	
121-14-2	2,4-Dinitrotoluene	U	390	1.0	330	390	100	
84-66-2	Diethylphthalate	U	390	1.0	330	390	95	
7005-72-3	4-Chlorophenyl-phenylether	U	390	1.0	330	390	92	
100-01-6	4-Nitroaniline	U	590	1.0	500	590	160	
534-52-1	4,6-Dinitro-2-Methylphenol	U	1400	1.0	1200	1400	400	
86-30-6	N-Nitrosodiphenylamine	U	780	1.0	660	780	260	
101-55-3	4-Bromophenyl-phenylether	U	390	1.0	330	390	100	
1912-24-9	Atrazine	U	390	1.0	330	390	110	
87-86-5	Pentachlorophenol	U	970	1.0	820	970	280	
120-12-7	Anthracene	U	390	1.0	330	390	100	
86-74-8	Carbazole	U	590	1.0	500	590	130	

MW 3/2/09

16

KATAHDIN ANALYTICAL SERVICES
Report of Analytical Results

Client: CH2MHill
Project: TO-009 Lejeune
PO No:
Sample Date: 12/04/08
Received Date: 12/05/08
Extraction Date: 12/08/08
Analysis Date: 19-DEC-2008 05:18
Report Date: 12/30/2008
Matrix: SOIL
% Solids: 84.4

Lab ID: SB7002-17
Client ID: MR08-SS078-08D
SDG: TO9-11
Extracted by: CB
Extraction Method: SW846 3550
Analyst: JCG
Analysis Method: SW846 8270C
Lab Prep Batch: WG58886
Units: ug/Kgdrywt

CAS#	Compound	Flags	Results	DF	PQL	Adj.PQL	Adj.MDL	
84-74-2	Di-n-butylphthalate	U	390	1.0	330	390	120	
85-68-7	Butylbenzylphthalate	U	390	1.0	330	390	110	
91-94-1	3,3'-Dichlorobenzidine	~~U~~ UJ	590	1.0	500	590	140	CCH
218-01-9	Chrysene	U	390	1.0	330	390	110	
117-81-7	bis(2-Ethylhexyl)phthalate	U	390	1.0	330	390	120	
117-84-0	Di-n-octylphthalate	U	390	1.0	330	390	250	
367-12-4	2-Fluorophenol		78%					
13127-88-3	Phenol-D6		86%					
4165-60-0	Nitrobenzene-D5		83%					
321-60-8	2-Fluorobiphenyl		85%					
118-79-6	2,4,6-Tribromophenol		99%					
1718-51-0	Terphenyl-D14		112%					

lw 3/2/09

KATAHDIN ANALYTICAL SERVICES
Report of Analytical Results

Client: CH2MHill
Project: TO-009 Lejeune
PO No:
Sample Date: 12/04/08
Received Date: 12/05/08
Extraction Date: 12/08/08
Analysis Date: 18-DEC-2008 14:11
Report Date: 12/30/2008
Matrix: SOIL
% Solids: 87.3

Lab ID: SB7002-19
Client ID: MR08-IS078-6-7-08D
SDG: TO9-11
Extracted by: CB
Extraction Method: SW846 3550
Analyst: JLP
Analysis Method: SW846 8270C
Lab Prep Batch: WG58886
Units: ug/Kgdrywt

CAS#	Compound	Flags	Results	DF	PQL	Adj.PQL	Adj.MDL
100-52-7	Benzaldehyde	~~U~~ UJ	570	1.0	500	570	140 CCH
108-95-2	Phenol	U	570	1.0	500	570	180
111-44-4	Bis(2-Chloroethyl)ether	U	380	1.0	330	380	93
95-57-8	2-Chlorophenol	U	570	1.0	500	570	190
95-48-7	2-Methylphenol	U	690	1.0	600	690	230
108-60-1	2,2'-Oxybis(1-chloropropane)	U	380	1.0	330	380	100
98-86-2	Acetophenone	U	690	1.0	600	690	200
621-64-7	N-Nitroso-di-n-propylamine	U	380	1.0	330	380	95
65794-96-9	3&4-Methylphenol	U	690	1.0	600	690	210
67-72-1	Hexachloroethane	U	380	1.0	330	380	110
98-95-3	Nitrobenzene	U	380	1.0	330	380	100
78-59-1	Isophorone	U	380	1.0	330	380	86
88-75-5	2-Nitrophenol	U	690	1.0	600	690	190
105-67-9	2,4-Dimethylphenol	U	570	1.0	500	570	190
111-91-1	Bis(2-Chloroethoxy)methane	U	380	1.0	330	380	110
120-83-2	2,4-Dichlorophenol	U	570	1.0	500	570	170
106-47-8	4-Chloroaniline	U	570	1.0	500	570	140
105-60-2	Caprolactam	U	570	1.0	500	570	160
59-50-7	4-Chloro-3-Methylphenol	U	570	1.0	500	570	190
88-06-2	2,4,6-Trichlorophenol	U	570	1.0	500	570	180
95-95-4	2,4,5-Trichlorophenol	U	570	1.0	500	570	180
91-58-7	2-Chloronaphthalene	U	380	1.0	330	380	100
92-52-4	1,1'-Biphenyl	U	380	1.0	330	380	84
88-74-4	2-Nitroaniline	U	570	1.0	500	570	86
131-11-3	Dimethyl Phthalate	U	380	1.0	330	380	89
606-20-2	2,6-Dinitrotoluene	U	380	1.0	330	380	90
208-96-8	Acenaphthylene	U	380	1.0	330	380	80
99-09-2	3-Nitroaniline	U	570	1.0	500	570	110
83-32-9	Acenaphthene	U	380	1.0	330	380	74
51-28-5	2,4-Dinitrophenol	U	1400	1.0	1200	1400	430
132-64-9	Dibenzofuran	U	380	1.0	330	380	90
100-02-7	4-Nitrophenol	U	1400	1.0	1200	1400	350
121-14-2	2,4-Dinitrotoluene	U	380	1.0	330	380	97
84-66-2	Diethylphthalate	U	380	1.0	330	380	92
7005-72-3	4-Chlorophenyl-phenylether	U	380	1.0	330	380	89
100-01-6	4-Nitroaniline	U	570	1.0	500	570	150
534-52-1	4,6-Dinitro-2-Methylphenol	U	1400	1.0	1200	1400	380
86-30-6	N-Nitrosodiphenylamine	U	760	1.0	660	760	250
101-55-3	4-Bromophenyl-phenylether	U	380	1.0	330	380	97
1912-24-9	Atrazine	U	380	1.0	330	380	100
87-86-5	Pentachlorophenol	U	940	1.0	820	940	270
120-12-7	Anthracene	U	380	1.0	330	380	96
86-74-8	Carbazole	U	570	1.0	500	570	130

lw 3/2/09

KATAHDIN ANALYTICAL SERVICES
Report of Analytical Results

Client: CH2MHill
Project: TO-009 Lejeune
PO No:
Sample Date: 12/04/08
Received Date: 12/05/08
Extraction Date: 12/08/08
Analysis Date: 18-DEC-2008 14:11
Report Date: 12/30/2008
Matrix: SOIL
% Solids: 87.3

Lab ID: SB7002-19
Client ID: MR08-IS078-6-7-08D
SDG: TO9-11
Extracted by: CB
Extraction Method: SW846 3550
Analyst: JLP
Analysis Method: SW846 8270C
Lab Prep Batch: WG58886
Units: ug/Kgdrywt

CAS#	Compound	Flags	Results	DF	PQL	Adj.PQL	Adj.MDL
84-74-2	Di-n-butylphthalate	U	380	1.0	330	380	120
85-68-7	Butylbenzylphthalate	U	380	1.0	330	380	110
91-94-1	3,3'-Dichlorobenzidine	~~U~~ UJ	570	1.0	500	570	130 CCH
218-01-9	Chrysene	U	380	1.0	330	380	110
117-81-7	bis(2-Ethylhexyl)phthalate	U	380	1.0	330	380	110
117-84-0	Di-n-octylphthalate	U	380	1.0	330	380	240
367-12-4	2-Fluorophenol		68%				
13127-88-3	Phenol-D6		72%				
4165-60-0	Nitrobenzene-D5		72%				
321-60-8	2-Fluorobiphenyl		78%				
118-79-6	2,4,6-Tribromophenol		72%				
1718-51-0	Terphenyl-D14		94%				

lew
3/2/09

KATAHDIN ANALYTICAL SERVICES
Report of Analytical Results

Client: CH2MHill
Project: TO-009 Lejeune
PO No:
Sample Date: 12/04/08
Received Date: 12/05/08
Extraction Date: 12/08/08
Analysis Date: 30-DEC-2008 11:07
Report Date: 12/30/2008
Matrix: SOIL
% Solids: 79.9

Lab ID: SB7002-21
Client ID: MR08-SS079-08D
SDG: TO9-11
Extracted by: CB
Extraction Method: SW846 3550
Analyst: JLP
Analysis Method: SW846 8270C
Lab Prep Batch: WG58886
Units: ug/Kgdrywt

CAS#	Compound	Flags	Results	DF	PQL	Adj.PQL	Adj.MDL	
100-52-7	Benzaldehyde	~~U~~ UJ	620	1.0	500	620	150	CCH
108-95-2	Phenol	U	620	1.0	500	620	200	
111-44-4	Bis(2-Chloroethyl)ether	U	410	1.0	330	410	100	
95-57-8	2-Chlorophenol	U	620	1.0	500	620	200	
95-48-7	2-Methylphenol	U	750	1.0	600	750	250	
108-60-1	2,2'-Oxybis(1-chloropropane)	U	410	1.0	330	410	110	
98-86-2	Acetophenone	U	750	1.0	600	750	220	
621-64-7	N-Nitroso-di-n-propylamine	U	410	1.0	330	410	100	
65794-96-9	3&4-Methylphenol	U	750	1.0	600	750	230	
67-72-1	Hexachloroethane	U	410	1.0	330	410	120	
98-95-3	Nitrobenzene	U	410	1.0	330	410	110	
78-59-1	Isophorone	U	410	1.0	330	410	94	
88-75-5	2-Nitrophenol	U	750	1.0	600	750	210	
105-67-9	2,4-Dimethylphenol	U	620	1.0	500	620	210	
111-91-1	Bis(2-Chloroethoxy)methane	U	410	1.0	330	410	120	
120-83-2	2,4-Dichlorophenol	U	620	1.0	500	620	190	
106-47-8	4-Chloroaniline	~~U~~ UJ	620	1.0	500	620	150	CCH
105-60-2	Caprolactam	~~U~~ UJ	620	1.0	500	620	180	CCH
59-50-7	4-Chloro-3-Methylphenol	U	620	1.0	500	620	210	
88-06-2	2,4,6-Trichlorophenol	U	620	1.0	500	620	190	
95-95-4	2,4,5-Trichlorophenol	U	620	1.0	500	620	190	
91-58-7	2-Chloronaphthalene	U	410	1.0	330	410	110	
92-52-4	1,1'-Biphenyl	U	410	1.0	330	410	91	
88-74-4	2-Nitroaniline	U	620	1.0	500	620	94	
131-11-3	Dimethyl Phthalate	U	410	1.0	330	410	98	
606-20-2	2,6-Dinitrotoluene	U	410	1.0	330	410	99	
208-96-8	Acenaphthylene	U	410	1.0	330	410	88	
99-09-2	3-Nitroaniline	~~U~~ UJ	620	1.0	500	620	120	CCH
83-32-9	Acenaphthene	U	410	1.0	330	410	81	
51-28-5	2,4-Dinitrophenol	U	1500	1.0	1200	1500	470	
132-64-9	Dibenzofuran	U	410	1.0	330	410	99	
100-02-7	4-Nitrophenol	U	1500	1.0	1200	1500	390	
121-14-2	2,4-Dinitrotoluene	U	410	1.0	330	410	110	
84-66-2	Diethylphthalate	U	410	1.0	330	410	100	
7005-72-3	4-Chlorophenyl-phenylether	U	410	1.0	330	410	98	
100-01-6	4-Nitroaniline	~~U~~ UJ	620	1.0	500	620	170	CCH
534-52-1	4,6-Dinitro-2-Methylphenol	U	1500	1.0	1200	1500	420	
86-30-6	N-Nitrosodiphenylamine	U	820	1.0	660	820	270	
101-55-3	4-Bromophenyl-phenylether	U	410	1.0	330	410	110	
1912-24-9	Atrazine	U	410	1.0	330	410	110	
87-86-5	Pentachlorophenol	U	1000	1.0	820	1000	300	
120-12-7	Anthracene	U	410	1.0	330	410	100	
86-74-8	Carbazole	~~U~~ UJ	620	1.0	500	620	140	CCH

gwd 3/2/09

KATAHDIN ANALYTICAL SERVICES
Report of Analytical Results

Client: CH2MHill
Project: TO-009 Lejeune
PO No:
Sample Date: 12/04/08
Received Date: 12/05/08
Extraction Date: 12/08/08
Analysis Date: 30-DEC-2008 11:07
Report Date: 12/30/2008
Matrix: SOIL
% Solids: 79.9

Lab ID: SB7002-21
Client ID: MR08-SS079-08D
SDG: TO9-11
Extracted by: CB
Extraction Method: SW846 3550
Analyst: JLP
Analysis Method: SW846 8270C
Lab Prep Batch: WG58886
Units: ug/Kgdrywt

CAS#	Compound	Flags	Results	DF	PQL	Adj.PQL	Adj.MDL	
84-74-2	Di-n-butylphthalate	U	410	1.0	330	410	130	
85-68-7	Butylbenzylphthalate	U	410	1.0	330	410	120	
91-94-1	3,3'-Dichlorobenzidine	~~U~~ UJ	620	1.0	500	620	140	CCH
218-01-9	Chrysene	U	410	1.0	330	410	120	
117-81-7	bis(2-Ethylhexyl)phthalate	U	410	1.0	330	410	120	
117-84-0	Di-n-octylphthalate	U	410	1.0	330	410	260	
367-12-4	2-Fluorophenol		72%					
13127-88-3	Phenol-D6		78%					
4165-60-0	Nitrobenzene-D5		72%					
321-60-8	2-Fluorobiphenyl		82%					
118-79-6	2,4,6-Tribromophenol		99%					
1718-51-0	Terphenyl-D14		105%					

LWD
3/2/09

KATAHDIN ANALYTICAL SERVICES
Report of Analytical Results

Client: CH2MHill
Project: TO-009 Lejeune
PO No:
Sample Date: 12/04/08
Received Date: 12/05/08
Extraction Date: 12/08/08
Analysis Date: 30-DEC-2008 11:50
Report Date: 12/30/2008
Matrix: SOIL
% Solids: 79.3

Lab ID: SB7002-23
Client ID: MR08-SS079D-08D
SDG: TO9-11
Extracted by: CB
Extraction Method: SW846 3550
Analyst: JLP
Analysis Method: SW846 8270C
Lab Prep Batch: WG58886
Units: ug/Kgdrywt

CAS#	Compound	Flags	Results	DF	PQL	Adj.PQL	Adj.MDL	
100-52-7	Benzaldehyde	~~U~~ UJ	630	1.0	500	630	150	CCH
108-95-2	Phenol	U	630	1.0	500	630	200	
111-44-4	Bis(2-Chloroethyl)ether	U	420	1.0	330	420	100	
95-57-8	2-Chlorophenol	U	630	1.0	500	630	210	
95-48-7	2-Methylphenol	U	760	1.0	600	760	250	
108-60-1	2,2'-Oxybis(1-chloropropane)	U	420	1.0	330	420	110	
98-86-2	Acetophenone	U	760	1.0	600	760	220	
621-64-7	N-Nitroso-di-n-propylamine	U	420	1.0	330	420	100	
65794-96-9	3&4-Methylphenol	U	760	1.0	600	760	240	
67-72-1	Hexachloroethane	U	420	1.0	330	420	120	
98-95-3	Nitrobenzene	U	420	1.0	330	420	110	
78-59-1	Isophorone	U	420	1.0	330	420	94	
88-75-5	2-Nitrophenol	U	760	1.0	600	760	210	
105-67-9	2,4-Dimethylphenol	U	630	1.0	500	630	210	
111-91-1	Bis(2-Chloroethoxy)methane	U	420	1.0	330	420	120	
120-83-2	2,4-Dichlorophenol	U	630	1.0	500	630	190	
106-47-8	4-Chloroaniline	~~U~~ UJ	630	1.0	500	630	150	CCH
105-60-2	Caprolactam	~~U~~ UJ	630	1.0	500	630	180	CCH
59-50-7	4-Chloro-3-Methylphenol	U	630	1.0	500	630	210	
88-06-2	2,4,6-Trichlorophenol	U	630	1.0	500	630	200	
95-95-4	2,4,5-Trichlorophenol	U	630	1.0	500	630	200	
91-58-7	2-Chloronaphthalene	U	420	1.0	330	420	110	
92-52-4	1,1'-Biphenyl	U	420	1.0	330	420	92	
88-74-4	2-Nitroaniline	U	630	1.0	500	630	94	
131-11-3	Dimethyl Phthalate	U	420	1.0	330	420	98	
606-20-2	2,6-Dinitrotoluene	U	420	1.0	330	420	100	
208-96-8	Acenaphthylene	U	420	1.0	330	420	88	
99-09-2	3-Nitroaniline	~~U~~ UJ	630	1.0	500	630	120	CCH
83-32-9	Acenaphthene	U	420	1.0	330	420	82	
51-28-5	2,4-Dinitrophenol	U	1500	1.0	1200	1500	480	
132-64-9	Dibenzofuran	U	420	1.0	330	420	100	
100-02-7	4-Nitrophenol	U	1500	1.0	1200	1500	390	
121-14-2	2,4-Dinitrotoluene	U	420	1.0	330	420	110	
84-66-2	Diethylphthalate	U	420	1.0	330	420	100	
7005-72-3	4-Chlorophenyl-phenylether	U	420	1.0	330	420	98	
100-01-6	4-Nitroaniline	~~U~~ UJ	630	1.0	500	630	170	CCH
534-52-1	4,6-Dinitro-2-Methylphenol	U	1500	1.0	1200	1500	420	
86-30-6	N-Nitrosodiphenylamine	U	830	1.0	660	830	280	
101-55-3	4-Bromophenyl-phenylether	U	420	1.0	330	420	110	
1912-24-9	Atrazine	U	420	1.0	330	420	110	
87-86-5	Pentachlorophenol	U	1000	1.0	820	1000	300	
120-12-7	Anthracene	U	420	1.0	330	420	100	
86-74-8	Carbazole	~~U~~ UJ	630	1.0	500	630	140	CCH

gw 3/2/09

19

KATAHDIN ANALYTICAL SERVICES
Report of Analytical Results

Client: CH2MHill
Project: TO-009 Lejeune
PO No:
Sample Date: 12/04/08
Received Date: 12/05/08
Extraction Date: 12/08/08
Analysis Date: 30-DEC-2008 11:50
Report Date: 12/30/2008
Matrix: SOIL
% Solids: 79.3

Lab ID: SB7002-23
Client ID: MR08-SS079D-08D
SDG: TO9-11
Extracted by: CB
Extraction Method: SW846 3550
Analyst: JLP
Analysis Method: SW846 8270C
Lab Prep Batch: WG58886
Units: ug/Kgdrywt

CAS#	Compound	Flags	Results	DF	PQL	Adj.PQL	Adj.MDL	
84-74-2	Di-n-butylphthalate	U	420	1.0	330	420	130	
85-68-7	Butylbenzylphthalate	U	420	1.0	330	420	120	
91-94-1	3,3'-Dichlorobenzidine	~~J~~ UJ	630	1.0	500	630	140	CCH
218-01-9	Chrysene	U	420	1.0	330	420	120	
117-81-7	bis(2-Ethylhexyl)phthalate	U	420	1.0	330	420	120	
117-84-0	Di-n-octylphthalate	U	420	1.0	330	420	270	
367-12-4	2-Fluorophenol		78%					
13127-88-3	Phenol-D6		84%					
4165-60-0	Nitrobenzene-D5		80%					
321-60-8	2-Fluorobiphenyl		92%					
118-79-6	2,4,6-Tribromophenol		102%					
1718-51-0	Terphenyl-D14		102%					

LWD
3/2/09

ENVIRONMENTAL
Data Services, Inc.

POLYNUCLEAR AROMATIC COMPOUNDS BY 8270SIM

USEPA Region IV - Level IV Review

Site: MCB Camp Lejeune, TO-09 SDG #: TO9-12

Client: CH2M HILL, Inc., Virginia Beach, Virginia Date: March 2, 2009

Laboratory: Katahdin Analytical Services, Scarborough, Maine Reviewer: Nancy Weaver

EDS ID	Client Sample ID	Laboratory Sample ID	Matrix
1	MR08-IS079-6-7-08D	SB7003-2	Soil
2	MR08-IS079D-6-7-08D	SB7003-4	Soil
3	MR08-SS097-08D	SB7003-6	Soil
4	MR08-IS097-6-7-08D	SB7003-8	Soil
5	MR08-SS096-08D	SB7003-10	Soil
6	MR08-IS096-6-7-08D	SB7003-12	Soil
7	MR08-SS095-08D	SB7003-14	Soil
8	MR08-IS095-6-7-08D	SB7003-16	Soil
9	MR08-SS094-08D	SB7003-18	Soil
10	MR08-IS094-5-6-08D	SB7003-20	Soil
11	MR08-SS092-08D	SB7003-22	Soil
12	MR08-IS092-4-5-08D	SB7003-24	Soil
13	MR08-SS091-08D	SB7032-2	Soil
14	MR08-IS091-2-3-08D	SB7032-4	Soil
15	MR08-SS093-08D	SB7032-6	Soil
16	MR08-IS093-2-3-08D	SB7032-8	Soil
17	MR08-SS103-08D	SB7032-10	Soil
18	MR08-IS103-3-4-08D	SB7032-12	Soil
19	MR08-SS116-08D	SB7032-14	Soil
20	MR08-IS116-3-4-08D	SB7032-16	Soil

The USEPA "Contract Laboratory Program National Functional Guidelines for Organic Data Review," October 1999, and professional judgment were used in evaluating the data in this summary report.

Holding Times - All samples were extracted within 14 days for soil samples and analyzed within 40 days for all samples.

GC/MS Tuning - All of the DFTPP tunes in the initial and continuing calibrations met the percent relative abundance criteria.

Initial Calibration - The initial calibrations exhibited acceptable %RSD and mean RRF values.

Continuing Calibration - The continuing calibrations exhibited acceptable %D and RRF values except the following.

CCAL Date	Compound	%D/RRF	Qualifier	Affected Samples
12/20/08	2-Methylnaphthalene	25.54%	J/UJ	1-10
	Phenanthrene	32.86%	J/UJ	1-10
	Hexachlorobenzene	25.30%	J/UJ	1-10
	Hexachlorobutadiene	31.02%	J/UJ	1-10
12/22/08	Naphthalene	25.38%	J/UJ	11-20
	Hexachlorocyclopentadiene	48.92%	J/UJ	11-20

Surrogates - Three samples exhibited high %R values for 2,4-dibromophenol however acid compounds were not reported so no qualifiers were required. All other samples exhibited acceptable surrogate recoveries.

MS/MSD - A MS/MSD sample was not analyzed.

Laboratory Control Sample - The LCS samples exhibited acceptable %R values except the following.

LCS ID	Compound	%R	Qualifier	Affected Samples
WG58887-LCS	Pyrene	118%	J	3-5, 7
	Benzo (k) fluoranthene	132%	J	3, 5, 7

Internal Standard (IS) Area Performance - All internal standards met response and retention time (RT) criteria.

Method Blank - The method blanks were free of contamination.

Field, Equipment Blank - Field QC results are summarized below.

Blank ID	Compound	Conc. ug/L	Action Level ug/L	Qualifier	Affected Samples
MR08-EB01120408-IS	None - ND	-	-	-	-
MR08-EB01120408-SS	None - ND	-	-	-	-
MR08-EB01120508-IS	None - ND	-	-	-	-
MR08-EB01120508-SS	None - ND	-	-	-	-
MR08-FB01120608	None - ND	-	-	-	-

Field Duplicates - Field duplicate results are summarized below.

Compound	MR08-IS079-6-7-08D ug/kg	MR08-IS079D-6-7-08D ug/kg	RPD	Qualifier
None	ND	ND	-	-

Tentatively Identified Compounds (TICs) - TICs were not reported.

Compound Quantitation - No discrepancies were identified.

KATAHDIN ANALYTICAL SERVICES
Report of Analytical Results

Client: CH2MHill
Project: TO-009 Lejeune
PO No:
Sample Date: 12/04/08
Received Date: 12/05/08
Extraction Date: 12/08/08
Analysis Date: 20-DEC-2008 17:58
Report Date: 12/24/2008
Matrix: SOIL
% Solids: 89.5

Lab ID: SB7003-2
Client ID: MR08-IS079-6-7-08D
SDG: TO9-12
Extracted by: CB
Extraction Method: SW846 3550
Analyst: EKC
Analysis Method: SW846 M8270C
Lab Prep Batch: WG58887
Units: ug/Kgdrywt

CAS#	Compound	Flags	Results	DF	PQL	Adj.PQL	Adj.MDL	
91-20-3	Naphthalene	U	11	1.0	10	11	2.9	
91-57-6	2-Methylnaphthalene	~~U~~ UJ	11	1.0	10	11	2.4	CCH
86-73-7	Fluorene	U	11	1.0	10	11	3.6	
85-01-8	Phenanthrene	~~U~~ UJ	11	1.0	10	11	2.0	CCH
206-44-0	Fluoranthene	U	11	1.0	10	11	2.0	
129-00-0	Pyrene	U	11	1.0	10	11	2.3	
56-55-3	Benzo(a)anthracene	U	11	1.0	10	11	2.1	
205-99-2	Benzo(b)fluoranthene	U	11	1.0	10	11	2.7	
207-08-9	Benzo(k)fluoranthene	U	11	1.0	10	11	3.5	
50-32-8	Benzo(a)pyrene	U	11	1.0	10	11	3.7	
193-39-5	Indeno(1,2,3-cd)pyrene	U	11	1.0	10	11	2.1	
53-70-3	Dibenzo(a,h)anthracene	U	11	1.0	10	11	2.0	
191-24-2	Benzo(g,h,i)perylene	U	11	1.0	10	11	2.2	
118-74-1	Hexachlorobenzene	~~U~~ UJ	11	1.0	10	11	2.0	CCH
87-68-3	Hexachlorobutadiene	~~U~~ UJ	11	1.0	10	11	2.6	CCH
77-47-4	Hexachlorocyclopentadiene	U	11	1.0	10	11	1.7	
7297-45-2	2-Methylnaphthalene-D10		85%					
367-12-4	2,4-Dibromophenol		131%					
81103-79-9	Fluorene-d10		78%					
1718-51-1	Pyrene-D10		123%					

lw 3/2/09

2

KATAHDIN ANALYTICAL SERVICES
Report of Analytical Results

Client: CH2MHill
Project: TO-009 Lejeune
PO No:
Sample Date: 12/04/08
Received Date: 12/05/08
Extraction Date: 12/08/08
Analysis Date: 20-DEC-2008 17:16
Report Date: 12/24/2008
Matrix: SOIL
% Solids: 90.3

Lab ID: SB7003-4
Client ID: MR08-IS079D-6-7-08D
SDG: TO9-12
Extracted by: CB
Extraction Method: SW846 3550
Analyst: EKC
Analysis Method: SW846 M8270C
Lab Prep Batch: WG58887
Units: ug/Kgdrywt

CAS#	Compound	Flags	Results	DF	PQL	Adj.PQL	Adj.MDL	
91-20-3	Naphthalene	U	11	1.0	10	11	2.9	
91-57-6	2-Methylnaphthalene	~~U~~ UJ	11	1.0	10	11	2.4	CCH
86-73-7	Fluorene	U	11	1.0	10	11	3.5	
85-01-8	Phenanthrene	~~U~~ UJ	11	1.0	10	11	2.0	CCH
206-44-0	Fluoranthene	U	11	1.0	10	11	2.0	
129-00-0	Pyrene	U	11	1.0	10	11	2.3	
56-55-3	Benzo(a)anthracene	U	11	1.0	10	11	2.1	
205-99-2	Benzo(b)fluoranthene	U	11	1.0	10	11	2.6	
207-08-9	Benzo(k)fluoranthene	U	11	1.0	10	11	3.4	
50-32-8	Benzo(a)pyrene	U	11	1.0	10	11	3.6	
193-39-5	Indeno(1,2,3-cd)pyrene	U	11	1.0	10	11	2.1	
53-70-3	Dibenzo(a,h)anthracene	U	11	1.0	10	11	2.0	
191-24-2	Benzo(g,h,i)perylene	U	11	1.0	10	11	2.2	
118-74-1	Hexachlorobenzene	~~U~~ UJ	11	1.0	10	11	2.0	CCH
87-68-3	Hexachlorobutadiene	~~U~~ UJ	11	1.0	10	11	2.5	CCH
77-47-4	Hexachlorocyclopentadiene	U	11	1.0	10	11	1.7	
7297-45-2	2-Methylnaphthalene-D10		75%					
367-12-4	2,4-Dibromophenol		127%					
81103-79-9	Fluorene-d10		71%					
1718-51-1	Pyrene-D10		97%					

lew 3/2/09

3

KATAHDIN ANALYTICAL SERVICES
Report of Analytical Results

Client: CH2MHill
Project: TO-009 Lejeune
PO No:
Sample Date: 12/04/08
Received Date: 12/05/08
Extraction Date: 12/08/08
Analysis Date: 20-DEC-2008 20:42
Report Date: 12/24/2008
Matrix: SOIL
% Solids: 84.7

Lab ID: SB7003-6
Client ID: MR08-SS097-08D
SDG: TO9-12
Extracted by: CB
Extraction Method: SW846 3550
Analyst: EKC
Analysis Method: SW846 M8270C
Lab Prep Batch: WG58887
Units: ug/Kgdrywt

CAS#	Compound	Flags		Results	DF	PQL	Adj.PQL	Adj.MDL	
91-20-3	Naphthalene	U		12	1.0	10	12	3.1	
91-57-6	2-Methylnaphthalene	~~U~~	J	3.3	1.0	10	12	2.6	CCH
86-73-7	Fluorene	U		12	1.0	10	12	3.8	
85-01-8	Phenanthrene	~~U~~	J	8.1	1.0	10	12	2.1	CCH
206-44-0	Fluoranthene			32	1.0	10	12	2.1	
129-00-0	Pyrene		J	38	1.0	10	12	2.5	BSH
56-55-3	Benzo(a)anthracene			12	1.0	10	12	2.2	
205-99-2	Benzo(b)fluoranthene			24	1.0	10	12	2.8	
207-08-9	Benzo(k)fluoranthene		J	19	1.0	10	12	3.7	BSH
50-32-8	Benzo(a)pyrene			17	1.0	10	12	3.9	
193-39-5	Indeno(1,2,3-cd)pyrene			13	1.0	10	12	2.2	
53-70-3	Dibenzo(a,h)anthracene	U		12	1.0	10	12	2.1	
191-24-2	Benzo(g,h,i)perylene			12	1.0	10	12	2.4	
118-74-1	Hexachlorobenzene	~~U~~	UJ	12	1.0	10	12	2.1	CCH
87-68-3	Hexachlorobutadiene	~~U~~	UJ	12	1.0	10	12	2.7	CCH
77-47-4	Hexachlorocyclopentadiene	U		12	1.0	10	12	1.8	
7297-45-2	2-Methylnaphthalene-D10			91%					
367-12-4	2,4-Dibromophenol			*156%					
81103-79-9	Fluorene-d10			75%					
1718-51-1	Pyrene-D10			98%					

QW 3/2/09

4

KATAHDIN ANALYTICAL SERVICES
Report of Analytical Results

Client: CH2MHill
Project: TO-009 Lejeune
PO No:
Sample Date: 12/04/08
Received Date: 12/05/08
Extraction Date: 12/08/08
Analysis Date: 20-DEC-2008 16:35
Report Date: 12/24/2008
Matrix: SOIL
% Solids: 85.7

Lab ID: SB7003-8
Client ID: MR08-IS097-6-7-08D
SDG: TO9-12
Extracted by: CB
Extraction Method: SW846 3550
Analyst: EKC
Analysis Method: SW846 M8270C
Lab Prep Batch: WG58887
Units: ug/Kgdrywt

CAS#	Compound	Flags	Results	DF	PQL	Adj.PQL	Adj.MDL	
91-20-3	Naphthalene	U	12	1.0	10	12	3.0	
91-57-6	2-Methylnaphthalene	~~U~~ UJ	12	1.0	10	12	2.6	CCH
86-73-7	Fluorene	U	12	1.0	10	12	3.7	
85-01-8	Phenanthrene	~~J~~ J	7.9	1.0	10	12	2.1	CCH
206-44-0	Fluoranthene	J	5.7	1.0	10	12	2.1	
129-00-0	Pyrene	~~J~~ J	8.1	1.0	10	12	2.4	BSH
56-55-3	Benzo(a)anthracene	U	12	1.0	10	12	2.2	
205-99-2	Benzo(b)fluoranthene	U	12	1.0	10	12	2.8	
207-08-9	Benzo(k)fluoranthene	U	12	1.0	10	12	3.6	
50-32-8	Benzo(a)pyrene	U	12	1.0	10	12	3.8	
193-39-5	Indeno(1,2,3-cd)pyrene	U	12	1.0	10	12	2.2	
53-70-3	Dibenzo(a,h)anthracene	U	12	1.0	10	12	2.1	
191-24-2	Benzo(g,h,i)perylene	U	12	1.0	10	12	2.3	
118-74-1	Hexachlorobenzene	~~U~~ UJ	12	1.0	10	12	2.1	CCH
87-68-3	Hexachlorobutadiene	~~U~~ UJ	12	1.0	10	12	2.7	CCH
77-47-4	Hexachlorocyclopentadiene	U	12	1.0	10	12	1.7	
7297-45-2	2-Methylnaphthalene-D10		78%					
367-12-4	2,4-Dibromophenol		132%					
81103-79-9	Fluorene-d10		75%					
1718-51-1	Pyrene-D10		101%					

MW
3/2/09

5

KATAHDIN ANALYTICAL SERVICES
Report of Analytical Results

Client: CH2MHill
Project: TO-009 Lejeune
PO No:
Sample Date: 12/04/08
Received Date: 12/05/08
Extraction Date: 12/08/08
Analysis Date: 20-DEC-2008 22:47
Report Date: 12/24/2008
Matrix: SOIL
% Solids: 67.9

Lab ID: SB7003-10
Client ID: MR08-SS096-08D
SDG: TO9-12
Extracted by: CB
Extraction Method: SW846 3550
Analyst: EKC
Analysis Method: SW846 M8270C
Lab Prep Batch: WG58887
Units: ug/Kgdrywt

CAS#	Compound	Flags		Results	DF	PQL	Adj.PQL	Adj.MDL	
91-20-3	Naphthalene	J		4.2	1.0	10	15	3.8	
91-57-6	2-Methylnaphthalene	~~J~~	J	6.8	1.0	10	15	3.2	CCH
86-73-7	Fluorene	U		15	1.0	10	15	4.7	
85-01-8	Phenanthrene		J	25	1.0	10	15	2.6	CCH
206-44-0	Fluoranthene			80	1.0	10	15	2.6	
129-00-0	Pyrene		J	69	1.0	10	15	3.1	BSH
56-55-3	Benzo(a)anthracene			31	1.0	10	15	2.8	
205-99-2	Benzo(b)fluoranthene			62	1.0	10	15	3.5	
207-08-9	Benzo(k)fluoranthene		J	46	1.0	10	15	4.6	BSH
50-32-8	Benzo(a)pyrene			48	1.0	10	15	4.9	
193-39-5	Indeno(1,2,3-cd)pyrene			32	1.0	10	15	2.8	
53-70-3	Dibenzo(a,h)anthracene	U		15	1.0	10	15	2.6	
191-24-2	Benzo(g,h,i)perylene			31	1.0	10	15	2.9	
118-74-1	Hexachlorobenzene	~~U~~	UJ	15	1.0	10	15	2.6	CCH
87-68-3	Hexachlorobutadiene	~~U~~	UJ	15	1.0	10	15	3.4	CCH
77-47-4	Hexachlorocyclopentadiene	U		15	1.0	10	15	2.2	
7297-45-2	2-Methylnaphthalene-D10			81%					
367-12-4	2,4-Dibromophenol			*152%					
81103-79-9	Fluorene-d10			77%					
1718-51-1	Pyrene-D10			92%					

kw 3/2/09

6

KATAHDIN ANALYTICAL SERVICES
Report of Analytical Results

Client: CH2MHill
Project: TO-009 Lejeune
PO No:
Sample Date: 12/04/08
Received Date: 12/05/08
Extraction Date: 12/08/08
Analysis Date: 20-DEC-2008 19:20
Report Date: 12/24/2008
Matrix: SOIL
% Solids: 90.1

Lab ID: SB7003-12
Client ID: MR08-IS096-6-7-08D
SDG: TO9-12
Extracted by: CB
Extraction Method: SW846 3550
Analyst: EKC
Analysis Method: SW846 M8270C
Lab Prep Batch: WG58887
Units: ug/Kgdrywt

CAS#	Compound	Flags		Results	DF	PQL	Adj.PQL	Adj.MDL	
91-20-3	Naphthalene	U		11	1.0	10	11	2.9	
91-57-6	2-Methylnaphthalene	~~U~~	UJ	11	1.0	10	11	2.4	CCH
86-73-7	Fluorene	U		11	1.0	10	11	3.6	
85-01-8	Phenanthrene	~~U~~	UJ	11	1.0	10	11	2.0	CCH
206-44-0	Fluoranthene	U		11	1.0	10	11	2.0	
129-00-0	Pyrene	U		11	1.0	10	11	2.3	
56-55-3	Benzo(a)anthracene	U		11	1.0	10	11	2.1	
205-99-2	Benzo(b)fluoranthene	U		11	1.0	10	11	2.7	
207-08-9	Benzo(k)fluoranthene	U		11	1.0	10	11	3.4	
50-32-8	Benzo(a)pyrene	U		11	1.0	10	11	3.7	
193-39-5	Indeno(1,2,3-cd)pyrene	U		11	1.0	10	11	2.1	
53-70-3	Dibenzo(a,h)anthracene	U		11	1.0	10	11	2.0	
191-24-2	Benzo(g,h,i)perylene	U		11	1.0	10	11	2.2	
118-74-1	Hexachlorobenzene	~~U~~	UJ	11	1.0	10	11	2.0	CCH
87-68-3	Hexachlorobutadiene	~~U~~	UJ	11	1.0	10	11	2.6	CCH
77-47-4	Hexachlorocyclopentadiene	U		11	1.0	10	11	1.7	
7297-45-2	2-Methylnaphthalene-D10			65%					
367-12-4	2,4-Dibromophenol			119%					
81103-79-9	Fluorene-d10			66%					
1718-51-1	Pyrene-D10			102%					

MW 3/2/09

7

KATAHDIN ANALYTICAL SERVICES
Report of Analytical Results

Client: CH2MHill
Project: TO-009 Lejeune
PO No:
Sample Date: 12/04/08
Received Date: 12/05/08
Extraction Date: 12/08/08
Analysis Date: 20-DEC-2008 21:24
Report Date: 12/24/2008
Matrix: SOIL
% Solids: 63.7

Lab ID: SB7003-14
Client ID: MR08-SS095-08D
SDG: TO9-12
Extracted by: CB
Extraction Method: SW846 3550
Analyst: EKC
Analysis Method: SW846 M8270C
Lab Prep Batch: WG58887
Units: ug/Kgdrywt

CAS#	Compound	Flags		Results	DF	PQL	Adj.PQL	Adj.MDL	
91-20-3	Naphthalene	U		16	1.0	10	16	4.1	
91-57-6	2-Methylnaphthalene	~~U~~	UJ	16	1.0	10	16	3.4	CCH
86-73-7	Fluorene	U		16	1.0	10	16	5.0	
85-01-8	Phenanthrene	~~J~~	J	7.9	1.0	10	16	2.8	CCH
206-44-0	Fluoranthene			25	1.0	10	16	2.8	
129-00-0	Pyrene		J	21	1.0	10	16	3.3	BSH
56-55-3	Benzo(a)anthracene	J		9.9	1.0	10	16	3.0	
205-99-2	Benzo(b)fluoranthene			18	1.0	10	16	3.8	
207-08-9	Benzo(k)fluoranthene	~~J~~	J	12	1.0	10	16	4.9	BSH
50-32-8	Benzo(a)pyrene	J		13	1.0	10	16	5.2	
193-39-5	Indeno(1,2,3-cd)pyrene	J		9.7	1.0	10	16	3.0	
53-70-3	Dibenzo(a,h)anthracene	U		16	1.0	10	16	2.8	
191-24-2	Benzo(g,h,i)perylene	J		8.9	1.0	10	16	3.1	
118-74-1	Hexachlorobenzene	~~U~~	UJ	16	1.0	10	16	2.8	CCH
87-68-3	Hexachlorobutadiene	~~U~~	UJ	16	1.0	10	16	3.6	CCH
77-47-4	Hexachlorocyclopentadiene	U		16	1.0	10	16	2.4	
7297-45-2	2-Methylnaphthalene-D10			78%					
367-12-4	2,4-Dibromophenol			130%					
81103-79-9	Fluorene-d10			70%					
1718-51-1	Pyrene-D10			76%					

fw 3/2/09

KATAHDIN ANALYTICAL SERVICES
Report of Analytical Results

Client: CH2MHill
Project: TO-009 Lejeune
PO No:
Sample Date: 12/04/08
Received Date: 12/05/08
Extraction Date: 12/08/08
Analysis Date: 20-DEC-2008 18:39
Report Date: 12/24/2008
Matrix: SOIL
% Solids: 89.1

Lab ID: SB7003-16
Client ID: MR08-IS095-6-7-08D
SDG: TO9-12
Extracted by: CB
Extraction Method: SW846 3550
Analyst: EKC
Analysis Method: SW846 M8270C
Lab Prep Batch: WG58887
Units: ug/Kgdrywt

CAS#	Compound	Flags	Results	DF	PQL	Adj.PQL	Adj.MDL	
91-20-3	Naphthalene	U	11	1.0	10	11	2.9	
91-57-6	2-Methylnaphthalene	~~U~~ UJ	11	1.0	10	11	2.5	CCH
86-73-7	Fluorene	U	11	1.0	10	11	3.6	
85-01-8	Phenanthrene	~~U~~ UJ	11	1.0	10	11	2.0	CCH
206-44-0	Fluoranthene	U	11	1.0	10	11	2.0	
129-00-0	Pyrene	U	11	1.0	10	11	2.4	
56-55-3	Benzo(a)anthracene	U	11	1.0	10	11	2.1	
205-99-2	Benzo(b)fluoranthene	U	11	1.0	10	11	2.7	
207-08-9	Benzo(k)fluoranthene	U	11	1.0	10	11	3.5	
50-32-8	Benzo(a)pyrene	U	11	1.0	10	11	3.7	
193-39-5	Indeno(1,2,3-cd)pyrene	U	11	1.0	10	11	2.1	
53-70-3	Dibenzo(a,h)anthracene	U	11	1.0	10	11	2.0	
191-24-2	Benzo(g,h,i)perylene	U	11	1.0	10	11	2.2	
118-74-1	Hexachlorobenzene	~~U~~ UJ	11	1.0	10	11	2.0	CCH
87-68-3	Hexachlorobutadiene	~~U~~ UJ	11	1.0	10	11	2.6	CCH
77-47-4	Hexachlorocyclopentadiene	U	11	1.0	10	11	1.7	
7297-45-2	2-Methylnaphthalene-D10		66%					
367-12-4	2,4-Dibromophenol		91%					
81103-79-9	Fluorene-d10		64%					
1718-51-1	Pyrene-D10		104%					

LW 3/2/09

KATAHDIN ANALYTICAL SERVICES
Report of Analytical Results

Client: CH2MHill
Project: TO-009 Lejeune
PO No:
Sample Date: 12/04/08
Received Date: 12/05/08
Extraction Date: 12/09/08
Analysis Date: 20-DEC-2008 22:05
Report Date: 12/29/2008
Matrix: SOIL
% Solids: 77.2

Lab ID: SB7003-18
Client ID: MR08-SS094-08D
SDG: TO9-12
Extracted by: CB
Extraction Method: SW846 3550
Analyst: EKC
Analysis Method: SW846 M8270C
Lab Prep Batch: WG58909
Units: ug/Kgdrywt

CAS#	Compound	Flags		Results	DF	PQL	Adj.PQL	Adj.MDL	
91-20-3	Naphthalene	J		4.0	1.0	10	13	3.4	
91-57-6	2-Methylnaphthalene	~~J~~	J	6.0	1.0	10	13	2.8	CCH
86-73-7	Fluorene	U		13	1.0	10	13	4.1	
85-01-8	Phenanthrene		J	15	1.0	10	13	2.3	CCH
206-44-0	Fluoranthene			47	1.0	10	13	2.3	
129-00-0	Pyrene			39	1.0	10	13	2.7	
56-55-3	Benzo(a)anthracene			18	1.0	10	13	2.5	
205-99-2	Benzo(b)fluoranthene			32	1.0	10	13	3.1	
207-08-9	Benzo(k)fluoranthene			23	1.0	10	13	4.0	
50-32-8	Benzo(a)pyrene			26	1.0	10	13	4.3	
193-39-5	Indeno(1,2,3-cd)pyrene			19	1.0	10	13	2.5	
53-70-3	Dibenzo(a,h)anthracene	U		13	1.0	10	13	2.3	
191-24-2	Benzo(g,h,i)perylene			18	1.0	10	13	2.6	
118-74-1	Hexachlorobenzene	~~J~~	UJ	13	1.0	10	13	2.3	CCH
87-68-3	Hexachlorobutadiene	~~J~~	UJ	13	1.0	10	13	3.0	CCH
77-47-4	Hexachlorocyclopentadiene	U		13	1.0	10	13	1.9	
7297-45-2	2-Methylnaphthalene-D10			105%					
367-12-4	2,4-Dibromophenol			143%					
81103-79-9	Fluorene-d10			74%					
1718-51-1	Pyrene-D10			91%					

lw
3/2/09

10

KATAHDIN ANALYTICAL SERVICES
Report of Analytical Results

Client: CH2MHill
Project: TO-009 Lejeune
PO No:
Sample Date: 12/04/08
Received Date: 12/05/08
Extraction Date: 12/09/08
Analysis Date: 20-DEC-2008 20:01
Report Date: 12/24/2008
Matrix: SOIL
% Solids: 90.1

Lab ID: SB7003-20
Client ID: MR08-IS094-5-6-08D
SDG: TO9-12
Extracted by: CB
Extraction Method: SW846 3550
Analyst: EKC
Analysis Method: SW846 M8270C
Lab Prep Batch: WG58909
Units: ug/Kgdrywt

CAS#	Compound	Flags		Results	DF	PQL	Adj.PQL	Adj.MDL	
91-20-3	Naphthalene	U		11	1.0	10	11	2.9	
91-57-6	2-Methylnaphthalene	~~U~~	UJ	11	1.0	10	11	2.4	CCH
86-73-7	Fluorene	U		11	1.0	10	11	3.6	
85-01-8	Phenanthrene	~~U~~	UJ	11	1.0	10	11	2.0	CCH
206-44-0	Fluoranthene	U		11	1.0	10	11	2.0	
129-00-0	Pyrene	U		11	1.0	10	11	2.3	
56-55-3	Benzo(a)anthracene	U		11	1.0	10	11	2.1	
205-99-2	Benzo(b)fluoranthene	U		11	1.0	10	11	2.7	
207-08-9	Benzo(k)fluoranthene	U		11	1.0	10	11	3.4	
50-32-8	Benzo(a)pyrene	U		11	1.0	10	11	3.7	
193-39-5	Indeno(1,2,3-cd)pyrene	U		11	1.0	10	11	2.1	
53-70-3	Dibenzo(a,h)anthracene	U		11	1.0	10	11	2.0	
191-24-2	Benzo(g,h,i)perylene	U		11	1.0	10	11	2.2	
118-74-1	Hexachlorobenzene	~~U~~	UJ	11	1.0	10	11	2.0	CCH
87-68-3	Hexachlorobutadiene	~~U~~	UJ	11	1.0	10	11	2.6	CCH
77-47-4	Hexachlorocyclopentadiene	U		11	1.0	10	11	1.7	
7297-45-2	2-Methylnaphthalene-D10			79%					
367-12-4	2,4-Dibromophenol			127%					
81103-79-9	Fluorene-d10			75%					
1718-51-1	Pyrene-D10			101%					

LW
3/2/09

11

KATAHDIN ANALYTICAL SERVICES
Report of Analytical Results

Client: CH2MHill
Project: TO-009 Lejeune
PO No:
Sample Date: 12/04/08
Received Date: 12/05/08
Extraction Date: 12/09/08
Analysis Date: 22-DEC-2008 21:49
Report Date: 12/24/2008
Matrix: SOIL
% Solids: 86.5

Lab ID: SB7003-22
Client ID: MR08-SS092-08D
SDG: TO9-12
Extracted by: CB
Extraction Method: SW846 3550
Analyst: JCG
Analysis Method: SW846 M8270C
Lab Prep Batch: WG58909
Units: ug/Kgdrywt

CAS#	Compound	Flags	Results	DF	PQL	Adj.PQL	Adj.MDL	
91-20-3	Naphthalene	~~J~~ J	3.4	1.0	10	12	3.0	CCH
91-57-6	2-Methylnaphthalene	J	7.5	1.0	10	12	2.5	
86-73-7	Fluorene	U	12	1.0	10	12	3.7	
85-01-8	Phenanthrene		14	1.0	10	12	2.1	
206-44-0	Fluoranthene		38	1.0	10	12	2.1	
129-00-0	Pyrene		27	1.0	10	12	2.4	
56-55-3	Benzo(a)anthracene		16	1.0	10	12	2.2	
205-99-2	Benzo(b)fluoranthene		26	1.0	10	12	2.8	
207-08-9	Benzo(k)fluoranthene		21	1.0	10	12	3.6	
50-32-8	Benzo(a)pyrene		18	1.0	10	12	3.8	
193-39-5	Indeno(1,2,3-cd)pyrene		16	1.0	10	12	2.2	
53-70-3	Dibenzo(a,h)anthracene	J	9.5	1.0	10	12	2.1	
191-24-2	Benzo(g,h,i)perylene		17	1.0	10	12	2.3	
118-74-1	Hexachlorobenzene	U	12	1.0	10	12	2.1	
87-68-3	Hexachlorobutadiene	U	12	1.0	10	12	2.6	
77-47-4	Hexachlorocyclopentadiene	~~U~~ UJ	12	1.0	10	12	1.7	CCH
7297-45-2	2-Methylnaphthalene-D10		79%					
367-12-4	2,4-Dibromophenol		141%					
81103-79-9	Fluorene-d10		72%					
1718-51-1	Pyrene-D10		88%					

lw 3/2/09

12

KATAHDIN ANALYTICAL SERVICES
Report of Analytical Results

Client: CH2MHill
Project: TO-009 Lejeune
PO No:
Sample Date: 12/04/08
Received Date: 12/05/08
Extraction Date: 12/09/08
Analysis Date: 22-DEC-2008 15:32
Report Date: 12/24/2008
Matrix: SOIL
% Solids: 86.2

Lab ID: SB7003-24
Client ID: MR08-IS092-4-5-08D
SDG: TO9-12
Extracted by: CB
Extraction Method: SW846 3550
Analyst: JCG
Analysis Method: SW846 M8270C
Lab Prep Batch: WG58909
Units: ug/Kgdrywt

CAS#	Compound	Flags	Results	DF	PQL	Adj.PQL	Adj.MDL	
91-20-3	Naphthalene	~~U~~ UJ	12	1.0	10	12	3.0	CCH
91-57-6	2-Methylnaphthalene	U	12	1.0	10	12	2.6	
86-73-7	Fluorene	U	12	1.0	10	12	3.7	
85-01-8	Phenanthrene	U	12	1.0	10	12	2.1	
206-44-0	Fluoranthene	U	12	1.0	10	12	2.1	
129-00-0	Pyrene	U	12	1.0	10	12	2.4	
56-55-3	Benzo(a)anthracene	U	12	1.0	10	12	2.2	
205-99-2	Benzo(b)fluoranthene	U	12	1.0	10	12	2.8	
207-08-9	Benzo(k)fluoranthene	U	12	1.0	10	12	3.6	
50-32-8	Benzo(a)pyrene	U	12	1.0	10	12	3.8	
193-39-5	Indeno(1,2,3-cd)pyrene	U	12	1.0	10	12	2.2	
53-70-3	Dibenzo(a,h)anthracene	U	12	1.0	10	12	2.1	
191-24-2	Benzo(g,h,i)perylene	U	12	1.0	10	12	2.3	
118-74-1	Hexachlorobenzene	U	12	1.0	10	12	2.1	
87-68-3	Hexachlorobutadiene	U	12	1.0	10	12	2.7	
77-47-4	Hexachlorocyclopentadiene	~~U~~ UJ	12	1.0	10	12	1.7	CCH
7297-45-2	2-Methylnaphthalene-D10		76%					
367-12-4	2,4-Dibromophenol		129%					
81103-79-9	Fluorene-d10		67%					
1718-51-1	Pyrene-D10		84%					

QW
3/2/09

KATAHDIN ANALYTICAL SERVICES
Report of Analytical Results

Client: CH2MHill
Project: TO-009 Lejeune
PO No:
Sample Date: 12/05/08
Received Date: 12/06/08
Extraction Date: 12/09/08
Analysis Date: 22-DEC-2008 19:45
Report Date: 12/24/2008
Matrix: SOIL
% Solids: 69.1

Lab ID: SB7032-2
Client ID: MR08-SS091-08D
SDG: TO9-12
Extracted by: CB
Extraction Method: SW846 3550
Analyst: JCG
Analysis Method: SW846 M8270C
Lab Prep Batch: WG58909
Units: ug/Kgdrywt

CAS#	Compound	Flags	Results	DF	PQL	Adj.PQL	Adj.MDL	
91-20-3	Naphthalene	~~J~~ J	3.8	1.0	10	14	3.8	CCH
91-57-6	2-Methylnaphthalene	J	8.5	1.0	10	14	3.2	
86-73-7	Fluorene	U	14	1.0	10	14	4.6	
85-01-8	Phenanthrene		24	1.0	10	14	2.6	
206-44-0	Fluoranthene		84	1.0	10	14	2.6	
129-00-0	Pyrene		68	1.0	10	14	3.0	
56-55-3	Benzo(a)anthracene		42	1.0	10	14	2.8	
205-99-2	Benzo(b)fluoranthene		74	1.0	10	14	3.5	
207-08-9	Benzo(k)fluoranthene		49	1.0	10	14	4.5	
50-32-8	Benzo(a)pyrene		51	1.0	10	14	4.8	
193-39-5	Indeno(1,2,3-cd)pyrene		40	1.0	10	14	2.8	
53-70-3	Dibenzo(a,h)anthracene		16	1.0	10	14	2.6	
191-24-2	Benzo(g,h,i)perylene		40	1.0	10	14	2.9	
118-74-1	Hexachlorobenzene	U	14	1.0	10	14	2.6	
87-68-3	Hexachlorobutadiene	U	14	1.0	10	14	3.3	
77-47-4	Hexachlorocyclopentadiene	~~U~~ UJ	14	1.0	10	14	2.2	CCH
7297-45-2	2-Methylnaphthalene-D10		76%					
367-12-4	2,4-Dibromophenol		141%					
81103-79-9	Fluorene-d10		70%					
1718-51-1	Pyrene-D10		80%					

lw
3/2/09

KATAHDIN ANALYTICAL SERVICES
Report of Analytical Results

Client: CH2MHill
Project: TO-009 Lejeune
PO No:
Sample Date: 12/05/08
Received Date: 12/06/08
Extraction Date: 12/09/08
Analysis Date: 22-DEC-2008 17:37
Report Date: 12/24/2008
Matrix: SOIL
% Solids: 84.6

Lab ID: SB7032-4
Client ID: MR08-IS091-2-3-08D
SDG: TO9-12
Extracted by: CB
Extraction Method: SW846 3550
Analyst: JCG
Analysis Method: SW846 M8270C
Lab Prep Batch: WG58909
Units: ug/Kgdrywt

CAS#	Compound	Flags	Results	DF	PQL	Adj.PQL	Adj.MDL	
91-20-3	Naphthalene	~~U~~ UJ	12	1.0	10	12	3.1	CCH
91-57-6	2-Methylnaphthalene	U	12	1.0	10	12	2.6	
86-73-7	Fluorene	U	12	1.0	10	12	3.8	
85-01-8	Phenanthrene	U	12	1.0	10	12	2.1	
206-44-0	Fluoranthene	U	12	1.0	10	12	2.1	
129-00-0	Pyrene	U	12	1.0	10	12	2.5	
56-55-3	Benzo(a)anthracene	U	12	1.0	10	12	2.2	
205-99-2	Benzo(b)fluoranthene	U	12	1.0	10	12	2.8	
207-08-9	Benzo(k)fluoranthene	U	12	1.0	10	12	3.7	
50-32-8	Benzo(a)pyrene	U	12	1.0	10	12	3.9	
193-39-5	Indeno(1,2,3-cd)pyrene	U	12	1.0	10	12	2.2	
53-70-3	Dibenzo(a,h)anthracene	U	12	1.0	10	12	2.1	
191-24-2	Benzo(g,h,i)perylene	U	12	1.0	10	12	2.4	
118-74-1	Hexachlorobenzene	U	12	1.0	10	12	2.1	
87-68-3	Hexachlorobutadiene	U	12	1.0	10	12	2.7	
77-47-4	Hexachlorocyclopentadiene	~~U~~ UJ	12	1.0	10	12	1.8	CCH
7297-45-2	2-Methylnaphthalene-D10		77%					
367-12-4	2,4-Dibromophenol		137%					
81103-79-9	Fluorene-d10		67%					
1718-51-1	Pyrene-D10		85%					

ms 3/2/09

15

KATAHDIN ANALYTICAL SERVICES
Report of Analytical Results

Client: CH2MHill
Project: TO-009 Lejeune
PO No:
Sample Date: 12/05/08
Received Date: 12/06/08
Extraction Date: 12/09/08
Analysis Date: 22-DEC-2008 18:20
Report Date: 12/24/2008
Matrix: SOIL
% Solids: 88.1

Lab ID: SB7032-6
Client ID: MR08-SS093-08D
SDG: TO9-12
Extracted by: CB
Extraction Method: SW846 3550
Analyst: JCG
Analysis Method: SW846 M8270C
Lab Prep Batch: WG58909
Units: ug/Kgdrywt

CAS#	Compound	Flags	Results	DF	PQL	Adj.PQL	Adj.MDL	
91-20-3	Naphthalene	~~U~~ UJ	11	1.0	10	11	3.0	CCH
91-57-6	2-Methylnaphthalene	U	11	1.0	10	11	2.5	
86-73-7	Fluorene	U	11	1.0	10	11	3.6	
85-01-8	Phenanthrene	U	11	1.0	10	11	2.0	
206-44-0	Fluoranthene	J	3.2	1.0	10	11	2.0	
129-00-0	Pyrene	J	2.6	1.0	10	11	2.4	
56-55-3	Benzo(a)anthracene	U	11	1.0	10	11	2.2	
205-99-2	Benzo(b)fluoranthene	U	11	1.0	10	11	2.7	
207-08-9	Benzo(k)fluoranthene	U	11	1.0	10	11	3.5	
50-32-8	Benzo(a)pyrene	U	11	1.0	10	11	3.7	
193-39-5	Indeno(1,2,3-cd)pyrene	U	11	1.0	10	11	2.2	
53-70-3	Dibenzo(a,h)anthracene	U	11	1.0	10	11	2.0	
191-24-2	Benzo(g,h,i)perylene	U	11	1.0	10	11	2.3	
118-74-1	Hexachlorobenzene	U	11	1.0	10	11	2.0	
87-68-3	Hexachlorobutadiene	U	11	1.0	10	11	2.6	
77-47-4	Hexachlorocyclopentadiene	~~U~~ UJ	11	1.0	10	11	1.7	CCH
7297-45-2	2-Methylnaphthalene-D10		74%					
367-12-4	2,4-Dibromophenol		132%					
81103-79-9	Fluorene-d10		62%					
1718-51-1	Pyrene-D10		80%					

DW
3/2/09

16

KATAHDIN ANALYTICAL SERVICES
Report of Analytical Results

Client: CH2MHill
Project: TO-009 Lejeune
PO No:
Sample Date: 12/05/08
Received Date: 12/06/08
Extraction Date: 12/09/08
Analysis Date: 22-DEC-2008 19:02
Report Date: 12/24/2008
Matrix: SOIL
% Solids: 89.6

Lab ID: SB7032-8
Client ID: MR08-IS093-2-3-08D
SDG: TO9-12
Extracted by: CB
Extraction Method: SW846 3550
Analyst: JCG
Analysis Method: SW846 M8270C
Lab Prep Batch: WG58909
Units: ug/Kgdrywt

CAS#	Compound	Flags	Results	DF	PQL	Adj.PQL	Adj.MDL	
91-20-3	Naphthalene	~~U~~ UJ	11	1.0	10	11	2.9	CCH
91-57-6	2-Methylnaphthalene	U	11	1.0	10	11	2.4	
86-73-7	Fluorene	U	11	1.0	10	11	3.6	
85-01-8	Phenanthrene	U	11	1.0	10	11	2.0	
206-44-0	Fluoranthene	J	2.8	1.0	10	11	2.0	
129-00-0	Pyrene	J	2.7	1.0	10	11	2.3	
56-55-3	Benzo(a)anthracene	U	11	1.0	10	11	2.1	
205-99-2	Benzo(b)fluoranthene	U	11	1.0	10	11	2.7	
207-08-9	Benzo(k)fluoranthene	U	11	1.0	10	11	3.4	
50-32-8	Benzo(a)pyrene	U	11	1.0	10	11	3.7	
193-39-5	Indeno(1,2,3-cd)pyrene	U	11	1.0	10	11	2.1	
53-70-3	Dibenzo(a,h)anthracene	U	11	1.0	10	11	2.0	
191-24-2	Benzo(g,h,i)perylene	J	2.3	1.0	10	11	2.2	
118-74-1	Hexachlorobenzene	U	11	1.0	10	11	2.0	
87-68-3	Hexachlorobutadiene	U	11	1.0	10	11	2.6	
77-47-4	Hexachlorocyclopentadiene	~~U~~ UJ	11	1.0	10	11	1.7	CCH
7297-45-2	2-Methylnaphthalene-D10		76%					
367-12-4	2,4-Dibromophenol		148%					
81103-79-9	Fluorene-d10		77%					
1718-51-1	Pyrene-D10		88%					

RW 3/2/09

17

KATAHDIN ANALYTICAL SERVICES
Report of Analytical Results

Client: CH2MHill
Project: TO-009 Lejeune
PO No:
Sample Date: 12/05/08
Received Date: 12/06/08
Extraction Date: 12/09/08
Analysis Date: 22-DEC-2008 23:11
Report Date: 12/24/2008
Matrix: SOIL
% Solids: 89.4

Lab ID: SB7032-10
Client ID: MR08-SS103-08D
SDG: TO9-12
Extracted by: CB
Extraction Method: SW846 3550
Analyst: JCG
Analysis Method: SW846 M8270C
Lab Prep Batch: WG58909
Units: ug/Kgdrywt

CAS#	Compound	Flags	Results	DF	PQL	Adj.PQL	Adj.MDL	
91-20-3	Naphthalene	~~U~~ UJ	11	1.0	10	11	2.9	CCH
91-57-6	2-Methylnaphthalene	U	11	1.0	10	11	2.5	
86-73-7	Fluorene	U	11	1.0	10	11	3.6	
85-01-8	Phenanthrene	U	11	1.0	10	11	2.0	
206-44-0	Fluoranthene	J	2.7	1.0	10	11	2.0	
129-00-0	Pyrene	J	3.4	1.0	10	11	2.3	
56-55-3	Benzo(a)anthracene	U	11	1.0	10	11	2.1	
205-99-2	Benzo(b)fluoranthene	U	11	1.0	10	11	2.7	
207-08-9	Benzo(k)fluoranthene	U	11	1.0	10	11	3.5	
50-32-8	Benzo(a)pyrene	U	11	1.0	10	11	3.7	
193-39-5	Indeno(1,2,3-cd)pyrene	U	11	1.0	10	11	2.1	
53-70-3	Dibenzo(a,h)anthracene	U	11	1.0	10	11	2.0	
191-24-2	Benzo(g,h,i)perylene	U	11	1.0	10	11	2.2	
118-74-1	Hexachlorobenzene	U	11	1.0	10	11	2.0	
87-68-3	Hexachlorobutadiene	U	11	1.0	10	11	2.6	
77-47-4	Hexachlorocyclopentadiene	~~U~~ UJ	11	1.0	10	11	1.7	CCH
7297-45-2	2-Methylnaphthalene-D10		78%					
367-12-4	2,4-Dibromophenol		*155%					
81103-79-9	Fluorene-d10		72%					
1718-51-1	Pyrene-D10		72%					

lw 3/2/09

18

KATAHDIN ANALYTICAL SERVICES
Report of Analytical Results

Client: CH2MHill
Project: TO-009 Lejeune
PO No:
Sample Date: 12/05/08
Received Date: 12/06/08
Extraction Date: 12/09/08
Analysis Date: 22-DEC-2008 14:50
Report Date: 12/24/2008
Matrix: SOIL
% Solids: 85.5

Lab ID: SB7032-12
Client ID: MR08-IS103-3-4-08D
SDG: TO9-12
Extracted by: CB
Extraction Method: SW846 3550
Analyst: JCG
Analysis Method: SW846 M8270C
Lab Prep Batch: WG58909
Units: ug/Kgdrywt

CAS#	Compound	Flags	Results	DF	PQL	Adj.PQL	Adj.MDL	
91-20-3	Naphthalene	~~U~~ UJ	12	1.0	10	12	3.0	CCH
91-57-6	2-Methylnaphthalene	U	12	1.0	10	12	2.6	
86-73-7	Fluorene	U	12	1.0	10	12	3.7	
85-01-8	Phenanthrene	U	12	1.0	10	12	2.1	
206-44-0	Fluoranthene	J	2.9	1.0	10	12	2.1	
129-00-0	Pyrene	U	12	1.0	10	12	2.4	
56-55-3	Benzo(a)anthracene	U	12	1.0	10	12	2.2	
205-99-2	Benzo(b)fluoranthene	U	12	1.0	10	12	2.8	
207-08-9	Benzo(k)fluoranthene	U	12	1.0	10	12	3.6	
50-32-8	Benzo(a)pyrene	U	12	1.0	10	12	3.8	
193-39-5	Indeno(1,2,3-cd)pyrene	U	12	1.0	10	12	2.2	
53-70-3	Dibenzo(a,h)anthracene	U	12	1.0	10	12	2.1	
191-24-2	Benzo(g,h,i)perylene	U	12	1.0	10	12	2.3	
118-74-1	Hexachlorobenzene	U	12	1.0	10	12	2.1	
87-68-3	Hexachlorobutadiene	U	12	1.0	10	12	2.7	
77-47-4	Hexachlorocyclopentadiene	~~U~~ UJ	12	1.0	10	12	1.8	CCH
7297-45-2	2-Methylnaphthalene-D10		82%					
367-12-4	2,4-Dibromophenol		132%					
81103-79-9	Fluorene-d10		64%					
1718-51-1	Pyrene-D10		87%					

fwd 3/2/09

KATAHDIN ANALYTICAL SERVICES
Report of Analytical Results

Client: CH2MHill
Project: TO-009 Lejeune
PO No:
Sample Date: 12/05/08
Received Date: 12/06/08
Extraction Date: 12/09/08
Analysis Date: 22-DEC-2008 20:27
Report Date: 12/24/2008
Matrix: SOIL
% Solids: 82.5

Lab ID: SB7032-14
Client ID: MR08-SS116-08D
SDG: TO9-12
Extracted by: CB
Extraction Method: SW846 3550
Analyst: JCG
Analysis Method: SW846 M8270C
Lab Prep Batch: WG58909
Units: ug/Kgdrywt

CAS#	Compound	Flags	Results	DF	PQL	Adj.PQL	Adj.MDL	
91-20-3	Naphthalene	~~U~~ UJ	12	1.0	10	12	3.2	CCH
91-57-6	2-Methylnaphthalene	U	12	1.0	10	12	2.7	
86-73-7	Fluorene	U	12	1.0	10	12	3.9	
85-01-8	Phenanthrene	U	12	1.0	10	12	2.2	
206-44-0	Fluoranthene	J	3.3	1.0	10	12	2.2	
129-00-0	Pyrene	J	2.9	1.0	10	12	2.5	
56-55-3	Benzo(a)anthracene	U	12	1.0	10	12	2.3	
205-99-2	Benzo(b)fluoranthene	U	12	1.0	10	12	2.9	
207-08-9	Benzo(k)fluoranthene	U	12	1.0	10	12	3.8	
50-32-8	Benzo(a)pyrene	U	12	1.0	10	12	4.0	
193-39-5	Indeno(1,2,3-cd)pyrene	J	2.6	1.0	10	12	2.3	
53-70-3	Dibenzo(a,h)anthracene	U	12	1.0	10	12	2.2	
191-24-2	Benzo(g,h,i)perylene	J	3.5	1.0	10	12	2.4	
118-74-1	Hexachlorobenzene	U	12	1.0	10	12	2.2	
87-68-3	Hexachlorobutadiene	U	12	1.0	10	12	2.8	
77-47-4	Hexachlorocyclopentadiene	~~U~~ UJ	12	1.0	10	12	1.8	CCH
7297-45-2	2-Methylnaphthalene-D10		76%					
367-12-4	2,4-Dibromophenol		146%					
81103-79-9	Fluorene-d10		73%					
1718-51-1	Pyrene-D10		87%					

lw
3/2/09

20

KATAHDIN ANALYTICAL SERVICES
Report of Analytical Results

Client: CH2MHill
Project: TO-009 Lejeune
PO No:
Sample Date: 12/05/08
Received Date: 12/06/08
Extraction Date: 12/09/08
Analysis Date: 22-DEC-2008 13:27
Report Date: 12/24/2008
Matrix: SOIL
% Solids: 87.5

Lab ID: SB7032-16
Client ID: MR08-IS116-3-4-08D
SDG: TO9-12
Extracted by: CB
Extraction Method: SW846 3550
Analyst: JCG
Analysis Method: SW846 M8270C
Lab Prep Batch: WG58909
Units: ug/Kgdrywt

CAS#	Compound	Flags	Results	DF	PQL	Adj.PQL	Adj.MDL
91-20-3	Naphthalene	~~U~~ UJ	11	1.0	10	11	3.0 CCH
91-57-6	2-Methylnaphthalene	U	11	1.0	10	11	2.5
86-73-7	Fluorene	U	11	1.0	10	11	3.6
85-01-8	Phenanthrene	U	11	1.0	10	11	2.0
206-44-0	Fluoranthene	U	11	1.0	10	11	2.0
129-00-0	Pyrene	U	11	1.0	10	11	2.4
56-55-3	Benzo(a)anthracene	U	11	1.0	10	11	2.2
205-99-2	Benzo(b)fluoranthene	U	11	1.0	10	11	2.7
207-08-9	Benzo(k)fluoranthene	U	11	1.0	10	11	3.5
50-32-8	Benzo(a)pyrene	U	11	1.0	10	11	3.8
193-39-5	Indeno(1,2,3-cd)pyrene	U	11	1.0	10	11	2.2
53-70-3	Dibenzo(a,h)anthracene	U	11	1.0	10	11	2.0
191-24-2	Benzo(g,h,i)perylene	U	11	1.0	10	11	2.3
118-74-1	Hexachlorobenzene	U	11	1.0	10	11	2.0
87-68-3	Hexachlorobutadiene	U	11	1.0	10	11	2.6
77-47-4	Hexachlorocyclopentadiene	~~U~~ UJ	11	1.0	10	11	1.7 CCH
7297-45-2	2-Methylnaphthalene-D10		79%				
367-12-4	2,4-Dibromophenol		140%				
81103-79-9	Fluorene-d10		70%				
1718-51-1	Pyrene-D10		88%				

lw
3/2/09

ENVIRONMENTAL
Data Services, Inc.

SEMIVOLATILE ORGANIC COMPOUNDS

USEPA Region IV - Level IV Review

Site: MCB Camp Lejeune, TO-09 SDG #: TO9-12

Client: CH2M HILL, Inc., Virginia Beach, Virginia Date: March 2, 2009

Laboratory: Katahdin Analytical Services, Scarborough, Maine Reviewer: Nancy Weaver

EDS ID	Client Sample ID	Laboratory Sample ID	Matrix
1	MR08-IS079-6-7-08D	SB7003-1	Soil
2	MR08-IS079D-6-7-08D	SB7003-3	Soil
3	MR08-SS097-08D	SB7003-5	Soil
4	MR08-IS097-6-7-08D	SB7003-7	Soil
5	MR08-SS096-08D	SB7003-9	Soil
6	MR08-IS096-6-7-08D	SB7003-11	Soil
7	MR08-SS095-08D	SB7003-13	Soil
8	MR08-IS095-6-7-08D	SB7003-15	Soil
9	MR08-SS094-08D	SB7003-17	Soil
10	MR08-IS094-5-6-08D	SB7003-19	Soil
11	MR08-SS092-08D	SB7003-21	Soil
12	MR08-IS092-4-5-08D	SB7003-23	Soil
13	MR08-SS091-08D	SB7032-1	Soil
14	MR08-IS091-2-3-08D	SB7032-3	Soil
15	MR08-SS093-08D	SB7032-5	Soil
16	MR08-IS093-2-3-08D	SB7032-7	Soil
17	MR08-SS103-08D	SB7032-9	Soil
18	MR08-IS103-3-4-08D	SB7032-11	Soil
19	MR08-SS116-08D	SB7032-13	Soil
20	MR08-IS116-3-4-08D	SB7032-15	Soil

The USEPA "Contract Laboratory Program National Functional Guidelines for Organic Data Review," October 1999, and professional judgment were used in evaluating the data in this summary report.

Holding Times - All samples were extracted within 14 days for soil samples and analyzed within 40 days for all samples.

GC/MS Tuning - All of the DFTPP tunes in the initial and continuing calibrations met the percent relative abundance criteria.

Initial Calibration - The initial calibrations exhibited acceptable %RSD and mean RRF values.

Continuing Calibration - The continuing calibrations exhibited acceptable %D and RRF values except the following.

CCAL Date	Compound	%D/RRF	Qualifier	Affected Samples
12/18/08	Benzaldehyde	34.98%	J/UJ	1, 2, 4, 6, 8
12/18/08	Benzaldehyde	39.17%	J/UJ	3, 5, 7, 9, 10-19

Surrogates - All samples exhibited acceptable surrogate recoveries.

MS/MSD - A MS/MSD sample was not analyzed.

Laboratory Control Sample - The LCS samples exhibited acceptable %R values.

Internal Standard (IS) Area Performance - All internal standards met response and retention time (RT) criteria.

Method Blank - The method blanks were free of contamination.

Field, Equipment Blank - Field QC results are summarized below.

Blank ID	Compound	Conc. ug/L	Action Level ug/L	Qualifier	Affected Samples
MR08-EB01120408-IS	None - ND	-	-	-	-
MR08-EB01120408-SS	None - ND	-	-	-	-
MR08-EB01120508-IS	None - ND	-	-	-	-
MR08-EB01120508-SS	None - ND	-	-	-	-
MR08-FB01120608	None - ND	-	-	-	-

Field Duplicates - Field duplicate results are summarized below.

Compound	MR08-IS079-6-7-08D	MR08-IS079D-6-7-08D	RPD	Qualifier
None	ND	ND	-	-

Tentatively Identified Compounds (TICs) - TICs were not reported.

KATAHDIN ANALYTICAL SERVICES
Report of Analytical Results

Client: CH2MHill
Project: TO-009 Lejeune
PO No:
Sample Date: 12/04/08
Received Date: 12/05/08
Extraction Date: 12/08/08
Analysis Date: 18-DEC-2008 12:52
Report Date: 12/22/2008
Matrix: SOIL
% Solids: 89.5

Lab ID: SB7003-1
Client ID: MR08-IS079-6-7-08D
SDG: TO9-12
Extracted by: CB
Extraction Method: SW846 3550
Analyst: JLP
Analysis Method: SW846 8270C
Lab Prep Batch: WG58886
Units: ug/Kgdrywt

CAS#	Compound	Flags	Results	DF	PQL	Adj.PQL	Adj.MDL
100-52-7	Benzaldehyde	~~U~~ UJ	560	1.0	500	560	130 CCH
108-95-2	Phenol	U	560	1.0	500	560	170
111-44-4	Bis(2-Chloroethyl)ether	U	370	1.0	330	370	90
95-57-8	2-Chlorophenol	U	560	1.0	500	560	180
95-48-7	2-Methylphenol	U	670	1.0	600	670	220
108-60-1	2,2'-Oxybis(1-chloropropane)	U	370	1.0	330	370	99
98-86-2	Acetophenone	U	670	1.0	600	670	200
621-64-7	N-Nitroso-di-n-propylamine	U	370	1.0	330	370	93
65794-96-9	3&4-Methylphenol	U	670	1.0	600	670	210
67-72-1	Hexachloroethane	U	370	1.0	330	370	110
98-95-3	Nitrobenzene	U	370	1.0	330	370	100
78-59-1	Isophorone	U	370	1.0	330	370	84
88-75-5	2-Nitrophenol	U	670	1.0	600	670	190
105-67-9	2,4-Dimethylphenol	U	560	1.0	500	560	180
111-91-1	Bis(2-Chloroethoxy)methane	U	370	1.0	330	370	110
120-83-2	2,4-Dichlorophenol	U	560	1.0	500	560	170
106-47-8	4-Chloroaniline	U	560	1.0	500	560	130
105-60-2	Caprolactam	U	560	1.0	500	560	160
59-50-7	4-Chloro-3-Methylphenol	U	560	1.0	500	560	180
88-06-2	2,4,6-Trichlorophenol	U	560	1.0	500	560	170
95-95-4	2,4,5-Trichlorophenol	U	560	1.0	500	560	170
91-58-7	2-Chloronaphthalene	U	370	1.0	330	370	97
92-52-4	1,1'-Biphenyl	U	370	1.0	330	370	82
88-74-4	2-Nitroaniline	U	560	1.0	500	560	84
131-11-3	Dimethyl Phthalate	U	370	1.0	330	370	87
606-20-2	2,6-Dinitrotoluene	U	370	1.0	330	370	88
208-96-8	Acenaphthylene	U	370	1.0	330	370	78
99-09-2	3-Nitroaniline	U	560	1.0	500	560	100
83-32-9	Acenaphthene	U	370	1.0	330	370	73
51-28-5	2,4-Dinitrophenol	U	1300	1.0	1200	1300	420
132-64-9	Dibenzofuran	U	370	1.0	330	370	88
100-02-7	4-Nitrophenol	U	1300	1.0	1200	1300	340
121-14-2	2,4-Dinitrotoluene	U	370	1.0	330	370	95
84-66-2	Diethylphthalate	U	370	1.0	330	370	89
7005-72-3	4-Chlorophenyl-phenylether	U	370	1.0	330	370	87
100-01-6	4-Nitroaniline	U	560	1.0	500	560	150
534-52-1	4,6-Dinitro-2-Methylphenol	U	1300	1.0	1200	1300	380
86-30-6	N-Nitrosodiphenylamine	U	740	1.0	660	740	240
101-55-3	4-Bromophenyl-phenylether	U	370	1.0	330	370	95
1912-24-9	Atrazine	U	370	1.0	330	370	100
87-86-5	Pentachlorophenol	U	920	1.0	820	920	260
120-12-7	Anthracene	U	370	1.0	330	370	94
86-74-8	Carbazole	U	560	1.0	500	560	120

lw 3/2/09

KATAHDIN ANALYTICAL SERVICES
Report of Analytical Results

Client: CH2MHill
Project: TO-009 Lejeune
PO No:
Sample Date: 12/04/08
Received Date: 12/05/08
Extraction Date: 12/08/08
Analysis Date: 18-DEC-2008 12:52
Report Date: 12/22/2008
Matrix: SOIL
% Solids: 89.5

Lab ID: SB7003-1
Client ID: MR08-IS079-6-7-08D
SDG: TO9-12
Extracted by: CB
Extraction Method: SW846 3550
Analyst: JLP
Analysis Method: SW846 8270C
Lab Prep Batch: WG58886
Units: ug/Kgdrywt

CAS#	Compound	Flags	Results	DF	PQL	Adj.PQL	Adj.MDL
84-74-2	Di-n-butylphthalate	U	370	1.0	330	370	110
85-68-7	Butylbenzylphthalate	U	370	1.0	330	370	100
91-94-1	3,3'-Dichlorobenzidine	U	560	1.0	500	560	130
218-01-9	Chrysene	U	370	1.0	330	370	110
117-81-7	bis(2-Ethylhexyl)phthalate	U	370	1.0	330	370	110
117-84-0	Di-n-octylphthalate	U	370	1.0	330	370	240
367-12-4	2-Fluorophenol		70%				
13127-88-3	Phenol-D6		79%				
4165-60-0	Nitrobenzene-D5		80%				
321-60-8	2-Fluorobiphenyl		82%				
118-79-6	2,4,6-Tribromophenol		84%				
1718-51-0	Terphenyl-D14		108%				

RWJ 3/2/09

KATAHDIN ANALYTICAL SERVICES
Report of Analytical Results

Client: CH2MHill
Project: TO-009 Lejeune
PO No:
Sample Date: 12/04/08
Received Date: 12/05/08
Extraction Date: 12/08/08
Analysis Date: 18-DEC-2008 13:34
Report Date: 12/22/2008
Matrix: SOIL
% Solids: 90.3

Lab ID: SB7003-3
Client ID: MR08-IS079D-6-7-08D
SDG: TO9-12
Extracted by: CB
Extraction Method: SW846 3550
Analyst: JLP
Analysis Method: SW846 8270C
Lab Prep Batch: WG58886
Units: ug/Kgdrywt

CAS#	Compound	Flags	Results	DF	PQL	Adj.PQL	Adj.MDL
100-52-7	Benzaldehyde	~~U~~ UJ	550	1.0	500	550	130 CCH
108-95-2	Phenol	U	550	1.0	500	550	170
111-44-4	Bis(2-Chloroethyl)ether	U	360	1.0	330	360	90
95-57-8	2-Chlorophenol	U	550	1.0	500	550	180
95-48-7	2-Methylphenol	U	660	1.0	600	660	220
108-60-1	2,2'-Oxybis(1-chloropropane)	U	360	1.0	330	360	98
98-86-2	Acetophenone	U	660	1.0	600	660	200
621-64-7	N-Nitroso-di-n-propylamine	U	360	1.0	330	360	92
65794-96-9	3&4-Methylphenol	U	660	1.0	600	660	210
67-72-1	Hexachloroethane	U	360	1.0	330	360	110
98-95-3	Nitrobenzene	U	360	1.0	330	360	100
78-59-1	Isophorone	U	360	1.0	330	360	83
88-75-5	2-Nitrophenol	U	660	1.0	600	660	180
105-67-9	2,4-Dimethylphenol	U	550	1.0	500	550	180
111-91-1	Bis(2-Chloroethoxy)methane	U	360	1.0	330	360	110
120-83-2	2,4-Dichlorophenol	U	550	1.0	500	550	170
106-47-8	4-Chloroaniline	U	550	1.0	500	550	130
105-60-2	Caprolactam	U	550	1.0	500	550	160
59-50-7	4-Chloro-3-Methylphenol	U	550	1.0	500	550	180
88-06-2	2,4,6-Trichlorophenol	U	550	1.0	500	550	170
95-95-4	2,4,5-Trichlorophenol	U	550	1.0	500	550	170
91-58-7	2-Chloronaphthalene	U	360	1.0	330	360	96
92-52-4	1,1'-Biphenyl	U	360	1.0	330	360	81
88-74-4	2-Nitroaniline	U	550	1.0	500	550	83
131-11-3	Dimethyl Phthalate	U	360	1.0	330	360	86
606-20-2	2,6-Dinitrotoluene	U	360	1.0	330	360	87
208-96-8	Acenaphthylene	U	360	1.0	330	360	78
99-09-2	3-Nitroaniline	U	550	1.0	500	550	100
83-32-9	Acenaphthene	U	360	1.0	330	360	72
51-28-5	2,4-Dinitrophenol	U	1300	1.0	1200	1300	420
132-64-9	Dibenzofuran	U	360	1.0	330	360	87
100-02-7	4-Nitrophenol	U	1300	1.0	1200	1300	340
121-14-2	2,4-Dinitrotoluene	U	360	1.0	330	360	94
84-66-2	Diethylphthalate	U	360	1.0	330	360	88
7005-72-3	4-Chlorophenyl-phenylether	U	360	1.0	330	360	86
100-01-6	4-Nitroaniline	U	550	1.0	500	550	150
534-52-1	4,6-Dinitro-2-Methylphenol	U	1300	1.0	1200	1300	370
86-30-6	N-Nitrosodiphenylamine	U	730	1.0	660	730	240
101-55-3	4-Bromophenyl-phenylether	U	360	1.0	330	360	94
1912-24-9	Atrazine	U	360	1.0	330	360	100
87-86-5	Pentachlorophenol	U	910	1.0	820	910	260
120-12-7	Anthracene	U	360	1.0	330	360	93
86-74-8	Carbazole	U	550	1.0	500	550	120

JW 3/2/09

2

KATAHDIN ANALYTICAL SERVICES
Report of Analytical Results

Client: CH2MHill
Project: TO-009 Lejeune
PO No:
Sample Date: 12/04/08
Received Date: 12/05/08
Extraction Date: 12/08/08
Analysis Date: 18-DEC-2008 13:34
Report Date: 12/22/2008
Matrix: SOIL
% Solids: 90.3

Lab ID: SB7003-3
Client ID: MR08-IS079D-6-7-08D
SDG: TO9-12
Extracted by: CB
Extraction Method: SW846 3550
Analyst: JLP
Analysis Method: SW846 8270C
Lab Prep Batch: WG58886
Units: ug/Kgdrywt

CAS#	Compound	Flags	Results	DF	PQL	Adj.PQL	Adj.MDL
84-74-2	Di-n-butylphthalate	U	360	1.0	330	360	110
85-68-7	Butylbenzylphthalate	U	360	1.0	330	360	100
91-94-1	3,3'-Dichlorobenzidine	U	550	1.0	500	550	130
218-01-9	Chrysene	U	360	1.0	330	360	100
117-81-7	bis(2-Ethylhexyl)phthalate	U	360	1.0	330	360	110
117-84-0	Di-n-octylphthalate	U	360	1.0	330	360	230
367-12-4	2-Fluorophenol		73%				
13127-88-3	Phenol-D6		80%				
4165-60-0	Nitrobenzene-D5		80%				
321-60-8	2-Fluorobiphenyl		80%				
118-79-6	2,4,6-Tribromophenol		88%				
1718-51-0	Terphenyl-D14		110%				

RW 3/2/09

3

KATAHDIN ANALYTICAL SERVICES
Report of Analytical Results

Client: CH2MHill
Project: TO-009 Lejeune
PO No:
Sample Date: 12/04/08
Received Date: 12/05/08
Extraction Date: 12/08/08
Analysis Date: 19-DEC-2008 05:02
Report Date: 12/22/2008
Matrix: SOIL
% Solids: 84.7

Lab ID: SB7003-5
Client ID: MR08-SS097-08D
SDG: TO9-12
Extracted by: CB
Extraction Method: SW846 3550
Analyst: JCG
Analysis Method: SW846 8270C
Lab Prep Batch: WG58886
Units: ug/Kgdrywt

CAS#	Compound	Flags	Results	DF	PQL	Adj.PQL	Adj.MDL
100-52-7	Benzaldehyde	~~U~~ UJ	590	1.0	500	590	140 CCH
108-95-2	Phenol	U	590	1.0	500	590	180
111-44-4	Bis(2-Chloroethyl)ether	U	390	1.0	330	390	96
95-57-8	2-Chlorophenol	U	590	1.0	500	590	190
95-48-7	2-Methylphenol	U	710	1.0	600	710	240
108-60-1	2,2'-Oxybis(1-chloropropane)	U	390	1.0	330	390	100
98-86-2	Acetophenone	U	710	1.0	600	710	210
621-64-7	N-Nitroso-di-n-propylamine	U	390	1.0	330	390	98
65794-96-9	3&4-Methylphenol	U	710	1.0	600	710	220
67-72-1	Hexachloroethane	U	390	1.0	330	390	110
98-95-3	Nitrobenzene	U	390	1.0	330	390	110
78-59-1	Isophorone	U	390	1.0	330	390	88
88-75-5	2-Nitrophenol	U	710	1.0	600	710	200
105-67-9	2,4-Dimethylphenol	U	590	1.0	500	590	190
111-91-1	Bis(2-Chloroethoxy)methane	U	390	1.0	330	390	110
120-83-2	2,4-Dichlorophenol	U	590	1.0	500	590	180
106-47-8	4-Chloroaniline	U	590	1.0	500	590	140
105-60-2	Caprolactam	U	590	1.0	500	590	170
59-50-7	4-Chloro-3-Methylphenol	U	590	1.0	500	590	200
88-06-2	2,4,6-Trichlorophenol	U	590	1.0	500	590	180
95-95-4	2,4,5-Trichlorophenol	U	590	1.0	500	590	180
91-58-7	2-Chloronaphthalene	U	390	1.0	330	390	100
92-52-4	1,1'-Biphenyl	U	390	1.0	330	390	86
88-74-4	2-Nitroaniline	U	590	1.0	500	590	88
131-11-3	Dimethyl Phthalate	U	390	1.0	330	390	92
606-20-2	2,6-Dinitrotoluene	U	390	1.0	330	390	93
208-96-8	Acenaphthylene	U	390	1.0	330	390	83
99-09-2	3-Nitroaniline	U	590	1.0	500	590	110
83-32-9	Acenaphthene	U	390	1.0	330	390	77
51-28-5	2,4-Dinitrophenol	U	1400	1.0	1200	1400	440
132-64-9	Dibenzofuran	U	390	1.0	330	390	93
100-02-7	4-Nitrophenol	U	1400	1.0	1200	1400	360
121-14-2	2,4-Dinitrotoluene	U	390	1.0	330	390	100
84-66-2	Diethylphthalate	U	390	1.0	330	390	94
7005-72-3	4-Chlorophenyl-phenylether	U	390	1.0	330	390	92
100-01-6	4-Nitroaniline	U	590	1.0	500	590	160
534-52-1	4,6-Dinitro-2-Methylphenol	U	1400	1.0	1200	1400	400
86-30-6	N-Nitrosodiphenylamine	U	780	1.0	660	780	260
101-55-3	4-Bromophenyl-phenylether	U	390	1.0	330	390	100
1912-24-9	Atrazine	U	390	1.0	330	390	110
87-86-5	Pentachlorophenol	U	970	1.0	820	970	280
120-12-7	Anthracene	U	390	1.0	330	390	99
86-74-8	Carbazole	U	590	1.0	500	590	130

JCW 3/2/09

3

KATAHDIN ANALYTICAL SERVICES
Report of Analytical Results

Client: CH2MHill
Project: TO-009 Lejeune
PO No:
Sample Date: 12/04/08
Received Date: 12/05/08
Extraction Date: 12/08/08
Analysis Date: 19-DEC-2008 05:02
Report Date: 12/22/2008
Matrix: SOIL
% Solids: 84.7

Lab ID: SB7003-5
Client ID: MR08-SS097-08D
SDG: TO9-12
Extracted by: CB
Extraction Method: SW846 3550
Analyst: JCG
Analysis Method: SW846 8270C
Lab Prep Batch: WG58886
Units: ug/Kgdrywt

CAS#	Compound	Flags	Results	DF	PQL	Adj.PQL	Adj.MDL
84-74-2	Di-n-butylphthalate	U	390	1.0	330	390	120
85-68-7	Butylbenzylphthalate	U	390	1.0	330	390	110
91-94-1	3,3'-Dichlorobenzidine	U	590	1.0	500	590	130
218-01-9	Chrysene	U	390	1.0	330	390	110
117-81-7	bis(2-Ethylhexyl)phthalate	U	390	1.0	330	390	120
117-84-0	Di-n-octylphthalate	U	390	1.0	330	390	250
367-12-4	2-Fluorophenol		79%				
13127-88-3	Phenol-D6		90%				
4165-60-0	Nitrobenzene-D5		87%				
321-60-8	2-Fluorobiphenyl		89%				
118-79-6	2,4,6-Tribromophenol		92%				
1718-51-0	Terphenyl-D14		117%				

lwl 3/2/09

4

KATAHDIN ANALYTICAL SERVICES
Report of Analytical Results

Client: CH2MHill
Project: TO-009 Lejeune
PO No:
Sample Date: 12/04/08
Received Date: 12/05/08
Extraction Date: 12/08/08
Analysis Date: 18-DEC-2008 14:16
Report Date: 12/22/2008
Matrix: SOIL
% Solids: 85.7

Lab ID: SB7003-7
Client ID: MR08-IS097-6-7-08D
SDG: TO9-12
Extracted by: CB
Extraction Method: SW846 3550
Analyst: JLP
Analysis Method: SW846 8270C
Lab Prep Batch: WG58886
Units: ug/Kgdrywt

CAS#	Compound	Flags	Results	DF	PQL	Adj.PQL	Adj.MDL
100-52-7	Benzaldehyde	~~U~~ UJ	580	1.0	500	580	140 CCH
108-95-2	Phenol	U	580	1.0	500	580	180
111-44-4	Bis(2-Chloroethyl)ether	U	380	1.0	330	380	94
95-57-8	2-Chlorophenol	U	580	1.0	500	580	190
95-48-7	2-Methylphenol	U	700	1.0	600	700	230
108-60-1	2,2'-Oxybis(1-chloropropane)	U	380	1.0	330	380	100
98-86-2	Acetophenone	U	700	1.0	600	700	210
621-64-7	N-Nitroso-di-n-propylamine	U	380	1.0	330	380	97
65794-96-9	3&4-Methylphenol	U	700	1.0	600	700	220
67-72-1	Hexachloroethane	U	380	1.0	330	380	110
98-95-3	Nitrobenzene	U	380	1.0	330	380	110
78-59-1	Isophorone	U	380	1.0	330	380	87
88-75-5	2-Nitrophenol	U	700	1.0	600	700	190
105-67-9	2,4-Dimethylphenol	U	580	1.0	500	580	190
111-91-1	Bis(2-Chloroethoxy)methane	U	380	1.0	330	380	110
120-83-2	2,4-Dichlorophenol	U	580	1.0	500	580	170
106-47-8	4-Chloroaniline	U	580	1.0	500	580	140
105-60-2	Caprolactam	U	580	1.0	500	580	170
59-50-7	4-Chloro-3-Methylphenol	U	580	1.0	500	580	190
88-06-2	2,4,6-Trichlorophenol	U	580	1.0	500	580	180
95-95-4	2,4,5-Trichlorophenol	U	580	1.0	500	580	180
91-58-7	2-Chloronaphthalene	U	380	1.0	330	380	100
92-52-4	1,1'-Biphenyl	U	380	1.0	330	380	85
88-74-4	2-Nitroaniline	U	580	1.0	500	580	87
131-11-3	Dimethyl Phthalate	U	380	1.0	330	380	91
606-20-2	2,6-Dinitrotoluene	U	380	1.0	330	380	92
208-96-8	Acenaphthylene	U	380	1.0	330	380	82
99-09-2	3-Nitroaniline	U	580	1.0	500	580	110
83-32-9	Acenaphthene	U	380	1.0	330	380	76
51-28-5	2,4-Dinitrophenol	U	1400	1.0	1200	1400	440
132-64-9	Dibenzofuran	U	380	1.0	330	380	92
100-02-7	4-Nitrophenol	U	1400	1.0	1200	1400	360
121-14-2	2,4-Dinitrotoluene	U	380	1.0	330	380	99
84-66-2	Diethylphthalate	U	380	1.0	330	380	93
7005-72-3	4-Chlorophenyl-phenylether	U	380	1.0	330	380	91
100-01-6	4-Nitroaniline	U	580	1.0	500	580	160
534-52-1	4,6-Dinitro-2-Methylphenol	U	1400	1.0	1200	1400	390
86-30-6	N-Nitrosodiphenylamine	U	770	1.0	660	770	260
101-55-3	4-Bromophenyl-phenylether	U	380	1.0	330	380	99
1912-24-9	Atrazine	U	380	1.0	330	380	110
87-86-5	Pentachlorophenol	U	960	1.0	820	960	280
120-12-7	Anthracene	U	380	1.0	330	380	98
86-74-8	Carbazole	U	580	1.0	500	580	130

RW
3/2/09

KATAHDIN ANALYTICAL SERVICES
Report of Analytical Results

Client: CH2MHill
Project: TO-009 Lejeune
PO No:
Sample Date: 12/04/08
Received Date: 12/05/08
Extraction Date: 12/08/08
Analysis Date: 18-DEC-2008 14:16
Report Date: 12/22/2008
Matrix: SOIL
% Solids: 85.7

Lab ID: SB7003-7
Client ID: MR08-IS097-6-7-08D
SDG: TO9-12
Extracted by: CB
Extraction Method: SW846 3550
Analyst: JLP
Analysis Method: SW846 8270C
Lab Prep Batch: WG58886
Units: ug/Kgdrywt

CAS#	Compound	Flags	Results	DF	PQL	Adj.PQL	Adj.MDL
84-74-2	Di-n-butylphthalate	U	380	1.0	330	380	120
85-68-7	Butylbenzylphthalate	U	380	1.0	330	380	110
91-94-1	3,3'-Dichlorobenzidine	U	580	1.0	500	580	130
218-01-9	Chrysene	U	380	1.0	330	380	110
117-81-7	bis(2-Ethylhexyl)phthalate		800	1.0	330	380	110
117-84-0	Di-n-octylphthalate	U	380	1.0	330	380	250
367-12-4	2-Fluorophenol		64%				
13127-88-3	Phenol-D6		72%				
4165-60-0	Nitrobenzene-D5		77%				
321-60-8	2-Fluorobiphenyl		81%				
118-79-6	2,4,6-Tribromophenol		83%				
1718-51-0	Terphenyl-D14		96%				

lw 3/2/09

5

KATAHDIN ANALYTICAL SERVICES
Report of Analytical Results

Client: CH2MHill
Project: TO-009 Lejeune
PO No:
Sample Date: 12/04/08
Received Date: 12/05/08
Extraction Date: 12/08/08
Analysis Date: 19-DEC-2008 07:49
Report Date: 12/22/2008
Matrix: SOIL
% Solids: 67.9

Lab ID: SB7003-9
Client ID: MR08-SS096-08D
SDG: TO9-12
Extracted by: CB
Extraction Method: SW846 3550
Analyst: JCG
Analysis Method: SW846 8270C
Lab Prep Batch: WG58886
Units: ug/Kgdrywt

CAS#	Compound	Flags	Results	DF	PQL	Adj.PQL	Adj.MDL
100-52-7	Benzaldehyde	~~B~~ UJ	740	1.0	500	740	180 CCH
108-95-2	Phenol	U	740	1.0	500	740	230
111-44-4	Bis(2-Chloroethyl)ether	U	490	1.0	330	490	120
95-57-8	2-Chlorophenol	U	740	1.0	500	740	240
95-48-7	2-Methylphenol	U	880	1.0	600	880	290
108-60-1	2,2'-Oxybis(1-chloropropane)	U	490	1.0	330	490	130
98-86-2	Acetophenone	U	880	1.0	600	880	260
621-64-7	N-Nitroso-di-n-propylamine	U	490	1.0	330	490	120
65794-96-9	3&4-Methylphenol	U	880	1.0	600	880	280
67-72-1	Hexachloroethane	U	490	1.0	330	490	140
98-95-3	Nitrobenzene	U	490	1.0	330	490	130
78-59-1	Isophorone	U	490	1.0	330	490	110
88-75-5	2-Nitrophenol	U	880	1.0	600	880	250
105-67-9	2,4-Dimethylphenol	U	740	1.0	500	740	240
111-91-1	Bis(2-Chloroethoxy)methane	U	490	1.0	330	490	140
120-83-2	2,4-Dichlorophenol	U	740	1.0	500	740	220
106-47-8	4-Chloroaniline	U	740	1.0	500	740	180
105-60-2	Caprolactam	U	740	1.0	500	740	210
59-50-7	4-Chloro-3-Methylphenol	U	740	1.0	500	740	240
88-06-2	2,4,6-Trichlorophenol	U	740	1.0	500	740	230
95-95-4	2,4,5-Trichlorophenol	U	740	1.0	500	740	230
91-58-7	2-Chloronaphthalene	U	490	1.0	330	490	130
92-52-4	1,1'-Biphenyl	U	490	1.0	330	490	110
88-74-4	2-Nitroaniline	U	740	1.0	500	740	110
131-11-3	Dimethyl Phthalate	U	490	1.0	330	490	110
606-20-2	2,6-Dinitrotoluene	U	490	1.0	330	490	120
208-96-8	Acenaphthylene	U	490	1.0	330	490	100
99-09-2	3-Nitroaniline	U	740	1.0	500	740	140
83-32-9	Acenaphthene	U	490	1.0	330	490	96
51-28-5	2,4-Dinitrophenol	U	1800	1.0	1200	1800	560
132-64-9	Dibenzofuran	U	490	1.0	330	490	120
100-02-7	4-Nitrophenol	U	1800	1.0	1200	1800	460
121-14-2	2,4-Dinitrotoluene	U	490	1.0	330	490	120
84-66-2	Diethylphthalate	U	490	1.0	330	490	120
7005-72-3	4-Chlorophenyl-phenylether	U	490	1.0	330	490	110
100-01-6	4-Nitroaniline	U	740	1.0	500	740	200
534-52-1	4,6-Dinitro-2-Methylphenol	U	1800	1.0	1200	1800	500
86-30-6	N-Nitrosodiphenylamine	U	970	1.0	660	970	320
101-55-3	4-Bromophenyl-phenylether	U	490	1.0	330	490	120
1912-24-9	Atrazine	U	490	1.0	330	490	130
87-86-5	Pentachlorophenol	U	1200	1.0	820	1200	350
120-12-7	Anthracene	U	490	1.0	330	490	120
86-74-8	Carbazole	U	740	1.0	500	740	160

QW 3/2/09

KATAHDIN ANALYTICAL SERVICES
Report of Analytical Results

Client: CH2MHill
Project: TO-009 Lejeune
PO No:
Sample Date: 12/04/08
Received Date: 12/05/08
Extraction Date: 12/08/08
Analysis Date: 19-DEC-2008 07:49
Report Date: 12/22/2008
Matrix: SOIL
% Solids: 67.9

Lab ID: SB7003-9
Client ID: MR08-SS096-08D
SDG: TO9-12
Extracted by: CB
Extraction Method: SW846 3550
Analyst: JCG
Analysis Method: SW846 8270C
Lab Prep Batch: WG58886
Units: ug/Kgdrywt

CAS#	Compound	Flags	Results	DF	PQL	Adj.PQL	Adj.MDL
84-74-2	Di-n-butylphthalate	U	490	1.0	330	490	150
85-68-7	Butylbenzylphthalate	U	490	1.0	330	490	140
91-94-1	3,3'-Dichlorobenzidine	U	740	1.0	500	740	170
218-01-9	Chrysene	U	490	1.0	330	490	140
117-81-7	bis(2-Ethylhexyl)phthalate	J	440	1.0	330	490	140
117-84-0	Di-n-octylphthalate	U	490	1.0	330	490	310
367-12-4	2-Fluorophenol		70%				
13127-88-3	Phenol-D6		88%				
4165-60-0	Nitrobenzene-D5		82%				
321-60-8	2-Fluorobiphenyl		94%				
118-79-6	2,4,6-Tribromophenol		79%				
1718-51-0	Terphenyl-D14		100%				

JW 3/2/09

6

KATAHDIN ANALYTICAL SERVICES
Report of Analytical Results

Client: CH2MHill
Project: TO-009 Lejeune
PO No:
Sample Date: 12/04/08
Received Date: 12/05/08
Extraction Date: 12/08/08
Analysis Date: 18-DEC-2008 14:59
Report Date: 12/22/2008
Matrix: SOIL
% Solids: 90.1

Lab ID: SB7003-11
Client ID: MR08-IS096-6-7-08D
SDG: TO9-12
Extracted by: CB
Extraction Method: SW846 3550
Analyst: JLP
Analysis Method: SW846 8270C
Lab Prep Batch: WG58886
Units: ug/Kgdrywt

CAS#	Compound	Flags	Results	DF	PQL	Adj.PQL	Adj.MDL	
100-52-7	Benzaldehyde	~~U~~ UJ	550	1.0	500	550	130	CEH
108-95-2	Phenol	U	550	1.0	500	550	170	
111-44-4	Bis(2-Chloroethyl)ether	U	370	1.0	330	370	90	
95-57-8	2-Chlorophenol	U	550	1.0	500	550	180	
95-48-7	2-Methylphenol	U	660	1.0	600	660	220	
108-60-1	2,2'-Oxybis(1-chloropropane)	U	370	1.0	330	370	99	
98-86-2	Acetophenone	U	660	1.0	600	660	200	
621-64-7	N-Nitroso-di-n-propylamine	U	370	1.0	330	370	92	
65794-96-9	3&4-Methylphenol	U	660	1.0	600	660	210	
67-72-1	Hexachloroethane	U	370	1.0	330	370	110	
98-95-3	Nitrobenzene	U	370	1.0	330	370	100	
78-59-1	Isophorone	U	370	1.0	330	370	83	
88-75-5	2-Nitrophenol	U	660	1.0	600	660	180	
105-67-9	2,4-Dimethylphenol	U	550	1.0	500	550	180	
111-91-1	Bis(2-Chloroethoxy)methane	U	370	1.0	330	370	110	
120-83-2	2,4-Dichlorophenol	U	550	1.0	500	550	170	
106-47-8	4-Chloroaniline	U	550	1.0	500	550	130	
105-60-2	Caprolactam	U	550	1.0	500	550	160	
59-50-7	4-Chloro-3-Methylphenol	U	550	1.0	500	550	180	
88-06-2	2,4,6-Trichlorophenol	U	550	1.0	500	550	170	
95-95-4	2,4,5-Trichlorophenol	U	550	1.0	500	550	170	
91-58-7	2-Chloronaphthalene	U	370	1.0	330	370	96	
92-52-4	1,1'-Biphenyl	U	370	1.0	330	370	81	
88-74-4	2-Nitroaniline	U	550	1.0	500	550	83	
131-11-3	Dimethyl Phthalate	U	370	1.0	330	370	86	
606-20-2	2,6-Dinitrotoluene	U	370	1.0	330	370	88	
208-96-8	Acenaphthylene	U	370	1.0	330	370	78	
99-09-2	3-Nitroaniline	U	550	1.0	500	550	100	
83-32-9	Acenaphthene	U	370	1.0	330	370	72	
51-28-5	2,4-Dinitrophenol	U	1300	1.0	1200	1300	420	
132-64-9	Dibenzofuran	U	370	1.0	330	370	88	
100-02-7	4-Nitrophenol	U	1300	1.0	1200	1300	340	
121-14-2	2,4-Dinitrotoluene	U	370	1.0	330	370	94	
84-66-2	Diethylphthalate	U	370	1.0	330	370	89	
7005-72-3	4-Chlorophenyl-phenylether	U	370	1.0	330	370	86	
100-01-6	4-Nitroaniline	U	550	1.0	500	550	150	
534-52-1	4,6-Dinitro-2-Methylphenol	U	1300	1.0	1200	1300	370	
86-30-6	N-Nitrosodiphenylamine	U	730	1.0	660	730	240	
101-55-3	4-Bromophenyl-phenylether	U	370	1.0	330	370	94	
1912-24-9	Atrazine	U	370	1.0	330	370	100	
87-86-5	Pentachlorophenol	U	910	1.0	820	910	260	
120-12-7	Anthracene	U	370	1.0	330	370	93	
86-74-8	Carbazole	U	550	1.0	500	550	120	

MW 3/2/09

6

KATAHDIN ANALYTICAL SERVICES
Report of Analytical Results

Client: CH2MHill
Project: TO-009 Lejeune
PO No:
Sample Date: 12/04/08
Received Date: 12/05/08
Extraction Date: 12/08/08
Analysis Date: 18-DEC-2008 14:59
Report Date: 12/22/2008
Matrix: SOIL
% Solids: 90.1

Lab ID: SB7003-11
Client ID: MR08-IS096-6-7-08D
SDG: TO9-12
Extracted by: CB
Extraction Method: SW846 3550
Analyst: JLP
Analysis Method: SW846 8270C
Lab Prep Batch: WG58886
Units: ug/Kgdrywt

CAS#	Compound	Flags	Results	DF	PQL	Adj.PQL	Adj.MDL
84-74-2	Di-n-butylphthalate	U	370	1.0	330	370	110
85-68-7	Butylbenzylphthalate	U	370	1.0	330	370	100
91-94-1	3,3'-Dichlorobenzidine	U	550	1.0	500	550	130
218-01-9	Chrysene	U	370	1.0	330	370	100
117-81-7	bis(2-Ethylhexyl)phthalate	U	370	1.0	330	370	110
117-84-0	Di-n-octylphthalate	U	370	1.0	330	370	230
367-12-4	2-Fluorophenol		65%				
13127-88-3	Phenol-D6		70%				
4165-60-0	Nitrobenzene-D5		69%				
321-60-8	2-Fluorobiphenyl		73%				
118-79-6	2,4,6-Tribromophenol		86%				
1718-51-0	Terphenyl-D14		112%				

MW 3/2/09

7

KATAHDIN ANALYTICAL SERVICES
Report of Analytical Results

Client: CH2MHill
Project: TO-009 Lejeune
PO No:
Sample Date: 12/04/08
Received Date: 12/05/08
Extraction Date: 12/08/08
Analysis Date: 19-DEC-2008 02:17
Report Date: 12/22/2008
Matrix: SOIL
% Solids: 63.7

Lab ID: SB7003-13
Client ID: MR08-SS095-08D
SDG: TO9-12
Extracted by: CB
Extraction Method: SW846 3550
Analyst: JCG
Analysis Method: SW846 8270C
Lab Prep Batch: WG58886
Units: ug/Kgdrywt

CAS#	Compound	Flags	Results	DF	PQL	Adj.PQL	Adj.MDL
100-52-7	Benzaldehyde	~~B~~ UJ	780	1.0	500	780	190 CCH
108-95-2	Phenol	U	780	1.0	500	780	240
111-44-4	Bis(2-Chloroethyl)ether	U	520	1.0	330	520	130
95-57-8	2-Chlorophenol	U	780	1.0	500	780	260
95-48-7	2-Methylphenol	U	940	1.0	600	940	310
108-60-1	2,2'-Oxybis(1-chloropropane)	U	520	1.0	330	520	140
98-86-2	Acetophenone	U	940	1.0	600	940	280
621-64-7	N-Nitroso-di-n-propylamine	U	520	1.0	330	520	130
65794-96-9	3&4-Methylphenol	U	940	1.0	600	940	290
67-72-1	Hexachloroethane	U	520	1.0	330	520	150
98-95-3	Nitrobenzene	U	520	1.0	330	520	140
78-59-1	Isophorone	U	520	1.0	330	520	120
88-75-5	2-Nitrophenol	U	940	1.0	600	940	260
105-67-9	2,4-Dimethylphenol	U	780	1.0	500	780	260
111-91-1	Bis(2-Chloroethoxy)methane	U	520	1.0	330	520	150
120-83-2	2,4-Dichlorophenol	U	780	1.0	500	780	240
106-47-8	4-Chloroaniline	U	780	1.0	500	780	190
105-60-2	Caprolactam	U	780	1.0	500	780	220
59-50-7	4-Chloro-3-Methylphenol	U	780	1.0	500	780	260
88-06-2	2,4,6-Trichlorophenol	U	780	1.0	500	780	240
95-95-4	2,4,5-Trichlorophenol	U	780	1.0	500	780	240
91-58-7	2-Chloronaphthalene	U	520	1.0	330	520	140
92-52-4	1,1'-Biphenyl	U	520	1.0	330	520	110
88-74-4	2-Nitroaniline	U	780	1.0	500	780	120
131-11-3	Dimethyl Phthalate	U	520	1.0	330	520	120
606-20-2	2,6-Dinitrotoluene	U	520	1.0	330	520	120
208-96-8	Acenaphthylene	U	520	1.0	330	520	110
99-09-2	3-Nitroaniline	U	780	1.0	500	780	150
83-32-9	Acenaphthene	U	520	1.0	330	520	100
51-28-5	2,4-Dinitrophenol	U	1900	1.0	1200	1900	590
132-64-9	Dibenzofuran	U	520	1.0	330	520	120
100-02-7	4-Nitrophenol	U	1900	1.0	1200	1900	480
121-14-2	2,4-Dinitrotoluene	U	520	1.0	330	520	130
84-66-2	Diethylphthalate	U	520	1.0	330	520	120
7005-72-3	4-Chlorophenyl-phenylether	U	520	1.0	330	520	120
100-01-6	4-Nitroaniline	U	780	1.0	500	780	210
534-52-1	4,6-Dinitro-2-Methylphenol	U	1900	1.0	1200	1900	530
86-30-6	N-Nitrosodiphenylamine	U	1000	1.0	660	1000	340
101-55-3	4-Bromophenyl-phenylether	U	520	1.0	330	520	130
1912-24-9	Atrazine	U	520	1.0	330	520	140
87-86-5	Pentachlorophenol	U	1300	1.0	820	1300	370
120-12-7	Anthracene	U	520	1.0	330	520	130
86-74-8	Carbazole	U	780	1.0	500	780	170

LW
3/2/09

7

KATAHDIN ANALYTICAL SERVICES
Report of Analytical Results

Client: CH2MHill
Project: TO-009 Lejeune
PO No:
Sample Date: 12/04/08
Received Date: 12/05/08
Extraction Date: 12/08/08
Analysis Date: 19-DEC-2008 02:17
Report Date: 12/22/2008
Matrix: SOIL
% Solids: 63.7

Lab ID: SB7003-13
Client ID: MR08-SS095-08D
SDG: TO9-12
Extracted by: CB
Extraction Method: SW846 3550
Analyst: JCG
Analysis Method: SW846 8270C
Lab Prep Batch: WG58886
Units: ug/Kgdrywt

CAS#	Compound	Flags	Results	DF	PQL	Adj.PQL	Adj.MDL
84-74-2	Di-n-butylphthalate	U	520	1.0	330	520	160
85-68-7	Butylbenzylphthalate	U	520	1.0	330	520	140
91-94-1	3,3'-Dichlorobenzidine	U	780	1.0	500	780	180
218-01-9	Chrysene	U	520	1.0	330	520	150
117-81-7	bis(2-Ethylhexyl)phthalate	U	520	1.0	330	520	150
117-84-0	Di-n-octylphthalate	U	520	1.0	330	520	330
367-12-4	2-Fluorophenol		68%				
13127-88-3	Phenol-D6		78%				
4165-60-0	Nitrobenzene-D5		76%				
321-60-8	2-Fluorobiphenyl		77%				
118-79-6	2,4,6-Tribromophenol		79%				
1718-51-0	Terphenyl-D14		99%				

RW 3/2/09

8

KATAHDIN ANALYTICAL SERVICES
Report of Analytical Results

Client: CH2MHill
Project: TO-009 Lejeune
PO No:
Sample Date: 12/04/08
Received Date: 12/05/08
Extraction Date: 12/08/08
Analysis Date: 18-DEC-2008 15:41
Report Date: 12/22/2008
Matrix: SOIL
% Solids: 89.1

Lab ID: SB7003-15
Client ID: MR08-IS095-6-7-08D
SDG: TO9-12
Extracted by: CB
Extraction Method: SW846 3550
Analyst: JLP
Analysis Method: SW846 8270C
Lab Prep Batch: WG58886
Units: ug/Kgdrywt

CAS#	Compound	Flags	Results	DF	PQL	Adj.PQL	Adj.MDL
100-52-7	Benzaldehyde	~~U~~ UJ	560	1.0	500	560	130 CCH
108-95-2	Phenol	U	560	1.0	500	560	180
111-44-4	Bis(2-Chloroethyl)ether	U	370	1.0	330	370	91
95-57-8	2-Chlorophenol	U	560	1.0	500	560	180
95-48-7	2-Methylphenol	U	670	1.0	600	670	220
108-60-1	2,2'-Oxybis(1-chloropropane)	U	370	1.0	330	370	100
98-86-2	Acetophenone	U	670	1.0	600	670	200
621-64-7	N-Nitroso-di-n-propylamine	U	370	1.0	330	370	93
65794-96-9	3&4-Methylphenol	U	670	1.0	600	670	210
67-72-1	Hexachloroethane	U	370	1.0	330	370	110
98-95-3	Nitrobenzene	U	370	1.0	330	370	100
78-59-1	Isophorone	U	370	1.0	330	370	84
88-75-5	2-Nitrophenol	U	670	1.0	600	670	190
105-67-9	2,4-Dimethylphenol	U	560	1.0	500	560	180
111-91-1	Bis(2-Chloroethoxy)methane	U	370	1.0	330	370	110
120-83-2	2,4-Dichlorophenol	U	560	1.0	500	560	170
106-47-8	4-Chloroaniline	U	560	1.0	500	560	130
105-60-2	Caprolactam	U	560	1.0	500	560	160
59-50-7	4-Chloro-3-Methylphenol	U	560	1.0	500	560	190
88-06-2	2,4,6-Trichlorophenol	U	560	1.0	500	560	170
95-95-4	2,4,5-Trichlorophenol	U	560	1.0	500	560	170
91-58-7	2-Chloronaphthalene	U	370	1.0	330	370	98
92-52-4	1,1'-Biphenyl	U	370	1.0	330	370	82
88-74-4	2-Nitroaniline	U	560	1.0	500	560	84
131-11-3	Dimethyl Phthalate	U	370	1.0	330	370	88
606-20-2	2,6-Dinitrotoluene	U	370	1.0	330	370	89
208-96-8	Acenaphthylene	U	370	1.0	330	370	78
99-09-2	3-Nitroaniline	U	560	1.0	500	560	100
83-32-9	Acenaphthene	U	370	1.0	330	370	73
51-28-5	2,4-Dinitrophenol	U	1300	1.0	1200	1300	420
132-64-9	Dibenzofuran	U	370	1.0	330	370	89
100-02-7	4-Nitrophenol	U	1300	1.0	1200	1300	350
121-14-2	2,4-Dinitrotoluene	U	370	1.0	330	370	95
84-66-2	Diethylphthalate	U	370	1.0	330	370	90
7005-72-3	4-Chlorophenyl-phenylether	U	370	1.0	330	370	88
100-01-6	4-Nitroaniline	U	560	1.0	500	560	150
534-52-1	4,6-Dinitro-2-Methylphenol	U	1300	1.0	1200	1300	380
86-30-6	N-Nitrosodiphenylamine	U	740	1.0	660	740	240
101-55-3	4-Bromophenyl-phenylether	U	370	1.0	330	370	95
1912-24-9	Atrazine	U	370	1.0	330	370	100
87-86-5	Pentachlorophenol	U	920	1.0	820	920	260
120-12-7	Anthracene	U	370	1.0	330	370	94
86-74-8	Carbazole	U	560	1.0	500	560	120

LW 3/2/09

KATAHDIN ANALYTICAL SERVICES
Report of Analytical Results

Client: CH2MHill
Project: TO-009 Lejeune
PO No:
Sample Date: 12/04/08
Received Date: 12/05/08
Extraction Date: 12/08/08
Analysis Date: 18-DEC-2008 15:41
Report Date: 12/22/2008
Matrix: SOIL
% Solids: 89.1

Lab ID: SB7003-15
Client ID: MR08-IS095-6-7-08D
SDG: TO9-12
Extracted by: CB
Extraction Method: SW846 3550
Analyst: JLP
Analysis Method: SW846 8270C
Lab Prep Batch: WG58886
Units: ug/Kgdrywt

CAS#	Compound	Flags	Results	DF	PQL	Adj.PQL	Adj.MDL
84-74-2	Di-n-butylphthalate	U	370	1.0	330	370	110
85-68-7	Butylbenzylphthalate	U	370	1.0	330	370	100
91-94-1	3,3'-Dichlorobenzidine	U	560	1.0	500	560	130
218-01-9	Chrysene	U	370	1.0	330	370	110
117-81-7	bis(2-Ethylhexyl)phthalate	U	370	1.0	330	370	110
117-84-0	Di-n-octylphthalate	U	370	1.0	330	370	240
367-12-4	2-Fluorophenol		62%				
13127-88-3	Phenol-D6		71%				
4165-60-0	Nitrobenzene-D5		72%				
321-60-8	2-Fluorobiphenyl		73%				
118-79-6	2,4,6-Tribromophenol		61%				
1718-51-0	Terphenyl-D14		106%				

MW 3/2/09

KATAHDIN ANALYTICAL SERVICES
Report of Analytical Results

Client: CH2MHill
Project: TO-009 Lejeune
PO No:
Sample Date: 12/04/08
Received Date: 12/05/08
Extraction Date: 12/09/08
Analysis Date: 19-DEC-2008 05:44
Report Date: 12/22/2008
Matrix: SOIL
% Solids: 77.2

Lab ID: SB7003-17
Client ID: MR08-SS094-08D
SDG: TO9-12
Extracted by: CB
Extraction Method: SW846 3550
Analyst: JCG
Analysis Method: SW846 8270C
Lab Prep Batch: WG58908
Units: ug/Kgdrywt

CAS#	Compound	Flags	Results	DF	PQL	Adj.PQL	Adj.MDL
100-52-7	Benzaldehyde	~~U~~ UJ	650	1.0	500	650	160 CCH
108-95-2	Phenol	U	650	1.0	500	650	200
111-44-4	Bis(2-Chloroethyl)ether	U	430	1.0	330	430	100
95-57-8	2-Chlorophenol	U	650	1.0	500	650	210
95-48-7	2-Methylphenol	U	780	1.0	600	780	260
108-60-1	2,2'-Oxybis(1-chloropropane)	U	430	1.0	330	430	120
98-86-2	Acetophenone	U	780	1.0	600	780	230
621-64-7	N-Nitroso-di-n-propylamine	U	430	1.0	330	430	110
65794-96-9	3&4-Methylphenol	U	780	1.0	600	780	240
67-72-1	Hexachloroethane	U	430	1.0	330	430	120
98-95-3	Nitrobenzene	U	430	1.0	330	430	120
78-59-1	Isophorone	U	430	1.0	330	430	97
88-75-5	2-Nitrophenol	U	780	1.0	600	780	220
105-67-9	2,4-Dimethylphenol	U	650	1.0	500	650	210
111-91-1	Bis(2-Chloroethoxy)methane	U	430	1.0	330	430	120
120-83-2	2,4-Dichlorophenol	U	650	1.0	500	650	190
106-47-8	4-Chloroaniline	U	650	1.0	500	650	150
105-60-2	Caprolactam	U	650	1.0	500	650	190
59-50-7	4-Chloro-3-Methylphenol	U	650	1.0	500	650	220
88-06-2	2,4,6-Trichlorophenol	U	650	1.0	500	650	200
95-95-4	2,4,5-Trichlorophenol	U	650	1.0	500	650	200
91-58-7	2-Chloronaphthalene	U	430	1.0	330	430	110
92-52-4	1,1'-Biphenyl	U	430	1.0	330	430	95
88-74-4	2-Nitroaniline	U	650	1.0	500	650	97
131-11-3	Dimethyl Phthalate	U	430	1.0	330	430	100
606-20-2	2,6-Dinitrotoluene	U	430	1.0	330	430	100
208-96-8	Acenaphthylene	U	430	1.0	330	430	91
99-09-2	3-Nitroaniline	U	650	1.0	500	650	120
83-32-9	Acenaphthene	U	430	1.0	330	430	84
51-28-5	2,4-Dinitrophenol	U	1600	1.0	1200	1600	490
132-64-9	Dibenzofuran	U	430	1.0	330	430	100
100-02-7	4-Nitrophenol	U	1600	1.0	1200	1600	400
121-14-2	2,4-Dinitrotoluene	U	430	1.0	330	430	110
84-66-2	Diethylphthalate	U	430	1.0	330	430	100
7005-72-3	4-Chlorophenyl-phenylether	U	430	1.0	330	430	100
100-01-6	4-Nitroaniline	U	650	1.0	500	650	170
534-52-1	4,6-Dinitro-2-Methylphenol	U	1600	1.0	1200	1600	440
86-30-6	N-Nitrosodiphenylamine	U	860	1.0	660	860	280
101-55-3	4-Bromophenyl-phenylether	U	430	1.0	330	430	110
1912-24-9	Atrazine	U	430	1.0	330	430	120
87-86-5	Pentachlorophenol	U	1100	1.0	820	1100	310
120-12-7	Anthracene	U	430	1.0	330	430	110
86-74-8	Carbazole	U	650	1.0	500	650	140

LW 3/2/09

KATAHDIN ANALYTICAL SERVICES
Report of Analytical Results

Client: CH2MHill
Project: TO-009 Lejeune
PO No:
Sample Date: 12/04/08
Received Date: 12/05/08
Extraction Date: 12/09/08
Analysis Date: 19-DEC-2008 05:44
Report Date: 12/22/2008
Matrix: SOIL
% Solids: 77.2

Lab ID: SB7003-17
Client ID: MR08-SS094-08D
SDG: TO9-12
Extracted by: CB
Extraction Method: SW846 3550
Analyst: JCG
Analysis Method: SW846 8270C
Lab Prep Batch: WG58908
Units: ug/Kgdrywt

CAS#	Compound	Flags	Results	DF	PQL	Adj.PQL	Adj.MDL
84-74-2	Di-n-butylphthalate	U	430	1.0	330	430	130
85-68-7	Butylbenzylphthalate	U	430	1.0	330	430	120
91-94-1	3,3'-Dichlorobenzidine	U	650	1.0	500	650	150
218-01-9	Chrysene	U	430	1.0	330	430	120
117-81-7	bis(2-Ethylhexyl)phthalate	U	430	1.0	330	430	130
117-84-0	Di-n-octylphthalate	U	430	1.0	330	430	270
367-12-4	2-Fluorophenol		79%				
13127-88-3	Phenol-D6		90%				
4165-60-0	Nitrobenzene-D5		89%				
321-60-8	2-Fluorobiphenyl		92%				
118-79-6	2,4,6-Tribromophenol		84%				
1718-51-0	Terphenyl-D14		101%				

RWJ 3/2/09

KATAHDIN ANALYTICAL SERVICES
Report of Analytical Results

Client: CH2MHill
Project: TO-009 Lejeune
PO No:
Sample Date: 12/04/08
Received Date: 12/05/08
Extraction Date: 12/09/08
Analysis Date: 18-DEC-2008 21:25
Report Date: 12/22/2008
Matrix: SOIL
% Solids: 90.1

Lab ID: SB7003-19
Client ID: MR08-IS094-5-6-08D
SDG: TO9-12
Extracted by: CB
Extraction Method: SW846 3550
Analyst: JCG
Analysis Method: SW846 8270C
Lab Prep Batch: WG58908
Units: ug/Kgdrywt

CAS#	Compound	Flags	Results	DF	PQL	Adj.PQL	Adj.MDL	
100-52-7	Benzaldehyde	~~U~~ UJ	550	1.0	500	550	130	CCH
108-95-2	Phenol	U	550	1.0	500	550	170	
111-44-4	Bis(2-Chloroethyl)ether	U	370	1.0	330	370	90	
95-57-8	2-Chlorophenol	U	550	1.0	500	550	180	
95-48-7	2-Methylphenol	U	660	1.0	600	660	220	
108-60-1	2,2'-Oxybis(1-chloropropane)	U	370	1.0	330	370	99	
98-86-2	Acetophenone	U	660	1.0	600	660	200	
621-64-7	N-Nitroso-di-n-propylamine	U	370	1.0	330	370	92	
65794-96-9	3&4-Methylphenol	U	660	1.0	600	660	210	
67-72-1	Hexachloroethane	U	370	1.0	330	370	110	
98-95-3	Nitrobenzene	U	370	1.0	330	370	100	
78-59-1	Isophorone	U	370	1.0	330	370	83	
88-75-5	2-Nitrophenol	U	660	1.0	600	660	180	
105-67-9	2,4-Dimethylphenol	U	550	1.0	500	550	180	
111-91-1	Bis(2-Chloroethoxy)methane	U	370	1.0	330	370	110	
120-83-2	2,4-Dichlorophenol	U	550	1.0	500	550	170	
106-47-8	4-Chloroaniline	U	550	1.0	500	550	130	
105-60-2	Caprolactam	U	550	1.0	500	550	160	
59-50-7	4-Chloro-3-Methylphenol	U	550	1.0	500	550	180	
88-06-2	2,4,6-Trichlorophenol	U	550	1.0	500	550	170	
95-95-4	2,4,5-Trichlorophenol	U	550	1.0	500	550	170	
91-58-7	2-Chloronaphthalene	U	370	1.0	330	370	96	
92-52-4	1,1'-Biphenyl	U	370	1.0	330	370	81	
88-74-4	2-Nitroaniline	U	550	1.0	500	550	83	
131-11-3	Dimethyl Phthalate	U	370	1.0	330	370	86	
606-20-2	2,6-Dinitrotoluene	U	370	1.0	330	370	88	
208-96-8	Acenaphthylene	U	370	1.0	330	370	78	
99-09-2	3-Nitroaniline	U	550	1.0	500	550	100	
83-32-9	Acenaphthene	U	370	1.0	330	370	72	
51-28-5	2,4-Dinitrophenol	U	1300	1.0	1200	1300	420	
132-64-9	Dibenzofuran	U	370	1.0	330	370	88	
100-02-7	4-Nitrophenol	U	1300	1.0	1200	1300	340	
121-14-2	2,4-Dinitrotoluene	U	370	1.0	330	370	94	
84-66-2	Diethylphthalate	U	370	1.0	330	370	89	
7005-72-3	4-Chlorophenyl-phenylether	U	370	1.0	330	370	86	
100-01-6	4-Nitroaniline	U	550	1.0	500	550	150	
534-52-1	4,6-Dinitro-2-Methylphenol	U	1300	1.0	1200	1300	370	
86-30-6	N-Nitrosodiphenylamine	U	730	1.0	660	730	240	
101-55-3	4-Bromophenyl-phenylether	U	370	1.0	330	370	94	
1912-24-9	Atrazine	U	370	1.0	330	370	100	
87-86-5	Pentachlorophenol	U	910	1.0	820	910	260	
120-12-7	Anthracene	U	370	1.0	330	370	93	
86-74-8	Carbazole	U	550	1.0	500	550	120	

lw 3/2/09

KATAHDIN ANALYTICAL SERVICES
Report of Analytical Results

Client: CH2MHill
Project: TO-009 Lejeune
PO No:
Sample Date: 12/04/08
Received Date: 12/05/08
Extraction Date: 12/09/08
Analysis Date: 18-DEC-2008 21:25
Report Date: 12/22/2008
Matrix: SOIL
% Solids: 90.1

Lab ID: SB7003-19
Client ID: MR08-IS094-5-6-08D
SDG: TO9-12
Extracted by: CB
Extraction Method: SW846 3550
Analyst: JCG
Analysis Method: SW846 8270C
Lab Prep Batch: WG58908
Units: ug/Kgdrywt

CAS#	Compound	Flags	Results	DF	PQL	Adj.PQL	Adj.MDL
84-74-2	Di-n-butylphthalate	U	370	1.0	330	370	110
85-68-7	Butylbenzylphthalate	U	370	1.0	330	370	100
91-94-1	3,3'-Dichlorobenzidine	U	550	1.0	500	550	130
218-01-9	Chrysene	U	370	1.0	330	370	100
117-81-7	bis(2-Ethylhexyl)phthalate	J	140	1.0	330	370	110
117-84-0	Di-n-octylphthalate	U	370	1.0	330	370	230
367-12-4	2-Fluorophenol		70%				
13127-88-3	Phenol-D6		87%				
4165-60-0	Nitrobenzene-D5		90%				
321-60-8	2-Fluorobiphenyl		89%				
118-79-6	2,4,6-Tribromophenol		78%				
1718-51-0	Terphenyl-D14		109%				

JWS 3/2/09

11

KATAHDIN ANALYTICAL SERVICES
Report of Analytical Results

Client: CH2MHill
Project: TO-009 Lejeune
PO No:
Sample Date: 12/04/08
Received Date: 12/05/08
Extraction Date: 12/09/08
Analysis Date: 19-DEC-2008 02:58
Report Date: 12/22/2008
Matrix: SOIL
% Solids: 86.5

Lab ID: SB7003-21
Client ID: MR08-SS092-08D
SDG: TO9-12
Extracted by: CB
Extraction Method: SW846 3550
Analyst: JCG
Analysis Method: SW846 8270C
Lab Prep Batch: WG58908
Units: ug/Kgdrywt

CAS#	Compound	Flags	Results	DF	PQL	Adj.PQL	Adj.MDL
100-52-7	Benzaldehyde	~~U~~ UJ	580	1.0	500	580	140 CCH
108-95-2	Phenol	U	580	1.0	500	580	180
111-44-4	Bis(2-Chloroethyl)ether	U	380	1.0	330	380	94
95-57-8	2-Chlorophenol	U	580	1.0	500	580	190
95-48-7	2-Methylphenol	U	690	1.0	600	690	230
108-60-1	2,2'-Oxybis(1-chloropropane)	U	380	1.0	330	380	100
98-86-2	Acetophenone	U	690	1.0	600	690	200
621-64-7	N-Nitroso-di-n-propylamine	U	380	1.0	330	380	96
65794-96-9	3&4-Methylphenol	U	690	1.0	600	690	220
67-72-1	Hexachloroethane	U	380	1.0	330	380	110
98-95-3	Nitrobenzene	U	380	1.0	330	380	100
78-59-1	Isophorone	U	380	1.0	330	380	87
88-75-5	2-Nitrophenol	U	690	1.0	600	690	190
105-67-9	2,4-Dimethylphenol	U	580	1.0	500	580	190
111-91-1	Bis(2-Chloroethoxy)methane	U	380	1.0	330	380	110
120-83-2	2,4-Dichlorophenol	U	580	1.0	500	580	170
106-47-8	4-Chloroaniline	U	580	1.0	500	580	140
105-60-2	Caprolactam	U	580	1.0	500	580	170
59-50-7	4-Chloro-3-Methylphenol	U	580	1.0	500	580	190
88-06-2	2,4,6-Trichlorophenol	U	580	1.0	500	580	180
95-95-4	2,4,5-Trichlorophenol	U	580	1.0	500	580	180
91-58-7	2-Chloronaphthalene	U	380	1.0	330	380	100
92-52-4	1,1'-Biphenyl	U	380	1.0	330	380	84
88-74-4	2-Nitroaniline	U	580	1.0	500	580	87
131-11-3	Dimethyl Phthalate	U	380	1.0	330	380	90
606-20-2	2,6-Dinitrotoluene	U	380	1.0	330	380	91
208-96-8	Acenaphthylene	U	380	1.0	330	380	81
99-09-2	3-Nitroaniline	U	580	1.0	500	580	110
83-32-9	Acenaphthene	U	380	1.0	330	380	75
51-28-5	2,4-Dinitrophenol	U	1400	1.0	1200	1400	440
132-64-9	Dibenzofuran	U	380	1.0	330	380	91
100-02-7	4-Nitrophenol	U	1400	1.0	1200	1400	360
121-14-2	2,4-Dinitrotoluene	U	380	1.0	330	380	98
84-66-2	Diethylphthalate	U	380	1.0	330	380	92
7005-72-3	4-Chlorophenyl-phenylether	U	380	1.0	330	380	90
100-01-6	4-Nitroaniline	U	580	1.0	500	580	150
534-52-1	4,6-Dinitro-2-Methylphenol	U	1400	1.0	1200	1400	390
86-30-6	N-Nitrosodiphenylamine	U	760	1.0	660	760	250
101-55-3	4-Bromophenyl-phenylether	U	380	1.0	330	380	98
1912-24-9	Atrazine	U	380	1.0	330	380	100
87-86-5	Pentachlorophenol	U	950	1.0	820	950	270
120-12-7	Anthracene	U	380	1.0	330	380	97
86-74-8	Carbazole	U	580	1.0	500	580	130

lw 3/2/09

11

KATAHDIN ANALYTICAL SERVICES
Report of Analytical Results

Client: CH2MHill
Project: TO-009 Lejeune
PO No:
Sample Date: 12/04/08
Received Date: 12/05/08
Extraction Date: 12/09/08
Analysis Date: 19-DEC-2008 02:58
Report Date: 12/22/2008
Matrix: SOIL
% Solids: 86.5

Lab ID: SB7003-21
Client ID: MR08-SS092-08D
SDG: TO9-12
Extracted by: CB
Extraction Method: SW846 3550
Analyst: JCG
Analysis Method: SW846 8270C
Lab Prep Batch: WG58908
Units: ug/Kgdrywt

CAS#	Compound	Flags	Results	DF	PQL	Adj.PQL	Adj.MDL
84-74-2	Di-n-butylphthalate	U	380	1.0	330	380	120
85-68-7	Butylbenzylphthalate	U	380	1.0	330	380	110
91-94-1	3,3'-Dichlorobenzidine	U	580	1.0	500	580	130
218-01-9	Chrysene	U	380	1.0	330	380	110
117-81-7	bis(2-Ethylhexyl)phthalate	U	380	1.0	330	380	110
117-84-0	Di-n-octylphthalate	U	380	1.0	330	380	240
367-12-4	2-Fluorophenol		77%				
13127-88-3	Phenol-D6		88%				
4165-60-0	Nitrobenzene-D5		85%				
321-60-8	2-Fluorobiphenyl		87%				
118-79-6	2,4,6-Tribromophenol		85%				
1718-51-0	Terphenyl-D14		122%				

MW 3/2/09

12

KATAHDIN ANALYTICAL SERVICES
Report of Analytical Results

Client: CH2MHill
Project: TO-009 Lejeune
PO No:
Sample Date: 12/04/08
Received Date: 12/05/08
Extraction Date: 12/09/08
Analysis Date: 18-DEC-2008 22:07
Report Date: 12/22/2008
Matrix: SOIL
% Solids: 86.2

Lab ID: SB7003-23
Client ID: MR08-IS092-4-5-08D
SDG: TO9-12
Extracted by: CB
Extraction Method: SW846 3550
Analyst: JCG
Analysis Method: SW846 8270C
Lab Prep Batch: WG58908
Units: ug/Kgdrywt

CAS#	Compound	Flags	Results	DF	PQL	Adj.PQL	Adj.MDL	
100-52-7	Benzaldehyde	~~U~~ UJ	580	1.0	500	580	140	CCH
108-95-2	Phenol	U	580	1.0	500	580	180	
111-44-4	Bis(2-Chloroethyl)ether	U	380	1.0	330	380	94	
95-57-8	2-Chlorophenol	U	580	1.0	500	580	190	
95-48-7	2-Methylphenol	U	700	1.0	600	700	230	
108-60-1	2,2'-Oxybis(1-chloropropane)	U	380	1.0	330	380	100	
98-86-2	Acetophenone	U	700	1.0	600	700	210	
621-64-7	N-Nitroso-di-n-propylamine	U	380	1.0	330	380	96	
65794-96-9	3&4-Methylphenol	U	700	1.0	600	700	220	
67-72-1	Hexachloroethane	U	380	1.0	330	380	110	
98-95-3	Nitrobenzene	U	380	1.0	330	380	100	
78-59-1	Isophorone	U	380	1.0	330	380	87	
88-75-5	2-Nitrophenol	U	700	1.0	600	700	190	
105-67-9	2,4-Dimethylphenol	U	580	1.0	500	580	190	
111-91-1	Bis(2-Chloroethoxy)methane	U	380	1.0	330	380	110	
120-83-2	2,4-Dichlorophenol	U	580	1.0	500	580	170	
106-47-8	4-Chloroaniline	U	580	1.0	500	580	140	
105-60-2	Caprolactam	U	580	1.0	500	580	170	
59-50-7	4-Chloro-3-Methylphenol	U	580	1.0	500	580	190	
88-06-2	2,4,6-Trichlorophenol	U	580	1.0	500	580	180	
95-95-4	2,4,5-Trichlorophenol	U	580	1.0	500	580	180	
91-58-7	2-Chloronaphthalene	U	380	1.0	330	380	100	
92-52-4	1,1'-Biphenyl	U	380	1.0	330	380	85	
88-74-4	2-Nitroaniline	U	580	1.0	500	580	87	
131-11-3	Dimethyl Phthalate	U	380	1.0	330	380	90	
606-20-2	2,6-Dinitrotoluene	U	380	1.0	330	380	92	
208-96-8	Acenaphthylene	U	380	1.0	330	380	81	
99-09-2	3-Nitroaniline	U	580	1.0	500	580	110	
83-32-9	Acenaphthene	U	380	1.0	330	380	75	
51-28-5	2,4-Dinitrophenol	U	1400	1.0	1200	1400	440	
132-64-9	Dibenzofuran	U	380	1.0	330	380	92	
100-02-7	4-Nitrophenol	U	1400	1.0	1200	1400	360	
121-14-2	2,4-Dinitrotoluene	U	380	1.0	330	380	99	
84-66-2	Diethylphthalate	U	380	1.0	330	380	93	
7005-72-3	4-Chlorophenyl-phenylether	U	380	1.0	330	380	90	
100-01-6	4-Nitroaniline	U	580	1.0	500	580	160	
534-52-1	4,6-Dinitro-2-Methylphenol	U	1400	1.0	1200	1400	390	
86-30-6	N-Nitrosodiphenylamine	U	770	1.0	660	770	250	
101-55-3	4-Bromophenyl-phenylether	U	380	1.0	330	380	99	
1912-24-9	Atrazine	U	380	1.0	330	380	100	
87-86-5	Pentachlorophenol	U	950	1.0	820	950	280	
120-12-7	Anthracene	U	380	1.0	330	380	97	
86-74-8	Carbazole	U	580	1.0	500	580	130	

lw 3/2/09

KATAHDIN ANALYTICAL SERVICES
Report of Analytical Results

Client: CH2MHill
Project: TO-009 Lejeune
PO No:
Sample Date: 12/04/08
Received Date: 12/05/08
Extraction Date: 12/09/08
Analysis Date: 18-DEC-2008 22:07
Report Date: 12/22/2008
Matrix: SOIL
% Solids: 86.2

Lab ID: SB7003-23
Client ID: MR08-IS092-4-5-08D
SDG: TO9-12
Extracted by: CB
Extraction Method: SW846 3550
Analyst: JCG
Analysis Method: SW846 8270C
Lab Prep Batch: WG58908
Units: ug/Kgdrywt

CAS#	Compound	Flags	Results	DF	PQL	Adj.PQL	Adj.MDL
84-74-2	Di-n-butylphthalate	U	380	1.0	330	380	120
85-68-7	Butylbenzylphthalate	U	380	1.0	330	380	110
91-94-1	3,3'-Dichlorobenzidine	U	580	1.0	500	580	130
218-01-9	Chrysene	U	380	1.0	330	380	110
117-81-7	bis(2-Ethylhexyl)phthalate	U	380	1.0	330	380	110
117-84-0	Di-n-octylphthalate	U	380	1.0	330	380	240
367-12-4	2-Fluorophenol		79%				
13127-88-3	Phenol-D6		89%				
4165-60-0	Nitrobenzene-D5		84%				
321-60-8	2-Fluorobiphenyl		82%				
118-79-6	2,4,6-Tribromophenol		90%				
1718-51-0	Terphenyl-D14		105%				

lw 3/2/09

KATAHDIN ANALYTICAL SERVICES
Report of Analytical Results

Client: CH2MHill
Project: TO-009 Lejeune
PO No:
Sample Date: 12/05/08
Received Date: 12/06/08
Extraction Date: 12/09/08
Analysis Date: 19-DEC-2008 03:40
Report Date: 12/22/2008
Matrix: SOIL
% Solids: 69.1

Lab ID: SB7032-1
Client ID: MR08-SS091-08D
SDG: TO9-12
Extracted by: CB
Extraction Method: SW846 3550
Analyst: JCG
Analysis Method: SW846 8270C
Lab Prep Batch: WG58908
Units: ug/Kgdrywt

CAS#	Compound	Flags	Results	DF	PQL	Adj.PQL	Adj.MDL	
100-52-7	Benzaldehyde	~~U~~ UJ	720	1.0	500	720	170	CCH
108-95-2	Phenol	U	720	1.0	500	720	220	
111-44-4	Bis(2-Chloroethyl)ether	U	480	1.0	330	480	120	
95-57-8	2-Chlorophenol	U	720	1.0	500	720	240	
95-48-7	2-Methylphenol	U	870	1.0	600	870	290	
108-60-1	2,2'-Oxybis(1-chloropropane)	U	480	1.0	330	480	130	
98-86-2	Acetophenone	U	870	1.0	600	870	260	
621-64-7	N-Nitroso-di-n-propylamine	U	480	1.0	330	480	120	
65794-96-9	3&4-Methylphenol	U	870	1.0	600	870	270	
67-72-1	Hexachloroethane	U	480	1.0	330	480	140	
98-95-3	Nitrobenzene	U	480	1.0	330	480	130	
78-59-1	Isophorone	U	480	1.0	330	480	110	
88-75-5	2-Nitrophenol	U	870	1.0	600	870	240	
105-67-9	2,4-Dimethylphenol	U	720	1.0	500	720	240	
111-91-1	Bis(2-Chloroethoxy)methane	U	480	1.0	330	480	140	
120-83-2	2,4-Dichlorophenol	U	720	1.0	500	720	220	
106-47-8	4-Chloroaniline	U	720	1.0	500	720	170	
105-60-2	Caprolactam	U	720	1.0	500	720	210	
59-50-7	4-Chloro-3-Methylphenol	U	720	1.0	500	720	240	
88-06-2	2,4,6-Trichlorophenol	U	720	1.0	500	720	220	
95-95-4	2,4,5-Trichlorophenol	U	720	1.0	500	720	220	
91-58-7	2-Chloronaphthalene	U	480	1.0	330	480	120	
92-52-4	1,1'-Biphenyl	U	480	1.0	330	480	100	
88-74-4	2-Nitroaniline	U	720	1.0	500	720	110	
131-11-3	Dimethyl Phthalate	U	480	1.0	330	480	110	
606-20-2	2,6-Dinitrotoluene	U	480	1.0	330	480	110	
208-96-8	Acenaphthylene	U	480	1.0	330	480	100	
99-09-2	3-Nitroaniline	U	720	1.0	500	720	140	
83-32-9	Acenaphthene	U	480	1.0	330	480	94	
51-28-5	2,4-Dinitrophenol	U	1700	1.0	1200	1700	540	
132-64-9	Dibenzofuran	U	480	1.0	330	480	110	
100-02-7	4-Nitrophenol	U	1700	1.0	1200	1700	450	
121-14-2	2,4-Dinitrotoluene	U	480	1.0	330	480	120	
84-66-2	Diethylphthalate	U	480	1.0	330	480	120	
7005-72-3	4-Chlorophenyl-phenylether	U	480	1.0	330	480	110	
100-01-6	4-Nitroaniline	U	720	1.0	500	720	190	
534-52-1	4,6-Dinitro-2-Methylphenol	U	1700	1.0	1200	1700	490	
86-30-6	N-Nitrosodiphenylamine	U	960	1.0	660	960	320	
101-55-3	4-Bromophenyl-phenylether	U	480	1.0	330	480	120	
1912-24-9	Atrazine	U	480	1.0	330	480	130	
87-86-5	Pentachlorophenol	U	1200	1.0	820	1200	340	
120-12-7	Anthracene	U	480	1.0	330	480	120	
86-74-8	Carbazole	U	720	1.0	500	720	160	

MW 3/2/09

KATAHDIN ANALYTICAL SERVICES
Report of Analytical Results

Client: CH2MHill
Project: TO-009 Lejeune
PO No:
Sample Date: 12/05/08
Received Date: 12/06/08
Extraction Date: 12/09/08
Analysis Date: 19-DEC-2008 03:40
Report Date: 12/22/2008
Matrix: SOIL
% Solids: 69.1

Lab ID: SB7032-1
Client ID: MR08-SS091-08D
SDG: TO9-12
Extracted by: CB
Extraction Method: SW846 3550
Analyst: JCG
Analysis Method: SW846 8270C
Lab Prep Batch: WG58908
Units: ug/Kgdrywt

CAS#	Compound	Flags	Results	DF	PQL	Adj.PQL	Adj.MDL
84-74-2	Di-n-butylphthalate	U	480	1.0	330	480	150
85-68-7	Butylbenzylphthalate	U	480	1.0	330	480	130
91-94-1	3,3'-Dichlorobenzidine	U	720	1.0	500	720	160
218-01-9	Chrysene	U	480	1.0	330	480	140
117-81-7	bis(2-Ethylhexyl)phthalate	U	480	1.0	330	480	140
117-84-0	Di-n-octylphthalate	U	480	1.0	330	480	300
367-12-4	2-Fluorophenol		72%				
13127-88-3	Phenol-D6		81%				
4165-60-0	Nitrobenzene-D5		84%				
321-60-8	2-Fluorobiphenyl		81%				
118-79-6	2,4,6-Tribromophenol		86%				
1718-51-0	Terphenyl-D14		106%				

lus 3/2/09

KATAHDIN ANALYTICAL SERVICES
Report of Analytical Results

Client: CH2MHill
Project: TO-009 Lejeune
PO No:
Sample Date: 12/05/08
Received Date: 12/06/08
Extraction Date: 12/09/08
Analysis Date: 19-DEC-2008 00:54
Report Date: 12/22/2008
Matrix: SOIL
% Solids: 84.6

Lab ID: SB7032-3
Client ID: MR08-IS091-2-3-08D
SDG: TO9-12
Extracted by: CB
Extraction Method: SW846 3550
Analyst: JCG
Analysis Method: SW846 8270C
Lab Prep Batch: WG58908
Units: ug/Kgdrywt

CAS#	Compound	Flags	Results	DF	PQL	Adj.PQL	Adj.MDL
100-52-7	Benzaldehyde	~~U~~ UJ	590	1.0	500	590	140 CCH
108-95-2	Phenol	U	590	1.0	500	590	180
111-44-4	Bis(2-Chloroethyl)ether	U	390	1.0	330	390	96
95-57-8	2-Chlorophenol	U	590	1.0	500	590	190
95-48-7	2-Methylphenol	U	710	1.0	600	710	240
108-60-1	2,2'-Oxybis(1-chloropropane)	U	390	1.0	330	390	100
98-86-2	Acetophenone	U	710	1.0	600	710	210
621-64-7	N-Nitroso-di-n-propylamine	U	390	1.0	330	390	98
65794-96-9	3&4-Methylphenol	U	710	1.0	600	710	220
67-72-1	Hexachloroethane	U	390	1.0	330	390	110
98-95-3	Nitrobenzene	U	390	1.0	330	390	110
78-59-1	Isophorone	U	390	1.0	330	390	88
88-75-5	2-Nitrophenol	U	710	1.0	600	710	200
105-67-9	2,4-Dimethylphenol	U	590	1.0	500	590	190
111-91-1	Bis(2-Chloroethoxy)methane	U	390	1.0	330	390	110
120-83-2	2,4-Dichlorophenol	U	590	1.0	500	590	180
106-47-8	4-Chloroaniline	U	590	1.0	500	590	140
105-60-2	Caprolactam	U	590	1.0	500	590	170
59-50-7	4-Chloro-3-Methylphenol	U	590	1.0	500	590	200
88-06-2	2,4,6-Trichlorophenol	U	590	1.0	500	590	180
95-95-4	2,4,5-Trichlorophenol	U	590	1.0	500	590	180
91-58-7	2-Chloronaphthalene	U	390	1.0	330	390	100
92-52-4	1,1'-Biphenyl	U	390	1.0	330	390	86
88-74-4	2-Nitroaniline	U	590	1.0	500	590	88
131-11-3	Dimethyl Phthalate	U	390	1.0	330	390	92
606-20-2	2,6-Dinitrotoluene	U	390	1.0	330	390	93
208-96-8	Acenaphthylene	U	390	1.0	330	390	83
99-09-2	3-Nitroaniline	U	590	1.0	500	590	110
83-32-9	Acenaphthene	U	390	1.0	330	390	77
51-28-5	2,4-Dinitrophenol	U	1400	1.0	1200	1400	440
132-64-9	Dibenzofuran	U	390	1.0	330	390	93
100-02-7	4-Nitrophenol	U	1400	1.0	1200	1400	360
121-14-2	2,4-Dinitrotoluene	U	390	1.0	330	390	100
84-66-2	Diethylphthalate	U	390	1.0	330	390	94
7005-72-3	4-Chlorophenyl-phenylether	U	390	1.0	330	390	92
100-01-6	4-Nitroaniline	U	590	1.0	500	590	160
534-52-1	4,6-Dinitro-2-Methylphenol	U	1400	1.0	1200	1400	400
86-30-6	N-Nitrosodiphenylamine	U	780	1.0	660	780	260
101-55-3	4-Bromophenyl-phenylether	U	390	1.0	330	390	100
1912-24-9	Atrazine	U	390	1.0	330	390	110
87-86-5	Pentachlorophenol	U	970	1.0	820	970	280
120-12-7	Anthracene	U	390	1.0	330	390	99
86-74-8	Carbazole	U	590	1.0	500	590	130

lw
3/2/09

KATAHDIN ANALYTICAL SERVICES
Report of Analytical Results

Client: CH2MHill
Project: TO-009 Lejeune
PO No:
Sample Date: 12/05/08
Received Date: 12/06/08
Extraction Date: 12/09/08
Analysis Date: 19-DEC-2008 00:54
Report Date: 12/22/2008
Matrix: SOIL
% Solids: 84.6

Lab ID: SB7032-3
Client ID: MR08-IS091-2-3-08D
SDG: TO9-12
Extracted by: CB
Extraction Method: SW846 3550
Analyst: JCG
Analysis Method: SW846 8270C
Lab Prep Batch: WG58908
Units: ug/Kgdrywt

CAS#	Compound	Flags	Results	DF	PQL	Adj.PQL	Adj.MDL
84-74-2	Di-n-butylphthalate	U	390	1.0	330	390	120
85-68-7	Butylbenzylphthalate	U	390	1.0	330	390	110
91-94-1	3,3'-Dichlorobenzidine	U	590	1.0	500	590	130
218-01-9	Chrysene	U	390	1.0	330	390	110
117-81-7	bis(2-Ethylhexyl)phthalate	U	390	1.0	330	390	120
117-84-0	Di-n-octylphthalate	U	390	1.0	330	390	250
367-12-4	2-Fluorophenol		79%				
13127-88-3	Phenol-D6		89%				
4165-60-0	Nitrobenzene-D5		87%				
321-60-8	2-Fluorobiphenyl		87%				
118-79-6	2,4,6-Tribromophenol		85%				
1718-51-0	Terphenyl-D14		107%				

JW 3/2/09

KATAHDIN ANALYTICAL SERVICES
Report of Analytical Results

Client: CH2MHill
Project: TO-009 Lejeune
PO No:
Sample Date: 12/05/08
Received Date: 12/06/08
Extraction Date: 12/09/08
Analysis Date: 19-DEC-2008 00:12
Report Date: 12/22/2008
Matrix: SOIL
% Solids: 88.1

Lab ID: SB7032-5
Client ID: MR08-SS093-08D
SDG: TO9-12
Extracted by: CB
Extraction Method: SW846 3550
Analyst: JCG
Analysis Method: SW846 8270C
Lab Prep Batch: WG58908
Units: ug/Kgdrywt

CAS#	Compound	Flags	Results	DF	PQL	Adj.PQL	Adj.MDL
100-52-7	Benzaldehyde	~~J~~ U J	570	1.0	500	570	140 CCH
108-95-2	Phenol	U	570	1.0	500	570	180
111-44-4	Bis(2-Chloroethyl)ether	U	370	1.0	330	370	92
95-57-8	2-Chlorophenol	U	570	1.0	500	570	190
95-48-7	2-Methylphenol	U	680	1.0	600	680	230
108-60-1	2,2'-Oxybis(1-chloropropane)	U	370	1.0	330	370	100
98-86-2	Acetophenone	U	680	1.0	600	680	200
621-64-7	N-Nitroso-di-n-propylamine	U	370	1.0	330	370	94
65794-96-9	3&4-Methylphenol	U	680	1.0	600	680	210
67-72-1	Hexachloroethane	U	370	1.0	330	370	110
98-95-3	Nitrobenzene	U	370	1.0	330	370	100
78-59-1	Isophorone	U	370	1.0	330	370	85
88-75-5	2-Nitrophenol	U	680	1.0	600	680	190
105-67-9	2,4-Dimethylphenol	U	570	1.0	500	570	190
111-91-1	Bis(2-Chloroethoxy)methane	U	370	1.0	330	370	110
120-83-2	2,4-Dichlorophenol	U	570	1.0	500	570	170
106-47-8	4-Chloroaniline	U	570	1.0	500	570	140
105-60-2	Caprolactam	U	570	1.0	500	570	160
59-50-7	4-Chloro-3-Methylphenol	U	570	1.0	500	570	190
88-06-2	2,4,6-Trichlorophenol	U	570	1.0	500	570	180
95-95-4	2,4,5-Trichlorophenol	U	570	1.0	500	570	180
91-58-7	2-Chloronaphthalene	U	370	1.0	330	370	99
92-52-4	1,1'-Biphenyl	U	370	1.0	330	370	83
88-74-4	2-Nitroaniline	U	570	1.0	500	570	85
131-11-3	Dimethyl Phthalate	U	370	1.0	330	370	88
606-20-2	2,6-Dinitrotoluene	U	370	1.0	330	370	90
208-96-8	Acenaphthylene	U	370	1.0	330	370	79
99-09-2	3-Nitroaniline	U	570	1.0	500	570	110
83-32-9	Acenaphthene	U	370	1.0	330	370	74
51-28-5	2,4-Dinitrophenol	U	1400	1.0	1200	1400	430
132-64-9	Dibenzofuran	U	370	1.0	330	370	90
100-02-7	4-Nitrophenol	U	1400	1.0	1200	1400	350
121-14-2	2,4-Dinitrotoluene	U	370	1.0	330	370	96
84-66-2	Diethylphthalate	U	370	1.0	330	370	91
7005-72-3	4-Chlorophenyl-phenylether	U	370	1.0	330	370	88
100-01-6	4-Nitroaniline	U	570	1.0	500	570	150
534-52-1	4,6-Dinitro-2-Methylphenol	U	1400	1.0	1200	1400	380
86-30-6	N-Nitrosodiphenylamine	U	750	1.0	660	750	250
101-55-3	4-Bromophenyl-phenylether	U	370	1.0	330	370	96
1912-24-9	Atrazine	U	370	1.0	330	370	100
87-86-5	Pentachlorophenol	U	930	1.0	820	930	270
120-12-7	Anthracene	U	370	1.0	330	370	95
86-74-8	Carbazole	U	570	1.0	500	570	130

LW 3/2/09

KATAHDIN ANALYTICAL SERVICES
Report of Analytical Results

Client: CH2MHill
Project: TO-009 Lejeune
PO No:
Sample Date: 12/05/08
Received Date: 12/06/08
Extraction Date: 12/09/08
Analysis Date: 19-DEC-2008 00:12
Report Date: 12/22/2008
Matrix: SOIL
% Solids: 88.1

Lab ID: SB7032-5
Client ID: MR08-SS093-08D
SDG: TO9-12
Extracted by: CB
Extraction Method: SW846 3550
Analyst: JCG
Analysis Method: SW846 8270C
Lab Prep Batch: WG58908
Units: ug/Kgdrywt

CAS#	Compound	Flags	Results	DF	PQL	Adj.PQL	Adj.MDL
84-74-2	Di-n-butylphthalate	U	370	1.0	330	370	110
85-68-7	Butylbenzylphthalate	U	370	1.0	330	370	100
91-94-1	3,3'-Dichlorobenzidine	U	570	1.0	500	570	130
218-01-9	Chrysene	U	370	1.0	330	370	110
117-81-7	bis(2-Ethylhexyl)phthalate	U	370	1.0	330	370	110
117-84-0	Di-n-octylphthalate	U	370	1.0	330	370	240
367-12-4	2-Fluorophenol		70%				
13127-88-3	Phenol-D6		81%				
4165-60-0	Nitrobenzene-D5		80%				
321-60-8	2-Fluorobiphenyl		76%				
118-79-6	2,4,6-Tribromophenol		74%				
1718-51-0	Terphenyl-D14		96%				

LW 3/2/09

16

KATAHDIN ANALYTICAL SERVICES
Report of Analytical Results

Client: CH2MHill
Project: TO-009 Lejeune
PO No:
Sample Date: 12/05/08
Received Date: 12/06/08
Extraction Date: 12/09/08
Analysis Date: 19-DEC-2008 01:36
Report Date: 12/22/2008
Matrix: SOIL
% Solids: 89.6

Lab ID: SB7032-7
Client ID: MR08-IS093-2-3-08D
SDG: TO9-12
Extracted by: CB
Extraction Method: SW846 3550
Analyst: JCG
Analysis Method: SW846 8270C
Lab Prep Batch: WG58908
Units: ug/Kgdrywt

CAS#	Compound	Flags	Results	DF	PQL	Adj.PQL	Adj.MDL
100-52-7	Benzaldehyde	~~U~~ UJ	560	1.0	500	560	130 CCH
108-95-2	Phenol	U	560	1.0	500	560	170
111-44-4	Bis(2-Chloroethyl)ether	U	370	1.0	330	370	90
95-57-8	2-Chlorophenol	U	560	1.0	500	560	180
95-48-7	2-Methylphenol	U	670	1.0	600	670	220
108-60-1	2,2'-Oxybis(1-chloropropane)	U	370	1.0	330	370	99
98-86-2	Acetophenone	U	670	1.0	600	670	200
621-64-7	N-Nitroso-di-n-propylamine	U	370	1.0	330	370	93
65794-96-9	3&4-Methylphenol	U	670	1.0	600	670	210
67-72-1	Hexachloroethane	U	370	1.0	330	370	110
98-95-3	Nitrobenzene	U	370	1.0	330	370	100
78-59-1	Isophorone	U	370	1.0	330	370	84
88-75-5	2-Nitrophenol	U	670	1.0	600	670	190
105-67-9	2,4-Dimethylphenol	U	560	1.0	500	560	180
111-91-1	Bis(2-Chloroethoxy)methane	U	370	1.0	330	370	110
120-83-2	2,4-Dichlorophenol	U	560	1.0	500	560	170
106-47-8	4-Chloroaniline	U	560	1.0	500	560	130
105-60-2	Caprolactam	U	560	1.0	500	560	160
59-50-7	4-Chloro-3-Methylphenol	U	560	1.0	500	560	180
88-06-2	2,4,6-Trichlorophenol	U	560	1.0	500	560	170
95-95-4	2,4,5-Trichlorophenol	U	560	1.0	500	560	170
91-58-7	2-Chloronaphthalene	U	370	1.0	330	370	97
92-52-4	1,1'-Biphenyl	U	370	1.0	330	370	81
88-74-4	2-Nitroaniline	U	560	1.0	500	560	84
131-11-3	Dimethyl Phthalate	U	370	1.0	330	370	87
606-20-2	2,6-Dinitrotoluene	U	370	1.0	330	370	88
208-96-8	Acenaphthylene	U	370	1.0	330	370	78
99-09-2	3-Nitroaniline	U	560	1.0	500	560	100
83-32-9	Acenaphthene	U	370	1.0	330	370	72
51-28-5	2,4-Dinitrophenol	U	1300	1.0	1200	1300	420
132-64-9	Dibenzofuran	U	370	1.0	330	370	88
100-02-7	4-Nitrophenol	U	1300	1.0	1200	1300	340
121-14-2	2,4-Dinitrotoluene	U	370	1.0	330	370	95
84-66-2	Diethylphthalate	U	370	1.0	330	370	89
7005-72-3	4-Chlorophenyl-phenylether	U	370	1.0	330	370	87
100-01-6	4-Nitroaniline	U	560	1.0	500	560	150
534-52-1	4,6-Dinitro-2-Methylphenol	U	1300	1.0	1200	1300	380
86-30-6	N-Nitrosodiphenylamine	U	740	1.0	660	740	240
101-55-3	4-Bromophenyl-phenylether	U	370	1.0	330	370	95
1912-24-9	Atrazine	U	370	1.0	330	370	100
87-86-5	Pentachlorophenol	U	920	1.0	820	920	260
120-12-7	Anthracene	U	370	1.0	330	370	94
86-74-8	Carbazole	U	560	1.0	500	560	120

lw 3/2/09

16

KATAHDIN ANALYTICAL SERVICES
Report of Analytical Results

Client: CH2MHill
Project: TO-009 Lejeune
PO No:
Sample Date: 12/05/08
Received Date: 12/06/08
Extraction Date: 12/09/08
Analysis Date: 19-DEC-2008 01:36
Report Date: 12/22/2008
Matrix: SOIL
% Solids: 89.6

Lab ID: SB7032-7
Client ID: MR08-IS093-2-3-08D
SDG: TO9-12
Extracted by: CB
Extraction Method: SW846 3550
Analyst: JCG
Analysis Method: SW846 8270C
Lab Prep Batch: WG58908
Units: ug/Kgdrywt

CAS#	Compound	Flags	Results	DF	PQL	Adj.PQL	Adj.MDL
84-74-2	Di-n-butylphthalate	U	370	1.0	330	370	110
85-68-7	Butylbenzylphthalate	U	370	1.0	330	370	100
91-94-1	3,3'-Dichlorobenzidine	U	560	1.0	500	560	130
218-01-9	Chrysene	U	370	1.0	330	370	110
117-81-7	bis(2-Ethylhexyl)phthalate	J	220	1.0	330	370	110
117-84-0	Di-n-octylphthalate	U	370	1.0	330	370	240
367-12-4	2-Fluorophenol		76%				
13127-88-3	Phenol-D6		88%				
4165-60-0	Nitrobenzene-D5		87%				
321-60-8	2-Fluorobiphenyl		86%				
118-79-6	2,4,6-Tribromophenol		86%				
1718-51-0	Terphenyl-D14		114%				

MEV 3/2/09

KATAHDIN ANALYTICAL SERVICES
Report of Analytical Results

Client: CH2MHill
Project: TO-009 Lejeune
PO No:
Sample Date: 12/05/08
Received Date: 12/06/08
Extraction Date: 12/09/08
Analysis Date: 19-DEC-2008 07:07
Report Date: 12/23/2008
Matrix: SOIL
% Solids: 89.4

Lab ID: SB7032-9
Client ID: MR08-SS103-08D
SDG: TO9-12
Extracted by: CB
Extraction Method: SW846 3550
Analyst: JCG
Analysis Method: SW846 8270C
Lab Prep Batch: WG58908
Units: ug/Kgdrywt

CAS#	Compound	Flags	Results	DF	PQL	Adj.PQL	Adj.MDL
100-52-7	Benzaldehyde	~~U~~ UJ	560	1.0	500	560	130 CCH
108-95-2	Phenol	U	560	1.0	500	560	170
111-44-4	Bis(2-Chloroethyl)ether	U	370	1.0	330	370	90
95-57-8	2-Chlorophenol	U	560	1.0	500	560	180
95-48-7	2-Methylphenol	U	670	1.0	600	670	220
108-60-1	2,2'-Oxybis(1-chloropropane)	U	370	1.0	330	370	100
98-86-2	Acetophenone	U	670	1.0	600	670	200
621-64-7	N-Nitroso-di-n-propylamine	U	370	1.0	330	370	93
65794-96-9	3&4-Methylphenol	U	670	1.0	600	670	210
67-72-1	Hexachloroethane	U	370	1.0	330	370	110
98-95-3	Nitrobenzene	U	370	1.0	330	370	100
78-59-1	Isophorone	U	370	1.0	330	370	84
88-75-5	2-Nitrophenol	U	670	1.0	600	670	190
105-67-9	2,4-Dimethylphenol	U	560	1.0	500	560	180
111-91-1	Bis(2-Chloroethoxy)methane	U	370	1.0	330	370	110
120-83-2	2,4-Dichlorophenol	U	560	1.0	500	560	170
106-47-8	4-Chloroaniline	U	560	1.0	500	560	130
105-60-2	Caprolactam	U	560	1.0	500	560	160
59-50-7	4-Chloro-3-Methylphenol	U	560	1.0	500	560	180
88-06-2	2,4,6-Trichlorophenol	U	560	1.0	500	560	170
95-95-4	2,4,5-Trichlorophenol	U	560	1.0	500	560	170
91-58-7	2-Chloronaphthalene	U	370	1.0	330	370	97
92-52-4	1,1'-Biphenyl	U	370	1.0	330	370	82
88-74-4	2-Nitroaniline	U	560	1.0	500	560	84
131-11-3	Dimethyl Phthalate	U	370	1.0	330	370	87
606-20-2	2,6-Dinitrotoluene	U	370	1.0	330	370	88
208-96-8	Acenaphthylene	U	370	1.0	330	370	78
99-09-2	3-Nitroaniline	U	560	1.0	500	560	100
83-32-9	Acenaphthene	U	370	1.0	330	370	73
51-28-5	2,4-Dinitrophenol	U	1300	1.0	1200	1300	420
132-64-9	Dibenzofuran	U	370	1.0	330	370	88
100-02-7	4-Nitrophenol	U	1300	1.0	1200	1300	340
121-14-2	2,4-Dinitrotoluene	U	370	1.0	330	370	95
84-66-2	Diethylphthalate	U	370	1.0	330	370	89
7005-72-3	4-Chlorophenyl-phenylether	U	370	1.0	330	370	87
100-01-6	4-Nitroaniline	U	560	1.0	500	560	150
534-52-1	4,6-Dinitro-2-Methylphenol	U	1300	1.0	1200	1300	380
86-30-6	N-Nitrosodiphenylamine	U	740	1.0	660	740	240
101-55-3	4-Bromophenyl-phenylether	U	370	1.0	330	370	95
1912-24-9	Atrazine	U	370	1.0	330	370	100
87-86-5	Pentachlorophenol	U	920	1.0	820	920	260
120-12-7	Anthracene	U	370	1.0	330	370	94
86-74-8	Carbazole	U	560	1.0	500	560	120

lwd 3/2/09

KATAHDIN ANALYTICAL SERVICES
Report of Analytical Results

Client: CH2MHill
Project: TO-009 Lejeune
PO No:
Sample Date: 12/05/08
Received Date: 12/06/08
Extraction Date: 12/09/08
Analysis Date: 19-DEC-2008 07:07
Report Date: 12/23/2008
Matrix: SOIL
% Solids: 89.4

Lab ID: SB7032-9
Client ID: MR08-SS103-08D
SDG: TO9-12
Extracted by: CB
Extraction Method: SW846 3550
Analyst: JCG
Analysis Method: SW846 8270C
Lab Prep Batch: WG58908
Units: ug/Kgdrywt

CAS#	Compound	Flags	Results	DF	PQL	Adj.PQL	Adj.MDL
84-74-2	Di-n-butylphthalate	U	370	1.0	330	370	110
85-68-7	Butylbenzylphthalate	U	370	1.0	330	370	100
91-94-1	3,3'-Dichlorobenzidine	U	560	1.0	500	560	130
218-01-9	Chrysene	U	370	1.0	330	370	110
117-81-7	bis(2-Ethylhexyl)phthalate		680	1.0	330	370	110
117-84-0	Di-n-octylphthalate	U	370	1.0	330	370	240
367-12-4	2-Fluorophenol		81%				
13127-88-3	Phenol-D6		*101%				
4165-60-0	Nitrobenzene-D5		86%				
321-60-8	2-Fluorobiphenyl		103%				
118-79-6	2,4,6-Tribromophenol		85%				
1718-51-0	Terphenyl-D14		106%				

MW
3/2/09

KATAHDIN ANALYTICAL SERVICES
Report of Analytical Results

Client: CH2MHill
Project: TO-009 Lejeune
PO No:
Sample Date: 12/05/08
Received Date: 12/06/08
Extraction Date: 12/09/08
Analysis Date: 18-DEC-2008 23:31
Report Date: 12/22/2008
Matrix: SOIL
% Solids: 85.5

Lab ID: SB7032-11
Client ID: MR08-IS103-3-4-08D
SDG: TO9-12
Extracted by: CB
Extraction Method: SW846 3550
Analyst: JCG
Analysis Method: SW846 8270C
Lab Prep Batch: WG58908
Units: ug/Kgdrywt

CAS#	Compound	Flags	Results	DF	PQL	Adj.PQL	Adj.MDL	
100-52-7	Benzaldehyde	~~U~~ UJ	580	1.0	500	580	140	CCH
108-95-2	Phenol	U	580	1.0	500	580	180	
111-44-4	Bis(2-Chloroethyl)ether	U	380	1.0	330	380	95	
95-57-8	2-Chlorophenol	U	580	1.0	500	580	190	
95-48-7	2-Methylphenol	U	700	1.0	600	700	230	
108-60-1	2,2'-Oxybis(1-chloropropane)	U	380	1.0	330	380	100	
98-86-2	Acetophenone	U	700	1.0	600	700	210	
621-64-7	N-Nitroso-di-n-propylamine	U	380	1.0	330	380	97	
65794-96-9	3&4-Methylphenol	U	700	1.0	600	700	220	
67-72-1	Hexachloroethane	U	380	1.0	330	380	110	
98-95-3	Nitrobenzene	U	380	1.0	330	380	110	
78-59-1	Isophorone	U	380	1.0	330	380	88	
88-75-5	2-Nitrophenol	U	700	1.0	600	700	200	
105-67-9	2,4-Dimethylphenol	U	580	1.0	500	580	190	
111-91-1	Bis(2-Chloroethoxy)methane	U	380	1.0	330	380	110	
120-83-2	2,4-Dichlorophenol	U	580	1.0	500	580	180	
106-47-8	4-Chloroaniline	U	580	1.0	500	580	140	
105-60-2	Caprolactam	U	580	1.0	500	580	170	
59-50-7	4-Chloro-3-Methylphenol	U	580	1.0	500	580	190	
88-06-2	2,4,6-Trichlorophenol	U	580	1.0	500	580	180	
95-95-4	2,4,5-Trichlorophenol	U	580	1.0	500	580	180	
91-58-7	2-Chloronaphthalene	U	380	1.0	330	380	100	
92-52-4	1,1'-Biphenyl	U	380	1.0	330	380	85	
88-74-4	2-Nitroaniline	U	580	1.0	500	580	88	
131-11-3	Dimethyl Phthalate	U	380	1.0	330	380	91	
606-20-2	2,6-Dinitrotoluene	U	380	1.0	330	380	92	
208-96-8	Acenaphthylene	U	380	1.0	330	380	82	
99-09-2	3-Nitroaniline	U	580	1.0	500	580	110	
83-32-9	Acenaphthene	U	380	1.0	330	380	76	
51-28-5	2,4-Dinitrophenol	U	1400	1.0	1200	1400	440	
132-64-9	Dibenzofuran	U	380	1.0	330	380	92	
100-02-7	4-Nitrophenol	U	1400	1.0	1200	1400	360	
121-14-2	2,4-Dinitrotoluene	U	380	1.0	330	380	99	
84-66-2	Diethylphthalate	U	380	1.0	330	380	94	
7005-72-3	4-Chlorophenyl-phenylether	U	380	1.0	330	380	91	
100-01-6	4-Nitroaniline	U	580	1.0	500	580	160	
534-52-1	4,6-Dinitro-2-Methylphenol	U	1400	1.0	1200	1400	390	
86-30-6	N-Nitrosodiphenylamine	U	770	1.0	660	770	260	
101-55-3	4-Bromophenyl-phenylether	U	380	1.0	330	380	99	
1912-24-9	Atrazine	U	380	1.0	330	380	110	
87-86-5	Pentachlorophenol	U	960	1.0	820	960	280	
120-12-7	Anthracene	U	380	1.0	330	380	98	
86-74-8	Carbazole	U	580	1.0	500	580	130	

LW 3/2/09

KATAHDIN ANALYTICAL SERVICES
Report of Analytical Results

Client: CH2MHill
Project: TO-009 Lejeune
PO No:
Sample Date: 12/05/08
Received Date: 12/06/08
Extraction Date: 12/09/08
Analysis Date: 18-DEC-2008 23:31
Report Date: 12/22/2008
Matrix: SOIL
% Solids: 85.5

Lab ID: SB7032-11
Client ID: MR08-IS103-3-4-08D
SDG: TO9-12
Extracted by: CB
Extraction Method: SW846 3550
Analyst: JCG
Analysis Method: SW846 8270C
Lab Prep Batch: WG58908
Units: ug/Kgdrywt

CAS#	Compound	Flags	Results	DF	PQL	Adj.PQL	Adj.MDL
84-74-2	Di-n-butylphthalate	U	380	1.0	330	380	120
85-68-7	Butylbenzylphthalate	U	380	1.0	330	380	110
91-94-1	3,3'-Dichlorobenzidine	U	580	1.0	500	580	130
218-01-9	Chrysene	U	380	1.0	330	380	110
117-81-7	bis(2-Ethylhexyl)phthalate	U	380	1.0	330	380	110
117-84-0	Di-n-octylphthalate	U	380	1.0	330	380	250
367-12-4	2-Fluorophenol		75%				
13127-88-3	Phenol-D6		85%				
4165-60-0	Nitrobenzene-D5		83%				
321-60-8	2-Fluorobiphenyl		80%				
118-79-6	2,4,6-Tribromophenol		91%				
1718-51-0	Terphenyl-D14		105%				

lcs
3/2/09

KATAHDIN ANALYTICAL SERVICES
Report of Analytical Results

Client: CH2MHill
Project: TO-009 Lejeune
PO No:
Sample Date: 12/05/08
Received Date: 12/06/08
Extraction Date: 12/09/08
Analysis Date: 19-DEC-2008 04:21
Report Date: 12/22/2008
Matrix: SOIL
% Solids: 82.5

Lab ID: SB7032-13
Client ID: MR08-SS116-08D
SDG: TO9-12
Extracted by: CB
Extraction Method: SW846 3550
Analyst: JCG
Analysis Method: SW846 8270C
Lab Prep Batch: WG58908
Units: ug/Kgdrywt

CAS#	Compound	Flags	Results	DF	PQL	Adj.PQL	Adj.MDL
100-52-7	Benzaldehyde	~~U~~ UJ	610	1.0	500	610	140 CCH
108-95-2	Phenol	U	610	1.0	500	610	190
111-44-4	Bis(2-Chloroethyl)ether	U	400	1.0	330	400	98
95-57-8	2-Chlorophenol	U	610	1.0	500	610	200
95-48-7	2-Methylphenol	U	730	1.0	600	730	240
108-60-1	2,2'-Oxybis(1-chloropropane)	U	400	1.0	330	400	110
98-86-2	Acetophenone	U	730	1.0	600	730	220
621-64-7	N-Nitroso-di-n-propylamine	U	400	1.0	330	400	100
65794-96-9	3&4-Methylphenol	U	730	1.0	600	730	230
67-72-1	Hexachloroethane	U	400	1.0	330	400	120
98-95-3	Nitrobenzene	U	400	1.0	330	400	110
78-59-1	Isophorone	U	400	1.0	330	400	91
88-75-5	2-Nitrophenol	U	730	1.0	600	730	200
105-67-9	2,4-Dimethylphenol	U	610	1.0	500	610	200
111-91-1	Bis(2-Chloroethoxy)methane	U	400	1.0	330	400	120
120-83-2	2,4-Dichlorophenol	U	610	1.0	500	610	180
106-47-8	4-Chloroaniline	U	610	1.0	500	610	140
105-60-2	Caprolactam	U	610	1.0	500	610	170
59-50-7	4-Chloro-3-Methylphenol	U	610	1.0	500	610	200
88-06-2	2,4,6-Trichlorophenol	U	610	1.0	500	610	190
95-95-4	2,4,5-Trichlorophenol	U	610	1.0	500	610	190
91-58-7	2-Chloronaphthalene	U	400	1.0	330	400	100
92-52-4	1,1'-Biphenyl	U	400	1.0	330	400	88
88-74-4	2-Nitroaniline	U	610	1.0	500	610	91
131-11-3	Dimethyl Phthalate	U	400	1.0	330	400	94
606-20-2	2,6-Dinitrotoluene	U	400	1.0	330	400	96
208-96-8	Acenaphthylene	U	400	1.0	330	400	85
99-09-2	3-Nitroaniline	U	610	1.0	500	610	110
83-32-9	Acenaphthene	U	400	1.0	330	400	79
51-28-5	2,4-Dinitrophenol	U	1400	1.0	1200	1400	460
132-64-9	Dibenzofuran	U	400	1.0	330	400	96
100-02-7	4-Nitrophenol	U	1400	1.0	1200	1400	370
121-14-2	2,4-Dinitrotoluene	U	400	1.0	330	400	100
84-66-2	Diethylphthalate	U	400	1.0	330	400	97
7005-72-3	4-Chlorophenyl-phenylether	U	400	1.0	330	400	94
100-01-6	4-Nitroaniline	U	610	1.0	500	610	160
534-52-1	4,6-Dinitro-2-Methylphenol	U	1400	1.0	1200	1400	410
86-30-6	N-Nitrosodiphenylamine	U	800	1.0	660	800	260
101-55-3	4-Bromophenyl-phenylether	U	400	1.0	330	400	100
1912-24-9	Atrazine	U	400	1.0	330	400	110
87-86-5	Pentachlorophenol	U	990	1.0	820	990	290
120-12-7	Anthracene	U	400	1.0	330	400	100
86-74-8	Carbazole	U	610	1.0	500	610	130

JCW 3/2/09

KATAHDIN ANALYTICAL SERVICES
Report of Analytical Results

Client: CH2MHill
Project: TO-009 Lejeune
PO No:
Sample Date: 12/05/08
Received Date: 12/06/08
Extraction Date: 12/09/08
Analysis Date: 19-DEC-2008 04:21
Report Date: 12/22/2008
Matrix: SOIL
% Solids: 82.5

Lab ID: SB7032-13
Client ID: MR08-SS116-08D
SDG: TO9-12
Extracted by: CB
Extraction Method: SW846 3550
Analyst: JCG
Analysis Method: SW846 8270C
Lab Prep Batch: WG58908
Units: ug/Kgdrywt

CAS#	Compound	Flags	Results	DF	PQL	Adj.PQL	Adj.MDL
84-74-2	Di-n-butylphthalate	U	400	1.0	330	400	120
85-68-7	Butylbenzylphthalate	U	400	1.0	330	400	110
91-94-1	3,3'-Dichlorobenzidine	U	610	1.0	500	610	140
218-01-9	Chrysene	U	400	1.0	330	400	120
117-81-7	bis(2-Ethylhexyl)phthalate		720	1.0	330	400	120
117-84-0	Di-n-octylphthalate	U	400	1.0	330	400	260
367-12-4	2-Fluorophenol		75%				
13127-88-3	Phenol-D6		86%				
4165-60-0	Nitrobenzene-D5		83%				
321-60-8	2-Fluorobiphenyl		85%				
118-79-6	2,4,6-Tribromophenol		94%				
1718-51-0	Terphenyl-D14		112%				

lw
3/2/09

20

KATAHDIN ANALYTICAL SERVICES
Report of Analytical Results

Client: CH2MHill
Project: TO-009 Lejeune
PO No:
Sample Date: 12/05/08
Received Date: 12/06/08
Extraction Date: 12/09/08
Analysis Date: 18-DEC-2008 22:49
Report Date: 12/22/2008
Matrix: SOIL
% Solids: 87.5

Lab ID: SB7032-15
Client ID: MR08-IS116-3-4-08D
SDG: TO9-12
Extracted by: CB
Extraction Method: SW846 3550
Analyst: JCG
Analysis Method: SW846 8270C
Lab Prep Batch: WG58908
Units: ug/Kgdrywt

CAS#	Compound	Flags	Results	DF	PQL	Adj.PQL	Adj.MDL
100-52-7	Benzaldehyde	~~U~~ UJ	570	1.0	500	570	140 CCH
108-95-2	Phenol	U	570	1.0	500	570	180
111-44-4	Bis(2-Chloroethyl)ether	U	380	1.0	330	380	92
95-57-8	2-Chlorophenol	U	570	1.0	500	570	190
95-48-7	2-Methylphenol	U	680	1.0	600	680	230
108-60-1	2,2'-Oxybis(1-chloropropane)	U	380	1.0	330	380	100
98-86-2	Acetophenone	U	680	1.0	600	680	200
621-64-7	N-Nitroso-di-n-propylamine	U	380	1.0	330	380	95
65794-96-9	3&4-Methylphenol	U	680	1.0	600	680	210
67-72-1	Hexachloroethane	U	380	1.0	330	380	110
98-95-3	Nitrobenzene	U	380	1.0	330	380	100
78-59-1	Isophorone	U	380	1.0	330	380	86
88-75-5	2-Nitrophenol	U	680	1.0	600	680	190
105-67-9	2,4-Dimethylphenol	U	570	1.0	500	570	190
111-91-1	Bis(2-Chloroethoxy)methane	U	380	1.0	330	380	110
120-83-2	2,4-Dichlorophenol	U	570	1.0	500	570	170
106-47-8	4-Chloroaniline	U	570	1.0	500	570	140
105-60-2	Caprolactam	U	570	1.0	500	570	160
59-50-7	4-Chloro-3-Methylphenol	U	570	1.0	500	570	190
88-06-2	2,4,6-Trichlorophenol	U	570	1.0	500	570	180
95-95-4	2,4,5-Trichlorophenol	U	570	1.0	500	570	180
91-58-7	2-Chloronaphthalene	U	380	1.0	330	380	99
92-52-4	1,1'-Biphenyl	U	380	1.0	330	380	83
88-74-4	2-Nitroaniline	U	570	1.0	500	570	86
131-11-3	Dimethyl Phthalate	U	380	1.0	330	380	89
606-20-2	2,6-Dinitrotoluene	U	380	1.0	330	380	90
208-96-8	Acenaphthylene	U	380	1.0	330	380	80
99-09-2	3-Nitroaniline	U	570	1.0	500	570	110
83-32-9	Acenaphthene	U	380	1.0	330	380	74
51-28-5	2,4-Dinitrophenol	U	1400	1.0	1200	1400	430
132-64-9	Dibenzofuran	U	380	1.0	330	380	90
100-02-7	4-Nitrophenol	U	1400	1.0	1200	1400	350
121-14-2	2,4-Dinitrotoluene	U	380	1.0	330	380	97
84-66-2	Diethylphthalate	U	380	1.0	330	380	91
7005-72-3	4-Chlorophenyl-phenylether	U	380	1.0	330	380	89
100-01-6	4-Nitroaniline	U	570	1.0	500	570	150
534-52-1	4,6-Dinitro-2-Methylphenol	U	1400	1.0	1200	1400	380
86-30-6	N-Nitrosodiphenylamine	U	750	1.0	660	750	250
101-55-3	4-Bromophenyl-phenylether	U	380	1.0	330	380	97
1912-24-9	Atrazine	U	380	1.0	330	380	100
87-86-5	Pentachlorophenol	U	940	1.0	820	940	270
120-12-7	Anthracene	U	380	1.0	330	380	96
86-74-8	Carbazole	U	570	1.0	500	570	130

RW 3/2/09

KATAHDIN ANALYTICAL SERVICES
Report of Analytical Results

Client: CH2MHill
Project: TO-009 Lejeune
PO No:
Sample Date: 12/05/08
Received Date: 12/06/08
Extraction Date: 12/09/08
Analysis Date: 18-DEC-2008 22:49
Report Date: 12/22/2008
Matrix: SOIL
% Solids: 87.5

Lab ID: SB7032-15
Client ID: MR08-IS116-3-4-08D
SDG: TO9-12
Extracted by: CB
Extraction Method: SW846 3550
Analyst: JCG
Analysis Method: SW846 8270C
Lab Prep Batch: WG58908
Units: ug/Kgdrywt

CAS#	Compound	Flags	Results	DF	PQL	Adj.PQL	Adj.MDL
84-74-2	Di-n-butylphthalate	U	380	1.0	330	380	120
85-68-7	Butylbenzylphthalate	U	380	1.0	330	380	110
91-94-1	3,3'-Dichlorobenzidine	U	570	1.0	500	570	130
218-01-9	Chrysene	U	380	1.0	330	380	110
117-81-7	bis(2-Ethylhexyl)phthalate	U	380	1.0	330	380	110
117-84-0	Di-n-octylphthalate	U	380	1.0	330	380	240
367-12-4	2-Fluorophenol		76%				
13127-88-3	Phenol-D6		86%				
4165-60-0	Nitrobenzene-D5		88%				
321-60-8	2-Fluorobiphenyl		85%				
118-79-6	2,4,6-Tribromophenol		83%				
1718-51-0	Terphenyl-D14		102%				

lw 3/2/09

ENVIRONMENTAL
Data Services, Inc.

SEMIVOLATILE ORGANIC COMPOUNDS

USEPA Region IV - Level IV Review

Site: MCB Camp Lejeune, TO-09 SDG #: TO9-12

Client: CH2M HILL, Inc., Virginia Beach, Virginia Date: March 2, 2009

Laboratory: Katahdin Analytical Services, Scarborough, Maine Reviewer: Nancy Weaver

EDS ID	Client Sample ID	Laboratory Sample ID	Matrix
1	MR08-IS079-6-7-08D	SB7003-1	Soil
2	MR08-IS079D-6-7-08D	SB7003-3	Soil
3	MR08-SS097-08D	SB7003-5	Soil
4	MR08-IS097-6-7-08D	SB7003-7	Soil
5	MR08-SS096-08D	SB7003-9	Soil
6	MR08-IS096-6-7-08D	SB7003-11	Soil
7	MR08-SS095-08D	SB7003-13	Soil
8	MR08-IS095-6-7-08D	SB7003-15	Soil
9	MR08-SS094-08D	SB7003-17	Soil
10	MR08-IS094-5-6-08D	SB7003-19	Soil
11	MR08-SS092-08D	SB7003-21	Soil
12	MR08-IS092-4-5-08D	SB7003-23	Soil
13	MR08-SS091-08D	SB7032-1	Soil
14	MR08-IS091-2-3-08D	SB7032-3	Soil
15	MR08-SS093-08D	SB7032-5	Soil
16	MR08-IS093-2-3-08D	SB7032-7	Soil
17	MR08-SS103-08D	SB7032-9	Soil
18	MR08-IS103-3-4-08D	SB7032-11	Soil
19	MR08-SS116-08D	SB7032-13	Soil
20	MR08-IS116-3-4-08D	SB7032-15	Soil

The USEPA "Contract Laboratory Program National Functional Guidelines for Organic Data Review," October 1999, and professional judgment were used in evaluating the data in this summary report.

Holding Times - All samples were extracted within 14 days for soil samples and analyzed within 40 days for all samples.

GC/MS Tuning - All of the DFTPP tunes in the initial and continuing calibrations met the percent relative abundance criteria.

Initial Calibration - The initial calibrations exhibited acceptable %RSD and mean RRF values.

Continuing Calibration - The continuing calibrations exhibited acceptable %D and RRF values except the following.

CCAL Date	Compound	%D/RRF	Qualifier	Affected Samples
12/18/08	Benzaldehyde	34.98%	J/UJ	1, 2, 4, 6, 8
12/18/08	Benzaldehyde	39.17%	J/UJ	3, 5, 7, 9, 10-20

Surrogates - All samples exhibited acceptable surrogate recoveries.

MS/MSD - A MS/MSD sample was not analyzed.

Laboratory Control Sample - The LCS samples exhibited acceptable %R values.

Internal Standard (IS) Area Performance - All internal standards met response and retention time (RT) criteria.

Method Blank - The method blanks were free of contamination.

Field, Equipment Blank - Field QC results are summarized below.

Blank ID	Compound	Conc. ug/L	Action Level ug/L	Qualifier	Affected Samples
MR08-EB01120408-IS	None - ND	-	-	-	-
MR08-EB01120408-SS	None - ND	-	-	-	-
MR08-EB01120508-IS	None - ND	-	-	-	-
MR08-EB01120508-SS	None - ND	-	-	-	-
MR08-FB01120608	None - ND	-	-	-	-

Field Duplicates - Field duplicate results are summarized below.

Compound	MR08-IS079-6-7-08D	MR08-IS079D-6-7-08D	RPD	Qualifier
None	ND	ND	-	-

Tentatively Identified Compounds (TICs) - TICs were not reported.

Compound Quantitation - No discrepancies were identified.

KATAHDIN ANALYTICAL SERVICES
Report of Analytical Results

Client: CH2MHill
Project: TO-009 Lejeune
PO No:
Sample Date: 12/04/08
Received Date: 12/05/08
Extraction Date: 12/08/08
Analysis Date: 18-DEC-2008 12:52
Report Date: 12/22/2008
Matrix: SOIL
% Solids: 89.5

Lab ID: SB7003-1
Client ID: MR08-IS079-6-7-08D
SDG: TO9-12
Extracted by: CB
Extraction Method: SW846 3550
Analyst: JLP
Analysis Method: SW846 8270C
Lab Prep Batch: WG58886
Units: ug/Kgdrywt

CAS#	Compound	Flags	Results	DF	PQL	Adj.PQL	Adj.MDL
100-52-7	Benzaldehyde	~~U~~ UJ	560	1.0	500	560	130 CCH
108-95-2	Phenol	U	560	1.0	500	560	170
111-44-4	Bis(2-Chloroethyl)ether	U	370	1.0	330	370	90
95-57-8	2-Chlorophenol	U	560	1.0	500	560	180
95-48-7	2-Methylphenol	U	670	1.0	600	670	220
108-60-1	2,2'-Oxybis(1-chloropropane)	U	370	1.0	330	370	99
98-86-2	Acetophenone	U	670	1.0	600	670	200
621-64-7	N-Nitroso-di-n-propylamine	U	370	1.0	330	370	93
65794-96-9	3&4-Methylphenol	U	670	1.0	600	670	210
67-72-1	Hexachloroethane	U	370	1.0	330	370	110
98-95-3	Nitrobenzene	U	370	1.0	330	370	100
78-59-1	Isophorone	U	370	1.0	330	370	84
88-75-5	2-Nitrophenol	U	670	1.0	600	670	190
105-67-9	2,4-Dimethylphenol	U	560	1.0	500	560	180
111-91-1	Bis(2-Chloroethoxy)methane	U	370	1.0	330	370	110
120-83-2	2,4-Dichlorophenol	U	560	1.0	500	560	170
106-47-8	4-Chloroaniline	U	560	1.0	500	560	130
105-60-2	Caprolactam	U	560	1.0	500	560	160
59-50-7	4-Chloro-3-Methylphenol	U	560	1.0	500	560	180
88-06-2	2,4,6-Trichlorophenol	U	560	1.0	500	560	170
95-95-4	2,4,5-Trichlorophenol	U	560	1.0	500	560	170
91-58-7	2-Chloronaphthalene	U	370	1.0	330	370	97
92-52-4	1,1'-Biphenyl	U	370	1.0	330	370	82
88-74-4	2-Nitroaniline	U	560	1.0	500	560	84
131-11-3	Dimethyl Phthalate	U	370	1.0	330	370	87
606-20-2	2,6-Dinitrotoluene	U	370	1.0	330	370	88
208-96-8	Acenaphthylene	U	370	1.0	330	370	78
99-09-2	3-Nitroaniline	U	560	1.0	500	560	100
83-32-9	Acenaphthene	U	370	1.0	330	370	73
51-28-5	2,4-Dinitrophenol	U	1300	1.0	1200	1300	420
132-64-9	Dibenzofuran	U	370	1.0	330	370	88
100-02-7	4-Nitrophenol	U	1300	1.0	1200	1300	340
121-14-2	2,4-Dinitrotoluene	U	370	1.0	330	370	95
84-66-2	Diethylphthalate	U	370	1.0	330	370	89
7005-72-3	4-Chlorophenyl-phenylether	U	370	1.0	330	370	87
100-01-6	4-Nitroaniline	U	560	1.0	500	560	150
534-52-1	4,6-Dinitro-2-Methylphenol	U	1300	1.0	1200	1300	380
86-30-6	N-Nitrosodiphenylamine	U	740	1.0	660	740	240
101-55-3	4-Bromophenyl-phenylether	U	370	1.0	330	370	95
1912-24-9	Atrazine	U	370	1.0	330	370	100
87-86-5	Pentachlorophenol	U	920	1.0	820	920	260
120-12-7	Anthracene	U	370	1.0	330	370	94
86-74-8	Carbazole	U	560	1.0	500	560	120

lw 3/2/09

KATAHDIN ANALYTICAL SERVICES
Report of Analytical Results

Client: CH2MHill
Project: TO-009 Lejeune
PO No:
Sample Date: 12/04/08
Received Date: 12/05/08
Extraction Date: 12/08/08
Analysis Date: 18-DEC-2008 12:52
Report Date: 12/22/2008
Matrix: SOIL
% Solids: 89.5

Lab ID: SB7003-1
Client ID: MR08-IS079-6-7-08D
SDG: TO9-12
Extracted by: CB
Extraction Method: SW846 3550
Analyst: JLP
Analysis Method: SW846 8270C
Lab Prep Batch: WG58886
Units: ug/Kgdrywt

CAS#	Compound	Flags	Results	DF	PQL	Adj.PQL	Adj.MDL
84-74-2	Di-n-butylphthalate	U	370	1.0	330	370	110
85-68-7	Butylbenzylphthalate	U	370	1.0	330	370	100
91-94-1	3,3'-Dichlorobenzidine	U	560	1.0	500	560	130
218-01-9	Chrysene	U	370	1.0	330	370	110
117-81-7	bis(2-Ethylhexyl)phthalate	U	370	1.0	330	370	110
117-84-0	Di-n-octylphthalate	U	370	1.0	330	370	240
367-12-4	2-Fluorophenol		70%				
13127-88-3	Phenol-D6		79%				
4165-60-0	Nitrobenzene-D5		80%				
321-60-8	2-Fluorobiphenyl		82%				
118-79-6	2,4,6-Tribromophenol		84%				
1718-51-0	Terphenyl-D14		108%				

RWJ 3/2/09

KATAHDIN ANALYTICAL SERVICES
Report of Analytical Results

Client: CH2MHill
Project: TO-009 Lejeune
PO No:
Sample Date: 12/04/08
Received Date: 12/05/08
Extraction Date: 12/08/08
Analysis Date: 18-DEC-2008 13:34
Report Date: 12/22/2008
Matrix: SOIL
% Solids: 90.3

Lab ID: SB7003-3
Client ID: MR08-IS079D-6-7-08D
SDG: TO9-12
Extracted by: CB
Extraction Method: SW846 3550
Analyst: JLP
Analysis Method: SW846 8270C
Lab Prep Batch: WG58886
Units: ug/Kgdrywt

CAS#	Compound	Flags	Results	DF	PQL	Adj.PQL	Adj.MDL
100-52-7	Benzaldehyde	~~U~~ UJ	550	1.0	500	550	130 CCH
108-95-2	Phenol	U	550	1.0	500	550	170
111-44-4	Bis(2-Chloroethyl)ether	U	360	1.0	330	360	90
95-57-8	2-Chlorophenol	U	550	1.0	500	550	180
95-48-7	2-Methylphenol	U	660	1.0	600	660	220
108-60-1	2,2'-Oxybis(1-chloropropane)	U	360	1.0	330	360	98
98-86-2	Acetophenone	U	660	1.0	600	660	200
621-64-7	N-Nitroso-di-n-propylamine	U	360	1.0	330	360	92
65794-96-9	3&4-Methylphenol	U	660	1.0	600	660	210
67-72-1	Hexachloroethane	U	360	1.0	330	360	110
98-95-3	Nitrobenzene	U	360	1.0	330	360	100
78-59-1	Isophorone	U	360	1.0	330	360	83
88-75-5	2-Nitrophenol	U	660	1.0	600	660	180
105-67-9	2,4-Dimethylphenol	U	550	1.0	500	550	180
111-91-1	Bis(2-Chloroethoxy)methane	U	360	1.0	330	360	110
120-83-2	2,4-Dichlorophenol	U	550	1.0	500	550	170
106-47-8	4-Chloroaniline	U	550	1.0	500	550	130
105-60-2	Caprolactam	U	550	1.0	500	550	160
59-50-7	4-Chloro-3-Methylphenol	U	550	1.0	500	550	180
88-06-2	2,4,6-Trichlorophenol	U	550	1.0	500	550	170
95-95-4	2,4,5-Trichlorophenol	U	550	1.0	500	550	170
91-58-7	2-Chloronaphthalene	U	360	1.0	330	360	96
92-52-4	1,1'-Biphenyl	U	360	1.0	330	360	81
88-74-4	2-Nitroaniline	U	550	1.0	500	550	83
131-11-3	Dimethyl Phthalate	U	360	1.0	330	360	86
606-20-2	2,6-Dinitrotoluene	U	360	1.0	330	360	87
208-96-8	Acenaphthylene	U	360	1.0	330	360	78
99-09-2	3-Nitroaniline	U	550	1.0	500	550	100
83-32-9	Acenaphthene	U	360	1.0	330	360	72
51-28-5	2,4-Dinitrophenol	U	1300	1.0	1200	1300	420
132-64-9	Dibenzofuran	U	360	1.0	330	360	87
100-02-7	4-Nitrophenol	U	1300	1.0	1200	1300	340
121-14-2	2,4-Dinitrotoluene	U	360	1.0	330	360	94
84-66-2	Diethylphthalate	U	360	1.0	330	360	88
7005-72-3	4-Chlorophenyl-phenylether	U	360	1.0	330	360	86
100-01-6	4-Nitroaniline	U	550	1.0	500	550	150
534-52-1	4,6-Dinitro-2-Methylphenol	U	1300	1.0	1200	1300	370
86-30-6	N-Nitrosodiphenylamine	U	730	1.0	660	730	240
101-55-3	4-Bromophenyl-phenylether	U	360	1.0	330	360	94
1912-24-9	Atrazine	U	360	1.0	330	360	100
87-86-5	Pentachlorophenol	U	910	1.0	820	910	260
120-12-7	Anthracene	U	360	1.0	330	360	93
86-74-8	Carbazole	U	550	1.0	500	550	120

JW 3/2/09

2

KATAHDIN ANALYTICAL SERVICES
Report of Analytical Results

Client: CH2MHill
Project: TO-009 Lejeune
PO No:
Sample Date: 12/04/08
Received Date: 12/05/08
Extraction Date: 12/08/08
Analysis Date: 18-DEC-2008 13:34
Report Date: 12/22/2008
Matrix: SOIL
% Solids: 90.3

Lab ID: SB7003-3
Client ID: MR08-IS079D-6-7-08D
SDG: TO9-12
Extracted by: CB
Extraction Method: SW846 3550
Analyst: JLP
Analysis Method: SW846 8270C
Lab Prep Batch: WG58886
Units: ug/Kgdrywt

CAS#	Compound	Flags	Results	DF	PQL	Adj.PQL	Adj.MDL
84-74-2	Di-n-butylphthalate	U	360	1.0	330	360	110
85-68-7	Butylbenzylphthalate	U	360	1.0	330	360	100
91-94-1	3,3'-Dichlorobenzidine	U	550	1.0	500	550	130
218-01-9	Chrysene	U	360	1.0	330	360	100
117-81-7	bis(2-Ethylhexyl)phthalate	U	360	1.0	330	360	110
117-84-0	Di-n-octylphthalate	U	360	1.0	330	360	230
367-12-4	2-Fluorophenol		73%				
13127-88-3	Phenol-D6		80%				
4165-60-0	Nitrobenzene-D5		80%				
321-60-8	2-Fluorobiphenyl		80%				
118-79-6	2,4,6-Tribromophenol		88%				
1718-51-0	Terphenyl-D14		110%				

RW 3/2/09

3

KATAHDIN ANALYTICAL SERVICES
Report of Analytical Results

Client: CH2MHill
Project: TO-009 Lejeune
PO No:
Sample Date: 12/04/08
Received Date: 12/05/08
Extraction Date: 12/08/08
Analysis Date: 19-DEC-2008 05:02
Report Date: 12/22/2008
Matrix: SOIL
% Solids: 84.7

Lab ID: SB7003-5
Client ID: MR08-SS097-08D
SDG: TO9-12
Extracted by: CB
Extraction Method: SW846 3550
Analyst: JCG
Analysis Method: SW846 8270C
Lab Prep Batch: WG58886
Units: ug/Kgdrywt

CAS#	Compound	Flags	Results	DF	PQL	Adj.PQL	Adj.MDL
100-52-7	Benzaldehyde	~~U~~ UJ	590	1.0	500	590	140 CCH
108-95-2	Phenol	U	590	1.0	500	590	180
111-44-4	Bis(2-Chloroethyl)ether	U	390	1.0	330	390	96
95-57-8	2-Chlorophenol	U	590	1.0	500	590	190
95-48-7	2-Methylphenol	U	710	1.0	600	710	240
108-60-1	2,2'-Oxybis(1-chloropropane)	U	390	1.0	330	390	100
98-86-2	Acetophenone	U	710	1.0	600	710	210
621-64-7	N-Nitroso-di-n-propylamine	U	390	1.0	330	390	98
65794-96-9	3&4-Methylphenol	U	710	1.0	600	710	220
67-72-1	Hexachloroethane	U	390	1.0	330	390	110
98-95-3	Nitrobenzene	U	390	1.0	330	390	110
78-59-1	Isophorone	U	390	1.0	330	390	88
88-75-5	2-Nitrophenol	U	710	1.0	600	710	200
105-67-9	2,4-Dimethylphenol	U	590	1.0	500	590	190
111-91-1	Bis(2-Chloroethoxy)methane	U	390	1.0	330	390	110
120-83-2	2,4-Dichlorophenol	U	590	1.0	500	590	180
106-47-8	4-Chloroaniline	U	590	1.0	500	590	140
105-60-2	Caprolactam	U	590	1.0	500	590	170
59-50-7	4-Chloro-3-Methylphenol	U	590	1.0	500	590	200
88-06-2	2,4,6-Trichlorophenol	U	590	1.0	500	590	180
95-95-4	2,4,5-Trichlorophenol	U	590	1.0	500	590	180
91-58-7	2-Chloronaphthalene	U	390	1.0	330	390	100
92-52-4	1,1'-Biphenyl	U	390	1.0	330	390	86
88-74-4	2-Nitroaniline	U	590	1.0	500	590	88
131-11-3	Dimethyl Phthalate	U	390	1.0	330	390	92
606-20-2	2,6-Dinitrotoluene	U	390	1.0	330	390	93
208-96-8	Acenaphthylene	U	390	1.0	330	390	83
99-09-2	3-Nitroaniline	U	590	1.0	500	590	110
83-32-9	Acenaphthene	U	390	1.0	330	390	77
51-28-5	2,4-Dinitrophenol	U	1400	1.0	1200	1400	440
132-64-9	Dibenzofuran	U	390	1.0	330	390	93
100-02-7	4-Nitrophenol	U	1400	1.0	1200	1400	360
121-14-2	2,4-Dinitrotoluene	U	390	1.0	330	390	100
84-66-2	Diethylphthalate	U	390	1.0	330	390	94
7005-72-3	4-Chlorophenyl-phenylether	U	390	1.0	330	390	92
100-01-6	4-Nitroaniline	U	590	1.0	500	590	160
534-52-1	4,6-Dinitro-2-Methylphenol	U	1400	1.0	1200	1400	400
86-30-6	N-Nitrosodiphenylamine	U	780	1.0	660	780	260
101-55-3	4-Bromophenyl-phenylether	U	390	1.0	330	390	100
1912-24-9	Atrazine	U	390	1.0	330	390	110
87-86-5	Pentachlorophenol	U	970	1.0	820	970	280
120-12-7	Anthracene	U	390	1.0	330	390	99
86-74-8	Carbazole	U	590	1.0	500	590	130

JCW 3/2/09

3

KATAHDIN ANALYTICAL SERVICES
Report of Analytical Results

Client: CH2MHill
Project: TO-009 Lejeune
PO No:
Sample Date: 12/04/08
Received Date: 12/05/08
Extraction Date: 12/08/08
Analysis Date: 19-DEC-2008 05:02
Report Date: 12/22/2008
Matrix: SOIL
% Solids: 84.7

Lab ID: SB7003-5
Client ID: MR08-SS097-08D
SDG: TO9-12
Extracted by: CB
Extraction Method: SW846 3550
Analyst: JCG
Analysis Method: SW846 8270C
Lab Prep Batch: WG58886
Units: ug/Kgdrywt

CAS#	Compound	Flags	Results	DF	PQL	Adj.PQL	Adj.MDL
84-74-2	Di-n-butylphthalate	U	390	1.0	330	390	120
85-68-7	Butylbenzylphthalate	U	390	1.0	330	390	110
91-94-1	3,3'-Dichlorobenzidine	U	590	1.0	500	590	130
218-01-9	Chrysene	U	390	1.0	330	390	110
117-81-7	bis(2-Ethylhexyl)phthalate	U	390	1.0	330	390	120
117-84-0	Di-n-octylphthalate	U	390	1.0	330	390	250
367-12-4	2-Fluorophenol		79%				
13127-88-3	Phenol-D6		90%				
4165-60-0	Nitrobenzene-D5		87%				
321-60-8	2-Fluorobiphenyl		89%				
118-79-6	2,4,6-Tribromophenol		92%				
1718-51-0	Terphenyl-D14		117%				

lwl 3/2/09

4

KATAHDIN ANALYTICAL SERVICES
Report of Analytical Results

Client: CH2MHill
Project: TO-009 Lejeune
PO No:
Sample Date: 12/04/08
Received Date: 12/05/08
Extraction Date: 12/08/08
Analysis Date: 18-DEC-2008 14:16
Report Date: 12/22/2008
Matrix: SOIL
% Solids: 85.7

Lab ID: SB7003-7
Client ID: MR08-IS097-6-7-08D
SDG: TO9-12
Extracted by: CB
Extraction Method: SW846 3550
Analyst: JLP
Analysis Method: SW846 8270C
Lab Prep Batch: WG58886
Units: ug/Kgdrywt

CAS#	Compound	Flags	Results	DF	PQL	Adj.PQL	Adj.MDL
100-52-7	Benzaldehyde	~~U~~ UJ	580	1.0	500	580	140 CCH
108-95-2	Phenol	U	580	1.0	500	580	180
111-44-4	Bis(2-Chloroethyl)ether	U	380	1.0	330	380	94
95-57-8	2-Chlorophenol	U	580	1.0	500	580	190
95-48-7	2-Methylphenol	U	700	1.0	600	700	230
108-60-1	2,2'-Oxybis(1-chloropropane)	U	380	1.0	330	380	100
98-86-2	Acetophenone	U	700	1.0	600	700	210
621-64-7	N-Nitroso-di-n-propylamine	U	380	1.0	330	380	97
65794-96-9	3&4-Methylphenol	U	700	1.0	600	700	220
67-72-1	Hexachloroethane	U	380	1.0	330	380	110
98-95-3	Nitrobenzene	U	380	1.0	330	380	110
78-59-1	Isophorone	U	380	1.0	330	380	87
88-75-5	2-Nitrophenol	U	700	1.0	600	700	190
105-67-9	2,4-Dimethylphenol	U	580	1.0	500	580	190
111-91-1	Bis(2-Chloroethoxy)methane	U	380	1.0	330	380	110
120-83-2	2,4-Dichlorophenol	U	580	1.0	500	580	170
106-47-8	4-Chloroaniline	U	580	1.0	500	580	140
105-60-2	Caprolactam	U	580	1.0	500	580	170
59-50-7	4-Chloro-3-Methylphenol	U	580	1.0	500	580	190
88-06-2	2,4,6-Trichlorophenol	U	580	1.0	500	580	180
95-95-4	2,4,5-Trichlorophenol	U	580	1.0	500	580	180
91-58-7	2-Chloronaphthalene	U	380	1.0	330	380	100
92-52-4	1,1'-Biphenyl	U	380	1.0	330	380	85
88-74-4	2-Nitroaniline	U	580	1.0	500	580	87
131-11-3	Dimethyl Phthalate	U	380	1.0	330	380	91
606-20-2	2,6-Dinitrotoluene	U	380	1.0	330	380	92
208-96-8	Acenaphthylene	U	380	1.0	330	380	82
99-09-2	3-Nitroaniline	U	580	1.0	500	580	110
83-32-9	Acenaphthene	U	380	1.0	330	380	76
51-28-5	2,4-Dinitrophenol	U	1400	1.0	1200	1400	440
132-64-9	Dibenzofuran	U	380	1.0	330	380	92
100-02-7	4-Nitrophenol	U	1400	1.0	1200	1400	360
121-14-2	2,4-Dinitrotoluene	U	380	1.0	330	380	99
84-66-2	Diethylphthalate	U	380	1.0	330	380	93
7005-72-3	4-Chlorophenyl-phenylether	U	380	1.0	330	380	91
100-01-6	4-Nitroaniline	U	580	1.0	500	580	160
534-52-1	4,6-Dinitro-2-Methylphenol	U	1400	1.0	1200	1400	390
86-30-6	N-Nitrosodiphenylamine	U	770	1.0	660	770	260
101-55-3	4-Bromophenyl-phenylether	U	380	1.0	330	380	99
1912-24-9	Atrazine	U	380	1.0	330	380	110
87-86-5	Pentachlorophenol	U	960	1.0	820	960	280
120-12-7	Anthracene	U	380	1.0	330	380	98
86-74-8	Carbazole	U	580	1.0	500	580	130

RW
3/2/09

KATAHDIN ANALYTICAL SERVICES
Report of Analytical Results

Client: CH2MHill
Project: TO-009 Lejeune
PO No:
Sample Date: 12/04/08
Received Date: 12/05/08
Extraction Date: 12/08/08
Analysis Date: 18-DEC-2008 14:16
Report Date: 12/22/2008
Matrix: SOIL
% Solids: 85.7

Lab ID: SB7003-7
Client ID: MR08-IS097-6-7-08D
SDG: TO9-12
Extracted by: CB
Extraction Method: SW846 3550
Analyst: JLP
Analysis Method: SW846 8270C
Lab Prep Batch: WG58886
Units: ug/Kgdrywt

CAS#	Compound	Flags	Results	DF	PQL	Adj.PQL	Adj.MDL
84-74-2	Di-n-butylphthalate	U	380	1.0	330	380	120
85-68-7	Butylbenzylphthalate	U	380	1.0	330	380	110
91-94-1	3,3'-Dichlorobenzidine	U	580	1.0	500	580	130
218-01-9	Chrysene	U	380	1.0	330	380	110
117-81-7	bis(2-Ethylhexyl)phthalate		800	1.0	330	380	110
117-84-0	Di-n-octylphthalate	U	380	1.0	330	380	250
367-12-4	2-Fluorophenol		64%				
13127-88-3	Phenol-D6		72%				
4165-60-0	Nitrobenzene-D5		77%				
321-60-8	2-Fluorobiphenyl		81%				
118-79-6	2,4,6-Tribromophenol		83%				
1718-51-0	Terphenyl-D14		96%				

lw 3/2/09

5

KATAHDIN ANALYTICAL SERVICES
Report of Analytical Results

Client: CH2MHill
Project: TO-009 Lejeune
PO No:
Sample Date: 12/04/08
Received Date: 12/05/08
Extraction Date: 12/08/08
Analysis Date: 19-DEC-2008 07:49
Report Date: 12/22/2008
Matrix: SOIL
% Solids: 67.9

Lab ID: SB7003-9
Client ID: MR08-SS096-08D
SDG: TO9-12
Extracted by: CB
Extraction Method: SW846 3550
Analyst: JCG
Analysis Method: SW846 8270C
Lab Prep Batch: WG58886
Units: ug/Kgdrywt

CAS#	Compound	Flags	Results	DF	PQL	Adj.PQL	Adj.MDL
100-52-7	Benzaldehyde	~~B~~ UJ	740	1.0	500	740	180 CCH
108-95-2	Phenol	U	740	1.0	500	740	230
111-44-4	Bis(2-Chloroethyl)ether	U	490	1.0	330	490	120
95-57-8	2-Chlorophenol	U	740	1.0	500	740	240
95-48-7	2-Methylphenol	U	880	1.0	600	880	290
108-60-1	2,2'-Oxybis(1-chloropropane)	U	490	1.0	330	490	130
98-86-2	Acetophenone	U	880	1.0	600	880	260
621-64-7	N-Nitroso-di-n-propylamine	U	490	1.0	330	490	120
65794-96-9	3&4-Methylphenol	U	880	1.0	600	880	280
67-72-1	Hexachloroethane	U	490	1.0	330	490	140
98-95-3	Nitrobenzene	U	490	1.0	330	490	130
78-59-1	Isophorone	U	490	1.0	330	490	110
88-75-5	2-Nitrophenol	U	880	1.0	600	880	250
105-67-9	2,4-Dimethylphenol	U	740	1.0	500	740	240
111-91-1	Bis(2-Chloroethoxy)methane	U	490	1.0	330	490	140
120-83-2	2,4-Dichlorophenol	U	740	1.0	500	740	220
106-47-8	4-Chloroaniline	U	740	1.0	500	740	180
105-60-2	Caprolactam	U	740	1.0	500	740	210
59-50-7	4-Chloro-3-Methylphenol	U	740	1.0	500	740	240
88-06-2	2,4,6-Trichlorophenol	U	740	1.0	500	740	230
95-95-4	2,4,5-Trichlorophenol	U	740	1.0	500	740	230
91-58-7	2-Chloronaphthalene	U	490	1.0	330	490	130
92-52-4	1,1'-Biphenyl	U	490	1.0	330	490	110
88-74-4	2-Nitroaniline	U	740	1.0	500	740	110
131-11-3	Dimethyl Phthalate	U	490	1.0	330	490	110
606-20-2	2,6-Dinitrotoluene	U	490	1.0	330	490	120
208-96-8	Acenaphthylene	U	490	1.0	330	490	100
99-09-2	3-Nitroaniline	U	740	1.0	500	740	140
83-32-9	Acenaphthene	U	490	1.0	330	490	96
51-28-5	2,4-Dinitrophenol	U	1800	1.0	1200	1800	560
132-64-9	Dibenzofuran	U	490	1.0	330	490	120
100-02-7	4-Nitrophenol	U	1800	1.0	1200	1800	460
121-14-2	2,4-Dinitrotoluene	U	490	1.0	330	490	120
84-66-2	Diethylphthalate	U	490	1.0	330	490	120
7005-72-3	4-Chlorophenyl-phenylether	U	490	1.0	330	490	110
100-01-6	4-Nitroaniline	U	740	1.0	500	740	200
534-52-1	4,6-Dinitro-2-Methylphenol	U	1800	1.0	1200	1800	500
86-30-6	N-Nitrosodiphenylamine	U	970	1.0	660	970	320
101-55-3	4-Bromophenyl-phenylether	U	490	1.0	330	490	120
1912-24-9	Atrazine	U	490	1.0	330	490	130
87-86-5	Pentachlorophenol	U	1200	1.0	820	1200	350
120-12-7	Anthracene	U	490	1.0	330	490	120
86-74-8	Carbazole	U	740	1.0	500	740	160

QW 3/2/09

KATAHDIN ANALYTICAL SERVICES
Report of Analytical Results

Client: CH2MHill
Project: TO-009 Lejeune
PO No:
Sample Date: 12/04/08
Received Date: 12/05/08
Extraction Date: 12/08/08
Analysis Date: 19-DEC-2008 07:49
Report Date: 12/22/2008
Matrix: SOIL
% Solids: 67.9

Lab ID: SB7003-9
Client ID: MR08-SS096-08D
SDG: TO9-12
Extracted by: CB
Extraction Method: SW846 3550
Analyst: JCG
Analysis Method: SW846 8270C
Lab Prep Batch: WG58886
Units: ug/Kgdrywt

CAS#	Compound	Flags	Results	DF	PQL	Adj.PQL	Adj.MDL
84-74-2	Di-n-butylphthalate	U	490	1.0	330	490	150
85-68-7	Butylbenzylphthalate	U	490	1.0	330	490	140
91-94-1	3,3'-Dichlorobenzidine	U	740	1.0	500	740	170
218-01-9	Chrysene	U	490	1.0	330	490	140
117-81-7	bis(2-Ethylhexyl)phthalate	J	440	1.0	330	490	140
117-84-0	Di-n-octylphthalate	U	490	1.0	330	490	310
367-12-4	2-Fluorophenol		70%				
13127-88-3	Phenol-D6		88%				
4165-60-0	Nitrobenzene-D5		82%				
321-60-8	2-Fluorobiphenyl		94%				
118-79-6	2,4,6-Tribromophenol		79%				
1718-51-0	Terphenyl-D14		100%				

JW 3/2/09

6

KATAHDIN ANALYTICAL SERVICES
Report of Analytical Results

Client: CH2MHill
Project: TO-009 Lejeune
PO No:
Sample Date: 12/04/08
Received Date: 12/05/08
Extraction Date: 12/08/08
Analysis Date: 18-DEC-2008 14:59
Report Date: 12/22/2008
Matrix: SOIL
% Solids: 90.1

Lab ID: SB7003-11
Client ID: MR08-IS096-6-7-08D
SDG: TO9-12
Extracted by: CB
Extraction Method: SW846 3550
Analyst: JLP
Analysis Method: SW846 8270C
Lab Prep Batch: WG58886
Units: ug/Kgdrywt

CAS#	Compound	Flags	Results	DF	PQL	Adj.PQL	Adj.MDL	
100-52-7	Benzaldehyde	~~U~~ UJ	550	1.0	500	550	130	CEH
108-95-2	Phenol	U	550	1.0	500	550	170	
111-44-4	Bis(2-Chloroethyl)ether	U	370	1.0	330	370	90	
95-57-8	2-Chlorophenol	U	550	1.0	500	550	180	
95-48-7	2-Methylphenol	U	660	1.0	600	660	220	
108-60-1	2,2'-Oxybis(1-chloropropane)	U	370	1.0	330	370	99	
98-86-2	Acetophenone	U	660	1.0	600	660	200	
621-64-7	N-Nitroso-di-n-propylamine	U	370	1.0	330	370	92	
65794-96-9	3&4-Methylphenol	U	660	1.0	600	660	210	
67-72-1	Hexachloroethane	U	370	1.0	330	370	110	
98-95-3	Nitrobenzene	U	370	1.0	330	370	100	
78-59-1	Isophorone	U	370	1.0	330	370	83	
88-75-5	2-Nitrophenol	U	660	1.0	600	660	180	
105-67-9	2,4-Dimethylphenol	U	550	1.0	500	550	180	
111-91-1	Bis(2-Chloroethoxy)methane	U	370	1.0	330	370	110	
120-83-2	2,4-Dichlorophenol	U	550	1.0	500	550	170	
106-47-8	4-Chloroaniline	U	550	1.0	500	550	130	
105-60-2	Caprolactam	U	550	1.0	500	550	160	
59-50-7	4-Chloro-3-Methylphenol	U	550	1.0	500	550	180	
88-06-2	2,4,6-Trichlorophenol	U	550	1.0	500	550	170	
95-95-4	2,4,5-Trichlorophenol	U	550	1.0	500	550	170	
91-58-7	2-Chloronaphthalene	U	370	1.0	330	370	96	
92-52-4	1,1'-Biphenyl	U	370	1.0	330	370	81	
88-74-4	2-Nitroaniline	U	550	1.0	500	550	83	
131-11-3	Dimethyl Phthalate	U	370	1.0	330	370	86	
606-20-2	2,6-Dinitrotoluene	U	370	1.0	330	370	88	
208-96-8	Acenaphthylene	U	370	1.0	330	370	78	
99-09-2	3-Nitroaniline	U	550	1.0	500	550	100	
83-32-9	Acenaphthene	U	370	1.0	330	370	72	
51-28-5	2,4-Dinitrophenol	U	1300	1.0	1200	1300	420	
132-64-9	Dibenzofuran	U	370	1.0	330	370	88	
100-02-7	4-Nitrophenol	U	1300	1.0	1200	1300	340	
121-14-2	2,4-Dinitrotoluene	U	370	1.0	330	370	94	
84-66-2	Diethylphthalate	U	370	1.0	330	370	89	
7005-72-3	4-Chlorophenyl-phenylether	U	370	1.0	330	370	86	
100-01-6	4-Nitroaniline	U	550	1.0	500	550	150	
534-52-1	4,6-Dinitro-2-Methylphenol	U	1300	1.0	1200	1300	370	
86-30-6	N-Nitrosodiphenylamine	U	730	1.0	660	730	240	
101-55-3	4-Bromophenyl-phenylether	U	370	1.0	330	370	94	
1912-24-9	Atrazine	U	370	1.0	330	370	100	
87-86-5	Pentachlorophenol	U	910	1.0	820	910	260	
120-12-7	Anthracene	U	370	1.0	330	370	93	
86-74-8	Carbazole	U	550	1.0	500	550	120	

MW 3/2/09

6

KATAHDIN ANALYTICAL SERVICES
Report of Analytical Results

Client: CH2MHill
Project: TO-009 Lejeune
PO No:
Sample Date: 12/04/08
Received Date: 12/05/08
Extraction Date: 12/08/08
Analysis Date: 18-DEC-2008 14:59
Report Date: 12/22/2008
Matrix: SOIL
% Solids: 90.1

Lab ID: SB7003-11
Client ID: MR08-IS096-6-7-08D
SDG: TO9-12
Extracted by: CB
Extraction Method: SW846 3550
Analyst: JLP
Analysis Method: SW846 8270C
Lab Prep Batch: WG58886
Units: ug/Kgdrywt

CAS#	Compound	Flags	Results	DF	PQL	Adj.PQL	Adj.MDL
84-74-2	Di-n-butylphthalate	U	370	1.0	330	370	110
85-68-7	Butylbenzylphthalate	U	370	1.0	330	370	100
91-94-1	3,3'-Dichlorobenzidine	U	550	1.0	500	550	130
218-01-9	Chrysene	U	370	1.0	330	370	100
117-81-7	bis(2-Ethylhexyl)phthalate	U	370	1.0	330	370	110
117-84-0	Di-n-octylphthalate	U	370	1.0	330	370	230
367-12-4	2-Fluorophenol		65%				
13127-88-3	Phenol-D6		70%				
4165-60-0	Nitrobenzene-D5		69%				
321-60-8	2-Fluorobiphenyl		73%				
118-79-6	2,4,6-Tribromophenol		86%				
1718-51-0	Terphenyl-D14		112%				

MW 3/2/09

7

KATAHDIN ANALYTICAL SERVICES
Report of Analytical Results

Client: CH2MHill
Project: TO-009 Lejeune
PO No:
Sample Date: 12/04/08
Received Date: 12/05/08
Extraction Date: 12/08/08
Analysis Date: 19-DEC-2008 02:17
Report Date: 12/22/2008
Matrix: SOIL
% Solids: 63.7

Lab ID: SB7003-13
Client ID: MR08-SS095-08D
SDG: TO9-12
Extracted by: CB
Extraction Method: SW846 3550
Analyst: JCG
Analysis Method: SW846 8270C
Lab Prep Batch: WG58886
Units: ug/Kgdrywt

CAS#	Compound	Flags	Results	DF	PQL	Adj.PQL	Adj.MDL
100-52-7	Benzaldehyde	~~B~~ UJ	780	1.0	500	780	190 CCH
108-95-2	Phenol	U	780	1.0	500	780	240
111-44-4	Bis(2-Chloroethyl)ether	U	520	1.0	330	520	130
95-57-8	2-Chlorophenol	U	780	1.0	500	780	260
95-48-7	2-Methylphenol	U	940	1.0	600	940	310
108-60-1	2,2'-Oxybis(1-chloropropane)	U	520	1.0	330	520	140
98-86-2	Acetophenone	U	940	1.0	600	940	280
621-64-7	N-Nitroso-di-n-propylamine	U	520	1.0	330	520	130
65794-96-9	3&4-Methylphenol	U	940	1.0	600	940	290
67-72-1	Hexachloroethane	U	520	1.0	330	520	150
98-95-3	Nitrobenzene	U	520	1.0	330	520	140
78-59-1	Isophorone	U	520	1.0	330	520	120
88-75-5	2-Nitrophenol	U	940	1.0	600	940	260
105-67-9	2,4-Dimethylphenol	U	780	1.0	500	780	260
111-91-1	Bis(2-Chloroethoxy)methane	U	520	1.0	330	520	150
120-83-2	2,4-Dichlorophenol	U	780	1.0	500	780	240
106-47-8	4-Chloroaniline	U	780	1.0	500	780	190
105-60-2	Caprolactam	U	780	1.0	500	780	220
59-50-7	4-Chloro-3-Methylphenol	U	780	1.0	500	780	260
88-06-2	2,4,6-Trichlorophenol	U	780	1.0	500	780	240
95-95-4	2,4,5-Trichlorophenol	U	780	1.0	500	780	240
91-58-7	2-Chloronaphthalene	U	520	1.0	330	520	140
92-52-4	1,1'-Biphenyl	U	520	1.0	330	520	110
88-74-4	2-Nitroaniline	U	780	1.0	500	780	120
131-11-3	Dimethyl Phthalate	U	520	1.0	330	520	120
606-20-2	2,6-Dinitrotoluene	U	520	1.0	330	520	120
208-96-8	Acenaphthylene	U	520	1.0	330	520	110
99-09-2	3-Nitroaniline	U	780	1.0	500	780	150
83-32-9	Acenaphthene	U	520	1.0	330	520	100
51-28-5	2,4-Dinitrophenol	U	1900	1.0	1200	1900	590
132-64-9	Dibenzofuran	U	520	1.0	330	520	120
100-02-7	4-Nitrophenol	U	1900	1.0	1200	1900	480
121-14-2	2,4-Dinitrotoluene	U	520	1.0	330	520	130
84-66-2	Diethylphthalate	U	520	1.0	330	520	120
7005-72-3	4-Chlorophenyl-phenylether	U	520	1.0	330	520	120
100-01-6	4-Nitroaniline	U	780	1.0	500	780	210
534-52-1	4,6-Dinitro-2-Methylphenol	U	1900	1.0	1200	1900	530
86-30-6	N-Nitrosodiphenylamine	U	1000	1.0	660	1000	340
101-55-3	4-Bromophenyl-phenylether	U	520	1.0	330	520	130
1912-24-9	Atrazine	U	520	1.0	330	520	140
87-86-5	Pentachlorophenol	U	1300	1.0	820	1300	370
120-12-7	Anthracene	U	520	1.0	330	520	130
86-74-8	Carbazole	U	780	1.0	500	780	170

LW
3/2/09

7

KATAHDIN ANALYTICAL SERVICES
Report of Analytical Results

Client: CH2MHill
Project: TO-009 Lejeune
PO No:
Sample Date: 12/04/08
Received Date: 12/05/08
Extraction Date: 12/08/08
Analysis Date: 19-DEC-2008 02:17
Report Date: 12/22/2008
Matrix: SOIL
% Solids: 63.7

Lab ID: SB7003-13
Client ID: MR08-SS095-08D
SDG: TO9-12
Extracted by: CB
Extraction Method: SW846 3550
Analyst: JCG
Analysis Method: SW846 8270C
Lab Prep Batch: WG58886
Units: ug/Kgdrywt

CAS#	Compound	Flags	Results	DF	PQL	Adj.PQL	Adj.MDL
84-74-2	Di-n-butylphthalate	U	520	1.0	330	520	160
85-68-7	Butylbenzylphthalate	U	520	1.0	330	520	140
91-94-1	3,3'-Dichlorobenzidine	U	780	1.0	500	780	180
218-01-9	Chrysene	U	520	1.0	330	520	150
117-81-7	bis(2-Ethylhexyl)phthalate	U	520	1.0	330	520	150
117-84-0	Di-n-octylphthalate	U	520	1.0	330	520	330
367-12-4	2-Fluorophenol		68%				
13127-88-3	Phenol-D6		78%				
4165-60-0	Nitrobenzene-D5		76%				
321-60-8	2-Fluorobiphenyl		77%				
118-79-6	2,4,6-Tribromophenol		79%				
1718-51-0	Terphenyl-D14		99%				

RW 3/2/09

8

KATAHDIN ANALYTICAL SERVICES
Report of Analytical Results

Client: CH2MHill
Project: TO-009 Lejeune
PO No:
Sample Date: 12/04/08
Received Date: 12/05/08
Extraction Date: 12/08/08
Analysis Date: 18-DEC-2008 15:41
Report Date: 12/22/2008
Matrix: SOIL
% Solids: 89.1

Lab ID: SB7003-15
Client ID: MR08-IS095-6-7-08D
SDG: TO9-12
Extracted by: CB
Extraction Method: SW846 3550
Analyst: JLP
Analysis Method: SW846 8270C
Lab Prep Batch: WG58886
Units: ug/Kgdrywt

CAS#	Compound	Flags	Results	DF	PQL	Adj.PQL	Adj.MDL
100-52-7	Benzaldehyde	~~U~~ UJ	560	1.0	500	560	130 CCH
108-95-2	Phenol	U	560	1.0	500	560	180
111-44-4	Bis(2-Chloroethyl)ether	U	370	1.0	330	370	91
95-57-8	2-Chlorophenol	U	560	1.0	500	560	180
95-48-7	2-Methylphenol	U	670	1.0	600	670	220
108-60-1	2,2'-Oxybis(1-chloropropane)	U	370	1.0	330	370	100
98-86-2	Acetophenone	U	670	1.0	600	670	200
621-64-7	N-Nitroso-di-n-propylamine	U	370	1.0	330	370	93
65794-96-9	3&4-Methylphenol	U	670	1.0	600	670	210
67-72-1	Hexachloroethane	U	370	1.0	330	370	110
98-95-3	Nitrobenzene	U	370	1.0	330	370	100
78-59-1	Isophorone	U	370	1.0	330	370	84
88-75-5	2-Nitrophenol	U	670	1.0	600	670	190
105-67-9	2,4-Dimethylphenol	U	560	1.0	500	560	180
111-91-1	Bis(2-Chloroethoxy)methane	U	370	1.0	330	370	110
120-83-2	2,4-Dichlorophenol	U	560	1.0	500	560	170
106-47-8	4-Chloroaniline	U	560	1.0	500	560	130
105-60-2	Caprolactam	U	560	1.0	500	560	160
59-50-7	4-Chloro-3-Methylphenol	U	560	1.0	500	560	190
88-06-2	2,4,6-Trichlorophenol	U	560	1.0	500	560	170
95-95-4	2,4,5-Trichlorophenol	U	560	1.0	500	560	170
91-58-7	2-Chloronaphthalene	U	370	1.0	330	370	98
92-52-4	1,1'-Biphenyl	U	370	1.0	330	370	82
88-74-4	2-Nitroaniline	U	560	1.0	500	560	84
131-11-3	Dimethyl Phthalate	U	370	1.0	330	370	88
606-20-2	2,6-Dinitrotoluene	U	370	1.0	330	370	89
208-96-8	Acenaphthylene	U	370	1.0	330	370	78
99-09-2	3-Nitroaniline	U	560	1.0	500	560	100
83-32-9	Acenaphthene	U	370	1.0	330	370	73
51-28-5	2,4-Dinitrophenol	U	1300	1.0	1200	1300	420
132-64-9	Dibenzofuran	U	370	1.0	330	370	89
100-02-7	4-Nitrophenol	U	1300	1.0	1200	1300	350
121-14-2	2,4-Dinitrotoluene	U	370	1.0	330	370	95
84-66-2	Diethylphthalate	U	370	1.0	330	370	90
7005-72-3	4-Chlorophenyl-phenylether	U	370	1.0	330	370	88
100-01-6	4-Nitroaniline	U	560	1.0	500	560	150
534-52-1	4,6-Dinitro-2-Methylphenol	U	1300	1.0	1200	1300	380
86-30-6	N-Nitrosodiphenylamine	U	740	1.0	660	740	240
101-55-3	4-Bromophenyl-phenylether	U	370	1.0	330	370	95
1912-24-9	Atrazine	U	370	1.0	330	370	100
87-86-5	Pentachlorophenol	U	920	1.0	820	920	260
120-12-7	Anthracene	U	370	1.0	330	370	94
86-74-8	Carbazole	U	560	1.0	500	560	120

LW 3/2/09

KATAHDIN ANALYTICAL SERVICES
Report of Analytical Results

Client: CH2MHill
Project: TO-009 Lejeune
PO No:
Sample Date: 12/04/08
Received Date: 12/05/08
Extraction Date: 12/08/08
Analysis Date: 18-DEC-2008 15:41
Report Date: 12/22/2008
Matrix: SOIL
% Solids: 89.1

Lab ID: SB7003-15
Client ID: MR08-IS095-6-7-08D
SDG: TO9-12
Extracted by: CB
Extraction Method: SW846 3550
Analyst: JLP
Analysis Method: SW846 8270C
Lab Prep Batch: WG58886
Units: ug/Kgdrywt

CAS#	Compound	Flags	Results	DF	PQL	Adj.PQL	Adj.MDL
84-74-2	Di-n-butylphthalate	U	370	1.0	330	370	110
85-68-7	Butylbenzylphthalate	U	370	1.0	330	370	100
91-94-1	3,3'-Dichlorobenzidine	U	560	1.0	500	560	130
218-01-9	Chrysene	U	370	1.0	330	370	110
117-81-7	bis(2-Ethylhexyl)phthalate	U	370	1.0	330	370	110
117-84-0	Di-n-octylphthalate	U	370	1.0	330	370	240
367-12-4	2-Fluorophenol		62%				
13127-88-3	Phenol-D6		71%				
4165-60-0	Nitrobenzene-D5		72%				
321-60-8	2-Fluorobiphenyl		73%				
118-79-6	2,4,6-Tribromophenol		61%				
1718-51-0	Terphenyl-D14		106%				

MW 3/2/09

KATAHDIN ANALYTICAL SERVICES
Report of Analytical Results

Client: CH2MHill
Project: TO-009 Lejeune
PO No:
Sample Date: 12/04/08
Received Date: 12/05/08
Extraction Date: 12/09/08
Analysis Date: 19-DEC-2008 05:44
Report Date: 12/22/2008
Matrix: SOIL
% Solids: 77.2

Lab ID: SB7003-17
Client ID: MR08-SS094-08D
SDG: TO9-12
Extracted by: CB
Extraction Method: SW846 3550
Analyst: JCG
Analysis Method: SW846 8270C
Lab Prep Batch: WG58908
Units: ug/Kgdrywt

CAS#	Compound	Flags	Results	DF	PQL	Adj.PQL	Adj.MDL
100-52-7	Benzaldehyde	~~U~~ UJ	650	1.0	500	650	160 CCH
108-95-2	Phenol	U	650	1.0	500	650	200
111-44-4	Bis(2-Chloroethyl)ether	U	430	1.0	330	430	100
95-57-8	2-Chlorophenol	U	650	1.0	500	650	210
95-48-7	2-Methylphenol	U	780	1.0	600	780	260
108-60-1	2,2'-Oxybis(1-chloropropane)	U	430	1.0	330	430	120
98-86-2	Acetophenone	U	780	1.0	600	780	230
621-64-7	N-Nitroso-di-n-propylamine	U	430	1.0	330	430	110
65794-96-9	3&4-Methylphenol	U	780	1.0	600	780	240
67-72-1	Hexachloroethane	U	430	1.0	330	430	120
98-95-3	Nitrobenzene	U	430	1.0	330	430	120
78-59-1	Isophorone	U	430	1.0	330	430	97
88-75-5	2-Nitrophenol	U	780	1.0	600	780	220
105-67-9	2,4-Dimethylphenol	U	650	1.0	500	650	210
111-91-1	Bis(2-Chloroethoxy)methane	U	430	1.0	330	430	120
120-83-2	2,4-Dichlorophenol	U	650	1.0	500	650	190
106-47-8	4-Chloroaniline	U	650	1.0	500	650	150
105-60-2	Caprolactam	U	650	1.0	500	650	190
59-50-7	4-Chloro-3-Methylphenol	U	650	1.0	500	650	220
88-06-2	2,4,6-Trichlorophenol	U	650	1.0	500	650	200
95-95-4	2,4,5-Trichlorophenol	U	650	1.0	500	650	200
91-58-7	2-Chloronaphthalene	U	430	1.0	330	430	110
92-52-4	1,1'-Biphenyl	U	430	1.0	330	430	95
88-74-4	2-Nitroaniline	U	650	1.0	500	650	97
131-11-3	Dimethyl Phthalate	U	430	1.0	330	430	100
606-20-2	2,6-Dinitrotoluene	U	430	1.0	330	430	100
208-96-8	Acenaphthylene	U	430	1.0	330	430	91
99-09-2	3-Nitroaniline	U	650	1.0	500	650	120
83-32-9	Acenaphthene	U	430	1.0	330	430	84
51-28-5	2,4-Dinitrophenol	U	1600	1.0	1200	1600	490
132-64-9	Dibenzofuran	U	430	1.0	330	430	100
100-02-7	4-Nitrophenol	U	1600	1.0	1200	1600	400
121-14-2	2,4-Dinitrotoluene	U	430	1.0	330	430	110
84-66-2	Diethylphthalate	U	430	1.0	330	430	100
7005-72-3	4-Chlorophenyl-phenylether	U	430	1.0	330	430	100
100-01-6	4-Nitroaniline	U	650	1.0	500	650	170
534-52-1	4,6-Dinitro-2-Methylphenol	U	1600	1.0	1200	1600	440
86-30-6	N-Nitrosodiphenylamine	U	860	1.0	660	860	280
101-55-3	4-Bromophenyl-phenylether	U	430	1.0	330	430	110
1912-24-9	Atrazine	U	430	1.0	330	430	120
87-86-5	Pentachlorophenol	U	1100	1.0	820	1100	310
120-12-7	Anthracene	U	430	1.0	330	430	110
86-74-8	Carbazole	U	650	1.0	500	650	140

LW 3/2/09

KATAHDIN ANALYTICAL SERVICES
Report of Analytical Results

Client: CH2MHill
Project: TO-009 Lejeune
PO No:
Sample Date: 12/04/08
Received Date: 12/05/08
Extraction Date: 12/09/08
Analysis Date: 19-DEC-2008 05:44
Report Date: 12/22/2008
Matrix: SOIL
% Solids: 77.2

Lab ID: SB7003-17
Client ID: MR08-SS094-08D
SDG: TO9-12
Extracted by: CB
Extraction Method: SW846 3550
Analyst: JCG
Analysis Method: SW846 8270C
Lab Prep Batch: WG58908
Units: ug/Kgdrywt

CAS#	Compound	Flags	Results	DF	PQL	Adj.PQL	Adj.MDL
84-74-2	Di-n-butylphthalate	U	430	1.0	330	430	130
85-68-7	Butylbenzylphthalate	U	430	1.0	330	430	120
91-94-1	3,3'-Dichlorobenzidine	U	650	1.0	500	650	150
218-01-9	Chrysene	U	430	1.0	330	430	120
117-81-7	bis(2-Ethylhexyl)phthalate	U	430	1.0	330	430	130
117-84-0	Di-n-octylphthalate	U	430	1.0	330	430	270
367-12-4	2-Fluorophenol		79%				
13127-88-3	Phenol-D6		90%				
4165-60-0	Nitrobenzene-D5		89%				
321-60-8	2-Fluorobiphenyl		92%				
118-79-6	2,4,6-Tribromophenol		84%				
1718-51-0	Terphenyl-D14		101%				

RWJ 3/2/09

KATAHDIN ANALYTICAL SERVICES
Report of Analytical Results

Client: CH2MHill
Project: TO-009 Lejeune
PO No:
Sample Date: 12/04/08
Received Date: 12/05/08
Extraction Date: 12/09/08
Analysis Date: 18-DEC-2008 21:25
Report Date: 12/22/2008
Matrix: SOIL
% Solids: 90.1

Lab ID: SB7003-19
Client ID: MR08-IS094-5-6-08D
SDG: TO9-12
Extracted by: CB
Extraction Method: SW846 3550
Analyst: JCG
Analysis Method: SW846 8270C
Lab Prep Batch: WG58908
Units: ug/Kgdrywt

CAS#	Compound	Flags	Results	DF	PQL	Adj.PQL	Adj.MDL	
100-52-7	Benzaldehyde	~~U~~ UJ	550	1.0	500	550	130	CCH
108-95-2	Phenol	U	550	1.0	500	550	170	
111-44-4	Bis(2-Chloroethyl)ether	U	370	1.0	330	370	90	
95-57-8	2-Chlorophenol	U	550	1.0	500	550	180	
95-48-7	2-Methylphenol	U	660	1.0	600	660	220	
108-60-1	2,2'-Oxybis(1-chloropropane)	U	370	1.0	330	370	99	
98-86-2	Acetophenone	U	660	1.0	600	660	200	
621-64-7	N-Nitroso-di-n-propylamine	U	370	1.0	330	370	92	
65794-96-9	3&4-Methylphenol	U	660	1.0	600	660	210	
67-72-1	Hexachloroethane	U	370	1.0	330	370	110	
98-95-3	Nitrobenzene	U	370	1.0	330	370	100	
78-59-1	Isophorone	U	370	1.0	330	370	83	
88-75-5	2-Nitrophenol	U	660	1.0	600	660	180	
105-67-9	2,4-Dimethylphenol	U	550	1.0	500	550	180	
111-91-1	Bis(2-Chloroethoxy)methane	U	370	1.0	330	370	110	
120-83-2	2,4-Dichlorophenol	U	550	1.0	500	550	170	
106-47-8	4-Chloroaniline	U	550	1.0	500	550	130	
105-60-2	Caprolactam	U	550	1.0	500	550	160	
59-50-7	4-Chloro-3-Methylphenol	U	550	1.0	500	550	180	
88-06-2	2,4,6-Trichlorophenol	U	550	1.0	500	550	170	
95-95-4	2,4,5-Trichlorophenol	U	550	1.0	500	550	170	
91-58-7	2-Chloronaphthalene	U	370	1.0	330	370	96	
92-52-4	1,1'-Biphenyl	U	370	1.0	330	370	81	
88-74-4	2-Nitroaniline	U	550	1.0	500	550	83	
131-11-3	Dimethyl Phthalate	U	370	1.0	330	370	86	
606-20-2	2,6-Dinitrotoluene	U	370	1.0	330	370	88	
208-96-8	Acenaphthylene	U	370	1.0	330	370	78	
99-09-2	3-Nitroaniline	U	550	1.0	500	550	100	
83-32-9	Acenaphthene	U	370	1.0	330	370	72	
51-28-5	2,4-Dinitrophenol	U	1300	1.0	1200	1300	420	
132-64-9	Dibenzofuran	U	370	1.0	330	370	88	
100-02-7	4-Nitrophenol	U	1300	1.0	1200	1300	340	
121-14-2	2,4-Dinitrotoluene	U	370	1.0	330	370	94	
84-66-2	Diethylphthalate	U	370	1.0	330	370	89	
7005-72-3	4-Chlorophenyl-phenylether	U	370	1.0	330	370	86	
100-01-6	4-Nitroaniline	U	550	1.0	500	550	150	
534-52-1	4,6-Dinitro-2-Methylphenol	U	1300	1.0	1200	1300	370	
86-30-6	N-Nitrosodiphenylamine	U	730	1.0	660	730	240	
101-55-3	4-Bromophenyl-phenylether	U	370	1.0	330	370	94	
1912-24-9	Atrazine	U	370	1.0	330	370	100	
87-86-5	Pentachlorophenol	U	910	1.0	820	910	260	
120-12-7	Anthracene	U	370	1.0	330	370	93	
86-74-8	Carbazole	U	550	1.0	500	550	120	

lw 3/2/09

KATAHDIN ANALYTICAL SERVICES
Report of Analytical Results

Client: CH2MHill
Project: TO-009 Lejeune
PO No:
Sample Date: 12/04/08
Received Date: 12/05/08
Extraction Date: 12/09/08
Analysis Date: 18-DEC-2008 21:25
Report Date: 12/22/2008
Matrix: SOIL
% Solids: 90.1

Lab ID: SB7003-19
Client ID: MR08-IS094-5-6-08D
SDG: TO9-12
Extracted by: CB
Extraction Method: SW846 3550
Analyst: JCG
Analysis Method: SW846 8270C
Lab Prep Batch: WG58908
Units: ug/Kgdrywt

CAS#	Compound	Flags	Results	DF	PQL	Adj.PQL	Adj.MDL
84-74-2	Di-n-butylphthalate	U	370	1.0	330	370	110
85-68-7	Butylbenzylphthalate	U	370	1.0	330	370	100
91-94-1	3,3'-Dichlorobenzidine	U	550	1.0	500	550	130
218-01-9	Chrysene	U	370	1.0	330	370	100
117-81-7	bis(2-Ethylhexyl)phthalate	J	140	1.0	330	370	110
117-84-0	Di-n-octylphthalate	U	370	1.0	330	370	230
367-12-4	2-Fluorophenol		70%				
13127-88-3	Phenol-D6		87%				
4165-60-0	Nitrobenzene-D5		90%				
321-60-8	2-Fluorobiphenyl		89%				
118-79-6	2,4,6-Tribromophenol		78%				
1718-51-0	Terphenyl-D14		109%				

JWS 3/2/09

11

KATAHDIN ANALYTICAL SERVICES
Report of Analytical Results

Client: CH2MHill
Project: TO-009 Lejeune
PO No:
Sample Date: 12/04/08
Received Date: 12/05/08
Extraction Date: 12/09/08
Analysis Date: 19-DEC-2008 02:58
Report Date: 12/22/2008
Matrix: SOIL
% Solids: 86.5

Lab ID: SB7003-21
Client ID: MR08-SS092-08D
SDG: TO9-12
Extracted by: CB
Extraction Method: SW846 3550
Analyst: JCG
Analysis Method: SW846 8270C
Lab Prep Batch: WG58908
Units: ug/Kgdrywt

CAS#	Compound	Flags	Results	DF	PQL	Adj.PQL	Adj.MDL
100-52-7	Benzaldehyde	~~U~~ UJ	580	1.0	500	580	140 CCH
108-95-2	Phenol	U	580	1.0	500	580	180
111-44-4	Bis(2-Chloroethyl)ether	U	380	1.0	330	380	94
95-57-8	2-Chlorophenol	U	580	1.0	500	580	190
95-48-7	2-Methylphenol	U	690	1.0	600	690	230
108-60-1	2,2'-Oxybis(1-chloropropane)	U	380	1.0	330	380	100
98-86-2	Acetophenone	U	690	1.0	600	690	200
621-64-7	N-Nitroso-di-n-propylamine	U	380	1.0	330	380	96
65794-96-9	3&4-Methylphenol	U	690	1.0	600	690	220
67-72-1	Hexachloroethane	U	380	1.0	330	380	110
98-95-3	Nitrobenzene	U	380	1.0	330	380	100
78-59-1	Isophorone	U	380	1.0	330	380	87
88-75-5	2-Nitrophenol	U	690	1.0	600	690	190
105-67-9	2,4-Dimethylphenol	U	580	1.0	500	580	190
111-91-1	Bis(2-Chloroethoxy)methane	U	380	1.0	330	380	110
120-83-2	2,4-Dichlorophenol	U	580	1.0	500	580	170
106-47-8	4-Chloroaniline	U	580	1.0	500	580	140
105-60-2	Caprolactam	U	580	1.0	500	580	170
59-50-7	4-Chloro-3-Methylphenol	U	580	1.0	500	580	190
88-06-2	2,4,6-Trichlorophenol	U	580	1.0	500	580	180
95-95-4	2,4,5-Trichlorophenol	U	580	1.0	500	580	180
91-58-7	2-Chloronaphthalene	U	380	1.0	330	380	100
92-52-4	1,1'-Biphenyl	U	380	1.0	330	380	84
88-74-4	2-Nitroaniline	U	580	1.0	500	580	87
131-11-3	Dimethyl Phthalate	U	380	1.0	330	380	90
606-20-2	2,6-Dinitrotoluene	U	380	1.0	330	380	91
208-96-8	Acenaphthylene	U	380	1.0	330	380	81
99-09-2	3-Nitroaniline	U	580	1.0	500	580	110
83-32-9	Acenaphthene	U	380	1.0	330	380	75
51-28-5	2,4-Dinitrophenol	U	1400	1.0	1200	1400	440
132-64-9	Dibenzofuran	U	380	1.0	330	380	91
100-02-7	4-Nitrophenol	U	1400	1.0	1200	1400	360
121-14-2	2,4-Dinitrotoluene	U	380	1.0	330	380	98
84-66-2	Diethylphthalate	U	380	1.0	330	380	92
7005-72-3	4-Chlorophenyl-phenylether	U	380	1.0	330	380	90
100-01-6	4-Nitroaniline	U	580	1.0	500	580	150
534-52-1	4,6-Dinitro-2-Methylphenol	U	1400	1.0	1200	1400	390
86-30-6	N-Nitrosodiphenylamine	U	760	1.0	660	760	250
101-55-3	4-Bromophenyl-phenylether	U	380	1.0	330	380	98
1912-24-9	Atrazine	U	380	1.0	330	380	100
87-86-5	Pentachlorophenol	U	950	1.0	820	950	270
120-12-7	Anthracene	U	380	1.0	330	380	97
86-74-8	Carbazole	U	580	1.0	500	580	130

lw 3/2/09

11

KATAHDIN ANALYTICAL SERVICES
Report of Analytical Results

Client: CH2MHill
Project: TO-009 Lejeune
PO No:
Sample Date: 12/04/08
Received Date: 12/05/08
Extraction Date: 12/09/08
Analysis Date: 19-DEC-2008 02:58
Report Date: 12/22/2008
Matrix: SOIL
% Solids: 86.5

Lab ID: SB7003-21
Client ID: MR08-SS092-08D
SDG: TO9-12
Extracted by: CB
Extraction Method: SW846 3550
Analyst: JCG
Analysis Method: SW846 8270C
Lab Prep Batch: WG58908
Units: ug/Kgdrywt

CAS#	Compound	Flags	Results	DF	PQL	Adj.PQL	Adj.MDL
84-74-2	Di-n-butylphthalate	U	380	1.0	330	380	120
85-68-7	Butylbenzylphthalate	U	380	1.0	330	380	110
91-94-1	3,3'-Dichlorobenzidine	U	580	1.0	500	580	130
218-01-9	Chrysene	U	380	1.0	330	380	110
117-81-7	bis(2-Ethylhexyl)phthalate	U	380	1.0	330	380	110
117-84-0	Di-n-octylphthalate	U	380	1.0	330	380	240
367-12-4	2-Fluorophenol		77%				
13127-88-3	Phenol-D6		88%				
4165-60-0	Nitrobenzene-D5		85%				
321-60-8	2-Fluorobiphenyl		87%				
118-79-6	2,4,6-Tribromophenol		85%				
1718-51-0	Terphenyl-D14		122%				

MW 3/2/09

12

KATAHDIN ANALYTICAL SERVICES
Report of Analytical Results

Client: CH2MHill
Project: TO-009 Lejeune
PO No:
Sample Date: 12/04/08
Received Date: 12/05/08
Extraction Date: 12/09/08
Analysis Date: 18-DEC-2008 22:07
Report Date: 12/22/2008
Matrix: SOIL
% Solids: 86.2

Lab ID: SB7003-23
Client ID: MR08-IS092-4-5-08D
SDG: TO9-12
Extracted by: CB
Extraction Method: SW846 3550
Analyst: JCG
Analysis Method: SW846 8270C
Lab Prep Batch: WG58908
Units: ug/Kgdrywt

CAS#	Compound	Flags	Results	DF	PQL	Adj.PQL	Adj.MDL	
100-52-7	Benzaldehyde	~~U~~ UJ	580	1.0	500	580	140	CCH
108-95-2	Phenol	U	580	1.0	500	580	180	
111-44-4	Bis(2-Chloroethyl)ether	U	380	1.0	330	380	94	
95-57-8	2-Chlorophenol	U	580	1.0	500	580	190	
95-48-7	2-Methylphenol	U	700	1.0	600	700	230	
108-60-1	2,2'-Oxybis(1-chloropropane)	U	380	1.0	330	380	100	
98-86-2	Acetophenone	U	700	1.0	600	700	210	
621-64-7	N-Nitroso-di-n-propylamine	U	380	1.0	330	380	96	
65794-96-9	3&4-Methylphenol	U	700	1.0	600	700	220	
67-72-1	Hexachloroethane	U	380	1.0	330	380	110	
98-95-3	Nitrobenzene	U	380	1.0	330	380	100	
78-59-1	Isophorone	U	380	1.0	330	380	87	
88-75-5	2-Nitrophenol	U	700	1.0	600	700	190	
105-67-9	2,4-Dimethylphenol	U	580	1.0	500	580	190	
111-91-1	Bis(2-Chloroethoxy)methane	U	380	1.0	330	380	110	
120-83-2	2,4-Dichlorophenol	U	580	1.0	500	580	170	
106-47-8	4-Chloroaniline	U	580	1.0	500	580	140	
105-60-2	Caprolactam	U	580	1.0	500	580	170	
59-50-7	4-Chloro-3-Methylphenol	U	580	1.0	500	580	190	
88-06-2	2,4,6-Trichlorophenol	U	580	1.0	500	580	180	
95-95-4	2,4,5-Trichlorophenol	U	580	1.0	500	580	180	
91-58-7	2-Chloronaphthalene	U	380	1.0	330	380	100	
92-52-4	1,1'-Biphenyl	U	380	1.0	330	380	85	
88-74-4	2-Nitroaniline	U	580	1.0	500	580	87	
131-11-3	Dimethyl Phthalate	U	380	1.0	330	380	90	
606-20-2	2,6-Dinitrotoluene	U	380	1.0	330	380	92	
208-96-8	Acenaphthylene	U	380	1.0	330	380	81	
99-09-2	3-Nitroaniline	U	580	1.0	500	580	110	
83-32-9	Acenaphthene	U	380	1.0	330	380	75	
51-28-5	2,4-Dinitrophenol	U	1400	1.0	1200	1400	440	
132-64-9	Dibenzofuran	U	380	1.0	330	380	92	
100-02-7	4-Nitrophenol	U	1400	1.0	1200	1400	360	
121-14-2	2,4-Dinitrotoluene	U	380	1.0	330	380	99	
84-66-2	Diethylphthalate	U	380	1.0	330	380	93	
7005-72-3	4-Chlorophenyl-phenylether	U	380	1.0	330	380	90	
100-01-6	4-Nitroaniline	U	580	1.0	500	580	160	
534-52-1	4,6-Dinitro-2-Methylphenol	U	1400	1.0	1200	1400	390	
86-30-6	N-Nitrosodiphenylamine	U	770	1.0	660	770	250	
101-55-3	4-Bromophenyl-phenylether	U	380	1.0	330	380	99	
1912-24-9	Atrazine	U	380	1.0	330	380	100	
87-86-5	Pentachlorophenol	U	950	1.0	820	950	280	
120-12-7	Anthracene	U	380	1.0	330	380	97	
86-74-8	Carbazole	U	580	1.0	500	580	130	

lw 3/2/09

KATAHDIN ANALYTICAL SERVICES
Report of Analytical Results

Client: CH2MHill
Project: TO-009 Lejeune
PO No:
Sample Date: 12/04/08
Received Date: 12/05/08
Extraction Date: 12/09/08
Analysis Date: 18-DEC-2008 22:07
Report Date: 12/22/2008
Matrix: SOIL
% Solids: 86.2

Lab ID: SB7003-23
Client ID: MR08-IS092-4-5-08D
SDG: TO9-12
Extracted by: CB
Extraction Method: SW846 3550
Analyst: JCG
Analysis Method: SW846 8270C
Lab Prep Batch: WG58908
Units: ug/Kgdrywt

CAS#	Compound	Flags	Results	DF	PQL	Adj.PQL	Adj.MDL
84-74-2	Di-n-butylphthalate	U	380	1.0	330	380	120
85-68-7	Butylbenzylphthalate	U	380	1.0	330	380	110
91-94-1	3,3'-Dichlorobenzidine	U	580	1.0	500	580	130
218-01-9	Chrysene	U	380	1.0	330	380	110
117-81-7	bis(2-Ethylhexyl)phthalate	U	380	1.0	330	380	110
117-84-0	Di-n-octylphthalate	U	380	1.0	330	380	240
367-12-4	2-Fluorophenol		79%				
13127-88-3	Phenol-D6		89%				
4165-60-0	Nitrobenzene-D5		84%				
321-60-8	2-Fluorobiphenyl		82%				
118-79-6	2,4,6-Tribromophenol		90%				
1718-51-0	Terphenyl-D14		105%				

lw 3/2/09

KATAHDIN ANALYTICAL SERVICES
Report of Analytical Results

Client: CH2MHill
Project: TO-009 Lejeune
PO No:
Sample Date: 12/05/08
Received Date: 12/06/08
Extraction Date: 12/09/08
Analysis Date: 19-DEC-2008 03:40
Report Date: 12/22/2008
Matrix: SOIL
% Solids: 69.1

Lab ID: SB7032-1
Client ID: MR08-SS091-08D
SDG: TO9-12
Extracted by: CB
Extraction Method: SW846 3550
Analyst: JCG
Analysis Method: SW846 8270C
Lab Prep Batch: WG58908
Units: ug/Kgdrywt

CAS#	Compound	Flags	Results	DF	PQL	Adj.PQL	Adj.MDL	
100-52-7	Benzaldehyde	~~U~~ UJ	720	1.0	500	720	170	CCH
108-95-2	Phenol	U	720	1.0	500	720	220	
111-44-4	Bis(2-Chloroethyl)ether	U	480	1.0	330	480	120	
95-57-8	2-Chlorophenol	U	720	1.0	500	720	240	
95-48-7	2-Methylphenol	U	870	1.0	600	870	290	
108-60-1	2,2'-Oxybis(1-chloropropane)	U	480	1.0	330	480	130	
98-86-2	Acetophenone	U	870	1.0	600	870	260	
621-64-7	N-Nitroso-di-n-propylamine	U	480	1.0	330	480	120	
65794-96-9	3&4-Methylphenol	U	870	1.0	600	870	270	
67-72-1	Hexachloroethane	U	480	1.0	330	480	140	
98-95-3	Nitrobenzene	U	480	1.0	330	480	130	
78-59-1	Isophorone	U	480	1.0	330	480	110	
88-75-5	2-Nitrophenol	U	870	1.0	600	870	240	
105-67-9	2,4-Dimethylphenol	U	720	1.0	500	720	240	
111-91-1	Bis(2-Chloroethoxy)methane	U	480	1.0	330	480	140	
120-83-2	2,4-Dichlorophenol	U	720	1.0	500	720	220	
106-47-8	4-Chloroaniline	U	720	1.0	500	720	170	
105-60-2	Caprolactam	U	720	1.0	500	720	210	
59-50-7	4-Chloro-3-Methylphenol	U	720	1.0	500	720	240	
88-06-2	2,4,6-Trichlorophenol	U	720	1.0	500	720	220	
95-95-4	2,4,5-Trichlorophenol	U	720	1.0	500	720	220	
91-58-7	2-Chloronaphthalene	U	480	1.0	330	480	120	
92-52-4	1,1'-Biphenyl	U	480	1.0	330	480	100	
88-74-4	2-Nitroaniline	U	720	1.0	500	720	110	
131-11-3	Dimethyl Phthalate	U	480	1.0	330	480	110	
606-20-2	2,6-Dinitrotoluene	U	480	1.0	330	480	110	
208-96-8	Acenaphthylene	U	480	1.0	330	480	100	
99-09-2	3-Nitroaniline	U	720	1.0	500	720	140	
83-32-9	Acenaphthene	U	480	1.0	330	480	94	
51-28-5	2,4-Dinitrophenol	U	1700	1.0	1200	1700	540	
132-64-9	Dibenzofuran	U	480	1.0	330	480	110	
100-02-7	4-Nitrophenol	U	1700	1.0	1200	1700	450	
121-14-2	2,4-Dinitrotoluene	U	480	1.0	330	480	120	
84-66-2	Diethylphthalate	U	480	1.0	330	480	120	
7005-72-3	4-Chlorophenyl-phenylether	U	480	1.0	330	480	110	
100-01-6	4-Nitroaniline	U	720	1.0	500	720	190	
534-52-1	4,6-Dinitro-2-Methylphenol	U	1700	1.0	1200	1700	490	
86-30-6	N-Nitrosodiphenylamine	U	960	1.0	660	960	320	
101-55-3	4-Bromophenyl-phenylether	U	480	1.0	330	480	120	
1912-24-9	Atrazine	U	480	1.0	330	480	130	
87-86-5	Pentachlorophenol	U	1200	1.0	820	1200	340	
120-12-7	Anthracene	U	480	1.0	330	480	120	
86-74-8	Carbazole	U	720	1.0	500	720	160	

MW 3/2/09

KATAHDIN ANALYTICAL SERVICES
Report of Analytical Results

Client: CH2MHill
Project: TO-009 Lejeune
PO No:
Sample Date: 12/05/08
Received Date: 12/06/08
Extraction Date: 12/09/08
Analysis Date: 19-DEC-2008 03:40
Report Date: 12/22/2008
Matrix: SOIL
% Solids: 69.1

Lab ID: SB7032-1
Client ID: MR08-SS091-08D
SDG: TO9-12
Extracted by: CB
Extraction Method: SW846 3550
Analyst: JCG
Analysis Method: SW846 8270C
Lab Prep Batch: WG58908
Units: ug/Kgdrywt

CAS#	Compound	Flags	Results	DF	PQL	Adj.PQL	Adj.MDL
84-74-2	Di-n-butylphthalate	U	480	1.0	330	480	150
85-68-7	Butylbenzylphthalate	U	480	1.0	330	480	130
91-94-1	3,3'-Dichlorobenzidine	U	720	1.0	500	720	160
218-01-9	Chrysene	U	480	1.0	330	480	140
117-81-7	bis(2-Ethylhexyl)phthalate	U	480	1.0	330	480	140
117-84-0	Di-n-octylphthalate	U	480	1.0	330	480	300
367-12-4	2-Fluorophenol		72%				
13127-88-3	Phenol-D6		81%				
4165-60-0	Nitrobenzene-D5		84%				
321-60-8	2-Fluorobiphenyl		81%				
118-79-6	2,4,6-Tribromophenol		86%				
1718-51-0	Terphenyl-D14		106%				

lus 3/2/09

KATAHDIN ANALYTICAL SERVICES
Report of Analytical Results

Client: CH2MHill
Project: TO-009 Lejeune
PO No:
Sample Date: 12/05/08
Received Date: 12/06/08
Extraction Date: 12/09/08
Analysis Date: 19-DEC-2008 00:54
Report Date: 12/22/2008
Matrix: SOIL
% Solids: 84.6

Lab ID: SB7032-3
Client ID: MR08-IS091-2-3-08D
SDG: TO9-12
Extracted by: CB
Extraction Method: SW846 3550
Analyst: JCG
Analysis Method: SW846 8270C
Lab Prep Batch: WG58908
Units: ug/Kgdrywt

CAS#	Compound	Flags	Results	DF	PQL	Adj.PQL	Adj.MDL
100-52-7	Benzaldehyde	~~U~~ UJ	590	1.0	500	590	140 CCH
108-95-2	Phenol	U	590	1.0	500	590	180
111-44-4	Bis(2-Chloroethyl)ether	U	390	1.0	330	390	96
95-57-8	2-Chlorophenol	U	590	1.0	500	590	190
95-48-7	2-Methylphenol	U	710	1.0	600	710	240
108-60-1	2,2'-Oxybis(1-chloropropane)	U	390	1.0	330	390	100
98-86-2	Acetophenone	U	710	1.0	600	710	210
621-64-7	N-Nitroso-di-n-propylamine	U	390	1.0	330	390	98
65794-96-9	3&4-Methylphenol	U	710	1.0	600	710	220
67-72-1	Hexachloroethane	U	390	1.0	330	390	110
98-95-3	Nitrobenzene	U	390	1.0	330	390	110
78-59-1	Isophorone	U	390	1.0	330	390	88
88-75-5	2-Nitrophenol	U	710	1.0	600	710	200
105-67-9	2,4-Dimethylphenol	U	590	1.0	500	590	190
111-91-1	Bis(2-Chloroethoxy)methane	U	390	1.0	330	390	110
120-83-2	2,4-Dichlorophenol	U	590	1.0	500	590	180
106-47-8	4-Chloroaniline	U	590	1.0	500	590	140
105-60-2	Caprolactam	U	590	1.0	500	590	170
59-50-7	4-Chloro-3-Methylphenol	U	590	1.0	500	590	200
88-06-2	2,4,6-Trichlorophenol	U	590	1.0	500	590	180
95-95-4	2,4,5-Trichlorophenol	U	590	1.0	500	590	180
91-58-7	2-Chloronaphthalene	U	390	1.0	330	390	100
92-52-4	1,1'-Biphenyl	U	390	1.0	330	390	86
88-74-4	2-Nitroaniline	U	590	1.0	500	590	88
131-11-3	Dimethyl Phthalate	U	390	1.0	330	390	92
606-20-2	2,6-Dinitrotoluene	U	390	1.0	330	390	93
208-96-8	Acenaphthylene	U	390	1.0	330	390	83
99-09-2	3-Nitroaniline	U	590	1.0	500	590	110
83-32-9	Acenaphthene	U	390	1.0	330	390	77
51-28-5	2,4-Dinitrophenol	U	1400	1.0	1200	1400	440
132-64-9	Dibenzofuran	U	390	1.0	330	390	93
100-02-7	4-Nitrophenol	U	1400	1.0	1200	1400	360
121-14-2	2,4-Dinitrotoluene	U	390	1.0	330	390	100
84-66-2	Diethylphthalate	U	390	1.0	330	390	94
7005-72-3	4-Chlorophenyl-phenylether	U	390	1.0	330	390	92
100-01-6	4-Nitroaniline	U	590	1.0	500	590	160
534-52-1	4,6-Dinitro-2-Methylphenol	U	1400	1.0	1200	1400	400
86-30-6	N-Nitrosodiphenylamine	U	780	1.0	660	780	260
101-55-3	4-Bromophenyl-phenylether	U	390	1.0	330	390	100
1912-24-9	Atrazine	U	390	1.0	330	390	110
87-86-5	Pentachlorophenol	U	970	1.0	820	970	280
120-12-7	Anthracene	U	390	1.0	330	390	99
86-74-8	Carbazole	U	590	1.0	500	590	130

lw
3/2/09

KATAHDIN ANALYTICAL SERVICES
Report of Analytical Results

Client: CH2MHill
Project: TO-009 Lejeune
PO No:
Sample Date: 12/05/08
Received Date: 12/06/08
Extraction Date: 12/09/08
Analysis Date: 19-DEC-2008 00:54
Report Date: 12/22/2008
Matrix: SOIL
% Solids: 84.6

Lab ID: SB7032-3
Client ID: MR08-IS091-2-3-08D
SDG: TO9-12
Extracted by: CB
Extraction Method: SW846 3550
Analyst: JCG
Analysis Method: SW846 8270C
Lab Prep Batch: WG58908
Units: ug/Kgdrywt

CAS#	Compound	Flags	Results	DF	PQL	Adj.PQL	Adj.MDL
84-74-2	Di-n-butylphthalate	U	390	1.0	330	390	120
85-68-7	Butylbenzylphthalate	U	390	1.0	330	390	110
91-94-1	3,3'-Dichlorobenzidine	U	590	1.0	500	590	130
218-01-9	Chrysene	U	390	1.0	330	390	110
117-81-7	bis(2-Ethylhexyl)phthalate	U	390	1.0	330	390	120
117-84-0	Di-n-octylphthalate	U	390	1.0	330	390	250
367-12-4	2-Fluorophenol		79%				
13127-88-3	Phenol-D6		89%				
4165-60-0	Nitrobenzene-D5		87%				
321-60-8	2-Fluorobiphenyl		87%				
118-79-6	2,4,6-Tribromophenol		85%				
1718-51-0	Terphenyl-D14		107%				

JW 3/2/09

KATAHDIN ANALYTICAL SERVICES
Report of Analytical Results

Client: CH2MHill
Project: TO-009 Lejeune
PO No:
Sample Date: 12/05/08
Received Date: 12/06/08
Extraction Date: 12/09/08
Analysis Date: 19-DEC-2008 00:12
Report Date: 12/22/2008
Matrix: SOIL
% Solids: 88.1

Lab ID: SB7032-5
Client ID: MR08-SS093-08D
SDG: TO9-12
Extracted by: CB
Extraction Method: SW846 3550
Analyst: JCG
Analysis Method: SW846 8270C
Lab Prep Batch: WG58908
Units: ug/Kgdrywt

CAS#	Compound	Flags	Results	DF	PQL	Adj.PQL	Adj.MDL
100-52-7	Benzaldehyde	~~J~~ U J	570	1.0	500	570	140 CCH
108-95-2	Phenol	U	570	1.0	500	570	180
111-44-4	Bis(2-Chloroethyl)ether	U	370	1.0	330	370	92
95-57-8	2-Chlorophenol	U	570	1.0	500	570	190
95-48-7	2-Methylphenol	U	680	1.0	600	680	230
108-60-1	2,2'-Oxybis(1-chloropropane)	U	370	1.0	330	370	100
98-86-2	Acetophenone	U	680	1.0	600	680	200
621-64-7	N-Nitroso-di-n-propylamine	U	370	1.0	330	370	94
65794-96-9	3&4-Methylphenol	U	680	1.0	600	680	210
67-72-1	Hexachloroethane	U	370	1.0	330	370	110
98-95-3	Nitrobenzene	U	370	1.0	330	370	100
78-59-1	Isophorone	U	370	1.0	330	370	85
88-75-5	2-Nitrophenol	U	680	1.0	600	680	190
105-67-9	2,4-Dimethylphenol	U	570	1.0	500	570	190
111-91-1	Bis(2-Chloroethoxy)methane	U	370	1.0	330	370	110
120-83-2	2,4-Dichlorophenol	U	570	1.0	500	570	170
106-47-8	4-Chloroaniline	U	570	1.0	500	570	140
105-60-2	Caprolactam	U	570	1.0	500	570	160
59-50-7	4-Chloro-3-Methylphenol	U	570	1.0	500	570	190
88-06-2	2,4,6-Trichlorophenol	U	570	1.0	500	570	180
95-95-4	2,4,5-Trichlorophenol	U	570	1.0	500	570	180
91-58-7	2-Chloronaphthalene	U	370	1.0	330	370	99
92-52-4	1,1'-Biphenyl	U	370	1.0	330	370	83
88-74-4	2-Nitroaniline	U	570	1.0	500	570	85
131-11-3	Dimethyl Phthalate	U	370	1.0	330	370	88
606-20-2	2,6-Dinitrotoluene	U	370	1.0	330	370	90
208-96-8	Acenaphthylene	U	370	1.0	330	370	79
99-09-2	3-Nitroaniline	U	570	1.0	500	570	110
83-32-9	Acenaphthene	U	370	1.0	330	370	74
51-28-5	2,4-Dinitrophenol	U	1400	1.0	1200	1400	430
132-64-9	Dibenzofuran	U	370	1.0	330	370	90
100-02-7	4-Nitrophenol	U	1400	1.0	1200	1400	350
121-14-2	2,4-Dinitrotoluene	U	370	1.0	330	370	96
84-66-2	Diethylphthalate	U	370	1.0	330	370	91
7005-72-3	4-Chlorophenyl-phenylether	U	370	1.0	330	370	88
100-01-6	4-Nitroaniline	U	570	1.0	500	570	150
534-52-1	4,6-Dinitro-2-Methylphenol	U	1400	1.0	1200	1400	380
86-30-6	N-Nitrosodiphenylamine	U	750	1.0	660	750	250
101-55-3	4-Bromophenyl-phenylether	U	370	1.0	330	370	96
1912-24-9	Atrazine	U	370	1.0	330	370	100
87-86-5	Pentachlorophenol	U	930	1.0	820	930	270
120-12-7	Anthracene	U	370	1.0	330	370	95
86-74-8	Carbazole	U	570	1.0	500	570	130

LW 3/2/09

KATAHDIN ANALYTICAL SERVICES
Report of Analytical Results

Client: CH2MHill
Project: TO-009 Lejeune
PO No:
Sample Date: 12/05/08
Received Date: 12/06/08
Extraction Date: 12/09/08
Analysis Date: 19-DEC-2008 00:12
Report Date: 12/22/2008
Matrix: SOIL
% Solids: 88.1

Lab ID: SB7032-5
Client ID: MR08-SS093-08D
SDG: TO9-12
Extracted by: CB
Extraction Method: SW846 3550
Analyst: JCG
Analysis Method: SW846 8270C
Lab Prep Batch: WG58908
Units: ug/Kgdrywt

CAS#	Compound	Flags	Results	DF	PQL	Adj.PQL	Adj.MDL
84-74-2	Di-n-butylphthalate	U	370	1.0	330	370	110
85-68-7	Butylbenzylphthalate	U	370	1.0	330	370	100
91-94-1	3,3'-Dichlorobenzidine	U	570	1.0	500	570	130
218-01-9	Chrysene	U	370	1.0	330	370	110
117-81-7	bis(2-Ethylhexyl)phthalate	U	370	1.0	330	370	110
117-84-0	Di-n-octylphthalate	U	370	1.0	330	370	240
367-12-4	2-Fluorophenol		70%				
13127-88-3	Phenol-D6		81%				
4165-60-0	Nitrobenzene-D5		80%				
321-60-8	2-Fluorobiphenyl		76%				
118-79-6	2,4,6-Tribromophenol		74%				
1718-51-0	Terphenyl-D14		96%				

LW 3/2/09

16

KATAHDIN ANALYTICAL SERVICES
Report of Analytical Results

Client: CH2MHill
Project: TO-009 Lejeune
PO No:
Sample Date: 12/05/08
Received Date: 12/06/08
Extraction Date: 12/09/08
Analysis Date: 19-DEC-2008 01:36
Report Date: 12/22/2008
Matrix: SOIL
% Solids: 89.6

Lab ID: SB7032-7
Client ID: MR08-IS093-2-3-08D
SDG: TO9-12
Extracted by: CB
Extraction Method: SW846 3550
Analyst: JCG
Analysis Method: SW846 8270C
Lab Prep Batch: WG58908
Units: ug/Kgdrywt

CAS#	Compound	Flags	Results	DF	PQL	Adj.PQL	Adj.MDL
100-52-7	Benzaldehyde	~~U~~ UJ	560	1.0	500	560	130 CCH
108-95-2	Phenol	U	560	1.0	500	560	170
111-44-4	Bis(2-Chloroethyl)ether	U	370	1.0	330	370	90
95-57-8	2-Chlorophenol	U	560	1.0	500	560	180
95-48-7	2-Methylphenol	U	670	1.0	600	670	220
108-60-1	2,2'-Oxybis(1-chloropropane)	U	370	1.0	330	370	99
98-86-2	Acetophenone	U	670	1.0	600	670	200
621-64-7	N-Nitroso-di-n-propylamine	U	370	1.0	330	370	93
65794-96-9	3&4-Methylphenol	U	670	1.0	600	670	210
67-72-1	Hexachloroethane	U	370	1.0	330	370	110
98-95-3	Nitrobenzene	U	370	1.0	330	370	100
78-59-1	Isophorone	U	370	1.0	330	370	84
88-75-5	2-Nitrophenol	U	670	1.0	600	670	190
105-67-9	2,4-Dimethylphenol	U	560	1.0	500	560	180
111-91-1	Bis(2-Chloroethoxy)methane	U	370	1.0	330	370	110
120-83-2	2,4-Dichlorophenol	U	560	1.0	500	560	170
106-47-8	4-Chloroaniline	U	560	1.0	500	560	130
105-60-2	Caprolactam	U	560	1.0	500	560	160
59-50-7	4-Chloro-3-Methylphenol	U	560	1.0	500	560	180
88-06-2	2,4,6-Trichlorophenol	U	560	1.0	500	560	170
95-95-4	2,4,5-Trichlorophenol	U	560	1.0	500	560	170
91-58-7	2-Chloronaphthalene	U	370	1.0	330	370	97
92-52-4	1,1'-Biphenyl	U	370	1.0	330	370	81
88-74-4	2-Nitroaniline	U	560	1.0	500	560	84
131-11-3	Dimethyl Phthalate	U	370	1.0	330	370	87
606-20-2	2,6-Dinitrotoluene	U	370	1.0	330	370	88
208-96-8	Acenaphthylene	U	370	1.0	330	370	78
99-09-2	3-Nitroaniline	U	560	1.0	500	560	100
83-32-9	Acenaphthene	U	370	1.0	330	370	72
51-28-5	2,4-Dinitrophenol	U	1300	1.0	1200	1300	420
132-64-9	Dibenzofuran	U	370	1.0	330	370	88
100-02-7	4-Nitrophenol	U	1300	1.0	1200	1300	340
121-14-2	2,4-Dinitrotoluene	U	370	1.0	330	370	95
84-66-2	Diethylphthalate	U	370	1.0	330	370	89
7005-72-3	4-Chlorophenyl-phenylether	U	370	1.0	330	370	87
100-01-6	4-Nitroaniline	U	560	1.0	500	560	150
534-52-1	4,6-Dinitro-2-Methylphenol	U	1300	1.0	1200	1300	380
86-30-6	N-Nitrosodiphenylamine	U	740	1.0	660	740	240
101-55-3	4-Bromophenyl-phenylether	U	370	1.0	330	370	95
1912-24-9	Atrazine	U	370	1.0	330	370	100
87-86-5	Pentachlorophenol	U	920	1.0	820	920	260
120-12-7	Anthracene	U	370	1.0	330	370	94
86-74-8	Carbazole	U	560	1.0	500	560	120

lw 3/2/09

16

KATAHDIN ANALYTICAL SERVICES
Report of Analytical Results

Client: CH2MHill
Project: TO-009 Lejeune
PO No:
Sample Date: 12/05/08
Received Date: 12/06/08
Extraction Date: 12/09/08
Analysis Date: 19-DEC-2008 01:36
Report Date: 12/22/2008
Matrix: SOIL
% Solids: 89.6

Lab ID: SB7032-7
Client ID: MR08-IS093-2-3-08D
SDG: TO9-12
Extracted by: CB
Extraction Method: SW846 3550
Analyst: JCG
Analysis Method: SW846 8270C
Lab Prep Batch: WG58908
Units: ug/Kgdrywt

CAS#	Compound	Flags	Results	DF	PQL	Adj.PQL	Adj.MDL
84-74-2	Di-n-butylphthalate	U	370	1.0	330	370	110
85-68-7	Butylbenzylphthalate	U	370	1.0	330	370	100
91-94-1	3,3'-Dichlorobenzidine	U	560	1.0	500	560	130
218-01-9	Chrysene	U	370	1.0	330	370	110
117-81-7	bis(2-Ethylhexyl)phthalate	J	220	1.0	330	370	110
117-84-0	Di-n-octylphthalate	U	370	1.0	330	370	240
367-12-4	2-Fluorophenol		76%				
13127-88-3	Phenol-D6		88%				
4165-60-0	Nitrobenzene-D5		87%				
321-60-8	2-Fluorobiphenyl		86%				
118-79-6	2,4,6-Tribromophenol		86%				
1718-51-0	Terphenyl-D14		114%				

MEV 3/2/09

KATAHDIN ANALYTICAL SERVICES
Report of Analytical Results

Client: CH2MHill
Project: TO-009 Lejeune
PO No:
Sample Date: 12/05/08
Received Date: 12/06/08
Extraction Date: 12/09/08
Analysis Date: 19-DEC-2008 07:07
Report Date: 12/23/2008
Matrix: SOIL
% Solids: 89.4

Lab ID: SB7032-9
Client ID: MR08-SS103-08D
SDG: TO9-12
Extracted by: CB
Extraction Method: SW846 3550
Analyst: JCG
Analysis Method: SW846 8270C
Lab Prep Batch: WG58908
Units: ug/Kgdrywt

CAS#	Compound	Flags	Results	DF	PQL	Adj.PQL	Adj.MDL
100-52-7	Benzaldehyde	~~U~~ UJ	560	1.0	500	560	130 CCH
108-95-2	Phenol	U	560	1.0	500	560	170
111-44-4	Bis(2-Chloroethyl)ether	U	370	1.0	330	370	90
95-57-8	2-Chlorophenol	U	560	1.0	500	560	180
95-48-7	2-Methylphenol	U	670	1.0	600	670	220
108-60-1	2,2'-Oxybis(1-chloropropane)	U	370	1.0	330	370	100
98-86-2	Acetophenone	U	670	1.0	600	670	200
621-64-7	N-Nitroso-di-n-propylamine	U	370	1.0	330	370	93
65794-96-9	3&4-Methylphenol	U	670	1.0	600	670	210
67-72-1	Hexachloroethane	U	370	1.0	330	370	110
98-95-3	Nitrobenzene	U	370	1.0	330	370	100
78-59-1	Isophorone	U	370	1.0	330	370	84
88-75-5	2-Nitrophenol	U	670	1.0	600	670	190
105-67-9	2,4-Dimethylphenol	U	560	1.0	500	560	180
111-91-1	Bis(2-Chloroethoxy)methane	U	370	1.0	330	370	110
120-83-2	2,4-Dichlorophenol	U	560	1.0	500	560	170
106-47-8	4-Chloroaniline	U	560	1.0	500	560	130
105-60-2	Caprolactam	U	560	1.0	500	560	160
59-50-7	4-Chloro-3-Methylphenol	U	560	1.0	500	560	180
88-06-2	2,4,6-Trichlorophenol	U	560	1.0	500	560	170
95-95-4	2,4,5-Trichlorophenol	U	560	1.0	500	560	170
91-58-7	2-Chloronaphthalene	U	370	1.0	330	370	97
92-52-4	1,1'-Biphenyl	U	370	1.0	330	370	82
88-74-4	2-Nitroaniline	U	560	1.0	500	560	84
131-11-3	Dimethyl Phthalate	U	370	1.0	330	370	87
606-20-2	2,6-Dinitrotoluene	U	370	1.0	330	370	88
208-96-8	Acenaphthylene	U	370	1.0	330	370	78
99-09-2	3-Nitroaniline	U	560	1.0	500	560	100
83-32-9	Acenaphthene	U	370	1.0	330	370	73
51-28-5	2,4-Dinitrophenol	U	1300	1.0	1200	1300	420
132-64-9	Dibenzofuran	U	370	1.0	330	370	88
100-02-7	4-Nitrophenol	U	1300	1.0	1200	1300	340
121-14-2	2,4-Dinitrotoluene	U	370	1.0	330	370	95
84-66-2	Diethylphthalate	U	370	1.0	330	370	89
7005-72-3	4-Chlorophenyl-phenylether	U	370	1.0	330	370	87
100-01-6	4-Nitroaniline	U	560	1.0	500	560	150
534-52-1	4,6-Dinitro-2-Methylphenol	U	1300	1.0	1200	1300	380
86-30-6	N-Nitrosodiphenylamine	U	740	1.0	660	740	240
101-55-3	4-Bromophenyl-phenylether	U	370	1.0	330	370	95
1912-24-9	Atrazine	U	370	1.0	330	370	100
87-86-5	Pentachlorophenol	U	920	1.0	820	920	260
120-12-7	Anthracene	U	370	1.0	330	370	94
86-74-8	Carbazole	U	560	1.0	500	560	120

lwd 3/2/09

KATAHDIN ANALYTICAL SERVICES
Report of Analytical Results

Client: CH2MHill
Project: TO-009 Lejeune
PO No:
Sample Date: 12/05/08
Received Date: 12/06/08
Extraction Date: 12/09/08
Analysis Date: 19-DEC-2008 07:07
Report Date: 12/23/2008
Matrix: SOIL
% Solids: 89.4

Lab ID: SB7032-9
Client ID: MR08-SS103-08D
SDG: TO9-12
Extracted by: CB
Extraction Method: SW846 3550
Analyst: JCG
Analysis Method: SW846 8270C
Lab Prep Batch: WG58908
Units: ug/Kgdrywt

CAS#	Compound	Flags	Results	DF	PQL	Adj.PQL	Adj.MDL
84-74-2	Di-n-butylphthalate	U	370	1.0	330	370	110
85-68-7	Butylbenzylphthalate	U	370	1.0	330	370	100
91-94-1	3,3'-Dichlorobenzidine	U	560	1.0	500	560	130
218-01-9	Chrysene	U	370	1.0	330	370	110
117-81-7	bis(2-Ethylhexyl)phthalate		680	1.0	330	370	110
117-84-0	Di-n-octylphthalate	U	370	1.0	330	370	240
367-12-4	2-Fluorophenol		81%				
13127-88-3	Phenol-D6		*101%				
4165-60-0	Nitrobenzene-D5		86%				
321-60-8	2-Fluorobiphenyl		103%				
118-79-6	2,4,6-Tribromophenol		85%				
1718-51-0	Terphenyl-D14		106%				

MW
3/2/09

KATAHDIN ANALYTICAL SERVICES
Report of Analytical Results

Client: CH2MHill
Project: TO-009 Lejeune
PO No:
Sample Date: 12/05/08
Received Date: 12/06/08
Extraction Date: 12/09/08
Analysis Date: 18-DEC-2008 23:31
Report Date: 12/22/2008
Matrix: SOIL
% Solids: 85.5

Lab ID: SB7032-11
Client ID: MR08-IS103-3-4-08D
SDG: TO9-12
Extracted by: CB
Extraction Method: SW846 3550
Analyst: JCG
Analysis Method: SW846 8270C
Lab Prep Batch: WG58908
Units: ug/Kgdrywt

CAS#	Compound	Flags	Results	DF	PQL	Adj.PQL	Adj.MDL	
100-52-7	Benzaldehyde	~~U~~ UJ	580	1.0	500	580	140	CCH
108-95-2	Phenol	U	580	1.0	500	580	180	
111-44-4	Bis(2-Chloroethyl)ether	U	380	1.0	330	380	95	
95-57-8	2-Chlorophenol	U	580	1.0	500	580	190	
95-48-7	2-Methylphenol	U	700	1.0	600	700	230	
108-60-1	2,2'-Oxybis(1-chloropropane)	U	380	1.0	330	380	100	
98-86-2	Acetophenone	U	700	1.0	600	700	210	
621-64-7	N-Nitroso-di-n-propylamine	U	380	1.0	330	380	97	
65794-96-9	3&4-Methylphenol	U	700	1.0	600	700	220	
67-72-1	Hexachloroethane	U	380	1.0	330	380	110	
98-95-3	Nitrobenzene	U	380	1.0	330	380	110	
78-59-1	Isophorone	U	380	1.0	330	380	88	
88-75-5	2-Nitrophenol	U	700	1.0	600	700	200	
105-67-9	2,4-Dimethylphenol	U	580	1.0	500	580	190	
111-91-1	Bis(2-Chloroethoxy)methane	U	380	1.0	330	380	110	
120-83-2	2,4-Dichlorophenol	U	580	1.0	500	580	180	
106-47-8	4-Chloroaniline	U	580	1.0	500	580	140	
105-60-2	Caprolactam	U	580	1.0	500	580	170	
59-50-7	4-Chloro-3-Methylphenol	U	580	1.0	500	580	190	
88-06-2	2,4,6-Trichlorophenol	U	580	1.0	500	580	180	
95-95-4	2,4,5-Trichlorophenol	U	580	1.0	500	580	180	
91-58-7	2-Chloronaphthalene	U	380	1.0	330	380	100	
92-52-4	1,1'-Biphenyl	U	380	1.0	330	380	85	
88-74-4	2-Nitroaniline	U	580	1.0	500	580	88	
131-11-3	Dimethyl Phthalate	U	380	1.0	330	380	91	
606-20-2	2,6-Dinitrotoluene	U	380	1.0	330	380	92	
208-96-8	Acenaphthylene	U	380	1.0	330	380	82	
99-09-2	3-Nitroaniline	U	580	1.0	500	580	110	
83-32-9	Acenaphthene	U	380	1.0	330	380	76	
51-28-5	2,4-Dinitrophenol	U	1400	1.0	1200	1400	440	
132-64-9	Dibenzofuran	U	380	1.0	330	380	92	
100-02-7	4-Nitrophenol	U	1400	1.0	1200	1400	360	
121-14-2	2,4-Dinitrotoluene	U	380	1.0	330	380	99	
84-66-2	Diethylphthalate	U	380	1.0	330	380	94	
7005-72-3	4-Chlorophenyl-phenylether	U	380	1.0	330	380	91	
100-01-6	4-Nitroaniline	U	580	1.0	500	580	160	
534-52-1	4,6-Dinitro-2-Methylphenol	U	1400	1.0	1200	1400	390	
86-30-6	N-Nitrosodiphenylamine	U	770	1.0	660	770	260	
101-55-3	4-Bromophenyl-phenylether	U	380	1.0	330	380	99	
1912-24-9	Atrazine	U	380	1.0	330	380	110	
87-86-5	Pentachlorophenol	U	960	1.0	820	960	280	
120-12-7	Anthracene	U	380	1.0	330	380	98	
86-74-8	Carbazole	U	580	1.0	500	580	130	

LW 3/2/09

KATAHDIN ANALYTICAL SERVICES
Report of Analytical Results

Client: CH2MHill
Project: TO-009 Lejeune
PO No:
Sample Date: 12/05/08
Received Date: 12/06/08
Extraction Date: 12/09/08
Analysis Date: 18-DEC-2008 23:31
Report Date: 12/22/2008
Matrix: SOIL
% Solids: 85.5

Lab ID: SB7032-11
Client ID: MR08-IS103-3-4-08D
SDG: TO9-12
Extracted by: CB
Extraction Method: SW846 3550
Analyst: JCG
Analysis Method: SW846 8270C
Lab Prep Batch: WG58908
Units: ug/Kgdrywt

CAS#	Compound	Flags	Results	DF	PQL	Adj.PQL	Adj.MDL
84-74-2	Di-n-butylphthalate	U	380	1.0	330	380	120
85-68-7	Butylbenzylphthalate	U	380	1.0	330	380	110
91-94-1	3,3'-Dichlorobenzidine	U	580	1.0	500	580	130
218-01-9	Chrysene	U	380	1.0	330	380	110
117-81-7	bis(2-Ethylhexyl)phthalate	U	380	1.0	330	380	110
117-84-0	Di-n-octylphthalate	U	380	1.0	330	380	250
367-12-4	2-Fluorophenol		75%				
13127-88-3	Phenol-D6		85%				
4165-60-0	Nitrobenzene-D5		83%				
321-60-8	2-Fluorobiphenyl		80%				
118-79-6	2,4,6-Tribromophenol		91%				
1718-51-0	Terphenyl-D14		105%				

lcs
3/2/09

KATAHDIN ANALYTICAL SERVICES
Report of Analytical Results

Client: CH2MHill
Project: TO-009 Lejeune
PO No:
Sample Date: 12/05/08
Received Date: 12/06/08
Extraction Date: 12/09/08
Analysis Date: 19-DEC-2008 04:21
Report Date: 12/22/2008
Matrix: SOIL
% Solids: 82.5

Lab ID: SB7032-13
Client ID: MR08-SS116-08D
SDG: TO9-12
Extracted by: CB
Extraction Method: SW846 3550
Analyst: JCG
Analysis Method: SW846 8270C
Lab Prep Batch: WG58908
Units: ug/Kgdrywt

CAS#	Compound	Flags	Results	DF	PQL	Adj.PQL	Adj.MDL
100-52-7	Benzaldehyde	~~U~~ UJ	610	1.0	500	610	140 CCH
108-95-2	Phenol	U	610	1.0	500	610	190
111-44-4	Bis(2-Chloroethyl)ether	U	400	1.0	330	400	98
95-57-8	2-Chlorophenol	U	610	1.0	500	610	200
95-48-7	2-Methylphenol	U	730	1.0	600	730	240
108-60-1	2,2'-Oxybis(1-chloropropane)	U	400	1.0	330	400	110
98-86-2	Acetophenone	U	730	1.0	600	730	220
621-64-7	N-Nitroso-di-n-propylamine	U	400	1.0	330	400	100
65794-96-9	3&4-Methylphenol	U	730	1.0	600	730	230
67-72-1	Hexachloroethane	U	400	1.0	330	400	120
98-95-3	Nitrobenzene	U	400	1.0	330	400	110
78-59-1	Isophorone	U	400	1.0	330	400	91
88-75-5	2-Nitrophenol	U	730	1.0	600	730	200
105-67-9	2,4-Dimethylphenol	U	610	1.0	500	610	200
111-91-1	Bis(2-Chloroethoxy)methane	U	400	1.0	330	400	120
120-83-2	2,4-Dichlorophenol	U	610	1.0	500	610	180
106-47-8	4-Chloroaniline	U	610	1.0	500	610	140
105-60-2	Caprolactam	U	610	1.0	500	610	170
59-50-7	4-Chloro-3-Methylphenol	U	610	1.0	500	610	200
88-06-2	2,4,6-Trichlorophenol	U	610	1.0	500	610	190
95-95-4	2,4,5-Trichlorophenol	U	610	1.0	500	610	190
91-58-7	2-Chloronaphthalene	U	400	1.0	330	400	100
92-52-4	1,1'-Biphenyl	U	400	1.0	330	400	88
88-74-4	2-Nitroaniline	U	610	1.0	500	610	91
131-11-3	Dimethyl Phthalate	U	400	1.0	330	400	94
606-20-2	2,6-Dinitrotoluene	U	400	1.0	330	400	96
208-96-8	Acenaphthylene	U	400	1.0	330	400	85
99-09-2	3-Nitroaniline	U	610	1.0	500	610	110
83-32-9	Acenaphthene	U	400	1.0	330	400	79
51-28-5	2,4-Dinitrophenol	U	1400	1.0	1200	1400	460
132-64-9	Dibenzofuran	U	400	1.0	330	400	96
100-02-7	4-Nitrophenol	U	1400	1.0	1200	1400	370
121-14-2	2,4-Dinitrotoluene	U	400	1.0	330	400	100
84-66-2	Diethylphthalate	U	400	1.0	330	400	97
7005-72-3	4-Chlorophenyl-phenylether	U	400	1.0	330	400	94
100-01-6	4-Nitroaniline	U	610	1.0	500	610	160
534-52-1	4,6-Dinitro-2-Methylphenol	U	1400	1.0	1200	1400	410
86-30-6	N-Nitrosodiphenylamine	U	800	1.0	660	800	260
101-55-3	4-Bromophenyl-phenylether	U	400	1.0	330	400	100
1912-24-9	Atrazine	U	400	1.0	330	400	110
87-86-5	Pentachlorophenol	U	990	1.0	820	990	290
120-12-7	Anthracene	U	400	1.0	330	400	100
86-74-8	Carbazole	U	610	1.0	500	610	130

JCW 3/2/09

KATAHDIN ANALYTICAL SERVICES
Report of Analytical Results

Client: CH2MHill
Project: TO-009 Lejeune
PO No:
Sample Date: 12/05/08
Received Date: 12/06/08
Extraction Date: 12/09/08
Analysis Date: 19-DEC-2008 04:21
Report Date: 12/22/2008
Matrix: SOIL
% Solids: 82.5

Lab ID: SB7032-13
Client ID: MR08-SS116-08D
SDG: TO9-12
Extracted by: CB
Extraction Method: SW846 3550
Analyst: JCG
Analysis Method: SW846 8270C
Lab Prep Batch: WG58908
Units: ug/Kgdrywt

CAS#	Compound	Flags	Results	DF	PQL	Adj.PQL	Adj.MDL
84-74-2	Di-n-butylphthalate	U	400	1.0	330	400	120
85-68-7	Butylbenzylphthalate	U	400	1.0	330	400	110
91-94-1	3,3'-Dichlorobenzidine	U	610	1.0	500	610	140
218-01-9	Chrysene	U	400	1.0	330	400	120
117-81-7	bis(2-Ethylhexyl)phthalate		720	1.0	330	400	120
117-84-0	Di-n-octylphthalate	U	400	1.0	330	400	260
367-12-4	2-Fluorophenol		75%				
13127-88-3	Phenol-D6		86%				
4165-60-0	Nitrobenzene-D5		83%				
321-60-8	2-Fluorobiphenyl		85%				
118-79-6	2,4,6-Tribromophenol		94%				
1718-51-0	Terphenyl-D14		112%				

lw
3/2/09

20

KATAHDIN ANALYTICAL SERVICES
Report of Analytical Results

Client: CH2MHill
Project: TO-009 Lejeune
PO No:
Sample Date: 12/05/08
Received Date: 12/06/08
Extraction Date: 12/09/08
Analysis Date: 18-DEC-2008 22:49
Report Date: 12/22/2008
Matrix: SOIL
% Solids: 87.5

Lab ID: SB7032-15
Client ID: MR08-IS116-3-4-08D
SDG: TO9-12
Extracted by: CB
Extraction Method: SW846 3550
Analyst: JCG
Analysis Method: SW846 8270C
Lab Prep Batch: WG58908
Units: ug/Kgdrywt

CAS#	Compound	Flags	Results	DF	PQL	Adj.PQL	Adj.MDL
100-52-7	Benzaldehyde	~~U~~ UJ	570	1.0	500	570	140 CCH
108-95-2	Phenol	U	570	1.0	500	570	180
111-44-4	Bis(2-Chloroethyl)ether	U	380	1.0	330	380	92
95-57-8	2-Chlorophenol	U	570	1.0	500	570	190
95-48-7	2-Methylphenol	U	680	1.0	600	680	230
108-60-1	2,2'-Oxybis(1-chloropropane)	U	380	1.0	330	380	100
98-86-2	Acetophenone	U	680	1.0	600	680	200
621-64-7	N-Nitroso-di-n-propylamine	U	380	1.0	330	380	95
65794-96-9	3&4-Methylphenol	U	680	1.0	600	680	210
67-72-1	Hexachloroethane	U	380	1.0	330	380	110
98-95-3	Nitrobenzene	U	380	1.0	330	380	100
78-59-1	Isophorone	U	380	1.0	330	380	86
88-75-5	2-Nitrophenol	U	680	1.0	600	680	190
105-67-9	2,4-Dimethylphenol	U	570	1.0	500	570	190
111-91-1	Bis(2-Chloroethoxy)methane	U	380	1.0	330	380	110
120-83-2	2,4-Dichlorophenol	U	570	1.0	500	570	170
106-47-8	4-Chloroaniline	U	570	1.0	500	570	140
105-60-2	Caprolactam	U	570	1.0	500	570	160
59-50-7	4-Chloro-3-Methylphenol	U	570	1.0	500	570	190
88-06-2	2,4,6-Trichlorophenol	U	570	1.0	500	570	180
95-95-4	2,4,5-Trichlorophenol	U	570	1.0	500	570	180
91-58-7	2-Chloronaphthalene	U	380	1.0	330	380	99
92-52-4	1,1'-Biphenyl	U	380	1.0	330	380	83
88-74-4	2-Nitroaniline	U	570	1.0	500	570	86
131-11-3	Dimethyl Phthalate	U	380	1.0	330	380	89
606-20-2	2,6-Dinitrotoluene	U	380	1.0	330	380	90
208-96-8	Acenaphthylene	U	380	1.0	330	380	80
99-09-2	3-Nitroaniline	U	570	1.0	500	570	110
83-32-9	Acenaphthene	U	380	1.0	330	380	74
51-28-5	2,4-Dinitrophenol	U	1400	1.0	1200	1400	430
132-64-9	Dibenzofuran	U	380	1.0	330	380	90
100-02-7	4-Nitrophenol	U	1400	1.0	1200	1400	350
121-14-2	2,4-Dinitrotoluene	U	380	1.0	330	380	97
84-66-2	Diethylphthalate	U	380	1.0	330	380	91
7005-72-3	4-Chlorophenyl-phenylether	U	380	1.0	330	380	89
100-01-6	4-Nitroaniline	U	570	1.0	500	570	150
534-52-1	4,6-Dinitro-2-Methylphenol	U	1400	1.0	1200	1400	380
86-30-6	N-Nitrosodiphenylamine	U	750	1.0	660	750	250
101-55-3	4-Bromophenyl-phenylether	U	380	1.0	330	380	97
1912-24-9	Atrazine	U	380	1.0	330	380	100
87-86-5	Pentachlorophenol	U	940	1.0	820	940	270
120-12-7	Anthracene	U	380	1.0	330	380	96
86-74-8	Carbazole	U	570	1.0	500	570	130

RW 3/2/09

KATAHDIN ANALYTICAL SERVICES
Report of Analytical Results

Client: CH2MHill
Project: TO-009 Lejeune
PO No:
Sample Date: 12/05/08
Received Date: 12/06/08
Extraction Date: 12/09/08
Analysis Date: 18-DEC-2008 22:49
Report Date: 12/22/2008
Matrix: SOIL
% Solids: 87.5

Lab ID: SB7032-15
Client ID: MR08-IS116-3-4-08D
SDG: TO9-12
Extracted by: CB
Extraction Method: SW846 3550
Analyst: JCG
Analysis Method: SW846 8270C
Lab Prep Batch: WG58908
Units: ug/Kgdrywt

CAS#	Compound	Flags	Results	DF	PQL	Adj.PQL	Adj.MDL
84-74-2	Di-n-butylphthalate	U	380	1.0	330	380	120
85-68-7	Butylbenzylphthalate	U	380	1.0	330	380	110
91-94-1	3,3'-Dichlorobenzidine	U	570	1.0	500	570	130
218-01-9	Chrysene	U	380	1.0	330	380	110
117-81-7	bis(2-Ethylhexyl)phthalate	U	380	1.0	330	380	110
117-84-0	Di-n-octylphthalate	U	380	1.0	330	380	240
367-12-4	2-Fluorophenol		76%				
13127-88-3	Phenol-D6		86%				
4165-60-0	Nitrobenzene-D5		88%				
321-60-8	2-Fluorobiphenyl		85%				
118-79-6	2,4,6-Tribromophenol		83%				
1718-51-0	Terphenyl-D14		102%				

lw 3/2/09

ENVIRONMENTAL
Data Services, Inc.

POLYNUCLEAR AROMATIC COMPOUNDS BY 8270SIM

USEPA Region IV - Level IV Review

Site: MCB Camp Lejeune, TO-09 SDG #: TO9-13

Client: CH2M HILL, Inc., Virginia Beach, Virginia Date: March 2, 2009

Laboratory: Katahdin Analytical Services, Scarborough, Maine Reviewer: Nancy Weaver

EDS ID	Client Sample ID	Laboratory Sample ID	Matrix
1	MR08-SS117-08D	SB7033-2	Soil
2	MR08-IS117-2-3-08D	SB7033-4	Soil
3	MR08-SS125-08D	SB7033-6	Soil
4	MR08-IS125-4-5-08D	SB7033-8	Soil
5	MR08-SS123-08D	SB7033-10	Soil
6	MR08-IS123-6-7-08D	SB7033-12	Soil
7	MR08-SS056-08D	SB7054-2	Soil
8	MR08-IS056-2-3-08D	SB7054-4	Soil
9	MR08-SS057-08D	SB7054-6	Soil
10	MR08-IS057-2-3-08D	SB7054-8	Soil
11	MR08-SS058-08D	SB7054-10	Soil
12	MR08-IS058-2-3-08D	SB7054-12	Soil
13	MR08-SS059-08D	SB7054-14	Soil
14	MR08-SS059D-08D	SB7054-16	Soil
15	MR08-IS059-3-4-08D	SB7054-18	Soil
16	MR08-IS059D-3-4-08D	SB7054-20	Soil
17	MR08-SS060-08D	SB7054-22	Soil
18	MR08-IS060-2-3-08D	SB7054-24	Soil
19	MR08-SS061-08D	SB7054-26	Soil
20	MR08-IS061-2-3-08D	SB7054-28	Soil

The USEPA "Contract Laboratory Program National Functional Guidelines for Organic Data Review," October 1999, and professional judgment were used in evaluating the data in this summary report.

Holding Times - All samples were extracted within 14 days for soil samples and analyzed within 40 days for all samples.

GC/MS Tuning - All of the DFTPP tunes in the initial and continuing calibrations met the percent relative abundance criteria.

Initial Calibration - The initial calibrations exhibited acceptable %RSD and mean RRF values.

Continuing Calibration - The continuing calibrations exhibited acceptable %D and RRF values except the following.

CCAL Date	Compound	%D/RRF	Qualifier	Affected Samples
12/22/08	Naphthalene	25.38%	J/UJ	1-6
	Hexachlorocyclopentadiene	48.92%	J/UJ	1-6
12/24/08	Naphthalene	25.69%	J/UJ	7-20
12/29/08	Naphthalene	34.53%	J/UJ	7DL
	2-Methylnaphthalene	42.62%	J/UJ	7DL
	Hexachlorocyclopentadiene	29.40%	J/UJ	7DL

Surrogates - Three samples exhibited high %R values for 2,4-dibromophenol however acid compounds were not reported so no qualifiers were required. All other samples exhibited acceptable surrogate recoveries.

MS/MSD - A MS/MSD sample was not analyzed.

Laboratory Control Sample - The LCS samples exhibited acceptable %R values.

Internal Standard (IS) Area Performance - All internal standards met response and retention time (RT) criteria.

Method Blank - The method blanks were free of contamination.

Field, Equipment Blank - Field QC results are summarized below.

Blank ID	Compound	Conc. ug/L	Action Level ug/L	Qualifier	Affected Samples
MR08-EB01120508-SS	None - ND	-	-	-	-
MR08-EB01120508-IS	None - ND	-	-	-	-
MR08-EB01120608-SS	None - ND	-	-	-	-
MR08-EB01120608-IS	None - ND	-	-	-	-
MR08-FB01120608	None - ND	-	-	-	-

Field Duplicates - Field duplicate results are summarized below.

Compound	MR08-SS059-08D ug/kg	MR08-SS059D-08D ug/kg	RPD	Qualifier
2-Methylnaphthalene	2.6	11 U	NC	None
Phenanthrene	5.8	5.3	9%	None
Fluoranthene	11	10	10%	None
Pyrene	10	11	10%	None
Benzo (a) anthracene	6.0	6.2	3%	None
Benzo (b) fluoranthene	12	12	0%	None
Benzo (k) fluoranthene	9.6	11	14%	None
Benzo (a) pyrene	7.8	7.9	1%	None
Indeno (1,2,3-cd) pyrene	6.1	6.2	2%	None
Dibenzo (a,h) anthracene	2.8	2.4	15%	None
Benzo (g,h,i) perylene	6.7	7.8	15%	None

Compound	MR08-IS059-3-4-08D ug/kg	MR08-IS059D-3-4-08D ug/kg	RPD	Qualifier
Phenanthrene	11 U	2.6	NC	None
Fluoranthene	11 U	5.8	NC	None
Pyrene	11 U	5.1	NC	None
Benzo (a) anthracene	11 U	2.6	NC	None
Benzo (b) fluoranthene	11 U	4.8	NC	None
Benzo (k) fluoranthene	11 U	4.4	NC	None
Indeno (1,2,3-cd) pyrene	11 U	2.9	NC	None
Benzo (g,h,i) perylene	11 U	3.3	NC	None
Hexachlorobenzene	11 U	2.8	NC	None

Tentatively Identified Compounds (TICs) - TICs were not reported.

Compound Quantitation - EDS sample ID #7 exhibited high concentrations of target compounds and were flagged (E) by the laboratory. The laboratory diluted and reanalyzed this sample. The reviewer replaced the original results with the dilution results. The original Form Is should be used for reporting purposes.

KATAHDIN ANALYTICAL SERVICES
Report of Analytical Results

Client: CH2MHill
Project: TO-009 Lejeune
PO No:
Sample Date: 12/05/08
Received Date: 12/06/08
Extraction Date: 12/09/08
Analysis Date: 22-DEC-2008 21:08
Report Date: 12/30/2008
Matrix: SOIL
% Solids: 93.1

Lab ID: SB7033-2
Client ID: MR08-SS117-08D
SDG: TO9-13
Extracted by: CB
Extraction Method: SW846 3550
Analyst: JCG
Analysis Method: SW846 M8270C
Lab Prep Batch: WG58909
Units: ug/Kgdrywt

CAS#	Compound	Flags	Results	DF	PQL	Adj.PQL	Adj.MDL
91-20-3	Naphthalene	~~J~~ UJ	11	1.0	10	11	2.8 CCH
91-57-6	2-Methylnaphthalene	U	11	1.0	10	11	2.4
86-73-7	Fluorene	U	11	1.0	10	11	3.4
85-01-8	Phenanthrene	U	11	1.0	10	11	1.9
206-44-0	Fluoranthene	U	11	1.0	10	11	1.9
129-00-0	Pyrene	U	11	1.0	10	11	2.2
56-55-3	Benzo(a)anthracene	U	11	1.0	10	11	2.0
205-99-2	Benzo(b)fluoranthene	U	11	1.0	10	11	2.6
207-08-9	Benzo(k)fluoranthene	U	11	1.0	10	11	3.3
50-32-8	Benzo(a)pyrene	U	11	1.0	10	11	3.5
193-39-5	Indeno(1,2,3-cd)pyrene	U	11	1.0	10	11	2.0
53-70-3	Dibenzo(a,h)anthracene	U	11	1.0	10	11	1.9
191-24-2	Benzo(g,h,i)perylene	J	4.1	1.0	10	11	2.1
118-74-1	Hexachlorobenzene	U	11	1.0	10	11	1.9
87-68-3	Hexachlorobutadiene	U	11	1.0	10	11	2.5
77-47-4	Hexachlorocyclopentadiene	~~J~~ UJ	11	1.0	10	11	1.6 CCH
7297-45-2	2-Methylnaphthalene-D10		72%				
367-12-4	2,4-Dibromophenol		*156%				
81103-79-9	Fluorene-d10		74%				
1718-51-1	Pyrene-D10		87%				

LW 3/2/09

2

KATAHDIN ANALYTICAL SERVICES
Report of Analytical Results

Client: CH2MHill
Project: TO-009 Lejeune
PO No:
Sample Date: 12/05/08
Received Date: 12/06/08
Extraction Date: 12/09/08
Analysis Date: 22-DEC-2008 14:08
Report Date: 12/30/2008
Matrix: SOIL
% Solids: 87.0

Lab ID: SB7033-4
Client ID: MR08-IS117-2-3-08D
SDG: TO9-13
Extracted by: CB
Extraction Method: SW846 3550
Analyst: JCG
Analysis Method: SW846 M8270C
Lab Prep Batch: WG58909
Units: ug/Kgdrywt

CAS#	Compound	Flags	Results	DF	PQL	Adj.PQL	Adj.MDL	
91-20-3	Naphthalene	~~U~~ UJ	11	1.0	10	11	3.0	CCH
91-57-6	2-Methylnaphthalene	U	11	1.0	10	11	2.5	
86-73-7	Fluorene	U	11	1.0	10	11	3.7	
85-01-8	Phenanthrene	U	11	1.0	10	11	2.1	
206-44-0	Fluoranthene	U	11	1.0	10	11	2.1	
129-00-0	Pyrene	U	11	1.0	10	11	2.4	
56-55-3	Benzo(a)anthracene	U	11	1.0	10	11	2.2	
205-99-2	Benzo(b)fluoranthene	U	11	1.0	10	11	2.8	
207-08-9	Benzo(k)fluoranthene	U	11	1.0	10	11	3.6	
50-32-8	Benzo(a)pyrene	U	11	1.0	10	11	3.8	
193-39-5	Indeno(1,2,3-cd)pyrene	U	11	1.0	10	11	2.2	
53-70-3	Dibenzo(a,h)anthracene	U	11	1.0	10	11	2.1	
191-24-2	Benzo(g,h,i)perylene	U	11	1.0	10	11	2.3	
118-74-1	Hexachlorobenzene	U	11	1.0	10	11	2.1	
87-68-3	Hexachlorobutadiene	U	11	1.0	10	11	2.6	
77-47-4	Hexachlorocyclopentadiene	~~U~~ UJ	11	1.0	10	11	1.7	CCH
7297-45-2	2-Methylnaphthalene-D10		72%					
367-12-4	2,4-Dibromophenol		131%					
81103-79-9	Fluorene-d10		63%					
1718-51-1	Pyrene-D10		88%					

gw 3/17/09

3

KATAHDIN ANALYTICAL SERVICES
Report of Analytical Results

Client: CH2MHill
Project: TO-009 Lejeune
PO No:
Sample Date: 12/05/08
Received Date: 12/06/08
Extraction Date: 12/09/08
Analysis Date: 22-DEC-2008 22:30
Report Date: 12/30/2008
Matrix: SOIL
% Solids: 86.8

Lab ID: SB7033-6
Client ID: MR08-SS125-08D
SDG: TO9-13
Extracted by: CB
Extraction Method: SW846 3550
Analyst: JCG
Analysis Method: SW846 M8270C
Lab Prep Batch: WG58909
Units: ug/Kgdrywt

CAS#	Compound	Flags	Results	DF	PQL	Adj.PQL	Adj.MDL
91-20-3	Naphthalene	~~U~~ UJ	12	1.0	10	12	3.0 CCH
91-57-6	2-Methylnaphthalene	U	12	1.0	10	12	2.5
86-73-7	Fluorene	U	12	1.0	10	12	3.7
85-01-8	Phenanthrene	J	2.1	1.0	10	12	2.1
206-44-0	Fluoranthene	J	2.6	1.0	10	12	2.1
129-00-0	Pyrene	J	2.8	1.0	10	12	2.4
56-55-3	Benzo(a)anthracene	U	12	1.0	10	12	2.2
205-99-2	Benzo(b)fluoranthene	U	12	1.0	10	12	2.8
207-08-9	Benzo(k)fluoranthene	U	12	1.0	10	12	3.6
50-32-8	Benzo(a)pyrene	U	12	1.0	10	12	3.8
193-39-5	Indeno(1,2,3-cd)pyrene	U	12	1.0	10	12	2.2
53-70-3	Dibenzo(a,h)anthracene	U	12	1.0	10	12	2.1
191-24-2	Benzo(g,h,i)perylene	J	5.6	1.0	10	12	2.3
118-74-1	Hexachlorobenzene	U	12	1.0	10	12	2.1
87-68-3	Hexachlorobutadiene	U	12	1.0	10	12	2.6
77-47-4	Hexachlorocyclopentadiene	~~U~~ UJ	12	1.0	10	12	1.7 CCH
7297-45-2	2-Methylnaphthalene-D10		72%				
367-12-4	2,4-Dibromophenol		*156%				
81103-79-9	Fluorene-d10		77%				
1718-51-1	Pyrene-D10		88%				

lw 3/2/09

4

KATAHDIN ANALYTICAL SERVICES
Report of Analytical Results

Client: CH2MHill
Project: TO-009 Lejeune
PO No:
Sample Date: 12/05/08
Received Date: 12/06/08
Extraction Date: 12/09/08
Analysis Date: 22-DEC-2008 16:14
Report Date: 12/30/2008
Matrix: SOIL
% Solids: 89.3

Lab ID: SB7033-8
Client ID: MR08-IS125-4-5-08D
SDG: TO9-13
Extracted by: CB
Extraction Method: SW846 3550
Analyst: JCG
Analysis Method: SW846 M8270C
Lab Prep Batch: WG58909
Units: ug/Kgdrywt

CAS#	Compound	Flags	Results	DF	PQL	Adj.PQL	Adj.MDL	
91-20-3	Naphthalene	~~U~~ UJ	11	1.0	10	11	2.9	CCH
91-57-6	2-Methylnaphthalene	U	11	1.0	10	11	2.5	
86-73-7	Fluorene	U	11	1.0	10	11	3.6	
85-01-8	Phenanthrene	U	11	1.0	10	11	2.0	
206-44-0	Fluoranthene	U	11	1.0	10	11	2.0	
129-00-0	Pyrene	U	11	1.0	10	11	2.4	
56-55-3	Benzo(a)anthracene	U	11	1.0	10	11	2.1	
205-99-2	Benzo(b)fluoranthene	U	11	1.0	10	11	2.7	
207-08-9	Benzo(k)fluoranthene	U	11	1.0	10	11	3.5	
50-32-8	Benzo(a)pyrene	U	11	1.0	10	11	3.7	
193-39-5	Indeno(1,2,3-cd)pyrene	U	11	1.0	10	11	2.1	
53-70-3	Dibenzo(a,h)anthracene	U	11	1.0	10	11	2.0	
191-24-2	Benzo(g,h,i)perylene	U	11	1.0	10	11	2.2	
118-74-1	Hexachlorobenzene	U	11	1.0	10	11	2.0	
87-68-3	Hexachlorobutadiene	U	11	1.0	10	11	2.6	
77-47-4	Hexachlorocyclopentadiene	~~U~~ UJ	11	1.0	10	11	1.7	CCH
7297-45-2	2-Methylnaphthalene-D10		73%					
367-12-4	2,4-Dibromophenol		131%					
81103-79-9	Fluorene-d10		62%					
1718-51-1	Pyrene-D10		85%					

LLW
3/2/09

5

KATAHDIN ANALYTICAL SERVICES
Report of Analytical Results

Client: CH2MHill
Project: TO-009 Lejeune
PO No:
Sample Date: 12/05/08
Received Date: 12/06/08
Extraction Date: 12/09/08
Analysis Date: 22-DEC-2008 23:52
Report Date: 12/30/2008
Matrix: SOIL
% Solids: 91.0

Lab ID: SB7033-10
Client ID: MR08-SS123-08D
SDG: TO9-13
Extracted by: CB
Extraction Method: SW846 3550
Analyst: JCG
Analysis Method: SW846 M8270C
Lab Prep Batch: WG58909
Units: ug/Kgdrywt

CAS#	Compound	Flags	Results	DF	PQL	Adj.PQL	Adj.MDL	
91-20-3	Naphthalene	~~J~~ UJ	11	1.0	10	11	2.8	CCH
91-57-6	2-Methylnaphthalene	U	11	1.0	10	11	2.4	
86-73-7	Fluorene	U	11	1.0	10	11	3.5	
85-01-8	Phenanthrene	J	3.2	1.0	10	11	2.0	
206-44-0	Fluoranthene	J	4.2	1.0	10	11	2.0	
129-00-0	Pyrene	J	4.1	1.0	10	11	2.3	
56-55-3	Benzo(a)anthracene	J	3.7	1.0	10	11	2.1	
205-99-2	Benzo(b)fluoranthene	U	11	1.0	10	11	2.6	
207-08-9	Benzo(k)fluoranthene	U	11	1.0	10	11	3.4	
50-32-8	Benzo(a)pyrene	U	11	1.0	10	11	3.6	
193-39-5	Indeno(1,2,3-cd)pyrene	U	11	1.0	10	11	2.1	
53-70-3	Dibenzo(a,h)anthracene	U	11	1.0	10	11	2.0	
191-24-2	Benzo(g,h,i)perylene	J	5.3	1.0	10	11	2.2	
118-74-1	Hexachlorobenzene	U	11	1.0	10	11	2.0	
87-68-3	Hexachlorobutadiene	U	11	1.0	10	11	2.5	
77-47-4	Hexachlorocyclopentadiene	~~J~~ UJ	11	1.0	10	11	1.6	CCH
7297-45-2	2-Methylnaphthalene-D10		73%					
367-12-4	2,4-Dibromophenol		*155%					
81103-79-9	Fluorene-d10		77%					
1718-51-1	Pyrene-D10		75%					

lw 3/2/09

6

KATAHDIN ANALYTICAL SERVICES
Report of Analytical Results

Client: CH2MHill
Project: TO-009 Lejeune
PO No:
Sample Date: 12/05/08
Received Date: 12/06/08
Extraction Date: 12/09/08
Analysis Date: 22-DEC-2008 16:55
Report Date: 12/30/2008
Matrix: SOIL
% Solids: 88.6

Lab ID: SB7033-12
Client ID: MR08-IS123-6-7-08D
SDG: TO9-13
Extracted by: CB
Extraction Method: SW846 3550
Analyst: JCG
Analysis Method: SW846 M8270C
Lab Prep Batch: WG58909
Units: ug/Kgdrywt

CAS#	Compound	Flags	Results	DF	PQL	Adj.PQL	Adj.MDL	
91-20-3	Naphthalene	~~U~~ UJ	11	1.0	10	11	2.9	CCH
91-57-6	2-Methylnaphthalene	U	11	1.0	10	11	2.5	
86-73-7	Fluorene	U	11	1.0	10	11	3.6	
85-01-8	Phenanthrene	U	11	1.0	10	11	2.0	
206-44-0	Fluoranthene	J	2.5	1.0	10	11	2.0	
129-00-0	Pyrene	U	11	1.0	10	11	2.4	
56-55-3	Benzo(a)anthracene	U	11	1.0	10	11	2.1	
205-99-2	Benzo(b)fluoranthene	U	11	1.0	10	11	2.7	
207-08-9	Benzo(k)fluoranthene	U	11	1.0	10	11	3.5	
50-32-8	Benzo(a)pyrene	U	11	1.0	10	11	3.7	
193-39-5	Indeno(1,2,3-cd)pyrene	U	11	1.0	10	11	2.1	
53-70-3	Dibenzo(a,h)anthracene	U	11	1.0	10	11	2.0	
191-24-2	Benzo(g,h,i)perylene	U	11	1.0	10	11	2.2	
118-74-1	Hexachlorobenzene	U	11	1.0	10	11	2.0	
87-68-3	Hexachlorobutadiene	U	11	1.0	10	11	2.6	
77-47-4	Hexachlorocyclopentadiene	~~U~~ UJ	11	1.0	10	11	1.7	CCH
7297-45-2	2-Methylnaphthalene-D10		64%					
367-12-4	2,4-Dibromophenol		125%					
81103-79-9	Fluorene-d10		58%					
1718-51-1	Pyrene-D10		85%					

dlw 3/2/09

7

KATAHDIN ANALYTICAL SERVICES
Report of Analytical Results

Client: CH2MHill
Project: TO-009 Lejeune
PO No:
Sample Date: 12/06/08
Received Date: 12/09/08
Extraction Date: 12/10/08
Analysis Date: 24-DEC-2008 21:23
Report Date: 12/30/2008
Matrix: SOIL
% Solids: 67.9

Lab ID: SB7054-2
Client ID: MR08-SS056-08D
SDG: TO9-13
Extracted by: CB
Extraction Method: SW846 3550
Analyst: JCG
Analysis Method: SW846 M8270C
Lab Prep Batch: WG58963
Units: ug/Kgdrywt

CAS#	Compound	Flags	Results	DF	PQL	Adj.PQL	Adj.MDL	
91-20-3	Naphthalene	~~J~~ J	3.9	1.0	10	15	3.8	CCH
91-57-6	2-Methylnaphthalene	J	5.9	1.0	10	15	3.2	
86-73-7	Fluorene	U	15	1.0	10	15	4.7	
85-01-8	Phenanthrene		72	1.0	10	15	2.6	
206-44-0	Fluoranthene		260	1.0	10	15	2.6	
129-00-0	Pyrene		300	1.0	10	15	3.1	
56-55-3	Benzo(a)anthracene		220	1.0	10	15	2.8	
205-99-2	Benzo(b)fluoranthene	~~E~~ 500	~~420~~	1.0	10	15	3.5	R DL
207-08-9	Benzo(k)fluoranthene		380	1.0	10	15	4.6	
50-32-8	Benzo(a)pyrene		340	1.0	10	15	4.9	
193-39-5	Indeno(1,2,3-cd)pyrene		280	1.0	10	15	2.8	
53-70-3	Dibenzo(a,h)anthracene		75	1.0	10	15	2.6	
191-24-2	Benzo(g,h,i)perylene		350	1.0	10	15	2.9	
118-74-1	Hexachlorobenzene	J	5.8	1.0	10	15	2.6	
87-68-3	Hexachlorobutadiene	U	15	1.0	10	15	3.4	
77-47-4	Hexachlorocyclopentadiene	U	15	1.0	10	15	2.2	
7297-45-2	2-Methylnaphthalene-D10		58%					
367-12-4	2,4-Dibromophenol		74%					
81103-79-9	Fluorene-d10		61%					
1718-51-1	Pyrene-D10		94%					

lw
3/2/09

7DL

KATAHDIN ANALYTICAL SERVICES
Report of Analytical Results

Client: CH2MHill
Project: TO-009 Lejeune
PO No:
Sample Date: 12/06/08
Received Date: 12/09/08
Extraction Date: 12/10/08
Analysis Date: 29-DEC-2008 13:00
Report Date: 12/30/2008
Matrix: SOIL
% Solids: 67.9

Lab ID: SB7054-2DL
Client ID: MR08-SS056-08D
SDG: TO9-13
Extracted by: CB
Extraction Method: SW846 3550
Analyst: JCG
Analysis Method: SW846 M8270C
Lab Prep Batch: WG58963
Units: ug/Kgdrywt

use original

CAS#	Compound	Flags	Results	DF	PQL	Adj.PQL	Adj.MDL	
91-20-3	Naphthalene	~~J~~ UJ	29	2.0	10	29	7.7	CCH
91-57-6	2-Methylnaphthalene	~~J~~ UJ	29	2.0	10	29	6.5	CCH
86-73-7	Fluorene	U	29	2.0	10	29	9.4	
85-01-8	Phenanthrene		63	2.0	10	29	5.3	
206-44-0	Fluoranthene		270	2.0	10	29	5.3	
129-00-0	Pyrene		290	2.0	10	29	6.2	
56-55-3	Benzo(a)anthracene		240	2.0	10	29	5.6	
205-99-2	Benzo(b)fluoranthene		500	2.0	10	29	7.1	
207-08-9	Benzo(k)fluoranthene		280	2.0	10	29	9.1	
50-32-8	Benzo(a)pyrene		340	2.0	10	29	9.7	
193-39-5	Indeno(1,2,3-cd)pyrene		300	2.0	10	29	5.6	
53-70-3	Dibenzo(a,h)anthracene		76	2.0	10	29	5.3	
191-24-2	Benzo(g,h,i)perylene		380	2.0	10	29	5.9	
118-74-1	Hexachlorobenzene	~~J~~ J	5.9	2.0	10	29	5.3	CCH
87-68-3	Hexachlorobutadiene	U	29	2.0	10	29	6.8	
77-47-4	Hexachlorocyclopentadiene	U	29	2.0	10	29	4.4	
7297-45-2	2-Methylnaphthalene-D10		63%					
367-12-4	2,4-Dibromophenol		78%					
81103-79-9	Fluorene-d10		56%					
1718-51-1	Pyrene-D10		89%					

R DL

AW 3/2/09

8

KATAHDIN ANALYTICAL SERVICES
Report of Analytical Results

Client: CH2MHill
Project: TO-009 Lejeune
PO No:
Sample Date: 12/06/08
Received Date: 12/09/08
Extraction Date: 12/10/08
Analysis Date: 24-DEC-2008 20:42
Report Date: 12/30/2008
Matrix: SOIL
% Solids: 76.8

Lab ID: SB7054-4
Client ID: MR08-IS056-2-3-08D
SDG: TO9-13
Extracted by: CB
Extraction Method: SW846 3550
Analyst: JCG
Analysis Method: SW846 M8270C
Lab Prep Batch: WG58963
Units: ug/Kgdrywt

CAS#	Compound	Flags	Results	DF	PQL	Adj.PQL	Adj.MDL
91-20-3	Naphthalene	~~J~~ UJ	13	1.0	10	13	3.4 CCH
91-57-6	2-Methylnaphthalene	U	13	1.0	10	13	2.9
86-73-7	Fluorene	U	13	1.0	10	13	4.2
85-01-8	Phenanthrene		26	1.0	10	13	2.3
206-44-0	Fluoranthene		62	1.0	10	13	2.3
129-00-0	Pyrene		85	1.0	10	13	2.7
56-55-3	Benzo(a)anthracene		44	1.0	10	13	2.5
205-99-2	Benzo(b)fluoranthene		100	1.0	10	13	3.1
207-08-9	Benzo(k)fluoranthene		64	1.0	10	13	4.0
50-32-8	Benzo(a)pyrene		80	1.0	10	13	4.3
193-39-5	Indeno(1,2,3-cd)pyrene		80	1.0	10	13	2.5
53-70-3	Dibenzo(a,h)anthracene		16	1.0	10	13	2.3
191-24-2	Benzo(g,h,i)perylene		120	1.0	10	13	2.6
118-74-1	Hexachlorobenzene	J	2.6	1.0	10	13	2.3
87-68-3	Hexachlorobutadiene	U	13	1.0	10	13	3.0
77-47-4	Hexachlorocyclopentadiene	U	13	1.0	10	13	2.0
7297-45-2	2-Methylnaphthalene-D10		59%				
367-12-4	2,4-Dibromophenol		78%				
81103-79-9	Fluorene-d10		64%				
1718-51-1	Pyrene-D10		94%				

lw 3/2/09

9

KATAHDIN ANALYTICAL SERVICES
Report of Analytical Results

Client: CH2MHill
Project: TO-009 Lejeune
PO No:
Sample Date: 12/06/08
Received Date: 12/09/08
Extraction Date: 12/10/08
Analysis Date: 24-DEC-2008 15:09
Report Date: 12/30/2008
Matrix: SOIL
% Solids: 75.2

Lab ID: SB7054-6
Client ID: MR08-SS057-08D
SDG: TO9-13
Extracted by: CB
Extraction Method: SW846 3550
Analyst: JCG
Analysis Method: SW846 M8270C
Lab Prep Batch: WG58963
Units: ug/Kgdrywt

CAS#	Compound	Flags	Results	DF	PQL	Adj.PQL	Adj.MDL
91-20-3	Naphthalene	~~U~~ UJ	13	1.0	10	13	3.4 CCH
91-57-6	2-Methylnaphthalene	U	13	1.0	10	13	2.9
86-73-7	Fluorene	U	13	1.0	10	13	4.2
85-01-8	Phenanthrene	J	4.5	1.0	10	13	2.4
206-44-0	Fluoranthene	J	13	1.0	10	13	2.4
129-00-0	Pyrene	J	11	1.0	10	13	2.8
56-55-3	Benzo(a)anthracene	J	5.6	1.0	10	13	2.5
205-99-2	Benzo(b)fluoranthene	J	13	1.0	10	13	3.2
207-08-9	Benzo(k)fluoranthene	J	9.8	1.0	10	13	4.1
50-32-8	Benzo(a)pyrene	J	7.2	1.0	10	13	4.4
193-39-5	Indeno(1,2,3-cd)pyrene	J	5.6	1.0	10	13	2.5
53-70-3	Dibenzo(a,h)anthracene	U	13	1.0	10	13	2.4
191-24-2	Benzo(g,h,i)perylene	J	7.7	1.0	10	13	2.6
118-74-1	Hexachlorobenzene	U	13	1.0	10	13	2.4
87-68-3	Hexachlorobutadiene	U	13	1.0	10	13	3.0
77-47-4	Hexachlorocyclopentadiene	U	13	1.0	10	13	2.0
7297-45-2	2-Methylnaphthalene-D10		66%				
367-12-4	2,4-Dibromophenol		88%				
81103-79-9	Fluorene-d10		61%				
1718-51-1	Pyrene-D10		96%				

lw 3/2/09

10

KATAHDIN ANALYTICAL SERVICES
Report of Analytical Results

Client: CH2MHill
Project: TO-009 Lejeune
PO No:
Sample Date: 12/06/08
Received Date: 12/09/08
Extraction Date: 12/10/08
Analysis Date: 23-DEC-2008 23:00
Report Date: 12/30/2008
Matrix: SOIL
% Solids: 88.2

Lab ID: SB7054-8
Client ID: MR08-IS057-2-3-08D
SDG: TO9-13
Extracted by: CB
Extraction Method: SW846 3550
Analyst: JCG
Analysis Method: SW846 8270C
Lab Prep Batch: WG58963
Units: ug/Kgdrywt

CAS#	Compound	Flags	Results	DF	PQL	Adj.PQL	Adj.MDL
91-20-3	Naphthalene	~~U~~ UJ	11	1.0	10	11	2.9 CCH
91-57-6	2-Methylnaphthalene	U	11	1.0	10	11	2.5
86-73-7	Fluorene	U	11	1.0	10	11	3.6
85-01-8	Phenanthrene	U	11	1.0	10	11	2.0
206-44-0	Fluoranthene	U	11	1.0	10	11	2.0
129-00-0	Pyrene	U	11	1.0	10	11	2.4
56-55-3	Benzo(a)anthracene	U	11	1.0	10	11	2.2
205-99-2	Benzo(b)fluoranthene	U	11	1.0	10	11	2.7
207-08-9	Benzo(k)fluoranthene	U	11	1.0	10	11	3.5
50-32-8	Benzo(a)pyrene	U	11	1.0	10	11	3.7
193-39-5	Indeno(1,2,3-cd)pyrene	U	11	1.0	10	11	2.2
53-70-3	Dibenzo(a,h)anthracene	U	11	1.0	10	11	2.0
191-24-2	Benzo(g,h,i)perylene	U	11	1.0	10	11	2.3
118-74-1	Hexachlorobenzene	U	11	1.0	10	11	2.0
87-68-3	Hexachlorobutadiene	U	11	1.0	10	11	2.6
77-47-4	Hexachlorocyclopentadiene	U	11	1.0	10	11	1.7
7297-45-2	2-Methylnaphthalene-D10		63%				
367-12-4	2,4-Dibromophenol		90%				
81103-79-9	Fluorene-d10		61%				
1718-51-1	Pyrene-D10		94%				

QCD 3/2/09

11

KATAHDIN ANALYTICAL SERVICES
Report of Analytical Results

Client: CH2MHill
Project: TO-009 Lejeune
PO No:
Sample Date: 12/06/08
Received Date: 12/09/08
Extraction Date: 12/10/08
Analysis Date: 24-DEC-2008 20:00
Report Date: 12/30/2008
Matrix: SOIL
% Solids: 87.4

Lab ID: SB7054-10
Client ID: MR08-SS058-08D
SDG: TO9-13
Extracted by: CB
Extraction Method: SW846 3550
Analyst: JCG
Analysis Method: SW846 M8270C
Lab Prep Batch: WG58963
Units: ug/Kgdrywt

CAS#	Compound	Flags	Results	DF	PQL	Adj.PQL	Adj.MDL
91-20-3	Naphthalene	~~U~~ UJ	11	1.0	10	11	3.0 CEH
91-57-6	2-Methylnaphthalene	U	11	1.0	10	11	2.5
86-73-7	Fluorene	U	11	1.0	10	11	3.6
85-01-8	Phenanthrene	J	7.5	1.0	10	11	2.0
206-44-0	Fluoranthene		15	1.0	10	11	2.0
129-00-0	Pyrene		15	1.0	10	11	2.4
56-55-3	Benzo(a)anthracene	J	8.0	1.0	10	11	2.2
205-99-2	Benzo(b)fluoranthene	J	11	1.0	10	11	2.7
207-08-9	Benzo(k)fluoranthene	J	11	1.0	10	11	3.5
50-32-8	Benzo(a)pyrene	J	8.7	1.0	10	11	3.8
193-39-5	Indeno(1,2,3-cd)pyrene	J	5.8	1.0	10	11	2.2
53-70-3	Dibenzo(a,h)anthracene	U	11	1.0	10	11	2.0
191-24-2	Benzo(g,h,i)perylene	J	6.4	1.0	10	11	2.3
118-74-1	Hexachlorobenzene	U	11	1.0	10	11	2.0
87-68-3	Hexachlorobutadiene	U	11	1.0	10	11	2.6
77-47-4	Hexachlorocyclopentadiene	U	11	1.0	10	11	1.7
7297-45-2	2-Methylnaphthalene-D10		72%				
367-12-4	2,4-Dibromophenol		92%				
81103-79-9	Fluorene-d10		62%				
1718-51-1	Pyrene-D10		105%				

MW 3/2/09

12

KATAHDIN ANALYTICAL SERVICES
Report of Analytical Results

Client: CH2MHill
Project: TO-009 Lejeune
PO No:
Sample Date: 12/06/08
Received Date: 12/09/08
Extraction Date: 12/10/08
Analysis Date: 23-DEC-2008 23:41
Report Date: 12/30/2008
Matrix: SOIL
% Solids: 87.6

Lab ID: SB7054-12
Client ID: MR08-IS058-2-3-08D
SDG: TO9-13
Extracted by: CB
Extraction Method: SW846 3550
Analyst: JCG
Analysis Method: SW846 8270C
Lab Prep Batch: WG58963
Units: ug/Kgdrywt

CAS#	Compound	Flags	Results	DF	PQL	Adj.PQL	Adj.MDL
91-20-3	Naphthalene	~~U~~ UJ	11	1.0	10	11	3.0 CCH
91-57-6	2-Methylnaphthalene	U	11	1.0	10	11	2.5
86-73-7	Fluorene	U	11	1.0	10	11	3.6
85-01-8	Phenanthrene	U	11	1.0	10	11	2.0
206-44-0	Fluoranthene	U	11	1.0	10	11	2.0
129-00-0	Pyrene	U	11	1.0	10	11	2.4
56-55-3	Benzo(a)anthracene	U	11	1.0	10	11	2.2
205-99-2	Benzo(b)fluoranthene	U	11	1.0	10	11	2.7
207-08-9	Benzo(k)fluoranthene	U	11	1.0	10	11	3.5
50-32-8	Benzo(a)pyrene	U	11	1.0	10	11	3.8
193-39-5	Indeno(1,2,3-cd)pyrene	U	11	1.0	10	11	2.2
53-70-3	Dibenzo(a,h)anthracene	U	11	1.0	10	11	2.0
191-24-2	Benzo(g,h,i)perylene	U	11	1.0	10	11	2.3
118-74-1	Hexachlorobenzene	U	11	1.0	10	11	2.0
87-68-3	Hexachlorobutadiene	U	11	1.0	10	11	2.6
77-47-4	Hexachlorocyclopentadiene	U	11	1.0	10	11	1.7
7297-45-2	2-Methylnaphthalene-D10		69%				
367-12-4	2,4-Dibromophenol		81%				
81103-79-9	Fluorene-d10		61%				
1718-51-1	Pyrene-D10		95%				

MW 3/2/09

13

KATAHDIN ANALYTICAL SERVICES
Report of Analytical Results

Client: CH2MHill
Project: TO-009 Lejeune
PO No:
Sample Date: 12/06/08
Received Date: 12/09/08
Extraction Date: 12/10/08
Analysis Date: 24-DEC-2008 15:50
Report Date: 12/30/2008
Matrix: SOIL
% Solids: 86.9

Lab ID: SB7054-14
Client ID: MR08-SS059-08D
SDG: TO9-13
Extracted by: CB
Extraction Method: SW846 3550
Analyst: JCG
Analysis Method: SW846 M8270C
Lab Prep Batch: WG58963
Units: ug/Kgdrywt

CAS#	Compound	Flags	Results	DF	PQL	Adj.PQL	Adj.MDL
91-20-3	Naphthalene	~~J~~ UJ	12	1.0	10	12	3.0 CCH
91-57-6	2-Methylnaphthalene	J	2.6	1.0	10	12	2.5
86-73-7	Fluorene	U	12	1.0	10	12	3.7
85-01-8	Phenanthrene	J	5.8	1.0	10	12	2.1
206-44-0	Fluoranthene	J	11	1.0	10	12	2.1
129-00-0	Pyrene	J	10	1.0	10	12	2.4
56-55-3	Benzo(a)anthracene	J	6.0	1.0	10	12	2.2
205-99-2	Benzo(b)fluoranthene		12	1.0	10	12	2.8
207-08-9	Benzo(k)fluoranthene	J	9.6	1.0	10	12	3.6
50-32-8	Benzo(a)pyrene	J	7.8	1.0	10	12	3.8
193-39-5	Indeno(1,2,3-cd)pyrene	J	6.1	1.0	10	12	2.2
53-70-3	Dibenzo(a,h)anthracene	J	2.8	1.0	10	12	2.1
191-24-2	Benzo(g,h,i)perylene	J	6.7	1.0	10	12	2.3
118-74-1	Hexachlorobenzene	U	12	1.0	10	12	2.1
87-68-3	Hexachlorobutadiene	U	12	1.0	10	12	2.6
77-47-4	Hexachlorocyclopentadiene	U	12	1.0	10	12	1.7
7297-45-2	2-Methylnaphthalene-D10		65%				
367-12-4	2,4-Dibromophenol		93%				
81103-79-9	Fluorene-d10		65%				
1718-51-1	Pyrene-D10		93%				

LW
3/2/09

KATAHDIN ANALYTICAL SERVICES
Report of Analytical Results

Client: CH2MHill
Project: TO-009 Lejeune
PO No:
Sample Date: 12/06/08
Received Date: 12/09/08
Extraction Date: 12/10/08
Analysis Date: 24-DEC-2008 16:32
Report Date: 12/30/2008
Matrix: SOIL
% Solids: 87.2

Lab ID: SB7054-16
Client ID: MR08-SS059D-08D
SDG: TO9-13
Extracted by: CB
Extraction Method: SW846 3550
Analyst: JCG
Analysis Method: SW846 M8270C
Lab Prep Batch: WG58963
Units: ug/Kgdrywt

CAS#	Compound	Flags	Results	DF	PQL	Adj.PQL	Adj.MDL
91-20-3	Naphthalene	~~U~~ UJ	11	1.0	10	11	3.0 CCH
91-57-6	2-Methylnaphthalene	U	11	1.0	10	11	2.5
86-73-7	Fluorene	U	11	1.0	10	11	3.7
85-01-8	Phenanthrene	J	5.3	1.0	10	11	2.1
206-44-0	Fluoranthene	J	10	1.0	10	11	2.1
129-00-0	Pyrene	J	11	1.0	10	11	2.4
56-55-3	Benzo(a)anthracene	J	6.2	1.0	10	11	2.2
205-99-2	Benzo(b)fluoranthene		12	1.0	10	11	2.8
207-08-9	Benzo(k)fluoranthene	J	11	1.0	10	11	3.6
50-32-8	Benzo(a)pyrene	J	7.9	1.0	10	11	3.8
193-39-5	Indeno(1,2,3-cd)pyrene	J	6.2	1.0	10	11	2.2
53-70-3	Dibenzo(a,h)anthracene	J	2.4	1.0	10	11	2.1
191-24-2	Benzo(g,h,i)perylene	J	7.8	1.0	10	11	2.3
118-74-1	Hexachlorobenzene	U	11	1.0	10	11	2.1
87-68-3	Hexachlorobutadiene	U	11	1.0	10	11	2.6
77-47-4	Hexachlorocyclopentadiene	U	11	1.0	10	11	1.7
7297-45-2	2-Methylnaphthalene-D10		65%				
367-12-4	2,4-Dibromophenol		93%				
81103-79-9	Fluorene-d10		65%				
1718-51-1	Pyrene-D10		105%				

CCH
3/2/09

15

KATAHDIN ANALYTICAL SERVICES
Report of Analytical Results

Client: CH2MHill
Project: TO-009 Lejeune
PO No:
Sample Date: 12/06/08
Received Date: 12/09/08
Extraction Date: 12/10/08
Analysis Date: 24-DEC-2008 00:22
Report Date: 12/30/2008
Matrix: SOIL
% Solids: 87.5

Lab ID: SB7054-18
Client ID: MR08-IS059-3-4-08D
SDG: TO9-13
Extracted by: CB
Extraction Method: SW846 3550
Analyst: JCG
Analysis Method: SW846 8270C
Lab Prep Batch: WG58963
Units: ug/Kgdrywt

CAS#	Compound	Flags	Results	DF	PQL	Adj.PQL	Adj.MDL
91-20-3	Naphthalene	~~U~~ UJ	11	1.0	10	11	3.0 CCH
91-57-6	2-Methylnaphthalene	U	11	1.0	10	11	2.5
86-73-7	Fluorene	U	11	1.0	10	11	3.6
85-01-8	Phenanthrene	U	11	1.0	10	11	2.0
206-44-0	Fluoranthene	U	11	1.0	10	11	2.0
129-00-0	Pyrene	U	11	1.0	10	11	2.4
56-55-3	Benzo(a)anthracene	U	11	1.0	10	11	2.2
205-99-2	Benzo(b)fluoranthene	U	11	1.0	10	11	2.7
207-08-9	Benzo(k)fluoranthene	U	11	1.0	10	11	3.5
50-32-8	Benzo(a)pyrene	U	11	1.0	10	11	3.8
193-39-5	Indeno(1,2,3-cd)pyrene	U	11	1.0	10	11	2.2
53-70-3	Dibenzo(a,h)anthracene	U	11	1.0	10	11	2.0
191-24-2	Benzo(g,h,i)perylene	U	11	1.0	10	11	2.3
118-74-1	Hexachlorobenzene	U	11	1.0	10	11	2.0
87-68-3	Hexachlorobutadiene	U	11	1.0	10	11	2.6
77-47-4	Hexachlorocyclopentadiene	U	11	1.0	10	11	1.7
7297-45-2	2-Methylnaphthalene-D10		66%				
367-12-4	2,4-Dibromophenol		76%				
81103-79-9	Fluorene-d10		54%				
1718-51-1	Pyrene-D10		103%				

MW
3/2/09

16

KATAHDIN ANALYTICAL SERVICES
Report of Analytical Results

Client: CH2MHill
Project: TO-009 Lejeune
PO No:
Sample Date: 12/06/08
Received Date: 12/09/08
Extraction Date: 12/10/08
Analysis Date: 24-DEC-2008 01:03
Report Date: 12/30/2008
Matrix: SOIL
% Solids: 87.6

Lab ID: SB7054-20
Client ID: MR08-IS059D-3-4-08D
SDG: TO9-13
Extracted by: CB
Extraction Method: SW846 3550
Analyst: JCG
Analysis Method: SW846 8270C
Lab Prep Batch: WG58963
Units: ug/Kgdrywt

CAS#	Compound	Flags	Results	DF	PQL	Adj.PQL	Adj.MDL
91-20-3	Naphthalene	~~U~~ UJ	11	1.0	10	11	3.0 CCH
91-57-6	2-Methylnaphthalene	U	11	1.0	10	11	2.5
86-73-7	Fluorene	U	11	1.0	10	11	3.6
85-01-8	Phenanthrene	J	2.6	1.0	10	11	2.0
206-44-0	Fluoranthene	J	5.8	1.0	10	11	2.0
129-00-0	Pyrene	J	5.1	1.0	10	11	2.4
56-55-3	Benzo(a)anthracene	J	2.6	1.0	10	11	2.2
205-99-2	Benzo(b)fluoranthene	J	4.8	1.0	10	11	2.7
207-08-9	Benzo(k)fluoranthene	J	4.4	1.0	10	11	3.5
50-32-8	Benzo(a)pyrene	U	11	1.0	10	11	3.8
193-39-5	Indeno(1,2,3-cd)pyrene	J	2.9	1.0	10	11	2.2
53-70-3	Dibenzo(a,h)anthracene	U	11	1.0	10	11	2.0
191-24-2	Benzo(g,h,i)perylene	J	3.3	1.0	10	11	2.3
118-74-1	Hexachlorobenzene	J	2.8	1.0	10	11	2.0
87-68-3	Hexachlorobutadiene	U	11	1.0	10	11	2.6
77-47-4	Hexachlorocyclopentadiene	U	11	1.0	10	11	1.7
7297-45-2	2-Methylnaphthalene-D10		67%				
367-12-4	2,4-Dibromophenol		81%				
81103-79-9	Fluorene-d10		57%				
1718-51-1	Pyrene-D10		106%				

lw 3/2/09

KATAHDIN ANALYTICAL SERVICES
Report of Analytical Results

Client: CH2MHill
Project: TO-009 Lejeune
PO No:
Sample Date: 12/06/08
Received Date: 12/09/08
Extraction Date: 12/10/08
Analysis Date: 24-DEC-2008 17:13
Report Date: 12/30/2008
Matrix: SOIL
% Solids: 88.2

Lab ID: SB7054-22
Client ID: MR08-SS060-08D
SDG: TO9-13
Extracted by: CB
Extraction Method: SW846 3550
Analyst: JCG
Analysis Method: SW846 M8270C
Lab Prep Batch: WG58963
Units: ug/Kgdrywt

CAS#	Compound	Flags	Results	DF	PQL	Adj.PQL	Adj.MDL
91-20-3	Naphthalene	~~J~~ UJ	11	1.0	10	11	2.9 CCH
91-57-6	2-Methylnaphthalene	U	11	1.0	10	11	2.5
86-73-7	Fluorene	U	11	1.0	10	11	3.6
85-01-8	Phenanthrene	J	11	1.0	10	11	2.0
206-44-0	Fluoranthene		30	1.0	10	11	2.0
129-00-0	Pyrene		26	1.0	10	11	2.4
56-55-3	Benzo(a)anthracene	J	9.4	1.0	10	11	2.2
205-99-2	Benzo(b)fluoranthene		17	1.0	10	11	2.7
207-08-9	Benzo(k)fluoranthene		14	1.0	10	11	3.5
50-32-8	Benzo(a)pyrene	J	9.4	1.0	10	11	3.7
193-39-5	Indeno(1,2,3-cd)pyrene	J	6.2	1.0	10	11	2.2
53-70-3	Dibenzo(a,h)anthracene	J	2.2	1.0	10	11	2.0
191-24-2	Benzo(g,h,i)perylene	J	6.8	1.0	10	11	2.3
118-74-1	Hexachlorobenzene	U	11	1.0	10	11	2.0
87-68-3	Hexachlorobutadiene	U	11	1.0	10	11	2.6
77-47-4	Hexachlorocyclopentadiene	U	11	1.0	10	11	1.7
7297-45-2	2-Methylnaphthalene-D10		69%				
367-12-4	2,4-Dibromophenol		93%				
81103-79-9	Fluorene-d10		67%				
1718-51-1	Pyrene-D10		108%				

Rev 3/2/09

18

KATAHDIN ANALYTICAL SERVICES
Report of Analytical Results

Client: CH2MHill
Project: TO-009 Lejeune
PO No:
Sample Date: 12/06/08
Received Date: 12/09/08
Extraction Date: 12/10/08
Analysis Date: 24-DEC-2008 01:44
Report Date: 12/30/2008
Matrix: SOIL
% Solids: 88.8

Lab ID: SB7054-24
Client ID: MR08-IS060-2-3-08D
SDG: TO9-13
Extracted by: CB
Extraction Method: SW846 3550
Analyst: JCG
Analysis Method: SW846 8270C
Lab Prep Batch: WG58963
Units: ug/Kgdrywt

CAS#	Compound	Flags	Results	DF	PQL	Adj.PQL	Adj.MDL
91-20-3	Naphthalene	~~U~~ UJ	11	1.0	10	11	2.9 CCH
91-57-6	2-Methylnaphthalene	U	11	1.0	10	11	2.5
86-73-7	Fluorene	U	11	1.0	10	11	3.6
85-01-8	Phenanthrene	U	11	1.0	10	11	2.0
206-44-0	Fluoranthene	U	11	1.0	10	11	2.0
129-00-0	Pyrene	U	11	1.0	10	11	2.4
56-55-3	Benzo(a)anthracene	U	11	1.0	10	11	2.1
205-99-2	Benzo(b)fluoranthene	U	11	1.0	10	11	2.7
207-08-9	Benzo(k)fluoranthene	U	11	1.0	10	11	3.5
50-32-8	Benzo(a)pyrene	U	11	1.0	10	11	3.7
193-39-5	Indeno(1,2,3-cd)pyrene	U	11	1.0	10	11	2.1
53-70-3	Dibenzo(a,h)anthracene	U	11	1.0	10	11	2.0
191-24-2	Benzo(g,h,i)perylene	U	11	1.0	10	11	2.2
118-74-1	Hexachlorobenzene	U	11	1.0	10	11	2.0
87-68-3	Hexachlorobutadiene	U	11	1.0	10	11	2.6
77-47-4	Hexachlorocyclopentadiene	U	11	1.0	10	11	1.7
7297-45-2	2-Methylnaphthalene-D10		80%				
367-12-4	2,4-Dibromophenol		79%				
81103-79-9	Fluorene-d10		54%				
1718-51-1	Pyrene-D10		94%				

fw 3/2/09

19

KATAHDIN ANALYTICAL SERVICES
Report of Analytical Results

Client: CH2MHill
Project: TO-009 Lejeune
PO No:
Sample Date: 12/06/08
Received Date: 12/09/08
Extraction Date: 12/10/08
Analysis Date: 24-DEC-2008 19:18
Report Date: 12/30/2008
Matrix: SOIL
% Solids: 76.1

Lab ID: SB7054-26
Client ID: MR08-SS061-08D
SDG: TO9-13
Extracted by: CB
Extraction Method: SW846 3550
Analyst: JCG
Analysis Method: SW846 M8270C
Lab Prep Batch: WG58963
Units: ug/Kgdrywt

CAS#	Compound	Flags	Results	DF	PQL	Adj.PQL	Adj.MDL	
91-20-3	Naphthalene	~~J~~ UJ	13	1.0	10	13	3.4	CCH
91-57-6	2-Methylnaphthalene	J	3.0	1.0	10	13	2.9	
86-73-7	Fluorene	U	13	1.0	10	13	4.2	
85-01-8	Phenanthrene	J	9.2	1.0	10	13	2.4	
206-44-0	Fluoranthene		19	1.0	10	13	2.4	
129-00-0	Pyrene		20	1.0	10	13	2.8	
56-55-3	Benzo(a)anthracene	J	9.3	1.0	10	13	2.5	
205-99-2	Benzo(b)fluoranthene		17	1.0	10	13	3.2	
207-08-9	Benzo(k)fluoranthene		15	1.0	10	13	4.1	
50-32-8	Benzo(a)pyrene	J	11	1.0	10	13	4.3	
193-39-5	Indeno(1,2,3-cd)pyrene	J	9.3	1.0	10	13	2.5	
53-70-3	Dibenzo(a,h)anthracene	J	3.3	1.0	10	13	2.4	
191-24-2	Benzo(g,h,i)perylene	J	10	1.0	10	13	2.6	
118-74-1	Hexachlorobenzene	J	5.6	1.0	10	13	2.4	
87-68-3	Hexachlorobutadiene	U	13	1.0	10	13	3.0	
77-47-4	Hexachlorocyclopentadiene	U	13	1.0	10	13	2.0	
7297-45-2	2-Methylnaphthalene-D10		70%					
367-12-4	2,4-Dibromophenol		87%					
81103-79-9	Fluorene-d10		60%					
1718-51-1	Pyrene-D10		98%					

lwd
3/2/09

20

KATAHDIN ANALYTICAL SERVICES
Report of Analytical Results

Client: CH2MHill
Project: TO-009 Lejeune
PO No:
Sample Date: 12/06/08
Received Date: 12/09/08
Extraction Date: 12/10/08
Analysis Date: 24-DEC-2008 13:04
Report Date: 12/30/2008
Matrix: SOIL
% Solids: 86.2

Lab ID: SB7054-28
Client ID: MR08-IS061-2-3-08D
SDG: TO9-13
Extracted by: CB
Extraction Method: SW846 3550
Analyst: JCG
Analysis Method: SW846 M8270C
Lab Prep Batch: WG58963
Units: ug/Kgdrywt

CAS#	Compound	Flags	Results	DF	PQL	Adj.PQL	Adj.MDL
91-20-3	Naphthalene	~~U~~ UJ	12	1.0	10	12	3.0 CCH
91-57-6	2-Methylnaphthalene	U	12	1.0	10	12	2.6
86-73-7	Fluorene	U	12	1.0	10	12	3.7
85-01-8	Phenanthrene	U	12	1.0	10	12	2.1
206-44-0	Fluoranthene	U	12	1.0	10	12	2.1
129-00-0	Pyrene	U	12	1.0	10	12	2.4
56-55-3	Benzo(a)anthracene	U	12	1.0	10	12	2.2
205-99-2	Benzo(b)fluoranthene	U	12	1.0	10	12	2.8
207-08-9	Benzo(k)fluoranthene	U	12	1.0	10	12	3.6
50-32-8	Benzo(a)pyrene	U	12	1.0	10	12	3.8
193-39-5	Indeno(1,2,3-cd)pyrene	U	12	1.0	10	12	2.2
53-70-3	Dibenzo(a,h)anthracene	U	12	1.0	10	12	2.1
191-24-2	Benzo(g,h,i)perylene	U	12	1.0	10	12	2.3
118-74-1	Hexachlorobenzene	U	12	1.0	10	12	2.1
87-68-3	Hexachlorobutadiene	U	12	1.0	10	12	2.7
77-47-4	Hexachlorocyclopentadiene	U	12	1.0	10	12	1.7
7297-45-2	2-Methylnaphthalene-D10		64%				
367-12-4	2,4-Dibromophenol		74%				
81103-79-9	Fluorene-d10		54%				
1718-51-1	Pyrene-D10		106%				

GW
3/2/09

ENVIRONMENTAL
Data Services, Inc.

SEMIVOLATILE ORGANIC COMPOUNDS

USEPA Region IV - Level IV Review

Site: MCB Camp Lejeune, TO-09 SDG #: TO9-13

Client: CH2M HILL, Inc., Virginia Beach, Virginia Date: March 2, 2009

Laboratory: Katahdin Analytical Services, Scarborough, Maine Reviewer: Nancy Weaver

EDS ID	Client Sample ID	Laboratory Sample ID	Matrix
1	MR08-SS117-08D	SB7033-1	Soil
2	MR08-IS117-2-3-08D	SB7033-3	Soil
3	MR08-SS125-08D	SB7033-5	Soil
4	MR08-IS125-4-5-08D	SB7033-7	Soil
5	MR08-SS123-08D	SB7033-9	Soil
6	MR08-IS123-6-7-08D	SB7033-11	Soil
7	MR08-SS056-08D	SB7054-1	Soil
8	MR08-IS056-2-3-08D	SB7054-3	Soil
9	MR08-SS057-08D	SB7054-5	Soil
10	MR08-IS057-2-3-08D	SB7054-7	Soil
11	MR08-SS058-08D	SB7054-9	Soil
12	MR08-IS058-2-3-08D	SB7054-11	Soil
13	MR08-SS059-08D	SB7054-13	Soil
14	MR08-SS059D-08D	SB7054-15	Soil
15	MR08-IS059-3-4-08D	SB7054-17	Soil
16	MR08-IS059D-3-4-08D	SB7054-19	Soil
17	MR08-SS060-08D	SB7054-21	Soil
18	MR08-IS060-2-3-08D	SB7054-23	Soil
19	MR08-SS061-08D	SB7054-25	Soil
20	MR08-IS061-2-3-08D	SB7054-27	Soil

The USEPA "Contract Laboratory Program National Functional Guidelines for Organic Data Review," October 1999, and professional judgment were used in evaluating the data in this summary report.

Holding Times - All samples were extracted within 14 days for soil samples and analyzed within 40 days for all samples.

GC/MS Tuning - All of the DFTPP tunes in the initial and continuing calibrations met the percent relative abundance criteria.

Initial Calibration - The initial calibrations exhibited acceptable %RSD and mean RRF values.

Continuing Calibration - The continuing calibrations exhibited acceptable %D and RRF values except the following.

CCAL Date	Compound	%D/RRF	Qualifier	Affected Samples
12/19/08	Benzaldehyde	64.49%	J/UJ	6, 10-17
	Nitrobenzene	46.15%	J/UJ	6, 10-17
12/20/08	Benzaldehyde	89.51%	J/UJ	1, 2, 7, 18-20
	Nitrobenzene	37.59%	J/UJ	1, 2, 7, 18-20
	4-Nitrophenol	29.65%	J/UJ	1, 2, 7, 18-20
12/22/08	Benzaldehyde	90.97%	J/UJ	4, 5, 9
	Nitrobenzene	63.78%	J/UJ	4, 5, 9
	3,3'-Dichlorobenzidine	32.78%	J/UJ	4, 5, 9
12/29/08	Benzaldehyde	89.18%	J/UJ	3, 8
	Nitrobenzene	40.02%	J/UJ	3, 8
	2,4-Dinitrophenol	43.59%	J/UJ	3, 8
	4-Nitroaniline	35.78%	J/UJ	3, 8
	Butylbenzylphthalate	27.64%	J/UJ	3, 8
	bis (2-Ethylhexyl) phthalate	38.63%	J/UJ	3, 8
	Di-n-octylphthalate	61.96%	J/UJ	3, 8

Surrogates - All samples exhibited acceptable surrogate recoveries.

MS/MSD - A MS/MSD sample was not analyzed.

Laboratory Control Sample - The LCS samples exhibited acceptable %R values except the following.

LCS ID	Compound	%R	Qualifier	Affected Samples
WG58962-LCS	Phenol	104%	None	All associated ND

Internal Standard (IS) Area Performance - All internal standards met response and retention time (RT) criteria.

Method Blank - The method blanks were free of contamination.

Field, Equipment Blank - Field QC results are summarized below.

Blank ID	Compound	Conc. ug/L	Action Level ug/L	Qualifier	Affected Samples
MR08-EB01120508-SS	None - ND	-	-	-	-

Blank ID	Compound	Conc. ug/L	Action Level ug/L	Qualifier	Affected Samples
MR08-EB01120508-IS	None - ND	-	-	-	-
MR08-EB01120608-SS	None - ND	-	-	-	-
MR08-EB01120608-IS	None - ND	-	-	-	-
MR08-FB01120608	None - ND	-	-	-	-

Field Duplicates - Field duplicate results are summarized below.

Compound	MR08-SS059-08D ug/kg	MR08-SS059D-08D ug/kg	RPD	Qualifier
Benzaldehyde	580 U	150	NC	None
bis (2-Ethylhexyl) phthalate	190	110	53%	None

Compound	MR08-IS059-3-4-08D ug/kg	MR08-IS059D-3-4-08D ug/kg	RPD	Qualifier
bis (2-Ethylhexyl) phthalate	380 U	110	NC	None

Tentatively Identified Compounds (TICs) - TICs were reported.

Compound Quantitation - No discrepancies were identified.

KATAHDIN ANALYTICAL SERVICES
Report of Analytical Results

Client: CH2MHill
Project: TO-009 Lejeune
PO No:
Sample Date: 12/05/08
Received Date: 12/06/08
Extraction Date: 12/09/08
Analysis Date: 20-DEC-2008 19:56
Report Date: 12/30/2008
Matrix: SOIL
% Solids: 93.1

Lab ID: SB7033-1
Client ID: MR08-SS117-08D
SDG: TO9-13
Extracted by: CB
Extraction Method: SW846 3550
Analyst: EKC
Analysis Method: SW846 8270C
Lab Prep Batch: WG58908
Units: ug/Kgdrywt

CAS#	Compound	Flags	Results	DF	PQL	Adj.PQL	Adj.MDL	
100-52-7	Benzaldehyde	~~U~~ UJ	540	1.0	500	540	130	CCH
108-95-2	Phenol	U	540	1.0	500	540	170	
111-44-4	Bis(2-Chloroethyl)ether	U	350	1.0	330	350	87	
95-57-8	2-Chlorophenol	U	540	1.0	500	540	180	
95-48-7	2-Methylphenol	U	640	1.0	600	640	210	
108-60-1	2,2'-Oxybis(1-chloropropane)	U	350	1.0	330	350	96	
98-86-2	Acetophenone	U	640	1.0	600	640	190	
621-64-7	N-Nitroso-di-n-propylamine	U	350	1.0	330	350	89	
65794-96-9	3&4-Methylphenol	U	640	1.0	600	640	200	
67-72-1	Hexachloroethane	U	350	1.0	330	350	100	
98-95-3	Nitrobenzene	~~U~~ UJ	350	1.0	330	350	98	CCH
78-59-1	Isophorone	U	350	1.0	330	350	80	
88-75-5	2-Nitrophenol	U	640	1.0	600	640	180	
105-67-9	2,4-Dimethylphenol	U	540	1.0	500	540	180	
111-91-1	Bis(2-Chloroethoxy)methane	U	350	1.0	330	350	100	
120-83-2	2,4-Dichlorophenol	U	540	1.0	500	540	160	
106-47-8	4-Chloroaniline	U	540	1.0	500	540	130	
105-60-2	Caprolactam	U	540	1.0	500	540	150	
59-50-7	4-Chloro-3-Methylphenol	U	540	1.0	500	540	180	
88-06-2	2,4,6-Trichlorophenol	U	540	1.0	500	540	170	
95-95-4	2,4,5-Trichlorophenol	U	540	1.0	500	540	170	
91-58-7	2-Chloronaphthalene	U	350	1.0	330	350	93	
92-52-4	1,1'-Biphenyl	U	350	1.0	330	350	78	
88-74-4	2-Nitroaniline	U	540	1.0	500	540	80	
131-11-3	Dimethyl Phthalate	U	350	1.0	330	350	84	
606-20-2	2,6-Dinitrotoluene	U	350	1.0	330	350	85	
208-96-8	Acenaphthylene	U	350	1.0	330	350	75	
99-09-2	3-Nitroaniline	U	540	1.0	500	540	100	
83-32-9	Acenaphthene	U	350	1.0	330	350	70	
51-28-5	2,4-Dinitrophenol	U	1300	1.0	1200	1300	400	
132-64-9	Dibenzofuran	U	350	1.0	330	350	85	
100-02-7	4-Nitrophenol	~~U~~ UJ	1300	1.0	1200	1300	330	CCH
121-14-2	2,4-Dinitrotoluene	U	350	1.0	330	350	91	
84-66-2	Diethylphthalate	U	350	1.0	330	350	86	
7005-72-3	4-Chlorophenyl-phenylether	U	350	1.0	330	350	84	
100-01-6	4-Nitroaniline	U	540	1.0	500	540	140	
534-52-1	4,6-Dinitro-2-Methylphenol	U	1300	1.0	1200	1300	360	
86-30-6	N-Nitrosodiphenylamine	U	710	1.0	660	710	240	
101-55-3	4-Bromophenyl-phenylether	U	350	1.0	330	350	91	
1912-24-9	Atrazine	U	350	1.0	330	350	98	
87-86-5	Pentachlorophenol	U	880	1.0	820	880	250	
120-12-7	Anthracene	U	350	1.0	330	350	90	
86-74-8	Carbazole	U	540	1.0	500	540	120	

lew 3/2/09

KATAHDIN ANALYTICAL SERVICES
Report of Analytical Results

Client: CH2MHill
Project: TO-009 Lejeune
PO No:
Sample Date: 12/05/08
Received Date: 12/06/08
Extraction Date: 12/09/08
Analysis Date: 20-DEC-2008 19:56
Report Date: 12/30/2008
Matrix: SOIL
% Solids: 93.1

Lab ID: SB7033-1
Client ID: MR08-SS117-08D
SDG: TO9-13
Extracted by: CB
Extraction Method: SW846 3550
Analyst: EKC
Analysis Method: SW846 8270C
Lab Prep Batch: WG58908
Units: ug/Kgdrywt

CAS#	Compound	Flags	Results	DF	PQL	Adj.PQL	Adj.MDL
84-74-2	Di-n-butylphthalate	U	350	1.0	330	350	110
85-68-7	Butylbenzylphthalate	U	350	1.0	330	350	100
91-94-1	3,3'-Dichlorobenzidine	U	540	1.0	500	540	120
218-01-9	Chrysene	U	350	1.0	330	350	100
117-81-7	bis(2-Ethylhexyl)phthalate	J	270	1.0	330	350	100
117-84-0	Di-n-octylphthalate	U	350	1.0	330	350	230
367-12-4	2-Fluorophenol		80%				
13127-88-3	Phenol-D6		88%				
4165-60-0	Nitrobenzene-D5		80%				
321-60-8	2-Fluorobiphenyl		91%				
118-79-6	2,4,6-Tribromophenol		98%				
1718-51-0	Terphenyl-D14		111%				

lew
3/2/09

2

KATAHDIN ANALYTICAL SERVICES
Report of Analytical Results

Client: CH2MHill
Project: TO-009 Lejeune
PO No:
Sample Date: 12/05/08
Received Date: 12/06/08
Extraction Date: 12/09/08
Analysis Date: 20-DEC-2008 21:20
Report Date: 12/30/2008
Matrix: SOIL
% Solids: 87.0

Lab ID: SB7033-3RA
Client ID: MR08-IS117-2-3-08D
SDG: TO9-13
Extracted by: CB
Extraction Method: SW846 3550
Analyst: EKC
Analysis Method: SW846 8270C
Lab Prep Batch: WG58908
Units: ug/Kgdrywt

CAS#	Compound	Flags	Results	DF	PQL	Adj.PQL	Adj.MDL	
100-52-7	Benzaldehyde	~~U~~ UJ	570	1.0	500	570	140	CCH
108-95-2	Phenol	U	570	1.0	500	570	180	
111-44-4	Bis(2-Chloroethyl)ether	U	380	1.0	330	380	93	
95-57-8	2-Chlorophenol	U	570	1.0	500	570	190	
95-48-7	2-Methylphenol	U	690	1.0	600	690	230	
108-60-1	2,2'-Oxybis(1-chloropropane)	U	380	1.0	330	380	100	
98-86-2	Acetophenone	U	690	1.0	600	690	200	
621-64-7	N-Nitroso-di-n-propylamine	U	380	1.0	330	380	95	
65794-96-9	3&4-Methylphenol	U	690	1.0	600	690	210	
67-72-1	Hexachloroethane	U	380	1.0	330	380	110	
98-95-3	Nitrobenzene	~~U~~ UJ	380	1.0	330	380	100	CCH
78-59-1	Isophorone	U	380	1.0	330	380	86	
88-75-5	2-Nitrophenol	U	690	1.0	600	690	190	
105-67-9	2,4-Dimethylphenol	U	570	1.0	500	570	190	
111-91-1	Bis(2-Chloroethoxy)methane	U	380	1.0	330	380	110	
120-83-2	2,4-Dichlorophenol	U	570	1.0	500	570	170	
106-47-8	4-Chloroaniline	U	570	1.0	500	570	140	
105-60-2	Caprolactam	U	570	1.0	500	570	160	
59-50-7	4-Chloro-3-Methylphenol	U	570	1.0	500	570	190	
88-06-2	2,4,6-Trichlorophenol	U	570	1.0	500	570	180	
95-95-4	2,4,5-Trichlorophenol	U	570	1.0	500	570	180	
91-58-7	2-Chloronaphthalene	U	380	1.0	330	380	100	
92-52-4	1,1'-Biphenyl	U	380	1.0	330	380	84	
88-74-4	2-Nitroaniline	U	570	1.0	500	570	86	
131-11-3	Dimethyl Phthalate	U	380	1.0	330	380	90	
606-20-2	2,6-Dinitrotoluene	U	380	1.0	330	380	91	
208-96-8	Acenaphthylene	U	380	1.0	330	380	80	
99-09-2	3-Nitroaniline	U	570	1.0	500	570	110	
83-32-9	Acenaphthene	U	380	1.0	330	380	75	
51-28-5	2,4-Dinitrophenol	U	1400	1.0	1200	1400	430	
132-64-9	Dibenzofuran	U	380	1.0	330	380	91	
100-02-7	4-Nitrophenol	~~U~~ UJ	1400	1.0	1200	1400	360	CCH
121-14-2	2,4-Dinitrotoluene	U	380	1.0	330	380	98	
84-66-2	Diethylphthalate	U	380	1.0	330	380	92	
7005-72-3	4-Chlorophenyl-phenylether	U	380	1.0	330	380	90	
100-01-6	4-Nitroaniline	U	570	1.0	500	570	150	
534-52-1	4,6-Dinitro-2-Methylphenol	U	1400	1.0	1200	1400	390	
86-30-6	N-Nitrosodiphenylamine	U	760	1.0	660	760	250	
101-55-3	4-Bromophenyl-phenylether	U	380	1.0	330	380	98	
1912-24-9	Atrazine	U	380	1.0	330	380	100	
87-86-5	Pentachlorophenol	U	940	1.0	820	940	270	
120-12-7	Anthracene	U	380	1.0	330	380	96	
86-74-8	Carbazole	U	570	1.0	500	570	130	

LW 3/2/09

KATAHDIN ANALYTICAL SERVICES
Report of Analytical Results

Client: CH2MHill
Project: TO-009 Lejeune
PO No:
Sample Date: 12/05/08
Received Date: 12/06/08
Extraction Date: 12/09/08
Analysis Date: 20-DEC-2008 21:20
Report Date: 12/30/2008
Matrix: SOIL
% Solids: 87.0

Lab ID: SB7033-3RA
Client ID: MR08-IS117-2-3-08D
SDG: TO9-13
Extracted by: CB
Extraction Method: SW846 3550
Analyst: EKC
Analysis Method: SW846 8270C
Lab Prep Batch: WG58908
Units: ug/Kgdrywt

CAS#	Compound	Flags	Results	DF	PQL	Adj.PQL	Adj.MDL
84-74-2	Di-n-butylphthalate	U	380	1.0	330	380	120
85-68-7	Butylbenzylphthalate	U	380	1.0	330	380	110
91-94-1	3,3'-Dichlorobenzidine	U	570	1.0	500	570	130
218-01-9	Chrysene	U	380	1.0	330	380	110
117-81-7	bis(2-Ethylhexyl)phthalate	J	180	1.0	330	380	110
117-84-0	Di-n-octylphthalate	U	380	1.0	330	380	240
367-12-4	2-Fluorophenol		81%				
13127-88-3	Phenol-D6		90%				
4165-60-0	Nitrobenzene-D5		88%				
321-60-8	2-Fluorobiphenyl		89%				
118-79-6	2,4,6-Tribromophenol		82%				
1718-51-0	Terphenyl-D14		116%				

lew 3/2/09

3

KATAHDIN ANALYTICAL SERVICES
Report of Analytical Results

Client: CH2MHill
Project: TO-009 Lejeune
PO No:
Sample Date: 12/05/08
Received Date: 12/06/08
Extraction Date: 12/09/08
Analysis Date: 29-DEC-2008 15:49
Report Date: 12/30/2008
Matrix: SOIL
% Solids: 86.8

Lab ID: SB7033-5RA
Client ID: MR08-SS125-08D
SDG: TO9-13
Extracted by: CB
Extraction Method: SW846 3550
Analyst: JCG
Analysis Method: SW846 8270C
Lab Prep Batch: WG58908
Units: ug/Kgdrywt

CAS#	Compound	Flags	Results	DF	PQL	Adj.PQL	Adj.MDL	
100-52-7	Benzaldehyde	~~U~~ UJ	580	1.0	500	580	140	CCH
108-95-2	Phenol	U	580	1.0	500	580	180	
111-44-4	Bis(2-Chloroethyl)ether	U	380	1.0	330	380	93	
95-57-8	2-Chlorophenol	U	580	1.0	500	580	190	
95-48-7	2-Methylphenol	U	690	1.0	600	690	230	
108-60-1	2,2'-Oxybis(1-chloropropane)	U	380	1.0	330	380	100	
98-86-2	Acetophenone	U	690	1.0	600	690	200	
621-64-7	N-Nitroso-di-n-propylamine	U	380	1.0	330	380	96	
65794-96-9	3&4-Methylphenol	U	690	1.0	600	690	220	
67-72-1	Hexachloroethane	U	380	1.0	330	380	110	
98-95-3	Nitrobenzene	~~U~~ UJ	380	1.0	330	380	100	CCH
78-59-1	Isophorone	U	380	1.0	330	380	86	
88-75-5	2-Nitrophenol	U	690	1.0	600	690	190	
105-67-9	2,4-Dimethylphenol	U	580	1.0	500	580	190	
111-91-1	Bis(2-Chloroethoxy)methane	U	380	1.0	330	380	110	
120-83-2	2,4-Dichlorophenol	U	580	1.0	500	580	170	
106-47-8	4-Chloroaniline	U	580	1.0	500	580	140	
105-60-2	Caprolactam	U	580	1.0	500	580	160	
59-50-7	4-Chloro-3-Methylphenol	U	580	1.0	500	580	190	
88-06-2	2,4,6-Trichlorophenol	U	580	1.0	500	580	180	
95-95-4	2,4,5-Trichlorophenol	U	580	1.0	500	580	180	
91-58-7	2-Chloronaphthalene	U	380	1.0	330	380	100	
92-52-4	1,1'-Biphenyl	U	380	1.0	330	380	84	
88-74-4	2-Nitroaniline	U	580	1.0	500	580	86	
131-11-3	Dimethyl Phthalate	U	380	1.0	330	380	90	
606-20-2	2,6-Dinitrotoluene	U	380	1.0	330	380	91	
208-96-8	Acenaphthylene	U	380	1.0	330	380	81	
99-09-2	3-Nitroaniline	U	580	1.0	500	580	110	
83-32-9	Acenaphthene	U	380	1.0	330	380	75	
51-28-5	2,4-Dinitrophenol	~~U~~ UJ	1400	1.0	1200	1400	430	CCH
132-64-9	Dibenzofuran	U	380	1.0	330	380	91	
100-02-7	4-Nitrophenol	U	1400	1.0	1200	1400	360	
121-14-2	2,4-Dinitrotoluene	U	380	1.0	330	380	98	
84-66-2	Diethylphthalate	U	380	1.0	330	380	92	
7005-72-3	4-Chlorophenyl-phenylether	U	380	1.0	330	380	90	
100-01-6	4-Nitroaniline	~~U~~ UJ	580	1.0	500	580	150	CCH
534-52-1	4,6-Dinitro-2-Methylphenol	U	1400	1.0	1200	1400	390	
86-30-6	N-Nitrosodiphenylamine	U	760	1.0	660	760	250	
101-55-3	4-Bromophenyl-phenylether	U	380	1.0	330	380	98	
1912-24-9	Atrazine	U	380	1.0	330	380	100	
87-86-5	Pentachlorophenol	U	940	1.0	820	940	270	
120-12-7	Anthracene	U	380	1.0	330	380	97	
86-74-8	Carbazole	U	580	1.0	500	580	130	

LEW
3/2/09

3

KATAHDIN ANALYTICAL SERVICES
Report of Analytical Results

Client: CH2MHill
Project: TO-009 Lejeune
PO No:
Sample Date: 12/05/08
Received Date: 12/06/08
Extraction Date: 12/09/08
Analysis Date: 29-DEC-2008 15:49
Report Date: 12/30/2008
Matrix: SOIL
% Solids: 86.8

Lab ID: SB7033-5RA
Client ID: MR08-SS125-08D
SDG: TO9-13
Extracted by: CB
Extraction Method: SW846 3550
Analyst: JCG
Analysis Method: SW846 8270C
Lab Prep Batch: WG58908
Units: ug/Kgdrywt

CAS#	Compound	Flags	Results	DF	PQL	Adj.PQL	Adj.MDL	
84-74-2	Di-n-butylphthalate	U	380	1.0	330	380	120	
85-68-7	Butylbenzylphthalate	~~U~~ UJ	380	1.0	330	380	110	CCH
91-94-1	3,3'-Dichlorobenzidine	U	580	1.0	500	580	130	
218-01-9	Chrysene	U	380	1.0	330	380	110	
117-81-7	bis(2-Ethylhexyl)phthalate	~~U~~ UJ	380	1.0	330	380	110	CCH
117-84-0	Di-n-octylphthalate	~~U~~ UJ	380	1.0	330	380	240	CCH
367-12-4	2-Fluorophenol		78%					
13127-88-3	Phenol-D6		94%					
4165-60-0	Nitrobenzene-D5		80%					
321-60-8	2-Fluorobiphenyl		95%					
118-79-6	2,4,6-Tribromophenol		90%					
1718-51-0	Terphenyl-D14		119%					

JCW 3/2/09

4

KATAHDIN ANALYTICAL SERVICES
Report of Analytical Results

Client: CH2MHill
Project: TO-009 Lejeune
PO No:
Sample Date: 12/05/08
Received Date: 12/06/08
Extraction Date: 12/09/08
Analysis Date: 22-DEC-2008 18:04
Report Date: 12/30/2008
Matrix: SOIL
% Solids: 89.3

Lab ID: SB7033-7RA2
Client ID: MR08-IS125-4-5-08D
SDG: TO9-13
Extracted by: CB
Extraction Method: SW846 3550
Analyst: JCG
Analysis Method: SW846 8270C
Lab Prep Batch: WG58908
Units: ug/Kgdrywt

CAS#	Compound	Flags	Results	DF	PQL	Adj.PQL	Adj.MDL
100-52-7	Benzaldehyde	~~U~~ UJ	560	1.0	500	560	130 CCH
108-95-2	Phenol	U	560	1.0	500	560	170
111-44-4	Bis(2-Chloroethyl)ether	U	370	1.0	330	370	91
95-57-8	2-Chlorophenol	U	560	1.0	500	560	180
95-48-7	2-Methylphenol	U	670	1.0	600	670	220
108-60-1	2,2'-Oxybis(1-chloropropane)	U	370	1.0	330	370	100
98-86-2	Acetophenone	U	670	1.0	600	670	200
621-64-7	N-Nitroso-di-n-propylamine	U	370	1.0	330	370	93
65794-96-9	3&4-Methylphenol	U	670	1.0	600	670	210
67-72-1	Hexachloroethane	U	370	1.0	330	370	110
98-95-3	Nitrobenzene	~~U~~ UJ	370	1.0	330	370	100 CCH
78-59-1	Isophorone	U	370	1.0	330	370	84
88-75-5	2-Nitrophenol	U	670	1.0	600	670	190
105-67-9	2,4-Dimethylphenol	U	560	1.0	500	560	180
111-91-1	Bis(2-Chloroethoxy)methane	U	370	1.0	330	370	110
120-83-2	2,4-Dichlorophenol	U	560	1.0	500	560	170
106-47-8	4-Chloroaniline	U	560	1.0	500	560	130
105-60-2	Caprolactam	U	560	1.0	500	560	160
59-50-7	4-Chloro-3-Methylphenol	U	560	1.0	500	560	180
88-06-2	2,4,6-Trichlorophenol	U	560	1.0	500	560	170
95-95-4	2,4,5-Trichlorophenol	U	560	1.0	500	560	170
91-58-7	2-Chloronaphthalene	U	370	1.0	330	370	97
92-52-4	1,1'-Biphenyl	U	370	1.0	330	370	82
88-74-4	2-Nitroaniline	U	560	1.0	500	560	84
131-11-3	Dimethyl Phthalate	U	370	1.0	330	370	87
606-20-2	2,6-Dinitrotoluene	U	370	1.0	330	370	88
208-96-8	Acenaphthylene	U	370	1.0	330	370	78
99-09-2	3-Nitroaniline	U	560	1.0	500	560	100
83-32-9	Acenaphthene	U	370	1.0	330	370	73
51-28-5	2,4-Dinitrophenol	U	1300	1.0	1200	1300	420
132-64-9	Dibenzofuran	U	370	1.0	330	370	88
100-02-7	4-Nitrophenol	U	1300	1.0	1200	1300	340
121-14-2	2,4-Dinitrotoluene	U	370	1.0	330	370	95
84-66-2	Diethylphthalate	U	370	1.0	330	370	90
7005-72-3	4-Chlorophenyl-phenylether	U	370	1.0	330	370	87
100-01-6	4-Nitroaniline	U	560	1.0	500	560	150
534-52-1	4,6-Dinitro-2-Methylphenol	U	1300	1.0	1200	1300	380
86-30-6	N-Nitrosodiphenylamine	U	740	1.0	660	740	240
101-55-3	4-Bromophenyl-phenylether	U	370	1.0	330	370	95
1912-24-9	Atrazine	U	370	1.0	330	370	100
87-86-5	Pentachlorophenol	U	920	1.0	820	920	260
120-12-7	Anthracene	U	370	1.0	330	370	94
86-74-8	Carbazole	U	560	1.0	500	560	120

ew 3/2/09

4

KATAHDIN ANALYTICAL SERVICES
Report of Analytical Results

Client: CH2MHill
Project: TO-009 Lejeune
PO No:
Sample Date: 12/05/08
Received Date: 12/06/08
Extraction Date: 12/09/08
Analysis Date: 22-DEC-2008 18:04
Report Date: 12/30/2008
Matrix: SOIL
% Solids: 89.3

Lab ID: SB7033-7RA2
Client ID: MR08-IS125-4-5-08D
SDG: TO9-13
Extracted by: CB
Extraction Method: SW846 3550
Analyst: JCG
Analysis Method: SW846 8270C
Lab Prep Batch: WG58908
Units: ug/Kgdrywt

CAS#	Compound	Flags	Results	DF	PQL	Adj.PQL	Adj.MDL	
84-74-2	Di-n-butylphthalate	U	370	1.0	330	370	110	
85-68-7	Butylbenzylphthalate	U	370	1.0	330	370	100	
91-94-1	3,3'-Dichlorobenzidine	~~U~~ UJ	560	1.0	500	560	130	CCH
218-01-9	Chrysene	U	370	1.0	330	370	110	
117-81-7	bis(2-Ethylhexyl)phthalate	J	150	1.0	330	370	110	
117-84-0	Di-n-octylphthalate	U	370	1.0	330	370	240	
367-12-4	2-Fluorophenol		78%					
13127-88-3	Phenol-D6		84%					
4165-60-0	Nitrobenzene-D5		83%					
321-60-8	2-Fluorobiphenyl		83%					
118-79-6	2,4,6-Tribromophenol		74%					
1718-51-0	Terphenyl-D14		94%					

LW 3/2/09

KATAHDIN ANALYTICAL SERVICES
Report of Analytical Results

Client: CH2MHill
Project: TO-009 Lejeune
PO No:
Sample Date: 12/05/08
Received Date: 12/06/08
Extraction Date: 12/09/08
Analysis Date: 23-DEC-2008 00:30
Report Date: 12/30/2008
Matrix: SOIL
% Solids: 91.0

Lab ID: SB7033-9
Client ID: MR08-SS123-08D
SDG: TO9-13
Extracted by: CB
Extraction Method: SW846 3550
Analyst: JCG
Analysis Method: SW846 8270C
Lab Prep Batch: WG58908
Units: ug/Kgdrywt

CAS#	Compound	Flags	Results	DF	PQL	Adj.PQL	Adj.MDL	
100-52-7	Benzaldehyde	~~U~~ UJ	550	1.0	500	550	130	CCH
108-95-2	Phenol	U	550	1.0	500	550	170	
111-44-4	Bis(2-Chloroethyl)ether	U	360	1.0	330	360	89	
95-57-8	2-Chlorophenol	U	550	1.0	500	550	180	
95-48-7	2-Methylphenol	U	660	1.0	600	660	220	
108-60-1	2,2'-Oxybis(1-chloropropane)	U	360	1.0	330	360	98	
98-86-2	Acetophenone	U	660	1.0	600	660	200	
621-64-7	N-Nitroso-di-n-propylamine	U	360	1.0	330	360	91	
65794-96-9	3&4-Methylphenol	U	660	1.0	600	660	200	
67-72-1	Hexachloroethane	U	360	1.0	330	360	100	
98-95-3	Nitrobenzene	~~U~~ UJ	360	1.0	330	360	100	CCH
78-59-1	Isophorone	U	360	1.0	330	360	82	
88-75-5	2-Nitrophenol	U	660	1.0	600	660	180	
105-67-9	2,4-Dimethylphenol	U	550	1.0	500	550	180	
111-91-1	Bis(2-Chloroethoxy)methane	U	360	1.0	330	360	100	
120-83-2	2,4-Dichlorophenol	U	550	1.0	500	550	160	
106-47-8	4-Chloroaniline	U	550	1.0	500	550	130	
105-60-2	Caprolactam	U	550	1.0	500	550	160	
59-50-7	4-Chloro-3-Methylphenol	U	550	1.0	500	550	180	
88-06-2	2,4,6-Trichlorophenol	U	550	1.0	500	550	170	
95-95-4	2,4,5-Trichlorophenol	U	550	1.0	500	550	170	
91-58-7	2-Chloronaphthalene	U	360	1.0	330	360	96	
92-52-4	1,1'-Biphenyl	U	360	1.0	330	360	80	
88-74-4	2-Nitroaniline	U	550	1.0	500	550	82	
131-11-3	Dimethyl Phthalate	U	360	1.0	330	360	86	
606-20-2	2,6-Dinitrotoluene	U	360	1.0	330	360	87	
208-96-8	Acenaphthylene	U	360	1.0	330	360	77	
99-09-2	3-Nitroaniline	U	550	1.0	500	550	100	
83-32-9	Acenaphthene	U	360	1.0	330	360	71	
51-28-5	2,4-Dinitrophenol	U	1300	1.0	1200	1300	410	
132-64-9	Dibenzofuran	U	360	1.0	330	360	87	
100-02-7	4-Nitrophenol	U	1300	1.0	1200	1300	340	
121-14-2	2,4-Dinitrotoluene	U	360	1.0	330	360	93	
84-66-2	Diethylphthalate	U	360	1.0	330	360	88	
7005-72-3	4-Chlorophenyl-phenylether	U	360	1.0	330	360	86	
100-01-6	4-Nitroaniline	U	550	1.0	500	550	150	
534-52-1	4,6-Dinitro-2-Methylphenol	U	1300	1.0	1200	1300	370	
86-30-6	N-Nitrosodiphenylamine	U	720	1.0	660	720	240	
101-55-3	4-Bromophenyl-phenylether	U	360	1.0	330	360	93	
1912-24-9	Atrazine	U	360	1.0	330	360	100	
87-86-5	Pentachlorophenol	U	900	1.0	820	900	260	
120-12-7	Anthracene	U	360	1.0	330	360	92	
86-74-8	Carbazole	U	550	1.0	500	550	120	

lw
3/2/09

5

KATAHDIN ANALYTICAL SERVICES
Report of Analytical Results

Client: CH2MHill
Project: TO-009 Lejeune
PO No:
Sample Date: 12/05/08
Received Date: 12/06/08
Extraction Date: 12/09/08
Analysis Date: 23-DEC-2008 00:30
Report Date: 12/30/2008
Matrix: SOIL
% Solids: 91.0

Lab ID: SB7033-9
Client ID: MR08-SS123-08D
SDG: TO9-13
Extracted by: CB
Extraction Method: SW846 3550
Analyst: JCG
Analysis Method: SW846 8270C
Lab Prep Batch: WG58908
Units: ug/Kgdrywt

CAS#	Compound	Flags	Results	DF	PQL	Adj.PQL	Adj.MDL	
84-74-2	Di-n-butylphthalate	U	360	1.0	330	360	110	
85-68-7	Butylbenzylphthalate	U	360	1.0	330	360	100	
91-94-1	3,3'-Dichlorobenzidine	~~J~~ UJ	550	1.0	500	550	120	CCH
218-01-9	Chrysene	U	360	1.0	330	360	100	
117-81-7	bis(2-Ethylhexyl)phthalate	J	350	1.0	330	360	110	
117-84-0	Di-n-octylphthalate	U	360	1.0	330	360	230	
367-12-4	2-Fluorophenol		86%					
13127-88-3	Phenol-D6		95%					
4165-60-0	Nitrobenzene-D5		80%					
321-60-8	2-Fluorobiphenyl		91%					
118-79-6	2,4,6-Tribromophenol		95%					
1718-51-0	Terphenyl-D14		104%					

lw 3/2/09

6

KATAHDIN ANALYTICAL SERVICES
Report of Analytical Results

Client: CH2MHill
Project: TO-009 Lejeune
PO No:
Sample Date: 12/05/08
Received Date: 12/06/08
Extraction Date: 12/09/08
Analysis Date: 19-DEC-2008 21:37
Report Date: 12/30/2008
Matrix: SOIL
% Solids: 88.6

Lab ID: SB7033-11
Client ID: MR08-IS123-6-7-08D
SDG: TO9-13
Extracted by: CB
Extraction Method: SW846 3550
Analyst: JCG
Analysis Method: SW846 8270C
Lab Prep Batch: WG58908
Units: ug/Kgdrywt

CAS#	Compound	Flags	Results	DF	PQL	Adj.PQL	Adj.MDL	
100-52-7	Benzaldehyde	~~U~~ UJ	560	1.0	500	560	140	CCH
108-95-2	Phenol	U	560	1.0	500	560	180	
111-44-4	Bis(2-Chloroethyl)ether	U	370	1.0	330	370	91	
95-57-8	2-Chlorophenol	U	560	1.0	500	560	180	
95-48-7	2-Methylphenol	U	680	1.0	600	680	220	
108-60-1	2,2'-Oxybis(1-chloropropane)	U	370	1.0	330	370	100	
98-86-2	Acetophenone	U	680	1.0	600	680	200	
621-64-7	N-Nitroso-di-n-propylamine	U	370	1.0	330	370	94	
65794-96-9	3&4-Methylphenol	U	680	1.0	600	680	210	
67-72-1	Hexachloroethane	U	370	1.0	330	370	110	
98-95-3	Nitrobenzene	~~U~~ UJ	370	1.0	330	370	100	CCH
78-59-1	Isophorone	U	370	1.0	330	370	85	
88-75-5	2-Nitrophenol	U	680	1.0	600	680	190	
105-67-9	2,4-Dimethylphenol	U	560	1.0	500	560	190	
111-91-1	Bis(2-Chloroethoxy)methane	U	370	1.0	330	370	110	
120-83-2	2,4-Dichlorophenol	U	560	1.0	500	560	170	
106-47-8	4-Chloroaniline	U	560	1.0	500	560	130	
105-60-2	Caprolactam	U	560	1.0	500	560	160	
59-50-7	4-Chloro-3-Methylphenol	U	560	1.0	500	560	190	
88-06-2	2,4,6-Trichlorophenol	U	560	1.0	500	560	180	
95-95-4	2,4,5-Trichlorophenol	U	560	1.0	500	560	180	
91-58-7	2-Chloronaphthalene	U	370	1.0	330	370	98	
92-52-4	1,1'-Biphenyl	U	370	1.0	330	370	82	
88-74-4	2-Nitroaniline	U	560	1.0	500	560	85	
131-11-3	Dimethyl Phthalate	U	370	1.0	330	370	88	
606-20-2	2,6-Dinitrotoluene	U	370	1.0	330	370	89	
208-96-8	Acenaphthylene	U	370	1.0	330	370	79	
99-09-2	3-Nitroaniline	U	560	1.0	500	560	110	
83-32-9	Acenaphthene	U	370	1.0	330	370	73	
51-28-5	2,4-Dinitrophenol	U	1400	1.0	1200	1400	420	
132-64-9	Dibenzofuran	U	370	1.0	330	370	89	
100-02-7	4-Nitrophenol	U	1400	1.0	1200	1400	350	
121-14-2	2,4-Dinitrotoluene	U	370	1.0	330	370	96	
84-66-2	Diethylphthalate	U	370	1.0	330	370	90	
7005-72-3	4-Chlorophenyl-phenylether	U	370	1.0	330	370	88	
100-01-6	4-Nitroaniline	U	560	1.0	500	560	150	
534-52-1	4,6-Dinitro-2-Methylphenol	U	1400	1.0	1200	1400	380	
86-30-6	N-Nitrosodiphenylamine	U	740	1.0	660	740	250	
101-55-3	4-Bromophenyl-phenylether	U	370	1.0	330	370	96	
1912-24-9	Atrazine	U	370	1.0	330	370	100	
87-86-5	Pentachlorophenol	U	920	1.0	820	920	270	
120-12-7	Anthracene	U	370	1.0	330	370	95	
86-74-8	Carbazole	U	560	1.0	500	560	120	

LW
3/2/09

6

KATAHDIN ANALYTICAL SERVICES
Report of Analytical Results

Client: CH2MHill
Project: TO-009 Lejeune
PO No:
Sample Date: 12/05/08
Received Date: 12/06/08
Extraction Date: 12/09/08
Analysis Date: 19-DEC-2008 21:37
Report Date: 12/30/2008
Matrix: SOIL
% Solids: 88.6

Lab ID: SB7033-11
Client ID: MR08-IS123-6-7-08D
SDG: TO9-13
Extracted by: CB
Extraction Method: SW846 3550
Analyst: JCG
Analysis Method: SW846 8270C
Lab Prep Batch: WG58908
Units: ug/Kgdrywt

CAS#	Compound	Flags	Results	DF	PQL	Adj.PQL	Adj.MDL
84-74-2	Di-n-butylphthalate	U	370	1.0	330	370	110
85-68-7	Butylbenzylphthalate	U	370	1.0	330	370	100
91-94-1	3,3'-Dichlorobenzidine	U	560	1.0	500	560	130
218-01-9	Chrysene	U	370	1.0	330	370	110
117-81-7	bis(2-Ethylhexyl)phthalate	J	350	1.0	330	370	110
117-84-0	Di-n-octylphthalate	U	370	1.0	330	370	240
367-12-4	2-Fluorophenol		74%				
13127-88-3	Phenol-D6		83%				
4165-60-0	Nitrobenzene-D5		68%				
321-60-8	2-Fluorobiphenyl		74%				
118-79-6	2,4,6-Tribromophenol		81%				
1718-51-0	Terphenyl-D14		94%				

lw
3/2/09

7

KATAHDIN ANALYTICAL SERVICES
Report of Analytical Results

Client: CH2MHill
Project: TO-009 Lejeune
PO No:
Sample Date: 12/06/08
Received Date: 12/09/08
Extraction Date: 12/10/08
Analysis Date: 20-DEC-2008 18:32
Report Date: 12/30/2008
Matrix: SOIL
% Solids: 67.9

Lab ID: SB7054-1
Client ID: MR08-SS056-08D
SDG: TO9-13
Extracted by: CB
Extraction Method: SW846 3550
Analyst: EKC
Analysis Method: SW846 8270C
Lab Prep Batch: WG58962
Units: ug/Kgdrywt

CAS#	Compound	Flags	Results	DF	PQL	Adj.PQL	Adj.MDL	
100-52-7	Benzaldehyde	~~U~~ UJ	740	1.0	500	740	180	CCH
108-95-2	Phenol	U	740	1.0	500	740	230	
111-44-4	Bis(2-Chloroethyl)ether	U	490	1.0	330	490	120	
95-57-8	2-Chlorophenol	U	740	1.0	500	740	240	
95-48-7	2-Methylphenol	U	880	1.0	600	880	290	
108-60-1	2,2'-Oxybis(1-chloropropane)	U	490	1.0	330	490	130	
98-86-2	Acetophenone	J	430	1.0	600	880	260	
621-64-7	N-Nitroso-di-n-propylamine	U	490	1.0	330	490	120	
65794-96-9	3&4-Methylphenol	U	880	1.0	600	880	280	
67-72-1	Hexachloroethane	U	490	1.0	330	490	140	
98-95-3	Nitrobenzene	~~U~~ UJ	490	1.0	330	490	130	CCH
78-59-1	Isophorone	U	490	1.0	330	490	110	
88-75-5	2-Nitrophenol	U	880	1.0	600	880	250	
105-67-9	2,4-Dimethylphenol	U	740	1.0	500	740	240	
111-91-1	Bis(2-Chloroethoxy)methane	U	490	1.0	330	490	140	
120-83-2	2,4-Dichlorophenol	U	740	1.0	500	740	220	
106-47-8	4-Chloroaniline	U	740	1.0	500	740	180	
105-60-2	Caprolactam	U	740	1.0	500	740	210	
59-50-7	4-Chloro-3-Methylphenol	U	740	1.0	500	740	240	
88-06-2	2,4,6-Trichlorophenol	U	740	1.0	500	740	230	
95-95-4	2,4,5-Trichlorophenol	U	740	1.0	500	740	230	
91-58-7	2-Chloronaphthalene	U	490	1.0	330	490	130	
92-52-4	1,1'-Biphenyl	U	490	1.0	330	490	110	
88-74-4	2-Nitroaniline	U	740	1.0	500	740	110	
131-11-3	Dimethyl Phthalate	U	490	1.0	330	490	110	
606-20-2	2,6-Dinitrotoluene	U	490	1.0	330	490	120	
208-96-8	Acenaphthylene	U	490	1.0	330	490	100	
99-09-2	3-Nitroaniline	U	740	1.0	500	740	140	
83-32-9	Acenaphthene	U	490	1.0	330	490	96	
51-28-5	2,4-Dinitrophenol	U	1800	1.0	1200	1800	560	
132-64-9	Dibenzofuran	U	490	1.0	330	490	120	
100-02-7	4-Nitrophenol	~~U~~ UJ	1800	1.0	1200	1800	460	CCH
121-14-2	2,4-Dinitrotoluene	U	490	1.0	330	490	120	
84-66-2	Diethylphthalate	U	490	1.0	330	490	120	
7005-72-3	4-Chlorophenyl-phenylether	U	490	1.0	330	490	110	
100-01-6	4-Nitroaniline	U	740	1.0	500	740	200	
534-52-1	4,6-Dinitro-2-Methylphenol	U	1800	1.0	1200	1800	500	
86-30-6	N-Nitrosodiphenylamine	U	970	1.0	660	970	320	
101-55-3	4-Bromophenyl-phenylether	U	490	1.0	330	490	120	
1912-24-9	Atrazine	U	490	1.0	330	490	130	
87-86-5	Pentachlorophenol	U	1200	1.0	820	1200	350	
120-12-7	Anthracene	U	490	1.0	330	490	120	
86-74-8	Carbazole	U	740	1.0	500	740	160	

RW 3/2/09

7

KATAHDIN ANALYTICAL SERVICES
Report of Analytical Results

Client: CH2MHill
Project: TO-009 Lejeune
PO No:
Sample Date: 12/06/08
Received Date: 12/09/08
Extraction Date: 12/10/08
Analysis Date: 20-DEC-2008 18:32
Report Date: 12/30/2008
Matrix: SOIL
% Solids: 67.9

Lab ID: SB7054-1
Client ID: MR08-SS056-08D
SDG: TO9-13
Extracted by: CB
Extraction Method: SW846 3550
Analyst: EKC
Analysis Method: SW846 8270C
Lab Prep Batch: WG58962
Units: ug/Kgdrywt

CAS#	Compound	Flags	Results	DF	PQL	Adj.PQL	Adj.MDL
84-74-2	Di-n-butylphthalate	U	490	1.0	330	490	150
85-68-7	Butylbenzylphthalate	J	200	1.0	330	490	140
91-94-1	3,3'-Dichlorobenzidine	U	740	1.0	500	740	170
218-01-9	Chrysene	J	250	1.0	330	490	140
117-81-7	bis(2-Ethylhexyl)phthalate		3900	1.0	330	490	140
117-84-0	Di-n-octylphthalate	U	490	1.0	330	490	310
367-12-4	2-Fluorophenol		58%				
13127-88-3	Phenol-D6		68%				
4165-60-0	Nitrobenzene-D5		62%				
321-60-8	2-Fluorobiphenyl		76%				
118-79-6	2,4,6-Tribromophenol		68%				
1718-51-0	Terphenyl-D14		96%				

LW 3/2/09

8

KATAHDIN ANALYTICAL SERVICES
Report of Analytical Results

Client: CH2MHill
Project: TO-009 Lejeune
PO No:
Sample Date: 12/06/08
Received Date: 12/09/08
Extraction Date: 12/10/08
Analysis Date: 29-DEC-2008 16:32
Report Date: 12/30/2008
Matrix: SOIL
% Solids: 76.8

Lab ID: SB7054-3RA
Client ID: MR08-IS056-2-3-08D
SDG: TO9-13
Extracted by: CB
Extraction Method: SW846 3550
Analyst: JCG
Analysis Method: SW846 8270C
Lab Prep Batch: WG58962
Units: ug/Kgdrywt

CAS#	Compound	Flags	Results	DF	PQL	Adj.PQL	Adj.MDL	
100-52-7	Benzaldehyde	~~U~~ UJ	650	1.0	500	650	160	CCH
108-95-2	Phenol	U	650	1.0	500	650	200	
111-44-4	Bis(2-Chloroethyl)ether	U	430	1.0	330	430	100	
95-57-8	2-Chlorophenol	U	650	1.0	500	650	210	
95-48-7	2-Methylphenol	U	780	1.0	600	780	260	
108-60-1	2,2'-Oxybis(1-chloropropane)	U	430	1.0	330	430	120	
98-86-2	Acetophenone	U	780	1.0	600	780	230	
621-64-7	N-Nitroso-di-n-propylamine	U	430	1.0	330	430	110	
65794-96-9	3&4-Methylphenol	U	780	1.0	600	780	240	
67-72-1	Hexachloroethane	U	430	1.0	330	430	120	
98-95-3	Nitrobenzene	~~U~~ UJ	430	1.0	330	430	120	CCH
78-59-1	Isophorone	U	430	1.0	330	430	98	
88-75-5	2-Nitrophenol	U	780	1.0	600	780	220	
105-67-9	2,4-Dimethylphenol	U	650	1.0	500	650	210	
111-91-1	Bis(2-Chloroethoxy)methane	U	430	1.0	330	430	120	
120-83-2	2,4-Dichlorophenol	U	650	1.0	500	650	200	
106-47-8	4-Chloroaniline	U	650	1.0	500	650	150	
105-60-2	Caprolactam	U	650	1.0	500	650	190	
59-50-7	4-Chloro-3-Methylphenol	U	650	1.0	500	650	220	
88-06-2	2,4,6-Trichlorophenol	U	650	1.0	500	650	200	
95-95-4	2,4,5-Trichlorophenol	U	650	1.0	500	650	200	
91-58-7	2-Chloronaphthalene	U	430	1.0	330	430	110	
92-52-4	1,1'-Biphenyl	U	430	1.0	330	430	95	
88-74-4	2-Nitroaniline	U	650	1.0	500	650	98	
131-11-3	Dimethyl Phthalate	U	430	1.0	330	430	100	
606-20-2	2,6-Dinitrotoluene	U	430	1.0	330	430	100	
208-96-8	Acenaphthylene	U	430	1.0	330	430	91	
99-09-2	3-Nitroaniline	U	650	1.0	500	650	120	
83-32-9	Acenaphthene	U	430	1.0	330	430	84	
51-28-5	2,4-Dinitrophenol	~~U~~ UJ	1600	1.0	1200	1600	490	CCH
132-64-9	Dibenzofuran	U	430	1.0	330	430	100	
100-02-7	4-Nitrophenol	U	1600	1.0	1200	1600	400	
121-14-2	2,4-Dinitrotoluene	U	430	1.0	330	430	110	
84-66-2	Diethylphthalate	U	430	1.0	330	430	100	
7005-72-3	4-Chlorophenyl-phenylether	U	430	1.0	330	430	100	
100-01-6	4-Nitroaniline	~~U~~ UJ	650	1.0	500	650	170	CCH
534-52-1	4,6-Dinitro-2-Methylphenol	U	1600	1.0	1200	1600	440	
86-30-6	N-Nitrosodiphenylamine	U	860	1.0	660	860	280	
101-55-3	4-Bromophenyl-phenylether	U	430	1.0	330	430	110	
1912-24-9	Atrazine	U	430	1.0	330	430	120	
87-86-5	Pentachlorophenol	U	1100	1.0	820	1100	310	
120-12-7	Anthracene	U	430	1.0	330	430	110	
86-74-8	Carbazole	U	650	1.0	500	650	140	

fw 3/2/09

8

KATAHDIN ANALYTICAL SERVICES
Report of Analytical Results

Client: CH2MHill
Project: TO-009 Lejeune
PO No:
Sample Date: 12/06/08
Received Date: 12/09/08
Extraction Date: 12/10/08
Analysis Date: 29-DEC-2008 16:32
Report Date: 12/30/2008
Matrix: SOIL
% Solids: 76.8

Lab ID: SB7054-3RA
Client ID: MR08-IS056-2-3-08D
SDG: TO9-13
Extracted by: CB
Extraction Method: SW846 3550
Analyst: JCG
Analysis Method: SW846 8270C
Lab Prep Batch: WG58962
Units: ug/Kgdrywt

CAS#	Compound	Flags	Results	DF	PQL	Adj.PQL	Adj.MDL	
84-74-2	Di-n-butylphthalate	U	430	1.0	330	430	130	
85-68-7	Butylbenzylphthalate	~~U~~ UJ	430	1.0	330	430	120	CCR
91-94-1	3,3'-Dichlorobenzidine	U	650	1.0	500	650	150	
218-01-9	Chrysene	U	430	1.0	330	430	120	
117-81-7	bis(2-Ethylhexyl)phthalate	J	1000	1.0	330	430	130	CCR
117-84-0	Di-n-octylphthalate	~~U~~ UJ	430	1.0	330	430	270	CCR
367-12-4	2-Fluorophenol		67%					
13127-88-3	Phenol-D6		82%					
4165-60-0	Nitrobenzene-D5		71%					
321-60-8	2-Fluorobiphenyl		82%					
118-79-6	2,4,6-Tribromophenol		73%					
1718-51-0	Terphenyl-D14		106%					

lw
3/2/09

9

KATAHDIN ANALYTICAL SERVICES
Report of Analytical Results

Client: CH2MHill
Project: TO-009 Lejeune
PO No:
Sample Date: 12/06/08
Received Date: 12/09/08
Extraction Date: 12/10/08
Analysis Date: 22-DEC-2008 20:15
Report Date: 12/30/2008
Matrix: SOIL
% Solids: 75.2

Lab ID: SB7054-5RA
Client ID: MR08-SS057-08D
SDG: TO9-13
Extracted by: CB
Extraction Method: SW846 3550
Analyst: JCG
Analysis Method: SW846 8270C
Lab Prep Batch: WG58962
Units: ug/Kgdrywt

CAS#	Compound	Flags	Results	DF	PQL	Adj.PQL	Adj.MDL	
100-52-7	Benzaldehyde	~~U~~ UJ	660	1.0	500	660	160	CCH
108-95-2	Phenol	U	660	1.0	500	660	210	
111-44-4	Bis(2-Chloroethyl)ether	U	440	1.0	330	440	110	
95-57-8	2-Chlorophenol	U	660	1.0	500	660	220	
95-48-7	2-Methylphenol	U	800	1.0	600	800	260	
108-60-1	2,2'-Oxybis(1-chloropropane)	U	440	1.0	330	440	120	
98-86-2	Acetophenone	U	800	1.0	600	800	240	
621-64-7	N-Nitroso-di-n-propylamine	U	440	1.0	330	440	110	
65794-96-9	3&4-Methylphenol	U	800	1.0	600	800	250	
67-72-1	Hexachloroethane	U	440	1.0	330	440	130	
98-95-3	Nitrobenzene	~~U~~ UJ	440	1.0	330	440	120	CCH
78-59-1	Isophorone	U	440	1.0	330	440	100	
88-75-5	2-Nitrophenol	U	800	1.0	600	800	220	
105-67-9	2,4-Dimethylphenol	U	660	1.0	500	660	220	
111-91-1	Bis(2-Chloroethoxy)methane	U	440	1.0	330	440	130	
120-83-2	2,4-Dichlorophenol	U	660	1.0	500	660	200	
106-47-8	4-Chloroaniline	U	660	1.0	500	660	160	
105-60-2	Caprolactam	U	660	1.0	500	660	190	
59-50-7	4-Chloro-3-Methylphenol	U	660	1.0	500	660	220	
88-06-2	2,4,6-Trichlorophenol	U	660	1.0	500	660	200	
95-95-4	2,4,5-Trichlorophenol	U	660	1.0	500	660	200	
91-58-7	2-Chloronaphthalene	U	440	1.0	330	440	120	
92-52-4	1,1'-Biphenyl	U	440	1.0	330	440	97	
88-74-4	2-Nitroaniline	U	660	1.0	500	660	100	
131-11-3	Dimethyl Phthalate	U	440	1.0	330	440	100	
606-20-2	2,6-Dinitrotoluene	U	440	1.0	330	440	100	
208-96-8	Acenaphthylene	U	440	1.0	330	440	93	
99-09-2	3-Nitroaniline	U	660	1.0	500	660	120	
83-32-9	Acenaphthene	U	440	1.0	330	440	86	
51-28-5	2,4-Dinitrophenol	U	1600	1.0	1200	1600	500	
132-64-9	Dibenzofuran	U	440	1.0	330	440	100	
100-02-7	4-Nitrophenol	U	1600	1.0	1200	1600	410	
121-14-2	2,4-Dinitrotoluene	U	440	1.0	330	440	110	
84-66-2	Diethylphthalate	U	440	1.0	330	440	110	
7005-72-3	4-Chlorophenyl-phenylether	U	440	1.0	330	440	100	
100-01-6	4-Nitroaniline	U	660	1.0	500	660	180	
534-52-1	4,6-Dinitro-2-Methylphenol	U	1600	1.0	1200	1600	450	
86-30-6	N-Nitrosodiphenylamine	U	880	1.0	660	880	290	
101-55-3	4-Bromophenyl-phenylether	U	440	1.0	330	440	110	
1912-24-9	Atrazine	U	440	1.0	330	440	120	
87-86-5	Pentachlorophenol	U	1100	1.0	820	1100	310	
120-12-7	Anthracene	U	440	1.0	330	440	110	
86-74-8	Carbazole	U	660	1.0	500	660	150	

fw 3/2/09

9

KATAHDIN ANALYTICAL SERVICES
Report of Analytical Results

Client: CH2MHill
Project: TO-009 Lejeune
PO No:
Sample Date: 12/06/08
Received Date: 12/09/08
Extraction Date: 12/10/08
Analysis Date: 22-DEC-2008 20:15
Report Date: 12/30/2008
Matrix: SOIL
% Solids: 75.2

Lab ID: SB7054-5RA
Client ID: MR08-SS057-08D
SDG: TO9-13
Extracted by: CB
Extraction Method: SW846 3550
Analyst: JCG
Analysis Method: SW846 8270C
Lab Prep Batch: WG58962
Units: ug/Kgdrywt

CAS#	Compound	Flags	Results	DF	PQL	Adj.PQL	Adj.MDL	
84-74-2	Di-n-butylphthalate	U	440	1.0	330	440	130	
85-68-7	Butylbenzylphthalate	U	440	1.0	330	440	120	
91-94-1	3,3'-Dichlorobenzidine	~~U~~ UJ	660	1.0	500	660	150	CCH
218-01-9	Chrysene	U	440	1.0	330	440	130	
117-81-7	bis(2-Ethylhexyl)phthalate	U	440	1.0	330	440	130	
117-84-0	Di-n-octylphthalate	U	440	1.0	330	440	280	
367-12-4	2-Fluorophenol		70%					
13127-88-3	Phenol-D6		74%					
4165-60-0	Nitrobenzene-D5		74%					
321-60-8	2-Fluorobiphenyl		74%					
118-79-6	2,4,6-Tribromophenol		81%					
1718-51-0	Terphenyl-D14		92%					

lcs
3/2/09

10

KATAHDIN ANALYTICAL SERVICES
Report of Analytical Results

Client: CH2MHill
Project: TO-009 Lejeune
PO No:
Sample Date: 12/06/08
Received Date: 12/09/08
Extraction Date: 12/10/08
Analysis Date: 19-DEC-2008 23:00
Report Date: 12/30/2008
Matrix: SOIL
% Solids: 88.2

Lab ID: SB7054-7
Client ID: MR08-IS057-2-3-08D
SDG: TO9-13
Extracted by: CB
Extraction Method: SW846 3550
Analyst: JCG
Analysis Method: SW846 8270C
Lab Prep Batch: WG58962
Units: ug/Kgdrywt

CAS#	Compound	Flags	Results	DF	PQL	Adj.PQL	Adj.MDL	
100-52-7	Benzaldehyde	~~U~~ UJ	570	1.0	500	570	140	CCH
108-95-2	Phenol	U	570	1.0	500	570	180	
111-44-4	Bis(2-Chloroethyl)ether	U	370	1.0	330	370	92	
95-57-8	2-Chlorophenol	U	570	1.0	500	570	180	
95-48-7	2-Methylphenol	U	680	1.0	600	680	230	
108-60-1	2,2'-Oxybis(1-chloropropane)	U	370	1.0	330	370	100	
98-86-2	Acetophenone	U	680	1.0	600	680	200	
621-64-7	N-Nitroso-di-n-propylamine	U	370	1.0	330	370	94	
65794-96-9	3&4-Methylphenol	U	680	1.0	600	680	210	
67-72-1	Hexachloroethane	U	370	1.0	330	370	110	
98-95-3	Nitrobenzene	~~U~~ UJ	370	1.0	330	370	100	CCH
78-59-1	Isophorone	U	370	1.0	330	370	85	
88-75-5	2-Nitrophenol	U	680	1.0	600	680	190	
105-67-9	2,4-Dimethylphenol	U	570	1.0	500	570	190	
111-91-1	Bis(2-Chloroethoxy)methane	U	370	1.0	330	370	110	
120-83-2	2,4-Dichlorophenol	U	570	1.0	500	570	170	
106-47-8	4-Chloroaniline	U	570	1.0	500	570	130	
105-60-2	Caprolactam	U	570	1.0	500	570	160	
59-50-7	4-Chloro-3-Methylphenol	U	570	1.0	500	570	190	
88-06-2	2,4,6-Trichlorophenol	U	570	1.0	500	570	180	
95-95-4	2,4,5-Trichlorophenol	U	570	1.0	500	570	180	
91-58-7	2-Chloronaphthalene	U	370	1.0	330	370	99	
92-52-4	1,1'-Biphenyl	U	370	1.0	330	370	83	
88-74-4	2-Nitroaniline	U	570	1.0	500	570	85	
131-11-3	Dimethyl Phthalate	U	370	1.0	330	370	88	
606-20-2	2,6-Dinitrotoluene	U	370	1.0	330	370	90	
208-96-8	Acenaphthylene	U	370	1.0	330	370	79	
99-09-2	3-Nitroaniline	U	570	1.0	500	570	110	
83-32-9	Acenaphthene	U	370	1.0	330	370	74	
51-28-5	2,4-Dinitrophenol	U	1400	1.0	1200	1400	430	
132-64-9	Dibenzofuran	U	370	1.0	330	370	90	
100-02-7	4-Nitrophenol	U	1400	1.0	1200	1400	350	
121-14-2	2,4-Dinitrotoluene	U	370	1.0	330	370	96	
84-66-2	Diethylphthalate	U	370	1.0	330	370	91	
7005-72-3	4-Chlorophenyl-phenylether	U	370	1.0	330	370	88	
100-01-6	4-Nitroaniline	U	570	1.0	500	570	150	
534-52-1	4,6-Dinitro-2-Methylphenol	U	1400	1.0	1200	1400	380	
86-30-6	N-Nitrosodiphenylamine	U	750	1.0	660	750	250	
101-55-3	4-Bromophenyl-phenylether	U	370	1.0	330	370	96	
1912-24-9	Atrazine	U	370	1.0	330	370	100	
87-86-5	Pentachlorophenol	U	930	1.0	820	930	270	
120-12-7	Anthracene	U	370	1.0	330	370	95	
86-74-8	Carbazole	U	570	1.0	500	570	120	

JW 3/2/09

10

KATAHDIN ANALYTICAL SERVICES
Report of Analytical Results

Client: CH2MHill
Project: TO-009 Lejeune
PO No:
Sample Date: 12/06/08
Received Date: 12/09/08
Extraction Date: 12/10/08
Analysis Date: 19-DEC-2008 23:00
Report Date: 12/30/2008
Matrix: SOIL
% Solids: 88.2

Lab ID: SB7054-7
Client ID: MR08-IS057-2-3-08D
SDG: TO9-13
Extracted by: CB
Extraction Method: SW846 3550
Analyst: JCG
Analysis Method: SW846 8270C
Lab Prep Batch: WG58962
Units: ug/Kgdrywt

CAS#	Compound	Flags	Results	DF	PQL	Adj.PQL	Adj.MDL
84-74-2	Di-n-butylphthalate	U	370	1.0	330	370	110
85-68-7	Butylbenzylphthalate	U	370	1.0	330	370	100
91-94-1	3,3'-Dichlorobenzidine	U	570	1.0	500	570	130
218-01-9	Chrysene	U	370	1.0	330	370	110
117-81-7	bis(2-Ethylhexyl)phthalate	J	130	1.0	330	370	110
117-84-0	Di-n-octylphthalate	U	370	1.0	330	370	240
367-12-4	2-Fluorophenol		72%				
13127-88-3	Phenol-D6		80%				
4165-60-0	Nitrobenzene-D5		74%				
321-60-8	2-Fluorobiphenyl		75%				
118-79-6	2,4,6-Tribromophenol		82%				
1718-51-0	Terphenyl-D14		87%				

lw 3/2/09

KATAHDIN ANALYTICAL SERVICES
Report of Analytical Results

Client: CH2MHill
Project: TO-009 Lejeune
PO No:
Sample Date: 12/06/08
Received Date: 12/09/08
Extraction Date: 12/10/08
Analysis Date: 19-DEC-2008 23:41
Report Date: 12/30/2008
Matrix: SOIL
% Solids: 87.4

Lab ID: SB7054-9
Client ID: MR08-SS058-08D
SDG: TO9-13
Extracted by: CB
Extraction Method: SW846 3550
Analyst: JCG
Analysis Method: SW846 8270C
Lab Prep Batch: WG58962
Units: ug/Kgdrywt

CAS#	Compound	Flags	Results	DF	PQL	Adj.PQL	Adj.MDL	
100-52-7	Benzaldehyde	~~U~~ UJ	570	1.0	500	570	140	CCH
108-95-2	Phenol	U	570	1.0	500	570	180	
111-44-4	Bis(2-Chloroethyl)ether	U	380	1.0	330	380	93	
95-57-8	2-Chlorophenol	U	570	1.0	500	570	190	
95-48-7	2-Methylphenol	U	690	1.0	600	690	230	
108-60-1	2,2'-Oxybis(1-chloropropane)	U	380	1.0	330	380	100	
98-86-2	Acetophenone	U	690	1.0	600	690	200	
621-64-7	N-Nitroso-di-n-propylamine	U	380	1.0	330	380	95	
65794-96-9	3&4-Methylphenol	U	690	1.0	600	690	210	
67-72-1	Hexachloroethane	U	380	1.0	330	380	110	
98-95-3	Nitrobenzene	~~U~~ UJ	380	1.0	330	380	100	CCH
78-59-1	Isophorone	U	380	1.0	330	380	86	
88-75-5	2-Nitrophenol	U	690	1.0	600	690	190	
105-67-9	2,4-Dimethylphenol	U	570	1.0	500	570	190	
111-91-1	Bis(2-Chloroethoxy)methane	U	380	1.0	330	380	110	
120-83-2	2,4-Dichlorophenol	U	570	1.0	500	570	170	
106-47-8	4-Chloroaniline	U	570	1.0	500	570	140	
105-60-2	Caprolactam	U	570	1.0	500	570	160	
59-50-7	4-Chloro-3-Methylphenol	U	570	1.0	500	570	190	
88-06-2	2,4,6-Trichlorophenol	U	570	1.0	500	570	180	
95-95-4	2,4,5-Trichlorophenol	U	570	1.0	500	570	180	
91-58-7	2-Chloronaphthalene	U	380	1.0	330	380	99	
92-52-4	1,1'-Biphenyl	U	380	1.0	330	380	83	
88-74-4	2-Nitroaniline	U	570	1.0	500	570	86	
131-11-3	Dimethyl Phthalate	U	380	1.0	330	380	89	
606-20-2	2,6-Dinitrotoluene	U	380	1.0	330	380	90	
208-96-8	Acenaphthylene	U	380	1.0	330	380	80	
99-09-2	3-Nitroaniline	U	570	1.0	500	570	110	
83-32-9	Acenaphthene	U	380	1.0	330	380	74	
51-28-5	2,4-Dinitrophenol	U	1400	1.0	1200	1400	430	
132-64-9	Dibenzofuran	U	380	1.0	330	380	90	
100-02-7	4-Nitrophenol	U	1400	1.0	1200	1400	350	
121-14-2	2,4-Dinitrotoluene	U	380	1.0	330	380	97	
84-66-2	Diethylphthalate	U	380	1.0	330	380	91	
7005-72-3	4-Chlorophenyl-phenylether	U	380	1.0	330	380	89	
100-01-6	4-Nitroaniline	U	570	1.0	500	570	150	
534-52-1	4,6-Dinitro-2-Methylphenol	U	1400	1.0	1200	1400	380	
86-30-6	N-Nitrosodiphenylamine	U	750	1.0	660	750	250	
101-55-3	4-Bromophenyl-phenylether	U	380	1.0	330	380	97	
1912-24-9	Atrazine	U	380	1.0	330	380	100	
87-86-5	Pentachlorophenol	U	940	1.0	820	940	270	
120-12-7	Anthracene	U	380	1.0	330	380	96	
86-74-8	Carbazole	U	570	1.0	500	570	130	

LW 3/2/09

KATAHDIN ANALYTICAL SERVICES
Report of Analytical Results

Client: CH2MHill
Project: TO-009 Lejeune
PO No:
Sample Date: 12/06/08
Received Date: 12/09/08
Extraction Date: 12/10/08
Analysis Date: 19-DEC-2008 23:41
Report Date: 12/30/2008
Matrix: SOIL
% Solids: 87.4

Lab ID: SB7054-9
Client ID: MR08-SS058-08D
SDG: TO9-13
Extracted by: CB
Extraction Method: SW846 3550
Analyst: JCG
Analysis Method: SW846 8270C
Lab Prep Batch: WG58962
Units: ug/Kgdrywt

CAS#	Compound	Flags	Results	DF	PQL	Adj.PQL	Adj.MDL
84-74-2	Di-n-butylphthalate	U	380	1.0	330	380	120
85-68-7	Butylbenzylphthalate	U	380	1.0	330	380	110
91-94-1	3,3'-Dichlorobenzidine	U	570	1.0	500	570	130
218-01-9	Chrysene	U	380	1.0	330	380	110
117-81-7	bis(2-Ethylhexyl)phthalate	J	120	1.0	330	380	110
117-84-0	Di-n-octylphthalate	U	380	1.0	330	380	240
367-12-4	2-Fluorophenol		75%				
13127-88-3	Phenol-D6		80%				
4165-60-0	Nitrobenzene-D5		72%				
321-60-8	2-Fluorobiphenyl		77%				
118-79-6	2,4,6-Tribromophenol		94%				
1718-51-0	Terphenyl-D14		90%				

JCW 3/2/09

KATAHDIN ANALYTICAL SERVICES
Report of Analytical Results

Client: CH2MHill
Project: TO-009 Lejeune
PO No:
Sample Date: 12/06/08
Received Date: 12/09/08
Extraction Date: 12/10/08
Analysis Date: 20-DEC-2008 00:22
Report Date: 12/30/2008
Matrix: SOIL
% Solids: 87.6

Lab ID: SB7054-11
Client ID: MR08-IS058-2-3-08D
SDG: TO9-13
Extracted by: CB
Extraction Method: SW846 3550
Analyst: JCG
Analysis Method: SW846 8270C
Lab Prep Batch: WG58962
Units: ug/Kgdrywt

CAS#	Compound	Flags	Results	DF	PQL	Adj.PQL	Adj.MDL	
100-52-7	Benzaldehyde	~~U~~ UJ	570	1.0	500	570	140	CCH
108-95-2	Phenol	U	570	1.0	500	570	180	
111-44-4	Bis(2-Chloroethyl)ether	U	380	1.0	330	380	92	
95-57-8	2-Chlorophenol	U	570	1.0	500	570	190	
95-48-7	2-Methylphenol	U	680	1.0	600	680	230	
108-60-1	2,2'-Oxybis(1-chloropropane)	U	380	1.0	330	380	100	
98-86-2	Acetophenone	U	680	1.0	600	680	200	
621-64-7	N-Nitroso-di-n-propylamine	U	380	1.0	330	380	95	
65794-96-9	3&4-Methylphenol	U	680	1.0	600	680	210	
67-72-1	Hexachloroethane	U	380	1.0	330	380	110	
98-95-3	Nitrobenzene	~~U~~ UJ	380	1.0	330	380	100	CCH
78-59-1	Isophorone	U	380	1.0	330	380	86	
88-75-5	2-Nitrophenol	U	680	1.0	600	680	190	
105-67-9	2,4-Dimethylphenol	U	570	1.0	500	570	190	
111-91-1	Bis(2-Chloroethoxy)methane	U	380	1.0	330	380	110	
120-83-2	2,4-Dichlorophenol	U	570	1.0	500	570	170	
106-47-8	4-Chloroaniline	U	570	1.0	500	570	140	
105-60-2	Caprolactam	U	570	1.0	500	570	160	
59-50-7	4-Chloro-3-Methylphenol	U	570	1.0	500	570	190	
88-06-2	2,4,6-Trichlorophenol	U	570	1.0	500	570	180	
95-95-4	2,4,5-Trichlorophenol	U	570	1.0	500	570	180	
91-58-7	2-Chloronaphthalene	U	380	1.0	330	380	99	
92-52-4	1,1'-Biphenyl	U	380	1.0	330	380	83	
88-74-4	2-Nitroaniline	U	570	1.0	500	570	86	
131-11-3	Dimethyl Phthalate	U	380	1.0	330	380	89	
606-20-2	2,6-Dinitrotoluene	U	380	1.0	330	380	90	
208-96-8	Acenaphthylene	U	380	1.0	330	380	80	
99-09-2	3-Nitroaniline	U	570	1.0	500	570	110	
83-32-9	Acenaphthene	U	380	1.0	330	380	74	
51-28-5	2,4-Dinitrophenol	U	1400	1.0	1200	1400	430	
132-64-9	Dibenzofuran	U	380	1.0	330	380	90	
100-02-7	4-Nitrophenol	U	1400	1.0	1200	1400	350	
121-14-2	2,4-Dinitrotoluene	U	380	1.0	330	380	97	
84-66-2	Diethylphthalate	U	380	1.0	330	380	91	
7005-72-3	4-Chlorophenyl-phenylether	U	380	1.0	330	380	89	
100-01-6	4-Nitroaniline	U	570	1.0	500	570	150	
534-52-1	4,6-Dinitro-2-Methylphenol	U	1400	1.0	1200	1400	380	
86-30-6	N-Nitrosodiphenylamine	U	750	1.0	660	750	250	
101-55-3	4-Bromophenyl-phenylether	U	380	1.0	330	380	97	
1912-24-9	Atrazine	U	380	1.0	330	380	100	
87-86-5	Pentachlorophenol	U	940	1.0	820	940	270	
120-12-7	Anthracene	U	380	1.0	330	380	96	
86-74-8	Carbazole	U	570	1.0	500	570	130	

fcw 3/2/09

12

KATAHDIN ANALYTICAL SERVICES
Report of Analytical Results

Client: CH2MHill
Project: TO-009 Lejeune
PO No:
Sample Date: 12/06/08
Received Date: 12/09/08
Extraction Date: 12/10/08
Analysis Date: 20-DEC-2008 00:22
Report Date: 12/30/2008
Matrix: SOIL
% Solids: 87.6

Lab ID: SB7054-11
Client ID: MR08-IS058-2-3-08D
SDG: TO9-13
Extracted by: CB
Extraction Method: SW846 3550
Analyst: JCG
Analysis Method: SW846 8270C
Lab Prep Batch: WG58962
Units: ug/Kgdrywt

CAS#	Compound	Flags	Results	DF	PQL	Adj.PQL	Adj.MDL
84-74-2	Di-n-butylphthalate	U	380	1.0	330	380	120
85-68-7	Butylbenzylphthalate	U	380	1.0	330	380	110
91-94-1	3,3'-Dichlorobenzidine	U	570	1.0	500	570	130
218-01-9	Chrysene	U	380	1.0	330	380	110
117-81-7	bis(2-Ethylhexyl)phthalate	J	210	1.0	330	380	110
117-84-0	Di-n-octylphthalate	U	380	1.0	330	380	240
367-12-4	2-Fluorophenol		76%				
13127-88-3	Phenol-D6		83%				
4165-60-0	Nitrobenzene-D5		78%				
321-60-8	2-Fluorobiphenyl		77%				
118-79-6	2,4,6-Tribromophenol		91%				
1718-51-0	Terphenyl-D14		87%				

LWD
3/2/09

KATAHDIN ANALYTICAL SERVICES
Report of Analytical Results

Client: CH2MHill
Project: TO-009 Lejeune
PO No:
Sample Date: 12/06/08
Received Date: 12/09/08
Extraction Date: 12/10/08
Analysis Date: 20-DEC-2008 01:03
Report Date: 12/30/2008
Matrix: SOIL
% Solids: 86.9

Lab ID: SB7054-13
Client ID: MR08-SS059-08D
SDG: TO9-13
Extracted by: CB
Extraction Method: SW846 3550
Analyst: JCG
Analysis Method: SW846 8270C
Lab Prep Batch: WG58962
Units: ug/Kgdrywt

CAS#	Compound	Flags	Results	DF	PQL	Adj.PQL	Adj.MDL	
100-52-7	Benzaldehyde	~~U~~ UJ	580	1.0	500	580	140	CCH
108-95-2	Phenol	U	580	1.0	500	580	180	
111-44-4	Bis(2-Chloroethyl)ether	U	380	1.0	330	380	93	
95-57-8	2-Chlorophenol	U	580	1.0	500	580	190	
95-48-7	2-Methylphenol	U	690	1.0	600	690	230	
108-60-1	2,2'-Oxybis(1-chloropropane)	U	380	1.0	330	380	100	
98-86-2	Acetophenone	U	690	1.0	600	690	200	
621-64-7	N-Nitroso-di-n-propylamine	U	380	1.0	330	380	96	
65794-96-9	3&4-Methylphenol	U	690	1.0	600	690	220	
67-72-1	Hexachloroethane	U	380	1.0	330	380	110	
98-95-3	Nitrobenzene	~~U~~ UJ	380	1.0	330	380	100	CCH
78-59-1	Isophorone	U	380	1.0	330	380	86	
88-75-5	2-Nitrophenol	U	690	1.0	600	690	190	
105-67-9	2,4-Dimethylphenol	U	580	1.0	500	580	190	
111-91-1	Bis(2-Chloroethoxy)methane	U	380	1.0	330	380	110	
120-83-2	2,4-Dichlorophenol	U	580	1.0	500	580	170	
106-47-8	4-Chloroaniline	U	580	1.0	500	580	140	
105-60-2	Caprolactam	U	580	1.0	500	580	160	
59-50-7	4-Chloro-3-Methylphenol	U	580	1.0	500	580	190	
88-06-2	2,4,6-Trichlorophenol	U	580	1.0	500	580	180	
95-95-4	2,4,5-Trichlorophenol	U	580	1.0	500	580	180	
91-58-7	2-Chloronaphthalene	U	380	1.0	330	380	100	
92-52-4	1,1'-Biphenyl	U	380	1.0	330	380	84	
88-74-4	2-Nitroaniline	U	580	1.0	500	580	86	
131-11-3	Dimethyl Phthalate	U	380	1.0	330	380	90	
606-20-2	2,6-Dinitrotoluene	U	380	1.0	330	380	91	
208-96-8	Acenaphthylene	U	380	1.0	330	380	80	
99-09-2	3-Nitroaniline	U	580	1.0	500	580	110	
83-32-9	Acenaphthene	U	380	1.0	330	380	75	
51-28-5	2,4-Dinitrophenol	U	1400	1.0	1200	1400	430	
132-64-9	Dibenzofuran	U	380	1.0	330	380	91	
100-02-7	4-Nitrophenol	U	1400	1.0	1200	1400	360	
121-14-2	2,4-Dinitrotoluene	U	380	1.0	330	380	98	
84-66-2	Diethylphthalate	U	380	1.0	330	380	92	
7005-72-3	4-Chlorophenyl-phenylether	U	380	1.0	330	380	90	
100-01-6	4-Nitroaniline	U	580	1.0	500	580	150	
534-52-1	4,6-Dinitro-2-Methylphenol	U	1400	1.0	1200	1400	390	
86-30-6	N-Nitrosodiphenylamine	U	760	1.0	660	760	250	
101-55-3	4-Bromophenyl-phenylether	U	380	1.0	330	380	98	
1912-24-9	Atrazine	U	380	1.0	330	380	100	
87-86-5	Pentachlorophenol	U	940	1.0	820	940	270	
120-12-7	Anthracene	U	380	1.0	330	380	97	
86-74-8	Carbazole	U	580	1.0	500	580	130	

lW 3/2/09

KATAHDIN ANALYTICAL SERVICES
Report of Analytical Results

Client: CH2MHill
Project: TO-009 Lejeune
PO No:
Sample Date: 12/06/08
Received Date: 12/09/08
Extraction Date: 12/10/08
Analysis Date: 20-DEC-2008 01:03
Report Date: 12/30/2008
Matrix: SOIL
% Solids: 86.9

Lab ID: SB7054-13
Client ID: MR08-SS059-08D
SDG: TO9-13
Extracted by: CB
Extraction Method: SW846 3550
Analyst: JCG
Analysis Method: SW846 8270C
Lab Prep Batch: WG58962
Units: ug/Kgdrywt

CAS#	Compound	Flags	Results	DF	PQL	Adj.PQL	Adj.MDL
84-74-2	Di-n-butylphthalate	U	380	1.0	330	380	120
85-68-7	Butylbenzylphthalate	U	380	1.0	330	380	110
91-94-1	3,3'-Dichlorobenzidine	U	580	1.0	500	580	130
218-01-9	Chrysene	U	380	1.0	330	380	110
117-81-7	bis(2-Ethylhexyl)phthalate	J	190	1.0	330	380	110
117-84-0	Di-n-octylphthalate	U	380	1.0	330	380	240
367-12-4	2-Fluorophenol		63%				
13127-88-3	Phenol-D6		68%				
4165-60-0	Nitrobenzene-D5		62%				
321-60-8	2-Fluorobiphenyl		68%				
118-79-6	2,4,6-Tribromophenol		85%				
1718-51-0	Terphenyl-D14		84%				

JW 3/2/09

KATAHDIN ANALYTICAL SERVICES
Report of Analytical Results

Client: CH2MHill
Project: TO-009 Lejeune
PO No:
Sample Date: 12/06/08
Received Date: 12/09/08
Extraction Date: 12/10/08
Analysis Date: 20-DEC-2008 01:45
Report Date: 12/30/2008
Matrix: SOIL
% Solids: 87.2

Lab ID: SB7054-15
Client ID: MR08-SS059D-08D
SDG: TO9-13
Extracted by: CB
Extraction Method: SW846 3550
Analyst: JCG
Analysis Method: SW846 8270C
Lab Prep Batch: WG58962
Units: ug/Kgdrywt

CAS#	Compound	Flags	Results	DF	PQL	Adj.PQL	Adj.MDL	
100-52-7	Benzaldehyde	~~U~~ J	150	1.0	500	570	140	CCH
108-95-2	Phenol	U	570	1.0	500	570	180	
111-44-4	Bis(2-Chloroethyl)ether	U	380	1.0	330	380	93	
95-57-8	2-Chlorophenol	U	570	1.0	500	570	190	
95-48-7	2-Methylphenol	U	690	1.0	600	690	230	
108-60-1	2,2'-Oxybis(1-chloropropane)	U	380	1.0	330	380	100	
98-86-2	Acetophenone	U	690	1.0	600	690	200	
621-64-7	N-Nitroso-di-n-propylamine	U	380	1.0	330	380	95	
65794-96-9	3&4-Methylphenol	U	690	1.0	600	690	210	
67-72-1	Hexachloroethane	U	380	1.0	330	380	110	
98-95-3	Nitrobenzene	~~U~~ UJ	380	1.0	330	380	100	CCH
78-59-1	Isophorone	U	380	1.0	330	380	86	
88-75-5	2-Nitrophenol	U	690	1.0	600	690	190	
105-67-9	2,4-Dimethylphenol	U	570	1.0	500	570	190	
111-91-1	Bis(2-Chloroethoxy)methane	U	380	1.0	330	380	110	
120-83-2	2,4-Dichlorophenol	U	570	1.0	500	570	170	
106-47-8	4-Chloroaniline	U	570	1.0	500	570	140	
105-60-2	Caprolactam	U	570	1.0	500	570	160	
59-50-7	4-Chloro-3-Methylphenol	U	570	1.0	500	570	190	
88-06-2	2,4,6-Trichlorophenol	U	570	1.0	500	570	180	
95-95-4	2,4,5-Trichlorophenol	U	570	1.0	500	570	180	
91-58-7	2-Chloronaphthalene	U	380	1.0	330	380	100	
92-52-4	1,1'-Biphenyl	U	380	1.0	330	380	84	
88-74-4	2-Nitroaniline	U	570	1.0	500	570	86	
131-11-3	Dimethyl Phthalate	U	380	1.0	330	380	89	
606-20-2	2,6-Dinitrotoluene	U	380	1.0	330	380	91	
208-96-8	Acenaphthylene	U	380	1.0	330	380	80	
99-09-2	3-Nitroaniline	U	570	1.0	500	570	110	
83-32-9	Acenaphthene	U	380	1.0	330	380	74	
51-28-5	2,4-Dinitrophenol	U	1400	1.0	1200	1400	430	
132-64-9	Dibenzofuran	U	380	1.0	330	380	91	
100-02-7	4-Nitrophenol	U	1400	1.0	1200	1400	350	
121-14-2	2,4-Dinitrotoluene	U	380	1.0	330	380	98	
84-66-2	Diethylphthalate	U	380	1.0	330	380	92	
7005-72-3	4-Chlorophenyl-phenylether	U	380	1.0	330	380	89	
100-01-6	4-Nitroaniline	U	570	1.0	500	570	150	
534-52-1	4,6-Dinitro-2-Methylphenol	U	1400	1.0	1200	1400	390	
86-30-6	N-Nitrosodiphenylamine	U	760	1.0	660	760	250	
101-55-3	4-Bromophenyl-phenylether	U	380	1.0	330	380	98	
1912-24-9	Atrazine	U	380	1.0	330	380	100	
87-86-5	Pentachlorophenol	U	940	1.0	820	940	270	
120-12-7	Anthracene	U	380	1.0	330	380	96	
86-74-8	Carbazole	U	570	1.0	500	570	130	

WW
3/2/09

KATAHDIN ANALYTICAL SERVICES
Report of Analytical Results

Client: CH2MHill
Project: TO-009 Lejeune
PO No:
Sample Date: 12/06/08
Received Date: 12/09/08
Extraction Date: 12/10/08
Analysis Date: 20-DEC-2008 01:45
Report Date: 12/30/2008
Matrix: SOIL
% Solids: 87.2

Lab ID: SB7054-15
Client ID: MR08-SS059D-08D
SDG: TO9-13
Extracted by: CB
Extraction Method: SW846 3550
Analyst: JCG
Analysis Method: SW846 8270C
Lab Prep Batch: WG58962
Units: ug/Kgdrywt

CAS#	Compound	Flags	Results	DF	PQL	Adj.PQL	Adj.MDL
84-74-2	Di-n-butylphthalate	U	380	1.0	330	380	120
85-68-7	Butylbenzylphthalate	U	380	1.0	330	380	110
91-94-1	3,3'-Dichlorobenzidine	U	570	1.0	500	570	130
218-01-9	Chrysene	U	380	1.0	330	380	110
117-81-7	bis(2-Ethylhexyl)phthalate	J	110	1.0	330	380	110
117-84-0	Di-n-octylphthalate	U	380	1.0	330	380	240
367-12-4	2-Fluorophenol		64%				
13127-88-3	Phenol-D6		69%				
4165-60-0	Nitrobenzene-D5		66%				
321-60-8	2-Fluorobiphenyl		67%				
118-79-6	2,4,6-Tribromophenol		91%				
1718-51-0	Terphenyl-D14		89%				

MW
3/2/09

KATAHDIN ANALYTICAL SERVICES
Report of Analytical Results

Client: CH2MHill
Project: TO-009 Lejeune
PO No:
Sample Date: 12/06/08
Received Date: 12/09/08
Extraction Date: 12/10/08
Analysis Date: 20-DEC-2008 02:26
Report Date: 12/30/2008
Matrix: SOIL
% Solids: 87.5

Lab ID: SB7054-17
Client ID: MR08-IS059-3-4-08D
SDG: TO9-13
Extracted by: CB
Extraction Method: SW846 3550
Analyst: JCG
Analysis Method: SW846 8270C
Lab Prep Batch: WG58962
Units: ug/Kgdrywt

CAS#	Compound	Flags	Results	DF	PQL	Adj.PQL	Adj.MDL	
100-52-7	Benzaldehyde	~~U~~ UJ	570	1.0	500	570	140	CCH
108-95-2	Phenol	U	570	1.0	500	570	180	
111-44-4	Bis(2-Chloroethyl)ether	U	380	1.0	330	380	93	
95-57-8	2-Chlorophenol	U	570	1.0	500	570	190	
95-48-7	2-Methylphenol	U	680	1.0	600	680	230	
108-60-1	2,2'-Oxybis(1-chloropropane)	U	380	1.0	330	380	100	
98-86-2	Acetophenone	U	680	1.0	600	680	200	
621-64-7	N-Nitroso-di-n-propylamine	U	380	1.0	330	380	95	
65794-96-9	3&4-Methylphenol	U	680	1.0	600	680	210	
67-72-1	Hexachloroethane	U	380	1.0	330	380	110	
98-95-3	Nitrobenzene	~~U~~ UJ	380	1.0	330	380	100	CCH
78-59-1	Isophorone	U	380	1.0	330	380	86	
88-75-5	2-Nitrophenol	U	680	1.0	600	680	190	
105-67-9	2,4-Dimethylphenol	U	570	1.0	500	570	190	
111-91-1	Bis(2-Chloroethoxy)methane	U	380	1.0	330	380	110	
120-83-2	2,4-Dichlorophenol	U	570	1.0	500	570	170	
106-47-8	4-Chloroaniline	U	570	1.0	500	570	140	
105-60-2	Caprolactam	U	570	1.0	500	570	160	
59-50-7	4-Chloro-3-Methylphenol	U	570	1.0	500	570	190	
88-06-2	2,4,6-Trichlorophenol	U	570	1.0	500	570	180	
95-95-4	2,4,5-Trichlorophenol	U	570	1.0	500	570	180	
91-58-7	2-Chloronaphthalene	U	380	1.0	330	380	99	
92-52-4	1,1'-Biphenyl	U	380	1.0	330	380	83	
88-74-4	2-Nitroaniline	U	570	1.0	500	570	86	
131-11-3	Dimethyl Phthalate	U	380	1.0	330	380	89	
606-20-2	2,6-Dinitrotoluene	U	380	1.0	330	380	90	
208-96-8	Acenaphthylene	U	380	1.0	330	380	80	
99-09-2	3-Nitroaniline	U	570	1.0	500	570	110	
83-32-9	Acenaphthene	U	380	1.0	330	380	74	
51-28-5	2,4-Dinitrophenol	U	1400	1.0	1200	1400	430	
132-64-9	Dibenzofuran	U	380	1.0	330	380	90	
100-02-7	4-Nitrophenol	U	1400	1.0	1200	1400	350	
121-14-2	2,4-Dinitrotoluene	U	380	1.0	330	380	97	
84-66-2	Diethylphthalate	U	380	1.0	330	380	91	
7005-72-3	4-Chlorophenyl-phenylether	U	380	1.0	330	380	89	
100-01-6	4-Nitroaniline	U	570	1.0	500	570	150	
534-52-1	4,6-Dinitro-2-Methylphenol	U	1400	1.0	1200	1400	380	
86-30-6	N-Nitrosodiphenylamine	U	750	1.0	660	750	250	
101-55-3	4-Bromophenyl-phenylether	U	380	1.0	330	380	97	
1912-24-9	Atrazine	U	380	1.0	330	380	100	
87-86-5	Pentachlorophenol	U	940	1.0	820	940	270	
120-12-7	Anthracene	U	380	1.0	330	380	96	
86-74-8	Carbazole	U	570	1.0	500	570	130	

lw 3/2/09

KATAHDIN ANALYTICAL SERVICES
Report of Analytical Results

Client: CH2MHill
Project: TO-009 Lejeune
PO No:
Sample Date: 12/06/08
Received Date: 12/09/08
Extraction Date: 12/10/08
Analysis Date: 20-DEC-2008 02:26
Report Date: 12/30/2008
Matrix: SOIL
% Solids: 87.5

Lab ID: SB7054-17
Client ID: MR08-IS059-3-4-08D
SDG: TO9-13
Extracted by: CB
Extraction Method: SW846 3550
Analyst: JCG
Analysis Method: SW846 8270C
Lab Prep Batch: WG58962
Units: ug/Kgdrywt

CAS#	Compound	Flags	Results	DF	PQL	Adj.PQL	Adj.MDL
84-74-2	Di-n-butylphthalate	U	380	1.0	330	380	120
85-68-7	Butylbenzylphthalate	U	380	1.0	330	380	110
91-94-1	3,3'-Dichlorobenzidine	U	570	1.0	500	570	130
218-01-9	Chrysene	U	380	1.0	330	380	110
117-81-7	bis(2-Ethylhexyl)phthalate	U	380	1.0	330	380	110
117-84-0	Di-n-octylphthalate	U	380	1.0	330	380	240
367-12-4	2-Fluorophenol		64%				
13127-88-3	Phenol-D6		71%				
4165-60-0	Nitrobenzene-D5		68%				
321-60-8	2-Fluorobiphenyl		67%				
118-79-6	2,4,6-Tribromophenol		70%				
1718-51-0	Terphenyl-D14		86%				

MW 3/2/09

16

KATAHDIN ANALYTICAL SERVICES
Report of Analytical Results

Client: CH2MHill
Project: TO-009 Lejeune
PO No:
Sample Date: 12/06/08
Received Date: 12/09/08
Extraction Date: 12/10/08
Analysis Date: 20-DEC-2008 03:07
Report Date: 12/30/2008
Matrix: SOIL
% Solids: 87.6

Lab ID: SB7054-19
Client ID: MR08-IS059D-3-4-08D
SDG: TO9-13
Extracted by: CB
Extraction Method: SW846 3550
Analyst: JCG
Analysis Method: SW846 8270C
Lab Prep Batch: WG58962
Units: ug/Kgdrywt

CAS#	Compound	Flags	Results	DF	PQL	Adj.PQL	Adj.MDL	
100-52-7	Benzaldehyde	~~U~~ UJ	570	1.0	500	570	140	CCH
108-95-2	Phenol	U	570	1.0	500	570	180	
111-44-4	Bis(2-Chloroethyl)ether	U	380	1.0	330	380	92	
95-57-8	2-Chlorophenol	U	570	1.0	500	570	190	
95-48-7	2-Methylphenol	U	680	1.0	600	680	230	
108-60-1	2,2'-Oxybis(1-chloropropane)	U	380	1.0	330	380	100	
98-86-2	Acetophenone	U	680	1.0	600	680	200	
621-64-7	N-Nitroso-di-n-propylamine	U	380	1.0	330	380	95	
65794-96-9	3&4-Methylphenol	U	680	1.0	600	680	210	
67-72-1	Hexachloroethane	U	380	1.0	330	380	110	
98-95-3	Nitrobenzene	~~U~~ UJ	380	1.0	330	380	100	CCH
78-59-1	Isophorone	U	380	1.0	330	380	86	
88-75-5	2-Nitrophenol	U	680	1.0	600	680	190	
105-67-9	2,4-Dimethylphenol	U	570	1.0	500	570	190	
111-91-1	Bis(2-Chloroethoxy)methane	U	380	1.0	330	380	110	
120-83-2	2,4-Dichlorophenol	U	570	1.0	500	570	170	
106-47-8	4-Chloroaniline	U	570	1.0	500	570	140	
105-60-2	Caprolactam	U	570	1.0	500	570	160	
59-50-7	4-Chloro-3-Methylphenol	U	570	1.0	500	570	190	
88-06-2	2,4,6-Trichlorophenol	U	570	1.0	500	570	180	
95-95-4	2,4,5-Trichlorophenol	U	570	1.0	500	570	180	
91-58-7	2-Chloronaphthalene	U	380	1.0	330	380	99	
92-52-4	1,1'-Biphenyl	U	380	1.0	330	380	83	
88-74-4	2-Nitroaniline	U	570	1.0	500	570	86	
131-11-3	Dimethyl Phthalate	U	380	1.0	330	380	89	
606-20-2	2,6-Dinitrotoluene	U	380	1.0	330	380	90	
208-96-8	Acenaphthylene	U	380	1.0	330	380	80	
99-09-2	3-Nitroaniline	U	570	1.0	500	570	110	
83-32-9	Acenaphthene	U	380	1.0	330	380	74	
51-28-5	2,4-Dinitrophenol	U	1400	1.0	1200	1400	430	
132-64-9	Dibenzofuran	U	380	1.0	330	380	90	
100-02-7	4-Nitrophenol	U	1400	1.0	1200	1400	350	
121-14-2	2,4-Dinitrotoluene	U	380	1.0	330	380	97	
84-66-2	Diethylphthalate	U	380	1.0	330	380	91	
7005-72-3	4-Chlorophenyl-phenylether	U	380	1.0	330	380	89	
100-01-6	4-Nitroaniline	U	570	1.0	500	570	150	
534-52-1	4,6-Dinitro-2-Methylphenol	U	1400	1.0	1200	1400	380	
86-30-6	N-Nitrosodiphenylamine	U	750	1.0	660	750	250	
101-55-3	4-Bromophenyl-phenylether	U	380	1.0	330	380	97	
1912-24-9	Atrazine	U	380	1.0	330	380	100	
87-86-5	Pentachlorophenol	U	940	1.0	820	940	270	
120-12-7	Anthracene	U	380	1.0	330	380	96	
86-74-8	Carbazole	U	570	1.0	500	570	130	

MW 3/2/09

KATAHDIN ANALYTICAL SERVICES
Report of Analytical Results

Client: CH2MHill
Project: TO-009 Lejeune
PO No:
Sample Date: 12/06/08
Received Date: 12/09/08
Extraction Date: 12/10/08
Analysis Date: 20-DEC-2008 03:07
Report Date: 12/30/2008
Matrix: SOIL
% Solids: 87.6

Lab ID: SB7054-19
Client ID: MR08-IS059D-3-4-08D
SDG: TO9-13
Extracted by: CB
Extraction Method: SW846 3550
Analyst: JCG
Analysis Method: SW846 8270C
Lab Prep Batch: WG58962
Units: ug/Kgdrywt

CAS#	Compound	Flags	Results	DF	PQL	Adj.PQL	Adj.MDL
84-74-2	Di-n-butylphthalate	U	380	1.0	330	380	120
85-68-7	Butylbenzylphthalate	U	380	1.0	330	380	110
91-94-1	3,3'-Dichlorobenzidine	U	570	1.0	500	570	130
218-01-9	Chrysene	U	380	1.0	330	380	110
117-81-7	bis(2-Ethylhexyl)phthalate	J	110	1.0	330	380	110
117-84-0	Di-n-octylphthalate	U	380	1.0	330	380	240
367-12-4	2-Fluorophenol		68%				
13127-88-3	Phenol-D6		73%				
4165-60-0	Nitrobenzene-D5		71%				
321-60-8	2-Fluorobiphenyl		69%				
118-79-6	2,4,6-Tribromophenol		83%				
1718-51-0	Terphenyl-D14		96%				

lw 3/2/09

KATAHDIN ANALYTICAL SERVICES
Report of Analytical Results

Client: CH2MHill
Project: TO-009 Lejeune
PO No:
Sample Date: 12/06/08
Received Date: 12/09/08
Extraction Date: 12/10/08
Analysis Date: 20-DEC-2008 03:48
Report Date: 12/30/2008
Matrix: SOIL
% Solids: 88.2

Lab ID: SB7054-21
Client ID: MR08-SS060-08D
SDG: TO9-13
Extracted by: CB
Extraction Method: SW846 3550
Analyst: JCG
Analysis Method: SW846 8270C
Lab Prep Batch: WG58962
Units: ug/Kgdrywt

CAS#	Compound	Flags	Results	DF	PQL	Adj.PQL	Adj.MDL	
100-52-7	Benzaldehyde	~~U~~ UJ	570	1.0	500	570	140	CCH
108-95-2	Phenol	U	570	1.0	500	570	180	
111-44-4	Bis(2-Chloroethyl)ether	U	370	1.0	330	370	92	
95-57-8	2-Chlorophenol	U	570	1.0	500	570	180	
95-48-7	2-Methylphenol	U	680	1.0	600	680	230	
108-60-1	2,2'-Oxybis(1-chloropropane)	U	370	1.0	330	370	100	
98-86-2	Acetophenone	U	680	1.0	600	680	200	
621-64-7	N-Nitroso-di-n-propylamine	U	370	1.0	330	370	94	
65794-96-9	3&4-Methylphenol	U	680	1.0	600	680	210	
67-72-1	Hexachloroethane	U	370	1.0	330	370	110	
98-95-3	Nitrobenzene	~~U~~ UJ	370	1.0	330	370	100	CCH
78-59-1	Isophorone	U	370	1.0	330	370	85	
88-75-5	2-Nitrophenol	U	680	1.0	600	680	190	
105-67-9	2,4-Dimethylphenol	U	570	1.0	500	570	190	
111-91-1	Bis(2-Chloroethoxy)methane	U	370	1.0	330	370	110	
120-83-2	2,4-Dichlorophenol	U	570	1.0	500	570	170	
106-47-8	4-Chloroaniline	U	570	1.0	500	570	130	
105-60-2	Caprolactam	U	570	1.0	500	570	160	
59-50-7	4-Chloro-3-Methylphenol	U	570	1.0	500	570	190	
88-06-2	2,4,6-Trichlorophenol	U	570	1.0	500	570	180	
95-95-4	2,4,5-Trichlorophenol	U	570	1.0	500	570	180	
91-58-7	2-Chloronaphthalene	U	370	1.0	330	370	99	
92-52-4	1,1'-Biphenyl	U	370	1.0	330	370	83	
88-74-4	2-Nitroaniline	U	570	1.0	500	570	85	
131-11-3	Dimethyl Phthalate	U	370	1.0	330	370	88	
606-20-2	2,6-Dinitrotoluene	U	370	1.0	330	370	90	
208-96-8	Acenaphthylene	U	370	1.0	330	370	79	
99-09-2	3-Nitroaniline	U	570	1.0	500	570	110	
83-32-9	Acenaphthene	U	370	1.0	330	370	74	
51-28-5	2,4-Dinitrophenol	U	1400	1.0	1200	1400	430	
132-64-9	Dibenzofuran	U	370	1.0	330	370	90	
100-02-7	4-Nitrophenol	U	1400	1.0	1200	1400	350	
121-14-2	2,4-Dinitrotoluene	U	370	1.0	330	370	96	
84-66-2	Diethylphthalate	U	370	1.0	330	370	91	
7005-72-3	4-Chlorophenyl-phenylether	U	370	1.0	330	370	88	
100-01-6	4-Nitroaniline	U	570	1.0	500	570	150	
534-52-1	4,6-Dinitro-2-Methylphenol	U	1400	1.0	1200	1400	380	
86-30-6	N-Nitrosodiphenylamine	U	750	1.0	660	750	250	
101-55-3	4-Bromophenyl-phenylether	U	370	1.0	330	370	96	
1912-24-9	Atrazine	U	370	1.0	330	370	100	
87-86-5	Pentachlorophenol	U	930	1.0	820	930	270	
120-12-7	Anthracene	U	370	1.0	330	370	95	
86-74-8	Carbazole	U	570	1.0	500	570	120	

lw 3/2/09

KATAHDIN ANALYTICAL SERVICES
Report of Analytical Results

Client: CH2MHill
Project: TO-009 Lejeune
PO No:
Sample Date: 12/06/08
Received Date: 12/09/08
Extraction Date: 12/10/08
Analysis Date: 20-DEC-2008 03:48
Report Date: 12/30/2008
Matrix: SOIL
% Solids: 88.2

Lab ID: SB7054-21
Client ID: MR08-SS060-08D
SDG: TO9-13
Extracted by: CB
Extraction Method: SW846 3550
Analyst: JCG
Analysis Method: SW846 8270C
Lab Prep Batch: WG58962
Units: ug/Kgdrywt

CAS#	Compound	Flags	Results	DF	PQL	Adj.PQL	Adj.MDL
84-74-2	Di-n-butylphthalate	U	370	1.0	330	370	110
85-68-7	Butylbenzylphthalate	U	370	1.0	330	370	100
91-94-1	3,3'-Dichlorobenzidine	U	570	1.0	500	570	130
218-01-9	Chrysene	U	370	1.0	330	370	110
117-81-7	bis(2-Ethylhexyl)phthalate	U	370	1.0	330	370	110
117-84-0	Di-n-octylphthalate	U	370	1.0	330	370	240
367-12-4	2-Fluorophenol		71%				
13127-88-3	Phenol-D6		75%				
4165-60-0	Nitrobenzene-D5		67%				
321-60-8	2-Fluorobiphenyl		72%				
118-79-6	2,4,6-Tribromophenol		91%				
1718-51-0	Terphenyl-D14		93%				

lw
3/2/09

KATAHDIN ANALYTICAL SERVICES
Report of Analytical Results

Client: CH2MHill
Project: TO-009 Lejeune
PO No:
Sample Date: 12/06/08
Received Date: 12/09/08
Extraction Date: 12/10/08
Analysis Date: 20-DEC-2008 22:44
Report Date: 12/30/2008
Matrix: SOIL
% Solids: 88.8

Lab ID: SB7054-23
Client ID: MR08-IS060-2-3-08D
SDG: TO9-13
Extracted by: CB
Extraction Method: SW846 3550
Analyst: EKC
Analysis Method: SW846 8270C
Lab Prep Batch: WG58962
Units: ug/Kgdrywt

CAS#	Compound	Flags	Results	DF	PQL	Adj.PQL	Adj.MDL	
100-52-7	Benzaldehyde	~~U~~ UJ	560	1.0	500	560	140	CCH
108-95-2	Phenol	U	560	1.0	500	560	180	
111-44-4	Bis(2-Chloroethyl)ether	U	370	1.0	330	370	91	
95-57-8	2-Chlorophenol	U	560	1.0	500	560	180	
95-48-7	2-Methylphenol	U	680	1.0	600	680	220	
108-60-1	2,2'-Oxybis(1-chloropropane)	U	370	1.0	330	370	100	
98-86-2	Acetophenone	U	680	1.0	600	680	200	
621-64-7	N-Nitroso-di-n-propylamine	U	370	1.0	330	370	94	
65794-96-9	3&4-Methylphenol	U	680	1.0	600	680	210	
67-72-1	Hexachloroethane	U	370	1.0	330	370	110	
98-95-3	Nitrobenzene	~~U~~ UJ	370	1.0	330	370	100	CCH
78-59-1	Isophorone	U	370	1.0	330	370	84	
88-75-5	2-Nitrophenol	U	680	1.0	600	680	190	
105-67-9	2,4-Dimethylphenol	U	560	1.0	500	560	180	
111-91-1	Bis(2-Chloroethoxy)methane	U	370	1.0	330	370	110	
120-83-2	2,4-Dichlorophenol	U	560	1.0	500	560	170	
106-47-8	4-Chloroaniline	U	560	1.0	500	560	130	
105-60-2	Caprolactam	U	560	1.0	500	560	160	
59-50-7	4-Chloro-3-Methylphenol	U	560	1.0	500	560	190	
88-06-2	2,4,6-Trichlorophenol	U	560	1.0	500	560	170	
95-95-4	2,4,5-Trichlorophenol	U	560	1.0	500	560	170	
91-58-7	2-Chloronaphthalene	U	370	1.0	330	370	98	
92-52-4	1,1'-Biphenyl	U	370	1.0	330	370	82	
88-74-4	2-Nitroaniline	U	560	1.0	500	560	84	
131-11-3	Dimethyl Phthalate	U	370	1.0	330	370	88	
606-20-2	2,6-Dinitrotoluene	U	370	1.0	330	370	89	
208-96-8	Acenaphthylene	U	370	1.0	330	370	79	
99-09-2	3-Nitroaniline	U	560	1.0	500	560	100	
83-32-9	Acenaphthene	U	370	1.0	330	370	73	
51-28-5	2,4-Dinitrophenol	U	1400	1.0	1200	1400	420	
132-64-9	Dibenzofuran	U	370	1.0	330	370	89	
100-02-7	4-Nitrophenol	~~U~~ UJ	1400	1.0	1200	1400	350	CCH
121-14-2	2,4-Dinitrotoluene	U	370	1.0	330	370	96	
84-66-2	Diethylphthalate	U	370	1.0	330	370	90	
7005-72-3	4-Chlorophenyl-phenylether	U	370	1.0	330	370	88	
100-01-6	4-Nitroaniline	U	560	1.0	500	560	150	
534-52-1	4,6-Dinitro-2-Methylphenol	U	1400	1.0	1200	1400	380	
86-30-6	N-Nitrosodiphenylamine	U	740	1.0	660	740	250	
101-55-3	4-Bromophenyl-phenylether	U	370	1.0	330	370	96	
1912-24-9	Atrazine	U	370	1.0	330	370	100	
87-86-5	Pentachlorophenol	U	920	1.0	820	920	270	
120-12-7	Anthracene	U	370	1.0	330	370	95	
86-74-8	Carbazole	U	560	1.0	500	560	120	

MW 3/2/09

KATAHDIN ANALYTICAL SERVICES
Report of Analytical Results

Client: CH2MHill
Project: TO-009 Lejeune
PO No:
Sample Date: 12/06/08
Received Date: 12/09/08
Extraction Date: 12/10/08
Analysis Date: 20-DEC-2008 22:44
Report Date: 12/30/2008
Matrix: SOIL
% Solids: 88.8

Lab ID: SB7054-23
Client ID: MR08-IS060-2-3-08D
SDG: TO9-13
Extracted by: CB
Extraction Method: SW846 3550
Analyst: EKC
Analysis Method: SW846 8270C
Lab Prep Batch: WG58962
Units: ug/Kgdrywt

CAS#	Compound	Flags	Results	DF	PQL	Adj.PQL	Adj.MDL
84-74-2	Di-n-butylphthalate	U	370	1.0	330	370	110
85-68-7	Butylbenzylphthalate	U	370	1.0	330	370	100
91-94-1	3,3'-Dichlorobenzidine	U	560	1.0	500	560	130
218-01-9	Chrysene	U	370	1.0	330	370	110
117-81-7	bis(2-Ethylhexyl)phthalate	U	370	1.0	330	370	110
117-84-0	Di-n-octylphthalate	U	370	1.0	330	370	240
367-12-4	2-Fluorophenol		63%				
13127-88-3	Phenol-D6		80%				
4165-60-0	Nitrobenzene-D5		79%				
321-60-8	2-Fluorobiphenyl		79%				
118-79-6	2,4,6-Tribromophenol		54%				
1718-51-0	Terphenyl-D14		106%				

Qw 3/2/09

KATAHDIN ANALYTICAL SERVICES
Report of Analytical Results

Client: CH2MHill
Project: TO-009 Lejeune
PO No:
Sample Date: 12/06/08
Received Date: 12/09/08
Extraction Date: 12/10/08
Analysis Date: 20-DEC-2008 23:26
Report Date: 12/30/2008
Matrix: SOIL
% Solids: 76.1

Lab ID: SB7054-25
Client ID: MR08-SS061-08D
SDG: TO9-13
Extracted by: CB
Extraction Method: SW846 3550
Analyst: EKC
Analysis Method: SW846 8270C
Lab Prep Batch: WG58962
Units: ug/Kgdrywt

CAS#	Compound	Flags	Results	DF	PQL	Adj.PQL	Adj.MDL	
100-52-7	Benzaldehyde	~~U~~ UJ	660	1.0	500	660	160	CCH
108-95-2	Phenol	U	660	1.0	500	660	200	
111-44-4	Bis(2-Chloroethyl)ether	U	430	1.0	330	430	110	
95-57-8	2-Chlorophenol	U	660	1.0	500	660	220	
95-48-7	2-Methylphenol	U	790	1.0	600	790	260	
108-60-1	2,2'-Oxybis(1-chloropropane)	U	430	1.0	330	430	120	
98-86-2	Acetophenone	U	790	1.0	600	790	230	
621-64-7	N-Nitroso-di-n-propylamine	U	430	1.0	330	430	110	
65794-96-9	3&4-Methylphenol	U	790	1.0	600	790	240	
67-72-1	Hexachloroethane	U	430	1.0	330	430	130	
98-95-3	Nitrobenzene	~~U~~ UJ	430	1.0	330	430	120	CCH
78-59-1	Isophorone	U	430	1.0	330	430	98	
88-75-5	2-Nitrophenol	U	790	1.0	600	790	220	
105-67-9	2,4-Dimethylphenol	U	660	1.0	500	660	220	
111-91-1	Bis(2-Chloroethoxy)methane	U	430	1.0	330	430	130	
120-83-2	2,4-Dichlorophenol	U	660	1.0	500	660	200	
106-47-8	4-Chloroaniline	U	660	1.0	500	660	160	
105-60-2	Caprolactam	U	660	1.0	500	660	190	
59-50-7	4-Chloro-3-Methylphenol	U	660	1.0	500	660	220	
88-06-2	2,4,6-Trichlorophenol	U	660	1.0	500	660	200	
95-95-4	2,4,5-Trichlorophenol	U	660	1.0	500	660	200	
91-58-7	2-Chloronaphthalene	U	430	1.0	330	430	110	
92-52-4	1,1'-Biphenyl	U	430	1.0	330	430	96	
88-74-4	2-Nitroaniline	U	660	1.0	500	660	98	
131-11-3	Dimethyl Phthalate	U	430	1.0	330	430	100	
606-20-2	2,6-Dinitrotoluene	U	430	1.0	330	430	100	
208-96-8	Acenaphthylene	U	430	1.0	330	430	92	
99-09-2	3-Nitroaniline	U	660	1.0	500	660	120	
83-32-9	Acenaphthene	U	430	1.0	330	430	85	
51-28-5	2,4-Dinitrophenol	U	1600	1.0	1200	1600	500	
132-64-9	Dibenzofuran	U	430	1.0	330	430	100	
100-02-7	4-Nitrophenol	~~U~~ UJ	1600	1.0	1200	1600	410	CCH
121-14-2	2,4-Dinitrotoluene	U	430	1.0	330	430	110	
84-66-2	Diethylphthalate	U	430	1.0	330	430	100	
7005-72-3	4-Chlorophenyl-phenylether	U	430	1.0	330	430	100	
100-01-6	4-Nitroaniline	U	660	1.0	500	660	180	
534-52-1	4,6-Dinitro-2-Methylphenol	U	1600	1.0	1200	1600	440	
86-30-6	N-Nitrosodiphenylamine	U	870	1.0	660	870	290	
101-55-3	4-Bromophenyl-phenylether	U	430	1.0	330	430	110	
1912-24-9	Atrazine	U	430	1.0	330	430	120	
87-86-5	Pentachlorophenol	U	1100	1.0	820	1100	310	
120-12-7	Anthracene	U	430	1.0	330	430	110	
86-74-8	Carbazole	U	660	1.0	500	660	140	

LW 3/2/09

KATAHDIN ANALYTICAL SERVICES
Report of Analytical Results

Client: CH2MHill
Project: TO-009 Lejeune
PO No:
Sample Date: 12/06/08
Received Date: 12/09/08
Extraction Date: 12/10/08
Analysis Date: 20-DEC-2008 23:26
Report Date: 12/30/2008
Matrix: SOIL
% Solids: 76.1

Lab ID: SB7054-25
Client ID: MR08-SS061-08D
SDG: TO9-13
Extracted by: CB
Extraction Method: SW846 3550
Analyst: EKC
Analysis Method: SW846 8270C
Lab Prep Batch: WG58962
Units: ug/Kgdrywt

CAS#	Compound	Flags	Results	DF	PQL	Adj.PQL	Adj.MDL
84-74-2	Di-n-butylphthalate	U	430	1.0	330	430	130
85-68-7	Butylbenzylphthalate	U	430	1.0	330	430	120
91-94-1	3,3'-Dichlorobenzidine	U	660	1.0	500	660	150
218-01-9	Chrysene	U	430	1.0	330	430	120
117-81-7	bis(2-Ethylhexyl)phthalate	U	430	1.0	330	430	130
117-84-0	Di-n-octylphthalate	U	430	1.0	330	430	280
367-12-4	2-Fluorophenol		79%				
13127-88-3	Phenol-D6		85%				
4165-60-0	Nitrobenzene-D5		80%				
321-60-8	2-Fluorobiphenyl		80%				
118-79-6	2,4,6-Tribromophenol		85%				
1718-51-0	Terphenyl-D14		108%				

LW
3/2/09

20

KATAHDIN ANALYTICAL SERVICES
Report of Analytical Results

Client: CH2MHill
Project: TO-009 Lejeune
PO No:
Sample Date: 12/06/08
Received Date: 12/09/08
Extraction Date: 12/10/08
Analysis Date: 21-DEC-2008 00:08
Report Date: 12/30/2008
Matrix: SOIL
% Solids: 86.2

Lab ID: SB7054-27
Client ID: MR08-IS061-2-3-08D
SDG: TO9-13
Extracted by: CB
Extraction Method: SW846 3550
Analyst: EKC
Analysis Method: SW846 8270C
Lab Prep Batch: WG58962
Units: ug/Kgdrywt

CAS#	Compound	Flags	Results	DF	PQL	Adj.PQL	Adj.MDL	
100-52-7	Benzaldehyde	~~U~~ UJ	580	1.0	500	580	140	CCH
108-95-2	Phenol	U	580	1.0	500	580	180	
111-44-4	Bis(2-Chloroethyl)ether	U	380	1.0	330	380	94	
95-57-8	2-Chlorophenol	U	580	1.0	500	580	190	
95-48-7	2-Methylphenol	U	700	1.0	600	700	230	
108-60-1	2,2'-Oxybis(1-chloropropane)	U	380	1.0	330	380	100	
98-86-2	Acetophenone	U	700	1.0	600	700	210	
621-64-7	N-Nitroso-di-n-propylamine	U	380	1.0	330	380	96	
65794-96-9	3&4-Methylphenol	U	700	1.0	600	700	220	
67-72-1	Hexachloroethane	U	380	1.0	330	380	110	
98-95-3	Nitrobenzene	~~U~~ UJ	380	1.0	330	380	100	CCH
78-59-1	Isophorone	U	380	1.0	330	380	87	
88-75-5	2-Nitrophenol	U	700	1.0	600	700	190	
105-67-9	2,4-Dimethylphenol	U	580	1.0	500	580	190	
111-91-1	Bis(2-Chloroethoxy)methane	U	380	1.0	330	380	110	
120-83-2	2,4-Dichlorophenol	U	580	1.0	500	580	170	
106-47-8	4-Chloroaniline	U	580	1.0	500	580	140	
105-60-2	Caprolactam	U	580	1.0	500	580	170	
59-50-7	4-Chloro-3-Methylphenol	U	580	1.0	500	580	190	
88-06-2	2,4,6-Trichlorophenol	U	580	1.0	500	580	180	
95-95-4	2,4,5-Trichlorophenol	U	580	1.0	500	580	180	
91-58-7	2-Chloronaphthalene	U	380	1.0	330	380	100	
92-52-4	1,1'-Biphenyl	U	380	1.0	330	380	85	
88-74-4	2-Nitroaniline	U	580	1.0	500	580	87	
131-11-3	Dimethyl Phthalate	U	380	1.0	330	380	90	
606-20-2	2,6-Dinitrotoluene	U	380	1.0	330	380	92	
208-96-8	Acenaphthylene	U	380	1.0	330	380	81	
99-09-2	3-Nitroaniline	U	580	1.0	500	580	110	
83-32-9	Acenaphthene	U	380	1.0	330	380	75	
51-28-5	2,4-Dinitrophenol	U	1400	1.0	1200	1400	440	
132-64-9	Dibenzofuran	U	380	1.0	330	380	92	
100-02-7	4-Nitrophenol	~~U~~ UJ	1400	1.0	1200	1400	360	CCH
121-14-2	2,4-Dinitrotoluene	U	380	1.0	330	380	98	
84-66-2	Diethylphthalate	U	380	1.0	330	380	93	
7005-72-3	4-Chlorophenyl-phenylether	U	380	1.0	330	380	90	
100-01-6	4-Nitroaniline	U	580	1.0	500	580	160	
534-52-1	4,6-Dinitro-2-Methylphenol	U	1400	1.0	1200	1400	390	
86-30-6	N-Nitrosodiphenylamine	U	760	1.0	660	760	250	
101-55-3	4-Bromophenyl-phenylether	U	380	1.0	330	380	98	
1912-24-9	Atrazine	U	380	1.0	330	380	100	
87-86-5	Pentachlorophenol	U	950	1.0	820	950	270	
120-12-7	Anthracene	U	380	1.0	330	380	97	
86-74-8	Carbazole	U	580	1.0	500	580	130	

MW 3/2/09

20

KATAHDIN ANALYTICAL SERVICES
Report of Analytical Results

Client: CH2MHill
Project: TO-009 Lejeune
PO No:
Sample Date: 12/06/08
Received Date: 12/09/08
Extraction Date: 12/10/08
Analysis Date: 21-DEC-2008 00:08
Report Date: 12/30/2008
Matrix: SOIL
% Solids: 86.2

Lab ID: SB7054-27
Client ID: MR08-IS061-2-3-08D
SDG: TO9-13
Extracted by: CB
Extraction Method: SW846 3550
Analyst: EKC
Analysis Method: SW846 8270C
Lab Prep Batch: WG58962
Units: ug/Kgdrywt

CAS#	Compound	Flags	Results	DF	PQL	Adj.PQL	Adj.MDL
84-74-2	Di-n-butylphthalate	U	380	1.0	330	380	120
85-68-7	Butylbenzylphthalate	U	380	1.0	330	380	110
91-94-1	3,3'-Dichlorobenzidine	U	580	1.0	500	580	130
218-01-9	Chrysene	U	380	1.0	330	380	110
117-81-7	bis(2-Ethylhexyl)phthalate	J	170	1.0	330	380	110
117-84-0	Di-n-octylphthalate	U	380	1.0	330	380	240
367-12-4	2-Fluorophenol		77%				
13127-88-3	Phenol-D6		85%				
4165-60-0	Nitrobenzene-D5		84%				
321-60-8	2-Fluorobiphenyl		87%				
118-79-6	2,4,6-Tribromophenol		81%				
1718-51-0	Terphenyl-D14		121%				

CW
3/2/09

ENVIRONMENTAL
Data Services, Inc.

POLYNUCLEAR AROMATIC COMPOUNDS BY 8270SIM

USEPA Region IV - Level IV Review

Site: MCB Camp Lejeune, TO-09 SDG #: TO9-14

Client: CH2M HILL, Inc., Virginia Beach, Virginia Date: March 3, 2009

Laboratory: Katahdin Analytical Services, Scarborough, Maine Reviewer: Nancy Weaver

EDS ID	Client Sample ID	Laboratory Sample ID	Matrix
1	MR08-SS062-08D	SB7055-2	Soil
2	MR08-SS062-2-3-08D	SB7055-4	Soil
3	MR08-SS063-08D	SB7055-6	Soil
4	MR08-IS063-2-3-08D	SB7055-8	Soil
5	MR08-SS064-08D	SB7055-10	Soil
6	MR08-IS064-2-3-08D	SB7055-12	Soil
7	MR08-SS065-08D	SB7055-14	Soil
8	MR08-IS065-1-2-08D	SB7055-16	Soil
8RE	MR08-IS065-1-2-08DRE	SB7055-16RE	Soil
9	MR08-SS066-08D	SB7055-18	Soil
10	MR08-IS066-2-3-08D	SB7055-20	Soil
11	MR08-SS080-08D	SB7055-22	Soil
12	MR08-IS080-5-6-08D	SB7055-24	Soil
13	MR08-SS081-08D	SB7055-26	Soil
14	MR08-IS081-6-7-08D	SB7055-28	Soil
15	MR08-SS082-08D	SB7055-30	Soil
16	MR08-IS082-5-6-08D	SB7055-32	Soil
17	MR08-SS083-08D	SB7055-34	Soil
18	MR08-IS083-6-7-08D	SB7055-36	Soil
19	MR08-SS084-08D	SB7055-38	Soil
20	MR08-SS104-08D	SB7055-40	Soil
20MS	MR08-SS104-08DMS	SB7055-40MS	Soil
20MSD	MR08-SS104-08DMSD	SB7055-40MSD	Soil

The USEPA "Contract Laboratory Program National Functional Guidelines for Organic Data Review," October 1999, and professional judgment were used in evaluating the data in this summary report.

Holding Times - All samples were extracted within 14 days for soil samples and analyzed within 40 days for all samples.

GC/MS Tuning - All of the DFTPP tunes in the initial and continuing calibrations met the percent relative abundance criteria.

Initial Calibration - The initial calibrations exhibited acceptable %RSD and mean RRF values.

Continuing Calibration - The continuing calibrations exhibited acceptable %D and RRF values except the following.

CCAL Date	Compound	%D/RRF	Qualifier	Affected Samples
12/31/08 (1132)	Indeno (1,2,3-cd) pyrene	38.74%	J/UJ	8, 12
	Benzo (g,h,i) perylene	64.74%	J/UJ	8, 12
12/31/08 (1735)	Naphthalene	34.16%	J/UJ	7, 8RE, 9-11, 13-15, 17-20
	2-Methylnaphthalene	34.84%	J/UJ	7, 8RE, 9-11, 13-15, 17-20
	Benzo (b) fluoranthene	29.13%	J/UJ	7, 8RE, 9-11, 13-15, 17-20
	Indeno (1,2,3-cd) pyrene	120.41%	J/UJ	7, 8RE, 9-11, 13-15, 17-20
	Dibenz (a,h) anthracene	74.93%	J/UJ	7, 8RE, 9-11, 13-15, 17-20
	Benzo (g,h,i) perylene	85.21%	J/UJ	7, 8RE, 9-11, 13-15, 17-20

Surrogates - All samples exhibited acceptable surrogate recoveries.

MS/MSD - The MS/MSD sample exhibited acceptable %R and RPD values except the following.

MS/MSD Sample ID	Compound	MS/MSD %R/RPD	Qualifier
20	2-Methylnaphthalene	187%/147%/Ok	None - Already qualified due to LCS
	Benzo (k) fluoranthene	36%/Ok/Ok	J/UJ
	Hexachlorocyclopentadiene	29%/21%/Ok	J/UJ

Laboratory Control Sample - The LCS samples exhibited acceptable %R values except the following.

LCS ID	Compound	%R	Qualifier	Affected Samples
WG58993-LCS	Naphthalene	107%	J	17, 19
WG59027-LCS	Naphthalene	130%	None	All associated ND
	2-Methylnaphthalene	152%	J	20

Internal Standard (IS) Area Performance - All internal standards met response and retention time (RT) criteria except the following.

Sample ID	Internal Standard	Area Count	Qualifier
8	IS5-Chrysene-d12	High	J - Associated compounds
	IS6-Perylene-d12	High	J - Associated compounds

Sample ID	Internal Standard	Area Count	Qualifier
8RE	IS5-Chrysene-d12	High	J - Associated compounds
9	IS5-Chrysene-d12	High	J - Associated compounds
17	IS5-Chrysene-d12	High	J - Associated compounds
17RE	IS6-Perylene-d12	High	J - Associated compounds

Method Blank - The method blanks were free of contamination.

Field, Equipment Blank - Field QC results are summarized below.

Blank ID	Compound	Conc. ug/L	Action Level ug/L	Qualifier	Affected Samples
MR08-EB01120608-SS	None - ND	-	-	-	-
MR08-EB01120608-IS	None - ND	-	-	-	-
MR08-EB01120708-SS	None - ND	-	-	-	-
MR08-EB01120708-IS	None - ND	-	-	-	-
MR08-FB01120608	None - ND	-	-	-	-

Field Duplicates - Field duplicate samples were not included in this data package.

Tentatively Identified Compounds (TICs) - TICs were not reported.

Compound Quantitation - Several samples exhibited poor internal standard area performance. Refer to Form Is for which to use.

KATAHDIN ANALYTICAL SERVICES
Report of Analytical Results

Client: CH2MHill
Project: TO-009 Lejeune
PO No:
Sample Date: 12/06/08
Received Date: 12/09/08
Extraction Date: 12/10/08
Analysis Date: 31-DEC-2008 02:09
Report Date: 01/05/2009
Matrix: SOIL
% Solids: 85.7

Lab ID: SB7055-2
Client ID: MR08-SS062-08D
SDG: TO9-14
Extracted by: CB
Extraction Method: SW846 3550
Analyst: JCG
Analysis Method: SW846 M8270C
Lab Prep Batch: WG58963
Units: ug/Kgdrywt

CAS#	Compound	Flags	Results	DF	PQL	Adj.PQL	Adj.MDL
91-20-3	Naphthalene	U	12	1.0	10	12	3.0
91-57-6	2-Methylnaphthalene	U	12	1.0	10	12	2.6
86-73-7	Fluorene	U	12	1.0	10	12	3.7
85-01-8	Phenanthrene		17	1.0	10	12	2.1
206-44-0	Fluoranthene		28	1.0	10	12	2.1
129-00-0	Pyrene		15	1.0	10	12	2.4
56-55-3	Benzo(a)anthracene	J	9.5	1.0	10	12	2.2
205-99-2	Benzo(b)fluoranthene	J	7.6	1.0	10	12	2.8
207-08-9	Benzo(k)fluoranthene	J	5.3	1.0	10	12	3.6
50-32-8	Benzo(a)pyrene	U	12	1.0	10	12	3.8
193-39-5	Indeno(1,2,3-cd)pyrene	U	12	1.0	10	12	2.2
53-70-3	Dibenzo(a,h)anthracene	U	12	1.0	10	12	2.1
191-24-2	Benzo(g,h,i)perylene	U	12	1.0	10	12	2.3
118-74-1	Hexachlorobenzene	U	12	1.0	10	12	2.1
87-68-3	Hexachlorobutadiene	U	12	1.0	10	12	2.7
77-47-4	Hexachlorocyclopentadiene	U	12	1.0	10	12	1.7
7297-45-2	2-Methylnaphthalene-D10		111%				
367-12-4	2,4-Dibromophenol		115%				
81103-79-9	Fluorene-d10		77%				
1718-51-1	Pyrene-D10		103%				

lw
3/3/09

2

KATAHDIN ANALYTICAL SERVICES
Report of Analytical Results

Client: CH2MHill
Project: TO-009 Lejeune
PO No:
Sample Date: 12/06/08
Received Date: 12/09/08
Extraction Date: 12/10/08
Analysis Date: 31-DEC-2008 02:51
Report Date: 01/05/2009
Matrix: SOIL
% Solids: 88.6

Lab ID: SB7055-4
Client ID: MR08-SS062-2-3-08D
SDG: TO9-14
Extracted by: CB
Extraction Method: SW846 3550
Analyst: JCG
Analysis Method: SW846 M8270C
Lab Prep Batch: WG58963
Units: ug/Kgdrywt

CAS#	Compound	Flags	Results	DF	PQL	Adj.PQL	Adj.MDL
91-20-3	Naphthalene	U	11	1.0	10	11	2.9
91-57-6	2-Methylnaphthalene	U	11	1.0	10	11	2.5
86-73-7	Fluorene	U	11	1.0	10	11	3.6
85-01-8	Phenanthrene	U	11	1.0	10	11	2.0
206-44-0	Fluoranthene	U	11	1.0	10	11	2.0
129-00-0	Pyrene	U	11	1.0	10	11	2.4
56-55-3	Benzo(a)anthracene	U	11	1.0	10	11	2.1
205-99-2	Benzo(b)fluoranthene	U	11	1.0	10	11	2.7
207-08-9	Benzo(k)fluoranthene	U	11	1.0	10	11	3.5
50-32-8	Benzo(a)pyrene	U	11	1.0	10	11	3.7
193-39-5	Indeno(1,2,3-cd)pyrene	U	11	1.0	10	11	2.1
53-70-3	Dibenzo(a,h)anthracene	U	11	1.0	10	11	2.0
191-24-2	Benzo(g,h,i)perylene	U	11	1.0	10	11	2.2
118-74-1	Hexachlorobenzene	U	11	1.0	10	11	2.0
87-68-3	Hexachlorobutadiene	U	11	1.0	10	11	2.6
77-47-4	Hexachlorocyclopentadiene	U	11	1.0	10	11	1.7
7297-45-2	2-Methylnaphthalene-D10		93%				
367-12-4	2,4-Dibromophenol		100%				
81103-79-9	Fluorene-d10		67%				
1718-51-1	Pyrene-D10		86%				

lw 3/3/09

3

KATAHDIN ANALYTICAL SERVICES
Report of Analytical Results

Client: CH2MHill
Project: TO-009 Lejeune
PO No:
Sample Date: 12/06/08
Received Date: 12/09/08
Extraction Date: 12/10/08
Analysis Date: 31-DEC-2008 03:33
Report Date: 01/05/2009
Matrix: SOIL
% Solids: 86.5

Lab ID: SB7055-6
Client ID: MR08-SS063-08D
SDG: TO9-14
Extracted by: CB
Extraction Method: SW846 3550
Analyst: JCG
Analysis Method: SW846 M8270C
Lab Prep Batch: WG58963
Units: ug/Kgdrywt

CAS#	Compound	Flags	Results	DF	PQL	Adj.PQL	Adj.MDL
91-20-3	Naphthalene	U	12	1.0	10	12	3.0
91-57-6	2-Methylnaphthalene	U	12	1.0	10	12	2.5
86-73-7	Fluorene	U	12	1.0	10	12	3.7
85-01-8	Phenanthrene	J	2.1	1.0	10	12	2.1
206-44-0	Fluoranthene	J	7.4	1.0	10	12	2.1
129-00-0	Pyrene	J	2.8	1.0	10	12	2.4
56-55-3	Benzo(a)anthracene	J	7.1	1.0	10	12	2.2
205-99-2	Benzo(b)fluoranthene	U	12	1.0	10	12	2.8
207-08-9	Benzo(k)fluoranthene	U	12	1.0	10	12	3.6
50-32-8	Benzo(a)pyrene	U	12	1.0	10	12	3.8
193-39-5	Indeno(1,2,3-cd)pyrene	U	12	1.0	10	12	2.2
53-70-3	Dibenzo(a,h)anthracene	U	12	1.0	10	12	2.1
191-24-2	Benzo(g,h,i)perylene	U	12	1.0	10	12	2.3
118-74-1	Hexachlorobenzene	U	12	1.0	10	12	2.1
87-68-3	Hexachlorobutadiene	U	12	1.0	10	12	2.7
77-47-4	Hexachlorocyclopentadiene	U	12	1.0	10	12	1.7
7297-45-2	2-Methylnaphthalene-D10		99%				
367-12-4	2,4-Dibromophenol		93%				
81103-79-9	Fluorene-d10		75%				
1718-51-1	Pyrene-D10		103%				

lew
3/3/09

4

KATAHDIN ANALYTICAL SERVICES
Report of Analytical Results

Client: CH2MHill
Project: TO-009 Lejeune
PO No:
Sample Date: 12/06/08
Received Date: 12/09/08
Extraction Date: 12/10/08
Analysis Date: 31-DEC-2008 04:14
Report Date: 01/05/2009
Matrix: SOIL
% Solids: 87.2

Lab ID: SB7055-8
Client ID: MR08-IS063-2-3-08D
SDG: TO9-14
Extracted by: CB
Extraction Method: SW846 3550
Analyst: JCG
Analysis Method: SW846 M8270C
Lab Prep Batch: WG58963
Units: ug/Kgdrywt

CAS#	Compound	Flags	Results	DF	PQL	Adj.PQL	Adj.MDL
91-20-3	Naphthalene	U	11	1.0	10	11	3.0
91-57-6	2-Methylnaphthalene	U	11	1.0	10	11	2.5
86-73-7	Fluorene	U	11	1.0	10	11	3.7
85-01-8	Phenanthrene	U	11	1.0	10	11	2.1
206-44-0	Fluoranthene	U	11	1.0	10	11	2.1
129-00-0	Pyrene	U	11	1.0	10	11	2.4
56-55-3	Benzo(a)anthracene	U	11	1.0	10	11	2.2
205-99-2	Benzo(b)fluoranthene	U	11	1.0	10	11	2.8
207-08-9	Benzo(k)fluoranthene	U	11	1.0	10	11	3.6
50-32-8	Benzo(a)pyrene	U	11	1.0	10	11	3.8
193-39-5	Indeno(1,2,3-cd)pyrene	U	11	1.0	10	11	2.2
53-70-3	Dibenzo(a,h)anthracene	U	11	1.0	10	11	2.1
191-24-2	Benzo(g,h,i)perylene	U	11	1.0	10	11	2.3
118-74-1	Hexachlorobenzene	U	11	1.0	10	11	2.1
87-68-3	Hexachlorobutadiene	U	11	1.0	10	11	2.6
77-47-4	Hexachlorocyclopentadiene	U	11	1.0	10	11	1.7
7297-45-2	2-Methylnaphthalene-D10		109%				
367-12-4	2,4-Dibromophenol		113%				
81103-79-9	Fluorene-d10		82%				
1718-51-1	Pyrene-D10		123%				

lw
3/3/09

KATAHDIN ANALYTICAL SERVICES
Report of Analytical Results

Client: CH2MHill
Project: TO-009 Lejeune
PO No:
Sample Date: 12/06/08
Received Date: 12/09/08
Extraction Date: 12/10/08
Analysis Date: 31-DEC-2008 04:56
Report Date: 01/05/2009
Matrix: SOIL
% Solids: 86.9

Lab ID: SB7055-10
Client ID: MR08-SS064-08D
SDG: TO9-14
Extracted by: CB
Extraction Method: SW846 3550
Analyst: JCG
Analysis Method: SW846 M8270C
Lab Prep Batch: WG58963
Units: ug/Kgdrywt

CAS#	Compound	Flags	Results	DF	PQL	Adj.PQL	Adj.MDL
91-20-3	Naphthalene	U	12	1.0	10	12	3.0
91-57-6	2-Methylnaphthalene	U	12	1.0	10	12	2.5
86-73-7	Fluorene	U	12	1.0	10	12	3.7
85-01-8	Phenanthrene		25	1.0	10	12	2.1
206-44-0	Fluoranthene		44	1.0	10	12	2.1
129-00-0	Pyrene		24	1.0	10	12	2.4
56-55-3	Benzo(a)anthracene	J	10	1.0	10	12	2.2
205-99-2	Benzo(b)fluoranthene	J	8.4	1.0	10	12	2.8
207-08-9	Benzo(k)fluoranthene	J	4.9	1.0	10	12	3.6
50-32-8	Benzo(a)pyrene	U	12	1.0	10	12	3.8
193-39-5	Indeno(1,2,3-cd)pyrene	U	12	1.0	10	12	2.2
53-70-3	Dibenzo(a,h)anthracene	U	12	1.0	10	12	2.1
191-24-2	Benzo(g,h,i)perylene	U	12	1.0	10	12	2.3
118-74-1	Hexachlorobenzene	U	12	1.0	10	12	2.1
87-68-3	Hexachlorobutadiene	U	12	1.0	10	12	2.6
77-47-4	Hexachlorocyclopentadiene	U	12	1.0	10	12	1.7
7297-45-2	2-Methylnaphthalene-D10		98%				
367-12-4	2,4-Dibromophenol		95%				
81103-79-9	Fluorene-d10		73%				
1718-51-1	Pyrene-D10		98%				

lwb 3/3/09

6

KATAHDIN ANALYTICAL SERVICES
Report of Analytical Results

Client: CH2MHill
Project: TO-009 Lejeune
PO No:
Sample Date: 12/06/08
Received Date: 12/09/08
Extraction Date: 12/10/08
Analysis Date: 02-JAN-2009 15:12
Report Date: 01/05/2009
Matrix: SOIL
% Solids: 89.7

Lab ID: SB7055-12RA2
Client ID: MR08-IS064-2-3-08D
SDG: TO9-14
Extracted by: CB
Extraction Method: SW846 3550
Analyst: JCG
Analysis Method: SW846 M8270C
Lab Prep Batch: WG58963
Units: ug/Kgdrywt

CAS#	Compound	Flags	Results	DF	PQL	Adj.PQL	Adj.MDL
91-20-3	Naphthalene	U	11	1.0	10	11	2.9
91-57-6	2-Methylnaphthalene	U	11	1.0	10	11	2.4
86-73-7	Fluorene	U	11	1.0	10	11	3.6
85-01-8	Phenanthrene	U	11	1.0	10	11	2.0
206-44-0	Fluoranthene	U	11	1.0	10	11	2.0
129-00-0	Pyrene	U	11	1.0	10	11	2.3
56-55-3	Benzo(a)anthracene	U	11	1.0	10	11	2.1
205-99-2	Benzo(b)fluoranthene	U	11	1.0	10	11	2.7
207-08-9	Benzo(k)fluoranthene	U	11	1.0	10	11	3.4
50-32-8	Benzo(a)pyrene	U	11	1.0	10	11	3.7
193-39-5	Indeno(1,2,3-cd)pyrene	U	11	1.0	10	11	2.1
53-70-3	Dibenzo(a,h)anthracene	U	11	1.0	10	11	2.0
191-24-2	Benzo(g,h,i)perylene	U	11	1.0	10	11	2.2
118-74-1	Hexachlorobenzene	U	11	1.0	10	11	2.0
87-68-3	Hexachlorobutadiene	U	11	1.0	10	11	2.6
77-47-4	Hexachlorocyclopentadiene	U	11	1.0	10	11	1.7
7297-45-2	2-Methylnaphthalene-D10		60%				
367-12-4	2,4-Dibromophenol		81%				
81103-79-9	Fluorene-d10		64%				
1718-51-1	Pyrene-D10		101%				

lcw 3/3/09

7

KATAHDIN ANALYTICAL SERVICES
Report of Analytical Results

Client: CH2MHill
Project: TO-009 Lejeune
PO No:
Sample Date: 12/06/08
Received Date: 12/09/08
Extraction Date: 12/11/08
Analysis Date: 31-DEC-2008 22:58
Report Date: 01/05/2009
Matrix: SOIL
% Solids: 75.8

Lab ID: SB7055-14RA
Client ID: MR08-SS065-08D
SDG: TO9-14
Extracted by: CB
Extraction Method: SW846 3550
Analyst: JCG
Analysis Method: SW846 M8270C
Lab Prep Batch: WG58993
Units: ug/Kgdrywt

CAS#	Compound	Flags	Results	DF	PQL	Adj.PQL	Adj.MDL	
91-20-3	Naphthalene	~~J~~ UJ	13	1.0	10	13	3.4	CCH
91-57-6	2-Methylnaphthalene	~~J~~ UJ	13	1.0	10	13	2.9	CCH
86-73-7	Fluorene	U	13	1.0	10	13	4.2	
85-01-8	Phenanthrene		38	1.0	10	13	2.4	
206-44-0	Fluoranthene		97	1.0	10	13	2.4	
129-00-0	Pyrene		35	1.0	10	13	2.8	
56-55-3	Benzo(a)anthracene		20	1.0	10	13	2.5	
205-99-2	Benzo(b)fluoranthene	J	31	1.0	10	13	3.2	CCH
207-08-9	Benzo(k)fluoranthene		14	1.0	10	13	4.1	
50-32-8	Benzo(a)pyrene	J	11	1.0	10	13	4.4	
193-39-5	Indeno(1,2,3-cd)pyrene	~~J~~ J	10	1.0	10	13	2.5	CCH
53-70-3	Dibenzo(a,h)anthracene	~~J~~ UJ	13	1.0	10	13	2.4	↓
191-24-2	Benzo(g,h,i)perylene	~~J~~ J	8.5	1.0	10	13	2.6	
118-74-1	Hexachlorobenzene	U	13	1.0	10	13	2.4	
87-68-3	Hexachlorobutadiene	U	13	1.0	10	13	3.0	
77-47-4	Hexachlorocyclopentadiene	U	13	1.0	10	13	2.0	
7297-45-2	2-Methylnaphthalene-D10		88%					
367-12-4	2,4-Dibromophenol		118%					
81103-79-9	Fluorene-d10		79%					
1718-51-1	Pyrene-D10		60%					

lw 3/3/09

8

KATAHDIN ANALYTICAL SERVICES
Report of Analytical Results

Client: CH2MHill
Project: TO-009 Lejeune
PO No:
Sample Date: 12/06/08
Received Date: 12/09/08
Extraction Date: 12/11/08
Analysis Date: 31-DEC-2008 15:09
Report Date: 01/05/2009
Matrix: SOIL
% Solids: 81.6

Lab ID: SB7055-16
Client ID: MR08-IS065-1-2-08D
SDG: TO9-14
Extracted by: CB
Extraction Method: SW846 3550
Analyst: JCG
Analysis Method: SW846 M8270C
Lab Prep Batch: WG58993
Units: ug/Kgdrywt

CAS#	Compound	Flags		Results	DF	PQL	Adj.PQL	Adj.MDL	
91-20-3	Naphthalene	U		12	1.0	10	12	3.2	
91-57-6	2-Methylnaphthalene	U		12	1.0	10	12	2.7	
86-73-7	Fluorene	U		12	1.0	10	12	3.9	
85-01-8	Phenanthrene	U		12	1.0	10	12	2.2	
206-44-0	Fluoranthene	J		7.1	1.0	10	12	2.2	
129-00-0	Pyrene	U		12	1.0	10	12	2.6	
56-55-3	Benzo(a)anthracene	~~J~~	J	7.6	1.0	10	12	2.3	ISH
205-99-2	Benzo(b)fluoranthene	U		12	1.0	10	12	2.9	
207-08-9	Benzo(k)fluoranthene	U		12	1.0	10	12	3.8	
50-32-8	Benzo(a)pyrene	U		12	1.0	10	12	4.0	
193-39-5	Indeno(1,2,3-cd)pyrene	~~U~~	UJ	12	1.0	10	12	2.3	CCH
53-70-3	Dibenzo(a,h)anthracene	U		12	1.0	10	12	2.2	
191-24-2	Benzo(g,h,i)perylene	~~U~~	UJ	12	1.0	10	12	2.4	CCH
118-74-1	Hexachlorobenzene	U		12	1.0	10	12	2.2	
87-68-3	Hexachlorobutadiene	U		12	1.0	10	12	2.8	
77-47-4	Hexachlorocyclopentadiene	U		12	1.0	10	12	1.8	
7297-45-2	2-Methylnaphthalene-D10			69%					
367-12-4	2,4-Dibromophenol			120%					
81103-79-9	Fluorene-d10			85%					
1718-51-1	Pyrene-D10			68%					

lw 3/31/09

8RE

KATAHDIN ANALYTICAL SERVICES
Report of Analytical Results

Client: CH2MHill
Project: TO-009 Lejeune
PO No:
Sample Date: 12/06/08
Received Date: 12/09/08
Extraction Date: 12/11/08
Analysis Date: 31-DEC-2008 23:38
Report Date: 01/05/2009
Matrix: SOIL
% Solids: 81.6

Lab ID: SB7055-16RA
Client ID: MR08-IS065-1-2-08D
SDG: TO9-14
Extracted by: CB
Extraction Method: SW846 3550
Analyst: JCG
Analysis Method: SW846 M8270C
Lab Prep Batch: WG58993
Units: ug/Kgdrywt

Use original

CAS#	Compound	Flags		Results	DF	PQL	Adj.PQL	Adj.MDL	
91-20-3	Naphthalene	~~U~~	UJ	12	1.0	10	12	3.2	CCH
91-57-6	2-Methylnaphthalene	~~U~~	UJ	12	1.0	10	12	2.7	CCH
86-73-7	Fluorene	U		12	1.0	10	12	3.9	
85-01-8	Phenanthrene	U		12	1.0	10	12	2.2	
206-44-0	Fluoranthene	J		7.1	1.0	10	12	2.2	
129-00-0	Pyrene	U		12	1.0	10	12	2.6	
56-55-3	Benzo(a)anthracene	~~U~~	J	7.5	1.0	10	12	2.3	JSH
205-99-2	Benzo(b)fluoranthene	~~U~~	UJ	12	1.0	10	12	2.9	CCH
207-08-9	Benzo(k)fluoranthene	U		12	1.0	10	12	3.8	
50-32-8	Benzo(a)pyrene	U		12	1.0	10	12	4.0	
193-39-5	Indeno(1,2,3-cd)pyrene	~~U~~	UJ	12	1.0	10	12	2.3	CCH
53-70-3	Dibenzo(a,h)anthracene	~~U~~	↓	12	1.0	10	12	2.2	↓
191-24-2	Benzo(g,h,i)perylene	~~U~~		12	1.0	10	12	2.4	
118-74-1	Hexachlorobenzene	U		12	1.0	10	12	2.2	
87-68-3	Hexachlorobutadiene	U		12	1.0	10	12	2.8	
77-47-4	Hexachlorocyclopentadiene	U		12	1.0	10	12	1.8	
7297-45-2	2-Methylnaphthalene-D10			85%					
367-12-4	2,4-Dibromophenol			117%					
81103-79-9	Fluorene-d10			78%					
1718-51-1	Pyrene-D10			66%					

R RE

3/3/09

KATAHDIN ANALYTICAL SERVICES
Report of Analytical Results

Client: CH2MHill
Project: TO-009 Lejeune
PO No:
Sample Date: 12/06/08
Received Date: 12/09/08
Extraction Date: 12/11/08
Analysis Date: 31-DEC-2008 19:37
Report Date: 01/05/2009
Matrix: SOIL
% Solids: 80.6

Lab ID: SB7055-18
Client ID: MR08-SS066-08D
SDG: TO9-14
Extracted by: CB
Extraction Method: SW846 3550
Analyst: JCG
Analysis Method: SW846 M8270C
Lab Prep Batch: WG58993
Units: ug/Kgdrywt

CAS#	Compound	Flags	Results	DF	PQL	Adj.PQL	Adj.MDL	
91-20-3	Naphthalene	~~J~~ UJ	12	1.0	10	12	3.2	CCH
91-57-6	2-Methylnaphthalene	~~J~~ UJ	12	1.0	10	12	2.7	CCH
86-73-7	Fluorene	U	12	1.0	10	12	4.0	
85-01-8	Phenanthrene	J	10	1.0	10	12	2.2	
206-44-0	Fluoranthene		40	1.0	10	12	2.2	
129-00-0	Pyrene	J	15	1.0	10	12	2.6	JSH
56-55-3	Benzo(a)anthracene	J	14	1.0	10	12	2.4	JSH
205-99-2	Benzo(b)fluoranthene	~~J~~ J	12	1.0	10	12	3.0	CCH
207-08-9	Benzo(k)fluoranthene	J	8.2	1.0	10	12	3.8	
50-32-8	Benzo(a)pyrene	J	7.6	1.0	10	12	4.1	
193-39-5	Indeno(1,2,3-cd)pyrene	~~J~~ J	7.4	1.0	10	12	2.4	CCH
53-70-3	Dibenzo(a,h)anthracene	~~J~~ UJ	12	1.0	10	12	2.2	↓
191-24-2	Benzo(g,h,i)perylene	~~J~~ J	6.1	1.0	10	12	2.5	
118-74-1	Hexachlorobenzene	U	12	1.0	10	12	2.2	
87-68-3	Hexachlorobutadiene	U	12	1.0	10	12	2.8	
77-47-4	Hexachlorocyclopentadiene	U	12	1.0	10	12	1.9	
7297-45-2	2-Methylnaphthalene-D10		92%					
367-12-4	2,4-Dibromophenol		118%					
81103-79-9	Fluorene-d10		85%					
1718-51-1	Pyrene-D10		61%					

fwo 3/3/09

10

KATAHDIN ANALYTICAL SERVICES
Report of Analytical Results

Client: CH2MHill
Project: TO-009 Lejeune
PO No:
Sample Date: 12/06/08
Received Date: 12/09/08
Extraction Date: 12/11/08
Analysis Date: 31-DEC-2008 20:17
Report Date: 01/05/2009
Matrix: SOIL
% Solids: 68.6

Lab ID: SB7055-20
Client ID: MR08-IS066-2-3-08D
SDG: TO9-14
Extracted by: CB
Extraction Method: SW846 3550
Analyst: JCG
Analysis Method: SW846 M8270C
Lab Prep Batch: WG58993
Units: ug/Kgdrywt

CAS#	Compound	Flags	Results	DF	PQL	Adj.PQL	Adj.MDL	
91-20-3	Naphthalene	~~U~~ UJ	14	1.0	10	14	3.8	CCH
91-57-6	2-Methylnaphthalene	~~U~~ UJ	14	1.0	10	14	3.2	CCH
86-73-7	Fluorene	U	14	1.0	10	14	4.7	
85-01-8	Phenanthrene	U	14	1.0	10	14	2.6	
206-44-0	Fluoranthene	J	6.6	1.0	10	14	2.6	
129-00-0	Pyrene	U	14	1.0	10	14	3.0	
56-55-3	Benzo(a)anthracene	J	8.2	1.0	10	14	2.8	
205-99-2	Benzo(b)fluoranthene	~~U~~ UJ	14	1.0	10	14	3.5	CCH
207-08-9	Benzo(k)fluoranthene	U	14	1.0	10	14	4.5	
50-32-8	Benzo(a)pyrene	U	14	1.0	10	14	4.8	
193-39-5	Indeno(1,2,3-cd)pyrene	~~U~~ UJ	14	1.0	10	14	2.8	CCH
53-70-3	Dibenzo(a,h)anthracene	~~U~~ ↓	14	1.0	10	14	2.6	↓
191-24-2	Benzo(g,h,i)perylene	~~U~~ ↓	14	1.0	10	14	2.9	
118-74-1	Hexachlorobenzene	U	14	1.0	10	14	2.6	
87-68-3	Hexachlorobutadiene	U	14	1.0	10	14	3.4	
77-47-4	Hexachlorocyclopentadiene	U	14	1.0	10	14	2.2	
7297-45-2	2-Methylnaphthalene-D10		93%					
367-12-4	2,4-Dibromophenol		126%					
81103-79-9	Fluorene-d10		78%					
1718-51-1	Pyrene-D10		62%					

MW 3/3/09

11.

KATAHDIN ANALYTICAL SERVICES
Report of Analytical Results

Client: CH2MHill
Project: TO-009 Lejeune
PO No:
Sample Date: 12/07/08
Received Date: 12/09/08
Extraction Date: 12/11/08
Analysis Date: 01-JAN-2009 03:37
Report Date: 01/05/2009
Matrix: SOIL
% Solids: 73.0

Lab ID: SB7055-22
Client ID: MR08-SS080-08D
SDG: TO9-14
Extracted by: CB
Extraction Method: SW846 3550
Analyst: JCG
Analysis Method: SW846 M8270C
Lab Prep Batch: WG58993
Units: ug/Kgdrywt

CAS#	Compound	Flags	Results	DF	PQL	Adj.PQL	Adj.MDL	
91-20-3	Naphthalene	~~J~~ J	4.7	1.0	10	14	3.6	CCH
91-57-6	2-Methylnaphthalene	~~J~~ J	7.3	1.0	10	14	3.0	CCH
86-73-7	Fluorene	U	14	1.0	10	14	4.4	
85-01-8	Phenanthrene		19	1.0	10	14	2.5	
206-44-0	Fluoranthene		46	1.0	10	14	2.5	
129-00-0	Pyrene		26	1.0	10	14	2.9	
56-55-3	Benzo(a)anthracene		24	1.0	10	14	2.6	
205-99-2	Benzo(b)fluoranthene	J	37	1.0	10	14	3.3	CCH
207-08-9	Benzo(k)fluoranthene		14	1.0	10	14	4.2	
50-32-8	Benzo(a)pyrene		18	1.0	10	14	4.5	
193-39-5	Indeno(1,2,3-cd)pyrene	J	19	1.0	10	14	2.6	CCH
53-70-3	Dibenzo(a,h)anthracene	~~U~~ UJ	14	1.0	10	14	2.5	↓
191-24-2	Benzo(g,h,i)perylene	J	16	1.0	10	14	2.7	
118-74-1	Hexachlorobenzene	U	14	1.0	10	14	2.5	
87-68-3	Hexachlorobutadiene	U	14	1.0	10	14	3.1	
77-47-4	Hexachlorocyclopentadiene	U	14	1.0	10	14	2.0	
7297-45-2	2-Methylnaphthalene-D10		98%					
367-12-4	2,4-Dibromophenol		115%					
81103-79-9	Fluorene-d10		79%					
1718-51-1	Pyrene-D10		67%					

MW 3/3/09

12

KATAHDIN ANALYTICAL SERVICES
Report of Analytical Results

Client: CH2MHill
Project: TO-009 Lejeune
PO No:
Sample Date: 12/07/08
Received Date: 12/09/08
Extraction Date: 12/11/08
Analysis Date: 31-DEC-2008 13:02
Report Date: 01/05/2009
Matrix: SOIL
% Solids: 85.7

Lab ID: SB7055-24
Client ID: MR08-IS080-5-6-08D
SDG: TO9-14
Extracted by: CB
Extraction Method: SW846 3550
Analyst: JCG
Analysis Method: SW846 M8270C
Lab Prep Batch: WG58993
Units: ug/Kgdrywt

CAS#	Compound	Flags	Results	DF	PQL	Adj.PQL	Adj.MDL	
91-20-3	Naphthalene	U	12	1.0	10	12	3.0	
91-57-6	2-Methylnaphthalene	U	12	1.0	10	12	2.6	
86-73-7	Fluorene	U	12	1.0	10	12	3.7	
85-01-8	Phenanthrene	U	12	1.0	10	12	2.1	
206-44-0	Fluoranthene	U	12	1.0	10	12	2.1	
129-00-0	Pyrene	U	12	1.0	10	12	2.4	
56-55-3	Benzo(a)anthracene	U	12	1.0	10	12	2.2	
205-99-2	Benzo(b)fluoranthene	U	12	1.0	10	12	2.8	
207-08-9	Benzo(k)fluoranthene	U	12	1.0	10	12	3.6	
50-32-8	Benzo(a)pyrene	U	12	1.0	10	12	3.8	
193-39-5	Indeno(1,2,3-cd)pyrene	~~U~~ UJ	12	1.0	10	12	2.2	CCH
53-70-3	Dibenzo(a,h)anthracene	U	12	1.0	10	12	2.1	
191-24-2	Benzo(g,h,i)perylene	~~U~~ UJ	12	1.0	10	12	2.3	CCH
118-74-1	Hexachlorobenzene	U	12	1.0	10	12	2.1	
87-68-3	Hexachlorobutadiene	U	12	1.0	10	12	2.7	
77-47-4	Hexachlorocyclopentadiene	U	12	1.0	10	12	1.7	
7297-45-2	2-Methylnaphthalene-D10		52%					
367-12-4	2,4-Dibromophenol		107%					
81103-79-9	Fluorene-d10		71%					
1718-51-1	Pyrene-D10		79%					

lmw
3/3/09

13

KATAHDIN ANALYTICAL SERVICES
Report of Analytical Results

Client: CH2MHill
Project: TO-009 Lejeune
PO No:
Sample Date: 12/07/08
Received Date: 12/09/08
Extraction Date: 12/11/08
Analysis Date: 01-JAN-2009 04:16
Report Date: 01/05/2009
Matrix: SOIL
% Solids: 63.1

Lab ID: SB7055-26
Client ID: MR08-SS081-08D
SDG: TO9-14
Extracted by: CB
Extraction Method: SW846 3550
Analyst: JCG
Analysis Method: SW846 M8270C
Lab Prep Batch: WG58993
Units: ug/Kgdrywt

CAS#	Compound	Flags	Results	DF	PQL	Adj.PQL	Adj.MDL	
91-20-3	Naphthalene	~~J~~ J	4.8	1.0	10	16	4.1	C CH
91-57-6	2-Methylnaphthalene	~~J~~ J	7.1	1.0	10	16	3.5	CCH
86-73-7	Fluorene	U	16	1.0	10	16	5.1	
85-01-8	Phenanthrene		41	1.0	10	16	2.8	
206-44-0	Fluoranthene		94	1.0	10	16	2.8	
129-00-0	Pyrene		56	1.0	10	16	3.3	
56-55-3	Benzo(a)anthracene		41	1.0	10	16	3.0	
205-99-2	Benzo(b)fluoranthene	J	86	1.0	10	16	3.8	CCH
207-08-9	Benzo(k)fluoranthene		30	1.0	10	16	4.9	
50-32-8	Benzo(a)pyrene		38	1.0	10	16	5.2	
193-39-5	Indeno(1,2,3-cd)pyrene	J	34	1.0	10	16	3.0	CCH
53-70-3	Dibenzo(a,h)anthracene	~~U~~ UJ	16	1.0	10	16	2.8	
191-24-2	Benzo(g,h,i)perylene	J	23	1.0	10	16	3.2	
118-74-1	Hexachlorobenzene	U	16	1.0	10	16	2.8	
87-68-3	Hexachlorobutadiene	U	16	1.0	10	16	3.6	
77-47-4	Hexachlorocyclopentadiene	U	16	1.0	10	16	2.4	
7297-45-2	2-Methylnaphthalene-D10		101%					
367-12-4	2,4-Dibromophenol		110%					
81103-79-9	Fluorene-d10		70%					
1718-51-1	Pyrene-D10		59%					

Mus 3/3/09

14

KATAHDIN ANALYTICAL SERVICES
Report of Analytical Results

Client: CH2MHill
Project: TO-009 Lejeune
PO No:
Sample Date: 12/07/08
Received Date: 12/09/08
Extraction Date: 12/11/08
Analysis Date: 31-DEC-2008 20:57
Report Date: 01/05/2009
Matrix: SOIL
% Solids: 88.2

Lab ID: SB7055-28
Client ID: MR08-IS081-6-7-08D
SDG: TO9-14
Extracted by: CB
Extraction Method: SW846 3550
Analyst: JCG
Analysis Method: SW846 M8270C
Lab Prep Batch: WG58993
Units: ug/Kgdrywt

CAS#	Compound	Flags		Results	DF	PQL	Adj.PQL	Adj.MDL	
91-20-3	Naphthalene	~~U~~	UJ	11	1.0	10	11	2.9	CCH
91-57-6	2-Methylnaphthalene	~~U~~	UJ	11	1.0	10	11	2.5	CCH
86-73-7	Fluorene	U		11	1.0	10	11	3.6	
85-01-8	Phenanthrene	U		11	1.0	10	11	2.0	
206-44-0	Fluoranthene	U		11	1.0	10	11	2.0	
129-00-0	Pyrene	U		11	1.0	10	11	2.4	
56-55-3	Benzo(a)anthracene	U		11	1.0	10	11	2.2	
205-99-2	Benzo(b)fluoranthene	~~U~~	UJ	11	1.0	10	11	2.7	CCH
207-08-9	Benzo(k)fluoranthene	U		11	1.0	10	11	3.5	
50-32-8	Benzo(a)pyrene	U		11	1.0	10	11	3.7	
193-39-5	Indeno(1,2,3-cd)pyrene	~~U~~	UJ	11	1.0	10	11	2.2	CCH
53-70-3	Dibenzo(a,h)anthracene	~~U~~	↓	11	1.0	10	11	2.0	↓
191-24-2	Benzo(g,h,i)perylene	~~U~~		11	1.0	10	11	2.3	
118-74-1	Hexachlorobenzene	U		11	1.0	10	11	2.0	
87-68-3	Hexachlorobutadiene	U		11	1.0	10	11	2.6	
77-47-4	Hexachlorocyclopentadiene	U		11	1.0	10	11	1.7	
7297-45-2	2-Methylnaphthalene-D10			104%					
367-12-4	2,4-Dibromophenol			122%					
81103-79-9	Fluorene-d10			78%					
1718-51-1	Pyrene-D10			67%					

lew
3/3/09

15

KATAHDIN ANALYTICAL SERVICES
Report of Analytical Results

Client: CH2MHill
Project: TO-009 Lejeune
PO No:
Sample Date: 12/07/08
Received Date: 12/09/08
Extraction Date: 12/11/08
Analysis Date: 31-DEC-2008 21:37
Report Date: 01/05/2009
Matrix: SOIL
% Solids: 78.7

Lab ID: SB7055-30
Client ID: MR08-SS082-08D
SDG: TO9-14
Extracted by: CB
Extraction Method: SW846 3550
Analyst: JCG
Analysis Method: SW846 M8270C
Lab Prep Batch: WG58993
Units: ug/Kgdrywt

CAS#	Compound	Flags	Results	DF	PQL	Adj.PQL	Adj.MDL	
91-20-3	Naphthalene	~~J~~ J	4.4	1.0	10	13	3.3	CCH
91-57-6	2-Methylnaphthalene	~~J~~ J	5.4	1.0	10	13	2.8	CCH
86-73-7	Fluorene	U	13	1.0	10	13	4.1	
85-01-8	Phenanthrene		24	1.0	10	13	2.3	
206-44-0	Fluoranthene		64	1.0	10	13	2.3	
129-00-0	Pyrene		32	1.0	10	13	2.7	
56-55-3	Benzo(a)anthracene		27	1.0	10	13	2.4	
205-99-2	Benzo(b)fluoranthene	J	44	1.0	10	13	3.0	CCH
207-08-9	Benzo(k)fluoranthene		20	1.0	10	13	3.9	
50-32-8	Benzo(a)pyrene		22	1.0	10	13	4.2	
193-39-5	Indeno(1,2,3-cd)pyrene	J	18	1.0	10	13	2.4	CCH
53-70-3	Dibenzo(a,h)anthracene	~~J~~ UJ	13	1.0	10	13	2.3	↓
191-24-2	Benzo(g,h,i)perylene	J	14	1.0	10	13	2.5	
118-74-1	Hexachlorobenzene	U	13	1.0	10	13	2.3	
87-68-3	Hexachlorobutadiene	U	13	1.0	10	13	2.9	
77-47-4	Hexachlorocyclopentadiene	U	13	1.0	10	13	1.9	
7297-45-2	2-Methylnaphthalene-D10		96%					
367-12-4	2,4-Dibromophenol		112%					
81103-79-9	Fluorene-d10		80%					
1718-51-1	Pyrene-D10		66%					

LW
3/3/09

16

KATAHDIN ANALYTICAL SERVICES
Report of Analytical Results

Client: CH2MHill
Project: TO-009 Lejeune
PO No:
Sample Date: 12/07/08
Received Date: 12/09/08
Extraction Date: 12/11/08
Analysis Date: 02-JAN-2009 15:52
Report Date: 01/05/2009
Matrix: SOIL
% Solids: 96.2

Lab ID: SB7055-32RA
Client ID: MR08-IS082-5-6-08D
SDG: TO9-14
Extracted by: CB
Extraction Method: SW846 3550
Analyst: JCG
Analysis Method: SW846 M8270C
Lab Prep Batch: WG58993
Units: ug/Kgdrywt

CAS#	Compound	Flags	Results	DF	PQL	Adj.PQL	Adj.MDL
91-20-3	Naphthalene	U	10	1.0	10	10	2.7
91-57-6	2-Methylnaphthalene	U	10	1.0	10	10	2.3
86-73-7	Fluorene	U	10	1.0	10	10	3.3
85-01-8	Phenanthrene	U	10	1.0	10	10	1.9
206-44-0	Fluoranthene	U	10	1.0	10	10	1.9
129-00-0	Pyrene	U	10	1.0	10	10	2.2
56-55-3	Benzo(a)anthracene	U	10	1.0	10	10	2.0
205-99-2	Benzo(b)fluoranthene	U	10	1.0	10	10	2.5
207-08-9	Benzo(k)fluoranthene	U	10	1.0	10	10	3.2
50-32-8	Benzo(a)pyrene	U	10	1.0	10	10	3.4
193-39-5	Indeno(1,2,3-cd)pyrene	U	10	1.0	10	10	2.0
53-70-3	Dibenzo(a,h)anthracene	U	10	1.0	10	10	1.9
191-24-2	Benzo(g,h,i)perylene	U	10	1.0	10	10	2.1
118-74-1	Hexachlorobenzene	U	10	1.0	10	10	1.9
87-68-3	Hexachlorobutadiene	U	10	1.0	10	10	2.4
77-47-4	Hexachlorocyclopentadiene	U	10	1.0	10	10	1.6
7297-45-2	2-Methylnaphthalene-D10		53%				
367-12-4	2,4-Dibromophenol		71%				
81103-79-9	Fluorene-d10		59%				
1718-51-1	Pyrene-D10		101%				

lew
3/3/09

17

KATAHDIN ANALYTICAL SERVICES
Report of Analytical Results

Client: CH2MHill
Project: TO-009 Lejeune
PO No:
Sample Date: 12/07/08
Received Date: 12/09/08
Extraction Date: 12/11/08
Analysis Date: 01-JAN-2009 00:18
Report Date: 01/05/2009
Matrix: SOIL
% Solids: 85.3

Lab ID: SB7055-34
Client ID: MR08-SS083-08D
SDG: TO9-14
Extracted by: CB
Extraction Method: SW846 3550
Analyst: JCG
Analysis Method: SW846 M8270C
Lab Prep Batch: WG58993
Units: ug/Kgdrywt

CAS#	Compound	Flags	Results	DF	PQL	Adj.PQL	Adj.MDL	
91-20-3	Naphthalene	~~J~~ J	4.6	1.0	10	12	3.0	BSH
91-57-6	2-Methylnaphthalene	~~J~~ J	5.9	1.0	10	12	2.6	CCH
86-73-7	Fluorene	U	12	1.0	10	12	3.8	
85-01-8	Phenanthrene		16	1.0	10	12	2.1	
206-44-0	Fluoranthene		31	1.0	10	12	2.1	
129-00-0	Pyrene	~~J~~ J	9.2	1.0	10	12	2.5	ISH
56-55-3	Benzo(a)anthracene	J	13	1.0	10	12	2.2	ISH
205-99-2	Benzo(b)fluoranthene	J	19	1.0	10	12	2.8	CCH
207-08-9	Benzo(k)fluoranthene	J	9.9	1.0	10	12	3.6	
50-32-8	Benzo(a)pyrene	J	10	1.0	10	12	3.9	
193-39-5	Indeno(1,2,3-cd)pyrene	~~J~~ J	10	1.0	10	12	2.2	CCH
53-70-3	Dibenzo(a,h)anthracene	~~J~~ J	9.7	1.0	10	12	2.1	↓
191-24-2	Benzo(g,h,i)perylene	~~J~~ J	8.2	1.0	10	12	2.3	
118-74-1	Hexachlorobenzene	U	12	1.0	10	12	2.1	
87-68-3	Hexachlorobutadiene	U	12	1.0	10	12	2.7	
77-47-4	Hexachlorocyclopentadiene	U	12	1.0	10	12	1.8	
7297-45-2	2-Methylnaphthalene-D10		120%					
367-12-4	2,4-Dibromophenol		134%					
81103-79-9	Fluorene-d10		86%					
1718-51-1	Pyrene-D10		43%					

lw 3/3/09

17RE

KATAHDIN ANALYTICAL SERVICES
Report of Analytical Results

Client: CH2MHill
Project: TO-009 Lejeune
PO No:
Sample Date: 12/07/08
Received Date: 12/09/08
Extraction Date: 12/11/08
Analysis Date: 02-JAN-2009 16:32
Report Date: 01/05/2009
Matrix: SOIL
% Solids: 85.3

Lab ID: SB7055-34RA
Client ID: MR08-SS083-08D
SDG: TO9-14
Extracted by: CB
Extraction Method: SW846 3550
Analyst: JCG
Analysis Method: SW846 M8270C
Lab Prep Batch: WG58993
Units: ug/Kgdrywt

Use original

CAS#	Compound	Flags	Results	DF	PQL	Adj.PQL	Adj.MDL	
91-20-3	Naphthalene	U	12	1.0	10	12	3.0	
91-57-6	2-Methylnaphthalene	J	4.3	1.0	10	12	2.6	
86-73-7	Fluorene	U	12	1.0	10	12	3.8	
85-01-8	Phenanthrene		12	1.0	10	12	2.1	
206-44-0	Fluoranthene		18	1.0	10	12	2.1	
129-00-0	Pyrene		20	1.0	10	12	2.5	
56-55-3	Benzo(a)anthracene	J	8.2	1.0	10	12	2.2	
205-99-2	Benzo(b)fluoranthene	J	13	1.0	10	12	2.8	ISL
207-08-9	Benzo(k)fluoranthene		14	1.0	10	12	3.6	
50-32-8	Benzo(a)pyrene	J	10	1.0	10	12	3.9	
193-39-5	Indeno(1,2,3-cd)pyrene	U	7.7	1.0	10	12	2.2	
53-70-3	Dibenzo(a,h)anthracene	U UJ	12	1.0	10	12	2.1	
191-24-2	Benzo(g,h,i)perylene	J J	8.3	1.0	10	12	2.3	
118-74-1	Hexachlorobenzene	U UJ	12	1.0	10	12	2.1	
87-68-3	Hexachlorobutadiene	U	12	1.0	10	12	2.7	
77-47-4	Hexachlorocyclopentadiene	U	12	1.0	10	12	1.8	
7297-45-2	2-Methylnaphthalene-D10		54%					
367-12-4	2,4-Dibromophenol		111%					
81103-79-9	Fluorene-d10		74%					
1718-51-1	Pyrene-D10		117%					

R RE

lw 3/3/09

18

KATAHDIN ANALYTICAL SERVICES
Report of Analytical Results

Client: CH2MHill
Project: TO-009 Lejeune
PO No:
Sample Date: 12/07/08
Received Date: 12/09/08
Extraction Date: 12/11/08
Analysis Date: 31-DEC-2008 22:18
Report Date: 01/05/2009
Matrix: SOIL
% Solids: 94.6

Lab ID: SB7055-36
Client ID: MR08-IS083-6-7-08D
SDG: TO9-14
Extracted by: CB
Extraction Method: SW846 3550
Analyst: JCG
Analysis Method: SW846 M8270C
Lab Prep Batch: WG58993
Units: ug/Kgdrywt

CAS#	Compound	Flags		Results	DF	PQL	Adj.PQL	Adj.MDL	
91-20-3	Naphthalene	~~U~~	UJ	10	1.0	10	10	2.7	CCH
91-57-6	2-Methylnaphthalene	~~U~~	UJ	10	1.0	10	10	2.3	↓
86-73-7	Fluorene	U		10	1.0	10	10	3.4	
85-01-8	Phenanthrene	U		10	1.0	10	10	1.9	
206-44-0	Fluoranthene	U		10	1.0	10	10	1.9	
129-00-0	Pyrene	U		10	1.0	10	10	2.2	
56-55-3	Benzo(a)anthracene	U		10	1.0	10	10	2.0	
205-99-2	Benzo(b)fluoranthene	~~U~~	UJ	10	1.0	10	10	2.5	CCH
207-08-9	Benzo(k)fluoranthene	U		10	1.0	10	10	3.3	
50-32-8	Benzo(a)pyrene	U		10	1.0	10	10	3.5	
193-39-5	Indeno(1,2,3-cd)pyrene	~~U~~	UJ	10	1.0	10	10	2.0	CCH
53-70-3	Dibenzo(a,h)anthracene	~~U~~	↓	10	1.0	10	10	1.9	↓
191-24-2	Benzo(g,h,i)perylene	~~U~~		10	1.0	10	10	2.1	
118-74-1	Hexachlorobenzene	U		10	1.0	10	10	1.9	
87-68-3	Hexachlorobutadiene	U		10	1.0	10	10	2.4	
77-47-4	Hexachlorocyclopentadiene	U		10	1.0	10	10	1.6	
7297-45-2	2-Methylnaphthalene-D10			93%					
367-12-4	2,4-Dibromophenol			117%					
81103-79-9	Fluorene-d10			81%					
1718-51-1	Pyrene-D10			71%					

KW
3/31/09

19

KATAHDIN ANALYTICAL SERVICES
Report of Analytical Results

Client: CH2MHill
Project: TO-009 Lejeune
PO No:
Sample Date: 12/07/08
Received Date: 12/09/08
Extraction Date: 12/11/08
Analysis Date: 01-JAN-2009 00:57
Report Date: 01/05/2009
Matrix: SOIL
% Solids: 85.5

Lab ID: SB7055-38
Client ID: MR08-SS084-08D
SDG: TO9-14
Extracted by: CB
Extraction Method: SW846 3550
Analyst: JCG
Analysis Method: SW846 M8270C
Lab Prep Batch: WG58993
Units: ug/Kgdrywt

CAS#	Compound	Flags		Results	DF	PQL	Adj.PQL	Adj.MDL	
91-20-3	Naphthalene	~~J~~	J	8.8	1.0	10	12	3.0	BSH
91-57-6	2-Methylnaphthalene		J	12	1.0	10	12	2.6	CCH
86-73-7	Fluorene	U		12	1.0	10	12	3.7	
85-01-8	Phenanthrene			43	1.0	10	12	2.1	
206-44-0	Fluoranthene			40	1.0	10	12	2.1	
129-00-0	Pyrene			15	1.0	10	12	2.4	
56-55-3	Benzo(a)anthracene			18	1.0	10	12	2.2	
205-99-2	Benzo(b)fluoranthene		J	21	1.0	10	12	2.8	CCH
207-08-9	Benzo(k)fluoranthene	J		8.3	1.0	10	12	3.6	
50-32-8	Benzo(a)pyrene	U		12	1.0	10	12	3.8	
193-39-5	Indeno(1,2,3-cd)pyrene	~~J~~	J	7.0	1.0	10	12	2.2	CCH
53-70-3	Dibenzo(a,h)anthracene	~~U~~	UJ	12	1.0	10	12	2.1	↓
191-24-2	Benzo(g,h,i)perylene	~~J~~	J	5.2	1.0	10	12	2.3	
118-74-1	Hexachlorobenzene	U		12	1.0	10	12	2.1	
87-68-3	Hexachlorobutadiene	U		12	1.0	10	12	2.7	
77-47-4	Hexachlorocyclopentadiene	U		12	1.0	10	12	1.8	
7297-45-2	2-Methylnaphthalene-D10			99%					
367-12-4	2,4-Dibromophenol			129%					
81103-79-9	Fluorene-d10			78%					
1718-51-1	Pyrene-D10			60%					

lw
3/3/09

20

KATAHDIN ANALYTICAL SERVICES
Report of Analytical Results

Client: CH2MHill
Project: TO-009 Lejeune
PO No:
Sample Date: 12/08/08
Received Date: 12/09/08
Extraction Date: 12/13/08
Analysis Date: 01-JAN-2009 01:37
Report Date: 01/05/2009
Matrix: SOIL
% Solids: 85.3

Lab ID: SB7055-40
Client ID: MR08-SS104-08D
SDG: TO9-14
Extracted by: CB
Extraction Method: SW846 3550
Analyst: JCG
Analysis Method: SW846 M8270C
Lab Prep Batch: WG59027
Units: ug/Kgdrywt

CAS#	Compound	Flags	Results	DF	PQL	Adj.PQL	Adj.MDL	
91-20-3	Naphthalene	~~U~~ UJ	12	1.0	10	12	3.0	CCH
91-57-6	2-Methylnaphthalene	~~U~~ J	3.0	1.0	10	12	2.6	BSH
86-73-7	Fluorene	U	12	1.0	10	12	3.8	
85-01-8	Phenanthrene	J	9.3	1.0	10	12	2.1	
206-44-0	Fluoranthene		91	1.0	10	12	2.1	
129-00-0	Pyrene		47	1.0	10	12	2.5	
56-55-3	Benzo(a)anthracene		58	1.0	10	12	2.2	
205-99-2	Benzo(b)fluoranthene	J	95	1.0	10	12	2.8	CCH
207-08-9	Benzo(k)fluoranthene	J	36	1.0	10	12	3.6	MSL
50-32-8	Benzo(a)pyrene		52	1.0	10	12	3.9	
193-39-5	Indeno(1,2,3-cd)pyrene	J	37	1.0	10	12	2.2	CCH
53-70-3	Dibenzo(a,h)anthracene	↓	18	1.0	10	12	2.1	↓
191-24-2	Benzo(g,h,i)perylene	↓	29	1.0	10	12	2.3	↓
118-74-1	Hexachlorobenzene	U	12	1.0	10	12	2.1	
87-68-3	Hexachlorobutadiene	U	12	1.0	10	12	2.7	
77-47-4	Hexachlorocyclopentadiene	~~U~~ UJ	12	1.0	10	12	1.8	MSL
7297-45-2	2-Methylnaphthalene-D10		109%					
367-12-4	2,4-Dibromophenol		114%					
81103-79-9	Fluorene-d10		82%					
1718-51-1	Pyrene-D10		70%					

lw 3/3/09

ENVIRONMENTAL
Data Services, Inc.

SEMIVOLATILE ORGANIC COMPOUNDS

USEPA Region IV - Level IV Review

Site: MCB Camp Lejeune, TO-09 SDG #: TO9-14

Client: CH2M HILL, Inc., Virginia Beach, Virginia Date: March 3, 2009

Laboratory: Katahdin Analytical Services, Scarborough, Maine Reviewer: Nancy Weaver

EDS ID	Client Sample ID	Laboratory Sample ID	Matrix
1	MR08-SS062-08D	SB7055-1	Soil
2	MR08-SS062-2-3-08D	SB7055-3	Soil
3	MR08-SS063-08D	SB7055-5	Soil
4	MR08-IS063-2-3-08D	SB7055-7	Soil
5	MR08-SS064-08D	SB7055-9	Soil
6	MR08-IS064-2-3-08D	SB7055-11	Soil
7	MR08-SS065-08D	SB7055-13	Soil
8	MR08-IS065-1-2-08D	SB7055-15	Soil
9	MR08-SS066-08D	SB7055-17	Soil
10	MR08-IS066-2-3-08D	SB7055-19	Soil
11	MR08-SS080-08D	SB7055-21	Soil
12	MR08-IS080-5-6-08D	SB7055-23	Soil
13	MR08-SS081-08D	SB7055-25	Soil
14	MR08-IS081-6-7-08D	SB7055-27	Soil
15	MR08-SS082-08D	SB7055-29	Soil
16	MR08-IS082-5-6-08D	SB7055-31	Soil
17	MR08-SS083-08D	SB7055-33	Soil
18	MR08-IS083-6-7-08D	SB7055-35	Soil
19	MR08-SS084-08D	SB7055-37	Soil
20	MR08-SS104-08D	SB7055-39	Soil
20MS	MR08-SS104-08DMS	SB7055-39MS	Soil
20MSD	MR08-SS104-08DMSD	SB7055-39MSD	Soil

The USEPA "Contract Laboratory Program National Functional Guidelines for Organic Data Review," October 1999, and professional judgment were used in evaluating the data in this summary report.

Holding Times - All samples were extracted within 14 days for soil samples and analyzed within 40 days for all samples.

GC/MS Tuning - All of the DFTPP tunes in the initial and continuing calibrations met the percent relative abundance criteria.

Initial Calibration - The initial calibrations exhibited acceptable %RSD and mean RRF values.

Continuing Calibration - The continuing calibrations exhibited acceptable %D and RRF values except the following.

CCAL Date	Compound	%D/RRF	Qualifier	Affected Samples
12/23/08	Benzaldehyde	91.70%	J/UJ	1, 2
	Nitrobenzene	34.75%	J/UJ	1, 2
	3,3'-Dichlorobenzidine	29.12%	J/UJ	1, 2
12/24/08	Benzaldehyde	91.72%	J/UJ	3-5
	Nitrobenzene	36.36%	J/UJ	3-5
	3,3'-Dichlorobenzidine	29.02%	J/UJ	3-5
12/29/08	Benzaldehyde	89.18%	J/UJ	6-8
	Nitrobenzene	40.02%	J/UJ	6-8
	2,4-Dinitrophenol	43.59%	J/UJ	6-8
	4-Nitroaniline	35.78%	J/UJ	6-8
	Butylbenzylphthalate	27.64%	J/UJ	6-8
	bis (2-Ethylhexyl) phthalate	38.63%	J/UJ	6-8
	Di-n-octylphthalate	61.96%	J/UJ	6-8
12/30/08 (0946)	Benzaldehyde	91.42%	J/UJ	12
	Nitrobenzene	39.12%	J/UJ	12
	4-Chloroaniline	28.55%	J/UJ	12
	2,4-Dinitrophenol	40.11%	J/UJ	12
	4-Nitrophenol	29.33%	J/UJ	12
	4-Nitroaniline	38.41%	J/UJ	12
	Carbazole	28.03%	J/UJ	12
	Butylbenzylphthalate	27.30%	J/UJ	12
	bis (2-Ethylhexyl) phthalate	39.35%	J/UJ	12
	Di-n-octylphthalate	34.97%	J/UJ	12
12/30/08 (1943)	Benzaldehyde	91.39%	J/UJ	9-11, 13-20
	Nitrobenzene	42.33%	J/UJ	9-11, 13-20

Surrogates - All samples exhibited acceptable surrogate recoveries.

MS/MSD - The MS/MSD sample exhibited acceptable %R and RPD values except the following.

MS/MSD Sample ID	Compound	MS/MSD %R/RPD	Qualifier
20	Phenol	Ok/109%/Ok	None - All ND
	2,4,5-Trichlorophenol	Ok/113%/Ok	None - All ND
	4-Bromophenyl-phenyl ether	Ok/119%/Ok	None - All ND
	Di-n-octyl phthalate	Ok/161%/Ok	None - All ND

Laboratory Control Sample - The LCS samples exhibited acceptable %R values except the following.

LCS ID	Compound	%R	Qualifier	Affected Samples
WG58962-LCS	Phenol	104%	None	All associated ND
WG58992-LCS	Nitrobenzene	121%	None	All associated ND
	Di-n-octylphtalate	149%	None	All associated ND

Internal Standard (IS) Area Performance - All internal standards met response and retention time (RT) criteria.

Method Blank - The method blanks were free of contamination.

Field, Equipment Blank - Field QC results are summarized below.

Blank ID	Compound	Conc. ug/L	Action Level ug/L	Qualifier	Affected Samples
MR08-EB01120608-SS	None - ND	-	-	-	-
MR08-EB01120608-IS	None - ND	-	-	-	-
MR08-EB01120708-SS	None - ND	-	-	-	-
MR08-EB01120708-IS	None - ND	-	-	-	-
MR08-FB01120608	None - ND	-	-	-	-

Field Duplicates - Field duplicate samples were not included in this data package.

Tentatively Identified Compounds (TICs) - TICs were not reported.

Compound Quantitation - No discrepancies were identified.

1

KATAHDIN ANALYTICAL SERVICES
Report of Analytical Results

Client: CH2MHill
Project: TO-009 Lejeune
PO No:
Sample Date: 12/06/08
Received Date: 12/09/08
Extraction Date: 12/10/08
Analysis Date: 23-DEC-2008 16:05
Report Date: 01/04/2009
Matrix: SOIL
% Solids: 85.7

Lab ID: SB7055-1
Client ID: MR08-SS062-08D
SDG: TO9-14
Extracted by: CB
Extraction Method: SW846 3550
Analyst: JCG
Analysis Method: SW846 8270C
Lab Prep Batch: WG58962
Units: ug/Kgdrywt

CAS#	Compound	Flags	Results	DF	PQL	Adj.PQL	Adj.MDL	
100-52-7	Benzaldehyde	~~U~~ UJ	580	1.0	500	580	140	CCH
108-95-2	Phenol	U	580	1.0	500	580	180	
111-44-4	Bis(2-Chloroethyl)ether	U	380	1.0	330	380	94	
95-57-8	2-Chlorophenol	U	580	1.0	500	580	190	
95-48-7	2-Methylphenol	U	700	1.0	600	700	230	
108-60-1	2,2'-Oxybis(1-chloropropane)	U	380	1.0	330	380	100	
98-86-2	Acetophenone	U	700	1.0	600	700	210	
621-64-7	N-Nitroso-di-n-propylamine	U	380	1.0	330	380	97	
65794-96-9	3&4-Methylphenol	U	700	1.0	600	700	220	
67-72-1	Hexachloroethane	U	380	1.0	330	380	110	
98-95-3	Nitrobenzene	~~U~~ UJ	380	1.0	330	380	110	CCH
78-59-1	Isophorone	U	380	1.0	330	380	87	
88-75-5	2-Nitrophenol	U	700	1.0	600	700	190	
105-67-9	2,4-Dimethylphenol	U	580	1.0	500	580	190	
111-91-1	Bis(2-Chloroethoxy)methane	U	380	1.0	330	380	110	
120-83-2	2,4-Dichlorophenol	U	580	1.0	500	580	170	
106-47-8	4-Chloroaniline	U	580	1.0	500	580	140	
105-60-2	Caprolactam	U	580	1.0	500	580	170	
59-50-7	4-Chloro-3-Methylphenol	U	580	1.0	500	580	190	
88-06-2	2,4,6-Trichlorophenol	U	580	1.0	500	580	180	
95-95-4	2,4,5-Trichlorophenol	U	580	1.0	500	580	180	
91-58-7	2-Chloronaphthalene	U	380	1.0	330	380	100	
92-52-4	1,1'-Biphenyl	U	380	1.0	330	380	85	
88-74-4	2-Nitroaniline	U	580	1.0	500	580	87	
131-11-3	Dimethyl Phthalate	U	380	1.0	330	380	91	
606-20-2	2,6-Dinitrotoluene	U	380	1.0	330	380	92	
208-96-8	Acenaphthylene	U	380	1.0	330	380	82	
99-09-2	3-Nitroaniline	U	580	1.0	500	580	110	
83-32-9	Acenaphthene	U	380	1.0	330	380	76	
51-28-5	2,4-Dinitrophenol	U	1400	1.0	1200	1400	440	
132-64-9	Dibenzofuran	U	380	1.0	330	380	92	
100-02-7	4-Nitrophenol	U	1400	1.0	1200	1400	360	
121-14-2	2,4-Dinitrotoluene	U	380	1.0	330	380	99	
84-66-2	Diethylphthalate	U	380	1.0	330	380	93	
7005-72-3	4-Chlorophenyl-phenylether	U	380	1.0	330	380	91	
100-01-6	4-Nitroaniline	U	580	1.0	500	580	160	
534-52-1	4,6-Dinitro-2-Methylphenol	U	1400	1.0	1200	1400	390	
86-30-6	N-Nitrosodiphenylamine	U	770	1.0	660	770	260	
101-55-3	4-Bromophenyl-phenylether	U	380	1.0	330	380	99	
1912-24-9	Atrazine	U	380	1.0	330	380	110	
87-86-5	Pentachlorophenol	U	960	1.0	820	960	280	
120-12-7	Anthracene	U	380	1.0	330	380	98	
86-74-8	Carbazole	U	580	1.0	500	580	130	

LW 3/3/09

KATAHDIN ANALYTICAL SERVICES
Report of Analytical Results

Client: CH2MHill
Project: TO-009 Lejeune
PO No:
Sample Date: 12/06/08
Received Date: 12/09/08
Extraction Date: 12/10/08
Analysis Date: 23-DEC-2008 16:05
Report Date: 01/04/2009
Matrix: SOIL
% Solids: 85.7

Lab ID: SB7055-1
Client ID: MR08-SS062-08D
SDG: TO9-14
Extracted by: CB
Extraction Method: SW846 3550
Analyst: JCG
Analysis Method: SW846 8270C
Lab Prep Batch: WG58962
Units: ug/Kgdrywt

CAS#	Compound	Flags	Results	DF	PQL	Adj.PQL	Adj.MDL	
84-74-2	Di-n-butylphthalate	U	380	1.0	330	380	120	
85-68-7	Butylbenzylphthalate	U	380	1.0	330	380	110	
91-94-1	3,3'-Dichlorobenzidine	~~U~~ UJ	580	1.0	500	580	130	CCH
218-01-9	Chrysene	U	380	1.0	330	380	110	
117-81-7	bis(2-Ethylhexyl)phthalate	U	380	1.0	330	380	110	
117-84-0	Di-n-octylphthalate	U	380	1.0	330	380	250	
367-12-4	2-Fluorophenol		85%					
13127-88-3	Phenol-D6		90%					
4165-60-0	Nitrobenzene-D5		85%					
321-60-8	2-Fluorobiphenyl		87%					
118-79-6	2,4,6-Tribromophenol		94%					
1718-51-0	Terphenyl-D14		109%					

WW 3/3/09

2

KATAHDIN ANALYTICAL SERVICES
Report of Analytical Results

Client: CH2MHill
Project: TO-009 Lejeune
PO No:
Sample Date: 12/06/08
Received Date: 12/09/08
Extraction Date: 12/10/08
Analysis Date: 23-DEC-2008 16:50
Report Date: 01/04/2009
Matrix: SOIL
% Solids: 88.6

Lab ID: SB7055-3
Client ID: MR08-SS062-2-3-08D
SDG: TO9-14
Extracted by: CB
Extraction Method: SW846 3550
Analyst: JCG
Analysis Method: SW846 8270C
Lab Prep Batch: WG58962
Units: ug/Kgdrywt

CAS#	Compound	Flags	Results	DF	PQL	Adj.PQL	Adj.MDL
100-52-7	Benzaldehyde	~~U~~ UJ	560	1.0	500	560	140 CCH
108-95-2	Phenol	U	560	1.0	500	560	180
111-44-4	Bis(2-Chloroethyl)ether	U	370	1.0	330	370	91
95-57-8	2-Chlorophenol	U	560	1.0	500	560	180
95-48-7	2-Methylphenol	U	680	1.0	600	680	220
108-60-1	2,2'-Oxybis(1-chloropropane)	U	370	1.0	330	370	100
98-86-2	Acetophenone	U	680	1.0	600	680	200
621-64-7	N-Nitroso-di-n-propylamine	U	370	1.0	330	370	94
65794-96-9	3&4-Methylphenol	U	680	1.0	600	680	210
67-72-1	Hexachloroethane	U	370	1.0	330	370	110
98-95-3	Nitrobenzene	~~U~~ UJ	370	1.0	330	370	100 CCH
78-59-1	Isophorone	U	370	1.0	330	370	85
88-75-5	2-Nitrophenol	U	680	1.0	600	680	190
105-67-9	2,4-Dimethylphenol	U	560	1.0	500	560	190
111-91-1	Bis(2-Chloroethoxy)methane	U	370	1.0	330	370	110
120-83-2	2,4-Dichlorophenol	U	560	1.0	500	560	170
106-47-8	4-Chloroaniline	U	560	1.0	500	560	130
105-60-2	Caprolactam	U	560	1.0	500	560	160
59-50-7	4-Chloro-3-Methylphenol	U	560	1.0	500	560	190
88-06-2	2,4,6-Trichlorophenol	U	560	1.0	500	560	170
95-95-4	2,4,5-Trichlorophenol	U	560	1.0	500	560	170
91-58-7	2-Chloronaphthalene	U	370	1.0	330	370	98
92-52-4	1,1'-Biphenyl	U	370	1.0	330	370	82
88-74-4	2-Nitroaniline	U	560	1.0	500	560	85
131-11-3	Dimethyl Phthalate	U	370	1.0	330	370	88
606-20-2	2,6-Dinitrotoluene	U	370	1.0	330	370	89
208-96-8	Acenaphthylene	U	370	1.0	330	370	79
99-09-2	3-Nitroaniline	U	560	1.0	500	560	110
83-32-9	Acenaphthene	U	370	1.0	330	370	73
51-28-5	2,4-Dinitrophenol	U	1400	1.0	1200	1400	420
132-64-9	Dibenzofuran	U	370	1.0	330	370	89
100-02-7	4-Nitrophenol	U	1400	1.0	1200	1400	350
121-14-2	2,4-Dinitrotoluene	U	370	1.0	330	370	96
84-66-2	Diethylphthalate	U	370	1.0	330	370	90
7005-72-3	4-Chlorophenyl-phenylether	U	370	1.0	330	370	88
100-01-6	4-Nitroaniline	U	560	1.0	500	560	150
534-52-1	4,6-Dinitro-2-Methylphenol	U	1400	1.0	1200	1400	380
86-30-6	N-Nitrosodiphenylamine	U	740	1.0	660	740	250
101-55-3	4-Bromophenyl-phenylether	U	370	1.0	330	370	96
1912-24-9	Atrazine	U	370	1.0	330	370	100
87-86-5	Pentachlorophenol	U	920	1.0	820	920	270
120-12-7	Anthracene	U	370	1.0	330	370	95
86-74-8	Carbazole	U	560	1.0	500	560	120

lw 3/3/09

2

KATAHDIN ANALYTICAL SERVICES
Report of Analytical Results

Client: CH2MHill
Project: TO-009 Lejeune
PO No:
Sample Date: 12/06/08
Received Date: 12/09/08
Extraction Date: 12/10/08
Analysis Date: 23-DEC-2008 16:50
Report Date: 01/04/2009
Matrix: SOIL
% Solids: 88.6

Lab ID: SB7055-3
Client ID: MR08-SS062-2-3-08D
SDG: TO9-14
Extracted by: CB
Extraction Method: SW846 3550
Analyst: JCG
Analysis Method: SW846 8270C
Lab Prep Batch: WG58962
Units: ug/Kgdrywt

CAS#	Compound	Flags	Results	DF	PQL	Adj.PQL	Adj.MDL	
84-74-2	Di-n-butylphthalate	U	370	1.0	330	370	110	
85-68-7	Butylbenzylphthalate	U	370	1.0	330	370	100	
91-94-1	3,3'-Dichlorobenzidine	~~U~~ UJ	560	1.0	500	560	130	CCH
218-01-9	Chrysene	U	370	1.0	330	370	110	
117-81-7	bis(2-Ethylhexyl)phthalate	U	370	1.0	330	370	110	
117-84-0	Di-n-octylphthalate	U	370	1.0	330	370	240	
367-12-4	2-Fluorophenol		75%					
13127-88-3	Phenol-D6		80%					
4165-60-0	Nitrobenzene-D5		75%					
321-60-8	2-Fluorobiphenyl		78%					
118-79-6	2,4,6-Tribromophenol		84%					
1718-51-0	Terphenyl-D14		109%					

fw 3/3/09

3

KATAHDIN ANALYTICAL SERVICES
Report of Analytical Results

Client: CH2MHill
Project: TO-009 Lejeune
PO No:
Sample Date: 12/06/08
Received Date: 12/09/08
Extraction Date: 12/10/08
Analysis Date: 24-DEC-2008 13:44
Report Date: 01/04/2009
Matrix: SOIL
% Solids: 86.5

Lab ID: SB7055-5
Client ID: MR08-SS063-08D
SDG: TO9-14
Extracted by: CB
Extraction Method: SW846 3550
Analyst: JCG
Analysis Method: SW846 8270C
Lab Prep Batch: WG58962
Units: ug/Kgdrywt

CAS#	Compound	Flags	Results	DF	PQL	Adj.PQL	Adj.MDL	
100-52-7	Benzaldehyde	~~U~~ UJ	580	1.0	500	580	140	CCH
108-95-2	Phenol	U	580	1.0	500	580	180	
111-44-4	Bis(2-Chloroethyl)ether	U	380	1.0	330	380	94	
95-57-8	2-Chlorophenol	U	580	1.0	500	580	190	
95-48-7	2-Methylphenol	U	690	1.0	600	690	230	
108-60-1	2,2'-Oxybis(1-chloropropane)	U	380	1.0	330	380	100	
98-86-2	Acetophenone	U	690	1.0	600	690	200	
621-64-7	N-Nitroso-di-n-propylamine	U	380	1.0	330	380	96	
65794-96-9	3&4-Methylphenol	U	690	1.0	600	690	220	
67-72-1	Hexachloroethane	U	380	1.0	330	380	110	
98-95-3	Nitrobenzene	~~U~~ UJ	380	1.0	330	380	100	CCH
78-59-1	Isophorone	U	380	1.0	330	380	87	
88-75-5	2-Nitrophenol	U	690	1.0	600	690	190	
105-67-9	2,4-Dimethylphenol	U	580	1.0	500	580	190	
111-91-1	Bis(2-Chloroethoxy)methane	U	380	1.0	330	380	110	
120-83-2	2,4-Dichlorophenol	U	580	1.0	500	580	170	
106-47-8	4-Chloroaniline	U	580	1.0	500	580	140	
105-60-2	Caprolactam	U	580	1.0	500	580	170	
59-50-7	4-Chloro-3-Methylphenol	U	580	1.0	500	580	190	
88-06-2	2,4,6-Trichlorophenol	U	580	1.0	500	580	180	
95-95-4	2,4,5-Trichlorophenol	U	580	1.0	500	580	180	
91-58-7	2-Chloronaphthalene	U	380	1.0	330	380	100	
92-52-4	1,1'-Biphenyl	U	380	1.0	330	380	84	
88-74-4	2-Nitroaniline	U	580	1.0	500	580	87	
131-11-3	Dimethyl Phthalate	U	380	1.0	330	380	90	
606-20-2	2,6-Dinitrotoluene	U	380	1.0	330	380	91	
208-96-8	Acenaphthylene	U	380	1.0	330	380	81	
99-09-2	3-Nitroaniline	U	580	1.0	500	580	110	
83-32-9	Acenaphthene	U	380	1.0	330	380	75	
51-28-5	2,4-Dinitrophenol	U	1400	1.0	1200	1400	440	
132-64-9	Dibenzofuran	U	380	1.0	330	380	91	
100-02-7	4-Nitrophenol	U	1400	1.0	1200	1400	360	
121-14-2	2,4-Dinitrotoluene	U	380	1.0	330	380	98	
84-66-2	Diethylphthalate	U	380	1.0	330	380	92	
7005-72-3	4-Chlorophenyl-phenylether	U	380	1.0	330	380	90	
100-01-6	4-Nitroaniline	U	580	1.0	500	580	150	
534-52-1	4,6-Dinitro-2-Methylphenol	U	1400	1.0	1200	1400	390	
86-30-6	N-Nitrosodiphenylamine	U	760	1.0	660	760	250	
101-55-3	4-Bromophenyl-phenylether	U	380	1.0	330	380	98	
1912-24-9	Atrazine	U	380	1.0	330	380	100	
87-86-5	Pentachlorophenol	U	950	1.0	820	950	270	
120-12-7	Anthracene	U	380	1.0	330	380	97	
86-74-8	Carbazole	U	580	1.0	500	580	130	

RW 3/3/09

3

KATAHDIN ANALYTICAL SERVICES
Report of Analytical Results

Client: CH2MHill
Project: TO-009 Lejeune
PO No:
Sample Date: 12/06/08
Received Date: 12/09/08
Extraction Date: 12/10/08
Analysis Date: 24-DEC-2008 13:44
Report Date: 01/04/2009
Matrix: SOIL
% Solids: 86.5

Lab ID: SB7055-5
Client ID: MR08-SS063-08D
SDG: TO9-14
Extracted by: CB
Extraction Method: SW846 3550
Analyst: JCG
Analysis Method: SW846 8270C
Lab Prep Batch: WG58962
Units: ug/Kgdrywt

CAS#	Compound	Flags	Results	DF	PQL	Adj.PQL	Adj.MDL	
84-74-2	Di-n-butylphthalate	U	380	1.0	330	380	120	
85-68-7	Butylbenzylphthalate	U	380	1.0	330	380	110	
91-94-1	3,3'-Dichlorobenzidine	~~U~~ UJ	580	1.0	500	580	130	CCH
218-01-9	Chrysene	U	380	1.0	330	380	110	
117-81-7	bis(2-Ethylhexyl)phthalate	U	380	1.0	330	380	110	
117-84-0	Di-n-octylphthalate	U	380	1.0	330	380	240	
367-12-4	2-Fluorophenol		62%					
13127-88-3	Phenol-D6		80%					
4165-60-0	Nitrobenzene-D5		84%					
321-60-8	2-Fluorobiphenyl		83%					
118-79-6	2,4,6-Tribromophenol		49%					
1718-51-0	Terphenyl-D14		100%					

lw 3/3/09

4

KATAHDIN ANALYTICAL SERVICES
Report of Analytical Results

Client: CH2MHill
Project: TO-009 Lejeune
PO No:
Sample Date: 12/06/08
Received Date: 12/09/08
Extraction Date: 12/10/08
Analysis Date: 24-DEC-2008 14:28
Report Date: 01/04/2009
Matrix: SOIL
% Solids: 87.2

Lab ID: SB7055-7
Client ID: MR08-IS063-2-3-08D
SDG: TO9-14
Extracted by: CB
Extraction Method: SW846 3550
Analyst: JCG
Analysis Method: SW846 8270C
Lab Prep Batch: WG58962
Units: ug/Kgdrywt

CAS#	Compound	Flags	Results	DF	PQL	Adj.PQL	Adj.MDL	
100-52-7	Benzaldehyde	~~U~~ UJ	570	1.0	500	570	140	CCH
108-95-2	Phenol	U	570	1.0	500	570	180	
111-44-4	Bis(2-Chloroethyl)ether	U	380	1.0	330	380	93	
95-57-8	2-Chlorophenol	U	570	1.0	500	570	190	
95-48-7	2-Methylphenol	U	690	1.0	600	690	230	
108-60-1	2,2'-Oxybis(1-chloropropane)	U	380	1.0	330	380	100	
98-86-2	Acetophenone	U	690	1.0	600	690	200	
621-64-7	N-Nitroso-di-n-propylamine	U	380	1.0	330	380	95	
65794-96-9	3&4-Methylphenol	U	690	1.0	600	690	210	
67-72-1	Hexachloroethane	U	380	1.0	330	380	110	
98-95-3	Nitrobenzene	~~U~~ UJ	380	1.0	330	380	100	CCH
78-59-1	Isophorone	U	380	1.0	330	380	86	
88-75-5	2-Nitrophenol	U	690	1.0	600	690	190	
105-67-9	2,4-Dimethylphenol	U	570	1.0	500	570	190	
111-91-1	Bis(2-Chloroethoxy)methane	U	380	1.0	330	380	110	
120-83-2	2,4-Dichlorophenol	U	570	1.0	500	570	170	
106-47-8	4-Chloroaniline	U	570	1.0	500	570	140	
105-60-2	Caprolactam	U	570	1.0	500	570	160	
59-50-7	4-Chloro-3-Methylphenol	U	570	1.0	500	570	190	
88-06-2	2,4,6-Trichlorophenol	U	570	1.0	500	570	180	
95-95-4	2,4,5-Trichlorophenol	U	570	1.0	500	570	180	
91-58-7	2-Chloronaphthalene	U	380	1.0	330	380	100	
92-52-4	1,1'-Biphenyl	U	380	1.0	330	380	84	
88-74-4	2-Nitroaniline	U	570	1.0	500	570	86	
131-11-3	Dimethyl Phthalate	U	380	1.0	330	380	89	
606-20-2	2,6-Dinitrotoluene	U	380	1.0	330	380	90	
208-96-8	Acenaphthylene	U	380	1.0	330	380	80	
99-09-2	3-Nitroaniline	U	570	1.0	500	570	110	
83-32-9	Acenaphthene	U	380	1.0	330	380	74	
51-28-5	2,4-Dinitrophenol	U	1400	1.0	1200	1400	430	
132-64-9	Dibenzofuran	U	380	1.0	330	380	90	
100-02-7	4-Nitrophenol	U	1400	1.0	1200	1400	350	
121-14-2	2,4-Dinitrotoluene	U	380	1.0	330	380	97	
84-66-2	Diethylphthalate	U	380	1.0	330	380	92	
7005-72-3	4-Chlorophenyl-phenylether	U	380	1.0	330	380	89	
100-01-6	4-Nitroaniline	U	570	1.0	500	570	150	
534-52-1	4,6-Dinitro-2-Methylphenol	U	1400	1.0	1200	1400	390	
86-30-6	N-Nitrosodiphenylamine	U	760	1.0	660	760	250	
101-55-3	4-Bromophenyl-phenylether	U	380	1.0	330	380	97	
1912-24-9	Atrazine	U	380	1.0	330	380	100	
87-86-5	Pentachlorophenol	U	940	1.0	820	940	270	
120-12-7	Anthracene	U	380	1.0	330	380	96	
86-74-8	Carbazole	U	570	1.0	500	570	130	

lW 3/3/09

4

KATAHDIN ANALYTICAL SERVICES
Report of Analytical Results

Client: CH2MHill
Project: TO-009 Lejeune
PO No:
Sample Date: 12/06/08
Received Date: 12/09/08
Extraction Date: 12/10/08
Analysis Date: 24-DEC-2008 14:28
Report Date: 01/04/2009
Matrix: SOIL
% Solids: 87.2

Lab ID: SB7055-7
Client ID: MR08-IS063-2-3-08D
SDG: TO9-14
Extracted by: CB
Extraction Method: SW846 3550
Analyst: JCG
Analysis Method: SW846 8270C
Lab Prep Batch: WG58962
Units: ug/Kgdrywt

CAS#	Compound	Flags	Results	DF	PQL	Adj.PQL	Adj.MDL	
84-74-2	Di-n-butylphthalate	U	380	1.0	330	380	120	
85-68-7	Butylbenzylphthalate	U	380	1.0	330	380	110	
91-94-1	3,3'-Dichlorobenzidine	~~U~~ UJ	570	1.0	500	570	130	CCH
218-01-9	Chrysene	U	380	1.0	330	380	110	
117-81-7	bis(2-Ethylhexyl)phthalate	J	240	1.0	330	380	110	
117-84-0	Di-n-octylphthalate	U	380	1.0	330	380	240	
367-12-4	2-Fluorophenol		79%					
13127-88-3	Phenol-D6		86%					
4165-60-0	Nitrobenzene-D5		86%					
321-60-8	2-Fluorobiphenyl		84%					
118-79-6	2,4,6-Tribromophenol		65%					
1718-51-0	Terphenyl-D14		108%					

kew 3/3/09

KATAHDIN ANALYTICAL SERVICES
Report of Analytical Results

Client: CH2MHill
Project: TO-009 Lejeune
PO No:
Sample Date: 12/06/08
Received Date: 12/09/08
Extraction Date: 12/10/08
Analysis Date: 24-DEC-2008 15:13
Report Date: 01/04/2009
Matrix: SOIL
% Solids: 86.9

Lab ID: SB7055-9
Client ID: MR08-SS064-08D
SDG: TO9-14
Extracted by: CB
Extraction Method: SW846 3550
Analyst: JCG
Analysis Method: SW846 8270C
Lab Prep Batch: WG58962
Units: ug/Kgdrywt

CAS#	Compound	Flags	Results	DF	PQL	Adj.PQL	Adj.MDL	
100-52-7	Benzaldehyde	~~U~~ UJ	580	1.0	500	580	140	CCH
108-95-2	Phenol	U	580	1.0	500	580	180	
111-44-4	Bis(2-Chloroethyl)ether	U	380	1.0	330	380	93	
95-57-8	2-Chlorophenol	U	580	1.0	500	580	190	
95-48-7	2-Methylphenol	U	690	1.0	600	690	230	
108-60-1	2,2'-Oxybis(1-chloropropane)	U	380	1.0	330	380	100	
98-86-2	Acetophenone	U	690	1.0	600	690	200	
621-64-7	N-Nitroso-di-n-propylamine	U	380	1.0	330	380	95	
65794-96-9	3&4-Methylphenol	U	690	1.0	600	690	220	
67-72-1	Hexachloroethane	U	380	1.0	330	380	110	
98-95-3	Nitrobenzene	~~U~~ UJ	380	1.0	330	380	100	CCH
78-59-1	Isophorone	U	380	1.0	330	380	86	
88-75-5	2-Nitrophenol	U	690	1.0	600	690	190	
105-67-9	2,4-Dimethylphenol	U	580	1.0	500	580	190	
111-91-1	Bis(2-Chloroethoxy)methane	U	380	1.0	330	380	110	
120-83-2	2,4-Dichlorophenol	U	580	1.0	500	580	170	
106-47-8	4-Chloroaniline	U	580	1.0	500	580	140	
105-60-2	Caprolactam	U	580	1.0	500	580	160	
59-50-7	4-Chloro-3-Methylphenol	U	580	1.0	500	580	190	
88-06-2	2,4,6-Trichlorophenol	U	580	1.0	500	580	180	
95-95-4	2,4,5-Trichlorophenol	U	580	1.0	500	580	180	
91-58-7	2-Chloronaphthalene	U	380	1.0	330	380	100	
92-52-4	1,1'-Biphenyl	U	380	1.0	330	380	84	
88-74-4	2-Nitroaniline	U	580	1.0	500	580	86	
131-11-3	Dimethyl Phthalate	U	380	1.0	330	380	90	
606-20-2	2,6-Dinitrotoluene	U	380	1.0	330	380	91	
208-96-8	Acenaphthylene	U	380	1.0	330	380	80	
99-09-2	3-Nitroaniline	U	580	1.0	500	580	110	
83-32-9	Acenaphthene	U	380	1.0	330	380	75	
51-28-5	2,4-Dinitrophenol	U	1400	1.0	1200	1400	430	
132-64-9	Dibenzofuran	U	380	1.0	330	380	91	
100-02-7	4-Nitrophenol	U	1400	1.0	1200	1400	360	
121-14-2	2,4-Dinitrotoluene	U	380	1.0	330	380	98	
84-66-2	Diethylphthalate	U	380	1.0	330	380	92	
7005-72-3	4-Chlorophenyl-phenylether	U	380	1.0	330	380	90	
100-01-6	4-Nitroaniline	U	580	1.0	500	580	150	
534-52-1	4,6-Dinitro-2-Methylphenol	U	1400	1.0	1200	1400	390	
86-30-6	N-Nitrosodiphenylamine	U	760	1.0	660	760	250	
101-55-3	4-Bromophenyl-phenylether	U	380	1.0	330	380	98	
1912-24-9	Atrazine	U	380	1.0	330	380	100	
87-86-5	Pentachlorophenol	U	940	1.0	820	940	270	
120-12-7	Anthracene	U	380	1.0	330	380	97	
86-74-8	Carbazole	U	580	1.0	500	580	130	

MW 3/3/09

5

KATAHDIN ANALYTICAL SERVICES
Report of Analytical Results

Client: CH2MHill
Project: TO-009 Lejeune
PO No:
Sample Date: 12/06/08
Received Date: 12/09/08
Extraction Date: 12/10/08
Analysis Date: 24-DEC-2008 15:13
Report Date: 01/04/2009
Matrix: SOIL
% Solids: 86.9

Lab ID: SB7055-9
Client ID: MR08-SS064-08D
SDG: TO9-14
Extracted by: CB
Extraction Method: SW846 3550
Analyst: JCG
Analysis Method: SW846 8270C
Lab Prep Batch: WG58962
Units: ug/Kgdrywt

CAS#	Compound	Flags	Results	DF	PQL	Adj.PQL	Adj.MDL	
84-74-2	Di-n-butylphthalate	U	380	1.0	330	380	120	
85-68-7	Butylbenzylphthalate	U	380	1.0	330	380	110	
91-94-1	3,3'-Dichlorobenzidine	~~U~~ UJ	580	1.0	500	580	130	CCH
218-01-9	Chrysene	U	380	1.0	330	380	110	
117-81-7	bis(2-Ethylhexyl)phthalate	U	380	1.0	330	380	110	
117-84-0	Di-n-octylphthalate	U	380	1.0	330	380	240	
367-12-4	2-Fluorophenol		82%					
13127-88-3	Phenol-D6		84%					
4165-60-0	Nitrobenzene-D5		80%					
321-60-8	2-Fluorobiphenyl		83%					
118-79-6	2,4,6-Tribromophenol		90%					
1718-51-0	Terphenyl-D14		109%					

lwo
3/3/09

6

KATAHDIN ANALYTICAL SERVICES
Report of Analytical Results

Client: CH2MHill
Project: TO-009 Lejeune
PO No:
Sample Date: 12/06/08
Received Date: 12/09/08
Extraction Date: 12/10/08
Analysis Date: 29-DEC-2008 22:10
Report Date: 01/04/2009
Matrix: SOIL
% Solids: 89.7

Lab ID: SB7055-11
Client ID: MR08-IS064-2-3-08D
SDG: TO9-14
Extracted by: CB
Extraction Method: SW846 3550
Analyst: JCG
Analysis Method: SW846 8270C
Lab Prep Batch: WG58962
Units: ug/Kgdrywt

CAS#	Compound	Flags	Results	DF	PQL	Adj.PQL	Adj.MDL	
100-52-7	Benzaldehyde	~~U~~ UJ	560	1.0	500	560	130	CCH
108-95-2	Phenol	U	560	1.0	500	560	170	
111-44-4	Bis(2-Chloroethyl)ether	U	370	1.0	330	370	90	
95-57-8	2-Chlorophenol	U	560	1.0	500	560	180	
95-48-7	2-Methylphenol	U	670	1.0	600	670	220	
108-60-1	2,2'-Oxybis(1-chloropropane)	U	370	1.0	330	370	99	
98-86-2	Acetophenone	U	670	1.0	600	670	200	
621-64-7	N-Nitroso-di-n-propylamine	U	370	1.0	330	370	92	
65794-96-9	3&4-Methylphenol	U	670	1.0	600	670	210	
67-72-1	Hexachloroethane	U	370	1.0	330	370	110	
98-95-3	Nitrobenzene	~~U~~ UJ	370	1.0	330	370	100	CCH
78-59-1	Isophorone	U	370	1.0	330	370	84	
88-75-5	2-Nitrophenol	U	670	1.0	600	670	190	
105-67-9	2,4-Dimethylphenol	U	560	1.0	500	560	180	
111-91-1	Bis(2-Chloroethoxy)methane	U	370	1.0	330	370	110	
120-83-2	2,4-Dichlorophenol	U	560	1.0	500	560	170	
106-47-8	4-Chloroaniline	U	560	1.0	500	560	130	
105-60-2	Caprolactam	U	560	1.0	500	560	160	
59-50-7	4-Chloro-3-Methylphenol	U	560	1.0	500	560	180	
88-06-2	2,4,6-Trichlorophenol	U	560	1.0	500	560	170	
95-95-4	2,4,5-Trichlorophenol	U	560	1.0	500	560	170	
91-58-7	2-Chloronaphthalene	U	370	1.0	330	370	97	
92-52-4	1,1'-Biphenyl	U	370	1.0	330	370	81	
88-74-4	2-Nitroaniline	U	560	1.0	500	560	84	
131-11-3	Dimethyl Phthalate	U	370	1.0	330	370	87	
606-20-2	2,6-Dinitrotoluene	U	370	1.0	330	370	88	
208-96-8	Acenaphthylene	U	370	1.0	330	370	78	
99-09-2	3-Nitroaniline	U	560	1.0	500	560	100	
83-32-9	Acenaphthene	U	370	1.0	330	370	72	
51-28-5	2,4-Dinitrophenol	~~U~~ UJ	1300	1.0	1200	1300	420	CCH
132-64-9	Dibenzofuran	U	370	1.0	330	370	88	
100-02-7	4-Nitrophenol	U	1300	1.0	1200	1300	340	
121-14-2	2,4-Dinitrotoluene	U	370	1.0	330	370	95	
84-66-2	Diethylphthalate	U	370	1.0	330	370	89	
7005-72-3	4-Chlorophenyl-phenylether	U	370	1.0	330	370	87	
100-01-6	4-Nitroaniline	~~U~~ UJ	560	1.0	500	560	150	CCH
534-52-1	4,6-Dinitro-2-Methylphenol	U	1300	1.0	1200	1300	380	
86-30-6	N-Nitrosodiphenylamine	U	740	1.0	660	740	240	
101-55-3	4-Bromophenyl-phenylether	U	370	1.0	330	370	95	
1912-24-9	Atrazine	U	370	1.0	330	370	100	
87-86-5	Pentachlorophenol	U	910	1.0	820	910	260	
120-12-7	Anthracene	U	370	1.0	330	370	94	
86-74-8	Carbazole	U	560	1.0	500	560	120	

MW 3/3/09

6

KATAHDIN ANALYTICAL SERVICES
Report of Analytical Results

Client: CH2MHill
Project: TO-009 Lejeune
PO No:
Sample Date: 12/06/08
Received Date: 12/09/08
Extraction Date: 12/10/08
Analysis Date: 29-DEC-2008 22:10
Report Date: 01/04/2009
Matrix: SOIL
% Solids: 89.7

Lab ID: SB7055-11
Client ID: MR08-IS064-2-3-08D
SDG: TO9-14
Extracted by: CB
Extraction Method: SW846 3550
Analyst: JCG
Analysis Method: SW846 8270C
Lab Prep Batch: WG58962
Units: ug/Kgdrywt

CAS#	Compound	Flags	Results	DF	PQL	Adj.PQL	Adj.MDL	
84-74-2	Di-n-butylphthalate	U	370	1.0	330	370	110	
85-68-7	Butylbenzylphthalate	~~U~~ UJ	370	1.0	330	370	100	CCH
91-94-1	3,3'-Dichlorobenzidine	U	560	1.0	500	560	130	
218-01-9	Chrysene	U	370	1.0	330	370	100	
117-81-7	bis(2-Ethylhexyl)phthalate	~~J~~ J	280	1.0	330	370	110	CCH
117-84-0	Di-n-octylphthalate	~~U~~ UJ	370	1.0	330	370	240	CCH
367-12-4	2-Fluorophenol		60%					
13127-88-3	Phenol-D6		77%					
4165-60-0	Nitrobenzene-D5		72%					
321-60-8	2-Fluorobiphenyl		75%					
118-79-6	2,4,6-Tribromophenol		53%					
1718-51-0	Terphenyl-D14		110%					

lw 3/3/09

7

KATAHDIN ANALYTICAL SERVICES
Report of Analytical Results

Client: CH2MHill
Project: TO-009 Lejeune
PO No:
Sample Date: 12/06/08
Received Date: 12/09/08
Extraction Date: 12/11/08
Analysis Date: 29-DEC-2008 22:53
Report Date: 01/04/2009
Matrix: SOIL
% Solids: 75.8

Lab ID: SB7055-13
Client ID: MR08-SS065-08D
SDG: TO9-14
Extracted by: CB
Extraction Method: SW846 3550
Analyst: JCG
Analysis Method: SW846 8270C
Lab Prep Batch: WG58992
Units: ug/Kgdrywt

CAS#	Compound	Flags	Results	DF	PQL	Adj.PQL	Adj.MDL	
100-52-7	Benzaldehyde	~~U~~ UJ	660	1.0	500	660	160	CCH
108-95-2	Phenol	U	660	1.0	500	660	200	
111-44-4	Bis(2-Chloroethyl)ether	U	440	1.0	330	440	110	
95-57-8	2-Chlorophenol	U	660	1.0	500	660	220	
95-48-7	2-Methylphenol	U	790	1.0	600	790	260	
108-60-1	2,2'-Oxybis(1-chloropropane)	U	440	1.0	330	440	120	
98-86-2	Acetophenone	U	790	1.0	600	790	230	
621-64-7	N-Nitroso-di-n-propylamine	U	440	1.0	330	440	110	
65794-96-9	3&4-Methylphenol	U	790	1.0	600	790	250	
67-72-1	Hexachloroethane	U	440	1.0	330	440	130	
98-95-3	Nitrobenzene	~~U~~ UJ	440	1.0	330	440	120	CCH
78-59-1	Isophorone	U	440	1.0	330	440	99	
88-75-5	2-Nitrophenol	U	790	1.0	600	790	220	
105-67-9	2,4-Dimethylphenol	U	660	1.0	500	660	220	
111-91-1	Bis(2-Chloroethoxy)methane	U	440	1.0	330	440	130	
120-83-2	2,4-Dichlorophenol	U	660	1.0	500	660	200	
106-47-8	4-Chloroaniline	U	660	1.0	500	660	160	
105-60-2	Caprolactam	U	660	1.0	500	660	190	
59-50-7	4-Chloro-3-Methylphenol	U	660	1.0	500	660	220	
88-06-2	2,4,6-Trichlorophenol	U	660	1.0	500	660	200	
95-95-4	2,4,5-Trichlorophenol	U	660	1.0	500	660	200	
91-58-7	2-Chloronaphthalene	U	440	1.0	330	440	110	
92-52-4	1,1'-Biphenyl	U	440	1.0	330	440	96	
88-74-4	2-Nitroaniline	U	660	1.0	500	660	99	
131-11-3	Dimethyl Phthalate	U	440	1.0	330	440	100	
606-20-2	2,6-Dinitrotoluene	U	440	1.0	330	440	100	
208-96-8	Acenaphthylene	U	440	1.0	330	440	92	
99-09-2	3-Nitroaniline	U	660	1.0	500	660	120	
83-32-9	Acenaphthene	U	440	1.0	330	440	86	
51-28-5	2,4-Dinitrophenol	~~U~~ UJ	1600	1.0	1200	1600	500	CCH
132-64-9	Dibenzofuran	U	440	1.0	330	440	100	
100-02-7	4-Nitrophenol	U	1600	1.0	1200	1600	410	
121-14-2	2,4-Dinitrotoluene	U	440	1.0	330	440	110	
84-66-2	Diethylphthalate	U	440	1.0	330	440	100	
7005-72-3	4-Chlorophenyl-phenylether	U	440	1.0	330	440	100	
100-01-6	4-Nitroaniline	~~U~~ UJ	660	1.0	500	660	180	CCH
534-52-1	4,6-Dinitro-2-Methylphenol	U	1600	1.0	1200	1600	440	
86-30-6	N-Nitrosodiphenylamine	U	870	1.0	660	870	290	
101-55-3	4-Bromophenyl-phenylether	U	440	1.0	330	440	110	
1912-24-9	Atrazine	U	440	1.0	330	440	120	
87-86-5	Pentachlorophenol	U	1100	1.0	820	1100	310	
120-12-7	Anthracene	U	440	1.0	330	440	110	
86-74-8	Carbazole	U	660	1.0	500	660	150	

lws
3/3/09

7

KATAHDIN ANALYTICAL SERVICES
Report of Analytical Results

Client: CH2MHill
Project: TO-009 Lejeune
PO No:
Sample Date: 12/06/08
Received Date: 12/09/08
Extraction Date: 12/11/08
Analysis Date: 29-DEC-2008 22:53
Report Date: 01/04/2009
Matrix: SOIL
% Solids: 75.8

Lab ID: SB7055-13
Client ID: MR08-SS065-08D
SDG: TO9-14
Extracted by: CB
Extraction Method: SW846 3550
Analyst: JCG
Analysis Method: SW846 8270C
Lab Prep Batch: WG58992
Units: ug/Kgdrywt

CAS#	Compound	Flags	Results	DF	PQL	Adj.PQL	Adj.MDL	
84-74-2	Di-n-butylphthalate	U	440	1.0	330	440	130	
85-68-7	Butylbenzylphthalate	~~U~~ UJ	440	1.0	330	440	120	CCH
91-94-1	3,3'-Dichlorobenzidine	U	660	1.0	500	660	150	
218-01-9	Chrysene	U	440	1.0	330	440	120	
117-81-7	bis(2-Ethylhexyl)phthalate	~~J~~ J	140	1.0	330	440	130	CCH
117-84-0	Di-n-octylphthalate	~~U~~ UJ	440	1.0	330	440	280	CCH
367-12-4	2-Fluorophenol		60%					
13127-88-3	Phenol-D6		77%					
4165-60-0	Nitrobenzene-D5		67%					
321-60-8	2-Fluorobiphenyl		76%					
118-79-6	2,4,6-Tribromophenol		74%					
1718-51-0	Terphenyl-D14		104%					

kcw 3/3/09

B

KATAHDIN ANALYTICAL SERVICES
Report of Analytical Results

Client: CH2MHill
Project: TO-009 Lejeune
PO No:
Sample Date: 12/06/08
Received Date: 12/09/08
Extraction Date: 12/11/08
Analysis Date: 29-DEC-2008 23:35
Report Date: 01/04/2009
Matrix: SOIL
% Solids: 81.6

Lab ID: SB7055-15
Client ID: MR08-IS065-1-2-08D
SDG: TO9-14
Extracted by: CB
Extraction Method: SW846 3550
Analyst: JCG
Analysis Method: SW846 8270C
Lab Prep Batch: WG58992
Units: ug/Kgdrywt

CAS#	Compound	Flags	Results	DF	PQL	Adj.PQL	Adj.MDL	
100-52-7	Benzaldehyde	~~U~~ UJ	610	1.0	500	610	150	CCH
108-95-2	Phenol	U	610	1.0	500	610	190	
111-44-4	Bis(2-Chloroethyl)ether	U	400	1.0	330	400	99	
95-57-8	2-Chlorophenol	U	610	1.0	500	610	200	
95-48-7	2-Methylphenol	U	740	1.0	600	740	240	
108-60-1	2,2'-Oxybis(1-chloropropane)	U	400	1.0	330	400	110	
98-86-2	Acetophenone	U	740	1.0	600	740	220	
621-64-7	N-Nitroso-di-n-propylamine	U	400	1.0	330	400	100	
65794-96-9	3&4-Methylphenol	U	740	1.0	600	740	230	
67-72-1	Hexachloroethane	U	400	1.0	330	400	120	
98-95-3	Nitrobenzene	~~U~~ UJ	400	1.0	330	400	110	CCH
78-59-1	Isophorone	U	400	1.0	330	400	92	
88-75-5	2-Nitrophenol	U	740	1.0	600	740	200	
105-67-9	2,4-Dimethylphenol	U	610	1.0	500	610	200	
111-91-1	Bis(2-Chloroethoxy)methane	U	400	1.0	330	400	120	
120-83-2	2,4-Dichlorophenol	U	610	1.0	500	610	180	
106-47-8	4-Chloroaniline	U	610	1.0	500	610	140	
105-60-2	Caprolactam	U	610	1.0	500	610	180	
59-50-7	4-Chloro-3-Methylphenol	U	610	1.0	500	610	200	
88-06-2	2,4,6-Trichlorophenol	U	610	1.0	500	610	190	
95-95-4	2,4,5-Trichlorophenol	U	610	1.0	500	610	190	
91-58-7	2-Chloronaphthalene	U	400	1.0	330	400	110	
92-52-4	1,1'-Biphenyl	U	400	1.0	330	400	89	
88-74-4	2-Nitroaniline	U	610	1.0	500	610	92	
131-11-3	Dimethyl Phthalate	U	400	1.0	330	400	96	
606-20-2	2,6-Dinitrotoluene	U	400	1.0	330	400	97	
208-96-8	Acenaphthylene	U	400	1.0	330	400	86	
99-09-2	3-Nitroaniline	U	610	1.0	500	610	120	
83-32-9	Acenaphthene	U	400	1.0	330	400	80	
51-28-5	2,4-Dinitrophenol	~~U~~ UJ	1500	1.0	1200	1500	460	CCH
132-64-9	Dibenzofuran	U	400	1.0	330	400	97	
100-02-7	4-Nitrophenol	U	1500	1.0	1200	1500	380	
121-14-2	2,4-Dinitrotoluene	U	400	1.0	330	400	100	
84-66-2	Diethylphthalate	U	400	1.0	330	400	98	
7005-72-3	4-Chlorophenyl-phenylether	U	400	1.0	330	400	96	
100-01-6	4-Nitroaniline	~~U~~ UJ	610	1.0	500	610	160	CCH
534-52-1	4,6-Dinitro-2-Methylphenol	U	1500	1.0	1200	1500	410	
86-30-6	N-Nitrosodiphenylamine	U	810	1.0	660	810	270	
101-55-3	4-Bromophenyl-phenylether	U	400	1.0	330	400	100	
1912-24-9	Atrazine	U	400	1.0	330	400	110	
87-86-5	Pentachlorophenol	U	1000	1.0	820	1000	290	
120-12-7	Anthracene	U	400	1.0	330	400	100	
86-74-8	Carbazole	U	610	1.0	500	610	140	

LW 3/3/09

8

KATAHDIN ANALYTICAL SERVICES
Report of Analytical Results

Client: CH2MHill
Project: TO-009 Lejeune
PO No:
Sample Date: 12/06/08
Received Date: 12/09/08
Extraction Date: 12/11/08
Analysis Date: 29-DEC-2008 23:35
Report Date: 01/04/2009
Matrix: SOIL
% Solids: 81.6

Lab ID: SB7055-15
Client ID: MR08-IS065-1-2-08D
SDG: TO9-14
Extracted by: CB
Extraction Method: SW846 3550
Analyst: JCG
Analysis Method: SW846 8270C
Lab Prep Batch: WG58992
Units: ug/Kgdrywt

CAS#	Compound	Flags	Results	DF	PQL	Adj.PQL	Adj.MDL	
84-74-2	Di-n-butylphthalate	U	400	1.0	330	400	120	
85-68-7	Butylbenzylphthalate	~~U~~ UJ	400	1.0	330	400	110	CCH
91-94-1	3,3'-Dichlorobenzidine	U	610	1.0	500	610	140	
218-01-9	Chrysene	U	400	1.0	330	400	120	
117-81-7	bis(2-Ethylhexyl)phthalate	~~J~~ J	130	1.0	330	400	120	CCH
117-84-0	Di-n-octylphthalate	~~U~~ UJ	400	1.0	330	400	260	CCH
367-12-4	2-Fluorophenol		66%					
13127-88-3	Phenol-D6		80%					
4165-60-0	Nitrobenzene-D5		66%					
321-60-8	2-Fluorobiphenyl		73%					
118-79-6	2,4,6-Tribromophenol		82%					
1718-51-0	Terphenyl-D14		109%					

KW 3/3/09

9

KATAHDIN ANALYTICAL SERVICES
Report of Analytical Results

Client: CH2MHill
Project: TO-009 Lejeune
PO No:
Sample Date: 12/06/08
Received Date: 12/09/08
Extraction Date: 12/11/08
Analysis Date: 30-DEC-2008 23:14
Report Date: 01/04/2009
Matrix: SOIL
% Solids: 80.6

Lab ID: SB7055-17
Client ID: MR08-SS066-08D
SDG: TO9-14
Extracted by: CB
Extraction Method: SW846 3550
Analyst: JCG
Analysis Method: SW846 8270C
Lab Prep Batch: WG58992
Units: ug/Kgdrywt

CAS#	Compound	Flags	Results	DF	PQL	Adj.PQL	Adj.MDL	
100-52-7	Benzaldehyde	~~U~~ UJ	620	1.0	500	620	150	CCH
108-95-2	Phenol	U	620	1.0	500	620	190	
111-44-4	Bis(2-Chloroethyl)ether	U	410	1.0	330	410	100	
95-57-8	2-Chlorophenol	U	620	1.0	500	620	200	
95-48-7	2-Methylphenol	U	740	1.0	600	740	250	
108-60-1	2,2'-Oxybis(1-chloropropane)	U	410	1.0	330	410	110	
98-86-2	Acetophenone	U	740	1.0	600	740	220	
621-64-7	N-Nitroso-di-n-propylamine	U	410	1.0	330	410	100	
65794-96-9	3&4-Methylphenol	U	740	1.0	600	740	230	
67-72-1	Hexachloroethane	U	410	1.0	330	410	120	
98-95-3	Nitrobenzene	~~U~~ UJ	410	1.0	330	410	110	CCH
78-59-1	Isophorone	U	410	1.0	330	410	93	
88-75-5	2-Nitrophenol	U	740	1.0	600	740	210	
105-67-9	2,4-Dimethylphenol	U	620	1.0	500	620	200	
111-91-1	Bis(2-Chloroethoxy)methane	U	410	1.0	330	410	120	
120-83-2	2,4-Dichlorophenol	U	620	1.0	500	620	190	
106-47-8	4-Chloroaniline	U	620	1.0	500	620	150	
105-60-2	Caprolactam	U	620	1.0	500	620	180	
59-50-7	4-Chloro-3-Methylphenol	U	620	1.0	500	620	210	
88-06-2	2,4,6-Trichlorophenol	U	620	1.0	500	620	190	
95-95-4	2,4,5-Trichlorophenol	U	620	1.0	500	620	190	
91-58-7	2-Chloronaphthalene	U	410	1.0	330	410	110	
92-52-4	1,1'-Biphenyl	U	410	1.0	330	410	90	
88-74-4	2-Nitroaniline	U	620	1.0	500	620	93	
131-11-3	Dimethyl Phthalate	U	410	1.0	330	410	97	
606-20-2	2,6-Dinitrotoluene	U	410	1.0	330	410	98	
208-96-8	Acenaphthylene	U	410	1.0	330	410	87	
99-09-2	3-Nitroaniline	U	620	1.0	500	620	120	
83-32-9	Acenaphthene	U	410	1.0	330	410	81	
51-28-5	2,4-Dinitrophenol	U	1500	1.0	1200	1500	470	
132-64-9	Dibenzofuran	U	410	1.0	330	410	98	
100-02-7	4-Nitrophenol	U	1500	1.0	1200	1500	380	
121-14-2	2,4-Dinitrotoluene	U	410	1.0	330	410	100	
84-66-2	Diethylphthalate	U	410	1.0	330	410	99	
7005-72-3	4-Chlorophenyl-phenylether	U	410	1.0	330	410	97	
100-01-6	4-Nitroaniline	U	620	1.0	500	620	170	
534-52-1	4,6-Dinitro-2-Methylphenol	U	1500	1.0	1200	1500	420	
86-30-6	N-Nitrosodiphenylamine	U	820	1.0	660	820	270	
101-55-3	4-Bromophenyl-phenylether	U	410	1.0	330	410	100	
1912-24-9	Atrazine	U	410	1.0	330	410	110	
87-86-5	Pentachlorophenol	U	1000	1.0	820	1000	290	
120-12-7	Anthracene	U	410	1.0	330	410	100	
86-74-8	Carbazole	U	620	1.0	500	620	140	

MW 3/3/09

KATAHDIN ANALYTICAL SERVICES
Report of Analytical Results

Client: CH2MHill
Project: TO-009 Lejeune
PO No:
Sample Date: 12/06/08
Received Date: 12/09/08
Extraction Date: 12/11/08
Analysis Date: 30-DEC-2008 23:14
Report Date: 01/04/2009
Matrix: SOIL
% Solids: 80.6

Lab ID: SB7055-17
Client ID: MR08-SS066-08D
SDG: TO9-14
Extracted by: CB
Extraction Method: SW846 3550
Analyst: JCG
Analysis Method: SW846 8270C
Lab Prep Batch: WG58992
Units: ug/Kgdrywt

CAS#	Compound	Flags	Results	DF	PQL	Adj.PQL	Adj.MDL
84-74-2	Di-n-butylphthalate	U	410	1.0	330	410	120
85-68-7	Butylbenzylphthalate	U	410	1.0	330	410	120
91-94-1	3,3'-Dichlorobenzidine	U	620	1.0	500	620	140
218-01-9	Chrysene	U	410	1.0	330	410	120
117-81-7	bis(2-Ethylhexyl)phthalate	U	410	1.0	330	410	120
117-84-0	Di-n-octylphthalate	U	410	1.0	330	410	260
367-12-4	2-Fluorophenol		76%				
13127-88-3	Phenol-D6		90%				
4165-60-0	Nitrobenzene-D5		81%				
321-60-8	2-Fluorobiphenyl		83%				
118-79-6	2,4,6-Tribromophenol		99%				
1718-51-0	Terphenyl-D14		95%				

lw 3/3/09

KATAHDIN ANALYTICAL SERVICES
Report of Analytical Results

Client: CH2MHill
Project: TO-009 Lejeune
PO No:
Sample Date: 12/06/08
Received Date: 12/09/08
Extraction Date: 12/11/08
Analysis Date: 30-DEC-2008 23:55
Report Date: 01/04/2009
Matrix: SOIL
% Solids: 68.6

Lab ID: SB7055-19
Client ID: MR08-IS066-2-3-08D
SDG: TO9-14
Extracted by: CB
Extraction Method: SW846 3550
Analyst: JCG
Analysis Method: SW846 8270C
Lab Prep Batch: WG58992
Units: ug/Kgdrywt

CAS#	Compound	Flags	Results	DF	PQL	Adj.PQL	Adj.MDL	
100-52-7	Benzaldehyde	~~J~~ UJ	730	1.0	500	730	170	CCH
108-95-2	Phenol	U	730	1.0	500	730	230	
111-44-4	Bis(2-Chloroethyl)ether	U	480	1.0	330	480	120	
95-57-8	2-Chlorophenol	U	730	1.0	500	730	240	
95-48-7	2-Methylphenol	U	870	1.0	600	870	290	
108-60-1	2,2'-Oxybis(1-chloropropane)	U	480	1.0	330	480	130	
98-86-2	Acetophenone	U	870	1.0	600	870	260	
621-64-7	N-Nitroso-di-n-propylamine	U	480	1.0	330	480	120	
65794-96-9	3&4-Methylphenol	U	870	1.0	600	870	270	
67-72-1	Hexachloroethane	U	480	1.0	330	480	140	
98-95-3	Nitrobenzene	~~J~~ UJ	480	1.0	330	480	130	CCH
78-59-1	Isophorone	U	480	1.0	330	480	110	
88-75-5	2-Nitrophenol	U	870	1.0	600	870	240	
105-67-9	2,4-Dimethylphenol	U	730	1.0	500	730	240	
111-91-1	Bis(2-Chloroethoxy)methane	U	480	1.0	330	480	140	
120-83-2	2,4-Dichlorophenol	U	730	1.0	500	730	220	
106-47-8	4-Chloroaniline	U	730	1.0	500	730	170	
105-60-2	Caprolactam	U	730	1.0	500	730	210	
59-50-7	4-Chloro-3-Methylphenol	U	730	1.0	500	730	240	
88-06-2	2,4,6-Trichlorophenol	U	730	1.0	500	730	220	
95-95-4	2,4,5-Trichlorophenol	U	730	1.0	500	730	220	
91-58-7	2-Chloronaphthalene	U	480	1.0	330	480	130	
92-52-4	1,1'-Biphenyl	U	480	1.0	330	480	110	
88-74-4	2-Nitroaniline	U	730	1.0	500	730	110	
131-11-3	Dimethyl Phthalate	U	480	1.0	330	480	110	
606-20-2	2,6-Dinitrotoluene	U	480	1.0	330	480	120	
208-96-8	Acenaphthylene	U	480	1.0	330	480	100	
99-09-2	3-Nitroaniline	U	730	1.0	500	730	140	
83-32-9	Acenaphthene	U	480	1.0	330	480	95	
51-28-5	2,4-Dinitrophenol	U	1700	1.0	1200	1700	550	
132-64-9	Dibenzofuran	U	480	1.0	330	480	120	
100-02-7	4-Nitrophenol	U	1700	1.0	1200	1700	450	
121-14-2	2,4-Dinitrotoluene	U	480	1.0	330	480	120	
84-66-2	Diethylphthalate	U	480	1.0	330	480	120	
7005-72-3	4-Chlorophenyl-phenylether	U	480	1.0	330	480	110	
100-01-6	4-Nitroaniline	U	730	1.0	500	730	200	
534-52-1	4,6-Dinitro-2-Methylphenol	U	1700	1.0	1200	1700	490	
86-30-6	N-Nitrosodiphenylamine	U	960	1.0	660	960	320	
101-55-3	4-Bromophenyl-phenylether	U	480	1.0	330	480	120	
1912-24-9	Atrazine	U	480	1.0	330	480	130	
87-86-5	Pentachlorophenol	U	1200	1.0	820	1200	340	
120-12-7	Anthracene	U	480	1.0	330	480	120	
86-74-8	Carbazole	U	730	1.0	500	730	160	

JCW 3/3/09

10

KATAHDIN ANALYTICAL SERVICES
Report of Analytical Results

Client: CH2MHill
Project: TO-009 Lejeune
PO No:
Sample Date: 12/06/08
Received Date: 12/09/08
Extraction Date: 12/11/08
Analysis Date: 30-DEC-2008 23:55
Report Date: 01/04/2009
Matrix: SOIL
% Solids: 68.6

Lab ID: SB7055-19
Client ID: MR08-IS066-2-3-08D
SDG: TO9-14
Extracted by: CB
Extraction Method: SW846 3550
Analyst: JCG
Analysis Method: SW846 8270C
Lab Prep Batch: WG58992
Units: ug/Kgdrywt

CAS#	Compound	Flags	Results	DF	PQL	Adj.PQL	Adj.MDL
84-74-2	Di-n-butylphthalate	U	480	1.0	330	480	150
85-68-7	Butylbenzylphthalate	U	480	1.0	330	480	140
91-94-1	3,3'-Dichlorobenzidine	U	730	1.0	500	730	170
218-01-9	Chrysene	U	480	1.0	330	480	140
117-81-7	bis(2-Ethylhexyl)phthalate	U	480	1.0	330	480	140
117-84-0	Di-n-octylphthalate	U	480	1.0	330	480	310
367-12-4	2-Fluorophenol		70%				
13127-88-3	Phenol-D6		90%				
4165-60-0	Nitrobenzene-D5		69%				
321-60-8	2-Fluorobiphenyl		76%				
118-79-6	2,4,6-Tribromophenol		89%				
1718-51-0	Terphenyl-D14		98%				

fw 3/3/09

11

KATAHDIN ANALYTICAL SERVICES
Report of Analytical Results

Client: CH2MHill
Project: TO-009 Lejeune
PO No:
Sample Date: 12/07/08
Received Date: 12/09/08
Extraction Date: 12/11/08
Analysis Date: 31-DEC-2008 04:06
Report Date: 01/04/2009
Matrix: SOIL
% Solids: 73.0

Lab ID: SB7055-21
Client ID: MR08-SS080-08D
SDG: TO9-14
Extracted by: CB
Extraction Method: SW846 3550
Analyst: JCG
Analysis Method: SW846 8270C
Lab Prep Batch: WG58992
Units: ug/Kgdrywt

CAS#	Compound	Flags	Results	DF	PQL	Adj.PQL	Adj.MDL	
100-52-7	Benzaldehyde	~~U~~ UJ	680	1.0	500	680	160	CCH
108-95-2	Phenol	U	680	1.0	500	680	210	
111-44-4	Bis(2-Chloroethyl)ether	U	450	1.0	330	450	110	
95-57-8	2-Chlorophenol	U	680	1.0	500	680	220	
95-48-7	2-Methylphenol	U	820	1.0	600	820	270	
108-60-1	2,2'-Oxybis(1-chloropropane)	U	450	1.0	330	450	120	
98-86-2	Acetophenone	U	820	1.0	600	820	240	
621-64-7	N-Nitroso-di-n-propylamine	U	450	1.0	330	450	110	
65794-96-9	3&4-Methylphenol	U	820	1.0	600	820	260	
67-72-1	Hexachloroethane	U	450	1.0	330	450	130	
98-95-3	Nitrobenzene	~~U~~ UJ	450	1.0	330	450	120	CCH
78-59-1	Isophorone	U	450	1.0	330	450	100	
88-75-5	2-Nitrophenol	U	820	1.0	600	820	230	
105-67-9	2,4-Dimethylphenol	U	680	1.0	500	680	220	
111-91-1	Bis(2-Chloroethoxy)methane	U	450	1.0	330	450	130	
120-83-2	2,4-Dichlorophenol	U	680	1.0	500	680	200	
106-47-8	4-Chloroaniline	U	680	1.0	500	680	160	
105-60-2	Caprolactam	U	680	1.0	500	680	200	
59-50-7	4-Chloro-3-Methylphenol	U	680	1.0	500	680	230	
88-06-2	2,4,6-Trichlorophenol	U	680	1.0	500	680	210	
95-95-4	2,4,5-Trichlorophenol	U	680	1.0	500	680	210	
91-58-7	2-Chloronaphthalene	U	450	1.0	330	450	120	
92-52-4	1,1'-Biphenyl	U	450	1.0	330	450	100	
88-74-4	2-Nitroaniline	U	680	1.0	500	680	100	
131-11-3	Dimethyl Phthalate	U	450	1.0	330	450	110	
606-20-2	2,6-Dinitrotoluene	U	450	1.0	330	450	110	
208-96-8	Acenaphthylene	U	450	1.0	330	450	96	
99-09-2	3-Nitroaniline	U	680	1.0	500	680	130	
83-32-9	Acenaphthene	U	450	1.0	330	450	89	
51-28-5	2,4-Dinitrophenol	U	1600	1.0	1200	1600	520	
132-64-9	Dibenzofuran	U	450	1.0	330	450	110	
100-02-7	4-Nitrophenol	U	1600	1.0	1200	1600	420	
121-14-2	2,4-Dinitrotoluene	U	450	1.0	330	450	120	
84-66-2	Diethylphthalate	U	450	1.0	330	450	110	
7005-72-3	4-Chlorophenyl-phenylether	U	450	1.0	330	450	110	
100-01-6	4-Nitroaniline	U	680	1.0	500	680	180	
534-52-1	4,6-Dinitro-2-Methylphenol	U	1600	1.0	1200	1600	460	
86-30-6	N-Nitrosodiphenylamine	U	900	1.0	660	900	300	
101-55-3	4-Bromophenyl-phenylether	U	450	1.0	330	450	120	
1912-24-9	Atrazine	U	450	1.0	330	450	120	
87-86-5	Pentachlorophenol	U	1100	1.0	820	1100	320	
120-12-7	Anthracene	U	450	1.0	330	450	120	
86-74-8	Carbazole	U	680	1.0	500	680	150	

LW 3/3/09

11

KATAHDIN ANALYTICAL SERVICES
Report of Analytical Results

Client: CH2MHill
Project: TO-009 Lejeune
PO No:
Sample Date: 12/07/08
Received Date: 12/09/08
Extraction Date: 12/11/08
Analysis Date: 31-DEC-2008 04:06
Report Date: 01/04/2009
Matrix: SOIL
% Solids: 73.0

Lab ID: SB7055-21
Client ID: MR08-SS080-08D
SDG: TO9-14
Extracted by: CB
Extraction Method: SW846 3550
Analyst: JCG
Analysis Method: SW846 8270C
Lab Prep Batch: WG58992
Units: ug/Kgdrywt

CAS#	Compound	Flags	Results	DF	PQL	Adj.PQL	Adj.MDL
84-74-2	Di-n-butylphthalate	U	450	1.0	330	450	140
85-68-7	Butylbenzylphthalate	U	450	1.0	330	450	130
91-94-1	3,3'-Dichlorobenzidine	U	680	1.0	500	680	160
218-01-9	Chrysene	U	450	1.0	330	450	130
117-81-7	bis(2-Ethylhexyl)phthalate	U	450	1.0	330	450	130
117-84-0	Di-n-octylphthalate	U	450	1.0	330	450	290
367-12-4	2-Fluorophenol		72%				
13127-88-3	Phenol-D6		86%				
4165-60-0	Nitrobenzene-D5		73%				
321-60-8	2-Fluorobiphenyl		81%				
118-79-6	2,4,6-Tribromophenol		88%				
1718-51-0	Terphenyl-D14		97%				

JCW 3/3/09

KATAHDIN ANALYTICAL SERVICES
Report of Analytical Results

Client: CH2MHill
Project: TO-009 Lejeune
PO No:
Sample Date: 12/07/08
Received Date: 12/09/08
Extraction Date: 12/11/08
Analysis Date: 30-DEC-2008 11:55
Report Date: 01/04/2009
Matrix: SOIL
% Solids: 85.7

Lab ID: SB7055-23
Client ID: MR08-IS080-5-6-08D
SDG: TO9-14
Extracted by: CB
Extraction Method: SW846 3550
Analyst: JLP
Analysis Method: SW846 8270C
Lab Prep Batch: WG58992
Units: ug/Kgdrywt

CAS#	Compound	Flags	Results	DF	PQL	Adj.PQL	Adj.MDL	
100-52-7	Benzaldehyde	~~U~~ UJ	580	1.0	500	580	140	CCH
108-95-2	Phenol	U	580	1.0	500	580	180	
111-44-4	Bis(2-Chloroethyl)ether	U	380	1.0	330	380	94	
95-57-8	2-Chlorophenol	U	580	1.0	500	580	190	
95-48-7	2-Methylphenol	U	700	1.0	600	700	230	
108-60-1	2,2'-Oxybis(1-chloropropane)	U	380	1.0	330	380	100	
98-86-2	Acetophenone	U	700	1.0	600	700	210	
621-64-7	N-Nitroso-di-n-propylamine	U	380	1.0	330	380	97	
65794-96-9	3&4-Methylphenol	U	700	1.0	600	700	220	
67-72-1	Hexachloroethane	U	380	1.0	330	380	110	
98-95-3	Nitrobenzene	~~U~~ UJ	380	1.0	330	380	110	CCH
78-59-1	Isophorone	U	380	1.0	330	380	87	
88-75-5	2-Nitrophenol	U	700	1.0	600	700	190	
105-67-9	2,4-Dimethylphenol	U	580	1.0	500	580	190	
111-91-1	Bis(2-Chloroethoxy)methane	U	380	1.0	330	380	110	
120-83-2	2,4-Dichlorophenol	U	580	1.0	500	580	170	
106-47-8	4-Chloroaniline	~~U~~ UJ	580	1.0	500	580	140	CCH
105-60-2	Caprolactam	U	580	1.0	500	580	170	
59-50-7	4-Chloro-3-Methylphenol	U	580	1.0	500	580	190	
88-06-2	2,4,6-Trichlorophenol	U	580	1.0	500	580	180	
95-95-4	2,4,5-Trichlorophenol	U	580	1.0	500	580	180	
91-58-7	2-Chloronaphthalene	U	380	1.0	330	380	100	
92-52-4	1,1'-Biphenyl	U	380	1.0	330	380	85	
88-74-4	2-Nitroaniline	U	580	1.0	500	580	87	
131-11-3	Dimethyl Phthalate	U	380	1.0	330	380	91	
606-20-2	2,6-Dinitrotoluene	U	380	1.0	330	380	92	
208-96-8	Acenaphthylene	U	380	1.0	330	380	82	
99-09-2	3-Nitroaniline	U	580	1.0	500	580	110	
83-32-9	Acenaphthene	U	380	1.0	330	380	76	
51-28-5	2,4-Dinitrophenol	~~U~~ UJ	1400	1.0	1200	1400	440	CCH
132-64-9	Dibenzofuran	U	380	1.0	330	380	92	
100-02-7	4-Nitrophenol	~~U~~ UJ	1400	1.0	1200	1400	360	CCH
121-14-2	2,4-Dinitrotoluene	U	380	1.0	330	380	99	
84-66-2	Diethylphthalate	U	380	1.0	330	380	93	
7005-72-3	4-Chlorophenyl-phenylether	U	380	1.0	330	380	91	
100-01-6	4-Nitroaniline	~~U~~ UJ	580	1.0	500	580	160	CCH
534-52-1	4,6-Dinitro-2-Methylphenol	U	1400	1.0	1200	1400	390	
86-30-6	N-Nitrosodiphenylamine	U	770	1.0	660	770	260	
101-55-3	4-Bromophenyl-phenylether	U	380	1.0	330	380	99	
1912-24-9	Atrazine	U	380	1.0	330	380	110	
87-86-5	Pentachlorophenol	U	960	1.0	820	960	280	
120-12-7	Anthracene	U	380	1.0	330	380	98	
86-74-8	Carbazole	~~U~~ UJ	580	1.0	500	580	130	CCH

3/3/09

12

KATAHDIN ANALYTICAL SERVICES
Report of Analytical Results

Client: CH2MHill
Project: TO-009 Lejeune
PO No:
Sample Date: 12/07/08
Received Date: 12/09/08
Extraction Date: 12/11/08
Analysis Date: 30-DEC-2008 11:55
Report Date: 01/04/2009
Matrix: SOIL
% Solids: 85.7

Lab ID: SB7055-23
Client ID: MR08-IS080-5-6-08D
SDG: TO9-14
Extracted by: CB
Extraction Method: SW846 3550
Analyst: JLP
Analysis Method: SW846 8270C
Lab Prep Batch: WG58992
Units: ug/Kgdrywt

CAS#	Compound	Flags	Results	DF	PQL	Adj.PQL	Adj.MDL	
84-74-2	Di-n-butylphthalate	U	380	1.0	330	380	120	
85-68-7	Butylbenzylphthalate	~~U~~ UJ	380	1.0	330	380	110	CCH
91-94-1	3,3'-Dichlorobenzidine	U	580	1.0	500	580	130	
218-01-9	Chrysene	U	380	1.0	330	380	110	
117-81-7	bis(2-Ethylhexyl)phthalate	~~U~~ UJ	380	1.0	330	380	110	CCH
117-84-0	Di-n-octylphthalate	~~U~~ UJ	380	1.0	330	380	250	CCH
367-12-4	2-Fluorophenol		66%					
13127-88-3	Phenol-D6		64%					
4165-60-0	Nitrobenzene-D5		68%					
321-60-8	2-Fluorobiphenyl		75%					
118-79-6	2,4,6-Tribromophenol		69%					
1718-51-0	Terphenyl-D14		111%					

MW 3/3/09

13

KATAHDIN ANALYTICAL SERVICES
Report of Analytical Results

Client: CH2MHill
Project: TO-009 Lejeune
PO No:
Sample Date: 12/07/08
Received Date: 12/09/08
Extraction Date: 12/11/08
Analysis Date: 31-DEC-2008 04:47
Report Date: 01/04/2009
Matrix: SOIL
% Solids: 63.1

Lab ID: SB7055-25
Client ID: MR08-SS081-08D
SDG: TO9-14
Extracted by: CB
Extraction Method: SW846 3550
Analyst: JCG
Analysis Method: SW846 8270C
Lab Prep Batch: WG58992
Units: ug/Kgdrywt

CAS#	Compound	Flags	Results	DF	PQL	Adj.PQL	Adj.MDL	
100-52-7	Benzaldehyde	~~U~~ UJ	790	1.0	500	790	190	CCH
108-95-2	Phenol	U	790	1.0	500	790	250	
111-44-4	Bis(2-Chloroethyl)ether	U	520	1.0	330	520	130	
95-57-8	2-Chlorophenol	U	790	1.0	500	790	260	
95-48-7	2-Methylphenol	U	950	1.0	600	950	320	
108-60-1	2,2'-Oxybis(1-chloropropane)	U	520	1.0	330	520	140	
98-86-2	Acetophenone	U	950	1.0	600	950	280	
621-64-7	N-Nitroso-di-n-propylamine	U	520	1.0	330	520	130	
65794-96-9	3&4-Methylphenol	U	950	1.0	600	950	300	
67-72-1	Hexachloroethane	U	520	1.0	330	520	150	
98-95-3	Nitrobenzene	~~U~~ UJ	520	1.0	330	520	140	CCH
78-59-1	Isophorone	U	520	1.0	330	520	120	
88-75-5	2-Nitrophenol	U	950	1.0	600	950	260	
105-67-9	2,4-Dimethylphenol	U	790	1.0	500	790	260	
111-91-1	Bis(2-Chloroethoxy)methane	U	520	1.0	330	520	150	
120-83-2	2,4-Dichlorophenol	U	790	1.0	500	790	240	
106-47-8	4-Chloroaniline	U	790	1.0	500	790	190	
105-60-2	Caprolactam	U	790	1.0	500	790	230	
59-50-7	4-Chloro-3-Methylphenol	U	790	1.0	500	790	260	
88-06-2	2,4,6-Trichlorophenol	U	790	1.0	500	790	240	
95-95-4	2,4,5-Trichlorophenol	U	790	1.0	500	790	240	
91-58-7	2-Chloronaphthalene	U	520	1.0	330	520	140	
92-52-4	1,1'-Biphenyl	U	520	1.0	330	520	120	
88-74-4	2-Nitroaniline	U	790	1.0	500	790	120	
131-11-3	Dimethyl Phthalate	U	520	1.0	330	520	120	
606-20-2	2,6-Dinitrotoluene	U	520	1.0	330	520	120	
208-96-8	Acenaphthylene	U	520	1.0	330	520	110	
99-09-2	3-Nitroaniline	U	790	1.0	500	790	150	
83-32-9	Acenaphthene	U	520	1.0	330	520	100	
51-28-5	2,4-Dinitrophenol	U	1900	1.0	1200	1900	600	
132-64-9	Dibenzofuran	U	520	1.0	330	520	120	
100-02-7	4-Nitrophenol	U	1900	1.0	1200	1900	490	
121-14-2	2,4-Dinitrotoluene	U	520	1.0	330	520	130	
84-66-2	Diethylphthalate	U	520	1.0	330	520	130	
7005-72-3	4-Chlorophenyl-phenylether	U	520	1.0	330	520	120	
100-01-6	4-Nitroaniline	U	790	1.0	500	790	210	
534-52-1	4,6-Dinitro-2-Methylphenol	U	1900	1.0	1200	1900	530	
86-30-6	N-Nitrosodiphenylamine	U	1000	1.0	660	1000	350	
101-55-3	4-Bromophenyl-phenylether	U	520	1.0	330	520	130	
1912-24-9	Atrazine	U	520	1.0	330	520	140	
87-86-5	Pentachlorophenol	U	1300	1.0	820	1300	380	
120-12-7	Anthracene	U	520	1.0	330	520	130	
86-74-8	Carbazole	U	790	1.0	500	790	180	

LEW 3/3/09

KATAHDIN ANALYTICAL SERVICES
Report of Analytical Results

Client: CH2MHill
Project: TO-009 Lejeune
PO No:
Sample Date: 12/07/08
Received Date: 12/09/08
Extraction Date: 12/11/08
Analysis Date: 31-DEC-2008 04:47
Report Date: 01/04/2009
Matrix: SOIL
% Solids: 63.1

Lab ID: SB7055-25
Client ID: MR08-SS081-08D
SDG: T09-14
Extracted by: CB
Extraction Method: SW846 3550
Analyst: JCG
Analysis Method: SW846 8270C
Lab Prep Batch: WG58992
Units: ug/Kgdrywt

CAS#	Compound	Flags	Results	DF	PQL	Adj.PQL	Adj.MDL
84-74-2	Di-n-butylphthalate	U	520	1.0	330	520	160
85-68-7	Butylbenzylphthalate	U	520	1.0	330	520	150
91-94-1	3,3'-Dichlorobenzidine	U	790	1.0	500	790	180
218-01-9	Chrysene	U	520	1.0	330	520	150
117-81-7	bis(2-Ethylhexyl)phthalate	U	520	1.0	330	520	160
117-84-0	Di-n-octylphthalate	U	520	1.0	330	520	330
367-12-4	2-Fluorophenol		70%				
13127-88-3	Phenol-D6		84%				
4165-60-0	Nitrobenzene-D5		70%				
321-60-8	2-Fluorobiphenyl		77%				
118-79-6	2,4,6-Tribromophenol		82%				
1718-51-0	Terphenyl-D14		89%				

LW 3/3/09

KATAHDIN ANALYTICAL SERVICES
Report of Analytical Results

Client: CH2MHill
Project: TO-009 Lejeune
PO No:
Sample Date: 12/07/08
Received Date: 12/09/08
Extraction Date: 12/11/08
Analysis Date: 31-DEC-2008 00:37
Report Date: 01/04/2009
Matrix: SOIL
% Solids: 88.2

Lab ID: SB7055-27
Client ID: MR08-IS081-6-7-08D
SDG: TO9-14
Extracted by: CB
Extraction Method: SW846 3550
Analyst: JCG
Analysis Method: SW846 8270C
Lab Prep Batch: WG58992
Units: ug/Kgdrywt

CAS#	Compound	Flags	Results	DF	PQL	Adj.PQL	Adj.MDL
100-52-7	Benzaldehyde	~~U~~ UJ	570	1.0	500	570	140 CCH
108-95-2	Phenol	U	570	1.0	500	570	180
111-44-4	Bis(2-Chloroethyl)ether	U	370	1.0	330	370	92
95-57-8	2-Chlorophenol	U	570	1.0	500	570	180
95-48-7	2-Methylphenol	U	680	1.0	600	680	230
108-60-1	2,2'-Oxybis(1-chloropropane)	U	370	1.0	330	370	100
98-86-2	Acetophenone	U	680	1.0	600	680	200
621-64-7	N-Nitroso-di-n-propylamine	U	370	1.0	330	370	94
65794-96-9	3&4-Methylphenol	U	680	1.0	600	680	210
67-72-1	Hexachloroethane	U	370	1.0	330	370	110
98-95-3	Nitrobenzene	~~U~~ UJ	370	1.0	330	370	100 CCH
78-59-1	Isophorone	U	370	1.0	330	370	85
88-75-5	2-Nitrophenol	U	680	1.0	600	680	190
105-67-9	2,4-Dimethylphenol	U	570	1.0	500	570	190
111-91-1	Bis(2-Chloroethoxy)methane	U	370	1.0	330	370	110
120-83-2	2,4-Dichlorophenol	U	570	1.0	500	570	170
106-47-8	4-Chloroaniline	U	570	1.0	500	570	130
105-60-2	Caprolactam	U	570	1.0	500	570	160
59-50-7	4-Chloro-3-Methylphenol	U	570	1.0	500	570	190
88-06-2	2,4,6-Trichlorophenol	U	570	1.0	500	570	180
95-95-4	2,4,5-Trichlorophenol	U	570	1.0	500	570	180
91-58-7	2-Chloronaphthalene	U	370	1.0	330	370	99
92-52-4	1,1'-Biphenyl	U	370	1.0	330	370	83
88-74-4	2-Nitroaniline	U	570	1.0	500	570	85
131-11-3	Dimethyl Phthalate	U	370	1.0	330	370	88
606-20-2	2,6-Dinitrotoluene	U	370	1.0	330	370	90
208-96-8	Acenaphthylene	U	370	1.0	330	370	79
99-09-2	3-Nitroaniline	U	570	1.0	500	570	110
83-32-9	Acenaphthene	U	370	1.0	330	370	74
51-28-5	2,4-Dinitrophenol	U	1400	1.0	1200	1400	430
132-64-9	Dibenzofuran	U	370	1.0	330	370	90
100-02-7	4-Nitrophenol	U	1400	1.0	1200	1400	350
121-14-2	2,4-Dinitrotoluene	U	370	1.0	330	370	96
84-66-2	Diethylphthalate	U	370	1.0	330	370	91
7005-72-3	4-Chlorophenyl-phenylether	U	370	1.0	330	370	88
100-01-6	4-Nitroaniline	U	570	1.0	500	570	150
534-52-1	4,6-Dinitro-2-Methylphenol	U	1400	1.0	1200	1400	380
86-30-6	N-Nitrosodiphenylamine	U	750	1.0	660	750	250
101-55-3	4-Bromophenyl-phenylether	U	370	1.0	330	370	96
1912-24-9	Atrazine	U	370	1.0	330	370	100
87-86-5	Pentachlorophenol	U	930	1.0	820	930	270
120-12-7	Anthracene	U	370	1.0	330	370	95
86-74-8	Carbazole	U	570	1.0	500	570	120

LW 3/3/09

KATAHDIN ANALYTICAL SERVICES
Report of Analytical Results

Client: CH2MHill
Project: TO-009 Lejeune
PO No:
Sample Date: 12/07/08
Received Date: 12/09/08
Extraction Date: 12/11/08
Analysis Date: 31-DEC-2008 00:37
Report Date: 01/04/2009
Matrix: SOIL
% Solids: 88.2

Lab ID: SB7055-27
Client ID: MR08-IS081-6-7-08D
SDG: TO9-14
Extracted by: CB
Extraction Method: SW846 3550
Analyst: JCG
Analysis Method: SW846 8270C
Lab Prep Batch: WG58992
Units: ug/Kgdrywt

CAS#	Compound	Flags	Results	DF	PQL	Adj.PQL	Adj.MDL
84-74-2	Di-n-butylphthalate	U	370	1.0	330	370	110
85-68-7	Butylbenzylphthalate	U	370	1.0	330	370	100
91-94-1	3,3'-Dichlorobenzidine	U	570	1.0	500	570	130
218-01-9	Chrysene	U	370	1.0	330	370	110
117-81-7	bis(2-Ethylhexyl)phthalate	U	370	1.0	330	370	110
117-84-0	Di-n-octylphthalate	U	370	1.0	330	370	240
367-12-4	2-Fluorophenol		74%				
13127-88-3	Phenol-D6		84%				
4165-60-0	Nitrobenzene-D5		78%				
321-60-8	2-Fluorobiphenyl		79%				
118-79-6	2,4,6-Tribromophenol		94%				
1718-51-0	Terphenyl-D14		104%				

MW 3/3/09

KATAHDIN ANALYTICAL SERVICES
Report of Analytical Results

Client: CH2MHill
Project: TO-009 Lejeune
PO No:
Sample Date: 12/07/08
Received Date: 12/09/08
Extraction Date: 12/11/08
Analysis Date: 31-DEC-2008 01:19
Report Date: 01/04/2009
Matrix: SOIL
% Solids: 78.7

Lab ID: SB7055-29
Client ID: MR08-SS082-08D
SDG: TO9-14
Extracted by: CB
Extraction Method: SW846 3550
Analyst: JCG
Analysis Method: SW846 8270C
Lab Prep Batch: WG58992
Units: ug/Kgdrywt

CAS#	Compound	Flags	Results	DF	PQL	Adj.PQL	Adj.MDL	
100-52-7	Benzaldehyde	~~U~~ UJ	640	1.0	500	640	150	CCH
108-95-2	Phenol	U	640	1.0	500	640	200	
111-44-4	Bis(2-Chloroethyl)ether	U	420	1.0	330	420	100	
95-57-8	2-Chlorophenol	U	640	1.0	500	640	210	
95-48-7	2-Methylphenol	U	760	1.0	600	760	250	
108-60-1	2,2'-Oxybis(1-chloropropane)	U	420	1.0	330	420	110	
98-86-2	Acetophenone	U	760	1.0	600	760	230	
621-64-7	N-Nitroso-di-n-propylamine	U	420	1.0	330	420	100	
65794-96-9	3&4-Methylphenol	U	760	1.0	600	760	240	
67-72-1	Hexachloroethane	U	420	1.0	330	420	120	
98-95-3	Nitrobenzene	~~U~~ UJ	420	1.0	330	420	120	CCH
78-59-1	Isophorone	U	420	1.0	330	420	95	
88-75-5	2-Nitrophenol	U	760	1.0	600	760	210	
105-67-9	2,4-Dimethylphenol	U	640	1.0	500	640	210	
111-91-1	Bis(2-Chloroethoxy)methane	U	420	1.0	330	420	120	
120-83-2	2,4-Dichlorophenol	U	640	1.0	500	640	190	
106-47-8	4-Chloroaniline	U	640	1.0	500	640	150	
105-60-2	Caprolactam	U	640	1.0	500	640	180	
59-50-7	4-Chloro-3-Methylphenol	U	640	1.0	500	640	210	
88-06-2	2,4,6-Trichlorophenol	U	640	1.0	500	640	200	
95-95-4	2,4,5-Trichlorophenol	U	640	1.0	500	640	200	
91-58-7	2-Chloronaphthalene	U	420	1.0	330	420	110	
92-52-4	1,1'-Biphenyl	U	420	1.0	330	420	93	
88-74-4	2-Nitroaniline	U	640	1.0	500	640	95	
131-11-3	Dimethyl Phthalate	U	420	1.0	330	420	99	
606-20-2	2,6-Dinitrotoluene	U	420	1.0	330	420	100	
208-96-8	Acenaphthylene	U	420	1.0	330	420	89	
99-09-2	3-Nitroaniline	U	640	1.0	500	640	120	
83-32-9	Acenaphthene	U	420	1.0	330	420	82	
51-28-5	2,4-Dinitrophenol	U	1500	1.0	1200	1500	480	
132-64-9	Dibenzofuran	U	420	1.0	330	420	100	
100-02-7	4-Nitrophenol	U	1500	1.0	1200	1500	390	
121-14-2	2,4-Dinitrotoluene	U	420	1.0	330	420	110	
84-66-2	Diethylphthalate	U	420	1.0	330	420	100	
7005-72-3	4-Chlorophenyl-phenylether	U	420	1.0	330	420	99	
100-01-6	4-Nitroaniline	U	640	1.0	500	640	170	
534-52-1	4,6-Dinitro-2-Methylphenol	U	1500	1.0	1200	1500	430	
86-30-6	N-Nitrosodiphenylamine	U	840	1.0	660	840	280	
101-55-3	4-Bromophenyl-phenylether	U	420	1.0	330	420	110	
1912-24-9	Atrazine	U	420	1.0	330	420	120	
87-86-5	Pentachlorophenol	U	1000	1.0	820	1000	300	
120-12-7	Anthracene	U	420	1.0	330	420	110	
86-74-8	Carbazole	U	640	1.0	500	640	140	

lw 3/3/09

KATAHDIN ANALYTICAL SERVICES
Report of Analytical Results

Client: CH2MHill
Project: TO-009 Lejeune
PO No:
Sample Date: 12/07/08
Received Date: 12/09/08
Extraction Date: 12/11/08
Analysis Date: 31-DEC-2008 01:19
Report Date: 01/04/2009
Matrix: SOIL
% Solids: 78.7

Lab ID: SB7055-29
Client ID: MR08-SS082-08D
SDG: TO9-14
Extracted by: CB
Extraction Method: SW846 3550
Analyst: JCG
Analysis Method: SW846 8270C
Lab Prep Batch: WG58992
Units: ug/Kgdrywt

CAS#	Compound	Flags	Results	DF	PQL	Adj.PQL	Adj.MDL
84-74-2	Di-n-butylphthalate	U	420	1.0	330	420	130
85-68-7	Butylbenzylphthalate	U	420	1.0	330	420	120
91-94-1	3,3'-Dichlorobenzidine	U	640	1.0	500	640	140
218-01-9	Chrysene	U	420	1.0	330	420	120
117-81-7	bis(2-Ethylhexyl)phthalate	U	420	1.0	330	420	120
117-84-0	Di-n-octylphthalate	U	420	1.0	330	420	270
367-12-4	2-Fluorophenol		69%				
13127-88-3	Phenol-D6		81%				
4165-60-0	Nitrobenzene-D5		70%				
321-60-8	2-Fluorobiphenyl		76%				
118-79-6	2,4,6-Tribromophenol		97%				
1718-51-0	Terphenyl-D14		105%				

LWD
3/3/09

16

KATAHDIN ANALYTICAL SERVICES
Report of Analytical Results

Client: CH2MHill
Project: TO-009 Lejeune
PO No:
Sample Date: 12/07/08
Received Date: 12/09/08
Extraction Date: 12/11/08
Analysis Date: 30-DEC-2008 20:26
Report Date: 01/04/2009
Matrix: SOIL
% Solids: 96.2

Lab ID: SB7055-31
Client ID: MR08-IS082-5-6-08D
SDG: TO9-14
Extracted by: CB
Extraction Method: SW846 3550
Analyst: JCG
Analysis Method: SW846 8270C
Lab Prep Batch: WG58992
Units: ug/Kgdrywt

CAS#	Compound	Flags	Results	DF	PQL	Adj.PQL	Adj.MDL	
100-52-7	Benzaldehyde	~~U~~ UJ	520	1.0	500	520	120	CCH
108-95-2	Phenol	U	520	1.0	500	520	160	
111-44-4	Bis(2-Chloroethyl)ether	U	340	1.0	330	340	84	
95-57-8	2-Chlorophenol	U	520	1.0	500	520	170	
95-48-7	2-Methylphenol	U	620	1.0	600	620	210	
108-60-1	2,2'-Oxybis(1-chloropropane)	U	340	1.0	330	340	92	
98-86-2	Acetophenone	U	620	1.0	600	620	180	
621-64-7	N-Nitroso-di-n-propylamine	U	340	1.0	330	340	86	
65794-96-9	3&4-Methylphenol	U	620	1.0	600	620	190	
67-72-1	Hexachloroethane	U	340	1.0	330	340	100	
98-95-3	Nitrobenzene	~~U~~ UJ	340	1.0	330	340	95	CCH
78-59-1	Isophorone	U	340	1.0	330	340	78	
88-75-5	2-Nitrophenol	U	620	1.0	600	620	170	
105-67-9	2,4-Dimethylphenol	U	520	1.0	500	520	170	
111-91-1	Bis(2-Chloroethoxy)methane	U	340	1.0	330	340	100	
120-83-2	2,4-Dichlorophenol	U	520	1.0	500	520	160	
106-47-8	4-Chloroaniline	U	520	1.0	500	520	120	
105-60-2	Caprolactam	U	520	1.0	500	520	150	
59-50-7	4-Chloro-3-Methylphenol	U	520	1.0	500	520	170	
88-06-2	2,4,6-Trichlorophenol	U	520	1.0	500	520	160	
95-95-4	2,4,5-Trichlorophenol	U	520	1.0	500	520	160	
91-58-7	2-Chloronaphthalene	U	340	1.0	330	340	90	
92-52-4	1,1'-Biphenyl	U	340	1.0	330	340	76	
88-74-4	2-Nitroaniline	U	520	1.0	500	520	78	
131-11-3	Dimethyl Phthalate	U	340	1.0	330	340	81	
606-20-2	2,6-Dinitrotoluene	U	340	1.0	330	340	82	
208-96-8	Acenaphthylene	U	340	1.0	330	340	73	
99-09-2	3-Nitroaniline	U	520	1.0	500	520	98	
83-32-9	Acenaphthene	U	340	1.0	330	340	68	
51-28-5	2,4-Dinitrophenol	U	1200	1.0	1200	1200	390	
132-64-9	Dibenzofuran	U	340	1.0	330	340	82	
100-02-7	4-Nitrophenol	U	1200	1.0	1200	1200	320	
121-14-2	2,4-Dinitrotoluene	U	340	1.0	330	340	88	
84-66-2	Diethylphthalate	U	340	1.0	330	340	83	
7005-72-3	4-Chlorophenyl-phenylether	U	340	1.0	330	340	81	
100-01-6	4-Nitroaniline	U	520	1.0	500	520	140	
534-52-1	4,6-Dinitro-2-Methylphenol	U	1200	1.0	1200	1200	350	
86-30-6	N-Nitrosodiphenylamine	U	690	1.0	660	690	230	
101-55-3	4-Bromophenyl-phenylether	U	340	1.0	330	340	88	
1912-24-9	Atrazine	U	340	1.0	330	340	95	
87-86-5	Pentachlorophenol	U	850	1.0	820	850	250	
120-12-7	Anthracene	U	340	1.0	330	340	87	
86-74-8	Carbazole	U	520	1.0	500	520	120	

LW 3/3/09

16

KATAHDIN ANALYTICAL SERVICES
Report of Analytical Results

Client: CH2MHill
Project: TO-009 Lejeune
PO No:
Sample Date: 12/07/08
Received Date: 12/09/08
Extraction Date: 12/11/08
Analysis Date: 30-DEC-2008 20:26
Report Date: 01/04/2009
Matrix: SOIL
% Solids: 96.2

Lab ID: SB7055-31
Client ID: MR08-IS082-5-6-08D
SDG: TO9-14
Extracted by: CB
Extraction Method: SW846 3550
Analyst: JCG
Analysis Method: SW846 8270C
Lab Prep Batch: WG58992
Units: ug/Kgdrywt

CAS#	Compound	Flags	Results	DF	PQL	Adj.PQL	Adj.MDL
84-74-2	Di-n-butylphthalate	U	340	1.0	330	340	100
85-68-7	Butylbenzylphthalate	U	340	1.0	330	340	97
91-94-1	3,3'-Dichlorobenzidine	U	520	1.0	500	520	120
218-01-9	Chrysene	U	340	1.0	330	340	99
117-81-7	bis(2-Ethylhexyl)phthalate	U	340	1.0	330	340	100
117-84-0	Di-n-octylphthalate	U	340	1.0	330	340	220
367-12-4	2-Fluorophenol		67%				
13127-88-3	Phenol-D6		68%				
4165-60-0	Nitrobenzene-D5		68%				
321-60-8	2-Fluorobiphenyl		69%				
118-79-6	2,4,6-Tribromophenol		78%				
1718-51-0	Terphenyl-D14		83%				

Cw
3/3/09

17

KATAHDIN ANALYTICAL SERVICES
Report of Analytical Results

Client: CH2MHill
Project: TO-009 Lejeune
PO No:
Sample Date: 12/07/08
Received Date: 12/09/08
Extraction Date: 12/11/08
Analysis Date: 31-DEC-2008 02:01
Report Date: 01/04/2009
Matrix: SOIL
% Solids: 85.3

Lab ID: SB7055-33
Client ID: MR08-SS083-08D
SDG: TO9-14
Extracted by: CB
Extraction Method: SW846 3550
Analyst: JCG
Analysis Method: SW846 8270C
Lab Prep Batch: WG58992
Units: ug/Kgdrywt

CAS#	Compound	Flags	Results	DF	PQL	Adj.PQL	Adj.MDL	
100-52-7	Benzaldehyde	~~U~~ UJ	590	1.0	500	590	140	CCH
108-95-2	Phenol	U	590	1.0	500	590	180	
111-44-4	Bis(2-Chloroethyl)ether	U	390	1.0	330	390	95	
95-57-8	2-Chlorophenol	U	590	1.0	500	590	190	
95-48-7	2-Methylphenol	U	700	1.0	600	700	230	
108-60-1	2,2'-Oxybis(1-chloropropane)	U	390	1.0	330	390	100	
98-86-2	Acetophenone	U	700	1.0	600	700	210	
621-64-7	N-Nitroso-di-n-propylamine	U	390	1.0	330	390	97	
65794-96-9	3&4-Methylphenol	U	700	1.0	600	700	220	
67-72-1	Hexachloroethane	U	390	1.0	330	390	110	
98-95-3	Nitrobenzene	~~U~~ UJ	390	1.0	330	390	110	CCH
78-59-1	Isophorone	U	390	1.0	330	390	88	
88-75-5	2-Nitrophenol	U	700	1.0	600	700	200	
105-67-9	2,4-Dimethylphenol	U	590	1.0	500	590	190	
111-91-1	Bis(2-Chloroethoxy)methane	U	390	1.0	330	390	110	
120-83-2	2,4-Dichlorophenol	U	590	1.0	500	590	180	
106-47-8	4-Chloroaniline	U	590	1.0	500	590	140	
105-60-2	Caprolactam	U	590	1.0	500	590	170	
59-50-7	4-Chloro-3-Methylphenol	U	590	1.0	500	590	190	
88-06-2	2,4,6-Trichlorophenol	U	590	1.0	500	590	180	
95-95-4	2,4,5-Trichlorophenol	U	590	1.0	500	590	180	
91-58-7	2-Chloronaphthalene	U	390	1.0	330	390	100	
92-52-4	1,1'-Biphenyl	U	390	1.0	330	390	86	
88-74-4	2-Nitroaniline	U	590	1.0	500	590	88	
131-11-3	Dimethyl Phthalate	U	390	1.0	330	390	91	
606-20-2	2,6-Dinitrotoluene	U	390	1.0	330	390	93	
208-96-8	Acenaphthylene	U	390	1.0	330	390	82	
99-09-2	3-Nitroaniline	U	590	1.0	500	590	110	
83-32-9	Acenaphthene	U	390	1.0	330	390	76	
51-28-5	2,4-Dinitrophenol	U	1400	1.0	1200	1400	440	
132-64-9	Dibenzofuran	U	390	1.0	330	390	93	
100-02-7	4-Nitrophenol	U	1400	1.0	1200	1400	360	
121-14-2	2,4-Dinitrotoluene	U	390	1.0	330	390	100	
84-66-2	Diethylphthalate	U	390	1.0	330	390	94	
7005-72-3	4-Chlorophenyl-phenylether	U	390	1.0	330	390	91	
100-01-6	4-Nitroaniline	U	590	1.0	500	590	160	
534-52-1	4,6-Dinitro-2-Methylphenol	U	1400	1.0	1200	1400	400	
86-30-6	N-Nitrosodiphenylamine	U	770	1.0	660	770	260	
101-55-3	4-Bromophenyl-phenylether	U	390	1.0	330	390	100	
1912-24-9	Atrazine	U	390	1.0	330	390	110	
87-86-5	Pentachlorophenol	U	960	1.0	820	960	280	
120-12-7	Anthracene	U	390	1.0	330	390	98	
86-74-8	Carbazole	U	590	1.0	500	590	130	

RW 2/3/09

17

KATAHDIN ANALYTICAL SERVICES
Report of Analytical Results

Client: CH2MHill
Project: TO-009 Lejeune
PO No:
Sample Date: 12/07/08
Received Date: 12/09/08
Extraction Date: 12/11/08
Analysis Date: 31-DEC-2008 02:01
Report Date: 01/04/2009
Matrix: SOIL
% Solids: 85.3

Lab ID: SB7055-33
Client ID: MR08-SS083-08D
SDG: TO9-14
Extracted by: CB
Extraction Method: SW846 3550
Analyst: JCG
Analysis Method: SW846 8270C
Lab Prep Batch: WG58992
Units: ug/Kgdrywt

CAS#	Compound	Flags	Results	DF	PQL	Adj.PQL	Adj.MDL
84-74-2	Di-n-butylphthalate	U	390	1.0	330	390	120
85-68-7	Butylbenzylphthalate	U	390	1.0	330	390	110
91-94-1	3,3'-Dichlorobenzidine	U	590	1.0	500	590	130
218-01-9	Chrysene	U	390	1.0	330	390	110
117-81-7	bis(2-Ethylhexyl)phthalate	U	390	1.0	330	390	110
117-84-0	Di-n-octylphthalate	U	390	1.0	330	390	250
367-12-4	2-Fluorophenol		84%				
13127-88-3	Phenol-D6		97%				
4165-60-0	Nitrobenzene-D5		82%				
321-60-8	2-Fluorobiphenyl		90%				
118-79-6	2,4,6-Tribromophenol		91%				
1718-51-0	Terphenyl-D14		108%				

RW 3/3/09

18

KATAHDIN ANALYTICAL SERVICES
Report of Analytical Results

Client: CH2MHill
Project: TO-009 Lejeune
PO No:
Sample Date: 12/07/08
Received Date: 12/09/08
Extraction Date: 12/11/08
Analysis Date: 30-DEC-2008 21:08
Report Date: 01/04/2009
Matrix: SOIL
% Solids: 94.6

Lab ID: SB7055-35
Client ID: MR08-IS083-6-7-08D
SDG: TO9-14
Extracted by: CB
Extraction Method: SW846 3550
Analyst: JCG
Analysis Method: SW846 8270C
Lab Prep Batch: WG58992
Units: ug/Kgdrywt

CAS#	Compound	Flags	Results	DF	PQL	Adj.PQL	Adj.MDL	
100-52-7	Benzaldehyde	~~U~~ UJ	530	1.0	500	530	130	CCH
108-95-2	Phenol	U	530	1.0	500	530	160	
111-44-4	Bis(2-Chloroethyl)ether	U	350	1.0	330	350	86	
95-57-8	2-Chlorophenol	U	530	1.0	500	530	170	
95-48-7	2-Methylphenol	U	630	1.0	600	630	210	
108-60-1	2,2'-Oxybis(1-chloropropane)	U	350	1.0	330	350	94	
98-86-2	Acetophenone	U	630	1.0	600	630	190	
621-64-7	N-Nitroso-di-n-propylamine	U	350	1.0	330	350	88	
65794-96-9	3&4-Methylphenol	U	630	1.0	600	630	200	
67-72-1	Hexachloroethane	U	350	1.0	330	350	100	
98-95-3	Nitrobenzene	~~U~~ UJ	350	1.0	330	350	96	CCH
78-59-1	Isophorone	U	350	1.0	330	350	79	
88-75-5	2-Nitrophenol	U	630	1.0	600	630	180	
105-67-9	2,4-Dimethylphenol	U	530	1.0	500	530	170	
111-91-1	Bis(2-Chloroethoxy)methane	U	350	1.0	330	350	100	
120-83-2	2,4-Dichlorophenol	U	530	1.0	500	530	160	
106-47-8	4-Chloroaniline	U	530	1.0	500	530	120	
105-60-2	Caprolactam	U	530	1.0	500	530	150	
59-50-7	4-Chloro-3-Methylphenol	U	530	1.0	500	530	180	
88-06-2	2,4,6-Trichlorophenol	U	530	1.0	500	530	160	
95-95-4	2,4,5-Trichlorophenol	U	530	1.0	500	530	160	
91-58-7	2-Chloronaphthalene	U	350	1.0	330	350	92	
92-52-4	1,1'-Biphenyl	U	350	1.0	330	350	77	
88-74-4	2-Nitroaniline	U	530	1.0	500	530	79	
131-11-3	Dimethyl Phthalate	U	350	1.0	330	350	82	
606-20-2	2,6-Dinitrotoluene	U	350	1.0	330	350	83	
208-96-8	Acenaphthylene	U	350	1.0	330	350	74	
99-09-2	3-Nitroaniline	U	530	1.0	500	530	99	
83-32-9	Acenaphthene	U	350	1.0	330	350	69	
51-28-5	2,4-Dinitrophenol	U	1300	1.0	1200	1300	400	
132-64-9	Dibenzofuran	U	350	1.0	330	350	83	
100-02-7	4-Nitrophenol	U	1300	1.0	1200	1300	330	
121-14-2	2,4-Dinitrotoluene	U	350	1.0	330	350	90	
84-66-2	Diethylphthalate	U	350	1.0	330	350	84	
7005-72-3	4-Chlorophenyl-phenylether	U	350	1.0	330	350	82	
100-01-6	4-Nitroaniline	U	530	1.0	500	530	140	
534-52-1	4,6-Dinitro-2-Methylphenol	U	1300	1.0	1200	1300	360	
86-30-6	N-Nitrosodiphenylamine	U	700	1.0	660	700	230	
101-55-3	4-Bromophenyl-phenylether	U	350	1.0	330	350	90	
1912-24-9	Atrazine	U	350	1.0	330	350	96	
87-86-5	Pentachlorophenol	U	870	1.0	820	870	250	
120-12-7	Anthracene	U	350	1.0	330	350	89	
86-74-8	Carbazole	U	530	1.0	500	530	120	

MW 3/3/09

KATAHDIN ANALYTICAL SERVICES
Report of Analytical Results

Client: CH2MHill
Project: TO-009 Lejeune
PO No:
Sample Date: 12/07/08
Received Date: 12/09/08
Extraction Date: 12/11/08
Analysis Date: 30-DEC-2008 21:08
Report Date: 01/04/2009
Matrix: SOIL
% Solids: 94.6

Lab ID: SB7055-35
Client ID: MR08-IS083-6-7-08D
SDG: TO9-14
Extracted by: CB
Extraction Method: SW846 3550
Analyst: JCG
Analysis Method: SW846 8270C
Lab Prep Batch: WG58992
Units: ug/Kgdrywt

CAS#	Compound	Flags	Results	DF	PQL	Adj.PQL	Adj.MDL
84-74-2	Di-n-butylphthalate	U	350	1.0	330	350	110
85-68-7	Butylbenzylphthalate	U	350	1.0	330	350	98
91-94-1	3,3'-Dichlorobenzidine	U	530	1.0	500	530	120
218-01-9	Chrysene	U	350	1.0	330	350	100
117-81-7	bis(2-Ethylhexyl)phthalate	J	140	1.0	330	350	100
117-84-0	Di-n-octylphthalate	U	350	1.0	330	350	220
367-12-4	2-Fluorophenol		74%				
13127-88-3	Phenol-D6		74%				
4165-60-0	Nitrobenzene-D5		75%				
321-60-8	2-Fluorobiphenyl		74%				
118-79-6	2,4,6-Tribromophenol		91%				
1718-51-0	Terphenyl-D14		94%				

3/3/09

19

KATAHDIN ANALYTICAL SERVICES
Report of Analytical Results

Client: CH2MHill
Project: TO-009 Lejeune
PO No:
Sample Date: 12/07/08
Received Date: 12/09/08
Extraction Date: 12/11/08
Analysis Date: 31-DEC-2008 02:42
Report Date: 01/04/2009
Matrix: SOIL
% Solids: 85.5

Lab ID: SB7055-37
Client ID: MR08-SS084-08D
SDG: TO9-14
Extracted by: CB
Extraction Method: SW846 3550
Analyst: JCG
Analysis Method: SW846 8270C
Lab Prep Batch: WG58992
Units: ug/Kgdrywt

CAS#	Compound	Flags	Results	DF	PQL	Adj.PQL	Adj.MDL	
100-52-7	Benzaldehyde	~~U~~ UJ	580	1.0	500	580	140	CCH
108-95-2	Phenol	U	580	1.0	500	580	180	
111-44-4	Bis(2-Chloroethyl)ether	U	380	1.0	330	380	95	
95-57-8	2-Chlorophenol	U	580	1.0	500	580	190	
95-48-7	2-Methylphenol	U	700	1.0	600	700	230	
108-60-1	2,2'-Oxybis(1-chloropropane)	U	380	1.0	330	380	100	
98-86-2	Acetophenone	U	700	1.0	600	700	210	
621-64-7	N-Nitroso-di-n-propylamine	U	380	1.0	330	380	97	
65794-96-9	3&4-Methylphenol	U	700	1.0	600	700	220	
67-72-1	Hexachloroethane	U	380	1.0	330	380	110	
98-95-3	Nitrobenzene	~~U~~ UJ	380	1.0	330	380	110	CCH
78-59-1	Isophorone	U	380	1.0	330	380	88	
88-75-5	2-Nitrophenol	U	700	1.0	600	700	200	
105-67-9	2,4-Dimethylphenol	U	580	1.0	500	580	190	
111-91-1	Bis(2-Chloroethoxy)methane	U	380	1.0	330	380	110	
120-83-2	2,4-Dichlorophenol	U	580	1.0	500	580	180	
106-47-8	4-Chloroaniline	U	580	1.0	500	580	140	
105-60-2	Caprolactam	U	580	1.0	500	580	170	
59-50-7	4-Chloro-3-Methylphenol	U	580	1.0	500	580	190	
88-06-2	2,4,6-Trichlorophenol	U	580	1.0	500	580	180	
95-95-4	2,4,5-Trichlorophenol	U	580	1.0	500	580	180	
91-58-7	2-Chloronaphthalene	U	380	1.0	330	380	100	
92-52-4	1,1'-Biphenyl	U	380	1.0	330	380	85	
88-74-4	2-Nitroaniline	U	580	1.0	500	580	88	
131-11-3	Dimethyl Phthalate	U	380	1.0	330	380	91	
606-20-2	2,6-Dinitrotoluene	U	380	1.0	330	380	92	
208-96-8	Acenaphthylene	U	380	1.0	330	380	82	
99-09-2	3-Nitroaniline	U	580	1.0	500	580	110	
83-32-9	Acenaphthene	U	380	1.0	330	380	76	
51-28-5	2,4-Dinitrophenol	U	1400	1.0	1200	1400	440	
132-64-9	Dibenzofuran	U	380	1.0	330	380	92	
100-02-7	4-Nitrophenol	U	1400	1.0	1200	1400	360	
121-14-2	2,4-Dinitrotoluene	U	380	1.0	330	380	99	
84-66-2	Diethylphthalate	U	380	1.0	330	380	94	
7005-72-3	4-Chlorophenyl-phenylether	U	380	1.0	330	380	91	
100-01-6	4-Nitroaniline	U	580	1.0	500	580	160	
534-52-1	4,6-Dinitro-2-Methylphenol	U	1400	1.0	1200	1400	390	
86-30-6	N-Nitrosodiphenylamine	U	770	1.0	660	770	260	
101-55-3	4-Bromophenyl-phenylether	U	380	1.0	330	380	99	
1912-24-9	Atrazine	U	380	1.0	330	380	110	
87-86-5	Pentachlorophenol	U	960	1.0	820	960	280	
120-12-7	Anthracene	U	380	1.0	330	380	98	
86-74-8	Carbazole	U	580	1.0	500	580	130	

RW 3/2/09

KATAHDIN ANALYTICAL SERVICES
Report of Analytical Results

Client: CH2MHill
Project: TO-009 Lejeune
PO No:
Sample Date: 12/07/08
Received Date: 12/09/08
Extraction Date: 12/11/08
Analysis Date: 31-DEC-2008 02:42
Report Date: 01/04/2009
Matrix: SOIL
% Solids: 85.5

Lab ID: SB7055-37
Client ID: MR08-SS084-08D
SDG: TO9-14
Extracted by: CB
Extraction Method: SW846 3550
Analyst: JCG
Analysis Method: SW846 8270C
Lab Prep Batch: WG58992
Units: ug/Kgdrywt

CAS#	Compound	Flags	Results	DF	PQL	Adj.PQL	Adj.MDL
84-74-2	Di-n-butylphthalate	U	380	1.0	330	380	120
85-68-7	Butylbenzylphthalate	U	380	1.0	330	380	110
91-94-1	3,3'-Dichlorobenzidine	U	580	1.0	500	580	130
218-01-9	Chrysene	U	380	1.0	330	380	110
117-81-7	bis(2-Ethylhexyl)phthalate	U	380	1.0	330	380	110
117-84-0	Di-n-octylphthalate	U	380	1.0	330	380	250
367-12-4	2-Fluorophenol		69%				
13127-88-3	Phenol-D6		79%				
4165-60-0	Nitrobenzene-D5		70%				
321-60-8	2-Fluorobiphenyl		76%				
118-79-6	2,4,6-Tribromophenol		90%				
1718-51-0	Terphenyl-D14		93%				

LW 3/3/09

20

KATAHDIN ANALYTICAL SERVICES
Report of Analytical Results

Client: CH2MHill
Project: TO-009 Lejeune
PO No:
Sample Date: 12/08/08
Received Date: 12/09/08
Extraction Date: 12/13/08
Analysis Date: 31-DEC-2008 03:24
Report Date: 01/04/2009
Matrix: SOIL
% Solids: 85.2

Lab ID: SB7055-39
Client ID: MR08-SS104-08D
SDG: TO9-14
Extracted by: CB
Extraction Method: SW846 3550
Analyst: JCG
Analysis Method: SW846 8270C
Lab Prep Batch: WG59026
Units: ug/Kgdrywt

CAS#	Compound	Flags	Results	DF	PQL	Adj.PQL	Adj.MDL	
100-52-7	Benzaldehyde	~~U~~ UJ	590	1.0	500	590	140	CCH
108-95-2	Phenol	U	590	1.0	500	590	180	
111-44-4	Bis(2-Chloroethyl)ether	U	390	1.0	330	390	95	
95-57-8	2-Chlorophenol	U	590	1.0	500	590	190	
95-48-7	2-Methylphenol	U	700	1.0	600	700	230	
108-60-1	2,2'-Oxybis(1-chloropropane)	U	390	1.0	330	390	100	
98-86-2	Acetophenone	U	700	1.0	600	700	210	
621-64-7	N-Nitroso-di-n-propylamine	U	390	1.0	330	390	97	
65794-96-9	3&4-Methylphenol	U	700	1.0	600	700	220	
67-72-1	Hexachloroethane	U	390	1.0	330	390	110	
98-95-3	Nitrobenzene	~~U~~ UJ	390	1.0	330	390	110	CCH
78-59-1	Isophorone	U	390	1.0	330	390	88	
88-75-5	2-Nitrophenol	U	700	1.0	600	700	200	
105-67-9	2,4-Dimethylphenol	U	590	1.0	500	590	190	
111-91-1	Bis(2-Chloroethoxy)methane	U	390	1.0	330	390	110	
120-83-2	2,4-Dichlorophenol	U	590	1.0	500	590	180	
106-47-8	4-Chloroaniline	U	590	1.0	500	590	140	
105-60-2	Caprolactam	U	590	1.0	500	590	170	
59-50-7	4-Chloro-3-Methylphenol	U	590	1.0	500	590	190	
88-06-2	2,4,6-Trichlorophenol	U	590	1.0	500	590	180	
95-95-4	2,4,5-Trichlorophenol	U	590	1.0	500	590	180	
91-58-7	2-Chloronaphthalene	U	390	1.0	330	390	100	
92-52-4	1,1'-Biphenyl	U	390	1.0	330	390	86	
88-74-4	2-Nitroaniline	U	590	1.0	500	590	88	
131-11-3	Dimethyl Phthalate	U	390	1.0	330	390	92	
606-20-2	2,6-Dinitrotoluene	U	390	1.0	330	390	93	
208-96-8	Acenaphthylene	U	390	1.0	330	390	82	
99-09-2	3-Nitroaniline	U	590	1.0	500	590	110	
83-32-9	Acenaphthene	U	390	1.0	330	390	76	
51-28-5	2,4-Dinitrophenol	U	1400	1.0	1200	1400	440	
132-64-9	Dibenzofuran	U	390	1.0	330	390	93	
100-02-7	4-Nitrophenol	U	1400	1.0	1200	1400	360	
121-14-2	2,4-Dinitrotoluene	U	390	1.0	330	390	100	
84-66-2	Diethylphthalate	U	390	1.0	330	390	94	
7005-72-3	4-Chlorophenyl-phenylether	U	390	1.0	330	390	92	
100-01-6	4-Nitroaniline	U	590	1.0	500	590	160	
534-52-1	4,6-Dinitro-2-Methylphenol	U	1400	1.0	1200	1400	400	
86-30-6	N-Nitrosodiphenylamine	U	770	1.0	660	770	260	
101-55-3	4-Bromophenyl-phenylether	U	390	1.0	330	390	100	
1912-24-9	Atrazine	U	390	1.0	330	390	110	
87-86-5	Pentachlorophenol	U	960	1.0	820	960	280	
120-12-7	Anthracene	U	390	1.0	330	390	99	
86-74-8	Carbazole	U	590	1.0	500	590	130	

fw
3/3/09

KATAHDIN ANALYTICAL SERVICES
Report of Analytical Results

Client: CH2MHill
Project: TO-009 Lejeune
PO No:
Sample Date: 12/08/08
Received Date: 12/09/08
Extraction Date: 12/13/08
Analysis Date: 31-DEC-2008 03:24
Report Date: 01/04/2009
Matrix: SOIL
% Solids: 85.2

Lab ID: SB7055-39
Client ID: MR08-SS104-08D
SDG: TO9-14
Extracted by: CB
Extraction Method: SW846 3550
Analyst: JCG
Analysis Method: SW846 8270C
Lab Prep Batch: WG59026
Units: ug/Kgdrywt

CAS#	Compound	Flags	Results	DF	PQL	Adj.PQL	Adj.MDL
84-74-2	Di-n-butylphthalate	U	390	1.0	330	390	120
85-68-7	Butylbenzylphthalate	U	390	1.0	330	390	110
91-94-1	3,3'-Dichlorobenzidine	U	590	1.0	500	590	130
218-01-9	Chrysene	U	390	1.0	330	390	110
117-81-7	bis(2-Ethylhexyl)phthalate	J	220	1.0	330	390	120
117-84-0	Di-n-octylphthalate	U	390	1.0	330	390	250
367-12-4	2-Fluorophenol		76%				
13127-88-3	Phenol-D6		77%				
4165-60-0	Nitrobenzene-D5		73%				
321-60-8	2-Fluorobiphenyl		79%				
118-79-6	2,4,6-Tribromophenol		90%				
1718-51-0	Terphenyl-D14		100%				

fw 3/3/09

ENVIRONMENTAL
Data Services, Inc.

POLYNUCLEAR AROMATIC COMPOUNDS BY 8270SIM

USEPA Region IV - Level IV Review

Site: MCB Camp Lejeune, TO-09 SDG #: TO9-15

Client: CH2M HILL, Inc., Virginia Beach, Virginia Date: March 3, 2009

Laboratory: Katahdin Analytical Services, Scarborough, Maine Reviewer: Nancy Weaver

EDS ID	Client Sample ID	Laboratory Sample ID	Matrix
1	MR08-IS084-6-5-08D	SB7056-2	Soil
2	MR08-SS085-08D	SB7056-4	Soil
3	MR08-IS085-1-2-08D	SB7056-6	Soil
4	MR08-SS107-08D	SB7056-8	Soil
5	MR08-IS107-2-3-08D	SB7056-10	Soil
6	MR08-SS108-08D	SB7056-12	Soil
7	MR08-IS108-2-3-08D	SB7056-14	Soil
8	MR08-IS109-2-3-08D	SB7056-16	Soil
9	MR08-IS109D-2-3-08D	SB7056-18	Soil
10	MR08-SS109-08D	SB7056-20	Soil
11	MR08-SS109D-08D	SB7056-22	Soil
12	MR08-SS105-08D	SB7056-24	Soil
13	MR08-SS106-08D	SB7056-26	Soil
14	MR08-IS106-1-2-08D	SB7056-28	Soil
14MS	MR08-IS106-1-2-08DMS	SB7056-28MS	Soil
14MSD	MR08-IS106-1-2-08DMSD	SB7056-28MSD	Soil
15	MR08-IS105-2-3-08D	SB7056-30	Soil
16	MR08-IS106-2-3-08D	SB7056-32	Soil
17	MR08-SS087-08D	SB7056-34	Soil
18	MR08-IS087-2-3-08D	SB7056-36	Soil
19	MR08-SS086-08D	SB7056-38	Soil
19DL	MR08-SS086-08DDL	SB7056-38DL	Soil
20	MR08-IS086-2-3-08D	SB7056-40	Soil

The USEPA "Contract Laboratory Program National Functional Guidelines for Organic Data Review," October 1999, and professional judgement were used in evaluating the data in this summary report.

Holding Times - All samples were extracted within 14 days for soil samples and analyzed within 40 days for all samples.

GC/MS Tuning - All of the DFTPP tunes in the initial and continuing calibrations met the percent relative abundance criteria.

Initial Calibration - The initial calibrations exhibited acceptable %RSD and mean RRF values.

Continuing Calibration - The continuing calibrations exhibited acceptable %D and RRF values except the following.

CCAL Date	Compound	%D/RRF	Qualifier	Affected Samples
12/24/08	Naphthalene	25.69%	J/UJ	1, 3, 5, 6
12/29/08	Naphthalene	34.53%	J/UJ	4, 7, 9-18
	2-Methylnaphthalene	42.62%	J/UJ	4, 7, 9-18
	Hexachlorobenzene	29.40%	J/UJ	4, 7, 9-18
12/31/08	Benzo (b) fluoranthene	33.47%	J/UJ	19DL
	Hexachlorobenzene	34.25%	J/UJ	19DL
	Hexachlorocyclopentadiene	28.39%	J/UJ	19DL
01/02/09	Hexachlorobenzene	43.99%	J/UJ	2
	Hexachlorocyclopentadiene	34.52%	J/UJ	2

Surrogates - All samples exhibited acceptable surrogate recoveries.

MS/MSD - The MS/MSD sample exhibited acceptable %R and RPD values.

Laboratory Control Sample - The LCS samples exhibited acceptable %R values.

Internal Standard (IS) Area Performance - All internal standards met response and retention time (RT) criteria.

Method Blank - The method blanks were free of contamination.

Field, Equipment Blank - Field QC results are summarized below.

Blank ID	Compound	Conc. ug/L	Action Level ug/kg	Qualifier	Affected Samples
MR08-EB01120708-IS	None - ND	-	-	-	-
MR08-EB01120708-SS	None - ND	-	-	-	-
MR08-EB01120808-IS	Indeno-1,2,3-cd pyrene	0.11	9.2	U	14, 18, 20
	Dibenzo (a,h) anthracene	0.11	9.2	None	All ND or >5X
	Benzo (g,h,i) perylene	0.16	13.3	U	14, 18, 20
MR08-EB01120808-SS	Indeno-1,2,3-cd pyrene	0.063	5.25	U	12, 13
	Benzo (g,h,i) perylene	0.076	6.33	U	12, 13

Blank ID	Compound	Conc. ug/L	Action Level ug/kg	Qualifier	Affected Samples
MR08-FB01120608	None - ND	-	-	-	-

Field Duplicates - Field duplicate results are summarized below.

Compound	MR08-IS109-2-3-08D ug/kg	MR08-IS109D-2-3-08D ug/kg	RPD	Qualifier
Fluoranthene	11 U	4.2	NC	None
Pyrene	11 U	3.8	NC	None

Compound	MR08-SS109-08D ug/kg	MR08-SS109D-08D ug/kg	RPD	Qualifier
2-Methylnaphthalene	11 U	5.8	NC	None
Phenanthrene	26	50	63%	None
Fluoranthene	210	150	33%	None
Pyrene	210	120	55%	None
Benzo (a) anthracene	48	16	100%	None
Benzo (b) fluoroanthene	130	48	92%	None
Benzo (k) fluoranthene	120	45	91%	None
Benzo (a) pyrene	52	20	89%	None
Indeno (1,2,3-cd) pyrene	50	19	90%	None
Dibenzo (a,h) perylene	15	6.7	76%	None
Benzo (g,h,i) perylene	51	20	87%	None
Hexachlorobenzene	11 U	1.6	NC	None

Tentatively Identified Compounds (TICs) - TICs were not reported.

Compound Quantitation - EDS sample ID #19 exhibited high concentrations of target compounds which were flagged (E) by the laboratory. The laboratory diluted and reanalyzed this sample. The reviewer replaced the original results with the dilution results. The original Form Is should be used for reporting purposes.

KATAHDIN ANALYTICAL SERVICES
Report of Analytical Results

Client: CH2MHill
Project: TO-009 Lejeune
PO No:
Sample Date: 12/07/08
Received Date: 12/09/08
Extraction Date: 12/11/08
Analysis Date: 24-DEC-2008 13:46
Report Date: 01/02/2009
Matrix: SOIL
% Solids: 91.1

Lab ID: SB7056-2
Client ID: MR08-IS084-6-5-08D
SDG: TO9-15
Extracted by: CB
Extraction Method: SW846 3550
Analyst: JCG
Analysis Method: SW846 M8270C
Lab Prep Batch: WG58993
Units: ug/Kgdrywt

CAS#	Compound	Flags	Results	DF	PQL	Adj.PQL	Adj.MDL
91-20-3	Naphthalene	~~U~~ UJ	11	1.0	10	11	2.8 CCH
91-57-6	2-Methylnaphthalene	U	11	1.0	10	11	2.4
86-73-7	Fluorene	U	11	1.0	10	11	3.5
85-01-8	Phenanthrene	U	11	1.0	10	11	2.0
206-44-0	Fluoranthene	U	11	1.0	10	11	2.0
129-00-0	Pyrene	U	11	1.0	10	11	2.3
56-55-3	Benzo(a)anthracene	U	11	1.0	10	11	2.1
205-99-2	Benzo(b)fluoranthene	U	11	1.0	10	11	2.6
207-08-9	Benzo(k)fluoranthene	U	11	1.0	10	11	3.4
50-32-8	Benzo(a)pyrene	U	11	1.0	10	11	3.6
193-39-5	Indeno(1,2,3-cd)pyrene	U	11	1.0	10	11	2.1
53-70-3	Dibenzo(a,h)anthracene	U	11	1.0	10	11	2.0
191-24-2	Benzo(g,h,i)perylene	U	11	1.0	10	11	2.2
118-74-1	Hexachlorobenzene	U	11	1.0	10	11	2.0
87-68-3	Hexachlorobutadiene	U	11	1.0	10	11	2.5
77-47-4	Hexachlorocyclopentadiene	U	11	1.0	10	11	1.6
7297-45-2	2-Methylnaphthalene-D10		66%				
367-12-4	2,4-Dibromophenol		73%				
81103-79-9	Fluorene-d10		66%				
1718-51-1	Pyrene-D10		98%				

lw
3/3/09

2

KATAHDIN ANALYTICAL SERVICES
Report of Analytical Results

Client: CH2MHill
Project: TO-009 Lejeune
PO No:
Sample Date: 12/07/08
Received Date: 12/09/08
Extraction Date: 12/11/08
Analysis Date: 02-JAN-2009 21:27
Report Date: 01/05/2009
Matrix: SOIL
% Solids: 80.7

Lab ID: SB7056-4
Client ID: MR08-SS085-08D
SDG: TO9-15
Extracted by: CB
Extraction Method: SW846 3550
Analyst: JCG
Analysis Method: SW846 M8270C
Lab Prep Batch: WG58993
Units: ug/Kgdrywt

CAS#	Compound	Flags	Results	DF	PQL	Adj.PQL	Adj.MDL	
91-20-3	Naphthalene	J	5.9	1.0	10	12	3.2	
91-57-6	2-Methylnaphthalene		17	1.0	10	12	2.7	
86-73-7	Fluorene	U	12	1.0	10	12	4.0	
85-01-8	Phenanthrene		30	1.0	10	12	2.2	
206-44-0	Fluoranthene		32	1.0	10	12	2.2	
129-00-0	Pyrene		26	1.0	10	12	2.6	
56-55-3	Benzo(a)anthracene		21	1.0	10	12	2.4	
205-99-2	Benzo(b)fluoranthene		26	1.0	10	12	3.0	
207-08-9	Benzo(k)fluoranthene		19	1.0	10	12	3.8	
50-32-8	Benzo(a)pyrene		14	1.0	10	12	4.1	
193-39-5	Indeno(1,2,3-cd)pyrene	J	7.2	1.0	10	12	2.4	
53-70-3	Dibenzo(a,h)anthracene	U	12	1.0	10	12	2.2	
191-24-2	Benzo(g,h,i)perylene	U	12	1.0	10	12	2.5	
118-74-1	Hexachlorobenzene	~~J~~ UJ	12	1.0	10	12	2.2	CCH
87-68-3	Hexachlorobutadiene	U	12	1.0	10	12	2.8	
77-47-4	Hexachlorocyclopentadiene	~~J~~ UJ	12	1.0	10	12	1.8	CCH
7297-45-2	2-Methylnaphthalene-D10		66%					
367-12-4	2,4-Dibromophenol		123%					
81103-79-9	Fluorene-d10		71%					
1718-51-1	Pyrene-D10		82%					

MW
3/3/09

3

KATAHDIN ANALYTICAL SERVICES
Report of Analytical Results

Client: CH2MHill
Project: TO-009 Lejeune
PO No:
Sample Date: 12/07/08
Received Date: 12/09/08
Extraction Date: 12/11/08
Analysis Date: 24-DEC-2008 14:27
Report Date: 01/02/2009
Matrix: SOIL
% Solids: 88.2

Lab ID: SB7056-6
Client ID: MR08-IS085-1-2-08D
SDG: TO9-15
Extracted by: CB
Extraction Method: SW846 3550
Analyst: JCG
Analysis Method: SW846 M8270C
Lab Prep Batch: WG58993
Units: ug/Kgdrywt

CAS#	Compound	Flags	Results	DF	PQL	Adj.PQL	Adj.MDL	
91-20-3	Naphthalene	~~U~~ UJ	11	1.0	10	11	2.9	CCH
91-57-6	2-Methylnaphthalene	U	11	1.0	10	11	2.5	
86-73-7	Fluorene	U	11	1.0	10	11	3.6	
85-01-8	Phenanthrene	U	11	1.0	10	11	2.0	
206-44-0	Fluoranthene	U	11	1.0	10	11	2.0	
129-00-0	Pyrene	U	11	1.0	10	11	2.4	
56-55-3	Benzo(a)anthracene	U	11	1.0	10	11	2.2	
205-99-2	Benzo(b)fluoranthene	U	11	1.0	10	11	2.7	
207-08-9	Benzo(k)fluoranthene	U	11	1.0	10	11	3.5	
50-32-8	Benzo(a)pyrene	U	11	1.0	10	11	3.7	
193-39-5	Indeno(1,2,3-cd)pyrene	U	11	1.0	10	11	2.2	
53-70-3	Dibenzo(a,h)anthracene	U	11	1.0	10	11	2.0	
191-24-2	Benzo(g,h,i)perylene	U	11	1.0	10	11	2.3	
118-74-1	Hexachlorobenzene	U	11	1.0	10	11	2.0	
87-68-3	Hexachlorobutadiene	U	11	1.0	10	11	2.6	
77-47-4	Hexachlorocyclopentadiene	U	11	1.0	10	11	1.7	
7297-45-2	2-Methylnaphthalene-D10		60%					
367-12-4	2,4-Dibromophenol		76%					
81103-79-9	Fluorene-d10		54%					
1718-51-1	Pyrene-D10		99%					

hw
3/3/09

KATAHDIN ANALYTICAL SERVICES
Report of Analytical Results

Client: CH2MHill
Project: TO-009 Lejeune
PO No:
Sample Date: 12/07/08
Received Date: 12/09/08
Extraction Date: 12/11/08
Analysis Date: 29-DEC-2008 13:42
Report Date: 01/02/2009
Matrix: SOIL
% Solids: 90.7

Lab ID: SB7056-8
Client ID: MR08-SS107-08D
SDG: TO9-15
Extracted by: CB
Extraction Method: SW846 3550
Analyst: JCG
Analysis Method: SW846 M8270C
Lab Prep Batch: WG58993
Units: ug/Kgdrywt

CAS#	Compound	Flags	Results	DF	PQL	Adj.PQL	Adj.MDL	
91-20-3	Naphthalene	~~J~~ UJ	11	1.0	10	11	2.9	CCH
91-57-6	2-Methylnaphthalene	~~J~~ UJ	11	1.0	10	11	2.4	CCH
86-73-7	Fluorene	U	11	1.0	10	11	3.5	
85-01-8	Phenanthrene	J	2.9	1.0	10	11	2.0	
206-44-0	Fluoranthene	J	3.9	1.0	10	11	2.0	
129-00-0	Pyrene	J	3.5	1.0	10	11	2.3	
56-55-3	Benzo(a)anthracene	U	11	1.0	10	11	2.1	
205-99-2	Benzo(b)fluoranthene	U	11	1.0	10	11	2.6	
207-08-9	Benzo(k)fluoranthene	U	11	1.0	10	11	3.4	
50-32-8	Benzo(a)pyrene	U	11	1.0	10	11	3.6	
193-39-5	Indeno(1,2,3-cd)pyrene	U	11	1.0	10	11	2.1	
53-70-3	Dibenzo(a,h)anthracene	U	11	1.0	10	11	2.0	
191-24-2	Benzo(g,h,i)perylene	U	11	1.0	10	11	2.2	
118-74-1	Hexachlorobenzene	~~J~~ UJ	11	1.0	10	11	2.0	CCH
87-68-3	Hexachlorobutadiene	U	11	1.0	10	11	2.5	
77-47-4	Hexachlorocyclopentadiene	U	11	1.0	10	11	1.6	
7297-45-2	2-Methylnaphthalene-D10		58%					
367-12-4	2,4-Dibromophenol		78%					
81103-79-9	Fluorene-d10		54%					
1718-51-1	Pyrene-D10		95%					

RW 3/3/09

5

KATAHDIN ANALYTICAL SERVICES
Report of Analytical Results

Client: CH2MHill
Project: TO-009 Lejeune
PO No:
Sample Date: 12/07/08
Received Date: 12/09/08
Extraction Date: 12/11/08
Analysis Date: 24-DEC-2008 17:55
Report Date: 01/02/2009
Matrix: SOIL
% Solids: 89.6

Lab ID: SB7056-10
Client ID: MR08-IS107-2-3-08D
SDG: TO9-15
Extracted by: CB
Extraction Method: SW846 3550
Analyst: JCG
Analysis Method: SW846 M8270C
Lab Prep Batch: WG58993
Units: ug/Kgdrywt

CAS#	Compound	Flags	Results	DF	PQL	Adj.PQL	Adj.MDL	
91-20-3	Naphthalene	~~J~~ J	3.1	1.0	10	11	2.9	CCU
91-57-6	2-Methylnaphthalene	J	4.8	1.0	10	11	2.4	
86-73-7	Fluorene	J	5.0	1.0	10	11	3.6	
85-01-8	Phenanthrene	J	9.2	1.0	10	11	2.0	
206-44-0	Fluoranthene	J	6.4	1.0	10	11	2.0	
129-00-0	Pyrene	J	5.8	1.0	10	11	2.3	
56-55-3	Benzo(a)anthracene	U	11	1.0	10	11	2.1	
205-99-2	Benzo(b)fluoranthene	U	11	1.0	10	11	2.7	
207-08-9	Benzo(k)fluoranthene	U	11	1.0	10	11	3.5	
50-32-8	Benzo(a)pyrene	U	11	1.0	10	11	3.7	
193-39-5	Indeno(1,2,3-cd)pyrene	U	11	1.0	10	11	2.1	
53-70-3	Dibenzo(a,h)anthracene	U	11	1.0	10	11	2.0	
191-24-2	Benzo(g,h,i)perylene	U	11	1.0	10	11	2.2	
118-74-1	Hexachlorobenzene	U	11	1.0	10	11	2.0	
87-68-3	Hexachlorobutadiene	U	11	1.0	10	11	2.6	
77-47-4	Hexachlorocyclopentadiene	U	11	1.0	10	11	1.7	
7297-45-2	2-Methylnaphthalene-D10		69%					
367-12-4	2,4-Dibromophenol		85%					
81103-79-9	Fluorene-d10		60%					
1718-51-1	Pyrene-D10		106%					

MW 3/3/09

6

KATAHDIN ANALYTICAL SERVICES
Report of Analytical Results

Client: CH2MHill
Project: TO-009 Lejeune
PO No:
Sample Date: 12/07/08
Received Date: 12/09/08
Extraction Date: 12/11/08
Analysis Date: 24-DEC-2008 18:37
Report Date: 01/02/2009
Matrix: SOIL
% Solids: 92.8

Lab ID: SB7056-12
Client ID: MR08-SS108-08D
SDG: TO9-15
Extracted by: CB
Extraction Method: SW846 3550
Analyst: JCG
Analysis Method: SW846 M8270C
Lab Prep Batch: WG58993
Units: ug/Kgdrywt

CAS#	Compound	Flags	Results	DF	PQL	Adj.PQL	Adj.MDL
91-20-3	Naphthalene	~~U~~ UJ	11	1.0	10	11	2.8 CCH
91-57-6	2-Methylnaphthalene	U	11	1.0	10	11	2.4
86-73-7	Fluorene	U	11	1.0	10	11	3.4
85-01-8	Phenanthrene	J	5.8	1.0	10	11	1.9
206-44-0	Fluoranthene		39	1.0	10	11	1.9
129-00-0	Pyrene		42	1.0	10	11	2.3
56-55-3	Benzo(a)anthracene		28	1.0	10	11	2.0
205-99-2	Benzo(b)fluoranthene		42	1.0	10	11	2.6
207-08-9	Benzo(k)fluoranthene		24	1.0	10	11	3.3
50-32-8	Benzo(a)pyrene		28	1.0	10	11	3.6
193-39-5	Indeno(1,2,3-cd)pyrene		17	1.0	10	11	2.0
53-70-3	Dibenzo(a,h)anthracene	J	8.8	1.0	10	11	1.9
191-24-2	Benzo(g,h,i)perylene		17	1.0	10	11	2.2
118-74-1	Hexachlorobenzene	U	11	1.0	10	11	1.9
87-68-3	Hexachlorobutadiene	U	11	1.0	10	11	2.5
77-47-4	Hexachlorocyclopentadiene	U	11	1.0	10	11	1.6
7297-45-2	2-Methylnaphthalene-D10		67%				
367-12-4	2,4-Dibromophenol		85%				
81103-79-9	Fluorene-d10		60%				
1718-51-1	Pyrene-D10		105%				

lw 3/3/09

7

KATAHDIN ANALYTICAL SERVICES
Report of Analytical Results

Client: CH2MHill
Project: TO-009 Lejeune
PO No:
Sample Date: 12/07/08
Received Date: 12/09/08
Extraction Date: 12/13/08
Analysis Date: 29-DEC-2008 14:23
Report Date: 01/02/2009
Matrix: SOIL
% Solids: 88.6

Lab ID: SB7056-14
Client ID: MR08-IS108-2-3-08D
SDG: TO9-15
Extracted by: CB
Extraction Method: SW846 3550
Analyst: JCG
Analysis Method: SW846 M8270C
Lab Prep Batch: WG59027
Units: ug/Kgdrywt

CAS#	Compound	Flags	Results	DF	PQL	Adj.PQL	Adj.MDL	
91-20-3	Naphthalene	~~U~~ UJ	11	1.0	10	11	2.9	CCH
91-57-6	2-Methylnaphthalene	~~U~~ UJ	11	1.0	10	11	2.5	CCH
86-73-7	Fluorene	U	11	1.0	10	11	3.6	
85-01-8	Phenanthrene	U	11	1.0	10	11	2.0	
206-44-0	Fluoranthene	U	11	1.0	10	11	2.0	
129-00-0	Pyrene	U	11	1.0	10	11	2.4	
56-55-3	Benzo(a)anthracene	U	11	1.0	10	11	2.1	
205-99-2	Benzo(b)fluoranthene	U	11	1.0	10	11	2.7	
207-08-9	Benzo(k)fluoranthene	U	11	1.0	10	11	3.5	
50-32-8	Benzo(a)pyrene	U	11	1.0	10	11	3.7	
193-39-5	Indeno(1,2,3-cd)pyrene	U	11	1.0	10	11	2.1	
53-70-3	Dibenzo(a,h)anthracene	U	11	1.0	10	11	2.0	
191-24-2	Benzo(g,h,i)perylene	U	11	1.0	10	11	2.2	
118-74-1	Hexachlorobenzene	~~U~~ UJ	11	1.0	10	11	2.0	CCH
87-68-3	Hexachlorobutadiene	U	11	1.0	10	11	2.6	
77-47-4	Hexachlorocyclopentadiene	U	11	1.0	10	11	1.7	
7297-45-2	2-Methylnaphthalene-D10		69%					
367-12-4	2,4-Dibromophenol		89%					
81103-79-9	Fluorene-d10		63%					
1718-51-1	Pyrene-D10		108%					

MW 3/3/09

8

KATAHDIN ANALYTICAL SERVICES
Report of Analytical Results

Client: CH2MHill
Project: TO-009 Lejeune
PO No:
Sample Date: 12/07/08
Received Date: 12/09/08
Extraction Date: 12/15/08
Analysis Date: 31-DEC-2008 06:39
Report Date: 01/02/2009
Matrix: SOIL
% Solids: 87.7

Lab ID: SB7056-16RE
Client ID: MR08-IS109-2-3-08D
SDG: TO9-15
Extracted by: CB
Extraction Method: SW846 3550
Analyst: JCG
Analysis Method: SW846 M8270C
Lab Prep Batch: WG59079
Units: ug/Kgdrywt

CAS#	Compound	Flags	Results	DF	PQL	Adj.PQL	Adj.MDL
91-20-3	Naphthalene	U	11	1.0	10	11	3.0
91-57-6	2-Methylnaphthalene	U	11	1.0	10	11	2.5
86-73-7	Fluorene	U	11	1.0	10	11	3.6
85-01-8	Phenanthrene	U	11	1.0	10	11	2.0
206-44-0	Fluoranthene	U	11	1.0	10	11	2.0
129-00-0	Pyrene	U	11	1.0	10	11	2.4
56-55-3	Benzo(a)anthracene	U	11	1.0	10	11	2.2
205-99-2	Benzo(b)fluoranthene	U	11	1.0	10	11	2.7
207-08-9	Benzo(k)fluoranthene	U	11	1.0	10	11	3.5
50-32-8	Benzo(a)pyrene	U	11	1.0	10	11	3.8
193-39-5	Indeno(1,2,3-cd)pyrene	U	11	1.0	10	11	2.2
53-70-3	Dibenzo(a,h)anthracene	U	11	1.0	10	11	2.0
191-24-2	Benzo(g,h,i)perylene	U	11	1.0	10	11	2.3
118-74-1	Hexachlorobenzene	U	11	1.0	10	11	2.0
87-68-3	Hexachlorobutadiene	U	11	1.0	10	11	2.6
77-47-4	Hexachlorocyclopentadiene	U	11	1.0	10	11	1.7
7297-45-2	2-Methylnaphthalene-D10		62%				
367-12-4	2,4-Dibromophenol		102%				
81103-79-9	Fluorene-d10		70%				
1718-51-1	Pyrene-D10		79%				

lew
3/31/09

9

KATAHDIN ANALYTICAL SERVICES
Report of Analytical Results

Client: CH2MHill
Project: TO-009 Lejeune
PO No:
Sample Date: 12/07/08
Received Date: 12/09/08
Extraction Date: 12/13/08
Analysis Date: 29-DEC-2008 15:04
Report Date: 01/02/2009
Matrix: SOIL
% Solids: 84.1

Lab ID: SB7056-18
Client ID: MR08-IS109D-2-3-08D
SDG: TO9-15
Extracted by: CB
Extraction Method: SW846 3550
Analyst: JCG
Analysis Method: SW846 M8270C
Lab Prep Batch: WG59027
Units: ug/Kgdrywt

CAS#	Compound	Flags	Results	DF	PQL	Adj.PQL	Adj.MDL	
91-20-3	Naphthalene	~~U~~ UJ	12	1.0	10	12	3.1	CCH
91-57-6	2-Methylnaphthalene	~~U~~ UJ	12	1.0	10	12	2.6	CCH
86-73-7	Fluorene	U	12	1.0	10	12	3.8	
85-01-8	Phenanthrene	U	12	1.0	10	12	2.1	
206-44-0	Fluoranthene	J	4.2	1.0	10	12	2.1	
129-00-0	Pyrene	J	3.8	1.0	10	12	2.5	
56-55-3	Benzo(a)anthracene	U	12	1.0	10	12	2.2	
205-99-2	Benzo(b)fluoranthene	U	12	1.0	10	12	2.8	
207-08-9	Benzo(k)fluoranthene	U	12	1.0	10	12	3.7	
50-32-8	Benzo(a)pyrene	U	12	1.0	10	12	3.9	
193-39-5	Indeno(1,2,3-cd)pyrene	U	12	1.0	10	12	2.2	
53-70-3	Dibenzo(a,h)anthracene	U	12	1.0	10	12	2.1	
191-24-2	Benzo(g,h,i)perylene	U	12	1.0	10	12	2.4	
118-74-1	Hexachlorobenzene	~~U~~ UJ	12	1.0	10	12	2.1	CCH
87-68-3	Hexachlorobutadiene	U	12	1.0	10	12	2.7	
77-47-4	Hexachlorocyclopentadiene	U	12	1.0	10	12	1.8	
7297-45-2	2-Methylnaphthalene-D10		62%					
367-12-4	2,4-Dibromophenol		94%					
81103-79-9	Fluorene-d10		62%					
1718-51-1	Pyrene-D10		102%					

MW
3/3/09

10

KATAHDIN ANALYTICAL SERVICES
Report of Analytical Results

Client: CH2MHill
Project: TO-009 Lejeune
PO No:
Sample Date: 12/08/08
Received Date: 12/09/08
Extraction Date: 12/13/08
Analysis Date: 29-DEC-2008 15:46
Report Date: 01/02/2009
Matrix: SOIL
% Solids: 94.1

Lab ID: SB7056-20
Client ID: MR08-SS109-08D
SDG: TO9-15
Extracted by: CB
Extraction Method: SW846 3550
Analyst: JCG
Analysis Method: SW846 M8270C
Lab Prep Batch: WG59027
Units: ug/Kgdrywt

CAS#	Compound	Flags	Results	DF	PQL	Adj.PQL	Adj.MDL	
91-20-3	Naphthalene	~~U~~ UJ	11	1.0	10	11	2.8	CCH
91-57-6	2-Methylnaphthalene	~~U~~ UJ	11	1.0	10	11	2.3	CCH
86-73-7	Fluorene	U	11	1.0	10	11	3.4	
85-01-8	Phenanthrene		26	1.0	10	11	1.9	
206-44-0	Fluoranthene		210	1.0	10	11	1.9	
129-00-0	Pyrene		210	1.0	10	11	2.2	
56-55-3	Benzo(a)anthracene		48	1.0	10	11	2.0	
205-99-2	Benzo(b)fluoranthene		130	1.0	10	11	2.6	
207-08-9	Benzo(k)fluoranthene		120	1.0	10	11	3.3	
50-32-8	Benzo(a)pyrene		52	1.0	10	11	3.5	
193-39-5	Indeno(1,2,3-cd)pyrene		50	1.0	10	11	2.0	
53-70-3	Dibenzo(a,h)anthracene		15	1.0	10	11	1.9	
191-24-2	Benzo(g,h,i)perylene		51	1.0	10	11	2.1	
118-74-1	Hexachlorobenzene	~~U~~ UJ	11	1.0	10	11	1.9	CCH
87-68-3	Hexachlorobutadiene	U	11	1.0	10	11	2.4	
77-47-4	Hexachlorocyclopentadiene	U	11	1.0	10	11	1.6	
7297-45-2	2-Methylnaphthalene-D10		62%					
367-12-4	2,4-Dibromophenol		83%					
81103-79-9	Fluorene-d10		55%					
1718-51-1	Pyrene-D10		101%					

MW 3/3/09

11

KATAHDIN ANALYTICAL SERVICES
Report of Analytical Results

Client: CH2MHill
Project: TO-009 Lejeune
PO No:
Sample Date: 12/08/08
Received Date: 12/09/08
Extraction Date: 12/13/08
Analysis Date: 29-DEC-2008 16:27
Report Date: 01/02/2009
Matrix: SOIL
% Solids: 93.8

Lab ID: SB7056-22
Client ID: MR08-SS109D-08D
SDG: TO9-15
Extracted by: CB
Extraction Method: SW846 3550
Analyst: JCG
Analysis Method: SW846 M8270C
Lab Prep Batch: WG59027
Units: ug/Kgdrywt

CAS#	Compound	Flags	Results	DF	PQL	Adj.PQL	Adj.MDL	
91-20-3	Naphthalene	~~U~~ UJ	11	1.0	10	11	2.8	CCH
91-57-6	2-Methylnaphthalene	~~U~~ J	5.8	1.0	10	11	2.3	CCH
86-73-7	Fluorene	U	11	1.0	10	11	3.4	
85-01-8	Phenanthrene		50	1.0	10	11	1.9	
206-44-0	Fluoranthene		150	1.0	10	11	1.9	
129-00-0	Pyrene		120	1.0	10	11	2.2	
56-55-3	Benzo(a)anthracene		16	1.0	10	11	2.0	
205-99-2	Benzo(b)fluoranthene		48	1.0	10	11	2.6	
207-08-9	Benzo(k)fluoranthene		45	1.0	10	11	3.3	
50-32-8	Benzo(a)pyrene		20	1.0	10	11	3.5	
193-39-5	Indeno(1,2,3-cd)pyrene		19	1.0	10	11	2.0	
53-70-3	Dibenzo(a,h)anthracene	J	6.7	1.0	10	11	1.9	
191-24-2	Benzo(g,h,i)perylene		20	1.0	10	11	2.1	
118-74-1	Hexachlorobenzene	~~U~~ J	1.6	1.0	10	11	1.9	CCH
87-68-3	Hexachlorobutadiene	U	11	1.0	10	11	2.4	
77-47-4	Hexachlorocyclopentadiene	U	11	1.0	10	11	1.6	
7297-45-2	2-Methylnaphthalene-D10		66%					
367-12-4	2,4-Dibromophenol		87%					
81103-79-9	Fluorene-d10		59%					
1718-51-1	Pyrene-D10		101%					

LW
3/3/09

KATAHDIN ANALYTICAL SERVICES
Report of Analytical Results

Client: CH2MHill
Project: TO-009 Lejeune
PO No:
Sample Date: 12/08/08
Received Date: 12/09/08
Extraction Date: 12/13/08
Analysis Date: 29-DEC-2008 17:09
Report Date: 01/02/2009
Matrix: SOIL
% Solids: 90.9

Lab ID: SB7056-24
Client ID: MR08-SS105-08D
SDG: TO9-15
Extracted by: CB
Extraction Method: SW846 3550
Analyst: JCG
Analysis Method: SW846 M8270C
Lab Prep Batch: WG59027
Units: ug/Kgdrywt

CAS#	Compound	Flags	Results	DF	PQL	Adj.PQL	Adj.MDL	
91-20-3	Naphthalene	~~U~~ UJ	11	1.0	10	11	2.8	CCH
91-57-6	2-Methylnaphthalene	~~U~~ UJ	11	1.0	10	11	2.4	CCH
86-73-7	Fluorene	U	11	1.0	10	11	3.5	
85-01-8	Phenanthrene	U	11	1.0	10	11	2.0	
206-44-0	Fluoranthene	J	5.8	1.0	10	11	2.0	
129-00-0	Pyrene	J	7.0	1.0	10	11	2.3	
56-55-3	Benzo(a)anthracene	J	2.5	1.0	10	11	2.1	
205-99-2	Benzo(b)fluoranthene	U	11	1.0	10	11	2.6	
207-08-9	Benzo(k)fluoranthene	U	11	1.0	10	11	3.4	
50-32-8	Benzo(a)pyrene	~~J~~	4.1	1.0	10	11	3.6	
193-39-5	Indeno(1,2,3-cd)pyrene	~~J~~ 11U	~~4.0~~	1.0	10	11	2.1	BL
53-70-3	Dibenzo(a,h)anthracene	U	11	1.0	10	11	2.0	
191-24-2	Benzo(g,h,i)perylene	~~J~~ 11U	~~4.6~~	1.0	10	11	2.2	BL
118-74-1	Hexachlorobenzene	~~U~~ UJ	11	1.0	10	11	2.0	CCH
87-68-3	Hexachlorobutadiene	U	11	1.0	10	11	2.5	
77-47-4	Hexachlorocyclopentadiene	U	11	1.0	10	11	1.6	
7297-45-2	2-Methylnaphthalene-D10		62%					
367-12-4	2,4-Dibromophenol		86%					
81103-79-9	Fluorene-d10		61%					
1718-51-1	Pyrene-D10		100%					

CW
3/3/09

13

KATAHDIN ANALYTICAL SERVICES
Report of Analytical Results

Client: CH2MHill
Project: TO-009 Lejeune
PO No:
Sample Date: 12/08/08
Received Date: 12/09/08
Extraction Date: 12/13/08
Analysis Date: 29-DEC-2008 17:51
Report Date: 01/02/2009
Matrix: SOIL
% Solids: 92.7

Lab ID: SB7056-26
Client ID: MR08-SS106-08D
SDG: TO9-15
Extracted by: CB
Extraction Method: SW846 3550
Analyst: JCG
Analysis Method: SW846 M8270C
Lab Prep Batch: WG59027
Units: ug/Kgdrywt

CAS#	Compound	Flags	Results	DF	PQL	Adj.PQL	Adj.MDL	
91-20-3	Naphthalene	~~U~~ UJ	11	1.0	10	11	2.8	CCH
91-57-6	2-Methylnaphthalene	~~U~~ UJ	11	1.0	10	11	2.4	CCH
86-73-7	Fluorene	U	11	1.0	10	11	3.4	
85-01-8	Phenanthrene	J	2.6	1.0	10	11	1.9	
206-44-0	Fluoranthene	J	7.6	1.0	10	11	1.9	
129-00-0	Pyrene	J	7.4	1.0	10	11	2.3	
56-55-3	Benzo(a)anthracene	J	2.6	1.0	10	11	2.0	
205-99-2	Benzo(b)fluoranthene	J	8.3	1.0	10	11	2.6	
207-08-9	Benzo(k)fluoranthene	J	5.4	1.0	10	11	3.3	
50-32-8	Benzo(a)pyrene	J	4.6	1.0	10	11	3.6	
193-39-5	Indeno(1,2,3-cd)pyrene	~~J~~ UU	~~3.8~~	1.0	10	11	2.0	BL
53-70-3	Dibenzo(a,h)anthracene	U	11	1.0	10	11	1.9	
191-24-2	Benzo(g,h,i)perylene	~~J~~ UU	~~4.2~~	1.0	10	11	2.2	BL
118-74-1	Hexachlorobenzene	~~U~~ UJ	11	1.0	10	11	1.9	CCH
87-68-3	Hexachlorobutadiene	U	11	1.0	10	11	2.5	
77-47-4	Hexachlorocyclopentadiene	U	11	1.0	10	11	1.6	
7297-45-2	2-Methylnaphthalene-D10		64%					
367-12-4	2,4-Dibromophenol		81%					
81103-79-9	Fluorene-d10		61%					
1718-51-1	Pyrene-D10		93%					

LWS 3/3/09

KATAHDIN ANALYTICAL SERVICES
Report of Analytical Results

Client: CH2MHill
Project: TO-009 Lejeune
PO No:
Sample Date: 12/08/08
Received Date: 12/09/08
Extraction Date: 12/13/08
Analysis Date: 29-DEC-2008 18:33
Report Date: 01/02/2009
Matrix: SOIL
% Solids: 85.5

Lab ID: SB7056-28
Client ID: IS106-1-2-08D
SDG: TO9-15
Extracted by: CB
Extraction Method: SW846 3550
Analyst: JCG
Analysis Method: SW846 M8270C
Lab Prep Batch: WG59027
Units: ug/Kgdrywt

CAS#	Compound	Flags	Results	DF	PQL	Adj.PQL	Adj.MDL	
91-20-3	Naphthalene	~~U~~ UJ	12	1.0	10	12	3.0	CCH
91-57-6	2-Methylnaphthalene	~~U~~ UJ	12	1.0	10	12	2.6	CCH
86-73-7	Fluorene	U	12	1.0	10	12	3.7	
85-01-8	Phenanthrene	U	12	1.0	10	12	2.1	
206-44-0	Fluoranthene	J	3.8	1.0	10	12	2.1	
129-00-0	Pyrene	J	3.4	1.0	10	12	2.4	
56-55-3	Benzo(a)anthracene	J	2.8	1.0	10	12	2.2	
205-99-2	Benzo(b)fluoranthene	J	7.0	1.0	10	12	2.8	
207-08-9	Benzo(k)fluoranthene	J	5.6	1.0	10	12	3.6	
50-32-8	Benzo(a)pyrene	U	12	1.0	10	12	3.9	
193-39-5	Indeno(1,2,3-cd)pyrene	~~J~~ 12U	~~2.6~~	1.0	10	12	2.2	BL
53-70-3	Dibenzo(a,h)anthracene	U	12	1.0	10	12	2.1	
191-24-2	Benzo(g,h,i)perylene	~~J~~ 12U	~~3.4~~	1.0	10	12	2.3	BL
118-74-1	Hexachlorobenzene	~~U~~ UJ	12	1.0	10	12	2.1	CCH
87-68-3	Hexachlorobutadiene	U	12	1.0	10	12	2.7	
77-47-4	Hexachlorocyclopentadiene	U	12	1.0	10	12	1.8	
7297-45-2	2-Methylnaphthalene-D10		54%					
367-12-4	2,4-Dibromophenol		81%					
81103-79-9	Fluorene-d10		54%					
1718-51-1	Pyrene-D10		77%					

MW 3/3/09

KATAHDIN ANALYTICAL SERVICES
Report of Analytical Results

Client: CH2MHill
Project: TO-009 Lejeune
PO No:
Sample Date: 12/08/08
Received Date: 12/09/08
Extraction Date: 12/13/08
Analysis Date: 29-DEC-2008 19:15
Report Date: 01/02/2009
Matrix: SOIL
% Solids: 87.4

Lab ID: SB7056-30
Client ID: MR08-IS105-2-3-08D
SDG: TO9-15
Extracted by: CB
Extraction Method: SW846 3550
Analyst: JCG
Analysis Method: SW846 M8270C
Lab Prep Batch: WG59027
Units: ug/Kgdrywt

CAS#	Compound	Flags	Results	DF	PQL	Adj.PQL	Adj.MDL	
91-20-3	Naphthalene	~~U~~ UJ	11	1.0	10	11	3.0	CCH
91-57-6	2-Methylnaphthalene	~~U~~ UJ	11	1.0	10	11	2.5	CCH
86-73-7	Fluorene	U	11	1.0	10	11	3.7	
85-01-8	Phenanthrene	U	11	1.0	10	11	2.0	
206-44-0	Fluoranthene	U	11	1.0	10	11	2.0	
129-00-0	Pyrene	U	11	1.0	10	11	2.4	
56-55-3	Benzo(a)anthracene	U	11	1.0	10	11	2.2	
205-99-2	Benzo(b)fluoranthene	U	11	1.0	10	11	2.7	
207-08-9	Benzo(k)fluoranthene	U	11	1.0	10	11	3.5	
50-32-8	Benzo(a)pyrene	U	11	1.0	10	11	3.8	
193-39-5	Indeno(1,2,3-cd)pyrene	U	11	1.0	10	11	2.2	
53-70-3	Dibenzo(a,h)anthracene	U	11	1.0	10	11	2.0	
191-24-2	Benzo(g,h,i)perylene	U	11	1.0	10	11	2.3	
118-74-1	Hexachlorobenzene	~~U~~ UJ	11	1.0	10	11	2.0	CCH
87-68-3	Hexachlorobutadiene	U	11	1.0	10	11	2.6	
77-47-4	Hexachlorocyclopentadiene	U	11	1.0	10	11	1.7	
7297-45-2	2-Methylnaphthalene-D10		57%					
367-12-4	2,4-Dibromophenol		75%					
81103-79-9	Fluorene-d10		54%					
1718-51-1	Pyrene-D10		100%					

CW
3/3/09

16

KATAHDIN ANALYTICAL SERVICES
Report of Analytical Results

Client: CH2MHill
Project: TO-009 Lejeune
PO No:
Sample Date: 12/08/08
Received Date: 12/09/08
Extraction Date: 12/13/08
Analysis Date: 29-DEC-2008 19:57
Report Date: 01/02/2009
Matrix: SOIL
% Solids: 88.8

Lab ID: SB7056-32
Client ID: MR08-IS106-2-3-08D
SDG: TO9-15
Extracted by: CB
Extraction Method: SW846 3550
Analyst: JCG
Analysis Method: SW846 M8270C
Lab Prep Batch: WG59027
Units: ug/Kgdrywt

CAS#	Compound	Flags	Results	DF	PQL	Adj.PQL	Adj.MDL	
91-20-3	Naphthalene	~~U~~ UJ	11	1.0	10	11	2.9	CCH
91-57-6	2-Methylnaphthalene	~~U~~ UJ	11	1.0	10	11	2.5	CCH
86-73-7	Fluorene	U	11	1.0	10	11	3.6	
85-01-8	Phenanthrene	U	11	1.0	10	11	2.0	
206-44-0	Fluoranthene	U	11	1.0	10	11	2.0	
129-00-0	Pyrene	U	11	1.0	10	11	2.4	
56-55-3	Benzo(a)anthracene	U	11	1.0	10	11	2.1	
205-99-2	Benzo(b)fluoranthene	U	11	1.0	10	11	2.7	
207-08-9	Benzo(k)fluoranthene	U	11	1.0	10	11	3.5	
50-32-8	Benzo(a)pyrene	U	11	1.0	10	11	3.7	
193-39-5	Indeno(1,2,3-cd)pyrene	U	11	1.0	10	11	2.1	
53-70-3	Dibenzo(a,h)anthracene	U	11	1.0	10	11	2.0	
191-24-2	Benzo(g,h,i)perylene	U	11	1.0	10	11	2.2	
118-74-1	Hexachlorobenzene	~~U~~ UJ	11	1.0	10	11	2.0	CCH
87-68-3	Hexachlorobutadiene	U	11	1.0	10	11	2.6	
77-47-4	Hexachlorocyclopentadiene	U	11	1.0	10	11	1.7	
7297-45-2	2-Methylnaphthalene-D10		67%					
367-12-4	2,4-Dibromophenol		86%					
81103-79-9	Fluorene-d10		60%					
1718-51-1	Pyrene-D10		102%					

3/3/09

17

KATAHDIN ANALYTICAL SERVICES
Report of Analytical Results

Client: CH2MHill
Project: TO-009 Lejeune
PO No:
Sample Date: 12/08/08
Received Date: 12/09/08
Extraction Date: 12/13/08
Analysis Date: 29-DEC-2008 20:38
Report Date: 01/02/2009
Matrix: SOIL
% Solids: 92.5

Lab ID: SB7056-34
Client ID: MR08-SS087-08D
SDG: TO9-15
Extracted by: CB
Extraction Method: SW846 3550
Analyst: JCG
Analysis Method: SW846 M8270C
Lab Prep Batch: WG59027
Units: ug/Kgdrywt

CAS#	Compound	Flags	Results	DF	PQL	Adj.PQL	Adj.MDL	
91-20-3	Naphthalene	~~U~~ UJ	11	1.0	10	11	2.8	CCH
91-57-6	2-Methylnaphthalene	~~U~~ UJ	11	1.0	10	11	2.4	CCH
86-73-7	Fluorene	U	11	1.0	10	11	3.4	
85-01-8	Phenanthrene	U	11	1.0	10	11	1.9	
206-44-0	Fluoranthene	J	2.0	1.0	10	11	1.9	
129-00-0	Pyrene	U	11	1.0	10	11	2.3	
56-55-3	Benzo(a)anthracene	U	11	1.0	10	11	2.0	
205-99-2	Benzo(b)fluoranthene	U	11	1.0	10	11	2.6	
207-08-9	Benzo(k)fluoranthene	U	11	1.0	10	11	3.4	
50-32-8	Benzo(a)pyrene	U	11	1.0	10	11	3.6	
193-39-5	Indeno(1,2,3-cd)pyrene	U	11	1.0	10	11	2.0	
53-70-3	Dibenzo(a,h)anthracene	U	11	1.0	10	11	1.9	
191-24-2	Benzo(g,h,i)perylene	U	11	1.0	10	11	2.2	
118-74-1	Hexachlorobenzene	~~U~~ UJ	11	1.0	10	11	1.9	CCH
87-68-3	Hexachlorobutadiene	U	11	1.0	10	11	2.5	
77-47-4	Hexachlorocyclopentadiene	U	11	1.0	10	11	1.6	
7297-45-2	2-Methylnaphthalene-D10		57%					
367-12-4	2,4-Dibromophenol		71%					
81103-79-9	Fluorene-d10		53%					
1718-51-1	Pyrene-D10		91%					

LW
3/3/09

KATAHDIN ANALYTICAL SERVICES
Report of Analytical Results

Client: CH2MHill
Project: TO-009 Lejeune
PO No:
Sample Date: 12/08/08
Received Date: 12/09/08
Extraction Date: 12/13/08
Analysis Date: 29-DEC-2008 21:20
Report Date: 01/02/2009
Matrix: SOIL
% Solids: 87.8

Lab ID: SB7056-36
Client ID: MR08-IS087-2-3-08D
SDG: TO9-15
Extracted by: CB
Extraction Method: SW846 3550
Analyst: JCG
Analysis Method: SW846 M8270C
Lab Prep Batch: WG59027
Units: ug/Kgdrywt

CAS#	Compound	Flags	Results	DF	PQL	Adj.PQL	Adj.MDL	
91-20-3	Naphthalene	~~J~~ UJ	11	1.0	10	11	3.0	CCH
91-57-6	2-Methylnaphthalene	~~J~~ UJ	11	1.0	10	11	2.5	CCH
86-73-7	Fluorene	U	11	1.0	10	11	3.6	
85-01-8	Phenanthrene	J	3.7	1.0	10	11	2.0	
206-44-0	Fluoranthene	J	7.0	1.0	10	11	2.0	
129-00-0	Pyrene	J	6.5	1.0	10	11	2.4	
56-55-3	Benzo(a)anthracene	J	3.8	1.0	10	11	2.2	
205-99-2	Benzo(b)fluoranthene	U	11	1.0	10	11	2.7	
207-08-9	Benzo(k)fluoranthene	U	11	1.0	10	11	3.5	
50-32-8	Benzo(a)pyrene	U	11	1.0	10	11	3.8	
193-39-5	Indeno(1,2,3-cd)pyrene	~~J~~ 11U	~~2.6~~	1.0	10	11	2.2	BL
53-70-3	Dibenzo(a,h)anthracene	U	11	1.0	10	11	2.0	
191-24-2	Benzo(g,h,i)perylene	~~J~~ 11U	~~2.9~~	1.0	10	11	2.3	BL
118-74-1	Hexachlorobenzene	~~J~~ J	0.41	1.0	10	11	2.0	CCH
87-68-3	Hexachlorobutadiene	U	11	1.0	10	11	2.6	
77-47-4	Hexachlorocyclopentadiene	U	11	1.0	10	11	1.7	
7297-45-2	2-Methylnaphthalene-D10		65%					
367-12-4	2,4-Dibromophenol		88%					
81103-79-9	Fluorene-d10		61%					
1718-51-1	Pyrene-D10		93%					

fuw
3/3/09

KATAHDIN ANALYTICAL SERVICES
Report of Analytical Results

Client: CH2MHill
Project: TO-009 Lejeune
PO No:
Sample Date: 12/08/08
Received Date: 12/09/08
Extraction Date: 12/13/08
Analysis Date: 31-DEC-2008 05:17
Report Date: 01/02/2009
Matrix: SOIL
% Solids: 88.0

Lab ID: SB7056-38
Client ID: MR08-SS086-08D
SDG: TO9-15
Extracted by: CB
Extraction Method: SW846 3550
Analyst: JCG
Analysis Method: SW846 M8270C
Lab Prep Batch: WG59027
Units: ug/Kgdrywt

CAS#	Compound	Flags	Results	DF	PQL	Adj.PQL	Adj.MDL	
91-20-3	Naphthalene	U	11	1.0	10	11	3.0	
91-57-6	2-Methylnaphthalene		12	1.0	10	11	2.5	
86-73-7	Fluorene	U	11	1.0	10	11	3.6	
85-01-8	Phenanthrene		25	1.0	10	11	2.0	
206-44-0	Fluoranthene	~~E~~	490 ~~410~~	1.0	10	11	2.0	R DL
129-00-0	Pyrene	~~E~~	340 ~~300~~	1.0	10	11	2.4	R DL
56-55-3	Benzo(a)anthracene		92	1.0	10	11	2.2	
205-99-2	Benzo(b)fluoranthene		200	1.0	10	11	2.7	
207-08-9	Benzo(k)fluoranthene		130	1.0	10	11	3.5	
50-32-8	Benzo(a)pyrene	U	11	1.0	10	11	3.8	
193-39-5	Indeno(1,2,3-cd)pyrene	J	8.4	1.0	10	11	2.2	
53-70-3	Dibenzo(a,h)anthracene		13	1.0	10	11	2.0	
191-24-2	Benzo(g,h,i)perylene		45	1.0	10	11	2.3	
118-74-1	Hexachlorobenzene	U	11	1.0	10	11	2.0	
87-68-3	Hexachlorobutadiene	U	11	1.0	10	11	2.6	
77-47-4	Hexachlorocyclopentadiene	U	11	1.0	10	11	1.7	
7297-45-2	2-Methylnaphthalene-D10		62%					
367-12-4	2,4-Dibromophenol		80%					
81103-79-9	Fluorene-d10		69%					
1718-51-1	Pyrene-D10		83%					

LW 3/3/09

19DL

KATAHDIN ANALYTICAL SERVICES
Report of Analytical Results

Client: CH2MHill
Project: TO-009 Lejeune
PO No:
Sample Date: 12/08/08
Received Date: 12/09/08
Extraction Date: 12/13/08
Analysis Date: 31-DEC-2008 22:03
Report Date: 01/02/2009
Matrix: SOIL
% Solids: 88.0

Lab ID: SB7056-38DL
Client ID: MR08-SS086-08D
SDG: TO9-15
Extracted by: CB
Extraction Method: SW846 3550
Analyst: JCG
Analysis Method: SW846 M8270C
Lab Prep Batch: WG59027
Units: ug/Kgdrywt

Use original

CAS#	Compound	Flags	Results	DF	PQL	Adj.PQL	Adj.MDL	
91-20-3	Naphthalene	U	23	2.0	10	23	5.9	
91-57-6	2-Methylnaphthalene	J	20	2.0	10	23	5.0	
86-73-7	Fluorene	U	23	2.0	10	23	7.3	
85-01-8	Phenanthrene		25	2.0	10	23	4.1	
206-44-0	Fluoranthene		490	2.0	10	23	4.1	
129-00-0	Pyrene		340	2.0	10	23	4.8	
56-55-3	Benzo(a)anthracene		89	2.0	10	23	4.3	
205-99-2	Benzo(b)fluoranthene	J	280	2.0	10	23	5.4	CCH
207-08-9	Benzo(k)fluoranthene		130	2.0	10	23	7.0	
50-32-8	Benzo(a)pyrene		96	2.0	10	23	7.5	
193-39-5	Indeno(1,2,3-cd)pyrene		52	2.0	10	23	4.3	
53-70-3	Dibenzo(a,h)anthracene	J	20	2.0	10	23	4.1	
191-24-2	Benzo(g,h,i)perylene		51	2.0	10	23	4.5	
118-74-1	Hexachlorobenzene	~~U~~ UJ	23	2.0	10	23	4.1	CCH
87-68-3	Hexachlorobutadiene	U	23	2.0	10	23	5.2	
77-47-4	Hexachlorocyclopentadiene	~~U~~ UJ	23	2.0	10	23	3.4	CCH
7297-45-2	2-Methylnaphthalene-D10		69%					
367-12-4	2,4-Dibromophenol		101%					
81103-79-9	Fluorene-d10		74%					
1718-51-1	Pyrene-D10		92%					

R DL

MW 3/3/09

KATAHDIN ANALYTICAL SERVICES
Report of Analytical Results

Client: CH2MHill
Project: TO-009 Lejeune
PO No:
Sample Date: 12/08/08
Received Date: 12/09/08
Extraction Date: 12/13/08
Analysis Date: 31-DEC-2008 05:58
Report Date: 01/02/2009
Matrix: SOIL
% Solids: 87.0

Lab ID: SB7056-40
Client ID: MR08-IS086-2-3-08D
SDG: TO9-15
Extracted by: CB
Extraction Method: SW846 3550
Analyst: JCG
Analysis Method: SW846 M8270C
Lab Prep Batch: WG59027
Units: ug/Kgdrywt

CAS#	Compound	Flags	Results	DF	PQL	Adj.PQL	Adj.MDL
91-20-3	Naphthalene	U	11	1.0	10	11	3.0
91-57-6	2-Methylnaphthalene	J	11	1.0	10	11	2.5
86-73-7	Fluorene	U	11	1.0	10	11	3.7
85-01-8	Phenanthrene	J	7.6	1.0	10	11	2.1
206-44-0	Fluoranthene	U	11	1.0	10	11	2.1
129-00-0	Pyrene	U	11	1.0	10	11	2.4
56-55-3	Benzo(a)anthracene	J	3.7	1.0	10	11	2.2
205-99-2	Benzo(b)fluoranthene	U	11	1.0	10	11	2.8
207-08-9	Benzo(k)fluoranthene	U	11	1.0	10	11	3.6
50-32-8	Benzo(a)pyrene	U	11	1.0	10	11	3.8
193-39-5	Indeno(1,2,3-cd)pyrene	~~J~~	11U ~~3.0~~	1.0	10	11	2.2 BL
53-70-3	Dibenzo(a,h)anthracene	U	11	1.0	10	11	2.1
191-24-2	Benzo(g,h,i)perylene	~~J~~	11U ~~3.2~~	1.0	10	11	2.3 BL
118-74-1	Hexachlorobenzene	U	11	1.0	10	11	2.1
87-68-3	Hexachlorobutadiene	U	11	1.0	10	11	2.6
77-47-4	Hexachlorocyclopentadiene	U	11	1.0	10	11	1.7
7297-45-2	2-Methylnaphthalene-D10		71%				
367-12-4	2,4-Dibromophenol		105%				
81103-79-9	Fluorene-d10		80%				
1718-51-1	Pyrene-D10		101%				

fw
313609

ENVIRONMENTAL
Data Services, Inc.

SEMIVOLATILE ORGANIC COMPOUNDS

USEPA Region IV - Level IV Review

Site: MCB Camp Lejeune, TO-09 SDG #: TO9-15

Client: CH2M HILL, Inc., Virginia Beach, Virginia Date: March 3, 2009

Laboratory: Katahdin Analytical Services, Scarborough, Maine Reviewer: Nancy Weaver

EDS ID	Client Sample ID	Laboratory Sample ID	Matrix
1	MR08-IS084-6-5-08D	SB7056-1	Soil
2	MR08-SS085-08D	SB7056-3	Soil
3	MR08-IS085-1-2-08D	SB7056-5	Soil
4	MR08-SS107-08D	SB7056-7	Soil
5	MR08-IS107-2-3-08D	SB7056-9	Soil
6	MR08-SS108-08D	SB7056-11	Soil
7	MR08-IS108-2-3-08D	SB7056-13	Soil
8	MR08-IS109-2-3-08D	SB7056-15	Soil
9	MR08-IS109D-2-3-08D	SB7056-17	Soil
10	MR08-SS109-08D	SB7056-19	Soil
11	MR08-SS109D-08D	SB7056-21	Soil
12	MR08-SS105-08D	SB7056-23	Soil
13	MR08-SS106-08D	SB7056-25	Soil
14	MR08-IS106-1-2-08D	SB7056-27	Soil
14MS	MR08-IS106-1-2-08DMS	SB7056-27MS	Soil
14MSD	MR08-IS106-1-2-08DMSD	SB7056-27MSD	Soil
15	MR08-IS105-2-3-08D	SB7056-29	Soil
16	MR08-IS106-2-3-08D	SB7056-31	Soil
17	MR08-SS087-08D	SB7056-33	Soil
18	MR08-IS087-2-3-08D	SB7056-35	Soil
19	MR08-SS086-08D	SB7056-37	Soil
20	MR08-IS086-2-3-08D	SB7056-39	Soil

The USEPA "Contract Laboratory Program National Functional Guidelines for Organic Data Review," October 1999, and professional judgement were used in evaluating the data in this summary report.

Holding Times - All samples were extracted within 14 days for soil samples and analyzed within 40 days for all samples.

GC/MS Tuning - All of the DFTPP tunes in the initial and continuing calibrations met the percent relative abundance criteria.

Initial Calibration - The initial calibrations exhibited acceptable %RSD and mean RRF values.

Continuing Calibration - The continuing calibrations exhibited acceptable %D and RRF values except the following.

CCAL Date	Compound	%D/RRF	Qualifier	Affected Samples
12/31/08	Nitrobenzene	26.08%	J/UJ	1-7, 9-15
01/02/09	Benzaldehyde	92.08%	J/UJ	8, 16-20
	Nitrobenzene	38.68%	J/UJ	8, 16-20
	2,4-Dinitrophenol	40.43%	J/UJ	8, 16-20
	4,6-Dinitro-2-methylphenol	27.48%	J/UJ	8, 16-20
	3,3'-Dichlorobenzene	30.83%	J/UJ	8, 16-20

Surrogates - All samples exhibited acceptable surrogate recoveries.

MS/MSD - The MS/MSD sample exhibited acceptable %R and RPD values.

Laboratory Control Sample - The LCS samples exhibited acceptable %R values except the following.

LCS ID	Compound	%R	Qualifier	Affected Samples
WG58992-LCS	Nitrobenzene	121%	None	All associated ND
	Di-n-octylphthalate	149%	None	All associated ND

Internal Standard (IS) Area Performance - All internal standards met response and retention time (RT) criteria.

Method Blank - The method blanks were free of contamination.

Field, Equipment Blank - Field QC results are summarized below.

Blank ID	Compound	Conc. ug/L	Action Level ug/L	Qualifier	Affected Samples
MR08-EB01120708-IS	None - ND	-	-	-	-
MR08-EB01120708-SS	None - ND	-	-	-	-
MR08-EB01120808-IS	None - ND	-	-	-	-
MR08-EB01120808-SS	None - ND	-	-	-	-
MR08-FB01120608	None - ND	-	-	-	-

KATAHDIN ANALYTICAL SERVICES
Report of Analytical Results

Client: CH2MHill
Project: TO-009 Lejeune
PO No:
Sample Date: 12/07/08
Received Date: 12/09/08
Extraction Date: 12/11/08
Analysis Date: 31-DEC-2008 16:58
Report Date: 01/05/2009
Matrix: SOIL
% Solids: 91.1

Lab ID: SB7056-1
Client ID: MR08-IS084-6-5-08D
SDG: TO9-15
Extracted by: CB
Extraction Method: SW846 3550
Analyst: JCG
Analysis Method: SW846 8270C
Lab Prep Batch: WG58992
Units: ug/Kgdrywt

CAS#	Compound	Flags	Results	DF	PQL	Adj.PQL	Adj.MDL
100-52-7	Benzaldehyde	U	550	1.0	500	550	130
108-95-2	Phenol	U	550	1.0	500	550	170
111-44-4	Bis(2-Chloroethyl)ether	U	360	1.0	330	360	89
95-57-8	2-Chlorophenol	U	550	1.0	500	550	180
95-48-7	2-Methylphenol	U	660	1.0	600	660	220
108-60-1	2,2'-Oxybis(1-chloropropane)	U	360	1.0	330	360	98
98-86-2	Acetophenone	U	660	1.0	600	660	200
621-64-7	N-Nitroso-di-n-propylamine	U	360	1.0	330	360	91
65794-96-9	3&4-Methylphenol	U	660	1.0	600	660	200
67-72-1	Hexachloroethane	U	360	1.0	330	360	100
98-95-3	Nitrobenzene	~~U~~ UJ	360	1.0	330	360	100 CCH
78-59-1	Isophorone	U	360	1.0	330	360	82
88-75-5	2-Nitrophenol	U	660	1.0	600	660	180
105-67-9	2,4-Dimethylphenol	U	550	1.0	500	550	180
111-91-1	Bis(2-Chloroethoxy)methane	U	360	1.0	330	360	100
120-83-2	2,4-Dichlorophenol	U	550	1.0	500	550	160
106-47-8	4-Chloroaniline	U	550	1.0	500	550	130
105-60-2	Caprolactam	U	550	1.0	500	550	160
59-50-7	4-Chloro-3-Methylphenol	U	550	1.0	500	550	180
88-06-2	2,4,6-Trichlorophenol	U	550	1.0	500	550	170
95-95-4	2,4,5-Trichlorophenol	U	550	1.0	500	550	170
91-58-7	2-Chloronaphthalene	U	360	1.0	330	360	95
92-52-4	1,1'-Biphenyl	U	360	1.0	330	360	80
88-74-4	2-Nitroaniline	U	550	1.0	500	550	82
131-11-3	Dimethyl Phthalate	U	360	1.0	330	360	86
606-20-2	2,6-Dinitrotoluene	U	360	1.0	330	360	87
208-96-8	Acenaphthylene	U	360	1.0	330	360	77
99-09-2	3-Nitroaniline	U	550	1.0	500	550	100
83-32-9	Acenaphthene	U	360	1.0	330	360	71
51-28-5	2,4-Dinitrophenol	U	1300	1.0	1200	1300	410
132-64-9	Dibenzofuran	U	360	1.0	330	360	87
100-02-7	4-Nitrophenol	U	1300	1.0	1200	1300	340
121-14-2	2,4-Dinitrotoluene	U	360	1.0	330	360	93
84-66-2	Diethylphthalate	U	360	1.0	330	360	88
7005-72-3	4-Chlorophenyl-phenylether	U	360	1.0	330	360	86
100-01-6	4-Nitroaniline	U	550	1.0	500	550	150
534-52-1	4,6-Dinitro-2-Methylphenol	U	1300	1.0	1200	1300	370
86-30-6	N-Nitrosodiphenylamine	U	720	1.0	660	720	240
101-55-3	4-Bromophenyl-phenylether	U	360	1.0	330	360	93
1912-24-9	Atrazine	U	360	1.0	330	360	100
87-86-5	Pentachlorophenol	U	900	1.0	820	900	260
120-12-7	Anthracene	U	360	1.0	330	360	92
86-74-8	Carbazole	U	550	1.0	500	550	120

LW
3/3/09

KATAHDIN ANALYTICAL SERVICES
Report of Analytical Results

Client: CH2MHill
Project: TO-009 Lejeune
PO No:
Sample Date: 12/07/08
Received Date: 12/09/08
Extraction Date: 12/11/08
Analysis Date: 31-DEC-2008 16:58
Report Date: 01/05/2009
Matrix: SOIL
% Solids: 91.1

Lab ID: SB7056-1
Client ID: MR08-IS084-6-5-08D
SDG: TO9-15
Extracted by: CB
Extraction Method: SW846 3550
Analyst: JCG
Analysis Method: SW846 8270C
Lab Prep Batch: WG58992
Units: ug/Kgdrywt

CAS#	Compound	Flags	Results	DF	PQL	Adj.PQL	Adj.MDL
84-74-2	Di-n-butylphthalate	U	360	1.0	330	360	110
85-68-7	Butylbenzylphthalate	U	360	1.0	330	360	100
91-94-1	3,3'-Dichlorobenzidine	U	550	1.0	500	550	120
218-01-9	Chrysene	U	360	1.0	330	360	100
117-81-7	bis(2-Ethylhexyl)phthalate	U	360	1.0	330	360	110
117-84-0	Di-n-octylphthalate	U	360	1.0	330	360	230
367-12-4	2-Fluorophenol		69%				
13127-88-3	Phenol-D6		76%				
4165-60-0	Nitrobenzene-D5		75%				
321-60-8	2-Fluorobiphenyl		75%				
118-79-6	2,4,6-Tribromophenol		80%				
1718-51-0	Terphenyl-D14		86%				

MW 3/3/09

2

KATAHDIN ANALYTICAL SERVICES
Report of Analytical Results

Client: CH2MHill
Project: TO-009 Lejeune
PO No:
Sample Date: 12/07/08
Received Date: 12/09/08
Extraction Date: 12/11/08
Analysis Date: 31-DEC-2008 17:41
Report Date: 01/05/2009
Matrix: SOIL
% Solids: 80.7

Lab ID: SB7056-3
Client ID: MR08-SS085-08D
SDG: T09-15
Extracted by: CB
Extraction Method: SW846 3550
Analyst: JCG
Analysis Method: SW846 8270C
Lab Prep Batch: WG58992
Units: ug/Kgdrywt

CAS#	Compound	Flags	Results	DF	PQL	Adj.PQL	Adj.MDL
100-52-7	Benzaldehyde	U	620	1.0	500	620	150
108-95-2	Phenol	U	620	1.0	500	620	190
111-44-4	Bis(2-Chloroethyl)ether	U	410	1.0	330	410	100
95-57-8	2-Chlorophenol	U	620	1.0	500	620	200
95-48-7	2-Methylphenol	U	740	1.0	600	740	250
108-60-1	2,2'-Oxybis(1-chloropropane)	U	410	1.0	330	410	110
98-86-2	Acetophenone	U	740	1.0	600	740	220
621-64-7	N-Nitroso-di-n-propylamine	U	410	1.0	330	410	100
65794-96-9	3&4-Methylphenol	U	740	1.0	600	740	230
67-72-1	Hexachloroethane	U	410	1.0	330	410	120
98-95-3	Nitrobenzene	~~U~~ UJ	410	1.0	330	410	110 CCH
78-59-1	Isophorone	U	410	1.0	330	410	93
88-75-5	2-Nitrophenol	U	740	1.0	600	740	210
105-67-9	2,4-Dimethylphenol	U	620	1.0	500	620	200
111-91-1	Bis(2-Chloroethoxy)methane	U	410	1.0	330	410	120
120-83-2	2,4-Dichlorophenol	U	620	1.0	500	620	180
106-47-8	4-Chloroaniline	U	620	1.0	500	620	150
105-60-2	Caprolactam	U	620	1.0	500	620	180
59-50-7	4-Chloro-3-Methylphenol	U	620	1.0	500	620	200
88-06-2	2,4,6-Trichlorophenol	U	620	1.0	500	620	190
95-95-4	2,4,5-Trichlorophenol	U	620	1.0	500	620	190
91-58-7	2-Chloronaphthalene	U	410	1.0	330	410	110
92-52-4	1,1'-Biphenyl	U	410	1.0	330	410	90
88-74-4	2-Nitroaniline	U	620	1.0	500	620	93
131-11-3	Dimethyl Phthalate	U	410	1.0	330	410	97
606-20-2	2,6-Dinitrotoluene	U	410	1.0	330	410	98
208-96-8	Acenaphthylene	U	410	1.0	330	410	87
99-09-2	3-Nitroaniline	U	620	1.0	500	620	120
83-32-9	Acenaphthene	U	410	1.0	330	410	80
51-28-5	2,4-Dinitrophenol	U	1500	1.0	1200	1500	470
132-64-9	Dibenzofuran	U	410	1.0	330	410	98
100-02-7	4-Nitrophenol	U	1500	1.0	1200	1500	380
121-14-2	2,4-Dinitrotoluene	U	410	1.0	330	410	100
84-66-2	Diethylphthalate	U	410	1.0	330	410	99
7005-72-3	4-Chlorophenyl-phenylether	U	410	1.0	330	410	97
100-01-6	4-Nitroaniline	U	620	1.0	500	620	170
534-52-1	4,6-Dinitro-2-Methylphenol	U	1500	1.0	1200	1500	420
86-30-6	N-Nitrosodiphenylamine	U	820	1.0	660	820	270
101-55-3	4-Bromophenyl-phenylether	U	410	1.0	330	410	100
1912-24-9	Atrazine	U	410	1.0	330	410	110
87-86-5	Pentachlorophenol	U	1000	1.0	820	1000	290
120-12-7	Anthracene	U	410	1.0	330	410	100
86-74-8	Carbazole	U	620	1.0	500	620	140

LW 3/3/09

2

KATAHDIN ANALYTICAL SERVICES
Report of Analytical Results

Client: CH2MHill
Project: TO-009 Lejeune
PO No:
Sample Date: 12/07/08
Received Date: 12/09/08
Extraction Date: 12/11/08
Analysis Date: 31-DEC-2008 17:41
Report Date: 01/05/2009
Matrix: SOIL
% Solids: 80.7

Lab ID: SB7056-3
Client ID: MR08-SS085-08D
SDG: TO9-15
Extracted by: CB
Extraction Method: SW846 3550
Analyst: JCG
Analysis Method: SW846 8270C
Lab Prep Batch: WG58992
Units: ug/Kgdrywt

CAS#	Compound	Flags	Results	DF	PQL	Adj.PQL	Adj.MDL
84-74-2	Di-n-butylphthalate	U	410	1.0	330	410	120
85-68-7	Butylbenzylphthalate	U	410	1.0	330	410	120
91-94-1	3,3'-Dichlorobenzidine	U	620	1.0	500	620	140
218-01-9	Chrysene	U	410	1.0	330	410	120
117-81-7	bis(2-Ethylhexyl)phthalate	U	410	1.0	330	410	120
117-84-0	Di-n-octylphthalate	U	410	1.0	330	410	260
367-12-4	2-Fluorophenol		73%				
13127-88-3	Phenol-D6		81%				
4165-60-0	Nitrobenzene-D5		74%				
321-60-8	2-Fluorobiphenyl		73%				
118-79-6	2,4,6-Tribromophenol		92%				
1718-51-0	Terphenyl-D14		108%				

LW
3/3/09

3

KATAHDIN ANALYTICAL SERVICES
Report of Analytical Results

Client: CH2MHill
Project: TO-009 Lejeune
PO No:
Sample Date: 12/07/08
Received Date: 12/09/08
Extraction Date: 12/11/08
Analysis Date: 31-DEC-2008 18:24
Report Date: 01/05/2009
Matrix: SOIL
% Solids: 88.2

Lab ID: SB7056-5
Client ID: MR08-IS085-1-2-08D
SDG: TO9-15
Extracted by: CB
Extraction Method: SW846 3550
Analyst: JCG
Analysis Method: SW846 8270C
Lab Prep Batch: WG58992
Units: ug/Kgdrywt

CAS#	Compound	Flags	Results	DF	PQL	Adj.PQL	Adj.MDL
100-52-7	Benzaldehyde	U	570	1.0	500	570	140
108-95-2	Phenol	U	570	1.0	500	570	180
111-44-4	Bis(2-Chloroethyl)ether	U	370	1.0	330	370	92
95-57-8	2-Chlorophenol	U	570	1.0	500	570	180
95-48-7	2-Methylphenol	U	680	1.0	600	680	230
108-60-1	2,2'-Oxybis(1-chloropropane)	U	370	1.0	330	370	100
98-86-2	Acetophenone	U	680	1.0	600	680	200
621-64-7	N-Nitroso-di-n-propylamine	U	370	1.0	330	370	94
65794-96-9	3&4-Methylphenol	U	680	1.0	600	680	210
67-72-1	Hexachloroethane	U	370	1.0	330	370	110
98-95-3	Nitrobenzene	~~U~~ UJ	370	1.0	330	370	100 CCH
78-59-1	Isophorone	U	370	1.0	330	370	85
88-75-5	2-Nitrophenol	U	680	1.0	600	680	190
105-67-9	2,4-Dimethylphenol	U	570	1.0	500	570	190
111-91-1	Bis(2-Chloroethoxy)methane	U	370	1.0	330	370	110
120-83-2	2,4-Dichlorophenol	U	570	1.0	500	570	170
106-47-8	4-Chloroaniline	U	570	1.0	500	570	130
105-60-2	Caprolactam	U	570	1.0	500	570	160
59-50-7	4-Chloro-3-Methylphenol	U	570	1.0	500	570	190
88-06-2	2,4,6-Trichlorophenol	U	570	1.0	500	570	180
95-95-4	2,4,5-Trichlorophenol	U	570	1.0	500	570	180
91-58-7	2-Chloronaphthalene	U	370	1.0	330	370	99
92-52-4	1,1'-Biphenyl	U	370	1.0	330	370	83
88-74-4	2-Nitroaniline	U	570	1.0	500	570	85
131-11-3	Dimethyl Phthalate	U	370	1.0	330	370	88
606-20-2	2,6-Dinitrotoluene	U	370	1.0	330	370	90
208-96-8	Acenaphthylene	U	370	1.0	330	370	79
99-09-2	3-Nitroaniline	U	570	1.0	500	570	110
83-32-9	Acenaphthene	U	370	1.0	330	370	74
51-28-5	2,4-Dinitrophenol	U	1400	1.0	1200	1400	430
132-64-9	Dibenzofuran	U	370	1.0	330	370	90
100-02-7	4-Nitrophenol	U	1400	1.0	1200	1400	350
121-14-2	2,4-Dinitrotoluene	U	370	1.0	330	370	96
84-66-2	Diethylphthalate	U	370	1.0	330	370	91
7005-72-3	4-Chlorophenyl-phenylether	U	370	1.0	330	370	88
100-01-6	4-Nitroaniline	U	570	1.0	500	570	150
534-52-1	4,6-Dinitro-2-Methylphenol	U	1400	1.0	1200	1400	380
86-30-6	N-Nitrosodiphenylamine	U	750	1.0	660	750	250
101-55-3	4-Bromophenyl-phenylether	U	370	1.0	330	370	96
1912-24-9	Atrazine	U	370	1.0	330	370	100
87-86-5	Pentachlorophenol	U	930	1.0	820	930	270
120-12-7	Anthracene	U	370	1.0	330	370	95
86-74-8	Carbazole	U	570	1.0	500	570	120

DW 3/31/09

3

KATAHDIN ANALYTICAL SERVICES
Report of Analytical Results

Client: CH2MHill
Project: TO-009 Lejeune
PO No:
Sample Date: 12/07/08
Received Date: 12/09/08
Extraction Date: 12/11/08
Analysis Date: 31-DEC-2008 18:24
Report Date: 01/05/2009
Matrix: SOIL
% Solids: 88.2

Lab ID: SB7056-5
Client ID: MR08-IS085-1-2-08D
SDG: TO9-15
Extracted by: CB
Extraction Method: SW846 3550
Analyst: JCG
Analysis Method: SW846 8270C
Lab Prep Batch: WG58992
Units: ug/Kgdrywt

CAS#	Compound	Flags	Results	DF	PQL	Adj.PQL	Adj.MDL
84-74-2	Di-n-butylphthalate	U	370	1.0	330	370	110
85-68-7	Butylbenzylphthalate	U	370	1.0	330	370	100
91-94-1	3,3'-Dichlorobenzidine	U	570	1.0	500	570	130
218-01-9	Chrysene	U	370	1.0	330	370	110
117-81-7	bis(2-Ethylhexyl)phthalate	J	160	1.0	330	370	110
117-84-0	Di-n-octylphthalate	U	370	1.0	330	370	240
367-12-4	2-Fluorophenol		67%				
13127-88-3	Phenol-D6		76%				
4165-60-0	Nitrobenzene-D5		72%				
321-60-8	2-Fluorobiphenyl		71%				
118-79-6	2,4,6-Tribromophenol		76%				
1718-51-0	Terphenyl-D14		83%				

LW 3/3/09

4

KATAHDIN ANALYTICAL SERVICES
Report of Analytical Results

Client: CH2MHill
Project: TO-009 Lejeune
PO No:
Sample Date: 12/07/08
Received Date: 12/09/08
Extraction Date: 12/11/08
Analysis Date: 31-DEC-2008 19:06
Report Date: 01/05/2009
Matrix: SOIL
% Solids: 90.7

Lab ID: SB7056-7
Client ID: MR08-SS107-08D
SDG: TO9-15
Extracted by: CB
Extraction Method: SW846 3550
Analyst: JCG
Analysis Method: SW846 8270C
Lab Prep Batch: WG58992
Units: ug/Kgdrywt

CAS#	Compound	Flags	Results	DF	PQL	Adj.PQL	Adj.MDL
100-52-7	Benzaldehyde	U	550	1.0	500	550	130
108-95-2	Phenol	U	550	1.0	500	550	170
111-44-4	Bis(2-Chloroethyl)ether	U	360	1.0	330	360	89
95-57-8	2-Chlorophenol	U	550	1.0	500	550	180
95-48-7	2-Methylphenol	U	660	1.0	600	660	220
108-60-1	2,2'-Oxybis(1-chloropropane)	U	360	1.0	330	360	98
98-86-2	Acetophenone	U	660	1.0	600	660	200
621-64-7	N-Nitroso-di-n-propylamine	U	360	1.0	330	360	91
65794-96-9	3&4-Methylphenol	U	660	1.0	600	660	210
67-72-1	Hexachloroethane	U	360	1.0	330	360	100
98-95-3	Nitrobenzene	~~U~~ UJ	360	1.0	330	360	100 CCH
78-59-1	Isophorone	U	360	1.0	330	360	83
88-75-5	2-Nitrophenol	U	660	1.0	600	660	180
105-67-9	2,4-Dimethylphenol	U	550	1.0	500	550	180
111-91-1	Bis(2-Chloroethoxy)methane	U	360	1.0	330	360	100
120-83-2	2,4-Dichlorophenol	U	550	1.0	500	550	160
106-47-8	4-Chloroaniline	U	550	1.0	500	550	130
105-60-2	Caprolactam	U	550	1.0	500	550	160
59-50-7	4-Chloro-3-Methylphenol	U	550	1.0	500	550	180
88-06-2	2,4,6-Trichlorophenol	U	550	1.0	500	550	170
95-95-4	2,4,5-Trichlorophenol	U	550	1.0	500	550	170
91-58-7	2-Chloronaphthalene	U	360	1.0	330	360	96
92-52-4	1,1'-Biphenyl	U	360	1.0	330	360	80
88-74-4	2-Nitroaniline	U	550	1.0	500	550	83
131-11-3	Dimethyl Phthalate	U	360	1.0	330	360	86
606-20-2	2,6-Dinitrotoluene	U	360	1.0	330	360	87
208-96-8	Acenaphthylene	U	360	1.0	330	360	77
99-09-2	3-Nitroaniline	U	550	1.0	500	550	100
83-32-9	Acenaphthene	U	360	1.0	330	360	72
51-28-5	2,4-Dinitrophenol	U	1300	1.0	1200	1300	420
132-64-9	Dibenzofuran	U	360	1.0	330	360	87
100-02-7	4-Nitrophenol	U	1300	1.0	1200	1300	340
121-14-2	2,4-Dinitrotoluene	U	360	1.0	330	360	94
84-66-2	Diethylphthalate	U	360	1.0	330	360	88
7005-72-3	4-Chlorophenyl-phenylether	U	360	1.0	330	360	86
100-01-6	4-Nitroaniline	U	550	1.0	500	550	150
534-52-1	4,6-Dinitro-2-Methylphenol	U	1300	1.0	1200	1300	370
86-30-6	N-Nitrosodiphenylamine	U	730	1.0	660	730	240
101-55-3	4-Bromophenyl-phenylether	U	360	1.0	330	360	94
1912-24-9	Atrazine	U	360	1.0	330	360	100
87-86-5	Pentachlorophenol	U	900	1.0	820	900	260
120-12-7	Anthracene	U	360	1.0	330	360	92
86-74-8	Carbazole	U	550	1.0	500	550	120

lw
3/3/09

KATAHDIN ANALYTICAL SERVICES
Report of Analytical Results

Client: CH2MHill
Project: TO-009 Lejeune
PO No:
Sample Date: 12/07/08
Received Date: 12/09/08
Extraction Date: 12/11/08
Analysis Date: 31-DEC-2008 19:06
Report Date: 01/05/2009
Matrix: SOIL
% Solids: 90.7

Lab ID: SB7056-7
Client ID: MR08-SS107-08D
SDG: TO9-15
Extracted by: CB
Extraction Method: SW846 3550
Analyst: JCG
Analysis Method: SW846 8270C
Lab Prep Batch: WG58992
Units: ug/Kgdrywt

CAS#	Compound	Flags	Results	DF	PQL	Adj.PQL	Adj.MDL
84-74-2	Di-n-butylphthalate	U	360	1.0	330	360	110
85-68-7	Butylbenzylphthalate	U	360	1.0	330	360	100
91-94-1	3,3'-Dichlorobenzidine	U	550	1.0	500	550	120
218-01-9	Chrysene	U	360	1.0	330	360	100
117-81-7	bis(2-Ethylhexyl)phthalate	U	360	1.0	330	360	110
117-84-0	Di-n-octylphthalate	U	360	1.0	330	360	230
367-12-4	2-Fluorophenol		63%				
13127-88-3	Phenol-D6		67%				
4165-60-0	Nitrobenzene-D5		65%				
321-60-8	2-Fluorobiphenyl		64%				
118-79-6	2,4,6-Tribromophenol		67%				
1718-51-0	Terphenyl-D14		90%				

AW
3/3/09

5

KATAHDIN ANALYTICAL SERVICES
Report of Analytical Results

Client: CH2MHill
Project: TO-009 Lejeune
PO No:
Sample Date: 12/07/08
Received Date: 12/09/08
Extraction Date: 12/11/08
Analysis Date: 31-DEC-2008 19:48
Report Date: 01/05/2009
Matrix: SOIL
% Solids: 89.6

Lab ID: SB7056-9
Client ID: MR08-IS107-2-3-08D
SDG: TO9-15
Extracted by: CB
Extraction Method: SW846 3550
Analyst: JCG
Analysis Method: SW846 8270C
Lab Prep Batch: WG58992
Units: ug/Kgdrywt

CAS#	Compound	Flags	Results	DF	PQL	Adj.PQL	Adj.MDL
100-52-7	Benzaldehyde	U	560	1.0	500	560	130
108-95-2	Phenol	U	560	1.0	500	560	170
111-44-4	Bis(2-Chloroethyl)ether	U	370	1.0	330	370	90
95-57-8	2-Chlorophenol	U	560	1.0	500	560	180
95-48-7	2-Methylphenol	U	670	1.0	600	670	220
108-60-1	2,2'-Oxybis(1-chloropropane)	U	370	1.0	330	370	99
98-86-2	Acetophenone	U	670	1.0	600	670	200
621-64-7	N-Nitroso-di-n-propylamine	U	370	1.0	330	370	93
65794-96-9	3&4-Methylphenol	U	670	1.0	600	670	210
67-72-1	Hexachloroethane	U	370	1.0	330	370	110
98-95-3	Nitrobenzene	~~U~~ UJ	370	1.0	330	370	100 CCH
78-59-1	Isophorone	U	370	1.0	330	370	84
88-75-5	2-Nitrophenol	U	670	1.0	600	670	190
105-67-9	2,4-Dimethylphenol	U	560	1.0	500	560	180
111-91-1	Bis(2-Chloroethoxy)methane	U	370	1.0	330	370	110
120-83-2	2,4-Dichlorophenol	U	560	1.0	500	560	170
106-47-8	4-Chloroaniline	U	560	1.0	500	560	130
105-60-2	Caprolactam	U	560	1.0	500	560	160
59-50-7	4-Chloro-3-Methylphenol	U	560	1.0	500	560	180
88-06-2	2,4,6-Trichlorophenol	U	560	1.0	500	560	170
95-95-4	2,4,5-Trichlorophenol	U	560	1.0	500	560	170
91-58-7	2-Chloronaphthalene	U	370	1.0	330	370	97
92-52-4	1,1'-Biphenyl	U	370	1.0	330	370	81
88-74-4	2-Nitroaniline	U	560	1.0	500	560	84
131-11-3	Dimethyl Phthalate	U	370	1.0	330	370	87
606-20-2	2,6-Dinitrotoluene	U	370	1.0	330	370	88
208-96-8	Acenaphthylene	U	370	1.0	330	370	78
99-09-2	3-Nitroaniline	U	560	1.0	500	560	100
83-32-9	Acenaphthene	U	370	1.0	330	370	72
51-28-5	2,4-Dinitrophenol	U	1300	1.0	1200	1300	420
132-64-9	Dibenzofuran	U	370	1.0	330	370	88
100-02-7	4-Nitrophenol	U	1300	1.0	1200	1300	340
121-14-2	2,4-Dinitrotoluene	U	370	1.0	330	370	95
84-66-2	Diethylphthalate	U	370	1.0	330	370	89
7005-72-3	4-Chlorophenyl-phenylether	U	370	1.0	330	370	87
100-01-6	4-Nitroaniline	U	560	1.0	500	560	150
534-52-1	4,6-Dinitro-2-Methylphenol	U	1300	1.0	1200	1300	380
86-30-6	N-Nitrosodiphenylamine	U	740	1.0	660	740	240
101-55-3	4-Bromophenyl-phenylether	U	370	1.0	330	370	95
1912-24-9	Atrazine	U	370	1.0	330	370	100
87-86-5	Pentachlorophenol	U	920	1.0	820	920	260
120-12-7	Anthracene	U	370	1.0	330	370	94
86-74-8	Carbazole	U	560	1.0	500	560	120

JW 3/3/09

5

KATAHDIN ANALYTICAL SERVICES
Report of Analytical Results

Client: CH2MHill
Project: TO-009 Lejeune
PO No:
Sample Date: 12/07/08
Received Date: 12/09/08
Extraction Date: 12/11/08
Analysis Date: 31-DEC-2008 19:48
Report Date: 01/05/2009
Matrix: SOIL
% Solids: 89.6

Lab ID: SB7056-9
Client ID: MR08-IS107-2-3-08D
SDG: TO9-15
Extracted by: CB
Extraction Method: SW846 3550
Analyst: JCG
Analysis Method: SW846 8270C
Lab Prep Batch: WG58992
Units: ug/Kgdrywt

CAS#	Compound	Flags	Results	DF	PQL	Adj.PQL	Adj.MDL
84-74-2	Di-n-butylphthalate	U	370	1.0	330	370	110
85-68-7	Butylbenzylphthalate	U	370	1.0	330	370	100
91-94-1	3,3'-Dichlorobenzidine	U	560	1.0	500	560	130
218-01-9	Chrysene	U	370	1.0	330	370	110
117-81-7	bis(2-Ethylhexyl)phthalate	J	190	1.0	330	370	110
117-84-0	Di-n-octylphthalate	U	370	1.0	330	370	240
367-12-4	2-Fluorophenol		74%				
13127-88-3	Phenol-D6		83%				
4165-60-0	Nitrobenzene-D5		74%				
321-60-8	2-Fluorobiphenyl		77%				
118-79-6	2,4,6-Tribromophenol		90%				
1718-51-0	Terphenyl-D14		104%				

Ow
3/31/09

6

KATAHDIN ANALYTICAL SERVICES
Report of Analytical Results

Client: CH2MHill
Project: TO-009 Lejeune
PO No:
Sample Date: 12/07/08
Received Date: 12/09/08
Extraction Date: 12/11/08
Analysis Date: 31-DEC-2008 20:30
Report Date: 01/05/2009
Matrix: SOIL
% Solids: 92.8

Lab ID: SB7056-11
Client ID: MR08-SS108-08D
SDG: TO9-15
Extracted by: CB
Extraction Method: SW846 3550
Analyst: JCG
Analysis Method: SW846 8270C
Lab Prep Batch: WG58992
Units: ug/Kgdrywt

CAS#	Compound	Flags	Results	DF	PQL	Adj.PQL	Adj.MDL
100-52-7	Benzaldehyde	U	540	1.0	500	540	130
108-95-2	Phenol	U	540	1.0	500	540	170
111-44-4	Bis(2-Chloroethyl)ether	U	360	1.0	330	360	87
95-57-8	2-Chlorophenol	U	540	1.0	500	540	180
95-48-7	2-Methylphenol	U	650	1.0	600	650	220
108-60-1	2,2'-Oxybis(1-chloropropane)	U	360	1.0	330	360	96
98-86-2	Acetophenone	U	650	1.0	600	650	190
621-64-7	N-Nitroso-di-n-propylamine	U	360	1.0	330	360	89
65794-96-9	3&4-Methylphenol	U	650	1.0	600	650	200
67-72-1	Hexachloroethane	U	360	1.0	330	360	100
98-95-3	Nitrobenzene	~~U~~ UJ	360	1.0	330	360	98 CCH
78-59-1	Isophorone	U	360	1.0	330	360	81
88-75-5	2-Nitrophenol	U	650	1.0	600	650	180
105-67-9	2,4-Dimethylphenol	U	540	1.0	500	540	180
111-91-1	Bis(2-Chloroethoxy)methane	U	360	1.0	330	360	100
120-83-2	2,4-Dichlorophenol	U	540	1.0	500	540	160
106-47-8	4-Chloroaniline	U	540	1.0	500	540	130
105-60-2	Caprolactam	U	540	1.0	500	540	160
59-50-7	4-Chloro-3-Methylphenol	U	540	1.0	500	540	180
88-06-2	2,4,6-Trichlorophenol	U	540	1.0	500	540	170
95-95-4	2,4,5-Trichlorophenol	U	540	1.0	500	540	170
91-58-7	2-Chloronaphthalene	U	360	1.0	330	360	94
92-52-4	1,1'-Biphenyl	U	360	1.0	330	360	79
88-74-4	2-Nitroaniline	U	540	1.0	500	540	81
131-11-3	Dimethyl Phthalate	U	360	1.0	330	360	84
606-20-2	2,6-Dinitrotoluene	U	360	1.0	330	360	85
208-96-8	Acenaphthylene	U	360	1.0	330	360	75
99-09-2	3-Nitroaniline	U	540	1.0	500	540	100
83-32-9	Acenaphthene	U	360	1.0	330	360	70
51-28-5	2,4-Dinitrophenol	U	1300	1.0	1200	1300	410
132-64-9	Dibenzofuran	U	360	1.0	330	360	85
100-02-7	4-Nitrophenol	U	1300	1.0	1200	1300	330
121-14-2	2,4-Dinitrotoluene	U	360	1.0	330	360	92
84-66-2	Diethylphthalate	U	360	1.0	330	360	86
7005-72-3	4-Chlorophenyl-phenylether	U	360	1.0	330	360	84
100-01-6	4-Nitroaniline	U	540	1.0	500	540	140
534-52-1	4,6-Dinitro-2-Methylphenol	U	1300	1.0	1200	1300	360
86-30-6	N-Nitrosodiphenylamine	U	710	1.0	660	710	240
101-55-3	4-Bromophenyl-phenylether	U	360	1.0	330	360	92
1912-24-9	Atrazine	U	360	1.0	330	360	98
87-86-5	Pentachlorophenol	U	880	1.0	820	880	260
120-12-7	Anthracene	U	360	1.0	330	360	90
86-74-8	Carbazole	U	540	1.0	500	540	120

CW
3/3/09

6

KATAHDIN ANALYTICAL SERVICES
Report of Analytical Results

Client: CH2MHill
Project: TO-009 Lejeune
PO No:
Sample Date: 12/07/08
Received Date: 12/09/08
Extraction Date: 12/11/08
Analysis Date: 31-DEC-2008 20:30
Report Date: 01/05/2009
Matrix: SOIL
% Solids: 92.8

Lab ID: SB7056-11
Client ID: MR08-SS108-08D
SDG: TO9-15
Extracted by: CB
Extraction Method: SW846 3550
Analyst: JCG
Analysis Method: SW846 8270C
Lab Prep Batch: WG58992
Units: ug/Kgdrywt

CAS#	Compound	Flags	Results	DF	PQL	Adj.PQL	Adj.MDL
84-74-2	Di-n-butylphthalate	U	360	1.0	330	360	110
85-68-7	Butylbenzylphthalate	U	360	1.0	330	360	100
91-94-1	3,3'-Dichlorobenzidine	U	540	1.0	500	540	120
218-01-9	Chrysene	U	360	1.0	330	360	100
117-81-7	bis(2-Ethylhexyl)phthalate	U	360	1.0	330	360	100
117-84-0	Di-n-octylphthalate	U	360	1.0	330	360	230
367-12-4	2-Fluorophenol		77%				
13127-88-3	Phenol-D6		84%				
4165-60-0	Nitrobenzene-D5		78%				
321-60-8	2-Fluorobiphenyl		85%				
118-79-6	2,4,6-Tribromophenol		99%				
1718-51-0	Terphenyl-D14		119%				

MW
3/3/09

7

KATAHDIN ANALYTICAL SERVICES
Report of Analytical Results

Client: CH2MHill
Project: TO-009 Lejeune
PO No:
Sample Date: 12/07/08
Received Date: 12/09/08
Extraction Date: 12/13/08
Analysis Date: 31-DEC-2008 21:12
Report Date: 01/05/2009
Matrix: SOIL
% Solids: 88.6

Lab ID: SB7056-13
Client ID: MR08-IS108-2-3-08D
SDG: TO9-15
Extracted by: CB
Extraction Method: SW846 3550
Analyst: JCG
Analysis Method: SW846 8270C
Lab Prep Batch: WG59026
Units: ug/Kgdrywt

CAS#	Compound	Flags	Results	DF	PQL	Adj.PQL	Adj.MDL
100-52-7	Benzaldehyde	U	560	1.0	500	560	140
108-95-2	Phenol	U	560	1.0	500	560	180
111-44-4	Bis(2-Chloroethyl)ether	U	370	1.0	330	370	91
95-57-8	2-Chlorophenol	U	560	1.0	500	560	180
95-48-7	2-Methylphenol	U	680	1.0	600	680	220
108-60-1	2,2'-Oxybis(1-chloropropane)	U	370	1.0	330	370	100
98-86-2	Acetophenone	U	680	1.0	600	680	200
621-64-7	N-Nitroso-di-n-propylamine	U	370	1.0	330	370	94
65794-96-9	3&4-Methylphenol	U	680	1.0	600	680	210
67-72-1	Hexachloroethane	U	370	1.0	330	370	110
98-95-3	Nitrobenzene	~~U~~ UJ	370	1.0	330	370	100 CCH
78-59-1	Isophorone	U	370	1.0	330	370	85
88-75-5	2-Nitrophenol	U	680	1.0	600	680	190
105-67-9	2,4-Dimethylphenol	U	560	1.0	500	560	190
111-91-1	Bis(2-Chloroethoxy)methane	U	370	1.0	330	370	110
120-83-2	2,4-Dichlorophenol	U	560	1.0	500	560	170
106-47-8	4-Chloroaniline	U	560	1.0	500	560	130
105-60-2	Caprolactam	U	560	1.0	500	560	160
59-50-7	4-Chloro-3-Methylphenol	U	560	1.0	500	560	190
88-06-2	2,4,6-Trichlorophenol	U	560	1.0	500	560	170
95-95-4	2,4,5-Trichlorophenol	U	560	1.0	500	560	170
91-58-7	2-Chloronaphthalene	U	370	1.0	330	370	98
92-52-4	1,1'-Biphenyl	U	370	1.0	330	370	82
88-74-4	2-Nitroaniline	U	560	1.0	500	560	85
131-11-3	Dimethyl Phthalate	U	370	1.0	330	370	88
606-20-2	2,6-Dinitrotoluene	U	370	1.0	330	370	89
208-96-8	Acenaphthylene	U	370	1.0	330	370	79
99-09-2	3-Nitroaniline	U	560	1.0	500	560	110
83-32-9	Acenaphthene	U	370	1.0	330	370	73
51-28-5	2,4-Dinitrophenol	U	1400	1.0	1200	1400	420
132-64-9	Dibenzofuran	U	370	1.0	330	370	89
100-02-7	4-Nitrophenol	U	1400	1.0	1200	1400	350
121-14-2	2,4-Dinitrotoluene	U	370	1.0	330	370	96
84-66-2	Diethylphthalate	U	370	1.0	330	370	90
7005-72-3	4-Chlorophenyl-phenylether	U	370	1.0	330	370	88
100-01-6	4-Nitroaniline	U	560	1.0	500	560	150
534-52-1	4,6-Dinitro-2-Methylphenol	U	1400	1.0	1200	1400	380
86-30-6	N-Nitrosodiphenylamine	U	740	1.0	660	740	250
101-55-3	4-Bromophenyl-phenylether	U	370	1.0	330	370	96
1912-24-9	Atrazine	U	370	1.0	330	370	100
87-86-5	Pentachlorophenol	U	920	1.0	820	920	270
120-12-7	Anthracene	U	370	1.0	330	370	95
86-74-8	Carbazole	U	560	1.0	500	560	120

RW 3/3/09

7

KATAHDIN ANALYTICAL SERVICES
Report of Analytical Results

Client: CH2MHill
Project: TO-009 Lejeune
PO No:
Sample Date: 12/07/08
Received Date: 12/09/08
Extraction Date: 12/13/08
Analysis Date: 31-DEC-2008 21:12
Report Date: 01/05/2009
Matrix: SOIL
% Solids: 88.6

Lab ID: SB7056-13
Client ID: MR08-IS108-2-3-08D
SDG: TO9-15
Extracted by: CB
Extraction Method: SW846 3550
Analyst: JCG
Analysis Method: SW846 8270C
Lab Prep Batch: WG59026
Units: ug/Kgdrywt

CAS#	Compound	Flags	Results	DF	PQL	Adj.PQL	Adj.MDL
84-74-2	Di-n-butylphthalate	U	370	1.0	330	370	110
85-68-7	Butylbenzylphthalate	U	370	1.0	330	370	100
91-94-1	3,3'-Dichlorobenzidine	U	560	1.0	500	560	130
218-01-9	Chrysene	U	370	1.0	330	370	110
117-81-7	bis(2-Ethylhexyl)phthalate	U	370	1.0	330	370	110
117-84-0	Di-n-octylphthalate	U	370	1.0	330	370	240
367-12-4	2-Fluorophenol		72%				
13127-88-3	Phenol-D6		78%				
4165-60-0	Nitrobenzene-D5		75%				
321-60-8	2-Fluorobiphenyl		72%				
118-79-6	2,4,6-Tribromophenol		78%				
1718-51-0	Terphenyl-D14		89%				

MW
3/3/09

8

KATAHDIN ANALYTICAL SERVICES
Report of Analytical Results

Client: CH2MHill
Project: TO-009 Lejeune
PO No:
Sample Date: 12/07/08
Received Date: 12/09/08
Extraction Date: 12/15/08
Analysis Date: 02-JAN-2009 15:56
Report Date: 01/05/2009
Matrix: SOIL
% Solids: 87.7

Lab ID: SB7056-15RE
Client ID: MR08-IS109-2-3-08D
SDG: TO9-15
Extracted by: CB
Extraction Method: SW846 3550
Analyst: JCG
Analysis Method: SW846 8270C
Lab Prep Batch: WG59078
Units: ug/Kgdrywt

CAS#	Compound	Flags	Results	DF	PQL	Adj.PQL	Adj.MDL	
100-52-7	Benzaldehyde	~~U~~ UJ	570	1.0	500	570	140	CCH
108-95-2	Phenol	U	570	1.0	500	570	180	
111-44-4	Bis(2-Chloroethyl)ether	U	380	1.0	330	380	92	
95-57-8	2-Chlorophenol	U	570	1.0	500	570	190	
95-48-7	2-Methylphenol	U	680	1.0	600	680	230	
108-60-1	2,2'-Oxybis(1-chloropropane)	U	380	1.0	330	380	100	
98-86-2	Acetophenone	U	680	1.0	600	680	200	
621-64-7	N-Nitroso-di-n-propylamine	U	380	1.0	330	380	95	
65794-96-9	3&4-Methylphenol	U	680	1.0	600	680	210	
67-72-1	Hexachloroethane	U	380	1.0	330	380	110	
98-95-3	Nitrobenzene	~~U~~ UJ	380	1.0	330	380	100	CCH
78-59-1	Isophorone	U	380	1.0	330	380	85	
88-75-5	2-Nitrophenol	U	680	1.0	600	680	190	
105-67-9	2,4-Dimethylphenol	U	570	1.0	500	570	190	
111-91-1	Bis(2-Chloroethoxy)methane	U	380	1.0	330	380	110	
120-83-2	2,4-Dichlorophenol	U	570	1.0	500	570	170	
106-47-8	4-Chloroaniline	U	570	1.0	500	570	140	
105-60-2	Caprolactam	U	570	1.0	500	570	160	
59-50-7	4-Chloro-3-Methylphenol	U	570	1.0	500	570	190	
88-06-2	2,4,6-Trichlorophenol	U	570	1.0	500	570	180	
95-95-4	2,4,5-Trichlorophenol	U	570	1.0	500	570	180	
91-58-7	2-Chloronaphthalene	U	380	1.0	330	380	99	
92-52-4	1,1'-Biphenyl	U	380	1.0	330	380	83	
88-74-4	2-Nitroaniline	U	570	1.0	500	570	85	
131-11-3	Dimethyl Phthalate	U	380	1.0	330	380	89	
606-20-2	2,6-Dinitrotoluene	U	380	1.0	330	380	90	
208-96-8	Acenaphthylene	U	380	1.0	330	380	80	
99-09-2	3-Nitroaniline	U	570	1.0	500	570	110	
83-32-9	Acenaphthene	U	380	1.0	330	380	74	
51-28-5	2,4-Dinitrophenol	~~U~~ UJ	1400	1.0	1200	1400	430	CCH
132-64-9	Dibenzofuran	U	380	1.0	330	380	90	
100-02-7	4-Nitrophenol	U	1400	1.0	1200	1400	350	
121-14-2	2,4-Dinitrotoluene	U	380	1.0	330	380	97	
84-66-2	Diethylphthalate	U	380	1.0	330	380	91	
7005-72-3	4-Chlorophenyl-phenylether	U	380	1.0	330	380	89	
100-01-6	4-Nitroaniline	U	570	1.0	500	570	150	
534-52-1	4,6-Dinitro-2-Methylphenol	~~U~~ UJ	1400	1.0	1200	1400	380	CCH
86-30-6	N-Nitrosodiphenylamine	U	750	1.0	660	750	250	
101-55-3	4-Bromophenyl-phenylether	U	380	1.0	330	380	97	
1912-24-9	Atrazine	U	380	1.0	330	380	100	
87-86-5	Pentachlorophenol	U	930	1.0	820	930	270	
120-12-7	Anthracene	U	380	1.0	330	380	96	
86-74-8	Carbazole	U	570	1.0	500	570	130	

AW 3/3/09

8

KATAHDIN ANALYTICAL SERVICES
Report of Analytical Results

Client: CH2MHill
Project: TO-009 Lejeune
PO No:
Sample Date: 12/07/08
Received Date: 12/09/08
Extraction Date: 12/15/08
Analysis Date: 02-JAN-2009 15:56
Report Date: 01/05/2009
Matrix: SOIL
% Solids: 87.7

Lab ID: SB7056-15RE
Client ID: MR08-IS109-2-3-08D
SDG: TO9-15
Extracted by: CB
Extraction Method: SW846 3550
Analyst: JCG
Analysis Method: SW846 8270C
Lab Prep Batch: WG59078
Units: ug/Kgdrywt

CAS#	Compound	Flags	Results	DF	PQL	Adj.PQL	Adj.MDL	
84-74-2	Di-n-butylphthalate	U	380	1.0	330	380	120	
85-68-7	Butylbenzylphthalate	U	380	1.0	330	380	110	
91-94-1	3,3'-Dichlorobenzidine	~~U~~ UJ	570	1.0	500	570	130	CCH
218-01-9	Chrysene	U	380	1.0	330	380	110	
117-81-7	bis(2-Ethylhexyl)phthalate	U	380	1.0	330	380	110	
117-84-0	Di-n-octylphthalate	U	380	1.0	330	380	240	
367-12-4	2-Fluorophenol		69%					
13127-88-3	Phenol-D6		82%					
4165-60-0	Nitrobenzene-D5		67%					
321-60-8	2-Fluorobiphenyl		78%					
118-79-6	2,4,6-Tribromophenol		86%					
1718-51-0	Terphenyl-D14		108%					

LW
3/3/09

9

KATAHDIN ANALYTICAL SERVICES
Report of Analytical Results

Client: CH2MHill
Project: TO-009 Lejeune
PO No:
Sample Date: 12/07/08
Received Date: 12/09/08
Extraction Date: 12/13/08
Analysis Date: 31-DEC-2008 21:54
Report Date: 01/05/2009
Matrix: SOIL
% Solids: 84.1

Lab ID: SB7056-17
Client ID: MR08-IS109D-2-3-08D
SDG: TO9-15
Extracted by: CB
Extraction Method: SW846 3550
Analyst: JCG
Analysis Method: SW846 8270C
Lab Prep Batch: WG59026
Units: ug/Kgdrywt

CAS#	Compound	Flags	Results	DF	PQL	Adj.PQL	Adj.MDL
100-52-7	Benzaldehyde	U	590	1.0	500	590	140
108-95-2	Phenol	U	590	1.0	500	590	180
111-44-4	Bis(2-Chloroethyl)ether	U	390	1.0	330	390	96
95-57-8	2-Chlorophenol	U	590	1.0	500	590	190
95-48-7	2-Methylphenol	U	710	1.0	600	710	240
108-60-1	2,2'-Oxybis(1-chloropropane)	U	390	1.0	330	390	100
98-86-2	Acetophenone	U	710	1.0	600	710	210
621-64-7	N-Nitroso-di-n-propylamine	U	390	1.0	330	390	99
65794-96-9	3&4-Methylphenol	U	710	1.0	600	710	220
67-72-1	Hexachloroethane	U	390	1.0	330	390	110
98-95-3	Nitrobenzene	~~U~~ UJ	390	1.0	330	390	110 CCH
78-59-1	Isophorone	U	390	1.0	330	390	89
88-75-5	2-Nitrophenol	U	710	1.0	600	710	200
105-67-9	2,4-Dimethylphenol	U	590	1.0	500	590	200
111-91-1	Bis(2-Chloroethoxy)methane	U	390	1.0	330	390	110
120-83-2	2,4-Dichlorophenol	U	590	1.0	500	590	180
106-47-8	4-Chloroaniline	U	590	1.0	500	590	140
105-60-2	Caprolactam	U	590	1.0	500	590	170
59-50-7	4-Chloro-3-Methylphenol	U	590	1.0	500	590	200
88-06-2	2,4,6-Trichlorophenol	U	590	1.0	500	590	180
95-95-4	2,4,5-Trichlorophenol	U	590	1.0	500	590	180
91-58-7	2-Chloronaphthalene	U	390	1.0	330	390	100
92-52-4	1,1'-Biphenyl	U	390	1.0	330	390	87
88-74-4	2-Nitroaniline	U	590	1.0	500	590	89
131-11-3	Dimethyl Phthalate	U	390	1.0	330	390	93
606-20-2	2,6-Dinitrotoluene	U	390	1.0	330	390	94
208-96-8	Acenaphthylene	U	390	1.0	330	390	83
99-09-2	3-Nitroaniline	U	590	1.0	500	590	110
83-32-9	Acenaphthene	U	390	1.0	330	390	77
51-28-5	2,4-Dinitrophenol	U	1400	1.0	1200	1400	450
132-64-9	Dibenzofuran	U	390	1.0	330	390	94
100-02-7	4-Nitrophenol	U	1400	1.0	1200	1400	370
121-14-2	2,4-Dinitrotoluene	U	390	1.0	330	390	100
84-66-2	Diethylphthalate	U	390	1.0	330	390	95
7005-72-3	4-Chlorophenyl-phenylether	U	390	1.0	330	390	93
100-01-6	4-Nitroaniline	U	590	1.0	500	590	160
534-52-1	4,6-Dinitro-2-Methylphenol	U	1400	1.0	1200	1400	400
86-30-6	N-Nitrosodiphenylamine	U	780	1.0	660	780	260
101-55-3	4-Bromophenyl-phenylether	U	390	1.0	330	390	100
1912-24-9	Atrazine	U	390	1.0	330	390	110
87-86-5	Pentachlorophenol	U	970	1.0	820	970	280
120-12-7	Anthracene	U	390	1.0	330	390	100
86-74-8	Carbazole	U	590	1.0	500	590	130

WD
3/3/09

9

KATAHDIN ANALYTICAL SERVICES
Report of Analytical Results

Client: CH2MHill
Project: TO-009 Lejeune
PO No:
Sample Date: 12/07/08
Received Date: 12/09/08
Extraction Date: 12/13/08
Analysis Date: 31-DEC-2008 21:54
Report Date: 01/05/2009
Matrix: SOIL
% Solids: 84.1

Lab ID: SB7056-17
Client ID: MR08-IS109D-2-3-08D
SDG: TO9-15
Extracted by: CB
Extraction Method: SW846 3550
Analyst: JCG
Analysis Method: SW846 8270C
Lab Prep Batch: WG59026
Units: ug/Kgdrywt

CAS#	Compound	Flags	Results	DF	PQL	Adj.PQL	Adj.MDL
84-74-2	Di-n-butylphthalate	U	390	1.0	330	390	120
85-68-7	Butylbenzylphthalate	U	390	1.0	330	390	110
91-94-1	3,3'-Dichlorobenzidine	U	590	1.0	500	590	140
218-01-9	Chrysene	U	390	1.0	330	390	110
117-81-7	bis(2-Ethylhexyl)phthalate	U	390	1.0	330	390	120
117-84-0	Di-n-octylphthalate	U	390	1.0	330	390	250
367-12-4	2-Fluorophenol		70%				
13127-88-3	Phenol-D6		76%				
4165-60-0	Nitrobenzene-D5		70%				
321-60-8	2-Fluorobiphenyl		73%				
118-79-6	2,4,6-Tribromophenol		90%				
1718-51-0	Terphenyl-D14		110%				

MW
3/3/09

10

KATAHDIN ANALYTICAL SERVICES
Report of Analytical Results

Client: CH2MHill
Project: TO-009 Lejeune
PO No:
Sample Date: 12/08/08
Received Date: 12/09/08
Extraction Date: 12/13/08
Analysis Date: 31-DEC-2008 22:35
Report Date: 01/05/2009
Matrix: SOIL
% Solids: 94.1

Lab ID: SB7056-19
Client ID: MR08-SS109-08D
SDG: TO9-15
Extracted by: CB
Extraction Method: SW846 3550
Analyst: JCG
Analysis Method: SW846 8270C
Lab Prep Batch: WG59026
Units: ug/Kgdrywt

CAS#	Compound	Flags	Results	DF	PQL	Adj.PQL	Adj.MDL
100-52-7	Benzaldehyde	U	530	1.0	500	530	130
108-95-2	Phenol	U	530	1.0	500	530	160
111-44-4	Bis(2-Chloroethyl)ether	U	350	1.0	330	350	86
95-57-8	2-Chlorophenol	U	530	1.0	500	530	170
95-48-7	2-Methylphenol	U	640	1.0	600	640	210
108-60-1	2,2'-Oxybis(1-chloropropane)	U	350	1.0	330	350	95
98-86-2	Acetophenone	U	640	1.0	600	640	190
621-64-7	N-Nitroso-di-n-propylamine	U	350	1.0	330	350	88
65794-96-9	3&4-Methylphenol	U	640	1.0	600	640	200
67-72-1	Hexachloroethane	U	350	1.0	330	350	100
98-95-3	Nitrobenzene	~~U~~ UJ	350	1.0	330	350	97 CCH
78-59-1	Isophorone	U	350	1.0	330	350	80
88-75-5	2-Nitrophenol	U	640	1.0	600	640	180
105-67-9	2,4-Dimethylphenol	U	530	1.0	500	530	180
111-91-1	Bis(2-Chloroethoxy)methane	U	350	1.0	330	350	100
120-83-2	2,4-Dichlorophenol	U	530	1.0	500	530	160
106-47-8	4-Chloroaniline	U	530	1.0	500	530	130
105-60-2	Caprolactam	U	530	1.0	500	530	150
59-50-7	4-Chloro-3-Methylphenol	U	530	1.0	500	530	180
88-06-2	2,4,6-Trichlorophenol	U	530	1.0	500	530	160
95-95-4	2,4,5-Trichlorophenol	U	530	1.0	500	530	160
91-58-7	2-Chloronaphthalene	U	350	1.0	330	350	92
92-52-4	1,1'-Biphenyl	U	350	1.0	330	350	78
88-74-4	2-Nitroaniline	U	530	1.0	500	530	80
131-11-3	Dimethyl Phthalate	U	350	1.0	330	350	83
606-20-2	2,6-Dinitrotoluene	U	350	1.0	330	350	84
208-96-8	Acenaphthylene	U	350	1.0	330	350	74
99-09-2	3-Nitroaniline	U	530	1.0	500	530	100
83-32-9	Acenaphthene	U	350	1.0	330	350	69
51-28-5	2,4-Dinitrophenol	U	1300	1.0	1200	1300	400
132-64-9	Dibenzofuran	U	350	1.0	330	350	84
100-02-7	4-Nitrophenol	U	1300	1.0	1200	1300	330
121-14-2	2,4-Dinitrotoluene	U	350	1.0	330	350	90
84-66-2	Diethylphthalate	U	350	1.0	330	350	85
7005-72-3	4-Chlorophenyl-phenylether	U	350	1.0	330	350	83
100-01-6	4-Nitroaniline	U	530	1.0	500	530	140
534-52-1	4,6-Dinitro-2-Methylphenol	U	1300	1.0	1200	1300	360
86-30-6	N-Nitrosodiphenylamine	U	700	1.0	660	700	230
101-55-3	4-Bromophenyl-phenylether	U	350	1.0	330	350	90
1912-24-9	Atrazine	U	350	1.0	330	350	97
87-86-5	Pentachlorophenol	U	870	1.0	820	870	250
120-12-7	Anthracene	U	350	1.0	330	350	89
86-74-8	Carbazole	U	530	1.0	500	530	120

WD
3/3/09

10

KATAHDIN ANALYTICAL SERVICES
Report of Analytical Results

Client: CH2MHill
Project: TO-009 Lejeune
PO No:
Sample Date: 12/08/08
Received Date: 12/09/08
Extraction Date: 12/13/08
Analysis Date: 31-DEC-2008 22:35
Report Date: 01/05/2009
Matrix: SOIL
% Solids: 94.1

Lab ID: SB7056-19
Client ID: MR08-SS109-08D
SDG: TO9-15
Extracted by: CB
Extraction Method: SW846 3550
Analyst: JCG
Analysis Method: SW846 8270C
Lab Prep Batch: WG59026
Units: ug/Kgdrywt

CAS#	Compound	Flags	Results	DF	PQL	Adj.PQL	Adj.MDL
84-74-2	Di-n-butylphthalate	U	350	1.0	330	350	110
85-68-7	Butylbenzylphthalate	U	350	1.0	330	350	99
91-94-1	3,3'-Dichlorobenzidine	U	530	1.0	500	530	120
218-01-9	Chrysene	J	110	1.0	330	350	100
117-81-7	bis(2-Ethylhexyl)phthalate	U	350	1.0	330	350	100
117-84-0	Di-n-octylphthalate	U	350	1.0	330	350	220
367-12-4	2-Fluorophenol		66%				
13127-88-3	Phenol-D6		70%				
4165-60-0	Nitrobenzene-D5		68%				
321-60-8	2-Fluorobiphenyl		65%				
118-79-6	2,4,6-Tribromophenol		72%				
1718-51-0	Terphenyl-D14		96%				

CW
3/3/09

11

KATAHDIN ANALYTICAL SERVICES
Report of Analytical Results

Client: CH2MHill
Project: TO-009 Lejeune
PO No:
Sample Date: 12/08/08
Received Date: 12/09/08
Extraction Date: 12/13/08
Analysis Date: 31-DEC-2008 23:17
Report Date: 01/05/2009
Matrix: SOIL
% Solids: 93.8

Lab ID: SB7056-21
Client ID: MR08-SS109D-08D
SDG: TO9-15
Extracted by: CB
Extraction Method: SW846 3550
Analyst: JCG
Analysis Method: SW846 8270C
Lab Prep Batch: WG59026
Units: ug/Kgdrywt

CAS#	Compound	Flags	Results	DF	PQL	Adj.PQL	Adj.MDL
100-52-7	Benzaldehyde	U	530	1.0	500	530	130
108-95-2	Phenol	U	530	1.0	500	530	170
111-44-4	Bis(2-Chloroethyl)ether	U	350	1.0	330	350	86
95-57-8	2-Chlorophenol	U	530	1.0	500	530	170
95-48-7	2-Methylphenol	U	640	1.0	600	640	210
108-60-1	2,2'-Oxybis(1-chloropropane)	U	350	1.0	330	350	95
98-86-2	Acetophenone	U	640	1.0	600	640	190
621-64-7	N-Nitroso-di-n-propylamine	U	350	1.0	330	350	88
65794-96-9	3&4-Methylphenol	U	640	1.0	600	640	200
67-72-1	Hexachloroethane	U	350	1.0	330	350	100
98-95-3	Nitrobenzene	~~U~~ UJ	350	1.0	330	350	97 CCH
78-59-1	Isophorone	U	350	1.0	330	350	80
88-75-5	2-Nitrophenol	U	640	1.0	600	640	180
105-67-9	2,4-Dimethylphenol	U	530	1.0	500	530	180
111-91-1	Bis(2-Chloroethoxy)methane	U	350	1.0	330	350	100
120-83-2	2,4-Dichlorophenol	U	530	1.0	500	530	160
106-47-8	4-Chloroaniline	U	530	1.0	500	530	130
105-60-2	Caprolactam	U	530	1.0	500	530	150
59-50-7	4-Chloro-3-Methylphenol	U	530	1.0	500	530	180
88-06-2	2,4,6-Trichlorophenol	U	530	1.0	500	530	160
95-95-4	2,4,5-Trichlorophenol	U	530	1.0	500	530	160
91-58-7	2-Chloronaphthalene	U	350	1.0	330	350	93
92-52-4	1,1'-Biphenyl	U	350	1.0	330	350	78
88-74-4	2-Nitroaniline	U	530	1.0	500	530	80
131-11-3	Dimethyl Phthalate	U	350	1.0	330	350	83
606-20-2	2,6-Dinitrotoluene	U	350	1.0	330	350	84
208-96-8	Acenaphthylene	U	350	1.0	330	350	75
99-09-2	3-Nitroaniline	U	530	1.0	500	530	100
83-32-9	Acenaphthene	U	350	1.0	330	350	69
51-28-5	2,4-Dinitrophenol	U	1300	1.0	1200	1300	400
132-64-9	Dibenzofuran	U	350	1.0	330	350	84
100-02-7	4-Nitrophenol	U	1300	1.0	1200	1300	330
121-14-2	2,4-Dinitrotoluene	U	350	1.0	330	350	91
84-66-2	Diethylphthalate	U	350	1.0	330	350	85
7005-72-3	4-Chlorophenyl-phenylether	U	350	1.0	330	350	83
100-01-6	4-Nitroaniline	U	530	1.0	500	530	140
534-52-1	4,6-Dinitro-2-Methylphenol	U	1300	1.0	1200	1300	360
86-30-6	N-Nitrosodiphenylamine	U	700	1.0	660	700	230
101-55-3	4-Bromophenyl-phenylether	U	350	1.0	330	350	91
1912-24-9	Atrazine	U	350	1.0	330	350	97
87-86-5	Pentachlorophenol	U	870	1.0	820	870	250
120-12-7	Anthracene	U	350	1.0	330	350	90
86-74-8	Carbazole	U	530	1.0	500	530	120

RWS 3/3/09

11

KATAHDIN ANALYTICAL SERVICES
Report of Analytical Results

Client: CH2MHill
Project: TO-009 Lejeune
PO No:
Sample Date: 12/08/08
Received Date: 12/09/08
Extraction Date: 12/13/08
Analysis Date: 31-DEC-2008 23:17
Report Date: 01/05/2009
Matrix: SOIL
% Solids: 93.8

Lab ID: SB7056-21
Client ID: MR08-SS109D-08D
SDG: TO9-15
Extracted by: CB
Extraction Method: SW846 3550
Analyst: JCG
Analysis Method: SW846 8270C
Lab Prep Batch: WG59026
Units: ug/Kgdrywt

CAS#	Compound	Flags	Results	DF	PQL	Adj.PQL	Adj.MDL
84-74-2	Di-n-butylphthalate	U	350	1.0	330	350	110
85-68-7	Butylbenzylphthalate	U	350	1.0	330	350	99
91-94-1	3,3'-Dichlorobenzidine	U	530	1.0	500	530	120
218-01-9	Chrysene	U	350	1.0	330	350	100
117-81-7	bis(2-Ethylhexyl)phthalate		440	1.0	330	350	100
117-84-0	Di-n-octylphthalate	U	350	1.0	330	350	220
367-12-4	2-Fluorophenol		73%				
13127-88-3	Phenol-D6		79%				
4165-60-0	Nitrobenzene-D5		72%				
321-60-8	2-Fluorobiphenyl		73%				
118-79-6	2,4,6-Tribromophenol		86%				
1718-51-0	Terphenyl-D14		107%				

lw
3/3/09

12

KATAHDIN ANALYTICAL SERVICES
Report of Analytical Results

Client: CH2MHill
Project: TO-009 Lejeune
PO No:
Sample Date: 12/08/08
Received Date: 12/09/08
Extraction Date: 12/13/08
Analysis Date: 31-DEC-2008 23:58
Report Date: 01/05/2009
Matrix: SOIL
% Solids: 90.9

Lab ID: SB7056-23
Client ID: MR08-SS105-08D
SDG: TO9-15
Extracted by: CB
Extraction Method: SW846 3550
Analyst: JCG
Analysis Method: SW846 8270C
Lab Prep Batch: WG59026
Units: ug/Kgdrywt

CAS#	Compound	Flags	Results	DF	PQL	Adj.PQL	Adj.MDL
100-52-7	Benzaldehyde	U	550	1.0	500	550	130
108-95-2	Phenol	U	550	1.0	500	550	170
111-44-4	Bis(2-Chloroethyl)ether	U	360	1.0	330	360	89
95-57-8	2-Chlorophenol	U	550	1.0	500	550	180
95-48-7	2-Methylphenol	U	660	1.0	600	660	220
108-60-1	2,2'-Oxybis(1-chloropropane)	U	360	1.0	330	360	98
98-86-2	Acetophenone	U	660	1.0	600	660	200
621-64-7	N-Nitroso-di-n-propylamine	U	360	1.0	330	360	91
65794-96-9	3&4-Methylphenol	U	660	1.0	600	660	200
67-72-1	Hexachloroethane	U	360	1.0	330	360	100
98-95-3	Nitrobenzene	~~U~~ UJ	360	1.0	330	360	100 CCH
78-59-1	Isophorone	U	360	1.0	330	360	82
88-75-5	2-Nitrophenol	U	660	1.0	600	660	180
105-67-9	2,4-Dimethylphenol	U	550	1.0	500	550	180
111-91-1	Bis(2-Chloroethoxy)methane	U	360	1.0	330	360	100
120-83-2	2,4-Dichlorophenol	U	550	1.0	500	550	160
106-47-8	4-Chloroaniline	U	550	1.0	500	550	130
105-60-2	Caprolactam	U	550	1.0	500	550	160
59-50-7	4-Chloro-3-Methylphenol	U	550	1.0	500	550	180
88-06-2	2,4,6-Trichlorophenol	U	550	1.0	500	550	170
95-95-4	2,4,5-Trichlorophenol	U	550	1.0	500	550	170
91-58-7	2-Chloronaphthalene	U	360	1.0	330	360	96
92-52-4	1,1'-Biphenyl	U	360	1.0	330	360	80
88-74-4	2-Nitroaniline	U	550	1.0	500	550	82
131-11-3	Dimethyl Phthalate	U	360	1.0	330	360	86
606-20-2	2,6-Dinitrotoluene	U	360	1.0	330	360	87
208-96-8	Acenaphthylene	U	360	1.0	330	360	77
99-09-2	3-Nitroaniline	U	550	1.0	500	550	100
83-32-9	Acenaphthene	U	360	1.0	330	360	71
51-28-5	2,4-Dinitrophenol	U	1300	1.0	1200	1300	410
132-64-9	Dibenzofuran	U	360	1.0	330	360	87
100-02-7	4-Nitrophenol	U	1300	1.0	1200	1300	340
121-14-2	2,4-Dinitrotoluene	U	360	1.0	330	360	93
84-66-2	Diethylphthalate	U	360	1.0	330	360	88
7005-72-3	4-Chlorophenyl-phenylether	U	360	1.0	330	360	86
100-01-6	4-Nitroaniline	U	550	1.0	500	550	150
534-52-1	4,6-Dinitro-2-Methylphenol	U	1300	1.0	1200	1300	370
86-30-6	N-Nitrosodiphenylamine	U	720	1.0	660	720	240
101-55-3	4-Bromophenyl-phenylether	U	360	1.0	330	360	93
1912-24-9	Atrazine	U	360	1.0	330	360	100
87-86-5	Pentachlorophenol	U	900	1.0	820	900	260
120-12-7	Anthracene	U	360	1.0	330	360	92
86-74-8	Carbazole	U	550	1.0	500	550	120

LW
3/3/09

KATAHDIN ANALYTICAL SERVICES
Report of Analytical Results

Client: CH2MHill
Project: TO-009 Lejeune
PO No:
Sample Date: 12/08/08
Received Date: 12/09/08
Extraction Date: 12/13/08
Analysis Date: 31-DEC-2008 23:58
Report Date: 01/05/2009
Matrix: SOIL
% Solids: 90.9

Lab ID: SB7056-23
Client ID: MR08-SS105-08D
SDG: TO9-15
Extracted by: CB
Extraction Method: SW846 3550
Analyst: JCG
Analysis Method: SW846 8270C
Lab Prep Batch: WG59026
Units: ug/Kgdrywt

CAS#	Compound	Flags	Results	DF	PQL	Adj.PQL	Adj.MDL
84-74-2	Di-n-butylphthalate	U	360	1.0	330	360	110
85-68-7	Butylbenzylphthalate	U	360	1.0	330	360	100
91-94-1	3,3'-Dichlorobenzidine	U	550	1.0	500	550	120
218-01-9	Chrysene	U	360	1.0	330	360	100
117-81-7	bis(2-Ethylhexyl)phthalate	U	360	1.0	330	360	110
117-84-0	Di-n-octylphthalate	U	360	1.0	330	360	230
367-12-4	2-Fluorophenol		67%				
13127-88-3	Phenol-D6		71%				
4165-60-0	Nitrobenzene-D5		69%				
321-60-8	2-Fluorobiphenyl		70%				
118-79-6	2,4,6-Tribromophenol		84%				
1718-51-0	Terphenyl-D14		103%				

MW
3/3/09

13

KATAHDIN ANALYTICAL SERVICES
Report of Analytical Results

Client: CH2MHill
Project: TO-009 Lejeune
PO No:
Sample Date: 12/08/08
Received Date: 12/09/08
Extraction Date: 12/13/08
Analysis Date: 01-JAN-2009 00:40
Report Date: 01/05/2009
Matrix: SOIL
% Solids: 92.7

Lab ID: SB7056-25
Client ID: MR08-SS106-08D
SDG: TO9-15
Extracted by: CB
Extraction Method: SW846 3550
Analyst: JCG
Analysis Method: SW846 8270C
Lab Prep Batch: WG59026
Units: ug/Kgdrywt

CAS#	Compound	Flags	Results	DF	PQL	Adj.PQL	Adj.MDL	
100-52-7	Benzaldehyde	U	540	1.0	500	540	130	
108-95-2	Phenol	U	540	1.0	500	540	170	
111-44-4	Bis(2-Chloroethyl)ether	U	360	1.0	330	360	87	
95-57-8	2-Chlorophenol	U	540	1.0	500	540	180	
95-48-7	2-Methylphenol	U	650	1.0	600	650	220	
108-60-1	2,2'-Oxybis(1-chloropropane)	U	360	1.0	330	360	96	
98-86-2	Acetophenone	U	650	1.0	600	650	190	
621-64-7	N-Nitroso-di-n-propylamine	U	360	1.0	330	360	90	
65794-96-9	3&4-Methylphenol	U	650	1.0	600	650	200	
67-72-1	Hexachloroethane	U	360	1.0	330	360	100	
98-95-3	Nitrobenzene	~~U~~ UJ	360	1.0	330	360	98	CCH
78-59-1	Isophorone	U	360	1.0	330	360	81	
88-75-5	2-Nitrophenol	U	650	1.0	600	650	180	
105-67-9	2,4-Dimethylphenol	U	540	1.0	500	540	180	
111-91-1	Bis(2-Chloroethoxy)methane	U	360	1.0	330	360	100	
120-83-2	2,4-Dichlorophenol	U	540	1.0	500	540	160	
106-47-8	4-Chloroaniline	U	540	1.0	500	540	130	
105-60-2	Caprolactam	U	540	1.0	500	540	160	
59-50-7	4-Chloro-3-Methylphenol	U	540	1.0	500	540	180	
88-06-2	2,4,6-Trichlorophenol	U	540	1.0	500	540	170	
95-95-4	2,4,5-Trichlorophenol	U	540	1.0	500	540	170	
91-58-7	2-Chloronaphthalene	U	360	1.0	330	360	94	
92-52-4	1,1'-Biphenyl	U	360	1.0	330	360	79	
88-74-4	2-Nitroaniline	U	540	1.0	500	540	81	
131-11-3	Dimethyl Phthalate	U	360	1.0	330	360	84	
606-20-2	2,6-Dinitrotoluene	U	360	1.0	330	360	85	
208-96-8	Acenaphthylene	U	360	1.0	330	360	75	
99-09-2	3-Nitroaniline	U	540	1.0	500	540	100	
83-32-9	Acenaphthene	U	360	1.0	330	360	70	
51-28-5	2,4-Dinitrophenol	U	1300	1.0	1200	1300	410	
132-64-9	Dibenzofuran	U	360	1.0	330	360	85	
100-02-7	4-Nitrophenol	U	1300	1.0	1200	1300	330	
121-14-2	2,4-Dinitrotoluene	U	360	1.0	330	360	92	
84-66-2	Diethylphthalate	U	360	1.0	330	360	86	
7005-72-3	4-Chlorophenyl-phenylether	U	360	1.0	330	360	84	
100-01-6	4-Nitroaniline	U	540	1.0	500	540	140	
534-52-1	4,6-Dinitro-2-Methylphenol	U	1300	1.0	1200	1300	360	
86-30-6	N-Nitrosodiphenylamine	U	710	1.0	660	710	240	
101-55-3	4-Bromophenyl-phenylether	U	360	1.0	330	360	92	
1912-24-9	Atrazine	U	360	1.0	330	360	98	
87-86-5	Pentachlorophenol	U	880	1.0	820	880	260	
120-12-7	Anthracene	U	360	1.0	330	360	90	
86-74-8	Carbazole	U	540	1.0	500	540	120	

kw 3/3/09

KATAHDIN ANALYTICAL SERVICES
Report of Analytical Results

Client: CH2MHill
Project: TO-009 Lejeune
PO No:
Sample Date: 12/08/08
Received Date: 12/09/08
Extraction Date: 12/13/08
Analysis Date: 01-JAN-2009 00:40
Report Date: 01/05/2009
Matrix: SOIL
% Solids: 92.7

Lab ID: SB7056-25
Client ID: MR08-SS106-08D
SDG: TO9-15
Extracted by: CB
Extraction Method: SW846 3550
Analyst: JCG
Analysis Method: SW846 8270C
Lab Prep Batch: WG59026
Units: ug/Kgdrywt

CAS#	Compound	Flags	Results	DF	PQL	Adj.PQL	Adj.MDL
84-74-2	Di-n-butylphthalate	U	360	1.0	330	360	110
85-68-7	Butylbenzylphthalate	U	360	1.0	330	360	100
91-94-1	3,3'-Dichlorobenzidine	U	540	1.0	500	540	120
218-01-9	Chrysene	U	360	1.0	330	360	100
117-81-7	bis(2-Ethylhexyl)phthalate	U	360	1.0	330	360	100
117-84-0	Di-n-octylphthalate	U	360	1.0	330	360	230
367-12-4	2-Fluorophenol		69%				
13127-88-3	Phenol-D6		74%				
4165-60-0	Nitrobenzene-D5		73%				
321-60-8	2-Fluorobiphenyl		72%				
118-79-6	2,4,6-Tribromophenol		74%				
1718-51-0	Terphenyl-D14		95%				

lw 3/3/09

KATAHDIN ANALYTICAL SERVICES
Report of Analytical Results

Client: CH2MHill
Project: TO-009 Lejeune
PO No:
Sample Date: 12/08/08
Received Date: 12/09/08
Extraction Date: 12/13/08
Analysis Date: 01-JAN-2009 01:22
Report Date: 01/05/2009
Matrix: SOIL
% Solids: 85.5

Lab ID: SB7056-27
Client ID: IS106-1-2-08D
SDG: TO9-15
Extracted by: CB
Extraction Method: SW846 3550
Analyst: JCG
Analysis Method: SW846 8270C
Lab Prep Batch: WG59026
Units: ug/Kgdrywt

CAS#	Compound	Flags	Results	DF	PQL	Adj.PQL	Adj.MDL
100-52-7	Benzaldehyde	U	580	1.0	500	580	140
108-95-2	Phenol	U	580	1.0	500	580	180
111-44-4	Bis(2-Chloroethyl)ether	U	390	1.0	330	390	95
95-57-8	2-Chlorophenol	U	580	1.0	500	580	190
95-48-7	2-Methylphenol	U	700	1.0	600	700	230
108-60-1	2,2'-Oxybis(1-chloropropane)	U	390	1.0	330	390	100
98-86-2	Acetophenone	U	700	1.0	600	700	210
621-64-7	N-Nitroso-di-n-propylamine	U	390	1.0	330	390	97
65794-96-9	3&4-Methylphenol	U	700	1.0	600	700	220
67-72-1	Hexachloroethane	U	390	1.0	330	390	110
98-95-3	Nitrobenzene	~~U~~ UJ	390	1.0	330	390	110 CCH
78-59-1	Isophorone	U	390	1.0	330	390	88
88-75-5	2-Nitrophenol	U	700	1.0	600	700	200
105-67-9	2,4-Dimethylphenol	U	580	1.0	500	580	190
111-91-1	Bis(2-Chloroethoxy)methane	U	390	1.0	330	390	110
120-83-2	2,4-Dichlorophenol	U	580	1.0	500	580	180
106-47-8	4-Chloroaniline	U	580	1.0	500	580	140
105-60-2	Caprolactam	U	580	1.0	500	580	170
59-50-7	4-Chloro-3-Methylphenol	U	580	1.0	500	580	190
88-06-2	2,4,6-Trichlorophenol	U	580	1.0	500	580	180
95-95-4	2,4,5-Trichlorophenol	U	580	1.0	500	580	180
91-58-7	2-Chloronaphthalene	U	390	1.0	330	390	100
92-52-4	1,1'-Biphenyl	U	390	1.0	330	390	85
88-74-4	2-Nitroaniline	U	580	1.0	500	580	88
131-11-3	Dimethyl Phthalate	U	390	1.0	330	390	91
606-20-2	2,6-Dinitrotoluene	U	390	1.0	330	390	92
208-96-8	Acenaphthylene	U	390	1.0	330	390	82
99-09-2	3-Nitroaniline	U	580	1.0	500	580	110
83-32-9	Acenaphthene	U	390	1.0	330	390	76
51-28-5	2,4-Dinitrophenol	U	1400	1.0	1200	1400	440
132-64-9	Dibenzofuran	U	390	1.0	330	390	92
100-02-7	4-Nitrophenol	U	1400	1.0	1200	1400	360
121-14-2	2,4-Dinitrotoluene	U	390	1.0	330	390	99
84-66-2	Diethylphthalate	U	390	1.0	330	390	94
7005-72-3	4-Chlorophenyl-phenylether	U	390	1.0	330	390	91
100-01-6	4-Nitroaniline	U	580	1.0	500	580	160
534-52-1	4,6-Dinitro-2-Methylphenol	U	1400	1.0	1200	1400	390
86-30-6	N-Nitrosodiphenylamine	U	770	1.0	660	770	260
101-55-3	4-Bromophenyl-phenylether	U	390	1.0	330	390	99
1912-24-9	Atrazine	U	390	1.0	330	390	110
87-86-5	Pentachlorophenol	U	960	1.0	820	960	280
120-12-7	Anthracene	U	390	1.0	330	390	98
86-74-8	Carbazole	U	580	1.0	500	580	130

AW
3/3/09

KATAHDIN ANALYTICAL SERVICES
Report of Analytical Results

Client: CH2MHill
Project: TO-009 Lejeune
PO No:
Sample Date: 12/08/08
Received Date: 12/09/08
Extraction Date: 12/13/08
Analysis Date: 01-JAN-2009 01:22
Report Date: 01/05/2009
Matrix: SOIL
% Solids: 85.5

Lab ID: SB7056-27
Client ID: IS106-1-2-08D
SDG: TO9-15
Extracted by: CB
Extraction Method: SW846 3550
Analyst: JCG
Analysis Method: SW846 8270C
Lab Prep Batch: WG59026
Units: ug/Kgdrywt

CAS#	Compound	Flags	Results	DF	PQL	Adj.PQL	Adj.MDL
84-74-2	Di-n-butylphthalate	U	390	1.0	330	390	120
85-68-7	Butylbenzylphthalate	U	390	1.0	330	390	110
91-94-1	3,3'-Dichlorobenzidine	U	580	1.0	500	580	130
218-01-9	Chrysene	U	390	1.0	330	390	110
117-81-7	bis(2-Ethylhexyl)phthalate	J	160	1.0	330	390	110
117-84-0	Di-n-octylphthalate	U	390	1.0	330	390	250
367-12-4	2-Fluorophenol		65%				
13127-88-3	Phenol-D6		69%				
4165-60-0	Nitrobenzene-D5		66%				
321-60-8	2-Fluorobiphenyl		67%				
118-79-6	2,4,6-Tribromophenol		85%				
1718-51-0	Terphenyl-D14		96%				

MW 3/3/09

KATAHDIN ANALYTICAL SERVICES
Report of Analytical Results

Client: CH2MHill
Project: TO-009 Lejeune
PO No:
Sample Date: 12/08/08
Received Date: 12/09/08
Extraction Date: 12/13/08
Analysis Date: 01-JAN-2009 03:26
Report Date: 01/05/2009
Matrix: SOIL
% Solids: 87.4

Lab ID: SB7056-29
Client ID: MR08-IS105-2-3-08D
SDG: TO9-15
Extracted by: CB
Extraction Method: SW846 3550
Analyst: JCG
Analysis Method: SW846 8270C
Lab Prep Batch: WG59026
Units: ug/Kgdrywt

CAS#	Compound	Flags	Results	DF	PQL	Adj.PQL	Adj.MDL	
100-52-7	Benzaldehyde	U	570	1.0	500	570	140	
108-95-2	Phenol	U	570	1.0	500	570	180	
111-44-4	Bis(2-Chloroethyl)ether	U	380	1.0	330	380	93	
95-57-8	2-Chlorophenol	U	570	1.0	500	570	190	
95-48-7	2-Methylphenol	U	690	1.0	600	690	230	
108-60-1	2,2'-Oxybis(1-chloropropane)	U	380	1.0	330	380	100	
98-86-2	Acetophenone	U	690	1.0	600	690	200	
621-64-7	N-Nitroso-di-n-propylamine	U	380	1.0	330	380	95	
65794-96-9	3&4-Methylphenol	U	690	1.0	600	690	210	
67-72-1	Hexachloroethane	U	380	1.0	330	380	110	
98-95-3	Nitrobenzene	~~U~~ UJ	380	1.0	330	380	100	CCH
78-59-1	Isophorone	U	380	1.0	330	380	86	
88-75-5	2-Nitrophenol	U	690	1.0	600	690	190	
105-67-9	2,4-Dimethylphenol	U	570	1.0	500	570	190	
111-91-1	Bis(2-Chloroethoxy)methane	U	380	1.0	330	380	110	
120-83-2	2,4-Dichlorophenol	U	570	1.0	500	570	170	
106-47-8	4-Chloroaniline	U	570	1.0	500	570	140	
105-60-2	Caprolactam	U	570	1.0	500	570	160	
59-50-7	4-Chloro-3-Methylphenol	U	570	1.0	500	570	190	
88-06-2	2,4,6-Trichlorophenol	U	570	1.0	500	570	180	
95-95-4	2,4,5-Trichlorophenol	U	570	1.0	500	570	180	
91-58-7	2-Chloronaphthalene	U	380	1.0	330	380	100	
92-52-4	1,1'-Biphenyl	U	380	1.0	330	380	84	
88-74-4	2-Nitroaniline	U	570	1.0	500	570	86	
131-11-3	Dimethyl Phthalate	U	380	1.0	330	380	89	
606-20-2	2,6-Dinitrotoluene	U	380	1.0	330	380	90	
208-96-8	Acenaphthylene	U	380	1.0	330	380	80	
99-09-2	3-Nitroaniline	U	570	1.0	500	570	110	
83-32-9	Acenaphthene	U	380	1.0	330	380	74	
51-28-5	2,4-Dinitrophenol	U	1400	1.0	1200	1400	430	
132-64-9	Dibenzofuran	U	380	1.0	330	380	90	
100-02-7	4-Nitrophenol	U	1400	1.0	1200	1400	350	
121-14-2	2,4-Dinitrotoluene	U	380	1.0	330	380	97	
84-66-2	Diethylphthalate	U	380	1.0	330	380	92	
7005-72-3	4-Chlorophenyl-phenylether	U	380	1.0	330	380	89	
100-01-6	4-Nitroaniline	U	570	1.0	500	570	150	
534-52-1	4,6-Dinitro-2-Methylphenol	U	1400	1.0	1200	1400	380	
86-30-6	N-Nitrosodiphenylamine	U	760	1.0	660	760	250	
101-55-3	4-Bromophenyl-phenylether	U	380	1.0	330	380	97	
1912-24-9	Atrazine	U	380	1.0	330	380	100	
87-86-5	Pentachlorophenol	U	940	1.0	820	940	270	
120-12-7	Anthracene	U	380	1.0	330	380	96	
86-74-8	Carbazole	U	570	1.0	500	570	130	

3/3/09

KATAHDIN ANALYTICAL SERVICES
Report of Analytical Results

Client: CH2MHill
Project: TO-009 Lejeune
PO No:
Sample Date: 12/08/08
Received Date: 12/09/08
Extraction Date: 12/13/08
Analysis Date: 01-JAN-2009 03:26
Report Date: 01/05/2009
Matrix: SOIL
% Solids: 87.4

Lab ID: SB7056-29
Client ID: MR08-IS105-2-3-08D
SDG: TO9-15
Extracted by: CB
Extraction Method: SW846 3550
Analyst: JCG
Analysis Method: SW846 8270C
Lab Prep Batch: WG59026
Units: ug/Kgdrywt

CAS#	Compound	Flags	Results	DF	PQL	Adj.PQL	Adj.MDL
84-74-2	Di-n-butylphthalate	U	380	1.0	330	380	120
85-68-7	Butylbenzylphthalate	U	380	1.0	330	380	110
91-94-1	3,3'-Dichlorobenzidine	U	570	1.0	500	570	130
218-01-9	Chrysene	U	380	1.0	330	380	110
117-81-7	bis(2-Ethylhexyl)phthalate	U	380	1.0	330	380	110
117-84-0	Di-n-octylphthalate	U	380	1.0	330	380	240
367-12-4	2-Fluorophenol		64%				
13127-88-3	Phenol-D6		64%				
4165-60-0	Nitrobenzene-D5		65%				
321-60-8	2-Fluorobiphenyl		66%				
118-79-6	2,4,6-Tribromophenol		76%				
1718-51-0	Terphenyl-D14		108%				

lw 3/3/09

16

KATAHDIN ANALYTICAL SERVICES
Report of Analytical Results

Client: CH2MHill
Project: TO-009 Lejeune
PO No:
Sample Date: 12/08/08
Received Date: 12/09/08
Extraction Date: 12/13/08
Analysis Date: 02-JAN-2009 12:27
Report Date: 01/05/2009
Matrix: SOIL
% Solids: 88.8

Lab ID: SB7056-31
Client ID: MR08-IS106-2-3-08D
SDG: TO9-15
Extracted by: CB
Extraction Method: SW846 3550
Analyst: JCG
Analysis Method: SW846 8270C
Lab Prep Batch: WG59026
Units: ug/Kgdrywt

CAS#	Compound	Flags	Results	DF	PQL	Adj.PQL	Adj.MDL	
100-52-7	Benzaldehyde	~~U~~ UJ	560	1.0	500	560	140	CCH
108-95-2	Phenol	U	560	1.0	500	560	180	
111-44-4	Bis(2-Chloroethyl)ether	U	370	1.0	330	370	91	
95-57-8	2-Chlorophenol	U	560	1.0	500	560	180	
95-48-7	2-Methylphenol	U	680	1.0	600	680	220	
108-60-1	2,2'-Oxybis(1-chloropropane)	U	370	1.0	330	370	100	
98-86-2	Acetophenone	U	680	1.0	600	680	200	
621-64-7	N-Nitroso-di-n-propylamine	U	370	1.0	330	370	93	
65794-96-9	3&4-Methylphenol	U	680	1.0	600	680	210	
67-72-1	Hexachloroethane	U	370	1.0	330	370	110	
98-95-3	Nitrobenzene	~~U~~ UJ	370	1.0	330	370	100	CCH
78-59-1	Isophorone	U	370	1.0	330	370	84	
88-75-5	2-Nitrophenol	U	680	1.0	600	680	190	
105-67-9	2,4-Dimethylphenol	U	560	1.0	500	560	180	
111-91-1	Bis(2-Chloroethoxy)methane	U	370	1.0	330	370	110	
120-83-2	2,4-Dichlorophenol	U	560	1.0	500	560	170	
106-47-8	4-Chloroaniline	U	560	1.0	500	560	130	
105-60-2	Caprolactam	U	560	1.0	500	560	160	
59-50-7	4-Chloro-3-Methylphenol	U	560	1.0	500	560	190	
88-06-2	2,4,6-Trichlorophenol	U	560	1.0	500	560	170	
95-95-4	2,4,5-Trichlorophenol	U	560	1.0	500	560	170	
91-58-7	2-Chloronaphthalene	U	370	1.0	330	370	98	
92-52-4	1,1'-Biphenyl	U	370	1.0	330	370	82	
88-74-4	2-Nitroaniline	U	560	1.0	500	560	84	
131-11-3	Dimethyl Phthalate	U	370	1.0	330	370	88	
606-20-2	2,6-Dinitrotoluene	U	370	1.0	330	370	89	
208-96-8	Acenaphthylene	U	370	1.0	330	370	79	
99-09-2	3-Nitroaniline	U	560	1.0	500	560	100	
83-32-9	Acenaphthene	U	370	1.0	330	370	73	
51-28-5	2,4-Dinitrophenol	~~U~~ UJ	1400	1.0	1200	1400	420	CCH
132-64-9	Dibenzofuran	U	370	1.0	330	370	89	
100-02-7	4-Nitrophenol	U	1400	1.0	1200	1400	350	
121-14-2	2,4-Dinitrotoluene	U	370	1.0	330	370	96	
84-66-2	Diethylphthalate	U	370	1.0	330	370	90	
7005-72-3	4-Chlorophenyl-phenylether	U	370	1.0	330	370	88	
100-01-6	4-Nitroaniline	U	560	1.0	500	560	150	
534-52-1	4,6-Dinitro-2-Methylphenol	~~U~~ UJ	1400	1.0	1200	1400	380	CCH
86-30-6	N-Nitrosodiphenylamine	U	740	1.0	660	740	250	
101-55-3	4-Bromophenyl-phenylether	U	370	1.0	330	370	96	
1912-24-9	Atrazine	U	370	1.0	330	370	100	
87-86-5	Pentachlorophenol	U	920	1.0	820	920	270	
120-12-7	Anthracene	U	370	1.0	330	370	94	
86-74-8	Carbazole	U	560	1.0	500	560	120	

MW 3/3/09

KATAHDIN ANALYTICAL SERVICES
Report of Analytical Results

Client: CH2MHill
Project: TO-009 Lejeune
PO No:
Sample Date: 12/08/08
Received Date: 12/09/08
Extraction Date: 12/13/08
Analysis Date: 02-JAN-2009 12:27
Report Date: 01/05/2009
Matrix: SOIL
% Solids: 88.8

Lab ID: SB7056-31
Client ID: MR08-IS106-2-3-08D
SDG: TO9-15
Extracted by: CB
Extraction Method: SW846 3550
Analyst: JCG
Analysis Method: SW846 8270C
Lab Prep Batch: WG59026
Units: ug/Kgdrywt

CAS#	Compound	Flags	Results	DF	PQL	Adj.PQL	Adj.MDL
84-74-2	Di-n-butylphthalate	U	370	1.0	330	370	110
85-68-7	Butylbenzylphthalate	U	370	1.0	330	370	100
91-94-1	3,3'-Dichlorobenzidine	~~U~~ UJ	560	1.0	500	560	130 CH
218-01-9	Chrysene	U	370	1.0	330	370	110
117-81-7	bis(2-Ethylhexyl)phthalate	U	370	1.0	330	370	110
117-84-0	Di-n-octylphthalate	U	370	1.0	330	370	240
367-12-4	2-Fluorophenol		69%				
13127-88-3	Phenol-D6		71%				
4165-60-0	Nitrobenzene-D5		70%				
321-60-8	2-Fluorobiphenyl		74%				
118-79-6	2,4,6-Tribromophenol		83%				
1718-51-0	Terphenyl-D14		101%				

LW
3/3/09

KATAHDIN ANALYTICAL SERVICES
Report of Analytical Results

Client: CH2MHill
Project: TO-009 Lejeune
PO No:
Sample Date: 12/08/08
Received Date: 12/09/08
Extraction Date: 12/13/08
Analysis Date: 02-JAN-2009 13:09
Report Date: 01/05/2009
Matrix: SOIL
% Solids: 92.5

Lab ID: SB7056-33
Client ID: MR08-SS087-08D
SDG: TO9-15
Extracted by: CB
Extraction Method: SW846 3550
Analyst: JCG
Analysis Method: SW846 8270C
Lab Prep Batch: WG59026
Units: ug/Kgdrywt

CAS#	Compound	Flags	Results	DF	PQL	Adj.PQL	Adj.MDL	
100-52-7	Benzaldehyde	~~U~~ UJ	540	1.0	500	540	130	CCH
108-95-2	Phenol	U	540	1.0	500	540	170	
111-44-4	Bis(2-Chloroethyl)ether	U	360	1.0	330	360	88	
95-57-8	2-Chlorophenol	U	540	1.0	500	540	180	
95-48-7	2-Methylphenol	U	650	1.0	600	650	220	
108-60-1	2,2'-Oxybis(1-chloropropane)	U	360	1.0	330	360	96	
98-86-2	Acetophenone	U	650	1.0	600	650	190	
621-64-7	N-Nitroso-di-n-propylamine	U	360	1.0	330	360	90	
65794-96-9	3&4-Methylphenol	U	650	1.0	600	650	200	
67-72-1	Hexachloroethane	U	360	1.0	330	360	100	
98-95-3	Nitrobenzene	~~U~~ UJ	360	1.0	330	360	98	CCH
78-59-1	Isophorone	U	360	1.0	330	360	81	
88-75-5	2-Nitrophenol	U	650	1.0	600	650	180	
105-67-9	2,4-Dimethylphenol	U	540	1.0	500	540	180	
111-91-1	Bis(2-Chloroethoxy)methane	U	360	1.0	330	360	100	
120-83-2	2,4-Dichlorophenol	U	540	1.0	500	540	160	
106-47-8	4-Chloroaniline	U	540	1.0	500	540	130	
105-60-2	Caprolactam	U	540	1.0	500	540	160	
59-50-7	4-Chloro-3-Methylphenol	U	540	1.0	500	540	180	
88-06-2	2,4,6-Trichlorophenol	U	540	1.0	500	540	170	
95-95-4	2,4,5-Trichlorophenol	U	540	1.0	500	540	170	
91-58-7	2-Chloronaphthalene	U	360	1.0	330	360	94	
92-52-4	1,1'-Biphenyl	U	360	1.0	330	360	79	
88-74-4	2-Nitroaniline	U	540	1.0	500	540	81	
131-11-3	Dimethyl Phthalate	U	360	1.0	330	360	84	
606-20-2	2,6-Dinitrotoluene	U	360	1.0	330	360	85	
208-96-8	Acenaphthylene	U	360	1.0	330	360	76	
99-09-2	3-Nitroaniline	U	540	1.0	500	540	100	
83-32-9	Acenaphthene	U	360	1.0	330	360	70	
51-28-5	2,4-Dinitrophenol	~~U~~ UJ	1300	1.0	1200	1300	410	CCH
132-64-9	Dibenzofuran	U	360	1.0	330	360	85	
100-02-7	4-Nitrophenol	U	1300	1.0	1200	1300	330	
121-14-2	2,4-Dinitrotoluene	U	360	1.0	330	360	92	
84-66-2	Diethylphthalate	U	360	1.0	330	360	86	
7005-72-3	4-Chlorophenyl-phenylether	U	360	1.0	330	360	84	
100-01-6	4-Nitroaniline	U	540	1.0	500	540	140	
534-52-1	4,6-Dinitro-2-Methylphenol	~~U~~ UJ	1300	1.0	1200	1300	360	CCH
86-30-6	N-Nitrosodiphenylamine	U	710	1.0	660	710	240	
101-55-3	4-Bromophenyl-phenylether	U	360	1.0	330	360	92	
1912-24-9	Atrazine	U	360	1.0	330	360	98	
87-86-5	Pentachlorophenol	U	890	1.0	820	890	260	
120-12-7	Anthracene	U	360	1.0	330	360	91	
86-74-8	Carbazole	U	540	1.0	500	540	120	

MW 3/3/09

17

KATAHDIN ANALYTICAL SERVICES
Report of Analytical Results

Client: CH2MHill
Project: TO-009 Lejeune
PO No:
Sample Date: 12/08/08
Received Date: 12/09/08
Extraction Date: 12/13/08
Analysis Date: 02-JAN-2009 13:09
Report Date: 01/05/2009
Matrix: SOIL
% Solids: 92.5

Lab ID: SB7056-33
Client ID: MR08-SS087-08D
SDG: TO9-15
Extracted by: CB
Extraction Method: SW846 3550
Analyst: JCG
Analysis Method: SW846 8270C
Lab Prep Batch: WG59026
Units: ug/Kgdrywt

CAS#	Compound	Flags	Results	DF	PQL	Adj.PQL	Adj.MDL	
84-74-2	Di-n-butylphthalate	U	360	1.0	330	360	110	
85-68-7	Butylbenzylphthalate	U	360	1.0	330	360	100	
91-94-1	3,3'-Dichlorobenzidine	~~U~~ UJ	540	1.0	500	540	120	CCH
218-01-9	Chrysene	U	360	1.0	330	360	100	
117-81-7	bis(2-Ethylhexyl)phthalate	J	120	1.0	330	360	100	
117-84-0	Di-n-octylphthalate	U	360	1.0	330	360	230	
367-12-4	2-Fluorophenol		64%					
13127-88-3	Phenol-D6		65%					
4165-60-0	Nitrobenzene-D5		65%					
321-60-8	2-Fluorobiphenyl		68%					
118-79-6	2,4,6-Tribromophenol		65%					
1718-51-0	Terphenyl-D14		96%					

lw
3/3/09

KATAHDIN ANALYTICAL SERVICES
Report of Analytical Results

Client: CH2MHill
Project: TO-009 Lejeune
PO No:
Sample Date: 12/08/08
Received Date: 12/09/08
Extraction Date: 12/13/08
Analysis Date: 02-JAN-2009 13:51
Report Date: 01/05/2009
Matrix: SOIL
% Solids: 87.8

Lab ID: SB7056-35
Client ID: MR08-IS087-2-3-08D
SDG: TO9-15
Extracted by: CB
Extraction Method: SW846 3550
Analyst: JCG
Analysis Method: SW846 8270C
Lab Prep Batch: WG59026
Units: ug/Kgdrywt

CAS#	Compound	Flags	Results	DF	PQL	Adj.PQL	Adj.MDL	
100-52-7	Benzaldehyde	~~U~~ UJ	570	1.0	500	570	140	CCH
108-95-2	Phenol	U	570	1.0	500	570	180	
111-44-4	Bis(2-Chloroethyl)ether	U	380	1.0	330	380	92	
95-57-8	2-Chlorophenol	U	570	1.0	500	570	190	
95-48-7	2-Methylphenol	U	680	1.0	600	680	230	
108-60-1	2,2'-Oxybis(1-chloropropane)	U	380	1.0	330	380	100	
98-86-2	Acetophenone	U	680	1.0	600	680	200	
621-64-7	N-Nitroso-di-n-propylamine	U	380	1.0	330	380	94	
65794-96-9	3&4-Methylphenol	U	680	1.0	600	680	210	
67-72-1	Hexachloroethane	U	380	1.0	330	380	110	
98-95-3	Nitrobenzene	~~U~~ UJ	380	1.0	330	380	100	CCH
78-59-1	Isophorone	U	380	1.0	330	380	85	
88-75-5	2-Nitrophenol	U	680	1.0	600	680	190	
105-67-9	2,4-Dimethylphenol	U	570	1.0	500	570	190	
111-91-1	Bis(2-Chloroethoxy)methane	U	380	1.0	330	380	110	
120-83-2	2,4-Dichlorophenol	U	570	1.0	500	570	170	
106-47-8	4-Chloroaniline	U	570	1.0	500	570	140	
105-60-2	Caprolactam	U	570	1.0	500	570	160	
59-50-7	4-Chloro-3-Methylphenol	U	570	1.0	500	570	190	
88-06-2	2,4,6-Trichlorophenol	U	570	1.0	500	570	180	
95-95-4	2,4,5-Trichlorophenol	U	570	1.0	500	570	180	
91-58-7	2-Chloronaphthalene	U	380	1.0	330	380	99	
92-52-4	1,1'-Biphenyl	U	380	1.0	330	380	83	
88-74-4	2-Nitroaniline	U	570	1.0	500	570	85	
131-11-3	Dimethyl Phthalate	U	380	1.0	330	380	89	
606-20-2	2,6-Dinitrotoluene	U	380	1.0	330	380	90	
208-96-8	Acenaphthylene	U	380	1.0	330	380	80	
99-09-2	3-Nitroaniline	U	570	1.0	500	570	110	
83-32-9	Acenaphthene	U	380	1.0	330	380	74	
51-28-5	2,4-Dinitrophenol	~~U~~ UJ	1400	1.0	1200	1400	430	CCH
132-64-9	Dibenzofuran	U	380	1.0	330	380	90	
100-02-7	4-Nitrophenol	U	1400	1.0	1200	1400	350	
121-14-2	2,4-Dinitrotoluene	U	380	1.0	330	380	97	
84-66-2	Diethylphthalate	U	380	1.0	330	380	91	
7005-72-3	4-Chlorophenyl-phenylether	U	380	1.0	330	380	89	
100-01-6	4-Nitroaniline	U	570	1.0	500	570	150	
534-52-1	4,6-Dinitro-2-Methylphenol	~~U~~ UJ	1400	1.0	1200	1400	380	CCH
86-30-6	N-Nitrosodiphenylamine	U	750	1.0	660	750	250	
101-55-3	4-Bromophenyl-phenylether	U	380	1.0	330	380	97	
1912-24-9	Atrazine	U	380	1.0	330	380	100	
87-86-5	Pentachlorophenol	U	930	1.0	820	930	270	
120-12-7	Anthracene	U	380	1.0	330	380	96	
86-74-8	Carbazole	U	570	1.0	500	570	130	

MW
3/3/09

KATAHDIN ANALYTICAL SERVICES
Report of Analytical Results

Client: CH2MHill
Project: TO-009 Lejeune
PO No:
Sample Date: 12/08/08
Received Date: 12/09/08
Extraction Date: 12/13/08
Analysis Date: 02-JAN-2009 13:51
Report Date: 01/05/2009
Matrix: SOIL
% Solids: 87.8

Lab ID: SB7056-35
Client ID: MR08-IS087-2-3-08D
SDG: TO9-15
Extracted by: CB
Extraction Method: SW846 3550
Analyst: JCG
Analysis Method: SW846 8270C
Lab Prep Batch: WG59026
Units: ug/Kgdrywt

CAS#	Compound	Flags	Results	DF	PQL	Adj.PQL	Adj.MDL	
84-74-2	Di-n-butylphthalate	U	380	1.0	330	380	110	
85-68-7	Butylbenzylphthalate	U	380	1.0	330	380	100	
91-94-1	3,3'-Dichlorobenzidine	~~U~~ UJ	570	1.0	500	570	130	CCH
218-01-9	Chrysene	U	380	1.0	330	380	110	
117-81-7	bis(2-Ethylhexyl)phthalate	U	380	1.0	330	380	110	
117-84-0	Di-n-octylphthalate	U	380	1.0	330	380	240	
367-12-4	2-Fluorophenol		68%					
13127-88-3	Phenol-D6		76%					
4165-60-0	Nitrobenzene-D5		69%					
321-60-8	2-Fluorobiphenyl		71%					
118-79-6	2,4,6-Tribromophenol		83%					
1718-51-0	Terphenyl-D14		100%					

LW
3/3/09

KATAHDIN ANALYTICAL SERVICES
Report of Analytical Results

Client: CH2MHill
Project: TO-009 Lejeune
PO No:
Sample Date: 12/08/08
Received Date: 12/09/08
Extraction Date: 12/13/08
Analysis Date: 02-JAN-2009 14:32
Report Date: 01/05/2009
Matrix: SOIL
% Solids: 88.0

Lab ID: SB7056-37
Client ID: MR08-SS086-08D
SDG: TO9-15
Extracted by: CB
Extraction Method: SW846 3550
Analyst: JCG
Analysis Method: SW846 8270C
Lab Prep Batch: WG59026
Units: ug/Kgdrywt

CAS#	Compound	Flags	Results	DF	PQL	Adj.PQL	Adj.MDL	
100-52-7	Benzaldehyde	~~U~~ UJ	570	1.0	500	570	140	CCH
108-95-2	Phenol	U	570	1.0	500	570	180	
111-44-4	Bis(2-Chloroethyl)ether	U	380	1.0	330	380	92	
95-57-8	2-Chlorophenol	U	570	1.0	500	570	190	
95-48-7	2-Methylphenol	U	680	1.0	600	680	230	
108-60-1	2,2'-Oxybis(1-chloropropane)	U	380	1.0	330	380	100	
98-86-2	Acetophenone	U	680	1.0	600	680	200	
621-64-7	N-Nitroso-di-n-propylamine	U	380	1.0	330	380	94	
65794-96-9	3&4-Methylphenol	U	680	1.0	600	680	210	
67-72-1	Hexachloroethane	U	380	1.0	330	380	110	
98-95-3	Nitrobenzene	~~U~~ UJ	380	1.0	330	380	100	CCH
78-59-1	Isophorone	U	380	1.0	330	380	85	
88-75-5	2-Nitrophenol	U	680	1.0	600	680	190	
105-67-9	2,4-Dimethylphenol	U	570	1.0	500	570	190	
111-91-1	Bis(2-Chloroethoxy)methane	U	380	1.0	330	380	110	
120-83-2	2,4-Dichlorophenol	U	570	1.0	500	570	170	
106-47-8	4-Chloroaniline	U	570	1.0	500	570	140	
105-60-2	Caprolactam	U	570	1.0	500	570	160	
59-50-7	4-Chloro-3-Methylphenol	U	570	1.0	500	570	190	
88-06-2	2,4,6-Trichlorophenol	U	570	1.0	500	570	180	
95-95-4	2,4,5-Trichlorophenol	U	570	1.0	500	570	180	
91-58-7	2-Chloronaphthalene	U	380	1.0	330	380	99	
92-52-4	1,1'-Biphenyl	U	380	1.0	330	380	83	
88-74-4	2-Nitroaniline	U	570	1.0	500	570	85	
131-11-3	Dimethyl Phthalate	U	380	1.0	330	380	89	
606-20-2	2,6-Dinitrotoluene	U	380	1.0	330	380	90	
208-96-8	Acenaphthylene	U	380	1.0	330	380	80	
99-09-2	3-Nitroaniline	U	570	1.0	500	570	110	
83-32-9	Acenaphthene	U	380	1.0	330	380	74	
51-28-5	2,4-Dinitrophenol	~~U~~ UJ	1400	1.0	1200	1400	430	CCH
132-64-9	Dibenzofuran	U	380	1.0	330	380	90	
100-02-7	4-Nitrophenol	U	1400	1.0	1200	1400	350	
121-14-2	2,4-Dinitrotoluene	U	380	1.0	330	380	96	
84-66-2	Diethylphthalate	U	380	1.0	330	380	91	
7005-72-3	4-Chlorophenyl-phenylether	U	380	1.0	330	380	89	
100-01-6	4-Nitroaniline	U	570	1.0	500	570	150	
534-52-1	4,6-Dinitro-2-Methylphenol	~~U~~ UJ	1400	1.0	1200	1400	380	CCH
86-30-6	N-Nitrosodiphenylamine	U	750	1.0	660	750	250	
101-55-3	4-Bromophenyl-phenylether	U	380	1.0	330	380	96	
1912-24-9	Atrazine	U	380	1.0	330	380	100	
87-86-5	Pentachlorophenol	U	930	1.0	820	930	270	
120-12-7	Anthracene	U	380	1.0	330	380	95	
86-74-8	Carbazole	U	570	1.0	500	570	130	

MW 3/3/09

KATAHDIN ANALYTICAL SERVICES
Report of Analytical Results

Client: CH2MHill
Project: TO-009 Lejeune
PO No:
Sample Date: 12/08/08
Received Date: 12/09/08
Extraction Date: 12/13/08
Analysis Date: 02-JAN-2009 14:32
Report Date: 01/05/2009
Matrix: SOIL
% Solids: 88.0

Lab ID: SB7056-37
Client ID: MR08-SS086-08D
SDG: TO9-15
Extracted by: CB
Extraction Method: SW846 3550
Analyst: JCG
Analysis Method: SW846 8270C
Lab Prep Batch: WG59026
Units: ug/Kgdrywt

CAS#	Compound	Flags	Results	DF	PQL	Adj.PQL	Adj.MDL	
84-74-2	Di-n-butylphthalate	U	380	1.0	330	380	110	
85-68-7	Butylbenzylphthalate	U	380	1.0	330	380	100	
91-94-1	3,3'-Dichlorobenzidine	~~J~~ UJ	570	1.0	500	570	130	CCH
218-01-9	Chrysene	J	180	1.0	330	380	110	
117-81-7	bis(2-Ethylhexyl)phthalate	J	260	1.0	330	380	110	
117-84-0	Di-n-octylphthalate	U	380	1.0	330	380	240	
367-12-4	2-Fluorophenol		68%					
13127-88-3	Phenol-D6		70%					
4165-60-0	Nitrobenzene-D5		70%					
321-60-8	2-Fluorobiphenyl		72%					
118-79-6	2,4,6-Tribromophenol		73%					
1718-51-0	Terphenyl-D14		104%					

CW
3/3/09

2 c

KATAHDIN ANALYTICAL SERVICES
Report of Analytical Results

Client: CH2MHill
Project: TO-009 Lejeune
PO No:
Sample Date: 12/08/08
Received Date: 12/09/08
Extraction Date: 12/13/08
Analysis Date: 02-JAN-2009 15:14
Report Date: 01/05/2009
Matrix: SOIL
% Solids: 87.0

Lab ID: SB7056-39
Client ID: MR08-IS086-2-3-08D
SDG: TO9-15
Extracted by: CB
Extraction Method: SW846 3550
Analyst: JCG
Analysis Method: SW846 8270C
Lab Prep Batch: WG59026
Units: ug/Kgdrywt

CAS#	Compound	Flags	Results	DF	PQL	Adj.PQL	Adj.MDL	
100-52-7	Benzaldehyde	~~U~~ UJ	570	1.0	500	570	140	CCH
108-95-2	Phenol	U	570	1.0	500	570	180	
111-44-4	Bis(2-Chloroethyl)ether	U	380	1.0	330	380	93	
95-57-8	2-Chlorophenol	U	570	1.0	500	570	190	
95-48-7	2-Methylphenol	U	690	1.0	600	690	230	
108-60-1	2,2'-Oxybis(1-chloropropane)	U	380	1.0	330	380	100	
98-86-2	Acetophenone	U	690	1.0	600	690	200	
621-64-7	N-Nitroso-di-n-propylamine	U	380	1.0	330	380	95	
65794-96-9	3&4-Methylphenol	U	690	1.0	600	690	210	
67-72-1	Hexachloroethane	U	380	1.0	330	380	110	
98-95-3	Nitrobenzene	~~U~~ UJ	380	1.0	330	380	100	CCH
78-59-1	Isophorone	U	380	1.0	330	380	86	
88-75-5	2-Nitrophenol	U	690	1.0	600	690	190	
105-67-9	2,4-Dimethylphenol	U	570	1.0	500	570	190	
111-91-1	Bis(2-Chloroethoxy)methane	U	380	1.0	330	380	110	
120-83-2	2,4-Dichlorophenol	U	570	1.0	500	570	170	
106-47-8	4-Chloroaniline	U	570	1.0	500	570	140	
105-60-2	Caprolactam	U	570	1.0	500	570	160	
59-50-7	4-Chloro-3-Methylphenol	U	570	1.0	500	570	190	
88-06-2	2,4,6-Trichlorophenol	U	570	1.0	500	570	180	
95-95-4	2,4,5-Trichlorophenol	U	570	1.0	500	570	180	
91-58-7	2-Chloronaphthalene	U	380	1.0	330	380	100	
92-52-4	1,1'-Biphenyl	U	380	1.0	330	380	84	
88-74-4	2-Nitroaniline	U	570	1.0	500	570	86	
131-11-3	Dimethyl Phthalate	U	380	1.0	330	380	90	
606-20-2	2,6-Dinitrotoluene	U	380	1.0	330	380	91	
208-96-8	Acenaphthylene	U	380	1.0	330	380	80	
99-09-2	3-Nitroaniline	U	570	1.0	500	570	110	
83-32-9	Acenaphthene	U	380	1.0	330	380	75	
51-28-5	2,4-Dinitrophenol	~~U~~ UJ	1400	1.0	1200	1400	430	CCH
132-64-9	Dibenzofuran	U	380	1.0	330	380	91	
100-02-7	4-Nitrophenol	U	1400	1.0	1200	1400	350	
121-14-2	2,4-Dinitrotoluene	U	380	1.0	330	380	98	
84-66-2	Diethylphthalate	U	380	1.0	330	380	92	
7005-72-3	4-Chlorophenyl-phenylether	U	380	1.0	330	380	90	
100-01-6	4-Nitroaniline	U	570	1.0	500	570	150	
534-52-1	4,6-Dinitro-2-Methylphenol	~~U~~ UJ	1400	1.0	1200	1400	390	CCH
86-30-6	N-Nitrosodiphenylamine	U	760	1.0	660	760	250	
101-55-3	4-Bromophenyl-phenylether	U	380	1.0	330	380	98	
1912-24-9	Atrazine	U	380	1.0	330	380	100	
87-86-5	Pentachlorophenol	U	940	1.0	820	940	270	
120-12-7	Anthracene	U	380	1.0	330	380	96	
86-74-8	Carbazole	U	570	1.0	500	570	130	

CMD
3/3/09

KATAHDIN ANALYTICAL SERVICES
Report of Analytical Results

Client: CH2MHill
Project: TO-009 Lejeune
PO No:
Sample Date: 12/08/08
Received Date: 12/09/08
Extraction Date: 12/13/08
Analysis Date: 02-JAN-2009 15:14
Report Date: 01/05/2009
Matrix: SOIL
% Solids: 87.0

Lab ID: SB7056-39
Client ID: MR08-IS086-2-3-08D
SDG: TO9-15
Extracted by: CB
Extraction Method: SW846 3550
Analyst: JCG
Analysis Method: SW846 8270C
Lab Prep Batch: WG59026
Units: ug/Kgdrywt

CAS#	Compound	Flags	Results	DF	PQL	Adj.PQL	Adj.MDL	
84-74-2	Di-n-butylphthalate	U	380	1.0	330	380	120	
85-68-7	Butylbenzylphthalate	U	380	1.0	330	380	110	
91-94-1	3,3'-Dichlorobenzidine	~~U~~ UJ	570	1.0	500	570	130	CCH
218-01-9	Chrysene	U	380	1.0	330	380	110	
117-81-7	bis(2-Ethylhexyl)phthalate	J	310	1.0	330	380	110	
117-84-0	Di-n-octylphthalate	U	380	1.0	330	380	240	
367-12-4	2-Fluorophenol		74%					
13127-88-3	Phenol-D6		79%					
4165-60-0	Nitrobenzene-D5		76%					
321-60-8	2-Fluorobiphenyl		78%					
118-79-6	2,4,6-Tribromophenol		87%					
1718-51-0	Terphenyl-D14		112%					

lw
3/3/09

ENVIRONMENTAL
Data Services, Inc.

POLYNUCLEAR AROMATIC COMPOUNDS BY 8270SIM

USEPA Region IV - Level IV Review

Site: MCB Camp Lejeune, TO-09 SDG #: TO9-16

Client: CH2M HILL, Inc., Virginia Beach, Virginia Date: March 3, 2009

Laboratory: Katahdin Analytical Services, Scarborough, Maine Reviewer: Nancy Weaver

EDS ID	Client Sample ID	Laboratory Sample ID	Matrix
1	MR08-SS088-08D	SB7081-2	Soil
2	MR08-IS088-2-3-08D	SB7081-4	Soil
3	MR08-SS089-08D	SB7081-6	Soil
4	MR08-SS089D-08D	SB7081-8	Soil
5	MR08-IS089-2-3-08D	SB7081-10	Soil
6	MR08-IS089D-2-3-08D	SB7081-12	Soil
7	MR08-SS090-08D	SB7081-14	Soil
8	MR08-IS090-2-3-08D	SB7081-16	Soil
9	MR08-SS115-08D	SB7081-18	Soil
10	MR08-IS115-2-3-08D	SB7081-20	Soil
11	MR08-SS114-08D	SB7081-22	Soil
12	MR08-IS114-2-3-08D	SB7081-24	Soil
13	MR08-SS113-08D	SB7081-26	Soil
14	MR08-IS113-2-3-08D	SB7081-28	Soil
15	MR08-SS129-08D	SB7081-30	Soil
16	MR08-SS129D-08D	SB7081-32	Soil
17	MR08-IS129-2-3-08D	SB7081-34	Soil
18	MR08-IS129D-2-3-08D	SB7081-36	Soil
19	MR08-SS128-08D	SB7081-38	Soil
20	MR08-IS128-2-3-08D	SB7081-40	Soil

The USEPA "Contract Laboratory Program National Functional Guidelines for Organic Data Review," October 1999, and professional judgment were used in evaluating the data in this summary report.

Holding Times - All samples were extracted within 14 days for soil samples and analyzed within 40 days for all samples.

GC/MS Tuning - All of the DFTPP tunes in the initial and continuing calibrations met the percent relative abundance criteria.

Initial Calibration - The initial calibrations exhibited acceptable %RSD and mean RRF values.

Continuing Calibration - The continuing calibrations exhibited acceptable %D and RRF values except the following.

CCAL Date	Compound	%D/RRF	Qualifier	Affected Samples
12/31/08	Benzo (b) fluoranthene	33.47%	J/UJ	5, 12, 20
	Hexachlorobenzene	34.25%	J/UJ	5, 12, 20
	Hexachlorocyclopentadiene	28.39%	J/UJ	5, 12, 20
01/02/09	Hexachlorobenzene	43.99%	J/UJ	9, 10, 13, 15-17,. 19
	Hexachlorocyclopentadiene	34.52%	J/UJ	9, 10, 13, 15-17,. 19

Surrogates - All samples exhibited acceptable surrogate recoveries.

MS/MSD - A MS/MSD sample was not analyzed.

Laboratory Control Sample - The LCS samples exhibited acceptable %R values.

Internal Standard (IS) Area Performance - All internal standards met response and retention time (RT) criteria.

Method Blank - The method blanks were free of contamination.

Field, Equipment Blank - Field QC results are summarized below.

Blank ID	Compound	Conc. ug/L	Action Level ug/L	Qualifier	Affected Samples
MR08-EB01120908-IS	None - ND	-	-	-	-
MR08-EB01120908-SS	None - ND	-	-	-	-
MR08-FB01120608	None - ND	-	-	-	-

Field Duplicates - Field duplicate results are summarized below.

Compound	MR08-SS089-08D ug/kg	MR08-SS089D-08D ug/kg	RPD	Qualifier
Naphthalene	4.1	13 U	NC	None
2-Methylnaphthalene	12	13	8%	None
Phenanthrene	16	25	44%	None
Fluoranthene	33	30	10%	None
Pyrene	23	16	36%	None
Benzo (a) anthracene	11	3.6	101%	None

Compound	MR08-SS089-08D ug/kg	MR08-SS089D-08D ug/kg	RPD	Qualifier
Benzo (b) fluoranthene	27	12	77%	None
Benzo (k) fluoranthene	13	6.9	61%	None
Benzo (a) pyrene	15	5.8	88%	None
Indeno (1,2,3-cd) pyrene	11	4.3	88%	None
Dibenzo (a,h) anthracene	4.3	2.8	42%	None
Benzo (g,h,i) perylene	8.3	3.2	89%	None

Compound	MR08-IS089-2-3-08D ug/kg	MR08-IS089D-2-3-08D ug/kg	RPD	Qualifier
2-Methylnaphthalene	11 U	9.4	NC	None
Phenanthrene	11 U	1.7	NC	None
Fluoranthene	11 U	3.8	NC	None

Compound	MR08-SS129-08D ug/kg	MR08-SS129D-08D ug/kg	RPD	Qualifier
2-Methylnaphthalene	9.8	8.3	17%	None
Phenanthrene	9.8	3.6	93%	None
Fluoranthene	4.9	10 U	NC	None
Pyrene	7.1	6.6	7%	None
Benzo (a) anthracene	11 U	5.9	NC	None

Compound	MR08-IS129-2-3-08D ug/kg	MR08-IS129D-2-3-08D ug/kg	RPD	Qualifier
Phenanthrene	2.8	11 U	NC	None

Tentatively Identified Compounds (TICs) - TICs were not reported.

Compound Quantitation - No discrepancies were identified.

KATAHDIN ANALYTICAL SERVICES
Report of Analytical Results

Client: CH2MHill
Project: TO-009 Lejeune
PO No:
Sample Date: 12/09/08
Received Date: 12/10/08
Extraction Date: 12/15/08
Analysis Date: 31-DEC-2008 12:04
Report Date: 01/06/2009
Matrix: SOIL
% Solids: 91.2

Lab ID: SB7081-2
Client ID: MR08-SS088-08D
SDG: TO9-16
Extracted by: CB
Extraction Method: SW846 3550
Analyst: JLP
Analysis Method: SW846 M8270C
Lab Prep Batch: WG59049
Units: ug/Kgdrywt

CAS#	Compound	Flags	Results	DF	PQL	Adj.PQL	Adj.MDL
91-20-3	Naphthalene	U	11	1.0	10	11	2.8
91-57-6	2-Methylnaphthalene	J	10	1.0	10	11	2.4
86-73-7	Fluorene	U	11	1.0	10	11	3.5
85-01-8	Phenanthrene	J	3.0	1.0	10	11	2.0
206-44-0	Fluoranthene	J	5.3	1.0	10	11	2.0
129-00-0	Pyrene	J	4.1	1.0	10	11	2.3
56-55-3	Benzo(a)anthracene	J	1.6	1.0	10	11	2.1
205-99-2	Benzo(b)fluoranthene	J	8.0	1.0	10	11	2.6
207-08-9	Benzo(k)fluoranthene	J	2.2	1.0	10	11	3.4
50-32-8	Benzo(a)pyrene	U	11	1.0	10	11	3.6
193-39-5	Indeno(1,2,3-cd)pyrene	J	2.1	1.0	10	11	2.1
53-70-3	Dibenzo(a,h)anthracene	U	11	1.0	10	11	2.0
191-24-2	Benzo(g,h,i)perylene	U	11	1.0	10	11	2.2
118-74-1	Hexachlorobenzene	U	11	1.0	10	11	2.0
87-68-3	Hexachlorobutadiene	U	11	1.0	10	11	2.5
77-47-4	Hexachlorocyclopentadiene	U	11	1.0	10	11	1.6
7297-45-2	2-Methylnaphthalene-D10		86%				
367-12-4	2,4-Dibromophenol		108%				
81103-79-9	Fluorene-d10		90%				
1718-51-1	Pyrene-D10		98%				

QW 3/3/09

2

KATAHDIN ANALYTICAL SERVICES
Report of Analytical Results

Client: CH2MHill
Project: TO-009 Lejeune
PO No:
Sample Date: 12/09/08
Received Date: 12/10/08
Extraction Date: 12/15/08
Analysis Date: 31-DEC-2008 12:46
Report Date: 01/06/2009
Matrix: SOIL
% Solids: 90.5

Lab ID: SB7081-4
Client ID: MR08-IS088-2-3-08D
SDG: TO9-16
Extracted by: CB
Extraction Method: SW846 3550
Analyst: JLP
Analysis Method: SW846 M8270C
Lab Prep Batch: WG59049
Units: ug/Kgdrywt

CAS#	Compound	Flags	Results	DF	PQL	Adj.PQL	Adj.MDL
91-20-3	Naphthalene	U	11	1.0	10	11	2.9
91-57-6	2-Methylnaphthalene	U	11	1.0	10	11	2.4
86-73-7	Fluorene	U	11	1.0	10	11	3.5
85-01-8	Phenanthrene	J	7.7	1.0	10	11	2.0
206-44-0	Fluoranthene		27	1.0	10	11	2.0
129-00-0	Pyrene		20	1.0	10	11	2.3
56-55-3	Benzo(a)anthracene		17	1.0	10	11	2.1
205-99-2	Benzo(b)fluoranthene		17	1.0	10	11	2.6
207-08-9	Benzo(k)fluoranthene		13	1.0	10	11	3.4
50-32-8	Benzo(a)pyrene		13	1.0	10	11	3.6
193-39-5	Indeno(1,2,3-cd)pyrene	J	5.7	1.0	10	11	2.1
53-70-3	Dibenzo(a,h)anthracene	J	4.0	1.0	10	11	2.0
191-24-2	Benzo(g,h,i)perylene	J	5.3	1.0	10	11	2.2
118-74-1	Hexachlorobenzene	U	11	1.0	10	11	2.0
87-68-3	Hexachlorobutadiene	U	11	1.0	10	11	2.5
77-47-4	Hexachlorocyclopentadiene	U	11	1.0	10	11	1.6
7297-45-2	2-Methylnaphthalene-D10		74%				
367-12-4	2,4-Dibromophenol		108%				
81103-79-9	Fluorene-d10		83%				
1718-51-1	Pyrene-D10		88%				

QW 3/3/09

KATAHDIN ANALYTICAL SERVICES
Report of Analytical Results

Client: CH2MHill
Project: TO-009 Lejeune
PO No:
Sample Date: 12/09/08
Received Date: 12/10/08
Extraction Date: 12/15/08
Analysis Date: 31-DEC-2008 13:27
Report Date: 01/06/2009
Matrix: SOIL
% Solids: 89.0

Lab ID: SB7081-6
Client ID: MR08-SS089-08D
SDG: TO9-16
Extracted by: CB
Extraction Method: SW846 3550
Analyst: JLP
Analysis Method: SW846 M8270C
Lab Prep Batch: WG59049
Units: ug/Kgdrywt

CAS#	Compound	Flags	Results	DF	PQL	Adj.PQL	Adj.MDL
91-20-3	Naphthalene	J	4.1	1.0	10	11	2.9
91-57-6	2-Methylnaphthalene		12	1.0	10	11	2.5
86-73-7	Fluorene	U	11	1.0	10	11	3.6
85-01-8	Phenanthrene		16	1.0	10	11	2.0
206-44-0	Fluoranthene		33	1.0	10	11	2.0
129-00-0	Pyrene		23	1.0	10	11	2.4
56-55-3	Benzo(a)anthracene	J	11	1.0	10	11	2.1
205-99-2	Benzo(b)fluoranthene		27	1.0	10	11	2.7
207-08-9	Benzo(k)fluoranthene		13	1.0	10	11	3.5
50-32-8	Benzo(a)pyrene		15	1.0	10	11	3.7
193-39-5	Indeno(1,2,3-cd)pyrene	J	11	1.0	10	11	2.1
53-70-3	Dibenzo(a,h)anthracene	J	4.3	1.0	10	11	2.0
191-24-2	Benzo(g,h,i)perylene	J	8.3	1.0	10	11	2.2
118-74-1	Hexachlorobenzene	U	11	1.0	10	11	2.0
87-68-3	Hexachlorobutadiene	U	11	1.0	10	11	2.6
77-47-4	Hexachlorocyclopentadiene	U	11	1.0	10	11	1.7
7297-45-2	2-Methylnaphthalene-D10		72%				
367-12-4	2,4-Dibromophenol		93%				
81103-79-9	Fluorene-d10		79%				
1718-51-1	Pyrene-D10		92%				

LW 3/3/09

4

KATAHDIN ANALYTICAL SERVICES
Report of Analytical Results

Client: CH2MHill
Project: TO-009 Lejeune
PO No:
Sample Date: 12/09/08
Received Date: 12/10/08
Extraction Date: 12/15/08
Analysis Date: 31-DEC-2008 14:09
Report Date: 01/06/2009
Matrix: SOIL
% Solids: 74.3

Lab ID: SB7081-8
Client ID: MR08-SS089D-08D
SDG: TO9-16
Extracted by: CB
Extraction Method: SW846 3550
Analyst: JLP
Analysis Method: SW846 M8270C
Lab Prep Batch: WG59049
Units: ug/Kgdrywt

CAS#	Compound	Flags	Results	DF	PQL	Adj.PQL	Adj.MDL
91-20-3	Naphthalene	U	13	1.0	10	13	3.5
91-57-6	2-Methylnaphthalene	J	13	1.0	10	13	3.0
86-73-7	Fluorene	U	13	1.0	10	13	4.3
85-01-8	Phenanthrene		25	1.0	10	13	2.4
206-44-0	Fluoranthene		30	1.0	10	13	2.4
129-00-0	Pyrene		16	1.0	10	13	2.8
56-55-3	Benzo(a)anthracene	J	3.6	1.0	10	13	2.6
205-99-2	Benzo(b)fluoranthene	J	12	1.0	10	13	3.2
207-08-9	Benzo(k)fluoranthene	J	6.9	1.0	10	13	4.2
50-32-8	Benzo(a)pyrene	J	5.8	1.0	10	13	4.4
193-39-5	Indeno(1,2,3-cd)pyrene	J	4.3	1.0	10	13	2.6
53-70-3	Dibenzo(a,h)anthracene	J	2.8	1.0	10	13	2.4
191-24-2	Benzo(g,h,i)perylene	J	3.2	1.0	10	13	2.7
118-74-1	Hexachlorobenzene	U	13	1.0	10	13	2.4
87-68-3	Hexachlorobutadiene	U	13	1.0	10	13	3.1
77-47-4	Hexachlorocyclopentadiene	U	13	1.0	10	13	2.0
7297-45-2	2-Methylnaphthalene-D10		75%				
367-12-4	2,4-Dibromophenol		102%				
81103-79-9	Fluorene-d10		83%				
1718-51-1	Pyrene-D10		91%				

lw 3/3/09

KATAHDIN ANALYTICAL SERVICES
Report of Analytical Results

Client: CH2MHill
Project: TO-009 Lejeune
PO No:
Sample Date: 12/09/08
Received Date: 12/10/08
Extraction Date: 12/15/08
Analysis Date: 31-DEC-2008 22:44
Report Date: 01/06/2009
Matrix: SOIL
% Solids: 90.1

Lab ID: SB7081-10
Client ID: MR08-IS089-2-3-08D
SDG: TO9-16
Extracted by: CB
Extraction Method: SW846 3550
Analyst: JCG
Analysis Method: SW846 M8270C
Lab Prep Batch: WG59049
Units: ug/Kgdrywt

CAS#	Compound	Flags	Results	DF	PQL	Adj.PQL	Adj.MDL
91-20-3	Naphthalene	U	11	1.0	10	11	2.9
91-57-6	2-Methylnaphthalene	U	11	1.0	10	11	2.4
86-73-7	Fluorene	U	11	1.0	10	11	3.6
85-01-8	Phenanthrene	U	11	1.0	10	11	2.0
206-44-0	Fluoranthene	U	11	1.0	10	11	2.0
129-00-0	Pyrene	U	11	1.0	10	11	2.3
56-55-3	Benzo(a)anthracene	U	11	1.0	10	11	2.1
205-99-2	Benzo(b)fluoranthene	~~U~~ UJ	11	1.0	10	11	2.7 CCH
207-08-9	Benzo(k)fluoranthene	U	11	1.0	10	11	3.4
50-32-8	Benzo(a)pyrene	U	11	1.0	10	11	3.7
193-39-5	Indeno(1,2,3-cd)pyrene	U	11	1.0	10	11	2.1
53-70-3	Dibenzo(a,h)anthracene	U	11	1.0	10	11	2.0
191-24-2	Benzo(g,h,i)perylene	U	11	1.0	10	11	2.2
118-74-1	Hexachlorobenzene	~~U~~ UJ	11	1.0	10	11	2.0 CCH
87-68-3	Hexachlorobutadiene	U	11	1.0	10	11	2.6
77-47-4	Hexachlorocyclopentadiene	~~U~~ UJ	11	1.0	10	11	1.7 CCH
7297-45-2	2-Methylnaphthalene-D10		68%				
367-12-4	2,4-Dibromophenol		101%				
81103-79-9	Fluorene-d10		73%				
1718-51-1	Pyrene-D10		89%				

lw 3/3/09

6

KATAHDIN ANALYTICAL SERVICES
Report of Analytical Results

Client: CH2MHill
Project: TO-009 Lejeune
PO No:
Sample Date: 12/09/08
Received Date: 12/10/08
Extraction Date: 12/15/08
Analysis Date: 31-DEC-2008 14:51
Report Date: 01/06/2009
Matrix: SOIL
% Solids: 87.9

Lab ID: SB7081-12
Client ID: MR08-IS089D-2-3-08D
SDG: TO9-16
Extracted by: CB
Extraction Method: SW846 3550
Analyst: JLP
Analysis Method: SW846 M8270C
Lab Prep Batch: WG59049
Units: ug/Kgdrywt

CAS#	Compound	Flags	Results	DF	PQL	Adj.PQL	Adj.MDL
91-20-3	Naphthalene	U	11	1.0	10	11	3.0
91-57-6	2-Methylnaphthalene	J	9.4	1.0	10	11	2.5
86-73-7	Fluorene	U	11	1.0	10	11	3.6
85-01-8	Phenanthrene	J	1.7	1.0	10	11	2.0
206-44-0	Fluoranthene	J	3.8	1.0	10	11	2.0
129-00-0	Pyrene	U	11	1.0	10	11	2.4
56-55-3	Benzo(a)anthracene	U	11	1.0	10	11	2.2
205-99-2	Benzo(b)fluoranthene	U	11	1.0	10	11	2.7
207-08-9	Benzo(k)fluoranthene	U	11	1.0	10	11	3.5
50-32-8	Benzo(a)pyrene	U	11	1.0	10	11	3.8
193-39-5	Indeno(1,2,3-cd)pyrene	U	11	1.0	10	11	2.2
53-70-3	Dibenzo(a,h)anthracene	U	11	1.0	10	11	2.0
191-24-2	Benzo(g,h,i)perylene	U	11	1.0	10	11	2.3
118-74-1	Hexachlorobenzene	U	11	1.0	10	11	2.0
87-68-3	Hexachlorobutadiene	U	11	1.0	10	11	2.6
77-47-4	Hexachlorocyclopentadiene	U	11	1.0	10	11	1.7
7297-45-2	2-Methylnaphthalene-D10		74%				
367-12-4	2,4-Dibromophenol		106%				
81103-79-9	Fluorene-d10		84%				
1718-51-1	Pyrene-D10		100%				

3/3/09

KATAHDIN ANALYTICAL SERVICES
Report of Analytical Results

Client: CH2MHill
Project: TO-009 Lejeune
PO No:
Sample Date: 12/09/08
Received Date: 12/10/08
Extraction Date: 12/15/08
Analysis Date: 31-DEC-2008 15:32
Report Date: 01/06/2009
Matrix: SOIL
% Solids: 87.5

Lab ID: SB7081-14
Client ID: MR08-SS090-08D
SDG: TO9-16
Extracted by: CB
Extraction Method: SW846 3550
Analyst: JLP
Analysis Method: SW846 M8270C
Lab Prep Batch: WG59049
Units: ug/Kgdrywt

CAS#	Compound	Flags	Results	DF	PQL	Adj.PQL	Adj.MDL
91-20-3	Naphthalene	U	11	1.0	10	11	3.0
91-57-6	2-Methylnaphthalene		12	1.0	10	11	2.5
86-73-7	Fluorene	U	11	1.0	10	11	3.6
85-01-8	Phenanthrene	J	6.1	1.0	10	11	2.0
206-44-0	Fluoranthene		13	1.0	10	11	2.0
129-00-0	Pyrene	J	8.3	1.0	10	11	2.4
56-55-3	Benzo(a)anthracene	J	5.9	1.0	10	11	2.2
205-99-2	Benzo(b)fluoranthene		12	1.0	10	11	2.7
207-08-9	Benzo(k)fluoranthene	J	6.3	1.0	10	11	3.5
50-32-8	Benzo(a)pyrene	J	6.2	1.0	10	11	3.8
193-39-5	Indeno(1,2,3-cd)pyrene	J	4.2	1.0	10	11	2.2
53-70-3	Dibenzo(a,h)anthracene	J	2.9	1.0	10	11	2.0
191-24-2	Benzo(g,h,i)perylene	J	3.7	1.0	10	11	2.3
118-74-1	Hexachlorobenzene	U	11	1.0	10	11	2.0
87-68-3	Hexachlorobutadiene	U	11	1.0	10	11	2.6
77-47-4	Hexachlorocyclopentadiene	U	11	1.0	10	11	1.7
7297-45-2	2-Methylnaphthalene-D10		66%				
367-12-4	2,4-Dibromophenol		71%				
81103-79-9	Fluorene-d10		75%				
1718-51-1	Pyrene-D10		81%				

hw 3/3/09

8

KATAHDIN ANALYTICAL SERVICES
Report of Analytical Results

Client: CH2MHill
Project: TO-009 Lejeune
PO No:
Sample Date: 12/09/08
Received Date: 12/10/08
Extraction Date: 12/15/08
Analysis Date: 31-DEC-2008 16:14
Report Date: 01/06/2009
Matrix: SOIL
% Solids: 89.7

Lab ID: SB7081-16
Client ID: MR08-IS090-2-3-08D
SDG: TO9-16
Extracted by: CB
Extraction Method: SW846 3550
Analyst: JLP
Analysis Method: SW846 M8270C
Lab Prep Batch: WG59049
Units: ug/Kgdrywt

CAS#	Compound	Flags	Results	DF	PQL	Adj.PQL	Adj.MDL
91-20-3	Naphthalene	U	11	1.0	10	11	2.9
91-57-6	2-Methylnaphthalene	J	8.6	1.0	10	11	2.4
86-73-7	Fluorene	U	11	1.0	10	11	3.6
85-01-8	Phenanthrene	U	11	1.0	10	11	2.0
206-44-0	Fluoranthene	U	11	1.0	10	11	2.0
129-00-0	Pyrene	U	11	1.0	10	11	2.3
56-55-3	Benzo(a)anthracene	U	11	1.0	10	11	2.1
205-99-2	Benzo(b)fluoranthene	U	11	1.0	10	11	2.7
207-08-9	Benzo(k)fluoranthene	U	11	1.0	10	11	3.4
50-32-8	Benzo(a)pyrene	U	11	1.0	10	11	3.7
193-39-5	Indeno(1,2,3-cd)pyrene	U	11	1.0	10	11	2.1
53-70-3	Dibenzo(a,h)anthracene	U	11	1.0	10	11	2.0
191-24-2	Benzo(g,h,i)perylene	U	11	1.0	10	11	2.2
118-74-1	Hexachlorobenzene	U	11	1.0	10	11	2.0
87-68-3	Hexachlorobutadiene	U	11	1.0	10	11	2.6
77-47-4	Hexachlorocyclopentadiene	U	11	1.0	10	11	1.7
7297-45-2	2-Methylnaphthalene-D10		74%				
367-12-4	2,4-Dibromophenol		102%				
81103-79-9	Fluorene-d10		80%				
1718-51-1	Pyrene-D10		92%				

MW 3/3/09

9

KATAHDIN ANALYTICAL SERVICES
Report of Analytical Results

Client: CH2MHill
Project: TO-009 Lejeune
PO No:
Sample Date: 12/09/08
Received Date: 12/10/08
Extraction Date: 12/15/08
Analysis Date: 02-JAN-2009 14:36
Report Date: 01/06/2009
Matrix: SOIL
% Solids: 93.3

Lab ID: SB7081-18
Client ID: MR08-SS115-08D
SDG: TO9-16
Extracted by: CB
Extraction Method: SW846 3550
Analyst: JCG
Analysis Method: SW846 M8270C
Lab Prep Batch: WG59049
Units: ug/Kgdrywt

CAS#	Compound	Flags	Results	DF	PQL	Adj.PQL	Adj.MDL	
91-20-3	Naphthalene	U	11	1.0	10	11	2.8	
91-57-6	2-Methylnaphthalene		20	1.0	10	11	2.4	
86-73-7	Fluorene	J	5.2	1.0	10	11	3.4	
85-01-8	Phenanthrene		42	1.0	10	11	1.9	
206-44-0	Fluoranthene		11	1.0	10	11	1.9	
129-00-0	Pyrene	U	11	1.0	10	11	2.2	
56-55-3	Benzo(a)anthracene	U	11	1.0	10	11	2.0	
205-99-2	Benzo(b)fluoranthene	U	11	1.0	10	11	2.6	
207-08-9	Benzo(k)fluoranthene	U	11	1.0	10	11	3.3	
50-32-8	Benzo(a)pyrene	U	11	1.0	10	11	3.5	
193-39-5	Indeno(1,2,3-cd)pyrene	U	11	1.0	10	11	2.0	
53-70-3	Dibenzo(a,h)anthracene	U	11	1.0	10	11	1.9	
191-24-2	Benzo(g,h,i)perylene	U	11	1.0	10	11	2.1	
118-74-1	Hexachlorobenzene	~~U~~ UJ	11	1.0	10	11	1.9	CCH
87-68-3	Hexachlorobutadiene	U	11	1.0	10	11	2.5	
77-47-4	Hexachlorocyclopentadiene	~~U~~ UJ	11	1.0	10	11	1.6	CCH
7297-45-2	2-Methylnaphthalene-D10		77%					
367-12-4	2,4-Dibromophenol		92%					
81103-79-9	Fluorene-d10		78%					
1718-51-1	Pyrene-D10		56%					

JW 3/3/09

10

KATAHDIN ANALYTICAL SERVICES
Report of Analytical Results

Client: CH2MHill
Project: TO-009 Lejeune
PO No:
Sample Date: 12/09/08
Received Date: 12/10/08
Extraction Date: 12/15/08
Analysis Date: 02-JAN-2009 16:40
Report Date: 01/06/2009
Matrix: SOIL
% Solids: 90.6

Lab ID: SB7081-20
Client ID: MR08-IS115-2-3-08D
SDG: TO9-16
Extracted by: CB
Extraction Method: SW846 3550
Analyst: JCG
Analysis Method: SW846 M8270C
Lab Prep Batch: WG59049
Units: ug/Kgdrywt

CAS#	Compound	Flags	Results	DF	PQL	Adj.PQL	Adj.MDL	
91-20-3	Naphthalene	U	11	1.0	10	11	2.9	
91-57-6	2-Methylnaphthalene	J	9.1	1.0	10	11	2.4	
86-73-7	Fluorene	U	11	1.0	10	11	3.5	
85-01-8	Phenanthrene	J	4.5	1.0	10	11	2.0	
206-44-0	Fluoranthene	J	3.2	1.0	10	11	2.0	
129-00-0	Pyrene	J	4.7	1.0	10	11	2.3	
56-55-3	Benzo(a)anthracene	U	11	1.0	10	11	2.1	
205-99-2	Benzo(b)fluoranthene	U	11	1.0	10	11	2.6	
207-08-9	Benzo(k)fluoranthene	U	11	1.0	10	11	3.4	
50-32-8	Benzo(a)pyrene	U	11	1.0	10	11	3.6	
193-39-5	Indeno(1,2,3-cd)pyrene	U	11	1.0	10	11	2.1	
53-70-3	Dibenzo(a,h)anthracene	U	11	1.0	10	11	2.0	
191-24-2	Benzo(g,h,i)perylene	U	11	1.0	10	11	2.2	
118-74-1	Hexachlorobenzene	~~U~~ US	11	1.0	10	11	2.0	CCH
87-68-3	Hexachlorobutadiene	U	11	1.0	10	11	2.5	
77-47-4	Hexachlorocyclopentadiene	~~U~~ US	11	1.0	10	11	1.6	CCH
7297-45-2	2-Methylnaphthalene-D10		68%					
367-12-4	2,4-Dibromophenol		95%					
81103-79-9	Fluorene-d10		76%					
1718-51-1	Pyrene-D10		101%					

LW 3/3/09

11

KATAHDIN ANALYTICAL SERVICES
Report of Analytical Results

Client: CH2MHill
Project: TO-009 Lejeune
PO No:
Sample Date: 12/09/08
Received Date: 12/10/08
Extraction Date: 12/15/08
Analysis Date: 31-DEC-2008 16:56
Report Date: 01/06/2009
Matrix: SOIL
% Solids: 94.7

Lab ID: SB7081-22
Client ID: MR08-SS114-08D
SDG: TO9-16
Extracted by: CB
Extraction Method: SW846 3550
Analyst: JLP
Analysis Method: SW846 M8270C
Lab Prep Batch: WG59049
Units: ug/Kgdrywt

CAS#	Compound	Flags	Results	DF	PQL	Adj.PQL	Adj.MDL
91-20-3	Naphthalene	U	10	1.0	10	10	2.7
91-57-6	2-Methylnaphthalene	U	10	1.0	10	10	2.3
86-73-7	Fluorene	U	10	1.0	10	10	3.4
85-01-8	Phenanthrene	U	10	1.0	10	10	1.9
206-44-0	Fluoranthene	U	10	1.0	10	10	1.9
129-00-0	Pyrene	U	10	1.0	10	10	2.2
56-55-3	Benzo(a)anthracene	U	10	1.0	10	10	2.0
205-99-2	Benzo(b)fluoranthene	U	10	1.0	10	10	2.5
207-08-9	Benzo(k)fluoranthene	U	10	1.0	10	10	3.3
50-32-8	Benzo(a)pyrene	U	10	1.0	10	10	3.5
193-39-5	Indeno(1,2,3-cd)pyrene	U	10	1.0	10	10	2.0
53-70-3	Dibenzo(a,h)anthracene	U	10	1.0	10	10	1.9
191-24-2	Benzo(g,h,i)perylene	U	10	1.0	10	10	2.1
118-74-1	Hexachlorobenzene	U	10	1.0	10	10	1.9
87-68-3	Hexachlorobutadiene	U	10	1.0	10	10	2.4
77-47-4	Hexachlorocyclopentadiene	U	10	1.0	10	10	1.6
7297-45-2	2-Methylnaphthalene-D10		78%				
367-12-4	2,4-Dibromophenol		104%				
81103-79-9	Fluorene-d10		87%				
1718-51-1	Pyrene-D10		98%				

QW 3/3/09

KATAHDIN ANALYTICAL SERVICES
Report of Analytical Results

Client: CH2MHill
Project: TO-009 Lejeune
PO No:
Sample Date: 12/09/08
Received Date: 12/10/08
Extraction Date: 12/15/08
Analysis Date: 31-DEC-2008 23:25
Report Date: 01/06/2009
Matrix: SOIL
% Solids: 91.6

Lab ID: SB7081-24
Client ID: MR08-IS114-2-3-08D
SDG: TO9-16
Extracted by: CB
Extraction Method: SW846 3550
Analyst: JCG
Analysis Method: SW846 M8270C
Lab Prep Batch: WG59049
Units: ug/Kgdrywt

CAS#	Compound	Flags	Results	DF	PQL	Adj.PQL	Adj.MDL	
91-20-3	Naphthalene	U	11	1.0	10	11	2.8	
91-57-6	2-Methylnaphthalene	U	11	1.0	10	11	2.4	
86-73-7	Fluorene	U	11	1.0	10	11	3.5	
85-01-8	Phenanthrene	U	11	1.0	10	11	2.0	
206-44-0	Fluoranthene	U	11	1.0	10	11	2.0	
129-00-0	Pyrene	U	11	1.0	10	11	2.3	
56-55-3	Benzo(a)anthracene	U	11	1.0	10	11	2.1	
205-99-2	Benzo(b)fluoranthene	~~U~~ UJ	11	1.0	10	11	2.6	CCH
207-08-9	Benzo(k)fluoranthene	U	11	1.0	10	11	3.4	
50-32-8	Benzo(a)pyrene	U	11	1.0	10	11	3.6	
193-39-5	Indeno(1,2,3-cd)pyrene	U	11	1.0	10	11	2.1	
53-70-3	Dibenzo(a,h)anthracene	U	11	1.0	10	11	2.0	
191-24-2	Benzo(g,h,i)perylene	U	11	1.0	10	11	2.2	
118-74-1	Hexachlorobenzene	~~U~~ UJ	11	1.0	10	11	2.0	CCH
87-68-3	Hexachlorobutadiene	U	11	1.0	10	11	2.5	
77-47-4	Hexachlorocyclopentadiene	~~U~~ UJ	11	1.0	10	11	1.6	CCH
7297-45-2	2-Methylnaphthalene-D10		61%					
367-12-4	2,4-Dibromophenol		106%					
81103-79-9	Fluorene-d10		74%					
1718-51-1	Pyrene-D10		102%					

lw 3/3/09

13

KATAHDIN ANALYTICAL SERVICES
Report of Analytical Results

Client: CH2MHill
Project: TO-009 Lejeune
PO No:
Sample Date: 12/09/08
Received Date: 12/10/08
Extraction Date: 12/15/08
Analysis Date: 02-JAN-2009 15:17
Report Date: 01/06/2009
Matrix: SOIL
% Solids: 92.4

Lab ID: SB7081-26
Client ID: MR08-SS113-08D
SDG: TO9-16
Extracted by: CB
Extraction Method: SW846 3550
Analyst: JCG
Analysis Method: SW846 M8270C
Lab Prep Batch: WG59049
Units: ug/Kgdrywt

CAS#	Compound	Flags	Results	DF	PQL	Adj.PQL	Adj.MDL	
91-20-3	Naphthalene	U	11	1.0	10	11	2.8	
91-57-6	2-Methylnaphthalene		14	1.0	10	11	2.4	
86-73-7	Fluorene	U	11	1.0	10	11	3.5	
85-01-8	Phenanthrene		25	1.0	10	11	1.9	
206-44-0	Fluoranthene	J	10	1.0	10	11	1.9	
129-00-0	Pyrene		15	1.0	10	11	2.3	
56-55-3	Benzo(a)anthracene	J	7.5	1.0	10	11	2.0	
205-99-2	Benzo(b)fluoranthene	U	11	1.0	10	11	2.6	
207-08-9	Benzo(k)fluoranthene	U	11	1.0	10	11	3.4	
50-32-8	Benzo(a)pyrene	U	11	1.0	10	11	3.6	
193-39-5	Indeno(1,2,3-cd)pyrene	U	11	1.0	10	11	2.0	
53-70-3	Dibenzo(a,h)anthracene	U	11	1.0	10	11	1.9	
191-24-2	Benzo(g,h,i)perylene	U	11	1.0	10	11	2.2	
118-74-1	Hexachlorobenzene	~~U~~ UJ	11	1.0	10	11	1.9	CCH
87-68-3	Hexachlorobutadiene	U	11	1.0	10	11	2.5	
77-47-4	Hexachlorocyclopentadiene	~~U~~ UJ	11	1.0	10	11	1.6	CCH
7297-45-2	2-Methylnaphthalene-D10		81%					
367-12-4	2,4-Dibromophenol		116%					
81103-79-9	Fluorene-d10		90%					
1718-51-1	Pyrene-D10		95%					

MW 3/3/09

KATAHDIN ANALYTICAL SERVICES
Report of Analytical Results

Client: CH2MHill
Project: TO-009 Lejeune
PO No:
Sample Date: 12/09/08
Received Date: 12/10/08
Extraction Date: 12/15/08
Analysis Date: 31-DEC-2008 17:38
Report Date: 01/06/2009
Matrix: SOIL
% Solids: 87.9

Lab ID: SB7081-28
Client ID: MR08-IS113-2-3-08D
SDG: TO9-16
Extracted by: CB
Extraction Method: SW846 3550
Analyst: JLP
Analysis Method: SW846 M8270C
Lab Prep Batch: WG59049
Units: ug/Kgdrywt

CAS#	Compound	Flags	Results	DF	PQL	Adj.PQL	Adj.MDL
91-20-3	Naphthalene	U	11	1.0	10	11	3.0
91-57-6	2-Methylnaphthalene	U	11	1.0	10	11	2.5
86-73-7	Fluorene	U	11	1.0	10	11	3.6
85-01-8	Phenanthrene	U	11	1.0	10	11	2.0
206-44-0	Fluoranthene	U	11	1.0	10	11	2.0
129-00-0	Pyrene	U	11	1.0	10	11	2.4
56-55-3	Benzo(a)anthracene	U	11	1.0	10	11	2.2
205-99-2	Benzo(b)fluoranthene	U	11	1.0	10	11	2.7
207-08-9	Benzo(k)fluoranthene	U	11	1.0	10	11	3.5
50-32-8	Benzo(a)pyrene	U	11	1.0	10	11	3.8
193-39-5	Indeno(1,2,3-cd)pyrene	U	11	1.0	10	11	2.2
53-70-3	Dibenzo(a,h)anthracene	U	11	1.0	10	11	2.0
191-24-2	Benzo(g,h,i)perylene	U	11	1.0	10	11	2.3
118-74-1	Hexachlorobenzene	U	11	1.0	10	11	2.0
87-68-3	Hexachlorobutadiene	U	11	1.0	10	11	2.6
77-47-4	Hexachlorocyclopentadiene	U	11	1.0	10	11	1.7
7297-45-2	2-Methylnaphthalene-D10		74%				
367-12-4	2,4-Dibromophenol		93%				
81103-79-9	Fluorene-d10		81%				
1718-51-1	Pyrene-D10		101%				

lw
3/3/09

15

KATAHDIN ANALYTICAL SERVICES
Report of Analytical Results

Client: CH2MHill
Project: TO-009 Lejeune
PO No:
Sample Date: 12/09/08
Received Date: 12/10/08
Extraction Date: 12/15/08
Analysis Date: 02-JAN-2009 15:58
Report Date: 01/06/2009
Matrix: SOIL
% Solids: 93.9

Lab ID: SB7081-30
Client ID: MR08-SS129-08D
SDG: TO9-16
Extracted by: CB
Extraction Method: SW846 3550
Analyst: JCG
Analysis Method: SW846 M8270C
Lab Prep Batch: WG59049
Units: ug/Kgdrywt

CAS#	Compound	Flags	Results	DF	PQL	Adj.PQL	Adj.MDL	
91-20-3	Naphthalene	U	11	1.0	10	11	2.8	
91-57-6	2-Methylnaphthalene	J	9.8	1.0	10	11	2.3	
86-73-7	Fluorene	U	11	1.0	10	11	3.4	
85-01-8	Phenanthrene	J	9.8	1.0	10	11	1.9	
206-44-0	Fluoranthene	J	4.9	1.0	10	11	1.9	
129-00-0	Pyrene	J	7.1	1.0	10	11	2.2	
56-55-3	Benzo(a)anthracene	U	11	1.0	10	11	2.0	
205-99-2	Benzo(b)fluoranthene	U	11	1.0	10	11	2.6	
207-08-9	Benzo(k)fluoranthene	U	11	1.0	10	11	3.3	
50-32-8	Benzo(a)pyrene	U	11	1.0	10	11	3.5	
193-39-5	Indeno(1,2,3-cd)pyrene	U	11	1.0	10	11	2.0	
53-70-3	Dibenzo(a,h)anthracene	U	11	1.0	10	11	1.9	
191-24-2	Benzo(g,h,i)perylene	U	11	1.0	10	11	2.1	
118-74-1	Hexachlorobenzene	~~U~~ UJ	11	1.0	10	11	1.9	CCH
87-68-3	Hexachlorobutadiene	U	11	1.0	10	11	2.4	
77-47-4	Hexachlorocyclopentadiene	~~U~~ UJ	11	1.0	10	11	1.6	CCH
7297-45-2	2-Methylnaphthalene-D10		84%					
367-12-4	2,4-Dibromophenol		112%					
81103-79-9	Fluorene-d10		86%					
1718-51-1	Pyrene-D10		128%					

lw
3/3/09

16

KATAHDIN ANALYTICAL SERVICES
Report of Analytical Results

Client: CH2MHill
Project: TO-009 Lejeune
PO No:
Sample Date: 12/09/08
Received Date: 12/10/08
Extraction Date: 12/15/08
Analysis Date: 02-JAN-2009 17:21
Report Date: 01/06/2009
Matrix: SOIL
% Solids: 94.3

Lab ID: SB7081-32
Client ID: MR08-SS129D-08D
SDG: TO9-16
Extracted by: CB
Extraction Method: SW846 3550
Analyst: JCG
Analysis Method: SW846 M8270C
Lab Prep Batch: WG59049
Units: ug/Kgdrywt

CAS#	Compound	Flags	Results	DF	PQL	Adj.PQL	Adj.MDL	
91-20-3	Naphthalene	U	10	1.0	10	10	2.8	
91-57-6	2-Methylnaphthalene	J	8.3	1.0	10	10	2.3	
86-73-7	Fluorene	U	10	1.0	10	10	3.4	
85-01-8	Phenanthrene	J	3.6	1.0	10	10	1.9	
206-44-0	Fluoranthene	U	10	1.0	10	10	1.9	
129-00-0	Pyrene	J	6.6	1.0	10	10	2.2	
56-55-3	Benzo(a)anthracene	J	5.9	1.0	10	10	2.0	
205-99-2	Benzo(b)fluoranthene	U	10	1.0	10	10	2.5	
207-08-9	Benzo(k)fluoranthene	U	10	1.0	10	10	3.3	
50-32-8	Benzo(a)pyrene	U	10	1.0	10	10	3.5	
193-39-5	Indeno(1,2,3-cd)pyrene	U	10	1.0	10	10	2.0	
53-70-3	Dibenzo(a,h)anthracene	U	10	1.0	10	10	1.9	
191-24-2	Benzo(g,h,i)perylene	U	10	1.0	10	10	2.1	
118-74-1	Hexachlorobenzene	~~U~~ UJ	10	1.0	10	10	1.9	CCU
87-68-3	Hexachlorobutadiene	U	10	1.0	10	10	2.4	
77-47-4	Hexachlorocyclopentadiene	~~U~~ UJ	10	1.0	10	10	1.6	CCU
7297-45-2	2-Methylnaphthalene-D10		60%					
367-12-4	2,4-Dibromophenol		111%					
81103-79-9	Fluorene-d10		66%					
1718-51-1	Pyrene-D10		93%					

MW
3/3/09

KATAHDIN ANALYTICAL SERVICES
Report of Analytical Results

Client: CH2MHill
Project: TO-009 Lejeune
PO No:
Sample Date: 12/09/08
Received Date: 12/10/08
Extraction Date: 12/15/08
Analysis Date: 02-JAN-2009 18:02
Report Date: 01/06/2009
Matrix: SOIL
% Solids: 93.2

Lab ID: SB7081-34
Client ID: MR08-IS129-2-3-08D
SDG: TO9-16
Extracted by: CB
Extraction Method: SW846 3550
Analyst: JCG
Analysis Method: SW846 M8270C
Lab Prep Batch: WG59049
Units: ug/Kgdrywt

CAS#	Compound	Flags	Results	DF	PQL	Adj.PQL	Adj.MDL	
91-20-3	Naphthalene	U	11	1.0	10	11	2.8	
91-57-6	2-Methylnaphthalene	U	11	1.0	10	11	2.4	
86-73-7	Fluorene	U	11	1.0	10	11	3.4	
85-01-8	Phenanthrene	J	2.8	1.0	10	11	1.9	
206-44-0	Fluoranthene	U	11	1.0	10	11	1.9	
129-00-0	Pyrene	U	11	1.0	10	11	2.2	
56-55-3	Benzo(a)anthracene	U	11	1.0	10	11	2.0	
205-99-2	Benzo(b)fluoranthene	U	11	1.0	10	11	2.6	
207-08-9	Benzo(k)fluoranthene	U	11	1.0	10	11	3.3	
50-32-8	Benzo(a)pyrene	U	11	1.0	10	11	3.5	
193-39-5	Indeno(1,2,3-cd)pyrene	U	11	1.0	10	11	2.0	
53-70-3	Dibenzo(a,h)anthracene	U	11	1.0	10	11	1.9	
191-24-2	Benzo(g,h,i)perylene	U	11	1.0	10	11	2.1	
118-74-1	Hexachlorobenzene	~~U~~ UJ	11	1.0	10	11	1.9	CCH
87-68-3	Hexachlorobutadiene	U	11	1.0	10	11	2.5	
77-47-4	Hexachlorocyclopentadiene	~~U~~ UJ	11	1.0	10	11	1.6	CCH
7297-45-2	2-Methylnaphthalene-D10		65%					
367-12-4	2,4-Dibromophenol		112%					
81103-79-9	Fluorene-d10		77%					
1718-51-1	Pyrene-D10		103%					

LW 3/3/09

KATAHDIN ANALYTICAL SERVICES
Report of Analytical Results

Client: CH2MHill
Project: TO-009 Lejeune
PO No:
Sample Date: 12/09/08
Received Date: 12/10/08
Extraction Date: 12/15/08
Analysis Date: 31-DEC-2008 11:22
Report Date: 01/06/2009
Matrix: SOIL
% Solids: 93.3

Lab ID: SB7081-36
Client ID: MR08-IS129D-2-3-08D
SDG: TO9-16
Extracted by: CB
Extraction Method: SW846 3550
Analyst: JLP
Analysis Method: SW846 M8270C
Lab Prep Batch: WG59049
Units: ug/Kgdrywt

CAS#	Compound	Flags	Results	DF	PQL	Adj.PQL	Adj.MDL
91-20-3	Naphthalene	U	11	1.0	10	11	2.8
91-57-6	2-Methylnaphthalene	U	11	1.0	10	11	2.4
86-73-7	Fluorene	U	11	1.0	10	11	3.4
85-01-8	Phenanthrene	U	11	1.0	10	11	1.9
206-44-0	Fluoranthene	U	11	1.0	10	11	1.9
129-00-0	Pyrene	U	11	1.0	10	11	2.2
56-55-3	Benzo(a)anthracene	U	11	1.0	10	11	2.0
205-99-2	Benzo(b)fluoranthene	U	11	1.0	10	11	2.6
207-08-9	Benzo(k)fluoranthene	U	11	1.0	10	11	3.3
50-32-8	Benzo(a)pyrene	U	11	1.0	10	11	3.5
193-39-5	Indeno(1,2,3-cd)pyrene	J	2.1	1.0	10	11	2.0
53-70-3	Dibenzo(a,h)anthracene	J	3.3	1.0	10	11	1.9
191-24-2	Benzo(g,h,i)perylene	U	11	1.0	10	11	2.1
118-74-1	Hexachlorobenzene	U	11	1.0	10	11	1.9
87-68-3	Hexachlorobutadiene	U	11	1.0	10	11	2.5
77-47-4	Hexachlorocyclopentadiene	U	11	1.0	10	11	1.6
7297-45-2	2-Methylnaphthalene-D10		43%				
367-12-4	2,4-Dibromophenol		65%				
81103-79-9	Fluorene-d10		55%				
1718-51-1	Pyrene-D10		67%				

LW 3/3/09

KATAHDIN ANALYTICAL SERVICES
Report of Analytical Results

Client: CH2MHill
Project: TO-009 Lejeune
PO No:
Sample Date: 12/09/08
Received Date: 12/10/08
Extraction Date: 12/15/08
Analysis Date: 02-JAN-2009 13:55
Report Date: 01/06/2009
Matrix: SOIL
% Solids: 92.5

Lab ID: SB7081-38
Client ID: MR08-SS128-08D
SDG: TO9-16
Extracted by: CB
Extraction Method: SW846 3550
Analyst: JCG
Analysis Method: SW846 M8270C
Lab Prep Batch: WG59049
Units: ug/Kgdrywt

CAS#	Compound	Flags	Results	DF	PQL	Adj.PQL	Adj.MDL	
91-20-3	Naphthalene	U	11	1.0	10	11	2.8	
91-57-6	2-Methylnaphthalene		18	1.0	10	11	2.4	
86-73-7	Fluorene	U	11	1.0	10	11	3.5	
85-01-8	Phenanthrene		41	1.0	10	11	1.9	
206-44-0	Fluoranthene		14	1.0	10	11	1.9	
129-00-0	Pyrene		26	1.0	10	11	2.3	
56-55-3	Benzo(a)anthracene	U	11	1.0	10	11	2.0	
205-99-2	Benzo(b)fluoranthene	U	11	1.0	10	11	2.6	
207-08-9	Benzo(k)fluoranthene	U	11	1.0	10	11	3.4	
50-32-8	Benzo(a)pyrene	U	11	1.0	10	11	3.6	
193-39-5	Indeno(1,2,3-cd)pyrene	J	4.9	1.0	10	11	2.0	
53-70-3	Dibenzo(a,h)anthracene	U	11	1.0	10	11	1.9	
191-24-2	Benzo(g,h,i)perylene		17	1.0	10	11	2.2	
118-74-1	Hexachlorobenzene	~~U~~ UJ	11	1.0	10	11	1.9	CCH
87-68-3	Hexachlorobutadiene	U	11	1.0	10	11	2.5	
77-47-4	Hexachlorocyclopentadiene	~~U~~ UJ	11	1.0	10	11	1.6	CCH
7297-45-2	2-Methylnaphthalene-D10		81%					
367-12-4	2,4-Dibromophenol		87%					
81103-79-9	Fluorene-d10		85%					
1718-51-1	Pyrene-D10		91%					

JW 3/3/09

KATAHDIN ANALYTICAL SERVICES
Report of Analytical Results

Client: CH2MHill
Project: TO-009 Lejeune
PO No:
Sample Date: 12/09/08
Received Date: 12/10/08
Extraction Date: 12/15/08
Analysis Date: 01-JAN-2009 00:06
Report Date: 01/06/2009
Matrix: SOIL
% Solids: 91.5

Lab ID: SB7081-40
Client ID: MR08-IS128-2-3-08D
SDG: TO9-16
Extracted by: CB
Extraction Method: SW846 3550
Analyst: JCG
Analysis Method: SW846 M8270C
Lab Prep Batch: WG59049
Units: ug/Kgdrywt

CAS#	Compound	Flags	Results	DF	PQL	Adj.PQL	Adj.MDL	
91-20-3	Naphthalene	U	11	1.0	10	11	2.8	
91-57-6	2-Methylnaphthalene	U	11	1.0	10	11	2.4	
86-73-7	Fluorene	U	11	1.0	10	11	3.5	
85-01-8	Phenanthrene	U	11	1.0	10	11	2.0	
206-44-0	Fluoranthene	U	11	1.0	10	11	2.0	
129-00-0	Pyrene	U	11	1.0	10	11	2.3	
56-55-3	Benzo(a)anthracene	U	11	1.0	10	11	2.1	
205-99-2	Benzo(b)fluoranthene	~~U~~ UJ	11	1.0	10	11	2.6	CCH
207-08-9	Benzo(k)fluoranthene	U	11	1.0	10	11	3.4	
50-32-8	Benzo(a)pyrene	U	11	1.0	10	11	3.6	
193-39-5	Indeno(1,2,3-cd)pyrene	U	11	1.0	10	11	2.1	
53-70-3	Dibenzo(a,h)anthracene	U	11	1.0	10	11	2.0	
191-24-2	Benzo(g,h,i)perylene	U	11	1.0	10	11	2.2	
118-74-1	Hexachlorobenzene	~~U~~ UJ	11	1.0	10	11	2.0	CCH
87-68-3	Hexachlorobutadiene	U	11	1.0	10	11	2.5	
77-47-4	Hexachlorocyclopentadiene	~~U~~ UJ	11	1.0	10	11	1.6	CCH
7297-45-2	2-Methylnaphthalene-D10		56%					
367-12-4	2,4-Dibromophenol		93%					
81103-79-9	Fluorene-d10		64%					
1718-51-1	Pyrene-D10		86%					

MW 3/3/09

ENVIRONMENTAL
Data Services, Inc.

SEMIVOLATILE ORGANIC COMPOUNDS

USEPA Region IV - Level IV Review

Site: MCB Camp Lejeune, TO-09 SDG #: TO9-16

Client: CH2M HILL, Inc., Virginia Beach, Virginia Date: March 3, 2009

Laboratory: Katahdin Analytical Services, Scarborough, Maine Reviewer: Nancy Weaver

EDS ID	Client Sample ID	Laboratory Sample ID	Matrix
1	MR08-SS088-08D	SB7081-1	Soil
2	MR08-IS088-2-3-08D	SB7081-3	Soil
3	MR08-SS089-08D	SB7081-5	Soil
4	MR08-SS089D-08D	SB7081-7	Soil
5	MR08-IS089-2-3-08D	SB7081-9	Soil
6	MR08-IS089D-2-3-08D	SB7081-11	Soil
7	MR08-SS090-08D	SB7081-13	Soil
8	MR08-IS090-2-3-08D	SB7081-15	Soil
9	MR08-SS115-08D	SB7081-17	Soil
10	MR08-IS115-2-3-08D	SB7081-19	Soil
11	MR08-SS114-08D	SB7081-21	Soil
12	MR08-IS114-2-3-08D	SB7081-23	Soil
13	MR08-SS113-08D	SB7081-25	Soil
14	MR08-IS113-2-3-08D	SB7081-27	Soil
15	MR08-SS129-08D	SB7081-29	Soil
16	MR08-SS129D-08D	SB7081-31	Soil
17	MR08-IS129-2-3-08D	SB7081-33	Soil
18	MR08-IS129D-2-3-08D	SB7081-35	Soil
19	MR08-SS128-08D	SB7081-37	Soil
20	MR08-IS128-2-3-08D	SB7081-39	Soil

The USEPA "Contract Laboratory Program National Functional Guidelines for Organic Data Review," October 1999, and professional judgment were used in evaluating the data in this summary report.

Holding Times - All samples were extracted within 14 days for soil samples and analyzed within 40 days for all samples.

GC/MS Tuning - All of the DFTPP tunes in the initial and continuing calibrations met the percent relative abundance criteria.

Initial Calibration - The initial calibrations exhibited acceptable %RSD and mean RRF values.

Continuing Calibration - The continuing calibrations exhibited acceptable %D and RRF values except the following.

CCAL Date	Compound	%D/RRF	Qualifier	Affected Samples
12/22/08	Benzaldehyde	90.97%	J/UJ	1-8, 18
	Nitrobenzene	63.78%	J/UJ	1-8, 18
	3,3'-Dichlorobenzidine	32.78%	J/UJ	1-8, 18
12/23/08	Benzaldehyde	91.70%	J/UJ	11, 12, 14, 20
	Nitrobenzene	34.75%	J/UJ	11, 12, 14, 20
	3,3'-Dichlorobenzidine	29.12%	J/UJ	11, 12, 14, 20
12/24/08	Benzaldehyde	91.72%	J/UJ	9, 10, 13, 15-17
	Nitrobenzene	36.36%	J/UJ	9, 10, 13, 15-17
	3,3'-Dichlorobenzidine	29.02%	J/UJ	9, 10, 13, 15-17
12/30/08	Benzaldehyde	90.25%	J/UJ	19
	Nitrobenzene	35.03%	J/UJ	19
	4-Chloroaniline	25.76%	J/UJ	19
	2,4-Dinitrophenol	35.00%	J/UJ	19
	4-Nitroaniline	40.44%	J/UJ	19
	Carbazole	28.31%	J/UJ	19
	Butylbenzylphthalate	42.59%	J/UJ	19
	bis (2-Ethylhexyl) phthalate	67.67%	J/UJ	19
	Di-n-octyl phthalate	46.48%	J/UJ	19

Surrogates - All samples exhibited acceptable surrogate recoveries.

MS/MSD - A MS/MSD sample was not analyzed.

Laboratory Control Sample - The LCS samples exhibited acceptable %R values.

Internal Standard (IS) Area Performance - All internal standards met response and retention time (RT) criteria except the following.

Sample ID	Internal Standard	Area Count	Qualifier
15	IS6-Perylene-d12	Severely Low	J/R - All associated

Method Blank - The method blanks were free of contamination.

Field, Equipment Blank - Field QC results are summarized below.

Blank ID	Compound	Conc. ug/L	Action Level ug/L	Qualifier	Affected Samples
MR08-EB01120908-IS	None - ND	-	-	-	-
MR08-EB01120908-SS	None - ND	-	-	-	-
MR08-FB01120608	None - ND	-	-	-	-

Field Duplicates - Field duplicate results are summarized below.

Compound	MR08-SS089-08D ug/kg	MR08-SS089D-08D ug/kg	RPD	Qualifier
bis (2-Ethylhexyl) phthalate	320	440 U	NC	None

Compound	MR08-IS089-2-3-08D ug/kg	MR08-IS089D-2-3-08D ug/kg	RPD	Qualifier
None	ND	ND	-	-

Compound	MR08-SS129-08D ug/kg	MR08-SS129D-08D ug/kg	RPD	Qualifier
bis (2-Ethylhexyl) phthalate	540	300	57%	None

Compound	MR08-IS129-2-3-08D ug/kg	MR08-IS129D-2-3-08D ug/kg	RPD	Qualifier
bis (2-Ethylhexyl) phthalate	250	350 U	NC	None

Tentatively Identified Compounds (TICs) - TICs were not reported.

Compound Quantitation - No discrepancies were identified.

KATAHDIN ANALYTICAL SERVICES
Report of Analytical Results

Client: CH2MHill
Project: TO-009 Lejeune
PO No:
Sample Date: 12/09/08
Received Date: 12/10/08
Extraction Date: 12/15/08
Analysis Date: 22-DEC-2008 16:36
Report Date: 12/31/2008
Matrix: SOIL
% Solids: 91.2

Lab ID: SB7081-1
Client ID: MR08-SS088-08D
SDG: TO9-16
Extracted by: CB
Extraction Method: SW846 3550
Analyst: JCG
Analysis Method: SW846 8270C
Lab Prep Batch: WG59048
Units: ug/Kgdrywt

CAS#	Compound	Flags	Results	DF	PQL	Adj.PQL	Adj.MDL	
100-52-7	Benzaldehyde	~~U~~ UJ	550	1.0	500	550	130	CCH
108-95-2	Phenol	U	550	1.0	500	550	170	
111-44-4	Bis(2-Chloroethyl)ether	U	360	1.0	330	360	89	
95-57-8	2-Chlorophenol	U	550	1.0	500	550	180	
95-48-7	2-Methylphenol	U	660	1.0	600	660	220	
108-60-1	2,2'-Oxybis(1-chloropropane)	U	360	1.0	330	360	98	
98-86-2	Acetophenone	U	660	1.0	600	660	200	
621-64-7	N-Nitroso-di-n-propylamine	U	360	1.0	330	360	91	
65794-96-9	3&4-Methylphenol	U	660	1.0	600	660	200	
67-72-1	Hexachloroethane	U	360	1.0	330	360	100	
98-95-3	Nitrobenzene	~~U~~ UJ	360	1.0	330	360	100	CCH
78-59-1	Isophorone	U	360	1.0	330	360	82	
88-75-5	2-Nitrophenol	U	660	1.0	600	660	180	
105-67-9	2,4-Dimethylphenol	U	550	1.0	500	550	180	
111-91-1	Bis(2-Chloroethoxy)methane	U	360	1.0	330	360	100	
120-83-2	2,4-Dichlorophenol	U	550	1.0	500	550	160	
106-47-8	4-Chloroaniline	U	550	1.0	500	550	130	
105-60-2	Caprolactam	U	550	1.0	500	550	160	
59-50-7	4-Chloro-3-Methylphenol	U	550	1.0	500	550	180	
88-06-2	2,4,6-Trichlorophenol	U	550	1.0	500	550	170	
95-95-4	2,4,5-Trichlorophenol	U	550	1.0	500	550	170	
91-58-7	2-Chloronaphthalene	U	360	1.0	330	360	95	
92-52-4	1,1'-Biphenyl	U	360	1.0	330	360	80	
88-74-4	2-Nitroaniline	U	550	1.0	500	550	82	
131-11-3	Dimethyl Phthalate	U	360	1.0	330	360	85	
606-20-2	2,6-Dinitrotoluene	U	360	1.0	330	360	86	
208-96-8	Acenaphthylene	U	360	1.0	330	360	77	
99-09-2	3-Nitroaniline	U	550	1.0	500	550	100	
83-32-9	Acenaphthene	U	360	1.0	330	360	71	
51-28-5	2,4-Dinitrophenol	U	1300	1.0	1200	1300	410	
132-64-9	Dibenzofuran	U	360	1.0	330	360	86	
100-02-7	4-Nitrophenol	U	1300	1.0	1200	1300	340	
121-14-2	2,4-Dinitrotoluene	U	360	1.0	330	360	93	
84-66-2	Diethylphthalate	U	360	1.0	330	360	88	
7005-72-3	4-Chlorophenyl-phenylether	U	360	1.0	330	360	85	
100-01-6	4-Nitroaniline	U	550	1.0	500	550	150	
534-52-1	4,6-Dinitro-2-Methylphenol	U	1300	1.0	1200	1300	370	
86-30-6	N-Nitrosodiphenylamine	U	720	1.0	660	720	240	
101-55-3	4-Bromophenyl-phenylether	U	360	1.0	330	360	93	
1912-24-9	Atrazine	U	360	1.0	330	360	100	
87-86-5	Pentachlorophenol	U	900	1.0	820	900	260	
120-12-7	Anthracene	U	360	1.0	330	360	92	
86-74-8	Carbazole	U	550	1.0	500	550	120	

DW
3/3/09

KATAHDIN ANALYTICAL SERVICES
Report of Analytical Results

Client: CH2MHill
Project: TO-009 Lejeune
PO No:
Sample Date: 12/09/08
Received Date: 12/10/08
Extraction Date: 12/15/08
Analysis Date: 22-DEC-2008 16:36
Report Date: 12/31/2008
Matrix: SOIL
% Solids: 91.2

Lab ID: SB7081-1
Client ID: MR08-SS088-08D
SDG: TO9-16
Extracted by: CB
Extraction Method: SW846 3550
Analyst: JCG
Analysis Method: SW846 8270C
Lab Prep Batch: WG59048
Units: ug/Kgdrywt

CAS#	Compound	Flags	Results	DF	PQL	Adj.PQL	Adj.MDL	
84-74-2	Di-n-butylphthalate	U	360	1.0	330	360	110	
85-68-7	Butylbenzylphthalate	U	360	1.0	330	360	100	
91-94-1	3,3'-Dichlorobenzidine	~~U~~ UJ	550	1.0	500	550	120	CCH
218-01-9	Chrysene	U	360	1.0	330	360	100	
117-81-7	bis(2-Ethylhexyl)phthalate	J	150	1.0	330	360	110	
117-84-0	Di-n-octylphthalate	U	360	1.0	330	360	230	
367-12-4	2-Fluorophenol		84%					
13127-88-3	Phenol-D6		89%					
4165-60-0	Nitrobenzene-D5		88%					
321-60-8	2-Fluorobiphenyl		90%					
118-79-6	2,4,6-Tribromophenol		87%					
1718-51-0	Terphenyl-D14		90%					

MW 3/3/09

2

KATAHDIN ANALYTICAL SERVICES
Report of Analytical Results

Client: CH2MHill
Project: TO-009 Lejeune
PO No:
Sample Date: 12/09/08
Received Date: 12/10/08
Extraction Date: 12/15/08
Analysis Date: 22-DEC-2008 17:20
Report Date: 12/31/2008
Matrix: SOIL
% Solids: 90.5

Lab ID: SB7081-3
Client ID: MR08-IS088-2-3-08D
SDG: TO9-16
Extracted by: CB
Extraction Method: SW846 3550
Analyst: JCG
Analysis Method: SW846 8270C
Lab Prep Batch: WG59048
Units: ug/Kgdrywt

CAS#	Compound	Flags	Results	DF	PQL	Adj.PQL	Adj.MDL	
100-52-7	Benzaldehyde	~~U~~ UJ	550	1.0	500	550	130	CCH
108-95-2	Phenol	U	550	1.0	500	550	170	
111-44-4	Bis(2-Chloroethyl)ether	U	360	1.0	330	360	89	
95-57-8	2-Chlorophenol	U	550	1.0	500	550	180	
95-48-7	2-Methylphenol	U	660	1.0	600	660	220	
108-60-1	2,2'-Oxybis(1-chloropropane)	U	360	1.0	330	360	98	
98-86-2	Acetophenone	U	660	1.0	600	660	200	
621-64-7	N-Nitroso-di-n-propylamine	U	360	1.0	330	360	92	
65794-96-9	3&4-Methylphenol	U	660	1.0	600	660	210	
67-72-1	Hexachloroethane	U	360	1.0	330	360	110	
98-95-3	Nitrobenzene	~~U~~ UJ	360	1.0	330	360	100	CCH
78-59-1	Isophorone	U	360	1.0	330	360	83	
88-75-5	2-Nitrophenol	U	660	1.0	600	660	180	
105-67-9	2,4-Dimethylphenol	U	550	1.0	500	550	180	
111-91-1	Bis(2-Chloroethoxy)methane	U	360	1.0	330	360	110	
120-83-2	2,4-Dichlorophenol	U	550	1.0	500	550	160	
106-47-8	4-Chloroaniline	U	550	1.0	500	550	130	
105-60-2	Caprolactam	U	550	1.0	500	550	160	
59-50-7	4-Chloro-3-Methylphenol	U	550	1.0	500	550	180	
88-06-2	2,4,6-Trichlorophenol	U	550	1.0	500	550	170	
95-95-4	2,4,5-Trichlorophenol	U	550	1.0	500	550	170	
91-58-7	2-Chloronaphthalene	U	360	1.0	330	360	96	
92-52-4	1,1'-Biphenyl	U	360	1.0	330	360	81	
88-74-4	2-Nitroaniline	U	550	1.0	500	550	83	
131-11-3	Dimethyl Phthalate	U	360	1.0	330	360	86	
606-20-2	2,6-Dinitrotoluene	U	360	1.0	330	360	87	
208-96-8	Acenaphthylene	U	360	1.0	330	360	77	
99-09-2	3-Nitroaniline	U	550	1.0	500	550	100	
83-32-9	Acenaphthene	U	360	1.0	330	360	72	
51-28-5	2,4-Dinitrophenol	U	1300	1.0	1200	1300	420	
132-64-9	Dibenzofuran	U	360	1.0	330	360	87	
100-02-7	4-Nitrophenol	U	1300	1.0	1200	1300	340	
121-14-2	2,4-Dinitrotoluene	U	360	1.0	330	360	94	
84-66-2	Diethylphthalate	U	360	1.0	330	360	88	
7005-72-3	4-Chlorophenyl-phenylether	U	360	1.0	330	360	86	
100-01-6	4-Nitroaniline	U	550	1.0	500	550	150	
534-52-1	4,6-Dinitro-2-Methylphenol	U	1300	1.0	1200	1300	370	
86-30-6	N-Nitrosodiphenylamine	U	730	1.0	660	730	240	
101-55-3	4-Bromophenyl-phenylether	U	360	1.0	330	360	94	
1912-24-9	Atrazine	U	360	1.0	330	360	100	
87-86-5	Pentachlorophenol	U	910	1.0	820	910	260	
120-12-7	Anthracene	U	360	1.0	330	360	93	
86-74-8	Carbazole	U	550	1.0	500	550	120	

lew
3/3/09

2

KATAHDIN ANALYTICAL SERVICES
Report of Analytical Results

Client: CH2MHill
Project: TO-009 Lejeune
PO No:
Sample Date: 12/09/08
Received Date: 12/10/08
Extraction Date: 12/15/08
Analysis Date: 22-DEC-2008 17:20
Report Date: 12/31/2008
Matrix: SOIL
% Solids: 90.5

Lab ID: SB7081-3
Client ID: MR08-IS088-2-3-08D
SDG: TO9-16
Extracted by: CB
Extraction Method: SW846 3550
Analyst: JCG
Analysis Method: SW846 8270C
Lab Prep Batch: WG59048
Units: ug/Kgdrywt

CAS#	Compound	Flags	Results	DF	PQL	Adj.PQL	Adj.MDL
84-74-2	Di-n-butylphthalate	U	360	1.0	330	360	110
85-68-7	Butylbenzylphthalate	U	360	1.0	330	360	100
91-94-1	3,3'-Dichlorobenzidine	~~J~~ UJ	550	1.0	500	550	120 CCH
218-01-9	Chrysene	U	360	1.0	330	360	100
117-81-7	bis(2-Ethylhexyl)phthalate	J	160	1.0	330	360	110
117-84-0	Di-n-octylphthalate	U	360	1.0	330	360	230
367-12-4	2-Fluorophenol		79%				
13127-88-3	Phenol-D6		82%				
4165-60-0	Nitrobenzene-D5		82%				
321-60-8	2-Fluorobiphenyl		84%				
118-79-6	2,4,6-Tribromophenol		91%				
1718-51-0	Terphenyl-D14		103%				

MW 3/3/09

3

KATAHDIN ANALYTICAL SERVICES
Report of Analytical Results

Client: CH2MHill
Project: TO-009 Lejeune
PO No:
Sample Date: 12/09/08
Received Date: 12/10/08
Extraction Date: 12/15/08
Analysis Date: 22-DEC-2008 18:48
Report Date: 12/31/2008
Matrix: SOIL
% Solids: 89.0

Lab ID: SB7081-5
Client ID: MR08-SS089-08D
SDG: TO9-16
Extracted by: CB
Extraction Method: SW846 3550
Analyst: JCG
Analysis Method: SW846 8270C
Lab Prep Batch: WG59048
Units: ug/Kgdrywt

CAS#	Compound	Flags	Results	DF	PQL	Adj.PQL	Adj.MDL	
100-52-7	Benzaldehyde	~~U~~ UJ	560	1.0	500	560	130	CCH
108-95-2	Phenol	U	560	1.0	500	560	180	
111-44-4	Bis(2-Chloroethyl)ether	U	370	1.0	330	370	91	
95-57-8	2-Chlorophenol	U	560	1.0	500	560	180	
95-48-7	2-Methylphenol	U	670	1.0	600	670	220	
108-60-1	2,2'-Oxybis(1-chloropropane)	U	370	1.0	330	370	100	
98-86-2	Acetophenone	U	670	1.0	600	670	200	
621-64-7	N-Nitroso-di-n-propylamine	U	370	1.0	330	370	93	
65794-96-9	3&4-Methylphenol	U	670	1.0	600	670	210	
67-72-1	Hexachloroethane	U	370	1.0	330	370	110	
98-95-3	Nitrobenzene	~~U~~ UJ	370	1.0	330	370	100	CCH
78-59-1	Isophorone	U	370	1.0	330	370	84	
88-75-5	2-Nitrophenol	U	670	1.0	600	670	190	
105-67-9	2,4-Dimethylphenol	U	560	1.0	500	560	180	
111-91-1	Bis(2-Chloroethoxy)methane	U	370	1.0	330	370	110	
120-83-2	2,4-Dichlorophenol	U	560	1.0	500	560	170	
106-47-8	4-Chloroaniline	U	560	1.0	500	560	130	
105-60-2	Caprolactam	U	560	1.0	500	560	160	
59-50-7	4-Chloro-3-Methylphenol	U	560	1.0	500	560	190	
88-06-2	2,4,6-Trichlorophenol	U	560	1.0	500	560	170	
95-95-4	2,4,5-Trichlorophenol	U	560	1.0	500	560	170	
91-58-7	2-Chloronaphthalene	U	370	1.0	330	370	98	
92-52-4	1,1'-Biphenyl	U	370	1.0	330	370	82	
88-74-4	2-Nitroaniline	U	560	1.0	500	560	84	
131-11-3	Dimethyl Phthalate	U	370	1.0	330	370	88	
606-20-2	2,6-Dinitrotoluene	U	370	1.0	330	370	89	
208-96-8	Acenaphthylene	U	370	1.0	330	370	79	
99-09-2	3-Nitroaniline	U	560	1.0	500	560	100	
83-32-9	Acenaphthene	U	370	1.0	330	370	73	
51-28-5	2,4-Dinitrophenol	U	1300	1.0	1200	1300	420	
132-64-9	Dibenzofuran	U	370	1.0	330	370	89	
100-02-7	4-Nitrophenol	U	1300	1.0	1200	1300	350	
121-14-2	2,4-Dinitrotoluene	U	370	1.0	330	370	95	
84-66-2	Diethylphthalate	U	370	1.0	330	370	90	
7005-72-3	4-Chlorophenyl-phenylether	U	370	1.0	330	370	88	
100-01-6	4-Nitroaniline	U	560	1.0	500	560	150	
534-52-1	4,6-Dinitro-2-Methylphenol	U	1300	1.0	1200	1300	380	
86-30-6	N-Nitrosodiphenylamine	U	740	1.0	660	740	250	
101-55-3	4-Bromophenyl-phenylether	U	370	1.0	330	370	95	
1912-24-9	Atrazine	U	370	1.0	330	370	100	
87-86-5	Pentachlorophenol	U	920	1.0	820	920	270	
120-12-7	Anthracene	U	370	1.0	330	370	94	
86-74-8	Carbazole	U	560	1.0	500	560	120	

dw 3/3/09

3

KATAHDIN ANALYTICAL SERVICES
Report of Analytical Results

Client: CH2MHill
Project: TO-009 Lejeune
PO No:
Sample Date: 12/09/08
Received Date: 12/10/08
Extraction Date: 12/15/08
Analysis Date: 22-DEC-2008 18:48
Report Date: 12/31/2008
Matrix: SOIL
% Solids: 89.0

Lab ID: SB7081-5
Client ID: MR08-SS089-08D
SDG: TO9-16
Extracted by: CB
Extraction Method: SW846 3550
Analyst: JCG
Analysis Method: SW846 8270C
Lab Prep Batch: WG59048
Units: ug/Kgdrywt

CAS#	Compound	Flags	Results	DF	PQL	Adj.PQL	Adj.MDL	
84-74-2	Di-n-butylphthalate	U	370	1.0	330	370	110	
85-68-7	Butylbenzylphthalate	U	370	1.0	330	370	100	
91-94-1	3,3'-Dichlorobenzidine	~~U~~ UJ	560	1.0	500	560	130	CCH
218-01-9	Chrysene	U	370	1.0	330	370	110	
117-81-7	bis(2-Ethylhexyl)phthalate	J	320	1.0	330	370	110	
117-84-0	Di-n-octylphthalate	U	370	1.0	330	370	240	
367-12-4	2-Fluorophenol		72%					
13127-88-3	Phenol-D6		78%					
4165-60-0	Nitrobenzene-D5		76%					
321-60-8	2-Fluorobiphenyl		82%					
118-79-6	2,4,6-Tribromophenol		88%					
1718-51-0	Terphenyl-D14		100%					

LEW 3/3/09

4

KATAHDIN ANALYTICAL SERVICES
Report of Analytical Results

Client: CH2MHill
Project: TO-009 Lejeune
PO No:
Sample Date: 12/09/08
Received Date: 12/10/08
Extraction Date: 12/15/08
Analysis Date: 22-DEC-2008 19:31
Report Date: 12/31/2008
Matrix: SOIL
% Solids: 74.3

Lab ID: SB7081-7
Client ID: MR08-SS089D-08D
SDG: TO9-16
Extracted by: CB
Extraction Method: SW846 3550
Analyst: JCG
Analysis Method: SW846 8270C
Lab Prep Batch: WG59048
Units: ug/Kgdrywt

CAS#	Compound	Flags	Results	DF	PQL	Adj.PQL	Adj.MDL	
100-52-7	Benzaldehyde	~~U~~ UJ	670	1.0	500	670	160	CCH
108-95-2	Phenol	U	670	1.0	500	670	210	
111-44-4	Bis(2-Chloroethyl)ether	U	440	1.0	330	440	110	
95-57-8	2-Chlorophenol	U	670	1.0	500	670	220	
95-48-7	2-Methylphenol	U	810	1.0	600	810	270	
108-60-1	2,2'-Oxybis(1-chloropropane)	U	440	1.0	330	440	120	
98-86-2	Acetophenone	U	810	1.0	600	810	240	
621-64-7	N-Nitroso-di-n-propylamine	U	440	1.0	330	440	110	
65794-96-9	3&4-Methylphenol	U	810	1.0	600	810	250	
67-72-1	Hexachloroethane	U	440	1.0	330	440	130	
98-95-3	Nitrobenzene	~~U~~ UJ	440	1.0	330	440	120	CCH
78-59-1	Isophorone	U	440	1.0	330	440	100	
88-75-5	2-Nitrophenol	U	810	1.0	600	810	220	
105-67-9	2,4-Dimethylphenol	U	670	1.0	500	670	220	
111-91-1	Bis(2-Chloroethoxy)methane	U	440	1.0	330	440	130	
120-83-2	2,4-Dichlorophenol	U	670	1.0	500	670	200	
106-47-8	4-Chloroaniline	U	670	1.0	500	670	160	
105-60-2	Caprolactam	U	670	1.0	500	670	190	
59-50-7	4-Chloro-3-Methylphenol	U	670	1.0	500	670	220	
88-06-2	2,4,6-Trichlorophenol	U	670	1.0	500	670	210	
95-95-4	2,4,5-Trichlorophenol	U	670	1.0	500	670	210	
91-58-7	2-Chloronaphthalene	U	440	1.0	330	440	120	
92-52-4	1,1'-Biphenyl	U	440	1.0	330	440	98	
88-74-4	2-Nitroaniline	U	670	1.0	500	670	100	
131-11-3	Dimethyl Phthalate	U	440	1.0	330	440	100	
606-20-2	2,6-Dinitrotoluene	U	440	1.0	330	440	110	
208-96-8	Acenaphthylene	U	440	1.0	330	440	94	
99-09-2	3-Nitroaniline	U	670	1.0	500	670	130	
83-32-9	Acenaphthene	U	440	1.0	330	440	87	
51-28-5	2,4-Dinitrophenol	U	1600	1.0	1200	1600	510	
132-64-9	Dibenzofuran	U	440	1.0	330	440	110	
100-02-7	4-Nitrophenol	U	1600	1.0	1200	1600	420	
121-14-2	2,4-Dinitrotoluene	U	440	1.0	330	440	110	
84-66-2	Diethylphthalate	U	440	1.0	330	440	110	
7005-72-3	4-Chlorophenyl-phenylether	U	440	1.0	330	440	100	
100-01-6	4-Nitroaniline	U	670	1.0	500	670	180	
534-52-1	4,6-Dinitro-2-Methylphenol	U	1600	1.0	1200	1600	450	
86-30-6	N-Nitrosodiphenylamine	U	890	1.0	660	890	290	
101-55-3	4-Bromophenyl-phenylether	U	440	1.0	330	440	110	
1912-24-9	Atrazine	U	440	1.0	330	440	120	
87-86-5	Pentachlorophenol	U	1100	1.0	820	1100	320	
120-12-7	Anthracene	U	440	1.0	330	440	110	
86-74-8	Carbazole	U	670	1.0	500	670	150	

lw 3/3/09

4

KATAHDIN ANALYTICAL SERVICES
Report of Analytical Results

Client: CH2MHill
Project: TO-009 Lejeune
PO No:
Sample Date: 12/09/08
Received Date: 12/10/08
Extraction Date: 12/15/08
Analysis Date: 22-DEC-2008 19:31
Report Date: 12/31/2008
Matrix: SOIL
% Solids: 74.3

Lab ID: SB7081-7
Client ID: MR08-SS089D-08D
SDG: TO9-16
Extracted by: CB
Extraction Method: SW846 3550
Analyst: JCG
Analysis Method: SW846 8270C
Lab Prep Batch: WG59048
Units: ug/Kgdrywt

CAS#	Compound	Flags	Results	DF	PQL	Adj.PQL	Adj.MDL
84-74-2	Di-n-butylphthalate	U	440	1.0	330	440	140
85-68-7	Butylbenzylphthalate	U	440	1.0	330	440	120
91-94-1	3,3'-Dichlorobenzidine	~~U~~ UJ	670	1.0	500	670	150 CCH
218-01-9	Chrysene	U	440	1.0	330	440	130
117-81-7	bis(2-Ethylhexyl)phthalate	U	440	1.0	330	440	130
117-84-0	Di-n-octylphthalate	U	440	1.0	330	440	280
367-12-4	2-Fluorophenol		73%				
13127-88-3	Phenol-D6		77%				
4165-60-0	Nitrobenzene-D5		73%				
321-60-8	2-Fluorobiphenyl		77%				
118-79-6	2,4,6-Tribromophenol		76%				
1718-51-0	Terphenyl-D14		92%				

MW 3/3/09

5

KATAHDIN ANALYTICAL SERVICES
Report of Analytical Results

Client: CH2MHill
Project: TO-009 Lejeune
PO No:
Sample Date: 12/09/08
Received Date: 12/10/08
Extraction Date: 12/15/08
Analysis Date: 22-DEC-2008 20:58
Report Date: 12/31/2008
Matrix: SOIL
% Solids: 90.1

Lab ID: SB7081-9
Client ID: MR08-IS089-2-3-08D
SDG: TO9-16
Extracted by: CB
Extraction Method: SW846 3550
Analyst: JCG
Analysis Method: SW846 8270C
Lab Prep Batch: WG59048
Units: ug/Kgdrywt

CAS#	Compound	Flags	Results	DF	PQL	Adj.PQL	Adj.MDL	
100-52-7	Benzaldehyde	~~U~~ UJ	550	1.0	500	550	130	CCH
108-95-2	Phenol	U	550	1.0	500	550	170	
111-44-4	Bis(2-Chloroethyl)ether	U	370	1.0	330	370	90	
95-57-8	2-Chlorophenol	U	550	1.0	500	550	180	
95-48-7	2-Methylphenol	U	660	1.0	600	660	220	
108-60-1	2,2'-Oxybis(1-chloropropane)	U	370	1.0	330	370	99	
98-86-2	Acetophenone	U	660	1.0	600	660	200	
621-64-7	N-Nitroso-di-n-propylamine	U	370	1.0	330	370	92	
65794-96-9	3&4-Methylphenol	U	660	1.0	600	660	210	
67-72-1	Hexachloroethane	U	370	1.0	330	370	110	
98-95-3	Nitrobenzene	~~U~~ UJ	370	1.0	330	370	100	CCH
78-59-1	Isophorone	U	370	1.0	330	370	83	
88-75-5	2-Nitrophenol	U	660	1.0	600	660	180	
105-67-9	2,4-Dimethylphenol	U	550	1.0	500	550	180	
111-91-1	Bis(2-Chloroethoxy)methane	U	370	1.0	330	370	110	
120-83-2	2,4-Dichlorophenol	U	550	1.0	500	550	170	
106-47-8	4-Chloroaniline	U	550	1.0	500	550	130	
105-60-2	Caprolactam	U	550	1.0	500	550	160	
59-50-7	4-Chloro-3-Methylphenol	U	550	1.0	500	550	180	
88-06-2	2,4,6-Trichlorophenol	U	550	1.0	500	550	170	
95-95-4	2,4,5-Trichlorophenol	U	550	1.0	500	550	170	
91-58-7	2-Chloronaphthalene	U	370	1.0	330	370	96	
92-52-4	1,1'-Biphenyl	U	370	1.0	330	370	81	
88-74-4	2-Nitroaniline	U	550	1.0	500	550	83	
131-11-3	Dimethyl Phthalate	U	370	1.0	330	370	86	
606-20-2	2,6-Dinitrotoluene	U	370	1.0	330	370	88	
208-96-8	Acenaphthylene	U	370	1.0	330	370	78	
99-09-2	3-Nitroaniline	U	550	1.0	500	550	100	
83-32-9	Acenaphthene	U	370	1.0	330	370	72	
51-28-5	2,4-Dinitrophenol	U	1300	1.0	1200	1300	420	
132-64-9	Dibenzofuran	U	370	1.0	330	370	88	
100-02-7	4-Nitrophenol	U	1300	1.0	1200	1300	340	
121-14-2	2,4-Dinitrotoluene	U	370	1.0	330	370	94	
84-66-2	Diethylphthalate	U	370	1.0	330	370	89	
7005-72-3	4-Chlorophenyl-phenylether	U	370	1.0	330	370	86	
100-01-6	4-Nitroaniline	U	550	1.0	500	550	150	
534-52-1	4,6-Dinitro-2-Methylphenol	U	1300	1.0	1200	1300	370	
86-30-6	N-Nitrosodiphenylamine	U	730	1.0	660	730	240	
101-55-3	4-Bromophenyl-phenylether	U	370	1.0	330	370	94	
1912-24-9	Atrazine	U	370	1.0	330	370	100	
87-86-5	Pentachlorophenol	U	910	1.0	820	910	260	
120-12-7	Anthracene	U	370	1.0	330	370	93	
86-74-8	Carbazole	U	550	1.0	500	550	120	

LW 3/3/09

KATAHDIN ANALYTICAL SERVICES
Report of Analytical Results

Client: CH2MHill
Project: TO-009 Lejeune
PO No:
Sample Date: 12/09/08
Received Date: 12/10/08
Extraction Date: 12/15/08
Analysis Date: 22-DEC-2008 20:58
Report Date: 12/31/2008
Matrix: SOIL
% Solids: 90.1

Lab ID: SB7081-9
Client ID: MR08-IS089-2-3-08D
SDG: TO9-16
Extracted by: CB
Extraction Method: SW846 3550
Analyst: JCG
Analysis Method: SW846 8270C
Lab Prep Batch: WG59048
Units: ug/Kgdrywt

CAS#	Compound	Flags	Results	DF	PQL	Adj.PQL	Adj.MDL	
84-74-2	Di-n-butylphthalate	U	370	1.0	330	370	110	
85-68-7	Butylbenzylphthalate	U	370	1.0	330	370	100	
91-94-1	3,3'-Dichlorobenzidine	~~U~~ UJ	550	1.0	500	550	130	CCH
218-01-9	Chrysene	U	370	1.0	330	370	100	
117-81-7	bis(2-Ethylhexyl)phthalate	U	370	1.0	330	370	110	
117-84-0	Di-n-octylphthalate	U	370	1.0	330	370	230	
367-12-4	2-Fluorophenol		78%					
13127-88-3	Phenol-D6		80%					
4165-60-0	Nitrobenzene-D5		81%					
321-60-8	2-Fluorobiphenyl		85%					
118-79-6	2,4,6-Tribromophenol		81%					
1718-51-0	Terphenyl-D14		90%					

CW
3/3/09

6

KATAHDIN ANALYTICAL SERVICES
Report of Analytical Results

Client: CH2MHill
Project: TO-009 Lejeune
PO No:
Sample Date: 12/09/08
Received Date: 12/10/08
Extraction Date: 12/15/08
Analysis Date: 22-DEC-2008 21:40
Report Date: 12/31/2008
Matrix: SOIL
% Solids: 87.9

Lab ID: SB7081-11
Client ID: MR08-IS089D-2-3-08D
SDG: TO9-16
Extracted by: CB
Extraction Method: SW846 3550
Analyst: JCG
Analysis Method: SW846 8270C
Lab Prep Batch: WG59048
Units: ug/Kgdrywt

CAS#	Compound	Flags	Results	DF	PQL	Adj.PQL	Adj.MDL	
100-52-7	Benzaldehyde	~~U~~ UJ	570	1.0	500	570	140	CCH
108-95-2	Phenol	U	570	1.0	500	570	180	
111-44-4	Bis(2-Chloroethyl)ether	U	380	1.0	330	380	92	
95-57-8	2-Chlorophenol	U	570	1.0	500	570	190	
95-48-7	2-Methylphenol	U	680	1.0	600	680	230	
108-60-1	2,2'-Oxybis(1-chloropropane)	U	380	1.0	330	380	100	
98-86-2	Acetophenone	U	680	1.0	600	680	200	
621-64-7	N-Nitroso-di-n-propylamine	U	380	1.0	330	380	94	
65794-96-9	3&4-Methylphenol	U	680	1.0	600	680	210	
67-72-1	Hexachloroethane	U	380	1.0	330	380	110	
98-95-3	Nitrobenzene	~~U~~ UJ	380	1.0	330	380	100	CCH
78-59-1	Isophorone	U	380	1.0	330	380	85	
88-75-5	2-Nitrophenol	U	680	1.0	600	680	190	
105-67-9	2,4-Dimethylphenol	U	570	1.0	500	570	190	
111-91-1	Bis(2-Chloroethoxy)methane	U	380	1.0	330	380	110	
120-83-2	2,4-Dichlorophenol	U	570	1.0	500	570	170	
106-47-8	4-Chloroaniline	U	570	1.0	500	570	140	
105-60-2	Caprolactam	U	570	1.0	500	570	160	
59-50-7	4-Chloro-3-Methylphenol	U	570	1.0	500	570	190	
88-06-2	2,4,6-Trichlorophenol	U	570	1.0	500	570	180	
95-95-4	2,4,5-Trichlorophenol	U	570	1.0	500	570	180	
91-58-7	2-Chloronaphthalene	U	380	1.0	330	380	99	
92-52-4	1,1'-Biphenyl	U	380	1.0	330	380	83	
88-74-4	2-Nitroaniline	U	570	1.0	500	570	85	
131-11-3	Dimethyl Phthalate	U	380	1.0	330	380	89	
606-20-2	2,6-Dinitrotoluene	U	380	1.0	330	380	90	
208-96-8	Acenaphthylene	U	380	1.0	330	380	80	
99-09-2	3-Nitroaniline	U	570	1.0	500	570	110	
83-32-9	Acenaphthene	U	380	1.0	330	380	74	
51-28-5	2,4-Dinitrophenol	U	1400	1.0	1200	1400	430	
132-64-9	Dibenzofuran	U	380	1.0	330	380	90	
100-02-7	4-Nitrophenol	U	1400	1.0	1200	1400	350	
121-14-2	2,4-Dinitrotoluene	U	380	1.0	330	380	97	
84-66-2	Diethylphthalate	U	380	1.0	330	380	91	
7005-72-3	4-Chlorophenyl-phenylether	U	380	1.0	330	380	89	
100-01-6	4-Nitroaniline	U	570	1.0	500	570	150	
534-52-1	4,6-Dinitro-2-Methylphenol	U	1400	1.0	1200	1400	380	
86-30-6	N-Nitrosodiphenylamine	U	750	1.0	660	750	250	
101-55-3	4-Bromophenyl-phenylether	U	380	1.0	330	380	97	
1912-24-9	Atrazine	U	380	1.0	330	380	100	
87-86-5	Pentachlorophenol	U	930	1.0	820	930	270	
120-12-7	Anthracene	U	380	1.0	330	380	96	
86-74-8	Carbazole	U	570	1.0	500	570	130	

fwd 3/3/09

6

KATAHDIN ANALYTICAL SERVICES
Report of Analytical Results

Client: CH2MHill
Project: TO-009 Lejeune
PO No:
Sample Date: 12/09/08
Received Date: 12/10/08
Extraction Date: 12/15/08
Analysis Date: 22-DEC-2008 21:40
Report Date: 12/31/2008
Matrix: SOIL
% Solids: 87.9

Lab ID: SB7081-11
Client ID: MR08-IS089D-2-3-08D
SDG: TO9-16
Extracted by: CB
Extraction Method: SW846 3550
Analyst: JCG
Analysis Method: SW846 8270C
Lab Prep Batch: WG59048
Units: ug/Kgdrywt

CAS#	Compound	Flags	Results	DF	PQL	Adj.PQL	Adj.MDL
84-74-2	Di-n-butylphthalate	U	380	1.0	330	380	110
85-68-7	Butylbenzylphthalate	U	380	1.0	330	380	100
91-94-1	3,3'-Dichlorobenzidine	~~U~~ UJ	570	1.0	500	570	130 CH
218-01-9	Chrysene	U	380	1.0	330	380	110
117-81-7	bis(2-Ethylhexyl)phthalate	U	380	1.0	330	380	110
117-84-0	Di-n-octylphthalate	U	380	1.0	330	380	240
367-12-4	2-Fluorophenol		74%				
13127-88-3	Phenol-D6		76%				
4165-60-0	Nitrobenzene-D5		77%				
321-60-8	2-Fluorobiphenyl		78%				
118-79-6	2,4,6-Tribromophenol		82%				
1718-51-0	Terphenyl-D14		93%				

KW
3/3/09

7

KATAHDIN ANALYTICAL SERVICES
Report of Analytical Results

Client: CH2MHill
Project: TO-009 Lejeune
PO No:
Sample Date: 12/09/08
Received Date: 12/10/08
Extraction Date: 12/15/08
Analysis Date: 22-DEC-2008 22:23
Report Date: 12/31/2008
Matrix: SOIL
% Solids: 87.5

Lab ID: SB7081-13
Client ID: MR08-SS090-08D
SDG: TO9-16
Extracted by: CB
Extraction Method: SW846 3550
Analyst: JCG
Analysis Method: SW846 8270C
Lab Prep Batch: WG59048
Units: ug/Kgdrywt

CAS#	Compound	Flags	Results	DF	PQL	Adj.PQL	Adj.MDL	
100-52-7	Benzaldehyde	~~U~~ UJ	570	1.0	500	570	140	CCH
108-95-2	Phenol	U	570	1.0	500	570	180	
111-44-4	Bis(2-Chloroethyl)ether	U	380	1.0	330	380	92	
95-57-8	2-Chlorophenol	U	570	1.0	500	570	190	
95-48-7	2-Methylphenol	U	680	1.0	600	680	230	
108-60-1	2,2'-Oxybis(1-chloropropane)	U	380	1.0	330	380	100	
98-86-2	Acetophenone	U	680	1.0	600	680	200	
621-64-7	N-Nitroso-di-n-propylamine	U	380	1.0	330	380	95	
65794-96-9	3&4-Methylphenol	U	680	1.0	600	680	210	
67-72-1	Hexachloroethane	U	380	1.0	330	380	110	
98-95-3	Nitrobenzene	~~U~~ UJ	380	1.0	330	380	100	CCH
78-59-1	Isophorone	U	380	1.0	330	380	86	
88-75-5	2-Nitrophenol	U	680	1.0	600	680	190	
105-67-9	2,4-Dimethylphenol	U	570	1.0	500	570	190	
111-91-1	Bis(2-Chloroethoxy)methane	U	380	1.0	330	380	110	
120-83-2	2,4-Dichlorophenol	U	570	1.0	500	570	170	
106-47-8	4-Chloroaniline	U	570	1.0	500	570	140	
105-60-2	Caprolactam	U	570	1.0	500	570	160	
59-50-7	4-Chloro-3-Methylphenol	U	570	1.0	500	570	190	
88-06-2	2,4,6-Trichlorophenol	U	570	1.0	500	570	180	
95-95-4	2,4,5-Trichlorophenol	U	570	1.0	500	570	180	
91-58-7	2-Chloronaphthalene	U	380	1.0	330	380	99	
92-52-4	1,1'-Biphenyl	U	380	1.0	330	380	83	
88-74-4	2-Nitroaniline	U	570	1.0	500	570	86	
131-11-3	Dimethyl Phthalate	U	380	1.0	330	380	89	
606-20-2	2,6-Dinitrotoluene	U	380	1.0	330	380	90	
208-96-8	Acenaphthylene	U	380	1.0	330	380	80	
99-09-2	3-Nitroaniline	U	570	1.0	500	570	110	
83-32-9	Acenaphthene	U	380	1.0	330	380	74	
51-28-5	2,4-Dinitrophenol	U	1400	1.0	1200	1400	430	
132-64-9	Dibenzofuran	U	380	1.0	330	380	90	
100-02-7	4-Nitrophenol	U	1400	1.0	1200	1400	350	
121-14-2	2,4-Dinitrotoluene	U	380	1.0	330	380	97	
84-66-2	Diethylphthalate	U	380	1.0	330	380	91	
7005-72-3	4-Chlorophenyl-phenylether	U	380	1.0	330	380	89	
100-01-6	4-Nitroaniline	U	570	1.0	500	570	150	
534-52-1	4,6-Dinitro-2-Methylphenol	U	1400	1.0	1200	1400	380	
86-30-6	N-Nitrosodiphenylamine	U	750	1.0	660	750	250	
101-55-3	4-Bromophenyl-phenylether	U	380	1.0	330	380	97	
1912-24-9	Atrazine	U	380	1.0	330	380	100	
87-86-5	Pentachlorophenol	U	940	1.0	820	940	270	
120-12-7	Anthracene	U	380	1.0	330	380	96	
86-74-8	Carbazole	U	570	1.0	500	570	130	

MW 3/3/09

7

KATAHDIN ANALYTICAL SERVICES
Report of Analytical Results

Client: CH2MHill
Project: TO-009 Lejeune
PO No:
Sample Date: 12/09/08
Received Date: 12/10/08
Extraction Date: 12/15/08
Analysis Date: 22-DEC-2008 22:23
Report Date: 12/31/2008
Matrix: SOIL
% Solids: 87.5

Lab ID: SB7081-13
Client ID: MR08-SS090-08D
SDG: TO9-16
Extracted by: CB
Extraction Method: SW846 3550
Analyst: JCG
Analysis Method: SW846 8270C
Lab Prep Batch: WG59048
Units: ug/Kgdrywt

CAS#	Compound	Flags	Results	DF	PQL	Adj.PQL	Adj.MDL	
84-74-2	Di-n-butylphthalate	U	380	1.0	330	380	120	
85-68-7	Butylbenzylphthalate	U	380	1.0	330	380	110	
91-94-1	3,3'-Dichlorobenzidine	~~U~~ UJ	570	1.0	500	570	130	CEH
218-01-9	Chrysene	U	380	1.0	330	380	110	
117-81-7	bis(2-Ethylhexyl)phthalate	U	380	1.0	330	380	110	
117-84-0	Di-n-octylphthalate	U	380	1.0	330	380	240	
367-12-4	2-Fluorophenol		62%					
13127-88-3	Phenol-D6		70%					
4165-60-0	Nitrobenzene-D5		67%					
321-60-8	2-Fluorobiphenyl		66%					
118-79-6	2,4,6-Tribromophenol		51%					
1718-51-0	Terphenyl-D14		83%					

kw 3/3/09

8

KATAHDIN ANALYTICAL SERVICES
Report of Analytical Results

Client: CH2MHill
Project: TO-009 Lejeune
PO No:
Sample Date: 12/09/08
Received Date: 12/10/08
Extraction Date: 12/15/08
Analysis Date: 22-DEC-2008 23:05
Report Date: 12/31/2008
Matrix: SOIL
% Solids: 89.7

Lab ID: SB7081-15
Client ID: MR08-IS090-2-3-08D
SDG: TO9-16
Extracted by: CB
Extraction Method: SW846 3550
Analyst: JCG
Analysis Method: SW846 8270C
Lab Prep Batch: WG59048
Units: ug/Kgdrywt

CAS#	Compound	Flags	Results	DF	PQL	Adj.PQL	Adj.MDL
100-52-7	Benzaldehyde	~~U~~ UJ	560	1.0	500	560	130 CCH
108-95-2	Phenol	U	560	1.0	500	560	170
111-44-4	Bis(2-Chloroethyl)ether	U	370	1.0	330	370	90
95-57-8	2-Chlorophenol	U	560	1.0	500	560	180
95-48-7	2-Methylphenol	U	670	1.0	600	670	220
108-60-1	2,2'-Oxybis(1-chloropropane)	U	370	1.0	330	370	99
98-86-2	Acetophenone	U	670	1.0	600	670	200
621-64-7	N-Nitroso-di-n-propylamine	U	370	1.0	330	370	92
65794-96-9	3&4-Methylphenol	U	670	1.0	600	670	210
67-72-1	Hexachloroethane	U	370	1.0	330	370	110
98-95-3	Nitrobenzene	~~U~~ UJ	370	1.0	330	370	100 CCH
78-59-1	Isophorone	U	370	1.0	330	370	84
88-75-5	2-Nitrophenol	U	670	1.0	600	670	190
105-67-9	2,4-Dimethylphenol	U	560	1.0	500	560	180
111-91-1	Bis(2-Chloroethoxy)methane	U	370	1.0	330	370	110
120-83-2	2,4-Dichlorophenol	U	560	1.0	500	560	170
106-47-8	4-Chloroaniline	U	560	1.0	500	560	130
105-60-2	Caprolactam	U	560	1.0	500	560	160
59-50-7	4-Chloro-3-Methylphenol	U	560	1.0	500	560	180
88-06-2	2,4,6-Trichlorophenol	U	560	1.0	500	560	170
95-95-4	2,4,5-Trichlorophenol	U	560	1.0	500	560	170
91-58-7	2-Chloronaphthalene	U	370	1.0	330	370	97
92-52-4	1,1'-Biphenyl	U	370	1.0	330	370	81
88-74-4	2-Nitroaniline	U	560	1.0	500	560	84
131-11-3	Dimethyl Phthalate	U	370	1.0	330	370	87
606-20-2	2,6-Dinitrotoluene	U	370	1.0	330	370	88
208-96-8	Acenaphthylene	U	370	1.0	330	370	78
99-09-2	3-Nitroaniline	U	560	1.0	500	560	100
83-32-9	Acenaphthene	U	370	1.0	330	370	72
51-28-5	2,4-Dinitrophenol	U	1300	1.0	1200	1300	420
132-64-9	Dibenzofuran	U	370	1.0	330	370	88
100-02-7	4-Nitrophenol	U	1300	1.0	1200	1300	340
121-14-2	2,4-Dinitrotoluene	U	370	1.0	330	370	95
84-66-2	Diethylphthalate	U	370	1.0	330	370	89
7005-72-3	4-Chlorophenyl-phenylether	U	370	1.0	330	370	87
100-01-6	4-Nitroaniline	U	560	1.0	500	560	150
534-52-1	4,6-Dinitro-2-Methylphenol	U	1300	1.0	1200	1300	380
86-30-6	N-Nitrosodiphenylamine	U	740	1.0	660	740	240
101-55-3	4-Bromophenyl-phenylether	U	370	1.0	330	370	95
1912-24-9	Atrazine	U	370	1.0	330	370	100
87-86-5	Pentachlorophenol	U	910	1.0	820	910	260
120-12-7	Anthracene	U	370	1.0	330	370	94
86-74-8	Carbazole	U	560	1.0	500	560	120

LW 3/3/09

8

KATAHDIN ANALYTICAL SERVICES
Report of Analytical Results

Client: CH2MHill
Project: TO-009 Lejeune
PO No:
Sample Date: 12/09/08
Received Date: 12/10/08
Extraction Date: 12/15/08
Analysis Date: 22-DEC-2008 23:05
Report Date: 12/31/2008
Matrix: SOIL
% Solids: 89.7

Lab ID: SB7081-15
Client ID: MR08-IS090-2-3-08D
SDG: TO9-16
Extracted by: CB
Extraction Method: SW846 3550
Analyst: JCG
Analysis Method: SW846 8270C
Lab Prep Batch: WG59048
Units: ug/Kgdrywt

CAS#	Compound	Flags	Results	DF	PQL	Adj.PQL	Adj.MDL	
84-74-2	Di-n-butylphthalate	U	370	1.0	330	370	110	
85-68-7	Butylbenzylphthalate	U	370	1.0	330	370	100	
91-94-1	3,3'-Dichlorobenzidine	~~U~~ UJ	560	1.0	500	560	130	CCH
218-01-9	Chrysene	U	370	1.0	330	370	100	
117-81-7	bis(2-Ethylhexyl)phthalate	U	370	1.0	330	370	110	
117-84-0	Di-n-octylphthalate	U	370	1.0	330	370	240	
367-12-4	2-Fluorophenol		77%					
13127-88-3	Phenol-D6		79%					
4165-60-0	Nitrobenzene-D5		78%					
321-60-8	2-Fluorobiphenyl		79%					
118-79-6	2,4,6-Tribromophenol		83%					
1718-51-0	Terphenyl-D14		92%					

MW
3/3/09

9

KATAHDIN ANALYTICAL SERVICES
Report of Analytical Results

Client: CH2MHill
Project: TO-009 Lejeune
PO No:
Sample Date: 12/09/08
Received Date: 12/10/08
Extraction Date: 12/15/08
Analysis Date: 24-DEC-2008 18:10
Report Date: 12/31/2008
Matrix: SOIL
% Solids: 93.3

Lab ID: SB7081-17
Client ID: MR08-SS115-08D
SDG: TO9-16
Extracted by: CB
Extraction Method: SW846 3550
Analyst: JCG
Analysis Method: SW846 8270C
Lab Prep Batch: WG59048
Units: ug/Kgdrywt

CAS#	Compound	Flags	Results	DF	PQL	Adj.PQL	Adj.MDL	
100-52-7	Benzaldehyde	~~U~~ UJ	540	1.0	500	540	130	CCH
108-95-2	Phenol	U	540	1.0	500	540	170	
111-44-4	Bis(2-Chloroethyl)ether	U	350	1.0	330	350	87	
95-57-8	2-Chlorophenol	U	540	1.0	500	540	180	
95-48-7	2-Methylphenol	U	640	1.0	600	640	210	
108-60-1	2,2'-Oxybis(1-chloropropane)	U	350	1.0	330	350	95	
98-86-2	Acetophenone	U	640	1.0	600	640	190	
621-64-7	N-Nitroso-di-n-propylamine	U	350	1.0	330	350	89	
65794-96-9	3&4-Methylphenol	U	640	1.0	600	640	200	
67-72-1	Hexachloroethane	U	350	1.0	330	350	100	
98-95-3	Nitrobenzene	~~U~~ UJ	350	1.0	330	350	98	CCH
78-59-1	Isophorone	U	350	1.0	330	350	80	
88-75-5	2-Nitrophenol	U	640	1.0	600	640	180	
105-67-9	2,4-Dimethylphenol	U	540	1.0	500	540	180	
111-91-1	Bis(2-Chloroethoxy)methane	U	350	1.0	330	350	100	
120-83-2	2,4-Dichlorophenol	U	540	1.0	500	540	160	
106-47-8	4-Chloroaniline	U	540	1.0	500	540	130	
105-60-2	Caprolactam	U	540	1.0	500	540	150	
59-50-7	4-Chloro-3-Methylphenol	U	540	1.0	500	540	180	
88-06-2	2,4,6-Trichlorophenol	U	540	1.0	500	540	170	
95-95-4	2,4,5-Trichlorophenol	U	540	1.0	500	540	170	
91-58-7	2-Chloronaphthalene	U	350	1.0	330	350	93	
92-52-4	1,1'-Biphenyl	U	350	1.0	330	350	78	
88-74-4	2-Nitroaniline	U	540	1.0	500	540	80	
131-11-3	Dimethyl Phthalate	U	350	1.0	330	350	84	
606-20-2	2,6-Dinitrotoluene	U	350	1.0	330	350	85	
208-96-8	Acenaphthylene	U	350	1.0	330	350	75	
99-09-2	3-Nitroaniline	U	540	1.0	500	540	100	
83-32-9	Acenaphthene	U	350	1.0	330	350	70	
51-28-5	2,4-Dinitrophenol	U	1300	1.0	1200	1300	400	
132-64-9	Dibenzofuran	U	350	1.0	330	350	85	
100-02-7	4-Nitrophenol	U	1300	1.0	1200	1300	330	
121-14-2	2,4-Dinitrotoluene	U	350	1.0	330	350	91	
84-66-2	Diethylphthalate	U	350	1.0	330	350	86	
7005-72-3	4-Chlorophenyl-phenylether	U	350	1.0	330	350	84	
100-01-6	4-Nitroaniline	U	540	1.0	500	540	140	
534-52-1	4,6-Dinitro-2-Methylphenol	U	1300	1.0	1200	1300	360	
86-30-6	N-Nitrosodiphenylamine	U	710	1.0	660	710	230	
101-55-3	4-Bromophenyl-phenylether	U	350	1.0	330	350	91	
1912-24-9	Atrazine	U	350	1.0	330	350	98	
87-86-5	Pentachlorophenol	U	880	1.0	820	880	250	
120-12-7	Anthracene	U	350	1.0	330	350	90	
86-74-8	Carbazole	U	540	1.0	500	540	120	

CW
3/3/09

9

KATAHDIN ANALYTICAL SERVICES
Report of Analytical Results

Client: CH2MHill
Project: TO-009 Lejeune
PO No:
Sample Date: 12/09/08
Received Date: 12/10/08
Extraction Date: 12/15/08
Analysis Date: 24-DEC-2008 18:10
Report Date: 12/31/2008
Matrix: SOIL
% Solids: 93.3

Lab ID: SB7081-17
Client ID: MR08-SS115-08D
SDG: TO9-16
Extracted by: CB
Extraction Method: SW846 3550
Analyst: JCG
Analysis Method: SW846 8270C
Lab Prep Batch: WG59048
Units: ug/Kgdrywt

CAS#	Compound	Flags	Results	DF	PQL	Adj.PQL	Adj.MDL
84-74-2	Di-n-butylphthalate	U	350	1.0	330	350	110
85-68-7	Butylbenzylphthalate	U	350	1.0	330	350	100
91-94-1	3,3'-Dichlorobenzidine	~~U~~ UJ	540	1.0	500	540	120 CCd
218-01-9	Chrysene	U	350	1.0	330	350	100
117-81-7	bis(2-Ethylhexyl)phthalate		410	1.0	330	350	100
117-84-0	Di-n-octylphthalate	U	350	1.0	330	350	230
367-12-4	2-Fluorophenol		76%				
13127-88-3	Phenol-D6		92%				
4165-60-0	Nitrobenzene-D5		77%				
321-60-8	2-Fluorobiphenyl		89%				
118-79-6	2,4,6-Tribromophenol		65%				
1718-51-0	Terphenyl-D14		107%				

lw 3/3/09

10

KATAHDIN ANALYTICAL SERVICES
Report of Analytical Results

Client: CH2MHill
Project: TO-009 Lejeune
PO No:
Sample Date: 12/09/08
Received Date: 12/10/08
Extraction Date: 12/15/08
Analysis Date: 24-DEC-2008 17:26
Report Date: 12/31/2008
Matrix: SOIL
% Solids: 90.6

Lab ID: SB7081-19
Client ID: MR08-IS115-2-3-08D
SDG: TO9-16
Extracted by: CB
Extraction Method: SW846 3550
Analyst: JCG
Analysis Method: SW846 8270C
Lab Prep Batch: WG59048
Units: ug/Kgdrywt

CAS#	Compound	Flags	Results	DF	PQL	Adj.PQL	Adj.MDL	
100-52-7	Benzaldehyde	~~U~~ UJ	550	1.0	500	550	130	CCH
108-95-2	Phenol	U	550	1.0	500	550	170	
111-44-4	Bis(2-Chloroethyl)ether	U	360	1.0	330	360	89	
95-57-8	2-Chlorophenol	U	550	1.0	500	550	180	
95-48-7	2-Methylphenol	U	660	1.0	600	660	220	
108-60-1	2,2'-Oxybis(1-chloropropane)	U	360	1.0	330	360	98	
98-86-2	Acetophenone	U	660	1.0	600	660	200	
621-64-7	N-Nitroso-di-n-propylamine	U	360	1.0	330	360	92	
65794-96-9	3&4-Methylphenol	U	660	1.0	600	660	210	
67-72-1	Hexachloroethane	U	360	1.0	330	360	100	
98-95-3	Nitrobenzene	~~U~~ UJ	360	1.0	330	360	100	CCH
78-59-1	Isophorone	U	360	1.0	330	360	83	
88-75-5	2-Nitrophenol	U	660	1.0	600	660	180	
105-67-9	2,4-Dimethylphenol	U	550	1.0	500	550	180	
111-91-1	Bis(2-Chloroethoxy)methane	U	360	1.0	330	360	100	
120-83-2	2,4-Dichlorophenol	U	550	1.0	500	550	160	
106-47-8	4-Chloroaniline	U	550	1.0	500	550	130	
105-60-2	Caprolactam	U	550	1.0	500	550	160	
59-50-7	4-Chloro-3-Methylphenol	U	550	1.0	500	550	180	
88-06-2	2,4,6-Trichlorophenol	U	550	1.0	500	550	170	
95-95-4	2,4,5-Trichlorophenol	U	550	1.0	500	550	170	
91-58-7	2-Chloronaphthalene	U	360	1.0	330	360	96	
92-52-4	1,1'-Biphenyl	U	360	1.0	330	360	80	
88-74-4	2-Nitroaniline	U	550	1.0	500	550	83	
131-11-3	Dimethyl Phthalate	U	360	1.0	330	360	86	
606-20-2	2,6-Dinitrotoluene	U	360	1.0	330	360	87	
208-96-8	Acenaphthylene	U	360	1.0	330	360	77	
99-09-2	3-Nitroaniline	U	550	1.0	500	550	100	
83-32-9	Acenaphthene	U	360	1.0	330	360	72	
51-28-5	2,4-Dinitrophenol	U	1300	1.0	1200	1300	420	
132-64-9	Dibenzofuran	U	360	1.0	330	360	87	
100-02-7	4-Nitrophenol	U	1300	1.0	1200	1300	340	
121-14-2	2,4-Dinitrotoluene	U	360	1.0	330	360	94	
84-66-2	Diethylphthalate	U	360	1.0	330	360	88	
7005-72-3	4-Chlorophenyl-phenylether	U	360	1.0	330	360	86	
100-01-6	4-Nitroaniline	U	550	1.0	500	550	150	
534-52-1	4,6-Dinitro-2-Methylphenol	U	1300	1.0	1200	1300	370	
86-30-6	N-Nitrosodiphenylamine	U	730	1.0	660	730	240	
101-55-3	4-Bromophenyl-phenylether	U	360	1.0	330	360	94	
1912-24-9	Atrazine	U	360	1.0	330	360	100	
87-86-5	Pentachlorophenol	U	900	1.0	820	900	260	
120-12-7	Anthracene	U	360	1.0	330	360	93	
86-74-8	Carbazole	U	550	1.0	500	550	120	

LW
3/3/09

10

KATAHDIN ANALYTICAL SERVICES
Report of Analytical Results

Client: CH2MHill
Project: TO-009 Lejeune
PO No:
Sample Date: 12/09/08
Received Date: 12/10/08
Extraction Date: 12/15/08
Analysis Date: 24-DEC-2008 17:26
Report Date: 12/31/2008
Matrix: SOIL
% Solids: 90.6

Lab ID: SB7081-19
Client ID: MR08-IS115-2-3-08D
SDG: TO9-16
Extracted by: CB
Extraction Method: SW846 3550
Analyst: JCG
Analysis Method: SW846 8270C
Lab Prep Batch: WG59048
Units: ug/Kgdrywt

CAS#	Compound	Flags	Results	DF	PQL	Adj.PQL	Adj.MDL	
84-74-2	Di-n-butylphthalate	U	360	1.0	330	360	110	
85-68-7	Butylbenzylphthalate	U	360	1.0	330	360	100	
91-94-1	3,3'-Dichlorobenzidine	~~J~~ UJ	550	1.0	500	550	120	CCH
218-01-9	Chrysene	U	360	1.0	330	360	100	
117-81-7	bis(2-Ethylhexyl)phthalate	J	120	1.0	330	360	110	
117-84-0	Di-n-octylphthalate	U	360	1.0	330	360	230	
367-12-4	2-Fluorophenol		65%					
13127-88-3	Phenol-D6		82%					
4165-60-0	Nitrobenzene-D5		72%					
321-60-8	2-Fluorobiphenyl		79%					
118-79-6	2,4,6-Tribromophenol		48%					
1718-51-0	Terphenyl-D14		110%					

lcW
3/3/09

KATAHDIN ANALYTICAL SERVICES
Report of Analytical Results

Client: CH2MHill
Project: TO-009 Lejeune
PO No:
Sample Date: 12/09/08
Received Date: 12/10/08
Extraction Date: 12/15/08
Analysis Date: 23-DEC-2008 12:24
Report Date: 12/31/2008
Matrix: SOIL
% Solids: 94.7

Lab ID: SB7081-21
Client ID: MR08-SS114-08D
SDG: TO9-16
Extracted by: CB
Extraction Method: SW846 3550
Analyst: JCG
Analysis Method: SW846 8270C
Lab Prep Batch: WG59048
Units: ug/Kgdrywt

CAS#	Compound	Flags	Results	DF	PQL	Adj.PQL	Adj.MDL
100-52-7	Benzaldehyde	~~U~~ UJ	530	1.0	500	530	130 CCH
108-95-2	Phenol	U	530	1.0	500	530	160
111-44-4	Bis(2-Chloroethyl)ether	U	350	1.0	330	350	86
95-57-8	2-Chlorophenol	U	530	1.0	500	530	170
95-48-7	2-Methylphenol	U	630	1.0	600	630	210
108-60-1	2,2'-Oxybis(1-chloropropane)	U	350	1.0	330	350	94
98-86-2	Acetophenone	U	630	1.0	600	630	190
621-64-7	N-Nitroso-di-n-propylamine	U	350	1.0	330	350	88
65794-96-9	3&4-Methylphenol	U	630	1.0	600	630	200
67-72-1	Hexachloroethane	U	350	1.0	330	350	100
98-95-3	Nitrobenzene	~~U~~ UJ	350	1.0	330	350	96 CCH
78-59-1	Isophorone	U	350	1.0	330	350	79
88-75-5	2-Nitrophenol	U	630	1.0	600	630	180
105-67-9	2,4-Dimethylphenol	U	530	1.0	500	530	170
111-91-1	Bis(2-Chloroethoxy)methane	U	350	1.0	330	350	100
120-83-2	2,4-Dichlorophenol	U	530	1.0	500	530	160
106-47-8	4-Chloroaniline	U	530	1.0	500	530	120
105-60-2	Caprolactam	U	530	1.0	500	530	150
59-50-7	4-Chloro-3-Methylphenol	U	530	1.0	500	530	180
88-06-2	2,4,6-Trichlorophenol	U	530	1.0	500	530	160
95-95-4	2,4,5-Trichlorophenol	U	530	1.0	500	530	160
91-58-7	2-Chloronaphthalene	U	350	1.0	330	350	92
92-52-4	1,1'-Biphenyl	U	350	1.0	330	350	77
88-74-4	2-Nitroaniline	U	530	1.0	500	530	79
131-11-3	Dimethyl Phthalate	U	350	1.0	330	350	82
606-20-2	2,6-Dinitrotoluene	U	350	1.0	330	350	83
208-96-8	Acenaphthylene	U	350	1.0	330	350	74
99-09-2	3-Nitroaniline	U	530	1.0	500	530	99
83-32-9	Acenaphthene	U	350	1.0	330	350	69
51-28-5	2,4-Dinitrophenol	U	1300	1.0	1200	1300	400
132-64-9	Dibenzofuran	U	350	1.0	330	350	83
100-02-7	4-Nitrophenol	U	1300	1.0	1200	1300	330
121-14-2	2,4-Dinitrotoluene	U	350	1.0	330	350	90
84-66-2	Diethylphthalate	U	350	1.0	330	350	84
7005-72-3	4-Chlorophenyl-phenylether	U	350	1.0	330	350	82
100-01-6	4-Nitroaniline	U	530	1.0	500	530	140
534-52-1	4,6-Dinitro-2-Methylphenol	U	1300	1.0	1200	1300	360
86-30-6	N-Nitrosodiphenylamine	U	700	1.0	660	700	230
101-55-3	4-Bromophenyl-phenylether	U	350	1.0	330	350	90
1912-24-9	Atrazine	U	350	1.0	330	350	96
87-86-5	Pentachlorophenol	U	870	1.0	820	870	250
120-12-7	Anthracene	U	350	1.0	330	350	89
86-74-8	Carbazole	U	530	1.0	500	530	120

lw 3/3/09

11

KATAHDIN ANALYTICAL SERVICES
Report of Analytical Results

Client: CH2MHill
Project: TO-009 Lejeune
PO No:
Sample Date: 12/09/08
Received Date: 12/10/08
Extraction Date: 12/15/08
Analysis Date: 23-DEC-2008 12:24
Report Date: 12/31/2008
Matrix: SOIL
% Solids: 94.7

Lab ID: SB7081-21
Client ID: MR08-SS114-08D
SDG: TO9-16
Extracted by: CB
Extraction Method: SW846 3550
Analyst: JCG
Analysis Method: SW846 8270C
Lab Prep Batch: WG59048
Units: ug/Kgdrywt

CAS#	Compound	Flags	Results	DF	PQL	Adj.PQL	Adj.MDL
84-74-2	Di-n-butylphthalate	U	350	1.0	330	350	110
85-68-7	Butylbenzylphthalate	U	350	1.0	330	350	98
91-94-1	3,3'-Dichlorobenzidine	~~U~~ UJ	530	1.0	500	530	120 CCH
218-01-9	Chrysene	U	350	1.0	330	350	100
117-81-7	bis(2-Ethylhexyl)phthalate	U	350	1.0	330	350	100
117-84-0	Di-n-octylphthalate	U	350	1.0	330	350	220
367-12-4	2-Fluorophenol		76%				
13127-88-3	Phenol-D6		84%				
4165-60-0	Nitrobenzene-D5		79%				
321-60-8	2-Fluorobiphenyl		81%				
118-79-6	2,4,6-Tribromophenol		82%				
1718-51-0	Terphenyl-D14		106%				

lw 3/3/09

12

KATAHDIN ANALYTICAL SERVICES
Report of Analytical Results

Client: CH2MHill
Project: TO-009 Lejeune
PO No:
Sample Date: 12/09/08
Received Date: 12/10/08
Extraction Date: 12/15/08
Analysis Date: 23-DEC-2008 14:36
Report Date: 12/31/2008
Matrix: SOIL
% Solids: 91.6

Lab ID: SB7081-23
Client ID: MR08-IS114-2-3-08D
SDG: TO9-16
Extracted by: CB
Extraction Method: SW846 3550
Analyst: JCG
Analysis Method: SW846 8270C
Lab Prep Batch: WG59048
Units: ug/Kgdrywt

CAS#	Compound	Flags	Results	DF	PQL	Adj.PQL	Adj.MDL	
100-52-7	Benzaldehyde	~~U~~ UJ	540	1.0	500	540	130	CCH
108-95-2	Phenol	U	540	1.0	500	540	170	
111-44-4	Bis(2-Chloroethyl)ether	U	360	1.0	330	360	88	
95-57-8	2-Chlorophenol	U	540	1.0	500	540	180	
95-48-7	2-Methylphenol	U	660	1.0	600	660	220	
108-60-1	2,2'-Oxybis(1-chloropropane)	U	360	1.0	330	360	97	
98-86-2	Acetophenone	U	660	1.0	600	660	190	
621-64-7	N-Nitroso-di-n-propylamine	U	360	1.0	330	360	91	
65794-96-9	3&4-Methylphenol	U	660	1.0	600	660	200	
67-72-1	Hexachloroethane	U	360	1.0	330	360	100	
98-95-3	Nitrobenzene	~~U~~ UJ	360	1.0	330	360	99	CCH
78-59-1	Isophorone	U	360	1.0	330	360	82	
88-75-5	2-Nitrophenol	U	660	1.0	600	660	180	
105-67-9	2,4-Dimethylphenol	U	540	1.0	500	540	180	
111-91-1	Bis(2-Chloroethoxy)methane	U	360	1.0	330	360	100	
120-83-2	2,4-Dichlorophenol	U	540	1.0	500	540	160	
106-47-8	4-Chloroaniline	U	540	1.0	500	540	130	
105-60-2	Caprolactam	U	540	1.0	500	540	160	
59-50-7	4-Chloro-3-Methylphenol	U	540	1.0	500	540	180	
88-06-2	2,4,6-Trichlorophenol	U	540	1.0	500	540	170	
95-95-4	2,4,5-Trichlorophenol	U	540	1.0	500	540	170	
91-58-7	2-Chloronaphthalene	U	360	1.0	330	360	95	
92-52-4	1,1'-Biphenyl	U	360	1.0	330	360	80	
88-74-4	2-Nitroaniline	U	540	1.0	500	540	82	
131-11-3	Dimethyl Phthalate	U	360	1.0	330	360	85	
606-20-2	2,6-Dinitrotoluene	U	360	1.0	330	360	86	
208-96-8	Acenaphthylene	U	360	1.0	330	360	76	
99-09-2	3-Nitroaniline	U	540	1.0	500	540	100	
83-32-9	Acenaphthene	U	360	1.0	330	360	71	
51-28-5	2,4-Dinitrophenol	U	1300	1.0	1200	1300	410	
132-64-9	Dibenzofuran	U	360	1.0	330	360	86	
100-02-7	4-Nitrophenol	U	1300	1.0	1200	1300	340	
121-14-2	2,4-Dinitrotoluene	U	360	1.0	330	360	93	
84-66-2	Diethylphthalate	U	360	1.0	330	360	87	
7005-72-3	4-Chlorophenyl-phenylether	U	360	1.0	330	360	85	
100-01-6	4-Nitroaniline	U	540	1.0	500	540	150	
534-52-1	4,6-Dinitro-2-Methylphenol	U	1300	1.0	1200	1300	370	
86-30-6	N-Nitrosodiphenylamine	U	720	1.0	660	720	240	
101-55-3	4-Bromophenyl-phenylether	U	360	1.0	330	360	93	
1912-24-9	Atrazine	U	360	1.0	330	360	99	
87-86-5	Pentachlorophenol	U	900	1.0	820	900	260	
120-12-7	Anthracene	U	360	1.0	330	360	92	
86-74-8	Carbazole	U	540	1.0	500	540	120	

lcw 3/3/09

KATAHDIN ANALYTICAL SERVICES
Report of Analytical Results

Client: CH2MHill
Project: TO-009 Lejeune
PO No:
Sample Date: 12/09/08
Received Date: 12/10/08
Extraction Date: 12/15/08
Analysis Date: 23-DEC-2008 14:36
Report Date: 12/31/2008
Matrix: SOIL
% Solids: 91.6

Lab ID: SB7081-23
Client ID: MR08-IS114-2-3-08D
SDG: TO9-16
Extracted by: CB
Extraction Method: SW846 3550
Analyst: JCG
Analysis Method: SW846 8270C
Lab Prep Batch: WG59048
Units: ug/Kgdrywt

CAS#	Compound	Flags	Results	DF	PQL	Adj.PQL	Adj.MDL	
84-74-2	Di-n-butylphthalate	U	360	1.0	330	360	110	
85-68-7	Butylbenzylphthalate	U	360	1.0	330	360	100	
91-94-1	3,3'-Dichlorobenzidine	~~U~~ UJ	540	1.0	500	540	120	CCH
218-01-9	Chrysene	U	360	1.0	330	360	100	
117-81-7	bis(2-Ethylhexyl)phthalate	U	360	1.0	330	360	110	
117-84-0	Di-n-octylphthalate	U	360	1.0	330	360	230	
367-12-4	2-Fluorophenol		62%					
13127-88-3	Phenol-D6		68%					
4165-60-0	Nitrobenzene-D5		65%					
321-60-8	2-Fluorobiphenyl		65%					
118-79-6	2,4,6-Tribromophenol		78%					
1718-51-0	Terphenyl-D14		101%					

lw 3/3/09

13

KATAHDIN ANALYTICAL SERVICES
Report of Analytical Results

Client: CH2MHill
Project: TO-009 Lejeune
PO No:
Sample Date: 12/09/08
Received Date: 12/10/08
Extraction Date: 12/15/08
Analysis Date: 24-DEC-2008 18:54
Report Date: 12/31/2008
Matrix: SOIL
% Solids: 92.4

Lab ID: SB7081-25
Client ID: MR08-SS113-08D
SDG: TO9-16
Extracted by: CB
Extraction Method: SW846 3550
Analyst: JCG
Analysis Method: SW846 8270C
Lab Prep Batch: WG59048
Units: ug/Kgdrywt

CAS#	Compound	Flags	Results	DF	PQL	Adj.PQL	Adj.MDL	
100-52-7	Benzaldehyde	~~U~~ UJ	540	1.0	500	540	130	CCH
108-95-2	Phenol	U	540	1.0	500	540	170	
111-44-4	Bis(2-Chloroethyl)ether	U	360	1.0	330	360	88	
95-57-8	2-Chlorophenol	U	540	1.0	500	540	180	
95-48-7	2-Methylphenol	U	650	1.0	600	650	220	
108-60-1	2,2'-Oxybis(1-chloropropane)	U	360	1.0	330	360	96	
98-86-2	Acetophenone	U	650	1.0	600	650	190	
621-64-7	N-Nitroso-di-n-propylamine	U	360	1.0	330	360	90	
65794-96-9	3&4-Methylphenol	U	650	1.0	600	650	200	
67-72-1	Hexachloroethane	U	360	1.0	330	360	100	
98-95-3	Nitrobenzene	~~U~~ UJ	360	1.0	330	360	98	CCH
78-59-1	Isophorone	U	360	1.0	330	360	81	
88-75-5	2-Nitrophenol	U	650	1.0	600	650	180	
105-67-9	2,4-Dimethylphenol	U	540	1.0	500	540	180	
111-91-1	Bis(2-Chloroethoxy)methane	U	360	1.0	330	360	100	
120-83-2	2,4-Dichlorophenol	U	540	1.0	500	540	160	
106-47-8	4-Chloroaniline	U	540	1.0	500	540	130	
105-60-2	Caprolactam	U	540	1.0	500	540	160	
59-50-7	4-Chloro-3-Methylphenol	U	540	1.0	500	540	180	
88-06-2	2,4,6-Trichlorophenol	U	540	1.0	500	540	170	
95-95-4	2,4,5-Trichlorophenol	U	540	1.0	500	540	170	
91-58-7	2-Chloronaphthalene	U	360	1.0	330	360	94	
92-52-4	1,1'-Biphenyl	U	360	1.0	330	360	79	
88-74-4	2-Nitroaniline	U	540	1.0	500	540	81	
131-11-3	Dimethyl Phthalate	U	360	1.0	330	360	84	
606-20-2	2,6-Dinitrotoluene	U	360	1.0	330	360	85	
208-96-8	Acenaphthylene	U	360	1.0	330	360	76	
99-09-2	3-Nitroaniline	U	540	1.0	500	540	100	
83-32-9	Acenaphthene	U	360	1.0	330	360	70	
51-28-5	2,4-Dinitrophenol	U	1300	1.0	1200	1300	410	
132-64-9	Dibenzofuran	U	360	1.0	330	360	85	
100-02-7	4-Nitrophenol	U	1300	1.0	1200	1300	330	
121-14-2	2,4-Dinitrotoluene	U	360	1.0	330	360	92	
84-66-2	Diethylphthalate	U	360	1.0	330	360	86	
7005-72-3	4-Chlorophenyl-phenylether	U	360	1.0	330	360	84	
100-01-6	4-Nitroaniline	U	540	1.0	500	540	140	
534-52-1	4,6-Dinitro-2-Methylphenol	U	1300	1.0	1200	1300	360	
86-30-6	N-Nitrosodiphenylamine	U	710	1.0	660	710	240	
101-55-3	4-Bromophenyl-phenylether	U	360	1.0	330	360	92	
1912-24-9	Atrazine	U	360	1.0	330	360	98	
87-86-5	Pentachlorophenol	U	890	1.0	820	890	260	
120-12-7	Anthracene	U	360	1.0	330	360	91	
86-74-8	Carbazole	U	540	1.0	500	540	120	

lw 3/3/09

KATAHDIN ANALYTICAL SERVICES
Report of Analytical Results

Client: CH2MHill
Project: TO-009 Lejeune
PO No:
Sample Date: 12/09/08
Received Date: 12/10/08
Extraction Date: 12/15/08
Analysis Date: 24-DEC-2008 18:54
Report Date: 12/31/2008
Matrix: SOIL
% Solids: 92.4

Lab ID: SB7081-25
Client ID: MR08-SS113-08D
SDG: TO9-16
Extracted by: CB
Extraction Method: SW846 3550
Analyst: JCG
Analysis Method: SW846 8270C
Lab Prep Batch: WG59048
Units: ug/Kgdrywt

CAS#	Compound	Flags	Results	DF	PQL	Adj.PQL	Adj.MDL
84-74-2	Di-n-butylphthalate	U	360	1.0	330	360	110
85-68-7	Butylbenzylphthalate	U	360	1.0	330	360	100
91-94-1	3,3'-Dichlorobenzidine	~~U~~ UJ	540	1.0	500	540	120 CCH
218-01-9	Chrysene	U	360	1.0	330	360	100
117-81-7	bis(2-Ethylhexyl)phthalate	J	300	1.0	330	360	110
117-84-0	Di-n-octylphthalate	U	360	1.0	330	360	230
367-12-4	2-Fluorophenol		77%				
13127-88-3	Phenol-D6		96%				
4165-60-0	Nitrobenzene-D5		77%				
321-60-8	2-Fluorobiphenyl		92%				
118-79-6	2,4,6-Tribromophenol		88%				
1718-51-0	Terphenyl-D14		110%				

eW 3/3/09

KATAHDIN ANALYTICAL SERVICES
Report of Analytical Results

Client: CH2MHill
Project: TO-009 Lejeune
PO No:
Sample Date: 12/09/08
Received Date: 12/10/08
Extraction Date: 12/15/08
Analysis Date: 23-DEC-2008 13:08
Report Date: 12/31/2008
Matrix: SOIL
% Solids: 87.9

Lab ID: SB7081-27
Client ID: MR08-IS113-2-3-08D
SDG: TO9-16
Extracted by: CB
Extraction Method: SW846 3550
Analyst: JCG
Analysis Method: SW846 8270C
Lab Prep Batch: WG59048
Units: ug/Kgdrywt

CAS#	Compound	Flags	Results	DF	PQL	Adj.PQL	Adj.MDL	
100-52-7	Benzaldehyde	~~U~~ UJ	570	1.0	500	570	140	CCH
108-95-2	Phenol	U	570	1.0	500	570	180	
111-44-4	Bis(2-Chloroethyl)ether	U	380	1.0	330	380	92	
95-57-8	2-Chlorophenol	U	570	1.0	500	570	190	
95-48-7	2-Methylphenol	U	680	1.0	600	680	230	
108-60-1	2,2'-Oxybis(1-chloropropane)	U	380	1.0	330	380	100	
98-86-2	Acetophenone	U	680	1.0	600	680	200	
621-64-7	N-Nitroso-di-n-propylamine	U	380	1.0	330	380	94	
65794-96-9	3&4-Methylphenol	U	680	1.0	600	680	210	
67-72-1	Hexachloroethane	U	380	1.0	330	380	110	
98-95-3	Nitrobenzene	~~U~~ UJ	380	1.0	330	380	100	CCH
78-59-1	Isophorone	U	380	1.0	330	380	85	
88-75-5	2-Nitrophenol	U	680	1.0	600	680	190	
105-67-9	2,4-Dimethylphenol	U	570	1.0	500	570	190	
111-91-1	Bis(2-Chloroethoxy)methane	U	380	1.0	330	380	110	
120-83-2	2,4-Dichlorophenol	U	570	1.0	500	570	170	
106-47-8	4-Chloroaniline	U	570	1.0	500	570	140	
105-60-2	Caprolactam	U	570	1.0	500	570	160	
59-50-7	4-Chloro-3-Methylphenol	U	570	1.0	500	570	190	
88-06-2	2,4,6-Trichlorophenol	U	570	1.0	500	570	180	
95-95-4	2,4,5-Trichlorophenol	U	570	1.0	500	570	180	
91-58-7	2-Chloronaphthalene	U	380	1.0	330	380	99	
92-52-4	1,1'-Biphenyl	U	380	1.0	330	380	83	
88-74-4	2-Nitroaniline	U	570	1.0	500	570	85	
131-11-3	Dimethyl Phthalate	U	380	1.0	330	380	89	
606-20-2	2,6-Dinitrotoluene	U	380	1.0	330	380	90	
208-96-8	Acenaphthylene	U	380	1.0	330	380	80	
99-09-2	3-Nitroaniline	U	570	1.0	500	570	110	
83-32-9	Acenaphthene	U	380	1.0	330	380	74	
51-28-5	2,4-Dinitrophenol	U	1400	1.0	1200	1400	430	
132-64-9	Dibenzofuran	U	380	1.0	330	380	90	
100-02-7	4-Nitrophenol	U	1400	1.0	1200	1400	350	
121-14-2	2,4-Dinitrotoluene	U	380	1.0	330	380	97	
84-66-2	Diethylphthalate	U	380	1.0	330	380	91	
7005-72-3	4-Chlorophenyl-phenylether	U	380	1.0	330	380	89	
100-01-6	4-Nitroaniline	U	570	1.0	500	570	150	
534-52-1	4,6-Dinitro-2-Methylphenol	U	1400	1.0	1200	1400	380	
86-30-6	N-Nitrosodiphenylamine	U	750	1.0	660	750	250	
101-55-3	4-Bromophenyl-phenylether	U	380	1.0	330	380	97	
1912-24-9	Atrazine	U	380	1.0	330	380	100	
87-86-5	Pentachlorophenol	U	930	1.0	820	930	270	
120-12-7	Anthracene	U	380	1.0	330	380	96	
86-74-8	Carbazole	U	570	1.0	500	570	130	

lle 3/3/09

KATAHDIN ANALYTICAL SERVICES
Report of Analytical Results

Client: CH2MHill
Project: TO-009 Lejeune
PO No:
Sample Date: 12/09/08
Received Date: 12/10/08
Extraction Date: 12/15/08
Analysis Date: 23-DEC-2008 13:08
Report Date: 12/31/2008
Matrix: SOIL
% Solids: 87.9

Lab ID: SB7081-27
Client ID: MR08-IS113-2-3-08D
SDG: TO9-16
Extracted by: CB
Extraction Method: SW846 3550
Analyst: JCG
Analysis Method: SW846 8270C
Lab Prep Batch: WG59048
Units: ug/Kgdrywt

CAS#	Compound	Flags	Results	DF	PQL	Adj.PQL	Adj.MDL	
84-74-2	Di-n-butylphthalate	U	380	1.0	330	380	110	
85-68-7	Butylbenzylphthalate	U	380	1.0	330	380	100	
91-94-1	3,3'-Dichlorobenzidine	~~U~~ UJ	570	1.0	500	570	130	CCH
218-01-9	Chrysene	U	380	1.0	330	380	110	
117-81-7	bis(2-Ethylhexyl)phthalate	J	120	1.0	330	380	110	
117-84-0	Di-n-octylphthalate	U	380	1.0	330	380	240	
367-12-4	2-Fluorophenol		76%					
13127-88-3	Phenol-D6		82%					
4165-60-0	Nitrobenzene-D5		80%					
321-60-8	2-Fluorobiphenyl		81%					
118-79-6	2,4,6-Tribromophenol		73%					
1718-51-0	Terphenyl-D14		101%					

LWS 3/31/09

KATAHDIN ANALYTICAL SERVICES
Report of Analytical Results

Client: CH2MHill
Project: TO-009 Lejeune
PO No:
Sample Date: 12/09/08
Received Date: 12/10/08
Extraction Date: 12/15/08
Analysis Date: 24-DEC-2008 19:38
Report Date: 12/31/2008
Matrix: SOIL
% Solids: 93.9

Lab ID: SB7081-29
Client ID: MR08-SS129-08D
SDG: TO9-16
Extracted by: CB
Extraction Method: SW846 3550
Analyst: JCG
Analysis Method: SW846 8270C
Lab Prep Batch: WG59048
Units: ug/Kgdrywt

CAS#	Compound	Flags	Results	DF	PQL	Adj.PQL	Adj.MDL	
100-52-7	Benzaldehyde	~~U~~ UJ	530	1.0	500	530	130	CCH
108-95-2	Phenol	U	530	1.0	500	530	170	
111-44-4	Bis(2-Chloroethyl)ether	U	350	1.0	330	350	86	
95-57-8	2-Chlorophenol	U	530	1.0	500	530	170	
95-48-7	2-Methylphenol	U	640	1.0	600	640	210	
108-60-1	2,2'-Oxybis(1-chloropropane)	U	350	1.0	330	350	95	
98-86-2	Acetophenone	U	640	1.0	600	640	190	
621-64-7	N-Nitroso-di-n-propylamine	U	350	1.0	330	350	88	
65794-96-9	3&4-Methylphenol	U	640	1.0	600	640	200	
67-72-1	Hexachloroethane	U	350	1.0	330	350	100	
98-95-3	Nitrobenzene	~~U~~ UJ	350	1.0	330	350	97	CCH
78-59-1	Isophorone	U	350	1.0	330	350	80	
88-75-5	2-Nitrophenol	U	640	1.0	600	640	180	
105-67-9	2,4-Dimethylphenol	U	530	1.0	500	530	180	
111-91-1	Bis(2-Chloroethoxy)methane	U	350	1.0	330	350	100	
120-83-2	2,4-Dichlorophenol	U	530	1.0	500	530	160	
106-47-8	4-Chloroaniline	U	530	1.0	500	530	130	
105-60-2	Caprolactam	U	530	1.0	500	530	150	
59-50-7	4-Chloro-3-Methylphenol	U	530	1.0	500	530	180	
88-06-2	2,4,6-Trichlorophenol	U	530	1.0	500	530	160	
95-95-4	2,4,5-Trichlorophenol	U	530	1.0	500	530	160	
91-58-7	2-Chloronaphthalene	U	350	1.0	330	350	93	
92-52-4	1,1'-Biphenyl	U	350	1.0	330	350	78	
88-74-4	2-Nitroaniline	U	530	1.0	500	530	80	
131-11-3	Dimethyl Phthalate	U	350	1.0	330	350	83	
606-20-2	2,6-Dinitrotoluene	U	350	1.0	330	350	84	
208-96-8	Acenaphthylene	U	350	1.0	330	350	74	
99-09-2	3-Nitroaniline	U	530	1.0	500	530	100	
83-32-9	Acenaphthene	U	350	1.0	330	350	69	
51-28-5	2,4-Dinitrophenol	U	1300	1.0	1200	1300	400	
132-64-9	Dibenzofuran	U	350	1.0	330	350	84	
100-02-7	4-Nitrophenol	U	1300	1.0	1200	1300	330	
121-14-2	2,4-Dinitrotoluene	U	350	1.0	330	350	90	
84-66-2	Diethylphthalate	U	350	1.0	330	350	85	
7005-72-3	4-Chlorophenyl-phenylether	U	350	1.0	330	350	83	
100-01-6	4-Nitroaniline	U	530	1.0	500	530	140	
534-52-1	4,6-Dinitro-2-Methylphenol	U	1300	1.0	1200	1300	360	
86-30-6	N-Nitrosodiphenylamine	U	700	1.0	660	700	230	
101-55-3	4-Bromophenyl-phenylether	U	350	1.0	330	350	90	
1912-24-9	Atrazine	U	350	1.0	330	350	97	
87-86-5	Pentachlorophenol	U	870	1.0	820	870	250	
120-12-7	Anthracene	U	350	1.0	330	350	89	
86-74-8	Carbazole	U	530	1.0	500	530	120	

dlw 3/3/09

KATAHDIN ANALYTICAL SERVICES
Report of Analytical Results

Client: CH2MHill
Project: TO-009 Lejeune
PO No:
Sample Date: 12/09/08
Received Date: 12/10/08
Extraction Date: 12/15/08
Analysis Date: 24-DEC-2008 19:38
Report Date: 12/31/2008
Matrix: SOIL
% Solids: 93.9

Lab ID: SB7081-29
Client ID: MR08-SS129-08D
SDG: TO9-16
Extracted by: CB
Extraction Method: SW846 3550
Analyst: JCG
Analysis Method: SW846 8270C
Lab Prep Batch: WG59048
Units: ug/Kgdrywt

CAS#	Compound	Flags	Results	DF	PQL	Adj.PQL	Adj.MDL	
84-74-2	Di-n-butylphthalate	U	350	1.0	330	350	110	
85-68-7	Butylbenzylphthalate	U	350	1.0	330	350	99	
91-94-1	3,3'-Dichlorobenzidine	~~U~~ UJ	530	1.0	500	530	120	CCH
218-01-9	Chrysene	U	350	1.0	330	350	100	
117-81-7	bis(2-Ethylhexyl)phthalate	J	540	1.0	330	350	100	ISL
117-84-0	Di-n-octylphthalate	~~U~~ R	350	1.0	330	350	220	ISL
367-12-4	2-Fluorophenol		72%					
13127-88-3	Phenol-D6		94%					
4165-60-0	Nitrobenzene-D5		72%					
321-60-8	2-Fluorobiphenyl		94%					
118-79-6	2,4,6-Tribromophenol		80%					
1718-51-0	Terphenyl-D14		115%					

LW 3/3/09

16

KATAHDIN ANALYTICAL SERVICES
Report of Analytical Results

Client: CH2MHill
Project: TO-009 Lejeune
PO No:
Sample Date: 12/09/08
Received Date: 12/10/08
Extraction Date: 12/15/08
Analysis Date: 24-DEC-2008 15:57
Report Date: 12/31/2008
Matrix: SOIL
% Solids: 94.3

Lab ID: SB7081-31
Client ID: MR08-SS129D-08D
SDG: TO9-16
Extracted by: CB
Extraction Method: SW846 3550
Analyst: JCG
Analysis Method: SW846 8270C
Lab Prep Batch: WG59048
Units: ug/Kgdrywt

CAS#	Compound	Flags	Results	DF	PQL	Adj.PQL	Adj.MDL	
100-52-7	Benzaldehyde	~~U~~ UJ	530	1.0	500	530	130	CCH
108-95-2	Phenol	U	530	1.0	500	530	160	
111-44-4	Bis(2-Chloroethyl)ether	U	350	1.0	330	350	86	
95-57-8	2-Chlorophenol	U	530	1.0	500	530	170	
95-48-7	2-Methylphenol	U	640	1.0	600	640	210	
108-60-1	2,2'-Oxybis(1-chloropropane)	U	350	1.0	330	350	94	
98-86-2	Acetophenone	U	640	1.0	600	640	190	
621-64-7	N-Nitroso-di-n-propylamine	U	350	1.0	330	350	88	
65794-96-9	3&4-Methylphenol	U	640	1.0	600	640	200	
67-72-1	Hexachloroethane	U	350	1.0	330	350	100	
98-95-3	Nitrobenzene	~~U~~ UJ	350	1.0	330	350	96	CCH
78-59-1	Isophorone	U	350	1.0	330	350	79	
88-75-5	2-Nitrophenol	U	640	1.0	600	640	180	
105-67-9	2,4-Dimethylphenol	U	530	1.0	500	530	170	
111-91-1	Bis(2-Chloroethoxy)methane	U	350	1.0	330	350	100	
120-83-2	2,4-Dichlorophenol	U	530	1.0	500	530	160	
106-47-8	4-Chloroaniline	U	530	1.0	500	530	130	
105-60-2	Caprolactam	U	530	1.0	500	530	150	
59-50-7	4-Chloro-3-Methylphenol	U	530	1.0	500	530	180	
88-06-2	2,4,6-Trichlorophenol	U	530	1.0	500	530	160	
95-95-4	2,4,5-Trichlorophenol	U	530	1.0	500	530	160	
91-58-7	2-Chloronaphthalene	U	350	1.0	330	350	92	
92-52-4	1,1'-Biphenyl	U	350	1.0	330	350	77	
88-74-4	2-Nitroaniline	U	530	1.0	500	530	79	
131-11-3	Dimethyl Phthalate	U	350	1.0	330	350	83	
606-20-2	2,6-Dinitrotoluene	U	350	1.0	330	350	84	
208-96-8	Acenaphthylene	U	350	1.0	330	350	74	
99-09-2	3-Nitroaniline	U	530	1.0	500	530	100	
83-32-9	Acenaphthene	U	350	1.0	330	350	69	
51-28-5	2,4-Dinitrophenol	U	1300	1.0	1200	1300	400	
132-64-9	Dibenzofuran	U	350	1.0	330	350	84	
100-02-7	4-Nitrophenol	U	1300	1.0	1200	1300	330	
121-14-2	2,4-Dinitrotoluene	U	350	1.0	330	350	90	
84-66-2	Diethylphthalate	U	350	1.0	330	350	85	
7005-72-3	4-Chlorophenyl-phenylether	U	350	1.0	330	350	83	
100-01-6	4-Nitroaniline	U	530	1.0	500	530	140	
534-52-1	4,6-Dinitro-2-Methylphenol	U	1300	1.0	1200	1300	360	
86-30-6	N-Nitrosodiphenylamine	U	700	1.0	660	700	230	
101-55-3	4-Bromophenyl-phenylether	U	350	1.0	330	350	90	
1912-24-9	Atrazine	U	350	1.0	330	350	96	
87-86-5	Pentachlorophenol	U	870	1.0	820	870	250	
120-12-7	Anthracene	U	350	1.0	330	350	89	
86-74-8	Carbazole	U	530	1.0	500	530	120	

LW 3/3/09

KATAHDIN ANALYTICAL SERVICES
Report of Analytical Results

Client: CH2MHill
Project: TO-009 Lejeune
PO No:
Sample Date: 12/09/08
Received Date: 12/10/08
Extraction Date: 12/15/08
Analysis Date: 24-DEC-2008 15:57
Report Date: 12/31/2008
Matrix: SOIL
% Solids: 94.3

Lab ID: SB7081-31
Client ID: MR08-SS129D-08D
SDG: TO9-16
Extracted by: CB
Extraction Method: SW846 3550
Analyst: JCG
Analysis Method: SW846 8270C
Lab Prep Batch: WG59048
Units: ug/Kgdrywt

CAS#	Compound	Flags	Results	DF	PQL	Adj.PQL	Adj.MDL	
84-74-2	Di-n-butylphthalate	U	350	1.0	330	350	110	
85-68-7	Butylbenzylphthalate	U	350	1.0	330	350	98	
91-94-1	3,3'-Dichlorobenzidine	~~U~~ UJ	530	1.0	500	530	120	CCH
218-01-9	Chrysene	U	350	1.0	330	350	100	
117-81-7	bis(2-Ethylhexyl)phthalate	J	300	1.0	330	350	100	
117-84-0	Di-n-octylphthalate	U	350	1.0	330	350	220	
367-12-4	2-Fluorophenol		74%					
13127-88-3	Phenol-D6		83%					
4165-60-0	Nitrobenzene-D5		72%					
321-60-8	2-Fluorobiphenyl		81%					
118-79-6	2,4,6-Tribromophenol		90%					
1718-51-0	Terphenyl-D14		109%					

lw
3/3/09

17

KATAHDIN ANALYTICAL SERVICES
Report of Analytical Results

Client: CH2MHill
Project: TO-009 Lejeune
PO No:
Sample Date: 12/09/08
Received Date: 12/10/08
Extraction Date: 12/15/08
Analysis Date: 24-DEC-2008 16:41
Report Date: 12/31/2008
Matrix: SOIL
% Solids: 93.2

Lab ID: SB7081-33
Client ID: MR08-IS129-2-3-08D
SDG: TO9-16
Extracted by: CB
Extraction Method: SW846 3550
Analyst: JCG
Analysis Method: SW846 8270C
Lab Prep Batch: WG59048
Units: ug/Kgdrywt

CAS#	Compound	Flags	Results	DF	PQL	Adj.PQL	Adj.MDL	
100-52-7	Benzaldehyde	~~U~~ UJ	540	1.0	500	540	130	CCH
108-95-2	Phenol	U	540	1.0	500	540	170	
111-44-4	Bis(2-Chloroethyl)ether	U	350	1.0	330	350	87	
95-57-8	2-Chlorophenol	U	540	1.0	500	540	180	
95-48-7	2-Methylphenol	U	640	1.0	600	640	210	
108-60-1	2,2'-Oxybis(1-chloropropane)	U	350	1.0	330	350	96	
98-86-2	Acetophenone	U	640	1.0	600	640	190	
621-64-7	N-Nitroso-di-n-propylamine	U	350	1.0	330	350	89	
65794-96-9	3&4-Methylphenol	U	640	1.0	600	640	200	
67-72-1	Hexachloroethane	U	350	1.0	330	350	100	
98-95-3	Nitrobenzene	~~U~~ UJ	350	1.0	330	350	98	CCH
78-59-1	Isophorone	U	350	1.0	330	350	80	
88-75-5	2-Nitrophenol	U	640	1.0	600	640	180	
105-67-9	2,4-Dimethylphenol	U	540	1.0	500	540	180	
111-91-1	Bis(2-Chloroethoxy)methane	U	350	1.0	330	350	100	
120-83-2	2,4-Dichlorophenol	U	540	1.0	500	540	160	
106-47-8	4-Chloroaniline	U	540	1.0	500	540	130	
105-60-2	Caprolactam	U	540	1.0	500	540	150	
59-50-7	4-Chloro-3-Methylphenol	U	540	1.0	500	540	180	
88-06-2	2,4,6-Trichlorophenol	U	540	1.0	500	540	170	
95-95-4	2,4,5-Trichlorophenol	U	540	1.0	500	540	170	
91-58-7	2-Chloronaphthalene	U	350	1.0	330	350	93	
92-52-4	1,1'-Biphenyl	U	350	1.0	330	350	78	
88-74-4	2-Nitroaniline	U	540	1.0	500	540	80	
131-11-3	Dimethyl Phthalate	U	350	1.0	330	350	84	
606-20-2	2,6-Dinitrotoluene	U	350	1.0	330	350	85	
208-96-8	Acenaphthylene	U	350	1.0	330	350	75	
99-09-2	3-Nitroaniline	U	540	1.0	500	540	100	
83-32-9	Acenaphthene	U	350	1.0	330	350	70	
51-28-5	2,4-Dinitrophenol	U	1300	1.0	1200	1300	400	
132-64-9	Dibenzofuran	U	350	1.0	330	350	85	
100-02-7	4-Nitrophenol	U	1300	1.0	1200	1300	330	
121-14-2	2,4-Dinitrotoluene	U	350	1.0	330	350	91	
84-66-2	Diethylphthalate	U	350	1.0	330	350	86	
7005-72-3	4-Chlorophenyl-phenylether	U	350	1.0	330	350	84	
100-01-6	4-Nitroaniline	U	540	1.0	500	540	140	
534-52-1	4,6-Dinitro-2-Methylphenol	U	1300	1.0	1200	1300	360	
86-30-6	N-Nitrosodiphenylamine	U	710	1.0	660	710	240	
101-55-3	4-Bromophenyl-phenylether	U	350	1.0	330	350	91	
1912-24-9	Atrazine	U	350	1.0	330	350	98	
87-86-5	Pentachlorophenol	U	880	1.0	820	880	250	
120-12-7	Anthracene	U	350	1.0	330	350	90	
86-74-8	Carbazole	U	540	1.0	500	540	120	

LW 3/3/09

17

KATAHDIN ANALYTICAL SERVICES
Report of Analytical Results

Client: CH2MHill
Project: TO-009 Lejeune
PO No:
Sample Date: 12/09/08
Received Date: 12/10/08
Extraction Date: 12/15/08
Analysis Date: 24-DEC-2008 16:41
Report Date: 12/31/2008
Matrix: SOIL
% Solids: 93.2

Lab ID: SB7081-33
Client ID: MR08-IS129-2-3-08D
SDG: TO9-16
Extracted by: CB
Extraction Method: SW846 3550
Analyst: JCG
Analysis Method: SW846 8270C
Lab Prep Batch: WG59048
Units: ug/Kgdrywt

CAS#	Compound	Flags	Results	DF	PQL	Adj.PQL	Adj.MDL	
84-74-2	Di-n-butylphthalate	U	350	1.0	330	350	110	
85-68-7	Butylbenzylphthalate	U	350	1.0	330	350	100	
91-94-1	3,3'-Dichlorobenzidine	~~J~~ UJ	540	1.0	500	540	120	CCH
218-01-9	Chrysene	U	350	1.0	330	350	100	
117-81-7	bis(2-Ethylhexyl)phthalate	J	250	1.0	330	350	100	
117-84-0	Di-n-octylphthalate	U	350	1.0	330	350	230	
367-12-4	2-Fluorophenol		70%					
13127-88-3	Phenol-D6		72%					
4165-60-0	Nitrobenzene-D5		69%					
321-60-8	2-Fluorobiphenyl		76%					
118-79-6	2,4,6-Tribromophenol		82%					
1718-51-0	Terphenyl-D14		108%					

MW
3/3/09

KATAHDIN ANALYTICAL SERVICES
Report of Analytical Results

Client: CH2MHill
Project: TO-009 Lejeune
PO No:
Sample Date: 12/09/08
Received Date: 12/10/08
Extraction Date: 12/15/08
Analysis Date: 22-DEC-2008 23:48
Report Date: 12/31/2008
Matrix: SOIL
% Solids: 93.3

Lab ID: SB7081-35
Client ID: MR08-IS129D-2-3-08D
SDG: TO9-16
Extracted by: CB
Extraction Method: SW846 3550
Analyst: JCG
Analysis Method: SW846 8270C
Lab Prep Batch: WG59048
Units: ug/Kgdrywt

CAS#	Compound	Flags	Results	DF	PQL	Adj.PQL	Adj.MDL	
100-52-7	Benzaldehyde	~~U~~ UJ	540	1.0	500	540	130	CCH
108-95-2	Phenol	U	540	1.0	500	540	170	
111-44-4	Bis(2-Chloroethyl)ether	U	350	1.0	330	350	87	
95-57-8	2-Chlorophenol	U	540	1.0	500	540	180	
95-48-7	2-Methylphenol	U	640	1.0	600	640	210	
108-60-1	2,2'-Oxybis(1-chloropropane)	U	350	1.0	330	350	95	
98-86-2	Acetophenone	U	640	1.0	600	640	190	
621-64-7	N-Nitroso-di-n-propylamine	U	350	1.0	330	350	89	
65794-96-9	3&4-Methylphenol	U	640	1.0	600	640	200	
67-72-1	Hexachloroethane	U	350	1.0	330	350	100	
98-95-3	Nitrobenzene	~~U~~ UJ	350	1.0	330	350	97	CCH
78-59-1	Isophorone	U	350	1.0	330	350	80	
88-75-5	2-Nitrophenol	U	640	1.0	600	640	180	
105-67-9	2,4-Dimethylphenol	U	540	1.0	500	540	180	
111-91-1	Bis(2-Chloroethoxy)methane	U	350	1.0	330	350	100	
120-83-2	2,4-Dichlorophenol	U	540	1.0	500	540	160	
106-47-8	4-Chloroaniline	U	540	1.0	500	540	130	
105-60-2	Caprolactam	U	540	1.0	500	540	150	
59-50-7	4-Chloro-3-Methylphenol	U	540	1.0	500	540	180	
88-06-2	2,4,6-Trichlorophenol	U	540	1.0	500	540	170	
95-95-4	2,4,5-Trichlorophenol	U	540	1.0	500	540	170	
91-58-7	2-Chloronaphthalene	U	350	1.0	330	350	93	
92-52-4	1,1'-Biphenyl	U	350	1.0	330	350	78	
88-74-4	2-Nitroaniline	U	540	1.0	500	540	80	
131-11-3	Dimethyl Phthalate	U	350	1.0	330	350	84	
606-20-2	2,6-Dinitrotoluene	U	350	1.0	330	350	85	
208-96-8	Acenaphthylene	U	350	1.0	330	350	75	
99-09-2	3-Nitroaniline	U	540	1.0	500	540	100	
83-32-9	Acenaphthene	U	350	1.0	330	350	70	
51-28-5	2,4-Dinitrophenol	U	1300	1.0	1200	1300	400	
132-64-9	Dibenzofuran	U	350	1.0	330	350	85	
100-02-7	4-Nitrophenol	U	1300	1.0	1200	1300	330	
121-14-2	2,4-Dinitrotoluene	U	350	1.0	330	350	91	
84-66-2	Diethylphthalate	U	350	1.0	330	350	86	
7005-72-3	4-Chlorophenyl-phenylether	U	350	1.0	330	350	84	
100-01-6	4-Nitroaniline	U	540	1.0	500	540	140	
534-52-1	4,6-Dinitro-2-Methylphenol	U	1300	1.0	1200	1300	360	
86-30-6	N-Nitrosodiphenylamine	U	710	1.0	660	710	230	
101-55-3	4-Bromophenyl-phenylether	U	350	1.0	330	350	91	
1912-24-9	Atrazine	U	350	1.0	330	350	97	
87-86-5	Pentachlorophenol	U	880	1.0	820	880	250	
120-12-7	Anthracene	U	350	1.0	330	350	90	
86-74-8	Carbazole	U	540	1.0	500	540	120	

AW 3/3/09

KATAHDIN ANALYTICAL SERVICES
Report of Analytical Results

Client: CH2MHill
Project: TO-009 Lejeune
PO No:
Sample Date: 12/09/08
Received Date: 12/10/08
Extraction Date: 12/15/08
Analysis Date: 22-DEC-2008 23:48
Report Date: 12/31/2008
Matrix: SOIL
% Solids: 93.3

Lab ID: SB7081-35
Client ID: MR08-IS129D-2-3-08D
SDG: TO9-16
Extracted by: CB
Extraction Method: SW846 3550
Analyst: JCG
Analysis Method: SW846 8270C
Lab Prep Batch: WG59048
Units: ug/Kgdrywt

CAS#	Compound	Flags	Results	DF	PQL	Adj.PQL	Adj.MDL
84-74-2	Di-n-butylphthalate	U	350	1.0	330	350	110
85-68-7	Butylbenzylphthalate	U	350	1.0	330	350	100
91-94-1	3,3'-Dichlorobenzidine	~~U~~ UJ	540	1.0	500	540	120 CCH
218-01-9	Chrysene	U	350	1.0	330	350	100
117-81-7	bis(2-Ethylhexyl)phthalate	U	350	1.0	330	350	100
117-84-0	Di-n-octylphthalate	U	350	1.0	330	350	230
367-12-4	2-Fluorophenol		54%				
13127-88-3	Phenol-D6		54%				
4165-60-0	Nitrobenzene-D5		48%				
321-60-8	2-Fluorobiphenyl		48%				
118-79-6	2,4,6-Tribromophenol		52%				
1718-51-0	Terphenyl-D14		68%				

lw
3/3/09

KATAHDIN ANALYTICAL SERVICES
Report of Analytical Results

Client: CH2MHill
Project: TO-009 Lejeune
PO No:
Sample Date: 12/09/08
Received Date: 12/10/08
Extraction Date: 12/15/08
Analysis Date: 30-DEC-2008 15:30
Report Date: 12/31/2008
Matrix: SOIL
% Solids: 92.5

Lab ID: SB7081-37
Client ID: MR08-SS128-08D
SDG: TO9-16
Extracted by: CB
Extraction Method: SW846 3550
Analyst: JLP
Analysis Method: SW846 8270C
Lab Prep Batch: WG59048
Units: ug/Kgdrywt

CAS#	Compound	Flags	Results	DF	PQL	Adj.PQL	Adj.MDL	
100-52-7	Benzaldehyde	~~U~~ UJ	540	1.0	500	540	130	CCH
108-95-2	Phenol	U	540	1.0	500	540	170	
111-44-4	Bis(2-Chloroethyl)ether	U	360	1.0	330	360	88	
95-57-8	2-Chlorophenol	U	540	1.0	500	540	180	
95-48-7	2-Methylphenol	U	650	1.0	600	650	220	
108-60-1	2,2'-Oxybis(1-chloropropane)	U	360	1.0	330	360	96	
98-86-2	Acetophenone	U	650	1.0	600	650	190	
621-64-7	N-Nitroso-di-n-propylamine	U	360	1.0	330	360	90	
65794-96-9	3&4-Methylphenol	U	650	1.0	600	650	200	
67-72-1	Hexachloroethane	U	360	1.0	330	360	100	
98-95-3	Nitrobenzene	~~U~~ UJ	360	1.0	330	360	98	CCH
78-59-1	Isophorone	U	360	1.0	330	360	81	
88-75-5	2-Nitrophenol	U	650	1.0	600	650	180	
105-67-9	2,4-Dimethylphenol	U	540	1.0	500	540	180	
111-91-1	Bis(2-Chloroethoxy)methane	U	360	1.0	330	360	100	
120-83-2	2,4-Dichlorophenol	U	540	1.0	500	540	160	
106-47-8	4-Chloroaniline	~~U~~ UJ	540	1.0	500	540	130	CCH
105-60-2	Caprolactam	U	540	1.0	500	540	160	
59-50-7	4-Chloro-3-Methylphenol	U	540	1.0	500	540	180	
88-06-2	2,4,6-Trichlorophenol	U	540	1.0	500	540	170	
95-95-4	2,4,5-Trichlorophenol	U	540	1.0	500	540	170	
91-58-7	2-Chloronaphthalene	U	360	1.0	330	360	94	
92-52-4	1,1'-Biphenyl	U	360	1.0	330	360	79	
88-74-4	2-Nitroaniline	U	540	1.0	500	540	81	
131-11-3	Dimethyl Phthalate	U	360	1.0	330	360	84	
606-20-2	2,6-Dinitrotoluene	U	360	1.0	330	360	85	
208-96-8	Acenaphthylene	U	360	1.0	330	360	76	
99-09-2	3-Nitroaniline	U	540	1.0	500	540	100	
83-32-9	Acenaphthene	U	360	1.0	330	360	70	
51-28-5	2,4-Dinitrophenol	~~U~~ UJ	1300	1.0	1200	1300	410	CCH
132-64-9	Dibenzofuran	U	360	1.0	330	360	85	
100-02-7	4-Nitrophenol	U	1300	1.0	1200	1300	330	
121-14-2	2,4-Dinitrotoluene	U	360	1.0	330	360	92	
84-66-2	Diethylphthalate	U	360	1.0	330	360	86	
7005-72-3	4-Chlorophenyl-phenylether	U	360	1.0	330	360	84	
100-01-6	4-Nitroaniline	~~U~~ UJ	540	1.0	500	540	140	CCH
534-52-1	4,6-Dinitro-2-Methylphenol	U	1300	1.0	1200	1300	360	
86-30-6	N-Nitrosodiphenylamine	U	710	1.0	660	710	240	
101-55-3	4-Bromophenyl-phenylether	U	360	1.0	330	360	92	
1912-24-9	Atrazine	U	360	1.0	330	360	98	
87-86-5	Pentachlorophenol	U	890	1.0	820	890	260	
120-12-7	Anthracene	U	360	1.0	330	360	91	
86-74-8	Carbazole	~~U~~ UJ	540	1.0	500	540	120	CCH

RW 3/13/09

KATAHDIN ANALYTICAL SERVICES
Report of Analytical Results

Client: CH2MHill
Project: TO-009 Lejeune
PO No:
Sample Date: 12/09/08
Received Date: 12/10/08
Extraction Date: 12/15/08
Analysis Date: 30-DEC-2008 15:30
Report Date: 12/31/2008
Matrix: SOIL
% Solids: 92.5

Lab ID: SB7081-37
Client ID: MR08-SS128-08D
SDG: TO9-16
Extracted by: CB
Extraction Method: SW846 3550
Analyst: JLP
Analysis Method: SW846 8270C
Lab Prep Batch: WG59048
Units: ug/Kgdrywt

CAS#	Compound	Flags	Results	DF	PQL	Adj.PQL	Adj.MDL	
84-74-2	Di-n-butylphthalate	U	360	1.0	330	360	110	
85-68-7	Butylbenzylphthalate	~~J~~ UJ	360	1.0	330	360	100	CCH
91-94-1	3,3'-Dichlorobenzidine	U	540	1.0	500	540	120	
218-01-9	Chrysene	U	360	1.0	330	360	100	
117-81-7	bis(2-Ethylhexyl)phthalate	~~J~~ J	180	1.0	330	360	100	CCH
117-84-0	Di-n-octylphthalate	~~J~~ UJ	360	1.0	330	360	230	CCH
367-12-4	2-Fluorophenol		74%					
13127-88-3	Phenol-D6		87%					
4165-60-0	Nitrobenzene-D5		74%					
321-60-8	2-Fluorobiphenyl		89%					
118-79-6	2,4,6-Tribromophenol		47%					
1718-51-0	Terphenyl-D14		109%					

MW 3/3/09

20

KATAHDIN ANALYTICAL SERVICES
Report of Analytical Results

Client: CH2MHill
Project: TO-009 Lejeune
PO No:
Sample Date: 12/09/08
Received Date: 12/10/08
Extraction Date: 12/15/08
Analysis Date: 23-DEC-2008 13:52
Report Date: 12/31/2008
Matrix: SOIL
% Solids: 91.5

Lab ID: SB7081-39
Client ID: MR08-IS128-2-3-08D
SDG: TO9-16
Extracted by: CB
Extraction Method: SW846 3550
Analyst: JCG
Analysis Method: SW846 8270C
Lab Prep Batch: WG59048
Units: ug/Kgdrywt

CAS#	Compound	Flags	Results	DF	PQL	Adj.PQL	Adj.MDL	
100-52-7	Benzaldehyde	~~U~~ UJ	550	1.0	500	550	130	CCH
108-95-2	Phenol	U	550	1.0	500	550	170	
111-44-4	Bis(2-Chloroethyl)ether	U	360	1.0	330	360	88	
95-57-8	2-Chlorophenol	U	550	1.0	500	550	180	
95-48-7	2-Methylphenol	U	660	1.0	600	660	220	
108-60-1	2,2'-Oxybis(1-chloropropane)	U	360	1.0	330	360	97	
98-86-2	Acetophenone	U	660	1.0	600	660	190	
621-64-7	N-Nitroso-di-n-propylamine	U	360	1.0	330	360	91	
65794-96-9	3&4-Methylphenol	U	660	1.0	600	660	200	
67-72-1	Hexachloroethane	U	360	1.0	330	360	100	
98-95-3	Nitrobenzene	~~U~~ UJ	360	1.0	330	360	99	CCH
78-59-1	Isophorone	U	360	1.0	330	360	82	
88-75-5	2-Nitrophenol	U	660	1.0	600	660	180	
105-67-9	2,4-Dimethylphenol	U	550	1.0	500	550	180	
111-91-1	Bis(2-Chloroethoxy)methane	U	360	1.0	330	360	100	
120-83-2	2,4-Dichlorophenol	U	550	1.0	500	550	160	
106-47-8	4-Chloroaniline	U	550	1.0	500	550	130	
105-60-2	Caprolactam	U	550	1.0	500	550	160	
59-50-7	4-Chloro-3-Methylphenol	U	550	1.0	500	550	180	
88-06-2	2,4,6-Trichlorophenol	U	550	1.0	500	550	170	
95-95-4	2,4,5-Trichlorophenol	U	550	1.0	500	550	170	
91-58-7	2-Chloronaphthalene	U	360	1.0	330	360	95	
92-52-4	1,1'-Biphenyl	U	360	1.0	330	360	80	
88-74-4	2-Nitroaniline	U	550	1.0	500	550	82	
131-11-3	Dimethyl Phthalate	U	360	1.0	330	360	85	
606-20-2	2,6-Dinitrotoluene	U	360	1.0	330	360	86	
208-96-8	Acenaphthylene	U	360	1.0	330	360	76	
99-09-2	3-Nitroaniline	U	550	1.0	500	550	100	
83-32-9	Acenaphthene	U	360	1.0	330	360	71	
51-28-5	2,4-Dinitrophenol	U	1300	1.0	1200	1300	410	
132-64-9	Dibenzofuran	U	360	1.0	330	360	86	
100-02-7	4-Nitrophenol	U	1300	1.0	1200	1300	340	
121-14-2	2,4-Dinitrotoluene	U	360	1.0	330	360	93	
84-66-2	Diethylphthalate	U	360	1.0	330	360	87	
7005-72-3	4-Chlorophenyl-phenylether	U	360	1.0	330	360	85	
100-01-6	4-Nitroaniline	U	550	1.0	500	550	150	
534-52-1	4,6-Dinitro-2-Methylphenol	U	1300	1.0	1200	1300	370	
86-30-6	N-Nitrosodiphenylamine	U	720	1.0	660	720	240	
101-55-3	4-Bromophenyl-phenylether	U	360	1.0	330	360	93	
1912-24-9	Atrazine	U	360	1.0	330	360	99	
87-86-5	Pentachlorophenol	U	900	1.0	820	900	260	
120-12-7	Anthracene	U	360	1.0	330	360	92	
86-74-8	Carbazole	U	550	1.0	500	550	120	

LW 3/3/09

KATAHDIN ANALYTICAL SERVICES
Report of Analytical Results

Client: CH2MHill
Project: TO-009 Lejeune
PO No:
Sample Date: 12/09/08
Received Date: 12/10/08
Extraction Date: 12/15/08
Analysis Date: 23-DEC-2008 13:52
Report Date: 12/31/2008
Matrix: SOIL
% Solids: 91.5

Lab ID: SB7081-39
Client ID: MR08-IS128-2-3-08D
SDG: TO9-16
Extracted by: CB
Extraction Method: SW846 3550
Analyst: JCG
Analysis Method: SW846 8270C
Lab Prep Batch: WG59048
Units: ug/Kgdrywt

CAS#	Compound	Flags	Results	DF	PQL	Adj.PQL	Adj.MDL	
84-74-2	Di-n-butylphthalate	U	360	1.0	330	360	110	
85-68-7	Butylbenzylphthalate	U	360	1.0	330	360	100	
91-94-1	3,3'-Dichlorobenzidine	U UJ	550	1.0	500	550	120	CCH
218-01-9	Chrysene	U	360	1.0	330	360	100	
117-81-7	bis(2-Ethylhexyl)phthalate	U	360	1.0	330	360	110	
117-84-0	Di-n-octylphthalate	U	360	1.0	330	360	230	
367-12-4	2-Fluorophenol		64%					
13127-88-3	Phenol-D6		67%					
4165-60-0	Nitrobenzene-D5		64%					
321-60-8	2-Fluorobiphenyl		66%					
118-79-6	2,4,6-Tribromophenol		76%					
1718-51-0	Terphenyl-D14		101%					

MW 3/3/09

ENVIRONMENTAL
Data Services, Inc.

POLYNUCLEAR AROMATIC COMPOUNDS BY 8270SIM

USEPA Region IV - Level IV Review

Site: MCB Camp Lejeune, TO-09 SDG #: TO9-17

Client: CH2M HILL, Inc., Virginia Beach, Virginia Date: March 4, 2009

Laboratory: Katahdin Analytical Services, Scarborough, Maine Reviewer: Nancy Weaver

EDS ID	Client Sample ID	Laboratory Sample ID	Matrix
1	MR08-SS098-08D	SB7127-2	Soil
2	MR08-IS098-3-4-08D	SB7127-4	Soil
3	MR08-SS121-08D	SB7127-6	Soil
4	MR08-IS121-2-3-08D	SB7127-8	Soil
5	MR08-SS124-08D	SB7127-10	Soil
6	MR08-IS124-2-3-08D	SB7127-12	Soil
7	MR08-SS099-08D	SB7127-14	Soil
8	MR08-SS099D-08D	SB7127-16	Soil
9	MR08-IS099-2-3-08D	SB7127-18	Soil
10	MR08-IS099D-2-3-08D	SB7127-20	Soil
11	MR08-SS100-08D	SB7127-22	Soil
12	MR08-IS100-2-3-08D	SB7127-24	Soil
13	MR08-SS101-08D	SB7127-26	Soil
14	MR08-IS101-2-3-08D	SB7127-28	Soil
15	MR08-SS102-08D	SB7238-2	Soil
16	MR08-IS102-2-3-08D	SB7238-4	Soil
17	MR08-SS119-08D	SB7238-6	Soil
18	MR08-SS119D-08D	SB7238-8	Soil
19	MR08-IS119-4.5-5.5-08D	SB7238-10	Soil
20	MR08-IS119D-4.5-5.5-08D	SB7238-12	Soil

The USEPA "Contract Laboratory Program National Functional Guidelines for Organic Data Review," October 1999, and professional judgment were used in evaluating the data in this summary report.

Holding Times - All samples were extracted within 14 days for soil samples and analyzed within 40 days for all samples.

GC/MS Tuning - All of the DFTPP tunes in the initial and continuing calibrations met the percent relative abundance criteria.

Initial Calibration - The initial calibrations exhibited acceptable %RSD and mean RRF values.

Continuing Calibration - The continuing calibrations exhibited acceptable %D and RRF values except the following.

CCAL Date	Compound	%D/RRF	Qualifier	Affected Samples
01/09/09	Hexachlorocyclopentadiene	35.64%	J/UJ	15-20
01/11/09	Hexachlorobutadiene	35.38%	J/UJ	1, 3, 5, 7, 8, 11-13
	Indeno (1,2,3-cd) pyrene	33.61%	J/UJ	1, 3, 5, 7, 8, 11-13
	Phenanthrene	27.17%	J/UJ	1, 3, 5, 7, 8, 11-13
	Benzo (a) anthracene	32.29%	J/UJ	1, 3, 5, 7, 8, 11-13
	Benzo (b) fluoranthene	25.13%	J/UJ	1, 3, 5, 7, 8, 11-13
	Benzo (g,h,i) perylene	25.63%	J/UJ	1, 3, 5, 7, 8, 11-13

Surrogates - All samples exhibited acceptable surrogate recoveries except the following.

Sample ID	Surrogate	%R	Qualifier
3	Pyrene-d10	167%	None for 1 out
15	2,4-Dibromophenol	29%	No acids reported
18	2,4-Dibromophenol	29%	No acids reported

MS/MSD - A MS/MSD sample was not analyzed.

Laboratory Control Sample - The LCS samples exhibited acceptable %R values except the following.

LCS ID	Compound	%R	Qualifier	Affected Samples
WG59199-LCS	Phenanthrene	134%	J	16-18
	Benzo (b) fluoranthene	148%	J	16
	Benzo (k) fluoranthene	126%	None	All associated ND
	Benzo (a) pyrene	110%	None	All associated ND

Internal Standard (IS) Area Performance - All internal standards met response and retention time (RT) criteria.

Method Blank - The method blanks were free of contamination.

Field, Equipment Blank - Field QC results are summarized below.

Blank ID	Compound	Conc. ug/L	Action Level ug/kg	Qualifier	Affected Samples
MR08-FB01120608	None - ND	-	-	-	-
MR08-FB12192008	None - ND	-	-	-	-
MR08-EB01121008-SS	Benzo (a) anthracene	0.068	5.7	None	All >5X
	Benzo (b) fluoranthene	0.112	9.33	None	All >5X
	Benzo (k) fluoranthene	0.11	9.3	None	All >5X
	Indeno (1,2,3-cd) pyrene	0.18	15	None	All >5X
	Dibenzo (a,h) anthracene	0.16	13.33	None	All >5X
	Benzo (g,h,i) perylene	0.22	18.33	U	7
MR08-EB01-121508-SS	Hexachlorocyclopentadiene	0.11	9.2	U	17, 18

Field Duplicates - Field duplicate results are summarized below.

Compound	MR08-SS099-08D ug/kg	MR08-SS099D-08D ug/kg	RPD	Qualifier
Phenanthrene	11 U	6.8	NC	None
Pyrene	11 U	5.5	NC	None
Benzo (g,h,i) perylene	11 U	21	NC	None

Compound	MR08-IS099-2-3-08D ug/kg	MR08-IS099D-2-3-08D ug/kg	RPD	Qualifier
Indeno (1,2,3-cd) pyrene	2.7	11 U	NC	None
Dibenzo (a,h) anthracene	2.4	2.1	13%	None
Benzo (g,h,i) perylene	2.9	2.4	19%	None

Compound	MR08-SS119-08D ug/kg	MR08-SS119D-08D ug/kg	RPD	Qualifier
Naphthalene	4.0	11 U	NC	None
Phenanthrene	3.4	4.4	26%	None
Pyrene	3.0	3.8	24%	None
Benzo (a) anthracene	2.9	11 U	NC	None
Benzo (g,h,i) perylene	9.7	11	13%	None

Compound	MR08-IS119-4.5-5.5-08D ug/kg	MR08-IS119-D4.5-5.5-08D ug/kg	RPD	Qualifier
Phenanthrene	11U	5.0	NC	None

Tentatively Identified Compounds (TICs) - TICs were not reported.

Compound Quantitation - No discrepancies were identified.

KATAHDIN ANALYTICAL SERVICES
Report of Analytical Results

Client: CH2MHill
Project: TO-009 Lejeune
PO No:
Sample Date: 12/10/08
Received Date: 12/11/08
Extraction Date: 12/15/08
Analysis Date: 11-JAN-2009 18:46
Report Date: 01/12/2009
Matrix: SOIL
% Solids: 93.6

Lab ID: SB7127-2
Client ID: MR08-SS098-08D
SDG: TO9-17
Extracted by: CB
Extraction Method: SW846 3550
Analyst: EKC
Analysis Method: SW846 M8270C
Lab Prep Batch: WG59079
Units: ug/Kgdrywt

CAS#	Compound	Flags	Results	DF	PQL	Adj.PQL	Adj.MDL	
91-20-3	Naphthalene	U	11	1.0	10	11	2.8	
91-57-6	2-Methylnaphthalene	U	11	1.0	10	11	2.3	
86-73-7	Fluorene	U	11	1.0	10	11	3.4	
85-01-8	Phenanthrene	~~U~~ UJ	11	1.0	10	11	1.9	CCH
206-44-0	Fluoranthene	U	11	1.0	10	11	1.9	
129-00-0	Pyrene		47	1.0	10	11	2.2	
56-55-3	Benzo(a)anthracene	~~U~~ UJ	11	1.0	10	11	2.0	CCH
205-99-2	Benzo(b)fluoranthene	~~U~~ UJ	11	1.0	10	11	2.6	CCH
207-08-9	Benzo(k)fluoranthene	U	11	1.0	10	11	3.3	
50-32-8	Benzo(a)pyrene	U	11	1.0	10	11	3.5	
193-39-5	Indeno(1,2,3-cd)pyrene	~~U~~ UJ	11	1.0	10	11	2.0	CCH
53-70-3	Dibenzo(a,h)anthracene	U	11	1.0	10	11	1.9	
191-24-2	Benzo(g,h,i)perylene	~~U~~ UJ	11	1.0	10	11	2.1	CCH
118-74-1	Hexachlorobenzene	U	11	1.0	10	11	1.9	
87-68-3	Hexachlorobutadiene	~~U~~ UJ	11	1.0	10	11	2.4	CCH
77-47-4	Hexachlorocyclopentadiene	U	11	1.0	10	11	1.6	
7297-45-2	2-Methylnaphthalene-D10		88%					
367-12-4	2,4-Dibromophenol		101%					
81103-79-9	Fluorene-d10		98%					
1718-51-1	Pyrene-D10		157%					

MW 3/4/09

2

KATAHDIN ANALYTICAL SERVICES
Report of Analytical Results

Client: CH2MHill
Project: TO-009 Lejeune
PO No:
Sample Date: 12/10/08
Received Date: 12/11/08
Extraction Date: 12/15/08
Analysis Date: 07-JAN-2009 23:42
Report Date: 01/12/2009
Matrix: SOIL
% Solids: 88.2

Lab ID: SB7127-4
Client ID: MR08-IS098-3-4-08D
SDG: TO9-17
Extracted by: CB
Extraction Method: SW846 3550
Analyst: JCG
Analysis Method: SW846 M8270C
Lab Prep Batch: WG59079
Units: ug/Kgdrywt

CAS#	Compound	Flags	Results	DF	PQL	Adj.PQL	Adj.MDL
91-20-3	Naphthalene	U	11	1.0	10	11	2.9
91-57-6	2-Methylnaphthalene	U	11	1.0	10	11	2.5
86-73-7	Fluorene	U	11	1.0	10	11	3.6
85-01-8	Phenanthrene	U	11	1.0	10	11	2.0
206-44-0	Fluoranthene	U	11	1.0	10	11	2.0
129-00-0	Pyrene	U	11	1.0	10	11	2.4
56-55-3	Benzo(a)anthracene	U	11	1.0	10	11	2.2
205-99-2	Benzo(b)fluoranthene	U	11	1.0	10	11	2.7
207-08-9	Benzo(k)fluoranthene	U	11	1.0	10	11	3.5
50-32-8	Benzo(a)pyrene	U	11	1.0	10	11	3.7
193-39-5	Indeno(1,2,3-cd)pyrene	U	11	1.0	10	11	2.2
53-70-3	Dibenzo(a,h)anthracene	U	11	1.0	10	11	2.0
191-24-2	Benzo(g,h,i)perylene	U	11	1.0	10	11	2.3
118-74-1	Hexachlorobenzene	U	11	1.0	10	11	2.0
87-68-3	Hexachlorobutadiene	U	11	1.0	10	11	2.6
77-47-4	Hexachlorocyclopentadiene	U	11	1.0	10	11	1.7
7297-45-2	2-Methylnaphthalene-D10		70%				
367-12-4	2,4-Dibromophenol		89%				
81103-79-9	Fluorene-d10		84%				
1718-51-1	Pyrene-D10		95%				

QW 2/4/09

3

KATAHDIN ANALYTICAL SERVICES
Report of Analytical Results

Client: CH2MHill
Project: TO-009 Lejeune
PO No:
Sample Date: 12/10/08
Received Date: 12/11/08
Extraction Date: 12/15/08
Analysis Date: 11-JAN-2009 19:27
Report Date: 01/12/2009
Matrix: SOIL
% Solids: 92.6

Lab ID: SB7127-6
Client ID: MR08-SS121-08D
SDG: TO9-17
Extracted by: CB
Extraction Method: SW846 3550
Analyst: EKC
Analysis Method: SW846 M8270C
Lab Prep Batch: WG59079
Units: ug/Kgdrywt

CAS#	Compound	Flags	Results	DF	PQL	Adj.PQL	Adj.MDL	
91-20-3	Naphthalene	U	11	1.0	10	11	2.8	
91-57-6	2-Methylnaphthalene	U	11	1.0	10	11	2.4	
86-73-7	Fluorene	U	11	1.0	10	11	3.4	
85-01-8	Phenanthrene	~~J~~ J	2.4	1.0	10	11	1.9	CCH
206-44-0	Fluoranthene	U	11	1.0	10	11	1.9	
129-00-0	Pyrene	U	11	1.0	10	11	2.3	
56-55-3	Benzo(a)anthracene	~~U~~ UJ	11	1.0	10	11	2.0	CCH
205-99-2	Benzo(b)fluoranthene	~~U~~ UJ	11	1.0	10	11	2.6	CCH
207-08-9	Benzo(k)fluoranthene	U	11	1.0	10	11	3.3	
50-32-8	Benzo(a)pyrene	U	11	1.0	10	11	3.6	
193-39-5	Indeno(1,2,3-cd)pyrene	~~U~~ UJ	11	1.0	10	11	2.0	CCH
53-70-3	Dibenzo(a,h)anthracene	U	11	1.0	10	11	1.9	
191-24-2	Benzo(g,h,i)perylene	~~U~~ UJ	11	1.0	10	11	2.2	CCH
118-74-1	Hexachlorobenzene	U	11	1.0	10	11	1.9	
87-68-3	Hexachlorobutadiene	~~U~~ UJ	11	1.0	10	11	2.5	CCH
77-47-4	Hexachlorocyclopentadiene	U	11	1.0	10	11	1.6	
7297-45-2	2-Methylnaphthalene-D10		112%					
367-12-4	2,4-Dibromophenol		128%					
81103-79-9	Fluorene-d10		125%					
1718-51-1	Pyrene-D10		*167%					

WW
3/4/09

KATAHDIN ANALYTICAL SERVICES
Report of Analytical Results

Client: CH2MHill
Project: TO-009 Lejeune
PO No:
Sample Date: 12/10/08
Received Date: 12/11/08
Extraction Date: 12/15/08
Analysis Date: 08-JAN-2009 00:23
Report Date: 01/12/2009
Matrix: SOIL
% Solids: 85.1

Lab ID: SB7127-8
Client ID: MR08-IS121-2-3-08D
SDG: TO9-17
Extracted by: CB
Extraction Method: SW846 3550
Analyst: JCG
Analysis Method: SW846 M8270C
Lab Prep Batch: WG59079
Units: ug/Kgdrywt

CAS#	Compound	Flags	Results	DF	PQL	Adj.PQL	Adj.MDL
91-20-3	Naphthalene	U	12	1.0	10	12	3.0
91-57-6	2-Methylnaphthalene	U	12	1.0	10	12	2.6
86-73-7	Fluorene	U	12	1.0	10	12	3.8
85-01-8	Phenanthrene	U	12	1.0	10	12	2.1
206-44-0	Fluoranthene	U	12	1.0	10	12	2.1
129-00-0	Pyrene	U	12	1.0	10	12	2.5
56-55-3	Benzo(a)anthracene	U	12	1.0	10	12	2.2
205-99-2	Benzo(b)fluoranthene	U	12	1.0	10	12	2.8
207-08-9	Benzo(k)fluoranthene	U	12	1.0	10	12	3.6
50-32-8	Benzo(a)pyrene	U	12	1.0	10	12	3.9
193-39-5	Indeno(1,2,3-cd)pyrene	J	2.4	1.0	10	12	2.2
53-70-3	Dibenzo(a,h)anthracene	J	2.7	1.0	10	12	2.1
191-24-2	Benzo(g,h,i)perylene	J	3.1	1.0	10	12	2.4
118-74-1	Hexachlorobenzene	U	12	1.0	10	12	2.1
87-68-3	Hexachlorobutadiene	U	12	1.0	10	12	2.7
77-47-4	Hexachlorocyclopentadiene	U	12	1.0	10	12	1.8
7297-45-2	2-Methylnaphthalene-D10		64%				
367-12-4	2,4-Dibromophenol		81%				
81103-79-9	Fluorene-d10		73%				
1718-51-1	Pyrene-D10		90%				

lew
3/4/09

KATAHDIN ANALYTICAL SERVICES
Report of Analytical Results

Client: CH2MHill
Project: TO-009 Lejeune
PO No:
Sample Date: 12/10/08
Received Date: 12/11/08
Extraction Date: 12/15/08
Analysis Date: 11-JAN-2009 20:08
Report Date: 01/12/2009
Matrix: SOIL
% Solids: 89.2

Lab ID: SB7127-10
Client ID: MR08-SS124-08D
SDG: TO9-17
Extracted by: CB
Extraction Method: SW846 3550
Analyst: EKC
Analysis Method: SW846 M8270C
Lab Prep Batch: WG59079
Units: ug/Kgdrywt

CAS#	Compound	Flags	Results	DF	PQL	Adj.PQL	Adj.MDL	
91-20-3	Naphthalene	U	11	1.0	10	11	2.9	
91-57-6	2-Methylnaphthalene	U	11	1.0	10	11	2.5	
86-73-7	Fluorene	U	11	1.0	10	11	3.6	
85-01-8	Phenanthrene	~~U~~ UJ	11	1.0	10	11	2.0	CCH
206-44-0	Fluoranthene	U	11	1.0	10	11	2.0	
129-00-0	Pyrene	U	11	1.0	10	11	2.4	
56-55-3	Benzo(a)anthracene	~~U~~ UJ	11	1.0	10	11	2.1	CCH
205-99-2	Benzo(b)fluoranthene	~~U~~ UJ	11	1.0	10	11	2.7	CCH
207-08-9	Benzo(k)fluoranthene	U	11	1.0	10	11	3.5	
50-32-8	Benzo(a)pyrene	U	11	1.0	10	11	3.7	
193-39-5	Indeno(1,2,3-cd)pyrene	~~U~~ UJ	11	1.0	10	11	2.1	CCH
53-70-3	Dibenzo(a,h)anthracene	U	11	1.0	10	11	2.0	
191-24-2	Benzo(g,h,i)perylene	J	20	1.0	10	11	2.2	CCH
118-74-1	Hexachlorobenzene	U	11	1.0	10	11	2.0	
87-68-3	Hexachlorobutadiene	~~U~~ UJ	11	1.0	10	11	2.6	CCH
77-47-4	Hexachlorocyclopentadiene	U	11	1.0	10	11	1.7	
7297-45-2	2-Methylnaphthalene-D10		94%					
367-12-4	2,4-Dibromophenol		105%					
81103-79-9	Fluorene-d10		113%					
1718-51-1	Pyrene-D10		145%					

lcs
3/4/09

6

KATAHDIN ANALYTICAL SERVICES
Report of Analytical Results

Client: CH2MHill
Project: TO-009 Lejeune
PO No:
Sample Date: 12/10/08
Received Date: 12/11/08
Extraction Date: 12/15/08
Analysis Date: 08-JAN-2009 01:05
Report Date: 01/12/2009
Matrix: SOIL
% Solids: 90.9

Lab ID: SB7127-12
Client ID: MR08-IS124-2-3-08D
SDG: TO9-17
Extracted by: CB
Extraction Method: SW846 3550
Analyst: JCG
Analysis Method: SW846 M8270C
Lab Prep Batch: WG59079
Units: ug/Kgdrywt

CAS#	Compound	Flags	Results	DF	PQL	Adj.PQL	Adj.MDL
91-20-3	Naphthalene	U	11	1.0	10	11	2.8
91-57-6	2-Methylnaphthalene	U	11	1.0	10	11	2.4
86-73-7	Fluorene	U	11	1.0	10	11	3.5
85-01-8	Phenanthrene	U	11	1.0	10	11	2.0
206-44-0	Fluoranthene	U	11	1.0	10	11	2.0
129-00-0	Pyrene	U	11	1.0	10	11	2.3
56-55-3	Benzo(a)anthracene	U	11	1.0	10	11	2.1
205-99-2	Benzo(b)fluoranthene	U	11	1.0	10	11	2.6
207-08-9	Benzo(k)fluoranthene	U	11	1.0	10	11	3.4
50-32-8	Benzo(a)pyrene	U	11	1.0	10	11	3.6
193-39-5	Indeno(1,2,3-cd)pyrene	J	4.1	1.0	10	11	2.1
53-70-3	Dibenzo(a,h)anthracene	J	3.6	1.0	10	11	2.0
191-24-2	Benzo(g,h,i)perylene	J	5.3	1.0	10	11	2.2
118-74-1	Hexachlorobenzene	U	11	1.0	10	11	2.0
87-68-3	Hexachlorobutadiene	U	11	1.0	10	11	2.5
77-47-4	Hexachlorocyclopentadiene	U	11	1.0	10	11	1.6
7297-45-2	2-Methylnaphthalene-D10		63%				
367-12-4	2,4-Dibromophenol		74%				
81103-79-9	Fluorene-d10		71%				
1718-51-1	Pyrene-D10		88%				

LWO 3/4/09

7

KATAHDIN ANALYTICAL SERVICES
Report of Analytical Results

Client: CH2MHill
Project: TO-009 Lejeune
PO No:
Sample Date: 12/10/08
Received Date: 12/11/08
Extraction Date: 12/15/08
Analysis Date: 11-JAN-2009 18:05
Report Date: 01/12/2009
Matrix: SOIL
% Solids: 93.1

Lab ID: SB7127-14
Client ID: MR08-SS099-08D
SDG: TO9-17
Extracted by: CB
Extraction Method: SW846 3550
Analyst: EKC
Analysis Method: SW846 M8270C
Lab Prep Batch: WG59079
Units: ug/Kgdrywt

CAS#	Compound	Flags	Results	DF	PQL	Adj.PQL	Adj.MDL	
91-20-3	Naphthalene	U	11	1.0	10	11	2.8	
91-57-6	2-Methylnaphthalene	U	11	1.0	10	11	2.4	
86-73-7	Fluorene	U	11	1.0	10	11	3.4	
85-01-8	Phenanthrene	~~U~~ UJ	11	1.0	10	11	1.9	CCH
206-44-0	Fluoranthene	U	11	1.0	10	11	1.9	
129-00-0	Pyrene	U	11	1.0	10	11	2.2	
56-55-3	Benzo(a)anthracene	~~U~~ UJ	11	1.0	10	11	2.0	CCH
205-99-2	Benzo(b)fluoranthene	~~U~~ UJ	11	1.0	10	11	2.6	CCH
207-08-9	Benzo(k)fluoranthene	U	11	1.0	10	11	3.3	
50-32-8	Benzo(a)pyrene	U	11	1.0	10	11	3.5	
193-39-5	Indeno(1,2,3-cd)pyrene	~~U~~ UJ	11	1.0	10	11	2.0	CCH
53-70-3	Dibenzo(a,h)anthracene	U	11	1.0	10	11	1.9	
191-24-2	Benzo(g,h,i)perylene	11 ~~J~~ UJ	7.6	1.0	10	11	2.1	CCH, BC
118-74-1	Hexachlorobenzene	U	11	1.0	10	11	1.9	
87-68-3	Hexachlorobutadiene	~~U~~ UJ	11	1.0	10	11	2.5	CCH
77-47-4	Hexachlorocyclopentadiene	U	11	1.0	10	11	1.6	
7297-45-2	2-Methylnaphthalene-D10		88%					
367-12-4	2,4-Dibromophenol		102%					
81103-79-9	Fluorene-d10		105%					
1718-51-1	Pyrene-D10		132%					

JW 3/4/09

8

KATAHDIN ANALYTICAL SERVICES
Report of Analytical Results

Client: CH2MHill
Project: TO-009 Lejeune
PO No:
Sample Date: 12/10/08
Received Date: 12/11/08
Extraction Date: 12/15/08
Analysis Date: 11-JAN-2009 20:49
Report Date: 01/12/2009
Matrix: SOIL
% Solids: 94.8

Lab ID: SB7127-16
Client ID: MR08-SS099D-08D
SDG: TO9-17
Extracted by: CB
Extraction Method: SW846 3550
Analyst: EKC
Analysis Method: SW846 M8270C
Lab Prep Batch: WG59079
Units: ug/Kgdrywt

CAS#	Compound	Flags	Results	DF	PQL	Adj.PQL	Adj.MDL	
91-20-3	Naphthalene	U	10	1.0	10	10	2.7	
91-57-6	2-Methylnaphthalene	U	10	1.0	10	10	2.3	
86-73-7	Fluorene	U	10	1.0	10	10	3.4	
85-01-8	Phenanthrene	~~J~~ J	6.8	1.0	10	10	1.9	CCH
206-44-0	Fluoranthene	U	10	1.0	10	10	1.9	
129-00-0	Pyrene	J	5.5	1.0	10	10	2.2	
56-55-3	Benzo(a)anthracene	~~J~~ UJ	10	1.0	10	10	2.0	CCH
205-99-2	Benzo(b)fluoranthene	~~J~~ UJ	10	1.0	10	10	2.5	CCH
207-08-9	Benzo(k)fluoranthene	U	10	1.0	10	10	3.3	
50-32-8	Benzo(a)pyrene	U	10	1.0	10	10	3.5	
193-39-5	Indeno(1,2,3-cd)pyrene	~~J~~ UJ	10	1.0	10	10	2.0	CCH
53-70-3	Dibenzo(a,h)anthracene	U	10	1.0	10	10	1.9	
191-24-2	Benzo(g,h,i)perylene	J	21	1.0	10	10	2.1	CCH
118-74-1	Hexachlorobenzene	U	10	1.0	10	10	1.9	
87-68-3	Hexachlorobutadiene	~~J~~ UJ	10	1.0	10	10	2.4	CCH
77-47-4	Hexachlorocyclopentadiene	U	10	1.0	10	10	1.6	
7297-45-2	2-Methylnaphthalene-D10		86%					
367-12-4	2,4-Dibromophenol		102%					
81103-79-9	Fluorene-d10		100%					
1718-51-1	Pyrene-D10		123%					

LWD
3/4/09

KATAHDIN ANALYTICAL SERVICES
Report of Analytical Results

Client: CH2MHill
Project: TO-009 Lejeune
PO No:
Sample Date: 12/10/08
Received Date: 12/11/08
Extraction Date: 12/15/08
Analysis Date: 08-JAN-2009 01:46
Report Date: 01/12/2009
Matrix: SOIL
% Solids: 87.6

Lab ID: SB7127-18
Client ID: MR08-IS099-2-3-08D
SDG: TO9-17
Extracted by: CB
Extraction Method: SW846 3550
Analyst: JCG
Analysis Method: SW846 M8270C
Lab Prep Batch: WG59079
Units: ug/Kgdrywt

CAS#	Compound	Flags	Results	DF	PQL	Adj.PQL	Adj.MDL
91-20-3	Naphthalene	U	11	1.0	10	11	3.0
91-57-6	2-Methylnaphthalene	U	11	1.0	10	11	2.5
86-73-7	Fluorene	U	11	1.0	10	11	3.6
85-01-8	Phenanthrene	U	11	1.0	10	11	2.0
206-44-0	Fluoranthene	U	11	1.0	10	11	2.0
129-00-0	Pyrene	U	11	1.0	10	11	2.4
56-55-3	Benzo(a)anthracene	U	11	1.0	10	11	2.2
205-99-2	Benzo(b)fluoranthene	U	11	1.0	10	11	2.7
207-08-9	Benzo(k)fluoranthene	U	11	1.0	10	11	3.5
50-32-8	Benzo(a)pyrene	U	11	1.0	10	11	3.8
193-39-5	Indeno(1,2,3-cd)pyrene	J	2.7	1.0	10	11	2.2
53-70-3	Dibenzo(a,h)anthracene	J	2.4	1.0	10	11	2.0
191-24-2	Benzo(g,h,i)perylene	J	2.9	1.0	10	11	2.3
118-74-1	Hexachlorobenzene	U	11	1.0	10	11	2.0
87-68-3	Hexachlorobutadiene	U	11	1.0	10	11	2.6
77-47-4	Hexachlorocyclopentadiene	U	11	1.0	10	11	1.7
7297-45-2	2-Methylnaphthalene-D10		56%				
367-12-4	2,4-Dibromophenol		74%				
81103-79-9	Fluorene-d10		66%				
1718-51-1	Pyrene-D10		90%				

MW 3/4/09

10

KATAHDIN ANALYTICAL SERVICES
Report of Analytical Results

Client: CH2MHill
Project: TO-009 Lejeune
PO No:
Sample Date: 12/10/08
Received Date: 12/11/08
Extraction Date: 12/15/08
Analysis Date: 08-JAN-2009 02:27
Report Date: 01/12/2009
Matrix: SOIL
% Solids: 87.5

Lab ID: SB7127-20
Client ID: MR08-IS099D-2-3-08D
SDG: TO9-17
Extracted by: CB
Extraction Method: SW846 3550
Analyst: JCG
Analysis Method: SW846 M8270C
Lab Prep Batch: WG59079
Units: ug/Kgdrywt

CAS#	Compound	Flags	Results	DF	PQL	Adj.PQL	Adj.MDL
91-20-3	Naphthalene	U	11	1.0	10	11	3.0
91-57-6	2-Methylnaphthalene	U	11	1.0	10	11	2.5
86-73-7	Fluorene	U	11	1.0	10	11	3.6
85-01-8	Phenanthrene	U	11	1.0	10	11	2.0
206-44-0	Fluoranthene	U	11	1.0	10	11	2.0
129-00-0	Pyrene	U	11	1.0	10	11	2.4
56-55-3	Benzo(a)anthracene	U	11	1.0	10	11	2.2
205-99-2	Benzo(b)fluoranthene	U	11	1.0	10	11	2.7
207-08-9	Benzo(k)fluoranthene	U	11	1.0	10	11	3.5
50-32-8	Benzo(a)pyrene	U	11	1.0	10	11	3.8
193-39-5	Indeno(1,2,3-cd)pyrene	U	11	1.0	10	11	2.2
53-70-3	Dibenzo(a,h)anthracene	J	2.1	1.0	10	11	2.0
191-24-2	Benzo(g,h,i)perylene	J	2.4	1.0	10	11	2.3
118-74-1	Hexachlorobenzene	U	11	1.0	10	11	2.0
87-68-3	Hexachlorobutadiene	U	11	1.0	10	11	2.6
77-47-4	Hexachlorocyclopentadiene	U	11	1.0	10	11	1.7
7297-45-2	2-Methylnaphthalene-D10		64%				
367-12-4	2,4-Dibromophenol		77%				
81103-79-9	Fluorene-d10		69%				
1718-51-1	Pyrene-D10		90%				

MW
2/10/09

11

KATAHDIN ANALYTICAL SERVICES
Report of Analytical Results

Client: CH2MHill
Project: TO-009 Lejeune
PO No:
Sample Date: 12/10/08
Received Date: 12/11/08
Extraction Date: 12/15/08
Analysis Date: 11-JAN-2009 21:29
Report Date: 01/12/2009
Matrix: SOIL
% Solids: 88.8

Lab ID: SB7127-22
Client ID: MR08-SS100-08D
SDG: TO9-17
Extracted by: CB
Extraction Method: SW846 3550
Analyst: EKC
Analysis Method: SW846 M8270C
Lab Prep Batch: WG59079
Units: ug/Kgdrywt

CAS#	Compound	Flags	Results	DF	PQL	Adj.PQL	Adj.MDL	
91-20-3	Naphthalene	U	11	1.0	10	11	2.9	
91-57-6	2-Methylnaphthalene	U	11	1.0	10	11	2.5	
86-73-7	Fluorene	U	11	1.0	10	11	3.6	
85-01-8	Phenanthrene	~~J~~ J	4.0	1.0	10	11	2.0	CCH
206-44-0	Fluoranthene	U	11	1.0	10	11	2.0	
129-00-0	Pyrene	J	3.1	1.0	10	11	2.4	
56-55-3	Benzo(a)anthracene	~~U~~ UJ	11	1.0	10	11	2.1	CCH
205-99-2	Benzo(b)fluoranthene	~~U~~ UJ	11	1.0	10	11	2.7	CCH
207-08-9	Benzo(k)fluoranthene	U	11	1.0	10	11	3.5	
50-32-8	Benzo(a)pyrene	U	11	1.0	10	11	3.7	
193-39-5	Indeno(1,2,3-cd)pyrene	~~U~~ UJ	11	1.0	10	11	2.1	CCH
53-70-3	Dibenzo(a,h)anthracene	U	11	1.0	10	11	2.0	
191-24-2	Benzo(g,h,i)perylene	~~U~~ UJ	11	1.0	10	11	2.2	CCH
118-74-1	Hexachlorobenzene	U	11	1.0	10	11	2.0	
87-68-3	Hexachlorobutadiene	~~U~~ UJ	11	1.0	10	11	2.6	CCH
77-47-4	Hexachlorocyclopentadiene	U	11	1.0	10	11	1.7	
7297-45-2	2-Methylnaphthalene-D10		86%					
367-12-4	2,4-Dibromophenol		98%					
81103-79-9	Fluorene-d10		94%					
1718-51-1	Pyrene-D10		129%					

LW
3/4/09

KATAHDIN ANALYTICAL SERVICES
Report of Analytical Results

Client: CH2MHill
Project: TO-009 Lejeune
PO No:
Sample Date: 12/10/08
Received Date: 12/11/08
Extraction Date: 12/15/08
Analysis Date: 11-JAN-2009 16:43
Report Date: 01/12/2009
Matrix: SOIL
% Solids: 85.8

Lab ID: SB7127-24
Client ID: MR08-IS100-2-3-08D
SDG: TO9-17
Extracted by: CB
Extraction Method: SW846 3550
Analyst: EKC
Analysis Method: SW846 M8270C
Lab Prep Batch: WG59079
Units: ug/Kgdrywt

CAS#	Compound	Flags	Results	DF	PQL	Adj.PQL	Adj.MDL	
91-20-3	Naphthalene	U	12	1.0	10	12	3.0	
91-57-6	2-Methylnaphthalene	U	12	1.0	10	12	2.6	
86-73-7	Fluorene	U	12	1.0	10	12	3.7	
85-01-8	Phenanthrene	~~U~~ UJ	12	1.0	10	12	2.1	CCH
206-44-0	Fluoranthene	U	12	1.0	10	12	2.1	
129-00-0	Pyrene	U	12	1.0	10	12	2.4	
56-55-3	Benzo(a)anthracene	~~U~~ UJ	12	1.0	10	12	2.2	CCH
205-99-2	Benzo(b)fluoranthene	~~U~~ UJ	12	1.0	10	12	2.8	CCH
207-08-9	Benzo(k)fluoranthene	U	12	1.0	10	12	3.6	
50-32-8	Benzo(a)pyrene	U	12	1.0	10	12	3.8	
193-39-5	Indeno(1,2,3-cd)pyrene	~~U~~ UJ	12	1.0	10	12	2.2	CCH
53-70-3	Dibenzo(a,h)anthracene	U	12	1.0	10	12	2.1	
191-24-2	Benzo(g,h,i)perylene	~~U~~ UJ	12	1.0	10	12	2.3	CCH
118-74-1	Hexachlorobenzene	U	12	1.0	10	12	2.1	
87-68-3	Hexachlorobutadiene	~~U~~ UJ	12	1.0	10	12	2.7	CCH
77-47-4	Hexachlorocyclopentadiene	U	12	1.0	10	12	1.7	
7297-45-2	2-Methylnaphthalene-D10		72%					
367-12-4	2,4-Dibromophenol		76%					
81103-79-9	Fluorene-d10		85%					
1718-51-1	Pyrene-D10		121%					

CLW
3/4/09

13

KATAHDIN ANALYTICAL SERVICES
Report of Analytical Results

Client: CH2MHill
Project: TO-009 Lejeune
PO No:
Sample Date: 12/10/08
Received Date: 12/11/08
Extraction Date: 12/15/08
Analysis Date: 11-JAN-2009 17:24
Report Date: 01/12/2009
Matrix: SOIL
% Solids: 88.5

Lab ID: SB7127-26
Client ID: MR08-SS101-08D
SDG: TO9-17
Extracted by: CB
Extraction Method: SW846 3550
Analyst: EKC
Analysis Method: SW846 M8270C
Lab Prep Batch: WG59079
Units: ug/Kgdrywt

CAS#	Compound	Flags	Results	DF	PQL	Adj.PQL	Adj.MDL	
91-20-3	Naphthalene	U	11	1.0	10	11	2.9	
91-57-6	2-Methylnaphthalene	U	11	1.0	10	11	2.5	
86-73-7	Fluorene	U	11	1.0	10	11	3.6	
85-01-8	Phenanthrene	~~U~~ UJ	11	1.0	10	11	2.0	CCH
206-44-0	Fluoranthene	U	11	1.0	10	11	2.0	
129-00-0	Pyrene	U	11	1.0	10	11	2.4	
56-55-3	Benzo(a)anthracene	~~U~~ UJ	11	1.0	10	11	2.1	CCH
205-99-2	Benzo(b)fluoranthene	~~U~~ UJ	11	1.0	10	11	2.7	CCH
207-08-9	Benzo(k)fluoranthene	U	11	1.0	10	11	3.5	
50-32-8	Benzo(a)pyrene	U	11	1.0	10	11	3.7	
193-39-5	Indeno(1,2,3-cd)pyrene	~~U~~ UJ	11	1.0	10	11	2.1	CCH
53-70-3	Dibenzo(a,h)anthracene	U	11	1.0	10	11	2.0	
191-24-2	Benzo(g,h,i)perylene	~~U~~ UJ	11	1.0	10	11	2.2	CCH
118-74-1	Hexachlorobenzene	U	11	1.0	10	11	2.0	
87-68-3	Hexachlorobutadiene	~~U~~ UJ	11	1.0	10	11	2.6	CCH
77-47-4	Hexachlorocyclopentadiene	U	11	1.0	10	11	1.7	
7297-45-2	2-Methylnaphthalene-D10		74%					
367-12-4	2,4-Dibromophenol		82%					
81103-79-9	Fluorene-d10		90%					
1718-51-1	Pyrene-D10		120%					

LWS
3/4/09

KATAHDIN ANALYTICAL SERVICES
Report of Analytical Results

Client: CH2MHill
Project: TO-009 Lejeune
PO No:
Sample Date: 12/10/08
Received Date: 12/11/08
Extraction Date: 12/15/08
Analysis Date: 08-JAN-2009 03:08
Report Date: 01/12/2009
Matrix: SOIL
% Solids: 88.2

Lab ID: SB7127-28
Client ID: MR08-IS101-2-3-08D
SDG: TO9-17
Extracted by: CB
Extraction Method: SW846 3550
Analyst: JCG
Analysis Method: SW846 M8270C
Lab Prep Batch: WG59079
Units: ug/Kgdrywt

CAS#	Compound	Flags	Results	DF	PQL	Adj.PQL	Adj.MDL
91-20-3	Naphthalene	U	11	1.0	10	11	2.9
91-57-6	2-Methylnaphthalene	U	11	1.0	10	11	2.5
86-73-7	Fluorene	U	11	1.0	10	11	3.6
85-01-8	Phenanthrene	U	11	1.0	10	11	2.0
206-44-0	Fluoranthene	U	11	1.0	10	11	2.0
129-00-0	Pyrene	U	11	1.0	10	11	2.4
56-55-3	Benzo(a)anthracene	U	11	1.0	10	11	2.2
205-99-2	Benzo(b)fluoranthene	U	11	1.0	10	11	2.7
207-08-9	Benzo(k)fluoranthene	U	11	1.0	10	11	3.5
50-32-8	Benzo(a)pyrene	U	11	1.0	10	11	3.7
193-39-5	Indeno(1,2,3-cd)pyrene	U	11	1.0	10	11	2.2
53-70-3	Dibenzo(a,h)anthracene	U	11	1.0	10	11	2.0
191-24-2	Benzo(g,h,i)perylene	U	11	1.0	10	11	2.3
118-74-1	Hexachlorobenzene	U	11	1.0	10	11	2.0
87-68-3	Hexachlorobutadiene	U	11	1.0	10	11	2.6
77-47-4	Hexachlorocyclopentadiene	U	11	1.0	10	11	1.7
7297-45-2	2-Methylnaphthalene-D10		66%				
367-12-4	2,4-Dibromophenol		93%				
81103-79-9	Fluorene-d10		83%				
1718-51-1	Pyrene-D10		100%				

WO 31409

KATAHDIN ANALYTICAL SERVICES
Report of Analytical Results

Client: CH2MHill
Project: TO-009 Lejeune
PO No:
Sample Date: 12/15/08
Received Date: 12/17/08
Extraction Date: 12/18/08
Analysis Date: 09-JAN-2009 16:22
Report Date: 01/12/2009
Matrix: SOIL
% Solids: 92.2

Lab ID: SB7238-2
Client ID: MR08-SS102-08D
SDG: TO9-17
Extracted by: AC
Extraction Method: SW846 3550
Analyst: JCG
Analysis Method: SW846 M8270C
Lab Prep Batch: WG59199
Units: ug/Kgdrywt

CAS#	Compound	Flags	Results	DF	PQL	Adj.PQL	Adj.MDL	
91-20-3	Naphthalene	U	11	1.0	10	11	2.8	
91-57-6	2-Methylnaphthalene	U	11	1.0	10	11	2.4	
86-73-7	Fluorene	U	11	1.0	10	11	3.5	
85-01-8	Phenanthrene	U	11	1.0	10	11	2.0	
206-44-0	Fluoranthene	U	11	1.0	10	11	2.0	
129-00-0	Pyrene	U	11	1.0	10	11	2.3	
56-55-3	Benzo(a)anthracene	U	11	1.0	10	11	2.1	
205-99-2	Benzo(b)fluoranthene	U	11	1.0	10	11	2.6	
207-08-9	Benzo(k)fluoranthene	U	11	1.0	10	11	3.4	
50-32-8	Benzo(a)pyrene	U	11	1.0	10	11	3.6	
193-39-5	Indeno(1,2,3-cd)pyrene	U	11	1.0	10	11	2.1	
53-70-3	Dibenzo(a,h)anthracene	U	11	1.0	10	11	2.0	
191-24-2	Benzo(g,h,i)perylene	J	3.9	1.0	10	11	2.2	
118-74-1	Hexachlorobenzene	U	11	1.0	10	11	2.0	
87-68-3	Hexachlorobutadiene	U	11	1.0	10	11	2.5	
77-47-4	Hexachlorocyclopentadiene	~~U~~ UJ	11	1.0	10	11	1.6	CCH
7297-45-2	2-Methylnaphthalene-D10		75%					
367-12-4	2,4-Dibromophenol		* 29%					
81103-79-9	Fluorene-d10		88%					
1718-51-1	Pyrene-D10		89%					

DEW 3/4/09

16

KATAHDIN ANALYTICAL SERVICES
Report of Analytical Results

Client: CH2MHill
Project: TO-009 Lejeune
PO No:
Sample Date: 12/15/08
Received Date: 12/17/08
Extraction Date: 12/18/08
Analysis Date: 09-JAN-2009 13:01
Report Date: 01/12/2009
Matrix: SOIL
% Solids: 88.0

Lab ID: SB7238-4
Client ID: MR08-IS102-2-3-08D
SDG: TO9-17
Extracted by: AC
Extraction Method: SW846 3550
Analyst: JCG
Analysis Method: SW846 M8270C
Lab Prep Batch: WG59199
Units: ug/Kgdrywt

CAS#	Compound	Flags	Results	DF	PQL	Adj.PQL	Adj.MDL	
91-20-3	Naphthalene	J	4.9	1.0	10	11	3.0	
91-57-6	2-Methylnaphthalene	J	2.6	1.0	10	11	2.5	
86-73-7	Fluorene	U	11	1.0	10	11	3.6	
85-01-8	Phenanthrene	~~J~~ J	3.4	1.0	10	11	2.0	BSH
206-44-0	Fluoranthene	J	3.0	1.0	10	11	2.0	
129-00-0	Pyrene	J	2.7	1.0	10	11	2.4	
56-55-3	Benzo(a)anthracene	J	3.0	1.0	10	11	2.2	
205-99-2	Benzo(b)fluoranthene	~~J~~ J	9.9	1.0	10	11	2.7	BSH
207-08-9	Benzo(k)fluoranthene	U	11	1.0	10	11	3.5	
50-32-8	Benzo(a)pyrene	U	11	1.0	10	11	3.8	
193-39-5	Indeno(1,2,3-cd)pyrene	J	2.8	1.0	10	11	2.2	
53-70-3	Dibenzo(a,h)anthracene	J	3.4	1.0	10	11	2.0	
191-24-2	Benzo(g,h,i)perylene	J	3.6	1.0	10	11	2.3	
118-74-1	Hexachlorobenzene	J	2.2	1.0	10	11	2.0	
87-68-3	Hexachlorobutadiene	U	11	1.0	10	11	2.6	
77-47-4	Hexachlorocyclopentadiene	~~J~~ J	5.0	1.0	10	11	1.7	CCH
7297-45-2	2-Methylnaphthalene-D10		64%					
367-12-4	2,4-Dibromophenol		67%					
81103-79-9	Fluorene-d10		76%					
1718-51-1	Pyrene-D10		81%					

lcw
3/4/09

KATAHDIN ANALYTICAL SERVICES
Report of Analytical Results

Client: CH2MHill
Project: TO-009 Lejeune
PO No:
Sample Date: 12/15/08
Received Date: 12/17/08
Extraction Date: 12/18/08
Analysis Date: 09-JAN-2009 19:44
Report Date: 01/12/2009
Matrix: SOIL
% Solids: 92.0

Lab ID: SB7238-6
Client ID: MR08-SS119-08D
SDG: TO9-17
Extracted by: AC
Extraction Method: SW846 3550
Analyst: JCG
Analysis Method: SW846 M8270C
Lab Prep Batch: WG59199
Units: ug/Kgdrywt

CAS#	Compound	Flags	Results	DF	PQL	Adj.PQL	Adj.MDL	
91-20-3	Naphthalene	J	4.0	1.0	10	11	2.8	
91-57-6	2-Methylnaphthalene	U	11	1.0	10	11	2.4	
86-73-7	Fluorene	U	11	1.0	10	11	3.5	
85-01-8	Phenanthrene	~~J~~ J	3.4	1.0	10	11	2.0	BSH
206-44-0	Fluoranthene	U	11	1.0	10	11	2.0	
129-00-0	Pyrene	J	3.0	1.0	10	11	2.3	
56-55-3	Benzo(a)anthracene	J	2.9	1.0	10	11	2.1	
205-99-2	Benzo(b)fluoranthene	U	11	1.0	10	11	2.6	
207-08-9	Benzo(k)fluoranthene	U	11	1.0	10	11	3.4	
50-32-8	Benzo(a)pyrene	U	11	1.0	10	11	3.6	
193-39-5	Indeno(1,2,3-cd)pyrene	U	11	1.0	10	11	2.1	
53-70-3	Dibenzo(a,h)anthracene	U	11	1.0	10	11	2.0	
191-24-2	Benzo(g,h,i)perylene	J	9.7	1.0	10	11	2.2	
118-74-1	Hexachlorobenzene	U	11	1.0	10	11	2.0	
87-68-3	Hexachlorobutadiene	U	11	1.0	10	11	2.5	
77-47-4	Hexachlorocyclopentadiene	11 ~~J~~ U	3.3	1.0	10	11	1.6	CCH, BL
7297-45-2	2-Methylnaphthalene-D10		67%					
367-12-4	2,4-Dibromophenol		39%					
81103-79-9	Fluorene-d10		82%					
1718-51-1	Pyrene-D10		91%					

MW 3/4/09

KATAHDIN ANALYTICAL SERVICES
Report of Analytical Results

Client: CH2MHill
Project: TO-009 Lejeune
PO No:
Sample Date: 12/15/08
Received Date: 12/17/08
Extraction Date: 12/18/08
Analysis Date: 09-JAN-2009 21:04
Report Date: 01/12/2009
Matrix: SOIL
% Solids: 92.2

Lab ID: SB7238-8
Client ID: MR08-SS119D-08D
SDG: TO9-17
Extracted by: AC
Extraction Method: SW846 3550
Analyst: JCG
Analysis Method: SW846 M8270C
Lab Prep Batch: WG59199
Units: ug/Kgdrywt

CAS#	Compound	Flags	Results	DF	PQL	Adj.PQL	Adj.MDL	
91-20-3	Naphthalene	U	11	1.0	10	11	2.8	
91-57-6	2-Methylnaphthalene	U	11	1.0	10	11	2.4	
86-73-7	Fluorene	U	11	1.0	10	11	3.5	
85-01-8	Phenanthrene	~~J~~ J	4.4	1.0	10	11	2.0	BSH
206-44-0	Fluoranthene	U	11	1.0	10	11	2.0	
129-00-0	Pyrene	J	3.8	1.0	10	11	2.3	
56-55-3	Benzo(a)anthracene	U	11	1.0	10	11	2.1	
205-99-2	Benzo(b)fluoranthene	U	11	1.0	10	11	2.6	
207-08-9	Benzo(k)fluoranthene	U	11	1.0	10	11	3.4	
50-32-8	Benzo(a)pyrene	U	11	1.0	10	11	3.6	
193-39-5	Indeno(1,2,3-cd)pyrene	U	11	1.0	10	11	2.1	
53-70-3	Dibenzo(a,h)anthracene	U	11	1.0	10	11	2.0	
191-24-2	Benzo(g,h,i)perylene	J	11	1.0	10	11	2.2	
118-74-1	Hexachlorobenzene	U	11	1.0	10	11	2.0	
87-68-3	Hexachlorobutadiene	U	11	1.0	10	11	2.5	
77-47-4	Hexachlorocyclopentadiene	11 ~~J~~ UJ	3.3	1.0	10	11	1.6	CCH, BC
7297-45-2	2-Methylnaphthalene-D10		70%					
367-12-4	2,4-Dibromophenol		* 29%					
81103-79-9	Fluorene-d10		85%					
1718-51-1	Pyrene-D10		98%					

lew
3/4/09

KATAHDIN ANALYTICAL SERVICES
Report of Analytical Results

Client: CH2MHill
Project: TO-009 Lejeune
PO No:
Sample Date: 12/15/08
Received Date: 12/17/08
Extraction Date: 12/18/08
Analysis Date: 09-JAN-2009 15:02
Report Date: 01/12/2009
Matrix: SOIL
% Solids: 87.2

Lab ID: SB7238-10
Client ID: MR08-IS119-4.5-5.5
SDG: TO9-17
Extracted by: AC
Extraction Method: SW846 3550
Analyst: JCG
Analysis Method: SW846 M8270C
Lab Prep Batch: WG59199
Units: ug/Kgdrywt

CAS#	Compound	Flags	Results	DF	PQL	Adj.PQL	Adj.MDL
91-20-3	Naphthalene	U	11	1.0	10	11	3.0
91-57-6	2-Methylnaphthalene	U	11	1.0	10	11	2.5
86-73-7	Fluorene	U	11	1.0	10	11	3.7
85-01-8	Phenanthrene	U	11	1.0	10	11	2.1
206-44-0	Fluoranthene	U	11	1.0	10	11	2.1
129-00-0	Pyrene	U	11	1.0	10	11	2.4
56-55-3	Benzo(a)anthracene	U	11	1.0	10	11	2.2
205-99-2	Benzo(b)fluoranthene	U	11	1.0	10	11	2.8
207-08-9	Benzo(k)fluoranthene	U	11	1.0	10	11	3.6
50-32-8	Benzo(a)pyrene	U	11	1.0	10	11	3.8
193-39-5	Indeno(1,2,3-cd)pyrene	U	11	1.0	10	11	2.2
53-70-3	Dibenzo(a,h)anthracene	U	11	1.0	10	11	2.1
191-24-2	Benzo(g,h,i)perylene	U	11	1.0	10	11	2.3
118-74-1	Hexachlorobenzene	U	11	1.0	10	11	2.1
87-68-3	Hexachlorobutadiene	U	11	1.0	10	11	2.6
77-47-4	Hexachlorocyclopentadiene	~~U~~ UJ	11	1.0	10	11	1.7 CCH
7297-45-2	2-Methylnaphthalene-D10		69%				
367-12-4	2,4-Dibromophenol		55%				
81103-79-9	Fluorene-d10		80%				
1718-51-1	Pyrene-D10		82%				

JLW
3/11/09

20

KATAHDIN ANALYTICAL SERVICES
Report of Analytical Results

Client: CH2MHill
Project: TO-009 Lejeune
PO No:
Sample Date: 12/15/08
Received Date: 12/17/08
Extraction Date: 12/18/08
Analysis Date: 09-JAN-2009 20:24
Report Date: 01/12/2009
Matrix: SOIL
% Solids: 87.6

Lab ID: SB7238-12
Client ID: MR08-IS119D-4.5-5.5
SDG: TO9-17
Extracted by: AC
Extraction Method: SW846 3550
Analyst: JCG
Analysis Method: SW846 M8270C
Lab Prep Batch: WG59199
Units: ug/Kgdrywt

CAS#	Compound	Flags	Results	DF	PQL	Adj.PQL	Adj.MDL	
91-20-3	Naphthalene	U	11	1.0	10	11	3.0	
91-57-6	2-Methylnaphthalene	U	11	1.0	10	11	2.5	
86-73-7	Fluorene	U	11	1.0	10	11	3.6	
85-01-8	Phenanthrene	J	5.0	1.0	10	11	2.0	
206-44-0	Fluoranthene	U	11	1.0	10	11	2.0	
129-00-0	Pyrene	U	11	1.0	10	11	2.4	
56-55-3	Benzo(a)anthracene	U	11	1.0	10	11	2.2	
205-99-2	Benzo(b)fluoranthene	U	11	1.0	10	11	2.7	
207-08-9	Benzo(k)fluoranthene	U	11	1.0	10	11	3.5	
50-32-8	Benzo(a)pyrene	U	11	1.0	10	11	3.8	
193-39-5	Indeno(1,2,3-cd)pyrene	U	11	1.0	10	11	2.2	
53-70-3	Dibenzo(a,h)anthracene	U	11	1.0	10	11	2.0	
191-24-2	Benzo(g,h,i)perylene	U	11	1.0	10	11	2.3	
118-74-1	Hexachlorobenzene	U	11	1.0	10	11	2.0	
87-68-3	Hexachlorobutadiene	U	11	1.0	10	11	2.6	
77-47-4	Hexachlorocyclopentadiene	~~U~~ UJ	11	1.0	10	11	1.7	CCH
7297-45-2	2-Methylnaphthalene-D10		53%					
367-12-4	2,4-Dibromophenol		61%					
81103-79-9	Fluorene-d10		75%					
1718-51-1	Pyrene-D10		83%					

MW 3/4/09

ENVIRONMENTAL
Data Services, Inc.

SEMIVOLATILE ORGANIC COMPOUNDS

USEPA Region IV - Level IV Review

Site: MCB Camp Lejeune, TO-09 SDG #: TO9-17

Client: CH2M HILL, Inc., Virginia Beach, Virginia Date: March 9, 2009

Laboratory: Katahdin Analytical Services, Scarborough, Maine Reviewer: Nancy Weaver

EDS ID	Client Sample ID	Laboratory Sample ID	Matrix
1	MR08-SS098-08D	SB7127-1	Soil
2	MR08-IS098-3-4-08D	SB7127-3	Soil
3	MR08-SS121-08D	SB7127-5	Soil
4	MR08-IS121-2-3-08D	SB7127-7	Soil
5	MR08-SS124-08D	SB7127-9	Soil
6	MR08-IS124-2-3-08D	SB7127-11	Soil
7	MR08-SS099-08D	SB7127-13	Soil
8	MR08-SS099D-08D	SB7127-15	Soil
9	MR08-IS099-2-3-08D	SB7127-17	Soil
10	MR08-IS099D-2-3-08D	SB7127-19	Soil
11	MR08-SS100-08D	SB7127-21	Soil
12	MR08-IS100-2-3-08D	SB7127-23	Soil
13	MR08-SS101-08D	SB7127-25	Soil
14	MR08-IS101-2-3-08D	SB7127-27	Soil
15	MR08-SS102-08D	SB7238-1	Soil
15RE	MR08-SS102-08DRE	SB7238-1RE	Soil
16	MR08-IS102-2-3-08D	SB7238-3	Soil
17	MR08-SS119-08D	SB7238-5	Soil
17RE	MR08-SS119-08DRE	SB7238-5RE	Soil
18	MR08-SS119D-08D	SB7238-7	Soil
18RE	MR08-SS119D-08DRE	SB7238-7RE	Soil
19	MR08-IS119-4.5-5.5-08D	SB7238-9	Soil
19RE	MR08-IS119-4.5-5.5-08DRE	SB7238-9RE	Soil
20	MR08-IS119-D4.5-5.5-08D	SB7238-11	Soil

The USEPA "Contract Laboratory Program National Functional Guidelines for Organic Data Review," October 1999, and professional judgment were used in evaluating the data in this summary report.

Holding Times - All samples were extracted within 14 days for soil samples and analyzed within 40 days for all samples except the following.

Sample	Date Sampled	Date Extracted	# of Days	Qualifier
15RE	12/15/08	01/09/09	26	J/UJ - unless already qualified
17RE	12/15/08	01/09/09	26	J/UJ - unless already qualified
18RE	12/15/08	01/09/09	26	J/UJ - unless already qualified
19RE	12/15/08	01/09/09	26	J/UJ - unless already qualified

GC/MS Tuning - All of the DFTPP tunes in the initial and continuing calibrations met the percent relative abundance criteria.

Initial Calibration - The initial calibrations exhibited acceptable %RSD and mean RRF values except the following.

ICAL Date	Compound	%RSD/RRF	Qualifier	Affected Samples
01/12/09	Benzaldehyde	90.97%	J/UJ	All samples

Continuing Calibration - The continuing calibrations exhibited acceptable %D and RRF values except the following.

CCAL Date	Compound	%D/RRF	Qualifier	Affected Samples
01/07/09	Benzaldehyde	31.54%	None	Already qualified due to ICAL
	Nitrobenzene	37.96%	J/UJ	2, 4
	4-Nitrophenol	38.33%	J/UJ	2, 4
	Butylbenzylphthalate	27.32%	J/UJ	2, 4
	bis (2-Ethylhexyl) phthalate	26.38%	J/UJ	2, 4
	Di-n-octylphthalate	26.23%	J/UJ	2, 4
01/08/09	Benzaldehyde	38.48%	None	Already qualified due to ICAL
	Nitrobenzene	47.04%	J/UJ	1, 3, 5-10
01/08/09 (2010)	Benzaldehyde	38.44%	J/UJ	11-20
	Nitrobenzene	44.49%	J/UJ	11-20
	4-Nitrophenol	45.26%	J/UJ	11-20
01/13/09	Benzaldehyde	173.14%	None	Already qualified due to ICAL

Surrogates - All samples exhibited acceptable surrogate recoveries except the following.

Sample ID	Surrogate	%R	Qualifier
15	S1-2-Fluorophenol	7%	J/R - Acids
	S5-2,4,6-Tribromophenol	0%	
16	S5-2,4,6-Tribromophenol	15%	None for 1 out
17	S1-2-Fluorophenol	10%	J/R - Acids
	S5-2,4,6-Tribromophenol	0%	
18	S1-2-Fluorophenol	0%	J/R - Acids
	S2-Phenol-d6	39%	
	S5-2,4,6-Tribromophenol	0%	
18RE	S1-2-Fluorophenol	28%	J/UJ - Acids
	S5-2,4,6-Tribromophenol	18%	

Sample ID	Surrogate	%R	Qualifier
19	S1-2-Fluorophenol	26%	J/R - Acids
	S5-2,4,6-Tribromophenol	3%	
20	S5-2,4,6-Tribromophenol	12%	None for 1 out

MS/MSD - A MS/MSD sample was not analyzed.

Laboratory Control Sample - The LCS samples exhibited acceptable %R values except the following.

LCS ID	Compound	%R	Qualifier	Affected Samples
WG59685-LCS	2,2'-Oxybis (1-chloropropane)	59%	J/UJ	15RE, 17RE, 18RE, 19RE
WG59198-LCS	Nitrobenzene	134%	None	All ND
	2,4-Dimethylphenol	18%	J/UJ	15-20

Internal Standard (IS) Area Performance - All internal standards met response and retention time (RT) criteria.

Method Blank - The method blanks were free of contamination.

Field, Equipment Blank - Field QC results are summarized below.

Blank ID	Compound	Conc. ug/L	Action Level ug/L	Qualifier	Affected Samples
MR08-FB01120608	None - ND	-	-	-	-
MR08-FB12192008	None - ND	-	-	-	-
MR08-EB01121008-SS	None - ND	-	-	-	-
MR08-EB01-121508-SS	None - ND	-	-	-	-

Field Duplicates - Field duplicate results are summarized below.

Compound	MR08-SS099-08D ug/kg	MR08-SS099D-08D ug/kg	RPD	Qualifier
None	ND	ND	-	-

Compound	MR08-IS099-2-3-08D ug/kg	MR08-IS099D-2-3-08D ug/kg	RPD	Qualifier
None	ND	ND	-	-

Compound	MR08-SS119-08D ug/kg	MR08-SS119D-08D ug/kg	RPD	Qualifier
bis (2-Ethylhexyl) phthalate	360	220	48%	None

Compound	MR08-IS119-4.5-5.5-08D ug/kg	MR08-IS119-D4.5-5.5-08D ug/kg	RPD	Qualifier
bis (2-Ethylhexyl) phthalate	130	320	84%	None

Tentatively Identified Compounds (TICs) - TICs were not reported.

Compound Quantitation - Several samples were reanalyzed due to high concentrations of target compounds. Refer to Form Is for which were used for reporting purposes.

KATAHDIN ANALYTICAL SERVICES
Report of Analytical Results

Client: CH2MHill
Project: TO-009 Lejeune
PO No:
Sample Date: 12/10/08
Received Date: 12/11/08
Extraction Date: 12/15/08
Analysis Date: 08-JAN-2009 13:27
Report Date: 01/14/2009
Matrix: SOIL
% Solids: 93.6

Lab ID: SB7127-1
Client ID: MR08-SS098-08D
SDG: TO9-17
Extracted by: CB
Extraction Method: SW846 3550
Analyst: JLP
Analysis Method: SW846 8270C
Lab Prep Batch: WG59078
Units: ug/Kgdrywt

CAS#	Compound	Flags	Results	DF	PQL	Adj.PQL	Adj.MDL	
100-52-7	Benzaldehyde	~~U~~ UJ	530	1.0	500	530	130	ICB
108-95-2	Phenol	U	530	1.0	500	530	170	
111-44-4	Bis(2-Chloroethyl)ether	U	350	1.0	330	350	86	
95-57-8	2-Chlorophenol	U	530	1.0	500	530	180	
95-48-7	2-Methylphenol	U	640	1.0	600	640	210	
108-60-1	2,2'-Oxybis(1-chloropropane)	U	350	1.0	330	350	95	
98-86-2	Acetophenone	U	640	1.0	600	640	190	
621-64-7	N-Nitroso-di-n-propylamine	U	350	1.0	330	350	89	
65794-96-9	3&4-Methylphenol	U	640	1.0	600	640	200	
67-72-1	Hexachloroethane	U	350	1.0	330	350	100	
98-95-3	Nitrobenzene	~~U~~ UJ	350	1.0	330	350	97	CCH
78-59-1	Isophorone	U	350	1.0	330	350	80	
88-75-5	2-Nitrophenol	U	640	1.0	600	640	180	
105-67-9	2,4-Dimethylphenol	U	530	1.0	500	530	180	
111-91-1	Bis(2-Chloroethoxy)methane	U	350	1.0	330	350	100	
120-83-2	2,4-Dichlorophenol	U	530	1.0	500	530	160	
106-47-8	4-Chloroaniline	U	530	1.0	500	530	130	
105-60-2	Caprolactam	U	530	1.0	500	530	150	
59-50-7	4-Chloro-3-Methylphenol	U	530	1.0	500	530	180	
88-06-2	2,4,6-Trichlorophenol	U	530	1.0	500	530	160	
95-95-4	2,4,5-Trichlorophenol	U	530	1.0	500	530	160	
91-58-7	2-Chloronaphthalene	U	350	1.0	330	350	93	
92-52-4	1,1'-Biphenyl	U	350	1.0	330	350	78	
88-74-4	2-Nitroaniline	U	530	1.0	500	530	80	
131-11-3	Dimethyl Phthalate	U	350	1.0	330	350	83	
606-20-2	2,6-Dinitrotoluene	U	350	1.0	330	350	84	
208-96-8	Acenaphthylene	U	350	1.0	330	350	75	
99-09-2	3-Nitroaniline	U	530	1.0	500	530	100	
83-32-9	Acenaphthene	U	350	1.0	330	350	69	
51-28-5	2,4-Dinitrophenol	U	1300	1.0	1200	1300	400	
132-64-9	Dibenzofuran	U	350	1.0	330	350	84	
100-02-7	4-Nitrophenol	U	1300	1.0	1200	1300	330	
121-14-2	2,4-Dinitrotoluene	U	350	1.0	330	350	91	
84-66-2	Diethylphthalate	U	350	1.0	330	350	85	
7005-72-3	4-Chlorophenyl-phenylether	U	350	1.0	330	350	83	
100-01-6	4-Nitroaniline	U	530	1.0	500	530	140	
534-52-1	4,6-Dinitro-2-Methylphenol	U	1300	1.0	1200	1300	360	
86-30-6	N-Nitrosodiphenylamine	U	700	1.0	660	700	230	
101-55-3	4-Bromophenyl-phenylether	U	350	1.0	330	350	91	
1912-24-9	Atrazine	U	350	1.0	330	350	97	
87-86-5	Pentachlorophenol	U	880	1.0	820	880	250	
120-12-7	Anthracene	U	350	1.0	330	350	90	
86-74-8	Carbazole	U	530	1.0	500	530	120	

hW
3/4/09

KATAHDIN ANALYTICAL SERVICES
Report of Analytical Results

Client: CH2MHill
Project: TO-009 Lejeune
PO No:
Sample Date: 12/10/08
Received Date: 12/11/08
Extraction Date: 12/15/08
Analysis Date: 08-JAN-2009 13:27
Report Date: 01/14/2009
Matrix: SOIL
% Solids: 93.6

Lab ID: SB7127-1
Client ID: MR08-SS098-08D
SDG: TO9-17
Extracted by: CB
Extraction Method: SW846 3550
Analyst: JLP
Analysis Method: SW846 8270C
Lab Prep Batch: WG59078
Units: ug/Kgdrywt

CAS#	Compound	Flags	Results	DF	PQL	Adj.PQL	Adj.MDL
84-74-2	Di-n-butylphthalate	U	350	1.0	330	350	110
85-68-7	Butylbenzylphthalate	U	350	1.0	330	350	99
91-94-1	3,3'-Dichlorobenzidine	U	530	1.0	500	530	120
218-01-9	Chrysene	U	350	1.0	330	350	100
117-81-7	bis(2-Ethylhexyl)phthalate	J	330	1.0	330	350	100
117-84-0	Di-n-octylphthalate	U	350	1.0	330	350	220
367-12-4	2-Fluorophenol		70%				
13127-88-3	Phenol-D6		83%				
4165-60-0	Nitrobenzene-D5		62%				
321-60-8	2-Fluorobiphenyl		73%				
118-79-6	2,4,6-Tribromophenol		71%				
1718-51-0	Terphenyl-D14		88%				

lw 3/4/09

2

KATAHDIN ANALYTICAL SERVICES
Report of Analytical Results

Client: CH2MHill
Project: TO-009 Lejeune
PO No:
Sample Date: 12/10/08
Received Date: 12/11/08
Extraction Date: 12/15/08
Analysis Date: 08-JAN-2009 04:26
Report Date: 01/14/2009
Matrix: SOIL
% Solids: 88.2

Lab ID: SB7127-3
Client ID: MR08-IS098-3-4-08D
SDG: TO9-17
Extracted by: CB
Extraction Method: SW846 3550
Analyst: JCG
Analysis Method: SW846 8270C
Lab Prep Batch: WG59078
Units: ug/Kgdrywt

CAS#	Compound	Flags	Results	DF	PQL	Adj.PQL	Adj.MDL	
100-52-7	Benzaldehyde	~~U~~ UJ	570	1.0	500	570	140	JCB
108-95-2	Phenol	U	570	1.0	500	570	180	
111-44-4	Bis(2-Chloroethyl)ether	U	370	1.0	330	370	92	
95-57-8	2-Chlorophenol	U	570	1.0	500	570	180	
95-48-7	2-Methylphenol	U	680	1.0	600	680	230	
108-60-1	2,2'-Oxybis(1-chloropropane)	U	370	1.0	330	370	100	
98-86-2	Acetophenone	U	680	1.0	600	680	200	
621-64-7	N-Nitroso-di-n-propylamine	U	370	1.0	330	370	94	
65794-96-9	3&4-Methylphenol	U	680	1.0	600	680	210	
67-72-1	Hexachloroethane	U	370	1.0	330	370	110	
98-95-3	Nitrobenzene	~~U~~ UJ	370	1.0	330	370	100	CCH
78-59-1	Isophorone	U	370	1.0	330	370	85	
88-75-5	2-Nitrophenol	U	680	1.0	600	680	190	
105-67-9	2,4-Dimethylphenol	U	570	1.0	500	570	190	
111-91-1	Bis(2-Chloroethoxy)methane	U	370	1.0	330	370	110	
120-83-2	2,4-Dichlorophenol	U	570	1.0	500	570	170	
106-47-8	4-Chloroaniline	U	570	1.0	500	570	130	
105-60-2	Caprolactam	U	570	1.0	500	570	160	
59-50-7	4-Chloro-3-Methylphenol	U	570	1.0	500	570	190	
88-06-2	2,4,6-Trichlorophenol	U	570	1.0	500	570	180	
95-95-4	2,4,5-Trichlorophenol	U	570	1.0	500	570	180	
91-58-7	2-Chloronaphthalene	U	370	1.0	330	370	99	
92-52-4	1,1'-Biphenyl	U	370	1.0	330	370	83	
88-74-4	2-Nitroaniline	U	570	1.0	500	570	85	
131-11-3	Dimethyl Phthalate	U	370	1.0	330	370	88	
606-20-2	2,6-Dinitrotoluene	U	370	1.0	330	370	90	
208-96-8	Acenaphthylene	U	370	1.0	330	370	79	
99-09-2	3-Nitroaniline	U	570	1.0	500	570	110	
83-32-9	Acenaphthene	U	370	1.0	330	370	74	
51-28-5	2,4-Dinitrophenol	U	1400	1.0	1200	1400	430	
132-64-9	Dibenzofuran	U	370	1.0	330	370	90	
100-02-7	4-Nitrophenol	~~U~~ UJ	1400	1.0	1200	1400	350	CCH
121-14-2	2,4-Dinitrotoluene	U	370	1.0	330	370	96	
84-66-2	Diethylphthalate	U	370	1.0	330	370	91	
7005-72-3	4-Chlorophenyl-phenylether	U	370	1.0	330	370	88	
100-01-6	4-Nitroaniline	U	570	1.0	500	570	150	
534-52-1	4,6-Dinitro-2-Methylphenol	U	1400	1.0	1200	1400	380	
86-30-6	N-Nitrosodiphenylamine	U	750	1.0	660	750	250	
101-55-3	4-Bromophenyl-phenylether	U	370	1.0	330	370	96	
1912-24-9	Atrazine	U	370	1.0	330	370	100	
87-86-5	Pentachlorophenol	U	930	1.0	820	930	270	
120-12-7	Anthracene	U	370	1.0	330	370	95	
86-74-8	Carbazole	U	570	1.0	500	570	120	

DW
3/4/09

2

KATAHDIN ANALYTICAL SERVICES
Report of Analytical Results

Client: CH2MHill
Project: TO-009 Lejeune
PO No:
Sample Date: 12/10/08
Received Date: 12/11/08
Extraction Date: 12/15/08
Analysis Date: 08-JAN-2009 04:26
Report Date: 01/14/2009
Matrix: SOIL
% Solids: 88.2

Lab ID: SB7127-3
Client ID: MR08-IS098-3-4-08D
SDG: TO9-17
Extracted by: CB
Extraction Method: SW846 3550
Analyst: JCG
Analysis Method: SW846 8270C
Lab Prep Batch: WG59078
Units: ug/Kgdrywt

CAS#	Compound	Flags	Results	DF	PQL	Adj.PQL	Adj.MDL	
84-74-2	Di-n-butylphthalate	U	370	1.0	330	370	110	
85-68-7	Butylbenzylphthalate	~~U~~ UJ	370	1.0	330	370	100	CCH
91-94-1	3,3'-Dichlorobenzidine	U	570	1.0	500	570	130	
218-01-9	Chrysene	U	370	1.0	330	370	110	
117-81-7	bis(2-Ethylhexyl)phthalate	J	400	1.0	330	370	110	CCH
117-84-0	Di-n-octylphthalate	~~U~~ UJ	370	1.0	330	370	240	CCH
367-12-4	2-Fluorophenol		72%					
13127-88-3	Phenol-D6		83%					
4165-60-0	Nitrobenzene-D5		75%					
321-60-8	2-Fluorobiphenyl		74%					
118-79-6	2,4,6-Tribromophenol		68%					
1718-51-0	Terphenyl-D14		106%					

lew 3/4/09

3

KATAHDIN ANALYTICAL SERVICES
Report of Analytical Results

Client: CH2MHill
Project: TO-009 Lejeune
PO No:
Sample Date: 12/10/08
Received Date: 12/11/08
Extraction Date: 12/15/08
Analysis Date: 08-JAN-2009 14:10
Report Date: 01/14/2009
Matrix: SOIL
% Solids: 92.6

Lab ID: SB7127-5
Client ID: MR08-SS121-08D
SDG: TO9-17
Extracted by: CB
Extraction Method: SW846 3550
Analyst: JLP
Analysis Method: SW846 8270C
Lab Prep Batch: WG59078
Units: ug/Kgdrywt

CAS#	Compound	Flags	Results	DF	PQL	Adj.PQL	Adj.MDL	
100-52-7	Benzaldehyde	~~U~~ UJ	540	1.0	500	540	130	JCB
108-95-2	Phenol	U	540	1.0	500	540	170	
111-44-4	Bis(2-Chloroethyl)ether	U	360	1.0	330	360	87	
95-57-8	2-Chlorophenol	U	540	1.0	500	540	180	
95-48-7	2-Methylphenol	U	650	1.0	600	650	220	
108-60-1	2,2'-Oxybis(1-chloropropane)	U	360	1.0	330	360	96	
98-86-2	Acetophenone	U	650	1.0	600	650	190	
621-64-7	N-Nitroso-di-n-propylamine	U	360	1.0	330	360	90	
65794-96-9	3&4-Methylphenol	U	650	1.0	600	650	200	
67-72-1	Hexachloroethane	U	360	1.0	330	360	100	
98-95-3	Nitrobenzene	~~U~~ UJ	360	1.0	330	360	98	CCH
78-59-1	Isophorone	U	360	1.0	330	360	81	
88-75-5	2-Nitrophenol	U	650	1.0	600	650	180	
105-67-9	2,4-Dimethylphenol	U	540	1.0	500	540	180	
111-91-1	Bis(2-Chloroethoxy)methane	U	360	1.0	330	360	100	
120-83-2	2,4-Dichlorophenol	U	540	1.0	500	540	160	
106-47-8	4-Chloroaniline	U	540	1.0	500	540	130	
105-60-2	Caprolactam	U	540	1.0	500	540	160	
59-50-7	4-Chloro-3-Methylphenol	U	540	1.0	500	540	180	
88-06-2	2,4,6-Trichlorophenol	U	540	1.0	500	540	170	
95-95-4	2,4,5-Trichlorophenol	U	540	1.0	500	540	170	
91-58-7	2-Chloronaphthalene	U	360	1.0	330	360	94	
92-52-4	1,1'-Biphenyl	U	360	1.0	330	360	79	
88-74-4	2-Nitroaniline	U	540	1.0	500	540	81	
131-11-3	Dimethyl Phthalate	U	360	1.0	330	360	84	
606-20-2	2,6-Dinitrotoluene	U	360	1.0	330	360	85	
208-96-8	Acenaphthylene	U	360	1.0	330	360	76	
99-09-2	3-Nitroaniline	U	540	1.0	500	540	100	
83-32-9	Acenaphthene	U	360	1.0	330	360	70	
51-28-5	2,4-Dinitrophenol	U	1300	1.0	1200	1300	410	
132-64-9	Dibenzofuran	U	360	1.0	330	360	85	
100-02-7	4-Nitrophenol	U	1300	1.0	1200	1300	330	
121-14-2	2,4-Dinitrotoluene	U	360	1.0	330	360	92	
84-66-2	Diethylphthalate	U	360	1.0	330	360	86	
7005-72-3	4-Chlorophenyl-phenylether	U	360	1.0	330	360	84	
100-01-6	4-Nitroaniline	U	540	1.0	500	540	140	
534-52-1	4,6-Dinitro-2-Methylphenol	U	1300	1.0	1200	1300	360	
86-30-6	N-Nitrosodiphenylamine	U	710	1.0	660	710	240	
101-55-3	4-Bromophenyl-phenylether	U	360	1.0	330	360	92	
1912-24-9	Atrazine	U	360	1.0	330	360	98	
87-86-5	Pentachlorophenol	U	880	1.0	820	880	260	
120-12-7	Anthracene	U	360	1.0	330	360	91	
86-74-8	Carbazole	U	540	1.0	500	540	120	

DWJ
3/4/09

KATAHDIN ANALYTICAL SERVICES
Report of Analytical Results

Client: CH2MHill
Project: TO-009 Lejeune
PO No:
Sample Date: 12/10/08
Received Date: 12/11/08
Extraction Date: 12/15/08
Analysis Date: 08-JAN-2009 14:10
Report Date: 01/14/2009
Matrix: SOIL
% Solids: 92.6

Lab ID: SB7127-5
Client ID: MR08-SS121-08D
SDG: TO9-17
Extracted by: CB
Extraction Method: SW846 3550
Analyst: JLP
Analysis Method: SW846 8270C
Lab Prep Batch: WG59078
Units: ug/Kgdrywt

CAS#	Compound	Flags	Results	DF	PQL	Adj.PQL	Adj.MDL
84-74-2	Di-n-butylphthalate	U	360	1.0	330	360	110
85-68-7	Butylbenzylphthalate	U	360	1.0	330	360	100
91-94-1	3,3'-Dichlorobenzidine	U	540	1.0	500	540	120
218-01-9	Chrysene	U	360	1.0	330	360	100
117-81-7	bis(2-Ethylhexyl)phthalate	U	360	1.0	330	360	100
117-84-0	Di-n-octylphthalate	U	360	1.0	330	360	230
367-12-4	2-Fluorophenol		82%				
13127-88-3	Phenol-D6		93%				
4165-60-0	Nitrobenzene-D5		79%				
321-60-8	2-Fluorobiphenyl		88%				
118-79-6	2,4,6-Tribromophenol		99%				
1718-51-0	Terphenyl-D14		97%				

MW
3/4/09

4

KATAHDIN ANALYTICAL SERVICES
Report of Analytical Results

Client: CH2MHill
Project: TO-009 Lejeune
PO No:
Sample Date: 12/10/08
Received Date: 12/11/08
Extraction Date: 12/15/08
Analysis Date: 08-JAN-2009 05:08
Report Date: 01/14/2009
Matrix: SOIL
% Solids: 85.1

Lab ID: SB7127-7
Client ID: MR08-IS121-2-3-08D
SDG: TO9-17
Extracted by: CB
Extraction Method: SW846 3550
Analyst: JCG
Analysis Method: SW846 8270C
Lab Prep Batch: WG59078
Units: ug/Kgdrywt

CAS#	Compound	Flags	Results	DF	PQL	Adj.PQL	Adj.MDL	
100-52-7	Benzaldehyde	~~U~~ UJ	590	1.0	500	590	140	ICB
108-95-2	Phenol	U	590	1.0	500	590	180	
111-44-4	Bis(2-Chloroethyl)ether	U	390	1.0	330	390	95	
95-57-8	2-Chlorophenol	U	590	1.0	500	590	190	
95-48-7	2-Methylphenol	U	700	1.0	600	700	240	
108-60-1	2,2'-Oxybis(1-chloropropane)	U	390	1.0	330	390	100	
98-86-2	Acetophenone	U	700	1.0	600	700	210	
621-64-7	N-Nitroso-di-n-propylamine	U	390	1.0	330	390	98	
65794-96-9	3&4-Methylphenol	U	700	1.0	600	700	220	
67-72-1	Hexachloroethane	U	390	1.0	330	390	110	
98-95-3	Nitrobenzene	~~U~~ UJ	390	1.0	330	390	110	CCH
78-59-1	Isophorone	U	390	1.0	330	390	88	
88-75-5	2-Nitrophenol	U	700	1.0	600	700	200	
105-67-9	2,4-Dimethylphenol	U	590	1.0	500	590	190	
111-91-1	Bis(2-Chloroethoxy)methane	U	390	1.0	330	390	110	
120-83-2	2,4-Dichlorophenol	U	590	1.0	500	590	180	
106-47-8	4-Chloroaniline	U	590	1.0	500	590	140	
105-60-2	Caprolactam	U	590	1.0	500	590	170	
59-50-7	4-Chloro-3-Methylphenol	U	590	1.0	500	590	200	
88-06-2	2,4,6-Trichlorophenol	U	590	1.0	500	590	180	
95-95-4	2,4,5-Trichlorophenol	U	590	1.0	500	590	180	
91-58-7	2-Chloronaphthalene	U	390	1.0	330	390	100	
92-52-4	1,1'-Biphenyl	U	390	1.0	330	390	86	
88-74-4	2-Nitroaniline	U	590	1.0	500	590	88	
131-11-3	Dimethyl Phthalate	U	390	1.0	330	390	92	
606-20-2	2,6-Dinitrotoluene	U	390	1.0	330	390	93	
208-96-8	Acenaphthylene	U	390	1.0	330	390	82	
99-09-2	3-Nitroaniline	U	590	1.0	500	590	110	
83-32-9	Acenaphthene	U	390	1.0	330	390	76	
51-28-5	2,4-Dinitrophenol	U	1400	1.0	1200	1400	440	
132-64-9	Dibenzofuran	U	390	1.0	330	390	93	
100-02-7	4-Nitrophenol	~~U~~ UJ	1400	1.0	1200	1400	360	CCH
121-14-2	2,4-Dinitrotoluene	U	390	1.0	330	390	100	
84-66-2	Diethylphthalate	U	390	1.0	330	390	94	
7005-72-3	4-Chlorophenyl-phenylether	U	390	1.0	330	390	92	
100-01-6	4-Nitroaniline	U	590	1.0	500	590	160	
534-52-1	4,6-Dinitro-2-Methylphenol	U	1400	1.0	1200	1400	400	
86-30-6	N-Nitrosodiphenylamine	U	780	1.0	660	780	260	
101-55-3	4-Bromophenyl-phenylether	U	390	1.0	330	390	100	
1912-24-9	Atrazine	U	390	1.0	330	390	110	
87-86-5	Pentachlorophenol	U	960	1.0	820	960	280	
120-12-7	Anthracene	U	390	1.0	330	390	99	
86-74-8	Carbazole	U	590	1.0	500	590	130	

MW 3/4/09

KATAHDIN ANALYTICAL SERVICES
Report of Analytical Results

Client: CH2MHill
Project: TO-009 Lejeune
PO No:
Sample Date: 12/10/08
Received Date: 12/11/08
Extraction Date: 12/15/08
Analysis Date: 08-JAN-2009 05:08
Report Date: 01/14/2009
Matrix: SOIL
% Solids: 85.1

Lab ID: SB7127-7
Client ID: MR08-IS121-2-3-08D
SDG: TO9-17
Extracted by: CB
Extraction Method: SW846 3550
Analyst: JCG
Analysis Method: SW846 8270C
Lab Prep Batch: WG59078
Units: ug/Kgdrywt

CAS#	Compound	Flags	Results	DF	PQL	Adj.PQL	Adj.MDL	
84-74-2	Di-n-butylphthalate	U	390	1.0	330	390	120	
85-68-7	Butylbenzylphthalate	~~U~~ UJ	390	1.0	330	390	110	CCH
91-94-1	3,3'-Dichlorobenzidine	U	590	1.0	500	590	130	
218-01-9	Chrysene	U	390	1.0	330	390	110	
117-81-7	bis(2-Ethylhexyl)phthalate	~~U~~ UJ	390	1.0	330	390	120	CCH
117-84-0	Di-n-octylphthalate	~~U~~ UJ	390	1.0	330	390	250	CCH
367-12-4	2-Fluorophenol		67%					
13127-88-3	Phenol-D6		76%					
4165-60-0	Nitrobenzene-D5		67%					
321-60-8	2-Fluorobiphenyl		69%					
118-79-6	2,4,6-Tribromophenol		73%					
1718-51-0	Terphenyl-D14		101%					

MW 3/4/09

KATAHDIN ANALYTICAL SERVICES
Report of Analytical Results

Client: CH2MHill
Project: TO-009 Lejeune
PO No:
Sample Date: 12/10/08
Received Date: 12/11/08
Extraction Date: 12/15/08
Analysis Date: 08-JAN-2009 14:52
Report Date: 01/14/2009
Matrix: SOIL
% Solids: 89.2

Lab ID: SB7127-9
Client ID: MR08-SS124-08D
SDG: TO9-17
Extracted by: CB
Extraction Method: SW846 3550
Analyst: JLP
Analysis Method: SW846 8270C
Lab Prep Batch: WG59078
Units: ug/Kgdrywt

CAS#	Compound	Flags	Results	DF	PQL	Adj.PQL	Adj.MDL
100-52-7	Benzaldehyde	~~U~~ UJ	560	1.0	500	560	130 ICB
108-95-2	Phenol	U	560	1.0	500	560	170
111-44-4	Bis(2-Chloroethyl)ether	U	370	1.0	330	370	91
95-57-8	2-Chlorophenol	U	560	1.0	500	560	180
95-48-7	2-Methylphenol	U	670	1.0	600	670	220
108-60-1	2,2'-Oxybis(1-chloropropane)	U	370	1.0	330	370	100
98-86-2	Acetophenone	U	670	1.0	600	670	200
621-64-7	N-Nitroso-di-n-propylamine	U	370	1.0	330	370	93
65794-96-9	3&4-Methylphenol	U	670	1.0	600	670	210
67-72-1	Hexachloroethane	U	370	1.0	330	370	110
98-95-3	Nitrobenzene	~~U~~ UJ	370	1.0	330	370	100 CCH
78-59-1	Isophorone	U	370	1.0	330	370	84
88-75-5	2-Nitrophenol	U	670	1.0	600	670	190
105-67-9	2,4-Dimethylphenol	U	560	1.0	500	560	180
111-91-1	Bis(2-Chloroethoxy)methane	U	370	1.0	330	370	110
120-83-2	2,4-Dichlorophenol	U	560	1.0	500	560	170
106-47-8	4-Chloroaniline	U	560	1.0	500	560	130
105-60-2	Caprolactam	U	560	1.0	500	560	160
59-50-7	4-Chloro-3-Methylphenol	U	560	1.0	500	560	190
88-06-2	2,4,6-Trichlorophenol	U	560	1.0	500	560	170
95-95-4	2,4,5-Trichlorophenol	U	560	1.0	500	560	170
91-58-7	2-Chloronaphthalene	U	370	1.0	330	370	98
92-52-4	1,1'-Biphenyl	U	370	1.0	330	370	82
88-74-4	2-Nitroaniline	U	560	1.0	500	560	84
131-11-3	Dimethyl Phthalate	U	370	1.0	330	370	87
606-20-2	2,6-Dinitrotoluene	U	370	1.0	330	370	89
208-96-8	Acenaphthylene	U	370	1.0	330	370	78
99-09-2	3-Nitroaniline	U	560	1.0	500	560	100
83-32-9	Acenaphthene	U	370	1.0	330	370	73
51-28-5	2,4-Dinitrophenol	U	1300	1.0	1200	1300	420
132-64-9	Dibenzofuran	U	370	1.0	330	370	89
100-02-7	4-Nitrophenol	U	1300	1.0	1200	1300	350
121-14-2	2,4-Dinitrotoluene	U	370	1.0	330	370	95
84-66-2	Diethylphthalate	U	370	1.0	330	370	90
7005-72-3	4-Chlorophenyl-phenylether	U	370	1.0	330	370	87
100-01-6	4-Nitroaniline	U	560	1.0	500	560	150
534-52-1	4,6-Dinitro-2-Methylphenol	U	1300	1.0	1200	1300	380
86-30-6	N-Nitrosodiphenylamine	U	740	1.0	660	740	240
101-55-3	4-Bromophenyl-phenylether	U	370	1.0	330	370	95
1912-24-9	Atrazine	U	370	1.0	330	370	100
87-86-5	Pentachlorophenol	U	920	1.0	820	920	260
120-12-7	Anthracene	U	370	1.0	330	370	94
86-74-8	Carbazole	U	560	1.0	500	560	120

DW 3/4/09

5

KATAHDIN ANALYTICAL SERVICES
Report of Analytical Results

Client: CH2MHill
Project: TO-009 Lejeune
PO No:
Sample Date: 12/10/08
Received Date: 12/11/08
Extraction Date: 12/15/08
Analysis Date: 08-JAN-2009 14:52
Report Date: 01/14/2009
Matrix: SOIL
% Solids: 89.2

Lab ID: SB7127-9
Client ID: MR08-SS124-08D
SDG: T09-17
Extracted by: CB
Extraction Method: SW846 3550
Analyst: JLP
Analysis Method: SW846 8270C
Lab Prep Batch: WG59078
Units: ug/Kgdrywt

CAS#	Compound	Flags	Results	DF	PQL	Adj.PQL	Adj.MDL
84-74-2	Di-n-butylphthalate	U	370	1.0	330	370	110
85-68-7	Butylbenzylphthalate	U	370	1.0	330	370	100
91-94-1	3,3'-Dichlorobenzidine	U	560	1.0	500	560	130
218-01-9	Chrysene	U	370	1.0	330	370	110
117-81-7	bis(2-Ethylhexyl)phthalate	U	370	1.0	330	370	110
117-84-0	Di-n-octylphthalate	U	370	1.0	330	370	240
367-12-4	2-Fluorophenol		77%				
13127-88-3	Phenol-D6		92%				
4165-60-0	Nitrobenzene-D5		71%				
321-60-8	2-Fluorobiphenyl		83%				
118-79-6	2,4,6-Tribromophenol		94%				
1718-51-0	Terphenyl-D14		90%				

lw 3/4/09

6

KATAHDIN ANALYTICAL SERVICES
Report of Analytical Results

Client: CH2MHill
Project: TO-009 Lejeune
PO No:
Sample Date: 12/10/08
Received Date: 12/11/08
Extraction Date: 12/15/08
Analysis Date: 08-JAN-2009 11:19
Report Date: 01/14/2009
Matrix: SOIL
% Solids: 90.9

Lab ID: SB7127-11
Client ID: MR08-IS124-2-3-08D
SDG: TO9-17
Extracted by: CB
Extraction Method: SW846 3550
Analyst: JLP
Analysis Method: SW846 8270C
Lab Prep Batch: WG59078
Units: ug/Kgdrywt

CAS#	Compound	Flags	Results	DF	PQL	Adj.PQL	Adj.MDL	
100-52-7	Benzaldehyde	~~U~~ UJ	550	1.0	500	550	130	ICB
108-95-2	Phenol	U	550	1.0	500	550	170	
111-44-4	Bis(2-Chloroethyl)ether	U	360	1.0	330	360	89	
95-57-8	2-Chlorophenol	U	550	1.0	500	550	180	
95-48-7	2-Methylphenol	U	660	1.0	600	660	220	
108-60-1	2,2'-Oxybis(1-chloropropane)	U	360	1.0	330	360	98	
98-86-2	Acetophenone	U	660	1.0	600	660	200	
621-64-7	N-Nitroso-di-n-propylamine	U	360	1.0	330	360	91	
65794-96-9	3&4-Methylphenol	U	660	1.0	600	660	200	
67-72-1	Hexachloroethane	U	360	1.0	330	360	100	
98-95-3	Nitrobenzene	~~U~~ UJ	360	1.0	330	360	100	CCH
78-59-1	Isophorone	U	360	1.0	330	360	82	
88-75-5	2-Nitrophenol	U	660	1.0	600	660	180	
105-67-9	2,4-Dimethylphenol	U	550	1.0	500	550	180	
111-91-1	Bis(2-Chloroethoxy)methane	U	360	1.0	330	360	100	
120-83-2	2,4-Dichlorophenol	U	550	1.0	500	550	160	
106-47-8	4-Chloroaniline	U	550	1.0	500	550	130	
105-60-2	Caprolactam	U	550	1.0	500	550	160	
59-50-7	4-Chloro-3-Methylphenol	U	550	1.0	500	550	180	
88-06-2	2,4,6-Trichlorophenol	U	550	1.0	500	550	170	
95-95-4	2,4,5-Trichlorophenol	U	550	1.0	500	550	170	
91-58-7	2-Chloronaphthalene	U	360	1.0	330	360	96	
92-52-4	1,1'-Biphenyl	U	360	1.0	330	360	80	
88-74-4	2-Nitroaniline	U	550	1.0	500	550	82	
131-11-3	Dimethyl Phthalate	U	360	1.0	330	360	86	
606-20-2	2,6-Dinitrotoluene	U	360	1.0	330	360	87	
208-96-8	Acenaphthylene	U	360	1.0	330	360	77	
99-09-2	3-Nitroaniline	U	550	1.0	500	550	100	
83-32-9	Acenaphthene	U	360	1.0	330	360	71	
51-28-5	2,4-Dinitrophenol	U	1300	1.0	1200	1300	410	
132-64-9	Dibenzofuran	U	360	1.0	330	360	87	
100-02-7	4-Nitrophenol	U	1300	1.0	1200	1300	340	
121-14-2	2,4-Dinitrotoluene	U	360	1.0	330	360	93	
84-66-2	Diethylphthalate	U	360	1.0	330	360	88	
7005-72-3	4-Chlorophenyl-phenylether	U	360	1.0	330	360	86	
100-01-6	4-Nitroaniline	U	550	1.0	500	550	150	
534-52-1	4,6-Dinitro-2-Methylphenol	U	1300	1.0	1200	1300	370	
86-30-6	N-Nitrosodiphenylamine	U	720	1.0	660	720	240	
101-55-3	4-Bromophenyl-phenylether	U	360	1.0	330	360	93	
1912-24-9	Atrazine	U	360	1.0	330	360	100	
87-86-5	Pentachlorophenol	U	900	1.0	820	900	260	
120-12-7	Anthracene	U	360	1.0	330	360	92	
86-74-8	Carbazole	U	550	1.0	500	550	120	

RW 3/4/09

6

KATAHDIN ANALYTICAL SERVICES
Report of Analytical Results

Client: CH2MHill
Project: TO-009 Lejeune
PO No:
Sample Date: 12/10/08
Received Date: 12/11/08
Extraction Date: 12/15/08
Analysis Date: 08-JAN-2009 11:19
Report Date: 01/14/2009
Matrix: SOIL
% Solids: 90.9

Lab ID: SB7127-11
Client ID: MR08-IS124-2-3-08D
SDG: TO9-17
Extracted by: CB
Extraction Method: SW846 3550
Analyst: JLP
Analysis Method: SW846 8270C
Lab Prep Batch: WG59078
Units: ug/Kgdrywt

CAS#	Compound	Flags	Results	DF	PQL	Adj.PQL	Adj.MDL
84-74-2	Di-n-butylphthalate	U	360	1.0	330	360	110
85-68-7	Butylbenzylphthalate	U	360	1.0	330	360	100
91-94-1	3,3'-Dichlorobenzidine	U	550	1.0	500	550	120
218-01-9	Chrysene	U	360	1.0	330	360	100
117-81-7	bis(2-Ethylhexyl)phthalate	U	360	1.0	330	360	110
117-84-0	Di-n-octylphthalate	U	360	1.0	330	360	230
367-12-4	2-Fluorophenol		62%				
13127-88-3	Phenol-D6		71%				
4165-60-0	Nitrobenzene-D5		62%				
321-60-8	2-Fluorobiphenyl		62%				
118-79-6	2,4,6-Tribromophenol		79%				
1718-51-0	Terphenyl-D14		88%				

CW 3/4/09

7

KATAHDIN ANALYTICAL SERVICES
Report of Analytical Results

Client: CH2MHill
Project: TO-009 Lejeune
PO No:
Sample Date: 12/10/08
Received Date: 12/11/08
Extraction Date: 12/15/08
Analysis Date: 08-JAN-2009 15:35
Report Date: 01/14/2009
Matrix: SOIL
% Solids: 93.1

Lab ID: SB7127-13
Client ID: MR08-SS099-08D
SDG: TO9-17
Extracted by: CB
Extraction Method: SW846 3550
Analyst: JLP
Analysis Method: SW846 8270C
Lab Prep Batch: WG59078
Units: ug/Kgdrywt

CAS#	Compound	Flags	Results	DF	PQL	Adj.PQL	Adj.MDL	
100-52-7	Benzaldehyde	~~U~~ UJ	540	1.0	500	540	130	JeB
108-95-2	Phenol	U	540	1.0	500	540	170	
111-44-4	Bis(2-Chloroethyl)ether	U	350	1.0	330	350	87	
95-57-8	2-Chlorophenol	U	540	1.0	500	540	180	
95-48-7	2-Methylphenol	U	640	1.0	600	640	210	
108-60-1	2,2'-Oxybis(1-chloropropane)	U	350	1.0	330	350	96	
98-86-2	Acetophenone	U	640	1.0	600	640	190	
621-64-7	N-Nitroso-di-n-propylamine	U	350	1.0	330	350	89	
65794-96-9	3&4-Methylphenol	U	640	1.0	600	640	200	
67-72-1	Hexachloroethane	U	350	1.0	330	350	100	
98-95-3	Nitrobenzene	~~U~~ UJ	350	1.0	330	350	98	CCH
78-59-1	Isophorone	U	350	1.0	330	350	80	
88-75-5	2-Nitrophenol	U	640	1.0	600	640	180	
105-67-9	2,4-Dimethylphenol	U	540	1.0	500	540	180	
111-91-1	Bis(2-Chloroethoxy)methane	U	350	1.0	330	350	100	
120-83-2	2,4-Dichlorophenol	U	540	1.0	500	540	160	
106-47-8	4-Chloroaniline	U	540	1.0	500	540	130	
105-60-2	Caprolactam	U	540	1.0	500	540	150	
59-50-7	4-Chloro-3-Methylphenol	U	540	1.0	500	540	180	
88-06-2	2,4,6-Trichlorophenol	U	540	1.0	500	540	170	
95-95-4	2,4,5-Trichlorophenol	U	540	1.0	500	540	170	
91-58-7	2-Chloronaphthalene	U	350	1.0	330	350	93	
92-52-4	1,1'-Biphenyl	U	350	1.0	330	350	78	
88-74-4	2-Nitroaniline	U	540	1.0	500	540	80	
131-11-3	Dimethyl Phthalate	U	350	1.0	330	350	84	
606-20-2	2,6-Dinitrotoluene	U	350	1.0	330	350	85	
208-96-8	Acenaphthylene	U	350	1.0	330	350	75	
99-09-2	3-Nitroaniline	U	540	1.0	500	540	100	
83-32-9	Acenaphthene	U	350	1.0	330	350	70	
51-28-5	2,4-Dinitrophenol	U	1300	1.0	1200	1300	400	
132-64-9	Dibenzofuran	U	350	1.0	330	350	85	
100-02-7	4-Nitrophenol	U	1300	1.0	1200	1300	330	
121-14-2	2,4-Dinitrotoluene	U	350	1.0	330	350	91	
84-66-2	Diethylphthalate	U	350	1.0	330	350	86	
7005-72-3	4-Chlorophenyl-phenylether	U	350	1.0	330	350	84	
100-01-6	4-Nitroaniline	U	540	1.0	500	540	140	
534-52-1	4,6-Dinitro-2-Methylphenol	U	1300	1.0	1200	1300	360	
86-30-6	N-Nitrosodiphenylamine	U	710	1.0	660	710	240	
101-55-3	4-Bromophenyl-phenylether	U	350	1.0	330	350	91	
1912-24-9	Atrazine	U	350	1.0	330	350	98	
87-86-5	Pentachlorophenol	U	880	1.0	820	880	250	
120-12-7	Anthracene	U	350	1.0	330	350	90	
86-74-8	Carbazole	U	540	1.0	500	540	120	

lles 3/4/09

7

KATAHDIN ANALYTICAL SERVICES
Report of Analytical Results

Client: CH2MHill
Project: TO-009 Lejeune
PO No:
Sample Date: 12/10/08
Received Date: 12/11/08
Extraction Date: 12/15/08
Analysis Date: 08-JAN-2009 15:35
Report Date: 01/14/2009
Matrix: SOIL
% Solids: 93.1

Lab ID: SB7127-13
Client ID: MR08-SS099-08D
SDG: TO9-17
Extracted by: CB
Extraction Method: SW846 3550
Analyst: JLP
Analysis Method: SW846 8270C
Lab Prep Batch: WG59078
Units: ug/Kgdrywt

CAS#	Compound	Flags	Results	DF	PQL	Adj.PQL	Adj.MDL
84-74-2	Di-n-butylphthalate	U	350	1.0	330	350	110
85-68-7	Butylbenzylphthalate	U	350	1.0	330	350	100
91-94-1	3,3'-Dichlorobenzidine	U	540	1.0	500	540	120
218-01-9	Chrysene	U	350	1.0	330	350	100
117-81-7	bis(2-Ethylhexyl)phthalate	U	350	1.0	330	350	100
117-84-0	Di-n-octylphthalate	U	350	1.0	330	350	230
367-12-4	2-Fluorophenol		76%				
13127-88-3	Phenol-D6		87%				
4165-60-0	Nitrobenzene-D5		71%				
321-60-8	2-Fluorobiphenyl		81%				
118-79-6	2,4,6-Tribromophenol		86%				
1718-51-0	Terphenyl-D14		97%				

lcw 3/4/09

8

KATAHDIN ANALYTICAL SERVICES
Report of Analytical Results

Client: CH2MHill
Project: TO-009 Lejeune
PO No:
Sample Date: 12/10/08
Received Date: 12/11/08
Extraction Date: 12/15/08
Analysis Date: 08-JAN-2009 16:17
Report Date: 01/14/2009
Matrix: SOIL
% Solids: 94.8

Lab ID: SB7127-15
Client ID: MR08-SS099D-08D
SDG: TO9-17
Extracted by: CB
Extraction Method: SW846 3550
Analyst: JLP
Analysis Method: SW846 8270C
Lab Prep Batch: WG59078
Units: ug/Kgdrywt

CAS#	Compound	Flags	Results	DF	PQL	Adj.PQL	Adj.MDL	
100-52-7	Benzaldehyde	~~U~~ UJ	530	1.0	500	530	130	ICB
108-95-2	Phenol	U	530	1.0	500	530	160	
111-44-4	Bis(2-Chloroethyl)ether	U	350	1.0	330	350	85	
95-57-8	2-Chlorophenol	U	530	1.0	500	530	170	
95-48-7	2-Methylphenol	U	630	1.0	600	630	210	
108-60-1	2,2'-Oxybis(1-chloropropane)	U	350	1.0	330	350	94	
98-86-2	Acetophenone	U	630	1.0	600	630	190	
621-64-7	N-Nitroso-di-n-propylamine	U	350	1.0	330	350	88	
65794-96-9	3&4-Methylphenol	U	630	1.0	600	630	200	
67-72-1	Hexachloroethane	U	350	1.0	330	350	100	
98-95-3	Nitrobenzene	~~U~~ UJ	350	1.0	330	350	96	CCH
78-59-1	Isophorone	U	350	1.0	330	350	79	
88-75-5	2-Nitrophenol	U	630	1.0	600	630	180	
105-67-9	2,4-Dimethylphenol	U	530	1.0	500	530	170	
111-91-1	Bis(2-Chloroethoxy)methane	U	350	1.0	330	350	100	
120-83-2	2,4-Dichlorophenol	U	530	1.0	500	530	160	
106-47-8	4-Chloroaniline	U	530	1.0	500	530	120	
105-60-2	Caprolactam	U	530	1.0	500	530	150	
59-50-7	4-Chloro-3-Methylphenol	U	530	1.0	500	530	180	
88-06-2	2,4,6-Trichlorophenol	U	530	1.0	500	530	160	
95-95-4	2,4,5-Trichlorophenol	U	530	1.0	500	530	160	
91-58-7	2-Chloronaphthalene	U	350	1.0	330	350	92	
92-52-4	1,1'-Biphenyl	U	350	1.0	330	350	77	
88-74-4	2-Nitroaniline	U	530	1.0	500	530	79	
131-11-3	Dimethyl Phthalate	U	350	1.0	330	350	82	
606-20-2	2,6-Dinitrotoluene	U	350	1.0	330	350	83	
208-96-8	Acenaphthylene	U	350	1.0	330	350	74	
99-09-2	3-Nitroaniline	U	530	1.0	500	530	99	
83-32-9	Acenaphthene	U	350	1.0	330	350	68	
51-28-5	2,4-Dinitrophenol	U	1300	1.0	1200	1300	400	
132-64-9	Dibenzofuran	U	350	1.0	330	350	83	
100-02-7	4-Nitrophenol	U	1300	1.0	1200	1300	330	
121-14-2	2,4-Dinitrotoluene	U	350	1.0	330	350	90	
84-66-2	Diethylphthalate	U	350	1.0	330	350	84	
7005-72-3	4-Chlorophenyl-phenylether	U	350	1.0	330	350	82	
100-01-6	4-Nitroaniline	U	530	1.0	500	530	140	
534-52-1	4,6-Dinitro-2-Methylphenol	U	1300	1.0	1200	1300	360	
86-30-6	N-Nitrosodiphenylamine	U	700	1.0	660	700	230	
101-55-3	4-Bromophenyl-phenylether	U	350	1.0	330	350	90	
1912-24-9	Atrazine	U	350	1.0	330	350	96	
87-86-5	Pentachlorophenol	U	860	1.0	820	860	250	
120-12-7	Anthracene	U	350	1.0	330	350	89	
86-74-8	Carbazole	U	530	1.0	500	530	120	

LLS 3/4/09

KATAHDIN ANALYTICAL SERVICES
Report of Analytical Results

Client: CH2MHill
Project: TO-009 Lejeune
PO No:
Sample Date: 12/10/08
Received Date: 12/11/08
Extraction Date: 12/15/08
Analysis Date: 08-JAN-2009 16:17
Report Date: 01/14/2009
Matrix: SOIL
% Solids: 94.8

Lab ID: SB7127-15
Client ID: MR08-SS099D-08D
SDG: TO9-17
Extracted by: CB
Extraction Method: SW846 3550
Analyst: JLP
Analysis Method: SW846 8270C
Lab Prep Batch: WG59078
Units: ug/Kgdrywt

CAS#	Compound	Flags	Results	DF	PQL	Adj.PQL	Adj.MDL
84-74-2	Di-n-butylphthalate	U	350	1.0	330	350	110
85-68-7	Butylbenzylphthalate	U	350	1.0	330	350	98
91-94-1	3,3'-Dichlorobenzidine	U	530	1.0	500	530	120
218-01-9	Chrysene	U	350	1.0	330	350	100
117-81-7	bis(2-Ethylhexyl)phthalate	U	350	1.0	330	350	100
117-84-0	Di-n-octylphthalate	U	350	1.0	330	350	220
367-12-4	2-Fluorophenol		72%				
13127-88-3	Phenol-D6		88%				
4165-60-0	Nitrobenzene-D5		72%				
321-60-8	2-Fluorobiphenyl		79%				
118-79-6	2,4,6-Tribromophenol		77%				
1718-51-0	Terphenyl-D14		90%				

lew 3/4/09

9

KATAHDIN ANALYTICAL SERVICES
Report of Analytical Results

Client: CH2MHill
Project: TO-009 Lejeune
PO No:
Sample Date: 12/10/08
Received Date: 12/11/08
Extraction Date: 12/15/08
Analysis Date: 08-JAN-2009 12:02
Report Date: 01/14/2009
Matrix: SOIL
% Solids: 87.6

Lab ID: SB7127-17
Client ID: MR08-IS099-2-3-08D
SDG: TO9-17
Extracted by: CB
Extraction Method: SW846 3550
Analyst: JLP
Analysis Method: SW846 8270C
Lab Prep Batch: WG59078
Units: ug/Kgdrywt

CAS#	Compound	Flags	Results	DF	PQL	Adj.PQL	Adj.MDL	
100-52-7	Benzaldehyde	~~U~~ UJ	570	1.0	500	570	140	ICB
108-95-2	Phenol	U	570	1.0	500	570	180	
111-44-4	Bis(2-Chloroethyl)ether	U	380	1.0	330	380	92	
95-57-8	2-Chlorophenol	U	570	1.0	500	570	190	
95-48-7	2-Methylphenol	U	680	1.0	600	680	230	
108-60-1	2,2'-Oxybis(1-chloropropane)	U	380	1.0	330	380	100	
98-86-2	Acetophenone	U	680	1.0	600	680	200	
621-64-7	N-Nitroso-di-n-propylamine	U	380	1.0	330	380	95	
65794-96-9	3&4-Methylphenol	U	680	1.0	600	680	210	
67-72-1	Hexachloroethane	U	380	1.0	330	380	110	
98-95-3	Nitrobenzene	~~U~~ UJ	380	1.0	330	380	100	CCH
78-59-1	Isophorone	U	380	1.0	330	380	86	
88-75-5	2-Nitrophenol	U	680	1.0	600	680	190	
105-67-9	2,4-Dimethylphenol	U	570	1.0	500	570	190	
111-91-1	Bis(2-Chloroethoxy)methane	U	380	1.0	330	380	110	
120-83-2	2,4-Dichlorophenol	U	570	1.0	500	570	170	
106-47-8	4-Chloroaniline	U	570	1.0	500	570	140	
105-60-2	Caprolactam	U	570	1.0	500	570	160	
59-50-7	4-Chloro-3-Methylphenol	U	570	1.0	500	570	190	
88-06-2	2,4,6-Trichlorophenol	U	570	1.0	500	570	180	
95-95-4	2,4,5-Trichlorophenol	U	570	1.0	500	570	180	
91-58-7	2-Chloronaphthalene	U	380	1.0	330	380	99	
92-52-4	1,1'-Biphenyl	U	380	1.0	330	380	83	
88-74-4	2-Nitroaniline	U	570	1.0	500	570	86	
131-11-3	Dimethyl Phthalate	U	380	1.0	330	380	89	
606-20-2	2,6-Dinitrotoluene	U	380	1.0	330	380	90	
208-96-8	Acenaphthylene	U	380	1.0	330	380	80	
99-09-2	3-Nitroaniline	U	570	1.0	500	570	110	
83-32-9	Acenaphthene	U	380	1.0	330	380	74	
51-28-5	2,4-Dinitrophenol	U	1400	1.0	1200	1400	430	
132-64-9	Dibenzofuran	U	380	1.0	330	380	90	
100-02-7	4-Nitrophenol	U	1400	1.0	1200	1400	350	
121-14-2	2,4-Dinitrotoluene	U	380	1.0	330	380	97	
84-66-2	Diethylphthalate	U	380	1.0	330	380	91	
7005-72-3	4-Chlorophenyl-phenylether	U	380	1.0	330	380	89	
100-01-6	4-Nitroaniline	U	570	1.0	500	570	150	
534-52-1	4,6-Dinitro-2-Methylphenol	U	1400	1.0	1200	1400	380	
86-30-6	N-Nitrosodiphenylamine	U	750	1.0	660	750	250	
101-55-3	4-Bromophenyl-phenylether	U	380	1.0	330	380	97	
1912-24-9	Atrazine	U	380	1.0	330	380	100	
87-86-5	Pentachlorophenol	U	940	1.0	820	940	270	
120-12-7	Anthracene	U	380	1.0	330	380	96	
86-74-8	Carbazole	U	570	1.0	500	570	130	

Rev 3/4/09

KATAHDIN ANALYTICAL SERVICES
Report of Analytical Results

Client: CH2MHill
Project: TO-009 Lejeune
PO No:
Sample Date: 12/10/08
Received Date: 12/11/08
Extraction Date: 12/15/08
Analysis Date: 08-JAN-2009 12:02
Report Date: 01/14/2009
Matrix: SOIL
% Solids: 87.6

Lab ID: SB7127-17
Client ID: MR08-IS099-2-3-08D
SDG: TO9-17
Extracted by: CB
Extraction Method: SW846 3550
Analyst: JLP
Analysis Method: SW846 8270C
Lab Prep Batch: WG59078
Units: ug/Kgdrywt

CAS#	Compound	Flags	Results	DF	PQL	Adj.PQL	Adj.MDL
84-74-2	Di-n-butylphthalate	U	380	1.0	330	380	120
85-68-7	Butylbenzylphthalate	U	380	1.0	330	380	110
91-94-1	3,3'-Dichlorobenzidine	U	570	1.0	500	570	130
218-01-9	Chrysene	U	380	1.0	330	380	110
117-81-7	bis(2-Ethylhexyl)phthalate	U	380	1.0	330	380	110
117-84-0	Di-n-octylphthalate	U	380	1.0	330	380	240
367-12-4	2-Fluorophenol		56%				
13127-88-3	Phenol-D6		51%				
4165-60-0	Nitrobenzene-D5		54%				
321-60-8	2-Fluorobiphenyl		54%				
118-79-6	2,4,6-Tribromophenol		65%				
1718-51-0	Terphenyl-D14		82%				

MW 3/4/09

10

KATAHDIN ANALYTICAL SERVICES
Report of Analytical Results

Client: CH2MHill
Project: TO-009 Lejeune
PO No:
Sample Date: 12/10/08
Received Date: 12/11/08
Extraction Date: 12/15/08
Analysis Date: 08-JAN-2009 12:45
Report Date: 01/14/2009
Matrix: SOIL
% Solids: 87.5

Lab ID: SB7127-19
Client ID: MR08-IS099D-2-3-08D
SDG: TO9-17
Extracted by: CB
Extraction Method: SW846 3550
Analyst: JLP
Analysis Method: SW846 8270C
Lab Prep Batch: WG59078
Units: ug/Kgdrywt

CAS#	Compound	Flags	Results	DF	PQL	Adj.PQL	Adj.MDL	
100-52-7	Benzaldehyde	~~U~~ UJ	570	1.0	500	570	140	ICB
108-95-2	Phenol	U	570	1.0	500	570	180	
111-44-4	Bis(2-Chloroethyl)ether	U	380	1.0	330	380	92	
95-57-8	2-Chlorophenol	U	570	1.0	500	570	190	
95-48-7	2-Methylphenol	U	680	1.0	600	680	230	
108-60-1	2,2'-Oxybis(1-chloropropane)	U	380	1.0	330	380	100	
98-86-2	Acetophenone	U	680	1.0	600	680	200	
621-64-7	N-Nitroso-di-n-propylamine	U	380	1.0	330	380	95	
65794-96-9	3&4-Methylphenol	U	680	1.0	600	680	210	
67-72-1	Hexachloroethane	U	380	1.0	330	380	110	
98-95-3	Nitrobenzene	~~U~~ UJ	380	1.0	330	380	100	CCH
78-59-1	Isophorone	U	380	1.0	330	380	86	
88-75-5	2-Nitrophenol	U	680	1.0	600	680	190	
105-67-9	2,4-Dimethylphenol	U	570	1.0	500	570	190	
111-91-1	Bis(2-Chloroethoxy)methane	U	380	1.0	330	380	110	
120-83-2	2,4-Dichlorophenol	U	570	1.0	500	570	170	
106-47-8	4-Chloroaniline	U	570	1.0	500	570	140	
105-60-2	Caprolactam	U	570	1.0	500	570	160	
59-50-7	4-Chloro-3-Methylphenol	U	570	1.0	500	570	190	
88-06-2	2,4,6-Trichlorophenol	U	570	1.0	500	570	180	
95-95-4	2,4,5-Trichlorophenol	U	570	1.0	500	570	180	
91-58-7	2-Chloronaphthalene	U	380	1.0	330	380	99	
92-52-4	1,1'-Biphenyl	U	380	1.0	330	380	83	
88-74-4	2-Nitroaniline	U	570	1.0	500	570	86	
131-11-3	Dimethyl Phthalate	U	380	1.0	330	380	89	
606-20-2	2,6-Dinitrotoluene	U	380	1.0	330	380	90	
208-96-8	Acenaphthylene	U	380	1.0	330	380	80	
99-09-2	3-Nitroaniline	U	570	1.0	500	570	110	
83-32-9	Acenaphthene	U	380	1.0	330	380	74	
51-28-5	2,4-Dinitrophenol	U	1400	1.0	1200	1400	430	
132-64-9	Dibenzofuran	U	380	1.0	330	380	90	
100-02-7	4-Nitrophenol	U	1400	1.0	1200	1400	350	
121-14-2	2,4-Dinitrotoluene	U	380	1.0	330	380	97	
84-66-2	Diethylphthalate	U	380	1.0	330	380	91	
7005-72-3	4-Chlorophenyl-phenylether	U	380	1.0	330	380	89	
100-01-6	4-Nitroaniline	U	570	1.0	500	570	150	
534-52-1	4,6-Dinitro-2-Methylphenol	U	1400	1.0	1200	1400	380	
86-30-6	N-Nitrosodiphenylamine	U	750	1.0	660	750	250	
101-55-3	4-Bromophenyl-phenylether	U	380	1.0	330	380	97	
1912-24-9	Atrazine	U	380	1.0	330	380	100	
87-86-5	Pentachlorophenol	U	940	1.0	820	940	270	
120-12-7	Anthracene	U	380	1.0	330	380	96	
86-74-8	Carbazole	U	570	1.0	500	570	130	

LW 3/4/09

10

KATAHDIN ANALYTICAL SERVICES
Report of Analytical Results

Client: CH2MHill
Project: TO-009 Lejeune
PO No:
Sample Date: 12/10/08
Received Date: 12/11/08
Extraction Date: 12/15/08
Analysis Date: 08-JAN-2009 12:45
Report Date: 01/14/2009
Matrix: SOIL
% Solids: 87.5

Lab ID: SB7127-19
Client ID: MR08-IS099D-2-3-08D
SDG: TO9-17
Extracted by: CB
Extraction Method: SW846 3550
Analyst: JLP
Analysis Method: SW846 8270C
Lab Prep Batch: WG59078
Units: ug/Kgdrywt

CAS#	Compound	Flags	Results	DF	PQL	Adj.PQL	Adj.MDL
84-74-2	Di-n-butylphthalate	U	380	1.0	330	380	120
85-68-7	Butylbenzylphthalate	U	380	1.0	330	380	110
91-94-1	3,3'-Dichlorobenzidine	U	570	1.0	500	570	130
218-01-9	Chrysene	U	380	1.0	330	380	110
117-81-7	bis(2-Ethylhexyl)phthalate	U	380	1.0	330	380	110
117-84-0	Di-n-octylphthalate	U	380	1.0	330	380	240
367-12-4	2-Fluorophenol		61%				
13127-88-3	Phenol-D6		67%				
4165-60-0	Nitrobenzene-D5		58%				
321-60-8	2-Fluorobiphenyl		61%				
118-79-6	2,4,6-Tribromophenol		66%				
1718-51-0	Terphenyl-D14		83%				

lw 3/4/09

11

KATAHDIN ANALYTICAL SERVICES
Report of Analytical Results

Client: CH2MHill
Project: TO-009 Lejeune
PO No:
Sample Date: 12/10/08
Received Date: 12/11/08
Extraction Date: 12/15/08
Analysis Date: 08-JAN-2009 23:41
Report Date: 01/14/2009
Matrix: SOIL
% Solids: 88.8

Lab ID: SB7127-21
Client ID: MR08-SS100-08D
SDG: TO9-17
Extracted by: CB
Extraction Method: SW846 3550
Analyst: JCG
Analysis Method: SW846 8270C
Lab Prep Batch: WG59078
Units: ug/Kgdrywt

CAS#	Compound	Flags	Results	DF	PQL	Adj.PQL	Adj.MDL	
100-52-7	Benzaldehyde	~~U~~ UJ	560	1.0	500	560	140	JCB
108-95-2	Phenol	U	560	1.0	500	560	180	
111-44-4	Bis(2-Chloroethyl)ether	U	370	1.0	330	370	91	
95-57-8	2-Chlorophenol	U	560	1.0	500	560	180	
95-48-7	2-Methylphenol	U	680	1.0	600	680	220	
108-60-1	2,2'-Oxybis(1-chloropropane)	U	370	1.0	330	370	100	
98-86-2	Acetophenone	U	680	1.0	600	680	200	
621-64-7	N-Nitroso-di-n-propylamine	U	370	1.0	330	370	93	
65794-96-9	3&4-Methylphenol	U	680	1.0	600	680	210	
67-72-1	Hexachloroethane	U	370	1.0	330	370	110	
98-95-3	Nitrobenzene	~~U~~ UJ	370	1.0	330	370	100	CCH
78-59-1	Isophorone	U	370	1.0	330	370	84	
88-75-5	2-Nitrophenol	U	680	1.0	600	680	190	
105-67-9	2,4-Dimethylphenol	U	560	1.0	500	560	180	
111-91-1	Bis(2-Chloroethoxy)methane	U	370	1.0	330	370	110	
120-83-2	2,4-Dichlorophenol	U	560	1.0	500	560	170	
106-47-8	4-Chloroaniline	U	560	1.0	500	560	130	
105-60-2	Caprolactam	U	560	1.0	500	560	160	
59-50-7	4-Chloro-3-Methylphenol	U	560	1.0	500	560	190	
88-06-2	2,4,6-Trichlorophenol	U	560	1.0	500	560	170	
95-95-4	2,4,5-Trichlorophenol	U	560	1.0	500	560	170	
91-58-7	2-Chloronaphthalene	U	370	1.0	330	370	98	
92-52-4	1,1'-Biphenyl	U	370	1.0	330	370	82	
88-74-4	2-Nitroaniline	U	560	1.0	500	560	84	
131-11-3	Dimethyl Phthalate	U	370	1.0	330	370	88	
606-20-2	2,6-Dinitrotoluene	U	370	1.0	330	370	89	
208-96-8	Acenaphthylene	U	370	1.0	330	370	79	
99-09-2	3-Nitroaniline	U	560	1.0	500	560	100	
83-32-9	Acenaphthene	U	370	1.0	330	370	73	
51-28-5	2,4-Dinitrophenol	U	1400	1.0	1200	1400	420	
132-64-9	Dibenzofuran	U	370	1.0	330	370	89	
100-02-7	4-Nitrophenol	~~U~~ UJ	1400	1.0	1200	1400	350	CCH
121-14-2	2,4-Dinitrotoluene	U	370	1.0	330	370	96	
84-66-2	Diethylphthalate	U	370	1.0	330	370	90	
7005-72-3	4-Chlorophenyl-phenylether	U	370	1.0	330	370	88	
100-01-6	4-Nitroaniline	U	560	1.0	500	560	150	
534-52-1	4,6-Dinitro-2-Methylphenol	U	1400	1.0	1200	1400	380	
86-30-6	N-Nitrosodiphenylamine	U	740	1.0	660	740	250	
101-55-3	4-Bromophenyl-phenylether	U	370	1.0	330	370	96	
1912-24-9	Atrazine	U	370	1.0	330	370	100	
87-86-5	Pentachlorophenol	U	920	1.0	820	920	270	
120-12-7	Anthracene	U	370	1.0	330	370	94	
86-74-8	Carbazole	U	560	1.0	500	560	120	

AW
3/4/09

11

KATAHDIN ANALYTICAL SERVICES
Report of Analytical Results

Client: CH2MHill
Project: TO-009 Lejeune
PO No:
Sample Date: 12/10/08
Received Date: 12/11/08
Extraction Date: 12/15/08
Analysis Date: 08-JAN-2009 23:41
Report Date: 01/14/2009
Matrix: SOIL
% Solids: 88.8

Lab ID: SB7127-21
Client ID: MR08-SS100-08D
SDG: TO9-17
Extracted by: CB
Extraction Method: SW846 3550
Analyst: JCG
Analysis Method: SW846 8270C
Lab Prep Batch: WG59078
Units: ug/Kgdrywt

CAS#	Compound	Flags	Results	DF	PQL	Adj.PQL	Adj.MDL
84-74-2	Di-n-butylphthalate	U	370	1.0	330	370	110
85-68-7	Butylbenzylphthalate	U	370	1.0	330	370	100
91-94-1	3,3'-Dichlorobenzidine	U	560	1.0	500	560	130
218-01-9	Chrysene	U	370	1.0	330	370	110
117-81-7	bis(2-Ethylhexyl)phthalate	U	370	1.0	330	370	110
117-84-0	Di-n-octylphthalate	U	370	1.0	330	370	240
367-12-4	2-Fluorophenol		76%				
13127-88-3	Phenol-D6		86%				
4165-60-0	Nitrobenzene-D5		74%				
321-60-8	2-Fluorobiphenyl		84%				
118-79-6	2,4,6-Tribromophenol		86%				
1718-51-0	Terphenyl-D14		99%				

lwd 3/4/09

KATAHDIN ANALYTICAL SERVICES
Report of Analytical Results

Client: CH2MHill
Project: TO-009 Lejeune
PO No:
Sample Date: 12/10/08
Received Date: 12/11/08
Extraction Date: 12/15/08
Analysis Date: 09-JAN-2009 00:23
Report Date: 01/14/2009
Matrix: SOIL
% Solids: 85.8

Lab ID: SB7127-23
Client ID: MR08-IS100-2-3-08D
SDG: TO9-17
Extracted by: CB
Extraction Method: SW846 3550
Analyst: JCG
Analysis Method: SW846 8270C
Lab Prep Batch: WG59078
Units: ug/Kgdrywt

CAS#	Compound	Flags	Results	DF	PQL	Adj.PQL	Adj.MDL	
100-52-7	Benzaldehyde	~~U~~ UJ	580	1.0	500	580	140	JCB
108-95-2	Phenol	U	580	1.0	500	580	180	
111-44-4	Bis(2-Chloroethyl)ether	U	380	1.0	330	380	94	
95-57-8	2-Chlorophenol	U	580	1.0	500	580	190	
95-48-7	2-Methylphenol	U	700	1.0	600	700	230	
108-60-1	2,2'-Oxybis(1-chloropropane)	U	380	1.0	330	380	100	
98-86-2	Acetophenone	U	700	1.0	600	700	210	
621-64-7	N-Nitroso-di-n-propylamine	U	380	1.0	330	380	97	
65794-96-9	3&4-Methylphenol	U	700	1.0	600	700	220	
67-72-1	Hexachloroethane	U	380	1.0	330	380	110	
98-95-3	Nitrobenzene	~~U~~ UJ	380	1.0	330	380	110	CCH
78-59-1	Isophorone	U	380	1.0	330	380	87	
88-75-5	2-Nitrophenol	U	700	1.0	600	700	190	
105-67-9	2,4-Dimethylphenol	U	580	1.0	500	580	190	
111-91-1	Bis(2-Chloroethoxy)methane	U	380	1.0	330	380	110	
120-83-2	2,4-Dichlorophenol	U	580	1.0	500	580	170	
106-47-8	4-Chloroaniline	U	580	1.0	500	580	140	
105-60-2	Caprolactam	U	580	1.0	500	580	170	
59-50-7	4-Chloro-3-Methylphenol	U	580	1.0	500	580	190	
88-06-2	2,4,6-Trichlorophenol	U	580	1.0	500	580	180	
95-95-4	2,4,5-Trichlorophenol	U	580	1.0	500	580	180	
91-58-7	2-Chloronaphthalene	U	380	1.0	330	380	100	
92-52-4	1,1'-Biphenyl	U	380	1.0	330	380	85	
88-74-4	2-Nitroaniline	U	580	1.0	500	580	87	
131-11-3	Dimethyl Phthalate	U	380	1.0	330	380	91	
606-20-2	2,6-Dinitrotoluene	U	380	1.0	330	380	92	
208-96-8	Acenaphthylene	U	380	1.0	330	380	82	
99-09-2	3-Nitroaniline	U	580	1.0	500	580	110	
83-32-9	Acenaphthene	U	380	1.0	330	380	76	
51-28-5	2,4-Dinitrophenol	U	1400	1.0	1200	1400	440	
132-64-9	Dibenzofuran	U	380	1.0	330	380	92	
100-02-7	4-Nitrophenol	~~U~~ UJ	1400	1.0	1200	1400	360	CCH
121-14-2	2,4-Dinitrotoluene	U	380	1.0	330	380	99	
84-66-2	Diethylphthalate	U	380	1.0	330	380	93	
7005-72-3	4-Chlorophenyl-phenylether	U	380	1.0	330	380	91	
100-01-6	4-Nitroaniline	U	580	1.0	500	580	160	
534-52-1	4,6-Dinitro-2-Methylphenol	U	1400	1.0	1200	1400	390	
86-30-6	N-Nitrosodiphenylamine	U	770	1.0	660	770	260	
101-55-3	4-Bromophenyl-phenylether	U	380	1.0	330	380	99	
1912-24-9	Atrazine	U	380	1.0	330	380	110	
87-86-5	Pentachlorophenol	U	960	1.0	820	960	280	
120-12-7	Anthracene	U	380	1.0	330	380	98	
86-74-8	Carbazole	U	580	1.0	500	580	130	

LW 3/4/09

KATAHDIN ANALYTICAL SERVICES
Report of Analytical Results

Client: CH2MHill
Project: TO-009 Lejeune
PO No:
Sample Date: 12/10/08
Received Date: 12/11/08
Extraction Date: 12/15/08
Analysis Date: 09-JAN-2009 00:23
Report Date: 01/14/2009
Matrix: SOIL
% Solids: 85.8

Lab ID: SB7127-23
Client ID: MR08-IS100-2-3-08D
SDG: TO9-17
Extracted by: CB
Extraction Method: SW846 3550
Analyst: JCG
Analysis Method: SW846 8270C
Lab Prep Batch: WG59078
Units: ug/Kgdrywt

CAS#	Compound	Flags	Results	DF	PQL	Adj.PQL	Adj.MDL
84-74-2	Di-n-butylphthalate	U	380	1.0	330	380	120
85-68-7	Butylbenzylphthalate	U	380	1.0	330	380	110
91-94-1	3,3'-Dichlorobenzidine	U	580	1.0	500	580	130
218-01-9	Chrysene	U	380	1.0	330	380	110
117-81-7	bis(2-Ethylhexyl)phthalate	U	380	1.0	330	380	110
117-84-0	Di-n-octylphthalate	U	380	1.0	330	380	240
367-12-4	2-Fluorophenol		67%				
13127-88-3	Phenol-D6		77%				
4165-60-0	Nitrobenzene-D5		64%				
321-60-8	2-Fluorobiphenyl		69%				
118-79-6	2,4,6-Tribromophenol		82%				
1718-51-0	Terphenyl-D14		91%				

lw 3/4/09

KATAHDIN ANALYTICAL SERVICES
Report of Analytical Results

Client: CH2MHill
Project: TO-009 Lejeune
PO No:
Sample Date: 12/10/08
Received Date: 12/11/08
Extraction Date: 12/15/08
Analysis Date: 09-JAN-2009 01:05
Report Date: 01/14/2009
Matrix: SOIL
% Solids: 88.5

Lab ID: SB7127-25
Client ID: MR08-SS101-08D
SDG: TO9-17
Extracted by: CB
Extraction Method: SW846 3550
Analyst: JCG
Analysis Method: SW846 8270C
Lab Prep Batch: WG59078
Units: ug/Kgdrywt

CAS#	Compound	Flags	Results	DF	PQL	Adj.PQL	Adj.MDL	
100-52-7	Benzaldehyde	~~U~~ UJ	560	1.0	500	560	140	JCB
108-95-2	Phenol	U	560	1.0	500	560	180	
111-44-4	Bis(2-Chloroethyl)ether	U	370	1.0	330	370	92	
95-57-8	2-Chlorophenol	U	560	1.0	500	560	180	
95-48-7	2-Methylphenol	U	680	1.0	600	680	220	
108-60-1	2,2'-Oxybis(1-chloropropane)	U	370	1.0	330	370	100	
98-86-2	Acetophenone	U	680	1.0	600	680	200	
621-64-7	N-Nitroso-di-n-propylamine	U	370	1.0	330	370	94	
65794-96-9	3&4-Methylphenol	U	680	1.0	600	680	210	
67-72-1	Hexachloroethane	U	370	1.0	330	370	110	
98-95-3	Nitrobenzene	~~U~~ UJ	370	1.0	330	370	100	CCH
78-59-1	Isophorone	U	370	1.0	330	370	85	
88-75-5	2-Nitrophenol	U	680	1.0	600	680	190	
105-67-9	2,4-Dimethylphenol	U	560	1.0	500	560	190	
111-91-1	Bis(2-Chloroethoxy)methane	U	370	1.0	330	370	110	
120-83-2	2,4-Dichlorophenol	U	560	1.0	500	560	170	
106-47-8	4-Chloroaniline	U	560	1.0	500	560	130	
105-60-2	Caprolactam	U	560	1.0	500	560	160	
59-50-7	4-Chloro-3-Methylphenol	U	560	1.0	500	560	190	
88-06-2	2,4,6-Trichlorophenol	U	560	1.0	500	560	180	
95-95-4	2,4,5-Trichlorophenol	U	560	1.0	500	560	180	
91-58-7	2-Chloronaphthalene	U	370	1.0	330	370	98	
92-52-4	1,1'-Biphenyl	U	370	1.0	330	370	82	
88-74-4	2-Nitroaniline	U	560	1.0	500	560	85	
131-11-3	Dimethyl Phthalate	U	370	1.0	330	370	88	
606-20-2	2,6-Dinitrotoluene	U	370	1.0	330	370	89	
208-96-8	Acenaphthylene	U	370	1.0	330	370	79	
99-09-2	3-Nitroaniline	U	560	1.0	500	560	110	
83-32-9	Acenaphthene	U	370	1.0	330	370	73	
51-28-5	2,4-Dinitrophenol	U	1400	1.0	1200	1400	420	
132-64-9	Dibenzofuran	U	370	1.0	330	370	89	
100-02-7	4-Nitrophenol	~~U~~ UJ	1400	1.0	1200	1400	350	CCH
121-14-2	2,4-Dinitrotoluene	U	370	1.0	330	370	96	
84-66-2	Diethylphthalate	U	370	1.0	330	370	90	
7005-72-3	4-Chlorophenyl-phenylether	U	370	1.0	330	370	88	
100-01-6	4-Nitroaniline	U	560	1.0	500	560	150	
534-52-1	4,6-Dinitro-2-Methylphenol	U	1400	1.0	1200	1400	380	
86-30-6	N-Nitrosodiphenylamine	U	740	1.0	660	740	250	
101-55-3	4-Bromophenyl-phenylether	U	370	1.0	330	370	96	
1912-24-9	Atrazine	U	370	1.0	330	370	100	
87-86-5	Pentachlorophenol	U	930	1.0	820	930	270	
120-12-7	Anthracene	U	370	1.0	330	370	95	
86-74-8	Carbazole	U	560	1.0	500	560	120	

lw 3/4/09

KATAHDIN ANALYTICAL SERVICES
Report of Analytical Results

Client: CH2MHill
Project: TO-009 Lejeune
PO No:
Sample Date: 12/10/08
Received Date: 12/11/08
Extraction Date: 12/15/08
Analysis Date: 09-JAN-2009 01:05
Report Date: 01/14/2009
Matrix: SOIL
% Solids: 88.5

Lab ID: SB7127-25
Client ID: MR08-SS101-08D
SDG: TO9-17
Extracted by: CB
Extraction Method: SW846 3550
Analyst: JCG
Analysis Method: SW846 8270C
Lab Prep Batch: WG59078
Units: ug/Kgdrywt

CAS#	Compound	Flags	Results	DF	PQL	Adj.PQL	Adj.MDL
84-74-2	Di-n-butylphthalate	U	370	1.0	330	370	110
85-68-7	Butylbenzylphthalate	U	370	1.0	330	370	100
91-94-1	3,3'-Dichlorobenzidine	U	560	1.0	500	560	130
218-01-9	Chrysene	U	370	1.0	330	370	110
117-81-7	bis(2-Ethylhexyl)phthalate	U	370	1.0	330	370	110
117-84-0	Di-n-octylphthalate	U	370	1.0	330	370	240
367-12-4	2-Fluorophenol		67%				
13127-88-3	Phenol-D6		79%				
4165-60-0	Nitrobenzene-D5		68%				
321-60-8	2-Fluorobiphenyl		74%				
118-79-6	2,4,6-Tribromophenol		91%				
1718-51-0	Terphenyl-D14		98%				

lwo
3/4/09

1c

KATAHDIN ANALYTICAL SERVICES
Report of Analytical Results

Client: CH2MHill
Project: TO-009 Lejeune
PO No:
Sample Date: 12/10/08
Received Date: 12/11/08
Extraction Date: 12/15/08
Analysis Date: 09-JAN-2009 01:47
Report Date: 01/14/2009
Matrix: SOIL
% Solids: 88.2

Lab ID: SB7127-27
Client ID: MR08-IS101-2-3-08D
SDG: TO9-17
Extracted by: CB
Extraction Method: SW846 3550
Analyst: JCG
Analysis Method: SW846 8270C
Lab Prep Batch: WG59078
Units: ug/Kgdrywt

CAS#	Compound	Flags	Results	DF	PQL	Adj.PQL	Adj.MDL	
100-52-7	Benzaldehyde	~~U~~ UJ	570	1.0	500	570	140	JCB
108-95-2	Phenol	U	570	1.0	500	570	180	
111-44-4	Bis(2-Chloroethyl)ether	U	370	1.0	330	370	92	
95-57-8	2-Chlorophenol	U	570	1.0	500	570	180	
95-48-7	2-Methylphenol	U	680	1.0	600	680	230	
108-60-1	2,2'-Oxybis(1-chloropropane)	U	370	1.0	330	370	100	
98-86-2	Acetophenone	U	680	1.0	600	680	200	
621-64-7	N-Nitroso-di-n-propylamine	U	370	1.0	330	370	94	
65794-96-9	3&4-Methylphenol	U	680	1.0	600	680	210	
67-72-1	Hexachloroethane	U	370	1.0	330	370	110	
98-95-3	Nitrobenzene	~~U~~ UJ	370	1.0	330	370	100	CCH
78-59-1	Isophorone	U	370	1.0	330	370	85	
88-75-5	2-Nitrophenol	U	680	1.0	600	680	190	
105-67-9	2,4-Dimethylphenol	U	570	1.0	500	570	190	
111-91-1	Bis(2-Chloroethoxy)methane	U	370	1.0	330	370	110	
120-83-2	2,4-Dichlorophenol	U	570	1.0	500	570	170	
106-47-8	4-Chloroaniline	U	570	1.0	500	570	130	
105-60-2	Caprolactam	U	570	1.0	500	570	160	
59-50-7	4-Chloro-3-Methylphenol	U	570	1.0	500	570	190	
88-06-2	2,4,6-Trichlorophenol	U	570	1.0	500	570	180	
95-95-4	2,4,5-Trichlorophenol	U	570	1.0	500	570	180	
91-58-7	2-Chloronaphthalene	U	370	1.0	330	370	99	
92-52-4	1,1'-Biphenyl	U	370	1.0	330	370	83	
88-74-4	2-Nitroaniline	U	570	1.0	500	570	85	
131-11-3	Dimethyl Phthalate	U	370	1.0	330	370	88	
606-20-2	2,6-Dinitrotoluene	U	370	1.0	330	370	90	
208-96-8	Acenaphthylene	U	370	1.0	330	370	79	
99-09-2	3-Nitroaniline	U	570	1.0	500	570	110	
83-32-9	Acenaphthene	U	370	1.0	330	370	74	
51-28-5	2,4-Dinitrophenol	U	1400	1.0	1200	1400	430	
132-64-9	Dibenzofuran	U	370	1.0	330	370	90	
100-02-7	4-Nitrophenol	~~U~~ UJ	1400	1.0	1200	1400	350	CCH
121-14-2	2,4-Dinitrotoluene	U	370	1.0	330	370	96	
84-66-2	Diethylphthalate	U	370	1.0	330	370	91	
7005-72-3	4-Chlorophenyl-phenylether	U	370	1.0	330	370	88	
100-01-6	4-Nitroaniline	U	570	1.0	500	570	150	
534-52-1	4,6-Dinitro-2-Methylphenol	U	1400	1.0	1200	1400	380	
86-30-6	N-Nitrosodiphenylamine	U	750	1.0	660	750	250	
101-55-3	4-Bromophenyl-phenylether	U	370	1.0	330	370	96	
1912-24-9	Atrazine	U	370	1.0	330	370	100	
87-86-5	Pentachlorophenol	U	930	1.0	820	930	270	
120-12-7	Anthracene	U	370	1.0	330	370	95	
86-74-8	Carbazole	U	570	1.0	500	570	120	

RW 3/4/09

KATAHDIN ANALYTICAL SERVICES
Report of Analytical Results

Client: CH2MHill
Project: TO-009 Lejeune
PO No:
Sample Date: 12/10/08
Received Date: 12/11/08
Extraction Date: 12/15/08
Analysis Date: 09-JAN-2009 01:47
Report Date: 01/14/2009
Matrix: SOIL
% Solids: 88.2

Lab ID: SB7127-27
Client ID: MR08-IS101-2-3-08D
SDG: TO9-17
Extracted by: CB
Extraction Method: SW846 3550
Analyst: JCG
Analysis Method: SW846 8270C
Lab Prep Batch: WG59078
Units: ug/Kgdrywt

CAS#	Compound	Flags	Results	DF	PQL	Adj.PQL	Adj.MDL
84-74-2	Di-n-butylphthalate	U	370	1.0	330	370	110
85-68-7	Butylbenzylphthalate	U	370	1.0	330	370	100
91-94-1	3,3'-Dichlorobenzidine	U	570	1.0	500	570	130
218-01-9	Chrysene	U	370	1.0	330	370	110
117-81-7	bis(2-Ethylhexyl)phthalate	U	370	1.0	330	370	110
117-84-0	Di-n-octylphthalate	U	370	1.0	330	370	240
367-12-4	2-Fluorophenol		71%				
13127-88-3	Phenol-D6		82%				
4165-60-0	Nitrobenzene-D5		69%				
321-60-8	2-Fluorobiphenyl		73%				
118-79-6	2,4,6-Tribromophenol		92%				
1718-51-0	Terphenyl-D14		106%				

kW 3/4/09

15

KATAHDIN ANALYTICAL SERVICES
Report of Analytical Results

Client: CH2MHill
Project: TO-009 Lejeune
PO No:
Sample Date: 12/15/08
Received Date: 12/17/08
Extraction Date: 12/18/08
Analysis Date: 09-JAN-2009 02:29
Report Date: 01/15/2009
Matrix: SOIL
% Solids: 92.2

Lab ID: SB7238-1
Client ID: MR08-SS102-08D
SDG: TO9-17
Extracted by: AC
Extraction Method: SW846 3550
Analyst: JCG
Analysis Method: SW846 8270C
Lab Prep Batch: WG59198
Units: ug/Kgdrywt

Use reanalysis

CAS#	Compound	Flags	Results	DF	PQL	Adj.PQL	Adj.MDL	
100-52-7	Benzaldehyde	~~U~~ UJ	540	1.0	500	540	130	ICB
108-95-2	Phenol	~~U~~ R	540	1.0	500	540	170	SSL
111-44-4	Bis(2-Chloroethyl)ether	U	360	1.0	330	360	88	
95-57-8	2-Chlorophenol	~~U~~ R	540	1.0	500	540	180	SSL
95-48-7	2-Methylphenol	~~U~~ R	650	1.0	600	650	220	SSL
108-60-1	2,2'-Oxybis(1-chloropropane)	U	360	1.0	330	360	96	
98-86-2	Acetophenone	U	650	1.0	600	650	190	
621-64-7	N-Nitroso-di-n-propylamine	U	360	1.0	330	360	90	
65794-96-9	3&4-Methylphenol	~~U~~ R	650	1.0	600	650	200	SSL
67-72-1	Hexachloroethane	U	360	1.0	330	360	100	
98-95-3	Nitrobenzene	~~U~~ UJ	360	1.0	330	360	99	CCH
78-59-1	Isophorone	U	360	1.0	330	360	81	
88-75-5	2-Nitrophenol	~~U~~ R	650	1.0	600	650	180	SSL
105-67-9	2,4-Dimethylphenol	~~U~~ R	540	1.0	500	540	180	↓
111-91-1	Bis(2-Chloroethoxy)methane	U	360	1.0	330	360	100	
120-83-2	2,4-Dichlorophenol	~~U~~ R	540	1.0	500	540	160	SSL
106-47-8	4-Chloroaniline	U	540	1.0	500	540	130	
105-60-2	Caprolactam	U	540	1.0	500	540	160	
59-50-7	4-Chloro-3-Methylphenol	~~U~~ R	540	1.0	500	540	180	SSL
88-06-2	2,4,6-Trichlorophenol	~~U~~ ↓	540	1.0	500	540	170	↓
95-95-4	2,4,5-Trichlorophenol	~~U~~ ↓	540	1.0	500	540	170	↓
91-58-7	2-Chloronaphthalene	U	360	1.0	330	360	94	
92-52-4	1,1'-Biphenyl	U	360	1.0	330	360	79	
88-74-4	2-Nitroaniline	U	540	1.0	500	540	81	
131-11-3	Dimethyl Phthalate	U	360	1.0	330	360	84	
606-20-2	2,6-Dinitrotoluene	U	360	1.0	330	360	86	
208-96-8	Acenaphthylene	U	360	1.0	330	360	76	
99-09-2	3-Nitroaniline	U	540	1.0	500	540	100	
83-32-9	Acenaphthene	U	360	1.0	330	360	70	
51-28-5	2,4-Dinitrophenol	~~U~~ R	1300	1.0	1200	1300	410	SSL
132-64-9	Dibenzofuran	U	360	1.0	330	360	86	
100-02-7	4-Nitrophenol	~~U~~ R	1300	1.0	1200	1300	340	SSL
121-14-2	2,4-Dinitrotoluene	U	360	1.0	330	360	92	
84-66-2	Diethylphthalate	U	360	1.0	330	360	87	
7005-72-3	4-Chlorophenyl-phenylether	U	360	1.0	330	360	84	
100-01-6	4-Nitroaniline	U	540	1.0	500	540	140	
534-52-1	4,6-Dinitro-2-Methylphenol	~~U~~ R	1300	1.0	1200	1300	360	SSL
86-30-6	N-Nitrosodiphenylamine	U	720	1.0	660	720	240	
101-55-3	4-Bromophenyl-phenylether	U	360	1.0	330	360	92	
1912-24-9	Atrazine	U	360	1.0	330	360	99	
87-86-5	Pentachlorophenol	~~U~~ R	890	1.0	820	890	260	SSL
120-12-7	Anthracene	U	360	1.0	330	360	91	
86-74-8	Carbazole	U	540	1.0	500	540	120	

R R

lw 3/4/09

15

KATAHDIN ANALYTICAL SERVICES
Report of Analytical Results

Client: CH2MHill
Project: TO-009 Lejeune
PO No:
Sample Date: 12/15/08
Received Date: 12/17/08
Extraction Date: 12/18/08
Analysis Date: 09-JAN-2009 02:29
Report Date: 01/15/2009
Matrix: SOIL
% Solids: 92.2

Lab ID: SB7238-1
Client ID: MR08-SS102-08D
SDG: TO9-17
Extracted by: AC
Extraction Method: SW846 3550
Analyst: JCG
Analysis Method: SW846 8270C
Lab Prep Batch: WG59198
Units: ug/Kgdrywt

Use reanalysis

CAS#	Compound	Flags	Results	DF	PQL	Adj.PQL	Adj MDL
84-74-2	Di-n-butylphthalate	U	360	1.0	330	360	110
85-68-7	Butylbenzylphthalate	U	360	1.0	330	360	100
91-94-1	3,3'-Dichlorobenzidine	U	540	1.0	500	540	120
218-01-9	Chrysene	U	360	1.0	330	360	100
117-81-7	bis(2-Ethylhexyl)phthalate	U	360	1.0	330	360	110
117-84-0	Di-n-octylphthalate	U	360	1.0	330	360	230
367-12-4	2-Fluorophenol		* 7%				
13127-88-3	Phenol-D6		43%				
4165-60-0	Nitrobenzene-D5		74%				
321-60-8	2-Fluorobiphenyl		75%				
118-79-6	2,4,6-Tribromophenol		* 0%				
1718-51-0	Terphenyl-D14		89%				

lw 3/4/09

15RE

KATAHDIN ANALYTICAL SERVICES
Report of Analytical Results

Client: CH2MHill
Project: TO-009 Lejeune
PO No:
Sample Date: 12/15/08
Received Date: 12/17/08
Extraction Date: 01/09/09
Analysis Date: 13-JAN-2009 20:02
Report Date: 01/14/2009
Matrix: SOIL
% Solids: 92.2

Lab ID: SB7238-1RE
Client ID: MR08-SS102-08D
SDG: TO9-17
Extracted by: AC
Extraction Method: SW846 3550
Analyst: JCG
Analysis Method: SW846 8270C
Lab Prep Batch: WG59685
Units: ug/Kgdrywt

CAS#	Compound	Flags	Results	DF	PQL	Adj.PQL	Adj.MDL	
100-52-7	Benzaldehyde	~~U~~ UJ	540	1.0	500	540	130	ICB
108-95-2	Phenol	U	540	1.0	500	540	170	HT
111-44-4	Bis(2-Chloroethyl)ether	U	360	1.0	330	360	88	
95-57-8	2-Chlorophenol	U	540	1.0	500	540	180	
95-48-7	2-Methylphenol	U	650	1.0	600	650	220	
108-60-1	2,2'-Oxybis(1-chloropropane)	~~U~~ UJ	360	1.0	330	360	96	BSL
98-86-2	Acetophenone	U UJ	650	1.0	600	650	190	HT
621-64-7	N-Nitroso-di-n-propylamine	U	360	1.0	330	360	90	
65794-96-9	3&4-Methylphenol	U	650	1.0	600	650	200	
67-72-1	Hexachloroethane	U	360	1.0	330	360	100	
98-95-3	Nitrobenzene	U	360	1.0	330	360	99	
78-59-1	Isophorone	U	360	1.0	330	360	81	
88-75-5	2-Nitrophenol	U	650	1.0	600	650	180	
105-67-9	2,4-Dimethylphenol	U	540	1.0	500	540	180	
111-91-1	Bis(2-Chloroethoxy)methane	U	360	1.0	330	360	100	
120-83-2	2,4-Dichlorophenol	U	540	1.0	500	540	160	
106-47-8	4-Chloroaniline	U	540	1.0	500	540	130	
105-60-2	Caprolactam	U	540	1.0	500	540	160	
59-50-7	4-Chloro-3-Methylphenol	U	540	1.0	500	540	180	
88-06-2	2,4,6-Trichlorophenol	U	540	1.0	500	540	170	
95-95-4	2,4,5-Trichlorophenol	U	540	1.0	500	540	170	
91-58-7	2-Chloronaphthalene	U	360	1.0	330	360	94	
92-52-4	1,1'-Biphenyl	U	360	1.0	330	360	79	
88-74-4	2-Nitroaniline	U	540	1.0	500	540	81	
131-11-3	Dimethyl Phthalate	U	360	1.0	330	360	84	
606-20-2	2,6-Dinitrotoluene	U	360	1.0	330	360	86	
208-96-8	Acenaphthylene	U	360	1.0	330	360	76	
99-09-2	3-Nitroaniline	U	540	1.0	500	540	100	
83-32-9	Acenaphthene	U	360	1.0	330	360	70	
51-28-5	2,4-Dinitrophenol	U	1300	1.0	1200	1300	410	
132-64-9	Dibenzofuran	U	360	1.0	330	360	86	
100-02-7	4-Nitrophenol	U	1300	1.0	1200	1300	340	
121-14-2	2,4-Dinitrotoluene	U	360	1.0	330	360	92	
84-66-2	Diethylphthalate	U	360	1.0	330	360	87	
7005-72-3	4-Chlorophenyl-phenylether	U	360	1.0	330	360	84	
100-01-6	4-Nitroaniline	U	540	1.0	500	540	140	
534-52-1	4,6-Dinitro-2-Methylphenol	U	1300	1.0	1200	1300	360	
86-30-6	N-Nitrosodiphenylamine	U	720	1.0	660	720	240	
101-55-3	4-Bromophenyl-phenylether	U	360	1.0	330	360	92	
1912-24-9	Atrazine	U	360	1.0	330	360	99	
87-86-5	Pentachlorophenol	U	890	1.0	820	890	260	
120-12-7	Anthracene	U	360	1.0	330	360	91	
86-74-8	Carbazole	U	540	1.0	500	540	120	

RW 3/4/09

15RE

KATAHDIN ANALYTICAL SERVICES
Report of Analytical Results

Client: CH2MHill
Project: TO-009 Lejeune
PO No:
Sample Date: 12/15/08
Received Date: 12/17/08
Extraction Date: 01/09/09
Analysis Date: 13-JAN-2009 20:02
Report Date: 01/14/2009
Matrix: SOIL
% Solids: 92.2

Lab ID: SB7238-1RE
Client ID: MR08-SS102-08D
SDG: TO9-17
Extracted by: AC
Extraction Method: SW846 3550
Analyst: JCG
Analysis Method: SW846 8270C
Lab Prep Batch: WG59685
Units: ug/Kgdrywt

CAS#	Compound	Flags	Results	DF	PQL	Adj.PQL	Adj.MDL
84-74-2	Di-n-butylphthalate	U UJ	360	1.0	330	360	110
85-68-7	Butylbenzylphthalate	U	360	1.0	330	360	100
91-94-1	3,3'-Dichlorobenzidine	U	540	1.0	500	540	120
218-01-9	Chrysene	U	360	1.0	330	360	100
117-81-7	bis(2-Ethylhexyl)phthalate	U	360	1.0	330	360	110
117-84-0	Di-n-octylphthalate	U	360	1.0	330	360	230
367-12-4	2-Fluorophenol		45%				
13127-88-3	Phenol-D6		52%				
4165-60-0	Nitrobenzene-D5		56%				
321-60-8	2-Fluorobiphenyl		64%				
118-79-6	2,4,6-Tribromophenol		43%				
1718-51-0	Terphenyl-D14		87%				

HT

lw 3/4/09

16

KATAHDIN ANALYTICAL SERVICES
Report of Analytical Results

Client: CH2MHill
Project: TO-009 Lejeune
PO No:
Sample Date: 12/15/08
Received Date: 12/17/08
Extraction Date: 12/18/08
Analysis Date: 09-JAN-2009 03:11
Report Date: 01/15/2009
Matrix: SOIL
% Solids: 88.0

Lab ID: SB7238-3
Client ID: MR08-IS102-2-3-08D
SDG: TO9-17
Extracted by: AC
Extraction Method: SW846 3550
Analyst: JCG
Analysis Method: SW846 8270C
Lab Prep Batch: WG59198
Units: ug/Kgdrywt

CAS#	Compound	Flags	Results	DF	PQL	Adj.PQL	Adj.MDL	
100-52-7	Benzaldehyde	~~U~~ UJ	570	1.0	500	570	140	ICB
108-95-2	Phenol	U	570	1.0	500	570	180	
111-44-4	Bis(2-Chloroethyl)ether	U	380	1.0	330	380	92	
95-57-8	2-Chlorophenol	U	570	1.0	500	570	190	
95-48-7	2-Methylphenol	U	680	1.0	600	680	230	
108-60-1	2,2'-Oxybis(1-chloropropane)	U	380	1.0	330	380	100	
98-86-2	Acetophenone	U	680	1.0	600	680	200	
621-64-7	N-Nitroso-di-n-propylamine	U	380	1.0	330	380	94	
65794-96-9	3&4-Methylphenol	U	680	1.0	600	680	210	
67-72-1	Hexachloroethane	U	380	1.0	330	380	110	
98-95-3	Nitrobenzene	~~U~~ UJ	380	1.0	330	380	100	CCH
78-59-1	Isophorone	U	380	1.0	330	380	85	
88-75-5	2-Nitrophenol	U	680	1.0	600	680	190	
105-67-9	2,4-Dimethylphenol	~~U~~ UJ	570	1.0	500	570	190	BSL
111-91-1	Bis(2-Chloroethoxy)methane	U	380	1.0	330	380	110	
120-83-2	2,4-Dichlorophenol	U	570	1.0	500	570	170	
106-47-8	4-Chloroaniline	U	570	1.0	500	570	140	
105-60-2	Caprolactam	U	570	1.0	500	570	160	
59-50-7	4-Chloro-3-Methylphenol	U	570	1.0	500	570	190	
88-06-2	2,4,6-Trichlorophenol	U	570	1.0	500	570	180	
95-95-4	2,4,5-Trichlorophenol	U	570	1.0	500	570	180	
91-58-7	2-Chloronaphthalene	U	380	1.0	330	380	99	
92-52-4	1,1'-Biphenyl	U	380	1.0	330	380	83	
88-74-4	2-Nitroaniline	U	570	1.0	500	570	85	
131-11-3	Dimethyl Phthalate	U	380	1.0	330	380	89	
606-20-2	2,6-Dinitrotoluene	U	380	1.0	330	380	90	
208-96-8	Acenaphthylene	U	380	1.0	330	380	80	
99-09-2	3-Nitroaniline	U	570	1.0	500	570	110	
83-32-9	Acenaphthene	U	380	1.0	330	380	74	
51-28-5	2,4-Dinitrophenol	U	1400	1.0	1200	1400	430	
132-64-9	Dibenzofuran	U	380	1.0	330	380	90	
100-02-7	4-Nitrophenol	~~U~~ UJ	1400	1.0	1200	1400	350	CCH
121-14-2	2,4-Dinitrotoluene	U	380	1.0	330	380	97	
84-66-2	Diethylphthalate	U	380	1.0	330	380	91	
7005-72-3	4-Chlorophenyl-phenylether	U	380	1.0	330	380	89	
100-01-6	4-Nitroaniline	U	570	1.0	500	570	150	
534-52-1	4,6-Dinitro-2-Methylphenol	U	1400	1.0	1200	1400	380	
86-30-6	N-Nitrosodiphenylamine	U	750	1.0	660	750	250	
101-55-3	4-Bromophenyl-phenylether	U	380	1.0	330	380	97	
1912-24-9	Atrazine	U	380	1.0	330	380	100	
87-86-5	Pentachlorophenol	U	930	1.0	820	930	270	
120-12-7	Anthracene	U	380	1.0	330	380	95	
86-74-8	Carbazole	U	570	1.0	500	570	130	

lw 3/4/09

KATAHDIN ANALYTICAL SERVICES
Report of Analytical Results

Client: CH2MHill
Project: TO-009 Lejeune
PO No:
Sample Date: 12/15/08
Received Date: 12/17/08
Extraction Date: 12/18/08
Analysis Date: 09-JAN-2009 03:11
Report Date: 01/15/2009
Matrix: SOIL
% Solids: 88.0

Lab ID: SB7238-3
Client ID: MR08-IS102-2-3-08D
SDG: TO9-17
Extracted by: AC
Extraction Method: SW846 3550
Analyst: JCG
Analysis Method: SW846 8270C
Lab Prep Batch: WG59198
Units: ug/Kgdrywt

CAS#	Compound	Flags	Results	DF	PQL	Adj.PQL	Adj.MDL
84-74-2	Di-n-butylphthalate	U	380	1.0	330	380	110
85-68-7	Butylbenzylphthalate	U	380	1.0	330	380	100
91-94-1	3,3'-Dichlorobenzidine	U	570	1.0	500	570	130
218-01-9	Chrysene	U	380	1.0	330	380	110
117-81-7	bis(2-Ethylhexyl)phthalate	U	380	1.0	330	380	110
117-84-0	Di-n-octylphthalate	U	380	1.0	330	380	240
367-12-4	2-Fluorophenol		36%				
13127-88-3	Phenol-D6		62%				
4165-60-0	Nitrobenzene-D5		66%				
321-60-8	2-Fluorobiphenyl		64%				
118-79-6	2,4,6-Tribromophenol		* 15%				
1718-51-0	Terphenyl-D14		86%				

lw 3/4/09

17

KATAHDIN ANALYTICAL SERVICES
Report of Analytical Results

Client: CH2MHill
Project: TO-009 Lejeune
PO No:
Sample Date: 12/15/08
Received Date: 12/17/08
Extraction Date: 12/18/08
Analysis Date: 09-JAN-2009 03:53
Report Date: 01/15/2009
Matrix: SOIL
% Solids: 92.0

Lab ID: SB7238-5
Client ID: MR08-SS119-08D
SDG: TO9-17
Extracted by: AC
Extraction Method: SW846 3550
Analyst: JCG
Analysis Method: SW846 8270C
Lab Prep Batch: WG59198
Units: ug/Kgdrywt

Use reanalysis

CAS#	Compound	Flags	Results	DF	PQL	Adj.PQL	Adj.MDL	
100-52-7	Benzaldehyde	~~U~~ UJ	540	1.0	500	540	130	JCB
108-95-2	Phenol	~~U~~ R	540	1.0	500	540	170	SSL
111-44-4	Bis(2-Chloroethyl)ether	U	360	1.0	330	360	88	
95-57-8	2-Chlorophenol	~~U~~ R	540	1.0	500	540	180	SSL
95-48-7	2-Methylphenol	~~U~~ R	650	1.0	600	650	220	↓
108-60-1	2,2'-Oxybis(1-chloropropane)	U	360	1.0	330	360	97	
98-86-2	Acetophenone	U	650	1.0	600	650	190	
621-64-7	N-Nitroso-di-n-propylamine	U	360	1.0	330	360	90	
65794-96-9	3&4-Methylphenol	~~U~~ R	650	1.0	600	650	200	SSL
67-72-1	Hexachloroethane	U	360	1.0	330	360	100	
98-95-3	Nitrobenzene	~~U~~ UJ	360	1.0	330	360	99	CCH
78-59-1	Isophorone	U	360	1.0	330	360	82	
88-75-5	2-Nitrophenol	~~U~~ R	650	1.0	600	650	180	SSL
105-67-9	2,4-Dimethylphenol	~~U~~ R	540	1.0	500	540	180	SSL
111-91-1	Bis(2-Chloroethoxy)methane	U	360	1.0	330	360	100	
120-83-2	2,4-Dichlorophenol	~~U~~ R	540	1.0	500	540	160	SSL
106-47-8	4-Chloroaniline	U	540	1.0	500	540	130	
105-60-2	Caprolactam	U	540	1.0	500	540	160	
59-50-7	4-Chloro-3-Methylphenol	~~U~~ R	540	1.0	500	540	180	SSL
88-06-2	2,4,6-Trichlorophenol	~~U~~ ↓	540	1.0	500	540	170	↓
95-95-4	2,4,5-Trichlorophenol	~~U~~ ↓	540	1.0	500	540	170	↓
91-58-7	2-Chloronaphthalene	U	360	1.0	330	360	94	
92-52-4	1,1'-Biphenyl	U	360	1.0	330	360	79	
88-74-4	2-Nitroaniline	U	540	1.0	500	540	82	
131-11-3	Dimethyl Phthalate	U	360	1.0	330	360	85	
606-20-2	2,6-Dinitrotoluene	U	360	1.0	330	360	86	
208-96-8	Acenaphthylene	U	360	1.0	330	360	76	
99-09-2	3-Nitroaniline	U	540	1.0	500	540	100	
83-32-9	Acenaphthene	U	360	1.0	330	360	71	
51-28-5	2,4-Dinitrophenol	~~U~~ R	1300	1.0	1200	1300	410	SSL
132-64-9	Dibenzofuran	U	360	1.0	330	360	86	
100-02-7	4-Nitrophenol	~~U~~ R	1300	1.0	1200	1300	340	SSL
121-14-2	2,4-Dinitrotoluene	U	360	1.0	330	360	92	
84-66-2	Diethylphthalate	U	360	1.0	330	360	87	
7005-72-3	4-Chlorophenyl-phenylether	U	360	1.0	330	360	85	
100-01-6	4-Nitroaniline	U	540	1.0	500	540	140	
534-52-1	4,6-Dinitro-2-Methylphenol	~~U~~ R	1300	1.0	1200	1300	370	SSL
86-30-6	N-Nitrosodiphenylamine	U	720	1.0	660	720	240	
101-55-3	4-Bromophenyl-phenylether	U	360	1.0	330	360	92	
1912-24-9	Atrazine	U	360	1.0	330	360	99	
87-86-5	Pentachlorophenol	~~U~~ R	890	1.0	820	890	260	SSL
120-12-7	Anthracene	U	360	1.0	330	360	91	
86-74-8	Carbazole	U	540	1.0	500	540	120	

lw 314109

KATAHDIN ANALYTICAL SERVICES
Report of Analytical Results

Client: CH2MHill
Project: TO-009 Lejeune
PO No:
Sample Date: 12/15/08
Received Date: 12/17/08
Extraction Date: 12/18/08
Analysis Date: 09-JAN-2009 03:53
Report Date: 01/15/2009
Matrix: SOIL
% Solids: 92.0

Lab ID: SB7238-5
Client ID: MR08-SS119-08D
SDG: TO9-17
Extracted by: AC
Extraction Method: SW846 3550
Analyst: JCG
Analysis Method: SW846 8270C
Lab Prep Batch: WG59198
Units: ug/Kgdrywt

Use reanalysis

CAS#	Compound	Flags	Results	DF	PQL	Adj.PQL	Adj.MDL
84-74-2	Di-n-butylphthalate	U	360	1.0	330	360	110
85-68-7	Butylbenzylphthalate	U	360	1.0	330	360	100
91-94-1	3,3'-Dichlorobenzidine	U	540	1.0	500	540	120
218-01-9	Chrysene	U	360	1.0	330	360	100
117-81-7	bis(2-Ethylhexyl)phthalate	J	150	1.0	330	360	110
117-84-0	Di-n-octylphthalate	U	360	1.0	330	360	230
367-12-4	2-Fluorophenol		* 10%				
13127-88-3	Phenol-D6		47%				
4165-60-0	Nitrobenzene-D5		68%				
321-60-8	2-Fluorobiphenyl		76%				
118-79-6	2,4,6-Tribromophenol		* 0%				
1718-51-0	Terphenyl-D14		84%				

RE

MW 3/4/09

17RE

KATAHDIN ANALYTICAL SERVICES
Report of Analytical Results

Client: CH2MHill
Project: TO-009 Lejeune
PO No:
Sample Date: 12/15/08
Received Date: 12/17/08
Extraction Date: 01/09/09
Analysis Date: 13-JAN-2009 20:44
Report Date: 01/14/2009
Matrix: SOIL
% Solids: 92.0

Lab ID: SB7238-5RE
Client ID: MR08-SS119-08D
SDG: TO9-17
Extracted by: AC
Extraction Method: SW846 3550
Analyst: JCG
Analysis Method: SW846 8270C
Lab Prep Batch: WG59685
Units: ug/Kgdrywt

CAS#	Compound	Flags	Results	DF	PQL	Adj.PQL	Adj.MDL	
100-52-7	Benzaldehyde	~~U~~ UJ	540	1.0	500	540	130	JCB
108-95-2	Phenol	U UJ	540	1.0	500	540	170	HT
111-44-4	Bis(2-Chloroethyl)ether	U	360	1.0	330	360	88	
95-57-8	2-Chlorophenol	U	540	1.0	500	540	180	
95-48-7	2-Methylphenol	U	650	1.0	600	650	220	
108-60-1	2,2'-Oxybis(1-chloropropane)	~~U~~ UJ	360	1.0	330	360	97	BSL
98-86-2	Acetophenone	U UJ	650	1.0	600	650	190	HT
621-64-7	N-Nitroso-di-n-propylamine	U	360	1.0	330	360	90	
65794-96-9	3&4-Methylphenol	U	650	1.0	600	650	200	
67-72-1	Hexachloroethane	U	360	1.0	330	360	100	
98-95-3	Nitrobenzene	U	360	1.0	330	360	99	
78-59-1	Isophorone	U	360	1.0	330	360	82	
88-75-5	2-Nitrophenol	U	650	1.0	600	650	180	
105-67-9	2,4-Dimethylphenol	U	540	1.0	500	540	180	
111-91-1	Bis(2-Chloroethoxy)methane	U	360	1.0	330	360	100	
120-83-2	2,4-Dichlorophenol	U	540	1.0	500	540	160	
106-47-8	4-Chloroaniline	U	540	1.0	500	540	130	
105-60-2	Caprolactam	U	540	1.0	500	540	160	
59-50-7	4-Chloro-3-Methylphenol	U	540	1.0	500	540	180	
88-06-2	2,4,6-Trichlorophenol	U	540	1.0	500	540	170	
95-95-4	2,4,5-Trichlorophenol	U	540	1.0	500	540	170	
91-58-7	2-Chloronaphthalene	U	360	1.0	330	360	94	
92-52-4	1,1'-Biphenyl	U	360	1.0	330	360	79	
88-74-4	2-Nitroaniline	U	540	1.0	500	540	82	
131-11-3	Dimethyl Phthalate	U	360	1.0	330	360	85	
606-20-2	2,6-Dinitrotoluene	U	360	1.0	330	360	86	
208-96-8	Acenaphthylene	U	360	1.0	330	360	76	
99-09-2	3-Nitroaniline	U	540	1.0	500	540	100	
83-32-9	Acenaphthene	U	360	1.0	330	360	71	
51-28-5	2,4-Dinitrophenol	U	1300	1.0	1200	1300	410	
132-64-9	Dibenzofuran	U	360	1.0	330	360	86	
100-02-7	4-Nitrophenol	U	1300	1.0	1200	1300	340	
121-14-2	2,4-Dinitrotoluene	U	360	1.0	330	360	92	
84-66-2	Diethylphthalate	U	360	1.0	330	360	87	
7005-72-3	4-Chlorophenyl-phenylether	U	360	1.0	330	360	85	
100-01-6	4-Nitroaniline	U	540	1.0	500	540	140	
534-52-1	4,6-Dinitro-2-Methylphenol	U	1300	1.0	1200	1300	370	
86-30-6	N-Nitrosodiphenylamine	U	720	1.0	660	720	240	
101-55-3	4-Bromophenyl-phenylether	U	360	1.0	330	360	92	
1912-24-9	Atrazine	U	360	1.0	330	360	99	
87-86-5	Pentachlorophenol	U	890	1.0	820	890	260	
120-12-7	Anthracene	U	360	1.0	330	360	91	
86-74-8	Carbazole	U	540	1.0	500	540	120	

LW 3/4/09

17RE

KATAHDIN ANALYTICAL SERVICES
Report of Analytical Results

Client: CH2MHill
Project: TO-009 Lejeune
PO No:
Sample Date: 12/15/08
Received Date: 12/17/08
Extraction Date: 01/09/09
Analysis Date: 13-JAN-2009 20:44
Report Date: 01/14/2009
Matrix: SOIL
% Solids: 92.0

Lab ID: SB7238-5RE
Client ID: MR08-SS119-08D
SDG: TO9-17
Extracted by: AC
Extraction Method: SW846 3550
Analyst: JCG
Analysis Method: SW846 8270C
Lab Prep Batch: WG59685
Units: ug/Kgdrywt

CAS#	Compound	Flags	Results	DF	PQL	Adj.PQL	Adj.MDL	
84-74-2	Di-n-butylphthalate	~~U~~ UJ	360	1.0	330	360	110	HT
85-68-7	Butylbenzylphthalate	~~U~~	360	1.0	330	360	100	
91-94-1	3,3'-Dichlorobenzidine	~~U~~	540	1.0	500	540	120	
218-01-9	Chrysene	~~U~~	360	1.0	330	360	100	
117-81-7	bis(2-Ethylhexyl)phthalate	~~J~~ J	360	1.0	330	360	110	
117-84-0	Di-n-octylphthalate	~~U~~ UJ	360	1.0	330	360	230	
367-12-4	2-Fluorophenol		41%					
13127-88-3	Phenol-D6		53%					
4165-60-0	Nitrobenzene-D5		52%					
321-60-8	2-Fluorobiphenyl		70%					
118-79-6	2,4,6-Tribromophenol		46%					
1718-51-0	Terphenyl-D14		91%					

lw 3/4/09

18

KATAHDIN ANALYTICAL SERVICES
Report of Analytical Results

Client: CH2MHill
Project: TO-009 Lejeune
PO No:
Sample Date: 12/15/08
Received Date: 12/17/08
Extraction Date: 12/18/08
Analysis Date: 09-JAN-2009 04:35
Report Date: 01/15/2009
Matrix: SOIL
% Solids: 92.2

Lab ID: SB7238-7
Client ID: MR08-SS119D-08D
SDG: TO9-17
Extracted by: AC
Extraction Method: SW846 3550
Analyst: JCG
Analysis Method: SW846 8270C
Lab Prep Batch: WG59198
Units: ug/Kgdrywt

Use reanalysis

CAS#	Compound	Flags	Results	DF	PQL	Adj.PQL	Adj.MDL	
100-52-7	Benzaldehyde	~~U~~ UJ	540	1.0	500	540	130	ICB
108-95-2	Phenol	~~U~~ R	540	1.0	500	540	170	SSL
111-44-4	Bis(2-Chloroethyl)ether	U	360	1.0	330	360	88	
95-57-8	2-Chlorophenol	~~U~~ R	540	1.0	500	540	180	SSL
95-48-7	2-Methylphenol	~~U~~ R	650	1.0	600	650	220	SSL
108-60-1	2,2'-Oxybis(1-chloropropane)	U	360	1.0	330	360	96	
98-86-2	Acetophenone	U	650	1.0	600	650	190	
621-64-7	N-Nitroso-di-n-propylamine	U	360	1.0	330	360	90	
65794-96-9	3&4-Methylphenol	~~U~~ R	650	1.0	600	650	200	SSL
67-72-1	Hexachloroethane	U	360	1.0	330	360	100	
98-95-3	Nitrobenzene	~~U~~ UJ	360	1.0	330	360	99	CCH
78-59-1	Isophorone	U	360	1.0	330	360	81	
88-75-5	2-Nitrophenol	~~U~~ R	650	1.0	600	650	180	SSL
105-67-9	2,4-Dimethylphenol	~~U~~ R	540	1.0	500	540	180	SSL
111-91-1	Bis(2-Chloroethoxy)methane	U	360	1.0	330	360	100	
120-83-2	2,4-Dichlorophenol	~~U~~ R	540	1.0	500	540	160	SSL
106-47-8	4-Chloroaniline	U	540	1.0	500	540	130	
105-60-2	Caprolactam	U	540	1.0	500	540	160	
59-50-7	4-Chloro-3-Methylphenol	~~U~~ R	540	1.0	500	540	180	SSL
88-06-2	2,4,6-Trichlorophenol	U	540	1.0	500	540	170	↓
95-95-4	2,4,5-Trichlorophenol	U	540	1.0	500	540	170	↓
91-58-7	2-Chloronaphthalene	U	360	1.0	330	360	94	
92-52-4	1,1'-Biphenyl	U	360	1.0	330	360	79	
88-74-4	2-Nitroaniline	U	540	1.0	500	540	81	
131-11-3	Dimethyl Phthalate	U	360	1.0	330	360	85	
606-20-2	2,6-Dinitrotoluene	U	360	1.0	330	360	86	
208-96-8	Acenaphthylene	U	360	1.0	330	360	76	
99-09-2	3-Nitroaniline	U	540	1.0	500	540	100	
83-32-9	Acenaphthene	U	360	1.0	330	360	70	
51-28-5	2,4-Dinitrophenol	~~U~~ R	1300	1.0	1200	1300	410	SSL
132-64-9	Dibenzofuran	U	360	1.0	330	360	86	
100-02-7	4-Nitrophenol	~~U~~ R	1300	1.0	1200	1300	340	SSL
121-14-2	2,4-Dinitrotoluene	U	360	1.0	330	360	92	
84-66-2	Diethylphthalate	U	360	1.0	330	360	87	
7005-72-3	4-Chlorophenyl-phenylether	U	360	1.0	330	360	85	
100-01-6	4-Nitroaniline	U	540	1.0	500	540	140	
534-52-1	4,6-Dinitro-2-Methylphenol	~~U~~ R	1300	1.0	1200	1300	360	SSL
86-30-6	N-Nitrosodiphenylamine	U	720	1.0	660	720	240	
101-55-3	4-Bromophenyl-phenylether	U	360	1.0	330	360	92	
1912-24-9	Atrazine	U	360	1.0	330	360	99	
87-86-5	Pentachlorophenol	~~U~~ R	890	1.0	820	890	260	SSL
120-12-7	Anthracene	U	360	1.0	330	360	91	
86-74-8	Carbazole	U	540	1.0	500	540	120	

MD 3/4/09

KATAHDIN ANALYTICAL SERVICES
Report of Analytical Results

18

Client: CH2MHill
Project: TO-009 Lejeune
PO No:
Sample Date: 12/15/08
Received Date: 12/17/08
Extraction Date: 12/18/08
Analysis Date: 09-JAN-2009 04:35
Report Date: 01/15/2009
Matrix: SOIL
% Solids: 92.2

Lab ID: SB7238-7
Client ID: MR08-SS119D-08D
SDG: TO9-17
Extracted by: AC
Extraction Method: SW846 3550
Analyst: JCG
Analysis Method: SW846 8270C
Lab Prep Batch: WG59198
Units: ug/Kgdrywt

Use reanalysis

CAS#	Compound	Flags	Results	DF	PQL	Adj.PQL	Adj.MDL
84-74-2	Di-n-butylphthalate	U	360	1.0	330	360	110
85-68-7	Butylbenzylphthalate	U	360	1.0	330	360	100
91-94-1	3,3'-Dichlorobenzidine	U	540	1.0	500	540	120
218-01-9	Chrysene	U	360	1.0	330	360	100
117-81-7	bis(2-Ethylhexyl)phthalate		370	1.0	330	360	110
117-84-0	Di-n-octylphthalate	U	360	1.0	330	360	230
367-12-4	2-Fluorophenol		* 0%				
13127-88-3	Phenol-D6		* 39%				
4165-60-0	Nitrobenzene-D5		74%				
321-60-8	2-Fluorobiphenyl		79%				
118-79-6	2,4,6-Tribromophenol		* 0%				
1718-51-0	Terphenyl-D14		90%				

RE

lw
3/4/09

18RE

KATAHDIN ANALYTICAL SERVICES
Report of Analytical Results

Client: CH2MHill
Project: TO-009 Lejeune
PO No:
Sample Date: 12/15/08
Received Date: 12/17/08
Extraction Date: 01/09/09
Analysis Date: 13-JAN-2009 21:27
Report Date: 01/14/2009
Matrix: SOIL
% Solids: 92.2

Lab ID: SB7238-7RE
Client ID: MR08-SS119D-08D
SDG: TO9-17
Extracted by: AC
Extraction Method: SW846 3550
Analyst: JCG
Analysis Method: SW846 8270C
Lab Prep Batch: WG59685
Units: ug/Kgdrywt

CAS#	Compound	Flags	Results	DF	PQL	Adj.PQL	Adj.MDL	
100-52-7	Benzaldehyde	~~U~~ UJ	540	1.0	500	540	130	JCB
108-95-2	Phenol	~~U~~ UJ	540	1.0	500	540	170	SSL
111-44-4	Bis(2-Chloroethyl)ether	~~U~~ UJ	360	1.0	330	360	88	HT
95-57-8	2-Chlorophenol	~~U~~ UJ	540	1.0	500	540	180	SSL
95-48-7	2-Methylphenol	~~U~~ UJ	650	1.0	600	650	220	SSL
108-60-1	2,2'-Oxybis(1-chloropropane)	~~U~~ UJ	360	1.0	330	360	96	SSL
98-86-2	Acetophenone	U	650	1.0	600	650	190	HT
621-64-7	N-Nitroso-di-n-propylamine	U	360	1.0	330	360	90	
65794-96-9	3&4-Methylphenol	~~U~~ UJ	650	1.0	600	650	200	SSL
67-72-1	Hexachloroethane	U	360	1.0	330	360	100	HT
98-95-3	Nitrobenzene	U	360	1.0	330	360	99	
78-59-1	Isophorone	U	360	1.0	330	360	81	
88-75-5	2-Nitrophenol	~~U~~ UJ	650	1.0	600	650	180	SSL
105-67-9	2,4-Dimethylphenol	~~U~~ UJ	540	1.0	500	540	180	SSL
111-91-1	Bis(2-Chloroethoxy)methane	~~U~~ UJ	360	1.0	330	360	100	HT
120-83-2	2,4-Dichlorophenol	~~U~~ UJ	540	1.0	500	540	160	SSL
106-47-8	4-Chloroaniline	U UJ	540	1.0	500	540	130	HT
105-60-2	Caprolactam	U	540	1.0	500	540	160	
59-50-7	4-Chloro-3-Methylphenol	U UJ	540	1.0	500	540	180	SSL
88-06-2	2,4,6-Trichlorophenol	U	540	1.0	500	540	170	
95-95-4	2,4,5-Trichlorophenol	U	540	1.0	500	540	170	
91-58-7	2-Chloronaphthalene	U UJ	360	1.0	330	360	94	HT
92-52-4	1,1'-Biphenyl	U	360	1.0	330	360	79	
88-74-4	2-Nitroaniline	U	540	1.0	500	540	81	
131-11-3	Dimethyl Phthalate	U	360	1.0	330	360	85	
606-20-2	2,6-Dinitrotoluene	U	360	1.0	330	360	86	
208-96-8	Acenaphthylene	U	360	1.0	330	360	76	
99-09-2	3-Nitroaniline	U	540	1.0	500	540	100	
83-32-9	Acenaphthene	U	360	1.0	330	360	70	
51-28-5	2,4-Dinitrophenol	~~U~~ UJ	1300	1.0	1200	1300	410	SSL
132-64-9	Dibenzofuran	~~U~~ UJ	360	1.0	330	360	86	HT
100-02-7	4-Nitrophenol	~~U~~ UJ	1300	1.0	1200	1300	340	SSL
121-14-2	2,4-Dinitrotoluene	U UJ	360	1.0	330	360	92	HT
84-66-2	Diethylphthalate	U	360	1.0	330	360	87	
7005-72-3	4-Chlorophenyl-phenylether	U	360	1.0	330	360	85	
100-01-6	4-Nitroaniline	U	540	1.0	500	540	140	
534-52-1	4,6-Dinitro-2-Methylphenol	~~U~~ UJ	1300	1.0	1200	1300	360	SSL
86-30-6	N-Nitrosodiphenylamine	U	720	1.0	660	720	240	HT
101-55-3	4-Bromophenyl-phenylether	U	360	1.0	330	360	92	
1912-24-9	Atrazine	U	360	1.0	330	360	99	
87-86-5	Pentachlorophenol	~~U~~ UJ	890	1.0	820	890	260	SSL
120-12-7	Anthracene	U	360	1.0	330	360	91	HT
86-74-8	Carbazole	U	540	1.0	500	540	120	HT

RED 3/4/09

18RE

KATAHDIN ANALYTICAL SERVICES
Report of Analytical Results

Client: CH2MHill
Project: TO-009 Lejeune
PO No:
Sample Date: 12/15/08
Received Date: 12/17/08
Extraction Date: 01/09/09
Analysis Date: 13-JAN-2009 21:27
Report Date: 01/14/2009
Matrix: SOIL
% Solids: 92.2

Lab ID: SB7238-7RE
Client ID: MR08-SS119D-08D
SDG: TO9-17
Extracted by: AC
Extraction Method: SW846 3550
Analyst: JCG
Analysis Method: SW846 8270C
Lab Prep Batch: WG59685
Units: ug/Kgdrywt

CAS#	Compound	Flags	Results	DF	PQL	Adj.PQL	Adj.MDL
84-74-2	Di-n-butylphthalate	~~U~~ UJ	360	1.0	330	360	110 HT
85-68-7	Butylbenzylphthalate	~~U~~	360	1.0	330	360	100
91-94-1	3,3'-Dichlorobenzidine	~~U~~	540	1.0	500	540	120
218-01-9	Chrysene	~~U~~	360	1.0	330	360	100
117-81-7	bis(2-Ethylhexyl)phthalate	~~J~~ J	220	1.0	330	360	110
117-84-0	Di-n-octylphthalate	~~U~~ UJ	360	1.0	330	360	230
367-12-4	2-Fluorophenol		* 28%				
13127-88-3	Phenol-D6		46%				
4165-60-0	Nitrobenzene-D5		56%				
321-60-8	2-Fluorobiphenyl		73%				
118-79-6	2,4,6-Tribromophenol		* 18%				
1718-51-0	Terphenyl-D14		97%				

lw 3/4/09

19

KATAHDIN ANALYTICAL SERVICES
Report of Analytical Results

Client: CH2MHill
Project: TO-009 Lejeune
PO No:
Sample Date: 12/15/08
Received Date: 12/17/08
Extraction Date: 12/18/08
Analysis Date: 09-JAN-2009 05:17
Report Date: 01/15/2009
Matrix: SOIL
% Solids: 87.2

Lab ID: SB7238-9
Client ID: MR08-IS119-4.5-5.5
SDG: TO9-17
Extracted by: AC
Extraction Method: SW846 3550
Analyst: JCG
Analysis Method: SW846 8270C
Lab Prep Batch: WG59198
Units: ug/Kgdrywt

Use reanalysis

CAS#	Compound	Flags	Results	DF	PQL	Adj.PQL	Adj.MDL	
100-52-7	Benzaldehyde	~~U~~ UJ	570	1.0	500	570	140	ICB
108-95-2	Phenol	~~U~~ R	570	1.0	500	570	180	SSL
111-44-4	Bis(2-Chloroethyl)ether	U	380	1.0	330	380	93	
95-57-8	2-Chlorophenol	~~U~~ R	570	1.0	500	570	190	SSL
95-48-7	2-Methylphenol	~~U~~ R	690	1.0	600	690	230	SSL
108-60-1	2,2'-Oxybis(1-chloropropane)	U	380	1.0	330	380	100	
98-86-2	Acetophenone	U	690	1.0	600	690	200	
621-64-7	N-Nitroso-di-n-propylamine	U	380	1.0	330	380	95	
65794-96-9	3&4-Methylphenol	~~U~~ R	690	1.0	600	690	210	SSL
67-72-1	Hexachloroethane	U	380	1.0	330	380	110	
98-95-3	Nitrobenzene	~~U~~ UJ	380	1.0	330	380	100	CCH
78-59-1	Isophorone	U	380	1.0	330	380	86	
88-75-5	2-Nitrophenol	~~U~~ R	690	1.0	600	690	190	SSL
105-67-9	2,4-Dimethylphenol	~~U~~ R	570	1.0	500	570	190	↓
111-91-1	Bis(2-Chloroethoxy)methane	U	380	1.0	330	380	110	
120-83-2	2,4-Dichlorophenol	~~U~~ R	570	1.0	500	570	170	SSL
106-47-8	4-Chloroaniline	U	570	1.0	500	570	140	
105-60-2	Caprolactam	U	570	1.0	500	570	160	
59-50-7	4-Chloro-3-Methylphenol	~~U~~ R	570	1.0	500	570	190	SSL
88-06-2	2,4,6-Trichlorophenol	~~U~~ ↓	570	1.0	500	570	180	↓
95-95-4	2,4,5-Trichlorophenol	~~U~~ ↓	570	1.0	500	570	180	↓
91-58-7	2-Chloronaphthalene	U	380	1.0	330	380	100	
92-52-4	1,1'-Biphenyl	U	380	1.0	330	380	84	
88-74-4	2-Nitroaniline	U	570	1.0	500	570	86	
131-11-3	Dimethyl Phthalate	U	380	1.0	330	380	89	
606-20-2	2,6-Dinitrotoluene	U	380	1.0	330	380	90	
208-96-8	Acenaphthylene	U	380	1.0	330	380	80	
99-09-2	3-Nitroaniline	U	570	1.0	500	570	110	
83-32-9	Acenaphthene	U	380	1.0	330	380	74	
51-28-5	2,4-Dinitrophenol	~~U~~ R	1400	1.0	1200	1400	430	SSL
132-64-9	Dibenzofuran	U	380	1.0	330	380	90	
100-02-7	4-Nitrophenol	~~U~~ R	1400	1.0	1200	1400	350	SSL
121-14-2	2,4-Dinitrotoluene	U	380	1.0	330	380	97	
84-66-2	Diethylphthalate	U	380	1.0	330	380	92	
7005-72-3	4-Chlorophenyl-phenylether	U	380	1.0	330	380	89	
100-01-6	4-Nitroaniline	U	570	1.0	500	570	150	
534-52-1	4,6-Dinitro-2-Methylphenol	~~U~~ R	1400	1.0	1200	1400	390	SSL
86-30-6	N-Nitrosodiphenylamine	U	760	1.0	660	760	250	
101-55-3	4-Bromophenyl-phenylether	U	380	1.0	330	380	97	
1912-24-9	Atrazine	U	380	1.0	330	380	100	
87-86-5	Pentachlorophenol	~~U~~ R	940	1.0	820	940	270	SSL
120-12-7	Anthracene	U	380	1.0	330	380	96	
86-74-8	Carbazole	U	570	1.0	500	570	130	

lew 3/4/09

19

KATAHDIN ANALYTICAL SERVICES
Report of Analytical Results

Client: CH2MHill
Project: TO-009 Lejeune
PO No:
Sample Date: 12/15/08
Received Date: 12/17/08
Extraction Date: 12/18/08
Analysis Date: 09-JAN-2009 05:17
Report Date: 01/15/2009
Matrix: SOIL
% Solids: 87.2

Lab ID: SB7238-9
Client ID: MR08-IS119-4.5-5.5
SDG: TO9-17
Extracted by: AC
Extraction Method: SW846 3550
Analyst: JCG
Analysis Method: SW846 8270C
Lab Prep Batch: WG59198
Units: ug/Kgdrywt

Use reanalysis

CAS#	Compound	Flags	Results	DF	PQL	Adj.PQL	Adj.MDL
84-74-2	Di-n-butylphthalate	U	380	1.0	330	380	120
85-68-7	Butylbenzylphthalate	U	380	1.0	330	380	110
91-94-1	3,3'-Dichlorobenzidine	U	570	1.0	500	570	130
218-01-9	Chrysene	U	380	1.0	330	380	110
117-81-7	bis(2-Ethylhexyl)phthalate	J	120	1.0	330	380	110
117-84-0	Di-n-octylphthalate	U	380	1.0	330	380	240
367-12-4	2-Fluorophenol		* 26%				
13127-88-3	Phenol-D6		61%				
4165-60-0	Nitrobenzene-D5		70%				
321-60-8	2-Fluorobiphenyl		74%				
118-79-6	2,4,6-Tribromophenol		* 3%				
1718-51-0	Terphenyl-D14		87%				

R

WD
3/4/09

19RE

KATAHDIN ANALYTICAL SERVICES
Report of Analytical Results

Client: CH2MHill
Project: TO-009 Lejeune
PO No:
Sample Date: 12/15/08
Received Date: 12/17/08
Extraction Date: 01/09/09
Analysis Date: 13-JAN-2009 22:10
Report Date: 01/14/2009
Matrix: SOIL
% Solids: 87.2

Lab ID: SB7238-9RE
Client ID: MR08-IS119-4.5-5.5
SDG: TO9-17
Extracted by: AC
Extraction Method: SW846 3550
Analyst: JCG
Analysis Method: SW846 8270C
Lab Prep Batch: WG59685
Units: ug/Kgdrywt

CAS#	Compound	Flags	Results	DF	PQL	Adj.PQL	Adj.MDL	
100-52-7	Benzaldehyde	U UJ	570	1.0	500	570	140	ICB
108-95-2	Phenol	U UJ	570	1.0	500	570	180	HT
111-44-4	Bis(2-Chloroethyl)ether	U	380	1.0	330	380	93	
95-57-8	2-Chlorophenol	U	570	1.0	500	570	190	
95-48-7	2-Methylphenol	U	690	1.0	600	690	230	
108-60-1	2,2'-Oxybis(1-chloropropane)	U UJ	380	1.0	330	380	100	BSL
98-86-2	Acetophenone	U UJ	690	1.0	600	690	200	HT
621-64-7	N-Nitroso-di-n-propylamine	U	380	1.0	330	380	95	
65794-96-9	3&4-Methylphenol	U	690	1.0	600	690	210	
67-72-1	Hexachloroethane	U	380	1.0	330	380	110	
98-95-3	Nitrobenzene	U	380	1.0	330	380	100	
78-59-1	Isophorone	U	380	1.0	330	380	86	
88-75-5	2-Nitrophenol	U	690	1.0	600	690	190	
105-67-9	2,4-Dimethylphenol	U	570	1.0	500	570	190	
111-91-1	Bis(2-Chloroethoxy)methane	U	380	1.0	330	380	110	
120-83-2	2,4-Dichlorophenol	U	570	1.0	500	570	170	
106-47-8	4-Chloroaniline	U	570	1.0	500	570	140	
105-60-2	Caprolactam	U	570	1.0	500	570	160	
59-50-7	4-Chloro-3-Methylphenol	U	570	1.0	500	570	190	
88-06-2	2,4,6-Trichlorophenol	U	570	1.0	500	570	180	
95-95-4	2,4,5-Trichlorophenol	U	570	1.0	500	570	180	
91-58-7	2-Chloronaphthalene	U	380	1.0	330	380	100	
92-52-4	1,1'-Biphenyl	U	380	1.0	330	380	84	
88-74-4	2-Nitroaniline	U	570	1.0	500	570	86	
131-11-3	Dimethyl Phthalate	U	380	1.0	330	380	89	
606-20-2	2,6-Dinitrotoluene	U	380	1.0	330	380	90	
208-96-8	Acenaphthylene	U	380	1.0	330	380	80	
99-09-2	3-Nitroaniline	U	570	1.0	500	570	110	
83-32-9	Acenaphthene	U	380	1.0	330	380	74	
51-28-5	2,4-Dinitrophenol	U	1400	1.0	1200	1400	430	
132-64-9	Dibenzofuran	U	380	1.0	330	380	90	
100-02-7	4-Nitrophenol	U	1400	1.0	1200	1400	350	
121-14-2	2,4-Dinitrotoluene	U	380	1.0	330	380	97	
84-66-2	Diethylphthalate	U	380	1.0	330	380	92	
7005-72-3	4-Chlorophenyl-phenylether	U	380	1.0	330	380	89	
100-01-6	4-Nitroaniline	U	570	1.0	500	570	150	
534-52-1	4,6-Dinitro-2-Methylphenol	U	1400	1.0	1200	1400	390	
86-30-6	N-Nitrosodiphenylamine	U	760	1.0	660	760	250	
101-55-3	4-Bromophenyl-phenylether	U	380	1.0	330	380	97	
1912-24-9	Atrazine	U	380	1.0	330	380	100	
87-86-5	Pentachlorophenol	U	940	1.0	820	940	270	
120-12-7	Anthracene	U	380	1.0	330	380	96	
86-74-8	Carbazole	U	570	1.0	500	570	130	

Ceo
3/4/09

19RE

KATAHDIN ANALYTICAL SERVICES
Report of Analytical Results

Client: CH2MHill
Project: TO-009 Lejeune
PO No:
Sample Date: 12/15/08
Received Date: 12/17/08
Extraction Date: 01/09/09
Analysis Date: 13-JAN-2009 22:10
Report Date: 01/14/2009
Matrix: SOIL
% Solids: 87.2

Lab ID: SB7238-9RE
Client ID: MR08-IS119-4.5-5.5
SDG: TO9-17
Extracted by: AC
Extraction Method: SW846 3550
Analyst: JCG
Analysis Method: SW846 8270C
Lab Prep Batch: WG59685
Units: ug/Kgdrywt

CAS#	Compound	Flags	Results	DF	PQL	Adj.PQL	Adj.MDL	
84-74-2	Di-n-butylphthalate	U UJ	380	1.0	330	380	120	HT
85-68-7	Butylbenzylphthalate	U	380	1.0	330	380	110	
91-94-1	3,3'-Dichlorobenzidine	U	570	1.0	500	570	130	
218-01-9	Chrysene	U	380	1.0	330	380	110	
117-81-7	bis(2-Ethylhexyl)phthalate	J J	130	1.0	330	380	110	
117-84-0	Di-n-octylphthalate	U UJ	380	1.0	330	380	240	
367-12-4	2-Fluorophenol		42%					
13127-88-3	Phenol-D6		45%					
4165-60-0	Nitrobenzene-D5		47%					
321-60-8	2-Fluorobiphenyl		55%					
118-79-6	2,4,6-Tribromophenol		45%					
1718-51-0	Terphenyl-D14		85%					

ew 3/4/09

20

KATAHDIN ANALYTICAL SERVICES
Report of Analytical Results

Client: CH2MHill
Project: TO-009 Lejeune
PO No:
Sample Date: 12/15/08
Received Date: 12/17/08
Extraction Date: 12/18/08
Analysis Date: 09-JAN-2009 05:59
Report Date: 01/15/2009
Matrix: SOIL
% Solids: 87.6

Lab ID: SB7238-11
Client ID: MR08-IS119D-4.5-5.5
SDG: TO9-17
Extracted by: AC
Extraction Method: SW846 3550
Analyst: JCG
Analysis Method: SW846 8270C
Lab Prep Batch: WG59198
Units: ug/Kgdrywt

CAS#	Compound	Flags	Results	DF	PQL	Adj.PQL	Adj.MDL	
100-52-7	Benzaldehyde	~~U~~ UJ	570	1.0	500	570	140	JEB
108-95-2	Phenol	U	570	1.0	500	570	180	
111-44-4	Bis(2-Chloroethyl)ether	U	380	1.0	330	380	92	
95-57-8	2-Chlorophenol	U	570	1.0	500	570	190	
95-48-7	2-Methylphenol	U	680	1.0	600	680	230	
108-60-1	2,2'-Oxybis(1-chloropropane)	U	380	1.0	330	380	100	
98-86-2	Acetophenone	U	680	1.0	600	680	200	
621-64-7	N-Nitroso-di-n-propylamine	U	380	1.0	330	380	95	
65794-96-9	3&4-Methylphenol	U	680	1.0	600	680	210	
67-72-1	Hexachloroethane	U	380	1.0	330	380	110	
98-95-3	Nitrobenzene	~~U~~ UJ	380	1.0	330	380	100	CCH
78-59-1	Isophorone	U	380	1.0	330	380	86	
88-75-5	2-Nitrophenol	U	680	1.0	600	680	190	
105-67-9	2,4-Dimethylphenol	~~U~~ UJ	570	1.0	500	570	190	BSL
111-91-1	Bis(2-Chloroethoxy)methane	U	380	1.0	330	380	110	
120-83-2	2,4-Dichlorophenol	U	570	1.0	500	570	170	
106-47-8	4-Chloroaniline	U	570	1.0	500	570	140	
105-60-2	Caprolactam	U	570	1.0	500	570	160	
59-50-7	4-Chloro-3-Methylphenol	U	570	1.0	500	570	190	
88-06-2	2,4,6-Trichlorophenol	U	570	1.0	500	570	180	
95-95-4	2,4,5-Trichlorophenol	U	570	1.0	500	570	180	
91-58-7	2-Chloronaphthalene	U	380	1.0	330	380	99	
92-52-4	1,1'-Biphenyl	U	380	1.0	330	380	83	
88-74-4	2-Nitroaniline	U	570	1.0	500	570	86	
131-11-3	Dimethyl Phthalate	U	380	1.0	330	380	89	
606-20-2	2,6-Dinitrotoluene	U	380	1.0	330	380	90	
208-96-8	Acenaphthylene	U	380	1.0	330	380	80	
99-09-2	3-Nitroaniline	U	570	1.0	500	570	110	
83-32-9	Acenaphthene	U	380	1.0	330	380	74	
51-28-5	2,4-Dinitrophenol	U	1400	1.0	1200	1400	430	
132-64-9	Dibenzofuran	U	380	1.0	330	380	90	
100-02-7	4-Nitrophenol	~~U~~ UJ	1400	1.0	1200	1400	350	CCH
121-14-2	2,4-Dinitrotoluene	U	380	1.0	330	380	97	
84-66-2	Diethylphthalate	U	380	1.0	330	380	91	
7005-72-3	4-Chlorophenyl-phenylether	U	380	1.0	330	380	89	
100-01-6	4-Nitroaniline	U	570	1.0	500	570	150	
534-52-1	4,6-Dinitro-2-Methylphenol	U	1400	1.0	1200	1400	380	
86-30-6	N-Nitrosodiphenylamine	U	750	1.0	660	750	250	
101-55-3	4-Bromophenyl-phenylether	U	380	1.0	330	380	97	
1912-24-9	Atrazine	U	380	1.0	330	380	100	
87-86-5	Pentachlorophenol	U	940	1.0	820	940	270	
120-12-7	Anthracene	U	380	1.0	330	380	96	
86-74-8	Carbazole	U	570	1.0	500	570	130	

GW 3/4/09

KATAHDIN ANALYTICAL SERVICES
Report of Analytical Results

Client: CH2MHill
Project: TO-009 Lejeune
PO No:
Sample Date: 12/15/08
Received Date: 12/17/08
Extraction Date: 12/18/08
Analysis Date: 09-JAN-2009 05:59
Report Date: 01/15/2009
Matrix: SOIL
% Solids: 87.6

Lab ID: SB7238-11
Client ID: MR08-IS119D-4.5-5.5
SDG: TO9-17
Extracted by: AC
Extraction Method: SW846 3550
Analyst: JCG
Analysis Method: SW846 8270C
Lab Prep Batch: WG59198
Units: ug/Kgdrywt

CAS#	Compound	Flags	Results	DF	PQL	Adj.PQL	Adj.MDL
84-74-2	Di-n-butylphthalate	U	380	1.0	330	380	120
85-68-7	Butylbenzylphthalate	U	380	1.0	330	380	110
91-94-1	3,3'-Dichlorobenzidine	U	570	1.0	500	570	130
218-01-9	Chrysene	U	380	1.0	330	380	110
117-81-7	bis(2-Ethylhexyl)phthalate	J	320	1.0	330	380	110
117-84-0	Di-n-octylphthalate	U	380	1.0	330	380	240
367-12-4	2-Fluorophenol		35%				
13127-88-3	Phenol-D6		58%				
4165-60-0	Nitrobenzene-D5		65%				
321-60-8	2-Fluorobiphenyl		69%				
118-79-6	2,4,6-Tribromophenol		* 12%				
1718-51-0	Terphenyl-D14		78%				

lw 3/4/09

ENVIRONMENTAL
Data Services, Inc.

POLYNUCLEAR AROMATIC COMPOUNDS BY 8270SIM

USEPA Region IV - Level IV Review

Site: MCB Camp Lejeune, TO-09 SDG #: TO9-18

Client: CH2M HILL, Inc., Virginia Beach, Virginia Date: March 9, 2009

Laboratory: Katahdin Analytical Services, Scarborough, Maine Reviewer: Nancy Weaver

EDS ID	Client Sample ID	Laboratory Sample ID	Matrix
1	MR08-SS120-08D	SB7239-2	Soil
2	MR08-IS120-1.5-2.5-08D	SB7239-4	Soil
3	MR08-SS122-08D	SB7239-6	Soil
3MS	MR08-SS122-08DMS	SB7239-6MS	Soil
3MSD	MR08-SS122-08DMSD	SB7239-6MSD	Soil
4	MR08-IS122-6.5-08D	SB7239-8	Soil
4MS	MR08-IS122-6.5-08DMS	SB7239-8MS	Soil
4MSD	MR08-IS122-6.5-08DMSD	SB7239-8MSD	Soil
5	MR08-SS118-08D	SB7239-10	Soil
6	MR08-IS118-08D	SB7239-12	Soil
7	MR08-SS127-08D	SB7239-14	Soil
8	MR08-IS127-1.5-3-08D	SB7239-16	Soil
9	MR08-SS126-08D	SB7239-18	Soil
9RE	MR08-SS126-08DRE	SB7239-18RE	Soil
10	MR08-IS126-1.5-2.5-08D	SB7239-20	Soil
11	MR08-SS130-08D	SB7239-22	Soil
12	MR08-IS130-1.5-3-08D	SB7239-24	Soil
13	MR08-SS132-08D	SB7239-26	Soil
14	MR08-IS132-08D	SB7239-28	Soil
15	MR08-SS131-08D	SB7239-30	Soil
16	MR08-SS111-08D	SB7328-2	Soil
17	MR08-SS112-08D	SB7328-4	Soil
18	MR08-SS133-08D	SB7328-6	Soil
19	MR08-IS133-08D	SB7328-8	Soil
20	MR08-SS110-08D	SB7328-10	Soil

The USEPA "Contract Laboratory Program National Functional Guidelines for Organic Data Review," October 1999, and professional judgment were used in evaluating the data in this summary report.

Holding Times - All samples were extracted within 14 days for soil samples and analyzed within 40 days for all samples.

GC/MS Tuning - All of the DFTPP tunes in the initial and continuing calibrations met the percent relative abundance criteria.

Initial Calibration - The initial calibrations exhibited acceptable %RSD and mean RRF values.

Continuing Calibration - The continuing calibrations exhibited acceptable %D and RRF values except the following.

CCAL Date	Compound	%D/RRF	Qualifier	Affected Samples
01/09/09	Hexachlorocyclopentadiene	35.64%	J/UJ	8, 9RE, 10-14
01/10/09	Naphthalene	35.41%	None	Already qualified due to LCS
	2-Methylnaphthalene	33.71%	None	Already qualified due to LCS
	Hexachlorocyclopentadiene	76.82%	J/UJ	15
01/11/09	Naphthalene	33.75%	J/UJ	16-20
	2-Methylnaphthalene	31.45%	J/UJ	16-20
	Benzo (k) fluoranthene	51.22%	J/UJ	16-20
	Indeno (1,2,3-cd) pyrene	40.81%	J/UJ	16-20
	Dibenzo (a,h) anthracene	37.14%	J/UJ	16-20
	Benzo (g,h,i) perylene	50.88%	J/UJ	16-20
	Hexachlorocyclopentadiene	65.13%	J/UJ	16-20

Surrogates - All samples exhibited acceptable surrogate recoveries.

MS/MSD - The MS/MSD sample exhibited acceptable %R and RPD values.

MS/MSD Sample ID	Compound	MS/MSD %R/RPD	Qualifier
3	Naphthalene	113%/Ok/Ok	None - All ND
	Phenanthrene	Ok/138%/Ok	None - Already qualified
	Pyrene	Ok/135%/51	J/UJ
	Benzo (b) fluoranthene	Ok/180%/Ok	None - All ND
	Benzo (k) fluoranthene	Ok/125%/Ok	None - All ND
	Benzo (a) pyrene	34%/Ok/98	J/UJ
	Indeno (1,2,3-cd) pyrene	Ok/219%/100	None - All ND
	Dibenzo (a,h) anthracene	Ok/265%/110%	None - All ND
	Benzo (g,h,i) perylene	Ok/142%/92	J
4	2-Methylnaphthalene	Ok/61%/Ok	J/UJ
	Phenanthrene	136%/134%/Ok	None - Already qualified
	Pyrene	120%/Ok/Ok	J
	Benzo (k) fluoranthene	118%/156%/Ok	None - All ND
	Benzo (a) pyrene	Ok/33%/93	J/UJ
	Indeno (1,2,3-cd) pyrene	146%/182%/Ok	None - All ND
	Dibenzo (a,h) anthracene	144%/164%/Ok	None - All ND
	Benzo (g,h,i) perylene	Ok/118%/Ok	J
	Hexachlorocyclopentadiene	Ok/Ok/58	None for RPD alone

Laboratory Control Sample - The LCS samples exhibited acceptable %R values except the following.

LCS ID	Compound	%R	Qualifier	Affected Samples
WG59199-LCS	Phenanthrene	134%	J	1-5, 7-9, 9RE, 11
	Benzo (b) fluoranthene	148%	None	All ND
	Benzo (k) fluoranthene	126%	None	All ND
	Benzo (a) pyrene	110%	J	11
WG59243-LCS	Naphthalene	114%	J	12, 15
	2-Methylnaphthalene	164%	J	13-15
WG59323-LCS	Benzo (k) fluoranthene	124%	J	18

Internal Standard (IS) Area Performance - All internal standards met response and retention time (RT) criteria except the following.

Sample ID	Internal Standard	Area Count	Qualifier
9	IS6-Perylene-d12	Low	J/UJ
9RE	IS6-Perylene-d12	High	J - associated compounds

Method Blank - The method blanks exhibited the following contamination.

Blank ID	Compound	Conc. ug/L	Action Level ug/kg	Qualifier	Affected Samples
WG59243-BLANK	Phenanthrene	3.6	18	U	13
	Fluoranthene	5.2	26	U	13, 14
	Pyrene	2.2	11	U	13, 14

Field, Equipment Blank - Field QC results are summarized below.

Blank ID	Compound	Conc. ug/L	Action Level ug/kg	Qualifier	Affected Samples
MR08-FB122008	Hexachlorocyclopentadiene	0.15	12.5	U	6
MR08-EB01-121508-SS	Hexachlorocyclopentadiene	0.11	9.17	None	See FB
MR08-EB121708	Phenanthrene	0.075	6.25	U	19
	Hexachlorocyclopentadiene	0.13	10.83	None	See FB

Field Duplicates - Field duplicate samples were not included in this data package

Tentatively Identified Compounds (TICs) - TICs were not reported.

Compound Quantitation - Several samples were reanalyzed by the laboratory due to poor internal standard area performance, holding times, matrix spike/matrix spike duplicate recoveries and/or laboratory control sample recoveries. Refer to Form Is for which were used for reporting purposes.

KATAHDIN ANALYTICAL SERVICES
Report of Analytical Results

Client: CH2MHill
Project: TO-009 Lejeune
PO No:
Sample Date: 12/15/08
Received Date: 12/17/08
Extraction Date: 12/18/08
Analysis Date: 07-JAN-2009 23:54
Report Date: 01/15/2009
Matrix: SOIL
% Solids: 94.0

Lab ID: SB7239-2
Client ID: MR08-SS120-08D
SDG: TO9-18
Extracted by: AC
Extraction Method: SW846 3550
Analyst: JCG
Analysis Method: SW846 M8270C
Lab Prep Batch: WG59199
Units: ug/Kgdrywt

CAS#	Compound	Flags	Results	DF	PQL	Adj.PQL	Adj.MDL
91-20-3	Naphthalene	U	11	1.0	10	11	2.8
91-57-6	2-Methylnaphthalene	J	7.5	1.0	10	11	2.3
86-73-7	Fluorene	U	11	1.0	10	11	3.4
85-01-8	Phenanthrene	~~J~~ J	9.4	1.0	10	11	1.9 BSH
206-44-0	Fluoranthene	U	11	1.0	10	11	1.9
129-00-0	Pyrene	J	3.7	1.0	10	11	2.2
56-55-3	Benzo(a)anthracene	U	11	1.0	10	11	2.0
205-99-2	Benzo(b)fluoranthene	U	11	1.0	10	11	2.6
207-08-9	Benzo(k)fluoranthene	U	11	1.0	10	11	3.3
50-32-8	Benzo(a)pyrene	U	11	1.0	10	11	3.5
193-39-5	Indeno(1,2,3-cd)pyrene	U	11	1.0	10	11	2.0
53-70-3	Dibenzo(a,h)anthracene	U	11	1.0	10	11	1.9
191-24-2	Benzo(g,h,i)perylene		16	1.0	10	11	2.1
118-74-1	Hexachlorobenzene	U	11	1.0	10	11	1.9
87-68-3	Hexachlorobutadiene	U	11	1.0	10	11	2.4
77-47-4	Hexachlorocyclopentadiene	U	11	1.0	10	11	1.6
7297-45-2	2-Methylnaphthalene-D10		67%				
367-12-4	2,4-Dibromophenol		59%				
81103-79-9	Fluorene-d10		87%				
1718-51-1	Pyrene-D10		81%				

lw
31469

2

KATAHDIN ANALYTICAL SERVICES
Report of Analytical Results

Client: CH2MHill
Project: TO-009 Lejeune
PO No:
Sample Date: 12/15/08
Received Date: 12/17/08
Extraction Date: 12/18/08
Analysis Date: 07-JAN-2009 23:14
Report Date: 01/15/2009
Matrix: SOIL
% Solids: 89.0

Lab ID: SB7239-4
Client ID: MR08-IS120-1.5-2.5
SDG: TO9-18
Extracted by: AC
Extraction Method: SW846 3550
Analyst: JCG
Analysis Method: SW846 M8270C
Lab Prep Batch: WG59199
Units: ug/Kgdrywt

CAS#	Compound	Flags	Results	DF	PQL	Adj.PQL	Adj.MDL	
91-20-3	Naphthalene	U	11	1.0	10	11	2.9	
91-57-6	2-Methylnaphthalene	U	11	1.0	10	11	2.5	
86-73-7	Fluorene	U	11	1.0	10	11	3.6	
85-01-8	Phenanthrene	~~U~~ J	6.3	1.0	10	11	2.0	BSrt
206-44-0	Fluoranthene	U	11	1.0	10	11	2.0	
129-00-0	Pyrene	U	11	1.0	10	11	2.4	
56-55-3	Benzo(a)anthracene	U	11	1.0	10	11	2.1	
205-99-2	Benzo(b)fluoranthene	U	11	1.0	10	11	2.7	
207-08-9	Benzo(k)fluoranthene	U	11	1.0	10	11	3.5	
50-32-8	Benzo(a)pyrene	U	11	1.0	10	11	3.7	
193-39-5	Indeno(1,2,3-cd)pyrene	U	11	1.0	10	11	2.1	
53-70-3	Dibenzo(a,h)anthracene	U	11	1.0	10	11	2.0	
191-24-2	Benzo(g,h,i)perylene	U	11	1.0	10	11	2.2	
118-74-1	Hexachlorobenzene	U	11	1.0	10	11	2.0	
87-68-3	Hexachlorobutadiene	U	11	1.0	10	11	2.6	
77-47-4	Hexachlorocyclopentadiene	U	11	1.0	10	11	1.7	
7297-45-2	2-Methylnaphthalene-D10		63%					
367-12-4	2,4-Dibromophenol		33%					
81103-79-9	Fluorene-d10		83%					
1718-51-1	Pyrene-D10		97%					

LW 3/4/09

3

KATAHDIN ANALYTICAL SERVICES
Report of Analytical Results

Client: CH2MHill
Project: TO-009 Lejeune
PO No:
Sample Date: 12/15/08
Received Date: 12/17/08
Extraction Date: 12/18/08
Analysis Date: 08-JAN-2009 00:34
Report Date: 01/15/2009
Matrix: SOIL
% Solids: 90.1

Lab ID: SB7239-6
Client ID: MR08-SS122-08D
SDG: TO9-18
Extracted by: AC
Extraction Method: SW846 3550
Analyst: JCG
Analysis Method: SW846 M8270C
Lab Prep Batch: WG59199
Units: ug/Kgdrywt

CAS#	Compound	Flags	Results	DF	PQL	Adj.PQL	Adj.MDL	
91-20-3	Naphthalene	U	11	1.0	10	11	2.9	
91-57-6	2-Methylnaphthalene	J	6.6	1.0	10	11	2.4	
86-73-7	Fluorene	U	11	1.0	10	11	3.6	
85-01-8	Phenanthrene	~~J~~ J	9.6	1.0	10	11	2.0	BSH
206-44-0	Fluoranthene	U	11	1.0	10	11	2.0	
129-00-0	Pyrene	J	28	1.0	10	11	2.3	MSH
56-55-3	Benzo(a)anthracene		17	1.0	10	11	2.1	
205-99-2	Benzo(b)fluoranthene	U	11	1.0	10	11	2.7	
207-08-9	Benzo(k)fluoranthene	U	11	1.0	10	11	3.4	
50-32-8	Benzo(a)pyrene	~~J~~ UJ	11	1.0	10	11	3.7	MSL
193-39-5	Indeno(1,2,3-cd)pyrene	U	11	1.0	10	11	2.1	
53-70-3	Dibenzo(a,h)anthracene	U	11	1.0	10	11	2.0	
191-24-2	Benzo(g,h,i)perylene	J	20	1.0	10	11	2.2	MSH
118-74-1	Hexachlorobenzene	U	11	1.0	10	11	2.0	
87-68-3	Hexachlorobutadiene	U	11	1.0	10	11	2.6	
77-47-4	Hexachlorocyclopentadiene	U	11	1.0	10	11	1.7	
7297-45-2	2-Methylnaphthalene-D10		61%					
367-12-4	2,4-Dibromophenol		39%					
81103-79-9	Fluorene-d10		81%					
1718-51-1	Pyrene-D10		108%					

MW
3/4/09

4

KATAHDIN ANALYTICAL SERVICES
Report of Analytical Results

Client: CH2MHill
Project: TO-009 Lejeune
PO No:
Sample Date: 12/15/08
Received Date: 12/17/08
Extraction Date: 12/18/08
Analysis Date: 07-JAN-2009 21:13
Report Date: 01/15/2009
Matrix: SOIL
% Solids: 87.4

Lab ID: SB7239-8
Client ID: MR08-IS122-6.5-8
SDG: TO9-18
Extracted by: AC
Extraction Method: SW846 3550
Analyst: JCG
Analysis Method: SW846 M8270C
Lab Prep Batch: WG59199
Units: ug/Kgdrywt

CAS#	Compound	Flags	Results	DF	PQL	Adj.PQL	Adj.MDL	
91-20-3	Naphthalene	U	11	1.0	10	11	3.0	
91-57-6	2-Methylnaphthalene	~~U~~ J	7.7	1.0	10	11	2.5	MSL
86-73-7	Fluorene	U	11	1.0	10	11	3.7	
85-01-8	Phenanthrene	~~U~~ J	2.7	1.0	10	11	2.0	BSH
206-44-0	Fluoranthene	J	2.7	1.0	10	11	2.0	
129-00-0	Pyrene	~~U~~ J	2.5	1.0	10	11	2.4	MSH
56-55-3	Benzo(a)anthracene	J	11	1.0	10	11	2.2	
205-99-2	Benzo(b)fluoranthene	U	11	1.0	10	11	2.7	
207-08-9	Benzo(k)fluoranthene	U	11	1.0	10	11	3.5	
50-32-8	Benzo(a)pyrene	~~U~~ UJ	11	1.0	10	11	3.8	MSL
193-39-5	Indeno(1,2,3-cd)pyrene	U	11	1.0	10	11	2.2	
53-70-3	Dibenzo(a,h)anthracene	U	11	1.0	10	11	2.0	
191-24-2	Benzo(g,h,i)perylene	~~U~~ J	3.2	1.0	10	11	2.3	MSH
118-74-1	Hexachlorobenzene	U	11	1.0	10	11	2.0	
87-68-3	Hexachlorobutadiene	U	11	1.0	10	11	2.6	
77-47-4	Hexachlorocyclopentadiene	U	11	1.0	10	11	1.7	
7297-45-2	2-Methylnaphthalene-D10		78%					
367-12-4	2,4-Dibromophenol		64%					
81103-79-9	Fluorene-d10		76%					
1718-51-1	Pyrene-D10		88%					

LW
3/4/09

5

KATAHDIN ANALYTICAL SERVICES
Report of Analytical Results

Client: CH2MHill
Project: TO-009 Lejeune
PO No:
Sample Date: 12/15/08
Received Date: 12/17/08
Extraction Date: 12/18/08
Analysis Date: 09-JAN-2009 02:55
Report Date: 01/15/2009
Matrix: SOIL
% Solids: 88.2

Lab ID: SB7239-10
Client ID: MR08-SS118-08D
SDG: TO9-18
Extracted by: AC
Extraction Method: SW846 3550
Analyst: JCG
Analysis Method: SW846 M8270C
Lab Prep Batch: WG59199
Units: ug/Kgdrywt

CAS#	Compound	Flags	Results	DF	PQL	Adj.PQL	Adj.MDL
91-20-3	Naphthalene	J	4.0	1.0	10	11	2.9
91-57-6	2-Methylnaphthalene	U	11	1.0	10	11	2.5
86-73-7	Fluorene	U	11	1.0	10	11	3.6
85-01-8	Phenanthrene	~~J~~ J	2.4	1.0	10	11	2.0 BSH
206-44-0	Fluoranthene	U	11	1.0	10	11	2.0
129-00-0	Pyrene	J	2.4	1.0	10	11	2.4
56-55-3	Benzo(a)anthracene	U	11	1.0	10	11	2.2
205-99-2	Benzo(b)fluoranthene	U	11	1.0	10	11	2.7
207-08-9	Benzo(k)fluoranthene	U	11	1.0	10	11	3.5
50-32-8	Benzo(a)pyrene	U	11	1.0	10	11	3.7
193-39-5	Indeno(1,2,3-cd)pyrene	U	11	1.0	10	11	2.2
53-70-3	Dibenzo(a,h)anthracene	U	11	1.0	10	11	2.0
191-24-2	Benzo(g,h,i)perylene	J	2.4	1.0	10	11	2.3
118-74-1	Hexachlorobenzene	U	11	1.0	10	11	2.0
87-68-3	Hexachlorobutadiene	U	11	1.0	10	11	2.6
77-47-4	Hexachlorocyclopentadiene	U	11	1.0	10	11	1.7
7297-45-2	2-Methylnaphthalene-D10		77%				
367-12-4	2,4-Dibromophenol		56%				
81103-79-9	Fluorene-d10		82%				
1718-51-1	Pyrene-D10		83%				

RW 3/4/09

6

KATAHDIN ANALYTICAL SERVICES
Report of Analytical Results

Client: CH2MHill
Project: TO-009 Lejeune
PO No:
Sample Date: 12/15/08
Received Date: 12/17/08
Extraction Date: 12/18/08
Analysis Date: 09-JAN-2009 02:15
Report Date: 01/15/2009
Matrix: SOIL
% Solids: 88.6

Lab ID: SB7239-12
Client ID: MR08-IS118-08D
SDG: TO9-18
Extracted by: AC
Extraction Method: SW846 3550
Analyst: JCG
Analysis Method: SW846 M8270C
Lab Prep Batch: WG59199
Units: ug/Kgdrywt

CAS#	Compound	Flags	Results	DF	PQL	Adj.PQL	Adj.MDL
91-20-3	Naphthalene	J	3.9	1.0	10	11	2.9
91-57-6	2-Methylnaphthalene	U	11	1.0	10	11	2.5
86-73-7	Fluorene	U	11	1.0	10	11	3.6
85-01-8	Phenanthrene	U	11	1.0	10	11	2.0
206-44-0	Fluoranthene	U	11	1.0	10	11	2.0
129-00-0	Pyrene	U	11	1.0	10	11	2.4
56-55-3	Benzo(a)anthracene	U	11	1.0	10	11	2.1
205-99-2	Benzo(b)fluoranthene	U	11	1.0	10	11	2.7
207-08-9	Benzo(k)fluoranthene	U	11	1.0	10	11	3.5
50-32-8	Benzo(a)pyrene	U	11	1.0	10	11	3.7
193-39-5	Indeno(1,2,3-cd)pyrene	U	11	1.0	10	11	2.1
53-70-3	Dibenzo(a,h)anthracene	U	11	1.0	10	11	2.0
191-24-2	Benzo(g,h,i)perylene	U	11	1.0	10	11	2.2
118-74-1	Hexachlorobenzene	U	11	1.0	10	11	2.0
87-68-3	Hexachlorobutadiene	U	11	1.0	10	11	2.6
77-47-4	Hexachlorocyclopentadiene	~~J~~ 11U	~~3.5~~	1.0	10	11	1.7 BL
7297-45-2	2-Methylnaphthalene-D10		92%				
367-12-4	2,4-Dibromophenol		68%				
81103-79-9	Fluorene-d10		82%				
1718-51-1	Pyrene-D10		94%				

lw 3/4/09

7

KATAHDIN ANALYTICAL SERVICES
Report of Analytical Results

Client: CH2MHill
Project: TO-009 Lejeune
PO No:
Sample Date: 12/16/08
Received Date: 12/17/08
Extraction Date: 12/18/08
Analysis Date: 08-JAN-2009 02:35
Report Date: 01/15/2009
Matrix: SOIL
% Solids: 91.1

Lab ID: SB7239-14
Client ID: MR08-SS127-08D
SDG: TO9-18
Extracted by: AC
Extraction Method: SW846 3550
Analyst: JCG
Analysis Method: SW846 M8270C
Lab Prep Batch: WG59199
Units: ug/Kgdrywt

CAS#	Compound	Flags	Results	DF	PQL	Adj.PQL	Adj.MDL
91-20-3	Naphthalene	U	11	1.0	10	11	2.8
91-57-6	2-Methylnaphthalene	J	6.9	1.0	10	11	2.4
86-73-7	Fluorene	U	11	1.0	10	11	3.5
85-01-8	Phenanthrene	J	16	1.0	10	11	2.0
206-44-0	Fluoranthene	U	11	1.0	10	11	2.0
129-00-0	Pyrene		38	1.0	10	11	2.3
56-55-3	Benzo(a)anthracene	U	11	1.0	10	11	2.1
205-99-2	Benzo(b)fluoranthene	U	11	1.0	10	11	2.6
207-08-9	Benzo(k)fluoranthene	U	11	1.0	10	11	3.4
50-32-8	Benzo(a)pyrene	U	11	1.0	10	11	3.6
193-39-5	Indeno(1,2,3-cd)pyrene	U	11	1.0	10	11	2.1
53-70-3	Dibenzo(a,h)anthracene	U	11	1.0	10	11	2.0
191-24-2	Benzo(g,h,i)perylene		35	1.0	10	11	2.2
118-74-1	Hexachlorobenzene	U	11	1.0	10	11	2.0
87-68-3	Hexachlorobutadiene	U	11	1.0	10	11	2.5
77-47-4	Hexachlorocyclopentadiene	U	11	1.0	10	11	1.6
7297-45-2	2-Methylnaphthalene-D10		75%				
367-12-4	2,4-Dibromophenol		80%				
81103-79-9	Fluorene-d10		80%				
1718-51-1	Pyrene-D10		117%				

BSH

MW 3/4/09

8

KATAHDIN ANALYTICAL SERVICES
Report of Analytical Results

Client: CH2MHill
Project: TO-009 Lejeune
PO No:
Sample Date: 12/16/08
Received Date: 12/17/08
Extraction Date: 12/18/08
Analysis Date: 09-JAN-2009 17:02
Report Date: 01/15/2009
Matrix: SOIL
% Solids: 86.4

Lab ID: SB7239-16RA
Client ID: MR08-IS127-1.5-3
SDG: TO9-18
Extracted by: AC
Extraction Method: SW846 3550
Analyst: JCG
Analysis Method: SW846 M8270C
Lab Prep Batch: WG59199
Units: ug/Kgdrywt

CAS#	Compound	Flags	Results	DF	PQL	Adj.PQL	Adj.MDL	
91-20-3	Naphthalene	U	12	1.0	10	12	3.0	
91-57-6	2-Methylnaphthalene	U	12	1.0	10	12	2.5	
86-73-7	Fluorene	U	12	1.0	10	12	3.7	
85-01-8	Phenanthrene	J	25	1.0	10	12	2.1	BSH
206-44-0	Fluoranthene	U	12	1.0	10	12	2.1	
129-00-0	Pyrene		16	1.0	10	12	2.4	
56-55-3	Benzo(a)anthracene	J	7.3	1.0	10	12	2.2	
205-99-2	Benzo(b)fluoranthene	U	12	1.0	10	12	2.8	
207-08-9	Benzo(k)fluoranthene	U	12	1.0	10	12	3.6	
50-32-8	Benzo(a)pyrene	U	12	1.0	10	12	3.8	
193-39-5	Indeno(1,2,3-cd)pyrene	U	12	1.0	10	12	2.2	
53-70-3	Dibenzo(a,h)anthracene	U	12	1.0	10	12	2.1	
191-24-2	Benzo(g,h,i)perylene	U	12	1.0	10	12	2.3	
118-74-1	Hexachlorobenzene	U	12	1.0	10	12	2.1	
87-68-3	Hexachlorobutadiene	U	12	1.0	10	12	2.7	
77-47-4	Hexachlorocyclopentadiene	~~U~~ UJ	12	1.0	10	12	1.7	CCH
7297-45-2	2-Methylnaphthalene-D10		72%					
367-12-4	2,4-Dibromophenol		68%					
81103-79-9	Fluorene-d10		79%					
1718-51-1	Pyrene-D10		72%					

MW 3/4/09

9

KATAHDIN ANALYTICAL SERVICES
Report of Analytical Results

Client: CH2MHill
Project: TO-009 Lejeune
PO No:
Sample Date: 12/16/08
Received Date: 12/17/08
Extraction Date: 12/18/08
Analysis Date: 09-JAN-2009 05:36
Report Date: 01/15/2009
Matrix: SOIL
% Solids: 93.2

Lab ID: SB7239-18
Client ID: MR08-SS126-08D
SDG: TO9-18
Extracted by: AC
Extraction Method: SW846 3550
Analyst: JCG
Analysis Method: SW846 M8270C
Lab Prep Batch: WG59199
Units: ug/Kgdrywt

Use reanalysis

CAS#	Compound	Flags		Results	DF	PQL	Adj.PQL	Adj.MDL	
91-20-3	Naphthalene	J		4.5	1.0	10	11	2.8	
91-57-6	2-Methylnaphthalene	U		11	1.0	10	11	2.4	
86-73-7	Fluorene	U		11	1.0	10	11	3.4	
85-01-8	Phenanthrene	~~U~~	J	10	1.0	10	11	1.9	BSH
206-44-0	Fluoranthene	U		11	1.0	10	11	1.9	
129-00-0	Pyrene	J		4.6	1.0	10	11	2.2	
56-55-3	Benzo(a)anthracene	U		11	1.0	10	11	2.0	
205-99-2	Benzo(b)fluoranthene	~~U~~	UJ	11	1.0	10	11	2.6	ISL
207-08-9	Benzo(k)fluoranthene	~~U~~		11	1.0	10	11	3.3	
50-32-8	Benzo(a)pyrene	~~U~~		11	1.0	10	11	3.5	
193-39-5	Indeno(1,2,3-cd)pyrene	~~U~~		11	1.0	10	11	2.0	
53-70-3	Dibenzo(a,h)anthracene	~~U~~		11	1.0	10	11	1.9	
191-24-2	Benzo(g,h,i)perylene		J	28	1.0	10	11	2.1	
118-74-1	Hexachlorobenzene	~~U~~	UJ	11	1.0	10	11	1.9	
87-68-3	Hexachlorobutadiene	~~U~~		11	1.0	10	11	2.5	
77-47-4	Hexachlorocyclopentadiene	~~U~~		11	1.0	10	11	1.6	
7297-45-2	2-Methylnaphthalene-D10			72%					
367-12-4	2,4-Dibromophenol			78%					
81103-79-9	Fluorene-d10			81%					
1718-51-1	Pyrene-D10			72%					

lw 3/4/09

KATAHDIN ANALYTICAL SERVICES
Report of Analytical Results

QRE

Client: CH2MHill
Project: TO-009 Lejeune
PO No:
Sample Date: 12/16/08
Received Date: 12/17/08
Extraction Date: 12/18/08
Analysis Date: 09-JAN-2009 21:44
Report Date: 01/15/2009
Matrix: SOIL
% Solids: 93.2

Lab ID: SB7239-18RA
Client ID: MR08-SS126-08D
SDG: TO9-18
Extracted by: AC
Extraction Method: SW846 3550
Analyst: JCG
Analysis Method: SW846 M8270C
Lab Prep Batch: WG59199
Units: ug/Kgdrywt

CAS#	Compound	Flags	Results	DF	PQL	Adj.PQL	Adj.MDL	
91-20-3	Naphthalene	~~J~~ J	4.5	1.0	10	11	2.8	ISH
91-57-6	2-Methylnaphthalene	U	11	1.0	10	11	2.4	
86-73-7	Fluorene	U	11	1.0	10	11	3.4	
85-01-8	Phenanthrene	J	12	1.0	10	11	1.9	BSH
206-44-0	Fluoranthene	U	11	1.0	10	11	1.9	
129-00-0	Pyrene	J	6.5	1.0	10	11	2.2	
56-55-3	Benzo(a)anthracene	U	11	1.0	10	11	2.0	
205-99-2	Benzo(b)fluoranthene	U	11	1.0	10	11	2.6	
207-08-9	Benzo(k)fluoranthene	U	11	1.0	10	11	3.3	
50-32-8	Benzo(a)pyrene	U	11	1.0	10	11	3.5	
193-39-5	Indeno(1,2,3-cd)pyrene	U	11	1.0	10	11	2.0	
53-70-3	Dibenzo(a,h)anthracene	U	11	1.0	10	11	1.9	
191-24-2	Benzo(g,h,i)perylene		24	1.0	10	11	2.1	
118-74-1	Hexachlorobenzene	U	11	1.0	10	11	1.9	
87-68-3	Hexachlorobutadiene	U	11	1.0	10	11	2.5	
77-47-4	Hexachlorocyclopentadiene	~~U~~ UJ	11	1.0	10	11	1.6	CCH
7297-45-2	2-Methylnaphthalene-D10		57%					
367-12-4	2,4-Dibromophenol		68%					
81103-79-9	Fluorene-d10		87%					
1718-51-1	Pyrene-D10		85%					

JW
3/4/09

10

KATAHDIN ANALYTICAL SERVICES
Report of Analytical Results

Client: CH2MHill
Project: TO-009 Lejeune
PO No:
Sample Date: 12/16/08
Received Date: 12/17/08
Extraction Date: 12/18/08
Analysis Date: 09-JAN-2009 15:42
Report Date: 01/15/2009
Matrix: SOIL
% Solids: 87.1

Lab ID: SB7239-20RA
Client ID: MR08-IS126-1.5-2.5
SDG: TO9-18
Extracted by: AC
Extraction Method: SW846 3550
Analyst: JCG
Analysis Method: SW846 M8270C
Lab Prep Batch: WG59199
Units: ug/Kgdrywt

CAS#	Compound	Flags	Results	DF	PQL	Adj.PQL	Adj.MDL
91-20-3	Naphthalene	U	11	1.0	10	11	3.0
91-57-6	2-Methylnaphthalene	U	11	1.0	10	11	2.5
86-73-7	Fluorene	U	11	1.0	10	11	3.7
85-01-8	Phenanthrene	U	11	1.0	10	11	2.1
206-44-0	Fluoranthene	U	11	1.0	10	11	2.1
129-00-0	Pyrene	U	11	1.0	10	11	2.4
56-55-3	Benzo(a)anthracene	U	11	1.0	10	11	2.2
205-99-2	Benzo(b)fluoranthene	U	11	1.0	10	11	2.8
207-08-9	Benzo(k)fluoranthene	U	11	1.0	10	11	3.6
50-32-8	Benzo(a)pyrene	U	11	1.0	10	11	3.8
193-39-5	Indeno(1,2,3-cd)pyrene	U	11	1.0	10	11	2.2
53-70-3	Dibenzo(a,h)anthracene	U	11	1.0	10	11	2.1
191-24-2	Benzo(g,h,i)perylene	U	11	1.0	10	11	2.3
118-74-1	Hexachlorobenzene	U	11	1.0	10	11	2.1
87-68-3	Hexachlorobutadiene	U	11	1.0	10	11	2.6
77-47-4	Hexachlorocyclopentadiene	~~U~~ NJ	11	1.0	10	11	1.7 CCH
7297-45-2	2-Methylnaphthalene-D10		82%				
367-12-4	2,4-Dibromophenol		59%				
81103-79-9	Fluorene-d10		94%				
1718-51-1	Pyrene-D10		104%				

lus
3/4/09

11

KATAHDIN ANALYTICAL SERVICES
Report of Analytical Results

Client: CH2MHill
Project: TO-009 Lejeune
PO No:
Sample Date: 12/16/08
Received Date: 12/17/08
Extraction Date: 12/18/08
Analysis Date: 09-JAN-2009 19:03
Report Date: 01/15/2009
Matrix: SOIL
% Solids: 92.2

Lab ID: SB7239-22RA
Client ID: MR08-SS130-08D
SDG: TO9-18
Extracted by: AC
Extraction Method: SW846 3550
Analyst: JCG
Analysis Method: SW846 M8270C
Lab Prep Batch: WG59199
Units: ug/Kgdrywt

CAS#	Compound	Flags	Results	DF	PQL	Adj.PQL	Adj.MDL	
91-20-3	Naphthalene	J	3.8	1.0	10	11	2.8	
91-57-6	2-Methylnaphthalene	U	11	1.0	10	11	2.4	
86-73-7	Fluorene	U	11	1.0	10	11	3.5	
85-01-8	Phenanthrene	J	14	1.0	10	11	2.0	BSH
206-44-0	Fluoranthene	U	11	1.0	10	11	2.0	
129-00-0	Pyrene		29	1.0	10	11	2.3	
56-55-3	Benzo(a)anthracene		16	1.0	10	11	2.1	
205-99-2	Benzo(b)fluoranthene	U	11	1.0	10	11	2.6	
207-08-9	Benzo(k)fluoranthene	U	11	1.0	10	11	3.4	
50-32-8	Benzo(a)pyrene	J	46	1.0	10	11	3.6	BSH
193-39-5	Indeno(1,2,3-cd)pyrene		39	1.0	10	11	2.1	
53-70-3	Dibenzo(a,h)anthracene	U	11	1.0	10	11	2.0	
191-24-2	Benzo(g,h,i)perylene		37	1.0	10	11	2.2	
118-74-1	Hexachlorobenzene	U	11	1.0	10	11	2.0	
87-68-3	Hexachlorobutadiene	U	11	1.0	10	11	2.5	
77-47-4	Hexachlorocyclopentadiene	~~U~~ UJ	11	1.0	10	11	1.6	CCH
7297-45-2	2-Methylnaphthalene-D10		76%					
367-12-4	2,4-Dibromophenol		101%					
81103-79-9	Fluorene-d10		86%					
1718-51-1	Pyrene-D10		72%					

QLW
3/4/09

12

KATAHDIN ANALYTICAL SERVICES
Report of Analytical Results

Client: CH2MHill
Project: TO-009 Lejeune
PO No:
Sample Date: 12/16/08
Received Date: 12/17/08
Extraction Date: 12/18/08
Analysis Date: 09-JAN-2009 13:42
Report Date: 01/15/2009
Matrix: SOIL
% Solids: 87.3

Lab ID: SB7239-24
Client ID: MR08-IS130-1.5-3
SDG: TO9-18
Extracted by: AC
Extraction Method: SW846 3550
Analyst: JCG
Analysis Method: SW846 M8270C
Lab Prep Batch: WG59243
Units: ug/Kgdrywt

CAS#	Compound	Flags	Results	DF	PQL	Adj.PQL	Adj.MDL	
91-20-3	Naphthalene	~~J~~ J	3.9	1.0	10	11	3.0	BSH
91-57-6	2-Methylnaphthalene	U	11	1.0	10	11	2.5	
86-73-7	Fluorene	U	11	1.0	10	11	3.7	
85-01-8	Phenanthrene	U	11	1.0	10	11	2.1	
206-44-0	Fluoranthene	U	11	1.0	10	11	2.1	
129-00-0	Pyrene	U	11	1.0	10	11	2.4	
56-55-3	Benzo(a)anthracene	U	11	1.0	10	11	2.2	
205-99-2	Benzo(b)fluoranthene	U	11	1.0	10	11	2.7	
207-08-9	Benzo(k)fluoranthene	U	11	1.0	10	11	3.6	
50-32-8	Benzo(a)pyrene	J	4.7	1.0	10	11	3.8	
193-39-5	Indeno(1,2,3-cd)pyrene	U	11	1.0	10	11	2.2	
53-70-3	Dibenzo(a,h)anthracene	U	11	1.0	10	11	2.1	
191-24-2	Benzo(g,h,i)perylene	J	5.7	1.0	10	11	2.3	
118-74-1	Hexachlorobenzene	U	11	1.0	10	11	2.1	
87-68-3	Hexachlorobutadiene	U	11	1.0	10	11	2.6	
77-47-4	Hexachlorocyclopentadiene	~~U~~ UJ	11	1.0	10	11	1.7	CCH
7297-45-2	2-Methylnaphthalene-D10		87%					
367-12-4	2,4-Dibromophenol		88%					
81103-79-9	Fluorene-d10		76%					
1718-51-1	Pyrene-D10		83%					

MW
3/4/09

13

KATAHDIN ANALYTICAL SERVICES
Report of Analytical Results

Client: CH2MHill
Project: TO-009 Lejeune
PO No:
Sample Date: 12/16/08
Received Date: 12/17/08
Extraction Date: 12/18/08
Analysis Date: 09-JAN-2009 17:43
Report Date: 01/15/2009
Matrix: SOIL
% Solids: 90.5

Lab ID: SB7239-26
Client ID: MR08-SS132-08D
SDG: TO9-18
Extracted by: AC
Extraction Method: SW846 3550
Analyst: JCG
Analysis Method: SW846 M8270C
Lab Prep Batch: WG59243
Units: ug/Kgdrywt

CAS#	Compound	Flags	Results	DF	PQL	Adj.PQL	Adj.MDL	
91-20-3	Naphthalene	U	11	1.0	10	11	2.9	
91-57-6	2-Methylnaphthalene	~~J~~ J	3.0	1.0	10	11	2.4	BSH
86-73-7	Fluorene	U	11	1.0	10	11	3.5	
85-01-8	Phenanthrene	~~B~~ U	15	1.0	10	11	2.0	BL
206-44-0	Fluoranthene	~~JB~~ 11U	~~5.8~~	1.0	10	11	2.0	BL
129-00-0	Pyrene	~~JB~~ 11U	~~5.9~~	1.0	10	11	2.3	BL
56-55-3	Benzo(a)anthracene	U	11	1.0	10	11	2.1	
205-99-2	Benzo(b)fluoranthene	U	11	1.0	10	11	2.6	
207-08-9	Benzo(k)fluoranthene	U	11	1.0	10	11	3.4	
50-32-8	Benzo(a)pyrene	U	11	1.0	10	11	3.6	
193-39-5	Indeno(1,2,3-cd)pyrene	U	11	1.0	10	11	2.1	
53-70-3	Dibenzo(a,h)anthracene	U	11	1.0	10	11	2.0	
191-24-2	Benzo(g,h,i)perylene	U	11	1.0	10	11	2.2	
118-74-1	Hexachlorobenzene	U	11	1.0	10	11	2.0	
87-68-3	Hexachlorobutadiene	U	11	1.0	10	11	2.5	
77-47-4	Hexachlorocyclopentadiene	~~U~~ UJ	11	1.0	10	11	1.6	CCH
7297-45-2	2-Methylnaphthalene-D10		78%					
367-12-4	2,4-Dibromophenol		95%					
81103-79-9	Fluorene-d10		90%					
1718-51-1	Pyrene-D10		101%					

3/4/09

14

KATAHDIN ANALYTICAL SERVICES
Report of Analytical Results

Client: CH2MHill
Project: TO-009 Lejeune
PO No:
Sample Date: 12/16/08
Received Date: 12/17/08
Extraction Date: 12/18/08
Analysis Date: 09-JAN-2009 18:23
Report Date: 01/15/2009
Matrix: SOIL
% Solids: 92.7

Lab ID: SB7239-28
Client ID: MR08-IS132-08D
SDG: TO9-18
Extracted by: AC
Extraction Method: SW846 3550
Analyst: JCG
Analysis Method: SW846 M8270C
Lab Prep Batch: WG59243
Units: ug/Kgdrywt

CAS#	Compound	Flags	Results	DF	PQL	Adj.PQL	Adj.MDL	
91-20-3	Naphthalene	U	11	1.0	10	11	2.8	
91-57-6	2-Methylnaphthalene	~~J~~ J	3.5	1.0	10	11	2.4	BSH
86-73-7	Fluorene	U	11	1.0	10	11	3.4	
85-01-8	Phenanthrene	~~B~~	21	1.0	10	11	1.9	
206-44-0	Fluoranthene	~~JB~~ 11U	~~6.3~~	1.0	10	11	1.9	BL
129-00-0	Pyrene	~~JB~~ 11U	~~9.9~~	1.0	10	11	2.3	BL
56-55-3	Benzo(a)anthracene	U	11	1.0	10	11	2.0	
205-99-2	Benzo(b)fluoranthene	U	11	1.0	10	11	2.6	
207-08-9	Benzo(k)fluoranthene	U	11	1.0	10	11	3.3	
50-32-8	Benzo(a)pyrene	U	11	1.0	10	11	3.6	
193-39-5	Indeno(1,2,3-cd)pyrene	U	11	1.0	10	11	2.0	
53-70-3	Dibenzo(a,h)anthracene	U	11	1.0	10	11	1.9	
191-24-2	Benzo(g,h,i)perylene	U	11	1.0	10	11	2.2	
118-74-1	Hexachlorobenzene	U	11	1.0	10	11	1.9	
87-68-3	Hexachlorobutadiene	U	11	1.0	10	11	2.5	
77-47-4	Hexachlorocyclopentadiene	~~U~~ UJ	11	1.0	10	11	1.6	CCH
7297-45-2	2-Methylnaphthalene-D10		89%					
367-12-4	2,4-Dibromophenol		113%					
81103-79-9	Fluorene-d10		98%					
1718-51-1	Pyrene-D10		120%					

LW
3/4/09

15

KATAHDIN ANALYTICAL SERVICES
Report of Analytical Results

Client: CH2MHill
Project: TO-009 Lejeune
PO No:
Sample Date: 12/16/08
Received Date: 12/17/08
Extraction Date: 12/18/08
Analysis Date: 10-JAN-2009 16:35
Report Date: 01/15/2009
Matrix: SOIL
% Solids: 84.4

Lab ID: SB7239-30RA
Client ID: MR08-SS131-08D
SDG: TO9-18
Extracted by: AC
Extraction Method: SW846 3550
Analyst: JCG
Analysis Method: SW846 M8270C
Lab Prep Batch: WG59243
Units: ug/Kgdrywt

CAS#	Compound	Flags	Results	DF	PQL	Adj.PQL	Adj.MDL	
91-20-3	Naphthalene	~~B~~ J	5.7	1.0	10	12	3.1	BSH
91-57-6	2-Methylnaphthalene	~~B~~ J	4.4	1.0	10	12	2.6	BSH
86-73-7	Fluorene	U	12	1.0	10	12	3.8	
85-01-8	Phenanthrene	~~B~~	28	1.0	10	12	2.1	
206-44-0	Fluoranthene	~~B~~	93	1.0	10	12	2.1	
129-00-0	Pyrene	~~B~~	82	1.0	10	12	2.5	
56-55-3	Benzo(a)anthracene		40	1.0	10	12	2.2	
205-99-2	Benzo(b)fluoranthene		86	1.0	10	12	2.8	
207-08-9	Benzo(k)fluoranthene		71	1.0	10	12	3.7	
50-32-8	Benzo(a)pyrene		41	1.0	10	12	3.9	
193-39-5	Indeno(1,2,3-cd)pyrene		33	1.0	10	12	2.2	
53-70-3	Dibenzo(a,h)anthracene		16	1.0	10	12	2.1	
191-24-2	Benzo(g,h,i)perylene		33	1.0	10	12	2.4	
118-74-1	Hexachlorobenzene	U	12	1.0	10	12	2.1	
87-68-3	Hexachlorobutadiene	U	12	1.0	10	12	2.7	
77-47-4	Hexachlorocyclopentadiene	~~U~~ UJ	12	1.0	10	12	1.8	CCH
7297-45-2	2-Methylnaphthalene-D10		53%					
367-12-4	2,4-Dibromophenol		79%					
81103-79-9	Fluorene-d10		98%					
1718-51-1	Pyrene-D10		106%					

RW
3/4/09

KATAHDIN ANALYTICAL SERVICES
Report of Analytical Results

Client: CH2MHill
Project: TO-009 Lejeune
PO No:
Sample Date: 12/16/08
Received Date: 12/19/08
Extraction Date: 12/22/08
Analysis Date: 11-JAN-2009 19:25
Report Date: 01/15/2009
Matrix: SOIL
% Solids: 92.2

Lab ID: SB7328-2
Client ID: MR08-SS111-08D
SDG: TO9-18
Extracted by: AC
Extraction Method: SW846 3550
Analyst: EKC
Analysis Method: SW846 M8270C
Lab Prep Batch: WG59323
Units: ug/Kgdrywt

CAS#	Compound	Flags	Results	DF	PQL	Adj.PQL	Adj.MDL	
91-20-3	Naphthalene	~~U~~ UJ	11	1.0	10	11	2.8	CCH
91-57-6	2-Methylnaphthalene	~~J~~ J	2.8	1.0	10	11	2.4	CCH
86-73-7	Fluorene	U	11	1.0	10	11	3.5	
85-01-8	Phenanthrene		19	1.0	10	11	2.0	
206-44-0	Fluoranthene	U	11	1.0	10	11	2.0	
129-00-0	Pyrene		14	1.0	10	11	2.3	
56-55-3	Benzo(a)anthracene		30	1.0	10	11	2.1	
205-99-2	Benzo(b)fluoranthene	U	11	1.0	10	11	2.6	
207-08-9	Benzo(k)fluoranthene	~~U~~ UJ	11	1.0	10	11	3.4	CCH
50-32-8	Benzo(a)pyrene		24	1.0	10	11	3.6	
193-39-5	Indeno(1,2,3-cd)pyrene	~~U~~ UJ	11	1.0	10	11	2.1	CCH
53-70-3	Dibenzo(a,h)anthracene	U ↓	11	1.0	10	11	2.0	↓
191-24-2	Benzo(g,h,i)perylene	U ↓	11	1.0	10	11	2.2	↓
118-74-1	Hexachlorobenzene	U	11	1.0	10	11	2.0	
87-68-3	Hexachlorobutadiene	U	11	1.0	10	11	2.5	
77-47-4	Hexachlorocyclopentadiene	~~U~~ UJ	11	1.0	10	11	1.6	CCH
7297-45-2	2-Methylnaphthalene-D10		61%					
367-12-4	2,4-Dibromophenol		80%					
81103-79-9	Fluorene-d10		94%					
1718-51-1	Pyrene-D10		94%					

MW
3/4/09

17

KATAHDIN ANALYTICAL SERVICES
Report of Analytical Results

Client: CH2MHill
Project: TO-009 Lejeune
PO No:
Sample Date: 12/16/08
Received Date: 12/19/08
Extraction Date: 12/22/08
Analysis Date: 11-JAN-2009 20:05
Report Date: 01/15/2009
Matrix: SOIL
% Solids: 92.9

Lab ID: SB7328-4
Client ID: MR08-SS112-08D
SDG: TO9-18
Extracted by: AC
Extraction Method: SW846 3550
Analyst: EKC
Analysis Method: SW846 M8270C
Lab Prep Batch: WG59323
Units: ug/Kgdrywt

CAS#	Compound	Flags	Results	DF	PQL	Adj.PQL	Adj.MDL	
91-20-3	Naphthalene	~~U~~ UJ	11	1.0	10	11	2.8	CCH
91-57-6	2-Methylnaphthalene	~~J~~ J	7.2	1.0	10	11	2.4	↓
86-73-7	Fluorene	J	4.0	1.0	10	11	3.4	
85-01-8	Phenanthrene		38	1.0	10	11	1.9	
206-44-0	Fluoranthene	U	11	1.0	10	11	1.9	
129-00-0	Pyrene		29	1.0	10	11	2.2	
56-55-3	Benzo(a)anthracene	U	11	1.0	10	11	2.0	
205-99-2	Benzo(b)fluoranthene	U	11	1.0	10	11	2.6	
207-08-9	Benzo(k)fluoranthene	~~U~~ UJ	11	1.0	10	11	3.3	CCH
50-32-8	Benzo(a)pyrene		42	1.0	10	11	3.6	
193-39-5	Indeno(1,2,3-cd)pyrene	U UJ	11	1.0	10	11	2.0	CCH
53-70-3	Dibenzo(a,h)anthracene	U ↓	11	1.0	10	11	1.9	↓
191-24-2	Benzo(g,h,i)perylene	U ↓	11	1.0	10	11	2.2	
118-74-1	Hexachlorobenzene	U	11	1.0	10	11	1.9	
87-68-3	Hexachlorobutadiene	U	11	1.0	10	11	2.5	
77-47-4	Hexachlorocyclopentadiene	~~U~~ UJ	11	1.0	10	11	1.6	CCH
7297-45-2	2-Methylnaphthalene-D10		85%					
367-12-4	2,4-Dibromophenol		108%					
81103-79-9	Fluorene-d10		112%					
1718-51-1	Pyrene-D10		122%					

MW 3/4/09

18

KATAHDIN ANALYTICAL SERVICES
Report of Analytical Results

Client: CH2MHill
Project: TO-009 Lejeune
PO No:
Sample Date: 12/17/08
Received Date: 12/19/08
Extraction Date: 12/22/08
Analysis Date: 11-JAN-2009 13:26
Report Date: 01/15/2009
Matrix: SOIL
% Solids: 86.1

Lab ID: SB7328-6
Client ID: MR08-SS133-08D
SDG: TO9-18
Extracted by: AC
Extraction Method: SW846 3550
Analyst: EKC
Analysis Method: SW846 M8270C
Lab Prep Batch: WG59323
Units: ug/Kgdrywt

CAS#	Compound	Flags	Results	DF	PQL	Adj.PQL	Adj.MDL	
91-20-3	Naphthalene	~~J~~ J	7.9	1.0	10	12	3.0	CCH
91-57-6	2-Methylnaphthalene	J	14	1.0	10	12	2.6	CCH
86-73-7	Fluorene	U	12	1.0	10	12	3.7	
85-01-8	Phenanthrene		60	1.0	10	12	2.1	
206-44-0	Fluoranthene		68	1.0	10	12	2.1	
129-00-0	Pyrene		56	1.0	10	12	2.4	
56-55-3	Benzo(a)anthracene		32	1.0	10	12	2.2	
205-99-2	Benzo(b)fluoranthene		54	1.0	10	12	2.8	
207-08-9	Benzo(k)fluoranthene	J	61	1.0	10	12	3.6	BSH
50-32-8	Benzo(a)pyrene		35	1.0	10	12	3.8	
193-39-5	Indeno(1,2,3-cd)pyrene	J	18	1.0	10	12	2.2	CCH
53-70-3	Dibenzo(a,h)anthracene	~~J~~ J	6.0	1.0	10	12	2.1	↓
191-24-2	Benzo(g,h,i)perylene	J	18	1.0	10	12	2.3	↓
118-74-1	Hexachlorobenzene	U	12	1.0	10	12	2.1	
87-68-3	Hexachlorobutadiene	U	12	1.0	10	12	2.7	
77-47-4	Hexachlorocyclopentadiene	~~J~~ UJ	12	1.0	10	12	1.7	CCH
7297-45-2	2-Methylnaphthalene-D10		56%					
367-12-4	2,4-Dibromophenol		96%					
81103-79-9	Fluorene-d10		92%					
1718-51-1	Pyrene-D10		95%					

MW
3/4/09

19

KATAHDIN ANALYTICAL SERVICES
Report of Analytical Results

Client: CH2MHill
Project: TO-009 Lejeune
PO No:
Sample Date: 12/17/08
Received Date: 12/19/08
Extraction Date: 12/22/08
Analysis Date: 11-JAN-2009 12:46
Report Date: 01/15/2009
Matrix: SOIL
% Solids: 85.7

Lab ID: SB7328-8
Client ID: MR08-IS133-08D
SDG: TO9-18
Extracted by: AC
Extraction Method: SW846 3550
Analyst: EKC
Analysis Method: SW846 M8270C
Lab Prep Batch: WG59323
Units: ug/Kgdrywt

CAS#	Compound	Flags	Results	DF	PQL	Adj.PQL	Adj.MDL	
91-20-3	Naphthalene	~~U~~ UJ	12	1.0	10	12	3.0	CCH
91-57-6	2-Methylnaphthalene	~~U~~ UJ	12	1.0	10	12	2.6	CCH
86-73-7	Fluorene	U	12	1.0	10	12	3.7	
85-01-8	Phenanthrene	~~J~~ 12U	~~2.2~~	1.0	10	12	2.1	BL
206-44-0	Fluoranthene	J	2.9	1.0	10	12	2.1	
129-00-0	Pyrene	U	12	1.0	10	12	2.4	
56-55-3	Benzo(a)anthracene	U	12	1.0	10	12	2.2	
205-99-2	Benzo(b)fluoranthene	U	12	1.0	10	12	2.8	
207-08-9	Benzo(k)fluoranthene	~~U~~ UJ	12	1.0	10	12	3.6	CCH
50-32-8	Benzo(a)pyrene	U	12	1.0	10	12	3.8	
193-39-5	Indeno(1,2,3-cd)pyrene	~~U~~ UJ	12	1.0	10	12	2.2	CCH
53-70-3	Dibenzo(a,h)anthracene	~~U~~ ↓	12	1.0	10	12	2.1	↓
191-24-2	Benzo(g,h,i)perylene	~~U~~ ↓	12	1.0	10	12	2.3	↓
118-74-1	Hexachlorobenzene	U	12	1.0	10	12	2.1	
87-68-3	Hexachlorobutadiene	U	12	1.0	10	12	2.7	
77-47-4	Hexachlorocyclopentadiene	~~U~~ UJ	12	1.0	10	12	1.7	CCH
7297-45-2	2-Methylnaphthalene-D10		54%					
367-12-4	2,4-Dibromophenol		86%					
81103-79-9	Fluorene-d10		77%					
1718-51-1	Pyrene-D10		86%					

lw 3/4/09

20

KATAHDIN ANALYTICAL SERVICES
Report of Analytical Results

Client: CH2MHill
Project: TO-009 Lejeune
PO No:
Sample Date: 12/17/08
Received Date: 12/19/08
Extraction Date: 12/22/08
Analysis Date: 11-JAN-2009 12:06
Report Date: 01/15/2009
Matrix: SOIL
% Solids: 90.9

Lab ID: SB7328-10
Client ID: MR08-SS110-08D
SDG: TO9-18
Extracted by: AC
Extraction Method: SW846 3550
Analyst: EKC
Analysis Method: SW846 M8270C
Lab Prep Batch: WG59323
Units: ug/Kgdrywt

CAS#	Compound	Flags	Results	DF	PQL	Adj.PQL	Adj.MDL	
91-20-3	Naphthalene	~~U~~ UJ	11	1.0	10	11	2.9	CCH
91-57-6	2-Methylnaphthalene	~~U~~ UJ	11	1.0	10	11	2.4	CCH
86-73-7	Fluorene	U	11	1.0	10	11	3.5	
85-01-8	Phenanthrene	U	11	1.0	10	11	2.0	
206-44-0	Fluoranthene	J	4.2	1.0	10	11	2.0	
129-00-0	Pyrene	J	3.1	1.0	10	11	2.3	
56-55-3	Benzo(a)anthracene	U	11	1.0	10	11	2.1	
205-99-2	Benzo(b)fluoranthene	U	11	1.0	10	11	2.6	
207-08-9	Benzo(k)fluoranthene	~~U~~ UJ	11	1.0	10	11	3.4	CCH
50-32-8	Benzo(a)pyrene	U	11	1.0	10	11	3.6	
193-39-5	Indeno(1,2,3-cd)pyrene	~~U~~ UJ	11	1.0	10	11	2.1	CCH
53-70-3	Dibenzo(a,h)anthracene	~~U~~ UJ	11	1.0	10	11	2.0	↓
191-24-2	Benzo(g,h,i)perylene	J J	2.7	1.0	10	11	2.2	↓
118-74-1	Hexachlorobenzene	U	11	1.0	10	11	2.0	
87-68-3	Hexachlorobutadiene	U	11	1.0	10	11	2.5	
77-47-4	Hexachlorocyclopentadiene	~~U~~ UJ	11	1.0	10	11	1.6	CCH
7297-45-2	2-Methylnaphthalene-D10		54%					
367-12-4	2,4-Dibromophenol		80%					
81103-79-9	Fluorene-d10		79%					
1718-51-1	Pyrene-D10		80%					

RW
3/4/09

ENVIRONMENTAL
Data Services, Inc.

SEMIVOLATILE ORGANIC COMPOUNDS

USEPA Region IV - Level IV Review

Site: MCB Camp Lejeune, TO-09 SDG #: TO9-18

Client: CH2M HILL, Inc., Virginia Beach, Virginia Date: March 9, 2009

Laboratory: Katahdin Analytical Services, Scarborough, Maine Reviewer: Nancy Weaver

EDS ID	Client Sample ID	Laboratory Sample ID	Matrix
1	MR08-SS120-08D	SB7239-1	Soil
1RE	MR08-SS120-08DRE	SB7239-1RE	Soil
2	MR08-IS120-1.5-2.5-08D	SB7239-3	Soil
2RE	MR08-IS120-1.5-2.5-08DRE	SB7239-3RE	Soil
3	MR08-SS122-08D	SB7239-5	Soil
3RE	MR08-SS122-08DRE	SB7239-5RE	Soil
3MS	MR08-SS122-08DMS	SB7239-5MS	Soil
3MSD	MR08-SS122-08DMSD	SB7239-5MSD	Soil
4	MR08-IS122-6.5-08D	SB7239-7	Soil
4MS	MR08-IS122-6.5-08DMS	SB7239-7MS	Soil
4MSD	MR08-IS122-6.5-08DMSD	SB7239-7MSD	Soil
5	MR08-SS118-08D	SB7239-9	Soil
5RE	MR08-SS118-08DRE	SB7239-9RE	Soil
6	MR08-IS118-08D	SB7239-11	Soil
6RE	MR08-IS118-08DRE	SB7239-11RE	Soil
7	MR08-SS127-08D	SB7239-13	Soil
8	MR08-IS127-1.5-3-08D	SB7239-15	Soil
8RE	MR08-IS127-1.5-3-08DRE	SB7239-15RE	Soil
9	MR08-SS126-08D	SB7239-17	Soil
9RE	MR08-SS126-08DRE	SB7239-17RE	Soil
10	MR08-IS126-1.5-2.5-08D	SB7239-19	Soil
10RE	MR08-IS126-1.5-2.5-08DRE	SB7239-19RE	Soil
11	MR08-SS130-08D	SB7239-21	Soil
12	MR08-IS130-1.5-3-08D	SB7239-23	Soil
13	MR08-SS132-08D	SB7239-25	Soil
14	MR08-IS132-08D	SB7239-27	Soil
15	MR08-SS131-08D	SB7239-29	Soil
16	MR08-SS111-08D	SB7328-1	Soil
16RE	MR08-SS111-08DRE	SB7328-1RE	Soil
17	MR08-SS112-08D	SB7328-3	Soil
17RE	MR08-SS112-08DRE	SB7328-3RE	Soil
18	MR08-SS133-08D	SB7328-5	Soil
19	MR08-IS133-08D	SB7328-7	Soil
20	MR08-SS110-08D	SB7328-9	Soil
20RE	MR08-SS110-08DRE	SB7328-9RE	Soil

The USEPA "Contract Laboratory Program National Functional Guidelines for Organic Data Review," October 1999, and professional judgment were used in evaluating the data in this summary report.

Holding Times - All samples were extracted within 14 days for soil samples and analyzed within 40 days for all samples except for the reanalyses samples, which were qualified estimated (J/UJ).

GC/MS Tuning - All of the DFTPP tunes in the initial and continuing calibrations met the percent relative abundance criteria.

Initial Calibration - The initial calibrations exhibited acceptable %RSD and mean RRF values except the following.

ICAL Date	Compound	%RSD/RRF	Qualifier	Affected Samples
01/12/09	Benzaldehyde	90.97%	J/UJ	16-20
01/13/09	Benzaldehyde	44.95%	J/UJ	12, 13, 15

Continuing Calibration - The continuing calibrations exhibited acceptable %D and RRF values except the following.

CCAL Date	Compound	%D/RRF	Qualifier	Affected Samples
01/11/09	Benzaldehyde	277.94%	J/UJ	4, 6
	3,3'-Dichlorobenzidine	27.33%	J/UJ	6
01/12/09	Benzaldehyde	248.56%	J/UJ	1, 2, 5, 7, 8, 10, 11
01/14/09	Benzaldehyde	76.37%	J/UJ	3, 9, 14
01/15/08	Benzaldehyde	59.85%	None	Already qualified due to ICAL
	Di-n-octyl phthalate	40.81%	J/UJ	12, 13, 15
01/21/09	Benzaldehyde	79.39%	None	Already qualified due to HT
01/18/09	Benzaldehyde	68.63%	None	Already qualified due to HT
	Caprolactam	25.18%	None	Already qualified due to HT
	2,4-Dinitrophenol	41.98%	None	Already qualified due to HT
	4-Nitrophenol	44.77%	None	Already qualified due to HT
	4,6-Dinitro-2-methylphenol	28.36%	None	Already qualified due to HT
	Pentachlorophenol	27.33%	None	Already qualified due to HT
01/19/09	3-Nitroaniline	54.73%	J/UJ	16-20 unless already qualified due to surrogates
	2,4-Dinitrophenol	34.46%	J/UJ	
	4-Nitrophenol	38.54%	J/UJ	
	4-Nitroaniline	49.30%	J/UJ	
	4,6-Dinitro-2-methylphenol	25.48%	J/UJ	
	Pentachlorophenol	28.40%	J/UJ	
	Carbazole	56.11%	J/UJ	
	3,3'-Dichlorobenzidine	45.69%	J/UJ	

Surrogates - All samples exhibited acceptable surrogate recoveries except the following.

Sample ID	Surrogate	%R	Qualifier
1	S1-2-Fluorophenol	13%	J/R - acid compounds
	S5-2,4,6-Tribromophenol	2%	
2	S1-2-Fluorophenol	7%	J/R - acid compounds
	S2-Phenol-d6	38%	
	S5-2,4,6-Tribromophenol	0%	
3	S1-2-Fluorophenol	6%	J/R - acid compounds
	S2-Phenol-d6	38%	
	S5-2,4,6-Tribromophenol	2%	
4	S5-2,4,6-Tribromophenol	17%	None for 1 out
5	S1-2-Fluorophenol	19%	J/R - acid compounds
	S5-2,4,6-Tribromophenol	1%	
6	S1-2-Fluorophenol	30%	J/R - acid compounds
	S5-2,4,6-Tribromophenol	8%	
6RE	S2-Phenol-d6	38%	None for 1 out
7	S5-2,4,6-Tribromophenol	17%	None for 1 out
8	S1-2-Fluorophenol	18%	J/R - acid compounds
	S5-2,4,6-Tribromophenol	2%	
9	S1-2-Fluorophenol	33%	J/R - acid compounds
	S5-2,4,6-Tribromophenol	9%	
10	S1-2-Fluorophenol	20%	J/R - acid compounds
	S5-2,4,6-Tribromophenol	3%	
15	S5-2,4,6-Tribromophenol	15%	None for 1 out
16	S1-2-Fluorophenol	32%	J/UJ - acid compounds
	S5-2,4,6-Tribromophenol	17%	
17	S1-2-Fluorophenol	31%	J/R - acid compounds
	S5-2,4,6-Tribromophenol	9%	
20	S1-2-Fluorophenol	31%	J/R - acid compounds
	S5-2,4,6-Tribromophenol	9%	

MS/MSD - The MS/MSD sample exhibited acceptable %R and RPD values except the following.

MS/MSD Sample ID	Compound	MS/MSD %R/RPD	Qualifier
3	Benzaldehyde	157%/279%/56	None - All ND
	2-Methylphenol	6%/11%/51	None - Already qualified due to surrogates
	3&4-Methylphenol	17%/16%/Ok	None - Already qualified due to surrogates
	2,4-Dimethylphenol	13%/9%/Ok	None - Already qualified due to surrogates
	4-Chloroaniline	0%/0%/Ok	J/R
	2,4,6-Trichlorophenol	28%/34%/Ok	None - Already qualified due to surrogates
	Acenaphthylene	0%/0%/Ok	J/R
	4-Chlorophenyl-phenyl ether	14%/14%/Ok	J/UJ
	4,6-Dinitro-2-methylphenol	26%/28%/Ok	J/UJ
	Pentachlorophenol	48%/51%/Ok	None - already qualified

MS/MSD Sample ID	Compound	MS/MSD %R/RPD	Qualifier
3	3,3'-Dichlorobenzidine	0%/0%/Ok	J/R
	Anthracene	48%/Ok/Ok	J/UJ
4	Benzaldehyde	438%/472%/Ok	None All ND
	2-Methylphenol	Ok/25%/Ok	J/UJ
	2,2'-Oxybis (1-Chloropropane)	Ok/Ok/82	None for RPD alone
	3&4-Methylphenol	Ok/30%/67	J/UJ
	2,4-Dimethylphenol	Ok/10%/11	None - Already qualified
	4-Chloroaniline	0%/0%/Ok	J/R
	3-Nitroanilne	Ok/8%/100	J/R
	4-Nitroanilne	Ok/32%/53	J/UJ
	n-Nitrosodiphenylamine	Ok/28%/77	J/UJ
	3,3'-Dichlorobenzidine	0%/0%/Ok	J/R

Laboratory Control Sample - The LCS samples exhibited acceptable %R values except the following.

LCS ID	Compound	%R	Qualifier	Affected Samples
WG59322-LCS	Benzaldehyde	275%	None	All ND
	2,4-Dimethylphenol	19%	J/UJ	18, 19
WG59867-LCS	Acetophenone	52%	J/UJ	1RE, 2RE, 3RE, 5RE, 6RE, 8RE, 9RE, 10RE
WG59198-LCS	Nitrobenzene	134%	None	All ND
	2,4-Dimethylphenol	18%	J/UJ	4, 7, 11
WG59242-LCS	Benzaldehyde	131%	None	All ND
	2,4-Dimethylphenol	12%	J/UJ	12-15
	4-Chloroaniline	8%	J/R	12-15

Internal Standard (IS) Area Performance - All internal standards met response and retention time (RT) criteria except the following.

Sample ID	Internal Standard	Area Count	Qualifier
9	IS6-Perylene-d12	Low	J/UJ - Associated compounds

Method Blank - The method blanks were free of contamination.

Field, Equipment Blank - Field QC results are summarized below.

Blank ID	Compound	Conc. ug/L	Action Level ug/L	Qualifier	Affected Samples
MR08-FB122008	None - ND	-	-	-	-
MR08-EB01-121508-SS	None - ND	-	-	-	-
EB08-EB121708	None - ND	-	-	-	-

Field Duplicates - Field duplicate samples were not included in this data package.

Tentatively Identified Compounds (TICs) - TICs were not reported.

Compound Quantitation - Several samples were reanalyzed by the laboratory due to poor surrogate recoveries, poor internal standard area performance, holding times, matrix spike/matrix spike duplicate recoveries and/or laboratory control sample recoveries. Refer to Form Is for which were used for reporting purposes.

KATAHDIN ANALYTICAL SERVICES
Report of Analytical Results

Client: CH2MHill
Project: TO-009 Lejeune
PO No:
Sample Date: 12/15/08
Received Date: 12/17/08
Extraction Date: 12/18/08
Analysis Date: 12-JAN-2009 17:39
Report Date: 01/22/2009
Matrix: SOIL
% Solids: 94.0

Lab ID: SB7239-1
Client ID: MR08-SS120-08D
SDG: TO9-18
Extracted by: AC
Extraction Method: SW846 3550
Analyst: JCG
Analysis Method: SW846 8270C
Lab Prep Batch: WG59198
Units: ug/Kgdrywt

Use reanalysis

CAS#	Compound	Flags	Results	DF	PQL	Adj.PQL	Adj.MDL	
100-52-7	Benzaldehyde	~~J~~ UJ	530	1.0	500	530	130	CCH
108-95-2	Phenol	~~J~~ R	530	1.0	500	530	170	SSL
111-44-4	Bis(2-Chloroethyl)ether	U	350	1.0	330	350	86	
95-57-8	2-Chlorophenol	~~J~~ R	530	1.0	500	530	170	SSL
95-48-7	2-Methylphenol	~~J~~ R	640	1.0	600	640	210	SSL
108-60-1	2,2'-Oxybis(1-chloropropane)	U	350	1.0	330	350	95	
98-86-2	Acetophenone	U	640	1.0	600	640	190	
621-64-7	N-Nitroso-di-n-propylamine	U	350	1.0	330	350	88	
65794-96-9	3&4-Methylphenol	~~J~~ R	640	1.0	600	640	200	SSL
67-72-1	Hexachloroethane	U	350	1.0	330	350	100	
98-95-3	Nitrobenzene	U	350	1.0	330	350	97	
78-59-1	Isophorone	U	350	1.0	330	350	80	
88-75-5	2-Nitrophenol	~~J~~ R	640	1.0	600	640	180	SSL
105-67-9	2,4-Dimethylphenol	~~J~~ R	530	1.0	500	530	180	SSL
111-91-1	Bis(2-Chloroethoxy)methane	U	350	1.0	330	350	100	
120-83-2	2,4-Dichlorophenol	~~J~~ R	530	1.0	500	530	160	SSL
106-47-8	4-Chloroaniline	U	530	1.0	500	530	130	
105-60-2	Caprolactam	U	530	1.0	500	530	150	
59-50-7	4-Chloro-3-Methylphenol	~~J~~ R	530	1.0	500	530	180	SSL
88-06-2	2,4,6-Trichlorophenol	~~J~~ ↓	530	1.0	500	530	160	↓
95-95-4	2,4,5-Trichlorophenol	~~J~~	530	1.0	500	530	160	↓
91-58-7	2-Chloronaphthalene	U	350	1.0	330	350	92	
92-52-4	1,1'-Biphenyl	U	350	1.0	330	350	78	
88-74-4	2-Nitroaniline	U	530	1.0	500	530	80	
131-11-3	Dimethyl Phthalate	U	350	1.0	330	350	83	
606-20-2	2,6-Dinitrotoluene	U	350	1.0	330	350	84	
208-96-8	Acenaphthylene	U	350	1.0	330	350	74	
99-09-2	3-Nitroaniline	U	530	1.0	500	530	100	
83-32-9	Acenaphthene	U	350	1.0	330	350	69	
51-28-5	2,4-Dinitrophenol	~~J~~ R	1300	1.0	1200	1300	400	SSL
132-64-9	Dibenzofuran	U	350	1.0	330	350	84	
100-02-7	4-Nitrophenol	~~J~~ R	1300	1.0	1200	1300	330	SSL
121-14-2	2,4-Dinitrotoluene	U	350	1.0	330	350	90	
84-66-2	Diethylphthalate	U	350	1.0	330	350	85	
7005-72-3	4-Chlorophenyl-phenylether	U	350	1.0	330	350	83	
100-01-6	4-Nitroaniline	U	530	1.0	500	530	140	
534-52-1	4,6-Dinitro-2-Methylphenol	~~J~~ R	1300	1.0	1200	1300	360	SSL
86-30-6	N-Nitrosodiphenylamine	U	700	1.0	660	700	230	
101-55-3	4-Bromophenyl-phenylether	U	350	1.0	330	350	90	
1912-24-9	Atrazine	U	350	1.0	330	350	97	
87-86-5	Pentachlorophenol	~~J~~ R	870	1.0	820	870	250	SSL
120-12-7	Anthracene	U	350	1.0	330	350	89	
86-74-8	Carbazole	U	530	1.0	500	530	120	

MW 3/4/09

KATAHDIN ANALYTICAL SERVICES
Report of Analytical Results

Client: CH2MHill
Project: TO-009 Lejeune
PO No:
Sample Date: 12/15/08
Received Date: 12/17/08
Extraction Date: 12/18/08
Analysis Date: 12-JAN-2009 17:39
Report Date: 01/22/2009
Matrix: SOIL
% Solids: 94.0

Lab ID: SB7239-1
Client ID: MR08-SS120-08D
SDG: TO9-18
Extracted by: AC
Extraction Method: SW846 3550
Analyst: JCG
Analysis Method: SW846 8270C
Lab Prep Batch: WG59198
Units: ug/Kgdrywt

use reanalysis

CAS#	Compound	Flags	Results	DF	PQL	Adj.PQL	Adj.MDL
84-74-2	Di-n-butylphthalate	U	350	1.0	330	350	110
85-68-7	Butylbenzylphthalate	U	350	1.0	330	350	99
91-94-1	3,3'-Dichlorobenzidine	U	530	1.0	500	530	120
218-01-9	Chrysene	U	350	1.0	330	350	100
117-81-7	bis(2-Ethylhexyl)phthalate	J	290	1.0	330	350	100
117-84-0	Di-n-octylphthalate	U	350	1.0	330	350	220
367-12-4	2-Fluorophenol		* 13%				
13127-88-3	Phenol-D6		52%				
4165-60-0	Nitrobenzene-D5		82%				
321-60-8	2-Fluorobiphenyl		93%				
118-79-6	2,4,6-Tribromophenol		* 2%				
1718-51-0	Terphenyl-D14		112%				

RRE

MW 3/4/09

1RE

KATAHDIN ANALYTICAL SERVICES
Report of Analytical Results

Client: CH2MHill
Project: TO-009 Lejeune
PO No:
Sample Date: 12/15/08
Received Date: 12/17/08
Extraction Date: 01/16/09
Analysis Date: 18-JAN-2009 21:26
Report Date: 01/22/2009
Matrix: SOIL
% Solids: 94.0

Lab ID: SB7239-1RE
Client ID: MR08-SS120-08D
SDG: TO9-18
Extracted by: CB
Extraction Method: SW846 3550
Analyst: JLP
Analysis Method: SW846 8270C
Lab Prep Batch: WG59867
Units: ug/Kgdrywt

CAS#	Compound	Flags	Results	DF	PQL	Adj.PQL	Adj.MDL	
100-52-7	Benzaldehyde	U UJ	530	1.0	500	530	130	HT
108-95-2	Phenol	U	530	1.0	500	530	170	
111-44-4	Bis(2-Chloroethyl)ether	U	350	1.0	330	350	86	
95-57-8	2-Chlorophenol	U	530	1.0	500	530	170	
95-48-7	2-Methylphenol	U	640	1.0	600	640	210	
108-60-1	2,2'-Oxybis(1-chloropropane)	U	350	1.0	330	350	95	
98-86-2	Acetophenone	~~U~~ UJ	640	1.0	600	640	190	BSL
621-64-7	N-Nitroso-di-n-propylamine	U	350	1.0	330	350	88	UJ
65794-96-9	3&4-Methylphenol	U	640	1.0	600	640	200	
67-72-1	Hexachloroethane	U	350	1.0	330	350	100	
98-95-3	Nitrobenzene	U	350	1.0	330	350	97	
78-59-1	Isophorone	U	350	1.0	330	350	80	
88-75-5	2-Nitrophenol	U	640	1.0	600	640	180	
105-67-9	2,4-Dimethylphenol	U	530	1.0	500	530	180	
111-91-1	Bis(2-Chloroethoxy)methane	U	350	1.0	330	350	100	
120-83-2	2,4-Dichlorophenol	U	530	1.0	500	530	160	
106-47-8	4-Chloroaniline	U	530	1.0	500	530	130	
105-60-2	Caprolactam	U	530	1.0	500	530	150	
59-50-7	4-Chloro-3-Methylphenol	U	530	1.0	500	530	180	
88-06-2	2,4,6-Trichlorophenol	U	530	1.0	500	530	160	
95-95-4	2,4,5-Trichlorophenol	U	530	1.0	500	530	160	
91-58-7	2-Chloronaphthalene	U	350	1.0	330	350	92	
92-52-4	1,1'-Biphenyl	U	350	1.0	330	350	78	
88-74-4	2-Nitroaniline	U	530	1.0	500	530	80	
131-11-3	Dimethyl Phthalate	U	350	1.0	330	350	83	
606-20-2	2,6-Dinitrotoluene	U	350	1.0	330	350	84	
208-96-8	Acenaphthylene	U	350	1.0	330	350	74	
99-09-2	3-Nitroaniline	U	530	1.0	500	530	100	
83-32-9	Acenaphthene	U	350	1.0	330	350	69	
51-28-5	2,4-Dinitrophenol	U	1300	1.0	1200	1300	400	
132-64-9	Dibenzofuran	U	350	1.0	330	350	84	
100-02-7	4-Nitrophenol	U	1300	1.0	1200	1300	330	
121-14-2	2,4-Dinitrotoluene	U	350	1.0	330	350	90	
84-66-2	Diethylphthalate	U	350	1.0	330	350	85	
7005-72-3	4-Chlorophenyl-phenylether	U	350	1.0	330	350	83	
100-01-6	4-Nitroaniline	U	530	1.0	500	530	140	
534-52-1	4,6-Dinitro-2-Methylphenol	U	1300	1.0	1200	1300	360	
86-30-6	N-Nitrosodiphenylamine	U	700	1.0	660	700	230	
101-55-3	4-Bromophenyl-phenylether	U	350	1.0	330	350	90	
1912-24-9	Atrazine	U	350	1.0	330	350	97	
87-86-5	Pentachlorophenol	U	870	1.0	820	870	250	
120-12-7	Anthracene	U	350	1.0	330	350	89	
86-74-8	Carbazole	U	530	1.0	500	530	120	

LW 4/6/09

1RE

KATAHDIN ANALYTICAL SERVICES
Report of Analytical Results

Client: CH2MHill
Project: TO-009 Lejeune
PO No:
Sample Date: 12/15/08
Received Date: 12/17/08
Extraction Date: 01/16/09
Analysis Date: 18-JAN-2009 21:26
Report Date: 01/22/2009
Matrix: SOIL
% Solids: 94.0

Lab ID: SB7239-1RE
Client ID: MR08-SS120-08D
SDG: TO9-18
Extracted by: CB
Extraction Method: SW846 3550
Analyst: JLP
Analysis Method: SW846 8270C
Lab Prep Batch: WG59867
Units: ug/Kgdrywt

CAS#	Compound	Flags	Results	DF	PQL	Adj.PQL	Adj.MDL
84-74-2	Di-n-butylphthalate	U UJ	350	1.0	330	350	110 HT
85-68-7	Butylbenzylphthalate	U	350	1.0	330	350	99
91-94-1	3,3'-Dichlorobenzidine	U	530	1.0	500	530	120
218-01-9	Chrysene	U	350	1.0	330	350	100
117-81-7	bis(2-Ethylhexyl)phthalate	J	180	1.0	330	350	100
117-84-0	Di-n-octylphthalate	U UJ	350	1.0	330	350	220
367-12-4	2-Fluorophenol		51%				
13127-88-3	Phenol-D6		43%				
4165-60-0	Nitrobenzene-D5		53%				
321-60-8	2-Fluorobiphenyl		63%				
118-79-6	2,4,6-Tribromophenol		58%				
1718-51-0	Terphenyl-D14		74%				

LW 4/6/09

2

KATAHDIN ANALYTICAL SERVICES
Report of Analytical Results

Client: CH2MHill
Project: TO-009 Lejeune
PO No:
Sample Date: 12/15/08
Received Date: 12/17/08
Extraction Date: 12/17/08
Analysis Date: 12-JAN-2009 11:56
Report Date: 01/22/2009
Matrix: SOIL
% Solids: 89.0

Lab ID: SB7239-3
Client ID: MR08-IS120-1.5-2.5
SDG: TO9-18
Extracted by: AC
Extraction Method: SW846 3550
Analyst: JCG
Analysis Method: SW846 8270C
Lab Prep Batch: WG59198
Units: ug/Kgdrywt

Use reanalysis

CAS#	Compound	Flags	Results	DF	PQL	Adj.PQL	Adj.MDL	
100-52-7	Benzaldehyde	~~U~~ UJ	560	1.0	500	560	130	CCH
108-95-2	Phenol	~~U~~ R	560	1.0	500	560	180	SSL
111-44-4	Bis(2-Chloroethyl)ether	U	370	1.0	330	370	91	
95-57-8	2-Chlorophenol	~~U~~ R	560	1.0	500	560	180	SSL
95-48-7	2-Methylphenol	~~U~~ R	670	1.0	600	670	220	SSL
108-60-1	2,2'-Oxybis(1-chloropropane)	U	370	1.0	330	370	100	
98-86-2	Acetophenone	U	670	1.0	600	670	200	
621-64-7	N-Nitroso-di-n-propylamine	U	370	1.0	330	370	93	
65794-96-9	3&4-Methylphenol	~~U~~ R	670	1.0	600	670	210	SSL
67-72-1	Hexachloroethane	U	370	1.0	330	370	110	
98-95-3	Nitrobenzene	U	370	1.0	330	370	100	
78-59-1	Isophorone	U	370	1.0	330	370	84	
88-75-5	2-Nitrophenol	~~U~~ R	670	1.0	600	670	190	SSL
105-67-9	2,4-Dimethylphenol	~~U~~ R	560	1.0	500	560	180	SSL
111-91-1	Bis(2-Chloroethoxy)methane	U	370	1.0	330	370	110	
120-83-2	2,4-Dichlorophenol	~~U~~ R	560	1.0	500	560	170	SSL
106-47-8	4-Chloroaniline	U	560	1.0	500	560	130	
105-60-2	Caprolactam	U	560	1.0	500	560	160	
59-50-7	4-Chloro-3-Methylphenol	~~U~~ R	560	1.0	500	560	190	SSL
88-06-2	2,4,6-Trichlorophenol	U	560	1.0	500	560	170	
95-95-4	2,4,5-Trichlorophenol	U	560	1.0	500	560	170	
91-58-7	2-Chloronaphthalene	U	370	1.0	330	370	98	
92-52-4	1,1'-Biphenyl	U	370	1.0	330	370	82	
88-74-4	2-Nitroaniline	U	560	1.0	500	560	84	
131-11-3	Dimethyl Phthalate	U	370	1.0	330	370	88	
606-20-2	2,6-Dinitrotoluene	U	370	1.0	330	370	89	
208-96-8	Acenaphthylene	U	370	1.0	330	370	79	
99-09-2	3-Nitroaniline	U	560	1.0	500	560	100	
83-32-9	Acenaphthene	U	370	1.0	330	370	73	
51-28-5	2,4-Dinitrophenol	~~U~~ R	1300	1.0	1200	1300	420	SSL
132-64-9	Dibenzofuran	U	370	1.0	330	370	89	
100-02-7	4-Nitrophenol	~~U~~ R	1300	1.0	1200	1300	350	SSL
121-14-2	2,4-Dinitrotoluene	U	370	1.0	330	370	95	
84-66-2	Diethylphthalate	U	370	1.0	330	370	90	
7005-72-3	4-Chlorophenyl-phenylether	U	370	1.0	330	370	88	
100-01-6	4-Nitroaniline	U	560	1.0	500	560	150	
534-52-1	4,6-Dinitro-2-Methylphenol	~~U~~ R	1300	1.0	1200	1300	380	SSL
86-30-6	N-Nitrosodiphenylamine	U	740	1.0	660	740	240	
101-55-3	4-Bromophenyl-phenylether	U	370	1.0	330	370	95	
1912-24-9	Atrazine	U	370	1.0	330	370	100	
87-86-5	Pentachlorophenol	~~U~~ R	920	1.0	820	920	270	SSL
120-12-7	Anthracene	U	370	1.0	330	370	94	
86-74-8	Carbazole	U	560	1.0	500	560	120	

lw 3/4/09

2

KATAHDIN ANALYTICAL SERVICES
Report of Analytical Results

Client: CH2MHill
Project: TO-009 Lejeune
PO No:
Sample Date: 12/15/08
Received Date: 12/17/08
Extraction Date: 12/17/08
Analysis Date: 12-JAN-2009 11:56
Report Date: 01/22/2009
Matrix: SOIL
% Solids: 89.0

Lab ID: SB7239-3
Client ID: MR08-IS120-1.5-2.5
SDG: TO9-18
Extracted by: AC
Extraction Method: SW846 3550
Analyst: JCG
Analysis Method: SW846 8270C
Lab Prep Batch: WG59198
Units: ug/Kgdrywt

Use reanalysis

CAS#	Compound	Flags	Results	DF	PQL	Adj.PQL	Adj.MDL
84-74-2	Di-n-butylphthalate	U	370	1.0	330	370	110
85-68-7	Butylbenzylphthalate	U	370	1.0	330	370	100
91-94-1	3,3'-Dichlorobenzidine	U	560	1.0	500	560	130
218-01-9	Chrysene	U	370	1.0	330	370	110
117-81-7	bis(2-Ethylhexyl)phthalate	J	180	1.0	330	370	110
117-84-0	Di-n-octylphthalate	U	370	1.0	330	370	240
367-12-4	2-Fluorophenol		* 7%				
13127-88-3	Phenol-D6		* 38%				
4165-60-0	Nitrobenzene-D5		74%				
321-60-8	2-Fluorobiphenyl		80%				
118-79-6	2,4,6-Tribromophenol		* 0%				
1718-51-0	Terphenyl-D14		94%				

R RE

HW 3/4/09

2RE

KATAHDIN ANALYTICAL SERVICES
Report of Analytical Results

Client: CH2MHill
Project: TO-009 Lejeune
PO No:
Sample Date: 12/15/08
Received Date: 12/17/08
Extraction Date: 01/16/09
Analysis Date: 18-JAN-2009 22:08
Report Date: 01/22/2009
Matrix: SOIL
% Solids: 89.0

Lab ID: SB7239-3RE
Client ID: MR08-IS120-1.5-2.5
SDG: T09-18
Extracted by: CB
Extraction Method: SW846 3550
Analyst: JLP
Analysis Method: SW846 8270C
Lab Prep Batch: WG59867
Units: ug/Kgdrywt

CAS#	Compound	Flags	Results	DF	PQL	Adj.PQL	Adj.MDL	
100-52-7	Benzaldehyde	U UJ	560	1.0	500	560	130	HT
108-95-2	Phenol	U	560	1.0	500	560	180	
111-44-4	Bis(2-Chloroethyl)ether	U	370	1.0	330	370	91	
95-57-8	2-Chlorophenol	U	560	1.0	500	560	180	
95-48-7	2-Methylphenol	U	670	1.0	600	670	220	
108-60-1	2,2'-Oxybis(1-chloropropane)	U	370	1.0	330	370	100	
98-86-2	Acetophenone	U UJ	670	1.0	600	670	200	BSL
621-64-7	N-Nitroso-di-n-propylamine	U UJ	370	1.0	330	370	93	HT
65794-96-9	3&4-Methylphenol	U	670	1.0	600	670	210	
67-72-1	Hexachloroethane	U	370	1.0	330	370	110	
98-95-3	Nitrobenzene	U	370	1.0	330	370	100	
78-59-1	Isophorone	U	370	1.0	330	370	84	
88-75-5	2-Nitrophenol	U	670	1.0	600	670	190	
105-67-9	2,4-Dimethylphenol	U	560	1.0	500	560	180	
111-91-1	Bis(2-Chloroethoxy)methane	U	370	1.0	330	370	110	
120-83-2	2,4-Dichlorophenol	U	560	1.0	500	560	170	
106-47-8	4-Chloroaniline	U	560	1.0	500	560	130	
105-60-2	Caprolactam	U	560	1.0	500	560	160	
59-50-7	4-Chloro-3-Methylphenol	U	560	1.0	500	560	190	
88-06-2	2,4,6-Trichlorophenol	U	560	1.0	500	560	170	
95-95-4	2,4,5-Trichlorophenol	U	560	1.0	500	560	170	
91-58-7	2-Chloronaphthalene	U	370	1.0	330	370	98	
92-52-4	1,1'-Biphenyl	U	370	1.0	330	370	82	
88-74-4	2-Nitroaniline	U	560	1.0	500	560	84	
131-11-3	Dimethyl Phthalate	U	370	1.0	330	370	88	
606-20-2	2,6-Dinitrotoluene	U	370	1.0	330	370	89	
208-96-8	Acenaphthylene	U	370	1.0	330	370	79	
99-09-2	3-Nitroaniline	U	560	1.0	500	560	100	
83-32-9	Acenaphthene	U	370	1.0	330	370	73	
51-28-5	2,4-Dinitrophenol	U	1300	1.0	1200	1300	420	
132-64-9	Dibenzofuran	U	370	1.0	330	370	89	
100-02-7	4-Nitrophenol	U	1300	1.0	1200	1300	350	
121-14-2	2,4-Dinitrotoluene	U	370	1.0	330	370	95	
84-66-2	Diethylphthalate	U	370	1.0	330	370	90	
7005-72-3	4-Chlorophenyl-phenylether	U	370	1.0	330	370	88	
100-01-6	4-Nitroaniline	U	560	1.0	500	560	150	
534-52-1	4,6-Dinitro-2-Methylphenol	U	1300	1.0	1200	1300	380	
86-30-6	N-Nitrosodiphenylamine	U	740	1.0	660	740	240	
101-55-3	4-Bromophenyl-phenylether	U	370	1.0	330	370	95	
1912-24-9	Atrazine	U	370	1.0	330	370	100	
87-86-5	Pentachlorophenol	U	920	1.0	820	920	270	
120-12-7	Anthracene	U	370	1.0	330	370	94	
86-74-8	Carbazole	U	560	1.0	500	560	120	

LED 3/4/09

2RE

KATAHDIN ANALYTICAL SERVICES
Report of Analytical Results

Client: CH2MHill
Project: TO-009 Lejeune
PO No:
Sample Date: 12/15/08
Received Date: 12/17/08
Extraction Date: 01/16/09
Analysis Date: 18-JAN-2009 22:08
Report Date: 01/22/2009
Matrix: SOIL
% Solids: 89.0

Lab ID: SB7239-3RE
Client ID: MR08-IS120-1.5-2.5
SDG: TO9-18
Extracted by: CB
Extraction Method: SW846 3550
Analyst: JLP
Analysis Method: SW846 8270C
Lab Prep Batch: WG59867
Units: ug/Kgdrywt

CAS#	Compound	Flags	Results	DF	PQL	Adj.PQL	Adj.MDL	
84-74-2	Di-n-butylphthalate	~~U~~ UJ	370	1.0	330	370	110	HT
85-68-7	Butylbenzylphthalate	~~U~~	370	1.0	330	370	100	
91-94-1	3,3'-Dichlorobenzidine	~~U~~	560	1.0	500	560	130	
218-01-9	Chrysene	~~U~~	370	1.0	330	370	110	
117-81-7	bis(2-Ethylhexyl)phthalate	J	460	1.0	330	370	110	
117-84-0	Di-n-octylphthalate	~~U~~ UJ	370	1.0	330	370	240	
367-12-4	2-Fluorophenol		57%					
13127-88-3	Phenol-D6		48%					
4165-60-0	Nitrobenzene-D5		59%					
321-60-8	2-Fluorobiphenyl		63%					
118-79-6	2,4,6-Tribromophenol		68%					
1718-51-0	Terphenyl-D14		82%					

hw
3/4/09

3

KATAHDIN ANALYTICAL SERVICES
Report of Analytical Results

Client: CH2MHill
Project: TO-009 Lejeune
PO No:
Sample Date: 12/15/08
Received Date: 12/17/08
Extraction Date: 12/17/08
Analysis Date: 14-JAN-2009 14:21
Report Date: 01/22/2009
Matrix: SOIL
% Solids: 90.1

Lab ID: SB7239-5
Client ID: MR08-SS122-08D
SDG: TO9-18
Extracted by: AC
Extraction Method: SW846 3550
Analyst: JLP
Analysis Method: SW846 8270C
Lab Prep Batch: WG59198
Units: ug/Kgdrywt

Use reanalysis

CAS#	Compound	Flags	Results	DF	PQL	Adj.PQL	Adj.MDL	
100-52-7	Benzaldehyde	~~U~~ UJ	560	1.0	500	560	130	CCH
108-95-2	Phenol	~~U~~ R	560	1.0	500	560	170	SSL
111-44-4	Bis(2-Chloroethyl)ether	U	370	1.0	330	370	90	
95-57-8	2-Chlorophenol	~~U~~ R	560	1.0	500	560	180	SSL
95-48-7	2-Methylphenol	~~U~~ R	670	1.0	600	670	220	SSL
108-60-1	2,2'-Oxybis(1-chloropropane)	U	370	1.0	330	370	99	
98-86-2	Acetophenone	U	670	1.0	600	670	200	
621-64-7	N-Nitroso-di-n-propylamine	U	370	1.0	330	370	92	
65794-96-9	3&4-Methylphenol	~~U~~ R	670	1.0	600	670	210	SSL
67-72-1	Hexachloroethane	U	370	1.0	330	370	110	
98-95-3	Nitrobenzene	U	370	1.0	330	370	100	
78-59-1	Isophorone	U	370	1.0	330	370	83	
88-75-5	2-Nitrophenol	~~U~~ R	670	1.0	600	670	180	SSL
105-67-9	2,4-Dimethylphenol	~~U~~ R	560	1.0	500	560	180	SSL
111-91-1	Bis(2-Chloroethoxy)methane	U	370	1.0	330	370	110	
120-83-2	2,4-Dichlorophenol	~~U~~ R	560	1.0	500	560	170	SSL
106-47-8	4-Chloroaniline	~~U~~ R	560	1.0	500	560	130	MSL
105-60-2	Caprolactam	U	560	1.0	500	560	160	
59-50-7	4-Chloro-3-Methylphenol	~~U~~ R	560	1.0	500	560	180	SSL
88-06-2	2,4,6-Trichlorophenol	~~U~~ ↓	560	1.0	500	560	170	↓
95-95-4	2,4,5-Trichlorophenol	~~U~~ ↓	560	1.0	500	560	170	↓
91-58-7	2-Chloronaphthalene	U	370	1.0	330	370	96	
92-52-4	1,1'-Biphenyl	U	370	1.0	330	370	81	
88-74-4	2-Nitroaniline	U	560	1.0	500	560	83	
131-11-3	Dimethyl Phthalate	U	370	1.0	330	370	86	
606-20-2	2,6-Dinitrotoluene	U	370	1.0	330	370	88	
208-96-8	Acenaphthylene	U	370	1.0	330	370	78	
99-09-2	3-Nitroaniline	~~U~~ R	560	1.0	500	560	100	MSL
83-32-9	Acenaphthene	U	370	1.0	330	370	72	
51-28-5	2,4-Dinitrophenol	~~U~~ R	1300	1.0	1200	1300	420	SSL
132-64-9	Dibenzofuran	U	370	1.0	330	370	88	
100-02-7	4-Nitrophenol	~~U~~ R	1300	1.0	1200	1300	340	SSL
121-14-2	2,4-Dinitrotoluene	U	370	1.0	330	370	94	
84-66-2	Diethylphthalate	J	94	1.0	330	370	89	
7005-72-3	4-Chlorophenyl-phenylether	U	370	1.0	330	370	86	
100-01-6	4-Nitroaniline	~~U~~ UJ	560	1.0	500	560	150	MSL
534-52-1	4,6-Dinitro-2-Methylphenol	~~U~~ R	1300	1.0	1200	1300	370	SSL
86-30-6	N-Nitrosodiphenylamine	~~U~~ UJ	730	1.0	660	730	240	MSL
101-55-3	4-Bromophenyl-phenylether	U	370	1.0	330	370	94	
1912-24-9	Atrazine	U	370	1.0	330	370	100	
87-86-5	Pentachlorophenol	~~U~~ R	910	1.0	820	910	260	SSL
120-12-7	Anthracene	~~U~~ UJ	370	1.0	330	370	93	MSL
86-74-8	Carbazole	U	560	1.0	500	560	120	

ewo 3/4/09

3

KATAHDIN ANALYTICAL SERVICES
Report of Analytical Results

Client: CH2MHill
Project: TO-009 Lejeune
PO No:
Sample Date: 12/15/08
Received Date: 12/17/08
Extraction Date: 12/17/08
Analysis Date: 14-JAN-2009 14:21
Report Date: 01/22/2009
Matrix: SOIL
% Solids: 90.1

Lab ID: SB7239-5
Client ID: MR08-SS122-08D
SDG: TO9-18
Extracted by: AC
Extraction Method: SW846 3550
Analyst: JLP
Analysis Method: SW846 8270C
Lab Prep Batch: WG59198
Units: ug/Kgdrywt

Use reanalysis

CAS#	Compound	Flags	Results	DF	PQL	Adj.PQL	Adj.MDL
84-74-2	Di-n-butylphthalate	U	370	1.0	330	370	110
85-68-7	Butylbenzylphthalate	U	370	1.0	330	370	100
91-94-1	3,3'-Dichlorobenzidine	~~U~~ R	560	1.0	500	560	130 MSL
218-01-9	Chrysene	U	370	1.0	330	370	100
117-81-7	bis(2-Ethylhexyl)phthalate		380	1.0	330	370	110
117-84-0	Di-n-octylphthalate	U	370	1.0	330	370	230
367-12-4	2-Fluorophenol		* 6%				
13127-88-3	Phenol-D6		* 38%				
4165-60-0	Nitrobenzene-D5		67%				
321-60-8	2-Fluorobiphenyl		67%				
118-79-6	2,4,6-Tribromophenol		* 2%				
1718-51-0	Terphenyl-D14		94%				

R RE

MW 3/4/09

3RE

KATAHDIN ANALYTICAL SERVICES
Report of Analytical Results

Client: CH2MHill
Project: TO-009 Lejeune
PO No:
Sample Date: 12/15/08
Received Date: 12/17/08
Extraction Date: 01/16/09
Analysis Date: 18-JAN-2009 22:50
Report Date: 01/22/2009
Matrix: SOIL
% Solids: 90.1

Lab ID: SB7239-5RE
Client ID: MR08-SS122-08D
SDG: TO9-18
Extracted by: CB
Extraction Method: SW846 3550
Analyst: JLP
Analysis Method: SW846 8270C
Lab Prep Batch: WG59867
Units: ug/Kgdrywt

CAS#	Compound	Flags	Results	DF	PQL	Adj.PQL	Adj.MDL	
100-52-7	Benzaldehyde	U UJ	560	1.0	500	560	130	HT
108-95-2	Phenol	U	560	1.0	500	560	170	
111-44-4	Bis(2-Chloroethyl)ether	U	370	1.0	330	370	90	
95-57-8	2-Chlorophenol	U	560	1.0	500	560	180	
95-48-7	2-Methylphenol	U	670	1.0	600	670	220	
108-60-1	2,2'-Oxybis(1-chloropropane)	U	370	1.0	330	370	99	
98-86-2	Acetophenone	U UJ	670	1.0	600	670	200	BSL
621-64-7	N-Nitroso-di-n-propylamine	U UJ	370	1.0	330	370	92	HT
65794-96-9	3&4-Methylphenol	U	670	1.0	600	670	210	
67-72-1	Hexachloroethane	U	370	1.0	330	370	110	
98-95-3	Nitrobenzene	U	370	1.0	330	370	100	
78-59-1	Isophorone	U	370	1.0	330	370	83	
88-75-5	2-Nitrophenol	U	670	1.0	600	670	180	
105-67-9	2,4-Dimethylphenol	U	560	1.0	500	560	180	
111-91-1	Bis(2-Chloroethoxy)methane	U	370	1.0	330	370	110	
120-83-2	2,4-Dichlorophenol	U	560	1.0	500	560	170	
106-47-8	4-Chloroaniline	U	560	1.0	500	560	130	
105-60-2	Caprolactam	U	560	1.0	500	560	160	
59-50-7	4-Chloro-3-Methylphenol	U	560	1.0	500	560	180	
88-06-2	2,4,6-Trichlorophenol	U	560	1.0	500	560	170	
95-95-4	2,4,5-Trichlorophenol	U	560	1.0	500	560	170	
91-58-7	2-Chloronaphthalene	U	370	1.0	330	370	96	
92-52-4	1,1'-Biphenyl	U	370	1.0	330	370	81	
88-74-4	2-Nitroaniline	U	560	1.0	500	560	83	
131-11-3	Dimethyl Phthalate	U	370	1.0	330	370	86	
606-20-2	2,6-Dinitrotoluene	U	370	1.0	330	370	88	
208-96-8	Acenaphthylene	U	370	1.0	330	370	78	
99-09-2	3-Nitroaniline	U	560	1.0	500	560	100	
83-32-9	Acenaphthene	U	370	1.0	330	370	72	
51-28-5	2,4-Dinitrophenol	U	1300	1.0	1200	1300	420	
132-64-9	Dibenzofuran	U	370	1.0	330	370	88	
100-02-7	4-Nitrophenol	U	1300	1.0	1200	1300	340	
121-14-2	2,4-Dinitrotoluene	U	370	1.0	330	370	94	
84-66-2	Diethylphthalate	U	370	1.0	330	370	89	
7005-72-3	4-Chlorophenyl-phenylether	U	370	1.0	330	370	86	
100-01-6	4-Nitroaniline	U	560	1.0	500	560	150	
534-52-1	4,6-Dinitro-2-Methylphenol	U	1300	1.0	1200	1300	370	
86-30-6	N-Nitrosodiphenylamine	U	730	1.0	660	730	240	
101-55-3	4-Bromophenyl-phenylether	U	370	1.0	330	370	94	
1912-24-9	Atrazine	U	370	1.0	330	370	100	
87-86-5	Pentachlorophenol	U	910	1.0	820	910	260	
120-12-7	Anthracene	U	370	1.0	330	370	93	
86-74-8	Carbazole	U	560	1.0	500	560	120	

3/4/09

3RE

KATAHDIN ANALYTICAL SERVICES
Report of Analytical Results

Client: CH2MHill
Project: TO-009 Lejeune
PO No:
Sample Date: 12/15/08
Received Date: 12/17/08
Extraction Date: 01/16/09
Analysis Date: 18-JAN-2009 22:50
Report Date: 01/22/2009
Matrix: SOIL
% Solids: 90.1

Lab ID: SB7239-5RE
Client ID: MR08-SS122-08D
SDG: TO9-18
Extracted by: CB
Extraction Method: SW846 3550
Analyst: JLP
Analysis Method: SW846 8270C
Lab Prep Batch: WG59867
Units: ug/Kgdrywt

CAS#	Compound	Flags	Results	DF	PQL	Adj.PQL	Adj.MDL
84-74-2	Di-n-butylphthalate	U UJ	370	1.0	330	370	110 HT
85-68-7	Butylbenzylphthalate	U	370	1.0	330	370	100
91-94-1	3,3'-Dichlorobenzidine	U	560	1.0	500	560	130
218-01-9	Chrysene	U	370	1.0	330	370	100
117-81-7	bis(2-Ethylhexyl)phthalate	J J	340	1.0	330	370	110
117-84-0	Di-n-octylphthalate	U UJ	370	1.0	330	370	230
367-12-4	2-Fluorophenol		58%				
13127-88-3	Phenol-D6		66%				
4165-60-0	Nitrobenzene-D5		56%				
321-60-8	2-Fluorobiphenyl		70%				
118-79-6	2,4,6-Tribromophenol		56%				
1718-51-0	Terphenyl-D14		75%				

lew 3/4/09

4

KATAHDIN ANALYTICAL SERVICES
Report of Analytical Results

Client: CH2MHill
Project: TO-009 Lejeune
PO No:
Sample Date: 12/15/08
Received Date: 12/17/08
Extraction Date: 12/17/08
Analysis Date: 11-JAN-2009 14:43
Report Date: 01/22/2009
Matrix: SOIL
% Solids: 87.4

Lab ID: SB7239-7
Client ID: MR08-IS122-6.5-8
SDG: TO9-18
Extracted by: AC
Extraction Method: SW846 3550
Analyst: EKC
Analysis Method: SW846 8270C
Lab Prep Batch: WG59198
Units: ug/Kgdrywt

CAS#	Compound	Flags	Results	DF	PQL	Adj.PQL	Adj.MDL	
100-52-7	Benzaldehyde	~~U~~ UJ	570	1.0	500	570	140	CCH
108-95-2	Phenol	U	570	1.0	500	570	180	
111-44-4	Bis(2-Chloroethyl)ether	U	380	1.0	330	380	93	
95-57-8	2-Chlorophenol	U	570	1.0	500	570	190	
95-48-7	2-Methylphenol	~~U~~ UJ	690	1.0	600	690	230	MSL
108-60-1	2,2'-Oxybis(1-chloropropane)	U	380	1.0	330	380	100	
98-86-2	Acetophenone	U	690	1.0	600	690	200	
621-64-7	N-Nitroso-di-n-propylamine	U	380	1.0	330	380	95	
65794-96-9	3&4-Methylphenol	~~U~~ UJ	690	1.0	600	690	210	MSL
67-72-1	Hexachloroethane	U	380	1.0	330	380	110	
98-95-3	Nitrobenzene	U	380	1.0	330	380	100	
78-59-1	Isophorone	U	380	1.0	330	380	86	
88-75-5	2-Nitrophenol	U	690	1.0	600	690	190	
105-67-9	2,4-Dimethylphenol	~~U~~ UJ	570	1.0	500	570	190	BSL
111-91-1	Bis(2-Chloroethoxy)methane	U	380	1.0	330	380	110	
120-83-2	2,4-Dichlorophenol	U	570	1.0	500	570	170	
106-47-8	4-Chloroaniline	~~U~~ R	570	1.0	500	570	140	MSL
105-60-2	Caprolactam	U	570	1.0	500	570	160	
59-50-7	4-Chloro-3-Methylphenol	U	570	1.0	500	570	190	
88-06-2	2,4,6-Trichlorophenol	U	570	1.0	500	570	180	
95-95-4	2,4,5-Trichlorophenol	U	570	1.0	500	570	180	
91-58-7	2-Chloronaphthalene	U	380	1.0	330	380	100	
92-52-4	1,1'-Biphenyl	U	380	1.0	330	380	84	
88-74-4	2-Nitroaniline	U	570	1.0	500	570	86	
131-11-3	Dimethyl Phthalate	U	380	1.0	330	380	89	
606-20-2	2,6-Dinitrotoluene	U	380	1.0	330	380	90	
208-96-8	Acenaphthylene	U	380	1.0	330	380	80	
99-09-2	3-Nitroaniline	~~U~~ R	570	1.0	500	570	110	MSL
83-32-9	Acenaphthene	U	380	1.0	330	380	74	
51-28-5	2,4-Dinitrophenol	U	1400	1.0	1200	1400	430	
132-64-9	Dibenzofuran	U	380	1.0	330	380	90	
100-02-7	4-Nitrophenol	U	1400	1.0	1200	1400	350	
121-14-2	2,4-Dinitrotoluene	U	380	1.0	330	380	97	
84-66-2	Diethylphthalate	U	380	1.0	330	380	92	
7005-72-3	4-Chlorophenyl-phenylether	U	380	1.0	330	380	89	
100-01-6	4-Nitroaniline	~~U~~ UJ	570	1.0	500	570	150	MSL
534-52-1	4,6-Dinitro-2-Methylphenol	U	1400	1.0	1200	1400	380	
86-30-6	N-Nitrosodiphenylamine	~~U~~ UJ	760	1.0	660	760	250	MSL
101-55-3	4-Bromophenyl-phenylether	U	380	1.0	330	380	97	
1912-24-9	Atrazine	U	380	1.0	330	380	100	
87-86-5	Pentachlorophenol	U	940	1.0	820	940	270	
120-12-7	Anthracene	U	380	1.0	330	380	96	
86-74-8	Carbazole	U	570	1.0	500	570	130	

LCW 3/4/09

4

KATAHDIN ANALYTICAL SERVICES
Report of Analytical Results

Client: CH2MHill
Project: TO-009 Lejeune
PO No:
Sample Date: 12/15/08
Received Date: 12/17/08
Extraction Date: 12/17/08
Analysis Date: 11-JAN-2009 14:43
Report Date: 01/22/2009
Matrix: SOIL
% Solids: 87.4

Lab ID: SB7239-7
Client ID: MR08-IS122-6.5-8
SDG: TO9-18
Extracted by: AC
Extraction Method: SW846 3550
Analyst: EKC
Analysis Method: SW846 8270C
Lab Prep Batch: WG59198
Units: ug/Kgdrywt

CAS#	Compound	Flags	Results	DF	PQL	Adj.PQL	Adj.MDL	
84-74-2	Di-n-butylphthalate	U	380	1.0	330	380	120	
85-68-7	Butylbenzylphthalate	U	380	1.0	330	380	110	
91-94-1	3,3'-Dichlorobenzidine	~~U~~ R	570	1.0	500	570	130	MSL
218-01-9	Chrysene	U	380	1.0	330	380	110	
117-81-7	bis(2-Ethylhexyl)phthalate	U	380	1.0	330	380	110	
117-84-0	Di-n-octylphthalate	U	380	1.0	330	380	240	
367-12-4	2-Fluorophenol		40%					
13127-88-3	Phenol-D6		61%					
4165-60-0	Nitrobenzene-D5		75%					
321-60-8	2-Fluorobiphenyl		80%					
118-79-6	2,4,6-Tribromophenol		* 17%					
1718-51-0	Terphenyl-D14		86%					

Jes 3/4/09

5

KATAHDIN ANALYTICAL SERVICES
Report of Analytical Results

Client: CH2MHill
Project: TO-009 Lejeune
PO No:
Sample Date: 12/15/08
Received Date: 12/17/08
Extraction Date: 12/18/08
Analysis Date: 12-JAN-2009 14:05
Report Date: 01/22/2009
Matrix: SOIL
% Solids: 88.2

Lab ID: SB7239-9
Client ID: MR08-SS118-08D
SDG: TO9-18
Extracted by: AC
Extraction Method: SW846 3550
Analyst: JCG
Analysis Method: SW846 8270C
Lab Prep Batch: WG59198
Units: ug/Kgdrywt

Use reanalysis

CAS#	Compound	Flags	Results	DF	PQL	Adj.PQL	Adj.MDL	
100-52-7	Benzaldehyde	~~U~~ UJ	570	1.0	500	570	140	CCH
108-95-2	Phenol	~~U~~ R	570	1.0	500	570	180	SSL
111-44-4	Bis(2-Chloroethyl)ether	U	370	1.0	330	370	92	
95-57-8	2-Chlorophenol	~~U~~ R	570	1.0	500	570	180	SSL
95-48-7	2-Methylphenol	~~U~~ R	680	1.0	600	680	230	SSL
108-60-1	2,2'-Oxybis(1-chloropropane)	U	370	1.0	330	370	100	
98-86-2	Acetophenone	U	680	1.0	600	680	200	
621-64-7	N-Nitroso-di-n-propylamine	U	370	1.0	330	370	94	
65794-96-9	3&4-Methylphenol	~~U~~ R	680	1.0	600	680	210	SSL
67-72-1	Hexachloroethane	U	370	1.0	330	370	110	
98-95-3	Nitrobenzene	U	370	1.0	330	370	100	
78-59-1	Isophorone	U	370	1.0	330	370	85	
88-75-5	2-Nitrophenol	~~U~~ R	680	1.0	600	680	190	SSL
105-67-9	2,4-Dimethylphenol	~~U~~ R	570	1.0	500	570	190	SSL
111-91-1	Bis(2-Chloroethoxy)methane	U	370	1.0	330	370	110	
120-83-2	2,4-Dichlorophenol	~~U~~ R	570	1.0	500	570	170	SSL
106-47-8	4-Chloroaniline	U	570	1.0	500	570	130	
105-60-2	Caprolactam	U	570	1.0	500	570	160	
59-50-7	4-Chloro-3-Methylphenol	~~U~~ R	570	1.0	500	570	190	SSL
88-06-2	2,4,6-Trichlorophenol	~~U~~ ↓	570	1.0	500	570	180	↓
95-95-4	2,4,5-Trichlorophenol	~~U~~ ↓	570	1.0	500	570	180	↓
91-58-7	2-Chloronaphthalene	U	370	1.0	330	370	99	
92-52-4	1,1'-Biphenyl	U	370	1.0	330	370	83	
88-74-4	2-Nitroaniline	U	570	1.0	500	570	85	
131-11-3	Dimethyl Phthalate	U	370	1.0	330	370	88	
606-20-2	2,6-Dinitrotoluene	U	370	1.0	330	370	90	
208-96-8	Acenaphthylene	U	370	1.0	330	370	79	
99-09-2	3-Nitroaniline	U	570	1.0	500	570	110	
83-32-9	Acenaphthene	U	370	1.0	330	370	74	
51-28-5	2,4-Dinitrophenol	~~U~~ R	1400	1.0	1200	1400	430	SSL
132-64-9	Dibenzofuran	U	370	1.0	330	370	90	
100-02-7	4-Nitrophenol	~~U~~ R	1400	1.0	1200	1400	350	SSL
121-14-2	2,4-Dinitrotoluene	U	370	1.0	330	370	96	
84-66-2	Diethylphthalate	U	370	1.0	330	370	91	
7005-72-3	4-Chlorophenyl-phenylether	U	370	1.0	330	370	88	
100-01-6	4-Nitroaniline	U	570	1.0	500	570	150	
534-52-1	4,6-Dinitro-2-Methylphenol	~~U~~ R	1400	1.0	1200	1400	380	SSL
86-30-6	N-Nitrosodiphenylamine	U	750	1.0	660	750	250	
101-55-3	4-Bromophenyl-phenylether	U	370	1.0	330	370	96	
1912-24-9	Atrazine	U	370	1.0	330	370	100	
87-86-5	Pentachlorophenol	~~U~~ R	930	1.0	820	930	270	SSL
120-12-7	Anthracene	U	370	1.0	330	370	95	
86-74-8	Carbazole	U	570	1.0	500	570	120	

MW 3/4/09

5

KATAHDIN ANALYTICAL SERVICES
Report of Analytical Results

Client: CH2MHill
Project: TO-009 Lejeune
PO No:
Sample Date: 12/15/08
Received Date: 12/17/08
Extraction Date: 12/18/08
Analysis Date: 12-JAN-2009 14:05
Report Date: 01/22/2009
Matrix: SOIL
% Solids: 88.2

Lab ID: SB7239-9
Client ID: MR08-SS118-08D
SDG: TO9-18
Extracted by: AC
Extraction Method: SW846 3550
Analyst: JCG
Analysis Method: SW846 8270C
Lab Prep Batch: WG59198
Units: ug/Kgdrywt

Use reanalysis

CAS#	Compound	Flags	Results	DF	PQL	Adj.PQL	Adj.MDL
84-74-2	Di-n-butylphthalate	U	370	1.0	330	370	110
85-68-7	Butylbenzylphthalate	U	370	1.0	330	370	100
91-94-1	3,3'-Dichlorobenzidine	U	570	1.0	500	570	130
218-01-9	Chrysene	U	370	1.0	330	370	110
117-81-7	bis(2-Ethylhexyl)phthalate		430	1.0	330	370	110
117-84-0	Di-n-octylphthalate	U	370	1.0	330	370	240
367-12-4	2-Fluorophenol		* 19%				
13127-88-3	Phenol-D6		54%				
4165-60-0	Nitrobenzene-D5		81%				
321-60-8	2-Fluorobiphenyl		86%				
118-79-6	2,4,6-Tribromophenol		* 1%				
1718-51-0	Terphenyl-D14		110%				

RE

lw 3/4/09

5RE

KATAHDIN ANALYTICAL SERVICES
Report of Analytical Results

Client: CH2MHill
Project: TO-009 Lejeune
PO No:
Sample Date: 12/15/08
Received Date: 12/17/08
Extraction Date: 01/16/09
Analysis Date: 18-JAN-2009 23:32
Report Date: 01/22/2009
Matrix: SOIL
% Solids: 88.2

Lab ID: SB7239-9RE
Client ID: MR08-SS118-08D
SDG: TO9-18
Extracted by: CB
Extraction Method: SW846 3550
Analyst: JLP
Analysis Method: SW846 8270C
Lab Prep Batch: WG59867
Units: ug/Kgdrywt

CAS#	Compound	Flags	Results	DF	PQL	Adj.PQL	Adj.MDL	
100-52-7	Benzaldehyde	U UJ	570	1.0	500	570	140	HT
108-95-2	Phenol	U	570	1.0	500	570	180	
111-44-4	Bis(2-Chloroethyl)ether	U	370	1.0	330	370	92	
95-57-8	2-Chlorophenol	U	570	1.0	500	570	180	
95-48-7	2-Methylphenol	U	680	1.0	600	680	230	
108-60-1	2,2'-Oxybis(1-chloropropane)	U	370	1.0	330	370	100	
98-86-2	Acetophenone	~~U~~ UJ	680	1.0	600	680	200	BSL
621-64-7	N-Nitroso-di-n-propylamine	U UJ	370	1.0	330	370	94	HT
65794-96-9	3&4-Methylphenol	U	680	1.0	600	680	210	
67-72-1	Hexachloroethane	U	370	1.0	330	370	110	
98-95-3	Nitrobenzene	U	370	1.0	330	370	100	
78-59-1	Isophorone	U	370	1.0	330	370	85	
88-75-5	2-Nitrophenol	U	680	1.0	600	680	190	
105-67-9	2,4-Dimethylphenol	U	570	1.0	500	570	190	
111-91-1	Bis(2-Chloroethoxy)methane	U	370	1.0	330	370	110	
120-83-2	2,4-Dichlorophenol	U	570	1.0	500	570	170	
106-47-8	4-Chloroaniline	U	570	1.0	500	570	130	
105-60-2	Caprolactam	U	570	1.0	500	570	160	
59-50-7	4-Chloro-3-Methylphenol	U	570	1.0	500	570	190	
88-06-2	2,4,6-Trichlorophenol	U	570	1.0	500	570	180	
95-95-4	2,4,5-Trichlorophenol	U	570	1.0	500	570	180	
91-58-7	2-Chloronaphthalene	U	370	1.0	330	370	99	
92-52-4	1,1'-Biphenyl	U	370	1.0	330	370	83	
88-74-4	2-Nitroaniline	U	570	1.0	500	570	85	
131-11-3	Dimethyl Phthalate	U	370	1.0	330	370	88	
606-20-2	2,6-Dinitrotoluene	U	370	1.0	330	370	90	
208-96-8	Acenaphthylene	U	370	1.0	330	370	79	
99-09-2	3-Nitroaniline	U	570	1.0	500	570	110	
83-32-9	Acenaphthene	U	370	1.0	330	370	74	
51-28-5	2,4-Dinitrophenol	U	1400	1.0	1200	1400	430	
132-64-9	Dibenzofuran	U	370	1.0	330	370	90	
100-02-7	4-Nitrophenol	U	1400	1.0	1200	1400	350	
121-14-2	2,4-Dinitrotoluene	U	370	1.0	330	370	96	
84-66-2	Diethylphthalate	U	370	1.0	330	370	91	
7005-72-3	4-Chlorophenyl-phenylether	U	370	1.0	330	370	88	
100-01-6	4-Nitroaniline	U	570	1.0	500	570	150	
534-52-1	4,6-Dinitro-2-Methylphenol	U	1400	1.0	1200	1400	380	
86-30-6	N-Nitrosodiphenylamine	U	750	1.0	660	750	250	
101-55-3	4-Bromophenyl-phenylether	U	370	1.0	330	370	96	
1912-24-9	Atrazine	U	370	1.0	330	370	100	
87-86-5	Pentachlorophenol	U	930	1.0	820	930	270	
120-12-7	Anthracene	U	370	1.0	330	370	95	
86-74-8	Carbazole	U	570	1.0	500	570	120	

LW 3/4/09

5RE

KATAHDIN ANALYTICAL SERVICES
Report of Analytical Results

Client: CH2MHill
Project: TO-009 Lejeune
PO No:
Sample Date: 12/15/08
Received Date: 12/17/08
Extraction Date: 01/16/09
Analysis Date: 18-JAN-2009 23:32
Report Date: 01/22/2009
Matrix: SOIL
% Solids: 88.2

Lab ID: SB7239-9RE
Client ID: MR08-SS118-08D
SDG: TO9-18
Extracted by: CB
Extraction Method: SW846 3550
Analyst: JLP
Analysis Method: SW846 8270C
Lab Prep Batch: WG59867
Units: ug/Kgdrywt

CAS#	Compound	Flags	Results	DF	PQL	Adj.PQL	Adj.MDL
84-74-2	Di-n-butylphthalate	U UJ	370	1.0	330	370	110 HT
85-68-7	Butylbenzylphthalate	U	370	1.0	330	370	100
91-94-1	3,3'-Dichlorobenzidine	U	570	1.0	500	570	130
218-01-9	Chrysene	U	370	1.0	330	370	110
117-81-7	bis(2-Ethylhexyl)phthalate	J J	320	1.0	330	370	110
117-84-0	Di-n-octylphthalate	U UJ	370	1.0	330	370	240
367-12-4	2-Fluorophenol		50%				
13127-88-3	Phenol-D6		46%				
4165-60-0	Nitrobenzene-D5		51%				
321-60-8	2-Fluorobiphenyl		61%				
118-79-6	2,4,6-Tribromophenol		72%				
1718-51-0	Terphenyl-D14		83%				

lw 3/4/09

6

KATAHDIN ANALYTICAL SERVICES
Report of Analytical Results

Client: CH2MHill
Project: TO-009 Lejeune
PO No:
Sample Date: 12/15/08
Received Date: 12/17/08
Extraction Date: 12/18/08
Analysis Date: 11-JAN-2009 15:25
Report Date: 01/22/2009
Matrix: SOIL
% Solids: 88.6

Lab ID: SB7239-11
Client ID: MR08-IS118-08D
SDG: TO9-18
Extracted by: AC
Extraction Method: SW846 3550
Analyst: EKC
Analysis Method: SW846 8270C
Lab Prep Batch: WG59198
Units: ug/Kgdrywt

Use reanalysis

CAS#	Compound	Flags	Results	DF	PQL	Adj.PQL	Adj.MDL	
100-52-7	Benzaldehyde	~~U~~ WJ	560	1.0	500	560	140	CCH
108-95-2	Phenol	~~U~~ R	560	1.0	500	560	180	SSL
111-44-4	Bis(2-Chloroethyl)ether	U	370	1.0	330	370	91	
95-57-8	2-Chlorophenol	~~U~~ R	560	1.0	500	560	180	SSL
95-48-7	2-Methylphenol	~~U~~ R	680	1.0	600	680	220	SSL
108-60-1	2,2'-Oxybis(1-chloropropane)	U	370	1.0	330	370	100	
98-86-2	Acetophenone	U	680	1.0	600	680	200	
621-64-7	N-Nitroso-di-n-propylamine	U	370	1.0	330	370	94	
65794-96-9	3&4-Methylphenol	~~U~~ R	680	1.0	600	680	210	SSL
67-72-1	Hexachloroethane	U	370	1.0	330	370	110	
98-95-3	Nitrobenzene	U	370	1.0	330	370	100	
78-59-1	Isophorone	U	370	1.0	330	370	85	
88-75-5	2-Nitrophenol	~~U~~ R	680	1.0	600	680	190	SSL
105-67-9	2,4-Dimethylphenol	~~U~~ R	560	1.0	500	560	190	SSL
111-91-1	Bis(2-Chloroethoxy)methane	U	370	1.0	330	370	110	
120-83-2	2,4-Dichlorophenol	~~U~~ R	560	1.0	500	560	170	SSL
106-47-8	4-Chloroaniline	U	560	1.0	500	560	130	
105-60-2	Caprolactam	U	560	1.0	500	560	160	
59-50-7	4-Chloro-3-Methylphenol	~~U~~ R	560	1.0	500	560	190	SSL
88-06-2	2,4,6-Trichlorophenol	~~U~~ ↓	560	1.0	500	560	170	↓
95-95-4	2,4,5-Trichlorophenol	U	560	1.0	500	560	170	
91-58-7	2-Chloronaphthalene	U	370	1.0	330	370	98	
92-52-4	1,1'-Biphenyl	U	370	1.0	330	370	82	
88-74-4	2-Nitroaniline	U	560	1.0	500	560	85	
131-11-3	Dimethyl Phthalate	U	370	1.0	330	370	88	
606-20-2	2,6-Dinitrotoluene	U	370	1.0	330	370	89	
208-96-8	Acenaphthylene	U	370	1.0	330	370	79	
99-09-2	3-Nitroaniline	U	560	1.0	500	560	110	
83-32-9	Acenaphthene	U	370	1.0	330	370	73	
51-28-5	2,4-Dinitrophenol	~~U~~ R	1400	1.0	1200	1400	420	SSL
132-64-9	Dibenzofuran	U	370	1.0	330	370	89	
100-02-7	4-Nitrophenol	~~U~~ R	1400	1.0	1200	1400	350	SSL
121-14-2	2,4-Dinitrotoluene	U	370	1.0	330	370	96	
84-66-2	Diethylphthalate	U	370	1.0	330	370	90	
7005-72-3	4-Chlorophenyl-phenylether	U	370	1.0	330	370	88	
100-01-6	4-Nitroaniline	U	560	1.0	500	560	150	
534-52-1	4,6-Dinitro-2-Methylphenol	~~U~~ R	1400	1.0	1200	1400	380	SSL
86-30-6	N-Nitrosodiphenylamine	U	740	1.0	660	740	250	
101-55-3	4-Bromophenyl-phenylether	U	370	1.0	330	370	96	
1912-24-9	Atrazine	U	370	1.0	330	370	100	
87-86-5	Pentachlorophenol	~~U~~ R	920	1.0	820	920	270	SSL
120-12-7	Anthracene	U	370	1.0	330	370	95	
86-74-8	Carbazole	U	560	1.0	500	560	120	

RCW 3/4/09

6

KATAHDIN ANALYTICAL SERVICES
Report of Analytical Results

Client: CH2MHill
Project: TO-009 Lejeune
PO No:
Sample Date: 12/15/08
Received Date: 12/17/08
Extraction Date: 12/18/08
Analysis Date: 11-JAN-2009 15:25
Report Date: 01/22/2009
Matrix: SOIL
% Solids: 88.6

Lab ID: SB7239-11
Client ID: MR08-IS118-08D
SDG: TO9-18
Extracted by: AC
Extraction Method: SW846 3550
Analyst: EKC
Analysis Method: SW846 8270C
Lab Prep Batch: WG59198
Units: ug/Kgdrywt

Use reanalysis

CAS#	Compound	Flags	Results	DF	PQL	Adj.PQL	Adj.MDL
84-74-2	Di-n-butylphthalate	U	370	1.0	330	370	110
85-68-7	Butylbenzylphthalate	U	370	1.0	330	370	100
91-94-1	3,3'-Dichlorobenzidine	~~U~~ UJ	560	1.0	500	560	130 CCH
218-01-9	Chrysene	U	370	1.0	330	370	110
117-81-7	bis(2-Ethylhexyl)phthalate		740	1.0	330	370	110
117-84-0	Di-n-octylphthalate	U	370	1.0	330	370	240
367-12-4	2-Fluorophenol		* 30%				
13127-88-3	Phenol-D6		61%				
4165-60-0	Nitrobenzene-D5		82%				
321-60-8	2-Fluorobiphenyl		90%				
118-79-6	2,4,6-Tribromophenol		* 8%				
1718-51-0	Terphenyl-D14		94%				

R RC

MW 3/4/09

6RE

KATAHDIN ANALYTICAL SERVICES
Report of Analytical Results

Client: CH2MHill
Project: TO-009 Lejeune
PO No:
Sample Date: 12/15/08
Received Date: 12/17/08
Extraction Date: 01/16/09
Analysis Date: 18-JAN-2009 20:44
Report Date: 01/22/2009
Matrix: SOIL
% Solids: 88.6

Lab ID: SB7239-11RE
Client ID: MR08-IS118-08D
SDG: TO9-18
Extracted by: CB
Extraction Method: SW846 3550
Analyst: JLP
Analysis Method: SW846 8270C
Lab Prep Batch: WG59867
Units: ug/Kgdrywt

CAS#	Compound	Flags		Results	DF	PQL	Adj.PQL	Adj.MDL	
100-52-7	Benzaldehyde	U	UJ	560	1.0	500	560	140	HT
108-95-2	Phenol	U		560	1.0	500	560	180	
111-44-4	Bis(2-Chloroethyl)ether	U		370	1.0	330	370	91	
95-57-8	2-Chlorophenol	U		560	1.0	500	560	180	
95-48-7	2-Methylphenol	U		680	1.0	600	680	220	
108-60-1	2,2'-Oxybis(1-chloropropane)	U		370	1.0	330	370	100	
98-86-2	Acetophenone	U	UJ	680	1.0	600	680	200	BSL
621-64-7	N-Nitroso-di-n-propylamine	U	UJ	370	1.0	330	370	94	HT
65794-96-9	3&4-Methylphenol	U		680	1.0	600	680	210	
67-72-1	Hexachloroethane	U		370	1.0	330	370	110	
98-95-3	Nitrobenzene	U		370	1.0	330	370	100	
78-59-1	Isophorone	U		370	1.0	330	370	85	
88-75-5	2-Nitrophenol	U		680	1.0	600	680	190	
105-67-9	2,4-Dimethylphenol	U		560	1.0	500	560	190	
111-91-1	Bis(2-Chloroethoxy)methane	U		370	1.0	330	370	110	
120-83-2	2,4-Dichlorophenol	U		560	1.0	500	560	170	
106-47-8	4-Chloroaniline	U		560	1.0	500	560	130	
105-60-2	Caprolactam	U		560	1.0	500	560	160	
59-50-7	4-Chloro-3-Methylphenol	U		560	1.0	500	560	190	
88-06-2	2,4,6-Trichlorophenol	U		560	1.0	500	560	170	
95-95-4	2,4,5-Trichlorophenol	U		560	1.0	500	560	170	
91-58-7	2-Chloronaphthalene	U		370	1.0	330	370	98	
92-52-4	1,1'-Biphenyl	U		370	1.0	330	370	82	
88-74-4	2-Nitroaniline	U		560	1.0	500	560	85	
131-11-3	Dimethyl Phthalate	U		370	1.0	330	370	88	
606-20-2	2,6-Dinitrotoluene	U		370	1.0	330	370	89	
208-96-8	Acenaphthylene	U		370	1.0	330	370	79	
99-09-2	3-Nitroaniline	U		560	1.0	500	560	110	
83-32-9	Acenaphthene	U		370	1.0	330	370	73	
51-28-5	2,4-Dinitrophenol	U		1400	1.0	1200	1400	420	
132-64-9	Dibenzofuran	U		370	1.0	330	370	89	
100-02-7	4-Nitrophenol	U		1400	1.0	1200	1400	350	
121-14-2	2,4-Dinitrotoluene	U		370	1.0	330	370	96	
84-66-2	Diethylphthalate	U		370	1.0	330	370	90	
7005-72-3	4-Chlorophenyl-phenylether	U		370	1.0	330	370	88	
100-01-6	4-Nitroaniline	U		560	1.0	500	560	150	
534-52-1	4,6-Dinitro-2-Methylphenol	U		1400	1.0	1200	1400	380	
86-30-6	N-Nitrosodiphenylamine	U		740	1.0	660	740	250	
101-55-3	4-Bromophenyl-phenylether	U		370	1.0	330	370	96	
1912-24-9	Atrazine	U		370	1.0	330	370	100	
87-86-5	Pentachlorophenol	U		920	1.0	820	920	270	
120-12-7	Anthracene	U		370	1.0	330	370	95	
86-74-8	Carbazole	U		560	1.0	500	560	120	

KW
3/4/09

6RE

KATAHDIN ANALYTICAL SERVICES
Report of Analytical Results

Client: CH2MHill
Project: TO-009 Lejeune
PO No:
Sample Date: 12/15/08
Received Date: 12/17/08
Extraction Date: 01/16/09
Analysis Date: 18-JAN-2009 20:44
Report Date: 01/22/2009
Matrix: SOIL
% Solids: 88.6

Lab ID: SB7239-11RE
Client ID: MR08-IS118-08D
SDG: TO9-18
Extracted by: CB
Extraction Method: SW846 3550
Analyst: JLP
Analysis Method: SW846 8270C
Lab Prep Batch: WG59867
Units: ug/Kgdrywt

CAS#	Compound	Flags	Results	DF	PQL	Adj.PQL	Adj.MDL	
84-74-2	Di-n-butylphthalate	~~U~~ UJ	370	1.0	330	370	110	HT
85-68-7	Butylbenzylphthalate	~~U~~	370	1.0	330	370	100	
91-94-1	3,3'-Dichlorobenzidine	~~U~~	560	1.0	500	560	130	
218-01-9	Chrysene	~~U~~	370	1.0	330	370	110	
117-81-7	bis(2-Ethylhexyl)phthalate	J	690	1.0	330	370	110	
117-84-0	Di-n-octylphthalate	~~U~~ UJ	370	1.0	330	370	240	
367-12-4	2-Fluorophenol		42%					
13127-88-3	Phenol-D6		* 38%					
4165-60-0	Nitrobenzene-D5		45%					
321-60-8	2-Fluorobiphenyl		54%					
118-79-6	2,4,6-Tribromophenol		59%					
1718-51-0	Terphenyl-D14		72%					

MJ 3/4/09

7

KATAHDIN ANALYTICAL SERVICES
Report of Analytical Results

Client: CH2MHill
Project: TO-009 Lejeune
PO No:
Sample Date: 12/16/08
Received Date: 12/17/08
Extraction Date: 12/18/08
Analysis Date: 12-JAN-2009 16:56
Report Date: 01/22/2009
Matrix: SOIL
% Solids: 91.1

Lab ID: SB7239-13
Client ID: MR08-SS127-08D
SDG: TO9-18
Extracted by: AC
Extraction Method: SW846 3550
Analyst: JCG
Analysis Method: SW846 8270C
Lab Prep Batch: WG59198
Units: ug/Kgdrywt

CAS#	Compound	Flags	Results	DF	PQL	Adj.PQL	Adj.MDL	
100-52-7	Benzaldehyde	~~U~~ UJ	550	1.0	500	550	130	CCH
108-95-2	Phenol	U	550	1.0	500	550	170	
111-44-4	Bis(2-Chloroethyl)ether	U	360	1.0	330	360	89	
95-57-8	2-Chlorophenol	U	550	1.0	500	550	180	
95-48-7	2-Methylphenol	U	660	1.0	600	660	220	
108-60-1	2,2'-Oxybis(1-chloropropane)	U	360	1.0	330	360	98	
98-86-2	Acetophenone	U	660	1.0	600	660	200	
621-64-7	N-Nitroso-di-n-propylamine	U	360	1.0	330	360	91	
65794-96-9	3&4-Methylphenol	U	660	1.0	600	660	200	
67-72-1	Hexachloroethane	U	360	1.0	330	360	100	
98-95-3	Nitrobenzene	U	360	1.0	330	360	100	
78-59-1	Isophorone	U	360	1.0	330	360	82	
88-75-5	2-Nitrophenol	U	660	1.0	600	660	180	
105-67-9	2,4-Dimethylphenol	~~U~~ UJ	550	1.0	500	550	180	BSL
111-91-1	Bis(2-Chloroethoxy)methane	U	360	1.0	330	360	100	
120-83-2	2,4-Dichlorophenol	U	550	1.0	500	550	160	
106-47-8	4-Chloroaniline	U	550	1.0	500	550	130	
105-60-2	Caprolactam	U	550	1.0	500	550	160	
59-50-7	4-Chloro-3-Methylphenol	U	550	1.0	500	550	180	
88-06-2	2,4,6-Trichlorophenol	U	550	1.0	500	550	170	
95-95-4	2,4,5-Trichlorophenol	U	550	1.0	500	550	170	
91-58-7	2-Chloronaphthalene	U	360	1.0	330	360	96	
92-52-4	1,1'-Biphenyl	U	360	1.0	330	360	80	
88-74-4	2-Nitroaniline	U	550	1.0	500	550	82	
131-11-3	Dimethyl Phthalate	U	360	1.0	330	360	86	
606-20-2	2,6-Dinitrotoluene	U	360	1.0	330	360	87	
208-96-8	Acenaphthylene	U	360	1.0	330	360	77	
99-09-2	3-Nitroaniline	U	550	1.0	500	550	100	
83-32-9	Acenaphthene	U	360	1.0	330	360	71	
51-28-5	2,4-Dinitrophenol	U	1300	1.0	1200	1300	410	
132-64-9	Dibenzofuran	U	360	1.0	330	360	87	
100-02-7	4-Nitrophenol	U	1300	1.0	1200	1300	340	
121-14-2	2,4-Dinitrotoluene	U	360	1.0	330	360	93	
84-66-2	Diethylphthalate	U	360	1.0	330	360	88	
7005-72-3	4-Chlorophenyl-phenylether	U	360	1.0	330	360	86	
100-01-6	4-Nitroaniline	U	550	1.0	500	550	150	
534-52-1	4,6-Dinitro-2-Methylphenol	U	1300	1.0	1200	1300	370	
86-30-6	N-Nitrosodiphenylamine	U	720	1.0	660	720	240	
101-55-3	4-Bromophenyl-phenylether	U	360	1.0	330	360	93	
1912-24-9	Atrazine	U	360	1.0	330	360	100	
87-86-5	Pentachlorophenol	U	900	1.0	820	900	260	
120-12-7	Anthracene	U	360	1.0	330	360	92	
86-74-8	Carbazole	U	550	1.0	500	550	120	

lw 3/4/09

KATAHDIN ANALYTICAL SERVICES
Report of Analytical Results

Client: CH2MHill
Project: TO-009 Lejeune
PO No:
Sample Date: 12/16/08
Received Date: 12/17/08
Extraction Date: 12/18/08
Analysis Date: 12-JAN-2009 16:56
Report Date: 01/22/2009
Matrix: SOIL
% Solids: 91.1

Lab ID: SB7239-13
Client ID: MR08-SS127-08D
SDG: TO9-18
Extracted by: AC
Extraction Method: SW846 3550
Analyst: JCG
Analysis Method: SW846 8270C
Lab Prep Batch: WG59198
Units: ug/Kgdrywt

CAS#	Compound	Flags	Results	DF	PQL	Adj.PQL	Adj.MDL
84-74-2	Di-n-butylphthalate	U	360	1.0	330	360	110
85-68-7	Butylbenzylphthalate	U	360	1.0	330	360	100
91-94-1	3,3'-Dichlorobenzidine	U	550	1.0	500	550	120
218-01-9	Chrysene	U	360	1.0	330	360	100
117-81-7	bis(2-Ethylhexyl)phthalate	U	360	1.0	330	360	110
117-84-0	Di-n-octylphthalate	U	360	1.0	330	360	230
367-12-4	2-Fluorophenol		42%				
13127-88-3	Phenol-D6		66%				
4165-60-0	Nitrobenzene-D5		75%				
321-60-8	2-Fluorobiphenyl		86%				
118-79-6	2,4,6-Tribromophenol		* 17%				
1718-51-0	Terphenyl-D14		112%				

lw
3/4/09

8

KATAHDIN ANALYTICAL SERVICES
Report of Analytical Results

Client: CH2MHill
Project: TO-009 Lejeune
PO No:
Sample Date: 12/16/08
Received Date: 12/17/08
Extraction Date: 12/18/08
Analysis Date: 12-JAN-2009 15:30
Report Date: 01/22/2009
Matrix: SOIL
% Solids: 86.4

Lab ID: SB7239-15
Client ID: MR08-IS127-1.5-3
SDG: TO9-18
Extracted by: AC
Extraction Method: SW846 3550
Analyst: JCG
Analysis Method: SW846 8270C
Lab Prep Batch: WG59198
Units: ug/Kgdrywt

Use reanalysis

CAS#	Compound	Flags	Results	DF	PQL	Adj.PQL	Adj.MDL	
100-52-7	Benzaldehyde	~~U~~ J	240	1.0	500	580	140	CCH
108-95-2	Phenol	~~U~~ R	580	1.0	500	580	180	SSL
111-44-4	Bis(2-Chloroethyl)ether	U	380	1.0	330	380	94	
95-57-8	2-Chlorophenol	~~U~~ R	580	1.0	500	580	190	SSL
95-48-7	2-Methylphenol	~~U~~ R	690	1.0	600	690	230	SSL
108-60-1	2,2'-Oxybis(1-chloropropane)	U	380	1.0	330	380	100	
98-86-2	Acetophenone	U	690	1.0	600	690	200	
621-64-7	N-Nitroso-di-n-propylamine	U	380	1.0	330	380	96	
65794-96-9	3&4-Methylphenol	~~U~~ R	690	1.0	600	690	220	SSL
67-72-1	Hexachloroethane	U	380	1.0	330	380	110	
98-95-3	Nitrobenzene	U	380	1.0	330	380	100	
78-59-1	Isophorone	U	380	1.0	330	380	87	
88-75-5	2-Nitrophenol	~~U~~ R	690	1.0	600	690	190	SSL
105-67-9	2,4-Dimethylphenol	~~U~~ R	580	1.0	500	580	190	SSL
111-91-1	Bis(2-Chloroethoxy)methane	U	380	1.0	330	380	110	
120-83-2	2,4-Dichlorophenol	~~U~~ R	580	1.0	500	580	170	SSL
106-47-8	4-Chloroaniline	U	580	1.0	500	580	140	
105-60-2	Caprolactam	U	580	1.0	500	580	170	
59-50-7	4-Chloro-3-Methylphenol	~~U~~ R	580	1.0	500	580	190	SSL
88-06-2	2,4,6-Trichlorophenol	~~U~~ ↓	580	1.0	500	580	180	↓
95-95-4	2,4,5-Trichlorophenol	~~U~~ ↓	580	1.0	500	580	180	
91-58-7	2-Chloronaphthalene	U	380	1.0	330	380	100	
92-52-4	1,1'-Biphenyl	U	380	1.0	330	380	84	
88-74-4	2-Nitroaniline	U	580	1.0	500	580	87	
131-11-3	Dimethyl Phthalate	U	380	1.0	330	380	90	
606-20-2	2,6-Dinitrotoluene	U	380	1.0	330	380	91	
208-96-8	Acenaphthylene	U	380	1.0	330	380	81	
99-09-2	3-Nitroaniline	U	580	1.0	500	580	110	
83-32-9	Acenaphthene	U	380	1.0	330	380	75	
51-28-5	2,4-Dinitrophenol	~~U~~ R	1400	1.0	1200	1400	440	SSL
132-64-9	Dibenzofuran	U	380	1.0	330	380	91	
100-02-7	4-Nitrophenol	~~U~~ R	1400	1.0	1200	1400	360	SSL
121-14-2	2,4-Dinitrotoluene	U	380	1.0	330	380	98	
84-66-2	Diethylphthalate	U	380	1.0	330	380	92	
7005-72-3	4-Chlorophenyl-phenylether	U	380	1.0	330	380	90	
100-01-6	4-Nitroaniline	U	580	1.0	500	580	160	
534-52-1	4,6-Dinitro-2-Methylphenol	~~U~~ R	1400	1.0	1200	1400	390	SSL
86-30-6	N-Nitrosodiphenylamine	U	760	1.0	660	760	250	
101-55-3	4-Bromophenyl-phenylether	U	380	1.0	330	380	98	
1912-24-9	Atrazine	U	380	1.0	330	380	100	
87-86-5	Pentachlorophenol	~~U~~ R	950	1.0	820	950	270	SSL
120-12-7	Anthracene	U	380	1.0	330	380	97	
86-74-8	Carbazole	U	580	1.0	500	580	130	

MW 3/4/09

8

KATAHDIN ANALYTICAL SERVICES
Report of Analytical Results

Client: CH2MHill
Project: TO-009 Lejeune
PO No:
Sample Date: 12/16/08
Received Date: 12/17/08
Extraction Date: 12/18/08
Analysis Date: 12-JAN-2009 15:30
Report Date: 01/22/2009
Matrix: SOIL
% Solids: 86.4

Lab ID: SB7239-15
Client ID: MR08-IS127-1.5-3
SDG: TO9-18
Extracted by: AC
Extraction Method: SW846 3550
Analyst: JCG
Analysis Method: SW846 8270C
Lab Prep Batch: WG59198
Units: ug/Kgdrywt

Use reanalysis

CAS#	Compound	Flags	Results	DF	PQL	Adj.PQL	Adj.MDL
84-74-2	Di-n-butylphthalate	U	380	1.0	330	380	120
85-68-7	Butylbenzylphthalate	U	380	1.0	330	380	110
91-94-1	3,3'-Dichlorobenzidine	U	580	1.0	500	580	130
218-01-9	Chrysene	U	380	1.0	330	380	110
117-81-7	bis(2-Ethylhexyl)phthalate	J	340	1.0	330	380	110
117-84-0	Di-n-octylphthalate	U	380	1.0	330	380	240
367-12-4	2-Fluorophenol		* 18%				
13127-88-3	Phenol-D6		50%				
4165-60-0	Nitrobenzene-D5		74%				
321-60-8	2-Fluorobiphenyl		80%				
118-79-6	2,4,6-Tribromophenol		* 2%				
1718-51-0	Terphenyl-D14		112%				

Page 02 of 02 U4803.D

RE

lw 3/4/09

8RE

KATAHDIN ANALYTICAL SERVICES
Report of Analytical Results

Client: CH2MHill
Project: TO-009 Lejeune
PO No:
Sample Date: 12/16/08
Received Date: 12/17/08
Extraction Date: 01/16/09
Analysis Date: 19-JAN-2009 00:14
Report Date: 01/22/2009
Matrix: SOIL
% Solids: 86.4

Lab ID: SB7239-15RE
Client ID: MR08-IS127-1.5-3
SDG: TO9-18
Extracted by: CB
Extraction Method: SW846 3550
Analyst: JLP
Analysis Method: SW846 8270C
Lab Prep Batch: WG59867
Units: ug/Kgdrywt

CAS#	Compound	Flags	Results	DF	PQL	Adj.PQL	Adj.MDL	
100-52-7	Benzaldehyde	U UJ	580	1.0	500	580	140	HT
108-95-2	Phenol	U	580	1.0	500	580	180	
111-44-4	Bis(2-Chloroethyl)ether	U	380	1.0	330	380	94	
95-57-8	2-Chlorophenol	U	580	1.0	500	580	190	
95-48-7	2-Methylphenol	U	690	1.0	600	690	230	
108-60-1	2,2'-Oxybis(1-chloropropane)	U	380	1.0	330	380	100	
98-86-2	Acetophenone	U UJ	690	1.0	600	690	200	BSL
621-64-7	N-Nitroso-di-n-propylamine	U UJ	380	1.0	330	380	96	HT
65794-96-9	3&4-Methylphenol	U	690	1.0	600	690	220	
67-72-1	Hexachloroethane	U	380	1.0	330	380	110	
98-95-3	Nitrobenzene	U	380	1.0	330	380	100	
78-59-1	Isophorone	U	380	1.0	330	380	87	
88-75-5	2-Nitrophenol	U	690	1.0	600	690	190	
105-67-9	2,4-Dimethylphenol	U	580	1.0	500	580	190	
111-91-1	Bis(2-Chloroethoxy)methane	U	380	1.0	330	380	110	
120-83-2	2,4-Dichlorophenol	U	580	1.0	500	580	170	
106-47-8	4-Chloroaniline	U	580	1.0	500	580	140	
105-60-2	Caprolactam	U	580	1.0	500	580	170	
59-50-7	4-Chloro-3-Methylphenol	U	580	1.0	500	580	190	
88-06-2	2,4,6-Trichlorophenol	U	580	1.0	500	580	180	
95-95-4	2,4,5-Trichlorophenol	U	580	1.0	500	580	180	
91-58-7	2-Chloronaphthalene	U	380	1.0	330	380	100	
92-52-4	1,1'-Biphenyl	U	380	1.0	330	380	84	
88-74-4	2-Nitroaniline	U	580	1.0	500	580	87	
131-11-3	Dimethyl Phthalate	U	380	1.0	330	380	90	
606-20-2	2,6-Dinitrotoluene	U	380	1.0	330	380	91	
208-96-8	Acenaphthylene	U	380	1.0	330	380	81	
99-09-2	3-Nitroaniline	U	580	1.0	500	580	110	
83-32-9	Acenaphthene	U	380	1.0	330	380	75	
51-28-5	2,4-Dinitrophenol	U	1400	1.0	1200	1400	440	
132-64-9	Dibenzofuran	U	380	1.0	330	380	91	
100-02-7	4-Nitrophenol	U	1400	1.0	1200	1400	360	
121-14-2	2,4-Dinitrotoluene	U	380	1.0	330	380	98	
84-66-2	Diethylphthalate	U	380	1.0	330	380	92	
7005-72-3	4-Chlorophenyl-phenylether	U	380	1.0	330	380	90	
100-01-6	4-Nitroaniline	U	580	1.0	500	580	160	
534-52-1	4,6-Dinitro-2-Methylphenol	U	1400	1.0	1200	1400	390	
86-30-6	N-Nitrosodiphenylamine	U	760	1.0	660	760	250	
101-55-3	4-Bromophenyl-phenylether	U	380	1.0	330	380	98	
1912-24-9	Atrazine	U	380	1.0	330	380	100	
87-86-5	Pentachlorophenol	U	950	1.0	820	950	270	
120-12-7	Anthracene	U	380	1.0	330	380	97	
86-74-8	Carbazole	U	580	1.0	500	580	130	

LW 3/4/09

8RE

KATAHDIN ANALYTICAL SERVICES
Report of Analytical Results

Client: CH2MHill
Project: TO-009 Lejeune
PO No:
Sample Date: 12/16/08
Received Date: 12/17/08
Extraction Date: 01/16/09
Analysis Date: 19-JAN-2009 00:14
Report Date: 01/22/2009
Matrix: SOIL
% Solids: 86.4

Lab ID: SB7239-15RE
Client ID: MR08-IS127-1.5-3
SDG: TO9-18
Extracted by: CB
Extraction Method: SW846 3550
Analyst: JLP
Analysis Method: SW846 8270C
Lab Prep Batch: WG59867
Units: ug/Kgdrywt

CAS#	Compound	Flags		Results	DF	PQL	Adj.PQL	Adj.MDL	
84-74-2	Di-n-butylphthalate	~~U~~	UJ	380	1.0	330	380	120	HT
85-68-7	Butylbenzylphthalate	~~U~~		380	1.0	330	380	110	
91-94-1	3,3'-Dichlorobenzidine	~~U~~		580	1.0	500	580	130	
218-01-9	Chrysene	~~U~~		380	1.0	330	380	110	
117-81-7	bis(2-Ethylhexyl)phthalate	~~J~~	J	240	1.0	330	380	110	
117-84-0	Di-n-octylphthalate	~~U~~	UJ	380	1.0	330	380	240	
367-12-4	2-Fluorophenol			53%					
13127-88-3	Phenol-D6			54%					
4165-60-0	Nitrobenzene-D5			49%					
321-60-8	2-Fluorobiphenyl			66%					
118-79-6	2,4,6-Tribromophenol			72%					
1718-51-0	Terphenyl-D14			82%					

GW 3/4/09

9

KATAHDIN ANALYTICAL SERVICES
Report of Analytical Results

Client: CH2MHill
Project: TO-009 Lejeune
PO No:
Sample Date: 12/16/08
Received Date: 12/17/08
Extraction Date: 12/18/08
Analysis Date: 14-JAN-2009 15:03
Report Date: 01/22/2009
Matrix: SOIL
% Solids: 93.2

Lab ID: SB7239-17
Client ID: MR08-SS126-08D
SDG: TO9-18
Extracted by: AC
Extraction Method: SW846 3550
Analyst: JLP
Analysis Method: SW846 8270C
Lab Prep Batch: WG59198
Units: ug/Kgdrywt

Use reanalysis

CAS#	Compound	Flags	Results	DF	PQL	Adj.PQL	Adj.MDL	
100-52-7	Benzaldehyde	~~U~~ UJ	540	1.0	500	540	130	CCH
108-95-2	Phenol	~~U~~ R	540	1.0	500	540	170	SSL
111-44-4	Bis(2-Chloroethyl)ether	U	350	1.0	330	350	87	
95-57-8	2-Chlorophenol	~~U~~ R	540	1.0	500	540	180	SSL
95-48-7	2-Methylphenol	~~U~~ R	640	1.0	600	640	210	SSL
108-60-1	2,2'-Oxybis(1-chloropropane)	U	350	1.0	330	350	95	
98-86-2	Acetophenone	U	640	1.0	600	640	190	
621-64-7	N-Nitroso-di-n-propylamine	U	350	1.0	330	350	89	
65794-96-9	3&4-Methylphenol	~~U~~ R	640	1.0	600	640	200	SSL
67-72-1	Hexachloroethane	U	350	1.0	330	350	100	
98-95-3	Nitrobenzene	U	350	1.0	330	350	98	
78-59-1	Isophorone	U	350	1.0	330	350	80	
88-75-5	2-Nitrophenol	~~U~~ R	640	1.0	600	640	180	SSL
105-67-9	2,4-Dimethylphenol	~~U~~ R	540	1.0	500	540	180	SSL
111-91-1	Bis(2-Chloroethoxy)methane	U	350	1.0	330	350	100	
120-83-2	2,4-Dichlorophenol	~~U~~ R	540	1.0	500	540	160	SSL
106-47-8	4-Chloroaniline	U	540	1.0	500	540	130	
105-60-2	Caprolactam	U	540	1.0	500	540	150	
59-50-7	4-Chloro-3-Methylphenol	~~U~~ R	540	1.0	500	540	180	SSL
88-06-2	2,4,6-Trichlorophenol	~~U~~ ↓	540	1.0	500	540	170	↓
95-95-4	2,4,5-Trichlorophenol	~~U~~ ↓	540	1.0	500	540	170	↓
91-58-7	2-Chloronaphthalene	U	350	1.0	330	350	93	
92-52-4	1,1'-Biphenyl	U	350	1.0	330	350	78	
88-74-4	2-Nitroaniline	U	540	1.0	500	540	80	
131-11-3	Dimethyl Phthalate	U	350	1.0	330	350	84	
606-20-2	2,6-Dinitrotoluene	U	350	1.0	330	350	85	
208-96-8	Acenaphthylene	U	350	1.0	330	350	75	
99-09-2	3-Nitroaniline	U	540	1.0	500	540	100	
83-32-9	Acenaphthene	U	350	1.0	330	350	70	
51-28-5	2,4-Dinitrophenol	~~U~~ R	1300	1.0	1200	1300	400	SSL
132-64-9	Dibenzofuran	U	350	1.0	330	350	85	
100-02-7	4-Nitrophenol	~~U~~ R	1300	1.0	1200	1300	330	SSL
121-14-2	2,4-Dinitrotoluene	U	350	1.0	330	350	91	
84-66-2	Diethylphthalate	J	88	1.0	330	350	86	
7005-72-3	4-Chlorophenyl-phenylether	U	350	1.0	330	350	84	
100-01-6	4-Nitroaniline	U	540	1.0	500	540	140	
534-52-1	4,6-Dinitro-2-Methylphenol	~~U~~ R	1300	1.0	1200	1300	360	SSL
86-30-6	N-Nitrosodiphenylamine	U	710	1.0	660	710	230	
101-55-3	4-Bromophenyl-phenylether	U	350	1.0	330	350	91	
1912-24-9	Atrazine	U	350	1.0	330	350	98	
87-86-5	Pentachlorophenol	~~U~~ R	880	1.0	820	880	250	SSL
120-12-7	Anthracene	U	350	1.0	330	350	90	
86-74-8	Carbazole	U	540	1.0	500	540	120	

fw 3/4/09

KATAHDIN ANALYTICAL SERVICES
Report of Analytical Results

Client: CH2MHill
Project: TO-009 Lejeune
PO No:
Sample Date: 12/16/08
Received Date: 12/17/08
Extraction Date: 12/18/08
Analysis Date: 14-JAN-2009 15:03
Report Date: 01/22/2009
Matrix: SOIL
% Solids: 93.2

Lab ID: SB7239-17
Client ID: MR08-SS126-08D
SDG: TO9-18
Extracted by: AC
Extraction Method: SW846 3550
Analyst: JLP
Analysis Method: SW846 8270C
Lab Prep Batch: WG59198
Units: ug/Kgdrywt

Use reanalysis

CAS#	Compound	Flags	Results	DF	PQL	Adj.PQL	Adj.MDL	
84-74-2	Di-n-butylphthalate	U	350	1.0	330	350	110	
85-68-7	Butylbenzylphthalate	U	350	1.0	330	350	100	
91-94-1	3,3'-Dichlorobenzidine	U	540	1.0	500	540	120	
218-01-9	Chrysene	U	350	1.0	330	350	100	
117-81-7	bis(2-Ethylhexyl)phthalate	~~J~~ J	160	1.0	330	350	100	JSL
117-84-0	Di-n-octylphthalate	~~J~~ UJ	350	1.0	330	350	230	JSL
367-12-4	2-Fluorophenol		* 33%					
13127-88-3	Phenol-D6		68%					
4165-60-0	Nitrobenzene-D5		76%					
321-60-8	2-Fluorobiphenyl		79%					
118-79-6	2,4,6-Tribromophenol		* 9%					
1718-51-0	Terphenyl-D14		109%					

Page 02 of 02 U4846.D

R RE

lcw 3/4/09

9RE

KATAHDIN ANALYTICAL SERVICES
Report of Analytical Results

Client: CH2MHill
Project: TO-009 Lejeune
PO No:
Sample Date: 12/16/08
Received Date: 12/17/08
Extraction Date: 01/16/09
Analysis Date: 19-JAN-2009 00:56
Report Date: 01/22/2009
Matrix: SOIL
% Solids: 93.2

Lab ID: SB7239-17RE
Client ID: MR08-SS126-08D
SDG: TO9-18
Extracted by: CB
Extraction Method: SW846 3550
Analyst: JLP
Analysis Method: SW846 8270C
Lab Prep Batch: WG59867
Units: ug/Kgdrywt

CAS#	Compound	Flags		Results	DF	PQL	Adj.PQL	Adj.MDL	
100-52-7	Benzaldehyde	U	UJ	540	1.0	500	540	130	HT
108-95-2	Phenol	U		540	1.0	500	540	170	
111-44-4	Bis(2-Chloroethyl)ether	U		350	1.0	330	350	87	
95-57-8	2-Chlorophenol	U		540	1.0	500	540	180	
95-48-7	2-Methylphenol	U		640	1.0	600	640	210	
108-60-1	2,2'-Oxybis(1-chloropropane)	U		350	1.0	330	350	95	
98-86-2	Acetophenone	U	UJ	640	1.0	600	640	190	BSL
621-64-7	N-Nitroso-di-n-propylamine	U	UJ	350	1.0	330	350	89	HT
65794-96-9	3&4-Methylphenol	U		640	1.0	600	640	200	
67-72-1	Hexachloroethane	U		350	1.0	330	350	100	
98-95-3	Nitrobenzene	U		350	1.0	330	350	98	
78-59-1	Isophorone	U		350	1.0	330	350	80	
88-75-5	2-Nitrophenol	U		640	1.0	600	640	180	
105-67-9	2,4-Dimethylphenol	U		540	1.0	500	540	180	
111-91-1	Bis(2-Chloroethoxy)methane	U		350	1.0	330	350	100	
120-83-2	2,4-Dichlorophenol	U		540	1.0	500	540	160	
106-47-8	4-Chloroaniline	U		540	1.0	500	540	130	
105-60-2	Caprolactam	U		540	1.0	500	540	150	
59-50-7	4-Chloro-3-Methylphenol	U		540	1.0	500	540	180	
88-06-2	2,4,6-Trichlorophenol	U		540	1.0	500	540	170	
95-95-4	2,4,5-Trichlorophenol	U		540	1.0	500	540	170	
91-58-7	2-Chloronaphthalene	U		350	1.0	330	350	93	
92-52-4	1,1'-Biphenyl	U		350	1.0	330	350	78	
88-74-4	2-Nitroaniline	U		540	1.0	500	540	80	
131-11-3	Dimethyl Phthalate	U		350	1.0	330	350	84	
606-20-2	2,6-Dinitrotoluene	U		350	1.0	330	350	85	
208-96-8	Acenaphthylene	U		350	1.0	330	350	75	
99-09-2	3-Nitroaniline	U		540	1.0	500	540	100	
83-32-9	Acenaphthene	U		350	1.0	330	350	70	
51-28-5	2,4-Dinitrophenol	U		1300	1.0	1200	1300	400	
132-64-9	Dibenzofuran	U		350	1.0	330	350	85	
100-02-7	4-Nitrophenol	U		1300	1.0	1200	1300	330	
121-14-2	2,4-Dinitrotoluene	U		350	1.0	330	350	91	
84-66-2	Diethylphthalate	U		350	1.0	330	350	86	
7005-72-3	4-Chlorophenyl-phenylether	U		350	1.0	330	350	84	
100-01-6	4-Nitroaniline	U		540	1.0	500	540	140	
534-52-1	4,6-Dinitro-2-Methylphenol	U		1300	1.0	1200	1300	360	
86-30-6	N-Nitrosodiphenylamine	U		710	1.0	660	710	230	
101-55-3	4-Bromophenyl-phenylether	U		350	1.0	330	350	91	
1912-24-9	Atrazine	U		350	1.0	330	350	98	
87-86-5	Pentachlorophenol	U		880	1.0	820	880	250	
120-12-7	Anthracene	U		350	1.0	330	350	90	
86-74-8	Carbazole	U		540	1.0	500	540	120	

JW 3/4/09

9RE

KATAHDIN ANALYTICAL SERVICES
Report of Analytical Results

Client: CH2MHill
Project: TO-009 Lejeune
PO No:
Sample Date: 12/16/08
Received Date: 12/17/08
Extraction Date: 01/16/09
Analysis Date: 19-JAN-2009 00:56
Report Date: 01/22/2009
Matrix: SOIL
% Solids: 93.2

Lab ID: SB7239-17RE
Client ID: MR08-SS126-08D
SDG: TO9-18
Extracted by: CB
Extraction Method: SW846 3550
Analyst: JLP
Analysis Method: SW846 8270C
Lab Prep Batch: WG59867
Units: ug/Kgdrywt

CAS#	Compound	Flags	Results	DF	PQL	Adj.PQL	Adj.MDL
84-74-2	Di-n-butylphthalate	~~U~~ UJ	350	1.0	330	350	110 HT
85-68-7	Butylbenzylphthalate	~~U~~	350	1.0	330	350	100
91-94-1	3,3'-Dichlorobenzidine	~~U~~	540	1.0	500	540	120
218-01-9	Chrysene	~~U~~	350	1.0	330	350	100
117-81-7	bis(2-Ethylhexyl)phthalate	~~J~~ J	180	1.0	330	350	100
117-84-0	Di-n-octylphthalate	~~U~~ UJ	350	1.0	330	350	230
367-12-4	2-Fluorophenol		57%				
13127-88-3	Phenol-D6		62%				
4165-60-0	Nitrobenzene-D5		58%				
321-60-8	2-Fluorobiphenyl		65%				
118-79-6	2,4,6-Tribromophenol		63%				
1718-51-0	Terphenyl-D14		88%				

lwd 3/4/09

10

KATAHDIN ANALYTICAL SERVICES
Report of Analytical Results

Client: CH2MHill
Project: TO-009 Lejeune
PO No:
Sample Date: 12/16/08
Received Date: 12/17/08
Extraction Date: 12/18/08
Analysis Date: 12-JAN-2009 14:47
Report Date: 01/22/2009
Matrix: SOIL
% Solids: 87.1

Lab ID: SB7239-19
Client ID: MR08-IS126-1.5-2.5
SDG: TO9-18
Extracted by: AC
Extraction Method: SW846 3550
Analyst: JCG
Analysis Method: SW846 8270C
Lab Prep Batch: WG59198
Units: ug/Kgdrywt

Use reanalysis

CAS#	Compound	Flags	Results	DF	PQL	Adj.PQL	Adj.MDL	
100-52-7	Benzaldehyde	~~U~~ UJ	570	1.0	500	570	140	CCH
108-95-2	Phenol	~~U~~ R	570	1.0	500	570	180	SSL
111-44-4	Bis(2-Chloroethyl)ether	U	380	1.0	330	380	93	
95-57-8	2-Chlorophenol	~~U~~ R	570	1.0	500	570	190	SSL
95-48-7	2-Methylphenol	~~U~~ R	690	1.0	600	690	230	SSL
108-60-1	2,2'-Oxybis(1-chloropropane)	U	380	1.0	330	380	100	
98-86-2	Acetophenone	U	690	1.0	600	690	200	
621-64-7	N-Nitroso-di-n-propylamine	U	380	1.0	330	380	95	
65794-96-9	3&4-Methylphenol	~~U~~ R	690	1.0	600	690	210	SSL
67-72-1	Hexachloroethane	U	380	1.0	330	380	110	
98-95-3	Nitrobenzene	U	380	1.0	330	380	100	
78-59-1	Isophorone	U	380	1.0	330	380	86	
88-75-5	2-Nitrophenol	~~U~~ R	690	1.0	600	690	190	SSL
105-67-9	2,4-Dimethylphenol	~~U~~ R	570	1.0	500	570	190	SSL
111-91-1	Bis(2-Chloroethoxy)methane	U	380	1.0	330	380	110	
120-83-2	2,4-Dichlorophenol	~~U~~ R	570	1.0	500	570	170	SSL
106-47-8	4-Chloroaniline	U	570	1.0	500	570	140	
105-60-2	Caprolactam	U	570	1.0	500	570	160	
59-50-7	4-Chloro-3-Methylphenol	~~U~~ R	570	1.0	500	570	190	SSL
88-06-2	2,4,6-Trichlorophenol	~~U~~	570	1.0	500	570	180	
95-95-4	2,4,5-Trichlorophenol	~~U~~	570	1.0	500	570	180	
91-58-7	2-Chloronaphthalene	U	380	1.0	330	380	100	
92-52-4	1,1'-Biphenyl	U	380	1.0	330	380	84	
88-74-4	2-Nitroaniline	U	570	1.0	500	570	86	
131-11-3	Dimethyl Phthalate	U	380	1.0	330	380	90	
606-20-2	2,6-Dinitrotoluene	U	380	1.0	330	380	91	
208-96-8	Acenaphthylene	U	380	1.0	330	380	80	
99-09-2	3-Nitroaniline	U	570	1.0	500	570	110	
83-32-9	Acenaphthene	U	380	1.0	330	380	75	
51-28-5	2,4-Dinitrophenol	~~U~~ R	1400	1.0	1200	1400	430	SSL
132-64-9	Dibenzofuran	U	380	1.0	330	380	91	
100-02-7	4-Nitrophenol	~~U~~ R	1400	1.0	1200	1400	350	SSL
121-14-2	2,4-Dinitrotoluene	U	380	1.0	330	380	98	
84-66-2	Diethylphthalate	U	380	1.0	330	380	92	
7005-72-3	4-Chlorophenyl-phenylether	U	380	1.0	330	380	90	
100-01-6	4-Nitroaniline	U	570	1.0	500	570	150	
534-52-1	4,6-Dinitro-2-Methylphenol	~~U~~ R	1400	1.0	1200	1400	390	SSL
86-30-6	N-Nitrosodiphenylamine	U	760	1.0	660	760	250	
101-55-3	4-Bromophenyl-phenylether	U	380	1.0	330	380	98	
1912-24-9	Atrazine	U	380	1.0	330	380	100	
87-86-5	Pentachlorophenol	~~U~~ R	940	1.0	820	940	270	SSL
120-12-7	Anthracene	U	380	1.0	330	380	96	
86-74-8	Carbazole	U	570	1.0	500	570	130	

MW 3/4/09

10

KATAHDIN ANALYTICAL SERVICES
Report of Analytical Results

Client: CH2MHill
Project: TO-009 Lejeune
PO No:
Sample Date: 12/16/08
Received Date: 12/17/08
Extraction Date: 12/18/08
Analysis Date: 12-JAN-2009 14:47
Report Date: 01/22/2009
Matrix: SOIL
% Solids: 87.1

Lab ID: SB7239-19
Client ID: MR08-IS126-1.5-2.5
SDG: TO9-18
Extracted by: AC
Extraction Method: SW846 3550
Analyst: JCG
Analysis Method: SW846 8270C
Lab Prep Batch: WG59198
Units: ug/Kgdrywt

Use reanalysis

CAS#	Compound	Flags	Results	DF	PQL	Adj.PQL	Adj.MDL
84-74-2	Di-n-butylphthalate	U	380	1.0	330	380	120
85-68-7	Butylbenzylphthalate	U	380	1.0	330	380	110
91-94-1	3,3'-Dichlorobenzidine	U	570	1.0	500	570	130
218-01-9	Chrysene	U	380	1.0	330	380	110
117-81-7	bis(2-Ethylhexyl)phthalate	J	140	1.0	330	380	110
117-84-0	Di-n-octylphthalate	U	380	1.0	330	380	240
367-12-4	2-Fluorophenol		* 20%				
13127-88-3	Phenol-D6		55%				
4165-60-0	Nitrobenzene-D5		79%				
321-60-8	2-Fluorobiphenyl		84%				
118-79-6	2,4,6-Tribromophenol		* 3%				
1718-51-0	Terphenyl-D14		112%				

hw 3/4/09

10RE

KATAHDIN ANALYTICAL SERVICES
Report of Analytical Results

Client: CH2MHill
Project: TO-009 Lejeune
PO No:
Sample Date: 12/16/08
Received Date: 12/17/08
Extraction Date: 01/16/09
Analysis Date: 19-JAN-2009 16:11
Report Date: 01/22/2009
Matrix: SOIL
% Solids: 87.1

Lab ID: SB7239-19RERA
Client ID: MR08-IS126-1.5-2.5
SDG: TO9-18
Extracted by: CB
Extraction Method: SW846 3550
Analyst: JLP
Analysis Method: SW846 8270C
Lab Prep Batch: WG59867
Units: ug/Kgdrywt

CAS#	Compound	Flags	Results	DF	PQL	Adj.PQL	Adj.MDL	
100-52-7	Benzaldehyde	U UJ	570	1.0	500	570	140	HT
108-95-2	Phenol	U	570	1.0	500	570	180	
111-44-4	Bis(2-Chloroethyl)ether	U	380	1.0	330	380	93	
95-57-8	2-Chlorophenol	U	570	1.0	500	570	190	
95-48-7	2-Methylphenol	U	690	1.0	600	690	230	
108-60-1	2,2'-Oxybis(1-chloropropane)	U	380	1.0	330	380	100	
98-86-2	Acetophenone	~~U~~ UJ	690	1.0	600	690	200	BSC
621-64-7	N-Nitroso-di-n-propylamine	U UJ	380	1.0	330	380	95	HT
65794-96-9	3&4-Methylphenol	U	690	1.0	600	690	210	
67-72-1	Hexachloroethane	U	380	1.0	330	380	110	
98-95-3	Nitrobenzene	U	380	1.0	330	380	100	
78-59-1	Isophorone	U	380	1.0	330	380	86	
88-75-5	2-Nitrophenol	U	690	1.0	600	690	190	
105-67-9	2,4-Dimethylphenol	U	570	1.0	500	570	190	
111-91-1	Bis(2-Chloroethoxy)methane	U	380	1.0	330	380	110	
120-83-2	2,4-Dichlorophenol	U	570	1.0	500	570	170	
106-47-8	4-Chloroaniline	U	570	1.0	500	570	140	
105-60-2	Caprolactam	U	570	1.0	500	570	160	
59-50-7	4-Chloro-3-Methylphenol	U	570	1.0	500	570	190	
88-06-2	2,4,6-Trichlorophenol	U	570	1.0	500	570	180	
95-95-4	2,4,5-Trichlorophenol	U	570	1.0	500	570	180	
91-58-7	2-Chloronaphthalene	U	380	1.0	330	380	100	
92-52-4	1,1'-Biphenyl	U	380	1.0	330	380	84	
88-74-4	2-Nitroaniline	U	570	1.0	500	570	86	
131-11-3	Dimethyl Phthalate	U	380	1.0	330	380	90	
606-20-2	2,6-Dinitrotoluene	U	380	1.0	330	380	91	
208-96-8	Acenaphthylene	U	380	1.0	330	380	80	
99-09-2	3-Nitroaniline	U	570	1.0	500	570	110	
83-32-9	Acenaphthene	U	380	1.0	330	380	75	
51-28-5	2,4-Dinitrophenol	U	1400	1.0	1200	1400	430	
132-64-9	Dibenzofuran	U	380	1.0	330	380	91	
100-02-7	4-Nitrophenol	U	1400	1.0	1200	1400	350	
121-14-2	2,4-Dinitrotoluene	U	380	1.0	330	380	98	
84-66-2	Diethylphthalate	U	380	1.0	330	380	92	
7005-72-3	4-Chlorophenyl-phenylether	U	380	1.0	330	380	90	
100-01-6	4-Nitroaniline	U	570	1.0	500	570	150	
534-52-1	4,6-Dinitro-2-Methylphenol	U	1400	1.0	1200	1400	390	
86-30-6	N-Nitrosodiphenylamine	U	760	1.0	660	760	250	
101-55-3	4-Bromophenyl-phenylether	U	380	1.0	330	380	98	
1912-24-9	Atrazine	U	380	1.0	330	380	100	
87-86-5	Pentachlorophenol	U	940	1.0	820	940	270	
120-12-7	Anthracene	U	380	1.0	330	380	96	
86-74-8	Carbazole	U	570	1.0	500	570	130	

lw
3/4/09

10RE

KATAHDIN ANALYTICAL SERVICES
Report of Analytical Results

Client: CH2MHill
Project: TO-009 Lejeune
PO No:
Sample Date: 12/16/08
Received Date: 12/17/08
Extraction Date: 01/16/09
Analysis Date: 19-JAN-2009 16:11
Report Date: 01/22/2009
Matrix: SOIL
% Solids: 87.1

Lab ID: SB7239-19RERA
Client ID: MR08-IS126-1.5-2.5
SDG: TO9-18
Extracted by: CB
Extraction Method: SW846 3550
Analyst: JLP
Analysis Method: SW846 8270C
Lab Prep Batch: WG59867
Units: ug/Kgdrywt

CAS#	Compound	Flags	Results	DF	PQL	Adj.PQL	Adj.MDL	
84-74-2	Di-n-butylphthalate	~~U~~ UJ	380	1.0	330	380	120	HT
85-68-7	Butylbenzylphthalate	~~U~~	380	1.0	330	380	110	
91-94-1	3,3'-Dichlorobenzidine	~~U~~	570	1.0	500	570	130	
218-01-9	Chrysene	~~U~~	380	1.0	330	380	110	
117-81-7	bis(2-Ethylhexyl)phthalate	~~J~~ J	140	1.0	330	380	110	
117-84-0	Di-n-octylphthalate	~~U~~ UJ	380	1.0	330	380	240	
367-12-4	2-Fluorophenol		64%					
13127-88-3	Phenol-D6		61%					
4165-60-0	Nitrobenzene-D5		63%					
321-60-8	2-Fluorobiphenyl		69%					
118-79-6	2,4,6-Tribromophenol		68%					
1718-51-0	Terphenyl-D14		84%					

lw 3/4/09

11

KATAHDIN ANALYTICAL SERVICES
Report of Analytical Results

Client: CH2MHill
Project: TO-009 Lejeune
PO No:
Sample Date: 12/16/08
Received Date: 12/17/08
Extraction Date: 12/18/08
Analysis Date: 12-JAN-2009 16:13
Report Date: 01/22/2009
Matrix: SOIL
% Solids: 92.2

Lab ID: SB7239-21
Client ID: MR08-SS130-08D
SDG: TO9-18
Extracted by: AC
Extraction Method: SW846 3550
Analyst: JCG
Analysis Method: SW846 8270C
Lab Prep Batch: WG59198
Units: ug/Kgdrywt

CAS#	Compound	Flags	Results	DF	PQL	Adj.PQL	Adj.MDL	
100-52-7	Benzaldehyde	~~U~~ UJ	540	1.0	500	540	130	CCH
108-95-2	Phenol	U	540	1.0	500	540	170	
111-44-4	Bis(2-Chloroethyl)ether	U	360	1.0	330	360	88	
95-57-8	2-Chlorophenol	U	540	1.0	500	540	180	
95-48-7	2-Methylphenol	U	650	1.0	600	650	220	
108-60-1	2,2'-Oxybis(1-chloropropane)	U	360	1.0	330	360	96	
98-86-2	Acetophenone	U	650	1.0	600	650	190	
621-64-7	N-Nitroso-di-n-propylamine	U	360	1.0	330	360	90	
65794-96-9	3&4-Methylphenol	U	650	1.0	600	650	200	
67-72-1	Hexachloroethane	U	360	1.0	330	360	100	
98-95-3	Nitrobenzene	U	360	1.0	330	360	99	
78-59-1	Isophorone	U	360	1.0	330	360	81	
88-75-5	2-Nitrophenol	U	650	1.0	600	650	180	
105-67-9	2,4-Dimethylphenol	~~U~~ UJ	540	1.0	500	540	180	BSL
111-91-1	Bis(2-Chloroethoxy)methane	U	360	1.0	330	360	100	
120-83-2	2,4-Dichlorophenol	U	540	1.0	500	540	160	
106-47-8	4-Chloroaniline	U	540	1.0	500	540	130	
105-60-2	Caprolactam	U	540	1.0	500	540	160	
59-50-7	4-Chloro-3-Methylphenol	U	540	1.0	500	540	180	
88-06-2	2,4,6-Trichlorophenol	U	540	1.0	500	540	170	
95-95-4	2,4,5-Trichlorophenol	U	540	1.0	500	540	170	
91-58-7	2-Chloronaphthalene	U	360	1.0	330	360	94	
92-52-4	1,1'-Biphenyl	U	360	1.0	330	360	79	
88-74-4	2-Nitroaniline	U	540	1.0	500	540	81	
131-11-3	Dimethyl Phthalate	U	360	1.0	330	360	85	
606-20-2	2,6-Dinitrotoluene	U	360	1.0	330	360	86	
208-96-8	Acenaphthylene	U	360	1.0	330	360	76	
99-09-2	3-Nitroaniline	U	540	1.0	500	540	100	
83-32-9	Acenaphthene	U	360	1.0	330	360	70	
51-28-5	2,4-Dinitrophenol	U	1300	1.0	1200	1300	410	
132-64-9	Dibenzofuran	U	360	1.0	330	360	86	
100-02-7	4-Nitrophenol	U	1300	1.0	1200	1300	340	
121-14-2	2,4-Dinitrotoluene	U	360	1.0	330	360	92	
84-66-2	Diethylphthalate	U	360	1.0	330	360	87	
7005-72-3	4-Chlorophenyl-phenylether	U	360	1.0	330	360	85	
100-01-6	4-Nitroaniline	U	540	1.0	500	540	140	
534-52-1	4,6-Dinitro-2-Methylphenol	U	1300	1.0	1200	1300	360	
86-30-6	N-Nitrosodiphenylamine	U	720	1.0	660	720	240	
101-55-3	4-Bromophenyl-phenylether	U	360	1.0	330	360	92	
1912-24-9	Atrazine	U	360	1.0	330	360	99	
87-86-5	Pentachlorophenol	U	890	1.0	820	890	260	
120-12-7	Anthracene	U	360	1.0	330	360	91	
86-74-8	Carbazole	U	540	1.0	500	540	120	

JW 3/4/09

11

KATAHDIN ANALYTICAL SERVICES
Report of Analytical Results

Client: CH2MHill
Project: TO-009 Lejeune
PO No:
Sample Date: 12/16/08
Received Date: 12/17/08
Extraction Date: 12/18/08
Analysis Date: 12-JAN-2009 16:13
Report Date: 01/22/2009
Matrix: SOIL
% Solids: 92.2

Lab ID: SB7239-21
Client ID: MR08-SS130-08D
SDG: TO9-18
Extracted by: AC
Extraction Method: SW846 3550
Analyst: JCG
Analysis Method: SW846 8270C
Lab Prep Batch: WG59198
Units: ug/Kgdrywt

CAS#	Compound	Flags	Results	DF	PQL	Adj.PQL	Adj.MDL
84-74-2	Di-n-butylphthalate	U	360	1.0	330	360	110
85-68-7	Butylbenzylphthalate	U	360	1.0	330	360	100
91-94-1	3,3'-Dichlorobenzidine	U	540	1.0	500	540	120
218-01-9	Chrysene	U	360	1.0	330	360	100
117-81-7	bis(2-Ethylhexyl)phthalate	J	270	1.0	330	360	110
117-84-0	Di-n-octylphthalate	U	360	1.0	330	360	230
367-12-4	2-Fluorophenol		62%				
13127-88-3	Phenol-D6		78%				
4165-60-0	Nitrobenzene-D5		76%				
321-60-8	2-Fluorobiphenyl		89%				
118-79-6	2,4,6-Tribromophenol		54%				
1718-51-0	Terphenyl-D14		118%				

KW
3/4/09

KATAHDIN ANALYTICAL SERVICES
Report of Analytical Results

12

Client: CH2MHill
Project: TO-009 Lejeune
PO No:
Sample Date: 12/16/08
Received Date: 12/17/08
Extraction Date: 12/18/08
Analysis Date: 15-JAN-2009 20:14
Report Date: 01/22/2009
Matrix: SOIL
% Solids: 87.3

Lab ID: SB7239-23RA
Client ID: MR08-IS130-1.5-3
SDG: TO9-18
Extracted by: AC
Extraction Method: SW846 3550
Analyst: JCG
Analysis Method: SW846 8270C
Lab Prep Batch: WG59242
Units: ug/Kgdrywt

CAS#	Compound	Flags	Results	DF	PQL	Adj.PQL	Adj.MDL	
100-52-7	Benzaldehyde	~~U~~ UJ	570	1.0	500	570	140	ICB
108-95-2	Phenol	U	570	1.0	500	570	180	
111-44-4	Bis(2-Chloroethyl)ether	U	380	1.0	330	380	93	
95-57-8	2-Chlorophenol	U	570	1.0	500	570	190	
95-48-7	2-Methylphenol	U	690	1.0	600	690	230	
108-60-1	2,2'-Oxybis(1-chloropropane)	U	380	1.0	330	380	100	
98-86-2	Acetophenone	U	690	1.0	600	690	200	
621-64-7	N-Nitroso-di-n-propylamine	U	380	1.0	330	380	95	
65794-96-9	3&4-Methylphenol	U	690	1.0	600	690	210	
67-72-1	Hexachloroethane	U	380	1.0	330	380	110	
98-95-3	Nitrobenzene	U	380	1.0	330	380	100	
78-59-1	Isophorone	U	380	1.0	330	380	86	
88-75-5	2-Nitrophenol	U	690	1.0	600	690	190	
105-67-9	2,4-Dimethylphenol	~~U~~ UJ	570	1.0	500	570	190	BSL
111-91-1	Bis(2-Chloroethoxy)methane	U	380	1.0	330	380	110	
120-83-2	2,4-Dichlorophenol	U	570	1.0	500	570	170	
106-47-8	4-Chloroaniline	~~U~~ R	570	1.0	500	570	140	BSL
105-60-2	Caprolactam	U	570	1.0	500	570	160	
59-50-7	4-Chloro-3-Methylphenol	U	570	1.0	500	570	190	
88-06-2	2,4,6-Trichlorophenol	U	570	1.0	500	570	180	
95-95-4	2,4,5-Trichlorophenol	U	570	1.0	500	570	180	
91-58-7	2-Chloronaphthalene	U	380	1.0	330	380	100	
92-52-4	1,1'-Biphenyl	U	380	1.0	330	380	84	
88-74-4	2-Nitroaniline	U	570	1.0	500	570	86	
131-11-3	Dimethyl Phthalate	U	380	1.0	330	380	89	
606-20-2	2,6-Dinitrotoluene	U	380	1.0	330	380	90	
208-96-8	Acenaphthylene	U	380	1.0	330	380	80	
99-09-2	3-Nitroaniline	U	570	1.0	500	570	110	
83-32-9	Acenaphthene	U	380	1.0	330	380	74	
51-28-5	2,4-Dinitrophenol	U	1400	1.0	1200	1400	430	
132-64-9	Dibenzofuran	U	380	1.0	330	380	90	
100-02-7	4-Nitrophenol	U	1400	1.0	1200	1400	350	
121-14-2	2,4-Dinitrotoluene	U	380	1.0	330	380	97	
84-66-2	Diethylphthalate	U	380	1.0	330	380	92	
7005-72-3	4-Chlorophenyl-phenylether	U	380	1.0	330	380	89	
100-01-6	4-Nitroaniline	U	570	1.0	500	570	150	
534-52-1	4,6-Dinitro-2-Methylphenol	U	1400	1.0	1200	1400	390	
86-30-6	N-Nitrosodiphenylamine	U	760	1.0	660	760	250	
101-55-3	4-Bromophenyl-phenylether	U	380	1.0	330	380	97	
1912-24-9	Atrazine	U	380	1.0	330	380	100	
87-86-5	Pentachlorophenol	U	940	1.0	820	940	270	
120-12-7	Anthracene	U	380	1.0	330	380	96	
86-74-8	Carbazole	U	570	1.0	500	570	130	

lew 4/6/09

12

KATAHDIN ANALYTICAL SERVICES
Report of Analytical Results

Client: CH2MHill
Project: TO-009 Lejeune
PO No:
Sample Date: 12/16/08
Received Date: 12/17/08
Extraction Date: 12/18/08
Analysis Date: 15-JAN-2009 20:14
Report Date: 01/22/2009
Matrix: SOIL
% Solids: 87.3

Lab ID: SB7239-23RA
Client ID: MR08-IS130-1.5-3
SDG: TO9-18
Extracted by: AC
Extraction Method: SW846 3550
Analyst: JCG
Analysis Method: SW846 8270C
Lab Prep Batch: WG59242
Units: ug/Kgdrywt

CAS#	Compound	Flags	Results	DF	PQL	Adj.PQL	Adj.MDL
84-74-2	Di-n-butylphthalate	U	380	1.0	330	380	120
85-68-7	Butylbenzylphthalate	U	380	1.0	330	380	110
91-94-1	3,3'-Dichlorobenzidine	U	570	1.0	500	570	130
218-01-9	Chrysene	U	380	1.0	330	380	110
117-81-7	bis(2-Ethylhexyl)phthalate	J	170	1.0	330	380	110
117-84-0	Di-n-octylphthalate	~~J~~ UJ	380	1.0	330	380	240 CCH
367-12-4	2-Fluorophenol		67%				
13127-88-3	Phenol-D6		75%				
4165-60-0	Nitrobenzene-D5		77%				
321-60-8	2-Fluorobiphenyl		79%				
118-79-6	2,4,6-Tribromophenol		62%				
1718-51-0	Terphenyl-D14		110%				

bw
3/4/09

13

KATAHDIN ANALYTICAL SERVICES
Report of Analytical Results

Client: CH2MHill
Project: TO-009 Lejeune
PO No:
Sample Date: 12/16/08
Received Date: 12/17/08
Extraction Date: 12/18/08
Analysis Date: 15-JAN-2009 23:49
Report Date: 01/22/2009
Matrix: SOIL
% Solids: 90.5

Lab ID: SB7239-25RA
Client ID: MR08-SS132-08D
SDG: TO9-18
Extracted by: AC
Extraction Method: SW846 3550
Analyst: JCG
Analysis Method: SW846 8270C
Lab Prep Batch: WG59242
Units: ug/Kgdrywt

CAS#	Compound	Flags	Results	DF	PQL	Adj.PQL	Adj.MDL	
100-52-7	Benzaldehyde	~~U~~ UJ	550	1.0	500	550	130	ICB
108-95-2	Phenol	U	550	1.0	500	550	170	
111-44-4	Bis(2-Chloroethyl)ether	U	360	1.0	330	360	89	
95-57-8	2-Chlorophenol	U	550	1.0	500	550	180	
95-48-7	2-Methylphenol	U	660	1.0	600	660	220	
108-60-1	2,2'-Oxybis(1-chloropropane)	U	360	1.0	330	360	98	
98-86-2	Acetophenone	U	660	1.0	600	660	200	
621-64-7	N-Nitroso-di-n-propylamine	U	360	1.0	330	360	92	
65794-96-9	3&4-Methylphenol	U	660	1.0	600	660	210	
67-72-1	Hexachloroethane	U	360	1.0	330	360	110	
98-95-3	Nitrobenzene	U	360	1.0	330	360	100	
78-59-1	Isophorone	U	360	1.0	330	360	83	
88-75-5	2-Nitrophenol	U	660	1.0	600	660	180	
105-67-9	2,4-Dimethylphenol	~~U~~ UJ	550	1.0	500	550	180	BSL
111-91-1	Bis(2-Chloroethoxy)methane	U	360	1.0	330	360	110	
120-83-2	2,4-Dichlorophenol	U	550	1.0	500	550	160	
106-47-8	4-Chloroaniline	~~U~~ R	550	1.0	500	550	130	BSL
105-60-2	Caprolactam	U	550	1.0	500	550	160	
59-50-7	4-Chloro-3-Methylphenol	U	550	1.0	500	550	180	
88-06-2	2,4,6-Trichlorophenol	U	550	1.0	500	550	170	
95-95-4	2,4,5-Trichlorophenol	U	550	1.0	500	550	170	
91-58-7	2-Chloronaphthalene	U	360	1.0	330	360	96	
92-52-4	1,1'-Biphenyl	U	360	1.0	330	360	81	
88-74-4	2-Nitroaniline	U	550	1.0	500	550	83	
131-11-3	Dimethyl Phthalate	U	360	1.0	330	360	86	
606-20-2	2,6-Dinitrotoluene	U	360	1.0	330	360	87	
208-96-8	Acenaphthylene	U	360	1.0	330	360	77	
99-09-2	3-Nitroaniline	U	550	1.0	500	550	100	
83-32-9	Acenaphthene	U	360	1.0	330	360	72	
51-28-5	2,4-Dinitrophenol	U	1300	1.0	1200	1300	420	
132-64-9	Dibenzofuran	U	360	1.0	330	360	87	
100-02-7	4-Nitrophenol	U	1300	1.0	1200	1300	340	
121-14-2	2,4-Dinitrotoluene	U	360	1.0	330	360	94	
84-66-2	Diethylphthalate	J	93	1.0	330	360	88	
7005-72-3	4-Chlorophenyl-phenylether	U	360	1.0	330	360	86	
100-01-6	4-Nitroaniline	U	550	1.0	500	550	150	
534-52-1	4,6-Dinitro-2-Methylphenol	U	1300	1.0	1200	1300	370	
86-30-6	N-Nitrosodiphenylamine	U	730	1.0	660	730	240	
101-55-3	4-Bromophenyl-phenylether	U	360	1.0	330	360	94	
1912-24-9	Atrazine	U	360	1.0	330	360	100	
87-86-5	Pentachlorophenol	U	900	1.0	820	900	260	
120-12-7	Anthracene	U	360	1.0	330	360	93	
86-74-8	Carbazole	U	550	1.0	500	550	120	

LW
4/6/09

KATAHDIN ANALYTICAL SERVICES
Report of Analytical Results

Client: CH2MHill
Project: TO-009 Lejeune
PO No:
Sample Date: 12/16/08
Received Date: 12/17/08
Extraction Date: 12/18/08
Analysis Date: 15-JAN-2009 23:49
Report Date: 01/22/2009
Matrix: SOIL
% Solids: 90.5

Lab ID: SB7239-25RA
Client ID: MR08-SS132-08D
SDG: TO9-18
Extracted by: AC
Extraction Method: SW846 3550
Analyst: JCG
Analysis Method: SW846 8270C
Lab Prep Batch: WG59242
Units: ug/Kgdrywt

CAS#	Compound	Flags	Results	DF	PQL	Adj.PQL	Adj.MDL	
84-74-2	Di-n-butylphthalate	U	360	1.0	330	360	110	
85-68-7	Butylbenzylphthalate	U	360	1.0	330	360	100	
91-94-1	3,3'-Dichlorobenzidine	U	550	1.0	500	550	120	
218-01-9	Chrysene	U	360	1.0	330	360	100	
117-81-7	bis(2-Ethylhexyl)phthalate	J	120	1.0	330	360	110	
117-84-0	Di-n-octylphthalate	~~J~~ UJ	360	1.0	330	360	230	CEH
367-12-4	2-Fluorophenol		62%					
13127-88-3	Phenol-D6		81%					
4165-60-0	Nitrobenzene-D5		80%					
321-60-8	2-Fluorobiphenyl		80%					
118-79-6	2,4,6-Tribromophenol		43%					
1718-51-0	Terphenyl-D14		113%					

kes
3/4/09

KATAHDIN ANALYTICAL SERVICES
Report of Analytical Results

Client: CH2MHill
Project: TO-009 Lejeune
PO No:
Sample Date: 12/16/08
Received Date: 12/17/08
Extraction Date: 12/18/08
Analysis Date: 14-JAN-2009 17:12
Report Date: 01/22/2009
Matrix: SOIL
% Solids: 92.7

Lab ID: SB7239-27
Client ID: MR08-IS132-08D
SDG: TO9-18
Extracted by: AC
Extraction Method: SW846 3550
Analyst: JLP
Analysis Method: SW846 8270C
Lab Prep Batch: WG59242
Units: ug/Kgdrywt

CAS#	Compound	Flags	Results	DF	PQL	Adj.PQL	Adj.MDL	
100-52-7	Benzaldehyde	~~U~~ UJ	540	1.0	500	540	130	CCH
108-95-2	Phenol	U	540	1.0	500	540	170	
111-44-4	Bis(2-Chloroethyl)ether	U	360	1.0	330	360	87	
95-57-8	2-Chlorophenol	U	540	1.0	500	540	180	
95-48-7	2-Methylphenol	U	650	1.0	600	650	220	
108-60-1	2,2'-Oxybis(1-chloropropane)	U	360	1.0	330	360	96	
98-86-2	Acetophenone	U	650	1.0	600	650	190	
621-64-7	N-Nitroso-di-n-propylamine	U	360	1.0	330	360	90	
65794-96-9	3&4-Methylphenol	U	650	1.0	600	650	200	
67-72-1	Hexachloroethane	U	360	1.0	330	360	100	
98-95-3	Nitrobenzene	U	360	1.0	330	360	98	
78-59-1	Isophorone	U	360	1.0	330	360	81	
88-75-5	2-Nitrophenol	U	650	1.0	600	650	180	
105-67-9	2,4-Dimethylphenol	~~U~~ UJ	540	1.0	500	540	180	BSL
111-91-1	Bis(2-Chloroethoxy)methane	U	360	1.0	330	360	100	
120-83-2	2,4-Dichlorophenol	U	540	1.0	500	540	160	
106-47-8	4-Chloroaniline	~~U~~ R	540	1.0	500	540	130	BSL
105-60-2	Caprolactam	U	540	1.0	500	540	160	
59-50-7	4-Chloro-3-Methylphenol	U	540	1.0	500	540	180	
88-06-2	2,4,6-Trichlorophenol	U	540	1.0	500	540	170	
95-95-4	2,4,5-Trichlorophenol	U	540	1.0	500	540	170	
91-58-7	2-Chloronaphthalene	U	360	1.0	330	360	94	
92-52-4	1,1'-Biphenyl	U	360	1.0	330	360	79	
88-74-4	2-Nitroaniline	U	540	1.0	500	540	81	
131-11-3	Dimethyl Phthalate	U	360	1.0	330	360	84	
606-20-2	2,6-Dinitrotoluene	U	360	1.0	330	360	85	
208-96-8	Acenaphthylene	U	360	1.0	330	360	76	
99-09-2	3-Nitroaniline	U	540	1.0	500	540	100	
83-32-9	Acenaphthene	U	360	1.0	330	360	70	
51-28-5	2,4-Dinitrophenol	U	1300	1.0	1200	1300	410	
132-64-9	Dibenzofuran	U	360	1.0	330	360	85	
100-02-7	4-Nitrophenol	U	1300	1.0	1200	1300	330	
121-14-2	2,4-Dinitrotoluene	U	360	1.0	330	360	92	
84-66-2	Diethylphthalate	J	91	1.0	330	360	86	
7005-72-3	4-Chlorophenyl-phenylether	U	360	1.0	330	360	84	
100-01-6	4-Nitroaniline	U	540	1.0	500	540	140	
534-52-1	4,6-Dinitro-2-Methylphenol	U	1300	1.0	1200	1300	360	
86-30-6	N-Nitrosodiphenylamine	U	710	1.0	660	710	240	
101-55-3	4-Bromophenyl-phenylether	U	360	1.0	330	360	92	
1912-24-9	Atrazine	U	360	1.0	330	360	98	
87-86-5	Pentachlorophenol	U	880	1.0	820	880	260	
120-12-7	Anthracene	U	360	1.0	330	360	91	
86-74-8	Carbazole	U	540	1.0	500	540	120	

MW
3/4/09

KATAHDIN ANALYTICAL SERVICES
Report of Analytical Results

Client: CH2MHill
Project: TO-009 Lejeune
PO No:
Sample Date: 12/16/08
Received Date: 12/17/08
Extraction Date: 12/18/08
Analysis Date: 14-JAN-2009 17:12
Report Date: 01/22/2009
Matrix: SOIL
% Solids: 92.7

Lab ID: SB7239-27
Client ID: MR08-IS132-08D
SDG: TO9-18
Extracted by: AC
Extraction Method: SW846 3550
Analyst: JLP
Analysis Method: SW846 8270C
Lab Prep Batch: WG59242
Units: ug/Kgdrywt

CAS#	Compound	Flags	Results	DF	PQL	Adj.PQL	Adj.MDL
84-74-2	Di-n-butylphthalate	U	360	1.0	330	360	110
85-68-7	Butylbenzylphthalate	U	360	1.0	330	360	100
91-94-1	3,3'-Dichlorobenzidine	U	540	1.0	500	540	120
218-01-9	Chrysene	U	360	1.0	330	360	100
117-81-7	bis(2-Ethylhexyl)phthalate		590	1.0	330	360	100
117-84-0	Di-n-octylphthalate	U	360	1.0	330	360	230
367-12-4	2-Fluorophenol		70%				
13127-88-3	Phenol-D6		80%				
4165-60-0	Nitrobenzene-D5		79%				
321-60-8	2-Fluorobiphenyl		81%				
118-79-6	2,4,6-Tribromophenol		70%				
1718-51-0	Terphenyl-D14		115%				

MW
3/4/09

15

KATAHDIN ANALYTICAL SERVICES
Report of Analytical Results

Client: CH2MHill
Project: TO-009 Lejeune
PO No:
Sample Date: 12/16/08
Received Date: 12/17/08
Extraction Date: 12/18/08
Analysis Date: 15-JAN-2009 19:28
Report Date: 01/22/2009
Matrix: SOIL
% Solids: 84.4

Lab ID: SB7239-29
Client ID: MR08-SS131-08D
SDG: TO9-18
Extracted by: AC
Extraction Method: SW846 3550
Analyst: JCG
Analysis Method: SW846 8270C
Lab Prep Batch: WG59242
Units: ug/Kgdrywt

CAS#	Compound	Flags	Results	DF	PQL	Adj.PQL	Adj.MDL	
100-52-7	Benzaldehyde	~~U~~ UJ	590	1.0	500	590	140	ICB
108-95-2	Phenol	U	590	1.0	500	590	180	
111-44-4	Bis(2-Chloroethyl)ether	U	390	1.0	330	390	96	
95-57-8	2-Chlorophenol	U	590	1.0	500	590	190	
95-48-7	2-Methylphenol	U	710	1.0	600	710	240	
108-60-1	2,2'-Oxybis(1-chloropropane)	U	390	1.0	330	390	100	
98-86-2	Acetophenone	U	710	1.0	600	710	210	
621-64-7	N-Nitroso-di-n-propylamine	U	390	1.0	330	390	98	
65794-96-9	3&4-Methylphenol	U	710	1.0	600	710	220	
67-72-1	Hexachloroethane	U	390	1.0	330	390	110	
98-95-3	Nitrobenzene	U	390	1.0	330	390	110	
78-59-1	Isophorone	U	390	1.0	330	390	89	
88-75-5	2-Nitrophenol	U	710	1.0	600	710	200	
105-67-9	2,4-Dimethylphenol	~~U~~ UJ	590	1.0	500	590	200	BSL
111-91-1	Bis(2-Chloroethoxy)methane	U	390	1.0	330	390	110	
120-83-2	2,4-Dichlorophenol	U	590	1.0	500	590	180	
106-47-8	4-Chloroaniline	~~U~~ R	590	1.0	500	590	140	BSL
105-60-2	Caprolactam	U	590	1.0	500	590	170	
59-50-7	4-Chloro-3-Methylphenol	U	590	1.0	500	590	200	
88-06-2	2,4,6-Trichlorophenol	U	590	1.0	500	590	180	
95-95-4	2,4,5-Trichlorophenol	U	590	1.0	500	590	180	
91-58-7	2-Chloronaphthalene	U	390	1.0	330	390	100	
92-52-4	1,1'-Biphenyl	U	390	1.0	330	390	86	
88-74-4	2-Nitroaniline	U	590	1.0	500	590	89	
131-11-3	Dimethyl Phthalate	U	390	1.0	330	390	92	
606-20-2	2,6-Dinitrotoluene	U	390	1.0	330	390	94	
208-96-8	Acenaphthylene	U	390	1.0	330	390	83	
99-09-2	3-Nitroaniline	U	590	1.0	500	590	110	
83-32-9	Acenaphthene	U	390	1.0	330	390	77	
51-28-5	2,4-Dinitrophenol	U	1400	1.0	1200	1400	450	
132-64-9	Dibenzofuran	U	390	1.0	330	390	94	
100-02-7	4-Nitrophenol	U	1400	1.0	1200	1400	360	
121-14-2	2,4-Dinitrotoluene	U	390	1.0	330	390	100	
84-66-2	Diethylphthalate	J	100	1.0	330	390	95	
7005-72-3	4-Chlorophenyl-phenylether	U	390	1.0	330	390	92	
100-01-6	4-Nitroaniline	U	590	1.0	500	590	160	
534-52-1	4,6-Dinitro-2-Methylphenol	U	1400	1.0	1200	1400	400	
86-30-6	N-Nitrosodiphenylamine	U	780	1.0	660	780	260	
101-55-3	4-Bromophenyl-phenylether	U	390	1.0	330	390	100	
1912-24-9	Atrazine	U	390	1.0	330	390	110	
87-86-5	Pentachlorophenol	U	970	1.0	820	970	280	
120-12-7	Anthracene	U	390	1.0	330	390	99	
86-74-8	Carbazole	U	590	1.0	500	590	130	

lw
4/6/09

KATAHDIN ANALYTICAL SERVICES
Report of Analytical Results

Client: CH2MHill
Project: TO-009 Lejeune
PO No:
Sample Date: 12/16/08
Received Date: 12/17/08
Extraction Date: 12/18/08
Analysis Date: 15-JAN-2009 19:28
Report Date: 01/22/2009
Matrix: SOIL
% Solids: 84.4

Lab ID: SB7239-29
Client ID: MR08-SS131-08D
SDG: TO9-18
Extracted by: AC
Extraction Method: SW846 3550
Analyst: JCG
Analysis Method: SW846 8270C
Lab Prep Batch: WG59242
Units: ug/Kgdrywt

CAS#	Compound	Flags	Results	DF	PQL	Adj.PQL	Adj.MDL	
84-74-2	Di-n-butylphthalate	U	390	1.0	330	390	120	
85-68-7	Butylbenzylphthalate	U	390	1.0	330	390	110	
91-94-1	3,3'-Dichlorobenzidine	U	590	1.0	500	590	140	
218-01-9	Chrysene	U	390	1.0	330	390	110	
117-81-7	bis(2-Ethylhexyl)phthalate	J	150	1.0	330	390	120	
117-84-0	Di-n-octylphthalate	~~U~~ UJ	390	1.0	330	390	250	CCH
367-12-4	2-Fluorophenol		45%					
13127-88-3	Phenol-D6		75%					
4165-60-0	Nitrobenzene-D5		93%					
321-60-8	2-Fluorobiphenyl		90%					
118-79-6	2,4,6-Tribromophenol		* 15%					
1718-51-0	Terphenyl-D14		116%					

MW 3/4/09

KATAHDIN ANALYTICAL SERVICES
Report of Analytical Results

16

Client: CH2MHill
Project: TO-009 Lejeune
PO No:
Sample Date: 12/16/08
Received Date: 12/19/08
Extraction Date: 12/22/08
Analysis Date: 19-JAN-2009 19:05
Report Date: 01/22/2009
Matrix: SOIL
% Solids: 92.2

Lab ID: SB7328-1
Client ID: MR08-SS111-08D
SDG: TO9-18
Extracted by: AC
Extraction Method: SW846 3550
Analyst: JLP
Analysis Method: SW846 8270C
Lab Prep Batch: WG59322
Units: ug/Kgdrywt

CAS#	Compound	Flags	Results	DF	PQL	Adj.PQL	Adj.MDL	
100-52-7	Benzaldehyde	~~U~~ UJ	540	1.0	500	540	130	ICB
108-95-2	Phenol	~~U~~ UJ	540	1.0	500	540	170	SSL
111-44-4	Bis(2-Chloroethyl)ether	U	360	1.0	330	360	88	
95-57-8	2-Chlorophenol	~~U~~ UJ	540	1.0	500	540	180	SSL
95-48-7	2-Methylphenol	~~U~~ UJ	650	1.0	600	650	220	SSL
108-60-1	2,2'-Oxybis(1-chloropropane)	U	360	1.0	330	360	96	
98-86-2	Acetophenone	U	650	1.0	600	650	190	
621-64-7	N-Nitroso-di-n-propylamine	U	360	1.0	330	360	90	
65794-96-9	3&4-Methylphenol	~~U~~ UJ	650	1.0	600	650	200	SSL
67-72-1	Hexachloroethane	U	360	1.0	330	360	100	
98-95-3	Nitrobenzene	U	360	1.0	330	360	99	
78-59-1	Isophorone	U	360	1.0	330	360	81	
88-75-5	2-Nitrophenol	~~U~~ UJ	650	1.0	600	650	180	SSL
105-67-9	2,4-Dimethylphenol	~~U~~ UJ	540	1.0	500	540	180	SSL
111-91-1	Bis(2-Chloroethoxy)methane	U	360	1.0	330	360	100	
120-83-2	2,4-Dichlorophenol	~~U~~ UJ	540	1.0	500	540	160	SSL
106-47-8	4-Chloroaniline	U	540	1.0	500	540	130	
105-60-2	Caprolactam	U	540	1.0	500	540	160	
59-50-7	4-Chloro-3-Methylphenol	~~U~~ UJ	540	1.0	500	540	180	SSL
88-06-2	2,4,6-Trichlorophenol	~~U~~ ↓	540	1.0	500	540	170	↓
95-95-4	2,4,5-Trichlorophenol	~~U~~ ↓	540	1.0	500	540	170	
91-58-7	2-Chloronaphthalene	U	360	1.0	330	360	94	
92-52-4	1,1'-Biphenyl	U	360	1.0	330	360	79	
88-74-4	2-Nitroaniline	U	540	1.0	500	540	81	
131-11-3	Dimethyl Phthalate	U	360	1.0	330	360	85	
606-20-2	2,6-Dinitrotoluene	U	360	1.0	330	360	86	
208-96-8	Acenaphthylene	U	360	1.0	330	360	76	
99-09-2	3-Nitroaniline	~~U~~ UJ	540	1.0	500	540	100	CCH
83-32-9	Acenaphthene	U	360	1.0	330	360	70	
51-28-5	2,4-Dinitrophenol	~~U~~ UJ	1300	1.0	1200	1300	410	SSL
132-64-9	Dibenzofuran	U	360	1.0	330	360	86	
100-02-7	4-Nitrophenol	~~U~~ UJ	1300	1.0	1200	1300	340	SSL
121-14-2	2,4-Dinitrotoluene	U	360	1.0	330	360	92	
84-66-2	Diethylphthalate	U	360	1.0	330	360	87	
7005-72-3	4-Chlorophenyl-phenylether	U	360	1.0	330	360	85	
100-01-6	4-Nitroaniline	~~U~~ UJ	540	1.0	500	540	140	CCH
534-52-1	4,6-Dinitro-2-Methylphenol	~~U~~ UJ	1300	1.0	1200	1300	360	SSL
86-30-6	N-Nitrosodiphenylamine	U	720	1.0	660	720	240	
101-55-3	4-Bromophenyl-phenylether	U	360	1.0	330	360	92	
1912-24-9	Atrazine	U	360	1.0	330	360	99	
87-86-5	Pentachlorophenol	~~U~~ UJ	890	1.0	820	890	260	SSL
120-12-7	Anthracene	U	360	1.0	330	360	91	
86-74-8	Carbazole	~~U~~ UJ	540	1.0	500	540	120	CCH

lw
3/4/09

KATAHDIN ANALYTICAL SERVICES
Report of Analytical Results

16

Client: CH2MHill
Project: TO-009 Lejeune
PO No:
Sample Date: 12/16/08
Received Date: 12/19/08
Extraction Date: 12/22/08
Analysis Date: 19-JAN-2009 19:05
Report Date: 01/22/2009
Matrix: SOIL
% Solids: 92.2

Lab ID: SB7328-1
Client ID: MR08-SS111-08D
SDG: TO9-18
Extracted by: AC
Extraction Method: SW846 3550
Analyst: JLP
Analysis Method: SW846 8270C
Lab Prep Batch: WG59322
Units: ug/Kgdrywt

CAS#	Compound	Flags	Results	DF	PQL	Adj.PQL	Adj.MDL
84-74-2	Di-n-butylphthalate	U	360	1.0	330	360	110
85-68-7	Butylbenzylphthalate	U	360	1.0	330	360	100
91-94-1	3,3'-Dichlorobenzidine	~~U~~ UJ	540	1.0	500	540	120 CCH
218-01-9	Chrysene	U	360	1.0	330	360	100
117-81-7	bis(2-Ethylhexyl)phthalate	J	220	1.0	330	360	110
117-84-0	Di-n-octylphthalate	U	360	1.0	330	360	230
367-12-4	2-Fluorophenol		* 32%				
13127-88-3	Phenol-D6		45%				
4165-60-0	Nitrobenzene-D5		56%				
321-60-8	2-Fluorobiphenyl		60%				
118-79-6	2,4,6-Tribromophenol		* 17%				
1718-51-0	Terphenyl-D14		78%				

lw
3/4/09

16RE

KATAHDIN ANALYTICAL SERVICES
Report of Analytical Results

Client: CH2MHill
Project: TO-009 Lejeune
PO No:
Sample Date: 12/16/08
Received Date: 12/19/08
Extraction Date: 01/20/09
Analysis Date: 22-JAN-2009 03:48
Report Date: 01/22/2009
Matrix: SOIL
% Solids: 92.2

Lab ID: SB7328-1RE
Client ID: MR08-SS111-08D
SDG: TO9-18
Extracted by: AC
Extraction Method: SW846 3550
Analyst: JCG
Analysis Method: SW846 8270C
Lab Prep Batch: WG59991
Units: ug/Kgdrywt

Use Original

R RE

CAS#	Compound	Flags	Results	DF	PQL	Adj.PQL	Adj.MDL	
100-52-7	Benzaldehyde	U UJ	540	1.0	500	540	130	HT
108-95-2	Phenol	U	540	1.0	500	540	170	
111-44-4	Bis(2-Chloroethyl)ether	U	360	1.0	330	360	88	
95-57-8	2-Chlorophenol	U	540	1.0	500	540	180	
95-48-7	2-Methylphenol	U	650	1.0	600	650	220	
108-60-1	2,2'-Oxybis(1-chloropropane)	U	360	1.0	330	360	96	
98-86-2	Acetophenone	U	650	1.0	600	650	190	
621-64-7	N-Nitroso-di-n-propylamine	U	360	1.0	330	360	90	
65794-96-9	3&4-Methylphenol	U	650	1.0	600	650	200	
67-72-1	Hexachloroethane	U	360	1.0	330	360	100	
98-95-3	Nitrobenzene	U	360	1.0	330	360	99	
78-59-1	Isophorone	U	360	1.0	330	360	81	
88-75-5	2-Nitrophenol	U	650	1.0	600	650	180	
105-67-9	2,4-Dimethylphenol	U	540	1.0	500	540	180	
111-91-1	Bis(2-Chloroethoxy)methane	U	360	1.0	330	360	100	
120-83-2	2,4-Dichlorophenol	U	540	1.0	500	540	160	
106-47-8	4-Chloroaniline	U	540	1.0	500	540	130	
105-60-2	Caprolactam	U	540	1.0	500	540	160	
59-50-7	4-Chloro-3-Methylphenol	U	540	1.0	500	540	180	
88-06-2	2,4,6-Trichlorophenol	U	540	1.0	500	540	170	
95-95-4	2,4,5-Trichlorophenol	U	540	1.0	500	540	170	
91-58-7	2-Chloronaphthalene	U	360	1.0	330	360	94	
92-52-4	1,1'-Biphenyl	U	360	1.0	330	360	79	
88-74-4	2-Nitroaniline	U	540	1.0	500	540	81	
131-11-3	Dimethyl Phthalate	U	360	1.0	330	360	85	
606-20-2	2,6-Dinitrotoluene	U	360	1.0	330	360	86	
208-96-8	Acenaphthylene	U	360	1.0	330	360	76	
99-09-2	3-Nitroaniline	U	540	1.0	500	540	100	
83-32-9	Acenaphthene	U	360	1.0	330	360	70	
51-28-5	2,4-Dinitrophenol	U	1300	1.0	1200	1300	410	
132-64-9	Dibenzofuran	U	360	1.0	330	360	86	
100-02-7	4-Nitrophenol	U	1300	1.0	1200	1300	340	
121-14-2	2,4-Dinitrotoluene	U	360	1.0	330	360	92	
84-66-2	Diethylphthalate	U	360	1.0	330	360	87	
7005-72-3	4-Chlorophenyl-phenylether	U	360	1.0	330	360	85	
100-01-6	4-Nitroaniline	U	540	1.0	500	540	140	
534-52-1	4,6-Dinitro-2-Methylphenol	U	1300	1.0	1200	1300	360	
86-30-6	N-Nitrosodiphenylamine	U	720	1.0	660	720	240	
101-55-3	4-Bromophenyl-phenylether	U	360	1.0	330	360	92	
1912-24-9	Atrazine	U	360	1.0	330	360	99	
87-86-5	Pentachlorophenol	U	890	1.0	820	890	260	
120-12-7	Anthracene	U	360	1.0	330	360	91	
86-74-8	Carbazole	U	540	1.0	500	540	120	

MW 2/4/09

16RE

KATAHDIN ANALYTICAL SERVICES
Report of Analytical Results

Client: CH2MHill
Project: TO-009 Lejeune
PO No:
Sample Date: 12/16/08
Received Date: 12/19/08
Extraction Date: 01/20/09
Analysis Date: 22-JAN-2009 03:48
Report Date: 01/22/2009
Matrix: SOIL
% Solids: 92.2

Lab ID: SB7328-1RE
Client ID: MR08-SS111-08D
SDG: TO9-18
Extracted by: AC
Extraction Method: SW846 3550
Analyst: JCG
Analysis Method: SW846 8270C
Lab Prep Batch: WG59991
Units: ug/Kgdrywt

Use orig wt

CAS#	Compound	Flags		Results	DF	PQL	Adj.PQL	Adj.MDL	
84-74-2	Di-n-butylphthalate	U	UJ	360	1.0	330	360	110	HT
85-68-7	Butylbenzylphthalate	U		360	1.0	330	360	100	
91-94-1	3,3'-Dichlorobenzidine	U		540	1.0	500	540	120	
218-01-9	Chrysene	U		360	1.0	330	360	100	
117-81-7	bis(2-Ethylhexyl)phthalate	J	J	270	1.0	330	360	110	
117-84-0	Di-n-octylphthalate	U	UJ	360	1.0	330	360	230	
367-12-4	2-Fluorophenol			78%					
13127-88-3	Phenol-D6			82%					
4165-60-0	Nitrobenzene-D5			75%					
321-60-8	2-Fluorobiphenyl			90%					
118-79-6	2,4,6-Tribromophenol			77%					
1718-51-0	Terphenyl-D14			102%					

R RE

MW 3/4/09

Report of Analytical Results

17

Client: CH2MHill
Project: TO-009 Lejeune
PO No:
Sample Date: 12/16/08
Received Date: 12/19/08
Extraction Date: 12/22/08
Analysis Date: 19-JAN-2009 19:48
Report Date: 01/22/2009
Matrix: SOIL
% Solids: 92.9

Lab ID: SB7328-3
Client ID: MR08-SS112-08D
SDG: TO9-18
Extracted by: AC
Extraction Method: SW846 3550
Analyst: JLP
Analysis Method: SW846 8270C
Lab Prep Batch: WG59322
Units: ug/Kgdrywt

Use reanalysis

CAS#	Compound	Flags	Results	DF	PQL	Adj.PQL	Adj.MDL	
100-52-7	Benzaldehyde	~~U~~ UJ	540	1.0	500	540	130	ICB
108-95-2	Phenol	~~U~~ R	540	1.0	500	540	170	SSL
111-44-4	Bis(2-Chloroethyl)ether	U	360	1.0	330	360	87	
95-57-8	2-Chlorophenol	~~U~~ R	540	1.0	500	540	180	SSL
95-48-7	2-Methylphenol	~~U~~ R	640	1.0	600	640	220	SSL
108-60-1	2,2'-Oxybis(1-chloropropane)	U	360	1.0	330	360	96	
98-86-2	Acetophenone	U	640	1.0	600	640	190	
621-64-7	N-Nitroso-di-n-propylamine	U	360	1.0	330	360	89	
65794-96-9	3&4-Methylphenol	~~U~~ R	640	1.0	600	640	200	SSL
67-72-1	Hexachloroethane	U	360	1.0	330	360	100	
98-95-3	Nitrobenzene	U	360	1.0	330	360	98	
78-59-1	Isophorone	U	360	1.0	330	360	81	
88-75-5	2-Nitrophenol	~~U~~ R	640	1.0	600	640	180	SSL
105-67-9	2,4-Dimethylphenol	~~U~~ R	540	1.0	500	540	180	SSL
111-91-1	Bis(2-Chloroethoxy)methane	U	360	1.0	330	360	100	
120-83-2	2,4-Dichlorophenol	~~U~~ R	540	1.0	500	540	160	SSL
106-47-8	4-Chloroaniline	U	540	1.0	500	540	130	
105-60-2	Caprolactam	U	540	1.0	500	540	150	
59-50-7	4-Chloro-3-Methylphenol	~~U~~ R	540	1.0	500	540	180	SSL
88-06-2	2,4,6-Trichlorophenol	~~U~~	540	1.0	500	540	170	↓
95-95-4	2,4,5-Trichlorophenol	~~U~~	540	1.0	500	540	170	↓
91-58-7	2-Chloronaphthalene	U	360	1.0	330	360	94	
92-52-4	1,1'-Biphenyl	U	360	1.0	330	360	78	
88-74-4	2-Nitroaniline	U	540	1.0	500	540	81	
131-11-3	Dimethyl Phthalate	U	360	1.0	330	360	84	
606-20-2	2,6-Dinitrotoluene	U	360	1.0	330	360	85	
208-96-8	Acenaphthylene	U	360	1.0	330	360	75	
99-09-2	3-Nitroaniline	~~U~~ UJ	540	1.0	500	540	100	CCH
83-32-9	Acenaphthene	U	360	1.0	330	360	70	
51-28-5	2,4-Dinitrophenol	~~U~~ R	1300	1.0	1200	1300	400	SSL
132-64-9	Dibenzofuran	U	360	1.0	330	360	85	
100-02-7	4-Nitrophenol	~~U~~ R	1300	1.0	1200	1300	330	SSL
121-14-2	2,4-Dinitrotoluene	U	360	1.0	330	360	91	
84-66-2	Diethylphthalate	U	360	1.0	330	360	86	
7005-72-3	4-Chlorophenyl-phenylether	U	360	1.0	330	360	84	
100-01-6	4-Nitroaniline	~~U~~ UJ	540	1.0	500	540	140	CCH
534-52-1	4,6-Dinitro-2-Methylphenol	~~U~~ R	1300	1.0	1200	1300	360	SSL
86-30-6	N-Nitrosodiphenylamine	U	710	1.0	660	710	240	
101-55-3	4-Bromophenyl-phenylether	U	360	1.0	330	360	91	
1912-24-9	Atrazine	U	360	1.0	330	360	98	
87-86-5	Pentachlorophenol	~~U~~ R	880	1.0	820	880	250	SSL
120-12-7	Anthracene	U	360	1.0	330	360	90	
86-74-8	Carbazole	~~U~~ UJ	540	1.0	500	540	120	CCH

jw 3/4/09

KATAHDIN ANALYTICAL SERVICES
Report of Analytical Results

Client: CH2MHill
Project: TO-009 Lejeune
PO No:
Sample Date: 12/16/08
Received Date: 12/19/08
Extraction Date: 12/22/08
Analysis Date: 19-JAN-2009 19:48
Report Date: 01/22/2009
Matrix: SOIL
% Solids: 92.9

Lab ID: SB7328-3
Client ID: MR08-SS112-08D
SDG: TO9-18
Extracted by: AC
Extraction Method: SW846 3550
Analyst: JLP
Analysis Method: SW846 8270C
Lab Prep Batch: WG59322
Units: ug/Kgdrywt

Use Reanalysis

CAS#	Compound	Flags	Results	DF	PQL	Adj.PQL	Adj.MDL	
84-74-2	Di-n-butylphthalate	U	360	1.0	330	360	110	
85-68-7	Butylbenzylphthalate	U	360	1.0	330	360	100	
91-94-1	3,3'-Dichlorobenzidine	~~U~~ UJ	540	1.0	500	540	120	CCH
218-01-9	Chrysene	U	360	1.0	330	360	100	
117-81-7	bis(2-Ethylhexyl)phthalate	J	190	1.0	330	360	100	
117-84-0	Di-n-octylphthalate	U	360	1.0	330	360	230	
367-12-4	2-Fluorophenol		* 32%					
13127-88-3	Phenol-D6		59%					
4165-60-0	Nitrobenzene-D5		75%					
321-60-8	2-Fluorobiphenyl		84%					
118-79-6	2,4,6-Tribromophenol		* 9%					
1718-51-0	Terphenyl-D14		103%					

Page 02 of 02 G4054.D

R

AW
3/4/09

17RE

KATAHDIN ANALYTICAL SERVICES
Report of Analytical Results

Client: CH2MHill
Project: TO-009 Lejeune
PO No:
Sample Date: 12/16/08
Received Date: 12/19/08
Extraction Date: 01/20/09
Analysis Date: 22-JAN-2009 04:29
Report Date: 01/22/2009
Matrix: SOIL
% Solids: 92.9

Lab ID: SB7328-3RE
Client ID: MR08-SS112-08D
SDG: TO9-18
Extracted by: AC
Extraction Method: SW846 3550
Analyst: JCG
Analysis Method: SW846 8270C
Lab Prep Batch: WG59991
Units: ug/Kgdrywt

CAS#	Compound	Flags		Results	DF	PQL	Adj.PQL	Adj.MDL	
100-52-7	Benzaldehyde	U	UJ	540	1.0	500	540	130	HT
108-95-2	Phenol	U		540	1.0	500	540	170	
111-44-4	Bis(2-Chloroethyl)ether	U		360	1.0	330	360	87	
95-57-8	2-Chlorophenol	U		540	1.0	500	540	180	
95-48-7	2-Methylphenol	U		640	1.0	600	640	220	
108-60-1	2,2'-Oxybis(1-chloropropane)	U		360	1.0	330	360	96	
98-86-2	Acetophenone	U		640	1.0	600	640	190	
621-64-7	N-Nitroso-di-n-propylamine	U		360	1.0	330	360	89	
65794-96-9	3&4-Methylphenol	U		640	1.0	600	640	200	
67-72-1	Hexachloroethane	U		360	1.0	330	360	100	
98-95-3	Nitrobenzene	U		360	1.0	330	360	98	
78-59-1	Isophorone	U		360	1.0	330	360	81	
88-75-5	2-Nitrophenol	U		640	1.0	600	640	180	
105-67-9	2,4-Dimethylphenol	U		540	1.0	500	540	180	
111-91-1	Bis(2-Chloroethoxy)methane	U		360	1.0	330	360	100	
120-83-2	2,4-Dichlorophenol	U		540	1.0	500	540	160	
106-47-8	4-Chloroaniline	U		540	1.0	500	540	130	
105-60-2	Caprolactam	U		540	1.0	500	540	150	
59-50-7	4-Chloro-3-Methylphenol	U		540	1.0	500	540	180	
88-06-2	2,4,6-Trichlorophenol	U		540	1.0	500	540	170	
95-95-4	2,4,5-Trichlorophenol	U		540	1.0	500	540	170	
91-58-7	2-Chloronaphthalene	U		360	1.0	330	360	94	
92-52-4	1,1'-Biphenyl	U		360	1.0	330	360	78	
88-74-4	2-Nitroaniline	U		540	1.0	500	540	81	
131-11-3	Dimethyl Phthalate	U		360	1.0	330	360	84	
606-20-2	2,6-Dinitrotoluene	U		360	1.0	330	360	85	
208-96-8	Acenaphthylene	U		360	1.0	330	360	75	
99-09-2	3-Nitroaniline	U		540	1.0	500	540	100	
83-32-9	Acenaphthene	U		360	1.0	330	360	70	
51-28-5	2,4-Dinitrophenol	U		1300	1.0	1200	1300	400	
132-64-9	Dibenzofuran	U		360	1.0	330	360	85	
100-02-7	4-Nitrophenol	U		1300	1.0	1200	1300	330	
121-14-2	2,4-Dinitrotoluene	U		360	1.0	330	360	91	
84-66-2	Diethylphthalate	J	J	88	1.0	330	360	86	
7005-72-3	4-Chlorophenyl-phenylether	U	UJ	360	1.0	330	360	84	
100-01-6	4-Nitroaniline	U		540	1.0	500	540	140	
534-52-1	4,6-Dinitro-2-Methylphenol	U		1300	1.0	1200	1300	360	
86-30-6	N-Nitrosodiphenylamine	U		710	1.0	660	710	240	
101-55-3	4-Bromophenyl-phenylether	U		360	1.0	330	360	91	
1912-24-9	Atrazine	U		360	1.0	330	360	98	
87-86-5	Pentachlorophenol	U		880	1.0	820	880	250	
120-12-7	Anthracene	U		360	1.0	330	360	90	
86-74-8	Carbazole	U		540	1.0	500	540	120	

Lev
3/4/09

1 7RE

KATAHDIN ANALYTICAL SERVICES
Report of Analytical Results

Client: CH2MHill
Project: TO-009 Lejeune
PO No:
Sample Date: 12/16/08
Received Date: 12/19/08
Extraction Date: 01/20/09
Analysis Date: 22-JAN-2009 04:29
Report Date: 01/22/2009
Matrix: SOIL
% Solids: 92.9

Lab ID: SB7328-3RE
Client ID: MR08-SS112-08D
SDG: TO9-18
Extracted by: AC
Extraction Method: SW846 3550
Analyst: JCG
Analysis Method: SW846 8270C
Lab Prep Batch: WG59991
Units: ug/Kgdrywt

CAS#	Compound	Flags	Results	DF	PQL	Adj.PQL	Adj.MDL
84-74-2	Di-n-butylphthalate	U UJ	360	1.0	330	360	110 HT
85-68-7	Butylbenzylphthalate	U	360	1.0	330	360	100
91-94-1	3,3'-Dichlorobenzidine	U	540	1.0	500	540	120
218-01-9	Chrysene	U	360	1.0	330	360	100
117-81-7	bis(2-Ethylhexyl)phthalate	U J	240	1.0	330	360	100
117-84-0	Di-n-octylphthalate	U UJ	360	1.0	330	360	230
367-12-4	2-Fluorophenol		74%				
13127-88-3	Phenol-D6		77%				
4165-60-0	Nitrobenzene-D5		71%				
321-60-8	2-Fluorobiphenyl		88%				
118-79-6	2,4,6-Tribromophenol		66%				
1718-51-0	Terphenyl-D14		95%				

lw
3/4/09

KATAHDIN ANALYTICAL SERVICES
Report of Analytical Results

Client: CH2MHill
Project: TO-009 Lejeune
PO No:
Sample Date: 12/17/08
Received Date: 12/19/08
Extraction Date: 12/22/08
Analysis Date: 19-JAN-2009 16:54
Report Date: 01/22/2009
Matrix: SOIL
% Solids: 86.1

Lab ID: SB7328-5
Client ID: MR08-SS133-08D
SDG: TO9-18
Extracted by: AC
Extraction Method: SW846 3550
Analyst: JLP
Analysis Method: SW846 8270C
Lab Prep Batch: WG59322
Units: ug/Kgdrywt

CAS#	Compound	Flags	Results	DF	PQL	Adj.PQL	Adj.MDL	
100-52-7	Benzaldehyde	~~U~~ UJ	580	1.0	500	580	140	JCB
108-95-2	Phenol	U	580	1.0	500	580	180	
111-44-4	Bis(2-Chloroethyl)ether	U	380	1.0	330	380	94	
95-57-8	2-Chlorophenol	U	580	1.0	500	580	190	
95-48-7	2-Methylphenol	U	700	1.0	600	700	230	
108-60-1	2,2'-Oxybis(1-chloropropane)	U	380	1.0	330	380	100	
98-86-2	Acetophenone	U	700	1.0	600	700	210	
621-64-7	N-Nitroso-di-n-propylamine	U	380	1.0	330	380	96	
65794-96-9	3&4-Methylphenol	U	700	1.0	600	700	220	
67-72-1	Hexachloroethane	U	380	1.0	330	380	110	
98-95-3	Nitrobenzene	U	380	1.0	330	380	100	
78-59-1	Isophorone	U	380	1.0	330	380	87	
88-75-5	2-Nitrophenol	U	700	1.0	600	700	190	
105-67-9	2,4-Dimethylphenol	~~U~~ UJ	580	1.0	500	580	190	BSL
111-91-1	Bis(2-Chloroethoxy)methane	U	380	1.0	330	380	110	
120-83-2	2,4-Dichlorophenol	U	580	1.0	500	580	170	
106-47-8	4-Chloroaniline	U	580	1.0	500	580	140	
105-60-2	Caprolactam	U	580	1.0	500	580	170	
59-50-7	4-Chloro-3-Methylphenol	U	580	1.0	500	580	190	
88-06-2	2,4,6-Trichlorophenol	U	580	1.0	500	580	180	
95-95-4	2,4,5-Trichlorophenol	U	580	1.0	500	580	180	
91-58-7	2-Chloronaphthalene	U	380	1.0	330	380	100	
92-52-4	1,1'-Biphenyl	U	380	1.0	330	380	85	
88-74-4	2-Nitroaniline	U	580	1.0	500	580	87	
131-11-3	Dimethyl Phthalate	U	380	1.0	330	380	91	
606-20-2	2,6-Dinitrotoluene	U	380	1.0	330	380	92	
208-96-8	Acenaphthylene	U	380	1.0	330	380	81	
99-09-2	3-Nitroaniline	~~U~~ UJ	580	1.0	500	580	110	CCH
83-32-9	Acenaphthene	U	380	1.0	330	380	76	
51-28-5	2,4-Dinitrophenol	~~U~~ UJ	1400	1.0	1200	1400	440	CCH
132-64-9	Dibenzofuran	U	380	1.0	330	380	92	
100-02-7	4-Nitrophenol	~~U~~ UJ	1400	1.0	1200	1400	360	CCH
121-14-2	2,4-Dinitrotoluene	U	380	1.0	330	380	99	
84-66-2	Diethylphthalate	U	380	1.0	330	380	93	
7005-72-3	4-Chlorophenyl-phenylether	U	380	1.0	330	380	91	
100-01-6	4-Nitroaniline	~~U~~ UJ	580	1.0	500	580	160	CCH
534-52-1	4,6-Dinitro-2-Methylphenol	~~U~~ UJ	1400	1.0	1200	1400	390	CCH
86-30-6	N-Nitrosodiphenylamine	U	770	1.0	660	770	250	
101-55-3	4-Bromophenyl-phenylether	U	380	1.0	330	380	99	
1912-24-9	Atrazine	U	380	1.0	330	380	100	
87-86-5	Pentachlorophenol	~~U~~ UJ	950	1.0	820	950	280	CCH
120-12-7	Anthracene	U	380	1.0	330	380	98	
86-74-8	Carbazole	~~U~~ UJ	580	1.0	500	580	130	CCH

MW 3/4/09

18

KATAHDIN ANALYTICAL SERVICES
Report of Analytical Results

Client: CH2MHill
Project: TO-009 Lejeune
PO No:
Sample Date: 12/17/08
Received Date: 12/19/08
Extraction Date: 12/22/08
Analysis Date: 19-JAN-2009 16:54
Report Date: 01/22/2009
Matrix: SOIL
% Solids: 86.1

Lab ID: SB7328-5
Client ID: MR08-SS133-08D
SDG: TO9-18
Extracted by: AC
Extraction Method: SW846 3550
Analyst: JLP
Analysis Method: SW846 8270C
Lab Prep Batch: WG59322
Units: ug/Kgdrywt

CAS#	Compound	Flags	Results	DF	PQL	Adj.PQL	Adj.MDL	
84-74-2	Di-n-butylphthalate	U	380	1.0	330	380	120	
85-68-7	Butylbenzylphthalate	U	380	1.0	330	380	110	
91-94-1	3,3'-Dichlorobenzidine	~~U~~ UJ	580	1.0	500	580	130	CCH
218-01-9	Chrysene	U	380	1.0	330	380	110	
117-81-7	bis(2-Ethylhexyl)phthalate	U	380	1.0	330	380	110	
117-84-0	Di-n-octylphthalate	U	380	1.0	330	380	240	
367-12-4	2-Fluorophenol		48%					
13127-88-3	Phenol-D6		52%					
4165-60-0	Nitrobenzene-D5		61%					
321-60-8	2-Fluorobiphenyl		67%					
118-79-6	2,4,6-Tribromophenol		38%					
1718-51-0	Terphenyl-D14		81%					

MW 3/4/09

Report of Analytical Results

19

Client: CH2MHill
Project: TO-009 Lejeune
PO No:
Sample Date: 12/17/08
Received Date: 12/19/08
Extraction Date: 12/22/08
Analysis Date: 19-JAN-2009 17:36
Report Date: 01/22/2009
Matrix: SOIL
% Solids: 85.7

Lab ID: SB7328-7
Client ID: MR08-IS133-08D
SDG: TO9-18
Extracted by: AC
Extraction Method: SW846 3550
Analyst: JLP
Analysis Method: SW846 8270C
Lab Prep Batch: WG59322
Units: ug/Kgdrywt

CAS#	Compound	Flags	Results	DF	PQL	Adj.PQL	Adj.MDL	
100-52-7	Benzaldehyde	J	1400	1.0	500	580	140	JCB
108-95-2	Phenol	U	580	1.0	500	580	180	
111-44-4	Bis(2-Chloroethyl)ether	U	380	1.0	330	380	94	
95-57-8	2-Chlorophenol	U	580	1.0	500	580	190	
95-48-7	2-Methylphenol	U	700	1.0	600	700	230	
108-60-1	2,2'-Oxybis(1-chloropropane)	U	380	1.0	330	380	100	
98-86-2	Acetophenone	U	700	1.0	600	700	210	
621-64-7	N-Nitroso-di-n-propylamine	U	380	1.0	330	380	97	
65794-96-9	3&4-Methylphenol	U	700	1.0	600	700	220	
67-72-1	Hexachloroethane	U	380	1.0	330	380	110	
98-95-3	Nitrobenzene	U	380	1.0	330	380	110	
78-59-1	Isophorone	U	380	1.0	330	380	87	
88-75-5	2-Nitrophenol	U	700	1.0	600	700	190	
105-67-9	2,4-Dimethylphenol	~~U~~ UJ	580	1.0	500	580	190	BSL
111-91-1	Bis(2-Chloroethoxy)methane	U	380	1.0	330	380	110	
120-83-2	2,4-Dichlorophenol	U	580	1.0	500	580	170	
106-47-8	4-Chloroaniline	U	580	1.0	500	580	140	
105-60-2	Caprolactam	U	580	1.0	500	580	170	
59-50-7	4-Chloro-3-Methylphenol	U	580	1.0	500	580	190	
88-06-2	2,4,6-Trichlorophenol	U	580	1.0	500	580	180	
95-95-4	2,4,5-Trichlorophenol	U	580	1.0	500	580	180	
91-58-7	2-Chloronaphthalene	U	380	1.0	330	380	100	
92-52-4	1,1'-Biphenyl	U	380	1.0	330	380	85	
88-74-4	2-Nitroaniline	U	580	1.0	500	580	87	
131-11-3	Dimethyl Phthalate	U	380	1.0	330	380	91	
606-20-2	2,6-Dinitrotoluene	U	380	1.0	330	380	92	
208-96-8	Acenaphthylene	U	380	1.0	330	380	82	
99-09-2	3-Nitroaniline	~~U~~ UJ	580	1.0	500	580	110	CCH
83-32-9	Acenaphthene	U	380	1.0	330	380	76	
51-28-5	2,4-Dinitrophenol	~~U~~ UJ	1400	1.0	1200	1400	440	CCH
132-64-9	Dibenzofuran	U	380	1.0	330	380	92	
100-02-7	4-Nitrophenol	~~U~~ UJ	1400	1.0	1200	1400	360	CCH
121-14-2	2,4-Dinitrotoluene	U	380	1.0	330	380	99	
84-66-2	Diethylphthalate	U	380	1.0	330	380	93	
7005-72-3	4-Chlorophenyl-phenylether	U	380	1.0	330	380	91	
100-01-6	4-Nitroaniline	~~U~~ UJ	580	1.0	500	580	160	CCH
534-52-1	4,6-Dinitro-2-Methylphenol	~~U~~ UJ	1400	1.0	1200	1400	390	CCH
86-30-6	N-Nitrosodiphenylamine	U	770	1.0	660	770	260	
101-55-3	4-Bromophenyl-phenylether	U	380	1.0	330	380	99	
1912-24-9	Atrazine	U	380	1.0	330	380	110	
87-86-5	Pentachlorophenol	~~U~~ UJ	960	1.0	820	960	280	CCH
120-12-7	Anthracene	U	380	1.0	330	380	98	
86-74-8	Carbazole	~~U~~ UJ	580	1.0	500	580	130	CCH

MW 3/4/09

Report of Analytical Results

Client: CH2MHill
Project: TO-009 Lejeune
PO No:
Sample Date: 12/17/08
Received Date: 12/19/08
Extraction Date: 12/22/08
Analysis Date: 19-JAN-2009 17:36
Report Date: 01/22/2009
Matrix: SOIL
% Solids: 85.7

Lab ID: SB7328-7
Client ID: MR08-IS133-08D
SDG: TO9-18
Extracted by: AC
Extraction Method: SW846 3550
Analyst: JLP
Analysis Method: SW846 8270C
Lab Prep Batch: WG59322
Units: ug/Kgdrywt

CAS#	Compound	Flags	Results	DF	PQL	Adj.PQL	Adj.MDL
84-74-2	Di-n-butylphthalate	U	380	1.0	330	380	120
85-68-7	Butylbenzylphthalate	U	380	1.0	330	380	110
91-94-1	3,3'-Dichlorobenzidine	~~U~~ UJ	580	1.0	500	580	130 CCH
218-01-9	Chrysene	U	380	1.0	330	380	110
117-81-7	bis(2-Ethylhexyl)phthalate	U	380	1.0	330	380	110
117-84-0	Di-n-octylphthalate	U	380	1.0	330	380	250
367-12-4	2-Fluorophenol		51%				
13127-88-3	Phenol-D6		51%				
4165-60-0	Nitrobenzene-D5		57%				
321-60-8	2-Fluorobiphenyl		62%				
118-79-6	2,4,6-Tribromophenol		44%				
1718-51-0	Terphenyl-D14		80%				

lw 3/4/09

KATAHDIN ANALYTICAL SERVICES
Report of Analytical Results

20

Client: CH2MHill
Project: TO-009 Lejeune
PO No:
Sample Date: 12/17/08
Received Date: 12/19/08
Extraction Date: 12/22/08
Analysis Date: 19-JAN-2009 18:21
Report Date: 01/22/2009
Matrix: SOIL
% Solids: 90.9

Lab ID: SB7328-9
Client ID: MR08-SS110-08D
SDG: T09-18
Extracted by: AC
Extraction Method: SW846 3550
Analyst: JLP
Analysis Method: SW846 8270C
Lab Prep Batch: WG59322
Units: ug/Kgdrywt

Use reanalysis

CAS#	Compound	Flags	Results	DF	PQL	Adj.PQL	Adj.MDL	
100-52-7	Benzaldehyde	~~U~~ UJ	550	1.0	500	550	130	IEB
108-95-2	Phenol	~~U~~ R	550	1.0	500	550	170	SSL
111-44-4	Bis(2-Chloroethyl)ether	U	360	1.0	330	360	89	
95-57-8	2-Chlorophenol	~~U~~ R	550	1.0	500	550	180	SSL
95-48-7	2-Methylphenol	~~U~~ R	660	1.0	600	660	220	SSL
108-60-1	2,2'-Oxybis(1-chloropropane)	U	360	1.0	330	360	98	
98-86-2	Acetophenone	U	660	1.0	600	660	200	
621-64-7	N-Nitroso-di-n-propylamine	U	360	1.0	330	360	91	
65794-96-9	3&4-Methylphenol	~~U~~ R	660	1.0	600	660	200	SSL
67-72-1	Hexachloroethane	U	360	1.0	330	360	100	
98-95-3	Nitrobenzene	U	360	1.0	330	360	100	
78-59-1	Isophorone	U	360	1.0	330	360	82	
88-75-5	2-Nitrophenol	~~U~~ R	660	1.0	600	660	180	SSL
105-67-9	2,4-Dimethylphenol	~~U~~ R	550	1.0	500	550	180	SSL
111-91-1	Bis(2-Chloroethoxy)methane	U	360	1.0	330	360	100	
120-83-2	2,4-Dichlorophenol	~~U~~ R	550	1.0	500	550	160	SSL
106-47-8	4-Chloroaniline	U	550	1.0	500	550	130	
105-60-2	Caprolactam	U	550	1.0	500	550	160	
59-50-7	4-Chloro-3-Methylphenol	~~U~~ R	550	1.0	500	550	180	SSL
88-06-2	2,4,6-Trichlorophenol	~~U~~ ↓	550	1.0	500	550	170	↓
95-95-4	2,4,5-Trichlorophenol	U	550	1.0	500	550	170	
91-58-7	2-Chloronaphthalene	U	360	1.0	330	360	96	
92-52-4	1,1'-Biphenyl	U	360	1.0	330	360	80	
88-74-4	2-Nitroaniline	U	550	1.0	500	550	82	
131-11-3	Dimethyl Phthalate	U	360	1.0	330	360	86	
606-20-2	2,6-Dinitrotoluene	U	360	1.0	330	360	87	
208-96-8	Acenaphthylene	U	360	1.0	330	360	77	
99-09-2	3-Nitroaniline	~~U~~ UJ	550	1.0	500	550	100	CCH
83-32-9	Acenaphthene	U	360	1.0	330	360	72	
51-28-5	2,4-Dinitrophenol	~~U~~ R	1300	1.0	1200	1300	410	SSL
132-64-9	Dibenzofuran	U	360	1.0	330	360	87	
100-02-7	4-Nitrophenol	~~U~~ R	1300	1.0	1200	1300	340	SSL
121-14-2	2,4-Dinitrotoluene	U	360	1.0	330	360	94	
84-66-2	Diethylphthalate	U	360	1.0	330	360	88	
7005-72-3	4-Chlorophenyl-phenylether	U	360	1.0	330	360	86	
100-01-6	4-Nitroaniline	~~U~~ UJ	550	1.0	500	550	150	CCH
534-52-1	4,6-Dinitro-2-Methylphenol	~~U~~ R	1300	1.0	1200	1300	370	SSL
86-30-6	N-Nitrosodiphenylamine	U	730	1.0	660	730	240	
101-55-3	4-Bromophenyl-phenylether	U	360	1.0	330	360	94	
1912-24-9	Atrazine	U	360	1.0	330	360	100	
87-86-5	Pentachlorophenol	~~U~~ R	900	1.0	820	900	260	SSL
120-12-7	Anthracene	U	360	1.0	330	360	92	
86-74-8	Carbazole	~~U~~ UJ	550	1.0	500	550	120	CCH

MW
3/4/09

20

KATAHDIN ANALYTICAL SERVICES
Report of Analytical Results

Client: CH2MHill
Project: TO-009 Lejeune
PO No:
Sample Date: 12/17/08
Received Date: 12/19/08
Extraction Date: 12/22/08
Analysis Date: 19-JAN-2009 18:21
Report Date: 01/22/2009
Matrix: SOIL
% Solids: 90.9

Lab ID: SB7328-9
Client ID: MR08-SS110-08D
SDG: TO9-18
Extracted by: AC
Extraction Method: SW846 3550
Analyst: JLP
Analysis Method: SW846 8270C
Lab Prep Batch: WG59322
Units: ug/Kgdrywt

Use reanalysis

CAS#	Compound	Flags	Results	DF	PQL	Adj PQL	Adj.MDL	
84-74-2	Di-n-butylphthalate	U	360	1.0	330	360	110	
85-68-7	Butylbenzylphthalate	U	360	1.0	330	360	100	
91-94-1	3,3'-Dichlorobenzidine	~~U~~ UJ	550	1.0	500	550	120	CCH
218-01-9	Chrysene	U	360	1.0	330	360	100	
117-81-7	bis(2-Ethylhexyl)phthalate	J	110	1.0	330	360	110	
117-84-0	Di-n-octylphthalate	U	360	1.0	330	360	230	
367-12-4	2-Fluorophenol		* 31%					
13127-88-3	Phenol-D6		45%					
4165-60-0	Nitrobenzene-D5		59%					
321-60-8	2-Fluorobiphenyl		65%					
118-79-6	2,4,6-Tribromophenol		* 9%					
1718-51-0	Terphenyl-D14		75%					

Page 02 of 02 G4052.D

R

3/4/09

KATAHDIN ANALYTICAL SERVICES
Report of Analytical Results

2RE

Client: CH2MHill
Project: TO-009 Lejeune
PO No:
Sample Date: 12/17/08
Received Date: 12/19/08
Extraction Date: 01/20/09
Analysis Date: 22-JAN-2009 00:18
Report Date: 01/22/2009
Matrix: SOIL
% Solids: 90.9

Lab ID: SB7328-9RE
Client ID: MR08-SS110-08D
SDG: TO9-18
Extracted by: AC
Extraction Method: SW846 3550
Analyst: JCG
Analysis Method: SW846 8270C
Lab Prep Batch: WG59991
Units: ug/Kgdrywt

CAS#	Compound	Flags	Results	DF	PQL	Adj.PQL	Adj.MDL
100-52-7	Benzaldehyde	U UJ	550	1.0	500	550	130 HT
108-95-2	Phenol	U	550	1.0	500	550	170
111-44-4	Bis(2-Chloroethyl)ether	U	360	1.0	330	360	89
95-57-8	2-Chlorophenol	U	550	1.0	500	550	180
95-48-7	2-Methylphenol	U	660	1.0	600	660	220
108-60-1	2,2'-Oxybis(1-chloropropane)	U	360	1.0	330	360	98
98-86-2	Acetophenone	U	660	1.0	600	660	200
621-64-7	N-Nitroso-di-n-propylamine	U	360	1.0	330	360	91
65794-96-9	3&4-Methylphenol	U	660	1.0	600	660	200
67-72-1	Hexachloroethane	U	360	1.0	330	360	100
98-95-3	Nitrobenzene	U	360	1.0	330	360	100
78-59-1	Isophorone	U	360	1.0	330	360	82
88-75-5	2-Nitrophenol	U	660	1.0	600	660	180
105-67-9	2,4-Dimethylphenol	U	550	1.0	500	550	180
111-91-1	Bis(2-Chloroethoxy)methane	U	360	1.0	330	360	100
120-83-2	2,4-Dichlorophenol	U	550	1.0	500	550	160
106-47-8	4-Chloroaniline	U	550	1.0	500	550	130
105-60-2	Caprolactam	U	550	1.0	500	550	160
59-50-7	4-Chloro-3-Methylphenol	U	550	1.0	500	550	180
88-06-2	2,4,6-Trichlorophenol	U	550	1.0	500	550	170
95-95-4	2,4,5-Trichlorophenol	U	550	1.0	500	550	170
91-58-7	2-Chloronaphthalene	U	360	1.0	330	360	96
92-52-4	1,1'-Biphenyl	U	360	1.0	330	360	80
88-74-4	2-Nitroaniline	U	550	1.0	500	550	82
131-11-3	Dimethyl Phthalate	U	360	1.0	330	360	86
606-20-2	2,6-Dinitrotoluene	U	360	1.0	330	360	87
208-96-8	Acenaphthylene	U	360	1.0	330	360	77
99-09-2	3-Nitroaniline	U	550	1.0	500	550	100
83-32-9	Acenaphthene	U	360	1.0	330	360	72
51-28-5	2,4-Dinitrophenol	U	1300	1.0	1200	1300	410
132-64-9	Dibenzofuran	U	360	1.0	330	360	87
100-02-7	4-Nitrophenol	U	1300	1.0	1200	1300	340
121-14-2	2,4-Dinitrotoluene	U	360	1.0	330	360	94
84-66-2	Diethylphthalate	U	360	1.0	330	360	88
7005-72-3	4-Chlorophenyl-phenylether	U	360	1.0	330	360	86
100-01-6	4-Nitroaniline	U	550	1.0	500	550	150
534-52-1	4,6-Dinitro-2-Methylphenol	U	1300	1.0	1200	1300	370
86-30-6	N-Nitrosodiphenylamine	U	730	1.0	660	730	240
101-55-3	4-Bromophenyl-phenylether	U	360	1.0	330	360	94
1912-24-9	Atrazine	U	360	1.0	330	360	100
87-86-5	Pentachlorophenol	U	900	1.0	820	900	260
120-12-7	Anthracene	U	360	1.0	330	360	92
86-74-8	Carbazole	U	550	1.0	500	550	120

fw 3/4/09

2RE

KATAHDIN ANALYTICAL SERVICES
Report of Analytical Results

Client: CH2MHill
Project: TO-009 Lejeune
PO No:
Sample Date: 12/17/08
Received Date: 12/19/08
Extraction Date: 01/20/09
Analysis Date: 22-JAN-2009 00:18
Report Date: 01/22/2009
Matrix: SOIL
% Solids: 90.9

Lab ID: SB7328-9RE
Client ID: MR08-SS110-08D
SDG: TO9-18
Extracted by: AC
Extraction Method: SW846 3550
Analyst: JCG
Analysis Method: SW846 8270C
Lab Prep Batch: WG59991
Units: ug/Kgdrywt

CAS#	Compound	Flags		Results	DF	PQL	Adj.PQL	Adj.MDL	
84-74-2	Di-n-butylphthalate	~~U~~	UJ	360	1.0	330	360	110	HT
85-68-7	Butylbenzylphthalate	~~U~~		360	1.0	330	360	100	
91-94-1	3,3'-Dichlorobenzidine	~~U~~		550	1.0	500	550	120	
218-01-9	Chrysene	~~U~~		360	1.0	330	360	100	
117-81-7	bis(2-Ethylhexyl)phthalate	~~U~~		360	1.0	330	360	110	
117-84-0	Di-n-octylphthalate	~~U~~		360	1.0	330	360	230	
367-12-4	2-Fluorophenol			66%					
13127-88-3	Phenol-D6			68%					
4165-60-0	Nitrobenzene-D5			67%					
321-60-8	2-Fluorobiphenyl			70%					
118-79-6	2,4,6-Tribromophenol			82%					
1718-51-0	Terphenyl-D14			103%					

lew
3/4/09

ENVIRONMENTAL
Data Services, Inc.

POLYNUCLEAR AROMATIC COMPOUNDS BY 8270SIM

USEPA Region IV - Level IV Review

Site: MCB Camp Lejeune, TO-09 SDG #: TO9-19

Client: CH2M HILL, Inc., Virginia Beach, Virginia Date: March 9, 2009

Laboratory: Katahdin Analytical Services, Scarborough, Maine Reviewer: Nancy Weaver

EDS ID	Client Sample ID	Laboratory Sample ID	Matrix
1	MR08-EB01121508-SS	SB7240-2	Water
2	MR08-EB121708	SB7327-2	Water
3	MR08-EB01121808	SB7327-4	Water
4	MR08-EB01-121908	SB7352-2	Water
4RE	MR08-EB01-121908RE	SB7352-2RE	Water
5	MR08-EB01-122008	SB7371-2	Water
6	MR08-FB122008	SB7371-4	Water
7	MR08-EB01-122108	SB7371-6	Water
8	MR08-EB01-122208	SB7371-8	Water

The USEPA "Contract Laboratory Program National Functional Guidelines for Organic Data Review," October 1999, and professional judgment were used in evaluating the data in this summary report.

Holding Times - All samples were extracted within 7 days for water samples and analyzed within 40 days for all samples.

GC/MS Tuning - All of the DFTPP tunes in the initial and continuing calibrations met the percent relative abundance criteria.

Initial Calibration - The initial calibrations exhibited acceptable %RSD and mean RRF values.

Continuing Calibration - The continuing calibrations exhibited acceptable %D and RRF values except the following.

CCAL Date	Compound	%D/RRF	Qualifier	Affected Samples
01/10/09	Naphthalene	35.41%	J/UJ	1-3, 5-8
	2-Methylnaphthalene	33.71%	J/UJ	1-3, 5-8
	Hexachlorocyclopentadiene	76.82%	J/UJ	1-3, 5-8

CCAL Date	Compound	%D/RRF	Qualifier	Affected Samples
01/11/09	Phenanthrene	27.17%	J/UJ	4, 4RE
01/11/09	Benzo (a) anthracene	32.29%	J/UJ	4, 4RE
	Benzo (b) fluoranthene	25.13%	J/UJ	4, 4RE
	Indeno (1,2,3-cd) pyrene	33.61%	J/UJ	4, 4RE
	Benzo (g,h,i) perylene	25.63%	J/UJ	4, 4RE
	Hexachlorobutadiene	35.38%	J/UJ	4, 4RE

Surrogates - All samples exhibited acceptable surrogate recoveries except the following.

Sample ID	Surrogate	%R	Qualifier
4	S4-Pyrene-d10	145%	None for 1 out
4RE	S4-Pyrene-d10	135%	None for 1 out

MS/MSD - A MS/MSD sample was not analyzed.

Laboratory Control Sample - The LCS samples exhibited acceptable %R values except the following.

LCS ID	Compound	%R	Qualifier	Affected Samples
WG59197-LCS	Phenanthrene	134%	None	All ND
	Hexachlorocyclopentadiene	16%	J/UJ	1
WG59306-LCS	Hexachlorocyclopentadiene	20%	J/UJ	2, 3
WG59396-LCS	Phenanthrene	136%	None	All associated ND
	Fluoranthene	140%	None	All associated ND

Internal Standard (IS) Area Performance - All internal standards met response and retention time (RT) criteria.

Method Blank - The method blanks were free of contamination.

Field, Equipment Blank - Field QC results are summarized below.

Blank ID	Compound	Conc. ug/L	Action Level ug/L	Qualifier	Affected Samples
MR08-EB01121508-SS	Hexachlorocyclopentadiene	0.11	-	-	To be applied to other data packages.
MR08-EB121708	Phenanthrene	0.075	-	-	To be applied to other data packages.
	Hexachlorocyclopentadiene	0.13	-	-	To be applied to other data packages.
MR08-EB01121808	Hexachlorocyclopentadiene	0.11	-	-	To be applied to other data packages.

Blank ID	Compound	Conc. ug/L	Action Level ug/L	Qualifier	Affected Samples
MR08-EB01-121908	None - ND	-	-	-	To be applied to other data packages.
MR08-EB01-122008	Hexachlorocyclopentadiene	0.12	-	-	To be applied to other data packages.
MR08-FB122008	Hexachlorocyclopentadiene	0.15	-	-	To be applied to other data packages.
MR08-EB01-122108	Hexachlorocyclopentadiene	0.096	-	-	To be applied to other data packages.
MR08-EB01-122208	Hexachlorocyclopentadiene	0.15	-	-	To be applied to other data packages.

Field Duplicates - Field duplicate samples were not included in this data package.

Tentatively Identified Compounds (TICs) - TICs were not reported.

Compound Quantitation - EDS sample ID#4 exhibited high surrogate recoveries and was reanalyzed by the laboratory with similar results. The original Form Is should be used for reporting purposes.

KATAHDIN ANALYTICAL SERVICES
Report of Analytical Results

Client: CH2MHill
Project: TO-009 Lejeune
PO No:
Sample Date: 12/16/08
Received Date: 12/17/08
Extraction Date: 12/18/08
Analysis Date: 10-JAN-2009 17:15
Report Date: 01/12/2009
Matrix: WATER
% Solids: NA

Lab ID: SB7240-2
Client ID: MR08-EB01121508-SS
SDG: TO9-19
Extracted by: CB
Extraction Method: SW846 3510
Analyst: JCG
Analysis Method: SW846 M8270C
Lab Prep Batch: WG59197
Units: ug/L

CAS#	Compound	Flags	Results	DF	PQL	Adj.PQL	Adj.MDL	
91-20-3	Naphthalene	~~U~~ UJ	0.24	1.0	0.25	0.24	0.061	CCH
91-57-6	2-Methylnaphthalene	~~U~~ UJ	0.24	1.0	0.25	0.24	0.073	CCH
86-73-7	Fluorene	U	0.24	1.0	0.25	0.24	0.058	
85-01-8	Phenanthrene	U	0.24	1.0	0.25	0.24	0.048	
206-44-0	Fluoranthene	U	0.24	1.0	0.25	0.24	0.070	
129-00-0	Pyrene	U	0.24	1.0	0.25	0.24	0.056	
56-55-3	Benzo(a)anthracene	U	0.24	1.0	0.25	0.24	0.044	
205-99-2	Benzo(b)fluoranthene	U	0.26	1.0	0.27	0.26	0.085	
207-08-9	Benzo(k)fluoranthene	U	0.24	1.0	0.25	0.24	0.047	
50-32-8	Benzo(a)pyrene	U	0.24	1.0	0.25	0.24	0.063	
193-39-5	Indeno(1,2,3-cd)pyrene	U	0.24	1.0	0.25	0.24	0.050	
53-70-3	Dibenzo(a,h)anthracene	U	0.24	1.0	0.25	0.24	0.067	
191-24-2	Benzo(g,h,i)perylene	U	0.24	1.0	0.25	0.24	0.062	
118-74-1	Hexachlorobenzene	U	0.24	1.0	0.25	0.24	0.052	
87-68-3	Hexachlorobutadiene	U	0.26	1.0	0.27	0.26	0.083	
77-47-4	Hexachlorocyclopentadiene	~~U~~ J	0.11	1.0	0.25	0.24	0.064	BSL
7297-45-2	2-Methylnaphthalene-D10		51%					
367-12-4	2,4-Dibromophenol		103%					
81103-79-9	Fluorene-d10		85%					
1718-51-1	Pyrene-D10		94%					

LW 3/5/09

2

KATAHDIN ANALYTICAL SERVICES
Report of Analytical Results

Client: CH2MHill
Project: TO-009 Lejeune
PO No:
Sample Date: 12/17/08
Received Date: 12/19/08
Extraction Date: 12/22/08
Analysis Date: 10-JAN-2009 17:55
Report Date: 01/12/2009
Matrix: WATER
% Solids: NA

Lab ID: SB7327-2
Client ID: MR08-EB121708
SDG: TO9-19
Extracted by: CB
Extraction Method: SW846 3510
Analyst: JCG
Analysis Method: SW846 M8270C
Lab Prep Batch: WG59306
Units: ug/L

CAS#	Compound	Flags	Results	DF	PQL	Adj.PQL	Adj.MDL	
91-20-3	Naphthalene	~~U~~ UJ	0.25	1.0	0.25	0.25	0.064	CCH
91-57-6	2-Methylnaphthalene	~~U~~ UJ	0.25	1.0	0.25	0.25	0.077	CCH
86-73-7	Fluorene	U	0.25	1.0	0.25	0.25	0.061	
85-01-8	Phenanthrene	J	0.075	1.0	0.25	0.25	0.051	
206-44-0	Fluoranthene	U	0.25	1.0	0.25	0.25	0.073	
129-00-0	Pyrene	U	0.25	1.0	0.25	0.25	0.059	
56-55-3	Benzo(a)anthracene	U	0.25	1.0	0.25	0.25	0.046	
205-99-2	Benzo(b)fluoranthene	U	0.27	1.0	0.27	0.27	0.089	
207-08-9	Benzo(k)fluoranthene	U	0.25	1.0	0.25	0.25	0.049	
50-32-8	Benzo(a)pyrene	U	0.25	1.0	0.25	0.25	0.066	
193-39-5	Indeno(1,2,3-cd)pyrene	U	0.25	1.0	0.25	0.25	0.052	
53-70-3	Dibenzo(a,h)anthracene	U	0.25	1.0	0.25	0.25	0.070	
191-24-2	Benzo(g,h,i)perylene	U	0.25	1.0	0.25	0.25	0.065	
118-74-1	Hexachlorobenzene	U	0.25	1.0	0.25	0.25	0.055	
87-68-3	Hexachlorobutadiene	U	0.27	1.0	0.27	0.27	0.087	
77-47-4	Hexachlorocyclopentadiene	~~J~~ J	0.13	1.0	0.25	0.25	0.067	BSL
7297-45-2	2-Methylnaphthalene-D10		56%					
367-12-4	2,4-Dibromophenol		98%					
81103-79-9	Fluorene-d10		87%					
1718-51-1	Pyrene-D10		92%					

MW 3/5/09

3

KATAHDIN ANALYTICAL SERVICES
Report of Analytical Results

Client: CH2MHill
Project: TO-009 Lejeune
PO No:
Sample Date: 12/18/08
Received Date: 12/19/08
Extraction Date: 12/22/08
Analysis Date: 10-JAN-2009 18:35
Report Date: 01/12/2009
Matrix: WATER
% Solids: NA

Lab ID: SB7327-4
Client ID: MR08-EB01121808
SDG: TO9-19
Extracted by: CB
Extraction Method: SW846 3510
Analyst: JCG
Analysis Method: SW846 M8270C
Lab Prep Batch: WG59306
Units: ug/L

CAS#	Compound	Flags	Results	DF	PQL	Adj.PQL	Adj.MDL	
91-20-3	Naphthalene	~~U~~ UJ	0.24	1.0	0.25	0.24	0.060	CCH
91-57-6	2-Methylnaphthalene	~~U~~ UJ	0.24	1.0	0.25	0.24	0.073	CCH
86-73-7	Fluorene	U	0.24	1.0	0.25	0.24	0.058	
85-01-8	Phenanthrene	U	0.24	1.0	0.25	0.24	0.048	
206-44-0	Fluoranthene	U	0.24	1.0	0.25	0.24	0.069	
129-00-0	Pyrene	U	0.24	1.0	0.25	0.24	0.056	
56-55-3	Benzo(a)anthracene	U	0.24	1.0	0.25	0.24	0.043	
205-99-2	Benzo(b)fluoranthene	U	0.25	1.0	0.27	0.25	0.084	
207-08-9	Benzo(k)fluoranthene	U	0.24	1.0	0.25	0.24	0.046	
50-32-8	Benzo(a)pyrene	U	0.24	1.0	0.25	0.24	0.062	
193-39-5	Indeno(1,2,3-cd)pyrene	U	0.24	1.0	0.25	0.24	0.049	
53-70-3	Dibenzo(a,h)anthracene	U	0.24	1.0	0.25	0.24	0.066	
191-24-2	Benzo(g,h,i)perylene	U	0.24	1.0	0.25	0.24	0.061	
118-74-1	Hexachlorobenzene	U	0.24	1.0	0.25	0.24	0.052	
87-68-3	Hexachlorobutadiene	U	0.25	1.0	0.27	0.25	0.082	
77-47-4	Hexachlorocyclopentadiene	~~U~~ J	0.11	1.0	0.25	0.24	0.063	BSL
7297-45-2	2-Methylnaphthalene-D10		47%					
367-12-4	2,4-Dibromophenol		79%					
81103-79-9	Fluorene-d10		81%					
1718-51-1	Pyrene-D10		99%					

LW 3/5/09

KATAHDIN ANALYTICAL SERVICES
Report of Analytical Results

Client: CH2MHill
Project: TO-009 Lejeune
PO No:
Sample Date: 12/19/08
Received Date: 12/20/08
Extraction Date: 12/23/08
Analysis Date: 11-JAN-2009 11:14
Report Date: 01/12/2009
Matrix: WATER
% Solids: NA

Lab ID: SB7352-2
Client ID: MR08-EB01-121908
SDG: TO9-19
Extracted by: CB
Extraction Method: SW846 3510
Analyst: EKC
Analysis Method: SW846 M8270C
Lab Prep Batch: WG59360
Units: ug/L

CAS#	Compound	Flags	Results	DF	PQL	Adj.PQL	Adj.MDL	
91-20-3	Naphthalene	U	0.24	1.0	0.25	0.24	0.060	
91-57-6	2-Methylnaphthalene	U	0.24	1.0	0.25	0.24	0.073	
86-73-7	Fluorene	U	0.24	1.0	0.25	0.24	0.058	
85-01-8	Phenanthrene	~~U~~ UJ	0.24	1.0	0.25	0.24	0.048	CCH
206-44-0	Fluoranthene	U	0.24	1.0	0.25	0.24	0.069	
129-00-0	Pyrene	U	0.24	1.0	0.25	0.24	0.056	
56-55-3	Benzo(a)anthracene	~~U~~ UJ	0.24	1.0	0.25	0.24	0.043	CCH
205-99-2	Benzo(b)fluoranthene	~~U~~ UJ	0.25	1.0	0.27	0.25	0.084	CCH
207-08-9	Benzo(k)fluoranthene	U	0.24	1.0	0.25	0.24	0.046	
50-32-8	Benzo(a)pyrene	U	0.24	1.0	0.25	0.24	0.062	
193-39-5	Indeno(1,2,3-cd)pyrene	~~U~~ UJ	0.24	1.0	0.25	0.24	0.049	CCH
53-70-3	Dibenzo(a,h)anthracene	U	0.24	1.0	0.25	0.24	0.066	
191-24-2	Benzo(g,h,i)perylene	~~U~~ UJ	0.24	1.0	0.25	0.24	0.061	CCH
118-74-1	Hexachlorobenzene	U	0.24	1.0	0.25	0.24	0.052	
87-68-3	Hexachlorobutadiene	~~U~~ UJ	0.25	1.0	0.27	0.25	0.082	CCH
77-47-4	Hexachlorocyclopentadiene	U	0.24	1.0	0.25	0.24	0.063	
7297-45-2	2-Methylnaphthalene-D10		80%					
367-12-4	2,4-Dibromophenol		67%					
81103-79-9	Fluorene-d10		88%					
1718-51-1	Pyrene-D10		*145%					

fw 3/5/09

HR

KATAHDIN ANALYTICAL SERVICES
Report of Analytical Results

Client: CH2MHill
Project: TO-009 Lejeune
PO No:
Sample Date: 12/19/08
Received Date: 12/20/08
Extraction Date: 12/31/08
Analysis Date: 11-JAN-2009 11:55
Report Date: 01/12/2009
Matrix: WATER
% Solids: NA

Lab ID: SB7352-2RE
Client ID: MR08-EB01-121908
SDG: TO9-19
Extracted by: CB
Extraction Method: SW846 3510
Analyst: EKC
Analysis Method: SW846 M8270C
Lab Prep Batch: WG59511
Units: ug/L

Use original

RE

CAS#	Compound	Flags	Results	DF	PQL	Adj.PQL	Adj.MDL	
91-20-3	Naphthalene	U	0.24	1.0	0.25	0.24	0.060	
91-57-6	2-Methylnaphthalene	U	0.24	1.0	0.25	0.24	0.073	
86-73-7	Fluorene	U	0.24	1.0	0.25	0.24	0.058	
85-01-8	Phenanthrene	~~U~~ UJ	0.24	1.0	0.25	0.24	0.048	CCH
206-44-0	Fluoranthene	U	0.24	1.0	0.25	0.24	0.069	
129-00-0	Pyrene	U	0.24	1.0	0.25	0.24	0.056	
56-55-3	Benzo(a)anthracene	~~U~~ UJ	0.24	1.0	0.25	0.24	0.043	CCH
205-99-2	Benzo(b)fluoranthene	~~U~~ UJ	0.25	1.0	0.27	0.25	0.084	CCH
207-08-9	Benzo(k)fluoranthene	U	0.24	1.0	0.25	0.24	0.046	
50-32-8	Benzo(a)pyrene	U	0.24	1.0	0.25	0.24	0.062	
193-39-5	Indeno(1,2,3-cd)pyrene	~~U~~ UJ	0.24	1.0	0.25	0.24	0.049	CCH
53-70-3	Dibenzo(a,h)anthracene	U	0.24	1.0	0.25	0.24	0.066	
191-24-2	Benzo(g,h,i)perylene	~~U~~ UJ	0.24	1.0	0.25	0.24	0.061	CCH
118-74-1	Hexachlorobenzene	U	0.24	1.0	0.25	0.24	0.052	
87-68-3	Hexachlorobutadiene	~~U~~ UJ	0.25	1.0	0.27	0.25	0.082	CCH
77-47-4	Hexachlorocyclopentadiene	U	0.24	1.0	0.25	0.24	0.063	
7297-45-2	2-Methylnaphthalene-D10		75%					
367-12-4	2,4-Dibromophenol		61%					
81103-79-9	Fluorene-d10		80%					
1718-51-1	Pyrene-D10		*135%					

Page 01 of 01 G3857.D

LW 3/5/09

5

KATAHDIN ANALYTICAL SERVICES
Report of Analytical Results

Client: CH2MHill
Project: TO-009 Lejeune
PO No:
Sample Date: 12/20/08
Received Date: 12/23/08
Extraction Date: 12/24/08
Analysis Date: 10-JAN-2009 21:15
Report Date: 01/12/2009
Matrix: WATER
% Solids: NA

Lab ID: SB7371-2
Client ID: MR08-EB01-122008
SDG: TO9-19
Extracted by: CB
Extraction Method: SW846 3510
Analyst: JCG
Analysis Method: SW846 M8270C
Lab Prep Batch: WG59396
Units: ug/L

CAS#	Compound	Flags	Results	DF	PQL	Adj.PQL	Adj.MDL	
91-20-3	Naphthalene	~~U~~ UJ	0.25	1.0	0.25	0.25	0.065	CCH
91-57-6	2-Methylnaphthalene	~~U~~ UJ	0.25	1.0	0.25	0.25	0.078	CCH
86-73-7	Fluorene	U	0.25	1.0	0.25	0.25	0.062	
85-01-8	Phenanthrene	U	0.25	1.0	0.25	0.25	0.052	
206-44-0	Fluoranthene	U	0.25	1.0	0.25	0.25	0.074	
129-00-0	Pyrene	U	0.25	1.0	0.25	0.25	0.060	
56-55-3	Benzo(a)anthracene	U	0.25	1.0	0.25	0.25	0.046	
205-99-2	Benzo(b)fluoranthene	U	0.27	1.0	0.27	0.27	0.090	
207-08-9	Benzo(k)fluoranthene	U	0.25	1.0	0.25	0.25	0.049	
50-32-8	Benzo(a)pyrene	U	0.25	1.0	0.25	0.25	0.067	
193-39-5	Indeno(1,2,3-cd)pyrene	U	0.25	1.0	0.25	0.25	0.052	
53-70-3	Dibenzo(a,h)anthracene	U	0.25	1.0	0.25	0.25	0.071	
191-24-2	Benzo(g,h,i)perylene	U	0.25	1.0	0.25	0.25	0.066	
118-74-1	Hexachlorobenzene	U	0.25	1.0	0.25	0.25	0.056	
87-68-3	Hexachlorobutadiene	U	0.27	1.0	0.27	0.27	0.088	
77-47-4	Hexachlorocyclopentadiene	~~U~~ J	0.12	1.0	0.25	0.25	0.068	CCH
7297-45-2	2-Methylnaphthalene-D10		53%					
367-12-4	2,4-Dibromophenol		85%					
81103-79-9	Fluorene-d10		88%					
1718-51-1	Pyrene-D10		96%					

LW 3/5/09

6

KATAHDIN ANALYTICAL SERVICES
Report of Analytical Results

Client: CH2MHill
Project: TO-009 Lejeune
PO No:
Sample Date: 12/20/08
Received Date: 12/23/08
Extraction Date: 12/24/08
Analysis Date: 10-JAN-2009 21:55
Report Date: 01/12/2009
Matrix: WATER
% Solids: NA

Lab ID: SB7371-4
Client ID: MR08-FB122008
SDG: TO9-19
Extracted by: CB
Extraction Method: SW846 3510
Analyst: JCG
Analysis Method: SW846 M8270C
Lab Prep Batch: WG59396
Units: ug/L

CAS#	Compound	Flags	Results	DF	PQL	Adj.PQL	Adj.MDL	
91-20-3	Naphthalene	~~U~~ UJ	0.28	1.0	0.25	0.28	0.071	CCH
91-57-6	2-Methylnaphthalene	~~U~~ UJ	0.28	1.0	0.25	0.28	0.086	CCH
86-73-7	Fluorene	U	0.28	1.0	0.25	0.28	0.068	
85-01-8	Phenanthrene	U	0.28	1.0	0.25	0.28	0.057	
206-44-0	Fluoranthene	U	0.28	1.0	0.25	0.28	0.081	
129-00-0	Pyrene	U	0.28	1.0	0.25	0.28	0.066	
56-55-3	Benzo(a)anthracene	U	0.28	1.0	0.25	0.28	0.051	
205-99-2	Benzo(b)fluoranthene	U	0.30	1.0	0.27	0.30	0.099	
207-08-9	Benzo(k)fluoranthene	U	0.28	1.0	0.25	0.28	0.054	
50-32-8	Benzo(a)pyrene	U	0.28	1.0	0.25	0.28	0.073	
193-39-5	Indeno(1,2,3-cd)pyrene	U	0.28	1.0	0.25	0.28	0.058	
53-70-3	Dibenzo(a,h)anthracene	U	0.28	1.0	0.25	0.28	0.078	
191-24-2	Benzo(g,h,i)perylene	U	0.28	1.0	0.25	0.28	0.072	
118-74-1	Hexachlorobenzene	U	0.28	1.0	0.25	0.28	0.061	
87-68-3	Hexachlorobutadiene	U	0.30	1.0	0.27	0.30	0.097	
77-47-4	Hexachlorocyclopentadiene	~~U~~ J	0.15	1.0	0.25	0.28	0.074	CCH
7297-45-2	2-Methylnaphthalene-D10		54%					
367-12-4	2,4-Dibromophenol		91%					
81103-79-9	Fluorene-d10		89%					
1718-51-1	Pyrene-D10		96%					

lw 3/5/09

7

KATAHDIN ANALYTICAL SERVICES
Report of Analytical Results

Client: CH2MHill
Project: TO-009 Lejeune
PO No:
Sample Date: 12/21/08
Received Date: 12/23/08
Extraction Date: 12/24/08
Analysis Date: 10-JAN-2009 22:35
Report Date: 01/12/2009
Matrix: WATER
% Solids: NA

Lab ID: SB7371-6
Client ID: MR08-EB01-122108
SDG: TO9-19
Extracted by: CB
Extraction Method: SW846 3510
Analyst: JCG
Analysis Method: SW846 M8270C
Lab Prep Batch: WG59396
Units: ug/L

CAS#	Compound	Flags	Results	DF	PQL	Adj.PQL	Adj.MDL	
91-20-3	Naphthalene	~~U~~ UJ	0.24	1.0	0.25	0.24	0.060	CCH
91-57-6	2-Methylnaphthalene	~~U~~ UJ	0.24	1.0	0.25	0.24	0.073	CCH
86-73-7	Fluorene	U	0.24	1.0	0.25	0.24	0.058	
85-01-8	Phenanthrene	U	0.24	1.0	0.25	0.24	0.048	
206-44-0	Fluoranthene	U	0.24	1.0	0.25	0.24	0.069	
129-00-0	Pyrene	U	0.24	1.0	0.25	0.24	0.056	
56-55-3	Benzo(a)anthracene	U	0.24	1.0	0.25	0.24	0.043	
205-99-2	Benzo(b)fluoranthene	U	0.25	1.0	0.27	0.25	0.084	
207-08-9	Benzo(k)fluoranthene	U	0.24	1.0	0.25	0.24	0.046	
50-32-8	Benzo(a)pyrene	U	0.24	1.0	0.25	0.24	0.062	
193-39-5	Indeno(1,2,3-cd)pyrene	U	0.24	1.0	0.25	0.24	0.049	
53-70-3	Dibenzo(a,h)anthracene	U	0.24	1.0	0.25	0.24	0.066	
191-24-2	Benzo(g,h,i)perylene	U	0.24	1.0	0.25	0.24	0.061	
118-74-1	Hexachlorobenzene	U	0.24	1.0	0.25	0.24	0.052	
87-68-3	Hexachlorobutadiene	U	0.25	1.0	0.27	0.25	0.082	
77-47-4	Hexachlorocyclopentadiene	~~U~~ J	0.096	1.0	0.25	0.24	0.063	CCH
7297-45-2	2-Methylnaphthalene-D10		49%					
367-12-4	2,4-Dibromophenol		75%					
81103-79-9	Fluorene-d10		79%					
1718-51-1	Pyrene-D10		92%					

LW 3/5/09

8

KATAHDIN ANALYTICAL SERVICES
Report of Analytical Results

Client: CH2MHill
Project: TO-009 Lejeune
PO No:
Sample Date: 12/22/08
Received Date: 12/23/08
Extraction Date: 12/24/08
Analysis Date: 10-JAN-2009 23:15
Report Date: 01/12/2009
Matrix: WATER
% Solids: NA

Lab ID: SB7371-8
Client ID: MR08-EB01-122208
SDG: TO9-19
Extracted by: CB
Extraction Method: SW846 3510
Analyst: JCG
Analysis Method: SW846 M8270C
Lab Prep Batch: WG59396
Units: ug/L

CAS#	Compound	Flags	Results	DF	PQL	Adj.PQL	Adj.MDL	
91-20-3	Naphthalene	~~U~~ UJ	0.24	1.0	0.25	0.24	0.060	CCH
91-57-6	2-Methylnaphthalene	~~U~~ UJ	0.24	1.0	0.25	0.24	0.073	CCH
86-73-7	Fluorene	U	0.24	1.0	0.25	0.24	0.058	
85-01-8	Phenanthrene	U	0.24	1.0	0.25	0.24	0.048	
206-44-0	Fluoranthene	U	0.24	1.0	0.25	0.24	0.069	
129-00-0	Pyrene	U	0.24	1.0	0.25	0.24	0.056	
56-55-3	Benzo(a)anthracene	U	0.24	1.0	0.25	0.24	0.043	
205-99-2	Benzo(b)fluoranthene	U	0.25	1.0	0.27	0.25	0.084	
207-08-9	Benzo(k)fluoranthene	U	0.24	1.0	0.25	0.24	0.046	
50-32-8	Benzo(a)pyrene	U	0.24	1.0	0.25	0.24	0.062	
193-39-5	Indeno(1,2,3-cd)pyrene	U	0.24	1.0	0.25	0.24	0.049	
53-70-3	Dibenzo(a,h)anthracene	U	0.24	1.0	0.25	0.24	0.066	
191-24-2	Benzo(g,h,i)perylene	U	0.24	1.0	0.25	0.24	0.061	
118-74-1	Hexachlorobenzene	U	0.24	1.0	0.25	0.24	0.052	
87-68-3	Hexachlorobutadiene	U	0.25	1.0	0.27	0.25	0.082	
77-47-4	Hexachlorocyclopentadiene	~~J~~ J	0.15	1.0	0.25	0.24	0.063	CCH
7297-45-2	2-Methylnaphthalene-D10		51%					
367-12-4	2,4-Dibromophenol		78%					
81103-79-9	Fluorene-d10		85%					
1718-51-1	Pyrene-D10		90%					

lw
3/5/09

ENVIRONMENTAL
Data Services, Inc.

SEMIVOLATILE ORGANIC COMPOUNDS
USEPA Region IV - Level IV Review

Site: MCB Camp Lejeune, TO-09 SDG #: TO9-19

Client: CH2M HILL, Inc., Virginia Beach, Virginia Date: March 9, 2009

Laboratory: Katahdin Analytical Services, Scarborough, Maine Reviewer: Nancy Weaver

EDS ID	Client Sample ID	Laboratory Sample ID	Matrix
1	MR08-EB01121508-SS	SB7240-1	Water
2	MR08-EB121708	SB7327-1	Water
3	MR08-EB01121808	SB7327-3	Water
4	MR08-EB01-121908	SB7352-1	Water
4RE	MR08-EB01-121908RE	SB7352-1RE	Water
5	MR08-EB01-122008	SB7371-1	Water
6	MR08-FB122008	SB7371-3	Water
7	MR08-EB01-122108	SB7371-5	Water
8	MR08-EB01-122208	SB7371-7	Water

The USEPA "Contract Laboratory Program National Functional Guidelines for Organic Data Review," October 1999, and professional judgment were used in evaluating the data in this summary report.

Holding Times - All samples were extracted within 7 days for water samples and analyzed within 40 days for all samples.

GC/MS Tuning - All of the DFTPP tunes in the initial and continuing calibrations met the percent relative abundance criteria.

Initial Calibration - The initial calibrations exhibited acceptable %RSD and mean RRF values except the following.

ICAL Date	Compound	%RSD/RRF	Qualifier	Affected Samples
01/12/09	Benzaldehyde	90.97%	J/UJ	1, 5-8
01/13/09	Benzaldehyde	44.95%	J/UJ	4RE

Continuing Calibration - The continuing calibrations exhibited acceptable %D and RRF values except the following.

CCAL Date	Compound	%D/RRF	Qualifier	Affected Samples
01/09/09	Benzaldehyde	44.71%	J/UJ	2, 3
	Nitrobenzene	25.49%	J/UJ	2, 3
	Di-n-octyl phthalate	35.65%	J/UJ	2, 3
01/15/09	Benzaldehyde	59.82%	None	Already qualified due to ICAL or LCS
	Di-n-octyl phthalate	40.85%	J/UJ	4, 4RE

Surrogates - All samples exhibited acceptable surrogate recoveries.

MS/MSD - A MS/MSD sample was not analyzed.

Laboratory Control Sample - The LCS samples exhibited acceptable %R values except the following.

LCS ID	Compound	%R	Qualifier	Affected Samples
WG59196-LCS	Caprolactam	9%	J/R	1
	3,3'-Dichlorobenzidine	120%	None	All ND
WG59305-LCS	Acetophenone	131%	None	All ND
	Nitrobenzene	116%	None	All ND
	n-Nitrosodiphenylamine	186%	None	All ND
	Butylbenzylphthalate	116%	None	All ND
	bis (2-Ethylhexyl) phthalate	142%	None	All ND
	di-n-Octylphthalate	174%	None	All ND
WG59395	Benzaldehyde	222%	None	All ND
WG59358	Benzaldehyde	9%	J/R	4
	bis (2-Ethylhexyl) phthalate	13%	None	All ND

Internal Standard (IS) Area Performance - All internal standards met response and retention time (RT) criteria.

Method Blank - The method blanks exhibited the following contamination.

Blank ID	Compound	Conc. ug/L	Action Level ug/L	Qualifier	Affected Samples
WG59358-BLANK	bis (2-Ethylhexyl)phthalate	15	150	U	4

Field, Equipment Blank - Field QC results are summarized below.

Blank ID	Compound	Conc. ug/L	Action Level ug/L	Qualifier	Affected Samples
MR08-EB01121508-SS	None - ND	-	-	-	To be applied to other data packages.

Blank ID	Compound	Conc. ug/L	Action Level ug/L	Qualifier	Affected Samples
MR08-EB121708	None - ND	-	-	-	To be applied to other data packages.
MR08-EB01121808	None - ND	-	-	-	To be applied to other data packages.
MR08-EB01-121908RE	Diethylphthalate	2			To be applied to other data packages.
MR08-EB01-122008	None - ND	-	-	-	To be applied to other data packages.
MR08-FB122008	None - ND	-	-	-	To be applied to other data packages.
MR08-EB01-122108	None - ND	-	-	-	To be applied to other data packages.
MR08-EB01-122208	None - ND	-	-	-	To be applied to other data packages.

Field Duplicates - Field duplicate samples were not included in this data package.

Tentatively Identified Compounds (TICs) - TICs were not reported.

Compound Quantitation - EDS sample ID #4 exhibited poor laboratory control sample and calibration recovery values and was reanalyzed by the laboratory. The reanalysis should be used for reporting purposes.

KATAHDIN ANALYTICAL SERVICES
Report of Analytical Results

Client: CH2MHill
Project: TO-009 Lejeune
PO No:
Sample Date: 12/16/08
Received Date: 12/17/08
Extraction Date: 12/18/08
Analysis Date: 13-JAN-2009 03:08
Report Date: 01/16/2009
Matrix: WATER
% Solids: NA

Lab ID: SB7240-1
Client ID: MR08-EB01121508-SS
SDG: TO9-19
Extracted by: CB
Extraction Method: SW846 3510
Analyst: JCG
Analysis Method: SW846 8270C
Lab Prep Batch: WG59196
Units: ug/L

CAS#	Compound	Flags	Results	DF	PQL	Adj.PQL	Adj.MDL	
100-52-7	Benzaldehyde	~~U~~ UJ	10	1.0	10	10	3	ICB
108-95-2	Phenol	U	10	1.0	10	10	2	
111-44-4	Bis(2-Chloroethyl)ether	U	10	1.0	10	10	2	
95-57-8	2-Chlorophenol	U	11	1.0	12	11	3	
95-48-7	2-Methylphenol	U	11	1.0	12	11	4	
108-60-1	2,2'-Oxybis(1-chloropropane)	U	10	1.0	10	10	2	
98-86-2	Acetophenone	U	11	1.0	12	11	4	
621-64-7	N-Nitroso-di-n-propylamine	U	10	1.0	10	10	2	
65794-96-9	3&4-Methylphenol	U	10	1.0	10	10	2	
67-72-1	Hexachloroethane	U	10	1.0	10	10	2	
98-95-3	Nitrobenzene	U	10	1.0	10	10	2	
78-59-1	Isophorone	U	10	1.0	10	10	2	
88-75-5	2-Nitrophenol	U	10	1.0	10	10	3	
105-67-9	2,4-Dimethylphenol	U	11	1.0	12	11	4	
111-91-1	Bis(2-Chloroethoxy)methane	U	10	1.0	10	10	2	
120-83-2	2,4-Dichlorophenol	U	11	1.0	12	11	4	
106-47-8	4-Chloroaniline	U	10	1.0	10	10	2	
105-60-2	Caprolactam	~~U~~ R	10	1.0	10	10	0.4	BSL
59-50-7	4-Chloro-3-Methylphenol	U	10	1.0	10	10	2	
88-06-2	2,4,6-Trichlorophenol	U	10	1.0	10	10	3	
95-95-4	2,4,5-Trichlorophenol	U	24	1.0	25	24	4	
91-58-7	2-Chloronaphthalene	U	10	1.0	10	10	2	
92-52-4	1,1'-Biphenyl	U	10	1.0	10	10	2	
88-74-4	2-Nitroaniline	U	24	1.0	25	24	1	
131-11-3	Dimethyl Phthalate	U	10	1.0	10	10	0.8	
606-20-2	2,6-Dinitrotoluene	U	10	1.0	10	10	1	
208-96-8	Acenaphthylene	U	10	1.0	10	10	2	
99-09-2	3-Nitroaniline	U	24	1.0	25	24	1	
83-32-9	Acenaphthene	U	10	1.0	10	10	2	
51-28-5	2,4-Dinitrophenol	U	43	1.0	45	43	14	
132-64-9	Dibenzofuran	U	10	1.0	10	10	1	
100-02-7	4-Nitrophenol	U	24	1.0	25	24	5	
121-14-2	2,4-Dinitrotoluene	U	10	1.0	10	10	1	
84-66-2	Diethylphthalate	U	10	1.0	10	10	1	
7005-72-3	4-Chlorophenyl-phenylether	U	10	1.0	10	10	1	
100-01-6	4-Nitroaniline	U	24	1.0	25	24	2	
534-52-1	4,6-Dinitro-2-Methylphenol	U	24	1.0	25	24	6	
86-30-6	N-Nitrosodiphenylamine	U	10	1.0	10	10	2	
101-55-3	4-Bromophenyl-phenylether	U	10	1.0	10	10	1	
1912-24-9	Atrazine	U	10	1.0	10	10	2	
87-86-5	Pentachlorophenol	U	24	1.0	25	24	7	
120-12-7	Anthracene	U	10	1.0	10	10	1	
86-74-8	Carbazole	U	10	1.0	10	10	1	

lw 3/5/09

KATAHDIN ANALYTICAL SERVICES
Report of Analytical Results

Client: CH2MHill
Project: TO-009 Lejeune
PO No:
Sample Date: 12/16/08
Received Date: 12/17/08
Extraction Date: 12/18/08
Analysis Date: 13-JAN-2009 03:08
Report Date: 01/16/2009
Matrix: WATER
% Solids: NA

Lab ID: SB7240-1
Client ID: MR08-EB01121508-SS
SDG: TO9-19
Extracted by: CB
Extraction Method: SW846 3510
Analyst: JCG
Analysis Method: SW846 8270C
Lab Prep Batch: WG59196
Units: ug/L

CAS#	Compound	Flags	Results	DF	PQL	Adj.PQL	Adj.MDL
84-74-2	Di-n-butylphthalate	U	10	1.0	10	10	1
85-68-7	Butylbenzylphthalate	U	10	1.0	10	10	1
91-94-1	3,3'-Dichlorobenzidine	U	10	1.0	10	10	3
218-01-9	Chrysene	U	10	1.0	10	10	1
117-81-7	bis(2-Ethylhexyl)phthalate	U	10	1.0	10	10	2
117-84-0	Di-n-octylphthalate	U	10	1.0	10	10	2
367-12-4	2-Fluorophenol		41%				
13127-88-3	Phenol-D6		25%				
4165-60-0	Nitrobenzene-D5		71%				
321-60-8	2-Fluorobiphenyl		75%				
118-79-6	2,4,6-Tribromophenol		77%				
1718-51-0	Terphenyl-D14		103%				

ew 3/5/09

2

KATAHDIN ANALYTICAL SERVICES
Report of Analytical Results

Client: CH2MHill
Project: TO-009 Lejeune
PO No:
Sample Date: 12/17/08
Received Date: 12/19/08
Extraction Date: 12/22/08
Analysis Date: 09-JAN-2009 18:07
Report Date: 01/15/2009
Matrix: WATER
% Solids: NA

Lab ID: SB7327-1
Client ID: MR08-EB121708
SDG: TO9-19
Extracted by: CB
Extraction Method: SW846 3510
Analyst: JCG
Analysis Method: SW846 8270C
Lab Prep Batch: WG59305
Units: ug/L

CAS#	Compound	Flags	Results	DF	PQL	Adj.PQL	Adj.MDL	
100-52-7	Benzaldehyde	~~U~~ UJ	10	1.0	10	10	3	CCH
108-95-2	Phenol	U	10	1.0	10	10	2	
111-44-4	Bis(2-Chloroethyl)ether	U	10	1.0	10	10	2	
95-57-8	2-Chlorophenol	U	12	1.0	12	12	3	
95-48-7	2-Methylphenol	U	12	1.0	12	12	4	
108-60-1	2,2'-Oxybis(1-chloropropane)	U	10	1.0	10	10	2	
98-86-2	Acetophenone	U	12	1.0	12	12	4	
621-64-7	N-Nitroso-di-n-propylamine	U	10	1.0	10	10	2	
65794-96-9	3&4-Methylphenol	U	10	1.0	10	10	3	
67-72-1	Hexachloroethane	U	10	1.0	10	10	2	
98-95-3	Nitrobenzene	~~U~~ UJ	10	1.0	10	10	2	CCH
78-59-1	Isophorone	U	10	1.0	10	10	2	
88-75-5	2-Nitrophenol	U	10	1.0	10	10	4	
105-67-9	2,4-Dimethylphenol	U	12	1.0	12	12	4	
111-91-1	Bis(2-Chloroethoxy)methane	U	10	1.0	10	10	2	
120-83-2	2,4-Dichlorophenol	U	12	1.0	12	12	4	
106-47-8	4-Chloroaniline	U	10	1.0	10	10	2	
105-60-2	Caprolactam	U	10	1.0	10	10	0.4	
59-50-7	4-Chloro-3-Methylphenol	U	10	1.0	10	10	2	
88-06-2	2,4,6-Trichlorophenol	U	10	1.0	10	10	3	
95-95-4	2,4,5-Trichlorophenol	U	25	1.0	25	25	4	
91-58-7	2-Chloronaphthalene	U	10	1.0	10	10	2	
92-52-4	1,1'-Biphenyl	U	10	1.0	10	10	2	
88-74-4	2-Nitroaniline	U	25	1.0	25	25	2	
131-11-3	Dimethyl Phthalate	U	10	1.0	10	10	0.8	
606-20-2	2,6-Dinitrotoluene	U	10	1.0	10	10	1	
208-96-8	Acenaphthylene	U	10	1.0	10	10	2	
99-09-2	3-Nitroaniline	U	25	1.0	25	25	1	
83-32-9	Acenaphthene	U	10	1.0	10	10	2	
51-28-5	2,4-Dinitrophenol	U	45	1.0	45	45	15	
132-64-9	Dibenzofuran	U	10	1.0	10	10	1	
100-02-7	4-Nitrophenol	U	25	1.0	25	25	6	
121-14-2	2,4-Dinitrotoluene	U	10	1.0	10	10	1	
84-66-2	Diethylphthalate	U	10	1.0	10	10	1	
7005-72-3	4-Chlorophenyl-phenylether	U	10	1.0	10	10	1	
100-01-6	4-Nitroaniline	U	25	1.0	25	25	2	
534-52-1	4,6-Dinitro-2-Methylphenol	U	25	1.0	25	25	6	
86-30-6	N-Nitrosodiphenylamine	U	10	1.0	10	10	2	
101-55-3	4-Bromophenyl-phenylether	U	10	1.0	10	10	1	
1912-24-9	Atrazine	U	10	1.0	10	10	2	
87-86-5	Pentachlorophenol	U	25	1.0	25	25	8	
120-12-7	Anthracene	U	10	1.0	10	10	1	
86-74-8	Carbazole	U	10	1.0	10	10	1	

lw 3/5/09

2

KATAHDIN ANALYTICAL SERVICES
Report of Analytical Results

Client: CH2MHill
Project: TO-009 Lejeune
PO No:
Sample Date: 12/17/08
Received Date: 12/19/08
Extraction Date: 12/22/08
Analysis Date: 09-JAN-2009 18:07
Report Date: 01/15/2009
Matrix: WATER
% Solids: NA

Lab ID: SB7327-1
Client ID: MR08-EB121708
SDG: TO9-19
Extracted by: CB
Extraction Method: SW846 3510
Analyst: JCG
Analysis Method: SW846 8270C
Lab Prep Batch: WG59305
Units: ug/L

CAS#	Compound	Flags	Results	DF	PQL	Adj.PQL	Adj.MDL	
84-74-2	Di-n-butylphthalate	U	10	1.0	10	10	1	
85-68-7	Butylbenzylphthalate	U	10	1.0	10	10	2	
91-94-1	3,3'-Dichlorobenzidine	U	10	1.0	10	10	3	
218-01-9	Chrysene	U	10	1.0	10	10	1	
117-81-7	bis(2-Ethylhexyl)phthalate	U	10	1.0	10	10	2	
117-84-0	Di-n-octylphthalate	~~J~~ UJ	10	1.0	10	10	2	CCH
367-12-4	2-Fluorophenol		42%					
13127-88-3	Phenol-D6		28%					
4165-60-0	Nitrobenzene-D5		71%					
321-60-8	2-Fluorobiphenyl		69%					
118-79-6	2,4,6-Tribromophenol		83%					
1718-51-0	Terphenyl-D14		87%					

LW 3/5/09

3

KATAHDIN ANALYTICAL SERVICES
Report of Analytical Results

Client: CH2MHill
Project: TO-009 Lejeune
PO No:
Sample Date: 12/18/08
Received Date: 12/19/08
Extraction Date: 12/22/08
Analysis Date: 09-JAN-2009 18:49
Report Date: 01/15/2009
Matrix: WATER
% Solids: NA

Lab ID: SB7327-3
Client ID: MR08-EB01121808
SDG: TO9-19
Extracted by: CB
Extraction Method: SW846 3510
Analyst: JCG
Analysis Method: SW846 8270C
Lab Prep Batch: WG59305
Units: ug/L

CAS#	Compound	Flags	Results	DF	PQL	Adj.PQL	Adj.MDL	
100-52-7	Benzaldehyde	~~U~~ UJ	9	1.0	10	9	3	CCH
108-95-2	Phenol	U	9	1.0	10	9	2	
111-44-4	Bis(2-Chloroethyl)ether	U	9	1.0	10	9	2	
95-57-8	2-Chlorophenol	U	11	1.0	12	11	3	
95-48-7	2-Methylphenol	U	11	1.0	12	11	4	
108-60-1	2,2'-Oxybis(1-chloropropane)	U	9	1.0	10	9	2	
98-86-2	Acetophenone	U	11	1.0	12	11	4	
621-64-7	N-Nitroso-di-n-propylamine	U	9	1.0	10	9	2	
65794-96-9	3&4-Methylphenol	U	9	1.0	10	9	2	
67-72-1	Hexachloroethane	U	9	1.0	10	9	2	
98-95-3	Nitrobenzene	~~U~~ UJ	9	1.0	10	9	2	CCH
78-59-1	Isophorone	U	9	1.0	10	9	2	
88-75-5	2-Nitrophenol	U	9	1.0	10	9	3	
105-67-9	2,4-Dimethylphenol	U	11	1.0	12	11	4	
111-91-1	Bis(2-Chloroethoxy)methane	U	9	1.0	10	9	2	
120-83-2	2,4-Dichlorophenol	U	11	1.0	12	11	4	
106-47-8	4-Chloroaniline	U	9	1.0	10	9	2	
105-60-2	Caprolactam	U	9	1.0	10	9	0.4	
59-50-7	4-Chloro-3-Methylphenol	U	9	1.0	10	9	2	
88-06-2	2,4,6-Trichlorophenol	U	9	1.0	10	9	3	
95-95-4	2,4,5-Trichlorophenol	U	24	1.0	25	24	4	
91-58-7	2-Chloronaphthalene	U	9	1.0	10	9	2	
92-52-4	1,1'-Biphenyl	U	9	1.0	10	9	2	
88-74-4	2-Nitroaniline	U	24	1.0	25	24	1	
131-11-3	Dimethyl Phthalate	U	9	1.0	10	9	0.7	
606-20-2	2,6-Dinitrotoluene	U	9	1.0	10	9	1.0	
208-96-8	Acenaphthylene	U	9	1.0	10	9	2	
99-09-2	3-Nitroaniline	U	24	1.0	25	24	1	
83-32-9	Acenaphthene	U	9	1.0	10	9	2	
51-28-5	2,4-Dinitrophenol	U	42	1.0	45	42	14	
132-64-9	Dibenzofuran	U	9	1.0	10	9	1	
100-02-7	4-Nitrophenol	U	24	1.0	25	24	5	
121-14-2	2,4-Dinitrotoluene	U	9	1.0	10	9	1	
84-66-2	Diethylphthalate	U	9	1.0	10	9	1	
7005-72-3	4-Chlorophenyl-phenylether	U	9	1.0	10	9	1	
100-01-6	4-Nitroaniline	U	24	1.0	25	24	2	
534-52-1	4,6-Dinitro-2-Methylphenol	U	24	1.0	25	24	6	
86-30-6	N-Nitrosodiphenylamine	U	9	1.0	10	9	2	
101-55-3	4-Bromophenyl-phenylether	U	9	1.0	10	9	1	
1912-24-9	Atrazine	U	9	1.0	10	9	2	
87-86-5	Pentachlorophenol	U	24	1.0	25	24	7	
120-12-7	Anthracene	U	9	1.0	10	9	1	
86-74-8	Carbazole	U	9	1.0	10	9	1	

lwo 3/5/09

KATAHDIN ANALYTICAL SERVICES
Report of Analytical Results

3

Client: CH2MHill
Project: TO-009 Lejeune
PO No:
Sample Date: 12/18/08
Received Date: 12/19/08
Extraction Date: 12/22/08
Analysis Date: 09-JAN-2009 18:49
Report Date: 01/15/2009
Matrix: WATER
% Solids: NA

Lab ID: SB7327-3
Client ID: MR08-EB01121808
SDG: TO9-19
Extracted by: CB
Extraction Method: SW846 3510
Analyst: JCG
Analysis Method: SW846 8270C
Lab Prep Batch: WG59305
Units: ug/L

CAS#	Compound	Flags	Results	DF	PQL	Adj.PQL	Adj.MDL
84-74-2	Di-n-butylphthalate	U	9	1.0	10	9	1
85-68-7	Butylbenzylphthalate	U	9	1.0	10	9	1
91-94-1	3,3'-Dichlorobenzidine	U	9	1.0	10	9	3
218-01-9	Chrysene	U	9	1.0	10	9	1
117-81-7	bis(2-Ethylhexyl)phthalate	U	9	1.0	10	9	2
117-84-0	Di-n-octylphthalate	~~U~~ UJ	9	1.0	10	9	2 CCH
367-12-4	2-Fluorophenol		34%				
13127-88-3	Phenol-D6		23%				
4165-60-0	Nitrobenzene-D5		72%				
321-60-8	2-Fluorobiphenyl		72%				
118-79-6	2,4,6-Tribromophenol		78%				
1718-51-0	Terphenyl-D14		85%				

gcw 3/5/09

4

KATAHDIN ANALYTICAL SERVICES
Report of Analytical Results

Client: CH2MHill
Project: TO-009 Lejeune
PO No:
Sample Date: 12/19/08
Received Date: 12/20/08
Extraction Date: 12/23/08
Analysis Date: 15-JAN-2009 14:03
Report Date: 01/15/2009
Matrix: WATER
% Solids: NA

Lab ID: SB7352-1
Client ID: MR08-EB01-121908
SDG: TO9-19
Extracted by: CB
Extraction Method: SW846 3510
Analyst: JCG
Analysis Method: SW846 8270C
Lab Prep Batch: WG59358
Units: ug/L

Use reanalyses

CAS#	Compound	Flags	Results	DF	PQL	Adj.PQL	Adj.MDL
100-52-7	Benzaldehyde	U R	9	1.0	10	9	3 BSL
108-95-2	Phenol	U	9	1.0	10	9	2
111-44-4	Bis(2-Chloroethyl)ether	U	9	1.0	10	9	2
95-57-8	2-Chlorophenol	U	11	1.0	12	11	3
95-48-7	2-Methylphenol	U	11	1.0	12	11	4
108-60-1	2,2'-Oxybis(1-chloropropane)	U	9	1.0	10	9	2
98-86-2	Acetophenone	U	11	1.0	12	11	4
621-64-7	N-Nitroso-di-n-propylamine	U	9	1.0	10	9	2
65794-96-9	3&4-Methylphenol	U	9	1.0	10	9	2
67-72-1	Hexachloroethane	U	9	1.0	10	9	2
98-95-3	Nitrobenzene	U	9	1.0	10	9	2
78-59-1	Isophorone	U	9	1.0	10	9	2
88-75-5	2-Nitrophenol	U	9	1.0	10	9	3
105-67-9	2,4-Dimethylphenol	U	11	1.0	12	11	4
111-91-1	Bis(2-Chloroethoxy)methane	U	9	1.0	10	9	2
120-83-2	2,4-Dichlorophenol	U	11	1.0	12	11	4
106-47-8	4-Chloroaniline	U	9	1.0	10	9	2
105-60-2	Caprolactam	U	9	1.0	10	9	0.4
59-50-7	4-Chloro-3-Methylphenol	U	9	1.0	10	9	2
88-06-2	2,4,6-Trichlorophenol	U	9	1.0	10	9	3
95-95-4	2,4,5-Trichlorophenol	U	24	1.0	25	24	4
91-58-7	2-Chloronaphthalene	U	9	1.0	10	9	2
92-52-4	1,1'-Biphenyl	U	9	1.0	10	9	2
88-74-4	2-Nitroaniline	U	24	1.0	25	24	1
131-11-3	Dimethyl Phthalate	U	9	1.0	10	9	0.7
606-20-2	2,6-Dinitrotoluene	U	9	1.0	10	9	1.0
208-96-8	Acenaphthylene	U	9	1.0	10	9	2
99-09-2	3-Nitroaniline	U	24	1.0	25	24	1
83-32-9	Acenaphthene	U	9	1.0	10	9	2
51-28-5	2,4-Dinitrophenol	U	42	1.0	45	42	14
132-64-9	Dibenzofuran	U	9	1.0	10	9	1
100-02-7	4-Nitrophenol	U	24	1.0	25	24	5
121-14-2	2,4-Dinitrotoluene	U	9	1.0	10	9	1
84-66-2	Diethylphthalate	J	2	1.0	10	9	1
7005-72-3	4-Chlorophenyl-phenylether	U	9	1.0	10	9	1
100-01-6	4-Nitroaniline	U	24	1.0	25	24	2
534-52-1	4,6-Dinitro-2-Methylphenol	U	24	1.0	25	24	6
86-30-6	N-Nitrosodiphenylamine	U	9	1.0	10	9	2
101-55-3	4-Bromophenyl-phenylether	U	9	1.0	10	9	1
1912-24-9	Atrazine	U	9	1.0	10	9	2
87-86-5	Pentachlorophenol	U	24	1.0	25	24	7
120-12-7	Anthracene	U	9	1.0	10	9	1
86-74-8	Carbazole	U	9	1.0	10	9	1

R RE

hw 3/5/09

KATAHDIN ANALYTICAL SERVICES
Report of Analytical Results

4

Client: CH2MHill
Project: TO-009 Lejeune
PO No:
Sample Date: 12/19/08
Received Date: 12/20/08
Extraction Date: 12/23/08
Analysis Date: 15-JAN-2009 14:03
Report Date: 01/15/2009
Matrix: WATER
% Solids: NA

Lab ID: SB7352-1
Client ID: MR08-EB01-121908
SDG: TO9-19
Extracted by: CB
Extraction Method: SW846 3510
Analyst: JCG
Analysis Method: SW846 8270C
Lab Prep Batch: WG59358
Units: ug/L

Use reanalysis

CAS#	Compound	Flags	Results	DF	PQL	Adj.PQL	Adj.MDL
84-74-2	Di-n-butylphthalate	J	1	1.0	10	9	1
85-68-7	Butylbenzylphthalate	U	9	1.0	10	9	1
91-94-1	3,3'-Dichlorobenzidine	U	9	1.0	10	9	3
218-01-9	Chrysene	U	9	1.0	10	9	1
117-81-7	bis(2-Ethylhexyl)phthalate	~~JB~~ 9u	4	1.0	10	9	2 BL
117-84-0	Di-n-octylphthalate	~~U~~ UJ	9	1.0	10	9	2 CCH
367-12-4	2-Fluorophenol		53%				
13127-88-3	Phenol-D6		37%				
4165-60-0	Nitrobenzene-D5		78%				
321-60-8	2-Fluorobiphenyl		73%				
118-79-6	2,4,6-Tribromophenol		77%				
1718-51-0	Terphenyl-D14		104%				

R RE

JWJ 3/5/09

4RE

KATAHDIN ANALYTICAL SERVICES
Report of Analytical Results

Client: CH2MHill
Project: TO-009 Lejeune
PO No:
Sample Date: 12/19/08
Received Date: 12/20/08
Extraction Date: 12/31/08
Analysis Date: 15-JAN-2009 14:50
Report Date: 01/16/2009
Matrix: WATER
% Solids: NA

Lab ID: SB7352-1RE
Client ID: MR08-EB01-121908
SDG: TO9-19
Extracted by: CB
Extraction Method: SW846 3510
Analyst: JCG
Analysis Method: SW846 8270C
Lab Prep Batch: WG59510
Units: ug/L

CAS#	Compound	Flags	Results	DF	PQL	Adj.PQL	Adj.MDL
100-52-7	Benzaldehyde	~~J~~ UJ	9	1.0	10	9	3 ICB
108-95-2	Phenol	U	9	1.0	10	9	2
111-44-4	Bis(2-Chloroethyl)ether	U	9	1.0	10	9	2
95-57-8	2-Chlorophenol	U	11	1.0	12	11	3
95-48-7	2-Methylphenol	U	11	1.0	12	11	4
108-60-1	2,2'-Oxybis(1-chloropropane)	U	9	1.0	10	9	2
98-86-2	Acetophenone	U	11	1.0	12	11	4
621-64-7	N-Nitroso-di-n-propylamine	U	9	1.0	10	9	2
65794-96-9	3&4-Methylphenol	U	9	1.0	10	9	2
67-72-1	Hexachloroethane	U	9	1.0	10	9	2
98-95-3	Nitrobenzene	U	9	1.0	10	9	2
78-59-1	Isophorone	U	9	1.0	10	9	2
88-75-5	2-Nitrophenol	U	9	1.0	10	9	3
105-67-9	2,4-Dimethylphenol	U	11	1.0	12	11	4
111-91-1	Bis(2-Chloroethoxy)methane	U	9	1.0	10	9	2
120-83-2	2,4-Dichlorophenol	U	11	1.0	12	11	4
106-47-8	4-Chloroaniline	U	9	1.0	10	9	2
105-60-2	Caprolactam	U	9	1.0	10	9	0.4
59-50-7	4-Chloro-3-Methylphenol	U	9	1.0	10	9	2
88-06-2	2,4,6-Trichlorophenol	U	9	1.0	10	9	3
95-95-4	2,4,5-Trichlorophenol	U	24	1.0	25	24	4
91-58-7	2-Chloronaphthalene	U	9	1.0	10	9	2
92-52-4	1,1'-Biphenyl	U	9	1.0	10	9	2
88-74-4	2-Nitroaniline	U	24	1.0	25	24	1
131-11-3	Dimethyl Phthalate	U	9	1.0	10	9	0.7
606-20-2	2,6-Dinitrotoluene	U	9	1.0	10	9	1.0
208-96-8	Acenaphthylene	U	9	1.0	10	9	2
99-09-2	3-Nitroaniline	U	24	1.0	25	24	1
83-32-9	Acenaphthene	U	9	1.0	10	9	2
51-28-5	2,4-Dinitrophenol	U	42	1.0	45	42	14
132-64-9	Dibenzofuran	U	9	1.0	10	9	1
100-02-7	4-Nitrophenol	U	24	1.0	25	24	5
121-14-2	2,4-Dinitrotoluene	U	9	1.0	10	9	1
84-66-2	Diethylphthalate	J	2	1.0	10	9	1
7005-72-3	4-Chlorophenyl-phenylether	U	9	1.0	10	9	1
100-01-6	4-Nitroaniline	U	24	1.0	25	24	2
534-52-1	4,6-Dinitro-2-Methylphenol	U	24	1.0	25	24	6
86-30-6	N-Nitrosodiphenylamine	U	9	1.0	10	9	2
101-55-3	4-Bromophenyl-phenylether	U	9	1.0	10	9	1
1912-24-9	Atrazine	U	9	1.0	10	9	2
87-86-5	Pentachlorophenol	U	24	1.0	25	24	7
120-12-7	Anthracene	U	9	1.0	10	9	1
86-74-8	Carbazole	U	9	1.0	10	9	1

lw 3/5/09

KATAHDIN ANALYTICAL SERVICES
Report of Analytical Results

4RE

Client: CH2MHill
Project: TO-009 Lejeune
PO No:
Sample Date: 12/19/08
Received Date: 12/20/08
Extraction Date: 12/31/08
Analysis Date: 15-JAN-2009 14:50
Report Date: 01/16/2009
Matrix: WATER
% Solids: NA

Lab ID: SB7352-1RE
Client ID: MR08-EB01-121908
SDG: TO9-19
Extracted by: CB
Extraction Method: SW846 3510
Analyst: JCG
Analysis Method: SW846 8270C
Lab Prep Batch: WG59510
Units: ug/L

CAS#	Compound	Flags	Results	DF	PQL	Adj.PQL	Adj.MDL
84-74-2	Di-n-butylphthalate	U	9	1.0	10	9	1
85-68-7	Butylbenzylphthalate	U	9	1.0	10	9	1
91-94-1	3,3'-Dichlorobenzidine	U	9	1.0	10	9	3
218-01-9	Chrysene	U	9	1.0	10	9	1
117-81-7	bis(2-Ethylhexyl)phthalate	U	9	1.0	10	9	2
117-84-0	Di-n-octylphthalate	~~U~~ UJ	9	1.0	10	9	2 CCH
367-12-4	2-Fluorophenol		40%				
13127-88-3	Phenol-D6		28%				
4165-60-0	Nitrobenzene-D5		76%				
321-60-8	2-Fluorobiphenyl		74%				
118-79-6	2,4,6-Tribromophenol		65%				
1718-51-0	Terphenyl-D14		82%				

fw 3/5/09

5

KATAHDIN ANALYTICAL SERVICES
Report of Analytical Results

Client: CH2MHill
Project: TO-009 Lejeune
PO No:
Sample Date: 12/20/08
Received Date: 12/23/08
Extraction Date: 12/24/08
Analysis Date: 13-JAN-2009 03:50
Report Date: 01/15/2009
Matrix: WATER
% Solids: NA

Lab ID: SB7371-1
Client ID: MR08-EB01-122008
SDG: TO9-19
Extracted by: CB
Extraction Method: SW846 3510
Analyst: JCG
Analysis Method: SW846 8270C
Lab Prep Batch: WG59395
Units: ug/L

CAS#	Compound	Flags	Results	DF	PQL	Adj.PQL	Adj.MDL
100-52-7	Benzaldehyde	~~U~~ UJ	10	1.0	10	10	3 ICB
108-95-2	Phenol	U	10	1.0	10	10	2
111-44-4	Bis(2-Chloroethyl)ether	U	10	1.0	10	10	2
95-57-8	2-Chlorophenol	U	12	1.0	12	12	3
95-48-7	2-Methylphenol	U	12	1.0	12	12	4
108-60-1	2,2'-Oxybis(1-chloropropane)	U	10	1.0	10	10	2
98-86-2	Acetophenone	U	12	1.0	12	12	4
621-64-7	N-Nitroso-di-n-propylamine	U	10	1.0	10	10	2
65794-96-9	3&4-Methylphenol	U	10	1.0	10	10	3
67-72-1	Hexachloroethane	U	10	1.0	10	10	2
98-95-3	Nitrobenzene	U	10	1.0	10	10	2
78-59-1	Isophorone	U	10	1.0	10	10	2
88-75-5	2-Nitrophenol	U	10	1.0	10	10	4
105-67-9	2,4-Dimethylphenol	U	12	1.0	12	12	4
111-91-1	Bis(2-Chloroethoxy)methane	U	10	1.0	10	10	2
120-83-2	2,4-Dichlorophenol	U	12	1.0	12	12	4
106-47-8	4-Chloroaniline	U	10	1.0	10	10	2
105-60-2	Caprolactam	U	10	1.0	10	10	0.4
59-50-7	4-Chloro-3-Methylphenol	U	10	1.0	10	10	2
88-06-2	2,4,6-Trichlorophenol	U	10	1.0	10	10	3
95-95-4	2,4,5-Trichlorophenol	U	25	1.0	25	25	4
91-58-7	2-Chloronaphthalene	U	10	1.0	10	10	2
92-52-4	1,1'-Biphenyl	U	10	1.0	10	10	2
88-74-4	2-Nitroaniline	U	25	1.0	25	25	2
131-11-3	Dimethyl Phthalate	U	10	1.0	10	10	0.8
606-20-2	2,6-Dinitrotoluene	U	10	1.0	10	10	1
208-96-8	Acenaphthylene	U	10	1.0	10	10	2
99-09-2	3-Nitroaniline	U	25	1.0	25	25	1
83-32-9	Acenaphthene	U	10	1.0	10	10	2
51-28-5	2,4-Dinitrophenol	U	45	1.0	45	45	15
132-64-9	Dibenzofuran	U	10	1.0	10	10	1
100-02-7	4-Nitrophenol	U	25	1.0	25	25	6
121-14-2	2,4-Dinitrotoluene	U	10	1.0	10	10	1
84-66-2	Diethylphthalate	U	10	1.0	10	10	1
7005-72-3	4-Chlorophenyl-phenylether	U	10	1.0	10	10	1
100-01-6	4-Nitroaniline	U	25	1.0	25	25	2
534-52-1	4,6-Dinitro-2-Methylphenol	U	25	1.0	25	25	6
86-30-6	N-Nitrosodiphenylamine	U	10	1.0	10	10	2
101-55-3	4-Bromophenyl-phenylether	U	10	1.0	10	10	1
1912-24-9	Atrazine	U	10	1.0	10	10	2
87-86-5	Pentachlorophenol	U	25	1.0	25	25	8
120-12-7	Anthracene	U	10	1.0	10	10	1
86-74-8	Carbazole	U	10	1.0	10	10	1

MW 3/5/09

KATAHDIN ANALYTICAL SERVICES
Report of Analytical Results

Client: CH2MHill
Project: TO-009 Lejeune
PO No:
Sample Date: 12/20/08
Received Date: 12/23/08
Extraction Date: 12/24/08
Analysis Date: 13-JAN-2009 03:50
Report Date: 01/15/2009
Matrix: WATER
% Solids: NA

Lab ID: SB7371-1
Client ID: MR08-EB01-122008
SDG: TO9-19
Extracted by: CB
Extraction Method: SW846 3510
Analyst: JCG
Analysis Method: SW846 8270C
Lab Prep Batch: WG59395
Units: ug/L

CAS#	Compound	Flags	Results	DF	PQL	Adj.PQL	Adj.MDL
84-74-2	Di-n-butylphthalate	U	10	1.0	10	10	1
85-68-7	Butylbenzylphthalate	U	10	1.0	10	10	2
91-94-1	3,3'-Dichlorobenzidine	U	10	1.0	10	10	3
218-01-9	Chrysene	U	10	1.0	10	10	1
117-81-7	bis(2-Ethylhexyl)phthalate	U	10	1.0	10	10	2
117-84-0	Di-n-octylphthalate	U	10	1.0	10	10	2
367-12-4	2-Fluorophenol		48%				
13127-88-3	Phenol-D6		32%				
4165-60-0	Nitrobenzene-D5		77%				
321-60-8	2-Fluorobiphenyl		80%				
118-79-6	2,4,6-Tribromophenol		69%				
1718-51-0	Terphenyl-D14		84%				

lw 3/5/09

6

KATAHDIN ANALYTICAL SERVICES
Report of Analytical Results

Client: CH2MHill
Project: TO-009 Lejeune
PO No:
Sample Date: 12/20/08
Received Date: 12/23/08
Extraction Date: 12/24/08
Analysis Date: 13-JAN-2009 04:31
Report Date: 01/15/2009
Matrix: WATER
% Solids: NA

Lab ID: SB7371-3
Client ID: MR08-FB122008
SDG: TO9-19
Extracted by: CB
Extraction Method: SW846 3520
Analyst: JCG
Analysis Method: SW846 8270C
Lab Prep Batch: WG59395
Units: ug/L

CAS#	Compound	Flags	Results	DF	PQL	Adj.PQL	Adj.MDL
100-52-7	Benzaldehyde	~~U~~ UJ	11	1.0	10	11	3 ICB
108-95-2	Phenol	U	11	1.0	10	11	2
111-44-4	Bis(2-Chloroethyl)ether	U	11	1.0	10	11	2
95-57-8	2-Chlorophenol	U	13	1.0	12	13	4
95-48-7	2-Methylphenol	U	13	1.0	12	13	4
108-60-1	2,2'-Oxybis(1-chloropropane)	U	11	1.0	10	11	2
98-86-2	Acetophenone	U	13	1.0	12	13	4
621-64-7	N-Nitroso-di-n-propylamine	U	11	1.0	10	11	2
65794-96-9	3&4-Methylphenol	U	11	1.0	10	11	3
67-72-1	Hexachloroethane	U	11	1.0	10	11	2
98-95-3	Nitrobenzene	U	11	1.0	10	11	2
78-59-1	Isophorone	U	11	1.0	10	11	2
88-75-5	2-Nitrophenol	U	11	1.0	10	11	4
105-67-9	2,4-Dimethylphenol	U	13	1.0	12	13	4
111-91-1	Bis(2-Chloroethoxy)methane	U	11	1.0	10	11	3
120-83-2	2,4-Dichlorophenol	U	13	1.0	12	13	4
106-47-8	4-Chloroaniline	U	11	1.0	10	11	2
105-60-2	Caprolactam	U	11	1.0	10	11	0.4
59-50-7	4-Chloro-3-Methylphenol	U	11	1.0	10	11	3
88-06-2	2,4,6-Trichlorophenol	U	11	1.0	10	11	4
95-95-4	2,4,5-Trichlorophenol	U	28	1.0	25	28	5
91-58-7	2-Chloronaphthalene	U	11	1.0	10	11	2
92-52-4	1,1'-Biphenyl	U	11	1.0	10	11	2
88-74-4	2-Nitroaniline	U	28	1.0	25	28	2
131-11-3	Dimethyl Phthalate	U	11	1.0	10	11	0.9
606-20-2	2,6-Dinitrotoluene	U	11	1.0	10	11	1
208-96-8	Acenaphthylene	U	11	1.0	10	11	2
99-09-2	3-Nitroaniline	U	28	1.0	25	28	2
83-32-9	Acenaphthene	U	11	1.0	10	11	2
51-28-5	2,4-Dinitrophenol	U	50	1.0	45	50	17
132-64-9	Dibenzofuran	U	11	1.0	10	11	2
100-02-7	4-Nitrophenol	U	28	1.0	25	28	6
121-14-2	2,4-Dinitrotoluene	U	11	1.0	10	11	2
84-66-2	Diethylphthalate	U	11	1.0	10	11	1
7005-72-3	4-Chlorophenyl-phenylether	U	11	1.0	10	11	2
100-01-6	4-Nitroaniline	U	28	1.0	25	28	2
534-52-1	4,6-Dinitro-2-Methylphenol	U	28	1.0	25	28	6
86-30-6	N-Nitrosodiphenylamine	U	11	1.0	10	11	2
101-55-3	4-Bromophenyl-phenylether	U	11	1.0	10	11	1
1912-24-9	Atrazine	U	11	1.0	10	11	2
87-86-5	Pentachlorophenol	U	28	1.0	25	28	8
120-12-7	Anthracene	U	11	1.0	10	11	2
86-74-8	Carbazole	U	11	1.0	10	11	1

lw 3/5/09

KATAHDIN ANALYTICAL SERVICES
Report of Analytical Results

6

Client: CH2MHill
Project: TO-009 Lejeune
PO No:
Sample Date: 12/20/08
Received Date: 12/23/08
Extraction Date: 12/24/08
Analysis Date: 13-JAN-2009 04:31
Report Date: 01/15/2009
Matrix: WATER
% Solids: NA

Lab ID: SB7371-3
Client ID: MR08-FB122008
SDG: TO9-19
Extracted by: CB
Extraction Method: SW846 3520
Analyst: JCG
Analysis Method: SW846 8270C
Lab Prep Batch: WG59395
Units: ug/L

CAS#	Compound	Flags	Results	DF	PQL	Adj.PQL	Adj.MDL
84-74-2	Di-n-butylphthalate	U	11	1.0	10	11	1
85-68-7	Butylbenzylphthalate	U	11	1.0	10	11	2
91-94-1	3,3'-Dichlorobenzidine	U	11	1.0	10	11	3
218-01-9	Chrysene	U	11	1.0	10	11	1
117-81-7	bis(2-Ethylhexyl)phthalate	U	11	1.0	10	11	2
117-84-0	Di-n-octylphthalate	U	11	1.0	10	11	2
367-12-4	2-Fluorophenol		57%				
13127-88-3	Phenol-D6		38%				
4165-60-0	Nitrobenzene-D5		83%				
321-60-8	2-Fluorobiphenyl		84%				
118-79-6	2,4,6-Tribromophenol		68%				
1718-51-0	Terphenyl-D14		86%				

QW 3/5/09

7

KATAHDIN ANALYTICAL SERVICES
Report of Analytical Results

Client: CH2MHill
Project: TO-009 Lejeune
PO No:
Sample Date: 12/21/08
Received Date: 12/23/08
Extraction Date: 12/24/08
Analysis Date: 13-JAN-2009 05:13
Report Date: 01/15/2009
Matrix: WATER
% Solids: NA

Lab ID: SB7371-5
Client ID: MR08-EB01-122108
SDG: TO9-19
Extracted by: CB
Extraction Method: SW846 3520
Analyst: JCG
Analysis Method: SW846 8270C
Lab Prep Batch: WG59395
Units: ug/L

CAS#	Compound	Flags	Results	DF	PQL	Adj.PQL	Adj.MDL
100-52-7	Benzaldehyde	~~J~~ UJ	9	1.0	10	9	3 ICB
108-95-2	Phenol	U	9	1.0	10	9	2
111-44-4	Bis(2-Chloroethyl)ether	U	9	1.0	10	9	2
95-57-8	2-Chlorophenol	U	11	1.0	12	11	3
95-48-7	2-Methylphenol	U	11	1.0	12	11	4
108-60-1	2,2'-Oxybis(1-chloropropane)	U	9	1.0	10	9	2
98-86-2	Acetophenone	U	11	1.0	12	11	4
621-64-7	N-Nitroso-di-n-propylamine	U	9	1.0	10	9	2
65794-96-9	3&4-Methylphenol	U	9	1.0	10	9	2
67-72-1	Hexachloroethane	U	9	1.0	10	9	2
98-95-3	Nitrobenzene	U	9	1.0	10	9	2
78-59-1	Isophorone	U	9	1.0	10	9	2
88-75-5	2-Nitrophenol	U	9	1.0	10	9	3
105-67-9	2,4-Dimethylphenol	U	11	1.0	12	11	4
111-91-1	Bis(2-Chloroethoxy)methane	U	9	1.0	10	9	2
120-83-2	2,4-Dichlorophenol	U	11	1.0	12	11	4
106-47-8	4-Chloroaniline	U	9	1.0	10	9	2
105-60-2	Caprolactam	U	9	1.0	10	9	0.4
59-50-7	4-Chloro-3-Methylphenol	U	9	1.0	10	9	2
88-06-2	2,4,6-Trichlorophenol	U	9	1.0	10	9	3
95-95-4	2,4,5-Trichlorophenol	U	24	1.0	25	24	4
91-58-7	2-Chloronaphthalene	U	9	1.0	10	9	2
92-52-4	1,1'-Biphenyl	U	9	1.0	10	9	2
88-74-4	2-Nitroaniline	U	24	1.0	25	24	1
131-11-3	Dimethyl Phthalate	U	9	1.0	10	9	0.7
606-20-2	2,6-Dinitrotoluene	U	9	1.0	10	9	1.0
208-96-8	Acenaphthylene	U	9	1.0	10	9	2
99-09-2	3-Nitroaniline	U	24	1.0	25	24	1
83-32-9	Acenaphthene	U	9	1.0	10	9	2
51-28-5	2,4-Dinitrophenol	U	42	1.0	45	42	14
132-64-9	Dibenzofuran	U	9	1.0	10	9	1
100-02-7	4-Nitrophenol	U	24	1.0	25	24	5
121-14-2	2,4-Dinitrotoluene	U	9	1.0	10	9	1
84-66-2	Diethylphthalate	U	9	1.0	10	9	1
7005-72-3	4-Chlorophenyl-phenylether	U	9	1.0	10	9	1
100-01-6	4-Nitroaniline	U	24	1.0	25	24	2
534-52-1	4,6-Dinitro-2-Methylphenol	U	24	1.0	25	24	6
86-30-6	N-Nitrosodiphenylamine	U	9	1.0	10	9	2
101-55-3	4-Bromophenyl-phenylether	U	9	1.0	10	9	1
1912-24-9	Atrazine	U	9	1.0	10	9	2
87-86-5	Pentachlorophenol	U	24	1.0	25	24	7
120-12-7	Anthracene	U	9	1.0	10	9	1
86-74-8	Carbazole	U	9	1.0	10	9	1

LEW 3/5/09

KATAHDIN ANALYTICAL SERVICES
Report of Analytical Results

7

Client: CH2MHill
Project: TO-009 Lejeune
PO No:
Sample Date: 12/21/08
Received Date: 12/23/08
Extraction Date: 12/24/08
Analysis Date: 13-JAN-2009 05:13
Report Date: 01/15/2009
Matrix: WATER
% Solids: NA

Lab ID: SB7371-5
Client ID: MR08-EB01-122108
SDG: TO9-19
Extracted by: CB
Extraction Method: SW846 3520
Analyst: JCG
Analysis Method: SW846 8270C
Lab Prep Batch: WG59395
Units: ug/L

CAS#	Compound	Flags	Results	DF	PQL	Adj.PQL	Adj.MDL
84-74-2	Di-n-butylphthalate	U	9	1.0	10	9	1
85-68-7	Butylbenzylphthalate	U	9	1.0	10	9	1
91-94-1	3,3'-Dichlorobenzidine	U	9	1.0	10	9	3
218-01-9	Chrysene	U	9	1.0	10	9	1
117-81-7	bis(2-Ethylhexyl)phthalate	U	9	1.0	10	9	2
117-84-0	Di-n-octylphthalate	U	9	1.0	10	9	2
367-12-4	2-Fluorophenol		46%				
13127-88-3	Phenol-D6		30%				
4165-60-0	Nitrobenzene-D5		75%				
321-60-8	2-Fluorobiphenyl		77%				
118-79-6	2,4,6-Tribromophenol		65%				
1718-51-0	Terphenyl-D14		82%				

MW 3/5/09

8

KATAHDIN ANALYTICAL SERVICES
Report of Analytical Results

Client: CH2MHill
Project: TO-009 Lejeune
PO No:
Sample Date: 12/22/08
Received Date: 12/23/08
Extraction Date: 12/24/08
Analysis Date: 13-JAN-2009 05:55
Report Date: 01/15/2009
Matrix: WATER
% Solids: NA

Lab ID: SB7371-7
Client ID: MR08-EB01-122208
SDG: TO9-19
Extracted by: CB
Extraction Method: SW846 3510
Analyst: JCG
Analysis Method: SW846 8270C
Lab Prep Batch: WG59395
Units: ug/L

CAS#	Compound	Flags	Results	DF	PQL	Adj.PQL	Adj.MDL
100-52-7	Benzaldehyde	~~U~~ UJ	9	1.0	10	9	3 JCB
108-95-2	Phenol	U	9	1.0	10	9	2
111-44-4	Bis(2-Chloroethyl)ether	U	9	1.0	10	9	2
95-57-8	2-Chlorophenol	U	11	1.0	12	11	3
95-48-7	2-Methylphenol	U	11	1.0	12	11	4
108-60-1	2,2'-Oxybis(1-chloropropane)	U	9	1.0	10	9	2
98-86-2	Acetophenone	U	11	1.0	12	11	4
621-64-7	N-Nitroso-di-n-propylamine	U	9	1.0	10	9	2
65794-96-9	3&4-Methylphenol	U	9	1.0	10	9	2
67-72-1	Hexachloroethane	U	9	1.0	10	9	2
98-95-3	Nitrobenzene	U	9	1.0	10	9	2
78-59-1	Isophorone	U	9	1.0	10	9	2
88-75-5	2-Nitrophenol	U	9	1.0	10	9	3
105-67-9	2,4-Dimethylphenol	U	11	1.0	12	11	4
111-91-1	Bis(2-Chloroethoxy)methane	U	9	1.0	10	9	2
120-83-2	2,4-Dichlorophenol	U	11	1.0	12	11	4
106-47-8	4-Chloroaniline	U	9	1.0	10	9	2
105-60-2	Caprolactam	U	9	1.0	10	9	0.4
59-50-7	4-Chloro-3-Methylphenol	U	9	1.0	10	9	2
88-06-2	2,4,6-Trichlorophenol	U	9	1.0	10	9	3
95-95-4	2,4,5-Trichlorophenol	U	24	1.0	25	24	4
91-58-7	2-Chloronaphthalene	U	9	1.0	10	9	2
92-52-4	1,1'-Biphenyl	U	9	1.0	10	9	2
88-74-4	2-Nitroaniline	U	24	1.0	25	24	1
131-11-3	Dimethyl Phthalate	U	9	1.0	10	9	0.7
606-20-2	2,6-Dinitrotoluene	U	9	1.0	10	9	1.0
208-96-8	Acenaphthylene	U	9	1.0	10	9	2
99-09-2	3-Nitroaniline	U	24	1.0	25	24	1
83-32-9	Acenaphthene	U	9	1.0	10	9	2
51-28-5	2,4-Dinitrophenol	U	42	1.0	45	42	14
132-64-9	Dibenzofuran	U	9	1.0	10	9	1
100-02-7	4-Nitrophenol	U	24	1.0	25	24	5
121-14-2	2,4-Dinitrotoluene	U	9	1.0	10	9	1
84-66-2	Diethylphthalate	U	9	1.0	10	9	1
7005-72-3	4-Chlorophenyl-phenylether	U	9	1.0	10	9	1
100-01-6	4-Nitroaniline	U	24	1.0	25	24	2
534-52-1	4,6-Dinitro-2-Methylphenol	U	24	1.0	25	24	6
86-30-6	N-Nitrosodiphenylamine	U	9	1.0	10	9	2
101-55-3	4-Bromophenyl-phenylether	U	9	1.0	10	9	1
1912-24-9	Atrazine	U	9	1.0	10	9	2
87-86-5	Pentachlorophenol	U	24	1.0	25	24	7
120-12-7	Anthracene	U	9	1.0	10	9	1
86-74-8	Carbazole	U	9	1.0	10	9	1

MW 3/5/09

KATAHDIN ANALYTICAL SERVICES
Report of Analytical Results

8

Client: CH2MHill
Project: TO-009 Lejeune
PO No:
Sample Date: 12/22/08
Received Date: 12/23/08
Extraction Date: 12/24/08
Analysis Date: 13-JAN-2009 05:55
Report Date: 01/15/2009
Matrix: WATER
% Solids: NA

Lab ID: SB7371-7
Client ID: MR08-EB01-122208
SDG: TO9-19
Extracted by: CB
Extraction Method: SW846 3510
Analyst: JCG
Analysis Method: SW846 8270C
Lab Prep Batch: WG59395
Units: ug/L

CAS#	Compound	Flags	Results	DF	PQL	Adj.PQL	Adj.MDL
84-74-2	Di-n-butylphthalate	U	9	1.0	10	9	1
85-68-7	Butylbenzylphthalate	U	9	1.0	10	9	1
91-94-1	3,3'-Dichlorobenzidine	U	9	1.0	10	9	3
218-01-9	Chrysene	U	9	1.0	10	9	1
117-81-7	bis(2-Ethylhexyl)phthalate	U	9	1.0	10	9	2
117-84-0	Di-n-octylphthalate	U	9	1.0	10	9	2
367-12-4	2-Fluorophenol		41%				
13127-88-3	Phenol-D6		26%				
4165-60-0	Nitrobenzene-D5		75%				
321-60-8	2-Fluorobiphenyl		84%				
118-79-6	2,4,6-Tribromophenol		68%				
1718-51-0	Terphenyl-D14		88%				

lw 3/5/09

ENVIRONMENTAL
Data Services, Inc.

POLYNUCLEAR AROMATIC COMPOUNDS BY 8270SIM

USEPA Region IV - Level IV Review

Site: MCB Camp Lejeune, TO-09 SDG #: TO9-20

Client: CH2M HILL, Inc., Virginia Beach, Virginia Date: March 5, 2009

Laboratory: Katahdin Analytical Services, Scarborough, Maine Reviewer: Nancy Weaver

EDS ID	Client Sample ID	Laboratory Sample ID	Matrix
1	MR08-IS110-08D	SB7343-2	Soil
2	MR08-SS134-08D	SB7343-4	Soil
3	MR08-IS134-08D	SB7343-6	Soil
4	MR08-SS135-08D	SB7343-8	Soil
5	MR08-IS135-1.5-2.-08D	SB7343-10	Soil
6	MR08-SS156-08D	SB7343-12	Soil
7	MR08-IS156-1.5-2-08D	SB7343-14	Soil
8	MR08-SS159-08D	SB7343-16	Soil
8RE	MR08-SS159-08DRE	SB7343-16RE	Soil
9	MR08-IS159-4-5-08D	SB7343-18	Soil
10	MR08-SS158-08D	SB7343-20	Soil
11	MR08-IS158-4-5-08D	SB7343-22	Soil
12	MR08-SS157-08D	SB7343-24	Soil
13	MR08-IS157-08D	SB7343-26	Soil
14	MR08-SS181-08D	SB7343-28	Soil
14DL	MR08-SS181-08DDL	SB7343-28DL	Soil
15	MR08-IS181-1-2-08D	SB7343-30	Soil
16	MR08-IS179-1.5-2-08D	SB7349-2	Soil
17	MR08-SS179-08D	SB7349-4	Soil
18	MR08-IS160-5-6-08D	SB7349-6	Soil
19	MR08-SS160-08D	SB7349-8	Soil
20	MR08-IS155-1-2-08D	SB7349-10	Soil

The USEPA "Contract Laboratory Program National Functional Guidelines for Organic Data Review," October 1999, and professional judgment were used in evaluating the data in this summary report.

Holding Times - All samples were extracted within 14 days for soil samples and analyzed within 40 days for all samples.

Sample	Date Sampled	Date Extracted	# of Days	Qualifier
8RE	12/17/08	01/14/09	28	J/UJ

GC/MS Tuning - All of the DFTPP tunes in the initial and continuing calibrations met the percent relative abundance criteria.

Initial Calibration - The initial calibrations exhibited acceptable %RSD and mean RRF values.

Continuing Calibration - The continuing calibrations exhibited acceptable %D and RRF values except the following.

CCAL Date	Compound	%D/RRF	Qualifier	Affected Samples
01/12/09	Naphthalene	30.74%	J/UJ	14, 15
	2-Methylnaphthalene	25.87%	J/UJ	14, 15
01/14/09	Benzo (b) fluoranthene	30.76%	J/UJ	1, 2, 4, 5, 16-20
01/15/09 (1008)	Naphthalene	36.44%	J/UJ	10
	Benzo (a) anthracene	53.27%	J/UJ	10
	Hexachlorobutadiene	33.61%	J/UJ	10
	Hexachlorocyclopentadiene	77.62%	J/UJ	10
01/15/09 (2023)	Naphthalene	43.38%	None	Already qualified due to HT
	Fluoranthene	26.98%	None	Already qualified due to HT
	Hexachlorobutadiene	88.33%	None	Already qualified due to HT

Surrogates - All samples exhibited acceptable surrogate recoveries except the following.

Sample ID	Surrogate	%R	Qualifier
2	S3-Fluorene-d10	49%	None for 1 out
9	S1-2-Methylnaphthalene-d10	136%	None for 1 out
8	S1-2-Methylnaphthalene-d10	131%	None for 1 out
14DL	S1-2-Methylnaphthalene-d10	201%	J - positive results
	S2-2,4-Dibromophenol	156%	
	S3-Fluorene-d10	186%	
	S4-Pyrene-d10	244%	

MS/MSD - A MS/MSD sample was not analyzed.

Laboratory Control Sample - The LCS samples exhibited acceptable %R values except the following.

LCS ID	Compound	%R	Qualifier	Affected Samples
WG59398-LCS	Pyrene	132%	None	All ND
	Benzo (k) fluoranthene	150%	J	14
	Benzo (a) pyrene	119%	J	14
WG59786	Naphthalene	107%	None	All ND

Internal Standard (IS) Area Performance - All internal standards met response and retention time (RT) criteria except the following.

Sample ID	Internal Standard	Area Count	Qualifier
6	IS6-Perylene-d12	Low	J/UJ - associated compounds
8	IS6-Perylene-d12	Low	J/UJ - associated compounds
8RE	IS6-Perylene-d12	Low	None - Already qualified due to HT
14DL	IS6-Perylene-d12	Low	J/UJ - associated compounds

Method Blank - The method blanks were free of contamination.

Field, Equipment Blank - Field QC results are summarized below.

Blank ID	Compound	Conc. ug/L	Action Level ug/L	Qualifier	Affected Samples
MR08-FB122008	Hexachlorocyclopentadiene	0.15	12.5	None	All ND
MR08-EB121708	Phenanthene	0.075	6.25	U	4, 10
	Hexachlorocyclopentadiene	0.13	10.83	None	All ND
MR08-EB0112182008	Hexachlorocyclopentadiene	0.11	9.2	None	All ND

Field Duplicates - Field duplicate samples were not included in this data package.

Tentatively Identified Compounds (TICs) - TICs were not reported.

Compound Quantitation - Several samples were reanalyzed or diluted due to surrogate, laboratory control samples and/or internal standard area performance problems and high concentrations of target compounds. See Form Is for which to report.

KATAHDIN ANALYTICAL SERVICES
Report of Analytical Results

Client: CH2MHill
Project: TO-009 Lejeune
PO No:
Sample Date: 12/17/08
Received Date: 12/19/08
Extraction Date: 12/22/08
Analysis Date: 14-JAN-2009 11:52
Report Date: 01/16/2009
Matrix: SOIL
% Solids: 90.1

Lab ID: SB7343-2
Client ID: MR08-IS110-08D
SDG: TO9-20
Extracted by: AC
Extraction Method: SW846 3550
Analyst: JLP
Analysis Method: SW846 M8270C
Lab Prep Batch: WG59323
Units: ug/Kgdrywt

CAS#	Compound	Flags	Results	DF	PQL	Adj.PQL	Adj.MDL
91-20-3	Naphthalene	U	11	1.0	10	11	2.9
91-57-6	2-Methylnaphthalene	U	11	1.0	10	11	2.4
86-73-7	Fluorene	U	11	1.0	10	11	3.6
85-01-8	Phenanthrene	U	11	1.0	10	11	2.0
206-44-0	Fluoranthene	U	11	1.0	10	11	2.0
129-00-0	Pyrene	U	11	1.0	10	11	2.3
56-55-3	Benzo(a)anthracene	U	11	1.0	10	11	2.1
205-99-2	Benzo(b)fluoranthene	~~U~~ UJ	11	1.0	10	11	2.7 CCH
207-08-9	Benzo(k)fluoranthene	U	11	1.0	10	11	3.4
50-32-8	Benzo(a)pyrene	U	11	1.0	10	11	3.7
193-39-5	Indeno(1,2,3-cd)pyrene	U	11	1.0	10	11	2.1
53-70-3	Dibenzo(a,h)anthracene	U	11	1.0	10	11	2.0
191-24-2	Benzo(g,h,i)perylene	U	11	1.0	10	11	2.2
118-74-1	Hexachlorobenzene	U	11	1.0	10	11	2.0
87-68-3	Hexachlorobutadiene	U	11	1.0	10	11	2.6
77-47-4	Hexachlorocyclopentadiene	U	11	1.0	10	11	1.7
7297-45-2	2-Methylnaphthalene-D10		73%				
367-12-4	2,4-Dibromophenol		53%				
81103-79-9	Fluorene-d10		66%				
1718-51-1	Pyrene-D10		99%				

LEW 3/5/09

KATAHDIN ANALYTICAL SERVICES
Report of Analytical Results

2

Client: CH2MHill
Project: TO-009 Lejeune
PO No:
Sample Date: 12/17/08
Received Date: 12/19/08
Extraction Date: 12/22/08
Analysis Date: 14-JAN-2009 13:52
Report Date: 01/16/2009
Matrix: SOIL
% Solids: 91.0

Lab ID: SB7343-4
Client ID: MR08-SS134-08D
SDG: TO9-20
Extracted by: AC
Extraction Method: SW846 3550
Analyst: JLP
Analysis Method: SW846 M8270C
Lab Prep Batch: WG59323
Units: ug/Kgdrywt

CAS#	Compound	Flags	Results	DF	PQL	Adj.PQL	Adj.MDL
91-20-3	Naphthalene	J	9.2	1.0	10	11	2.8
91-57-6	2-Methylnaphthalene		15	1.0	10	11	2.4
86-73-7	Fluorene	U	11	1.0	10	11	3.5
85-01-8	Phenanthrene		24	1.0	10	11	2.0
206-44-0	Fluoranthene		42	1.0	10	11	2.0
129-00-0	Pyrene		42	1.0	10	11	2.3
56-55-3	Benzo(a)anthracene	U	11	1.0	10	11	2.1
205-99-2	Benzo(b)fluoranthene	~~U~~ UJ	11	1.0	10	11	2.6 CCU
207-08-9	Benzo(k)fluoranthene	U	11	1.0	10	11	3.4
50-32-8	Benzo(a)pyrene	U	11	1.0	10	11	3.6
193-39-5	Indeno(1,2,3-cd)pyrene		46	1.0	10	11	2.1
53-70-3	Dibenzo(a,h)anthracene	U	11	1.0	10	11	2.0
191-24-2	Benzo(g,h,i)perylene		170	1.0	10	11	2.2
118-74-1	Hexachlorobenzene	U	11	1.0	10	11	2.0
87-68-3	Hexachlorobutadiene	U	11	1.0	10	11	2.5
77-47-4	Hexachlorocyclopentadiene	U	11	1.0	10	11	1.6
7297-45-2	2-Methylnaphthalene-D10		37%				
367-12-4	2,4-Dibromophenol		42%				
81103-79-9	Fluorene-d10		* 49%				
1718-51-1	Pyrene-D10		68%				

Rev 3/5/09

KATAHDIN ANALYTICAL SERVICES
Report of Analytical Results

3

Client: CH2MHill
Project: TO-009 Lejeune
PO No:
Sample Date: 12/17/08
Received Date: 12/19/08
Extraction Date: 12/22/08
Analysis Date: 14-JAN-2009 23:31
Report Date: 01/16/2009
Matrix: SOIL
% Solids: 91.4

Lab ID: SB7343-6
Client ID: MR08-IS134-08D
SDG: TO9-20
Extracted by: AC
Extraction Method: SW846 3550
Analyst: JCG
Analysis Method: SW846 M8270C
Lab Prep Batch: WG59323
Units: ug/Kgdrywt

CAS#	Compound	Flags	Results	DF	PQL	Adj.PQL	Adj.MDL
91-20-3	Naphthalene	U	11	1.0	10	11	2.8
91-57-6	2-Methylnaphthalene	U	11	1.0	10	11	2.4
86-73-7	Fluorene	U	11	1.0	10	11	3.5
85-01-8	Phenanthrene	U	11	1.0	10	11	2.0
206-44-0	Fluoranthene	U	11	1.0	10	11	2.0
129-00-0	Pyrene	U	11	1.0	10	11	2.3
56-55-3	Benzo(a)anthracene	U	11	1.0	10	11	2.1
205-99-2	Benzo(b)fluoranthene	U	11	1.0	10	11	2.6
207-08-9	Benzo(k)fluoranthene	U	11	1.0	10	11	3.4
50-32-8	Benzo(a)pyrene	U	11	1.0	10	11	3.6
193-39-5	Indeno(1,2,3-cd)pyrene	U	11	1.0	10	11	2.1
53-70-3	Dibenzo(a,h)anthracene	U	11	1.0	10	11	2.0
191-24-2	Benzo(g,h,i)perylene	U	11	1.0	10	11	2.2
118-74-1	Hexachlorobenzene	U	11	1.0	10	11	2.0
87-68-3	Hexachlorobutadiene	U	11	1.0	10	11	2.5
77-47-4	Hexachlorocyclopentadiene	U	11	1.0	10	11	1.6
7297-45-2	2-Methylnaphthalene-D10		86%				
367-12-4	2,4-Dibromophenol		60%				
81103-79-9	Fluorene-d10		76%				
1718-51-1	Pyrene-D10		97%				

RW
3/5/09

4

KATAHDIN ANALYTICAL SERVICES
Report of Analytical Results

Client: CH2MHill
Project: TO-009 Lejeune
PO No:
Sample Date: 12/17/08
Received Date: 12/19/08
Extraction Date: 12/22/08
Analysis Date: 14-JAN-2009 14:32
Report Date: 01/16/2009
Matrix: SOIL
% Solids: 94.4

Lab ID: SB7343-8
Client ID: MR08-SS135-08D
SDG: TO9-20
Extracted by: AC
Extraction Method: SW846 3550
Analyst: JLP
Analysis Method: SW846 M8270C
Lab Prep Batch: WG59323
Units: ug/Kgdrywt

CAS#	Compound	Flags	Results	DF	PQL	Adj.PQL	Adj.MDL
91-20-3	Naphthalene	U	10	1.0	10	10	2.8
91-57-6	2-Methylnaphthalene	J	3.0	1.0	10	10	2.3
86-73-7	Fluorene	U	10	1.0	10	10	3.4
85-01-8	Phenanthrene	~~J~~ 10U	~~2.9~~	1.0	10	10	1.9 BL
206-44-0	Fluoranthene	U	10	1.0	10	10	1.9
129-00-0	Pyrene	J	2.4	1.0	10	10	2.2
56-55-3	Benzo(a)anthracene	U	10	1.0	10	10	2.0
205-99-2	Benzo(b)fluoranthene	~~J~~ UJ	10	1.0	10	10	2.5 CCH
207-08-9	Benzo(k)fluoranthene	U	10	1.0	10	10	3.3
50-32-8	Benzo(a)pyrene	U	10	1.0	10	10	3.5
193-39-5	Indeno(1,2,3-cd)pyrene	U	10	1.0	10	10	2.0
53-70-3	Dibenzo(a,h)anthracene	U	10	1.0	10	10	1.9
191-24-2	Benzo(g,h,i)perylene	U	10	1.0	10	10	2.1
118-74-1	Hexachlorobenzene	U	10	1.0	10	10	1.9
87-68-3	Hexachlorobutadiene	U	10	1.0	10	10	2.4
77-47-4	Hexachlorocyclopentadiene	U	10	1.0	10	10	1.6
7297-45-2	2-Methylnaphthalene-D10		51%				
367-12-4	2,4-Dibromophenol		36%				
81103-79-9	Fluorene-d10		61%				
1718-51-1	Pyrene-D10		59%				

lw 3/5/09

KATAHDIN ANALYTICAL SERVICES
Report of Analytical Results

Client: CH2MHill
Project: TO-009 Lejeune
PO No:
Sample Date: 12/17/08
Received Date: 12/19/08
Extraction Date: 12/22/08
Analysis Date: 14-JAN-2009 12:32
Report Date: 01/16/2009
Matrix: SOIL
% Solids: 94.2

Lab ID: SB7343-10
Client ID: MR08-IS135-1.5-2
SDG: TO9-20
Extracted by: AC
Extraction Method: SW846 3550
Analyst: JLP
Analysis Method: SW846 M8270C
Lab Prep Batch: WG59323
Units: ug/Kgdrywt

CAS#	Compound	Flags	Results	DF	PQL	Adj.PQL	Adj.MDL
91-20-3	Naphthalene	U	11	1.0	10	11	2.8
91-57-6	2-Methylnaphthalene	U	11	1.0	10	11	2.3
86-73-7	Fluorene	U	11	1.0	10	11	3.4
85-01-8	Phenanthrene	U	11	1.0	10	11	1.9
206-44-0	Fluoranthene	U	11	1.0	10	11	1.9
129-00-0	Pyrene	U	11	1.0	10	11	2.2
56-55-3	Benzo(a)anthracene	U	11	1.0	10	11	2.0
205-99-2	Benzo(b)fluoranthene	~~U~~ UJ	11	1.0	10	11	2.5 CCH
207-08-9	Benzo(k)fluoranthene	U	11	1.0	10	11	3.3
50-32-8	Benzo(a)pyrene	U	11	1.0	10	11	3.5
193-39-5	Indeno(1,2,3-cd)pyrene	U	11	1.0	10	11	2.0
53-70-3	Dibenzo(a,h)anthracene	U	11	1.0	10	11	1.9
191-24-2	Benzo(g,h,i)perylene	U	11	1.0	10	11	2.1
118-74-1	Hexachlorobenzene	U	11	1.0	10	11	1.9
87-68-3	Hexachlorobutadiene	U	11	1.0	10	11	2.4
77-47-4	Hexachlorocyclopentadiene	U	11	1.0	10	11	1.6
7297-45-2	2-Methylnaphthalene-D10		70%				
367-12-4	2,4-Dibromophenol		54%				
81103-79-9	Fluorene-d10		68%				
1718-51-1	Pyrene-D10		95%				

RW 3/5/09

KATAHDIN ANALYTICAL SERVICES
Report of Analytical Results

6

Client: CH2MHill
Project: TO-009 Lejeune
PO No:
Sample Date: 12/17/08
Received Date: 12/19/08
Extraction Date: 12/22/08
Analysis Date: 15-JAN-2009 05:30
Report Date: 01/16/2009
Matrix: SOIL
% Solids: 95.0

Lab ID: SB7343-12DL
Client ID: MR08-SS156-08D
SDG: TO9-20
Extracted by: AC
Extraction Method: SW846 3550
Analyst: JCG
Analysis Method: SW846 M8270C
Lab Prep Batch: WG59323
Units: ug/Kgdrywt

CAS#	Compound	Flags	Results	DF	PQL	Adj.PQL	Adj.MDL
91-20-3	Naphthalene	U	100	10	10	100	27
91-57-6	2-Methylnaphthalene	U	100	10	10	100	23
86-73-7	Fluorene	U	100	10	10	100	34
85-01-8	Phenanthrene	U	100	10	10	100	19
206-44-0	Fluoranthene	U	100	10	10	100	19
129-00-0	Pyrene	U	100	10	10	100	22
56-55-3	Benzo(a)anthracene	U	100	10	10	100	20
205-99-2	Benzo(b)fluoranthene	U UJ	100	10	10	100	25 ISL
207-08-9	Benzo(k)fluoranthene	U	100	10	10	100	33
50-32-8	Benzo(a)pyrene	U	100	10	10	100	35
193-39-5	Indeno(1,2,3-cd)pyrene	U	100	10	10	100	20
53-70-3	Dibenzo(a,h)anthracene	U	100	10	10	100	19
191-24-2	Benzo(g,h,i)perylene	U	100	10	10	100	21
118-74-1	Hexachlorobenzene	U	100	10	10	100	19
87-68-3	Hexachlorobutadiene	U	100	10	10	100	24
77-47-4	Hexachlorocyclopentadiene	U	100	10	10	100	16
7297-45-2	2-Methylnaphthalene-D10		D				
367-12-4	2,4-Dibromophenol		D				
81103-79-9	Fluorene-d10		D				
1718-51-1	Pyrene-D10		D				

lw
3/5/09

KATAHDIN ANALYTICAL SERVICES
Report of Analytical Results

Client: CH2MHill
Project: TO-009 Lejeune
PO No:
Sample Date: 12/17/08
Received Date: 12/19/08
Extraction Date: 12/22/08
Analysis Date: 15-JAN-2009 00:11
Report Date: 01/16/2009
Matrix: SOIL
% Solids: 88.9

Lab ID: SB7343-14
Client ID: MR08-IS156-1.5-2
SDG: TO9-20
Extracted by: AC
Extraction Method: SW846 3550
Analyst: JCG
Analysis Method: SW846 M8270C
Lab Prep Batch: WG59323
Units: ug/Kgdrywt

CAS#	Compound	Flags	Results	DF	PQL	Adj.PQL	Adj.MDL
91-20-3	Naphthalene	U	11	1.0	10	11	2.9
91-57-6	2-Methylnaphthalene	U	11	1.0	10	11	2.5
86-73-7	Fluorene	U	11	1.0	10	11	3.6
85-01-8	Phenanthrene	U	11	1.0	10	11	2.0
206-44-0	Fluoranthene	J	3.6	1.0	10	11	2.0
129-00-0	Pyrene	J	3.1	1.0	10	11	2.4
56-55-3	Benzo(a)anthracene	U	11	1.0	10	11	2.1
205-99-2	Benzo(b)fluoranthene	U	11	1.0	10	11	2.7
207-08-9	Benzo(k)fluoranthene	U	11	1.0	10	11	3.5
50-32-8	Benzo(a)pyrene	U	11	1.0	10	11	3.7
193-39-5	Indeno(1,2,3-cd)pyrene	U	11	1.0	10	11	2.1
53-70-3	Dibenzo(a,h)anthracene	U	11	1.0	10	11	2.0
191-24-2	Benzo(g,h,i)perylene	U	11	1.0	10	11	2.2
118-74-1	Hexachlorobenzene	U	11	1.0	10	11	2.0
87-68-3	Hexachlorobutadiene	U	11	1.0	10	11	2.6
77-47-4	Hexachlorocyclopentadiene	U	11	1.0	10	11	1.7
7297-45-2	2-Methylnaphthalene-D10		70%				
367-12-4	2,4-Dibromophenol		61%				
81103-79-9	Fluorene-d10		67%				
1718-51-1	Pyrene-D10		89%				

lcw
3/5/09

KATAHDIN ANALYTICAL SERVICES
Report of Analytical Results

Client: CH2MHill
Project: TO-009 Lejeune
PO No:
Sample Date: 12/17/08
Received Date: 12/19/08
Extraction Date: 12/22/08
Analysis Date: 15-JAN-2009 04:10
Report Date: 01/16/2009
Matrix: SOIL
% Solids: 93.8

Lab ID: SB7343-16
Client ID: MR08-SS159-08D
SDG: TO9-20
Extracted by: AC
Extraction Method: SW846 3550
Analyst: JCG
Analysis Method: SW846 M8270C
Lab Prep Batch: WG59323
Units: ug/Kgdrywt

CAS#	Compound	Flags	Results	DF	PQL	Adj.PQL	Adj.MDL	
91-20-3	Naphthalene	U	11	1.0	10	11	2.8	
91-57-6	2-Methylnaphthalene	U	11	1.0	10	11	2.3	
86-73-7	Fluorene	U	11	1.0	10	11	3.4	
85-01-8	Phenanthrene	U	11	1.0	10	11	1.9	
206-44-0	Fluoranthene	J	5.7	1.0	10	11	1.9	
129-00-0	Pyrene	J	4.4	1.0	10	11	2.2	
56-55-3	Benzo(a)anthracene	U	11	1.0	10	11	2.0	
205-99-2	Benzo(b)fluoranthene	U UJ	11	1.0	10	11	2.6	ISL
207-08-9	Benzo(k)fluoranthene	U	11	1.0	10	11	3.3	
50-32-8	Benzo(a)pyrene	U	11	1.0	10	11	3.5	
193-39-5	Indeno(1,2,3-cd)pyrene	U	11	1.0	10	11	2.0	
53-70-3	Dibenzo(a,h)anthracene	U	11	1.0	10	11	1.9	
191-24-2	Benzo(g,h,i)perylene	U	11	1.0	10	11	2.1	
118-74-1	Hexachlorobenzene	U	11	1.0	10	11	1.9	
87-68-3	Hexachlorobutadiene	U	11	1.0	10	11	2.4	
77-47-4	Hexachlorocyclopentadiene	U	11	1.0	10	11	1.6	
7297-45-2	2-Methylnaphthalene-D10		*131%					
367-12-4	2,4-Dibromophenol		74%					
81103-79-9	Fluorene-d10		89%					
1718-51-1	Pyrene-D10		116%					

MW 3/5/09

8RE

KATAHDIN ANALYTICAL SERVICES
Report of Analytical Results

Client: CH2MHill
Project: TO-009 Lejeune
PO No:
Sample Date: 12/17/08
Received Date: 12/19/08
Extraction Date: 01/14/09
Analysis Date: 16-JAN-2009 01:41
Report Date: 01/16/2009
Matrix: SOIL
% Solids: 93.8

Lab ID: SB7343-16RE
Client ID: MR08-SS159-08D
SDG: TO9-20
Extracted by: AC
Extraction Method: SW846 3550
Analyst: JCG
Analysis Method: SW846 M8270C
Lab Prep Batch: WG59786
Units: ug/Kgdrywt

use original

RE

CAS#	Compound	Flags	Results	DF	PQL	Adj.PQL	Adj.MDL
91-20-3	Naphthalene	U UJ	11	1.0	10	11	2.8 HT
91-57-6	2-Methylnaphthalene	U	11	1.0	10	11	2.3
86-73-7	Fluorene	U	11	1.0	10	11	3.4
85-01-8	Phenanthrene	U	11	1.0	10	11	1.9
206-44-0	Fluoranthene	J J	4.3	1.0	10	11	1.9
129-00-0	Pyrene	J J	7.2	1.0	10	11	2.2
56-55-3	Benzo(a)anthracene	J J	3.9	1.0	10	11	2.0
205-99-2	Benzo(b)fluoranthene	U UJ	11	1.0	10	11	2.6
207-08-9	Benzo(k)fluoranthene	U	11	1.0	10	11	3.3
50-32-8	Benzo(a)pyrene	U	11	1.0	10	11	3.5
193-39-5	Indeno(1,2,3-cd)pyrene	U	11	1.0	10	11	2.0
53-70-3	Dibenzo(a,h)anthracene	U	11	1.0	10	11	1.9
191-24-2	Benzo(g,h,i)perylene	U	11	1.0	10	11	2.1
118-74-1	Hexachlorobenzene	U	11	1.0	10	11	1.9
87-68-3	Hexachlorobutadiene	U	11	1.0	10	11	2.4
77-47-4	Hexachlorocyclopentadiene	U	11	1.0	10	11	1.6
7297-45-2	2-Methylnaphthalene-D10		55%				
367-12-4	2,4-Dibromophenol		80%				
81103-79-9	Fluorene-d10		96%				
1718-51-1	Pyrene-D10		150%				

Rev 3/5/09

KATAHDIN ANALYTICAL SERVICES
Report of Analytical Results

Client: CH2MHill
Project: TO-009 Lejeune
PO No:
Sample Date: 12/17/08
Received Date: 12/19/08
Extraction Date: 12/22/08
Analysis Date: 15-JAN-2009 00:51
Report Date: 01/16/2009
Matrix: SOIL
% Solids: 90.3

Lab ID: SB7343-18
Client ID: MR08-IS159-4-5-08D
SDG: TO9-20
Extracted by: AC
Extraction Method: SW846 3550
Analyst: JCG
Analysis Method: SW846 M8270C
Lab Prep Batch: WG59323
Units: ug/Kgdrywt

CAS#	Compound	Flags	Results	DF	PQL	Adj.PQL	Adj.MDL
91-20-3	Naphthalene	U	11	1.0	10	11	2.9
91-57-6	2-Methylnaphthalene	U	11	1.0	10	11	2.4
86-73-7	Fluorene	U	11	1.0	10	11	3.5
85-01-8	Phenanthrene	U	11	1.0	10	11	2.0
206-44-0	Fluoranthene	U	11	1.0	10	11	2.0
129-00-0	Pyrene	U	11	1.0	10	11	2.3
56-55-3	Benzo(a)anthracene	U	11	1.0	10	11	2.1
205-99-2	Benzo(b)fluoranthene	U	11	1.0	10	11	2.6
207-08-9	Benzo(k)fluoranthene	U	11	1.0	10	11	3.4
50-32-8	Benzo(a)pyrene	U	11	1.0	10	11	3.6
193-39-5	Indeno(1,2,3-cd)pyrene	U	11	1.0	10	11	2.1
53-70-3	Dibenzo(a,h)anthracene	U	11	1.0	10	11	2.0
191-24-2	Benzo(g,h,i)perylene	U	11	1.0	10	11	2.2
118-74-1	Hexachlorobenzene	U	11	1.0	10	11	2.0
87-68-3	Hexachlorobutadiene	U	11	1.0	10	11	2.5
77-47-4	Hexachlorocyclopentadiene	U	11	1.0	10	11	1.7
7297-45-2	2-Methylnaphthalene-D10		*136%				
367-12-4	2,4-Dibromophenol		79%				
81103-79-9	Fluorene-d10		99%				
1718-51-1	Pyrene-D10		112%				

lw 3/5/09

10

KATAHDIN ANALYTICAL SERVICES
Report of Analytical Results

Client: CH2MHill
Project: TO-009 Lejeune
PO No:
Sample Date: 12/17/08
Received Date: 12/19/08
Extraction Date: 12/22/08
Analysis Date: 15-JAN-2009 10:50
Report Date: 01/16/2009
Matrix: SOIL
% Solids: 92.0

Lab ID: SB7343-20
Client ID: MR08-SS158-08D
SDG: TO9-20
Extracted by: AC
Extraction Method: SW846 3550
Analyst: JLP
Analysis Method: SW846 M8270C
Lab Prep Batch: WG59323
Units: ug/Kgdrywt

CAS#	Compound	Flags		Results	DF	PQL	Adj.PQL	Adj.MDL	
91-20-3	Naphthalene	~~U~~	UJ	11	1.0	10	11	2.8	CCH
91-57-6	2-Methylnaphthalene	U		11	1.0	10	11	2.4	
86-73-7	Fluorene	U		11	1.0	10	11	3.5	
85-01-8	Phenanthrene	~~J~~	11U	~~2.9~~	1.0	10	11	2.0	BL
206-44-0	Fluoranthene			15	1.0	10	11	2.0	
129-00-0	Pyrene	J		10	1.0	10	11	2.3	
56-55-3	Benzo(a)anthracene	~~J~~	J	9.8	1.0	10	11	2.1	CCH
205-99-2	Benzo(b)fluoranthene	U		11	1.0	10	11	2.6	
207-08-9	Benzo(k)fluoranthene	U		11	1.0	10	11	3.4	
50-32-8	Benzo(a)pyrene	U		11	1.0	10	11	3.6	
193-39-5	Indeno(1,2,3-cd)pyrene	U		11	1.0	10	11	2.1	
53-70-3	Dibenzo(a,h)anthracene	U		11	1.0	10	11	2.0	
191-24-2	Benzo(g,h,i)perylene	U		11	1.0	10	11	2.2	
118-74-1	Hexachlorobenzene	U		11	1.0	10	11	2.0	
87-68-3	Hexachlorobutadiene	~~U~~	UJ	11	1.0	10	11	2.5	CCH
77-47-4	Hexachlorocyclopentadiene	~~U~~	UJ	11	1.0	10	11	1.6	CCH
7297-45-2	2-Methylnaphthalene-D10			106%					
367-12-4	2,4-Dibromophenol			78%					
81103-79-9	Fluorene-d10			77%					
1718-51-1	Pyrene-D10			68%					

lw 3/5/09

11

KATAHDIN ANALYTICAL SERVICES
Report of Analytical Results

Client: CH2MHill
Project: TO-009 Lejeune
PO No:
Sample Date: 12/17/08
Received Date: 12/19/08
Extraction Date: 12/22/08
Analysis Date: 15-JAN-2009 01:31
Report Date: 01/16/2009
Matrix: SOIL
% Solids: 89.2

Lab ID: SB7343-22
Client ID: MR08-IS158-4-5-08D
SDG: TO9-20
Extracted by: AC
Extraction Method: SW846 3550
Analyst: JCG
Analysis Method: SW846 M8270C
Lab Prep Batch: WG59323
Units: ug/Kgdrywt

CAS#	Compound	Flags	Results	DF	PQL	Adj.PQL	Adj.MDL
91-20-3	Naphthalene	U	11	1.0	10	11	2.9
91-57-6	2-Methylnaphthalene	U	11	1.0	10	11	2.5
86-73-7	Fluorene	U	11	1.0	10	11	3.6
85-01-8	Phenanthrene	U	11	1.0	10	11	2.0
206-44-0	Fluoranthene	U	11	1.0	10	11	2.0
129-00-0	Pyrene	U	11	1.0	10	11	2.4
56-55-3	Benzo(a)anthracene	U	11	1.0	10	11	2.1
205-99-2	Benzo(b)fluoranthene	U	11	1.0	10	11	2.7
207-08-9	Benzo(k)fluoranthene	U	11	1.0	10	11	3.5
50-32-8	Benzo(a)pyrene	U	11	1.0	10	11	3.7
193-39-5	Indeno(1,2,3-cd)pyrene	U	11	1.0	10	11	2.1
53-70-3	Dibenzo(a,h)anthracene	U	11	1.0	10	11	2.0
191-24-2	Benzo(g,h,i)perylene	U	11	1.0	10	11	2.2
118-74-1	Hexachlorobenzene	U	11	1.0	10	11	2.0
87-68-3	Hexachlorobutadiene	U	11	1.0	10	11	2.6
77-47-4	Hexachlorocyclopentadiene	U	11	1.0	10	11	1.7
7297-45-2	2-Methylnaphthalene-D10		110%				
367-12-4	2,4-Dibromophenol		79%				
81103-79-9	Fluorene-d10		87%				
1718-51-1	Pyrene-D10		111%				

lew
3/5/09

KATAHDIN ANALYTICAL SERVICES
Report of Analytical Results

Client: CH2MHill
Project: TO-009 Lejeune
PO No:
Sample Date: 12/17/08
Received Date: 12/19/08
Extraction Date: 12/22/08
Analysis Date: 15-JAN-2009 02:11
Report Date: 01/16/2009
Matrix: SOIL
% Solids: 89.4

Lab ID: SB7343-24
Client ID: MR08-SS157-08D
SDG: TO9-20
Extracted by: AC
Extraction Method: SW846 3550
Analyst: JCG
Analysis Method: SW846 M8270C
Lab Prep Batch: WG59323
Units: ug/Kgdrywt

CAS#	Compound	Flags	Results	DF	PQL	Adj.PQL	Adj.MDL
91-20-3	Naphthalene	U	11	1.0	10	11	2.9
91-57-6	2-Methylnaphthalene	U	11	1.0	10	11	2.4
86-73-7	Fluorene	U	11	1.0	10	11	3.6
85-01-8	Phenanthrene	U	11	1.0	10	11	2.0
206-44-0	Fluoranthene	J	3.6	1.0	10	11	2.0
129-00-0	Pyrene	J	2.8	1.0	10	11	2.3
56-55-3	Benzo(a)anthracene	U	11	1.0	10	11	2.1
205-99-2	Benzo(b)fluoranthene	U	11	1.0	10	11	2.7
207-08-9	Benzo(k)fluoranthene	U	11	1.0	10	11	3.5
50-32-8	Benzo(a)pyrene	U	11	1.0	10	11	3.7
193-39-5	Indeno(1,2,3-cd)pyrene	U	11	1.0	10	11	2.1
53-70-3	Dibenzo(a,h)anthracene	U	11	1.0	10	11	2.0
191-24-2	Benzo(g,h,i)perylene	J	2.9	1.0	10	11	2.2
118-74-1	Hexachlorobenzene	U	11	1.0	10	11	2.0
87-68-3	Hexachlorobutadiene	U	11	1.0	10	11	2.6
77-47-4	Hexachlorocyclopentadiene	U	11	1.0	10	11	1.7
7297-45-2	2-Methylnaphthalene-D10		110%				
367-12-4	2,4-Dibromophenol		63%				
81103-79-9	Fluorene-d10		87%				
1718-51-1	Pyrene-D10		111%				

lw 3/5/09

KATAHDIN ANALYTICAL SERVICES
Report of Analytical Results

Client: CH2MHill
Project: TO-009 Lejeune
PO No:
Sample Date: 12/17/08
Received Date: 12/19/08
Extraction Date: 12/22/08
Analysis Date: 15-JAN-2009 02:51
Report Date: 01/16/2009
Matrix: SOIL
% Solids: 90.2

Lab ID: SB7343-26
Client ID: MR08-IS157-08D
SDG: TO9-20
Extracted by: AC
Extraction Method: SW846 3550
Analyst: JCG
Analysis Method: SW846 M8270C
Lab Prep Batch: WG59323
Units: ug/Kgdrywt

CAS#	Compound	Flags	Results	DF	PQL	Adj.PQL	Adj.MDL
91-20-3	Naphthalene	U	11	1.0	10	11	2.9
91-57-6	2-Methylnaphthalene	U	11	1.0	10	11	2.4
86-73-7	Fluorene	U	11	1.0	10	11	3.5
85-01-8	Phenanthrene	U	11	1.0	10	11	2.0
206-44-0	Fluoranthene	J	1.6	1.0	10	11	2.0
129-00-0	Pyrene	U	11	1.0	10	11	2.3
56-55-3	Benzo(a)anthracene	U	11	1.0	10	11	2.1
205-99-2	Benzo(b)fluoranthene	U	11	1.0	10	11	2.7
207-08-9	Benzo(k)fluoranthene	U	11	1.0	10	11	3.4
50-32-8	Benzo(a)pyrene	U	11	1.0	10	11	3.6
193-39-5	Indeno(1,2,3-cd)pyrene	U	11	1.0	10	11	2.1
53-70-3	Dibenzo(a,h)anthracene	U	11	1.0	10	11	2.0
191-24-2	Benzo(g,h,i)perylene	U	11	1.0	10	11	2.2
118-74-1	Hexachlorobenzene	U	11	1.0	10	11	2.0
87-68-3	Hexachlorobutadiene	U	11	1.0	10	11	2.5
77-47-4	Hexachlorocyclopentadiene	U	11	1.0	10	11	1.7
7297-45-2	2-Methylnaphthalene-D10		109%				
367-12-4	2,4-Dibromophenol		69%				
81103-79-9	Fluorene-d10		78%				
1718-51-1	Pyrene-D10		81%				

lw 3/5/09

KATAHDIN ANALYTICAL SERVICES
Report of Analytical Results

Client: CH2MHill
Project: TO-009 Lejeune
PO No:
Sample Date: 12/17/08
Received Date: 12/19/08
Extraction Date: 12/24/08
Analysis Date: 12-JAN-2009 16:13
Report Date: 01/16/2009
Matrix: SOIL
% Solids: 87.4

Lab ID: SB7343-28
Client ID: MR08-SS181-08D
SDG: TO9-20
Extracted by: AC
Extraction Method: SW846 3550
Analyst: JLP
Analysis Method: SW846 M8270C
Lab Prep Batch: WG59398
Units: ug/Kgdrywt

CAS#	Compound	Flags	Results	DF	PQL	Adj.PQL	Adj.MDL	
91-20-3	Naphthalene	~~U~~ UJ	11	1.0	10	11	3.0	CCH
91-57-6	2-Methylnaphthalene	~~J~~ J	3.5	1.0	10	11	2.5	CCH
86-73-7	Fluorene	U	11	1.0	10	11	3.6	
85-01-8	Phenanthrene		100	1.0	10	11	2.0	
206-44-0	Fluoranthene	~~E~~ 810J	~~430~~ SSH	1.0	10	11	2.0	R DL
129-00-0	Pyrene	~~E~~ 670J	~~320~~ SSH	1.0	10	11	2.4	R DL
56-55-3	Benzo(a)anthracene		210	1.0	10	11	2.2	
205-99-2	Benzo(b)fluoranthene	~~E~~ 580J	~~160~~ JSL	1.0	10	11	2.7	R DL
207-08-9	Benzo(k)fluoranthene	J	200	1.0	10	11	3.5	BSH
50-32-8	Benzo(a)pyrene	J	240	1.0	10	11	3.8	BSH
193-39-5	Indeno(1,2,3-cd)pyrene		200	1.0	10	11	2.2	
53-70-3	Dibenzo(a,h)anthracene		70	1.0	10	11	2.0	
191-24-2	Benzo(g,h,i)perylene		180	1.0	10	11	2.3	
118-74-1	Hexachlorobenzene	U	11	1.0	10	11	2.0	
87-68-3	Hexachlorobutadiene	U	11	1.0	10	11	2.6	
77-47-4	Hexachlorocyclopentadiene	U	11	1.0	10	11	1.7	
7297-45-2	2-Methylnaphthalene-D10		72%					
367-12-4	2,4-Dibromophenol		108%					
81103-79-9	Fluorene-d10		88%					
1718-51-1	Pyrene-D10		105%					

lw 3/5/09

1451

KATAHDIN ANALYTICAL SERVICES
Report of Analytical Results

Client: CH2MHill
Project: TO-009 Lejeune
PO No:
Sample Date: 12/17/08
Received Date: 12/19/08
Extraction Date: 12/24/08
Analysis Date: 15-JAN-2009 03:31
Report Date: 01/16/2009
Matrix: SOIL
% Solids: 87.4

Lab ID: SB7343-28DL
Client ID: MR08-SS181-08D
SDG: TO9-20
Extracted by: AC
Extraction Method: SW846 3550
Analyst: JCG
Analysis Method: SW846 M8270C
Lab Prep Batch: WG59398
Units: ug/Kgdrywt

Use original

CAS#	Compound	Flags	Results	DF	PQL	Adj.PQL	Adj.MDL
91-20-3	Naphthalene	U	34	3.0	10	34	8.9
91-57-6	2-Methylnaphthalene	U	34	3.0	10	34	7.5
86-73-7	Fluorene	U	34	3.0	10	34	11
85-01-8	Phenanthrene	J	190	3.0	10	34	6.2 SSH
206-44-0	Fluoranthene		810	3.0	10	34	6.2
129-00-0	Pyrene		670	3.0	10	34	7.2
56-55-3	Benzo(a)anthracene		270	3.0	10	34	6.5
205-99-2	Benzo(b)fluoranthene	J	580	3.0	10	34	8.2 ISL
207-08-9	Benzo(k)fluoranthene		520	3.0	10	34	11
50-32-8	Benzo(a)pyrene		390	3.0	10	34	11
193-39-5	Indeno(1,2,3-cd)pyrene		220	3.0	10	34	6.5
53-70-3	Dibenzo(a,h)anthracene		56	3.0	10	34	6.2
191-24-2	Benzo(g,h,i)perylene		240	3.0	10	34	6.9
118-74-1	Hexachlorobenzene	~~U~~ UJ	34	3.0	10	34	6.2
87-68-3	Hexachlorobutadiene	~~U~~	34	3.0	10	34	7.9
77-47-4	Hexachlorocyclopentadiene	~~U~~	34	3.0	10	34	5.1
7297-45-2	2-Methylnaphthalene-D10		*201%				
367-12-4	2,4-Dibromophenol		*156%				
81103-79-9	Fluorene-d10		*186%				
1718-51-1	Pyrene-D10		*244%				

R DL

DW 31509

KATAHDIN ANALYTICAL SERVICES
Report of Analytical Results

Client: CH2MHill
Project: TO-009 Lejeune
PO No:
Sample Date: 12/17/08
Received Date: 12/19/08
Extraction Date: 12/24/08
Analysis Date: 12-JAN-2009 11:21
Report Date: 01/16/2009
Matrix: SOIL
% Solids: 86.6

Lab ID: SB7343-30
Client ID: MR08-IS181-1-2-08D
SDG: TO9-20
Extracted by: AC
Extraction Method: SW846 3550
Analyst: JLP
Analysis Method: SW846 M8270C
Lab Prep Batch: WG59398
Units: ug/Kgdrywt

CAS#	Compound	Flags	Results	DF	PQL	Adj.PQL	Adj.MDL
91-20-3	Naphthalene	~~U~~ UJ	12	1.0	10	12	3.0 CCH
91-57-6	2-Methylnaphthalene	~~U~~ UJ	12	1.0	10	12	2.5 CCH
86-73-7	Fluorene	U	12	1.0	10	12	3.7
85-01-8	Phenanthrene	U	12	1.0	10	12	2.1
206-44-0	Fluoranthene	J	3.1	1.0	10	12	2.1
129-00-0	Pyrene	U	12	1.0	10	12	2.4
56-55-3	Benzo(a)anthracene	U	12	1.0	10	12	2.2
205-99-2	Benzo(b)fluoranthene	U	12	1.0	10	12	2.8
207-08-9	Benzo(k)fluoranthene	U	12	1.0	10	12	3.6
50-32-8	Benzo(a)pyrene	U	12	1.0	10	12	3.8
193-39-5	Indeno(1,2,3-cd)pyrene	U	12	1.0	10	12	2.2
53-70-3	Dibenzo(a,h)anthracene	U	12	1.0	10	12	2.1
191-24-2	Benzo(g,h,i)perylene	U	12	1.0	10	12	2.3
118-74-1	Hexachlorobenzene	U	12	1.0	10	12	2.1
87-68-3	Hexachlorobutadiene	U	12	1.0	10	12	2.6
77-47-4	Hexachlorocyclopentadiene	U	12	1.0	10	12	1.7
7297-45-2	2-Methylnaphthalene-D10		70%				
367-12-4	2,4-Dibromophenol		85%				
81103-79-9	Fluorene-d10		79%				
1718-51-1	Pyrene-D10		82%				

MW 3/5/09

KATAHDIN ANALYTICAL SERVICES
Report of Analytical Results

16

Client: CH2MHill
Project: TO-009 Lejeune
PO No:
Sample Date: 12/18/08
Received Date: 12/20/08
Extraction Date: 12/24/08
Analysis Date: 14-JAN-2009 13:12
Report Date: 01/16/2009
Matrix: SOIL
% Solids: 82.6

Lab ID: SB7349-2
Client ID: MR08-IS179-1.5-2
SDG: TO9-20
Extracted by: AC
Extraction Method: SW846 3550
Analyst: JLP
Analysis Method: SW846 M8270C
Lab Prep Batch: WG59398
Units: ug/Kgdrywt

CAS#	Compound	Flags	Results	DF	PQL	Adj.PQL	Adj.MDL
91-20-3	Naphthalene	U	12	1.0	10	12	3.1
91-57-6	2-Methylnaphthalene	U	12	1.0	10	12	2.7
86-73-7	Fluorene	U	12	1.0	10	12	3.9
85-01-8	Phenanthrene	U	12	1.0	10	12	2.2
206-44-0	Fluoranthene	J	4.3	1.0	10	12	2.2
129-00-0	Pyrene	J	3.9	1.0	10	12	2.5
56-55-3	Benzo(a)anthracene	U	12	1.0	10	12	2.3
205-99-2	Benzo(b)fluoranthene	~~J~~ UJ	12	1.0	10	12	2.9 CCH
207-08-9	Benzo(k)fluoranthene	U	12	1.0	10	12	3.8
50-32-8	Benzo(a)pyrene	U	12	1.0	10	12	4.0
193-39-5	Indeno(1,2,3-cd)pyrene	U	12	1.0	10	12	2.3
53-70-3	Dibenzo(a,h)anthracene	U	12	1.0	10	12	2.2
191-24-2	Benzo(g,h,i)perylene	U	12	1.0	10	12	2.4
118-74-1	Hexachlorobenzene	U	12	1.0	10	12	2.2
87-68-3	Hexachlorobutadiene	U	12	1.0	10	12	2.8
77-47-4	Hexachlorocyclopentadiene	U	12	1.0	10	12	1.8
7297-45-2	2-Methylnaphthalene-D10		84%				
367-12-4	2,4-Dibromophenol		66%				
81103-79-9	Fluorene-d10		81%				
1718-51-1	Pyrene-D10		113%				

lw 3/5/09

KATAHDIN ANALYTICAL SERVICES
Report of Analytical Results

Client: CH2MHill
Project: TO-009 Lejeune
PO No:
Sample Date: 12/18/08
Received Date: 12/20/08
Extraction Date: 12/24/08
Analysis Date: 14-JAN-2009 15:53
Report Date: 01/16/2009
Matrix: SOIL
% Solids: 92.8

Lab ID: SB7349-4
Client ID: MR08-SS179-08D
SDG: TO9-20
Extracted by: AC
Extraction Method: SW846 3550
Analyst: JLP
Analysis Method: SW846 M8270C
Lab Prep Batch: WG59398
Units: ug/Kgdrywt

CAS#	Compound	Flags	Results	DF	PQL	Adj.PQL	Adj.MDL	
91-20-3	Naphthalene	U	11	1.0	10	11	2.8	
91-57-6	2-Methylnaphthalene	J	3.8	1.0	10	11	2.4	
86-73-7	Fluorene	U	11	1.0	10	11	3.4	
85-01-8	Phenanthrene		59	1.0	10	11	1.9	
206-44-0	Fluoranthene		210	1.0	10	11	1.9	
129-00-0	Pyrene		210	1.0	10	11	2.3	
56-55-3	Benzo(a)anthracene		92	1.0	10	11	2.0	
205-99-2	Benzo(b)fluoranthene	J	180	1.0	10	11	2.6	CU
207-08-9	Benzo(k)fluoranthene		130	1.0	10	11	3.3	
50-32-8	Benzo(a)pyrene		110	1.0	10	11	3.6	
193-39-5	Indeno(1,2,3-cd)pyrene		110	1.0	10	11	2.0	
53-70-3	Dibenzo(a,h)anthracene		34	1.0	10	11	1.9	
191-24-2	Benzo(g,h,i)perylene		110	1.0	10	11	2.2	
118-74-1	Hexachlorobenzene	U	11	1.0	10	11	1.9	
87-68-3	Hexachlorobutadiene	U	11	1.0	10	11	2.5	
77-47-4	Hexachlorocyclopentadiene	U	11	1.0	10	11	1.6	
7297-45-2	2-Methylnaphthalene-D10		61%					
367-12-4	2,4-Dibromophenol		64%					
81103-79-9	Fluorene-d10		77%					
1718-51-1	Pyrene-D10		90%					

JW 3/5/09

KATAHDIN ANALYTICAL SERVICES
Report of Analytical Results

Client: CH2MHill
Project: TO-009 Lejeune
PO No:
Sample Date: 12/18/08
Received Date: 12/20/08
Extraction Date: 12/24/08
Analysis Date: 14-JAN-2009 10:32
Report Date: 01/16/2009
Matrix: SOIL
% Solids: 89.2

Lab ID: SB7349-6
Client ID: MR08-IS160-5-6-08D
SDG: TO9-20
Extracted by: AC
Extraction Method: SW846 3550
Analyst: JLP
Analysis Method: SW846 M8270C
Lab Prep Batch: WG59398
Units: ug/Kgdrywt

CAS#	Compound	Flags	Results	DF	PQL	Adj.PQL	Adj.MDL
91-20-3	Naphthalene	U	11	1.0	10	11	2.9
91-57-6	2-Methylnaphthalene	U	11	1.0	10	11	2.5
86-73-7	Fluorene	U	11	1.0	10	11	3.6
85-01-8	Phenanthrene	U	11	1.0	10	11	2.0
206-44-0	Fluoranthene	U	11	1.0	10	11	2.0
129-00-0	Pyrene	U	11	1.0	10	11	2.4
56-55-3	Benzo(a)anthracene	U	11	1.0	10	11	2.1
205-99-2	Benzo(b)fluoranthene	~~U~~ UJ	11	1.0	10	11	2.7 CCH
207-08-9	Benzo(k)fluoranthene	U	11	1.0	10	11	3.5
50-32-8	Benzo(a)pyrene	U	11	1.0	10	11	3.7
193-39-5	Indeno(1,2,3-cd)pyrene	U	11	1.0	10	11	2.1
53-70-3	Dibenzo(a,h)anthracene	U	11	1.0	10	11	2.0
191-24-2	Benzo(g,h,i)perylene	U	11	1.0	10	11	2.2
118-74-1	Hexachlorobenzene	U	11	1.0	10	11	2.0
87-68-3	Hexachlorobutadiene	U	11	1.0	10	11	2.6
77-47-4	Hexachlorocyclopentadiene	U	11	1.0	10	11	1.7
7297-45-2	2-Methylnaphthalene-D10		75%				
367-12-4	2,4-Dibromophenol		65%				
81103-79-9	Fluorene-d10		78%				
1718-51-1	Pyrene-D10		117%				

KW 3/5/09

KATAHDIN ANALYTICAL SERVICES
Report of Analytical Results

Client: CH2MHill
Project: TO-009 Lejeune
PO No:
Sample Date: 12/18/08
Received Date: 12/20/08
Extraction Date: 12/24/08
Analysis Date: 14-JAN-2009 15:13
Report Date: 01/16/2009
Matrix: SOIL
% Solids: 82.5

Lab ID: SB7349-8
Client ID: MR08-SS160-08D
SDG: TO9-20
Extracted by: AC
Extraction Method: SW846 3550
Analyst: JLP
Analysis Method: SW846 M8270C
Lab Prep Batch: WG59398
Units: ug/Kgdrywt

CAS#	Compound	Flags	Results	DF	PQL	Adj.PQL	Adj.MDL
91-20-3	Naphthalene	U	12	1.0	10	12	3.2
91-57-6	2-Methylnaphthalene	U	12	1.0	10	12	2.7
86-73-7	Fluorene	U	12	1.0	10	12	3.9
85-01-8	Phenanthrene		13	1.0	10	12	2.2
206-44-0	Fluoranthene		31	1.0	10	12	2.2
129-00-0	Pyrene		40	1.0	10	12	2.5
56-55-3	Benzo(a)anthracene	J	12	1.0	10	12	2.3
205-99-2	Benzo(b)fluoranthene	J	24	1.0	10	12	2.9 CCH
207-08-9	Benzo(k)fluoranthene	J	8.2	1.0	10	12	3.8
50-32-8	Benzo(a)pyrene	J	11	1.0	10	12	4.0
193-39-5	Indeno(1,2,3-cd)pyrene	J	12	1.0	10	12	2.3
53-70-3	Dibenzo(a,h)anthracene	U	12	1.0	10	12	2.2
191-24-2	Benzo(g,h,i)perylene	J	11	1.0	10	12	2.4
118-74-1	Hexachlorobenzene	U	12	1.0	10	12	2.2
87-68-3	Hexachlorobutadiene	U	12	1.0	10	12	2.8
77-47-4	Hexachlorocyclopentadiene	U	12	1.0	10	12	1.8
7297-45-2	2-Methylnaphthalene-D10		79%				
367-12-4	2,4-Dibromophenol		72%				
81103-79-9	Fluorene-d10		80%				
1718-51-1	Pyrene-D10		117%				

lw
3/5/09

KATAHDIN ANALYTICAL SERVICES
Report of Analytical Results

20

Client: CH2MHill
Project: TO-009 Lejeune
PO No:
Sample Date: 12/18/08
Received Date: 12/20/08
Extraction Date: 12/24/08
Analysis Date: 14-JAN-2009 11:12
Report Date: 01/16/2009
Matrix: SOIL
% Solids: 83.9

Lab ID: SB7349-10
Client ID: MR08-IS155-1-2-08D
SDG: TO9-20
Extracted by: AC
Extraction Method: SW846 3550
Analyst: JLP
Analysis Method: SW846 M8270C
Lab Prep Batch: WG59398
Units: ug/Kgdrywt

CAS#	Compound	Flags	Results	DF	PQL	Adj.PQL	Adj.MDL	
91-20-3	Naphthalene	U	12	1.0	10	12	3.1	
91-57-6	2-Methylnaphthalene	U	12	1.0	10	12	2.6	
86-73-7	Fluorene	U	12	1.0	10	12	3.8	
85-01-8	Phenanthrene	U	12	1.0	10	12	2.1	
206-44-0	Fluoranthene	U	12	1.0	10	12	2.1	
129-00-0	Pyrene	U	12	1.0	10	12	2.5	
56-55-3	Benzo(a)anthracene	U	12	1.0	10	12	2.3	
205-99-2	Benzo(b)fluoranthene	~~U~~ UJ	12	1.0	10	12	2.9	CCH
207-08-9	Benzo(k)fluoranthene	U	12	1.0	10	12	3.7	
50-32-8	Benzo(a)pyrene	U	12	1.0	10	12	3.9	
193-39-5	Indeno(1,2,3-cd)pyrene	U	12	1.0	10	12	2.3	
53-70-3	Dibenzo(a,h)anthracene	U	12	1.0	10	12	2.1	
191-24-2	Benzo(g,h,i)perylene	U	12	1.0	10	12	2.4	
118-74-1	Hexachlorobenzene	U	12	1.0	10	12	2.1	
87-68-3	Hexachlorobutadiene	U	12	1.0	10	12	2.7	
77-47-4	Hexachlorocyclopentadiene	U	12	1.0	10	12	1.8	
7297-45-2	2-Methylnaphthalene-D10		67%					
367-12-4	2,4-Dibromophenol		55%					
81103-79-9	Fluorene-d10		69%					
1718-51-1	Pyrene-D10		107%					

3/5/09

ENVIRONMENTAL
Data Services, Inc.

SEMIVOLATILE ORGANIC COMPOUNDS

USEPA Region IV - Level IV Review

Site: MCB Camp Lejeune, TO-09 SDG #: TO9-20

Client: CH2M HILL, Inc., Virginia Beach, Virginia Date: March 5, 2009

Laboratory: Katahdin Analytical Services, Scarborough, Maine Reviewer: Nancy Weaver

EDS ID	Client Sample ID	Laboratory Sample ID	Matrix
1	MR08-IS110-08D	SB7343-1	Soil
2	MR08-SS134-08D	SB7343-3	Soil
3	MR08-IS134-08D	SB7343-5	Soil
3RE	MR08-IS134-08DRE	SB7343-5RE	Soil
4	MR08-SS135-08D	SB7343-7	Soil
4RE	MR08-SS135-08DRE	SB7343-7RE	Soil
5	MR08-IS135-1.5-2.-08D	SB7343-9	Soil
6	MR08-SS156-08D	SB7343-11	Soil
7	MR08-IS156-1.5-2-08D	SB7343-13	Soil
8	MR08-SS159-08D	SB7343-15	Soil
8RE	MR08-SS159-08DRE	SB7343-15RE	Soil
9	MR08-IS159-4-5-08D	SB7343-17	Soil
10	MR08-SS158-08D	SB7343-19	Soil
11	MR08-IS158-4-5-08D	SB7343-21	Soil
12	MR08-SS157-08D	SB7343-23	Soil
12RE	MR08-SS157-08DRE	SB7343-23RE	Soil
13	MR08-IS157-08D	SB7343-25	Soil
14	MR08-SS181-08D	SB7343-27	Soil
15	MR08-IS181-1-2-08D	SB7343-29	Soil
16	MR08-IS179-1.5-2-08D	SB7349-1	Soil
17	MR08-SS179-08D	SB7349-3	Soil
18	MR08-IS160-5-6-08D	SB7349-5	Soil
19	MR08-SS160-08D	SB7349-7	Soil
20	MR08-IS155-1-2-08D	SB7349-9	Soil

The USEPA "Contract Laboratory Program National Functional Guidelines for Organic Data Review," October 1999, and professional judgment were used in evaluating the data in this summary report.

Holding Times - All samples were extracted within 14 days for water samples and analyzed within 40 days for all samples except the following.

Sample	Date Sampled	Date Extracted	# of Days	Qualifier
3RE	12/17/08	01/14/08	28	J/UJ
4RE	12/17/08	01/14/08	28	J/UJ
8RE	12/17/08	01/14/08	28	J/UJ
12RE	12/17/08	01/14/08	28	J/UJ

GC/MS Tuning - All of the DFTPP tunes in the initial and continuing calibrations met the percent relative abundance criteria.

Initial Calibration - The initial calibrations exhibited acceptable %RSD and mean RRF values except the following.

ICAL Date	Compound	%RSD/RRF	Qualifier	Affected Samples
01/12/09	Benzaldehyde	90.97%	J/UJ	All samples

Continuing Calibration - The continuing calibrations exhibited acceptable %D and RRF values except the following.

CCAL Date	Compound	%D/RRF	Qualifier	Affected Samples
01/13/09 (0806)	Benzaldehyde	186.27%	None	Already qualified due to ICAL
01/13/09 (1749)	Benzaldehyde	173.14%	None	Already qualified due to ICAL
01/14/09 (1028)	Benzaldehyde	54.26%	None	Already qualified due to ICAL
	4-Nitroaniline	37.56%	J/UJ	14, 15, 20
01/14/09 (1734)	Benzaldehyde	52.46%	None	Already qualified due to ICAL
01/15/09 (1731)	Benzaldehyde	54.26%	None	Already qualified due to ICAL
	4-Nitroaniline	27.14%	None	Already qualified due to HT

Surrogates - All samples exhibited acceptable surrogate recoveries except the following.

Sample ID	Surrogate	%R	Qualifier
3	S5-2,4,6-Tribromophenol	23%	None for 1 out
8	S5-2,4,6-Tribromophenol	25%	None for 1 out
12	S1-2-Fluorophenol	33%	J/UJ - Acids
	S5-2,4,6-Tribromophenol	11%	
4	S5-2,4,6-Tribromophenol	8%	J/R - Acids

MS/MSD - A MS/MSD sample was not analyzed.

Laboratory Control Sample - The LCS samples exhibited acceptable %R values.

LCS ID	Compound	%R	Qualifier	Affected Samples
WG59322-LCS	Benzaldehyde	275%	None	All associated ND

LCS ID	Compound	%R	Qualifier	Affected Samples
	2,4-Dimethylphenol	19%	J/UJ	1-13
WG59785-LCS	Benzaldehyde	142%	None	All associated ND
WG59397-LCS	Phenol	101%	None	All associated ND
	Nitrobenzene	137%	None	All associated ND
	Di-n-butylphthalate	120%	None	All associated ND
WG59397-LCS	Butylbenzylphthalate	128%	None	All associated ND
	bis (2-Ethylhexyl) phthalate	140%	None	All associated ND
	Di-n-octyl phthalate	148%	None	All associated ND

Internal Standard (IS) Area Performance - All internal standards met response and retention time (RT) criteria.

Method Blank - The method blanks were free of contamination.

Field, Equipment Blank - Field QC results are summarized below.

Blank ID	Compound	Conc. ug/L	Action Level ug/L	Qualifier	Affected Samples
MR08-FB122008	None - ND	-	-	-	-
MR08-EB121708	None - ND	-	-	-	-
MR08-EB0112182008	None - ND	-	-	-	-

Field Duplicates - Field duplicate samples were not included in this data package.

Tentatively Identified Compounds (TICs) - TICs were not reported.

Compound Quantitation - Several samples were reanalyzed due to surrogate and LCS recovery deficiencies. Refer to the Form Is for which to use.

KATAHDIN ANALYTICAL SERVICES
Report of Analytical Results

Client: CH2MHill
Project: TO-009 Lejeune
PO No:
Sample Date: 12/17/08
Received Date: 12/19/08
Extraction Date: 12/22/08
Analysis Date: 13-JAN-2009 10:58
Report Date: 01/17/2009
Matrix: SOIL
% Solids: 90.1

Lab ID: SB7343-1
Client ID: MR08-IS110-08D
SDG: TO9-20
Extracted by: AC
Extraction Method: SW846 3550
Analyst: JLP
Analysis Method: SW846 8270C
Lab Prep Batch: WG59322
Units: ug/Kgdrywt

CAS#	Compound	Flags	Results	DF	PQL	Adj.PQL	Adj.MDL	
100-52-7	Benzaldehyde	~~U~~ UJ	550	1.0	500	550	130	JCB
108-95-2	Phenol	U	550	1.0	500	550	170	
111-44-4	Bis(2-Chloroethyl)ether	U	370	1.0	330	370	90	
95-57-8	2-Chlorophenol	U	550	1.0	500	550	180	
95-48-7	2-Methylphenol	U	660	1.0	600	660	220	
108-60-1	2,2'-Oxybis(1-chloropropane)	U	370	1.0	330	370	99	
98-86-2	Acetophenone	U	660	1.0	600	660	200	
621-64-7	N-Nitroso-di-n-propylamine	U	370	1.0	330	370	92	
65794-96-9	3&4-Methylphenol	U	660	1.0	600	660	210	
67-72-1	Hexachloroethane	U	370	1.0	330	370	110	
98-95-3	Nitrobenzene	U	370	1.0	330	370	100	
78-59-1	Isophorone	U	370	1.0	330	370	83	
88-75-5	2-Nitrophenol	U	660	1.0	600	660	180	
105-67-9	2,4-Dimethylphenol	~~U~~ UJ	550	1.0	500	550	180	BSL
111-91-1	Bis(2-Chloroethoxy)methane	U	370	1.0	330	370	110	
120-83-2	2,4-Dichlorophenol	U	550	1.0	500	550	170	
106-47-8	4-Chloroaniline	U	550	1.0	500	550	130	
105-60-2	Caprolactam	U	550	1.0	500	550	160	
59-50-7	4-Chloro-3-Methylphenol	U	550	1.0	500	550	180	
88-06-2	2,4,6-Trichlorophenol	U	550	1.0	500	550	170	
95-95-4	2,4,5-Trichlorophenol	U	550	1.0	500	550	170	
91-58-7	2-Chloronaphthalene	U	370	1.0	330	370	96	
92-52-4	1,1'-Biphenyl	U	370	1.0	330	370	81	
88-74-4	2-Nitroaniline	U	550	1.0	500	550	83	
131-11-3	Dimethyl Phthalate	U	370	1.0	330	370	86	
606-20-2	2,6-Dinitrotoluene	U	370	1.0	330	370	88	
208-96-8	Acenaphthylene	U	370	1.0	330	370	78	
99-09-2	3-Nitroaniline	U	550	1.0	500	550	100	
83-32-9	Acenaphthene	U	370	1.0	330	370	72	
51-28-5	2,4-Dinitrophenol	U	1300	1.0	1200	1300	420	
132-64-9	Dibenzofuran	U	370	1.0	330	370	88	
100-02-7	4-Nitrophenol	U	1300	1.0	1200	1300	340	
121-14-2	2,4-Dinitrotoluene	U	370	1.0	330	370	94	
84-66-2	Diethylphthalate	U	370	1.0	330	370	89	
7005-72-3	4-Chlorophenyl-phenylether	U	370	1.0	330	370	86	
100-01-6	4-Nitroaniline	U	550	1.0	500	550	150	
534-52-1	4,6-Dinitro-2-Methylphenol	U	1300	1.0	1200	1300	370	
86-30-6	N-Nitrosodiphenylamine	U	730	1.0	660	730	240	
101-55-3	4-Bromophenyl-phenylether	U	370	1.0	330	370	94	
1912-24-9	Atrazine	U	370	1.0	330	370	100	
87-86-5	Pentachlorophenol	U	910	1.0	820	910	260	
120-12-7	Anthracene	U	370	1.0	330	370	93	
86-74-8	Carbazole	U	550	1.0	500	550	120	

LW 3/5/09

KATAHDIN ANALYTICAL SERVICES
Report of Analytical Results

Client: CH2MHill
Project: TO-009 Lejeune
PO No:
Sample Date: 12/17/08
Received Date: 12/19/08
Extraction Date: 12/22/08
Analysis Date: 13-JAN-2009 10:58
Report Date: 01/17/2009
Matrix: SOIL
% Solids: 90.1

Lab ID: SB7343-1
Client ID: MR08-IS110-08D
SDG: TO9-20
Extracted by: AC
Extraction Method: SW846 3550
Analyst: JLP
Analysis Method: SW846 8270C
Lab Prep Batch: WG59322
Units: ug/Kgdrywt

CAS#	Compound	Flags	Results	DF	PQL	Adj.PQL	Adj.MDL
84-74-2	Di-n-butylphthalate	U	370	1.0	330	370	110
85-68-7	Butylbenzylphthalate	U	370	1.0	330	370	100
91-94-1	3,3'-Dichlorobenzidine	U	550	1.0	500	550	130
218-01-9	Chrysene	U	370	1.0	330	370	100
117-81-7	bis(2-Ethylhexyl)phthalate	J	110	1.0	330	370	110
117-84-0	Di-n-octylphthalate	U	370	1.0	330	370	230
367-12-4	2-Fluorophenol		68%				
13127-88-3	Phenol-D6		66%				
4165-60-0	Nitrobenzene-D5		65%				
321-60-8	2-Fluorobiphenyl		71%				
118-79-6	2,4,6-Tribromophenol		64%				
1718-51-0	Terphenyl-D14		79%				

kW
3/5/09

2

KATAHDIN ANALYTICAL SERVICES
Report of Analytical Results

Client: CH2MHill
Project: TO-009 Lejeune
PO No:
Sample Date: 12/17/08
Received Date: 12/19/08
Extraction Date: 12/22/08
Analysis Date: 13-JAN-2009 13:47
Report Date: 01/17/2009
Matrix: SOIL
% Solids: 91.0

Lab ID: SB7343-3
Client ID: MR08-SS134-08D
SDG: TO9-20
Extracted by: AC
Extraction Method: SW846 3550
Analyst: JLP
Analysis Method: SW846 8270C
Lab Prep Batch: WG59322
Units: ug/Kgdrywt

CAS#	Compound	Flags	Results	DF	PQL	Adj.PQL	Adj.MDL	
100-52-7	Benzaldehyde	~~U~~ UJ	550	1.0	500	550	130	JCB
108-95-2	Phenol	U	550	1.0	500	550	170	
111-44-4	Bis(2-Chloroethyl)ether	U	360	1.0	330	360	89	
95-57-8	2-Chlorophenol	U	550	1.0	500	550	180	
95-48-7	2-Methylphenol	U	660	1.0	600	660	220	
108-60-1	2,2'-Oxybis(1-chloropropane)	U	360	1.0	330	360	98	
98-86-2	Acetophenone	U	660	1.0	600	660	200	
621-64-7	N-Nitroso-di-n-propylamine	U	360	1.0	330	360	91	
65794-96-9	3&4-Methylphenol	U	660	1.0	600	660	200	
67-72-1	Hexachloroethane	U	360	1.0	330	360	100	
98-95-3	Nitrobenzene	U	360	1.0	330	360	100	
78-59-1	Isophorone	U	360	1.0	330	360	82	
88-75-5	2-Nitrophenol	U	660	1.0	600	660	180	
105-67-9	2,4-Dimethylphenol	~~U~~ UJ	550	1.0	500	550	180	BSL
111-91-1	Bis(2-Chloroethoxy)methane	U	360	1.0	330	360	100	
120-83-2	2,4-Dichlorophenol	U	550	1.0	500	550	160	
106-47-8	4-Chloroaniline	U	550	1.0	500	550	130	
105-60-2	Caprolactam	U	550	1.0	500	550	160	
59-50-7	4-Chloro-3-Methylphenol	U	550	1.0	500	550	180	
88-06-2	2,4,6-Trichlorophenol	U	550	1.0	500	550	170	
95-95-4	2,4,5-Trichlorophenol	U	550	1.0	500	550	170	
91-58-7	2-Chloronaphthalene	U	360	1.0	330	360	96	
92-52-4	1,1'-Biphenyl	U	360	1.0	330	360	80	
88-74-4	2-Nitroaniline	U	550	1.0	500	550	82	
131-11-3	Dimethyl Phthalate	U	360	1.0	330	360	86	
606-20-2	2,6-Dinitrotoluene	U	360	1.0	330	360	87	
208-96-8	Acenaphthylene	U	360	1.0	330	360	77	
99-09-2	3-Nitroaniline	U	550	1.0	500	550	100	
83-32-9	Acenaphthene	U	360	1.0	330	360	71	
51-28-5	2,4-Dinitrophenol	U	1300	1.0	1200	1300	410	
132-64-9	Dibenzofuran	U	360	1.0	330	360	87	
100-02-7	4-Nitrophenol	U	1300	1.0	1200	1300	340	
121-14-2	2,4-Dinitrotoluene	U	360	1.0	330	360	93	
84-66-2	Diethylphthalate	U	360	1.0	330	360	88	
7005-72-3	4-Chlorophenyl-phenylether	U	360	1.0	330	360	86	
100-01-6	4-Nitroaniline	U	550	1.0	500	550	150	
534-52-1	4,6-Dinitro-2-Methylphenol	U	1300	1.0	1200	1300	370	
86-30-6	N-Nitrosodiphenylamine	U	720	1.0	660	720	240	
101-55-3	4-Bromophenyl-phenylether	U	360	1.0	330	360	93	
1912-24-9	Atrazine	U	360	1.0	330	360	100	
87-86-5	Pentachlorophenol	U	900	1.0	820	900	260	
120-12-7	Anthracene	U	360	1.0	330	360	92	
86-74-8	Carbazole	U	550	1.0	500	550	120	

3/5/09

KATAHDIN ANALYTICAL SERVICES
Report of Analytical Results

Client: CH2MHill
Project: TO-009 Lejeune
PO No:
Sample Date: 12/17/08
Received Date: 12/19/08
Extraction Date: 12/22/08
Analysis Date: 13-JAN-2009 13:47
Report Date: 01/17/2009
Matrix: SOIL
% Solids: 91.0

Lab ID: SB7343-3
Client ID: MR08-SS134-08D
SDG: TO9-20
Extracted by: AC
Extraction Method: SW846 3550
Analyst: JLP
Analysis Method: SW846 8270C
Lab Prep Batch: WG59322
Units: ug/Kgdrywt

CAS#	Compound	Flags	Results	DF	PQL	Adj.PQL	Adj.MDL
84-74-2	Di-n-butylphthalate	U	360	1.0	330	360	110
85-68-7	Butylbenzylphthalate	U	360	1.0	330	360	100
91-94-1	3,3'-Dichlorobenzidine	U	550	1.0	500	550	120
218-01-9	Chrysene	U	360	1.0	330	360	100
117-81-7	bis(2-Ethylhexyl)phthalate	J	180	1.0	330	360	110
117-84-0	Di-n-octylphthalate	U	360	1.0	330	360	230
367-12-4	2-Fluorophenol		55%				
13127-88-3	Phenol-D6		56%				
4165-60-0	Nitrobenzene-D5		57%				
321-60-8	2-Fluorobiphenyl		71%				
118-79-6	2,4,6-Tribromophenol		54%				
1718-51-0	Terphenyl-D14		81%				

lw 3/5/09

3

KATAHDIN ANALYTICAL SERVICES
Report of Analytical Results

Client: CH2MHill
Project: TO-009 Lejeune
PO No:
Sample Date: 12/17/08
Received Date: 12/19/08
Extraction Date: 12/22/08
Analysis Date: 13-JAN-2009 11:40
Report Date: 01/17/2009
Matrix: SOIL
% Solids: 91.4

Lab ID: SB7343-5
Client ID: MR08-IS134-08D
SDG: TO9-20
Extracted by: AC
Extraction Method: SW846 3550
Analyst: JLP
Analysis Method: SW846 8270C
Lab Prep Batch: WG59322
Units: ug/Kgdrywt

CAS#	Compound	Flags	Results	DF	PQL	Adj.PQL	Adj.MDL	
100-52-7	Benzaldehyde	~~U~~ UJ	550	1.0	500	550	130	JeB
108-95-2	Phenol	U	550	1.0	500	550	170	
111-44-4	Bis(2-Chloroethyl)ether	U	360	1.0	330	360	88	
95-57-8	2-Chlorophenol	U	550	1.0	500	550	180	
95-48-7	2-Methylphenol	U	660	1.0	600	660	220	
108-60-1	2,2'-Oxybis(1-chloropropane)	U	360	1.0	330	360	97	
98-86-2	Acetophenone	U	660	1.0	600	660	190	
621-64-7	N-Nitroso-di-n-propylamine	U	360	1.0	330	360	91	
65794-96-9	3&4-Methylphenol	U	660	1.0	600	660	200	
67-72-1	Hexachloroethane	U	360	1.0	330	360	100	
98-95-3	Nitrobenzene	U	360	1.0	330	360	100	
78-59-1	Isophorone	U	360	1.0	330	360	82	
88-75-5	2-Nitrophenol	U	660	1.0	600	660	180	
105-67-9	2,4-Dimethylphenol	~~U~~ UJ	550	1.0	500	550	180	BiL
111-91-1	Bis(2-Chloroethoxy)methane	U	360	1.0	330	360	100	
120-83-2	2,4-Dichlorophenol	U	550	1.0	500	550	160	
106-47-8	4-Chloroaniline	U	550	1.0	500	550	130	
105-60-2	Caprolactam	U	550	1.0	500	550	160	
59-50-7	4-Chloro-3-Methylphenol	U	550	1.0	500	550	180	
88-06-2	2,4,6-Trichlorophenol	U	550	1.0	500	550	170	
95-95-4	2,4,5-Trichlorophenol	U	550	1.0	500	550	170	
91-58-7	2-Chloronaphthalene	U	360	1.0	330	360	95	
92-52-4	1,1'-Biphenyl	U	360	1.0	330	360	80	
88-74-4	2-Nitroaniline	U	550	1.0	500	550	82	
131-11-3	Dimethyl Phthalate	U	360	1.0	330	360	85	
606-20-2	2,6-Dinitrotoluene	U	360	1.0	330	360	86	
208-96-8	Acenaphthylene	U	360	1.0	330	360	76	
99-09-2	3-Nitroaniline	U	550	1.0	500	550	100	
83-32-9	Acenaphthene	U	360	1.0	330	360	71	
51-28-5	2,4-Dinitrophenol	U	1300	1.0	1200	1300	410	
132-64-9	Dibenzofuran	U	360	1.0	330	360	86	
100-02-7	4-Nitrophenol	U	1300	1.0	1200	1300	340	
121-14-2	2,4-Dinitrotoluene	U	360	1.0	330	360	93	
84-66-2	Diethylphthalate	U	360	1.0	330	360	87	
7005-72-3	4-Chlorophenyl-phenylether	U	360	1.0	330	360	85	
100-01-6	4-Nitroaniline	U	550	1.0	500	550	150	
534-52-1	4,6-Dinitro-2-Methylphenol	U	1300	1.0	1200	1300	370	
86-30-6	N-Nitrosodiphenylamine	U	720	1.0	660	720	240	
101-55-3	4-Bromophenyl-phenylether	U	360	1.0	330	360	93	
1912-24-9	Atrazine	U	360	1.0	330	360	100	
87-86-5	Pentachlorophenol	U	900	1.0	820	900	260	
120-12-7	Anthracene	U	360	1.0	330	360	92	
86-74-8	Carbazole	U	550	1.0	500	550	120	

LW 3/5/09

Report of Analytical Results

Client: CH2MHill
Project: TO-009 Lejeune
PO No:
Sample Date: 12/17/08
Received Date: 12/19/08
Extraction Date: 12/22/08
Analysis Date: 13-JAN-2009 11:40
Report Date: 01/17/2009
Matrix: SOIL
% Solids: 91.4

Lab ID: SB7343-5
Client ID: MR08-IS134-08D
SDG: TO9-20
Extracted by: AC
Extraction Method: SW846 3550
Analyst: JLP
Analysis Method: SW846 8270C
Lab Prep Batch: WG59322
Units: ug/Kgdrywt

CAS#	Compound	Flags	Results	DF	PQL	Adj.PQL	Adj.MDL
84-74-2	Di-n-butylphthalate	U	360	1.0	330	360	110
85-68-7	Butylbenzylphthalate	U	360	1.0	330	360	100
91-94-1	3,3'-Dichlorobenzidine	U	550	1.0	500	550	120
218-01-9	Chrysene	U	360	1.0	330	360	100
117-81-7	bis(2-Ethylhexyl)phthalate	U	360	1.0	330	360	110
117-84-0	Di-n-octylphthalate	U	360	1.0	330	360	230
367-12-4	2-Fluorophenol		42%				
13127-88-3	Phenol-D6		56%				
4165-60-0	Nitrobenzene-D5		60%				
321-60-8	2-Fluorobiphenyl		67%				
118-79-6	2,4,6-Tribromophenol		* 23%				
1718-51-0	Terphenyl-D14		80%				

LW 3/5/09

3RE

KATAHDIN ANALYTICAL SERVICES
Report of Analytical Results

Client: CH2MHill
Project: TO-009 Lejeune
PO No:
Sample Date: 12/17/08
Received Date: 12/19/08
Extraction Date: 01/14/09
Analysis Date: 15-JAN-2009 21:47
Report Date: 01/17/2009
Matrix: SOIL
% Solids: 91.4

Lab ID: SB7343-5RE
Client ID: MR08-IS134-08D
SDG: TO9-20
Extracted by: AC
Extraction Method: SW846 3550
Analyst: JCG
Analysis Method: SW846 8270C
Lab Prep Batch: WG59785
Units: ug/Kgdrywt

Use original

CAS#	Compound	Flags	Results	DF	PQL	Adj.PQL	Adj.MDL
100-52-7	Benzaldehyde	~~U~~ UJ	550	1.0	500	550	130 HT
108-95-2	Phenol	U	550	1.0	500	550	170
111-44-4	Bis(2-Chloroethyl)ether	U	360	1.0	330	360	88
95-57-8	2-Chlorophenol	U	550	1.0	500	550	180
95-48-7	2-Methylphenol	U	660	1.0	600	660	220
108-60-1	2,2'-Oxybis(1-chloropropane)	U	360	1.0	330	360	97
98-86-2	Acetophenone	U	660	1.0	600	660	190
621-64-7	N-Nitroso-di-n-propylamine	U	360	1.0	330	360	91
65794-96-9	3&4-Methylphenol	U	660	1.0	600	660	200
67-72-1	Hexachloroethane	U	360	1.0	330	360	100
98-95-3	Nitrobenzene	U	360	1.0	330	360	100
78-59-1	Isophorone	U	360	1.0	330	360	82
88-75-5	2-Nitrophenol	U	660	1.0	600	660	180
105-67-9	2,4-Dimethylphenol	~~U~~ UJ	550	1.0	500	550	180
111-91-1	Bis(2-Chloroethoxy)methane	U	360	1.0	330	360	100
120-83-2	2,4-Dichlorophenol	U	550	1.0	500	550	160
106-47-8	4-Chloroaniline	U	550	1.0	500	550	130
105-60-2	Caprolactam	U	550	1.0	500	550	160
59-50-7	4-Chloro-3-Methylphenol	U	550	1.0	500	550	180
88-06-2	2,4,6-Trichlorophenol	U	550	1.0	500	550	170
95-95-4	2,4,5-Trichlorophenol	U	550	1.0	500	550	170
91-58-7	2-Chloronaphthalene	U	360	1.0	330	360	95
92-52-4	1,1'-Biphenyl	U	360	1.0	330	360	80
88-74-4	2-Nitroaniline	U	550	1.0	500	550	82
131-11-3	Dimethyl Phthalate	U	360	1.0	330	360	85
606-20-2	2,6-Dinitrotoluene	U	360	1.0	330	360	86
208-96-8	Acenaphthylene	U	360	1.0	330	360	76
99-09-2	3-Nitroaniline	U	550	1.0	500	550	100
83-32-9	Acenaphthene	U	360	1.0	330	360	71
51-28-5	2,4-Dinitrophenol	U	1300	1.0	1200	1300	410
132-64-9	Dibenzofuran	U	360	1.0	330	360	86
100-02-7	4-Nitrophenol	U	1300	1.0	1200	1300	340
121-14-2	2,4-Dinitrotoluene	U	360	1.0	330	360	93
84-66-2	Diethylphthalate	U	360	1.0	330	360	87
7005-72-3	4-Chlorophenyl-phenylether	U	360	1.0	330	360	85
100-01-6	4-Nitroaniline	U	550	1.0	500	550	150
534-52-1	4,6-Dinitro-2-Methylphenol	U	1300	1.0	1200	1300	370
86-30-6	N-Nitrosodiphenylamine	U	720	1.0	660	720	240
101-55-3	4-Bromophenyl-phenylether	U	360	1.0	330	360	93
1912-24-9	Atrazine	U	360	1.0	330	360	100
87-86-5	Pentachlorophenol	U	900	1.0	820	900	260
120-12-7	Anthracene	U	360	1.0	330	360	92
86-74-8	Carbazole	U	550	1.0	500	550	120

3/5/09

3RE

KATAHDIN ANALYTICAL SERVICES
Report of Analytical Results

Client: CH2MHill
Project: TO-009 Lejeune
PO No:
Sample Date: 12/17/08
Received Date: 12/19/08
Extraction Date: 01/14/09
Analysis Date: 15-JAN-2009 21:47
Report Date: 01/17/2009
Matrix: SOIL
% Solids: 91.4

Lab ID: SB7343-5RE
Client ID: MR08-IS134-08D
SDG: TO9-20
Extracted by: AC
Extraction Method: SW846 3550
Analyst: JCG
Analysis Method: SW846 8270C
Lab Prep Batch: WG59785
Units: ug/Kgdrywt

Use original

CAS#	Compound	Flags		Results	DF	PQL	Adj.PQL	Adj.MDL	
84-74-2	Di-n-butylphthalate	U	UJ	360	1.0	330	360	110	HT
85-68-7	Butylbenzylphthalate	U		360	1.0	330	360	100	
91-94-1	3,3'-Dichlorobenzidine	U		550	1.0	500	550	120	
218-01-9	Chrysene	U		360	1.0	330	360	100	
117-81-7	bis(2-Ethylhexyl)phthalate	U		360	1.0	330	360	110	
117-84-0	Di-n-octylphthalate	U		360	1.0	330	360	230	
367-12-4	2-Fluorophenol			67%					
13127-88-3	Phenol-D6			67%					
4165-60-0	Nitrobenzene-D5			68%					
321-60-8	2-Fluorobiphenyl			71%					
118-79-6	2,4,6-Tribromophenol			58%					
1718-51-0	Terphenyl-D14			80%					

R RE

MW 3/5/09

4

KATAHDIN ANALYTICAL SERVICES
Report of Analytical Results

Client: CH2MHill
Project: TO-009 Lejeune
PO No:
Sample Date: 12/17/08
Received Date: 12/19/08
Extraction Date: 12/22/08
Analysis Date: 14-JAN-2009 01:43
Report Date: 01/17/2009
Matrix: SOIL
% Solids: 94.4

Lab ID: SB7343-7RA
Client ID: MR08-SS135-08D
SDG: TO9-20
Extracted by: AC
Extraction Method: SW846 3550
Analyst: JCG
Analysis Method: SW846 8270C
Lab Prep Batch: WG59322
Units: ug/Kgdrywt

Use reanalysis

CAS#	Compound	Flags	Results	DF	PQL	Adj.PQL	Adj.MDL	
100-52-7	Benzaldehyde	~~U~~ UJ	530	1.0	500	530	130	ICB
108-95-2	Phenol	~~U~~ R	530	1.0	500	530	160	SSL
111-44-4	Bis(2-Chloroethyl)ether	U	350	1.0	330	350	86	
95-57-8	2-Chlorophenol	~~U~~ R	530	1.0	500	530	170	SSL
95-48-7	2-Methylphenol	~~U~~ R	640	1.0	600	640	210	SSL
108-60-1	2,2'-Oxybis(1-chloropropane)	U	350	1.0	330	350	94	
98-86-2	Acetophenone	U	640	1.0	600	640	190	
621-64-7	N-Nitroso-di-n-propylamine	U	350	1.0	330	350	88	
65794-96-9	3&4-Methylphenol	~~U~~ R	640	1.0	600	640	200	SSL
67-72-1	Hexachloroethane	U	350	1.0	330	350	100	
98-95-3	Nitrobenzene	U	350	1.0	330	350	96	
78-59-1	Isophorone	U	350	1.0	330	350	79	
88-75-5	2-Nitrophenol	~~U~~ R	640	1.0	600	640	180	SSL
105-67-9	2,4-Dimethylphenol	~~U~~ R	530	1.0	500	530	170	SSL
111-91-1	Bis(2-Chloroethoxy)methane	U	350	1.0	330	350	100	
120-83-2	2,4-Dichlorophenol	~~U~~ R	530	1.0	500	530	160	
106-47-8	4-Chloroaniline	U	530	1.0	500	530	130	
105-60-2	Caprolactam	U	530	1.0	500	530	150	
59-50-7	4-Chloro-3-Methylphenol	~~U~~ R	530	1.0	500	530	180	SSL
88-06-2	2,4,6-Trichlorophenol	~~U~~ ↓	530	1.0	500	530	160	
95-95-4	2,4,5-Trichlorophenol	~~U~~ ↓	530	1.0	500	530	160	↓
91-58-7	2-Chloronaphthalene	U	350	1.0	330	350	92	
92-52-4	1,1'-Biphenyl	U	350	1.0	330	350	77	
88-74-4	2-Nitroaniline	U	530	1.0	500	530	79	
131-11-3	Dimethyl Phthalate	U	350	1.0	330	350	82	
606-20-2	2,6-Dinitrotoluene	U	350	1.0	330	350	84	
208-96-8	Acenaphthylene	U	350	1.0	330	350	74	
99-09-2	3-Nitroaniline	U	530	1.0	500	530	100	
83-32-9	Acenaphthene	U	350	1.0	330	350	69	
51-28-5	2,4-Dinitrophenol	~~U~~ R	1300	1.0	1200	1300	400	SSL
132-64-9	Dibenzofuran	U	350	1.0	330	350	84	
100-02-7	4-Nitrophenol	~~U~~ R	1300	1.0	1200	1300	330	SSL
121-14-2	2,4-Dinitrotoluene	U	350	1.0	330	350	90	
84-66-2	Diethylphthalate	U	350	1.0	330	350	85	
7005-72-3	4-Chlorophenyl-phenylether	U	350	1.0	330	350	82	
100-01-6	4-Nitroaniline	U	530	1.0	500	530	140	
534-52-1	4,6-Dinitro-2-Methylphenol	~~U~~ R	1300	1.0	1200	1300	360	SSL
86-30-6	N-Nitrosodiphenylamine	U	700	1.0	660	700	230	
101-55-3	4-Bromophenyl-phenylether	U	350	1.0	330	350	90	
1912-24-9	Atrazine	U	350	1.0	330	350	96	
87-86-5	Pentachlorophenol	~~U~~ R	870	1.0	820	870	250	SSL
120-12-7	Anthracene	U	350	1.0	330	350	89	
86-74-8	Carbazole	U	530	1.0	500	530	120	

QW 3/5/09

KATAHDIN ANALYTICAL SERVICES
Report of Analytical Results

Client: CH2MHill
Project: TO-009 Lejeune
PO No:
Sample Date: 12/17/08
Received Date: 12/19/08
Extraction Date: 12/22/08
Analysis Date: 14-JAN-2009 01:43
Report Date: 01/17/2009
Matrix: SOIL
% Solids: 94.4

Lab ID: SB7343-7RA
Client ID: MR08-SS135-08D
SDG: TO9-20
Extracted by: AC
Extraction Method: SW846 3550
Analyst: JCG
Analysis Method: SW846 8270C
Lab Prep Batch: WG59322
Units: ug/Kgdrywt

use reanalysis

CAS#	Compound	Flags	Results	DF	PQL	Adj.PQL	Adj.MDL
84-74-2	Di-n-butylphthalate	U	350	1.0	330	350	110
85-68-7	Butylbenzylphthalate	U	350	1.0	330	350	98
91-94-1	3,3'-Dichlorobenzidine	U	530	1.0	500	530	120
218-01-9	Chrysene	U	350	1.0	330	350	100
117-81-7	bis(2-Ethylhexyl)phthalate	U	350	1.0	330	350	100
117-84-0	Di-n-octylphthalate	U	350	1.0	330	350	220
367-12-4	2-Fluorophenol		35%				
13127-88-3	Phenol-D6		51%				
4165-60-0	Nitrobenzene-D5		64%				
321-60-8	2-Fluorobiphenyl		70%				
118-79-6	2,4,6-Tribromophenol		* 8%				
1718-51-0	Terphenyl-D14		88%				

R RE

lcw 3/5/09

4RE

KATAHDIN ANALYTICAL SERVICES
Report of Analytical Results

Client: CH2MHill
Project: TO-009 Lejeune
PO No:
Sample Date: 12/17/08
Received Date: 12/19/08
Extraction Date: 01/14/09
Analysis Date: 15-JAN-2009 22:29
Report Date: 01/17/2009
Matrix: SOIL
% Solids: 94.4

Lab ID: SB7343-7RE
Client ID: MR08-SS135-08D
SDG: TO9-20
Extracted by: AC
Extraction Method: SW846 3550
Analyst: JCG
Analysis Method: SW846 8270C
Lab Prep Batch: WG59785
Units: ug/Kgdrywt

CAS#	Compound	Flags	Results	DF	PQL	Adj.PQL	Adj.MDL
100-52-7	Benzaldehyde	U UJ	530	1.0	500	530	130 HT
108-95-2	Phenol	U	530	1.0	500	530	160
111-44-4	Bis(2-Chloroethyl)ether	U	350	1.0	330	350	86
95-57-8	2-Chlorophenol	U	530	1.0	500	530	170
95-48-7	2-Methylphenol	U	640	1.0	600	640	210
108-60-1	2,2'-Oxybis(1-chloropropane)	U	350	1.0	330	350	94
98-86-2	Acetophenone	U	640	1.0	600	640	190
621-64-7	N-Nitroso-di-n-propylamine	U	350	1.0	330	350	88
65794-96-9	3&4-Methylphenol	U	640	1.0	600	640	200
67-72-1	Hexachloroethane	U	350	1.0	330	350	100
98-95-3	Nitrobenzene	U	350	1.0	330	350	96
78-59-1	Isophorone	U	350	1.0	330	350	79
88-75-5	2-Nitrophenol	U	640	1.0	600	640	180
105-67-9	2,4-Dimethylphenol	U	530	1.0	500	530	170
111-91-1	Bis(2-Chloroethoxy)methane	U	350	1.0	330	350	100
120-83-2	2,4-Dichlorophenol	U	530	1.0	500	530	160
106-47-8	4-Chloroaniline	U	530	1.0	500	530	130
105-60-2	Caprolactam	U	530	1.0	500	530	150
59-50-7	4-Chloro-3-Methylphenol	U	530	1.0	500	530	180
88-06-2	2,4,6-Trichlorophenol	U	530	1.0	500	530	160
95-95-4	2,4,5-Trichlorophenol	U	530	1.0	500	530	160
91-58-7	2-Chloronaphthalene	U	350	1.0	330	350	92
92-52-4	1,1'-Biphenyl	U	350	1.0	330	350	77
88-74-4	2-Nitroaniline	U	530	1.0	500	530	79
131-11-3	Dimethyl Phthalate	U	350	1.0	330	350	82
606-20-2	2,6-Dinitrotoluene	U	350	1.0	330	350	84
208-96-8	Acenaphthylene	U	350	1.0	330	350	74
99-09-2	3-Nitroaniline	U	530	1.0	500	530	100
83-32-9	Acenaphthene	U	350	1.0	330	350	69
51-28-5	2,4-Dinitrophenol	U	1300	1.0	1200	1300	400
132-64-9	Dibenzofuran	U	350	1.0	330	350	84
100-02-7	4-Nitrophenol	U	1300	1.0	1200	1300	330
121-14-2	2,4-Dinitrotoluene	U	350	1.0	330	350	90
84-66-2	Diethylphthalate	U	350	1.0	330	350	85
7005-72-3	4-Chlorophenyl-phenylether	U	350	1.0	330	350	82
100-01-6	4-Nitroaniline	U	530	1.0	500	530	140
534-52-1	4,6-Dinitro-2-Methylphenol	U	1300	1.0	1200	1300	360
86-30-6	N-Nitrosodiphenylamine	U	700	1.0	660	700	230
101-55-3	4-Bromophenyl-phenylether	U	350	1.0	330	350	90
1912-24-9	Atrazine	U	350	1.0	330	350	96
87-86-5	Pentachlorophenol	U	870	1.0	820	870	250
120-12-7	Anthracene	U	350	1.0	330	350	89
86-74-8	Carbazole	U	530	1.0	500	530	120

LW 3/5/09

4RE

KATAHDIN ANALYTICAL SERVICES
Report of Analytical Results

Client: CH2MHill
Project: TO-009 Lejeune
PO No:
Sample Date: 12/17/08
Received Date: 12/19/08
Extraction Date: 01/14/09
Analysis Date: 15-JAN-2009 22:29
Report Date: 01/17/2009
Matrix: SOIL
% Solids: 94.4

Lab ID: SB7343-7RE
Client ID: MR08-SS135-08D
SDG: TO9-20
Extracted by: AC
Extraction Method: SW846 3550
Analyst: JCG
Analysis Method: SW846 8270C
Lab Prep Batch: WG59785
Units: ug/Kgdrywt

CAS#	Compound	Flags	Results	DF	PQL	Adj.PQL	Adj.MDL
84-74-2	Di-n-butylphthalate	~~U~~ UJ	350	1.0	330	350	110 HT
85-68-7	Butylbenzylphthalate	~~U~~	350	1.0	330	350	98
91-94-1	3,3'-Dichlorobenzidine	~~U~~	530	1.0	500	530	120
218-01-9	Chrysene	~~U~~	350	1.0	330	350	100
117-81-7	bis(2-Ethylhexyl)phthalate	~~U~~	350	1.0	330	350	100
117-84-0	Di-n-octylphthalate	~~U~~	350	1.0	330	350	220
367-12-4	2-Fluorophenol		63%				
13127-88-3	Phenol-D6		61%				
4165-60-0	Nitrobenzene-D5		66%				
321-60-8	2-Fluorobiphenyl		71%				
118-79-6	2,4,6-Tribromophenol		53%				
1718-51-0	Terphenyl-D14		75%				

lw 3/5/09

KATAHDIN ANALYTICAL SERVICES
Report of Analytical Results

Client: CH2MHill
Project: TO-009 Lejeune
PO No:
Sample Date: 12/17/08
Received Date: 12/19/08
Extraction Date: 12/22/08
Analysis Date: 13-JAN-2009 12:22
Report Date: 01/17/2009
Matrix: SOIL
% Solids: 94.2

Lab ID: SB7343-9
Client ID: MR08-IS135-1.5-2
SDG: TO9-20
Extracted by: AC
Extraction Method: SW846 3550
Analyst: JLP
Analysis Method: SW846 8270C
Lab Prep Batch: WG59322
Units: ug/Kgdrywt

CAS#	Compound	Flags	Results	DF	PQL	Adj.PQL	Adj.MDL
100-52-7	Benzaldehyde	~~U~~ UJ	530	1.0	500	530	130 ICB
108-95-2	Phenol	U	530	1.0	500	530	160
111-44-4	Bis(2-Chloroethyl)ether	U	350	1.0	330	350	86
95-57-8	2-Chlorophenol	U	530	1.0	500	530	170
95-48-7	2-Methylphenol	U	640	1.0	600	640	210
108-60-1	2,2'-Oxybis(1-chloropropane)	U	350	1.0	330	350	94
98-86-2	Acetophenone	U	640	1.0	600	640	190
621-64-7	N-Nitroso-di-n-propylamine	U	350	1.0	330	350	88
65794-96-9	3&4-Methylphenol	U	640	1.0	600	640	200
67-72-1	Hexachloroethane	U	350	1.0	330	350	100
98-95-3	Nitrobenzene	U	350	1.0	330	350	97
78-59-1	Isophorone	U	350	1.0	330	350	80
88-75-5	2-Nitrophenol	U	640	1.0	600	640	180
105-67-9	2,4-Dimethylphenol	~~U~~ UJ	530	1.0	500	530	180 BSL
111-91-1	Bis(2-Chloroethoxy)methane	U	350	1.0	330	350	100
120-83-2	2,4-Dichlorophenol	U	530	1.0	500	530	160
106-47-8	4-Chloroaniline	U	530	1.0	500	530	130
105-60-2	Caprolactam	U	530	1.0	500	530	150
59-50-7	4-Chloro-3-Methylphenol	U	530	1.0	500	530	180
88-06-2	2,4,6-Trichlorophenol	U	530	1.0	500	530	160
95-95-4	2,4,5-Trichlorophenol	U	530	1.0	500	530	160
91-58-7	2-Chloronaphthalene	U	350	1.0	330	350	92
92-52-4	1,1'-Biphenyl	U	350	1.0	330	350	78
88-74-4	2-Nitroaniline	U	530	1.0	500	530	80
131-11-3	Dimethyl Phthalate	U	350	1.0	330	350	83
606-20-2	2,6-Dinitrotoluene	U	350	1.0	330	350	84
208-96-8	Acenaphthylene	U	350	1.0	330	350	74
99-09-2	3-Nitroaniline	U	530	1.0	500	530	100
83-32-9	Acenaphthene	U	350	1.0	330	350	69
51-28-5	2,4-Dinitrophenol	U	1300	1.0	1200	1300	400
132-64-9	Dibenzofuran	U	350	1.0	330	350	84
100-02-7	4-Nitrophenol	U	1300	1.0	1200	1300	330
121-14-2	2,4-Dinitrotoluene	U	350	1.0	330	350	90
84-66-2	Diethylphthalate	U	350	1.0	330	350	85
7005-72-3	4-Chlorophenyl-phenylether	U	350	1.0	330	350	83
100-01-6	4-Nitroaniline	U	530	1.0	500	530	140
534-52-1	4,6-Dinitro-2-Methylphenol	U	1300	1.0	1200	1300	360
86-30-6	N-Nitrosodiphenylamine	U	700	1.0	660	700	230
101-55-3	4-Bromophenyl-phenylether	U	350	1.0	330	350	90
1912-24-9	Atrazine	U	350	1.0	330	350	97
87-86-5	Pentachlorophenol	U	870	1.0	820	870	250
120-12-7	Anthracene	U	350	1.0	330	350	89
86-74-8	Carbazole	U	530	1.0	500	530	120

lw 3/5/09

KATAHDIN ANALYTICAL SERVICES
Report of Analytical Results

Client: CH2MHill
Project: TO-009 Lejeune
PO No:
Sample Date: 12/17/08
Received Date: 12/19/08
Extraction Date: 12/22/08
Analysis Date: 13-JAN-2009 12:22
Report Date: 01/17/2009
Matrix: SOIL
% Solids: 94.2

Lab ID: SB7343-9
Client ID: MR08-IS135-1.5-2
SDG: TO9-20
Extracted by: AC
Extraction Method: SW846 3550
Analyst: JLP
Analysis Method: SW846 8270C
Lab Prep Batch: WG59322
Units: ug/Kgdrywt

CAS#	Compound	Flags	Results	DF	PQL	Adj.PQL	Adj.MDL
84-74-2	Di-n-butylphthalate	U	350	1.0	330	350	110
85-68-7	Butylbenzylphthalate	U	350	1.0	330	350	99
91-94-1	3,3'-Dichlorobenzidine	U	530	1.0	500	530	120
218-01-9	Chrysene	U	350	1.0	330	350	100
117-81-7	bis(2-Ethylhexyl)phthalate	U	350	1.0	330	350	100
117-84-0	Di-n-octylphthalate	U	350	1.0	330	350	220
367-12-4	2-Fluorophenol		67%				
13127-88-3	Phenol-D6		66%				
4165-60-0	Nitrobenzene-D5		66%				
321-60-8	2-Fluorobiphenyl		70%				
118-79-6	2,4,6-Tribromophenol		58%				
1718-51-0	Terphenyl-D14		86%				

lw 3/5/09

6

KATAHDIN ANALYTICAL SERVICES
Report of Analytical Results

Client: CH2MHill
Project: TO-009 Lejeune
PO No:
Sample Date: 12/17/08
Received Date: 12/19/08
Extraction Date: 12/22/08
Analysis Date: 14-JAN-2009 05:15
Report Date: 01/17/2009
Matrix: SOIL
% Solids: 95.0

Lab ID: SB7343-11DL
Client ID: MR08-SS156-08D
SDG: TO9-20
Extracted by: AC
Extraction Method: SW846 3550
Analyst: JCG
Analysis Method: SW846 8270C
Lab Prep Batch: WG59322
Units: ug/Kgdrywt

CAS#	Compound	Flags	Results	DF	PQL	Adj.PQL	Adj.MDL	
100-52-7	Benzaldehyde	~~U~~ UJ	5300	10	500	5300	1300	ICB
108-95-2	Phenol	U	5300	10	500	5300	1600	
111-44-4	Bis(2-Chloroethyl)ether	U	3500	10	330	3500	850	
95-57-8	2-Chlorophenol	U	5300	10	500	5300	1700	
95-48-7	2-Methylphenol	U	6300	10	600	6300	2100	
108-60-1	2,2'-Oxybis(1-chloropropane)	U	3500	10	330	3500	940	
98-86-2	Acetophenone	U	6300	10	600	6300	1900	
621-64-7	N-Nitroso-di-n-propylamine	U	3500	10	330	3500	870	
65794-96-9	3&4-Methylphenol	U	6300	10	600	6300	2000	
67-72-1	Hexachloroethane	U	3500	10	330	3500	1000	
98-95-3	Nitrobenzene	U	3500	10	330	3500	960	
78-59-1	Isophorone	U	3500	10	330	3500	790	
88-75-5	2-Nitrophenol	U	6300	10	600	6300	1800	
105-67-9	2,4-Dimethylphenol	~~U~~ UJ	5300	10	500	5300	1700	BSL
111-91-1	Bis(2-Chloroethoxy)methane	U	3500	10	330	3500	1000	
120-83-2	2,4-Dichlorophenol	U	5300	10	500	5300	1600	
106-47-8	4-Chloroaniline	U	5300	10	500	5300	1200	
105-60-2	Caprolactam	U	5300	10	500	5300	1500	
59-50-7	4-Chloro-3-Methylphenol	U	5300	10	500	5300	1700	
88-06-2	2,4,6-Trichlorophenol	U	5300	10	500	5300	1600	
95-95-4	2,4,5-Trichlorophenol	U	5300	10	500	5300	1600	
91-58-7	2-Chloronaphthalene	U	3500	10	330	3500	920	
92-52-4	1,1'-Biphenyl	U	3500	10	330	3500	770	
88-74-4	2-Nitroaniline	U	5300	10	500	5300	790	
131-11-3	Dimethyl Phthalate	U	3500	10	330	3500	820	
606-20-2	2,6-Dinitrotoluene	U	3500	10	330	3500	830	
208-96-8	Acenaphthylene	U	3500	10	330	3500	740	
99-09-2	3-Nitroaniline	U	5300	10	500	5300	990	
83-32-9	Acenaphthene	U	3500	10	330	3500	680	
51-28-5	2,4-Dinitrophenol	U	13000	10	1200	13000	4000	
132-64-9	Dibenzofuran	U	3500	10	330	3500	830	
100-02-7	4-Nitrophenol	U	13000	10	1200	13000	3200	
121-14-2	2,4-Dinitrotoluene	U	3500	10	330	3500	890	
84-66-2	Diethylphthalate	U	3500	10	330	3500	840	
7005-72-3	4-Chlorophenyl-phenylether	U	3500	10	330	3500	820	
100-01-6	4-Nitroaniline	U	5300	10	500	5300	1400	
534-52-1	4,6-Dinitro-2-Methylphenol	U	13000	10	1200	13000	3500	
86-30-6	N-Nitrosodiphenylamine	U	6900	10	660	6900	2300	
101-55-3	4-Bromophenyl-phenylether	U	3500	10	330	3500	890	
1912-24-9	Atrazine	U	3500	10	330	3500	960	
87-86-5	Pentachlorophenol	U	8600	10	820	8600	2500	
120-12-7	Anthracene	U	3500	10	330	3500	880	
86-74-8	Carbazole	U	5300	10	500	5300	1200	

MW 3/5/09

6

KATAHDIN ANALYTICAL SERVICES
Report of Analytical Results

Client: CH2MHill
Project: TO-009 Lejeune
PO No:
Sample Date: 12/17/08
Received Date: 12/19/08
Extraction Date: 12/22/08
Analysis Date: 14-JAN-2009 05:15
Report Date: 01/17/2009
Matrix: SOIL
% Solids: 95.0

Lab ID: SB7343-11DL
Client ID: MR08-SS156-08D
SDG: TO9-20
Extracted by: AC
Extraction Method: SW846 3550
Analyst: JCG
Analysis Method: SW846 8270C
Lab Prep Batch: WG59322
Units: ug/Kgdrywt

CAS#	Compound	Flags	Results	DF	PQL	Adj.PQL	Adj.MDL
84-74-2	Di-n-butylphthalate	U	3500	10	330	3500	1100
85-68-7	Butylbenzylphthalate	U	3500	10	330	3500	980
91-94-1	3,3'-Dichlorobenzidine	U	5300	10	500	5300	1200
218-01-9	Chrysene	U	3500	10	330	3500	1000
117-81-7	bis(2-Ethylhexyl)phthalate	U	3500	10	330	3500	1000
117-84-0	Di-n-octylphthalate	U	3500	10	330	3500	2200
367-12-4	2-Fluorophenol		D				
13127-88-3	Phenol-D6		D				
4165-60-0	Nitrobenzene-D5		D				
321-60-8	2-Fluorobiphenyl		D				
118-79-6	2,4,6-Tribromophenol		D				
1718-51-0	Terphenyl-D14		D				

QW 3/5/09

7

KATAHDIN ANALYTICAL SERVICES
Report of Analytical Results

Client: CH2MHill
Project: TO-009 Lejeune
PO No:
Sample Date: 12/17/08
Received Date: 12/19/08
Extraction Date: 12/22/08
Analysis Date: 14-JAN-2009 01:00
Report Date: 01/17/2009
Matrix: SOIL
% Solids: 88.9

Lab ID: SB7343-13RA
Client ID: MR08-IS156-1.5-2
SDG: TO9-20
Extracted by: AC
Extraction Method: SW846 3550
Analyst: JCG
Analysis Method: SW846 8270C
Lab Prep Batch: WG59322
Units: ug/Kgdrywt

CAS#	Compound	Flags	Results	DF	PQL	Adj.PQL	Adj.MDL	
100-52-7	Benzaldehyde	~~U~~ UJ	560	1.0	500	560	130	ICB
108-95-2	Phenol	U	560	1.0	500	560	180	
111-44-4	Bis(2-Chloroethyl)ether	U	370	1.0	330	370	91	
95-57-8	2-Chlorophenol	U	560	1.0	500	560	180	
95-48-7	2-Methylphenol	U	670	1.0	600	670	220	
108-60-1	2,2'-Oxybis(1-chloropropane)	U	370	1.0	330	370	100	
98-86-2	Acetophenone	U	670	1.0	600	670	200	
621-64-7	N-Nitroso-di-n-propylamine	U	370	1.0	330	370	93	
65794-96-9	3&4-Methylphenol	U	670	1.0	600	670	210	
67-72-1	Hexachloroethane	U	370	1.0	330	370	110	
98-95-3	Nitrobenzene	U	370	1.0	330	370	100	
78-59-1	Isophorone	U	370	1.0	330	370	84	
88-75-5	2-Nitrophenol	U	670	1.0	600	670	190	
105-67-9	2,4-Dimethylphenol	~~U~~ UJ	560	1.0	500	560	180	BSL
111-91-1	Bis(2-Chloroethoxy)methane	U	370	1.0	330	370	110	
120-83-2	2,4-Dichlorophenol	U	560	1.0	500	560	170	
106-47-8	4-Chloroaniline	U	560	1.0	500	560	130	
105-60-2	Caprolactam	U	560	1.0	500	560	160	
59-50-7	4-Chloro-3-Methylphenol	U	560	1.0	500	560	190	
88-06-2	2,4,6-Trichlorophenol	U	560	1.0	500	560	170	
95-95-4	2,4,5-Trichlorophenol	U	560	1.0	500	560	170	
91-58-7	2-Chloronaphthalene	U	370	1.0	330	370	98	
92-52-4	1,1'-Biphenyl	U	370	1.0	330	370	82	
88-74-4	2-Nitroaniline	U	560	1.0	500	560	84	
131-11-3	Dimethyl Phthalate	U	370	1.0	330	370	88	
606-20-2	2,6-Dinitrotoluene	U	370	1.0	330	370	89	
208-96-8	Acenaphthylene	U	370	1.0	330	370	79	
99-09-2	3-Nitroaniline	U	560	1.0	500	560	100	
83-32-9	Acenaphthene	U	370	1.0	330	370	73	
51-28-5	2,4-Dinitrophenol	U	1300	1.0	1200	1300	420	
132-64-9	Dibenzofuran	U	370	1.0	330	370	89	
100-02-7	4-Nitrophenol	U	1300	1.0	1200	1300	350	
121-14-2	2,4-Dinitrotoluene	U	370	1.0	330	370	96	
84-66-2	Diethylphthalate	U	370	1.0	330	370	90	
7005-72-3	4-Chlorophenyl-phenylether	U	370	1.0	330	370	88	
100-01-6	4-Nitroaniline	U	560	1.0	500	560	150	
534-52-1	4,6-Dinitro-2-Methylphenol	U	1300	1.0	1200	1300	380	
86-30-6	N-Nitrosodiphenylamine	U	740	1.0	660	740	250	
101-55-3	4-Bromophenyl-phenylether	U	370	1.0	330	370	96	
1912-24-9	Atrazine	U	370	1.0	330	370	100	
87-86-5	Pentachlorophenol	U	920	1.0	820	920	270	
120-12-7	Anthracene	U	370	1.0	330	370	94	
86-74-8	Carbazole	U	560	1.0	500	560	120	

Rev 3/5/09

7

KATAHDIN ANALYTICAL SERVICES
Report of Analytical Results

Client: CH2MHill
Project: TO-009 Lejeune
PO No:
Sample Date: 12/17/08
Received Date: 12/19/08
Extraction Date: 12/22/08
Analysis Date: 14-JAN-2009 01:00
Report Date: 01/17/2009
Matrix: SOIL
% Solids: 88.9

Lab ID: SB7343-13RA
Client ID: MR08-IS156-1.5-2
SDG: TO9-20
Extracted by: AC
Extraction Method: SW846 3550
Analyst: JCG
Analysis Method: SW846 8270C
Lab Prep Batch: WG59322
Units: ug/Kgdrywt

CAS#	Compound	Flags	Results	DF	PQL	Adj.PQL	Adj.MDL
84-74-2	Di-n-butylphthalate	U	370	1.0	330	370	110
85-68-7	Butylbenzylphthalate	U	370	1.0	330	370	100
91-94-1	3,3'-Dichlorobenzidine	U	560	1.0	500	560	130
218-01-9	Chrysene	U	370	1.0	330	370	110
117-81-7	bis(2-Ethylhexyl)phthalate	U	370	1.0	330	370	110
117-84-0	Di-n-octylphthalate	U	370	1.0	330	370	240
367-12-4	2-Fluorophenol		52%				
13127-88-3	Phenol-D6		54%				
4165-60-0	Nitrobenzene-D5		55%				
321-60-8	2-Fluorobiphenyl		62%				
118-79-6	2,4,6-Tribromophenol		43%				
1718-51-0	Terphenyl-D14		81%				

lw 3/5/09

8

KATAHDIN ANALYTICAL SERVICES
Report of Analytical Results

Client: CH2MHill
Project: TO-009 Lejeune
PO No:
Sample Date: 12/17/08
Received Date: 12/19/08
Extraction Date: 12/22/08
Analysis Date: 13-JAN-2009 14:29
Report Date: 01/17/2009
Matrix: SOIL
% Solids: 93.8

Lab ID: SB7343-15
Client ID: MR08-SS159-08D
SDG: TO9-20
Extracted by: AC
Extraction Method: SW846 3550
Analyst: JLP
Analysis Method: SW846 8270C
Lab Prep Batch: WG59322
Units: ug/Kgdrywt

CAS#	Compound	Flags	Results	DF	PQL	Adj.PQL	Adj.MDL	
100-52-7	Benzaldehyde	~~J~~ J	160	1.0	500	530	130	ICB
108-95-2	Phenol	U	530	1.0	500	530	170	
111-44-4	Bis(2-Chloroethyl)ether	U	350	1.0	330	350	86	
95-57-8	2-Chlorophenol	U	530	1.0	500	530	170	
95-48-7	2-Methylphenol	U	640	1.0	600	640	210	
108-60-1	2,2'-Oxybis(1-chloropropane)	U	350	1.0	330	350	95	
98-86-2	Acetophenone	U	640	1.0	600	640	190	
621-64-7	N-Nitroso-di-n-propylamine	U	350	1.0	330	350	88	
65794-96-9	3&4-Methylphenol	U	640	1.0	600	640	200	
67-72-1	Hexachloroethane	U	350	1.0	330	350	100	
98-95-3	Nitrobenzene	U	350	1.0	330	350	97	
78-59-1	Isophorone	U	350	1.0	330	350	80	
88-75-5	2-Nitrophenol	U	640	1.0	600	640	180	
105-67-9	2,4-Dimethylphenol	~~J~~ UJ	530	1.0	500	530	180	BSL
111-91-1	Bis(2-Chloroethoxy)methane	U	350	1.0	330	350	100	
120-83-2	2,4-Dichlorophenol	U	530	1.0	500	530	160	
106-47-8	4-Chloroaniline	U	530	1.0	500	530	130	
105-60-2	Caprolactam	U	530	1.0	500	530	150	
59-50-7	4-Chloro-3-Methylphenol	U	530	1.0	500	530	180	
88-06-2	2,4,6-Trichlorophenol	U	530	1.0	500	530	160	
95-95-4	2,4,5-Trichlorophenol	U	530	1.0	500	530	160	
91-58-7	2-Chloronaphthalene	U	350	1.0	330	350	93	
92-52-4	1,1'-Biphenyl	U	350	1.0	330	350	78	
88-74-4	2-Nitroaniline	U	530	1.0	500	530	80	
131-11-3	Dimethyl Phthalate	U	350	1.0	330	350	83	
606-20-2	2,6-Dinitrotoluene	U	350	1.0	330	350	84	
208-96-8	Acenaphthylene	U	350	1.0	330	350	75	
99-09-2	3-Nitroaniline	U	530	1.0	500	530	100	
83-32-9	Acenaphthene	U	350	1.0	330	350	69	
51-28-5	2,4-Dinitrophenol	U	1300	1.0	1200	1300	400	
132-64-9	Dibenzofuran	U	350	1.0	330	350	84	
100-02-7	4-Nitrophenol	U	1300	1.0	1200	1300	330	
121-14-2	2,4-Dinitrotoluene	U	350	1.0	330	350	91	
84-66-2	Diethylphthalate	U	350	1.0	330	350	85	
7005-72-3	4-Chlorophenyl-phenylether	U	350	1.0	330	350	83	
100-01-6	4-Nitroaniline	U	530	1.0	500	530	140	
534-52-1	4,6-Dinitro-2-Methylphenol	U	1300	1.0	1200	1300	360	
86-30-6	N-Nitrosodiphenylamine	U	700	1.0	660	700	230	
101-55-3	4-Bromophenyl-phenylether	U	350	1.0	330	350	91	
1912-24-9	Atrazine	U	350	1.0	330	350	97	
87-86-5	Pentachlorophenol	U	870	1.0	820	870	250	
120-12-7	Anthracene	U	350	1.0	330	350	90	
86-74-8	Carbazole	U	530	1.0	500	530	120	

lw 3/5/09

8

KATAHDIN ANALYTICAL SERVICES
Report of Analytical Results

Client: CH2MHill
Project: TO-009 Lejeune
PO No:
Sample Date: 12/17/08
Received Date: 12/19/08
Extraction Date: 12/22/08
Analysis Date: 13-JAN-2009 14:29
Report Date: 01/17/2009
Matrix: SOIL
% Solids: 93.8

Lab ID: SB7343-15
Client ID: MR08-SS159-08D
SDG: TO9-20
Extracted by: AC
Extraction Method: SW846 3550
Analyst: JLP
Analysis Method: SW846 8270C
Lab Prep Batch: WG59322
Units: ug/Kgdrywt

CAS#	Compound	Flags	Results	DF	PQL	Adj.PQL	Adj.MDL
84-74-2	Di-n-butylphthalate	U	350	1.0	330	350	110
85-68-7	Butylbenzylphthalate	U	350	1.0	330	350	99
91-94-1	3,3'-Dichlorobenzidine	U	530	1.0	500	530	120
218-01-9	Chrysene	U	350	1.0	330	350	100
117-81-7	bis(2-Ethylhexyl)phthalate	J	150	1.0	330	350	100
117-84-0	Di-n-octylphthalate	U	350	1.0	330	350	220
367-12-4	2-Fluorophenol		54%				
13127-88-3	Phenol-D6		63%				
4165-60-0	Nitrobenzene-D5		69%				
321-60-8	2-Fluorobiphenyl		74%				
118-79-6	2,4,6-Tribromophenol		* 25%				
1718-51-0	Terphenyl-D14		92%				

MW 31509

8RE

KATAHDIN ANALYTICAL SERVICES
Report of Analytical Results

Client: CH2MHill
Project: TO-009 Lejeune
PO No:
Sample Date: 12/17/08
Received Date: 12/19/08
Extraction Date: 01/14/09
Analysis Date: 15-JAN-2009 23:11
Report Date: 01/17/2009
Matrix: SOIL
% Solids: 93.8

Lab ID: SB7343-15RE
Client ID: MR08-SS159-08D
SDG: TO9-20
Extracted by: AC
Extraction Method: SW846 3550
Analyst: JCG
Analysis Method: SW846 8270C
Lab Prep Batch: WG59785
Units: ug/Kgdrywt

use original

RE

CAS#	Compound	Flags	Results	DF	PQL	Adj.PQL	Adj.MDL
100-52-7	Benzaldehyde	~~U~~ UJ	530	1.0	500	530	130
108-95-2	Phenol	U	530	1.0	500	530	170
111-44-4	Bis(2-Chloroethyl)ether	U	350	1.0	330	350	86
95-57-8	2-Chlorophenol	U	530	1.0	500	530	170
95-48-7	2-Methylphenol	U	640	1.0	600	640	210
108-60-1	2,2'-Oxybis(1-chloropropane)	U	350	1.0	330	350	95
98-86-2	Acetophenone	U	640	1.0	600	640	190
621-64-7	N-Nitroso-di-n-propylamine	U	350	1.0	330	350	88
65794-96-9	3&4-Methylphenol	U	640	1.0	600	640	200
67-72-1	Hexachloroethane	U	350	1.0	330	350	100
98-95-3	Nitrobenzene	U	350	1.0	330	350	97
78-59-1	Isophorone	U	350	1.0	330	350	80
88-75-5	2-Nitrophenol	U	640	1.0	600	640	180
105-67-9	2,4-Dimethylphenol	~~U~~ UJ	530	1.0	500	530	180
111-91-1	Bis(2-Chloroethoxy)methane	U	350	1.0	330	350	100
120-83-2	2,4-Dichlorophenol	U	530	1.0	500	530	160
106-47-8	4-Chloroaniline	U	530	1.0	500	530	130
105-60-2	Caprolactam	U	530	1.0	500	530	150
59-50-7	4-Chloro-3-Methylphenol	U	530	1.0	500	530	180
88-06-2	2,4,6-Trichlorophenol	U	530	1.0	500	530	160
95-95-4	2,4,5-Trichlorophenol	U	530	1.0	500	530	160
91-58-7	2-Chloronaphthalene	U	350	1.0	330	350	93
92-52-4	1,1'-Biphenyl	U	350	1.0	330	350	78
88-74-4	2-Nitroaniline	U	530	1.0	500	530	80
131-11-3	Dimethyl Phthalate	U	350	1.0	330	350	83
606-20-2	2,6-Dinitrotoluene	U	350	1.0	330	350	84
208-96-8	Acenaphthylene	U	350	1.0	330	350	75
99-09-2	3-Nitroaniline	U	530	1.0	500	530	100
83-32-9	Acenaphthene	U	350	1.0	330	350	69
51-28-5	2,4-Dinitrophenol	U	1300	1.0	1200	1300	400
132-64-9	Dibenzofuran	U	350	1.0	330	350	84
100-02-7	4-Nitrophenol	U	1300	1.0	1200	1300	330
121-14-2	2,4-Dinitrotoluene	U	350	1.0	330	350	91
84-66-2	Diethylphthalate	U	350	1.0	330	350	85
7005-72-3	4-Chlorophenyl-phenylether	U	350	1.0	330	350	83
100-01-6	4-Nitroaniline	U	530	1.0	500	530	140
534-52-1	4,6-Dinitro-2-Methylphenol	U	1300	1.0	1200	1300	360
86-30-6	N-Nitrosodiphenylamine	U	700	1.0	660	700	230
101-55-3	4-Bromophenyl-phenylether	U	350	1.0	330	350	91
1912-24-9	Atrazine	U	350	1.0	330	350	97
87-86-5	Pentachlorophenol	U	870	1.0	820	870	250
120-12-7	Anthracene	U	350	1.0	330	350	90
86-74-8	Carbazole	U	530	1.0	500	530	120

HT

3/5/09

8RE

KATAHDIN ANALYTICAL SERVICES
Report of Analytical Results

Client: CH2MHill
Project: TO-009 Lejeune
PO No:
Sample Date: 12/17/08
Received Date: 12/19/08
Extraction Date: 01/14/09
Analysis Date: 15-JAN-2009 23:11
Report Date: 01/17/2009
Matrix: SOIL
% Solids: 93.8

Lab ID: SB7343-15RE
Client ID: MR08-SS159-08D
SDG: TO9-20
Extracted by: AC
Extraction Method: SW846 3550
Analyst: JCG
Analysis Method: SW846 8270C
Lab Prep Batch: WG59785
Units: ug/Kgdrywt

Use original

CAS#	Compound	Flags	Results	DF	PQL	Adj.PQL	Adj.MDL	
84-74-2	Di-n-butylphthalate	~~U~~ UJ	350	1.0	330	350	110	HT
85-68-7	Butylbenzylphthalate	~~U~~	350	1.0	330	350	99	
91-94-1	3,3'-Dichlorobenzidine	~~U~~	530	1.0	500	530	120	
218-01-9	Chrysene	~~U~~	350	1.0	330	350	100	
117-81-7	bis(2-Ethylhexyl)phthalate	~~J~~ J	110	1.0	330	350	100	
117-84-0	Di-n-octylphthalate	~~U~~ UJ	350	1.0	330	350	220	
367-12-4	2-Fluorophenol		68%					
13127-88-3	Phenol-D6		67%					
4165-60-0	Nitrobenzene-D5		70%					
321-60-8	2-Fluorobiphenyl		77%					
118-79-6	2,4,6-Tribromophenol		61%					
1718-51-0	Terphenyl-D14		85%					

RE

MW 3/5/09

KATAHDIN ANALYTICAL SERVICES
Report of Analytical Results

Client: CH2MHill
Project: TO-009 Lejeune
PO No:
Sample Date: 12/17/08
Received Date: 12/19/08
Extraction Date: 12/22/08
Analysis Date: 13-JAN-2009 15:55
Report Date: 01/17/2009
Matrix: SOIL
% Solids: 90.3

Lab ID: SB7343-17
Client ID: MR08-IS159-4-5-08D
SDG: TO9-20
Extracted by: AC
Extraction Method: SW846 3550
Analyst: JLP
Analysis Method: SW846 8270C
Lab Prep Batch: WG59322
Units: ug/Kgdrywt

CAS#	Compound	Flags	Results	DF	PQL	Adj.PQL	Adj.MDL
100-52-7	Benzaldehyde	~~U~~ UJ	550	1.0	500	550	130 JLB
108-95-2	Phenol	U	550	1.0	500	550	170
111-44-4	Bis(2-Chloroethyl)ether	U	360	1.0	330	360	90
95-57-8	2-Chlorophenol	U	550	1.0	500	550	180
95-48-7	2-Methylphenol	U	660	1.0	600	660	220
108-60-1	2,2'-Oxybis(1-chloropropane)	U	360	1.0	330	360	98
98-86-2	Acetophenone	U	660	1.0	600	660	200
621-64-7	N-Nitroso-di-n-propylamine	U	360	1.0	330	360	92
65794-96-9	3&4-Methylphenol	U	660	1.0	600	660	210
67-72-1	Hexachloroethane	U	360	1.0	330	360	110
98-95-3	Nitrobenzene	U	360	1.0	330	360	100
78-59-1	Isophorone	U	360	1.0	330	360	83
88-75-5	2-Nitrophenol	U	660	1.0	600	660	180
105-67-9	2,4-Dimethylphenol	~~U~~ UJ	550	1.0	500	550	180 BSL
111-91-1	Bis(2-Chloroethoxy)methane	U	360	1.0	330	360	110
120-83-2	2,4-Dichlorophenol	U	550	1.0	500	550	170
106-47-8	4-Chloroaniline	U	550	1.0	500	550	130
105-60-2	Caprolactam	U	550	1.0	500	550	160
59-50-7	4-Chloro-3-Methylphenol	U	550	1.0	500	550	180
88-06-2	2,4,6-Trichlorophenol	U	550	1.0	500	550	170
95-95-4	2,4,5-Trichlorophenol	U	550	1.0	500	550	170
91-58-7	2-Chloronaphthalene	U	360	1.0	330	360	96
92-52-4	1,1'-Biphenyl	U	360	1.0	330	360	81
88-74-4	2-Nitroaniline	U	550	1.0	500	550	83
131-11-3	Dimethyl Phthalate	U	360	1.0	330	360	86
606-20-2	2,6-Dinitrotoluene	U	360	1.0	330	360	87
208-96-8	Acenaphthylene	U	360	1.0	330	360	78
99-09-2	3-Nitroaniline	U	550	1.0	500	550	100
83-32-9	Acenaphthene	U	360	1.0	330	360	72
51-28-5	2,4-Dinitrophenol	U	1300	1.0	1200	1300	420
132-64-9	Dibenzofuran	U	360	1.0	330	360	87
100-02-7	4-Nitrophenol	U	1300	1.0	1200	1300	340
121-14-2	2,4-Dinitrotoluene	U	360	1.0	330	360	94
84-66-2	Diethylphthalate	U	360	1.0	330	360	88
7005-72-3	4-Chlorophenyl-phenylether	U	360	1.0	330	360	86
100-01-6	4-Nitroaniline	U	550	1.0	500	550	150
534-52-1	4,6-Dinitro-2-Methylphenol	U	1300	1.0	1200	1300	370
86-30-6	N-Nitrosodiphenylamine	U	730	1.0	660	730	240
101-55-3	4-Bromophenyl-phenylether	U	360	1.0	330	360	94
1912-24-9	Atrazine	U	360	1.0	330	360	100
87-86-5	Pentachlorophenol	U	910	1.0	820	910	260
120-12-7	Anthracene	U	360	1.0	330	360	93
86-74-8	Carbazole	U	550	1.0	500	550	120

lw 3/5/09

KATAHDIN ANALYTICAL SERVICES
Report of Analytical Results

Client: CH2MHill
Project: TO-009 Lejeune
PO No:
Sample Date: 12/17/08
Received Date: 12/19/08
Extraction Date: 12/22/08
Analysis Date: 13-JAN-2009 15:55
Report Date: 01/17/2009
Matrix: SOIL
% Solids: 90.3

Lab ID: SB7343-17
Client ID: MR08-IS159-4-5-08D
SDG: TO9-20
Extracted by: AC
Extraction Method: SW846 3550
Analyst: JLP
Analysis Method: SW846 8270C
Lab Prep Batch: WG59322
Units: ug/Kgdrywt

CAS#	Compound	Flags	Results	DF	PQL	Adj.PQL	Adj.MDL
84-74-2	Di-n-butylphthalate	U	360	1.0	330	360	110
85-68-7	Butylbenzylphthalate	U	360	1.0	330	360	100
91-94-1	3,3'-Dichlorobenzidine	U	550	1.0	500	550	130
218-01-9	Chrysene	U	360	1.0	330	360	100
117-81-7	bis(2-Ethylhexyl)phthalate	U	360	1.0	330	360	110
117-84-0	Di-n-octylphthalate	U	360	1.0	330	360	230
367-12-4	2-Fluorophenol		60%				
13127-88-3	Phenol-D6		69%				
4165-60-0	Nitrobenzene-D5		75%				
321-60-8	2-Fluorobiphenyl		80%				
118-79-6	2,4,6-Tribromophenol		41%				
1718-51-0	Terphenyl-D14		102%				

lw 3/5/09

KATAHDIN ANALYTICAL SERVICES
Report of Analytical Results

Client: CH2MHill
Project: TO-009 Lejeune
PO No:
Sample Date: 12/17/08
Received Date: 12/19/08
Extraction Date: 12/22/08
Analysis Date: 14-JAN-2009 02:25
Report Date: 01/17/2009
Matrix: SOIL
% Solids: 92.0

Lab ID: SB7343-19
Client ID: MR08-SS158-08D
SDG: TO9-20
Extracted by: AC
Extraction Method: SW846 3550
Analyst: JCG
Analysis Method: SW846 8270C
Lab Prep Batch: WG59322
Units: ug/Kgdrywt

CAS#	Compound	Flags	Results	DF	PQL	Adj.PQL	Adj.MDL	
100-52-7	Benzaldehyde	~~U~~ UJ	540	1.0	500	540	130	ICB
108-95-2	Phenol	U	540	1.0	500	540	170	
111-44-4	Bis(2-Chloroethyl)ether	U	360	1.0	330	360	88	
95-57-8	2-Chlorophenol	U	540	1.0	500	540	180	
95-48-7	2-Methylphenol	U	650	1.0	600	650	220	
108-60-1	2,2'-Oxybis(1-chloropropane)	U	360	1.0	330	360	97	
98-86-2	Acetophenone	U	650	1.0	600	650	190	
621-64-7	N-Nitroso-di-n-propylamine	U	360	1.0	330	360	90	
65794-96-9	3&4-Methylphenol	U	650	1.0	600	650	200	
67-72-1	Hexachloroethane	U	360	1.0	330	360	100	
98-95-3	Nitrobenzene	U	360	1.0	330	360	99	
78-59-1	Isophorone	U	360	1.0	330	360	82	
88-75-5	2-Nitrophenol	U	650	1.0	600	650	180	
105-67-9	2,4-Dimethylphenol	~~U~~ UJ	540	1.0	500	540	180	BSL
111-91-1	Bis(2-Chloroethoxy)methane	U	360	1.0	330	360	100	
120-83-2	2,4-Dichlorophenol	U	540	1.0	500	540	160	
106-47-8	4-Chloroaniline	U	540	1.0	500	540	130	
105-60-2	Caprolactam	U	540	1.0	500	540	160	
59-50-7	4-Chloro-3-Methylphenol	U	540	1.0	500	540	180	
88-06-2	2,4,6-Trichlorophenol	U	540	1.0	500	540	170	
95-95-4	2,4,5-Trichlorophenol	U	540	1.0	500	540	170	
91-58-7	2-Chloronaphthalene	U	360	1.0	330	360	94	
92-52-4	1,1'-Biphenyl	U	360	1.0	330	360	79	
88-74-4	2-Nitroaniline	U	540	1.0	500	540	82	
131-11-3	Dimethyl Phthalate	U	360	1.0	330	360	85	
606-20-2	2,6-Dinitrotoluene	U	360	1.0	330	360	86	
208-96-8	Acenaphthylene	U	360	1.0	330	360	76	
99-09-2	3-Nitroaniline	U	540	1.0	500	540	100	
83-32-9	Acenaphthene	U	360	1.0	330	360	71	
51-28-5	2,4-Dinitrophenol	U	1300	1.0	1200	1300	410	
132-64-9	Dibenzofuran	U	360	1.0	330	360	86	
100-02-7	4-Nitrophenol	U	1300	1.0	1200	1300	340	
121-14-2	2,4-Dinitrotoluene	U	360	1.0	330	360	92	
84-66-2	Diethylphthalate	U	360	1.0	330	360	87	
7005-72-3	4-Chlorophenyl-phenylether	U	360	1.0	330	360	85	
100-01-6	4-Nitroaniline	U	540	1.0	500	540	140	
534-52-1	4,6-Dinitro-2-Methylphenol	U	1300	1.0	1200	1300	370	
86-30-6	N-Nitrosodiphenylamine	U	720	1.0	660	720	240	
101-55-3	4-Bromophenyl-phenylether	U	360	1.0	330	360	92	
1912-24-9	Atrazine	U	360	1.0	330	360	99	
87-86-5	Pentachlorophenol	U	890	1.0	820	890	260	
120-12-7	Anthracene	U	360	1.0	330	360	91	
86-74-8	Carbazole	U	540	1.0	500	540	120	

MW 3/5/09

KATAHDIN ANALYTICAL SERVICES
Report of Analytical Results

Client: CH2MHill
Project: TO-009 Lejeune
PO No:
Sample Date: 12/17/08
Received Date: 12/19/08
Extraction Date: 12/22/08
Analysis Date: 14-JAN-2009 02:25
Report Date: 01/17/2009
Matrix: SOIL
% Solids: 92.0

Lab ID: SB7343-19
Client ID: MR08-SS158-08D
SDG: TO9-20
Extracted by: AC
Extraction Method: SW846 3550
Analyst: JCG
Analysis Method: SW846 8270C
Lab Prep Batch: WG59322
Units: ug/Kgdrywt

CAS#	Compound	Flags	Results	DF	PQL	Adj.PQL	Adj.MDL
84-74-2	Di-n-butylphthalate	U	360	1.0	330	360	110
85-68-7	Butylbenzylphthalate	U	360	1.0	330	360	100
91-94-1	3,3'-Dichlorobenzidine	U	540	1.0	500	540	120
218-01-9	Chrysene	U	360	1.0	330	360	100
117-81-7	bis(2-Ethylhexyl)phthalate		410	1.0	330	360	110
117-84-0	Di-n-octylphthalate	U	360	1.0	330	360	230
367-12-4	2-Fluorophenol		61%				
13127-88-3	Phenol-D6		67%				
4165-60-0	Nitrobenzene-D5		76%				
321-60-8	2-Fluorobiphenyl		83%				
118-79-6	2,4,6-Tribromophenol		45%				
1718-51-0	Terphenyl-D14		110%				

MW 3/5/09

11

KATAHDIN ANALYTICAL SERVICES
Report of Analytical Results

Client: CH2MHill
Project: TO-009 Lejeune
PO No:
Sample Date: 12/17/08
Received Date: 12/19/08
Extraction Date: 12/22/08
Analysis Date: 13-JAN-2009 22:52
Report Date: 01/17/2009
Matrix: SOIL
% Solids: 89.2

Lab ID: SB7343-21
Client ID: MR08-IS158-4-5-08D
SDG: TO9-20
Extracted by: AC
Extraction Method: SW846 3550
Analyst: JCG
Analysis Method: SW846 8270C
Lab Prep Batch: WG59322
Units: ug/Kgdrywt

CAS#	Compound	Flags	Results	DF	PQL	Adj.PQL	Adj.MDL	
100-52-7	Benzaldehyde	~~U~~ UJ	560	1.0	500	560	130	ICB
108-95-2	Phenol	U	560	1.0	500	560	170	
111-44-4	Bis(2-Chloroethyl)ether	U	370	1.0	330	370	91	
95-57-8	2-Chlorophenol	U	560	1.0	500	560	180	
95-48-7	2-Methylphenol	U	670	1.0	600	670	220	
108-60-1	2,2'-Oxybis(1-chloropropane)	U	370	1.0	330	370	100	
98-86-2	Acetophenone	U	670	1.0	600	670	200	
621-64-7	N-Nitroso-di-n-propylamine	U	370	1.0	330	370	93	
65794-96-9	3&4-Methylphenol	U	670	1.0	600	670	210	
67-72-1	Hexachloroethane	U	370	1.0	330	370	110	
98-95-3	Nitrobenzene	U	370	1.0	330	370	100	
78-59-1	Isophorone	U	370	1.0	330	370	84	
88-75-5	2-Nitrophenol	U	670	1.0	600	670	190	
105-67-9	2,4-Dimethylphenol	~~U~~ UJ	560	1.0	500	560	180	BSL
111-91-1	Bis(2-Chloroethoxy)methane	U	370	1.0	330	370	110	
120-83-2	2,4-Dichlorophenol	U	560	1.0	500	560	170	
106-47-8	4-Chloroaniline	U	560	1.0	500	560	130	
105-60-2	Caprolactam	U	560	1.0	500	560	160	
59-50-7	4-Chloro-3-Methylphenol	U	560	1.0	500	560	190	
88-06-2	2,4,6-Trichlorophenol	U	560	1.0	500	560	170	
95-95-4	2,4,5-Trichlorophenol	U	560	1.0	500	560	170	
91-58-7	2-Chloronaphthalene	U	370	1.0	330	370	98	
92-52-4	1,1'-Biphenyl	U	370	1.0	330	370	82	
88-74-4	2-Nitroaniline	U	560	1.0	500	560	84	
131-11-3	Dimethyl Phthalate	U	370	1.0	330	370	87	
606-20-2	2,6-Dinitrotoluene	U	370	1.0	330	370	88	
208-96-8	Acenaphthylene	U	370	1.0	330	370	78	
99-09-2	3-Nitroaniline	U	560	1.0	500	560	100	
83-32-9	Acenaphthene	U	370	1.0	330	370	73	
51-28-5	2,4-Dinitrophenol	U	1300	1.0	1200	1300	420	
132-64-9	Dibenzofuran	U	370	1.0	330	370	88	
100-02-7	4-Nitrophenol	U	1300	1.0	1200	1300	350	
121-14-2	2,4-Dinitrotoluene	U	370	1.0	330	370	95	
84-66-2	Diethylphthalate	U	370	1.0	330	370	90	
7005-72-3	4-Chlorophenyl-phenylether	U	370	1.0	330	370	87	
100-01-6	4-Nitroaniline	U	560	1.0	500	560	150	
534-52-1	4,6-Dinitro-2-Methylphenol	U	1300	1.0	1200	1300	380	
86-30-6	N-Nitrosodiphenylamine	U	740	1.0	660	740	240	
101-55-3	4-Bromophenyl-phenylether	U	370	1.0	330	370	95	
1912-24-9	Atrazine	U	370	1.0	330	370	100	
87-86-5	Pentachlorophenol	U	920	1.0	820	920	260	
120-12-7	Anthracene	U	370	1.0	330	370	94	
86-74-8	Carbazole	U	560	1.0	500	560	120	

MW 3/5/09

11

KATAHDIN ANALYTICAL SERVICES
Report of Analytical Results

Client: CH2MHill
Project: TO-009 Lejeune
PO No:
Sample Date: 12/17/08
Received Date: 12/19/08
Extraction Date: 12/22/08
Analysis Date: 13-JAN-2009 22:52
Report Date: 01/17/2009
Matrix: SOIL
% Solids: 89.2

Lab ID: SB7343-21
Client ID: MR08-IS158-4-5-08D
SDG: TO9-20
Extracted by: AC
Extraction Method: SW846 3550
Analyst: JCG
Analysis Method: SW846 8270C
Lab Prep Batch: WG59322
Units: ug/Kgdrywt

CAS#	Compound	Flags	Results	DF	PQL	Adj.PQL	Adj.MDL
84-74-2	Di-n-butylphthalate	U	370	1.0	330	370	110
85-68-7	Butylbenzylphthalate	U	370	1.0	330	370	100
91-94-1	3,3'-Dichlorobenzidine	U	560	1.0	500	560	130
218-01-9	Chrysene	U	370	1.0	330	370	110
117-81-7	bis(2-Ethylhexyl)phthalate	U	370	1.0	330	370	110
117-84-0	Di-n-octylphthalate	U	370	1.0	330	370	240
367-12-4	2-Fluorophenol		57%				
13127-88-3	Phenol-D6		65%				
4165-60-0	Nitrobenzene-D5		64%				
321-60-8	2-Fluorobiphenyl		69%				
118-79-6	2,4,6-Tribromophenol		48%				
1718-51-0	Terphenyl-D14		92%				

lw 3/5/09

KATAHDIN ANALYTICAL SERVICES
Report of Analytical Results

Client: CH2MHill
Project: TO-009 Lejeune
PO No:
Sample Date: 12/17/08
Received Date: 12/19/08
Extraction Date: 12/22/08
Analysis Date: 13-JAN-2009 23:35
Report Date: 01/17/2009
Matrix: SOIL
% Solids: 89.4

Lab ID: SB7343-23
Client ID: MR08-SS157-08D
SDG: TO9-20
Extracted by: AC
Extraction Method: SW846 3550
Analyst: JCG
Analysis Method: SW846 8270C
Lab Prep Batch: WG59322
Units: ug/Kgdrywt

CAS#	Compound	Flags	Results	DF	PQL	Adj.PQL	Adj.MDL	
100-52-7	Benzaldehyde	~~U~~ UJ	560	1.0	500	560	130	ICB
108-95-2	Phenol	~~U~~ UJ	560	1.0	500	560	170	SSL
111-44-4	Bis(2-Chloroethyl)ether	U	370	1.0	330	370	90	
95-57-8	2-Chlorophenol	~~U~~ UJ	560	1.0	500	560	180	SSL
95-48-7	2-Methylphenol	~~U~~ UJ	670	1.0	600	670	220	SSL
108-60-1	2,2'-Oxybis(1-chloropropane)	U	370	1.0	330	370	99	
98-86-2	Acetophenone	U	670	1.0	600	670	200	
621-64-7	N-Nitroso-di-n-propylamine	U	370	1.0	330	370	93	
65794-96-9	3&4-Methylphenol	~~U~~ UJ	670	1.0	600	670	210	SSL
67-72-1	Hexachloroethane	U	370	1.0	330	370	110	
98-95-3	Nitrobenzene	U	370	1.0	330	370	100	
78-59-1	Isophorone	U	370	1.0	330	370	84	
88-75-5	2-Nitrophenol	~~U~~ UJ	670	1.0	600	670	190	SSL
105-67-9	2,4-Dimethylphenol	~~U~~ UJ	560	1.0	500	560	180	BSL
111-91-1	Bis(2-Chloroethoxy)methane	U	370	1.0	330	370	110	
120-83-2	2,4-Dichlorophenol	~~U~~ UJ	560	1.0	500	560	170	SSL
106-47-8	4-Chloroaniline	U	560	1.0	500	560	130	
105-60-2	Caprolactam	U	560	1.0	500	560	160	
59-50-7	4-Chloro-3-Methylphenol	~~U~~ UJ	560	1.0	500	560	180	SSL
88-06-2	2,4,6-Trichlorophenol	U	560	1.0	500	560	170	↓
95-95-4	2,4,5-Trichlorophenol	U	560	1.0	500	560	170	↓
91-58-7	2-Chloronaphthalene	U	370	1.0	330	370	97	
92-52-4	1,1'-Biphenyl	U	370	1.0	330	370	82	
88-74-4	2-Nitroaniline	U	560	1.0	500	560	84	
131-11-3	Dimethyl Phthalate	U	370	1.0	330	370	87	
606-20-2	2,6-Dinitrotoluene	U	370	1.0	330	370	88	
208-96-8	Acenaphthylene	U	370	1.0	330	370	78	
99-09-2	3-Nitroaniline	U	560	1.0	500	560	100	
83-32-9	Acenaphthene	U	370	1.0	330	370	73	
51-28-5	2,4-Dinitrophenol	~~U~~ UJ	1300	1.0	1200	1300	420	SSL
132-64-9	Dibenzofuran	U	370	1.0	330	370	88	
100-02-7	4-Nitrophenol	~~U~~ UJ	1300	1.0	1200	1300	340	SSL
121-14-2	2,4-Dinitrotoluene	U	370	1.0	330	370	95	
84-66-2	Diethylphthalate	U	370	1.0	330	370	89	
7005-72-3	4-Chlorophenyl-phenylether	U	370	1.0	330	370	87	
100-01-6	4-Nitroaniline	U	560	1.0	500	560	150	
534-52-1	4,6-Dinitro-2-Methylphenol	~~U~~ UJ	1300	1.0	1200	1300	380	SSL
86-30-6	N-Nitrosodiphenylamine	U	740	1.0	660	740	240	
101-55-3	4-Bromophenyl-phenylether	U	370	1.0	330	370	95	
1912-24-9	Atrazine	U	370	1.0	330	370	100	
87-86-5	Pentachlorophenol	~~U~~ UJ	920	1.0	820	920	260	SSL
120-12-7	Anthracene	U	370	1.0	330	370	94	
86-74-8	Carbazole	U	560	1.0	500	560	120	

dw 3/5/09

KATAHDIN ANALYTICAL SERVICES
Report of Analytical Results

Client: CH2MHill
Project: TO-009 Lejeune
PO No:
Sample Date: 12/17/08
Received Date: 12/19/08
Extraction Date: 12/22/08
Analysis Date: 13-JAN-2009 23:35
Report Date: 01/17/2009
Matrix: SOIL
% Solids: 89.4

Lab ID: SB7343-23
Client ID: MR08-SS157-08D
SDG: TO9-20
Extracted by: AC
Extraction Method: SW846 3550
Analyst: JCG
Analysis Method: SW846 8270C
Lab Prep Batch: WG59322
Units: ug/Kgdrywt

CAS#	Compound	Flags	Results	DF	PQL	Adj.PQL	Adj.MDL
84-74-2	Di-n-butylphthalate	U	370	1.0	330	370	110
85-68-7	Butylbenzylphthalate	U	370	1.0	330	370	100
91-94-1	3,3'-Dichlorobenzidine	U	560	1.0	500	560	130
218-01-9	Chrysene	U	370	1.0	330	370	110
117-81-7	bis(2-Ethylhexyl)phthalate	U	370	1.0	330	370	110
117-84-0	Di-n-octylphthalate	U	370	1.0	330	370	240
367-12-4	2-Fluorophenol		* 33%				
13127-88-3	Phenol-D6		56%				
4165-60-0	Nitrobenzene-D5		68%				
321-60-8	2-Fluorobiphenyl		74%				
118-79-6	2,4,6-Tribromophenol		* 11%				
1718-51-0	Terphenyl-D14		92%				

MW 3/5/09

12RE

KATAHDIN ANALYTICAL SERVICES
Report of Analytical Results

Client: CH2MHill
Project: TO-009 Lejeune
PO No:
Sample Date: 12/17/08
Received Date: 12/19/08
Extraction Date: 01/14/09
Analysis Date: 15-JAN-2009 23:53
Report Date: 01/17/2009
Matrix: SOIL
% Solids: 89.4

Lab ID: SB7343-23RE
Client ID: MR08-SS157-08D
SDG: TO9-20
Extracted by: AC
Extraction Method: SW846 3550
Analyst: JCG
Analysis Method: SW846 8270C
Lab Prep Batch: WG59785
Units: ug/Kgdrywt

Use original

CAS#	Compound	Flags	Results	DF	PQL	Adj.PQL	Adj.MDL
100-52-7	Benzaldehyde	~~U~~ UJ	560	1.0	500	560	130 HT
108-95-2	Phenol	U	560	1.0	500	560	170
111-44-4	Bis(2-Chloroethyl)ether	U	370	1.0	330	370	90
95-57-8	2-Chlorophenol	U	560	1.0	500	560	180
95-48-7	2-Methylphenol	U	670	1.0	600	670	220
108-60-1	2,2'-Oxybis(1-chloropropane)	U	370	1.0	330	370	99
98-86-2	Acetophenone	U	670	1.0	600	670	200
621-64-7	N-Nitroso-di-n-propylamine	U	370	1.0	330	370	93
65794-96-9	3&4-Methylphenol	U	670	1.0	600	670	210
67-72-1	Hexachloroethane	U	370	1.0	330	370	110
98-95-3	Nitrobenzene	U	370	1.0	330	370	100
78-59-1	Isophorone	U	370	1.0	330	370	84
88-75-5	2-Nitrophenol	U	670	1.0	600	670	190
105-67-9	2,4-Dimethylphenol	U	560	1.0	500	560	180
111-91-1	Bis(2-Chloroethoxy)methane	U	370	1.0	330	370	110
120-83-2	2,4-Dichlorophenol	U	560	1.0	500	560	170
106-47-8	4-Chloroaniline	U	560	1.0	500	560	130
105-60-2	Caprolactam	U	560	1.0	500	560	160
59-50-7	4-Chloro-3-Methylphenol	U	560	1.0	500	560	180
88-06-2	2,4,6-Trichlorophenol	U	560	1.0	500	560	170
95-95-4	2,4,5-Trichlorophenol	U	560	1.0	500	560	170
91-58-7	2-Chloronaphthalene	U	370	1.0	330	370	97
92-52-4	1,1'-Biphenyl	U	370	1.0	330	370	82
88-74-4	2-Nitroaniline	U	560	1.0	500	560	84
131-11-3	Dimethyl Phthalate	U	370	1.0	330	370	87
606-20-2	2,6-Dinitrotoluene	U	370	1.0	330	370	88
208-96-8	Acenaphthylene	U	370	1.0	330	370	78
99-09-2	3-Nitroaniline	U	560	1.0	500	560	100
83-32-9	Acenaphthene	U	370	1.0	330	370	73
51-28-5	2,4-Dinitrophenol	U	1300	1.0	1200	1300	420
132-64-9	Dibenzofuran	U	370	1.0	330	370	88
100-02-7	4-Nitrophenol	U	1300	1.0	1200	1300	340
121-14-2	2,4-Dinitrotoluene	U	370	1.0	330	370	95
84-66-2	Diethylphthalate	U	370	1.0	330	370	89
7005-72-3	4-Chlorophenyl-phenylether	U	370	1.0	330	370	87
100-01-6	4-Nitroaniline	U	560	1.0	500	560	150
534-52-1	4,6-Dinitro-2-Methylphenol	U	1300	1.0	1200	1300	380
86-30-6	N-Nitrosodiphenylamine	U	740	1.0	660	740	240
101-55-3	4-Bromophenyl-phenylether	U	370	1.0	330	370	95
1912-24-9	Atrazine	U	370	1.0	330	370	100
87-86-5	Pentachlorophenol	U	920	1.0	820	920	260
120-12-7	Anthracene	U	370	1.0	330	370	94
86-74-8	Carbazole	U	560	1.0	500	560	120

JW 3/5/09

12RE

KATAHDIN ANALYTICAL SERVICES
Report of Analytical Results

Client: CH2MHill
Project: TO-009 Lejeune
PO No:
Sample Date: 12/17/08
Received Date: 12/19/08
Extraction Date: 01/14/09
Analysis Date: 15-JAN-2009 23:53
Report Date: 01/17/2009
Matrix: SOIL
% Solids: 89.4

Lab ID: SB7343-23RE
Client ID: MR08-SS157-08D
SDG: TO9-20
Extracted by: AC
Extraction Method: SW846 3550
Analyst: JCG
Analysis Method: SW846 8270C
Lab Prep Batch: WG59785
Units: ug/Kgdrywt

Use ORIG. NAK

CAS#	Compound	Flags	Results	DF	PQL	Adj.PQL	Adj.MDL	
84-74-2	Di-n-butylphthalate	U UJ	370	1.0	330	370	110	HT
85-68-7	Butylbenzylphthalate	U	370	1.0	330	370	100	
91-94-1	3,3'-Dichlorobenzidine	U	560	1.0	500	560	130	
218-01-9	Chrysene	U	370	1.0	330	370	110	
117-81-7	bis(2-Ethylhexyl)phthalate	U	370	1.0	330	370	110	
117-84-0	Di-n-octylphthalate	U	370	1.0	330	370	240	
367-12-4	2-Fluorophenol		68%					
13127-88-3	Phenol-D6		66%					
4165-60-0	Nitrobenzene-D5		66%					
321-60-8	2-Fluorobiphenyl		71%					
118-79-6	2,4,6-Tribromophenol		67%					
1718-51-0	Terphenyl-D14		83%					

R RE

RW 3/5/09

KATAHDIN ANALYTICAL SERVICES
Report of Analytical Results

Client: CH2MHill
Project: TO-009 Lejeune
PO No:
Sample Date: 12/17/08
Received Date: 12/19/08
Extraction Date: 12/22/08
Analysis Date: 14-JAN-2009 00:18
Report Date: 01/17/2009
Matrix: SOIL
% Solids: 90.2

Lab ID: SB7343-25
Client ID: MR08-IS157-08D
SDG: TO9-20
Extracted by: AC
Extraction Method: SW846 3550
Analyst: JCG
Analysis Method: SW846 8270C
Lab Prep Batch: WG59322
Units: ug/Kgdrywt

CAS#	Compound	Flags	Results	DF	PQL	Adj.PQL	Adj.MDL	
100-52-7	Benzaldehyde	~~U~~ UJ	550	1.0	500	550	130	JCB
108-95-2	Phenol	U	550	1.0	500	550	170	
111-44-4	Bis(2-Chloroethyl)ether	U	360	1.0	330	360	90	
95-57-8	2-Chlorophenol	U	550	1.0	500	550	180	
95-48-7	2-Methylphenol	U	660	1.0	600	660	220	
108-60-1	2,2'-Oxybis(1-chloropropane)	U	360	1.0	330	360	99	
98-86-2	Acetophenone	U	660	1.0	600	660	200	
621-64-7	N-Nitroso-di-n-propylamine	U	360	1.0	330	360	92	
65794-96-9	3&4-Methylphenol	U	660	1.0	600	660	210	
67-72-1	Hexachloroethane	U	360	1.0	330	360	110	
98-95-3	Nitrobenzene	U	360	1.0	330	360	100	
78-59-1	Isophorone	U	360	1.0	330	360	83	
88-75-5	2-Nitrophenol	U	660	1.0	600	660	180	
105-67-9	2,4-Dimethylphenol	~~U~~ UJ	550	1.0	500	550	180	BSL
111-91-1	Bis(2-Chloroethoxy)methane	U	360	1.0	330	360	110	
120-83-2	2,4-Dichlorophenol	U	550	1.0	500	550	170	
106-47-8	4-Chloroaniline	U	550	1.0	500	550	130	
105-60-2	Caprolactam	U	550	1.0	500	550	160	
59-50-7	4-Chloro-3-Methylphenol	U	550	1.0	500	550	180	
88-06-2	2,4,6-Trichlorophenol	U	550	1.0	500	550	170	
95-95-4	2,4,5-Trichlorophenol	U	550	1.0	500	550	170	
91-58-7	2-Chloronaphthalene	U	360	1.0	330	360	96	
92-52-4	1,1'-Biphenyl	U	360	1.0	330	360	81	
88-74-4	2-Nitroaniline	U	550	1.0	500	550	83	
131-11-3	Dimethyl Phthalate	U	360	1.0	330	360	86	
606-20-2	2,6-Dinitrotoluene	U	360	1.0	330	360	88	
208-96-8	Acenaphthylene	U	360	1.0	330	360	78	
99-09-2	3-Nitroaniline	U	550	1.0	500	550	100	
83-32-9	Acenaphthene	U	360	1.0	330	360	72	
51-28-5	2,4-Dinitrophenol	U	1300	1.0	1200	1300	420	
132-64-9	Dibenzofuran	U	360	1.0	330	360	88	
100-02-7	4-Nitrophenol	U	1300	1.0	1200	1300	340	
121-14-2	2,4-Dinitrotoluene	U	360	1.0	330	360	94	
84-66-2	Diethylphthalate	U	360	1.0	330	360	89	
7005-72-3	4-Chlorophenyl-phenylether	U	360	1.0	330	360	86	
100-01-6	4-Nitroaniline	U	550	1.0	500	550	150	
534-52-1	4,6-Dinitro-2-Methylphenol	U	1300	1.0	1200	1300	370	
86-30-6	N-Nitrosodiphenylamine	U	730	1.0	660	730	240	
101-55-3	4-Bromophenyl-phenylether	U	360	1.0	330	360	94	
1912-24-9	Atrazine	U	360	1.0	330	360	100	
87-86-5	Pentachlorophenol	U	910	1.0	820	910	260	
120-12-7	Anthracene	U	360	1.0	330	360	93	
86-74-8	Carbazole	U	550	1.0	500	550	120	

lw
3/5/09

KATAHDIN ANALYTICAL SERVICES
Report of Analytical Results

Client: CH2MHill
Project: TO-009 Lejeune
PO No:
Sample Date: 12/17/08
Received Date: 12/19/08
Extraction Date: 12/22/08
Analysis Date: 14-JAN-2009 00:18
Report Date: 01/17/2009
Matrix: SOIL
% Solids: 90.2

Lab ID: SB7343-25
Client ID: MR08-IS157-08D
SDG: TO9-20
Extracted by: AC
Extraction Method: SW846 3550
Analyst: JCG
Analysis Method: SW846 8270C
Lab Prep Batch: WG59322
Units: ug/Kgdrywt

CAS#	Compound	Flags	Results	DF	PQL	Adj.PQL	Adj.MDL
84-74-2	Di-n-butylphthalate	U	360	1.0	330	360	110
85-68-7	Butylbenzylphthalate	U	360	1.0	330	360	100
91-94-1	3,3'-Dichlorobenzidine	U	550	1.0	500	550	130
218-01-9	Chrysene	U	360	1.0	330	360	100
117-81-7	bis(2-Ethylhexyl)phthalate	J	120	1.0	330	360	110
117-84-0	Di-n-octylphthalate	U	360	1.0	330	360	230
367-12-4	2-Fluorophenol		58%				
13127-88-3	Phenol-D6		64%				
4165-60-0	Nitrobenzene-D5		63%				
321-60-8	2-Fluorobiphenyl		72%				
118-79-6	2,4,6-Tribromophenol		41%				
1718-51-0	Terphenyl-D14		90%				

lw 3/5/09

KATAHDIN ANALYTICAL SERVICES
Report of Analytical Results

Client: CH2MHill
Project: TO-009 Lejeune
PO No:
Sample Date: 12/17/08
Received Date: 12/19/08
Extraction Date: 12/24/08
Analysis Date: 14-JAN-2009 16:12
Report Date: 01/17/2009
Matrix: SOIL
% Solids: 87.4

Lab ID: SB7343-27
Client ID: MR08-SS181-08D
SDG: TO9-20
Extracted by: AC
Extraction Method: SW846 3550
Analyst: JLP
Analysis Method: SW846 8270C
Lab Prep Batch: WG59397
Units: ug/Kgdrywt

CAS#	Compound	Flags	Results	DF	PQL	Adj.PQL	Adj.MDL	
100-52-7	Benzaldehyde	~~U~~ UJ	570	1.0	500	570	140	JCB
108-95-2	Phenol	U	570	1.0	500	570	180	
111-44-4	Bis(2-Chloroethyl)ether	U	380	1.0	330	380	93	
95-57-8	2-Chlorophenol	U	570	1.0	500	570	190	
95-48-7	2-Methylphenol	U	690	1.0	600	690	230	
108-60-1	2,2'-Oxybis(1-chloropropane)	U	380	1.0	330	380	100	
98-86-2	Acetophenone	U	690	1.0	600	690	200	
621-64-7	N-Nitroso-di-n-propylamine	U	380	1.0	330	380	95	
65794-96-9	3&4-Methylphenol	U	690	1.0	600	690	210	
67-72-1	Hexachloroethane	U	380	1.0	330	380	110	
98-95-3	Nitrobenzene	U	380	1.0	330	380	100	
78-59-1	Isophorone	U	380	1.0	330	380	86	
88-75-5	2-Nitrophenol	U	690	1.0	600	690	190	
105-67-9	2,4-Dimethylphenol	U	570	1.0	500	570	190	
111-91-1	Bis(2-Chloroethoxy)methane	U	380	1.0	330	380	110	
120-83-2	2,4-Dichlorophenol	U	570	1.0	500	570	170	
106-47-8	4-Chloroaniline	U	570	1.0	500	570	140	
105-60-2	Caprolactam	U	570	1.0	500	570	160	
59-50-7	4-Chloro-3-Methylphenol	U	570	1.0	500	570	190	
88-06-2	2,4,6-Trichlorophenol	U	570	1.0	500	570	180	
95-95-4	2,4,5-Trichlorophenol	U	570	1.0	500	570	180	
91-58-7	2-Chloronaphthalene	U	380	1.0	330	380	99	
92-52-4	1,1'-Biphenyl	U	380	1.0	330	380	83	
88-74-4	2-Nitroaniline	U	570	1.0	500	570	86	
131-11-3	Dimethyl Phthalate	U	380	1.0	330	380	89	
606-20-2	2,6-Dinitrotoluene	U	380	1.0	330	380	90	
208-96-8	Acenaphthylene	U	380	1.0	330	380	80	
99-09-2	3-Nitroaniline	U	570	1.0	500	570	110	
83-32-9	Acenaphthene	U	380	1.0	330	380	74	
51-28-5	2,4-Dinitrophenol	U	1400	1.0	1200	1400	430	
132-64-9	Dibenzofuran	U	380	1.0	330	380	90	
100-02-7	4-Nitrophenol	U	1400	1.0	1200	1400	350	
121-14-2	2,4-Dinitrotoluene	U	380	1.0	330	380	97	
84-66-2	Diethylphthalate	U	380	1.0	330	380	91	
7005-72-3	4-Chlorophenyl-phenylether	U	380	1.0	330	380	89	
100-01-6	4-Nitroaniline	~~U~~ UJ	570	1.0	500	570	150	CCH
534-52-1	4,6-Dinitro-2-Methylphenol	U	1400	1.0	1200	1400	380	
86-30-6	N-Nitrosodiphenylamine	U	750	1.0	660	750	250	
101-55-3	4-Bromophenyl-phenylether	U	380	1.0	330	380	97	
1912-24-9	Atrazine	U	380	1.0	330	380	100	
87-86-5	Pentachlorophenol	U	940	1.0	820	940	270	
120-12-7	Anthracene	U	380	1.0	330	380	96	
86-74-8	Carbazole	U	570	1.0	500	570	130	

AW
3/5/09

KATAHDIN ANALYTICAL SERVICES
Report of Analytical Results

Client: CH2MHill
Project: TO-009 Lejeune
PO No:
Sample Date: 12/17/08
Received Date: 12/19/08
Extraction Date: 12/24/08
Analysis Date: 14-JAN-2009 16:12
Report Date: 01/17/2009
Matrix: SOIL
% Solids: 87.4

Lab ID: SB7343-27
Client ID: MR08-SS181-08D
SDG: TO9-20
Extracted by: AC
Extraction Method: SW846 3550
Analyst: JLP
Analysis Method: SW846 8270C
Lab Prep Batch: WG59397
Units: ug/Kgdrywt

CAS#	Compound	Flags	Results	DF	PQL	Adj.PQL	Adj.MDL
84-74-2	Di-n-butylphthalate	U	380	1.0	330	380	120
85-68-7	Butylbenzylphthalate	U	380	1.0	330	380	110
91-94-1	3,3'-Dichlorobenzidine	U	570	1.0	500	570	130
218-01-9	Chrysene	J	200	1.0	330	380	110
117-81-7	bis(2-Ethylhexyl)phthalate	U	380	1.0	330	380	110
117-84-0	Di-n-octylphthalate	U	380	1.0	330	380	240
367-12-4	2-Fluorophenol		71%				
13127-88-3	Phenol-D6		68%				
4165-60-0	Nitrobenzene-D5		70%				
321-60-8	2-Fluorobiphenyl		76%				
118-79-6	2,4,6-Tribromophenol		87%				
1718-51-0	Terphenyl-D14		86%				

MW 3/5/09

KATAHDIN ANALYTICAL SERVICES
Report of Analytical Results

Client: CH2MHill
Project: TO-009 Lejeune
PO No:
Sample Date: 12/17/08
Received Date: 12/19/08
Extraction Date: 12/24/08
Analysis Date: 14-JAN-2009 12:39
Report Date: 01/17/2009
Matrix: SOIL
% Solids: 86.6

Lab ID: SB7343-29
Client ID: MR08-IS181-1-2-08D
SDG: TO9-20
Extracted by: AC
Extraction Method: SW846 3550
Analyst: JLP
Analysis Method: SW846 8270C
Lab Prep Batch: WG59397
Units: ug/Kgdrywt

CAS#	Compound	Flags	Results	DF	PQL	Adj.PQL	Adj.MDL	
100-52-7	Benzaldehyde	~~U~~ UJ	580	1.0	500	580	140	ICB
108-95-2	Phenol	U	580	1.0	500	580	180	
111-44-4	Bis(2-Chloroethyl)ether	U	380	1.0	330	380	94	
95-57-8	2-Chlorophenol	U	580	1.0	500	580	190	
95-48-7	2-Methylphenol	U	690	1.0	600	690	230	
108-60-1	2,2'-Oxybis(1-chloropropane)	U	380	1.0	330	380	100	
98-86-2	Acetophenone	U	690	1.0	600	690	200	
621-64-7	N-Nitroso-di-n-propylamine	U	380	1.0	330	380	96	
65794-96-9	3&4-Methylphenol	U	690	1.0	600	690	220	
67-72-1	Hexachloroethane	U	380	1.0	330	380	110	
98-95-3	Nitrobenzene	U	380	1.0	330	380	100	
78-59-1	Isophorone	U	380	1.0	330	380	87	
88-75-5	2-Nitrophenol	U	690	1.0	600	690	190	
105-67-9	2,4-Dimethylphenol	U	580	1.0	500	580	190	
111-91-1	Bis(2-Chloroethoxy)methane	U	380	1.0	330	380	110	
120-83-2	2,4-Dichlorophenol	U	580	1.0	500	580	170	
106-47-8	4-Chloroaniline	U	580	1.0	500	580	140	
105-60-2	Caprolactam	U	580	1.0	500	580	170	
59-50-7	4-Chloro-3-Methylphenol	U	580	1.0	500	580	190	
88-06-2	2,4,6-Trichlorophenol	U	580	1.0	500	580	180	
95-95-4	2,4,5-Trichlorophenol	U	580	1.0	500	580	180	
91-58-7	2-Chloronaphthalene	U	380	1.0	330	380	100	
92-52-4	1,1'-Biphenyl	U	380	1.0	330	380	84	
88-74-4	2-Nitroaniline	U	580	1.0	500	580	87	
131-11-3	Dimethyl Phthalate	U	380	1.0	330	380	90	
606-20-2	2,6-Dinitrotoluene	U	380	1.0	330	380	91	
208-96-8	Acenaphthylene	U	380	1.0	330	380	81	
99-09-2	3-Nitroaniline	U	580	1.0	500	580	110	
83-32-9	Acenaphthene	U	380	1.0	330	380	75	
51-28-5	2,4-Dinitrophenol	U	1400	1.0	1200	1400	440	
132-64-9	Dibenzofuran	U	380	1.0	330	380	91	
100-02-7	4-Nitrophenol	U	1400	1.0	1200	1400	360	
121-14-2	2,4-Dinitrotoluene	U	380	1.0	330	380	98	
84-66-2	Diethylphthalate	U	380	1.0	330	380	92	
7005-72-3	4-Chlorophenyl-phenylether	U	380	1.0	330	380	90	
100-01-6	4-Nitroaniline	~~U~~ UJ	580	1.0	500	580	150	CCH
534-52-1	4,6-Dinitro-2-Methylphenol	U	1400	1.0	1200	1400	390	
86-30-6	N-Nitrosodiphenylamine	U	760	1.0	660	760	250	
101-55-3	4-Bromophenyl-phenylether	U	380	1.0	330	380	98	
1912-24-9	Atrazine	U	380	1.0	330	380	100	
87-86-5	Pentachlorophenol	U	950	1.0	820	950	270	
120-12-7	Anthracene	U	380	1.0	330	380	97	
86-74-8	Carbazole	U	580	1.0	500	580	130	

LW 3/5/09

KATAHDIN ANALYTICAL SERVICES
Report of Analytical Results

Client: CH2MHill
Project: TO-009 Lejeune
PO No:
Sample Date: 12/17/08
Received Date: 12/19/08
Extraction Date: 12/24/08
Analysis Date: 14-JAN-2009 12:39
Report Date: 01/17/2009
Matrix: SOIL
% Solids: 86.6

Lab ID: SB7343-29
Client ID: MR08-IS181-1-2-08D
SDG: TO9-20
Extracted by: AC
Extraction Method: SW846 3550
Analyst: JLP
Analysis Method: SW846 8270C
Lab Prep Batch: WG59397
Units: ug/Kgdrywt

CAS#	Compound	Flags	Results	DF	PQL	Adj.PQL	Adj.MDL
84-74-2	Di-n-butylphthalate	U	380	1.0	330	380	120
85-68-7	Butylbenzylphthalate	U	380	1.0	330	380	110
91-94-1	3,3'-Dichlorobenzidine	U	580	1.0	500	580	130
218-01-9	Chrysene	U	380	1.0	330	380	110
117-81-7	bis(2-Ethylhexyl)phthalate	U	380	1.0	330	380	110
117-84-0	Di-n-octylphthalate	U	380	1.0	330	380	240
367-12-4	2-Fluorophenol		77%				
13127-88-3	Phenol-D6		77%				
4165-60-0	Nitrobenzene-D5		73%				
321-60-8	2-Fluorobiphenyl		81%				
118-79-6	2,4,6-Tribromophenol		73%				
1718-51-0	Terphenyl-D14		82%				

LW 3/9/09

16

KATAHDIN ANALYTICAL SERVICES
Report of Analytical Results

Client: CH2MHill
Project: TO-009 Lejeune
PO No:
Sample Date: 12/18/08
Received Date: 12/20/08
Extraction Date: 12/24/08
Analysis Date: 14-JAN-2009 03:08
Report Date: 01/17/2009
Matrix: SOIL
% Solids: 82.6

Lab ID: SB7349-1
Client ID: MR08-IS179-1.5-2
SDG: TO9-20
Extracted by: AC
Extraction Method: SW846 3550
Analyst: JCG
Analysis Method: SW846 8270C
Lab Prep Batch: WG59397
Units: ug/Kgdrywt

CAS#	Compound	Flags	Results	DF	PQL	Adj.PQL	Adj.MDL
100-52-7	Benzaldehyde	~~B~~ UJ	600	1.0	500	600	140 ICB
108-95-2	Phenol	U	600	1.0	500	600	190
111-44-4	Bis(2-Chloroethyl)ether	U	400	1.0	330	400	98
95-57-8	2-Chlorophenol	U	600	1.0	500	600	200
95-48-7	2-Methylphenol	U	730	1.0	600	730	240
108-60-1	2,2'-Oxybis(1-chloropropane)	U	400	1.0	330	400	110
98-86-2	Acetophenone	U	730	1.0	600	730	220
621-64-7	N-Nitroso-di-n-propylamine	U	400	1.0	330	400	100
65794-96-9	3&4-Methylphenol	U	730	1.0	600	730	230
67-72-1	Hexachloroethane	U	400	1.0	330	400	120
98-95-3	Nitrobenzene	U	400	1.0	330	400	110
78-59-1	Isophorone	U	400	1.0	330	400	91
88-75-5	2-Nitrophenol	U	730	1.0	600	730	200
105-67-9	2,4-Dimethylphenol	U	600	1.0	500	600	200
111-91-1	Bis(2-Chloroethoxy)methane	U	400	1.0	330	400	120
120-83-2	2,4-Dichlorophenol	U	600	1.0	500	600	180
106-47-8	4-Chloroaniline	U	600	1.0	500	600	140
105-60-2	Caprolactam	U	600	1.0	500	600	170
59-50-7	4-Chloro-3-Methylphenol	U	600	1.0	500	600	200
88-06-2	2,4,6-Trichlorophenol	U	600	1.0	500	600	190
95-95-4	2,4,5-Trichlorophenol	U	600	1.0	500	600	190
91-58-7	2-Chloronaphthalene	U	400	1.0	330	400	100
92-52-4	1,1'-Biphenyl	U	400	1.0	330	400	88
88-74-4	2-Nitroaniline	U	600	1.0	500	600	91
131-11-3	Dimethyl Phthalate	U	400	1.0	330	400	94
606-20-2	2,6-Dinitrotoluene	U	400	1.0	330	400	96
208-96-8	Acenaphthylene	U	400	1.0	330	400	85
99-09-2	3-Nitroaniline	U	600	1.0	500	600	110
83-32-9	Acenaphthene	U	400	1.0	330	400	79
51-28-5	2,4-Dinitrophenol	U	1400	1.0	1200	1400	460
132-64-9	Dibenzofuran	U	400	1.0	330	400	96
100-02-7	4-Nitrophenol	U	1400	1.0	1200	1400	370
121-14-2	2,4-Dinitrotoluene	U	400	1.0	330	400	100
84-66-2	Diethylphthalate	U	400	1.0	330	400	97
7005-72-3	4-Chlorophenyl-phenylether	U	400	1.0	330	400	94
100-01-6	4-Nitroaniline	U	600	1.0	500	600	160
534-52-1	4,6-Dinitro-2-Methylphenol	U	1400	1.0	1200	1400	410
86-30-6	N-Nitrosodiphenylamine	U	800	1.0	660	800	260
101-55-3	4-Bromophenyl-phenylether	U	400	1.0	330	400	100
1912-24-9	Atrazine	U	400	1.0	330	400	110
87-86-5	Pentachlorophenol	U	990	1.0	820	990	290
120-12-7	Anthracene	U	400	1.0	330	400	100
86-74-8	Carbazole	U	600	1.0	500	600	130

LW 3/5/09

16

KATAHDIN ANALYTICAL SERVICES
Report of Analytical Results

Client: CH2MHill
Project: TO-009 Lejeune
PO No:
Sample Date: 12/18/08
Received Date: 12/20/08
Extraction Date: 12/24/08
Analysis Date: 14-JAN-2009 03:08
Report Date: 01/17/2009
Matrix: SOIL
% Solids: 82.6

Lab ID: SB7349-1
Client ID: MR08-IS179-1.5-2
SDG: TO9-20
Extracted by: AC
Extraction Method: SW846 3550
Analyst: JCG
Analysis Method: SW846 8270C
Lab Prep Batch: WG59397
Units: ug/Kgdrywt

CAS#	Compound	Flags	Results	DF	PQL	Adj.PQL	Adj.MDL
84-74-2	Di-n-butylphthalate	U	400	1.0	330	400	120
85-68-7	Butylbenzylphthalate	U	400	1.0	330	400	110
91-94-1	3,3'-Dichlorobenzidine	U	600	1.0	500	600	140
218-01-9	Chrysene	U	400	1.0	330	400	120
117-81-7	bis(2-Ethylhexyl)phthalate	U	400	1.0	330	400	120
117-84-0	Di-n-octylphthalate	U	400	1.0	330	400	260
367-12-4	2-Fluorophenol		68%				
13127-88-3	Phenol-D6		68%				
4165-60-0	Nitrobenzene-D5		62%				
321-60-8	2-Fluorobiphenyl		74%				
118-79-6	2,4,6-Tribromophenol		62%				
1718-51-0	Terphenyl-D14		100%				

LW
3/5/09

KATAHDIN ANALYTICAL SERVICES
Report of Analytical Results

Client: CH2MHill
Project: TO-009 Lejeune
PO No:
Sample Date: 12/18/08
Received Date: 12/20/08
Extraction Date: 12/24/08
Analysis Date: 15-JAN-2009 03:24
Report Date: 01/17/2009
Matrix: SOIL
% Solids: 92.8

Lab ID: SB7349-3
Client ID: MR08-SS179-08D
SDG: TO9-20
Extracted by: AC
Extraction Method: SW846 3550
Analyst: JCG
Analysis Method: SW846 8270C
Lab Prep Batch: WG59397
Units: ug/Kgdrywt

CAS#	Compound	Flags	Results	DF	PQL	Adj.PQL	Adj.MDL
100-52-7	Benzaldehyde	~~B~~ UJ	540	1.0	500	540	130 JCB
108-95-2	Phenol	U	540	1.0	500	540	170
111-44-4	Bis(2-Chloroethyl)ether	U	360	1.0	330	360	87
95-57-8	2-Chlorophenol	U	540	1.0	500	540	180
95-48-7	2-Methylphenol	U	650	1.0	600	650	220
108-60-1	2,2'-Oxybis(1-chloropropane)	U	360	1.0	330	360	96
98-86-2	Acetophenone	U	650	1.0	600	650	190
621-64-7	N-Nitroso-di-n-propylamine	U	360	1.0	330	360	89
65794-96-9	3&4-Methylphenol	U	650	1.0	600	650	200
67-72-1	Hexachloroethane	U	360	1.0	330	360	100
98-95-3	Nitrobenzene	U	360	1.0	330	360	98
78-59-1	Isophorone	U	360	1.0	330	360	81
88-75-5	2-Nitrophenol	U	650	1.0	600	650	180
105-67-9	2,4-Dimethylphenol	U	540	1.0	500	540	180
111-91-1	Bis(2-Chloroethoxy)methane	U	360	1.0	330	360	100
120-83-2	2,4-Dichlorophenol	U	540	1.0	500	540	160
106-47-8	4-Chloroaniline	U	540	1.0	500	540	130
105-60-2	Caprolactam	U	540	1.0	500	540	160
59-50-7	4-Chloro-3-Methylphenol	U	540	1.0	500	540	180
88-06-2	2,4,6-Trichlorophenol	U	540	1.0	500	540	170
95-95-4	2,4,5-Trichlorophenol	U	540	1.0	500	540	170
91-58-7	2-Chloronaphthalene	U	360	1.0	330	360	94
92-52-4	1,1'-Biphenyl	U	360	1.0	330	360	79
88-74-4	2-Nitroaniline	U	540	1.0	500	540	81
131-11-3	Dimethyl Phthalate	U	360	1.0	330	360	84
606-20-2	2,6-Dinitrotoluene	U	360	1.0	330	360	85
208-96-8	Acenaphthylene	U	360	1.0	330	360	75
99-09-2	3-Nitroaniline	U	540	1.0	500	540	100
83-32-9	Acenaphthene	U	360	1.0	330	360	70
51-28-5	2,4-Dinitrophenol	U	1300	1.0	1200	1300	410
132-64-9	Dibenzofuran	U	360	1.0	330	360	85
100-02-7	4-Nitrophenol	U	1300	1.0	1200	1300	330
121-14-2	2,4-Dinitrotoluene	U	360	1.0	330	360	92
84-66-2	Diethylphthalate	U	360	1.0	330	360	86
7005-72-3	4-Chlorophenyl-phenylether	U	360	1.0	330	360	84
100-01-6	4-Nitroaniline	U	540	1.0	500	540	140
534-52-1	4,6-Dinitro-2-Methylphenol	U	1300	1.0	1200	1300	360
86-30-6	N-Nitrosodiphenylamine	U	710	1.0	660	710	240
101-55-3	4-Bromophenyl-phenylether	U	360	1.0	330	360	92
1912-24-9	Atrazine	U	360	1.0	330	360	98
87-86-5	Pentachlorophenol	U	880	1.0	820	880	260
120-12-7	Anthracene	U	360	1.0	330	360	90
86-74-8	Carbazole	U	540	1.0	500	540	120

MW 3/5/09

KATAHDIN ANALYTICAL SERVICES
Report of Analytical Results

Client: CH2MHill
Project: TO-009 Lejeune
PO No:
Sample Date: 12/18/08
Received Date: 12/20/08
Extraction Date: 12/24/08
Analysis Date: 15-JAN-2009 03:24
Report Date: 01/17/2009
Matrix: SOIL
% Solids: 92.8

Lab ID: SB7349-3
Client ID: MR08-SS179-08D
SDG: TO9-20
Extracted by: AC
Extraction Method: SW846 3550
Analyst: JCG
Analysis Method: SW846 8270C
Lab Prep Batch: WG59397
Units: ug/Kgdrywt

CAS#	Compound	Flags	Results	DF	PQL	Adj.PQL	Adj.MDL
84-74-2	Di-n-butylphthalate	U	360	1.0	330	360	110
85-68-7	Butylbenzylphthalate	U	360	1.0	330	360	100
91-94-1	3,3'-Dichlorobenzidine	U	540	1.0	500	540	120
218-01-9	Chrysene	J	140	1.0	330	360	100
117-81-7	bis(2-Ethylhexyl)phthalate	U	360	1.0	330	360	100
117-84-0	Di-n-octylphthalate	U	360	1.0	330	360	230
367-12-4	2-Fluorophenol		82%				
13127-88-3	Phenol-D6		82%				
4165-60-0	Nitrobenzene-D5		76%				
321-60-8	2-Fluorobiphenyl		86%				
118-79-6	2,4,6-Tribromophenol		88%				
1718-51-0	Terphenyl-D14		98%				

lw
3/5/09

KATAHDIN ANALYTICAL SERVICES
Report of Analytical Results

Client: CH2MHill
Project: TO-009 Lejeune
PO No:
Sample Date: 12/18/08
Received Date: 12/20/08
Extraction Date: 12/24/08
Analysis Date: 14-JAN-2009 03:50
Report Date: 01/17/2009
Matrix: SOIL
% Solids: 89.2

Lab ID: SB7349-5
Client ID: MR08-IS160-5-6-08D
SDG: TO9-20
Extracted by: AC
Extraction Method: SW846 3550
Analyst: JCG
Analysis Method: SW846 8270C
Lab Prep Batch: WG59397
Units: ug/Kgdrywt

CAS#	Compound	Flags	Results	DF	PQL	Adj.PQL	Adj.MDL
100-52-7	Benzaldehyde	~~U~~ UJ	560	1.0	500	560	130 JCB
108-95-2	Phenol	U	560	1.0	500	560	170
111-44-4	Bis(2-Chloroethyl)ether	U	370	1.0	330	370	91
95-57-8	2-Chlorophenol	U	560	1.0	500	560	180
95-48-7	2-Methylphenol	U	670	1.0	600	670	220
108-60-1	2,2'-Oxybis(1-chloropropane)	U	370	1.0	330	370	100
98-86-2	Acetophenone	U	670	1.0	600	670	200
621-64-7	N-Nitroso-di-n-propylamine	U	370	1.0	330	370	93
65794-96-9	3&4-Methylphenol	U	670	1.0	600	670	210
67-72-1	Hexachloroethane	U	370	1.0	330	370	110
98-95-3	Nitrobenzene	U	370	1.0	330	370	100
78-59-1	Isophorone	U	370	1.0	330	370	84
88-75-5	2-Nitrophenol	U	670	1.0	600	670	190
105-67-9	2,4-Dimethylphenol	U	560	1.0	500	560	180
111-91-1	Bis(2-Chloroethoxy)methane	U	370	1.0	330	370	110
120-83-2	2,4-Dichlorophenol	U	560	1.0	500	560	170
106-47-8	4-Chloroaniline	U	560	1.0	500	560	130
105-60-2	Caprolactam	U	560	1.0	500	560	160
59-50-7	4-Chloro-3-Methylphenol	U	560	1.0	500	560	190
88-06-2	2,4,6-Trichlorophenol	U	560	1.0	500	560	170
95-95-4	2,4,5-Trichlorophenol	U	560	1.0	500	560	170
91-58-7	2-Chloronaphthalene	U	370	1.0	330	370	98
92-52-4	1,1'-Biphenyl	U	370	1.0	330	370	82
88-74-4	2-Nitroaniline	U	560	1.0	500	560	84
131-11-3	Dimethyl Phthalate	U	370	1.0	330	370	87
606-20-2	2,6-Dinitrotoluene	U	370	1.0	330	370	88
208-96-8	Acenaphthylene	U	370	1.0	330	370	78
99-09-2	3-Nitroaniline	U	560	1.0	500	560	100
83-32-9	Acenaphthene	U	370	1.0	330	370	73
51-28-5	2,4-Dinitrophenol	U	1300	1.0	1200	1300	420
132-64-9	Dibenzofuran	U	370	1.0	330	370	88
100-02-7	4-Nitrophenol	U	1300	1.0	1200	1300	350
121-14-2	2,4-Dinitrotoluene	U	370	1.0	330	370	95
84-66-2	Diethylphthalate	U	370	1.0	330	370	90
7005-72-3	4-Chlorophenyl-phenylether	U	370	1.0	330	370	87
100-01-6	4-Nitroaniline	U	560	1.0	500	560	150
534-52-1	4,6-Dinitro-2-Methylphenol	U	1300	1.0	1200	1300	380
86-30-6	N-Nitrosodiphenylamine	U	740	1.0	660	740	240
101-55-3	4-Bromophenyl-phenylether	U	370	1.0	330	370	95
1912-24-9	Atrazine	U	370	1.0	330	370	100
87-86-5	Pentachlorophenol	U	920	1.0	820	920	260
120-12-7	Anthracene	U	370	1.0	330	370	94
86-74-8	Carbazole	U	560	1.0	500	560	120

lw 3/5/09

KATAHDIN ANALYTICAL SERVICES
Report of Analytical Results

Client: CH2MHill
Project: TO-009 Lejeune
PO No:
Sample Date: 12/18/08
Received Date: 12/20/08
Extraction Date: 12/24/08
Analysis Date: 14-JAN-2009 03:50
Report Date: 01/17/2009
Matrix: SOIL
% Solids: 89.2

Lab ID: SB7349-5
Client ID: MR08-IS160-5-6-08D
SDG: TO9-20
Extracted by: AC
Extraction Method: SW846 3550
Analyst: JCG
Analysis Method: SW846 8270C
Lab Prep Batch: WG59397
Units: ug/Kgdrywt

CAS#	Compound	Flags	Results	DF	PQL	Adj.PQL	Adj.MDL
84-74-2	Di-n-butylphthalate	U	370	1.0	330	370	110
85-68-7	Butylbenzylphthalate	U	370	1.0	330	370	100
91-94-1	3,3'-Dichlorobenzidine	U	560	1.0	500	560	130
218-01-9	Chrysene	U	370	1.0	330	370	110
117-81-7	bis(2-Ethylhexyl)phthalate	U	370	1.0	330	370	110
117-84-0	Di-n-octylphthalate	U	370	1.0	330	370	240
367-12-4	2-Fluorophenol		70%				
13127-88-3	Phenol-D6		72%				
4165-60-0	Nitrobenzene-D5		73%				
321-60-8	2-Fluorobiphenyl		79%				
118-79-6	2,4,6-Tribromophenol		63%				
1718-51-0	Terphenyl-D14		109%				

UW
3/5/09

KATAHDIN ANALYTICAL SERVICES
Report of Analytical Results

Client: CH2MHill
Project: TO-009 Lejeune
PO No:
Sample Date: 12/18/08
Received Date: 12/20/08
Extraction Date: 12/24/08
Analysis Date: 14-JAN-2009 04:32
Report Date: 01/17/2009
Matrix: SOIL
% Solids: 82.5

Lab ID: SB7349-7
Client ID: MR08-SS160-08D
SDG: TO9-20
Extracted by: AC
Extraction Method: SW846 3550
Analyst: JCG
Analysis Method: SW846 8270C
Lab Prep Batch: WG59397
Units: ug/Kgdrywt

CAS#	Compound	Flags	Results	DF	PQL	Adj.PQL	Adj.MDL
100-52-7	Benzaldehyde	~~U~~ UJ	610	1.0	500	610	140 JCB
108-95-2	Phenol	U	610	1.0	500	610	190
111-44-4	Bis(2-Chloroethyl)ether	U	400	1.0	330	400	98
95-57-8	2-Chlorophenol	U	610	1.0	500	610	200
95-48-7	2-Methylphenol	U	730	1.0	600	730	240
108-60-1	2,2'-Oxybis(1-chloropropane)	U	400	1.0	330	400	110
98-86-2	Acetophenone	U	730	1.0	600	730	220
621-64-7	N-Nitroso-di-n-propylamine	U	400	1.0	330	400	100
65794-96-9	3&4-Methylphenol	U	730	1.0	600	730	230
67-72-1	Hexachloroethane	U	400	1.0	330	400	120
98-95-3	Nitrobenzene	U	400	1.0	330	400	110
78-59-1	Isophorone	U	400	1.0	330	400	91
88-75-5	2-Nitrophenol	U	730	1.0	600	730	200
105-67-9	2,4-Dimethylphenol	U	610	1.0	500	610	200
111-91-1	Bis(2-Chloroethoxy)methane	U	400	1.0	330	400	120
120-83-2	2,4-Dichlorophenol	U	610	1.0	500	610	180
106-47-8	4-Chloroaniline	U	610	1.0	500	610	140
105-60-2	Caprolactam	U	610	1.0	500	610	170
59-50-7	4-Chloro-3-Methylphenol	U	610	1.0	500	610	200
88-06-2	2,4,6-Trichlorophenol	U	610	1.0	500	610	190
95-95-4	2,4,5-Trichlorophenol	U	610	1.0	500	610	190
91-58-7	2-Chloronaphthalene	U	400	1.0	330	400	100
92-52-4	1,1'-Biphenyl	U	400	1.0	330	400	88
88-74-4	2-Nitroaniline	U	610	1.0	500	610	91
131-11-3	Dimethyl Phthalate	U	400	1.0	330	400	94
606-20-2	2,6-Dinitrotoluene	U	400	1.0	330	400	96
208-96-8	Acenaphthylene	U	400	1.0	330	400	85
99-09-2	3-Nitroaniline	U	610	1.0	500	610	110
83-32-9	Acenaphthene	U	400	1.0	330	400	79
51-28-5	2,4-Dinitrophenol	U	1400	1.0	1200	1400	460
132-64-9	Dibenzofuran	U	400	1.0	330	400	96
100-02-7	4-Nitrophenol	U	1400	1.0	1200	1400	370
121-14-2	2,4-Dinitrotoluene	U	400	1.0	330	400	100
84-66-2	Diethylphthalate	U	400	1.0	330	400	97
7005-72-3	4-Chlorophenyl-phenylether	U	400	1.0	330	400	94
100-01-6	4-Nitroaniline	U	610	1.0	500	610	160
534-52-1	4,6-Dinitro-2-Methylphenol	U	1400	1.0	1200	1400	410
86-30-6	N-Nitrosodiphenylamine	U	800	1.0	660	800	260
101-55-3	4-Bromophenyl-phenylether	U	400	1.0	330	400	100
1912-24-9	Atrazine	U	400	1.0	330	400	110
87-86-5	Pentachlorophenol	U	990	1.0	820	990	290
120-12-7	Anthracene	U	400	1.0	330	400	100
86-74-8	Carbazole	U	610	1.0	500	610	130

lw 3/4/09

KATAHDIN ANALYTICAL SERVICES
Report of Analytical Results

Client: CH2MHill
Project: TO-009 Lejeune
PO No:
Sample Date: 12/18/08
Received Date: 12/20/08
Extraction Date: 12/24/08
Analysis Date: 14-JAN-2009 04:32
Report Date: 01/17/2009
Matrix: SOIL
% Solids: 82.5

Lab ID: SB7349-7
Client ID: MR08-SS160-08D
SDG: TO9-20
Extracted by: AC
Extraction Method: SW846 3550
Analyst: JCG
Analysis Method: SW846 8270C
Lab Prep Batch: WG59397
Units: ug/Kgdrywt

CAS#	Compound	Flags	Results	DF	PQL	Adj.PQL	Adj.MDL
84-74-2	Di-n-butylphthalate	U	400	1.0	330	400	120
85-68-7	Butylbenzylphthalate	U	400	1.0	330	400	110
91-94-1	3,3'-Dichlorobenzidine	U	610	1.0	500	610	140
218-01-9	Chrysene	U	400	1.0	330	400	120
117-81-7	bis(2-Ethylhexyl)phthalate	U	400	1.0	330	400	120
117-84-0	Di-n-octylphthalate	U	400	1.0	330	400	260
367-12-4	2-Fluorophenol		62%				
13127-88-3	Phenol-D6		64%				
4165-60-0	Nitrobenzene-D5		60%				
321-60-8	2-Fluorobiphenyl		67%				
118-79-6	2,4,6-Tribromophenol		64%				
1718-51-0	Terphenyl-D14		98%				

MW 7/5/09

KATAHDIN ANALYTICAL SERVICES
Report of Analytical Results

Client: CH2MHill
Project: TO-009 Lejeune
PO No:
Sample Date: 12/18/08
Received Date: 12/20/08
Extraction Date: 12/24/08
Analysis Date: 14-JAN-2009 11:57
Report Date: 01/17/2009
Matrix: SOIL
% Solids: 83.9

Lab ID: SB7349-9
Client ID: MR08-IS155-1-2-08D
SDG: TO9-20
Extracted by: AC
Extraction Method: SW846 3550
Analyst: JLP
Analysis Method: SW846 8270C
Lab Prep Batch: WG59397
Units: ug/Kgdrywt

CAS#	Compound	Flags	Results	DF	PQL	Adj.PQL	Adj.MDL	
100-52-7	Benzaldehyde	~~U~~ UJ	600	1.0	500	600	140	ICB
108-95-2	Phenol	U	600	1.0	500	600	180	
111-44-4	Bis(2-Chloroethyl)ether	U	390	1.0	330	390	96	
95-57-8	2-Chlorophenol	U	600	1.0	500	600	200	
95-48-7	2-Methylphenol	U	720	1.0	600	720	240	
108-60-1	2,2'-Oxybis(1-chloropropane)	U	390	1.0	330	390	110	
98-86-2	Acetophenone	U	720	1.0	600	720	210	
621-64-7	N-Nitroso-di-n-propylamine	U	390	1.0	330	390	99	
65794-96-9	3&4-Methylphenol	U	720	1.0	600	720	220	
67-72-1	Hexachloroethane	U	390	1.0	330	390	110	
98-95-3	Nitrobenzene	U	390	1.0	330	390	110	
78-59-1	Isophorone	U	390	1.0	330	390	89	
88-75-5	2-Nitrophenol	U	720	1.0	600	720	200	
105-67-9	2,4-Dimethylphenol	U	600	1.0	500	600	200	
111-91-1	Bis(2-Chloroethoxy)methane	U	390	1.0	330	390	110	
120-83-2	2,4-Dichlorophenol	U	600	1.0	500	600	180	
106-47-8	4-Chloroaniline	U	600	1.0	500	600	140	
105-60-2	Caprolactam	U	600	1.0	500	600	170	
59-50-7	4-Chloro-3-Methylphenol	U	600	1.0	500	600	200	
88-06-2	2,4,6-Trichlorophenol	U	600	1.0	500	600	180	
95-95-4	2,4,5-Trichlorophenol	U	600	1.0	500	600	180	
91-58-7	2-Chloronaphthalene	U	390	1.0	330	390	100	
92-52-4	1,1'-Biphenyl	U	390	1.0	330	390	87	
88-74-4	2-Nitroaniline	U	600	1.0	500	600	89	
131-11-3	Dimethyl Phthalate	U	390	1.0	330	390	93	
606-20-2	2,6-Dinitrotoluene	U	390	1.0	330	390	94	
208-96-8	Acenaphthylene	U	390	1.0	330	390	83	
99-09-2	3-Nitroaniline	U	600	1.0	500	600	110	
83-32-9	Acenaphthene	U	390	1.0	330	390	77	
51-28-5	2,4-Dinitrophenol	U	1400	1.0	1200	1400	450	
132-64-9	Dibenzofuran	U	390	1.0	330	390	94	
100-02-7	4-Nitrophenol	U	1400	1.0	1200	1400	370	
121-14-2	2,4-Dinitrotoluene	U	390	1.0	330	390	100	
84-66-2	Diethylphthalate	U	390	1.0	330	390	95	
7005-72-3	4-Chlorophenyl-phenylether	U	390	1.0	330	390	93	
100-01-6	4-Nitroaniline	~~U~~ UJ	600	1.0	500	600	160	CCH
534-52-1	4,6-Dinitro-2-Methylphenol	U	1400	1.0	1200	1400	400	
86-30-6	N-Nitrosodiphenylamine	U	790	1.0	660	790	260	
101-55-3	4-Bromophenyl-phenylether	U	390	1.0	330	390	100	
1912-24-9	Atrazine	U	390	1.0	330	390	110	
87-86-5	Pentachlorophenol	U	980	1.0	820	980	280	
120-12-7	Anthracene	U	390	1.0	330	390	100	
86-74-8	Carbazole	U	600	1.0	500	600	130	

NW 3/5/09

KATAHDIN ANALYTICAL SERVICES
Report of Analytical Results

Client: CH2MHill
Project: TO-009 Lejeune
PO No:
Sample Date: 12/18/08
Received Date: 12/20/08
Extraction Date: 12/24/08
Analysis Date: 14-JAN-2009 11:57
Report Date: 01/17/2009
Matrix: SOIL
% Solids: 83.9

Lab ID: SB7349-9
Client ID: MR08-IS155-1-2-08D
SDG: TO9-20
Extracted by: AC
Extraction Method: SW846 3550
Analyst: JLP
Analysis Method: SW846 8270C
Lab Prep Batch: WG59397
Units: ug/Kgdrywt

CAS#	Compound	Flags	Results	DF	PQL	Adj.PQL	Adj.MDL
84-74-2	Di-n-butylphthalate	U	390	1.0	330	390	120
85-68-7	Butylbenzylphthalate	U	390	1.0	330	390	110
91-94-1	3,3'-Dichlorobenzidine	U	600	1.0	500	600	140
218-01-9	Chrysene	U	390	1.0	330	390	110
117-81-7	bis(2-Ethylhexyl)phthalate	U	390	1.0	330	390	120
117-84-0	Di-n-octylphthalate	U	390	1.0	330	390	250
367-12-4	2-Fluorophenol		62%				
13127-88-3	Phenol-D6		63%				
4165-60-0	Nitrobenzene-D5		55%				
321-60-8	2-Fluorobiphenyl		61%				
118-79-6	2,4,6-Tribromophenol		69%				
1718-51-0	Terphenyl-D14		71%				

lw
2/5/09

ENVIRONMENTAL
Data Services, Inc.

POLYNUCLEAR AROMATIC COMPOUNDS BY 8270SIM

USEPA Region IV - Level IV Review

Site: MCB Camp Lejeune, TO-09 SDG #: TO9-21

Client: CH2M HILL, Inc., Virginia Beach, Virginia Date: March 5, 2009

Laboratory: Katahdin Analytical Services, Scarborough, Maine Reviewer: Nancy Weaver

EDS ID	Client Sample ID	Laboratory Sample ID	Matrix
1	MR08-SS155-08D	SB7350-2	Soil
2	MR08-IS136-1-2-08D	SB7350-4	Soil
3	MR08-SS136-08D	SB7350-6	Soil
4	MR08-SS137-08D	SB7350-8	Soil
5	MR08-IS137-2.5-3.5-08D	SB7350-10	Soil
6	MR08-SS154-08D	SB7350-12	Soil
6DL	MR08-SS154-08DDL	SB7350-12DL	Soil
7	MR08-SS154D-08D	SB7350-14	Soil
7DL	MR08-SS154D-08DDL	SB7350-14DL	Soil
8	MR08-IS154-1-1.5	SB7350-16	Soil
9	MR08-IS154D-1-1.5	SB7350-18	Soil
10	MR08-SS161-08D	SB7350-20	Soil
10DL	MR08-SS161-08DDL	SB7350-20DL	Soil
11	MR08-IS161-1-1.5-08D	SB7350-22	Soil
12	MR08-SS178-08D	SB7350-24	Soil
13	MR08-SS178D-08D	SB7350-26	Soil
14	MR08-IS178-4-5-08D	SB7350-28	Soil
15	MR08-IS178D-4-5-08D	SB7350-30	Soil
16	MR08-SS177-08D	SB7350-32	Soil
17	MR08-IS177-2-3-08D	SB7350-34	Soil
18	MR08-SS176-08D	SB7350-36	Soil
18DL	MR08-SS176-08DDL	SB7350-36DL	Soil
19	MR08-IS176-4-5-08D	SB7350-38	Soil
20	MR08-SS163-08D	SB7350-40	Soil

The USEPA "Contract Laboratory Program National Functional Guidelines for Organic Data Review," October 1999, and professional judgement were used in evaluating the data in this summary report.

Holding Times - All samples were extracted within 14 days for soil samples and analyzed within 40 days for all samples.

GC/MS Tuning - All of the DFTPP tunes in the initial and continuing calibrations met the percent relative abundance criteria.

Initial Calibration - The initial calibrations exhibited acceptable %RSD and mean RRF values.

Continuing Calibration - The continuing calibrations exhibited acceptable %D and RRF values except the following.

CCAL Date	Compound	%D/RRF	Qualifier	Affected Samples
01/11/09	Indeno (1,2,3-cd) pyrene	33.61%	J/UJ	2, 5, 8
	Benzo (g,h,i) perylene	25.63%	J/UJ	2, 5, 8
	Hexachlorobutadiene	35.38%	J/UJ	2, 5, 8
	Phenanthrene	27.17%	J/UJ	2, 5, 8
	Benzo (a) anthracene	32.29%	J/UJ	2, 5, 8
	Benzo (b) fluoranthene	32.29%	J/UJ	2, 5, 8
01/12/09	Naphthalene	30.74%	J/UJ	3, 4, 6, 7, 9-11
	2-Methylnaphthalene	25.87%	J/UJ	3, 4, 6, 7, 9-11
01/13/09	2-Methylnaphthalene	25.73%	J/UJ	6DL, 12
	Fluoranthene	25.43%	J/UJ	6DL, 12
	Indeno (1,2,3-cd) pyrene	29.24%	J/UJ	6DL, 12
	Benzo (g,h,i) perylene	33.14%	J/UJ	6DL, 12
	Hexachlorocyclopentadiene	50.72%	J/UJ	6DL, 12
01/14/09	Benzo (b) fluoranthene	30.76%	J/UJ	1
01/15/09	Naphthalene	36.44%	J/UJ	13-20
	Benzo (a) anthracene	53.27%	J/UJ	13-20
	Hexachlorobutadiene	33.61%	J/UJ	13-20
	Hexachlorocyclopentadiene	77.62%	J/UJ	13-20
01/16/09	Naphthalene	43.38%	J/UJ	18DL
	Fluoranthene	26.98%	J/UJ	18DL
	Hexachlorobutadiene	88.33%	J/UJ	18DL

Surrogates - All samples exhibited acceptable surrogate recoveries except the following.

Sample ID	Surrogate	%R	Qualifier
16	S2-2,4-Dibromophenol	27%	None - Acids not reported
	Fluorene-d10	32%	None for 1 out

MS/MSD - A MS/MSD sample was not analyzed.

Laboratory Control Sample - The LCS samples exhibited acceptable %R values except the following.

LCS ID	Compound	%R	Qualifier	Affected Samples
WG59398-LCS	Pyrene	132%	J	3, 4, 8, 9, 11

LCS ID	Compound	%R	Qualifier	Affected Samples
WG59398-LCS	Benzo (k) fluoranthene	150%	J	3, 4, 8, 9, 11
	Benzo (a) pyrene	119%	J	3, 4, 8, 9, 11
WG59447-LCS	2-Methylnaphthalene	95%	J	18, 20

Internal Standard (IS) Area Performance - All internal standards met response and retention time (RT) criteria.

Method Blank - The method blanks were free of contamination.

Field, Equipment Blank - Field QC results are summarized below.

Blank ID	Compound	Conc. ug/L	Action Level ug/kg	Qualifier	Affected Samples
MR08-FB12192008	None - ND	-	-	-	-
MR08-EB0112182009	Hexachlorocyclopentadiene	0.11	9.2	None	All ND
MR08-EB01-121908	None - ND	-	-	-	-

Field Duplicates - Field duplicate results are summarized below.

Compound	MR08-SS154-08D ug/kg	MR08-SS154D-08D ug/kg	RPD	Qualifier
Naphthalene	4.7	4.8	2%	None
2-Methylnaphthalene	6.0	5.5	9%	None
Fluorene	6.8	7.5	10%	None
Phenanthrene	510	590	15%	None
Fluoranthene	2000	2900	37%	None
Pyrene	2000	2000	0%	None
Benzo (a) anthracene	900	880	2%	None
Benzo (b) fluoranthene	1600	2600	48%	None
Benzo (k) fluoranthene	1600	790	68%	None
Benzo (a) pyrene	1400	1200	15%	None
Indeno (1,2,3-cd) pyrene	830	980	17%	None
Dibenzo (a,h) anthracene	270	370	31%	None
Benzo (g,h,i) perylene	840	1100	27%	None

Compound	MR08-IS154-1-1.5 ug/kg	MR08-IS154D-1-1.5 ug/kg	RPD	Qualifier
Phenanthrene	21	6.4	107%	None
Fluoranthene	85	35	83%	None
Pyrene	70	24	98%	None
Benzo (a) anthracene	26	12	74%	None
Benzo (b) fluoranthene	51	30	52%	None
Benzo (k) fluoranthene	46	18	88%	None
Benzo (a) pyrene	42	19	75%	None
Indeno (1,2,3-cd) pyrene	26	16	48%	None

Compound	MR08-IS154-1-1.5 ug/kg	MR08-IS154D-1-1.5 ug/kg	RPD	Qualifier
Dibenzo (a,h) anthracene	6.5	5.0	26%	None
Benzo (g,h,i) perylene	31	17	58%	None

Compound	MR08-SS178-08D ug/kg	MR08-SS178D-08D ug/kg	RPD	Qualifier
Phenanthrene	45	27	50%	None
Fluoranthene	230	170	30%	None
Pyrene	230	130	56%	None
Benzo (a) anthracene	120	96	22%	None
Benzo (b) fluoranthene	200	180	11%	None
Benzo (k) fluoranthene	190	110	53%	None
Benzo (a) pyrene	170	110	43%	None
Indeno (1,2,3-cd) pyrene	120	98	20%	None
Dibenzo (a,h) anthracene	42	34	21%	None
Benzo (g,h,i) perylene	120	94	24%	None

Compound	MR08-IS178-4-5-08D ug/kg	MR08-IS178D-4-5-08D ug/kg	RPD	Qualifier
Phenanthrene	4.6	11 U	NC	None
Fluoranthene	3.8	2.1	58%	None
Pyrene	3.2	11 U	NC	None
Benzo (a) anthracene	2.8	11 U	NC	None

Tentatively Identified Compounds (TICs) - TICs were not reported.

Compound Quantitation - Several samples exhibited high concentrations of target compounds and were flagged (E) by the laboratory. The laboratory diluted and reanalyzed samples. The reviewer replaced the original results with the dilution results. The original Form Is should be used for reporting purposes.

KATAHDIN ANALYTICAL SERVICES
Report of Analytical Results

Client: CH2MHill
Project: To-009 Lejeune
PO No:
Sample Date: 12/18/08
Received Date: 12/20/08
Extraction Date: 12/24/08
Analysis Date: 14-JAN-2009 16:33
Report Date: 01/16/2009
Matrix: SOIL
% Solids: 80.4

Lab ID: SB7350-2
Client ID: MR08-SS155-08D
SDG: TO9-21
Extracted by: AC
Extraction Method: SW846 3550
Analyst: JLP
Analysis Method: SW846 M8270C
Lab Prep Batch: WG59398
Units: ug/Kgdrywt

CAS#	Compound	Flags	Results	DF	PQL	Adj.PQL	Adj.MDL	
91-20-3	Naphthalene	J	5.0	1.0	10	12	3.2	
91-57-6	2-Methylnaphthalene	J	9.9	1.0	10	12	2.7	
86-73-7	Fluorene	U	12	1.0	10	12	4.0	
85-01-8	Phenanthrene		37	1.0	10	12	2.2	
206-44-0	Fluoranthene		170	1.0	10	12	2.2	
129-00-0	Pyrene		140	1.0	10	12	2.6	
56-55-3	Benzo(a)anthracene		70	1.0	10	12	2.4	
205-99-2	Benzo(b)fluoranthene	J	200	1.0	10	12	3.0	CCH
207-08-9	Benzo(k)fluoranthene		70	1.0	10	12	3.8	
50-32-8	Benzo(a)pyrene		82	1.0	10	12	4.1	
193-39-5	Indeno(1,2,3-cd)pyrene		80	1.0	10	12	2.4	
53-70-3	Dibenzo(a,h)anthracene		42	1.0	10	12	2.2	
191-24-2	Benzo(g,h,i)perylene		82	1.0	10	12	2.5	
118-74-1	Hexachlorobenzene	U	12	1.0	10	12	2.2	
87-68-3	Hexachlorobutadiene	U	12	1.0	10	12	2.9	
77-47-4	Hexachlorocyclopentadiene	U	12	1.0	10	12	1.9	
7297-45-2	2-Methylnaphthalene-D10		60%					
367-12-4	2,4-Dibromophenol		67%					
81103-79-9	Fluorene-d10		87%					
1718-51-1	Pyrene-D10		92%					

lw 3/5/09

2

KATAHDIN ANALYTICAL SERVICES
Report of Analytical Results

Client: CH2MHill
Project: TO-009 Lejeune
PO No:
Sample Date: 12/18/08
Received Date: 12/20/08
Extraction Date: 12/24/08
Analysis Date: 11-JAN-2009 14:39
Report Date: 01/16/2009
Matrix: SOIL
% Solids: 79.4

Lab ID: SB7350-4
Client ID: MR08-IS136-1-2-08D
SDG: TO9-21
Extracted by: AC
Extraction Method: SW846 3550
Analyst: EKC
Analysis Method: SW846 M8270C
Lab Prep Batch: WG59398
Units: ug/Kgdrywt

CAS#	Compound	Flags	Results	DF	PQL	Adj.PQL	Adj.MDL	
91-20-3	Naphthalene	U	12	1.0	10	12	3.3	
91-57-6	2-Methylnaphthalene	U	12	1.0	10	12	2.8	
86-73-7	Fluorene	U	12	1.0	10	12	4.0	
85-01-8	Phenanthrene	~~U~~ UJ	12	1.0	10	12	2.3	CCH
206-44-0	Fluoranthene	U	12	1.0	10	12	2.3	
129-00-0	Pyrene	U	12	1.0	10	12	2.6	
56-55-3	Benzo(a)anthracene	~~U~~ UJ	12	1.0	10	12	2.4	CCH
205-99-2	Benzo(b)fluoranthene	~~U~~ UJ	12	1.0	10	12	3.0	CCH
207-08-9	Benzo(k)fluoranthene	U	12	1.0	10	12	3.9	
50-32-8	Benzo(a)pyrene	U	12	1.0	10	12	4.2	
193-39-5	Indeno(1,2,3-cd)pyrene	~~U~~ UJ	12	1.0	10	12	2.4	CCH
53-70-3	Dibenzo(a,h)anthracene	U	12	1.0	10	12	2.3	
191-24-2	Benzo(g,h,i)perylene	~~U~~ UJ	12	1.0	10	12	2.5	CCH
118-74-1	Hexachlorobenzene	U	12	1.0	10	12	2.3	
87-68-3	Hexachlorobutadiene	~~U~~ UJ	12	1.0	10	12	2.9	CCH
77-47-4	Hexachlorocyclopentadiene	U	12	1.0	10	12	1.9	
7297-45-2	2-Methylnaphthalene-D10		73%					
367-12-4	2,4-Dibromophenol		69%					
81103-79-9	Fluorene-d10		81%					
1718-51-1	Pyrene-D10		122%					

LW 3/5/09

3

KATAHDIN ANALYTICAL SERVICES
Report of Analytical Results

Client: CH2MHill
Project: TO-009 Lejeune
PO No:
Sample Date: 12/18/08
Received Date: 12/20/08
Extraction Date: 12/24/08
Analysis Date: 12-JAN-2009 12:45
Report Date: 01/16/2009
Matrix: SOIL
% Solids: 83.6

Lab ID: SB7350-6
Client ID: MR08-SS136-08D
SDG: TO9-21
Extracted by: AC
Extraction Method: SW846 3550
Analyst: JLP
Analysis Method: SW846 M8270C
Lab Prep Batch: WG59398
Units: ug/Kgdrywt

CAS#	Compound	Flags	Results	DF	PQL	Adj.PQL	Adj.MDL	
91-20-3	Naphthalene	~~J~~ UJ	12	1.0	10	12	3.1	CCH
91-57-6	2-Methylnaphthalene	~~J~~ J	4.9	1.0	10	12	2.6	CCH
86-73-7	Fluorene	U	12	1.0	10	12	3.8	
85-01-8	Phenanthrene		17	1.0	10	12	2.2	
206-44-0	Fluoranthene		59	1.0	10	12	2.2	
129-00-0	Pyrene	J	53	1.0	10	12	2.5	BSH
56-55-3	Benzo(a)anthracene		28	1.0	10	12	2.3	
205-99-2	Benzo(b)fluoranthene		75	1.0	10	12	2.9	
207-08-9	Benzo(k)fluoranthene	J	28	1.0	10	12	3.7	BSH
50-32-8	Benzo(a)pyrene	J	31	1.0	10	12	3.9	BSH
193-39-5	Indeno(1,2,3-cd)pyrene		28	1.0	10	12	2.3	
53-70-3	Dibenzo(a,h)anthracene	J	11	1.0	10	12	2.2	
191-24-2	Benzo(g,h,i)perylene		28	1.0	10	12	2.4	
118-74-1	Hexachlorobenzene	U	12	1.0	10	12	2.2	
87-68-3	Hexachlorobutadiene	U	12	1.0	10	12	2.8	
77-47-4	Hexachlorocyclopentadiene	U	12	1.0	10	12	1.8	
7297-45-2	2-Methylnaphthalene-D10		68%					
367-12-4	2,4-Dibromophenol		89%					
81103-79-9	Fluorene-d10		84%					
1718-51-1	Pyrene-D10		94%					

RW 3/5/09

4

KATAHDIN ANALYTICAL SERVICES
Report of Analytical Results

Client: CH2MHill
Project: TO-009 Lejeune
PO No:
Sample Date: 12/18/08
Received Date: 12/20/08
Extraction Date: 12/24/08
Analysis Date: 12-JAN-2009 12:03
Report Date: 01/16/2009
Matrix: SOIL
% Solids: 85.7

Lab ID: SB7350-8
Client ID: MR08-SS137-08D
SDG: TO9-21
Extracted by: AC
Extraction Method: SW846 3550
Analyst: JLP
Analysis Method: SW846 M8270C
Lab Prep Batch: WG59398
Units: ug/Kgdrywt

CAS#	Compound	Flags		Results	DF	PQL	Adj.PQL	Adj.MDL	
91-20-3	Naphthalene	~~U~~	UJ	12	1.0	10	12	3.0	CCH
91-57-6	2-Methylnaphthalene	~~U~~	UJ	12	1.0	10	12	2.6	CCH
86-73-7	Fluorene	U		12	1.0	10	12	3.7	
85-01-8	Phenanthrene	J		4.7	1.0	10	12	2.1	
206-44-0	Fluoranthene			22	1.0	10	12	2.1	
129-00-0	Pyrene		J	17	1.0	10	12	2.4	BSH
56-55-3	Benzo(a)anthracene	U		12	1.0	10	12	2.2	
205-99-2	Benzo(b)fluoranthene			24	1.0	10	12	2.8	
207-08-9	Benzo(k)fluoranthene		J	13	1.0	10	12	3.6	BSH
50-32-8	Benzo(a)pyrene		J	14	1.0	10	12	3.8	BSH
193-39-5	Indeno(1,2,3-cd)pyrene			12	1.0	10	12	2.2	
53-70-3	Dibenzo(a,h)anthracene	U		12	1.0	10	12	2.1	
191-24-2	Benzo(g,h,i)perylene			12	1.0	10	12	2.3	
118-74-1	Hexachlorobenzene	U		12	1.0	10	12	2.1	
87-68-3	Hexachlorobutadiene	U		12	1.0	10	12	2.7	
77-47-4	Hexachlorocyclopentadiene	U		12	1.0	10	12	1.7	
7297-45-2	2-Methylnaphthalene-D10			74%					
367-12-4	2,4-Dibromophenol			95%					
81103-79-9	Fluorene-d10			87%					
1718-51-1	Pyrene-D10			92%					

QW
3/5/09

5

KATAHDIN ANALYTICAL SERVICES
Report of Analytical Results

Client: CH2MHill
Project: TO-009 Lejeune
PO No:
Sample Date: 12/18/08
Received Date: 12/20/08
Extraction Date: 12/24/08
Analysis Date: 11-JAN-2009 15:21
Report Date: 01/16/2009
Matrix: SOIL
% Solids: 90.1

Lab ID: SB7350-10
Client ID: MR08-IS137-2.5-3.5
SDG: TO9-21
Extracted by: AC
Extraction Method: SW846 3550
Analyst: EKC
Analysis Method: SW846 M8270C
Lab Prep Batch: WG59398
Units: ug/Kgdrywt

CAS#	Compound	Flags	Results	DF	PQL	Adj.PQL	Adj.MDL	
91-20-3	Naphthalene	U	11	1.0	10	11	2.9	
91-57-6	2-Methylnaphthalene	U	11	1.0	10	11	2.4	
86-73-7	Fluorene	U	11	1.0	10	11	3.6	
85-01-8	Phenanthrene	~~U~~ UJ	11	1.0	10	11	2.0	CCH
206-44-0	Fluoranthene	U	11	1.0	10	11	2.0	
129-00-0	Pyrene	U	11	1.0	10	11	2.3	
56-55-3	Benzo(a)anthracene	~~U~~ UJ	11	1.0	10	11	2.1	CCH
205-99-2	Benzo(b)fluoranthene	~~U~~ UJ	11	1.0	10	11	2.7	CCH
207-08-9	Benzo(k)fluoranthene	U	11	1.0	10	11	3.4	
50-32-8	Benzo(a)pyrene	U	11	1.0	10	11	3.7	
193-39-5	Indeno(1,2,3-cd)pyrene	~~U~~ UJ	11	1.0	10	11	2.1	CCH
53-70-3	Dibenzo(a,h)anthracene	U	11	1.0	10	11	2.0	
191-24-2	Benzo(g,h,i)perylene	~~U~~ UJ	11	1.0	10	11	2.2	CCH
118-74-1	Hexachlorobenzene	U	11	1.0	10	11	2.0	
87-68-3	Hexachlorobutadiene	~~U~~ UJ	11	1.0	10	11	2.6	CCH
77-47-4	Hexachlorocyclopentadiene	U	11	1.0	10	11	1.7	
7297-45-2	2-Methylnaphthalene-D10		78%					
367-12-4	2,4-Dibromophenol		67%					
81103-79-9	Fluorene-d10		86%					
1718-51-1	Pyrene-D10		131%					

lw
3/5/09

6

KATAHDIN ANALYTICAL SERVICES
Report of Analytical Results

Client: CH2MHill
Project: TO-009 Lejeune
PO No:
Sample Date: 12/18/08
Received Date: 12/20/08
Extraction Date: 12/24/08
Analysis Date: 12-JAN-2009 13:26
Report Date: 01/16/2009
Matrix: SOIL
% Solids: 86.1

Lab ID: SB7350-12
Client ID: MR08-SS154-08D
SDG: TO9-21
Extracted by: AC
Extraction Method: SW846 3550
Analyst: JLP
Analysis Method: SW846 M8270C
Lab Prep Batch: WG59398
Units: ug/Kgdrywt

CAS#	Compound	Flags	Results	DF	PQL	Adj.PQL	Adj.MDL	
91-20-3	Naphthalene	~~J~~	J 4.7	1.0	10	12	3.0	CCH
91-57-6	2-Methylnaphthalene	~~J~~	J 6.0	1.0	10	12	2.6	CCH
86-73-7	Fluorene	J	6.8	1.0	10	12	3.7	
85-01-8	Phenanthrene	~~E~~	510 ~~450~~	1.0	10	12	2.1	R DL
206-44-0	Fluoranthene	~~E~~	2000J ~~2300~~ CCH	1.0	10	12	2.1	
129-00-0	Pyrene	~~E~~	2000 ~~1400~~	1.0	10	12	2.4	
56-55-3	Benzo(a)anthracene	~~E~~	900 ~~940~~	1.0	10	12	2.2	
205-99-2	Benzo(b)fluoranthene	~~E~~	1600 ~~2100~~	1.0	10	12	2.8	
207-08-9	Benzo(k)fluoranthene	~~E~~	1600 ~~1000~~	1.0	10	12	3.6	
50-32-8	Benzo(a)pyrene	~~E~~	1400 ~~1200~~	1.0	10	12	3.8	
193-39-5	Indeno(1,2,3-cd)pyrene	~~E~~	830J ~~970~~ CCH	1.0	10	12	2.2	
53-70-3	Dibenzo(a,h)anthracene		270	1.0	10	12	2.1	
191-24-2	Benzo(g,h,i)perylene	~~E~~	840J ~~880~~ CCH	1.0	10	12	2.3	R DL
118-74-1	Hexachlorobenzene	U	12	1.0	10	12	2.1	
87-68-3	Hexachlorobutadiene	U	12	1.0	10	12	2.7	
77-47-4	Hexachlorocyclopentadiene	U	12	1.0	10	12	1.7	
7297-45-2	2-Methylnaphthalene-D10		74%					
367-12-4	2,4-Dibromophenol		92%					
81103-79-9	Fluorene-d10		87%					
1718-51-1	Pyrene-D10		98%					

LW 4/6/09

6DL

KATAHDIN ANALYTICAL SERVICES
Report of Analytical Results

Client: CH2MHill
Project: To-009 Lejeune
PO No:
Sample Date: 12/18/08
Received Date: 12/20/08
Extraction Date: 12/24/08
Analysis Date: 13-JAN-2009 14:54
Report Date: 01/16/2009
Matrix: SOIL
% Solids: 86.1

Lab ID: SB7350-12DL
Client ID: MR08-SS154-08D
SDG: TO9-21
Extracted by: AC
Extraction Method: SW846 3550
Analyst: JLP
Analysis Method: SW846 M8270C
Lab Prep Batch: WG59398
Units: ug/Kgdrywt

use original

CAS#	Compound	Flags	Results	DF	PQL	Adj.PQL	Adj.MDL
91-20-3	Naphthalene	U	140	12	10	140	36
91-57-6	2-Methylnaphthalene	~~U~~ UJ	140	12	10	140	31 CCH
86-73-7	Fluorene	U	140	12	10	140	45
85-01-8	Phenanthrene		510	12	10	140	25
206-44-0	Fluoranthene	J	2000	12	10	140	25 CCH
129-00-0	Pyrene		2000	12	10	140	29
56-55-3	Benzo(a)anthracene		900	12	10	140	26
205-99-2	Benzo(b)fluoranthene		1600	12	10	140	33
207-08-9	Benzo(k)fluoranthene		1600	12	10	140	43
50-32-8	Benzo(a)pyrene		1400	12	10	140	46
193-39-5	Indeno(1,2,3-cd)pyrene	J	830	12	10	140	26 CCH
53-70-3	Dibenzo(a,h)anthracene		340	12	10	140	25
191-24-2	Benzo(g,h,i)perylene	J	840	12	10	140	28 CCH
118-74-1	Hexachlorobenzene	U	140	12	10	140	25
87-68-3	Hexachlorobutadiene	U	140	12	10	140	32
77-47-4	Hexachlorocyclopentadiene	~~U~~ UJ	140	12	10	140	21 CCH
7297-45-2	2-Methylnaphthalene-D10		D				
367-12-4	2,4-Dibromophenol		D				
81103-79-9	Fluorene-d10		D				
1718-51-1	Pyrene-D10		D				

RDL

Page 01 of 01 R0730.D

LW 4/6/09

7

KATAHDIN ANALYTICAL SERVICES
Report of Analytical Results

Client: CH2MHill
Project: TO-009 Lejeune
PO No:
Sample Date: 12/18/08
Received Date: 12/20/08
Extraction Date: 12/24/08
Analysis Date: 12-JAN-2009 14:08
Report Date: 01/16/2009
Matrix: SOIL
% Solids: 86.0

Lab ID: SB7350-14
Client ID: MR08-SS154D-08D
SDG: TO9-21
Extracted by: AC
Extraction Method: SW846 3550
Analyst: JLP
Analysis Method: SW846 M8270C
Lab Prep Batch: WG59398
Units: ug/Kgdrywt

CAS#	Compound	Flags	Results	DF	PQL	Adj.PQL	Adj.MDL	
91-20-3	Naphthalene	~~J~~ J	4.8	1.0	10	12	3.0	CCH
91-57-6	2-Methylnaphthalene	~~J~~ J	5.5	1.0	10	12	2.6	CCH
86-73-7	Fluorene	J	7.5	1.0	10	12	3.7	
85-01-8	Phenanthrene	~~E~~ 590	~~500~~	1.0	10	12	2.1	R DL
206-44-0	Fluoranthene	~~E~~ 2900	~~2200~~	1.0	10	12	2.1	
129-00-0	Pyrene	~~E~~ 2000	~~1700~~	1.0	10	12	2.4	
56-55-3	Benzo(a)anthracene	~~E~~ 880	~~1100~~	1.0	10	12	2.2	
205-99-2	Benzo(b)fluoranthene	~~E~~ 2600	~~2000~~	1.0	10	12	2.8	
207-08-9	Benzo(k)fluoranthene	~~E~~ 790	~~1300~~	1.0	10	12	3.6	
50-32-8	Benzo(a)pyrene	~~E~~ 1200	~~1200~~	1.0	10	12	3.8	
193-39-5	Indeno(1,2,3-cd)pyrene	~~E~~ 980	~~1000~~	1.0	10	12	2.2	
53-70-3	Dibenzo(a,h)anthracene	~~E~~ 370 J	~~370~~ LR	1.0	10	12	2.1	
191-24-2	Benzo(g,h,i)perylene	~~E~~ 1100	~~960~~	1.0	10	12	2.3	
118-74-1	Hexachlorobenzene	U	12	1.0	10	12	2.1	
87-68-3	Hexachlorobutadiene	U	12	1.0	10	12	2.7	
77-47-4	Hexachlorocyclopentadiene	U	12	1.0	10	12	1.7	
7297-45-2	2-Methylnaphthalene-D10		72%					
367-12-4	2,4-Dibromophenol		81%					
81103-79-9	Fluorene-d10		84%					
1718-51-1	Pyrene-D10		92%					

3/5/09

7DL

KATAHDIN ANALYTICAL SERVICES
Report of Analytical Results

Client: CH2MHill
Project: To-009 Lejeune
PO No:
Sample Date: 12/18/08
Received Date: 12/20/08
Extraction Date: 12/24/08
Analysis Date: 14-JAN-2009 01:50
Report Date: 01/16/2009
Matrix: SOIL
% Solids: 86.0

Lab ID: SB7350-14DL
Client ID: MR08-SS154D-08D
SDG: TO9-21
Extracted by: AC
Extraction Method: SW846 3550
Analyst: JCG
Analysis Method: SW846 M8270C
Lab Prep Batch: WG59398
Units: ug/Kgdrywt

use original

R DL

CAS#	Compound	Flags	Results	DF	PQL	Adj.PQL	Adj.MDL
91-20-3	Naphthalene	U	170	15	10	170	45
91-57-6	2-Methylnaphthalene	U	170	15	10	170	38
86-73-7	Fluorene	U	170	15	10	170	56
85-01-8	Phenanthrene		590	15	10	170	31
206-44-0	Fluoranthene		2900	15	10	170	31
129-00-0	Pyrene		2000	15	10	170	37
56-55-3	Benzo(a)anthracene		880	15	10	170	33
205-99-2	Benzo(b)fluoranthene		2600	15	10	170	42
207-08-9	Benzo(k)fluoranthene		790	15	10	170	54
50-32-8	Benzo(a)pyrene		1200	15	10	170	58
193-39-5	Indeno(1,2,3-cd)pyrene		980	15	10	170	33
53-70-3	Dibenzo(a,h)anthracene	U	170	15	10	170	31
191-24-2	Benzo(g,h,i)perylene		1100	15	10	170	35
118-74-1	Hexachlorobenzene	U	170	15	10	170	31
87-68-3	Hexachlorobutadiene	U	170	15	10	170	40
77-47-4	Hexachlorocyclopentadiene	U	170	15	10	170	26
7297-45-2	2-Methylnaphthalene-D10		D				
367-12-4	2,4-Dibromophenol		D				
81103-79-9	Fluorene-d10		D				
1718-51-1	Pyrene-D10		D				

lw 3/5/09

8

KATAHDIN ANALYTICAL SERVICES
Report of Analytical Results

Client: CH2MHill
Project: TO-009 Lejeune
PO No:
Sample Date: 12/18/08
Received Date: 12/20/08
Extraction Date: 12/24/08
Analysis Date: 11-JAN-2009 16:02
Report Date: 01/16/2009
Matrix: SOIL
% Solids: 87.6

Lab ID: SB7350-16
Client ID: MR08-IS154-1-1.5
SDG: TO9-21
Extracted by: AC
Extraction Method: SW846 3550
Analyst: EKC
Analysis Method: SW846 M8270C
Lab Prep Batch: WG59398
Units: ug/Kgdrywt

CAS#	Compound	Flags	Results	DF	PQL	Adj.PQL	Adj.MDL	
91-20-3	Naphthalene	U	11	1.0	10	11	3.0	
91-57-6	2-Methylnaphthalene	U	11	1.0	10	11	2.5	
86-73-7	Fluorene	U	11	1.0	10	11	3.6	
85-01-8	Phenanthrene	J	21	1.0	10	11	2.0	CCH
206-44-0	Fluoranthene		85	1.0	10	11	2.0	
129-00-0	Pyrene	J	70	1.0	10	11	2.4	BSH
56-55-3	Benzo(a)anthracene	J	26	1.0	10	11	2.2	CCH
205-99-2	Benzo(b)fluoranthene	J	51	1.0	10	11	2.7	CCH
207-08-9	Benzo(k)fluoranthene	J	46	1.0	10	11	3.5	BSH
50-32-8	Benzo(a)pyrene	J	42	1.0	10	11	3.8	BSH
193-39-5	Indeno(1,2,3-cd)pyrene	J	26	1.0	10	11	2.2	CCH
53-70-3	Dibenzo(a,h)anthracene	J	6.5	1.0	10	11	2.0	
191-24-2	Benzo(g,h,i)perylene	J	31	1.0	10	11	2.3	CCH
118-74-1	Hexachlorobenzene	U	11	1.0	10	11	2.0	
87-68-3	Hexachlorobutadiene	~~U~~ UJ	11	1.0	10	11	2.6	CCH
77-47-4	Hexachlorocyclopentadiene	U	11	1.0	10	11	1.7	
7297-45-2	2-Methylnaphthalene-D10		80%					
367-12-4	2,4-Dibromophenol		74%					
81103-79-9	Fluorene-d10		92%					
1718-51-1	Pyrene-D10		127%					

hcj
3/5/09

9

KATAHDIN ANALYTICAL SERVICES
Report of Analytical Results

Client: CH2MHill
Project: TO-009 Lejeune
PO No:
Sample Date: 12/18/08
Received Date: 12/20/08
Extraction Date: 12/24/08
Analysis Date: 12-JAN-2009 09:58
Report Date: 01/16/2009
Matrix: SOIL
% Solids: 86.4

Lab ID: SB7350-18
Client ID: MR08-IS154D-1-1.5
SDG: TO9-21
Extracted by: AC
Extraction Method: SW846 3550
Analyst: JLP
Analysis Method: SW846 M8270C
Lab Prep Batch: WG59398
Units: ug/Kgdrywt

CAS#	Compound	Flags		Results	DF	PQL	Adj.PQL	Adj.MDL	
91-20-3	Naphthalene	~~U~~	UJ	12	1.0	10	12	3.0	CCH
91-57-6	2-Methylnaphthalene	~~U~~	UJ	12	1.0	10	12	2.5	CCH
86-73-7	Fluorene	U		12	1.0	10	12	3.7	
85-01-8	Phenanthrene	J		6.4	1.0	10	12	2.1	
206-44-0	Fluoranthene			35	1.0	10	12	2.1	
129-00-0	Pyrene		J	24	1.0	10	12	2.4	BSH
56-55-3	Benzo(a)anthracene			12	1.0	10	12	2.2	
205-99-2	Benzo(b)fluoranthene			30	1.0	10	12	2.8	
207-08-9	Benzo(k)fluoranthene		J	18	1.0	10	12	3.6	BSH
50-32-8	Benzo(a)pyrene		J	19	1.0	10	12	3.8	BSH
193-39-5	Indeno(1,2,3-cd)pyrene			16	1.0	10	12	2.2	
53-70-3	Dibenzo(a,h)anthracene	J		5.0	1.0	10	12	2.1	
191-24-2	Benzo(g,h,i)perylene			17	1.0	10	12	2.3	
118-74-1	Hexachlorobenzene	U		12	1.0	10	12	2.1	
87-68-3	Hexachlorobutadiene	U		12	1.0	10	12	2.7	
77-47-4	Hexachlorocyclopentadiene	U		12	1.0	10	12	1.7	
7297-45-2	2-Methylnaphthalene-D10			60%					
367-12-4	2,4-Dibromophenol			74%					
81103-79-9	Fluorene-d10			67%					
1718-51-1	Pyrene-D10			70%					

lw
3/5/09

KATAHDIN ANALYTICAL SERVICES
Report of Analytical Results

Client: CH2MHill
Project: TO-009 Lejeune
PO No:
Sample Date: 12/18/08
Received Date: 12/20/08
Extraction Date: 12/24/08
Analysis Date: 12-JAN-2009 14:49
Report Date: 01/16/2009
Matrix: SOIL
% Solids: 83.4

Lab ID: SB7350-20
Client ID: MR08-SS161-08D
SDG: T09-21
Extracted by: AC
Extraction Method: SW846 3550
Analyst: JLP
Analysis Method: SW846 M8270C
Lab Prep Batch: WG59398
Units: ug/Kgdrywt

CAS#	Compound	Flags		Results	DF	PQL	Adj.PQL	Adj.MDL	
91-20-3	Naphthalene	~~J~~	J	4.6	1.0	10	12	3.1	CCH
91-57-6	2-Methylnaphthalene	~~J~~	J	7.4	1.0	10	12	2.6	CCH
86-73-7	Fluorene	J		10	1.0	10	12	3.8	
85-01-8	Phenanthrene	~~E~~	680	~~600~~	1.0	10	12	2.2	R DL
206-44-0	Fluoranthene	~~E~~	3600	~~2400~~	1.0	10	12	2.2	
129-00-0	Pyrene	~~E~~	2500	~~2100~~	1.0	10	12	2.5	
56-55-3	Benzo(a)anthracene	~~E~~	1300	~~1300~~	1.0	10	12	2.3	
205-99-2	Benzo(b)fluoranthene	E	2700	~~3400~~	1.0	10	12	2.9	
207-08-9	Benzo(k)fluoranthene	~~E~~	900	~~1100~~	1.0	10	12	3.7	
50-32-8	Benzo(a)pyrene	~~E~~	1600	~~1600~~	1.0	10	12	4.0	
193-39-5	Indeno(1,2,3-cd)pyrene	~~E~~	1300	~~1300~~	1.0	10	12	2.3	
53-70-3	Dibenzo(a,h)anthracene	~~E~~	600	~~390~~	1.0	10	12	2.2	
191-24-2	Benzo(g,h,i)perylene	~~E~~	1300	~~1100~~	1.0	10	12	2.4	
118-74-1	Hexachlorobenzene	U		12	1.0	10	12	2.2	
87-68-3	Hexachlorobutadiene	U		12	1.0	10	12	2.8	
77-47-4	Hexachlorocyclopentadiene	U		12	1.0	10	12	1.8	
7297-45-2	2-Methylnaphthalene-D10			73%					
367-12-4	2,4-Dibromophenol			105%					
81103-79-9	Fluorene-d10			88%					
1718-51-1	Pyrene-D10			96%					

LW
3/5/09

10DL

KATAHDIN ANALYTICAL SERVICES
Report of Analytical Results

Client: CH2MHill
Project: To-009 Lejeune
PO No:
Sample Date: 12/18/08
Received Date: 12/20/08
Extraction Date: 12/24/08
Analysis Date: 14-JAN-2009 02:30
Report Date: 01/16/2009
Matrix: SOIL
% Solids: 83.4

Lab ID: SB7350-20DL
Client ID: MR08-SS161-08D
SDG: TO9-21
Extracted by: AC
Extraction Method: SW846 3550
Analyst: JCG
Analysis Method: SW846 M8270C
Lab Prep Batch: WG59398
Units: ug/Kgdrywt

Use original

R DL

CAS#	Compound	Flags	Results	DF	PQL	Adj.PQL	Adj.MDL
91-20-3	Naphthalene	U	300	25	10	300	78
91-57-6	2-Methylnaphthalene	U	300	25	10	300	66
86-73-7	Fluorene	U	300	25	10	300	96
85-01-8	Phenanthrene		680	25	10	300	54
206-44-0	Fluoranthene		3600	25	10	300	54
129-00-0	Pyrene		2500	25	10	300	63
56-55-3	Benzo(a)anthracene		1300	25	10	300	57
205-99-2	Benzo(b)fluoranthene		2700	25	10	300	72
207-08-9	Benzo(k)fluoranthene		900	25	10	300	93
50-32-8	Benzo(a)pyrene		1600	25	10	300	99
193-39-5	Indeno(1,2,3-cd)pyrene		1300	25	10	300	57
53-70-3	Dibenzo(a,h)anthracene		600	25	10	300	54
191-24-2	Benzo(g,h,i)perylene		1300	25	10	300	60
118-74-1	Hexachlorobenzene	U	300	25	10	300	54
87-68-3	Hexachlorobutadiene	U	300	25	10	300	69
77-47-4	Hexachlorocyclopentadiene	U	300	25	10	300	45
7297-45-2	2-Methylnaphthalene-D10		D				
367-12-4	2,4-Dibromophenol		D				
81103-79-9	Fluorene-d10		D				
1718-51-1	Pyrene-D10		D				

JWJ 3/5/09

11

KATAHDIN ANALYTICAL SERVICES
Report of Analytical Results

Client: CH2MHill
Project: TO-009 Lejeune
PO No:
Sample Date: 12/18/08
Received Date: 12/20/08
Extraction Date: 12/24/08
Analysis Date: 12-JAN-2009 10:40
Report Date: 01/16/2009
Matrix: SOIL
% Solids: 89.1

Lab ID: SB7350-22
Client ID: MR08-IS161-1-1.5
SDG: TO9-21
Extracted by: AC
Extraction Method: SW846 3550
Analyst: JLP
Analysis Method: SW846 M8270C
Lab Prep Batch: WG59398
Units: ug/Kgdrywt

CAS#	Compound	Flags	Results	DF	PQL	Adj.PQL	Adj.MDL	
91-20-3	Naphthalene	~~U~~ UJ	11	1.0	10	11	2.9	CCH
91-57-6	2-Methylnaphthalene	~~U~~ UJ	11	1.0	10	11	2.5	CCH
86-73-7	Fluorene	U	11	1.0	10	11	3.6	
85-01-8	Phenanthrene	J	8.5	1.0	10	11	2.0	
206-44-0	Fluoranthene		47	1.0	10	11	2.0	
129-00-0	Pyrene	J	30	1.0	10	11	2.4	BSH
56-55-3	Benzo(a)anthracene		20	1.0	10	11	2.1	
205-99-2	Benzo(b)fluoranthene		43	1.0	10	11	2.7	
207-08-9	Benzo(k)fluoranthene	J	23	1.0	10	11	3.5	BSH
50-32-8	Benzo(a)pyrene	J	24	1.0	10	11	3.7	BSH
193-39-5	Indeno(1,2,3-cd)pyrene		23	1.0	10	11	2.1	
53-70-3	Dibenzo(a,h)anthracene	J	8.3	1.0	10	11	2.0	
191-24-2	Benzo(g,h,i)perylene		24	1.0	10	11	2.2	
118-74-1	Hexachlorobenzene	U	11	1.0	10	11	2.0	
87-68-3	Hexachlorobutadiene	U	11	1.0	10	11	2.6	
77-47-4	Hexachlorocyclopentadiene	U	11	1.0	10	11	1.7	
7297-45-2	2-Methylnaphthalene-D10		72%					
367-12-4	2,4-Dibromophenol		95%					
81103-79-9	Fluorene-d10		81%					
1718-51-1	Pyrene-D10		90%					

lw
3/5/09

KATAHDIN ANALYTICAL SERVICES
Report of Analytical Results

Client: CH2MHill
Project: TO-009 Lejeune
PO No:
Sample Date: 12/18/08
Received Date: 12/20/08
Extraction Date: 12/24/08
Analysis Date: 13-JAN-2009 16:14
Report Date: 01/16/2009
Matrix: SOIL
% Solids: 92.2

Lab ID: SB7350-24RA
Client ID: MR08-SS178-08D
SDG: TO9-21
Extracted by: AC
Extraction Method: SW846 3550
Analyst: JLP
Analysis Method: SW846 M8270C
Lab Prep Batch: WG59398
Units: ug/Kgdrywt

CAS#	Compound	Flags	Results	DF	PQL	Adj.PQL	Adj.MDL	
91-20-3	Naphthalene	U	11	1.0	10	11	2.8	
91-57-6	2-Methylnaphthalene	~~U~~ UJ	11	1.0	10	11	2.4	CCH
86-73-7	Fluorene	U	11	1.0	10	11	3.5	
85-01-8	Phenanthrene		45	1.0	10	11	2.0	
206-44-0	Fluoranthene	J	230	1.0	10	11	2.0	CCH
129-00-0	Pyrene		230	1.0	10	11	2.3	
56-55-3	Benzo(a)anthracene		120	1.0	10	11	2.1	
205-99-2	Benzo(b)fluoranthene		200	1.0	10	11	2.6	
207-08-9	Benzo(k)fluoranthene		190	1.0	10	11	3.4	
50-32-8	Benzo(a)pyrene		170	1.0	10	11	3.6	
193-39-5	Indeno(1,2,3-cd)pyrene	J	120	1.0	10	11	2.1	CCH
53-70-3	Dibenzo(a,h)anthracene		42	1.0	10	11	2.0	
191-24-2	Benzo(g,h,i)perylene	J	120	1.0	10	11	2.2	CCH
118-74-1	Hexachlorobenzene	U	11	1.0	10	11	2.0	
87-68-3	Hexachlorobutadiene	U	11	1.0	10	11	2.5	
77-47-4	Hexachlorocyclopentadiene	~~U~~ UJ	11	1.0	10	11	1.6	CCH
7297-45-2	2-Methylnaphthalene-D10		40%					
367-12-4	2,4-Dibromophenol		74%					
81103-79-9	Fluorene-d10		74%					
1718-51-1	Pyrene-D10		76%					

RW 3/5/09

KATAHDIN ANALYTICAL SERVICES
Report of Analytical Results

Client: CH2MHill
Project: To-009 Lejeune
PO No:
Sample Date: 12/18/08
Received Date: 12/20/08
Extraction Date: 12/29/08
Analysis Date: 15-JAN-2009 13:31
Report Date: 01/16/2009
Matrix: SOIL
% Solids: 93.7

Lab ID: SB7350-26
Client ID: MR08-SS178D-08D
SDG: TO9-21
Extracted by: CB
Extraction Method: SW846 3550
Analyst: JLP
Analysis Method: SW846 M8270C
Lab Prep Batch: WG59447
Units: ug/Kgdrywt

CAS#	Compound	Flags		Results	DF	PQL	Adj.PQL	Adj.MDL	
91-20-3	Naphthalene	~~U~~	UJ	11	1.0	10	11	2.8	CCH
91-57-6	2-Methylnaphthalene	U		11	1.0	10	11	2.3	
86-73-7	Fluorene	U		11	1.0	10	11	3.4	
85-01-8	Phenanthrene			27	1.0	10	11	1.9	
206-44-0	Fluoranthene			170	1.0	10	11	1.9	
129-00-0	Pyrene			130	1.0	10	11	2.2	
56-55-3	Benzo(a)anthracene		J	96	1.0	10	11	2.0	CCH
205-99-2	Benzo(b)fluoranthene			180	1.0	10	11	2.6	
207-08-9	Benzo(k)fluoranthene			110	1.0	10	11	3.3	
50-32-8	Benzo(a)pyrene			110	1.0	10	11	3.5	
193-39-5	Indeno(1,2,3-cd)pyrene			98	1.0	10	11	2.0	
53-70-3	Dibenzo(a,h)anthracene			34	1.0	10	11	1.9	
191-24-2	Benzo(g,h,i)perylene			94	1.0	10	11	2.1	
118-74-1	Hexachlorobenzene	U		11	1.0	10	11	1.9	
87-68-3	Hexachlorobutadiene	~~U~~	UJ	11	1.0	10	11	2.4	CCH
77-47-4	Hexachlorocyclopentadiene	~~U~~	UJ	11	1.0	10	11	1.6	CCH
7297-45-2	2-Methylnaphthalene-D10			106%					
367-12-4	2,4-Dibromophenol			71%					
81103-79-9	Fluorene-d10			79%					
1718-51-1	Pyrene-D10			63%					

lw
3/5/09

14

KATAHDIN ANALYTICAL SERVICES
Report of Analytical Results

Client: CH2MHill
Project: To-009 Lejeune
PO No:
Sample Date: 12/18/08
Received Date: 12/20/08
Extraction Date: 12/29/08
Analysis Date: 15-JAN-2009 11:31
Report Date: 01/16/2009
Matrix: SOIL
% Solids: 92.4

Lab ID: SB7350-28
Client ID: MR08-IS178-4-5-08D
SDG: TO9-21
Extracted by: CB
Extraction Method: SW846 3550
Analyst: JLP
Analysis Method: SW846 M8270C
Lab Prep Batch: WG59447
Units: ug/Kgdrywt

CAS#	Compound	Flags	Results	DF	PQL	Adj.PQL	Adj.MDL	
91-20-3	Naphthalene	~~U~~ UJ	11	1.0	10	11	2.8	CCH
91-57-6	2-Methylnaphthalene	U	11	1.0	10	11	2.4	
86-73-7	Fluorene	U	11	1.0	10	11	3.5	
85-01-8	Phenanthrene	J	4.6	1.0	10	11	1.9	
206-44-0	Fluoranthene	J	3.8	1.0	10	11	1.9	
129-00-0	Pyrene	J	3.2	1.0	10	11	2.3	
56-55-3	Benzo(a)anthracene	~~U~~ J	2.8	1.0	10	11	2.0	CCH
205-99-2	Benzo(b)fluoranthene	U	11	1.0	10	11	2.6	
207-08-9	Benzo(k)fluoranthene	U	11	1.0	10	11	3.4	
50-32-8	Benzo(a)pyrene	U	11	1.0	10	11	3.6	
193-39-5	Indeno(1,2,3-cd)pyrene	U	11	1.0	10	11	2.0	
53-70-3	Dibenzo(a,h)anthracene	U	11	1.0	10	11	1.9	
191-24-2	Benzo(g,h,i)perylene	U	11	1.0	10	11	2.2	
118-74-1	Hexachlorobenzene	U	11	1.0	10	11	1.9	
87-68-3	Hexachlorobutadiene	~~U~~ UJ	11	1.0	10	11	2.5	CCH
77-47-4	Hexachlorocyclopentadiene	~~U~~ UJ	11	1.0	10	11	1.6	CCH
7297-45-2	2-Methylnaphthalene-D10		109%					
367-12-4	2,4-Dibromophenol		65%					
81103-79-9	Fluorene-d10		80%					
1718-51-1	Pyrene-D10		67%					

AW
3/5/09

15

KATAHDIN ANALYTICAL SERVICES
Report of Analytical Results

Client: CH2MHill
Project: To-009 Lejeune
PO No:
Sample Date: 12/18/08
Received Date: 12/20/08
Extraction Date: 12/29/08
Analysis Date: 15-JAN-2009 12:11
Report Date: 01/16/2009
Matrix: SOIL
% Solids: 92.2

Lab ID: SB7350-30
Client ID: MR08-IS178D-4-5-08D
SDG: TO9-21
Extracted by: CB
Extraction Method: SW846 3550
Analyst: JLP
Analysis Method: SW846 M8270C
Lab Prep Batch: WG59447
Units: ug/Kgdrywt

CAS#	Compound	Flags	Results	DF	PQL	Adj.PQL	Adj.MDL	
91-20-3	Naphthalene	~~U~~ UJ	11	1.0	10	11	2.8	CCH
91-57-6	2-Methylnaphthalene	U	11	1.0	10	11	2.4	
86-73-7	Fluorene	U	11	1.0	10	11	3.5	
85-01-8	Phenanthrene	U	11	1.0	10	11	2.0	
206-44-0	Fluoranthene	J	2.1	1.0	10	11	2.0	
129-00-0	Pyrene	U	11	1.0	10	11	2.3	
56-55-3	Benzo(a)anthracene	~~U~~ UJ	11	1.0	10	11	2.1	CCH
205-99-2	Benzo(b)fluoranthene	U	11	1.0	10	11	2.6	
207-08-9	Benzo(k)fluoranthene	U	11	1.0	10	11	3.4	
50-32-8	Benzo(a)pyrene	U	11	1.0	10	11	3.6	
193-39-5	Indeno(1,2,3-cd)pyrene	U	11	1.0	10	11	2.1	
53-70-3	Dibenzo(a,h)anthracene	U	11	1.0	10	11	2.0	
191-24-2	Benzo(g,h,i)perylene	U	11	1.0	10	11	2.2	
118-74-1	Hexachlorobenzene	U	11	1.0	10	11	2.0	
87-68-3	Hexachlorobutadiene	~~U~~ UJ	11	1.0	10	11	2.5	CCH
77-47-4	Hexachlorocyclopentadiene	~~U~~ UJ	11	1.0	10	11	1.6	CCH
7297-45-2	2-Methylnaphthalene-D10		121%					
367-12-4	2,4-Dibromophenol		67%					
81103-79-9	Fluorene-d10		83%					
1718-51-1	Pyrene-D10		75%					

KW
3/5/09

16

KATAHDIN ANALYTICAL SERVICES
Report of Analytical Results

Client: CH2MHill
Project: To-009 Lejeune
PO No:
Sample Date: 12/18/08
Received Date: 12/20/08
Extraction Date: 12/29/08
Analysis Date: 15-JAN-2009 14:11
Report Date: 01/16/2009
Matrix: SOIL
% Solids: 87.2

Lab ID: SB7350-32
Client ID: MR08-SS177-08D
SDG: TO9-21
Extracted by: CB
Extraction Method: SW846 3550
Analyst: JLP
Analysis Method: SW846 M8270C
Lab Prep Batch: WG59447
Units: ug/Kgdrywt

CAS#	Compound	Flags	Results	DF	PQL	Adj.PQL	Adj.MDL	
91-20-3	Naphthalene	~~U~~ UJ	11	1.0	10	11	3.0	CCH
91-57-6	2-Methylnaphthalene	U	11	1.0	10	11	2.5	
86-73-7	Fluorene	U	11	1.0	10	11	3.7	
85-01-8	Phenanthrene	J	6.5	1.0	10	11	2.1	
206-44-0	Fluoranthene	J	7.1	1.0	10	11	2.1	
129-00-0	Pyrene	J	4.9	1.0	10	11	2.4	
56-55-3	Benzo(a)anthracene	~~J~~ J	2.5	1.0	10	11	2.2	CCH
205-99-2	Benzo(b)fluoranthene	U	11	1.0	10	11	2.8	
207-08-9	Benzo(k)fluoranthene	U	11	1.0	10	11	3.6	
50-32-8	Benzo(a)pyrene	U	11	1.0	10	11	3.8	
193-39-5	Indeno(1,2,3-cd)pyrene	U	11	1.0	10	11	2.2	
53-70-3	Dibenzo(a,h)anthracene	U	11	1.0	10	11	2.1	
191-24-2	Benzo(g,h,i)perylene	J	1.9	1.0	10	11	2.3	
118-74-1	Hexachlorobenzene	U	11	1.0	10	11	2.1	
87-68-3	Hexachlorobutadiene	~~U~~ UJ	11	1.0	10	11	2.6	CCH
77-47-4	Hexachlorocyclopentadiene	~~U~~ UJ	11	1.0	10	11	1.7	CCH
7297-45-2	2-Methylnaphthalene-D10		33%					
367-12-4	2,4-Dibromophenol		* 27%					
81103-79-9	Fluorene-d10		* 32%					
1718-51-1	Pyrene-D10		34%					

QMJ
3/5/09

KATAHDIN ANALYTICAL SERVICES
Report of Analytical Results

Client: CH2MHill
Project: To-009 Lejeune
PO No:
Sample Date: 12/18/08
Received Date: 12/20/08
Extraction Date: 12/29/08
Analysis Date: 15-JAN-2009 14:51
Report Date: 01/16/2009
Matrix: SOIL
% Solids: 86.0

Lab ID: SB7350-34
Client ID: MR08-IS177-2-3-08D
SDG: TO9-21
Extracted by: CB
Extraction Method: SW846 3550
Analyst: JLP
Analysis Method: SW846 M8270C
Lab Prep Batch: WG59447
Units: ug/Kgdrywt

CAS#	Compound	Flags	Results	DF	PQL	Adj.PQL	Adj.MDL	
91-20-3	Naphthalene	~~U~~ UJ	12	1.0	10	12	3.0	CCH
91-57-6	2-Methylnaphthalene	U	12	1.0	10	12	2.6	
86-73-7	Fluorene	U	12	1.0	10	12	3.7	
85-01-8	Phenanthrene	J	10	1.0	10	12	2.1	
206-44-0	Fluoranthene		13	1.0	10	12	2.1	
129-00-0	Pyrene	J	8.1	1.0	10	12	2.4	
56-55-3	Benzo(a)anthracene	~~J~~ J	4.2	1.0	10	12	2.2	CCH
205-99-2	Benzo(b)fluoranthene	U	12	1.0	10	12	2.8	
207-08-9	Benzo(k)fluoranthene	U	12	1.0	10	12	3.6	
50-32-8	Benzo(a)pyrene	U	12	1.0	10	12	3.8	
193-39-5	Indeno(1,2,3-cd)pyrene	U	12	1.0	10	12	2.2	
53-70-3	Dibenzo(a,h)anthracene	U	12	1.0	10	12	2.1	
191-24-2	Benzo(g,h,i)perylene	J	1.8	1.0	10	12	2.3	
118-74-1	Hexachlorobenzene	U	12	1.0	10	12	2.1	
87-68-3	Hexachlorobutadiene	~~U~~ UJ	12	1.0	10	12	2.7	CCH
77-47-4	Hexachlorocyclopentadiene	~~U~~ UJ	12	1.0	10	12	1.7	CCH
7297-45-2	2-Methylnaphthalene-D10		95%					
367-12-4	2,4-Dibromophenol		65%					
81103-79-9	Fluorene-d10		73%					
1718-51-1	Pyrene-D10		65%					

QUJ
3/5/09

KATAHDIN ANALYTICAL SERVICES
Report of Analytical Results

Client: CH2MHill
Project: To-009 Lejeune
PO No:
Sample Date: 12/19/08
Received Date: 12/20/08
Extraction Date: 12/29/08
Analysis Date: 15-JAN-2009 16:12
Report Date: 01/16/2009
Matrix: SOIL
% Solids: 80.2

Lab ID: SB7350-36
Client ID: MR08-SS176-08D
SDG: TO9-21
Extracted by: CB
Extraction Method: SW846 3550
Analyst: JLP
Analysis Method: SW846 M8270C
Lab Prep Batch: WG59447
Units: ug/Kgdrywt

CAS#	Compound	Flags	Results	DF	PQL	Adj.PQL	Adj.MDL	
91-20-3	Naphthalene	~~J~~ J	11	1.0	10	12	3.2	CCH
91-57-6	2-Methylnaphthalene	J	20	1.0	10	12	2.7	BSH
86-73-7	Fluorene	J	4.2	1.0	10	12	4.0	
85-01-8	Phenanthrene		140	1.0	10	12	2.2	
206-44-0	Fluoranthene	~~E~~ 1000J	~~270~~ CH	1.0	10	12	2.2	R DL
129-00-0	Pyrene	~~E~~ 1000	~~590~~	1.0	10	12	2.6	
56-55-3	Benzo(a)anthracene	~~E~~ 440	~~420~~	1.0	10	12	2.4	
205-99-2	Benzo(b)fluoranthene	~~E~~ 890	~~970~~	1.0	10	12	3.0	
207-08-9	Benzo(k)fluoranthene	~~E~~ 860	~~660~~	1.0	10	12	3.9	
50-32-8	Benzo(a)pyrene	~~E~~ 640	~~620~~	1.0	10	12	4.1	
193-39-5	Indeno(1,2,3-cd)pyrene	~~E~~ 390	~~510~~	1.0	10	12	2.4	
53-70-3	Dibenzo(a,h)anthracene		160	1.0	10	12	2.2	
191-24-2	Benzo(g,h,i)perylene	~~E~~ 450	~~520~~	1.0	10	12	2.5	R DL
118-74-1	Hexachlorobenzene	U	12	1.0	10	12	2.2	
87-68-3	Hexachlorobutadiene	~~U~~ UJ	12	1.0	10	12	2.9	CCH
77-47-4	Hexachlorocyclopentadiene	~~U~~ UJ	12	1.0	10	12	1.9	CCH
7297-45-2	2-Methylnaphthalene-D10		110%					
367-12-4	2,4-Dibromophenol		86%					
81103-79-9	Fluorene-d10		78%					
1718-51-1	Pyrene-D10		60%					

RW
3/5/09

18DL

KATAHDIN ANALYTICAL SERVICES
Report of Analytical Results

Client: CH2MHill
Project: To-009 Lejeune
PO No:
Sample Date: 12/19/08
Received Date: 12/20/08
Extraction Date: 12/29/08
Analysis Date: 16-JAN-2009 01:01
Report Date: 01/16/2009
Matrix: SOIL
% Solids: 80.2

Lab ID: SB7350-36DL
Client ID: MR08-SS176-08D
SDG: TO9-21
Extracted by: CB
Extraction Method: SW846 3550
Analyst: JCG
Analysis Method: SW846 M8270C
Lab Prep Batch: WG59447
Units: ug/Kgdrywt

use original

RDL

CAS#	Compound	Flags	Results	DF	PQL	Adj.PQL	Adj.MDL	
91-20-3	Naphthalene	~~U~~ UJ	75	6.0	10	75	19	CCH
91-57-6	2-Methylnaphthalene	U	75	6.0	10	75	16	
86-73-7	Fluorene	U	75	6.0	10	75	24	
85-01-8	Phenanthrene	J	27	6.0	10	75	13	
206-44-0	Fluoranthene	J	1000	6.0	10	75	13	CCH
129-00-0	Pyrene		1000	6.0	10	75	16	
56-55-3	Benzo(a)anthracene		440	6.0	10	75	14	
205-99-2	Benzo(b)fluoranthene		890	6.0	10	75	18	
207-08-9	Benzo(k)fluoranthene		860	6.0	10	75	23	
50-32-8	Benzo(a)pyrene		640	6.0	10	75	25	
193-39-5	Indeno(1,2,3-cd)pyrene		390	6.0	10	75	14	
53-70-3	Dibenzo(a,h)anthracene		~~100~~	6.0	10	75	13	
191-24-2	Benzo(g,h,i)perylene		450	6.0	10	75	15	
118-74-1	Hexachlorobenzene	U	75	6.0	10	75	13	
87-68-3	Hexachlorobutadiene	~~U~~ UJ	75	6.0	10	75	17	CCH
77-47-4	Hexachlorocyclopentadiene	U	75	6.0	10	75	11	
7297-45-2	2-Methylnaphthalene-D10		44%					
367-12-4	2,4-Dibromophenol		62%					
81103-79-9	Fluorene-d10		78%					
1718-51-1	Pyrene-D10		120%					

fw 3/5/09

KATAHDIN ANALYTICAL SERVICES
Report of Analytical Results

Client: CH2MHill
Project: To-009 Lejeune
PO No:
Sample Date: 12/19/08
Received Date: 12/20/08
Extraction Date: 12/29/08
Analysis Date: 15-JAN-2009 12:51
Report Date: 01/16/2009
Matrix: SOIL
% Solids: 94.4

Lab ID: SB7350-38
Client ID: MR08-IS176-4-5-08D
SDG: TO9-21
Extracted by: CB
Extraction Method: SW846 3550
Analyst: JLP
Analysis Method: SW846 M8270C
Lab Prep Batch: WG59447
Units: ug/Kgdrywt

CAS#	Compound	Flags	Results	DF	PQL	Adj.PQL	Adj.MDL	
91-20-3	Naphthalene	~~U~~ UJ	10	1.0	10	10	2.8	CCH
91-57-6	2-Methylnaphthalene	U	10	1.0	10	10	2.3	
86-73-7	Fluorene	U	10	1.0	10	10	3.4	
85-01-8	Phenanthrene	U	10	1.0	10	10	1.9	
206-44-0	Fluoranthene		11	1.0	10	10	1.9	
129-00-0	Pyrene	J	7.4	1.0	10	10	2.2	
56-55-3	Benzo(a)anthracene	~~J~~ J	7.0	1.0	10	10	2.0	CCH
205-99-2	Benzo(b)fluoranthene		14	1.0	10	10	2.5	
207-08-9	Benzo(k)fluoranthene	J	6.3	1.0	10	10	3.3	
50-32-8	Benzo(a)pyrene	J	6.2	1.0	10	10	3.5	
193-39-5	Indeno(1,2,3-cd)pyrene	J	5.6	1.0	10	10	2.0	
53-70-3	Dibenzo(a,h)anthracene	J	2.1	1.0	10	10	1.9	
191-24-2	Benzo(g,h,i)perylene	J	5.7	1.0	10	10	2.1	
118-74-1	Hexachlorobenzene	U	10	1.0	10	10	1.9	
87-68-3	Hexachlorobutadiene	~~U~~ UJ	10	1.0	10	10	2.4	CCH
77-47-4	Hexachlorocyclopentadiene	~~U~~ UJ	10	1.0	10	10	1.6	CCH
7297-45-2	2-Methylnaphthalene-D10		107%					
367-12-4	2,4-Dibromophenol		80%					
81103-79-9	Fluorene-d10		81%					
1718-51-1	Pyrene-D10		72%					

Qrev
3/5/09

20

KATAHDIN ANALYTICAL SERVICES
Report of Analytical Results

Client: CH2MHill
Project: To-009 Lejeune
PO No:
Sample Date: 12/19/08
Received Date: 12/20/08
Extraction Date: 12/29/08
Analysis Date: 15-JAN-2009 15:32
Report Date: 01/16/2009
Matrix: SOIL
% Solids: 81.1

Lab ID: SB7350-40
Client ID: MR08-SS163-08D
SDG: T09-21
Extracted by: CB
Extraction Method: SW846 3550
Analyst: JLP
Analysis Method: SW846 M8270C
Lab Prep Batch: WG59447
Units: ug/Kgdrywt

CAS#	Compound	Flags	Results	DF	PQL	Adj.PQL	Adj.MDL	
91-20-3	Naphthalene	~~U~~ UJ	12	1.0	10	12	3.2	CCH
91-57-6	2-Methylnaphthalene	~~U~~ J	3.2	1.0	10	12	2.7	BSH
86-73-7	Fluorene	U	12	1.0	10	12	3.9	
85-01-8	Phenanthrene		22	1.0	10	12	2.2	
206-44-0	Fluoranthene		78	1.0	10	12	2.2	
129-00-0	Pyrene		62	1.0	10	12	2.6	
56-55-3	Benzo(a)anthracene	J	50	1.0	10	12	2.3	CCH
205-99-2	Benzo(b)fluoranthene		92	1.0	10	12	3.0	
207-08-9	Benzo(k)fluoranthene		57	1.0	10	12	3.8	
50-32-8	Benzo(a)pyrene		51	1.0	10	12	4.1	
193-39-5	Indeno(1,2,3-cd)pyrene		42	1.0	10	12	2.3	
53-70-3	Dibenzo(a,h)anthracene		15	1.0	10	12	2.2	
191-24-2	Benzo(g,h,i)perylene		42	1.0	10	12	2.5	
118-74-1	Hexachlorobenzene	U	12	1.0	10	12	2.2	
87-68-3	Hexachlorobutadiene	~~U~~ UJ	12	1.0	10	12	2.8	CCH
77-47-4	Hexachlorocyclopentadiene	~~U~~ UJ	12	1.0	10	12	1.8	CCH
7297-45-2	2-Methylnaphthalene-D10		102%					
367-12-4	2,4-Dibromophenol		63%					
81103-79-9	Fluorene-d10		76%					
1718-51-1	Pyrene-D10		59%					

LW
3/5/09

ENVIRONMENTAL
Data Services, Inc.

SEMIVOLATILE ORGANIC COMPOUNDS

USEPA Region IV - Level IV Review

Site: MCB Camp Lejeune, TO-09 SDG #: TO9-21

Client: CH2M HILL, Inc., Virginia Beach, Virginia Date: March 5, 2009

Laboratory: Katahdin Analytical Services, Scarborough, Maine Reviewer: Nancy Weaver

EDS ID	Client Sample ID	Laboratory Sample ID	Matrix
1	MR08-SS155-08D	SB7350-1	Soil
2	MR08-IS136-1-2-08D	SB7350-3	Soil
3	MR08-SS136-08D	SB7350-5	Soil
4	MR08-SS137-08D	SB7350-7	Soil
5	MR08-IS137-2.5-3.5-08D	SB7350-9	Soil
6	MR08-SS154-08D	SB7350-11	Soil
7	MR08-SS154D-08D	SB7350-13	Soil
8	MR08-IS154-1-1.5	SB7350-15	Soil
9	MR08-IS154D-1-1.5	SB7350-17	Soil
10	MR08-SS161-08D	SB7350-19	Soil
11	MR08-IS161-1-1.5-08D	SB7350-21	Soil
12	MR08-SS178-08D	SB7350-23	Soil
13	MR08-SS178D-08D	SB7350-25	Soil
14	MR08-IS178-4-5-08D	SB7350-27	Soil
15	MR08-IS178D-4-5-08D	SB7350-29	Soil
16	MR08-SS177-08D	SB7350-31	Soil
17	MR08-IS177-2-3-08D	SB7350-33	Soil
18	MR08-SS176-08D	SB7350-35	Soil
19	MR08-IS176-4-5-08D	SB7350-37	Soil
20	MR08-SS163-08D	SB7350-39	Soil

The USEPA "Contract Laboratory Program National Functional Guidelines for Organic Data Review," October 1999, and professional judgment were used in evaluating the data in this summary report.

Holding Times - All samples were extracted within 14 days for soil samples and analyzed within 40 days for all samples except the following.

Sample	Date Sampled	Date Extracted	# of Days	Qualifier
16RE	12/18/08	01/19/09	32	J/R

GC/MS Tuning - All of the DFTPP tunes in the initial and continuing calibrations met the percent relative abundance criteria.

Initial Calibration - The initial calibrations exhibited acceptable %RSD and mean RRF values except the following.

ICAL Date	Compound	%RSD/RRF	Qualifier	Affected Samples
01/12/09	Benzaldehyde	90.97%	J/UJ	13-15, 17-20
01/13/09	Benzaldehyde	44.95%	J/UJ	1-12

Continuing Calibration - The continuing calibrations exhibited acceptable %D and RRF values except the following.

CCAL Date	Compound	%D/RRF	Qualifier	Affected Samples
01/15/09	Benzaldehyde	59.85%	None	Already qualified due to ICAL
	Di-n-octyl phthalate	40.84%	J/UJ	1-7
01/16/09	Benzaldehyde	73.32%	None	Already qualified due to ICAL
	bis (2-Ethylhexyl) phthalate	27.75%	J/UJ	8-12
	Di-n-octyl phthalate	28.58%	J/UJ	8-12
01/17/09	Benzaldehyde	55.85%	None	Already qualified due to ICAL
	2,4-Dinitrophenol	28.42%	J/UJ	13-15, 17-20
01/20/09	Benzaldehyde	74.37%	None	Already qualified due to HT
	3,3'-Dichlorobenzidine	27.25%	None	Already qualified due to HT
	Di-n-octyl phthalate	26.71%	None	Already qualified due to HT

Surrogates - All samples exhibited acceptable surrogate recoveries except the following.

Sample ID	Surrogate	%R	Qualifier
12	S6-Terphenyl-d14	127%	None for 1 out
16	S1-Fluorophenol	22%	J/UJ
	S2-Phenol-d6	25%	J/UJ
	S3-Nitrobenzene-d5	28%	J/UJ
	S4-2-Fluorobiphenyl	31%	J/UJ
	S5-2,4,6-Tribromophenol	12%	J/UJ
17	S5-2,4,6-Tribromophenol	33%	None for 1 out

MS/MSD - A MS/MSD sample was not analyzed.

Laboratory Control Sample - The LCS samples exhibited acceptable %R values except the following.

LCS ID	Compound	%R	Qualifier	Affected Samples
WG59397-LCS	Phenol	101%	None	All ND
	Nitrobenzene	137%	None	All ND

LCS ID	Compound	%R	Qualifier	Affected Samples
WG59397-LCS	Di-n-butyl phthalate	120%	None	All ND
	Butylbenzylphthalate	128%	None	All ND
	bis (2-Ethylhexyl) phthalate	140%	J/UJ	6, 7
	Di-n-octyl phthalate	148%	None	All ND
WG59445-LCS	Benzaldehyde	292%	None	All ND
	2,4-Dimethylphenol	23%	J/UJ	13-15, 17-20

Internal Standard (IS) Area Performance - All internal standards met response and retention time (RT) criteria.

Method Blank - The method blanks exhibited the following contamination.

Blank ID	Compound	Conc. ug/kg	Action Level ug/kg	Qualifier	Affected Samples
WG59948-BLANK	Diethylphthalate	82	820	None	All associated ND

Field, Equipment Blank - Field QC results are summarized below.

Blank ID	Compound	Conc. ug/L	Action Level ug/kg	Qualifier	Affected Samples
MR08-FB12192008	None - ND	-	-	-	-
MR08-EB0112182008	None - ND	-	-	-	-
MR08-EB01-121908	Diethylphthalate	2	333	None	All associated ND

Field Duplicates - Field duplicate results are summarized below.

Compound	MR08-SS154-08D ug/kg	MR08-SS154D-08D ug/kg	RPD	Qualifier
Chrysene	1100	1300	17%	None
bis (2-Ethylhexyl) phthalate	860	750	14%	None

Compound	MR08-IS154-1-1.5 ug/kg	MR08-IS154D-1-1.5 ug/kg	RPD	Qualifier
Diethylphthalate	94	96	2%	None

Compound	MR08-SS178-08D ug/kg	MR08-SS178D-08D ug/kg	RPD	Qualifier
Diethylphthalate	90	350 U	NC	None
Chrysene	140	140	0%	None

Compound	MR08-IS178-4-5-08D ug/kg	MR08-IS178D-4-5-08D ug/kg	RPD	Qualifier
None	ND	ND	-	-

KATAHDIN ANALYTICAL SERVICES
Report of Analytical Results

Client: CH2MHill
Project: TO-009 Lejeune
PO No:
Sample Date: 12/18/08
Received Date: 12/20/08
Extraction Date: 12/24/08
Analysis Date: 16-JAN-2009 00:31
Report Date: 01/21/2009
Matrix: SOIL
% Solids: 80.4

Lab ID: SB7350-1
Client ID: MR08-SS155-08D
SDG: TO9-21
Extracted by: AC
Extraction Method: SW846 3550
Analyst: JCG
Analysis Method: SW846 8270C
Lab Prep Batch: WG59397
Units: ug/Kgdrywt

CAS#	Compound	Flags	Results	DF	PQL	Adj.PQL	Adj.MDL
100-52-7	Benzaldehyde	~~U~~ UJ	620	1.0	500	620	150 ICB
108-95-2	Phenol	U	620	1.0	500	620	190
111-44-4	Bis(2-Chloroethyl)ether	U	410	1.0	330	410	100
95-57-8	2-Chlorophenol	U	620	1.0	500	620	200
95-48-7	2-Methylphenol	U	750	1.0	600	750	250
108-60-1	2,2'-Oxybis(1-chloropropane)	U	410	1.0	330	410	110
98-86-2	Acetophenone	U	750	1.0	600	750	220
621-64-7	N-Nitroso-di-n-propylamine	U	410	1.0	330	410	100
65794-96-9	3&4-Methylphenol	U	750	1.0	600	750	230
67-72-1	Hexachloroethane	U	410	1.0	330	410	120
98-95-3	Nitrobenzene	U	410	1.0	330	410	110
78-59-1	Isophorone	U	410	1.0	330	410	93
88-75-5	2-Nitrophenol	U	750	1.0	600	750	210
105-67-9	2,4-Dimethylphenol	U	620	1.0	500	620	200
111-91-1	Bis(2-Chloroethoxy)methane	U	410	1.0	330	410	120
120-83-2	2,4-Dichlorophenol	U	620	1.0	500	620	190
106-47-8	4-Chloroaniline	U	620	1.0	500	620	150
105-60-2	Caprolactam	U	620	1.0	500	620	180
59-50-7	4-Chloro-3-Methylphenol	U	620	1.0	500	620	210
88-06-2	2,4,6-Trichlorophenol	U	620	1.0	500	620	190
95-95-4	2,4,5-Trichlorophenol	U	620	1.0	500	620	190
91-58-7	2-Chloronaphthalene	U	410	1.0	330	410	110
92-52-4	1,1'-Biphenyl	U	410	1.0	330	410	91
88-74-4	2-Nitroaniline	U	620	1.0	500	620	93
131-11-3	Dimethyl Phthalate	U	410	1.0	330	410	97
606-20-2	2,6-Dinitrotoluene	U	410	1.0	330	410	98
208-96-8	Acenaphthylene	U	410	1.0	330	410	87
99-09-2	3-Nitroaniline	U	620	1.0	500	620	120
83-32-9	Acenaphthene	U	410	1.0	330	410	81
51-28-5	2,4-Dinitrophenol	U	1500	1.0	1200	1500	470
132-64-9	Dibenzofuran	U	410	1.0	330	410	98
100-02-7	4-Nitrophenol	U	1500	1.0	1200	1500	380
121-14-2	2,4-Dinitrotoluene	U	410	1.0	330	410	100
84-66-2	Diethylphthalate	J	100	1.0	330	410	99
7005-72-3	4-Chlorophenyl-phenylether	U	410	1.0	330	410	97
100-01-6	4-Nitroaniline	U	620	1.0	500	620	170
534-52-1	4,6-Dinitro-2-Methylphenol	U	1500	1.0	1200	1500	420
86-30-6	N-Nitrosodiphenylamine	U	820	1.0	660	820	270
101-55-3	4-Bromophenyl-phenylether	U	410	1.0	330	410	100
1912-24-9	Atrazine	U	410	1.0	330	410	110
87-86-5	Pentachlorophenol	U	1000	1.0	820	1000	290
120-12-7	Anthracene	U	410	1.0	330	410	100
86-74-8	Carbazole	U	620	1.0	500	620	140

LW 3/5/09

KATAHDIN ANALYTICAL SERVICES
Report of Analytical Results

Client: CH2MHill
Project: TO-009 Lejeune
PO No:
Sample Date: 12/18/08
Received Date: 12/20/08
Extraction Date: 12/24/08
Analysis Date: 16-JAN-2009 00:31
Report Date: 01/21/2009
Matrix: SOIL
% Solids: 80.4

Lab ID: SB7350-1
Client ID: MR08-SS155-08D
SDG: TO9-21
Extracted by: AC
Extraction Method: SW846 3550
Analyst: JCG
Analysis Method: SW846 8270C
Lab Prep Batch: WG59397
Units: ug/Kgdrywt

CAS#	Compound	Flags	Results	DF	PQL	Adj.PQL	Adj.MDL	
84-74-2	Di-n-butylphthalate	U	410	1.0	330	410	120	
85-68-7	Butylbenzylphthalate	U	410	1.0	330	410	120	
91-94-1	3,3'-Dichlorobenzidine	U	620	1.0	500	620	140	
218-01-9	Chrysene	U	410	1.0	330	410	120	
117-81-7	bis(2-Ethylhexyl)phthalate	U	410	1.0	330	410	120	
117-84-0	Di-n-octylphthalate	~~U~~ UJ	410	1.0	330	410	260	CCH
367-12-4	2-Fluorophenol		58%					
13127-88-3	Phenol-D6		73%					
4165-60-0	Nitrobenzene-D5		67%					
321-60-8	2-Fluorobiphenyl		73%					
118-79-6	2,4,6-Tribromophenol		64%					
1718-51-0	Terphenyl-D14		114%					

LWS 3/5/09

2

KATAHDIN ANALYTICAL SERVICES
Report of Analytical Results

Client: CH2MHill
Project: TO-009 Lejeune
PO No:
Sample Date: 12/18/08
Received Date: 12/20/08
Extraction Date: 12/24/08
Analysis Date: 15-JAN-2009 18:43
Report Date: 01/21/2009
Matrix: SOIL
% Solids: 79.4

Lab ID: SB7350-3
Client ID: MR08-IS136-1-2-08D
SDG: TO9-21
Extracted by: AC
Extraction Method: SW846 3550
Analyst: JCG
Analysis Method: SW846 8270C
Lab Prep Batch: WG59397
Units: ug/Kgdrywt

CAS#	Compound	Flags	Results	DF	PQL	Adj.PQL	Adj.MDL
100-52-7	Benzaldehyde	~~U~~ UJ	630	1.0	500	630	150 ICB
108-95-2	Phenol	U	630	1.0	500	630	200
111-44-4	Bis(2-Chloroethyl)ether	U	420	1.0	330	420	100
95-57-8	2-Chlorophenol	U	630	1.0	500	630	210
95-48-7	2-Methylphenol	U	760	1.0	600	760	250
108-60-1	2,2'-Oxybis(1-chloropropane)	U	420	1.0	330	420	110
98-86-2	Acetophenone	U	760	1.0	600	760	220
621-64-7	N-Nitroso-di-n-propylamine	U	420	1.0	330	420	100
65794-96-9	3&4-Methylphenol	U	760	1.0	600	760	240
67-72-1	Hexachloroethane	U	420	1.0	330	420	120
98-95-3	Nitrobenzene	U	420	1.0	330	420	110
78-59-1	Isophorone	U	420	1.0	330	420	94
88-75-5	2-Nitrophenol	U	760	1.0	600	760	210
105-67-9	2,4-Dimethylphenol	U	630	1.0	500	630	210
111-91-1	Bis(2-Chloroethoxy)methane	U	420	1.0	330	420	120
120-83-2	2,4-Dichlorophenol	U	630	1.0	500	630	190
106-47-8	4-Chloroaniline	U	630	1.0	500	630	150
105-60-2	Caprolactam	U	630	1.0	500	630	180
59-50-7	4-Chloro-3-Methylphenol	U	630	1.0	500	630	210
88-06-2	2,4,6-Trichlorophenol	U	630	1.0	500	630	200
95-95-4	2,4,5-Trichlorophenol	U	630	1.0	500	630	200
91-58-7	2-Chloronaphthalene	U	420	1.0	330	420	110
92-52-4	1,1'-Biphenyl	U	420	1.0	330	420	92
88-74-4	2-Nitroaniline	U	630	1.0	500	630	94
131-11-3	Dimethyl Phthalate	U	420	1.0	330	420	98
606-20-2	2,6-Dinitrotoluene	U	420	1.0	330	420	100
208-96-8	Acenaphthylene	U	420	1.0	330	420	88
99-09-2	3-Nitroaniline	U	630	1.0	500	630	120
83-32-9	Acenaphthene	U	420	1.0	330	420	82
51-28-5	2,4-Dinitrophenol	U	1500	1.0	1200	1500	470
132-64-9	Dibenzofuran	U	420	1.0	330	420	100
100-02-7	4-Nitrophenol	U	1500	1.0	1200	1500	390
121-14-2	2,4-Dinitrotoluene	U	420	1.0	330	420	110
84-66-2	Diethylphthalate	U	420	1.0	330	420	100
7005-72-3	4-Chlorophenyl-phenylether	U	420	1.0	330	420	98
100-01-6	4-Nitroaniline	U	630	1.0	500	630	170
534-52-1	4,6-Dinitro-2-Methylphenol	U	1500	1.0	1200	1500	420
86-30-6	N-Nitrosodiphenylamine	U	830	1.0	660	830	280
101-55-3	4-Bromophenyl-phenylether	U	420	1.0	330	420	110
1912-24-9	Atrazine	U	420	1.0	330	420	110
87-86-5	Pentachlorophenol	U	1000	1.0	820	1000	300
120-12-7	Anthracene	U	420	1.0	330	420	100
86-74-8	Carbazole	U	630	1.0	500	630	140

LWS
3/5/09

2

KATAHDIN ANALYTICAL SERVICES
Report of Analytical Results

Client: CH2MHill
Project: TO-009 Lejeune
PO No:
Sample Date: 12/18/08
Received Date: 12/20/08
Extraction Date: 12/24/08
Analysis Date: 15-JAN-2009 18:43
Report Date: 01/21/2009
Matrix: SOIL
% Solids: 79.4

Lab ID: SB7350-3
Client ID: MR08-IS136-1-2-08D
SDG: TO9-21
Extracted by: AC
Extraction Method: SW846 3550
Analyst: JCG
Analysis Method: SW846 8270C
Lab Prep Batch: WG59397
Units: ug/Kgdrywt

CAS#	Compound	Flags	Results	DF	PQL	Adj.PQL	Adj.MDL	
84-74-2	Di-n-butylphthalate	U	420	1.0	330	420	130	
85-68-7	Butylbenzylphthalate	U	420	1.0	330	420	120	
91-94-1	3,3'-Dichlorobenzidine	U	630	1.0	500	630	140	
218-01-9	Chrysene	U	420	1.0	330	420	120	
117-81-7	bis(2-Ethylhexyl)phthalate	U	420	1.0	330	420	120	
117-84-0	Di-n-octylphthalate	~~U~~ UJ	420	1.0	330	420	260	CCH
367-12-4	2-Fluorophenol		63%					
13127-88-3	Phenol-D6		72%					
4165-60-0	Nitrobenzene-D5		76%					
321-60-8	2-Fluorobiphenyl		74%					
118-79-6	2,4,6-Tribromophenol		66%					
1718-51-0	Terphenyl-D14		102%					

CWS
3/5/09

3

KATAHDIN ANALYTICAL SERVICES
Report of Analytical Results

Client: CH2MHill
Project: TO-009 Lejeune
PO No:
Sample Date: 12/18/08
Received Date: 12/20/08
Extraction Date: 12/24/08
Analysis Date: 15-JAN-2009 21:42
Report Date: 01/21/2009
Matrix: SOIL
% Solids: 83.6

Lab ID: SB7350-5
Client ID: MR08-SS136-08D
SDG: TO9-21
Extracted by: AC
Extraction Method: SW846 3550
Analyst: JCG
Analysis Method: SW846 8270C
Lab Prep Batch: WG59397
Units: ug/Kgdrywt

CAS#	Compound	Flags	Results	DF	PQL	Adj.PQL	Adj.MDL	
100-52-7	Benzaldehyde	~~U~~ UJ	600	1.0	500	600	140	ICB
108-95-2	Phenol	U	600	1.0	500	600	190	
111-44-4	Bis(2-Chloroethyl)ether	U	390	1.0	330	390	97	
95-57-8	2-Chlorophenol	U	600	1.0	500	600	200	
95-48-7	2-Methylphenol	U	720	1.0	600	720	240	
108-60-1	2,2'-Oxybis(1-chloropropane)	U	390	1.0	330	390	110	
98-86-2	Acetophenone	U	720	1.0	600	720	210	
621-64-7	N-Nitroso-di-n-propylamine	U	390	1.0	330	390	99	
65794-96-9	3&4-Methylphenol	U	720	1.0	600	720	220	
67-72-1	Hexachloroethane	U	390	1.0	330	390	110	
98-95-3	Nitrobenzene	U	390	1.0	330	390	110	
78-59-1	Isophorone	U	390	1.0	330	390	90	
88-75-5	2-Nitrophenol	U	720	1.0	600	720	200	
105-67-9	2,4-Dimethylphenol	U	600	1.0	500	600	200	
111-91-1	Bis(2-Chloroethoxy)methane	U	390	1.0	330	390	110	
120-83-2	2,4-Dichlorophenol	U	600	1.0	500	600	180	
106-47-8	4-Chloroaniline	U	600	1.0	500	600	140	
105-60-2	Caprolactam	U	600	1.0	500	600	170	
59-50-7	4-Chloro-3-Methylphenol	U	600	1.0	500	600	200	
88-06-2	2,4,6-Trichlorophenol	U	600	1.0	500	600	180	
95-95-4	2,4,5-Trichlorophenol	U	600	1.0	500	600	180	
91-58-7	2-Chloronaphthalene	U	390	1.0	330	390	100	
92-52-4	1,1'-Biphenyl	U	390	1.0	330	390	87	
88-74-4	2-Nitroaniline	U	600	1.0	500	600	90	
131-11-3	Dimethyl Phthalate	U	390	1.0	330	390	93	
606-20-2	2,6-Dinitrotoluene	U	390	1.0	330	390	94	
208-96-8	Acenaphthylene	U	390	1.0	330	390	84	
99-09-2	3-Nitroaniline	U	600	1.0	500	600	110	
83-32-9	Acenaphthene	U	390	1.0	330	390	78	
51-28-5	2,4-Dinitrophenol	U	1400	1.0	1200	1400	450	
132-64-9	Dibenzofuran	U	390	1.0	330	390	94	
100-02-7	4-Nitrophenol	U	1400	1.0	1200	1400	370	
121-14-2	2,4-Dinitrotoluene	U	390	1.0	330	390	100	
84-66-2	Diethylphthalate	U	390	1.0	330	390	96	
7005-72-3	4-Chlorophenyl-phenylether	U	390	1.0	330	390	93	
100-01-6	4-Nitroaniline	U	600	1.0	500	600	160	
534-52-1	4,6-Dinitro-2-Methylphenol	U	1400	1.0	1200	1400	400	
86-30-6	N-Nitrosodiphenylamine	U	790	1.0	660	790	260	
101-55-3	4-Bromophenyl-phenylether	U	390	1.0	330	390	100	
1912-24-9	Atrazine	U	390	1.0	330	390	110	
87-86-5	Pentachlorophenol	U	980	1.0	820	980	280	
120-12-7	Anthracene	U	390	1.0	330	390	100	
86-74-8	Carbazole	U	600	1.0	500	600	130	

BW
3/5/09

3

KATAHDIN ANALYTICAL SERVICES
Report of Analytical Results

Client: CH2MHill
Project: TO-009 Lejeune
PO No:
Sample Date: 12/18/08
Received Date: 12/20/08
Extraction Date: 12/24/08
Analysis Date: 15-JAN-2009 21:42
Report Date: 01/21/2009
Matrix: SOIL
% Solids: 83.6

Lab ID: SB7350-5
Client ID: MR08-SS136-08D
SDG: TO9-21
Extracted by: AC
Extraction Method: SW846 3550
Analyst: JCG
Analysis Method: SW846 8270C
Lab Prep Batch: WG59397
Units: ug/Kgdrywt

CAS#	Compound	Flags	Results	DF	PQL	Adj.PQL	Adj.MDL	
84-74-2	Di-n-butylphthalate	U	390	1.0	330	390	120	
85-68-7	Butylbenzylphthalate	U	390	1.0	330	390	110	
91-94-1	3,3'-Dichlorobenzidine	U	600	1.0	500	600	140	
218-01-9	Chrysene	U	390	1.0	330	390	110	
117-81-7	bis(2-Ethylhexyl)phthalate	U	390	1.0	330	390	120	
117-84-0	Di-n-octylphthalate	~~U~~ UJ	390	1.0	330	390	250	CCH
367-12-4	2-Fluorophenol		73%					
13127-88-3	Phenol-D6		79%					
4165-60-0	Nitrobenzene-D5		79%					
321-60-8	2-Fluorobiphenyl		79%					
118-79-6	2,4,6-Tribromophenol		94%					
1718-51-0	Terphenyl-D14		117%					

lus
31569

KATAHDIN ANALYTICAL SERVICES
Report of Analytical Results

Client: CH2MHill
Project: TO-009 Lejeune
PO No:
Sample Date: 12/18/08
Received Date: 12/20/08
Extraction Date: 12/24/08
Analysis Date: 15-JAN-2009 20:58
Report Date: 01/21/2009
Matrix: SOIL
% Solids: 85.7

Lab ID: SB7350-7
Client ID: MR08-SS137-08D
SDG: TO9-21
Extracted by: AC
Extraction Method: SW846 3550
Analyst: JCG
Analysis Method: SW846 8270C
Lab Prep Batch: WG59397
Units: ug/Kgdrywt

CAS#	Compound	Flags	Results	DF	PQL	Adj.PQL	Adj.MDL
100-52-7	Benzaldehyde	~~U~~ UJ	580	1.0	500	580	140 ICB
108-95-2	Phenol	U	580	1.0	500	580	180
111-44-4	Bis(2-Chloroethyl)ether	U	380	1.0	330	380	94
95-57-8	2-Chlorophenol	U	580	1.0	500	580	190
95-48-7	2-Methylphenol	U	700	1.0	600	700	230
108-60-1	2,2'-Oxybis(1-chloropropane)	U	380	1.0	330	380	100
98-86-2	Acetophenone	U	700	1.0	600	700	210
621-64-7	N-Nitroso-di-n-propylamine	U	380	1.0	330	380	97
65794-96-9	3&4-Methylphenol	U	700	1.0	600	700	220
67-72-1	Hexachloroethane	U	380	1.0	330	380	110
98-95-3	Nitrobenzene	U	380	1.0	330	380	110
78-59-1	Isophorone	U	380	1.0	330	380	87
88-75-5	2-Nitrophenol	U	700	1.0	600	700	190
105-67-9	2,4-Dimethylphenol	U	580	1.0	500	580	190
111-91-1	Bis(2-Chloroethoxy)methane	U	380	1.0	330	380	110
120-83-2	2,4-Dichlorophenol	U	580	1.0	500	580	170
106-47-8	4-Chloroaniline	U	580	1.0	500	580	140
105-60-2	Caprolactam	U	580	1.0	500	580	170
59-50-7	4-Chloro-3-Methylphenol	U	580	1.0	500	580	190
88-06-2	2,4,6-Trichlorophenol	U	580	1.0	500	580	180
95-95-4	2,4,5-Trichlorophenol	U	580	1.0	500	580	180
91-58-7	2-Chloronaphthalene	U	380	1.0	330	380	100
92-52-4	1,1'-Biphenyl	U	380	1.0	330	380	85
88-74-4	2-Nitroaniline	U	580	1.0	500	580	87
131-11-3	Dimethyl Phthalate	U	380	1.0	330	380	91
606-20-2	2,6-Dinitrotoluene	U	380	1.0	330	380	92
208-96-8	Acenaphthylene	U	380	1.0	330	380	82
99-09-2	3-Nitroaniline	U	580	1.0	500	580	110
83-32-9	Acenaphthene	U	380	1.0	330	380	76
51-28-5	2,4-Dinitrophenol	U	1400	1.0	1200	1400	440
132-64-9	Dibenzofuran	U	380	1.0	330	380	92
100-02-7	4-Nitrophenol	U	1400	1.0	1200	1400	360
121-14-2	2,4-Dinitrotoluene	U	380	1.0	330	380	99
84-66-2	Diethylphthalate	J	94	1.0	330	380	93
7005-72-3	4-Chlorophenyl-phenylether	U	380	1.0	330	380	91
100-01-6	4-Nitroaniline	U	580	1.0	500	580	160
534-52-1	4,6-Dinitro-2-Methylphenol	U	1400	1.0	1200	1400	390
86-30-6	N-Nitrosodiphenylamine	U	770	1.0	660	770	260
101-55-3	4-Bromophenyl-phenylether	U	380	1.0	330	380	99
1912-24-9	Atrazine	U	380	1.0	330	380	110
87-86-5	Pentachlorophenol	U	960	1.0	820	960	280
120-12-7	Anthracene	U	380	1.0	330	380	98
86-74-8	Carbazole	U	580	1.0	500	580	130

lw 3/5/09

KATAHDIN ANALYTICAL SERVICES
Report of Analytical Results

Client: CH2MHill
Project: TO-009 Lejeune
PO No:
Sample Date: 12/18/08
Received Date: 12/20/08
Extraction Date: 12/24/08
Analysis Date: 15-JAN-2009 20:58
Report Date: 01/21/2009
Matrix: SOIL
% Solids: 85.7

Lab ID: SB7350-7
Client ID: MR08-SS137-08D
SDG: TO9-21
Extracted by: AC
Extraction Method: SW846 3550
Analyst: JCG
Analysis Method: SW846 8270C
Lab Prep Batch: WG59397
Units: ug/Kgdrywt

CAS#	Compound	Flags	Results	DF	PQL	Adj.PQL	Adj.MDL	
84-74-2	Di-n-butylphthalate	U	380	1.0	330	380	120	
85-68-7	Butylbenzylphthalate	U	380	1.0	330	380	110	
91-94-1	3,3'-Dichlorobenzidine	U	580	1.0	500	580	130	
218-01-9	Chrysene	U	380	1.0	330	380	110	
117-81-7	bis(2-Ethylhexyl)phthalate	U	380	1.0	330	380	110	
117-84-0	Di-n-octylphthalate	~~J~~ UJ	380	1.0	330	380	250	CCH
367-12-4	2-Fluorophenol		73%					
13127-88-3	Phenol-D6		82%					
4165-60-0	Nitrobenzene-D5		75%					
321-60-8	2-Fluorobiphenyl		84%					
118-79-6	2,4,6-Tribromophenol		85%					
1718-51-0	Terphenyl-D14		120%					

lw
3/5/09

5

KATAHDIN ANALYTICAL SERVICES
Report of Analytical Results

Client: CH2MHill
Project: TO-009 Lejeune
PO No:
Sample Date: 12/18/08
Received Date: 12/20/08
Extraction Date: 12/24/08
Analysis Date: 15-JAN-2009 17:57
Report Date: 01/21/2009
Matrix: SOIL
% Solids: 90.1

Lab ID: SB7350-9
Client ID: MR08-IS137-2.5-3.5
SDG: TO9-21
Extracted by: AC
Extraction Method: SW846 3550
Analyst: JCG
Analysis Method: SW846 8270C
Lab Prep Batch: WG59397
Units: ug/Kgdrywt

CAS#	Compound	Flags	Results	DF	PQL	Adj.PQL	Adj.MDL
100-52-7	Benzaldehyde	~~U~~ UJ	550	1.0	500	550	130 TeB
108-95-2	Phenol	U	550	1.0	500	550	170
111-44-4	Bis(2-Chloroethyl)ether	U	370	1.0	330	370	90
95-57-8	2-Chlorophenol	U	550	1.0	500	550	180
95-48-7	2-Methylphenol	U	660	1.0	600	660	220
108-60-1	2,2'-Oxybis(1-chloropropane)	U	370	1.0	330	370	99
98-86-2	Acetophenone	U	660	1.0	600	660	200
621-64-7	N-Nitroso-di-n-propylamine	U	370	1.0	330	370	92
65794-96-9	3&4-Methylphenol	U	660	1.0	600	660	210
67-72-1	Hexachloroethane	U	370	1.0	330	370	110
98-95-3	Nitrobenzene	U	370	1.0	330	370	100
78-59-1	Isophorone	U	370	1.0	330	370	83
88-75-5	2-Nitrophenol	U	660	1.0	600	660	180
105-67-9	2,4-Dimethylphenol	U	550	1.0	500	550	180
111-91-1	Bis(2-Chloroethoxy)methane	U	370	1.0	330	370	110
120-83-2	2,4-Dichlorophenol	U	550	1.0	500	550	170
106-47-8	4-Chloroaniline	U	550	1.0	500	550	130
105-60-2	Caprolactam	U	550	1.0	500	550	160
59-50-7	4-Chloro-3-Methylphenol	U	550	1.0	500	550	180
88-06-2	2,4,6-Trichlorophenol	U	550	1.0	500	550	170
95-95-4	2,4,5-Trichlorophenol	U	550	1.0	500	550	170
91-58-7	2-Chloronaphthalene	U	370	1.0	330	370	96
92-52-4	1,1'-Biphenyl	U	370	1.0	330	370	81
88-74-4	2-Nitroaniline	U	550	1.0	500	550	83
131-11-3	Dimethyl Phthalate	U	370	1.0	330	370	86
606-20-2	2,6-Dinitrotoluene	U	370	1.0	330	370	88
208-96-8	Acenaphthylene	U	370	1.0	330	370	78
99-09-2	3-Nitroaniline	U	550	1.0	500	550	100
83-32-9	Acenaphthene	U	370	1.0	330	370	72
51-28-5	2,4-Dinitrophenol	U	1300	1.0	1200	1300	420
132-64-9	Dibenzofuran	U	370	1.0	330	370	88
100-02-7	4-Nitrophenol	U	1300	1.0	1200	1300	340
121-14-2	2,4-Dinitrotoluene	U	370	1.0	330	370	94
84-66-2	Diethylphthalate	U	370	1.0	330	370	89
7005-72-3	4-Chlorophenyl-phenylether	U	370	1.0	330	370	86
100-01-6	4-Nitroaniline	U	550	1.0	500	550	150
534-52-1	4,6-Dinitro-2-Methylphenol	U	1300	1.0	1200	1300	370
86-30-6	N-Nitrosodiphenylamine	U	730	1.0	660	730	240
101-55-3	4-Bromophenyl-phenylether	U	370	1.0	330	370	94
1912-24-9	Atrazine	U	370	1.0	330	370	100
87-86-5	Pentachlorophenol	U	910	1.0	820	910	260
120-12-7	Anthracene	U	370	1.0	330	370	93
86-74-8	Carbazole	U	550	1.0	500	550	120

LW 3/5/09

5

KATAHDIN ANALYTICAL SERVICES
Report of Analytical Results

Client: CH2MHill
Project: TO-009 Lejeune
PO No:
Sample Date: 12/18/08
Received Date: 12/20/08
Extraction Date: 12/24/08
Analysis Date: 15-JAN-2009 17:57
Report Date: 01/21/2009
Matrix: SOIL
% Solids: 90.1

Lab ID: SB7350-9
Client ID: MR08-IS137-2.5-3.5
SDG: TO9-21
Extracted by: AC
Extraction Method: SW846 3550
Analyst: JCG
Analysis Method: SW846 8270C
Lab Prep Batch: WG59397
Units: ug/Kgdrywt

CAS#	Compound	Flags	Results	DF	PQL	Adj.PQL	Adj.MDL	
84-74-2	Di-n-butylphthalate	U	370	1.0	330	370	110	
85-68-7	Butylbenzylphthalate	U	370	1.0	330	370	100	
91-94-1	3,3'-Dichlorobenzidine	U	550	1.0	500	550	130	
218-01-9	Chrysene	U	370	1.0	330	370	100	
117-81-7	bis(2-Ethylhexyl)phthalate	U	370	1.0	330	370	110	
117-84-0	Di-n-octylphthalate	~~U~~ UJ	370	1.0	330	370	230	CCH
367-12-4	2-Fluorophenol		70%					
13127-88-3	Phenol-D6		79%					
4165-60-0	Nitrobenzene-D5		77%					
321-60-8	2-Fluorobiphenyl		74%					
118-79-6	2,4,6-Tribromophenol		72%					
1718-51-0	Terphenyl-D14		102%					

hw
3/5/09

6

KATAHDIN ANALYTICAL SERVICES
Report of Analytical Results

Client: CH2MHill
Project: TO-009 Lejeune
PO No:
Sample Date: 12/18/08
Received Date: 12/20/08
Extraction Date: 12/24/08
Analysis Date: 15-JAN-2009 22:25
Report Date: 01/21/2009
Matrix: SOIL
% Solids: 86.1

Lab ID: SB7350-11
Client ID: MR08-SS154-08D
SDG: TO9-21
Extracted by: AC
Extraction Method: SW846 3550
Analyst: JCG
Analysis Method: SW846 8270C
Lab Prep Batch: WG59397
Units: ug/Kgdrywt

CAS#	Compound	Flags	Results	DF	PQL	Adj.PQL	Adj.MDL
100-52-7	Benzaldehyde	~~U~~ UJ	580	1.0	500	580	140 JCB
108-95-2	Phenol	U	580	1.0	500	580	180
111-44-4	Bis(2-Chloroethyl)ether	U	380	1.0	330	380	94
95-57-8	2-Chlorophenol	U	580	1.0	500	580	190
95-48-7	2-Methylphenol	U	700	1.0	600	700	230
108-60-1	2,2'-Oxybis(1-chloropropane)	U	380	1.0	330	380	100
98-86-2	Acetophenone	U	700	1.0	600	700	210
621-64-7	N-Nitroso-di-n-propylamine	U	380	1.0	330	380	96
65794-96-9	3&4-Methylphenol	U	700	1.0	600	700	220
67-72-1	Hexachloroethane	U	380	1.0	330	380	110
98-95-3	Nitrobenzene	U	380	1.0	330	380	100
78-59-1	Isophorone	U	380	1.0	330	380	87
88-75-5	2-Nitrophenol	U	700	1.0	600	700	190
105-67-9	2,4-Dimethylphenol	U	580	1.0	500	580	190
111-91-1	Bis(2-Chloroethoxy)methane	U	380	1.0	330	380	110
120-83-2	2,4-Dichlorophenol	U	580	1.0	500	580	170
106-47-8	4-Chloroaniline	U	580	1.0	500	580	140
105-60-2	Caprolactam	U	580	1.0	500	580	170
59-50-7	4-Chloro-3-Methylphenol	U	580	1.0	500	580	190
88-06-2	2,4,6-Trichlorophenol	U	580	1.0	500	580	180
95-95-4	2,4,5-Trichlorophenol	U	580	1.0	500	580	180
91-58-7	2-Chloronaphthalene	U	380	1.0	330	380	100
92-52-4	1,1'-Biphenyl	U	380	1.0	330	380	85
88-74-4	2-Nitroaniline	U	580	1.0	500	580	87
131-11-3	Dimethyl Phthalate	U	380	1.0	330	380	91
606-20-2	2,6-Dinitrotoluene	U	380	1.0	330	380	92
208-96-8	Acenaphthylene	U	380	1.0	330	380	81
99-09-2	3-Nitroaniline	U	580	1.0	500	580	110
83-32-9	Acenaphthene	U	380	1.0	330	380	76
51-28-5	2,4-Dinitrophenol	U	1400	1.0	1200	1400	440
132-64-9	Dibenzofuran	U	380	1.0	330	380	92
100-02-7	4-Nitrophenol	U	1400	1.0	1200	1400	360
121-14-2	2,4-Dinitrotoluene	U	380	1.0	330	380	99
84-66-2	Diethylphthalate	U	380	1.0	330	380	93
7005-72-3	4-Chlorophenyl-phenylether	U	380	1.0	330	380	91
100-01-6	4-Nitroaniline	U	580	1.0	500	580	160
534-52-1	4,6-Dinitro-2-Methylphenol	U	1400	1.0	1200	1400	390
86-30-6	N-Nitrosodiphenylamine	U	770	1.0	660	770	250
101-55-3	4-Bromophenyl-phenylether	U	380	1.0	330	380	99
1912-24-9	Atrazine	U	380	1.0	330	380	100
87-86-5	Pentachlorophenol	U	950	1.0	820	950	280
120-12-7	Anthracene	U	380	1.0	330	380	98
86-74-8	Carbazole	U	580	1.0	500	580	130

lw
3/5/09

6

KATAHDIN ANALYTICAL SERVICES
Report of Analytical Results

Client: CH2MHill
Project: TO-009 Lejeune
PO No:
Sample Date: 12/18/08
Received Date: 12/20/08
Extraction Date: 12/24/08
Analysis Date: 15-JAN-2009 22:25
Report Date: 01/21/2009
Matrix: SOIL
% Solids: 86.1

Lab ID: SB7350-11
Client ID: MR08-SS154-08D
SDG: TO9-21
Extracted by: AC
Extraction Method: SW846 3550
Analyst: JCG
Analysis Method: SW846 8270C
Lab Prep Batch: WG59397
Units: ug/Kgdrywt

CAS#	Compound	Flags	Results	DF	PQL	Adj.PQL	Adj.MDL	
84-74-2	Di-n-butylphthalate	U	380	1.0	330	380	120	
85-68-7	Butylbenzylphthalate	U	380	1.0	330	380	110	
91-94-1	3,3'-Dichlorobenzidine	U	580	1.0	500	580	130	
218-01-9	Chrysene		1100	1.0	330	380	110	
117-81-7	bis(2-Ethylhexyl)phthalate	J	860	1.0	330	380	110	BSH
117-84-0	Di-n-octylphthalate	~~U~~ UJ	380	1.0	330	380	240	CCH
367-12-4	2-Fluorophenol		76%					
13127-88-3	Phenol-D6		84%					
4165-60-0	Nitrobenzene-D5		79%					
321-60-8	2-Fluorobiphenyl		79%					
118-79-6	2,4,6-Tribromophenol		87%					
1718-51-0	Terphenyl-D14		123%					

LW
3/5/09

7

KATAHDIN ANALYTICAL SERVICES
Report of Analytical Results

Client: CH2MHill
Project: TO-009 Lejeune
PO No:
Sample Date: 12/18/08
Received Date: 12/20/08
Extraction Date: 12/24/08
Analysis Date: 15-JAN-2009 23:07
Report Date: 01/21/2009
Matrix: SOIL
% Solids: 86.0

Lab ID: SB7350-13
Client ID: MR08-SS154D-08D
SDG: TO9-21
Extracted by: AC
Extraction Method: SW846 3550
Analyst: JCG
Analysis Method: SW846 8270C
Lab Prep Batch: WG59397
Units: ug/Kgdrywt

CAS#	Compound	Flags	Results	DF	PQL	Adj.PQL	Adj.MDL
100-52-7	Benzaldehyde	~~J~~ UJ	580	1.0	500	580	140 ICB
108-95-2	Phenol	U	580	1.0	500	580	180
111-44-4	Bis(2-Chloroethyl)ether	U	380	1.0	330	380	94
95-57-8	2-Chlorophenol	U	580	1.0	500	580	190
95-48-7	2-Methylphenol	U	700	1.0	600	700	230
108-60-1	2,2'-Oxybis(1-chloropropane)	U	380	1.0	330	380	100
98-86-2	Acetophenone	U	700	1.0	600	700	210
621-64-7	N-Nitroso-di-n-propylamine	U	380	1.0	330	380	96
65794-96-9	3&4-Methylphenol	U	700	1.0	600	700	220
67-72-1	Hexachloroethane	U	380	1.0	330	380	110
98-95-3	Nitrobenzene	U	380	1.0	330	380	100
78-59-1	Isophorone	U	380	1.0	330	380	87
88-75-5	2-Nitrophenol	U	700	1.0	600	700	190
105-67-9	2,4-Dimethylphenol	U	580	1.0	500	580	190
111-91-1	Bis(2-Chloroethoxy)methane	U	380	1.0	330	380	110
120-83-2	2,4-Dichlorophenol	U	580	1.0	500	580	170
106-47-8	4-Chloroaniline	U	580	1.0	500	580	140
105-60-2	Caprolactam	U	580	1.0	500	580	170
59-50-7	4-Chloro-3-Methylphenol	U	580	1.0	500	580	190
88-06-2	2,4,6-Trichlorophenol	U	580	1.0	500	580	180
95-95-4	2,4,5-Trichlorophenol	U	580	1.0	500	580	180
91-58-7	2-Chloronaphthalene	U	380	1.0	330	380	100
92-52-4	1,1'-Biphenyl	U	380	1.0	330	380	85
88-74-4	2-Nitroaniline	U	580	1.0	500	580	87
131-11-3	Dimethyl Phthalate	U	380	1.0	330	380	91
606-20-2	2,6-Dinitrotoluene	U	380	1.0	330	380	92
208-96-8	Acenaphthylene	U	380	1.0	330	380	81
99-09-2	3-Nitroaniline	U	580	1.0	500	580	110
83-32-9	Acenaphthene	U	380	1.0	330	380	76
51-28-5	2,4-Dinitrophenol	U	1400	1.0	1200	1400	440
132-64-9	Dibenzofuran	U	380	1.0	330	380	92
100-02-7	4-Nitrophenol	U	1400	1.0	1200	1400	360
121-14-2	2,4-Dinitrotoluene	U	380	1.0	330	380	99
84-66-2	Diethylphthalate	U	380	1.0	330	380	93
7005-72-3	4-Chlorophenyl-phenylether	U	380	1.0	330	380	91
100-01-6	4-Nitroaniline	U	580	1.0	500	580	160
534-52-1	4,6-Dinitro-2-Methylphenol	U	1400	1.0	1200	1400	390
86-30-6	N-Nitrosodiphenylamine	U	770	1.0	660	770	250
101-55-3	4-Bromophenyl-phenylether	U	380	1.0	330	380	99
1912-24-9	Atrazine	U	380	1.0	330	380	100
87-86-5	Pentachlorophenol	U	950	1.0	820	950	280
120-12-7	Anthracene	U	380	1.0	330	380	98
86-74-8	Carbazole	U	580	1.0	500	580	130

lw
3/5/09

7

KATAHDIN ANALYTICAL SERVICES
Report of Analytical Results

Client: CH2MHill
Project: TO-009 Lejeune
PO No:
Sample Date: 12/18/08
Received Date: 12/20/08
Extraction Date: 12/24/08
Analysis Date: 15-JAN-2009 23:07
Report Date: 01/21/2009
Matrix: SOIL
% Solids: 86.0

Lab ID: SB7350-13
Client ID: MR08-SS154D-08D
SDG: TO9-21
Extracted by: AC
Extraction Method: SW846 3550
Analyst: JCG
Analysis Method: SW846 8270C
Lab Prep Batch: WG59397
Units: ug/Kgdrywt

CAS#	Compound	Flags	Results	DF	PQL	Adj.PQL	Adj.MDL	
84-74-2	Di-n-butylphthalate	U	380	1.0	330	380	120	
85-68-7	Butylbenzylphthalate	U	380	1.0	330	380	110	
91-94-1	3,3'-Dichlorobenzidine	U	580	1.0	500	580	130	
218-01-9	Chrysene		1300	1.0	330	380	110	
117-81-7	bis(2-Ethylhexyl)phthalate	J	750	1.0	330	380	110	BSH
117-84-0	Di-n-octylphthalate	~~J~~ UJ	380	1.0	330	380	240	CCU
367-12-4	2-Fluorophenol		60%					
13127-88-3	Phenol-D6		76%					
4165-60-0	Nitrobenzene-D5		78%					
321-60-8	2-Fluorobiphenyl		78%					
118-79-6	2,4,6-Tribromophenol		50%					
1718-51-0	Terphenyl-D14		110%					

fw 3/5/09

KATAHDIN ANALYTICAL SERVICES
Report of Analytical Results

Client: CH2MHill
Project: TO-009 Lejeune
PO No:
Sample Date: 12/18/08
Received Date: 12/20/08
Extraction Date: 12/24/08
Analysis Date: 16-JAN-2009 13:32
Report Date: 01/21/2009
Matrix: SOIL
% Solids: 87.6

Lab ID: SB7350-15
Client ID: MR08-IS154-1-1.5
SDG: TO9-21
Extracted by: AC
Extraction Method: SW846 3550
Analyst: JCG
Analysis Method: SW846 8270C
Lab Prep Batch: WG59397
Units: ug/Kgdrywt

CAS#	Compound	Flags	Results	DF	PQL	Adj.PQL	Adj.MDL
100-52-7	Benzaldehyde	~~J~~ UJ	570	1.0	500	570	140 JCB
108-95-2	Phenol	U	570	1.0	500	570	180
111-44-4	Bis(2-Chloroethyl)ether	U	380	1.0	330	380	92
95-57-8	2-Chlorophenol	U	570	1.0	500	570	190
95-48-7	2-Methylphenol	U	680	1.0	600	680	230
108-60-1	2,2'-Oxybis(1-chloropropane)	U	380	1.0	330	380	100
98-86-2	Acetophenone	U	680	1.0	600	680	200
621-64-7	N-Nitroso-di-n-propylamine	U	380	1.0	330	380	95
65794-96-9	3&4-Methylphenol	U	680	1.0	600	680	210
67-72-1	Hexachloroethane	U	380	1.0	330	380	110
98-95-3	Nitrobenzene	U	380	1.0	330	380	100
78-59-1	Isophorone	U	380	1.0	330	380	86
88-75-5	2-Nitrophenol	U	680	1.0	600	680	190
105-67-9	2,4-Dimethylphenol	U	570	1.0	500	570	190
111-91-1	Bis(2-Chloroethoxy)methane	U	380	1.0	330	380	110
120-83-2	2,4-Dichlorophenol	U	570	1.0	500	570	170
106-47-8	4-Chloroaniline	U	570	1.0	500	570	140
105-60-2	Caprolactam	U	570	1.0	500	570	160
59-50-7	4-Chloro-3-Methylphenol	U	570	1.0	500	570	190
88-06-2	2,4,6-Trichlorophenol	U	570	1.0	500	570	180
95-95-4	2,4,5-Trichlorophenol	U	570	1.0	500	570	180
91-58-7	2-Chloronaphthalene	U	380	1.0	330	380	99
92-52-4	1,1'-Biphenyl	U	380	1.0	330	380	83
88-74-4	2-Nitroaniline	U	570	1.0	500	570	86
131-11-3	Dimethyl Phthalate	U	380	1.0	330	380	89
606-20-2	2,6-Dinitrotoluene	U	380	1.0	330	380	90
208-96-8	Acenaphthylene	U	380	1.0	330	380	80
99-09-2	3-Nitroaniline	U	570	1.0	500	570	110
83-32-9	Acenaphthene	U	380	1.0	330	380	74
51-28-5	2,4-Dinitrophenol	U	1400	1.0	1200	1400	430
132-64-9	Dibenzofuran	U	380	1.0	330	380	90
100-02-7	4-Nitrophenol	U	1400	1.0	1200	1400	350
121-14-2	2,4-Dinitrotoluene	U	380	1.0	330	380	97
84-66-2	Diethylphthalate	J	94	1.0	330	380	91
7005-72-3	4-Chlorophenyl-phenylether	U	380	1.0	330	380	89
100-01-6	4-Nitroaniline	U	570	1.0	500	570	150
534-52-1	4,6-Dinitro-2-Methylphenol	U	1400	1.0	1200	1400	380
86-30-6	N-Nitrosodiphenylamine	U	750	1.0	660	750	250
101-55-3	4-Bromophenyl-phenylether	U	380	1.0	330	380	97
1912-24-9	Atrazine	U	380	1.0	330	380	100
87-86-5	Pentachlorophenol	U	940	1.0	820	940	270
120-12-7	Anthracene	U	380	1.0	330	380	96
86-74-8	Carbazole	U	570	1.0	500	570	130

LW 3/5/09

KATAHDIN ANALYTICAL SERVICES
Report of Analytical Results

Client: CH2MHill
Project: TO-009 Lejeune
PO No:
Sample Date: 12/18/08
Received Date: 12/20/08
Extraction Date: 12/24/08
Analysis Date: 16-JAN-2009 13:32
Report Date: 01/21/2009
Matrix: SOIL
% Solids: 87.6

Lab ID: SB7350-15
Client ID: MR08-IS154-1-1.5
SDG: TO9-21
Extracted by: AC
Extraction Method: SW846 3550
Analyst: JCG
Analysis Method: SW846 8270C
Lab Prep Batch: WG59397
Units: ug/Kgdrywt

CAS#	Compound	Flags	Results	DF	PQL	Adj.PQL	Adj.MDL	
84-74-2	Di-n-butylphthalate	U	380	1.0	330	380	120	
85-68-7	Butylbenzylphthalate	U	380	1.0	330	380	110	
91-94-1	3,3'-Dichlorobenzidine	U	570	1.0	500	570	130	
218-01-9	Chrysene	U	380	1.0	330	380	110	
117-81-7	bis(2-Ethylhexyl)phthalate	~~U~~ UJ	380	1.0	330	380	110	CCH
117-84-0	Di-n-octylphthalate	~~U~~ UJ	380	1.0	330	380	240	CCH
367-12-4	2-Fluorophenol		74%					
13127-88-3	Phenol-D6		79%					
4165-60-0	Nitrobenzene-D5		83%					
321-60-8	2-Fluorobiphenyl		78%					
118-79-6	2,4,6-Tribromophenol		77%					
1718-51-0	Terphenyl-D14		101%					

hw
3/5/09

9

KATAHDIN ANALYTICAL SERVICES
Report of Analytical Results

Client: CH2MHill
Project: TO-009 Lejeune
PO No:
Sample Date: 12/18/08
Received Date: 12/20/08
Extraction Date: 12/24/08
Analysis Date: 16-JAN-2009 14:19
Report Date: 01/21/2009
Matrix: SOIL
% Solids: 86.4

Lab ID: SB7350-17
Client ID: MR08-IS154D-1-1.5
SDG: TO9-21
Extracted by: AC
Extraction Method: SW846 3550
Analyst: JCG
Analysis Method: SW846 8270C
Lab Prep Batch: WG59397
Units: ug/Kgdrywt

CAS#	Compound	Flags	Results	DF	PQL	Adj.PQL	Adj.MDL
100-52-7	Benzaldehyde	~~U~~ UJ	580	1.0	500	580	140 JCB
108-95-2	Phenol	U	580	1.0	500	580	180
111-44-4	Bis(2-Chloroethyl)ether	U	380	1.0	330	380	94
95-57-8	2-Chlorophenol	U	580	1.0	500	580	190
95-48-7	2-Methylphenol	U	690	1.0	600	690	230
108-60-1	2,2'-Oxybis(1-chloropropane)	U	380	1.0	330	380	100
98-86-2	Acetophenone	U	690	1.0	600	690	210
621-64-7	N-Nitroso-di-n-propylamine	U	380	1.0	330	380	96
65794-96-9	3&4-Methylphenol	U	690	1.0	600	690	220
67-72-1	Hexachloroethane	U	380	1.0	330	380	110
98-95-3	Nitrobenzene	U	380	1.0	330	380	100
78-59-1	Isophorone	U	380	1.0	330	380	87
88-75-5	2-Nitrophenol	U	690	1.0	600	690	190
105-67-9	2,4-Dimethylphenol	U	580	1.0	500	580	190
111-91-1	Bis(2-Chloroethoxy)methane	U	380	1.0	330	380	110
120-83-2	2,4-Dichlorophenol	U	580	1.0	500	580	170
106-47-8	4-Chloroaniline	U	580	1.0	500	580	140
105-60-2	Caprolactam	U	580	1.0	500	580	170
59-50-7	4-Chloro-3-Methylphenol	U	580	1.0	500	580	190
88-06-2	2,4,6-Trichlorophenol	U	580	1.0	500	580	180
95-95-4	2,4,5-Trichlorophenol	U	580	1.0	500	580	180
91-58-7	2-Chloronaphthalene	U	380	1.0	330	380	100
92-52-4	1,1'-Biphenyl	U	380	1.0	330	380	84
88-74-4	2-Nitroaniline	U	580	1.0	500	580	87
131-11-3	Dimethyl Phthalate	U	380	1.0	330	380	90
606-20-2	2,6-Dinitrotoluene	U	380	1.0	330	380	91
208-96-8	Acenaphthylene	U	380	1.0	330	380	81
99-09-2	3-Nitroaniline	U	580	1.0	500	580	110
83-32-9	Acenaphthene	U	380	1.0	330	380	75
51-28-5	2,4-Dinitrophenol	U	1400	1.0	1200	1400	440
132-64-9	Dibenzofuran	U	380	1.0	330	380	91
100-02-7	4-Nitrophenol	U	1400	1.0	1200	1400	360
121-14-2	2,4-Dinitrotoluene	U	380	1.0	330	380	98
84-66-2	Diethylphthalate	J	96	1.0	330	380	92
7005-72-3	4-Chlorophenyl-phenylether	U	380	1.0	330	380	90
100-01-6	4-Nitroaniline	U	580	1.0	500	580	160
534-52-1	4,6-Dinitro-2-Methylphenol	U	1400	1.0	1200	1400	390
86-30-6	N-Nitrosodiphenylamine	U	760	1.0	660	760	250
101-55-3	4-Bromophenyl-phenylether	U	380	1.0	330	380	98
1912-24-9	Atrazine	U	380	1.0	330	380	100
87-86-5	Pentachlorophenol	U	950	1.0	820	950	270
120-12-7	Anthracene	U	380	1.0	330	380	97
86-74-8	Carbazole	U	580	1.0	500	580	130

JCB 3/5/09

9

KATAHDIN ANALYTICAL SERVICES
Report of Analytical Results

Client: CH2MHill
Project: TO-009 Lejeune
PO No:
Sample Date: 12/18/08
Received Date: 12/20/08
Extraction Date: 12/24/08
Analysis Date: 16-JAN-2009 14:19
Report Date: 01/21/2009
Matrix: SOIL
% Solids: 86.4

Lab ID: SB7350-17
Client ID: MR08-IS154D-1-1.5
SDG: TO9-21
Extracted by: AC
Extraction Method: SW846 3550
Analyst: JCG
Analysis Method: SW846 8270C
Lab Prep Batch: WG59397
Units: ug/Kgdrywt

CAS#	Compound	Flags	Results	DF	PQL	Adj.PQL	Adj.MDL	
84-74-2	Di-n-butylphthalate	U	380	1.0	330	380	120	
85-68-7	Butylbenzylphthalate	U	380	1.0	330	380	110	
91-94-1	3,3'-Dichlorobenzidine	U	580	1.0	500	580	130	
218-01-9	Chrysene	U	380	1.0	330	380	110	
117-81-7	bis(2-Ethylhexyl)phthalate	~~U~~ UJ	380	1.0	330	380	110	CCH
117-84-0	Di-n-octylphthalate	~~U~~ UJ	380	1.0	330	380	240	CCH
367-12-4	2-Fluorophenol		71%					
13127-88-3	Phenol-D6		72%					
4165-60-0	Nitrobenzene-D5		76%					
321-60-8	2-Fluorobiphenyl		71%					
118-79-6	2,4,6-Tribromophenol		76%					
1718-51-0	Terphenyl-D14		93%					

MW 3/5/09

10

KATAHDIN ANALYTICAL SERVICES
Report of Analytical Results

Client: CH2MHill
Project: TO-009 Lejeune
PO No:
Sample Date: 12/18/08
Received Date: 12/20/08
Extraction Date: 12/24/08
Analysis Date: 16-JAN-2009 23:09
Report Date: 01/21/2009
Matrix: SOIL
% Solids: 83.4

Lab ID: SB7350-19
Client ID: MR08-SS161-08D
SDG: TO9-21
Extracted by: AC
Extraction Method: SW846 3550
Analyst: JCG
Analysis Method: SW846 8270C
Lab Prep Batch: WG59397
Units: ug/Kgdrywt

CAS#	Compound	Flags	Results	DF	PQL	Adj.PQL	Adj.MDL
100-52-7	Benzaldehyde	~~J~~ UJ	600	1.0	500	600	140 JCB
108-95-2	Phenol	U	600	1.0	500	600	190
111-44-4	Bis(2-Chloroethyl)ether	U	400	1.0	330	400	97
95-57-8	2-Chlorophenol	U	600	1.0	500	600	200
95-48-7	2-Methylphenol	U	720	1.0	600	720	240
108-60-1	2,2'-Oxybis(1-chloropropane)	U	400	1.0	330	400	110
98-86-2	Acetophenone	U	720	1.0	600	720	210
621-64-7	N-Nitroso-di-n-propylamine	U	400	1.0	330	400	100
65794-96-9	3&4-Methylphenol	U	720	1.0	600	720	220
67-72-1	Hexachloroethane	U	400	1.0	330	400	120
98-95-3	Nitrobenzene	U	400	1.0	330	400	110
78-59-1	Isophorone	U	400	1.0	330	400	90
88-75-5	2-Nitrophenol	U	720	1.0	600	720	200
105-67-9	2,4-Dimethylphenol	U	600	1.0	500	600	200
111-91-1	Bis(2-Chloroethoxy)methane	U	400	1.0	330	400	120
120-83-2	2,4-Dichlorophenol	U	600	1.0	500	600	180
106-47-8	4-Chloroaniline	U	600	1.0	500	600	140
105-60-2	Caprolactam	U	600	1.0	500	600	170
59-50-7	4-Chloro-3-Methylphenol	U	600	1.0	500	600	200
88-06-2	2,4,6-Trichlorophenol	U	600	1.0	500	600	180
95-95-4	2,4,5-Trichlorophenol	U	600	1.0	500	600	180
91-58-7	2-Chloronaphthalene	U	400	1.0	330	400	100
92-52-4	1,1'-Biphenyl	U	400	1.0	330	400	88
88-74-4	2-Nitroaniline	U	600	1.0	500	600	90
131-11-3	Dimethyl Phthalate	U	400	1.0	330	400	94
606-20-2	2,6-Dinitrotoluene	U	400	1.0	330	400	95
208-96-8	Acenaphthylene	U	400	1.0	330	400	84
99-09-2	3-Nitroaniline	U	600	1.0	500	600	110
83-32-9	Acenaphthene	U	400	1.0	330	400	78
51-28-5	2,4-Dinitrophenol	U	1400	1.0	1200	1400	450
132-64-9	Dibenzofuran	U	400	1.0	330	400	95
100-02-7	4-Nitrophenol	U	1400	1.0	1200	1400	370
121-14-2	2,4-Dinitrotoluene	U	400	1.0	330	400	100
84-66-2	Diethylphthalate	J	100	1.0	330	400	96
7005-72-3	4-Chlorophenyl-phenylether	U	400	1.0	330	400	94
100-01-6	4-Nitroaniline	U	600	1.0	500	600	160
534-52-1	4,6-Dinitro-2-Methylphenol	U	1400	1.0	1200	1400	400
86-30-6	N-Nitrosodiphenylamine	U	790	1.0	660	790	260
101-55-3	4-Bromophenyl-phenylether	U	400	1.0	330	400	100
1912-24-9	Atrazine	U	400	1.0	330	400	110
87-86-5	Pentachlorophenol	U	980	1.0	820	980	280
120-12-7	Anthracene	U	400	1.0	330	400	100
86-74-8	Carbazole	U	600	1.0	500	600	130

MW 3/5/09

10

KATAHDIN ANALYTICAL SERVICES
Report of Analytical Results

Client: CH2MHill
Project: TO-009 Lejeune
PO No:
Sample Date: 12/18/08
Received Date: 12/20/08
Extraction Date: 12/24/08
Analysis Date: 16-JAN-2009 23:09
Report Date: 01/21/2009
Matrix: SOIL
% Solids: 83.4

Lab ID: SB7350-19
Client ID: MR08-SS161-08D
SDG: TO9-21
Extracted by: AC
Extraction Method: SW846 3550
Analyst: JCG
Analysis Method: SW846 8270C
Lab Prep Batch: WG59397
Units: ug/Kgdrywt

CAS#	Compound	Flags	Results	DF	PQL	Adj.PQL	Adj.MDL	
84-74-2	Di-n-butylphthalate	U	400	1.0	330	400	120	
85-68-7	Butylbenzylphthalate	U	400	1.0	330	400	110	
91-94-1	3,3'-Dichlorobenzidine	U	600	1.0	500	600	140	
218-01-9	Chrysene		1500	1.0	330	400	110	
117-81-7	bis(2-Ethylhexyl)phthalate	~~J~~ J	220	1.0	330	400	120	CCH.
117-84-0	Di-n-octylphthalate	~~J~~ UJ	400	1.0	330	400	250	CCH
367-12-4	2-Fluorophenol		78%					
13127-88-3	Phenol-D6		87%					
4165-60-0	Nitrobenzene-D5		85%					
321-60-8	2-Fluorobiphenyl		86%					
118-79-6	2,4,6-Tribromophenol		87%					
1718-51-0	Terphenyl-D14		116%					

MW
3/5/09

11

KATAHDIN ANALYTICAL SERVICES
Report of Analytical Results

Client: CH2MHill
Project: TO-009 Lejeune
PO No:
Sample Date: 12/18/08
Received Date: 12/20/08
Extraction Date: 12/24/08
Analysis Date: 16-JAN-2009 15:04
Report Date: 01/21/2009
Matrix: SOIL
% Solids: 89.1

Lab ID: SB7350-21
Client ID: MR08-IS161-1-1.5
SDG: TO9-21
Extracted by: AC
Extraction Method: SW846 3550
Analyst: JCG
Analysis Method: SW846 8270C
Lab Prep Batch: WG59397
Units: ug/Kgdrywt

CAS#	Compound	Flags	Results	DF	PQL	Adj.PQL	Adj.MDL
100-52-7	Benzaldehyde	~~U~~ UJ	560	1.0	500	560	130 JCB
108-95-2	Phenol	U	560	1.0	500	560	180
111-44-4	Bis(2-Chloroethyl)ether	U	370	1.0	330	370	91
95-57-8	2-Chlorophenol	U	560	1.0	500	560	180
95-48-7	2-Methylphenol	U	670	1.0	600	670	220
108-60-1	2,2'-Oxybis(1-chloropropane)	U	370	1.0	330	370	100
98-86-2	Acetophenone	U	670	1.0	600	670	200
621-64-7	N-Nitroso-di-n-propylamine	U	370	1.0	330	370	93
65794-96-9	3&4-Methylphenol	U	670	1.0	600	670	210
67-72-1	Hexachloroethane	U	370	1.0	330	370	110
98-95-3	Nitrobenzene	U	370	1.0	330	370	100
78-59-1	Isophorone	U	370	1.0	330	370	84
88-75-5	2-Nitrophenol	U	670	1.0	600	670	190
105-67-9	2,4-Dimethylphenol	U	560	1.0	500	560	180
111-91-1	Bis(2-Chloroethoxy)methane	U	370	1.0	330	370	110
120-83-2	2,4-Dichlorophenol	U	560	1.0	500	560	170
106-47-8	4-Chloroaniline	U	560	1.0	500	560	130
105-60-2	Caprolactam	U	560	1.0	500	560	160
59-50-7	4-Chloro-3-Methylphenol	U	560	1.0	500	560	190
88-06-2	2,4,6-Trichlorophenol	U	560	1.0	500	560	170
95-95-4	2,4,5-Trichlorophenol	U	560	1.0	500	560	170
91-58-7	2-Chloronaphthalene	U	370	1.0	330	370	98
92-52-4	1,1'-Biphenyl	U	370	1.0	330	370	82
88-74-4	2-Nitroaniline	U	560	1.0	500	560	84
131-11-3	Dimethyl Phthalate	U	370	1.0	330	370	88
606-20-2	2,6-Dinitrotoluene	U	370	1.0	330	370	89
208-96-8	Acenaphthylene	U	370	1.0	330	370	78
99-09-2	3-Nitroaniline	U	560	1.0	500	560	100
83-32-9	Acenaphthene	U	370	1.0	330	370	73
51-28-5	2,4-Dinitrophenol	U	1300	1.0	1200	1300	420
132-64-9	Dibenzofuran	U	370	1.0	330	370	89
100-02-7	4-Nitrophenol	U	1300	1.0	1200	1300	350
121-14-2	2,4-Dinitrotoluene	U	370	1.0	330	370	95
84-66-2	Diethylphthalate	J	92	1.0	330	370	90
7005-72-3	4-Chlorophenyl-phenylether	U	370	1.0	330	370	88
100-01-6	4-Nitroaniline	U	560	1.0	500	560	150
534-52-1	4,6-Dinitro-2-Methylphenol	U	1300	1.0	1200	1300	380
86-30-6	N-Nitrosodiphenylamine	U	740	1.0	660	740	240
101-55-3	4-Bromophenyl-phenylether	U	370	1.0	330	370	95
1912-24-9	Atrazine	U	370	1.0	330	370	100
87-86-5	Pentachlorophenol	U	920	1.0	820	920	260
120-12-7	Anthracene	U	370	1.0	330	370	94
86-74-8	Carbazole	U	560	1.0	500	560	120

LW
3/5/09

KATAHDIN ANALYTICAL SERVICES
Report of Analytical Results

Client: CH2MHill
Project: TO-009 Lejeune
PO No:
Sample Date: 12/18/08
Received Date: 12/20/08
Extraction Date: 12/24/08
Analysis Date: 16-JAN-2009 15:04
Report Date: 01/21/2009
Matrix: SOIL
% Solids: 89.1

Lab ID: SB7350-21
Client ID: MR08-IS161-1-1.5
SDG: TO9-21
Extracted by: AC
Extraction Method: SW846 3550
Analyst: JCG
Analysis Method: SW846 8270C
Lab Prep Batch: WG59397
Units: ug/Kgdrywt

CAS#	Compound	Flags	Results	DF	PQL	Adj.PQL	Adj.MDL	
84-74-2	Di-n-butylphthalate	U	370	1.0	330	370	110	
85-68-7	Butylbenzylphthalate	U	370	1.0	330	370	100	
91-94-1	3,3'-Dichlorobenzidine	U	560	1.0	500	560	130	
218-01-9	Chrysene	U	370	1.0	330	370	110	
117-81-7	bis(2-Ethylhexyl)phthalate	~~U~~ UJ	370	1.0	330	370	110	CCH
117-84-0	Di-n-octylphthalate	~~U~~ UJ	370	1.0	330	370	240	CCH
367-12-4	2-Fluorophenol		61%					
13127-88-3	Phenol-D6		70%					
4165-60-0	Nitrobenzene-D5		82%					
321-60-8	2-Fluorobiphenyl		77%					
118-79-6	2,4,6-Tribromophenol		58%					
1718-51-0	Terphenyl-D14		97%					

MW 3/5/09

12

KATAHDIN ANALYTICAL SERVICES
Report of Analytical Results

Client: CH2MHill
Project: TO-009 Lejeune
PO No:
Sample Date: 12/18/08
Received Date: 12/20/08
Extraction Date: 12/24/08
Analysis Date: 16-JAN-2009 21:02
Report Date: 01/21/2009
Matrix: SOIL
% Solids: 92.2

Lab ID: SB7350-23
Client ID: MR08-SS178-08D
SDG: TO9-21
Extracted by: AC
Extraction Method: SW846 3550
Analyst: JCG
Analysis Method: SW846 8270C
Lab Prep Batch: WG59397
Units: ug/Kgdrywt

CAS#	Compound	Flags	Results	DF	PQL	Adj.PQL	Adj.MDL
100-52-7	Benzaldehyde	~~J~~ UJ	540	1.0	500	540	130 JCB
108-95-2	Phenol	U	540	1.0	500	540	170
111-44-4	Bis(2-Chloroethyl)ether	U	360	1.0	330	360	88
95-57-8	2-Chlorophenol	U	540	1.0	500	540	180
95-48-7	2-Methylphenol	U	650	1.0	600	650	220
108-60-1	2,2'-Oxybis(1-chloropropane)	U	360	1.0	330	360	96
98-86-2	Acetophenone	U	650	1.0	600	650	190
621-64-7	N-Nitroso-di-n-propylamine	U	360	1.0	330	360	90
65794-96-9	3&4-Methylphenol	U	650	1.0	600	650	200
67-72-1	Hexachloroethane	U	360	1.0	330	360	100
98-95-3	Nitrobenzene	U	360	1.0	330	360	99
78-59-1	Isophorone	U	360	1.0	330	360	81
88-75-5	2-Nitrophenol	U	650	1.0	600	650	180
105-67-9	2,4-Dimethylphenol	U	540	1.0	500	540	180
111-91-1	Bis(2-Chloroethoxy)methane	U	360	1.0	330	360	100
120-83-2	2,4-Dichlorophenol	U	540	1.0	500	540	160
106-47-8	4-Chloroaniline	U	540	1.0	500	540	130
105-60-2	Caprolactam	U	540	1.0	500	540	160
59-50-7	4-Chloro-3-Methylphenol	U	540	1.0	500	540	180
88-06-2	2,4,6-Trichlorophenol	U	540	1.0	500	540	170
95-95-4	2,4,5-Trichlorophenol	U	540	1.0	500	540	170
91-58-7	2-Chloronaphthalene	U	360	1.0	330	360	94
92-52-4	1,1'-Biphenyl	U	360	1.0	330	360	79
88-74-4	2-Nitroaniline	U	540	1.0	500	540	81
131-11-3	Dimethyl Phthalate	U	360	1.0	330	360	85
606-20-2	2,6-Dinitrotoluene	U	360	1.0	330	360	86
208-96-8	Acenaphthylene	U	360	1.0	330	360	76
99-09-2	3-Nitroaniline	U	540	1.0	500	540	100
83-32-9	Acenaphthene	U	360	1.0	330	360	70
51-28-5	2,4-Dinitrophenol	U	1300	1.0	1200	1300	410
132-64-9	Dibenzofuran	U	360	1.0	330	360	86
100-02-7	4-Nitrophenol	U	1300	1.0	1200	1300	340
121-14-2	2,4-Dinitrotoluene	U	360	1.0	330	360	92
84-66-2	Diethylphthalate	J	90	1.0	330	360	87
7005-72-3	4-Chlorophenyl-phenylether	U	360	1.0	330	360	85
100-01-6	4-Nitroaniline	U	540	1.0	500	540	140
534-52-1	4,6-Dinitro-2-Methylphenol	U	1300	1.0	1200	1300	360
86-30-6	N-Nitrosodiphenylamine	U	720	1.0	660	720	240
101-55-3	4-Bromophenyl-phenylether	U	360	1.0	330	360	92
1912-24-9	Atrazine	U	360	1.0	330	360	99
87-86-5	Pentachlorophenol	U	890	1.0	820	890	260
120-12-7	Anthracene	U	360	1.0	330	360	91
86-74-8	Carbazole	U	540	1.0	500	540	120

LW
3/5/09

12

KATAHDIN ANALYTICAL SERVICES
Report of Analytical Results

Client: CH2MHill
Project: TO-009 Lejeune
PO No:
Sample Date: 12/18/08
Received Date: 12/20/08
Extraction Date: 12/24/08
Analysis Date: 16-JAN-2009 21:02
Report Date: 01/21/2009
Matrix: SOIL
% Solids: 92.2

Lab ID: SB7350-23
Client ID: MR08-SS178-08D
SDG: TO9-21
Extracted by: AC
Extraction Method: SW846 3550
Analyst: JCG
Analysis Method: SW846 8270C
Lab Prep Batch: WG59397
Units: ug/Kgdrywt

CAS#	Compound	Flags	Results	DF	PQL	Adj.PQL	Adj.MDL	
84-74-2	Di-n-butylphthalate	U	360	1.0	330	360	110	
85-68-7	Butylbenzylphthalate	U	360	1.0	330	360	100	
91-94-1	3,3'-Dichlorobenzidine	U	540	1.0	500	540	120	
218-01-9	Chrysene	J	140	1.0	330	360	100	
117-81-7	bis(2-Ethylhexyl)phthalate	~~U~~ UJ	360	1.0	330	360	110	CCH
117-84-0	Di-n-octylphthalate	~~U~~ UJ	360	1.0	330	360	230	CCH
367-12-4	2-Fluorophenol		68%					
13127-88-3	Phenol-D6		75%					
4165-60-0	Nitrobenzene-D5		74%					
321-60-8	2-Fluorobiphenyl		76%					
118-79-6	2,4,6-Tribromophenol		87%					
1718-51-0	Terphenyl-D14		*127%					

RW 3/5/09

13

KATAHDIN ANALYTICAL SERVICES
Report of Analytical Results

Client: CH2MHill
Project: TO-009 Lejeune
PO No:
Sample Date: 12/18/08
Received Date: 12/20/08
Extraction Date: 12/29/08
Analysis Date: 17-JAN-2009 12:13
Report Date: 01/21/2009
Matrix: SOIL
% Solids: 93.7

Lab ID: SB7350-25
Client ID: MR08-SS178D-08D
SDG: TO9-21
Extracted by: CB
Extraction Method: SW846 3550
Analyst: JCG
Analysis Method: SW846 8270C
Lab Prep Batch: WG59445
Units: ug/Kgdrywt

CAS#	Compound	Flags	Results	DF	PQL	Adj.PQL	Adj.MDL	
100-52-7	Benzaldehyde	~~U~~ UJ	530	1.0	500	530	130	ICB
108-95-2	Phenol	U	530	1.0	500	530	170	
111-44-4	Bis(2-Chloroethyl)ether	U	350	1.0	330	350	86	
95-57-8	2-Chlorophenol	U	530	1.0	500	530	180	
95-48-7	2-Methylphenol	U	640	1.0	600	640	210	
108-60-1	2,2'-Oxybis(1-chloropropane)	U	350	1.0	330	350	95	
98-86-2	Acetophenone	U	640	1.0	600	640	190	
621-64-7	N-Nitroso-di-n-propylamine	U	350	1.0	330	350	88	
65794-96-9	3&4-Methylphenol	U	640	1.0	600	640	200	
67-72-1	Hexachloroethane	U	350	1.0	330	350	100	
98-95-3	Nitrobenzene	U	350	1.0	330	350	97	
78-59-1	Isophorone	U	350	1.0	330	350	80	
88-75-5	2-Nitrophenol	U	640	1.0	600	640	180	
105-67-9	2,4-Dimethylphenol	~~U~~ UJ	530	1.0	500	530	180	BSL
111-91-1	Bis(2-Chloroethoxy)methane	U	350	1.0	330	350	100	
120-83-2	2,4-Dichlorophenol	U	530	1.0	500	530	160	
106-47-8	4-Chloroaniline	U	530	1.0	500	530	130	
105-60-2	Caprolactam	U	530	1.0	500	530	150	
59-50-7	4-Chloro-3-Methylphenol	U	530	1.0	500	530	180	
88-06-2	2,4,6-Trichlorophenol	U	530	1.0	500	530	160	
95-95-4	2,4,5-Trichlorophenol	U	530	1.0	500	530	160	
91-58-7	2-Chloronaphthalene	U	350	1.0	330	350	93	
92-52-4	1,1'-Biphenyl	U	350	1.0	330	350	78	
88-74-4	2-Nitroaniline	U	530	1.0	500	530	80	
131-11-3	Dimethyl Phthalate	U	350	1.0	330	350	83	
606-20-2	2,6-Dinitrotoluene	U	350	1.0	330	350	84	
208-96-8	Acenaphthylene	U	350	1.0	330	350	75	
99-09-2	3-Nitroaniline	U	530	1.0	500	530	100	
83-32-9	Acenaphthene	U	350	1.0	330	350	69	
51-28-5	2,4-Dinitrophenol	~~U~~ UJ	1300	1.0	1200	1300	400	CCH
132-64-9	Dibenzofuran	U	350	1.0	330	350	84	
100-02-7	4-Nitrophenol	U	1300	1.0	1200	1300	330	
121-14-2	2,4-Dinitrotoluene	U	350	1.0	330	350	91	
84-66-2	Diethylphthalate	U	350	1.0	330	350	85	
7005-72-3	4-Chlorophenyl-phenylether	U	350	1.0	330	350	83	
100-01-6	4-Nitroaniline	U	530	1.0	500	530	140	
534-52-1	4,6-Dinitro-2-Methylphenol	U	1300	1.0	1200	1300	360	
86-30-6	N-Nitrosodiphenylamine	U	700	1.0	660	700	230	
101-55-3	4-Bromophenyl-phenylether	U	350	1.0	330	350	91	
1912-24-9	Atrazine	U	350	1.0	330	350	97	
87-86-5	Pentachlorophenol	U	880	1.0	820	880	250	
120-12-7	Anthracene	U	350	1.0	330	350	90	
86-74-8	Carbazole	U	530	1.0	500	530	120	

MW
3/5/09

KATAHDIN ANALYTICAL SERVICES
Report of Analytical Results

13

Client: CH2MHill
Project: TO-009 Lejeune
PO No:
Sample Date: 12/18/08
Received Date: 12/20/08
Extraction Date: 12/29/08
Analysis Date: 17-JAN-2009 12:13
Report Date: 01/21/2009
Matrix: SOIL
% Solids: 93.7

Lab ID: SB7350-25
Client ID: MR08-SS178D-08D
SDG: TO9-21
Extracted by: CB
Extraction Method: SW846 3550
Analyst: JCG
Analysis Method: SW846 8270C
Lab Prep Batch: WG59445
Units: ug/Kgdrywt

CAS#	Compound	Flags	Results	DF	PQL	Adj.PQL	Adj.MDL
84-74-2	Di-n-butylphthalate	U	350	1.0	330	350	110
85-68-7	Butylbenzylphthalate	U	350	1.0	330	350	99
91-94-1	3,3'-Dichlorobenzidine	U	530	1.0	500	530	120
218-01-9	Chrysene	J	140	1.0	330	350	100
117-81-7	bis(2-Ethylhexyl)phthalate	U	350	1.0	330	350	100
117-84-0	Di-n-octylphthalate	U	350	1.0	330	350	220
367-12-4	2-Fluorophenol		68%				
13127-88-3	Phenol-D6		72%				
4165-60-0	Nitrobenzene-D5		72%				
321-60-8	2-Fluorobiphenyl		79%				
118-79-6	2,4,6-Tribromophenol		52%				
1718-51-0	Terphenyl-D14		89%				

MW 3/5/09

KATAHDIN ANALYTICAL SERVICES
Report of Analytical Results

Client: CH2MHill
Project: TO-009 Lejeune
PO No:
Sample Date: 12/18/08
Received Date: 12/20/08
Extraction Date: 12/29/08
Analysis Date: 17-JAN-2009 12:57
Report Date: 01/21/2009
Matrix: SOIL
% Solids: 92.4

Lab ID: SB7350-27
Client ID: MR08-IS178-4-5-08D
SDG: TO9-21
Extracted by: CB
Extraction Method: SW846 3550
Analyst: JCG
Analysis Method: SW846 8270C
Lab Prep Batch: WG59445
Units: ug/Kgdrywt

CAS#	Compound	Flags	Results	DF	PQL	Adj.PQL	Adj.MDL
100-52-7	Benzaldehyde	~~U~~ UJ	540	1.0	500	540	130 JCB
108-95-2	Phenol	U	540	1.0	500	540	170
111-44-4	Bis(2-Chloroethyl)ether	U	360	1.0	330	360	88
95-57-8	2-Chlorophenol	U	540	1.0	500	540	180
95-48-7	2-Methylphenol	U	650	1.0	600	650	220
108-60-1	2,2'-Oxybis(1-chloropropane)	U	360	1.0	330	360	96
98-86-2	Acetophenone	U	650	1.0	600	650	190
621-64-7	N-Nitroso-di-n-propylamine	U	360	1.0	330	360	90
65794-96-9	3&4-Methylphenol	U	650	1.0	600	650	200
67-72-1	Hexachloroethane	U	360	1.0	330	360	100
98-95-3	Nitrobenzene	U	360	1.0	330	360	98
78-59-1	Isophorone	U	360	1.0	330	360	81
88-75-5	2-Nitrophenol	U	650	1.0	600	650	180
105-67-9	2,4-Dimethylphenol	~~U~~ UJ	540	1.0	500	540	180 BSL
111-91-1	Bis(2-Chloroethoxy)methane	U	360	1.0	330	360	100
120-83-2	2,4-Dichlorophenol	U	540	1.0	500	540	160
106-47-8	4-Chloroaniline	U	540	1.0	500	540	130
105-60-2	Caprolactam	U	540	1.0	500	540	160
59-50-7	4-Chloro-3-Methylphenol	U	540	1.0	500	540	180
88-06-2	2,4,6-Trichlorophenol	U	540	1.0	500	540	170
95-95-4	2,4,5-Trichlorophenol	U	540	1.0	500	540	170
91-58-7	2-Chloronaphthalene	U	360	1.0	330	360	94
92-52-4	1,1'-Biphenyl	U	360	1.0	330	360	79
88-74-4	2-Nitroaniline	U	540	1.0	500	540	81
131-11-3	Dimethyl Phthalate	U	360	1.0	330	360	84
606-20-2	2,6-Dinitrotoluene	U	360	1.0	330	360	86
208-96-8	Acenaphthylene	U	360	1.0	330	360	76
99-09-2	3-Nitroaniline	U	540	1.0	500	540	100
83-32-9	Acenaphthene	U	360	1.0	330	360	70
51-28-5	2,4-Dinitrophenol	~~U~~ UJ	1300	1.0	1200	1300	410 CCH
132-64-9	Dibenzofuran	U	360	1.0	330	360	86
100-02-7	4-Nitrophenol	U	1300	1.0	1200	1300	330
121-14-2	2,4-Dinitrotoluene	U	360	1.0	330	360	92
84-66-2	Diethylphthalate	U	360	1.0	330	360	87
7005-72-3	4-Chlorophenyl-phenylether	U	360	1.0	330	360	84
100-01-6	4-Nitroaniline	U	540	1.0	500	540	140
534-52-1	4,6-Dinitro-2-Methylphenol	U	1300	1.0	1200	1300	360
86-30-6	N-Nitrosodiphenylamine	U	710	1.0	660	710	240
101-55-3	4-Bromophenyl-phenylether	U	360	1.0	330	360	92
1912-24-9	Atrazine	U	360	1.0	330	360	98
87-86-5	Pentachlorophenol	U	890	1.0	820	890	260
120-12-7	Anthracene	U	360	1.0	330	360	91
86-74-8	Carbazole	U	540	1.0	500	540	120

LW
3/5/09

KATAHDIN ANALYTICAL SERVICES
Report of Analytical Results

Client: CH2MHill
Project: TO-009 Lejeune
PO No:
Sample Date: 12/18/08
Received Date: 12/20/08
Extraction Date: 12/29/08
Analysis Date: 17-JAN-2009 12:57
Report Date: 01/21/2009
Matrix: SOIL
% Solids: 92.4

Lab ID: SB7350-27
Client ID: MR08-IS178-4-5-08D
SDG: TO9-21
Extracted by: CB
Extraction Method: SW846 3550
Analyst: JCG
Analysis Method: SW846 8270C
Lab Prep Batch: WG59445
Units: ug/Kgdrywt

CAS#	Compound	Flags	Results	DF	PQL	Adj.PQL	Adj.MDL
84-74-2	Di-n-butylphthalate	U	360	1.0	330	360	110
85-68-7	Butylbenzylphthalate	U	360	1.0	330	360	100
91-94-1	3,3'-Dichlorobenzidine	U	540	1.0	500	540	120
218-01-9	Chrysene	U	360	1.0	330	360	100
117-81-7	bis(2-Ethylhexyl)phthalate	U	360	1.0	330	360	110
117-84-0	Di-n-octylphthalate	U	360	1.0	330	360	230
367-12-4	2-Fluorophenol		52%				
13127-88-3	Phenol-D6		63%				
4165-60-0	Nitrobenzene-D5		68%				
321-60-8	2-Fluorobiphenyl		73%				
118-79-6	2,4,6-Tribromophenol		38%				
1718-51-0	Terphenyl-D14		82%				

LW 3/5/09

KATAHDIN ANALYTICAL SERVICES
Report of Analytical Results

Client: CH2MHill
Project: TO-009 Lejeune
PO No:
Sample Date: 12/18/08
Received Date: 12/20/08
Extraction Date: 12/29/08
Analysis Date: 17-JAN-2009 13:40
Report Date: 01/21/2009
Matrix: SOIL
% Solids: 92.2

Lab ID: SB7350-29
Client ID: MR08-IS178D-4-5-08D
SDG: TO9-21
Extracted by: CB
Extraction Method: SW846 3550
Analyst: JCG
Analysis Method: SW846 8270C
Lab Prep Batch: WG59445
Units: ug/Kgdrywt

CAS#	Compound	Flags	Results	DF	PQL	Adj.PQL	Adj.MDL	
100-52-7	Benzaldehyde	~~U~~ UJ	540	1.0	500	540	130	ICB
108-95-2	Phenol	U	540	1.0	500	540	170	
111-44-4	Bis(2-Chloroethyl)ether	U	360	1.0	330	360	88	
95-57-8	2-Chlorophenol	U	540	1.0	500	540	180	
95-48-7	2-Methylphenol	U	650	1.0	600	650	220	
108-60-1	2,2'-Oxybis(1-chloropropane)	U	360	1.0	330	360	96	
98-86-2	Acetophenone	U	650	1.0	600	650	190	
621-64-7	N-Nitroso-di-n-propylamine	U	360	1.0	330	360	90	
65794-96-9	3&4-Methylphenol	U	650	1.0	600	650	200	
67-72-1	Hexachloroethane	U	360	1.0	330	360	100	
98-95-3	Nitrobenzene	U	360	1.0	330	360	99	
78-59-1	Isophorone	U	360	1.0	330	360	81	
88-75-5	2-Nitrophenol	U	650	1.0	600	650	180	
105-67-9	2,4-Dimethylphenol	~~U~~ UJ	540	1.0	500	540	180	BSL
111-91-1	Bis(2-Chloroethoxy)methane	U	360	1.0	330	360	100	
120-83-2	2,4-Dichlorophenol	U	540	1.0	500	540	160	
106-47-8	4-Chloroaniline	U	540	1.0	500	540	130	
105-60-2	Caprolactam	U	540	1.0	500	540	160	
59-50-7	4-Chloro-3-Methylphenol	U	540	1.0	500	540	180	
88-06-2	2,4,6-Trichlorophenol	U	540	1.0	500	540	170	
95-95-4	2,4,5-Trichlorophenol	U	540	1.0	500	540	170	
91-58-7	2-Chloronaphthalene	U	360	1.0	330	360	94	
92-52-4	1,1'-Biphenyl	U	360	1.0	330	360	79	
88-74-4	2-Nitroaniline	U	540	1.0	500	540	81	
131-11-3	Dimethyl Phthalate	U	360	1.0	330	360	84	
606-20-2	2,6-Dinitrotoluene	U	360	1.0	330	360	86	
208-96-8	Acenaphthylene	U	360	1.0	330	360	76	
99-09-2	3-Nitroaniline	U	540	1.0	500	540	100	
83-32-9	Acenaphthene	U	360	1.0	330	360	70	
51-28-5	2,4-Dinitrophenol	~~U~~ UJ	1300	1.0	1200	1300	410	CCH
132-64-9	Dibenzofuran	U	360	1.0	330	360	86	
100-02-7	4-Nitrophenol	U	1300	1.0	1200	1300	340	
121-14-2	2,4-Dinitrotoluene	U	360	1.0	330	360	92	
84-66-2	Diethylphthalate	U	360	1.0	330	360	87	
7005-72-3	4-Chlorophenyl-phenylether	U	360	1.0	330	360	84	
100-01-6	4-Nitroaniline	U	540	1.0	500	540	140	
534-52-1	4,6-Dinitro-2-Methylphenol	U	1300	1.0	1200	1300	360	
86-30-6	N-Nitrosodiphenylamine	U	720	1.0	660	720	240	
101-55-3	4-Bromophenyl-phenylether	U	360	1.0	330	360	92	
1912-24-9	Atrazine	U	360	1.0	330	360	99	
87-86-5	Pentachlorophenol	U	890	1.0	820	890	260	
120-12-7	Anthracene	U	360	1.0	330	360	91	
86-74-8	Carbazole	U	540	1.0	500	540	120	

lw
315109

15

KATAHDIN ANALYTICAL SERVICES
Report of Analytical Results

Client: CH2MHill
Project: TO-009 Lejeune
PO No:
Sample Date: 12/18/08
Received Date: 12/20/08
Extraction Date: 12/29/08
Analysis Date: 17-JAN-2009 13:40
Report Date: 01/21/2009
Matrix: SOIL
% Solids: 92.2

Lab ID: SB7350-29
Client ID: MR08-IS178D-4-5-08D
SDG: TO9-21
Extracted by: CB
Extraction Method: SW846 3550
Analyst: JCG
Analysis Method: SW846 8270C
Lab Prep Batch: WG59445
Units: ug/Kgdrywt

CAS#	Compound	Flags	Results	DF	PQL	Adj.PQL	Adj.MDL
84-74-2	Di-n-butylphthalate	U	360	1.0	330	360	110
85-68-7	Butylbenzylphthalate	U	360	1.0	330	360	100
91-94-1	3,3'-Dichlorobenzidine	U	540	1.0	500	540	120
218-01-9	Chrysene	U	360	1.0	330	360	100
117-81-7	bis(2-Ethylhexyl)phthalate	U	360	1.0	330	360	110
117-84-0	Di-n-octylphthalate	U	360	1.0	330	360	230
367-12-4	2-Fluorophenol		55%				
13127-88-3	Phenol-D6		66%				
4165-60-0	Nitrobenzene-D5		70%				
321-60-8	2-Fluorobiphenyl		80%				
118-79-6	2,4,6-Tribromophenol		35%				
1718-51-0	Terphenyl-D14		90%				

lew
3/5/09

16

KATAHDIN ANALYTICAL SERVICES
Report of Analytical Results

Client: CH2MHill
Project: TO-009 Lejeune
PO No:
Sample Date: 12/18/08
Received Date: 12/20/08
Extraction Date: 12/29/08
Analysis Date: 17-JAN-2009 14:24
Report Date: 01/21/2009
Matrix: SOIL
% Solids: 87.2

Lab ID: SB7350-31
Client ID: MR08-SS177-08D
SDG: TO9-21
Extracted by: CB
Extraction Method: SW846 3550
Analyst: JCG
Analysis Method: SW846 8270C
Lab Prep Batch: WG59445
Units: ug/Kgdrywt

CAS#	Compound	Flags		Results	DF	PQL	Adj.PQL	Adj.MDL	
100-52-7	Benzaldehyde	U	UJ	570	1.0	500	570	140	SSL
108-95-2	Phenol	U		570	1.0	500	570	180	
111-44-4	Bis(2-Chloroethyl)ether	U		380	1.0	330	380	93	
95-57-8	2-Chlorophenol	U		570	1.0	500	570	190	
95-48-7	2-Methylphenol	U		690	1.0	600	690	230	
108-60-1	2,2'-Oxybis(1-chloropropane)	U		380	1.0	330	380	100	
98-86-2	Acetophenone	U		690	1.0	600	690	200	
621-64-7	N-Nitroso-di-n-propylamine	U		380	1.0	330	380	95	
65794-96-9	3&4-Methylphenol	U		690	1.0	600	690	210	
67-72-1	Hexachloroethane	U		380	1.0	330	380	110	
98-95-3	Nitrobenzene	U		380	1.0	330	380	100	
78-59-1	Isophorone	U		380	1.0	330	380	86	
88-75-5	2-Nitrophenol	U		690	1.0	600	690	190	
105-67-9	2,4-Dimethylphenol	U		570	1.0	500	570	190	
111-91-1	Bis(2-Chloroethoxy)methane	U		380	1.0	330	380	110	
120-83-2	2,4-Dichlorophenol	U		570	1.0	500	570	170	
106-47-8	4-Chloroaniline	U		570	1.0	500	570	140	
105-60-2	Caprolactam	U		570	1.0	500	570	160	
59-50-7	4-Chloro-3-Methylphenol	U		570	1.0	500	570	190	
88-06-2	2,4,6-Trichlorophenol	U		570	1.0	500	570	180	
95-95-4	2,4,5-Trichlorophenol	U		570	1.0	500	570	180	
91-58-7	2-Chloronaphthalene	U		380	1.0	330	380	100	
92-52-4	1,1'-Biphenyl	U		380	1.0	330	380	84	
88-74-4	2-Nitroaniline	U		570	1.0	500	570	86	
131-11-3	Dimethyl Phthalate	U		380	1.0	330	380	89	
606-20-2	2,6-Dinitrotoluene	U		380	1.0	330	380	90	
208-96-8	Acenaphthylene	U		380	1.0	330	380	80	
99-09-2	3-Nitroaniline	U		570	1.0	500	570	110	
83-32-9	Acenaphthene	U		380	1.0	330	380	74	
51-28-5	2,4-Dinitrophenol	U		1400	1.0	1200	1400	430	
132-64-9	Dibenzofuran	U		380	1.0	330	380	90	
100-02-7	4-Nitrophenol	U		1400	1.0	1200	1400	350	
121-14-2	2,4-Dinitrotoluene	U		380	1.0	330	380	97	
84-66-2	Diethylphthalate	U		380	1.0	330	380	92	
7005-72-3	4-Chlorophenyl-phenylether	U		380	1.0	330	380	89	
100-01-6	4-Nitroaniline	U		570	1.0	500	570	150	
534-52-1	4,6-Dinitro-2-Methylphenol	U		1400	1.0	1200	1400	390	
86-30-6	N-Nitrosodiphenylamine	U		760	1.0	660	760	250	
101-55-3	4-Bromophenyl-phenylether	U		380	1.0	330	380	97	
1912-24-9	Atrazine	U		380	1.0	330	380	100	
87-86-5	Pentachlorophenol	U		940	1.0	820	940	270	
120-12-7	Anthracene	U		380	1.0	330	380	96	
86-74-8	Carbazole	U		570	1.0	500	570	130	

lw 3/5/09

16

KATAHDIN ANALYTICAL SERVICES
Report of Analytical Results

Client: CH2MHill
Project: TO-009 Lejeune
PO No:
Sample Date: 12/18/08
Received Date: 12/20/08
Extraction Date: 12/29/08
Analysis Date: 17-JAN-2009 14:24
Report Date: 01/21/2009
Matrix: SOIL
% Solids: 87.2

Lab ID: SB7350-31
Client ID: MR08-SS177-08D
SDG: TO9-21
Extracted by: CB
Extraction Method: SW846 3550
Analyst: JCG
Analysis Method: SW846 8270C
Lab Prep Batch: WG59445
Units: ug/Kgdrywt

CAS#	Compound	Flags	Results	DF	PQL	Adj.PQL	Adj.MDL
84-74-2	Di-n-butylphthalate	U UJ	380	1.0	330	380	120 SSL
85-68-7	Butylbenzylphthalate	U	380	1.0	330	380	110
91-94-1	3,3'-Dichlorobenzidine	U	570	1.0	500	570	130
218-01-9	Chrysene	U	380	1.0	330	380	110
117-81-7	bis(2-Ethylhexyl)phthalate	U	380	1.0	330	380	110
117-84-0	Di-n-octylphthalate	U	380	1.0	330	380	240
367-12-4	2-Fluorophenol		* 22%				
13127-88-3	Phenol-D6		* 25%				
4165-60-0	Nitrobenzene-D5		* 28%				
321-60-8	2-Fluorobiphenyl		* 31%				
118-79-6	2,4,6-Tribromophenol		* 12%				
1718-51-0	Terphenyl-D14		36%				

MW 3/5/09

16RE

KATAHDIN ANALYTICAL SERVICES
Report of Analytical Results

Client: CH2MHill
Project: TO-009 Lejeune
PO No:
Sample Date: 12/18/08
Received Date: 12/20/08
Extraction Date: 01/19/09
Analysis Date: 20-JAN-2009 23:02
Report Date: 01/21/2009
Matrix: SOIL
% Solids: 87.2

Lab ID: SB7350-31RE
Client ID: MR08-SS177-08D
SDG: TO9-21
Extracted by: CB
Extraction Method: SW846 3550
Analyst: JCG
Analysis Method: SW846 8270C
Lab Prep Batch: WG59948
Units: ug/Kgdrywt

use original

R RE

CAS#	Compound	Flags	Results	DF	PQL	Adj.PQL	Adj.MDL
100-52-7	Benzaldehyde	U R	570	1.0	500	570	140 HT
108-95-2	Phenol	U	570	1.0	500	570	180
111-44-4	Bis(2-Chloroethyl)ether	U	380	1.0	330	380	93
95-57-8	2-Chlorophenol	U	570	1.0	500	570	190
95-48-7	2-Methylphenol	U	690	1.0	600	690	230
108-60-1	2,2'-Oxybis(1-chloropropane)	U	380	1.0	330	380	100
98-86-2	Acetophenone	U	690	1.0	600	690	200
621-64-7	N-Nitroso-di-n-propylamine	U	380	1.0	330	380	95
65794-96-9	3&4-Methylphenol	U	690	1.0	600	690	210
67-72-1	Hexachloroethane	U	380	1.0	330	380	110
98-95-3	Nitrobenzene	U	380	1.0	330	380	100
78-59-1	Isophorone	U	380	1.0	330	380	86
88-75-5	2-Nitrophenol	U	690	1.0	600	690	190
105-67-9	2,4-Dimethylphenol	U	570	1.0	500	570	190
111-91-1	Bis(2-Chloroethoxy)methane	U	380	1.0	330	380	110
120-83-2	2,4-Dichlorophenol	U	570	1.0	500	570	170
106-47-8	4-Chloroaniline	U	570	1.0	500	570	140
105-60-2	Caprolactam	U	570	1.0	500	570	160
59-50-7	4-Chloro-3-Methylphenol	U	570	1.0	500	570	190
88-06-2	2,4,6-Trichlorophenol	U	570	1.0	500	570	180
95-95-4	2,4,5-Trichlorophenol	U	570	1.0	500	570	180
91-58-7	2-Chloronaphthalene	U	380	1.0	330	380	100
92-52-4	1,1'-Biphenyl	U	380	1.0	330	380	84
88-74-4	2-Nitroaniline	U	570	1.0	500	570	86
131-11-3	Dimethyl Phthalate	U	380	1.0	330	380	89
606-20-2	2,6-Dinitrotoluene	U	380	1.0	330	380	90
208-96-8	Acenaphthylene	U	380	1.0	330	380	80
99-09-2	3-Nitroaniline	U	570	1.0	500	570	110
83-32-9	Acenaphthene	U	380	1.0	330	380	74
51-28-5	2,4-Dinitrophenol	U	1400	1.0	1200	1400	430
132-64-9	Dibenzofuran	U	380	1.0	330	380	90
100-02-7	4-Nitrophenol	U	1400	1.0	1200	1400	350
121-14-2	2,4-Dinitrotoluene	U	380	1.0	330	380	97
84-66-2	Diethylphthalate	U	380	1.0	330	380	92
7005-72-3	4-Chlorophenyl-phenylether	U	380	1.0	330	380	89
100-01-6	4-Nitroaniline	U	570	1.0	500	570	150
534-52-1	4,6-Dinitro-2-Methylphenol	U	1400	1.0	1200	1400	390
86-30-6	N-Nitrosodiphenylamine	U	760	1.0	660	760	250
101-55-3	4-Bromophenyl-phenylether	U	380	1.0	330	380	97
1912-24-9	Atrazine	U	380	1.0	330	380	100
87-86-5	Pentachlorophenol	U	940	1.0	820	940	270
120-12-7	Anthracene	U	380	1.0	330	380	96
86-74-8	Carbazole	U	570	1.0	500	570	130

lw 3/5/09

16RE

KATAHDIN ANALYTICAL SERVICES
Report of Analytical Results

Client: CH2MHill
Project: TO-009 Lejeune
PO No:
Sample Date: 12/18/08
Received Date: 12/20/08
Extraction Date: 01/19/09
Analysis Date: 20-JAN-2009 23:02
Report Date: 01/21/2009
Matrix: SOIL
% Solids: 87.2

Lab ID: SB7350-31RE
Client ID: MR08-SS177-08D
SDG: TO9-21
Extracted by: CB
Extraction Method: SW846 3550
Analyst: JCG
Analysis Method: SW846 8270C
Lab Prep Batch: WG59948
Units: ug/Kgdrywt

Use original

CAS#	Compound	Flags	Results	DF	PQL	Adj.PQL	Adj.MDL
84-74-2	Di-n-butylphthalate	U R	380	1.0	330	380	120
85-68-7	Butylbenzylphthalate	U	380	1.0	330	380	110
91-94-1	3,3'-Dichlorobenzidine	U	570	1.0	500	570	130
218-01-9	Chrysene	U	380	1.0	330	380	110
117-81-7	bis(2-Ethylhexyl)phthalate	U	380	1.0	330	380	110
117-84-0	Di-n-octylphthalate	U	380	1.0	330	380	240
367-12-4	2-Fluorophenol		72%				
13127-88-3	Phenol-D6		76%				
4165-60-0	Nitrobenzene-D5		77%				
321-60-8	2-Fluorobiphenyl		81%				
118-79-6	2,4,6-Tribromophenol		86%				
1718-51-0	Terphenyl-D14		109%				

HT

RE

R

lw 3/5/09

KATAHDIN ANALYTICAL SERVICES
Report of Analytical Results

Client: CH2MHill
Project: TO-009 Lejeune
PO No:
Sample Date: 12/18/08
Received Date: 12/20/08
Extraction Date: 12/29/08
Analysis Date: 17-JAN-2009 15:07
Report Date: 01/21/2009
Matrix: SOIL
% Solids: 86.0

Lab ID: SB7350-33
Client ID: MR08-IS177-2-3-08D
SDG: TO9-21
Extracted by: CB
Extraction Method: SW846 3550
Analyst: JCG
Analysis Method: SW846 8270C
Lab Prep Batch: WG59445
Units: ug/Kgdrywt

CAS#	Compound	Flags	Results	DF	PQL	Adj.PQL	Adj.MDL	
100-52-7	Benzaldehyde	~~U~~ J	210	1.0	500	580	140	JCB
108-95-2	Phenol	U	580	1.0	500	580	180	
111-44-4	Bis(2-Chloroethyl)ether	U	380	1.0	330	380	94	
95-57-8	2-Chlorophenol	U	580	1.0	500	580	190	
95-48-7	2-Methylphenol	U	700	1.0	600	700	230	
108-60-1	2,2'-Oxybis(1-chloropropane)	U	380	1.0	330	380	100	
98-86-2	Acetophenone	U	700	1.0	600	700	210	
621-64-7	N-Nitroso-di-n-propylamine	U	380	1.0	330	380	96	
65794-96-9	3&4-Methylphenol	U	700	1.0	600	700	220	
67-72-1	Hexachloroethane	U	380	1.0	330	380	110	
98-95-3	Nitrobenzene	U	380	1.0	330	380	100	
78-59-1	Isophorone	U	380	1.0	330	380	87	
88-75-5	2-Nitrophenol	U	700	1.0	600	700	190	
105-67-9	2,4-Dimethylphenol	~~U~~ UJ	580	1.0	500	580	190	BSL
111-91-1	Bis(2-Chloroethoxy)methane	U	380	1.0	330	380	110	
120-83-2	2,4-Dichlorophenol	U	580	1.0	500	580	170	
106-47-8	4-Chloroaniline	U	580	1.0	500	580	140	
105-60-2	Caprolactam	U	580	1.0	500	580	170	
59-50-7	4-Chloro-3-Methylphenol	U	580	1.0	500	580	190	
88-06-2	2,4,6-Trichlorophenol	U	580	1.0	500	580	180	
95-95-4	2,4,5-Trichlorophenol	U	580	1.0	500	580	180	
91-58-7	2-Chloronaphthalene	U	380	1.0	330	380	100	
92-52-4	1,1'-Biphenyl	U	380	1.0	330	380	85	
88-74-4	2-Nitroaniline	U	580	1.0	500	580	87	
131-11-3	Dimethyl Phthalate	U	380	1.0	330	380	91	
606-20-2	2,6-Dinitrotoluene	U	380	1.0	330	380	92	
208-96-8	Acenaphthylene	U	380	1.0	330	380	81	
99-09-2	3-Nitroaniline	U	580	1.0	500	580	110	
83-32-9	Acenaphthene	U	380	1.0	330	380	76	
51-28-5	2,4-Dinitrophenol	~~U~~ UJ	1400	1.0	1200	1400	440	CCH
132-64-9	Dibenzofuran	U	380	1.0	330	380	92	
100-02-7	4-Nitrophenol	U	1400	1.0	1200	1400	360	
121-14-2	2,4-Dinitrotoluene	U	380	1.0	330	380	99	
84-66-2	Diethylphthalate	U	380	1.0	330	380	93	
7005-72-3	4-Chlorophenyl-phenylether	U	380	1.0	330	380	91	
100-01-6	4-Nitroaniline	U	580	1.0	500	580	160	
534-52-1	4,6-Dinitro-2-Methylphenol	U	1400	1.0	1200	1400	390	
86-30-6	N-Nitrosodiphenylamine	U	770	1.0	660	770	250	
101-55-3	4-Bromophenyl-phenylether	U	380	1.0	330	380	99	
1912-24-9	Atrazine	U	380	1.0	330	380	100	
87-86-5	Pentachlorophenol	U	950	1.0	820	950	280	
120-12-7	Anthracene	U	380	1.0	330	380	98	
86-74-8	Carbazole	U	580	1.0	500	580	130	

UW
3/5/09

KATAHDIN ANALYTICAL SERVICES
Report of Analytical Results

Client: CH2MHill
Project: TO-009 Lejeune
PO No:
Sample Date: 12/18/08
Received Date: 12/20/08
Extraction Date: 12/29/08
Analysis Date: 17-JAN-2009 15:07
Report Date: 01/21/2009
Matrix: SOIL
% Solids: 86.0

Lab ID: SB7350-33
Client ID: MR08-IS177-2-3-08D
SDG: TO9-21
Extracted by: CB
Extraction Method: SW846 3550
Analyst: JCG
Analysis Method: SW846 8270C
Lab Prep Batch: WG59445
Units: ug/Kgdrywt

CAS#	Compound	Flags	Results	DF	PQL	Adj.PQL	Adj.MDL
84-74-2	Di-n-butylphthalate	U	380	1.0	330	380	120
85-68-7	Butylbenzylphthalate	U	380	1.0	330	380	110
91-94-1	3,3'-Dichlorobenzidine	U	580	1.0	500	580	130
218-01-9	Chrysene	U	380	1.0	330	380	110
117-81-7	bis(2-Ethylhexyl)phthalate	U	380	1.0	330	380	110
117-84-0	Di-n-octylphthalate	U	380	1.0	330	380	240
367-12-4	2-Fluorophenol		52%				
13127-88-3	Phenol-D6		60%				
4165-60-0	Nitrobenzene-D5		66%				
321-60-8	2-Fluorobiphenyl		69%				
118-79-6	2,4,6-Tribromophenol		* 33%				
1718-51-0	Terphenyl-D14		79%				

MW
3/5/09

18

KATAHDIN ANALYTICAL SERVICES
Report of Analytical Results

Client: CH2MHill
Project: TO-009 Lejeune
PO No:
Sample Date: 12/19/08
Received Date: 12/20/08
Extraction Date: 12/29/08
Analysis Date: 17-JAN-2009 15:50
Report Date: 01/21/2009
Matrix: SOIL
% Solids: 80.2

Lab ID: SB7350-35
Client ID: MR08-SS176-08D
SDG: TO9-21
Extracted by: CB
Extraction Method: SW846 3550
Analyst: JCG
Analysis Method: SW846 8270C
Lab Prep Batch: WG59445
Units: ug/Kgdrywt

CAS#	Compound	Flags	Results	DF	PQL	Adj.PQL	Adj.MDL	
100-52-7	Benzaldehyde	~~J~~ UJ	620	1.0	500	620	150	ICB
108-95-2	Phenol	U	620	1.0	500	620	190	
111-44-4	Bis(2-Chloroethyl)ether	U	410	1.0	330	410	100	
95-57-8	2-Chlorophenol	U	620	1.0	500	620	200	
95-48-7	2-Methylphenol	U	750	1.0	600	750	250	
108-60-1	2,2'-Oxybis(1-chloropropane)	U	410	1.0	330	410	110	
98-86-2	Acetophenone	U	750	1.0	600	750	220	
621-64-7	N-Nitroso-di-n-propylamine	U	410	1.0	330	410	100	
65794-96-9	3&4-Methylphenol	U	750	1.0	600	750	230	
67-72-1	Hexachloroethane	U	410	1.0	330	410	120	
98-95-3	Nitrobenzene	U	410	1.0	330	410	110	
78-59-1	Isophorone	U	410	1.0	330	410	94	
88-75-5	2-Nitrophenol	U	750	1.0	600	750	210	
105-67-9	2,4-Dimethylphenol	~~J~~ UJ	620	1.0	500	620	200	BSL
111-91-1	Bis(2-Chloroethoxy)methane	U	410	1.0	330	410	120	
120-83-2	2,4-Dichlorophenol	U	620	1.0	500	620	190	
106-47-8	4-Chloroaniline	U	620	1.0	500	620	150	
105-60-2	Caprolactam	U	620	1.0	500	620	180	
59-50-7	4-Chloro-3-Methylphenol	U	620	1.0	500	620	210	
88-06-2	2,4,6-Trichlorophenol	U	620	1.0	500	620	190	
95-95-4	2,4,5-Trichlorophenol	U	620	1.0	500	620	190	
91-58-7	2-Chloronaphthalene	U	410	1.0	330	410	110	
92-52-4	1,1'-Biphenyl	U	410	1.0	330	410	91	
88-74-4	2-Nitroaniline	U	620	1.0	500	620	94	
131-11-3	Dimethyl Phthalate	U	410	1.0	330	410	97	
606-20-2	2,6-Dinitrotoluene	U	410	1.0	330	410	98	
208-96-8	Acenaphthylene	U	410	1.0	330	410	87	
99-09-2	3-Nitroaniline	U	620	1.0	500	620	120	
83-32-9	Acenaphthene	U	410	1.0	330	410	81	
51-28-5	2,4-Dinitrophenol	~~J~~ UJ	1500	1.0	1200	1500	470	CCH
132-64-9	Dibenzofuran	U	410	1.0	330	410	98	
100-02-7	4-Nitrophenol	U	1500	1.0	1200	1500	380	
121-14-2	2,4-Dinitrotoluene	U	410	1.0	330	410	110	
84-66-2	Diethylphthalate	U	410	1.0	330	410	100	
7005-72-3	4-Chlorophenyl-phenylether	U	410	1.0	330	410	97	
100-01-6	4-Nitroaniline	U	620	1.0	500	620	170	
534-52-1	4,6-Dinitro-2-Methylphenol	U	1500	1.0	1200	1500	420	
86-30-6	N-Nitrosodiphenylamine	U	820	1.0	660	820	270	
101-55-3	4-Bromophenyl-phenylether	U	410	1.0	330	410	110	
1912-24-9	Atrazine	U	410	1.0	330	410	110	
87-86-5	Pentachlorophenol	U	1000	1.0	820	1000	300	
120-12-7	Anthracene	U	410	1.0	330	410	100	
86-74-8	Carbazole	U	620	1.0	500	620	140	

LW
3/5/09

KATAHDIN ANALYTICAL SERVICES
Report of Analytical Results

Client: CH2MHill
Project: TO-009 Lejeune
PO No:
Sample Date: 12/19/08
Received Date: 12/20/08
Extraction Date: 12/29/08
Analysis Date: 17-JAN-2009 15:50
Report Date: 01/21/2009
Matrix: SOIL
% Solids: 80.2

Lab ID: SB7350-35
Client ID: MR08-SS176-08D
SDG: TO9-21
Extracted by: CB
Extraction Method: SW846 3550
Analyst: JCG
Analysis Method: SW846 8270C
Lab Prep Batch: WG59445
Units: ug/Kgdrywt

CAS#	Compound	Flags	Results	DF	PQL	Adj.PQL	Adj.MDL
84-74-2	Di-n-butylphthalate	U	410	1.0	330	410	120
85-68-7	Butylbenzylphthalate	U	410	1.0	330	410	120
91-94-1	3,3'-Dichlorobenzidine	U	620	1.0	500	620	140
218-01-9	Chrysene		650	1.0	330	410	120
117-81-7	bis(2-Ethylhexyl)phthalate		420	1.0	330	410	120
117-84-0	Di-n-octylphthalate	U	410	1.0	330	410	260
367-12-4	2-Fluorophenol		66%				
13127-88-3	Phenol-D6		66%				
4165-60-0	Nitrobenzene-D5		65%				
321-60-8	2-Fluorobiphenyl		74%				
118-79-6	2,4,6-Tribromophenol		68%				
1718-51-0	Terphenyl-D14		88%				

AW
3/5/09

19

KATAHDIN ANALYTICAL SERVICES
Report of Analytical Results

Client: CH2MHill
Project: TO-009 Lejeune
PO No:
Sample Date: 12/19/08
Received Date: 12/20/08
Extraction Date: 12/29/08
Analysis Date: 17-JAN-2009 16:32
Report Date: 01/21/2009
Matrix: SOIL
% Solids: 94.4

Lab ID: SB7350-37
Client ID: MR08-IS176-4-5-08D
SDG: TO9-21
Extracted by: CB
Extraction Method: SW846 3550
Analyst: JCG
Analysis Method: SW846 8270C
Lab Prep Batch: WG59445
Units: ug/Kgdrywt

CAS#	Compound	Flags	Results	DF	PQL	Adj.PQL	Adj.MDL	
100-52-7	Benzaldehyde	~~U~~ UJ	530	1.0	500	530	130	ICB
108-95-2	Phenol	U	530	1.0	500	530	160	
111-44-4	Bis(2-Chloroethyl)ether	U	350	1.0	330	350	86	
95-57-8	2-Chlorophenol	U	530	1.0	500	530	170	
95-48-7	2-Methylphenol	U	640	1.0	600	640	210	
108-60-1	2,2'-Oxybis(1-chloropropane)	U	350	1.0	330	350	94	
98-86-2	Acetophenone	U	640	1.0	600	640	190	
621-64-7	N-Nitroso-di-n-propylamine	U	350	1.0	330	350	88	
65794-96-9	3&4-Methylphenol	U	640	1.0	600	640	200	
67-72-1	Hexachloroethane	U	350	1.0	330	350	100	
98-95-3	Nitrobenzene	U	350	1.0	330	350	96	
78-59-1	Isophorone	U	350	1.0	330	350	79	
88-75-5	2-Nitrophenol	U	640	1.0	600	640	180	
105-67-9	2,4-Dimethylphenol	~~U~~ UJ	530	1.0	500	530	170	BSL
111-91-1	Bis(2-Chloroethoxy)methane	U	350	1.0	330	350	100	
120-83-2	2,4-Dichlorophenol	U	530	1.0	500	530	160	
106-47-8	4-Chloroaniline	U	530	1.0	500	530	120	
105-60-2	Caprolactam	U	530	1.0	500	530	150	
59-50-7	4-Chloro-3-Methylphenol	U	530	1.0	500	530	180	
88-06-2	2,4,6-Trichlorophenol	U	530	1.0	500	530	160	
95-95-4	2,4,5-Trichlorophenol	U	530	1.0	500	530	160	
91-58-7	2-Chloronaphthalene	U	350	1.0	330	350	92	
92-52-4	1,1'-Biphenyl	U	350	1.0	330	350	77	
88-74-4	2-Nitroaniline	U	530	1.0	500	530	79	
131-11-3	Dimethyl Phthalate	U	350	1.0	330	350	82	
606-20-2	2,6-Dinitrotoluene	U	350	1.0	330	350	84	
208-96-8	Acenaphthylene	U	350	1.0	330	350	74	
99-09-2	3-Nitroaniline	U	530	1.0	500	530	100	
83-32-9	Acenaphthene	U	350	1.0	330	350	69	
51-28-5	2,4-Dinitrophenol	~~U~~ UJ	1300	1.0	1200	1300	400	CCH
132-64-9	Dibenzofuran	U	350	1.0	330	350	84	
100-02-7	4-Nitrophenol	U	1300	1.0	1200	1300	330	
121-14-2	2,4-Dinitrotoluene	U	350	1.0	330	350	90	
84-66-2	Diethylphthalate	U	350	1.0	330	350	85	
7005-72-3	4-Chlorophenyl-phenylether	U	350	1.0	330	350	82	
100-01-6	4-Nitroaniline	U	530	1.0	500	530	140	
534-52-1	4,6-Dinitro-2-Methylphenol	U	1300	1.0	1200	1300	360	
86-30-6	N-Nitrosodiphenylamine	U	700	1.0	660	700	230	
101-55-3	4-Bromophenyl-phenylether	U	350	1.0	330	350	90	
1912-24-9	Atrazine	U	350	1.0	330	350	96	
87-86-5	Pentachlorophenol	U	870	1.0	820	870	250	
120-12-7	Anthracene	U	350	1.0	330	350	89	
86-74-8	Carbazole	U	530	1.0	500	530	120	

MW 3/5/09

KATAHDIN ANALYTICAL SERVICES
Report of Analytical Results

Client: CH2MHill
Project: TO-009 Lejeune
PO No:
Sample Date: 12/19/08
Received Date: 12/20/08
Extraction Date: 12/29/08
Analysis Date: 17-JAN-2009 16:32
Report Date: 01/21/2009
Matrix: SOIL
% Solids: 94.4

Lab ID: SB7350-37
Client ID: MR08-IS176-4-5-08D
SDG: TO9-21
Extracted by: CB
Extraction Method: SW846 3550
Analyst: JCG
Analysis Method: SW846 8270C
Lab Prep Batch: WG59445
Units: ug/Kgdrywt

CAS#	Compound	Flags	Results	DF	PQL	Adj.PQL	Adj.MDL
84-74-2	Di-n-butylphthalate	U	350	1.0	330	350	110
85-68-7	Butylbenzylphthalate	U	350	1.0	330	350	98
91-94-1	3,3'-Dichlorobenzidine	U	530	1.0	500	530	120
218-01-9	Chrysene	U	350	1.0	330	350	100
117-81-7	bis(2-Ethylhexyl)phthalate	J	130	1.0	330	350	100
117-84-0	Di-n-octylphthalate	U	350	1.0	330	350	220
367-12-4	2-Fluorophenol		58%				
13127-88-3	Phenol-D6		64%				
4165-60-0	Nitrobenzene-D5		60%				
321-60-8	2-Fluorobiphenyl		72%				
118-79-6	2,4,6-Tribromophenol		47%				
1718-51-0	Terphenyl-D14		86%				

lw
3/5/09

20

KATAHDIN ANALYTICAL SERVICES
Report of Analytical Results

Client: CH2MHill
Project: TO-009 Lejeune
PO No:
Sample Date: 12/19/08
Received Date: 12/20/08
Extraction Date: 12/29/08
Analysis Date: 17-JAN-2009 17:15
Report Date: 01/21/2009
Matrix: SOIL
% Solids: 81.1

Lab ID: SB7350-39
Client ID: MR08-SS163-08D
SDG: TO9-21
Extracted by: CB
Extraction Method: SW846 3550
Analyst: JCG
Analysis Method: SW846 8270C
Lab Prep Batch: WG59445
Units: ug/Kgdrywt

CAS#	Compound	Flags	Results	DF	PQL	Adj.PQL	Adj.MDL	
100-52-7	Benzaldehyde	~~U~~ UJ	620	1.0	500	620	150	ICB
108-95-2	Phenol	U	620	1.0	500	620	190	
111-44-4	Bis(2-Chloroethyl)ether	U	410	1.0	330	410	100	
95-57-8	2-Chlorophenol	U	620	1.0	500	620	200	
95-48-7	2-Methylphenol	U	740	1.0	600	740	250	
108-60-1	2,2'-Oxybis(1-chloropropane)	U	410	1.0	330	410	110	
98-86-2	Acetophenone	U	740	1.0	600	740	220	
621-64-7	N-Nitroso-di-n-propylamine	U	410	1.0	330	410	100	
65794-96-9	3&4-Methylphenol	U	740	1.0	600	740	230	
67-72-1	Hexachloroethane	U	410	1.0	330	410	120	
98-95-3	Nitrobenzene	U	410	1.0	330	410	110	
78-59-1	Isophorone	U	410	1.0	330	410	92	
88-75-5	2-Nitrophenol	U	740	1.0	600	740	200	
105-67-9	2,4-Dimethylphenol	~~U~~ UJ	620	1.0	500	620	200	BSL
111-91-1	Bis(2-Chloroethoxy)methane	U	410	1.0	330	410	120	
120-83-2	2,4-Dichlorophenol	U	620	1.0	500	620	180	
106-47-8	4-Chloroaniline	U	620	1.0	500	620	150	
105-60-2	Caprolactam	U	620	1.0	500	620	180	
59-50-7	4-Chloro-3-Methylphenol	U	620	1.0	500	620	200	
88-06-2	2,4,6-Trichlorophenol	U	620	1.0	500	620	190	
95-95-4	2,4,5-Trichlorophenol	U	620	1.0	500	620	190	
91-58-7	2-Chloronaphthalene	U	410	1.0	330	410	110	
92-52-4	1,1'-Biphenyl	U	410	1.0	330	410	90	
88-74-4	2-Nitroaniline	U	620	1.0	500	620	92	
131-11-3	Dimethyl Phthalate	U	410	1.0	330	410	96	
606-20-2	2,6-Dinitrotoluene	U	410	1.0	330	410	97	
208-96-8	Acenaphthylene	U	410	1.0	330	410	86	
99-09-2	3-Nitroaniline	U	620	1.0	500	620	120	
83-32-9	Acenaphthene	U	410	1.0	330	410	80	
51-28-5	2,4-Dinitrophenol	~~U~~ UJ	1500	1.0	1200	1500	460	CCH
132-64-9	Dibenzofuran	U	410	1.0	330	410	97	
100-02-7	4-Nitrophenol	U	1500	1.0	1200	1500	380	
121-14-2	2,4-Dinitrotoluene	U	410	1.0	330	410	100	
84-66-2	Diethylphthalate	U	410	1.0	330	410	99	
7005-72-3	4-Chlorophenyl-phenylether	U	410	1.0	330	410	96	
100-01-6	4-Nitroaniline	U	620	1.0	500	620	160	
534-52-1	4,6-Dinitro-2-Methylphenol	U	1500	1.0	1200	1500	420	
86-30-6	N-Nitrosodiphenylamine	U	810	1.0	660	810	270	
101-55-3	4-Bromophenyl-phenylether	U	410	1.0	330	410	100	
1912-24-9	Atrazine	U	410	1.0	330	410	110	
87-86-5	Pentachlorophenol	U	1000	1.0	820	1000	290	
120-12-7	Anthracene	U	410	1.0	330	410	100	
86-74-8	Carbazole	U	620	1.0	500	620	140	

LW
3/5/09

KATAHDIN ANALYTICAL SERVICES
Report of Analytical Results

Client: CH2MHill
Project: TO-009 Lejeune
PO No:
Sample Date: 12/19/08
Received Date: 12/20/08
Extraction Date: 12/29/08
Analysis Date: 17-JAN-2009 17:15
Report Date: 01/21/2009
Matrix: SOIL
% Solids: 81.1

Lab ID: SB7350-39
Client ID: MR08-SS163-08D
SDG: TO9-21
Extracted by: CB
Extraction Method: SW846 3550
Analyst: JCG
Analysis Method: SW846 8270C
Lab Prep Batch: WG59445
Units: ug/Kgdrywt

CAS#	Compound	Flags	Results	DF	PQL	Adj.PQL	Adj.MDL
84-74-2	Di-n-butylphthalate	U	410	1.0	330	410	120
85-68-7	Butylbenzylphthalate	U	410	1.0	330	410	110
91-94-1	3,3'-Dichlorobenzidine	U	620	1.0	500	620	140
218-01-9	Chrysene	U	410	1.0	330	410	120
117-81-7	bis(2-Ethylhexyl)phthalate	U	410	1.0	330	410	120
117-84-0	Di-n-octylphthalate	U	410	1.0	330	410	260
367-12-4	2-Fluorophenol		58%				
13127-88-3	Phenol-D6		62%				
4165-60-0	Nitrobenzene-D5		66%				
321-60-8	2-Fluorobiphenyl		69%				
118-79-6	2,4,6-Tribromophenol		40%				
1718-51-0	Terphenyl-D14		87%				

MW 3/5/09

ENVIRONMENTAL
Data Services, Inc.

POLYNUCLEAR AROMATIC COMPOUNDS BY 8270SIM

USEPA Region IV - Level IV Review

Site: MCB Camp Lejeune, TO-09 SDG #: TO9-22

Client: CH2M HILL, Inc., Virginia Beach, Virginia Date: March 6, 2009

Laboratory: Katahdin Analytical Services, Scarborough, Maine Reviewer: Nancy Weaver

EDS ID	Client Sample ID	Laboratory Sample ID	Matrix
1	MR08-IS163-4-5-08D	SB7351-2	Soil
2	MR08-SS152-08D	SB7351-4	Soil
2DL	MR08-SS152-08DDL	SB7351-4DL	Soil
3	MR08-IS152-4-5-08D	SB7351-6	Soil
4	MR08-SS139-08D	SB7351-8	Soil
4DL	MR08-SS139-08DDL	SB7351-8DL	Soil
5	MR08-SS139D-08D	SB7351-10	Soil
5DL	MR08-SS139D-08DDL	SB7351-10DL	Soil
6	MR08-IS139-.5-1.5-08D	SB7351-12	Soil
7	MR08-IS139D-.5-1.5-08D	SB7351-14	Soil
8	MR08-SS138-08D	SB7367-2	Soil
9	MR08-IS138-2-3-08D	SB7367-4	Soil
10	MR08-SS187-08D	SB7367-6	Soil
11	MR08-IS187-4-5-08D	SB7367-8	Soil
12	MR08-SS188-08D	SB7367-10	Soil
13	MR08-IS188-1-2-08D	SB7367-12	Soil
13RE	MR08-IS188-1-2-08DRE	SB7367-12RE	Soil
14	MR08-SS175-08D	SB7367-14	Soil
15	MR08-IS175-2-3-08D	SB7367-16	Soil
16	MR08-SS164-08D	SB7367-18	Soil
17	MR08-IS164-5-6-08D	SB7367-20	Soil
18	MR08-SS165-08D	SB7367-22	Soil
19	MR08-IS165-5-6-08D	SB7367-24	Soil
19RE	MR08-IS165-5-6-08DRE	SB7367-24RE	Soil
20	MR08-SS166-08D	SB7367-26	Soil

The USEPA "Contract Laboratory Program National Functional Guidelines for Organic Data Review," October 1999, and professional judgment were used in evaluating the data in this summary report.

Holding Times - All samples were extracted within 14 days for soil samples and analyzed within 40 days for all samples except the following.

Sample	Date Sampled	Date Extracted	# of Days	Qualifier
13RE	12/19/08	01/14/08	26	J/UJ
19RE	12/19/08	01/14/08	26	J/UJ

GC/MS Tuning - All of the DFTPP tunes in the initial and continuing calibrations met the percent relative abundance criteria.

Initial Calibration - The initial calibrations exhibited acceptable %RSD and mean RRF values.

Continuing Calibration - The continuing calibrations exhibited acceptable %D and RRF values except the following.

CCAL Date	Compound	%D/RRF	Qualifier	Affected Samples
01/11/09	Naphthalene	33.75%	J/UJ	1-5
	2-Methylnaphthalene	31.45%	J/UJ	1-5
	Benzo (k) fluoranthene	51.22%	J/UJ	1-5
	Indeno (1,2,3-cd) pyrene	40.81%	J/UJ	1-5
	Dibenzo (a,h) anthracene	37.14%	J/UJ	1-5
	Benzo (g,h,i) perylene	50.88%	J/UJ	1-5
	Hexachlorocyclopentadiene	65.13%	J/UJ	1-5
01/12/09 (0835)	Hexachlorocyclopentadiene	29.01%	J/UJ	4DL, 5DL, 6, 7, 9-12, 14
01/12/09 (1744)	Hexachlorobenzene	26.54%	J/UJ	2DL, 15-20
	Hexachlorocyclopentadiene	47.73%	J/UJ	2DL, 15-20
01/13/09	2-Methylnaphthalene	25.73%	J/UJ	8
	Fluoranthene	25.43%	J/UJ	8
	Indeno (1,2,3-cd) pyrene	29.24%	J/UJ	8
	Benzo (g,h,i) perylene	33.14%	J/UJ	8
	Hexachlorocyclopentadiene	50.72%	J/UJ	8

Surrogates - All samples exhibited acceptable surrogate recoveries except the following.

Sample ID	Surrogate	%R	Qualifier
13	S1-2-Methylnaphthalene-d10	19%	J/UJ unless qualified due to LCS
	S3-Fluorene-d10	32%	
19	S1-2-Methylnaphthalene-d10	19%	None for 1 out

MS/MSD - A MS/MSD sample was not analyzed.

Laboratory Control Sample - The LCS samples exhibited acceptable %R values except the following.

LCS ID	Compound	%R	Qualifier	Affected Samples
WG59786-LCS	Naphthalene	107%	None	All ND

LCS ID	Compound	%R	Qualifier	Affected Samples
WG59461-LCS	Pyrene	118%	J	13, 15, 16, 18-20
	Benzo (k) fluoranthene	136%	J	13, 15, 16, 19, 20

Internal Standard (IS) Area Performance - All internal standards met response and retention time (RT) criteria.

Method Blank - The method blanks were free of contamination.

Field, Equipment Blank - Field QC results are summarized below.

Blank ID	Compound	Conc. ug/L	Action Level ug/kg	Qualifier	Affected Samples
MR08-FB122008	Hexachlorocyclopentadiene	0.15	12.5	U	13
MR08-EB01-121908	None - ND	-	-	-	-
MR08-EB01-122008	Hexachlorocyclopentadiene	0.15	12.5	None	See FB

Field Duplicates - Field duplicate results are summarized below.

Compound	MR08-SS139-08D ug/kg	MR08-SS139D-08D ug/kg	RPD	Qualifier
Naphthalene	5.9	5.6	5%	None
2-Methylnaphthalene	4.1	4.3	5%	None
Phenanthrene	79	81	3%	None
Fluoranthene	330	340	3%	None
Pyrene	320	350	9%	None
Benzo (a) anthracene	170	170	0%	None
Benzo (b) fluoranthene	320	320	0%	None
Benzo (k) fluoranthene	320	240	29%	None
Benzo (a) pyrene	270	250	8%	None
Indeno (1,2,3-cd) pyrene	170	170	0%	None
Dibenzo (a,h) anthracene	43	45	5%	None
Benzo (g,h,i) perylene	150	160	6%	None

Compound	MR08-IS139-.5-1.5-08D ug/kg	MR08-IS139D-.5-1.5-08D ug/kg	RPD	Qualifier
Fluoranthene	3.7	5.2	3%	None
Pyrene	11 U	3.3	NC	None
Benzo (b) fluoranthene	11 U	11	NC	None

Tentatively Identified Compounds (TICs) - TICs were not reported.

KATAHDIN ANALYTICAL SERVICES
Report of Analytical Results

Client: CH2MHill
Project: TO-009 Lejeune
PO No:
Sample Date: 12/19/08
Received Date: 12/20/08
Extraction Date: 12/29/08
Analysis Date: 11-JAN-2009 16:06
Report Date: 01/17/2009
Matrix: SOIL
% Solids: 87.0

Lab ID: SB7351-2
Client ID: MR08-IS163-4-5-08D
SDG: TO9-22
Extracted by: CB
Extraction Method: SW846 3550
Analyst: EKC
Analysis Method: SW846 M8270C
Lab Prep Batch: WG59447
Units: ug/Kgdrywt

CAS#	Compound	Flags	Results	DF	PQL	Adj.PQL	Adj.MDL	
91-20-3	Naphthalene	~~J~~ UJ	11	1.0	10	11	3.0	CCH
91-57-6	2-Methylnaphthalene	~~J~~ J	2.6	1.0	10	11	2.5	CCH
86-73-7	Fluorene	U	11	1.0	10	11	3.7	
85-01-8	Phenanthrene	J	3.5	1.0	10	11	2.1	
206-44-0	Fluoranthene	J	3.6	1.0	10	11	2.1	
129-00-0	Pyrene	J	3.6	1.0	10	11	2.4	
56-55-3	Benzo(a)anthracene	J	3.2	1.0	10	11	2.2	
205-99-2	Benzo(b)fluoranthene	U	11	1.0	10	11	2.8	
207-08-9	Benzo(k)fluoranthene	~~J~~ UJ	11	1.0	10	11	3.6	CCH
50-32-8	Benzo(a)pyrene	U	11	1.0	10	11	3.8	
193-39-5	Indeno(1,2,3-cd)pyrene	~~J~~ J	2.7	1.0	10	11	2.2	CCH
53-70-3	Dibenzo(a,h)anthracene	~~J~~ UJ	11	1.0	10	11	2.1	↓
191-24-2	Benzo(g,h,i)perylene	~~J~~ J	3.4	1.0	10	11	2.3	
118-74-1	Hexachlorobenzene	J	2.4	1.0	10	11	2.1	
87-68-3	Hexachlorobutadiene	U	11	1.0	10	11	2.6	
77-47-4	Hexachlorocyclopentadiene	~~J~~ UJ	11	1.0	10	11	1.7	CCH
7297-45-2	2-Methylnaphthalene-D10		62%					
367-12-4	2,4-Dibromophenol		94%					
81103-79-9	Fluorene-d10		84%					
1718-51-1	Pyrene-D10		105%					

lw 3/6/09

2

KATAHDIN ANALYTICAL SERVICES
Report of Analytical Results

Client: CH2MHill
Project: TO-009 Lejeune
PO No:
Sample Date: 12/19/08
Received Date: 12/20/08
Extraction Date: 12/29/08
Analysis Date: 11-JAN-2009 17:26
Report Date: 01/17/2009
Matrix: SOIL
% Solids: 87.3

Lab ID: SB7351-4
Client ID: MR08-SS152-08D
SDG: TO9-22
Extracted by: CB
Extraction Method: SW846 3550
Analyst: EKC
Analysis Method: SW846 M8270C
Lab Prep Batch: WG59447
Units: ug/Kgdrywt

CAS#	Compound	Flags	Results	DF	PQL	Adj.PQL	Adj.MDL	
91-20-3	Naphthalene	~~J~~ J	4.7	1.0	10	11	3.0	CCH
91-57-6	2-Methylnaphthalene	~~J~~ J	2.9	1.0	10	11	2.5	CCH
86-73-7	Fluorene	U	11	1.0	10	11	3.7	
85-01-8	Phenanthrene		61	1.0	10	11	2.1	
206-44-0	Fluoranthene	~~E~~ 580	~~640~~	1.0	10	11	2.1	R DL
129-00-0	Pyrene	~~E~~ 2600	~~2100~~	1.0	10	11	2.4	
56-55-3	Benzo(a)anthracene	~~E~~ 1000	~~910~~	1.0	10	11	2.2	
205-99-2	Benzo(b)fluoranthene	~~E~~ 1400	~~2100~~	1.0	10	11	2.7	
207-08-9	Benzo(k)fluoranthene	~~E~~ 1400	~~1100~~	1.0	10	11	3.6	
50-32-8	Benzo(a)pyrene	~~E~~ 850	~~880~~	1.0	10	11	3.8	
193-39-5	Indeno(1,2,3-cd)pyrene	~~E~~ 520	~~460~~	1.0	10	11	2.2	
53-70-3	Dibenzo(a,h)anthracene	J	140	1.0	10	11	2.1	CCH
191-24-2	Benzo(g,h,i)perylene	~~E~~ 470	~~390~~	1.0	10	11	2.3	R DL
118-74-1	Hexachlorobenzene	U	11	1.0	10	11	2.1	
87-68-3	Hexachlorobutadiene	U	11	1.0	10	11	2.6	
77-47-4	Hexachlorocyclopentadiene	~~U~~ UJ	11	1.0	10	11	1.7	CCH
7297-45-2	2-Methylnaphthalene-D10		55%					
367-12-4	2,4-Dibromophenol		91%					
81103-79-9	Fluorene-d10		87%					
1718-51-1	Pyrene-D10		78%					

MW 3/6/09

ZDL

KATAHDIN ANALYTICAL SERVICES
Report of Analytical Results

Client: CH2MHill
Project: TO-009 Lejeune
PO No:
Sample Date: 12/19/08
Received Date: 12/20/08
Extraction Date: 12/29/08
Analysis Date: 13-JAN-2009 01:04
Report Date: 01/17/2009
Matrix: SOIL
% Solids: 87.3

Lab ID: SB7351-4DL
Client ID: MR08-SS152-08D
SDG: TO9-22
Extracted by: CB
Extraction Method: SW846 3550
Analyst: JCG
Analysis Method: SW846 M8270C
Lab Prep Batch: WG59447
Units: ug/Kgdrywt

use original

CAS#	Compound	Flags	Results	DF	PQL	Adj.PQL	Adj.MDL	
91-20-3	Naphthalene	U	140	12	10	140	36	
91-57-6	2-Methylnaphthalene	U	140	12	10	140	30	
86-73-7	Fluorene	U	140	12	10	140	44	
85-01-8	Phenanthrene	J	54	12	10	140	25	
206-44-0	Fluoranthene		580	12	10	140	25	
129-00-0	Pyrene		2600	12	10	140	29	
56-55-3	Benzo(a)anthracene		1000	12	10	140	26	
205-99-2	Benzo(b)fluoranthene		1400	12	10	140	33	
207-08-9	Benzo(k)fluoranthene		1400	12	10	140	43	
50-32-8	Benzo(a)pyrene		850	12	10	140	45	
193-39-5	Indeno(1,2,3-cd)pyrene		520	12	10	140	26	
53-70-3	Dibenzo(a,h)anthracene		160	12	10	140	25	
191-24-2	Benzo(g,h,i)perylene		470	12	10	140	27	
118-74-1	Hexachlorobenzene	~~U~~ UJ	140	12	10	140	25	CCH
87-68-3	Hexachlorobutadiene	U	140	12	10	140	32	
77-47-4	Hexachlorocyclopentadiene	~~U~~ UJ	140	12	10	140	21	CCH
7297-45-2	2-Methylnaphthalene-D10		D					
367-12-4	2,4-Dibromophenol		D					
81103-79-9	Fluorene-d10		D					
1718-51-1	Pyrene-D10		D					

DL

R

Page 01 of 01 R0714.D

3/6/09

3

KATAHDIN ANALYTICAL SERVICES
Report of Analytical Results

Client: CH2MHill
Project: TO-009 Lejeune
PO No:
Sample Date: 12/19/08
Received Date: 12/20/08
Extraction Date: 12/29/08
Analysis Date: 11-JAN-2009 16:46
Report Date: 01/17/2009
Matrix: SOIL
% Solids: 86.9

Lab ID: SB7351-6
Client ID: MR08-IS152-4-5-08D
SDG: TO9-22
Extracted by: CB
Extraction Method: SW846 3550
Analyst: EKC
Analysis Method: SW846 M8270C
Lab Prep Batch: WG59447
Units: ug/Kgdrywt

CAS#	Compound	Flags	Results	DF	PQL	Adj.PQL	Adj.MDL	
91-20-3	Naphthalene	~~U~~ UJ	12	1.0	10	12	3.0	CCH
91-57-6	2-Methylnaphthalene	~~U~~ UJ	12	1.0	10	12	2.5	CCH
86-73-7	Fluorene	U	12	1.0	10	12	3.7	
85-01-8	Phenanthrene	J	2.6	1.0	10	12	2.1	
206-44-0	Fluoranthene	J	7.9	1.0	10	12	2.1	
129-00-0	Pyrene		29	1.0	10	12	2.4	
56-55-3	Benzo(a)anthracene	J	9.0	1.0	10	12	2.2	
205-99-2	Benzo(b)fluoranthene		22	1.0	10	12	2.8	
207-08-9	Benzo(k)fluoranthene	J	16	1.0	10	12	3.6	CCH
50-32-8	Benzo(a)pyrene	J	9.7	1.0	10	12	3.8	
193-39-5	Indeno(1,2,3-cd)pyrene	~~J~~ J	4.7	1.0	10	12	2.2	CCH
53-70-3	Dibenzo(a,h)anthracene	~~U~~ UJ	12	1.0	10	12	2.1	↓
191-24-2	Benzo(g,h,i)perylene	~~J~~ J	3.6	1.0	10	12	2.3	↓
118-74-1	Hexachlorobenzene	U	12	1.0	10	12	2.1	
87-68-3	Hexachlorobutadiene	U	12	1.0	10	12	2.6	
77-47-4	Hexachlorocyclopentadiene	~~U~~ UJ	12	1.0	10	12	1.7	CCH
7297-45-2	2-Methylnaphthalene-D10		50%					
367-12-4	2,4-Dibromophenol		64%					
81103-79-9	Fluorene-d10		68%					
1718-51-1	Pyrene-D10		85%					

hw
3/6/09

4

KATAHDIN ANALYTICAL SERVICES
Report of Analytical Results

Client: CH2MHill
Project: TO-009 Lejeune
PO No:
Sample Date: 12/19/08
Received Date: 12/20/08
Extraction Date: 12/29/08
Analysis Date: 11-JAN-2009 18:05
Report Date: 01/17/2009
Matrix: SOIL
% Solids: 75.6

Lab ID: SB7351-8
Client ID: MR08-SS139-08D
SDG: TO9-22
Extracted by: CB
Extraction Method: SW846 3550
Analyst: EKC
Analysis Method: SW846 M8270C
Lab Prep Batch: WG59447
Units: ug/Kgdrywt

CAS#	Compound	Flags	Results	DF	PQL	Adj.PQL	Adj.MDL	
91-20-3	Naphthalene	~~J~~ J	5.9	1.0	10	13	3.4	CCH
91-57-6	2-Methylnaphthalene	~~J~~ J	4.1	1.0	10	13	2.9	CCH
86-73-7	Fluorene	U	13	1.0	10	13	4.2	
85-01-8	Phenanthrene		79	1.0	10	13	2.4	
206-44-0	Fluoranthene		330	1.0	10	13	2.4	
129-00-0	Pyrene		320	1.0	10	13	2.8	
56-55-3	Benzo(a)anthracene		170	1.0	10	13	2.5	
205-99-2	Benzo(b)fluoranthene		320	1.0	10	13	3.2	
207-08-9	Benzo(k)fluoranthene	~~E~~ 320	~~390~~	1.0	10	13	4.1	R DL
50-32-8	Benzo(a)pyrene		270	1.0	10	13	4.4	
193-39-5	Indeno(1,2,3-cd)pyrene	J	170	1.0	10	13	2.5	CCH
53-70-3	Dibenzo(a,h)anthracene	↓	43	1.0	10	13	2.4	↓
191-24-2	Benzo(g,h,i)perylene		150	1.0	10	13	2.6	
118-74-1	Hexachlorobenzene	U	13	1.0	10	13	2.4	
87-68-3	Hexachlorobutadiene	U	13	1.0	10	13	3.0	
77-47-4	Hexachlorocyclopentadiene	~~U~~ UJ	13	1.0	10	13	2.0	CCH
7297-45-2	2-Methylnaphthalene-D10		48%					
367-12-4	2,4-Dibromophenol		80%					
81103-79-9	Fluorene-d10		71%					
1718-51-1	Pyrene-D10		75%					

WW 3/6/09

KATAHDIN ANALYTICAL SERVICES
Report of Analytical Results

4DL

Client: CH2MHill
Project: TO-009 Lejeune
PO No:
Sample Date: 12/19/08
Received Date: 12/20/08
Extraction Date: 12/29/08
Analysis Date: 12-JAN-2009 09:56
Report Date: 01/17/2009
Matrix: SOIL
% Solids: 75.6

Lab ID: SB7351-8DL
Client ID: MR08-SS139-08D
SDG: TO9-22
Extracted by: CB
Extraction Method: SW846 3550
Analyst: JLP
Analysis Method: SW846 M8270C
Lab Prep Batch: WG59447
Units: ug/Kgdrywt

use ORIGINAL

CAS#	Compound	Flags	Results	DF	PQL	Adj.PQL	Adj.MDL
91-20-3	Naphthalene	~~U~~	9.7	2.0	10	26	6.9
91-57-6	2-Methylnaphthalene	~~U~~	26	2.0	10	26	5.8
86-73-7	Fluorene	U	26	2.0	10	26	8.5
85-01-8	Phenanthrene		64	2.0	10	26	4.8
206-44-0	Fluoranthene		330	2.0	10	26	4.8
129-00-0	Pyrene		330	2.0	10	26	5.6
56-55-3	Benzo(a)anthracene		170	2.0	10	26	5.0
205-99-2	Benzo(b)fluoranthene		320	2.0	10	26	6.4
207-08-9	Benzo(k)fluoranthene		320	2.0	10	26	8.2
50-32-8	Benzo(a)pyrene		250	2.0	10	26	8.7
193-39-5	Indeno(1,2,3-cd)pyrene		210	2.0	10	26	5.0
53-70-3	Dibenzo(a,h)anthracene		74	2.0	10	26	4.8
191-24-2	Benzo(g,h,i)perylene		200	2.0	10	26	5.3
118-74-1	Hexachlorobenzene	U	26	2.0	10	26	4.8
87-68-3	Hexachlorobutadiene	U	26	2.0	10	26	6.1
77-47-4	Hexachlorocyclopentadiene	~~U~~ UJ	26	2.0	10	26	4.0 CCH
7297-45-2	2-Methylnaphthalene-D10		39%				
367-12-4	2,4-Dibromophenol		82%				
81103-79-9	Fluorene-d10		72%				
1718-51-1	Pyrene-D10		69%				

RDL

LW 3/6/09

5

KATAHDIN ANALYTICAL SERVICES
Report of Analytical Results

Client: CH2MHill
Project: TO-009 Lejeune
PO No:
Sample Date: 12/19/08
Received Date: 12/20/08
Extraction Date: 12/29/08
Analysis Date: 11-JAN-2009 18:45
Report Date: 01/17/2009
Matrix: SOIL
% Solids: 73.4

Lab ID: SB7351-10
Client ID: MR08-SS139D-08D
SDG: TO9-22
Extracted by: CB
Extraction Method: SW846 3550
Analyst: EKC
Analysis Method: SW846 M8270C
Lab Prep Batch: WG59447
Units: ug/Kgdrywt

CAS#	Compound	Flags	Results	DF	PQL	Adj.PQL	Adj.MDL	
91-20-3	Naphthalene	~~J~~ J	5.6	1.0	10	14	3.5	CCH
91-57-6	2-Methylnaphthalene	~~J~~ J	4.3	1.0	10	14	3.0	CCH
86-73-7	Fluorene	U	14	1.0	10	14	4.4	
85-01-8	Phenanthrene		81	1.0	10	14	2.4	
206-44-0	Fluoranthene		340	1.0	10	14	2.4	
129-00-0	Pyrene		350	1.0	10	14	2.8	
56-55-3	Benzo(a)anthracene		170	1.0	10	14	2.6	
205-99-2	Benzo(b)fluoranthene	~~J~~ 320	~~440~~	1.0	10	14	3.3	R DL
207-08-9	Benzo(k)fluoranthene	J	240	1.0	10	14	4.2	CCH
50-32-8	Benzo(a)pyrene		250	1.0	10	14	4.5	
193-39-5	Indeno(1,2,3-cd)pyrene	J	170	1.0	10	14	2.6	CCH
53-70-3	Dibenzo(a,h)anthracene	J	45	1.0	10	14	2.4	↓
191-24-2	Benzo(g,h,i)perylene	J	160	1.0	10	14	2.7	↓
118-74-1	Hexachlorobenzene	U	14	1.0	10	14	2.4	
87-68-3	Hexachlorobutadiene	U	14	1.0	10	14	3.1	
77-47-4	Hexachlorocyclopentadiene	~~J~~ UJ	14	1.0	10	14	2.0	CCH
7297-45-2	2-Methylnaphthalene-D10		46%					
367-12-4	2,4-Dibromophenol		88%					
81103-79-9	Fluorene-d10		80%					
1718-51-1	Pyrene-D10		88%					

MW 3/6/09

5DL

KATAHDIN ANALYTICAL SERVICES
Report of Analytical Results

Client: CH2MHill
Project: TO-009 Lejeune
PO No:
Sample Date: 12/19/08
Received Date: 12/20/08
Extraction Date: 12/29/08
Analysis Date: 12-JAN-2009 10:36
Report Date: 01/17/2009
Matrix: SOIL
% Solids: 73.4

Lab ID: SB7351-10DL
Client ID: MR08-SS139D-08D
SDG: TO9-22
Extracted by: CB
Extraction Method: SW846 3550
Analyst: JLP
Analysis Method: SW846 M8270C
Lab Prep Batch: WG59447
Units: ug/Kgdrywt

use original

CAS#	Compound	Flags	Results	DF	PQL	Adj.PQL	Adj.MDL
91-20-3	Naphthalene	J	11	2.0	10	27	7.1
91-57-6	2-Methylnaphthalene	U	27	2.0	10	27	6.0
86-73-7	Fluorene	U	27	2.0	10	27	8.7
85-01-8	Phenanthrene		64	2.0	10	27	4.9
206-44-0	Fluoranthene		310	2.0	10	27	4.9
129-00-0	Pyrene		350	2.0	10	27	5.7
56-55-3	Benzo(a)anthracene		170	2.0	10	27	5.2
205-99-2	Benzo(b)fluoranthene		320	2.0	10	27	6.5
207-08-9	Benzo(k)fluoranthene		300	2.0	10	27	8.4
50-32-8	Benzo(a)pyrene		250	2.0	10	27	9.0
193-39-5	Indeno(1,2,3-cd)pyrene		200	2.0	10	27	5.2
53-70-3	Dibenzo(a,h)anthracene		68	2.0	10	27	4.9
191-24-2	Benzo(g,h,i)perylene		190	2.0	10	27	5.4
118-74-1	Hexachlorobenzene	U	27	2.0	10	27	4.9
87-68-3	Hexachlorobutadiene	U	27	2.0	10	27	6.3
77-47-4	Hexachlorocyclopentadiene	~~U~~ UJ	27	2.0	10	27	4.1 CCV
7297-45-2	2-Methylnaphthalene-D10		52%				
367-12-4	2,4-Dibromophenol		92%				
81103-79-9	Fluorene-d10		80%				
1718-51-1	Pyrene-D10		83%				

DL

R

Page 01 of 01 R0693.D

LW 3/6/09

6

KATAHDIN ANALYTICAL SERVICES
Report of Analytical Results

Client: CH2MHill
Project: TO-009 Lejeune
PO No:
Sample Date: 12/19/08
Received Date: 12/20/08
Extraction Date: 12/29/08
Analysis Date: 12-JAN-2009 11:17
Report Date: 01/17/2009
Matrix: SOIL
% Solids: 88.2

Lab ID: SB7351-12
Client ID: MR08-IS139-.5-1.5
SDG: TO9-22
Extracted by: CB
Extraction Method: SW846 3550
Analyst: JLP
Analysis Method: SW846 M8270C
Lab Prep Batch: WG59447
Units: ug/Kgdrywt

CAS#	Compound	Flags	Results	DF	PQL	Adj.PQL	Adj.MDL	
91-20-3	Naphthalene	U	11	1.0	10	11	2.9	
91-57-6	2-Methylnaphthalene	U	11	1.0	10	11	2.5	
86-73-7	Fluorene	U	11	1.0	10	11	3.6	
85-01-8	Phenanthrene	U	11	1.0	10	11	2.0	
206-44-0	Fluoranthene	J	3.7	1.0	10	11	2.0	
129-00-0	Pyrene	U	11	1.0	10	11	2.4	
56-55-3	Benzo(a)anthracene	U	11	1.0	10	11	2.2	
205-99-2	Benzo(b)fluoranthene	U	11	1.0	10	11	2.7	
207-08-9	Benzo(k)fluoranthene	U	11	1.0	10	11	3.5	
50-32-8	Benzo(a)pyrene	U	11	1.0	10	11	3.7	
193-39-5	Indeno(1,2,3-cd)pyrene	U	11	1.0	10	11	2.2	
53-70-3	Dibenzo(a,h)anthracene	U	11	1.0	10	11	2.0	
191-24-2	Benzo(g,h,i)perylene	U	11	1.0	10	11	2.3	
118-74-1	Hexachlorobenzene	U	11	1.0	10	11	2.0	
87-68-3	Hexachlorobutadiene	U	11	1.0	10	11	2.6	
77-47-4	Hexachlorocyclopentadiene	~~U~~ UJ	11	1.0	10	11	1.7	CCH
7297-45-2	2-Methylnaphthalene-D10		42%					
367-12-4	2,4-Dibromophenol		88%					
81103-79-9	Fluorene-d10		78%					
1718-51-1	Pyrene-D10		72%					

lw 3/6/09

7

KATAHDIN ANALYTICAL SERVICES
Report of Analytical Results

Client: CH2MHill
Project: TO-009 Lejeune
PO No:
Sample Date: 12/19/08
Received Date: 12/20/08
Extraction Date: 12/29/08
Analysis Date: 12-JAN-2009 11:57
Report Date: 01/17/2009
Matrix: SOIL
% Solids: 87.4

Lab ID: SB7351-14
Client ID: MR08-IS139D-.5-1.5
SDG: TO9-22
Extracted by: CB
Extraction Method: SW846 3550
Analyst: JLP
Analysis Method: SW846 M8270C
Lab Prep Batch: WG59447
Units: ug/Kgdrywt

CAS#	Compound	Flags	Results	DF	PQL	Adj.PQL	Adj.MDL	
91-20-3	Naphthalene	U	11	1.0	10	11	3.0	
91-57-6	2-Methylnaphthalene	U	11	1.0	10	11	2.5	
86-73-7	Fluorene	U	11	1.0	10	11	3.7	
85-01-8	Phenanthrene	U	11	1.0	10	11	2.0	
206-44-0	Fluoranthene	J	5.2	1.0	10	11	2.0	
129-00-0	Pyrene	J	3.3	1.0	10	11	2.4	
56-55-3	Benzo(a)anthracene	U	11	1.0	10	11	2.2	
205-99-2	Benzo(b)fluoranthene	J	11	1.0	10	11	2.7	
207-08-9	Benzo(k)fluoranthene	U	11	1.0	10	11	3.5	
50-32-8	Benzo(a)pyrene	U	11	1.0	10	11	3.8	
193-39-5	Indeno(1,2,3-cd)pyrene	U	11	1.0	10	11	2.2	
53-70-3	Dibenzo(a,h)anthracene	U	11	1.0	10	11	2.0	
191-24-2	Benzo(g,h,i)perylene	U	11	1.0	10	11	2.3	
118-74-1	Hexachlorobenzene	U	11	1.0	10	11	2.0	
87-68-3	Hexachlorobutadiene	U	11	1.0	10	11	2.6	
77-47-4	Hexachlorocyclopentadiene	~~J~~ UJ	11	1.0	10	11	1.7	CCH
7297-45-2	2-Methylnaphthalene-D10		36%					
367-12-4	2,4-Dibromophenol		76%					
81103-79-9	Fluorene-d10		72%					
1718-51-1	Pyrene-D10		66%					

LW 3/6/09

8

KATAHDIN ANALYTICAL SERVICES
Report of Analytical Results

Client: CH2MHill
Project: TO-009 Lejeune
PO No:
Sample Date: 12/19/08
Received Date: 12/23/08
Extraction Date: 12/29/08
Analysis Date: 13-JAN-2009 14:14
Report Date: 01/17/2009
Matrix: SOIL
% Solids: 92.1

Lab ID: SB7367-2RA
Client ID: MR08-SS138-08D
SDG: TO9-22
Extracted by: CB
Extraction Method: SW846 3550
Analyst: JLP
Analysis Method: SW846 M8270C
Lab Prep Batch: WG59447
Units: ug/Kgdrywt

CAS#	Compound	Flags	Results	DF	PQL	Adj.PQL	Adj.MDL	
91-20-3	Naphthalene	J	3.6	1.0	10	11	2.8	
91-57-6	2-Methylnaphthalene	~~U~~ UJ	11	1.0	10	11	2.4	CCH
86-73-7	Fluorene	U	11	1.0	10	11	3.5	
85-01-8	Phenanthrene		17	1.0	10	11	2.0	
206-44-0	Fluoranthene	J	14	1.0	10	11	2.0	CCH
129-00-0	Pyrene		18	1.0	10	11	2.3	
56-55-3	Benzo(a)anthracene	J	5.0	1.0	10	11	2.1	
205-99-2	Benzo(b)fluoranthene	U	11	1.0	10	11	2.6	
207-08-9	Benzo(k)fluoranthene	U	11	1.0	10	11	3.4	
50-32-8	Benzo(a)pyrene		13	1.0	10	11	3.6	
193-39-5	Indeno(1,2,3-cd)pyrene	~~U~~ UJ	11	1.0	10	11	2.1	CCH
53-70-3	Dibenzo(a,h)anthracene	U	11	1.0	10	11	2.0	
191-24-2	Benzo(g,h,i)perylene	J	25	1.0	10	11	2.2	CCH
118-74-1	Hexachlorobenzene	U	11	1.0	10	11	2.0	
87-68-3	Hexachlorobutadiene	U	11	1.0	10	11	2.5	
77-47-4	Hexachlorocyclopentadiene	~~U~~ UJ	11	1.0	10	11	1.6	CCH
7297-45-2	2-Methylnaphthalene-D10		37%					
367-12-4	2,4-Dibromophenol		70%					
81103-79-9	Fluorene-d10		65%					
1718-51-1	Pyrene-D10		83%					

3/6/09

9

KATAHDIN ANALYTICAL SERVICES
Report of Analytical Results

Client: CH2MHill
Project: TO-009 Lejeune
PO No:
Sample Date: 12/19/08
Received Date: 12/23/08
Extraction Date: 12/29/08
Analysis Date: 12-JAN-2009 12:37
Report Date: 01/17/2009
Matrix: SOIL
% Solids: 89.2

Lab ID: SB7367-4
Client ID: MR08-IS138-2-3-08D
SDG: TO9-22
Extracted by: CB
Extraction Method: SW846 3550
Analyst: JLP
Analysis Method: SW846 M8270C
Lab Prep Batch: WG59447
Units: ug/Kgdrywt

CAS#	Compound	Flags	Results	DF	PQL	Adj.PQL	Adj.MDL
91-20-3	Naphthalene	U	11	1.0	10	11	2.9
91-57-6	2-Methylnaphthalene	U	11	1.0	10	11	2.5
86-73-7	Fluorene	U	11	1.0	10	11	3.6
85-01-8	Phenanthrene	J	3.2	1.0	10	11	2.0
206-44-0	Fluoranthene	J	4.6	1.0	10	11	2.0
129-00-0	Pyrene	J	3.4	1.0	10	11	2.4
56-55-3	Benzo(a)anthracene	U	11	1.0	10	11	2.1
205-99-2	Benzo(b)fluoranthene	U	11	1.0	10	11	2.7
207-08-9	Benzo(k)fluoranthene	U	11	1.0	10	11	3.5
50-32-8	Benzo(a)pyrene	U	11	1.0	10	11	3.7
193-39-5	Indeno(1,2,3-cd)pyrene	U	11	1.0	10	11	2.1
53-70-3	Dibenzo(a,h)anthracene	U	11	1.0	10	11	2.0
191-24-2	Benzo(g,h,i)perylene	U	11	1.0	10	11	2.2
118-74-1	Hexachlorobenzene	U	11	1.0	10	11	2.0
87-68-3	Hexachlorobutadiene	U	11	1.0	10	11	2.6
77-47-4	Hexachlorocyclopentadiene	~~U~~ UJ	11	1.0	10	11	1.7 CCH
7297-45-2	2-Methylnaphthalene-D10		35%				
367-12-4	2,4-Dibromophenol		76%				
81103-79-9	Fluorene-d10		74%				
1718-51-1	Pyrene-D10		77%				

lew 3/6/09

10

KATAHDIN ANALYTICAL SERVICES
Report of Analytical Results

Client: CH2MHill
Project: TO-009 Lejeune
PO No:
Sample Date: 12/19/08
Received Date: 12/23/08
Extraction Date: 12/29/08
Analysis Date: 12-JAN-2009 13:17
Report Date: 01/17/2009
Matrix: SOIL
% Solids: 86.8

Lab ID: SB7367-6
Client ID: MR08-SS187-08D
SDG: TO9-22
Extracted by: CB
Extraction Method: SW846 3550
Analyst: JLP
Analysis Method: SW846 M8270C
Lab Prep Batch: WG59447
Units: ug/Kgdrywt

CAS#	Compound	Flags	Results	DF	PQL	Adj.PQL	Adj.MDL
91-20-3	Naphthalene	J	4.0	1.0	10	12	3.0
91-57-6	2-Methylnaphthalene	U	12	1.0	10	12	2.5
86-73-7	Fluorene	U	12	1.0	10	12	3.7
85-01-8	Phenanthrene		48	1.0	10	12	2.1
206-44-0	Fluoranthene		210	1.0	10	12	2.1
129-00-0	Pyrene		200	1.0	10	12	2.4
56-55-3	Benzo(a)anthracene		96	1.0	10	12	2.2
205-99-2	Benzo(b)fluoranthene		260	1.0	10	12	2.8
207-08-9	Benzo(k)fluoranthene		130	1.0	10	12	3.6
50-32-8	Benzo(a)pyrene		140	1.0	10	12	3.8
193-39-5	Indeno(1,2,3-cd)pyrene		120	1.0	10	12	2.2
53-70-3	Dibenzo(a,h)anthracene		38	1.0	10	12	2.1
191-24-2	Benzo(g,h,i)perylene		110	1.0	10	12	2.3
118-74-1	Hexachlorobenzene	U	12	1.0	10	12	2.1
87-68-3	Hexachlorobutadiene	U	12	1.0	10	12	2.6
77-47-4	Hexachlorocyclopentadiene	~~U~~ UJ	12	1.0	10	12	1.7 CCH
7297-45-2	2-Methylnaphthalene-D10		39%				
367-12-4	2,4-Dibromophenol		89%				
81103-79-9	Fluorene-d10		74%				
1718-51-1	Pyrene-D10		73%				

MW 3/6/09

KATAHDIN ANALYTICAL SERVICES
Report of Analytical Results

11

Client: CH2MHill
Project: TO-009 Lejeune
PO No:
Sample Date: 12/19/08
Received Date: 12/23/08
Extraction Date: 12/29/08
Analysis Date: 12-JAN-2009 13:57
Report Date: 01/17/2009
Matrix: SOIL
% Solids: 91.4

Lab ID: SB7367-8
Client ID: MR08-IS187-4-5-08D
SDG: TO9-22
Extracted by: CB
Extraction Method: SW846 3550
Analyst: JLP
Analysis Method: SW846 M8270C
Lab Prep Batch: WG59447
Units: ug/Kgdrywt

CAS#	Compound	Flags	Results	DF	PQL	Adj.PQL	Adj.MDL	
91-20-3	Naphthalene	U	11	1.0	10	11	2.8	
91-57-6	2-Methylnaphthalene	U	11	1.0	10	11	2.4	
86-73-7	Fluorene	U	11	1.0	10	11	3.5	
85-01-8	Phenanthrene	J	5.7	1.0	10	11	2.0	
206-44-0	Fluoranthene		29	1.0	10	11	2.0	
129-00-0	Pyrene		32	1.0	10	11	2.3	
56-55-3	Benzo(a)anthracene	J	10	1.0	10	11	2.1	
205-99-2	Benzo(b)fluoranthene		36	1.0	10	11	2.6	
207-08-9	Benzo(k)fluoranthene		20	1.0	10	11	3.4	
50-32-8	Benzo(a)pyrene		14	1.0	10	11	3.6	
193-39-5	Indeno(1,2,3-cd)pyrene		12	1.0	10	11	2.1	
53-70-3	Dibenzo(a,h)anthracene	U	11	1.0	10	11	2.0	
191-24-2	Benzo(g,h,i)perylene		16	1.0	10	11	2.2	
118-74-1	Hexachlorobenzene	U	11	1.0	10	11	2.0	
87-68-3	Hexachlorobutadiene	U	11	1.0	10	11	2.5	
77-47-4	Hexachlorocyclopentadiene	~~U~~ UJ	11	1.0	10	11	1.6	CCH
7297-45-2	2-Methylnaphthalene-D10		38%					
367-12-4	2,4-Dibromophenol		83%					
81103-79-9	Fluorene-d10		76%					
1718-51-1	Pyrene-D10		80%					

fcw
3/6/09

12

KATAHDIN ANALYTICAL SERVICES
Report of Analytical Results

Client: CH2MHill
Project: TO-009 Lejeune
PO No:
Sample Date: 12/19/08
Received Date: 12/23/08
Extraction Date: 12/29/08
Analysis Date: 12-JAN-2009 14:37
Report Date: 01/17/2009
Matrix: SOIL
% Solids: 93.8

Lab ID: SB7367-10
Client ID: MR08-SS188-08D
SDG: TO9-22
Extracted by: CB
Extraction Method: SW846 3550
Analyst: JLP
Analysis Method: SW846 M8270C
Lab Prep Batch: WG59447
Units: ug/Kgdrywt

CAS#	Compound	Flags	Results	DF	PQL	Adj.PQL	Adj.MDL
91-20-3	Naphthalene	U	11	1.0	10	11	2.8
91-57-6	2-Methylnaphthalene	U	11	1.0	10	11	2.3
86-73-7	Fluorene	U	11	1.0	10	11	3.4
85-01-8	Phenanthrene	J	3.9	1.0	10	11	1.9
206-44-0	Fluoranthene		11	1.0	10	11	1.9
129-00-0	Pyrene	J	10	1.0	10	11	2.2
56-55-3	Benzo(a)anthracene	J	5.1	1.0	10	11	2.0
205-99-2	Benzo(b)fluoranthene		17	1.0	10	11	2.6
207-08-9	Benzo(k)fluoranthene	J	8.3	1.0	10	11	3.3
50-32-8	Benzo(a)pyrene	J	6.6	1.0	10	11	3.5
193-39-5	Indeno(1,2,3-cd)pyrene	J	6.2	1.0	10	11	2.0
53-70-3	Dibenzo(a,h)anthracene	U	11	1.0	10	11	1.9
191-24-2	Benzo(g,h,i)perylene	J	6.7	1.0	10	11	2.1
118-74-1	Hexachlorobenzene	U	11	1.0	10	11	1.9
87-68-3	Hexachlorobutadiene	U	11	1.0	10	11	2.4
77-47-4	Hexachlorocyclopentadiene	~~U~~ UJ	11	1.0	10	11	1.6 CCH
7297-45-2	2-Methylnaphthalene-D10		40%				
367-12-4	2,4-Dibromophenol		73%				
81103-79-9	Fluorene-d10		74%				
1718-51-1	Pyrene-D10		75%				

ew 3/6/09

KATAHDIN ANALYTICAL SERVICES
Report of Analytical Results

Client: CH2MHill
Project: TO-009 Lejeune
PO No:
Sample Date: 12/19/08
Received Date: 12/23/08
Extraction Date: 12/29/08
Analysis Date: 12-JAN-2009 15:57
Report Date: 01/17/2009
Matrix: SOIL
% Solids: 93.7

Lab ID: SB7367-12
Client ID: MR08-IS188-1-2-08D
SDG: TO9-22
Extracted by: CB
Extraction Method: SW846 3550
Analyst: JLP
Analysis Method: SW846 M8270C
Lab Prep Batch: WG59461
Units: ug/Kgdrywt

CAS#	Compound	Flags	Results	DF	PQL	Adj.PQL	Adj.MDL	
91-20-3	Naphthalene	~~J~~	J 4.1	1.0	10	11	2.8	SSL
91-57-6	2-Methylnaphthalene	~~U~~	UJ 11	1.0	10	11	2.3	
86-73-7	Fluorene	~~J~~	J 5.8	1.0	10	11	3.4	
85-01-8	Phenanthrene		31	1.0	10	11	1.9	
206-44-0	Fluoranthene		41	1.0	10	11	1.9	
129-00-0	Pyrene		J 43	1.0	10	11	2.2	BSH
56-55-3	Benzo(a)anthracene		J 26	1.0	10	11	2.0	SSL
205-99-2	Benzo(b)fluoranthene		J 31	1.0	10	11	2.6	SSL
207-08-9	Benzo(k)fluoranthene		J 18	1.0	10	11	3.3	BSH
50-32-8	Benzo(a)pyrene		J 20	1.0	10	11	3.5	SSL
193-39-5	Indeno(1,2,3-cd)pyrene		14	1.0	10	11	2.0	
53-70-3	Dibenzo(a,h)anthracene	~~J~~	7.1	1.0	10	11	1.9	
191-24-2	Benzo(g,h,i)perylene		12	1.0	10	11	2.1	
118-74-1	Hexachlorobenzene	~~J~~	2.7	1.0	10	11	1.9	
87-68-3	Hexachlorobutadiene	~~J~~	1.2	1.0	10	11	2.4	
77-47-4	Hexachlorocyclopentadiene	~~J~~	11UJ ~~3.4~~	1.0	10	11	1.6	~~BL~~ SSL
7297-45-2	2-Methylnaphthalene-D10		* 19%					
367-12-4	2,4-Dibromophenol		35%					
81103-79-9	Fluorene-d10		* 32%					
1718-51-1	Pyrene-D10		35%					

RWD 3/6/09

13 RE

KATAHDIN ANALYTICAL SERVICES
Report of Analytical Results

Client: CH2MHill
Project: TO-009 Lejeune
PO No:
Sample Date: 12/19/08
Received Date: 12/23/08
Extraction Date: 01/14/09
Analysis Date: 16-JAN-2009 02:21
Report Date: 01/22/2009
Matrix: SOIL
% Solids: 93.7

Lab ID: SB7367-12RE
Client ID: MR08-IS188-1-2-08D
SDG: TO9-22
Extracted by: AC
Extraction Method: SW846 3550
Analyst: JCG
Analysis Method: SW846 M8270C
Lab Prep Batch: WG59786
Units: ug/Kgdrywt

Use original

CAS#	Compound	Flags	Results	DF	PQL	Adj.PQL	Adj.MDL
91-20-3	Naphthalene	~~U~~ UJ	11	1.0	10	11	2.8 HT
91-57-6	2-Methylnaphthalene	~~J~~ J	2.5	1.0	10	11	2.3
86-73-7	Fluorene	~~U~~ UJ	11	1.0	10	11	3.4
85-01-8	Phenanthrene	~~U~~ J	6.9	1.0	10	11	1.9
206-44-0	Fluoranthene		40	1.0	10	11	1.9
129-00-0	Pyrene		35	1.0	10	11	2.2
56-55-3	Benzo(a)anthracene		18	1.0	10	11	2.0
205-99-2	Benzo(b)fluoranthene		24	1.0	10	11	2.6
207-08-9	Benzo(k)fluoranthene		13	1.0	10	11	3.3
50-32-8	Benzo(a)pyrene		14	1.0	10	11	3.5
193-39-5	Indeno(1,2,3-cd)pyrene	~~J~~	7.7	1.0	10	11	2.0
53-70-3	Dibenzo(a,h)anthracene	~~J~~	3.4	1.0	10	11	1.9
191-24-2	Benzo(g,h,i)perylene	~~J~~	7.5	1.0	10	11	2.1
118-74-1	Hexachlorobenzene	~~U~~ UJ	11	1.0	10	11	1.9
87-68-3	Hexachlorobutadiene	~~U~~	11	1.0	10	11	2.4
77-47-4	Hexachlorocyclopentadiene	~~U~~	11	1.0	10	11	1.6
7297-45-2	2-Methylnaphthalene-D10		58%				
367-12-4	2,4-Dibromophenol		83%				
81103-79-9	Fluorene-d10		86%				
1718-51-1	Pyrene-D10		122%				

R RE

MW 3/6/09

14

KATAHDIN ANALYTICAL SERVICES
Report of Analytical Results

Client: CH2MHill
Project: TO-009 Lejeune
PO No:
Sample Date: 12/19/08
Received Date: 12/23/08
Extraction Date: 12/29/08
Analysis Date: 12-JAN-2009 16:37
Report Date: 01/17/2009
Matrix: SOIL
% Solids: 90.4

Lab ID: SB7367-14
Client ID: MR08-SS175-08D
SDG: TO9-22
Extracted by: CB
Extraction Method: SW846 3550
Analyst: JLP
Analysis Method: SW846 M8270C
Lab Prep Batch: WG59461
Units: ug/Kgdrywt

CAS#	Compound	Flags	Results	DF	PQL	Adj.PQL	Adj.MDL
91-20-3	Naphthalene	U	11	1.0	10	11	2.9
91-57-6	2-Methylnaphthalene	U	11	1.0	10	11	2.4
86-73-7	Fluorene	U	11	1.0	10	11	3.5
85-01-8	Phenanthrene	U	11	1.0	10	11	2.0
206-44-0	Fluoranthene	U	11	1.0	10	11	2.0
129-00-0	Pyrene	U	11	1.0	10	11	2.3
56-55-3	Benzo(a)anthracene	U	11	1.0	10	11	2.1
205-99-2	Benzo(b)fluoranthene	U	11	1.0	10	11	2.6
207-08-9	Benzo(k)fluoranthene	U	11	1.0	10	11	3.4
50-32-8	Benzo(a)pyrene	U	11	1.0	10	11	3.6
193-39-5	Indeno(1,2,3-cd)pyrene	U	11	1.0	10	11	2.1
53-70-3	Dibenzo(a,h)anthracene	U	11	1.0	10	11	2.0
191-24-2	Benzo(g,h,i)perylene	U	11	1.0	10	11	2.2
118-74-1	Hexachlorobenzene	U	11	1.0	10	11	2.0
87-68-3	Hexachlorobutadiene	U	11	1.0	10	11	2.5
77-47-4	Hexachlorocyclopentadiene	~~U~~ UJ	11	1.0	10	11	1.6 CCH
7297-45-2	2-Methylnaphthalene-D10		42%				
367-12-4	2,4-Dibromophenol		86%				
81103-79-9	Fluorene-d10		82%				
1718-51-1	Pyrene-D10		90%				

LW 3/6/09

15

KATAHDIN ANALYTICAL SERVICES
Report of Analytical Results

Client: CH2MHill
Project: TO-009 Lejeune
PO No:
Sample Date: 12/19/08
Received Date: 12/23/08
Extraction Date: 12/29/08
Analysis Date: 12-JAN-2009 21:05
Report Date: 01/17/2009
Matrix: SOIL
% Solids: 92.5

Lab ID: SB7367-16
Client ID: MR08-IS175-2-3-08D
SDG: TO9-22
Extracted by: CB
Extraction Method: SW846 3550
Analyst: JCG
Analysis Method: SW846 M8270C
Lab Prep Batch: WG59461
Units: ug/Kgdrywt

CAS#	Compound	Flags	Results	DF	PQL	Adj.PQL	Adj.MDL	
91-20-3	Naphthalene	J	4.4	1.0	10	11	2.8	
91-57-6	2-Methylnaphthalene	U	11	1.0	10	11	2.4	
86-73-7	Fluorene	U	11	1.0	10	11	3.4	
85-01-8	Phenanthrene		12	1.0	10	11	1.9	
206-44-0	Fluoranthene		62	1.0	10	11	1.9	
129-00-0	Pyrene	J	66	1.0	10	11	2.3	BSH
56-55-3	Benzo(a)anthracene		29	1.0	10	11	2.0	
205-99-2	Benzo(b)fluoranthene		88	1.0	10	11	2.6	
207-08-9	Benzo(k)fluoranthene	J	48	1.0	10	11	3.4	BSH
50-32-8	Benzo(a)pyrene		42	1.0	10	11	3.6	
193-39-5	Indeno(1,2,3-cd)pyrene		37	1.0	10	11	2.0	
53-70-3	Dibenzo(a,h)anthracene	J	10	1.0	10	11	1.9	
191-24-2	Benzo(g,h,i)perylene		44	1.0	10	11	2.2	
118-74-1	Hexachlorobenzene	~~U~~ UJ	11	1.0	10	11	1.9	CCH
87-68-3	Hexachlorobutadiene	U	11	1.0	10	11	2.5	
77-47-4	Hexachlorocyclopentadiene	~~U~~ UJ	11	1.0	10	11	1.6	CCH
7297-45-2	2-Methylnaphthalene-D10		49%					
367-12-4	2,4-Dibromophenol		65%					
81103-79-9	Fluorene-d10		78%					
1718-51-1	Pyrene-D10		85%					

lw
3/6/09

16

KATAHDIN ANALYTICAL SERVICES
Report of Analytical Results

Client: CH2MHill
Project: TO-009 Lejeune
PO No:
Sample Date: 12/20/08
Received Date: 12/23/08
Extraction Date: 12/29/08
Analysis Date: 12-JAN-2009 21:45
Report Date: 01/17/2009
Matrix: SOIL
% Solids: 86.1

Lab ID: SB7367-18
Client ID: MR08-SS164-08D
SDG: TO9-22
Extracted by: CB
Extraction Method: SW846 3550
Analyst: JCG
Analysis Method: SW846 M8270C
Lab Prep Batch: WG59461
Units: ug/Kgdrywt

CAS#	Compound	Flags	Results	DF	PQL	Adj.PQL	Adj.MDL	
91-20-3	Naphthalene	U	12	1.0	10	12	3.0	
91-57-6	2-Methylnaphthalene	U	12	1.0	10	12	2.6	
86-73-7	Fluorene	U	12	1.0	10	12	3.7	
85-01-8	Phenanthrene		12	1.0	10	12	2.1	
206-44-0	Fluoranthene		55	1.0	10	12	2.1	
129-00-0	Pyrene	J	61	1.0	10	12	2.4	BSH
56-55-3	Benzo(a)anthracene		27	1.0	10	12	2.2	
205-99-2	Benzo(b)fluoranthene		72	1.0	10	12	2.8	
207-08-9	Benzo(k)fluoranthene	J	40	1.0	10	12	3.6	BSH
50-32-8	Benzo(a)pyrene		42	1.0	10	12	3.8	
193-39-5	Indeno(1,2,3-cd)pyrene		37	1.0	10	12	2.2	
53-70-3	Dibenzo(a,h)anthracene		13	1.0	10	12	2.1	
191-24-2	Benzo(g,h,i)perylene		36	1.0	10	12	2.3	
118-74-1	Hexachlorobenzene	~~U~~ UJ	12	1.0	10	12	2.1	CCH
87-68-3	Hexachlorobutadiene	U	12	1.0	10	12	2.7	
77-47-4	Hexachlorocyclopentadiene	~~U~~ UJ	12	1.0	10	12	1.7	CCH
7297-45-2	2-Methylnaphthalene-D10		44%					
367-12-4	2,4-Dibromophenol		84%					
81103-79-9	Fluorene-d10		77%					
1718-51-1	Pyrene-D10		81%					

RW 3/6/09

17

KATAHDIN ANALYTICAL SERVICES
Report of Analytical Results

Client: CH2MHill
Project: TO-009 Lejeune
PO No:
Sample Date: 12/20/08
Received Date: 12/23/08
Extraction Date: 12/29/08
Analysis Date: 12-JAN-2009 22:25
Report Date: 01/17/2009
Matrix: SOIL
% Solids: 88.9

Lab ID: SB7367-20
Client ID: MR08-IS164-5-6-08D
SDG: TO9-22
Extracted by: CB
Extraction Method: SW846 3550
Analyst: JCG
Analysis Method: SW846 M8270C
Lab Prep Batch: WG59461
Units: ug/Kgdrywt

CAS#	Compound	Flags	Results	DF	PQL	Adj.PQL	Adj.MDL	
91-20-3	Naphthalene	U	11	1.0	10	11	2.9	
91-57-6	2-Methylnaphthalene	U	11	1.0	10	11	2.5	
86-73-7	Fluorene	U	11	1.0	10	11	3.6	
85-01-8	Phenanthrene	U	11	1.0	10	11	2.0	
206-44-0	Fluoranthene	U	11	1.0	10	11	2.0	
129-00-0	Pyrene	U	11	1.0	10	11	2.4	
56-55-3	Benzo(a)anthracene	U	11	1.0	10	11	2.1	
205-99-2	Benzo(b)fluoranthene	U	11	1.0	10	11	2.7	
207-08-9	Benzo(k)fluoranthene	U	11	1.0	10	11	3.5	
50-32-8	Benzo(a)pyrene	U	11	1.0	10	11	3.7	
193-39-5	Indeno(1,2,3-cd)pyrene	U	11	1.0	10	11	2.1	
53-70-3	Dibenzo(a,h)anthracene	U	11	1.0	10	11	2.0	
191-24-2	Benzo(g,h,i)perylene	U	11	1.0	10	11	2.2	
118-74-1	Hexachlorobenzene	~~U~~ UJ	11	1.0	10	11	2.0	CCH
87-68-3	Hexachlorobutadiene	U	11	1.0	10	11	2.6	
77-47-4	Hexachlorocyclopentadiene	~~U~~ UJ	11	1.0	10	11	1.7	CCH
7297-45-2	2-Methylnaphthalene-D10		44%					
367-12-4	2,4-Dibromophenol		82%					
81103-79-9	Fluorene-d10		75%					
1718-51-1	Pyrene-D10		89%					

MW 3/6/09

KATAHDIN ANALYTICAL SERVICES
Report of Analytical Results

Client: CH2MHill
Project: TO-009 Lejeune
PO No:
Sample Date: 12/20/08
Received Date: 12/23/08
Extraction Date: 12/29/08
Analysis Date: 12-JAN-2009 23:05
Report Date: 01/17/2009
Matrix: SOIL
% Solids: 92.8

Lab ID: SB7367-22
Client ID: MR08-SS165-08D
SDG: TO9-22
Extracted by: CB
Extraction Method: SW846 3550
Analyst: JCG
Analysis Method: SW846 M8270C
Lab Prep Batch: WG59461
Units: ug/Kgdrywt

CAS#	Compound	Flags	Results	DF	PQL	Adj.PQL	Adj.MDL	
91-20-3	Naphthalene	U	11	1.0	10	11	2.8	
91-57-6	2-Methylnaphthalene	U	11	1.0	10	11	2.4	
86-73-7	Fluorene	U	11	1.0	10	11	3.4	
85-01-8	Phenanthrene	J	2.3	1.0	10	11	1.9	
206-44-0	Fluoranthene	J	7.7	1.0	10	11	1.9	
129-00-0	Pyrene	~~J~~ J	7.0	1.0	10	11	2.3	BSH
56-55-3	Benzo(a)anthracene	J	2.9	1.0	10	11	2.0	
205-99-2	Benzo(b)fluoranthene	U	11	1.0	10	11	2.6	
207-08-9	Benzo(k)fluoranthene	U	11	1.0	10	11	3.3	
50-32-8	Benzo(a)pyrene	J	4.9	1.0	10	11	3.6	
193-39-5	Indeno(1,2,3-cd)pyrene	J	3.3	1.0	10	11	2.0	
53-70-3	Dibenzo(a,h)anthracene	U	11	1.0	10	11	1.9	
191-24-2	Benzo(g,h,i)perylene	J	3.5	1.0	10	11	2.2	
118-74-1	Hexachlorobenzene	~~U~~ UJ	11	1.0	10	11	1.9	CCH
87-68-3	Hexachlorobutadiene	U	11	1.0	10	11	2.5	
77-47-4	Hexachlorocyclopentadiene	~~U~~ UJ	11	1.0	10	11	1.6	CCH
7297-45-2	2-Methylnaphthalene-D10		42%					
367-12-4	2,4-Dibromophenol		82%					
81103-79-9	Fluorene-d10		76%					
1718-51-1	Pyrene-D10		81%					

lew
3/6/09

KATAHDIN ANALYTICAL SERVICES
Report of Analytical Results

Client: CH2MHill
Project: TO-009 Lejeune
PO No:
Sample Date: 12/20/08
Received Date: 12/23/08
Extraction Date: 12/29/08
Analysis Date: 12-JAN-2009 23:45
Report Date: 01/17/2009
Matrix: SOIL
% Solids: 84.8

Lab ID: SB7367-24
Client ID: MR08-IS165-5-6-08D
SDG: TO9-22
Extracted by: CB
Extraction Method: SW846 3550
Analyst: JCG
Analysis Method: SW846 M8270C
Lab Prep Batch: WG59461
Units: ug/Kgdrywt

CAS#	Compound	Flags	Results	DF	PQL	Adj.PQL	Adj.MDL	
91-20-3	Naphthalene	J	4.2	1.0	10	12	3.1	
91-57-6	2-Methylnaphthalene	U	12	1.0	10	12	2.6	
86-73-7	Fluorene	U	12	1.0	10	12	3.8	
85-01-8	Phenanthrene	J	3.7	1.0	10	12	2.1	
206-44-0	Fluoranthene	J	4.5	1.0	10	12	2.1	
129-00-0	Pyrene	~~J~~ J	4.4	1.0	10	12	2.5	BSH
56-55-3	Benzo(a)anthracene	J	4.1	1.0	10	12	2.2	
205-99-2	Benzo(b)fluoranthene	J	11	1.0	10	12	2.8	
207-08-9	Benzo(k)fluoranthene	~~J~~ J	4.4	1.0	10	12	3.6	BSH
50-32-8	Benzo(a)pyrene	J	4.2	1.0	10	12	3.9	
193-39-5	Indeno(1,2,3-cd)pyrene	J	3.5	1.0	10	12	2.2	
53-70-3	Dibenzo(a,h)anthracene	J	3.4	1.0	10	12	2.1	
191-24-2	Benzo(g,h,i)perylene	J	5.8	1.0	10	12	2.4	
118-74-1	Hexachlorobenzene	~~J~~ J	2.7	1.0	10	12	2.1	CCH
87-68-3	Hexachlorobutadiene	U	12	1.0	10	12	2.7	
77-47-4	Hexachlorocyclopentadiene	~~U~~ UJ	12	1.0	10	12	1.8	CCH
7297-45-2	2-Methylnaphthalene-D10		* 19%					
367-12-4	2,4-Dibromophenol		59%					
81103-79-9	Fluorene-d10		54%					
1718-51-1	Pyrene-D10		71%					

AW 3/6/09

19RE

KATAHDIN ANALYTICAL SERVICES
Report of Analytical Results

Client: CH2MHill
Project: TO-009 Lejeune
PO No:
Sample Date: 12/20/08
Received Date: 12/23/08
Extraction Date: 01/14/09
Analysis Date: 16-JAN-2009 03:00
Report Date: 01/17/2009
Matrix: SOIL
% Solids: 84.8

Lab ID: SB7367-24RE
Client ID: MR08-IS165-5-6-08D
SDG: TO9-22
Extracted by: AC
Extraction Method: SW846 3550
Analyst: JCG
Analysis Method: SW846 M8270C
Lab Prep Batch: WG59786
Units: ug/Kgdrywt

Use original

CAS#	Compound	Flags	Results	DF	PQL	Adj.PQL	Adj.MDL
91-20-3	Naphthalene	U UJ	12	1.0	10	12	3.1 HT
91-57-6	2-Methylnaphthalene	U	12	1.0	10	12	2.6
86-73-7	Fluorene	U	12	1.0	10	12	3.8
85-01-8	Phenanthrene	U	12	1.0	10	12	2.1
206-44-0	Fluoranthene	U	12	1.0	10	12	2.1
129-00-0	Pyrene	U	12	1.0	10	12	2.5
56-55-3	Benzo(a)anthracene	U	12	1.0	10	12	2.2
205-99-2	Benzo(b)fluoranthene	U	12	1.0	10	12	2.8
207-08-9	Benzo(k)fluoranthene	U	12	1.0	10	12	3.6
50-32-8	Benzo(a)pyrene	U	12	1.0	10	12	3.9
193-39-5	Indeno(1,2,3-cd)pyrene	U	12	1.0	10	12	2.2
53-70-3	Dibenzo(a,h)anthracene	U	12	1.0	10	12	2.1
191-24-2	Benzo(g,h,i)perylene	U	12	1.0	10	12	2.4
118-74-1	Hexachlorobenzene	U	12	1.0	10	12	2.1
87-68-3	Hexachlorobutadiene	U	12	1.0	10	12	2.7
77-47-4	Hexachlorocyclopentadiene	U	12	1.0	10	12	1.8
7297-45-2	2-Methylnaphthalene-D10		47%				
367-12-4	2,4-Dibromophenol		80%				
81103-79-9	Fluorene-d10		87%				
1718-51-1	Pyrene-D10		124%				

R RE

lw 3/6/09

KATAHDIN ANALYTICAL SERVICES
Report of Analytical Results

Client: CH2MHill
Project: TO-009 Lejeune
PO No:
Sample Date: 12/20/08
Received Date: 12/23/08
Extraction Date: 12/29/08
Analysis Date: 13-JAN-2009 00:25
Report Date: 01/17/2009
Matrix: SOIL
% Solids: 91.7

Lab ID: SB7367-26
Client ID: MR08-SS166-08D
SDG: TO9-22
Extracted by: CB
Extraction Method: SW846 3550
Analyst: JCG
Analysis Method: SW846 M8270C
Lab Prep Batch: WG59461
Units: ug/Kgdrywt

CAS#	Compound	Flags	Results	DF	PQL	Adj.PQL	Adj.MDL	
91-20-3	Naphthalene	J	4.6	1.0	10	11	2.8	
91-57-6	2-Methylnaphthalene	J	2.6	1.0	10	11	2.4	
86-73-7	Fluorene	U	11	1.0	10	11	3.5	
85-01-8	Phenanthrene		14	1.0	10	11	2.0	
206-44-0	Fluoranthene		54	1.0	10	11	2.0	
129-00-0	Pyrene	J	54	1.0	10	11	2.3	BSH
56-55-3	Benzo(a)anthracene		23	1.0	10	11	2.1	
205-99-2	Benzo(b)fluoranthene		72	1.0	10	11	2.6	
207-08-9	Benzo(k)fluoranthene	J	41	1.0	10	11	3.4	BSH
50-32-8	Benzo(a)pyrene		34	1.0	10	11	3.6	
193-39-5	Indeno(1,2,3-cd)pyrene		27	1.0	10	11	2.1	
53-70-3	Dibenzo(a,h)anthracene	J	8.1	1.0	10	11	2.0	
191-24-2	Benzo(g,h,i)perylene		28	1.0	10	11	2.2	
118-74-1	Hexachlorobenzene	~~J~~ UJ	11	1.0	10	11	2.0	CCH
87-68-3	Hexachlorobutadiene	U	11	1.0	10	11	2.5	
77-47-4	Hexachlorocyclopentadiene	~~J~~ UJ	11	1.0	10	11	1.6	CCH
7297-45-2	2-Methylnaphthalene-D10		51%					
367-12-4	2,4-Dibromophenol		82%					
81103-79-9	Fluorene-d10		83%					
1718-51-1	Pyrene-D10		81%					

lew 3/6/09

ENVIRONMENTAL
Data Services, Inc.

SEMIVOLATILE ORGANIC COMPOUNDS

USEPA Region IV - Level IV Review

Site: MCB Camp Lejeune, TO-09 SDG #: TO9-22

Client: CH2M HILL, Inc., Virginia Beach, Virginia Date: March 6, 2009

Laboratory: Katahdin Analytical Services, Scarborough, Maine Reviewer: Nancy Weaver

EDS ID	Client Sample ID	Laboratory Sample ID	Matrix
1	MR08-IS163-4-5-08D	SB7351-1	Soil
2	MR08-SS152-08D	SB7351-3	Soil
3	MR08-IS152-4-5-08D	SB7351-5	Soil
4	MR08-SS139-08D	SB7351-7	Soil
5	MR08-SS139D-08D	SB7351-9	Soil
6	MR08-IS139-.5-1.5-08D	SB7351-11	Soil
7	MR08-IS139D-.5-1.5-08D	SB7351-13	Soil
8	MR08-SS138-08D	SB7367-1	Soil
9	MR08-IS138-2-3-08D	SB7367-3	Soil
10	MR08-SS187-08D	SB7367-5	Soil
11	MR08-IS187-4-5-08D	SB7367-7	Soil
12	MR08-SS188-08D	SB7367-9	Soil
13	MR08-IS188-1-2-08D	SB7367-11	Soil
13RE	MR08-IS188-1-2-08DRE	SB7367-11RE	Soil
14	MR08-SS175-08D	SB7367-13	Soil
14RE	MR08-SS175-08DRE	SB7367-13RE	Soil
15	MR08-IS175-2-3-08D	SB7367-15	Soil
15RE	MR08-IS175-2-3-08DRE	SB7367-15RE	Soil
16	MR08-SS164-08D	SB7367-17	Soil
16RE	MR08-SS164-08DRE	SB7367-17RE	Soil
17	MR08-IS164-5-6-08D	SB7367-19	Soil
17RE	MR08-IS164-5-6-08DRE	SB7367-19RE	Soil
18	MR08-SS165-08D	SB7367-21	Soil
18RE	MR08-SS165-08DRE	SB7367-21RE	Soil
19	MR08-IS165-5-6-08D	SB7367-23	Soil
19RE	MR08-IS165-5-6-08DRE	SB7367-23RE	Soil
20	MR08-SS166-08D	SB7367-25	Soil
20RE	MR08-SS166-08DRE	SB7367-25RE	Soil

The USEPA "Contract Laboratory Program National Functional Guidelines for Organic Data Review," October 1999, and professional judgment were used in evaluating the data in this summary report.

Holding Times - All samples were extracted within 14 days for soil samples and analyzed within 40 days except the following.

Sample	Date Sampled	Date Extracted	# of Days	Qualifier
13RE	12/19/08	01/14/08	26	J/UJ
14RE	12/19/08	01/20/08	32	J/R
15RE	12/19/08	01/20/08	32	J/R
16RE	12/20/08	01/20/08	31	J/R
17RE	12/20/08	01/20/08	31	J/R
18RE	12/20/08	01/20/08	31	J/R
19RE	12/20/08	01/14/08	25	J/UJ
20RE	12/20/08	01/20/08	31	J/R

GC/MS Tuning - All of the DFTPP tunes in the initial and continuing calibrations met the percent relative abundance criteria.

Initial Calibration - The initial calibrations exhibited acceptable %RSD and mean RRF values except the following.

ICAL Date	Compound	%RSD/RRF	Qualifier	Affected Samples
01/12/09	Benzaldehyde	90.97%	J/UJ	All original samples except 13, 19
01/13/09	Benzaldehyde	44.95%	None	Already qualified due to HT

Continuing Calibration - The continuing calibrations exhibited acceptable %D and RRF values except the following.

CCAL Date	Compound	%D/RRF	Qualifier	Affected Samples
01/14/09 (1028)	Benzaldehyde	54.26%	None	Already qualified due to ICAL
	4-Nitroaniline	37.56%	J/UJ	1, 2
01/14/09 (1734)	Benzaldehyde	52.46%	None	Already qualified due to ICAL
01/15/09 (0825)	Benzaldehyde	51.53%	None	Already qualified due to ICAL
01/15/09 (1731)	Benzaldehyde	54.26%	None	Already qualified due to ICAL
	4-Nitroaniline	27.14%	J/UJ	18
01/16/09	Benzaldehyde	53.82%	None	Already qualified due to ICAL
	4-Nitroaniline	32.20%	J/UJ	20
01/21/09	Benzaldehyde	79.39%	None	Already qualified due to HT

Surrogates - All samples exhibited acceptable surrogate recoveries except the following.

Sample ID	Surrogate	%R	Qualifier
11	S5-2,4,6-Tribromophenol	24%	None for 1 out
12	S5-2,4,6-Tribromophenol	33%	None for 1 out
13	S1-2-Fluorophenol	26%	J/UJ - All compounds
	S2-Phenol-d6	24%	
	S3-Nitrobenzene-d5	24%	

Sample ID	Surrogate	%R	Qualifier
13	S4-2-Fluorobiphenyl	28%	J/UJ - All compounds
	S5-2,4,6-Tribromophenol	23%	
15	S1-2-Fluorophenol	19%	J/R - Acid compounds
	S5-2,4,6-Tribromophenol	0%	
19	S1-2-Fluorophenol	21%	J/UJ - All compounds
	S2-Phenol-d6	23%	
	S3-Nitrobenzene-d5	15%	
	S4-2-Fluorobiphenyl	28%	
20	S5-2,4,6-Tribromophenol	25%	None for 1 out

MS/MSD - A MS/MSD sample was not analyzed.

Laboratory Control Sample - The LCS samples exhibited acceptable %R values except the following.

LCS ID	Compound	%R	Qualifier	Affected Samples
WG59445-LCS	Benzaldehyde	292%	None	All ND
	2,4-Dimethylphenol	23%	J/UJ	1-12
WG59460-LCS	bis (2-Chloroethyl) ether	29%	J/UJ	14-18, 20
	Acetophenone	51%	J/UJ	14-18, 20
	Hexachloroethane	19%	J/UJ	14-18, 20
	2,4-Dimethylphenol	12%	J/UJ	14, 16-18, 20
WG59785-LCS	Benzaldehyde	142%	None	All ND

Internal Standard (IS) Area Performance - All internal standards met response and retention time (RT) criteria.

Method Blank - The method blanks were free of contamination.

Field, Equipment Blank - Field QC results are summarized below.

Blank ID	Compound	Conc. ug/L	Action Level ug/kg	Qualifier	Affected Samples
MR08-FB122008	None - ND	-	-	-	-
MR08-EB01-121908	Diethylphthalate	2	330	None	All associated ND
MR08-EB01-122008	None - ND	-	-	-	-

Field Duplicates - Field duplicate results are summarized below.

Compound	MR08-SS139-08D ug/kg	MR08-SS139D-08D ug/kg	RPD	Qualifier
Chrysene	210	210	0%	None

Compound	MR08-IS139-.5-1.5-08D ug/kg	MR08-IS139D-.5-1.5-08D ug/kg	RPD	Qualifier
bis (2-Ethylhexyl) phthalate	160	110	37%	None

Tentatively Identified Compounds (TICs) - TICs were not reported.

Compound Quantitation - Many samples were reanalyzed due to surrogate recovery deficiencies. The reanalyses were analyzed outside of holding time and were qualified estimated (J/UJ) or rejected (J/R). Refer to Form Is for which to use.

KATAHDIN ANALYTICAL SERVICES
Report of Analytical Results

Client: CH2MHill
Project: TO-009 Lejeune
PO No:
Sample Date: 12/19/08
Received Date: 12/20/08
Extraction Date: 12/29/08
Analysis Date: 14-JAN-2009 13:22
Report Date: 01/22/2009
Matrix: SOIL
% Solids: 87.0

Lab ID: SB7351-1
Client ID: MR08-IS163-4-5-08D
SDG: TO9-22
Extracted by: CB
Extraction Method: SW846 3550
Analyst: JLP
Analysis Method: SW846 8270C
Lab Prep Batch: WG59445
Units: ug/Kgdrywt

CAS#	Compound	Flags	Results	DF	PQL	Adj.PQL	Adj.MDL	
100-52-7	Benzaldehyde	~~U~~ UJ	570	1.0	500	570	140	ICB
108-95-2	Phenol	U	570	1.0	500	570	180	
111-44-4	Bis(2-Chloroethyl)ether	U	380	1.0	330	380	93	
95-57-8	2-Chlorophenol	U	570	1.0	500	570	190	
95-48-7	2-Methylphenol	U	690	1.0	600	690	230	
108-60-1	2,2'-Oxybis(1-chloropropane)	U	380	1.0	330	380	100	
98-86-2	Acetophenone	U	690	1.0	600	690	200	
621-64-7	N-Nitroso-di-n-propylamine	U	380	1.0	330	380	95	
65794-96-9	3&4-Methylphenol	U	690	1.0	600	690	210	
67-72-1	Hexachloroethane	U	380	1.0	330	380	110	
98-95-3	Nitrobenzene	U	380	1.0	330	380	100	
78-59-1	Isophorone	U	380	1.0	330	380	86	
88-75-5	2-Nitrophenol	U	690	1.0	600	690	190	
105-67-9	2,4-Dimethylphenol	~~U~~ UJ	570	1.0	500	570	190	BSL
111-91-1	Bis(2-Chloroethoxy)methane	U	380	1.0	330	380	110	
120-83-2	2,4-Dichlorophenol	U	570	1.0	500	570	170	
106-47-8	4-Chloroaniline	U	570	1.0	500	570	140	
105-60-2	Caprolactam	U	570	1.0	500	570	160	
59-50-7	4-Chloro-3-Methylphenol	U	570	1.0	500	570	190	
88-06-2	2,4,6-Trichlorophenol	U	570	1.0	500	570	180	
95-95-4	2,4,5-Trichlorophenol	U	570	1.0	500	570	180	
91-58-7	2-Chloronaphthalene	U	380	1.0	330	380	100	
92-52-4	1,1'-Biphenyl	U	380	1.0	330	380	84	
88-74-4	2-Nitroaniline	U	570	1.0	500	570	86	
131-11-3	Dimethyl Phthalate	U	380	1.0	330	380	90	
606-20-2	2,6-Dinitrotoluene	U	380	1.0	330	380	91	
208-96-8	Acenaphthylene	U	380	1.0	330	380	80	
99-09-2	3-Nitroaniline	U	570	1.0	500	570	110	
83-32-9	Acenaphthene	U	380	1.0	330	380	75	
51-28-5	2,4-Dinitrophenol	U	1400	1.0	1200	1400	430	
132-64-9	Dibenzofuran	U	380	1.0	330	380	91	
100-02-7	4-Nitrophenol	U	1400	1.0	1200	1400	360	
121-14-2	2,4-Dinitrotoluene	U	380	1.0	330	380	98	
84-66-2	Diethylphthalate	U	380	1.0	330	380	92	
7005-72-3	4-Chlorophenyl-phenylether	U	380	1.0	330	380	90	
100-01-6	4-Nitroaniline	~~U~~ UJ	570	1.0	500	570	150	CCH
534-52-1	4,6-Dinitro-2-Methylphenol	U	1400	1.0	1200	1400	390	
86-30-6	N-Nitrosodiphenylamine	U	760	1.0	660	760	250	
101-55-3	4-Bromophenyl-phenylether	U	380	1.0	330	380	98	
1912-24-9	Atrazine	U	380	1.0	330	380	100	
87-86-5	Pentachlorophenol	U	940	1.0	820	940	270	
120-12-7	Anthracene	U	380	1.0	330	380	96	
86-74-8	Carbazole	U	570	1.0	500	570	130	

LW
3/6/09

KATAHDIN ANALYTICAL SERVICES
Report of Analytical Results

Client: CH2MHill
Project: TO-009 Lejeune
PO No:
Sample Date: 12/19/08
Received Date: 12/20/08
Extraction Date: 12/29/08
Analysis Date: 14-JAN-2009 13:22
Report Date: 01/22/2009
Matrix: SOIL
% Solids: 87.0

Lab ID: SB7351-1
Client ID: MR08-IS163-4-5-08D
SDG: TO9-22
Extracted by: CB
Extraction Method: SW846 3550
Analyst: JLP
Analysis Method: SW846 8270C
Lab Prep Batch: WG59445
Units: ug/Kgdrywt

CAS#	Compound	Flags	Results	DF	PQL	Adj.PQL	Adj.MDL
84-74-2	Di-n-butylphthalate	U	380	1.0	330	380	120
85-68-7	Butylbenzylphthalate	U	380	1.0	330	380	110
91-94-1	3,3'-Dichlorobenzidine	U	570	1.0	500	570	130
218-01-9	Chrysene	U	380	1.0	330	380	110
117-81-7	bis(2-Ethylhexyl)phthalate	U	380	1.0	330	380	110
117-84-0	Di-n-octylphthalate	U	380	1.0	330	380	240
367-12-4	2-Fluorophenol		68%				
13127-88-3	Phenol-D6		70%				
4165-60-0	Nitrobenzene-D5		62%				
321-60-8	2-Fluorobiphenyl		67%				
118-79-6	2,4,6-Tribromophenol		66%				
1718-51-0	Terphenyl-D14		73%				

lew 3/6/09

2

KATAHDIN ANALYTICAL SERVICES
Report of Analytical Results

Client: CH2MHill
Project: TO-009 Lejeune
PO No:
Sample Date: 12/19/08
Received Date: 12/20/08
Extraction Date: 12/29/08
Analysis Date: 14-JAN-2009 15:30
Report Date: 01/22/2009
Matrix: SOIL
% Solids: 87.3

Lab ID: SB7351-3
Client ID: MR08-SS152-08D
SDG: TO9-22
Extracted by: CB
Extraction Method: SW846 3550
Analyst: JLP
Analysis Method: SW846 8270C
Lab Prep Batch: WG59445
Units: ug/Kgdrywt

CAS#	Compound	Flags	Results	DF	PQL	Adj.PQL	Adj.MDL	
100-52-7	Benzaldehyde	~~U~~ UJ	570	1.0	500	570	140	ICB
108-95-2	Phenol	U	570	1.0	500	570	180	
111-44-4	Bis(2-Chloroethyl)ether	U	380	1.0	330	380	93	
95-57-8	2-Chlorophenol	U	570	1.0	500	570	190	
95-48-7	2-Methylphenol	U	690	1.0	600	690	230	
108-60-1	2,2'-Oxybis(1-chloropropane)	U	380	1.0	330	380	100	
98-86-2	Acetophenone	U	690	1.0	600	690	200	
621-64-7	N-Nitroso-di-n-propylamine	U	380	1.0	330	380	95	
65794-96-9	3&4-Methylphenol	U	690	1.0	600	690	210	
67-72-1	Hexachloroethane	U	380	1.0	330	380	110	
98-95-3	Nitrobenzene	U	380	1.0	330	380	100	
78-59-1	Isophorone	U	380	1.0	330	380	86	
88-75-5	2-Nitrophenol	U	690	1.0	600	690	190	
105-67-9	2,4-Dimethylphenol	~~U~~ UJ	570	1.0	500	570	190	BSL
111-91-1	Bis(2-Chloroethoxy)methane	U	380	1.0	330	380	110	
120-83-2	2,4-Dichlorophenol	U	570	1.0	500	570	170	
106-47-8	4-Chloroaniline	U	570	1.0	500	570	140	
105-60-2	Caprolactam	U	570	1.0	500	570	160	
59-50-7	4-Chloro-3-Methylphenol	U	570	1.0	500	570	190	
88-06-2	2,4,6-Trichlorophenol	U	570	1.0	500	570	180	
95-95-4	2,4,5-Trichlorophenol	U	570	1.0	500	570	180	
91-58-7	2-Chloronaphthalene	U	380	1.0	330	380	100	
92-52-4	1,1'-Biphenyl	U	380	1.0	330	380	84	
88-74-4	2-Nitroaniline	U	570	1.0	500	570	86	
131-11-3	Dimethyl Phthalate	U	380	1.0	330	380	89	
606-20-2	2,6-Dinitrotoluene	U	380	1.0	330	380	90	
208-96-8	Acenaphthylene	U	380	1.0	330	380	80	
99-09-2	3-Nitroaniline	U	570	1.0	500	570	110	
83-32-9	Acenaphthene	U	380	1.0	330	380	74	
51-28-5	2,4-Dinitrophenol	U	1400	1.0	1200	1400	430	
132-64-9	Dibenzofuran	U	380	1.0	330	380	90	
100-02-7	4-Nitrophenol	U	1400	1.0	1200	1400	350	
121-14-2	2,4-Dinitrotoluene	U	380	1.0	330	380	97	
84-66-2	Diethylphthalate	U	380	1.0	330	380	92	
7005-72-3	4-Chlorophenyl-phenylether	U	380	1.0	330	380	89	
100-01-6	4-Nitroaniline	~~U~~ UJ	570	1.0	500	570	150	CCH
534-52-1	4,6-Dinitro-2-Methylphenol	U	1400	1.0	1200	1400	380	
86-30-6	N-Nitrosodiphenylamine	U	760	1.0	660	760	250	
101-55-3	4-Bromophenyl-phenylether	U	380	1.0	330	380	97	
1912-24-9	Atrazine	U	380	1.0	330	380	100	
87-86-5	Pentachlorophenol	U	940	1.0	820	940	270	
120-12-7	Anthracene	U	380	1.0	330	380	96	
86-74-8	Carbazole	U	570	1.0	500	570	130	

RW 3/6/09

2

KATAHDIN ANALYTICAL SERVICES
Report of Analytical Results

Client: CH2MHill
Project: TO-009 Lejeune
PO No:
Sample Date: 12/19/08
Received Date: 12/20/08
Extraction Date: 12/29/08
Analysis Date: 14-JAN-2009 15:30
Report Date: 01/22/2009
Matrix: SOIL
% Solids: 87.3

Lab ID: SB7351-3
Client ID: MR08-SS152-08D
SDG: TO9-22
Extracted by: CB
Extraction Method: SW846 3550
Analyst: JLP
Analysis Method: SW846 8270C
Lab Prep Batch: WG59445
Units: ug/Kgdrywt

CAS#	Compound	Flags	Results	DF	PQL	Adj.PQL	Adj.MDL
84-74-2	Di-n-butylphthalate	U	380	1.0	330	380	120
85-68-7	Butylbenzylphthalate	U	380	1.0	330	380	110
91-94-1	3,3'-Dichlorobenzidine	U	570	1.0	500	570	130
218-01-9	Chrysene		890	1.0	330	380	110
117-81-7	bis(2-Ethylhexyl)phthalate	J	350	1.0	330	380	110
117-84-0	Di-n-octylphthalate	U	380	1.0	330	380	240
367-12-4	2-Fluorophenol		56%				
13127-88-3	Phenol-D6		56%				
4165-60-0	Nitrobenzene-D5		59%				
321-60-8	2-Fluorobiphenyl		65%				
118-79-6	2,4,6-Tribromophenol		46%				
1718-51-0	Terphenyl-D14		69%				

lw
3/6/09

3

KATAHDIN ANALYTICAL SERVICES
Report of Analytical Results

Client: CH2MHill
Project: TO-009 Lejeune
PO No:
Sample Date: 12/19/08
Received Date: 12/20/08
Extraction Date: 12/29/08
Analysis Date: 14-JAN-2009 20:24
Report Date: 01/22/2009
Matrix: SOIL
% Solids: 86.9

Lab ID: SB7351-5
Client ID: MR08-IS152-4-5-08D
SDG: TO9-22
Extracted by: CB
Extraction Method: SW846 3550
Analyst: JCG
Analysis Method: SW846 8270C
Lab Prep Batch: WG59445
Units: ug/Kgdrywt

CAS#	Compound	Flags	Results	DF	PQL	Adj.PQL	Adj.MDL	
100-52-7	Benzaldehyde	~~U~~ UJ	580	1.0	500	580	140	JCB
108-95-2	Phenol	U	580	1.0	500	580	180	
111-44-4	Bis(2-Chloroethyl)ether	U	380	1.0	330	380	93	
95-57-8	2-Chlorophenol	U	580	1.0	500	580	190	
95-48-7	2-Methylphenol	U	690	1.0	600	690	230	
108-60-1	2,2'-Oxybis(1-chloropropane)	U	380	1.0	330	380	100	
98-86-2	Acetophenone	U	690	1.0	600	690	200	
621-64-7	N-Nitroso-di-n-propylamine	U	380	1.0	330	380	96	
65794-96-9	3&4-Methylphenol	U	690	1.0	600	690	220	
67-72-1	Hexachloroethane	U	380	1.0	330	380	110	
98-95-3	Nitrobenzene	U	380	1.0	330	380	100	
78-59-1	Isophorone	U	380	1.0	330	380	86	
88-75-5	2-Nitrophenol	U	690	1.0	600	690	190	
105-67-9	2,4-Dimethylphenol	~~U~~ UJ	580	1.0	500	580	190	BSL
111-91-1	Bis(2-Chloroethoxy)methane	U	380	1.0	330	380	110	
120-83-2	2,4-Dichlorophenol	U	580	1.0	500	580	170	
106-47-8	4-Chloroaniline	U	580	1.0	500	580	140	
105-60-2	Caprolactam	U	580	1.0	500	580	160	
59-50-7	4-Chloro-3-Methylphenol	U	580	1.0	500	580	190	
88-06-2	2,4,6-Trichlorophenol	U	580	1.0	500	580	180	
95-95-4	2,4,5-Trichlorophenol	U	580	1.0	500	580	180	
91-58-7	2-Chloronaphthalene	U	380	1.0	330	380	100	
92-52-4	1,1'-Biphenyl	U	380	1.0	330	380	84	
88-74-4	2-Nitroaniline	U	580	1.0	500	580	86	
131-11-3	Dimethyl Phthalate	U	380	1.0	330	380	90	
606-20-2	2,6-Dinitrotoluene	U	380	1.0	330	380	91	
208-96-8	Acenaphthylene	U	380	1.0	330	380	80	
99-09-2	3-Nitroaniline	U	580	1.0	500	580	110	
83-32-9	Acenaphthene	U	380	1.0	330	380	75	
51-28-5	2,4-Dinitrophenol	U	1400	1.0	1200	1400	430	
132-64-9	Dibenzofuran	U	380	1.0	330	380	91	
100-02-7	4-Nitrophenol	U	1400	1.0	1200	1400	360	
121-14-2	2,4-Dinitrotoluene	U	380	1.0	330	380	98	
84-66-2	Diethylphthalate	U	380	1.0	330	380	92	
7005-72-3	4-Chlorophenyl-phenylether	U	380	1.0	330	380	90	
100-01-6	4-Nitroaniline	U	580	1.0	500	580	150	
534-52-1	4,6-Dinitro-2-Methylphenol	U	1400	1.0	1200	1400	390	
86-30-6	N-Nitrosodiphenylamine	U	760	1.0	660	760	250	
101-55-3	4-Bromophenyl-phenylether	U	380	1.0	330	380	98	
1912-24-9	Atrazine	U	380	1.0	330	380	100	
87-86-5	Pentachlorophenol	U	940	1.0	820	940	270	
120-12-7	Anthracene	U	380	1.0	330	380	97	
86-74-8	Carbazole	U	580	1.0	500	580	130	

KEW 3/6/09

KATAHDIN ANALYTICAL SERVICES
Report of Analytical Results

3

Client: CH2MHill
Project: TO-009 Lejeune
PO No:
Sample Date: 12/19/08
Received Date: 12/20/08
Extraction Date: 12/29/08
Analysis Date: 14-JAN-2009 20:24
Report Date: 01/22/2009
Matrix: SOIL
% Solids: 86.9

Lab ID: SB7351-5
Client ID: MR08-IS152-4-5-08D
SDG: TO9-22
Extracted by: CB
Extraction Method: SW846 3550
Analyst: JCG
Analysis Method: SW846 8270C
Lab Prep Batch: WG59445
Units: ug/Kgdrywt

CAS#	Compound	Flags	Results	DF	PQL	Adj.PQL	Adj.MDL
84-74-2	Di-n-butylphthalate	U	380	1.0	330	380	120
85-68-7	Butylbenzylphthalate	U	380	1.0	330	380	110
91-94-1	3,3'-Dichlorobenzidine	U	580	1.0	500	580	130
218-01-9	Chrysene	U	380	1.0	330	380	110
117-81-7	bis(2-Ethylhexyl)phthalate	U	380	1.0	330	380	110
117-84-0	Di-n-octylphthalate	U	380	1.0	330	380	240
367-12-4	2-Fluorophenol		63%				
13127-88-3	Phenol-D6		66%				
4165-60-0	Nitrobenzene-D5		62%				
321-60-8	2-Fluorobiphenyl		67%				
118-79-6	2,4,6-Tribromophenol		58%				
1718-51-0	Terphenyl-D14		79%				

LW 3/6/09

4

KATAHDIN ANALYTICAL SERVICES
Report of Analytical Results

Client: CH2MHill
Project: TO-009 Lejeune
PO No:
Sample Date: 12/19/08
Received Date: 12/20/08
Extraction Date: 12/29/08
Analysis Date: 14-JAN-2009 21:06
Report Date: 01/22/2009
Matrix: SOIL
% Solids: 75.6

Lab ID: SB7351-7
Client ID: MR08-SS139-08D
SDG: TO9-22
Extracted by: CB
Extraction Method: SW846 3550
Analyst: JCG
Analysis Method: SW846 8270C
Lab Prep Batch: WG59445
Units: ug/Kgdrywt

CAS#	Compound	Flags	Results	DF	PQL	Adj.PQL	Adj.MDL	
100-52-7	Benzaldehyde	~~U~~ UJ	660	1.0	500	660	160	JCB
108-95-2	Phenol	U	660	1.0	500	660	210	
111-44-4	Bis(2-Chloroethyl)ether	U	440	1.0	330	440	110	
95-57-8	2-Chlorophenol	U	660	1.0	500	660	220	
95-48-7	2-Methylphenol	U	790	1.0	600	790	260	
108-60-1	2,2'-Oxybis(1-chloropropane)	U	440	1.0	330	440	120	
98-86-2	Acetophenone	U	790	1.0	600	790	240	
621-64-7	N-Nitroso-di-n-propylamine	U	440	1.0	330	440	110	
65794-96-9	3&4-Methylphenol	U	790	1.0	600	790	250	
67-72-1	Hexachloroethane	U	440	1.0	330	440	130	
98-95-3	Nitrobenzene	U	440	1.0	330	440	120	
78-59-1	Isophorone	U	440	1.0	330	440	99	
88-75-5	2-Nitrophenol	U	790	1.0	600	790	220	
105-67-9	2,4-Dimethylphenol	~~U~~ UJ	660	1.0	500	660	220	BSL
111-91-1	Bis(2-Chloroethoxy)methane	U	440	1.0	330	440	130	
120-83-2	2,4-Dichlorophenol	U	660	1.0	500	660	200	
106-47-8	4-Chloroaniline	U	660	1.0	500	660	160	
105-60-2	Caprolactam	U	660	1.0	500	660	190	
59-50-7	4-Chloro-3-Methylphenol	U	660	1.0	500	660	220	
88-06-2	2,4,6-Trichlorophenol	U	660	1.0	500	660	200	
95-95-4	2,4,5-Trichlorophenol	U	660	1.0	500	660	200	
91-58-7	2-Chloronaphthalene	U	440	1.0	330	440	120	
92-52-4	1,1'-Biphenyl	U	440	1.0	330	440	97	
88-74-4	2-Nitroaniline	U	660	1.0	500	660	99	
131-11-3	Dimethyl Phthalate	U	440	1.0	330	440	100	
606-20-2	2,6-Dinitrotoluene	U	440	1.0	330	440	100	
208-96-8	Acenaphthylene	U	440	1.0	330	440	93	
99-09-2	3-Nitroaniline	U	660	1.0	500	660	120	
83-32-9	Acenaphthene	U	440	1.0	330	440	86	
51-28-5	2,4-Dinitrophenol	U	1600	1.0	1200	1600	500	
132-64-9	Dibenzofuran	U	440	1.0	330	440	100	
100-02-7	4-Nitrophenol	U	1600	1.0	1200	1600	410	
121-14-2	2,4-Dinitrotoluene	U	440	1.0	330	440	110	
84-66-2	Diethylphthalate	U	440	1.0	330	440	100	
7005-72-3	4-Chlorophenyl-phenylether	U	440	1.0	330	440	100	
100-01-6	4-Nitroaniline	U	660	1.0	500	660	180	
534-52-1	4,6-Dinitro-2-Methylphenol	U	1600	1.0	1200	1600	450	
86-30-6	N-Nitrosodiphenylamine	U	870	1.0	660	870	290	
101-55-3	4-Bromophenyl-phenylether	U	440	1.0	330	440	110	
1912-24-9	Atrazine	U	440	1.0	330	440	120	
87-86-5	Pentachlorophenol	U	1100	1.0	820	1100	310	
120-12-7	Anthracene	U	440	1.0	330	440	110	
86-74-8	Carbazole	U	660	1.0	500	660	150	

LWS
3/6/09

KATAHDIN ANALYTICAL SERVICES
Report of Analytical Results

Client: CH2MHill
Project: TO-009 Lejeune
PO No:
Sample Date: 12/19/08
Received Date: 12/20/08
Extraction Date: 12/29/08
Analysis Date: 14-JAN-2009 21:06
Report Date: 01/22/2009
Matrix: SOIL
% Solids: 75.6

Lab ID: SB7351-7
Client ID: MR08-SS139-08D
SDG: TO9-22
Extracted by: CB
Extraction Method: SW846 3550
Analyst: JCG
Analysis Method: SW846 8270C
Lab Prep Batch: WG59445
Units: ug/Kgdrywt

CAS#	Compound	Flags	Results	DF	PQL	Adj.PQL	Adj.MDL
84-74-2	Di-n-butylphthalate	U	440	1.0	330	440	130
85-68-7	Butylbenzylphthalate	U	440	1.0	330	440	120
91-94-1	3,3'-Dichlorobenzidine	U	660	1.0	500	660	150
218-01-9	Chrysene	J	210	1.0	330	440	120
117-81-7	bis(2-Ethylhexyl)phthalate	U	440	1.0	330	440	130
117-84-0	Di-n-octylphthalate	U	440	1.0	330	440	280
367-12-4	2-Fluorophenol		62%				
13127-88-3	Phenol-D6		62%				
4165-60-0	Nitrobenzene-D5		61%				
321-60-8	2-Fluorobiphenyl		66%				
118-79-6	2,4,6-Tribromophenol		65%				
1718-51-0	Terphenyl-D14		79%				

lw
3/6/09

KATAHDIN ANALYTICAL SERVICES
Report of Analytical Results

Client: CH2MHill
Project: TO-009 Lejeune
PO No:
Sample Date: 12/19/08
Received Date: 12/20/08
Extraction Date: 12/29/08
Analysis Date: 14-JAN-2009 21:48
Report Date: 01/22/2009
Matrix: SOIL
% Solids: 73.4

Lab ID: SB7351-9
Client ID: MR08-SS139D-08D
SDG: TO9-22
Extracted by: CB
Extraction Method: SW846 3550
Analyst: JCG
Analysis Method: SW846 8270C
Lab Prep Batch: WG59445
Units: ug/Kgdrywt

CAS#	Compound	Flags	Results	DF	PQL	Adj.PQL	Adj.MDL	
100-52-7	Benzaldehyde	~~U~~ UJ	680	1.0	500	680	160	JCB
108-95-2	Phenol	U	680	1.0	500	680	210	
111-44-4	Bis(2-Chloroethyl)ether	U	450	1.0	330	450	110	
95-57-8	2-Chlorophenol	U	680	1.0	500	680	220	
95-48-7	2-Methylphenol	U	820	1.0	600	820	270	
108-60-1	2,2'-Oxybis(1-chloropropane)	U	450	1.0	330	450	120	
98-86-2	Acetophenone	U	820	1.0	600	820	240	
621-64-7	N-Nitroso-di-n-propylamine	U	450	1.0	330	450	110	
65794-96-9	3&4-Methylphenol	U	820	1.0	600	820	250	
67-72-1	Hexachloroethane	U	450	1.0	330	450	130	
98-95-3	Nitrobenzene	U	450	1.0	330	450	120	
78-59-1	Isophorone	U	450	1.0	330	450	100	
88-75-5	2-Nitrophenol	U	820	1.0	600	820	230	
105-67-9	2,4-Dimethylphenol	~~U~~ UJ	680	1.0	500	680	220	BSL
111-91-1	Bis(2-Chloroethoxy)methane	U	450	1.0	330	450	130	
120-83-2	2,4-Dichlorophenol	U	680	1.0	500	680	200	
106-47-8	4-Chloroaniline	U	680	1.0	500	680	160	
105-60-2	Caprolactam	U	680	1.0	500	680	200	
59-50-7	4-Chloro-3-Methylphenol	U	680	1.0	500	680	220	
88-06-2	2,4,6-Trichlorophenol	U	680	1.0	500	680	210	
95-95-4	2,4,5-Trichlorophenol	U	680	1.0	500	680	210	
91-58-7	2-Chloronaphthalene	U	450	1.0	330	450	120	
92-52-4	1,1'-Biphenyl	U	450	1.0	330	450	99	
88-74-4	2-Nitroaniline	U	680	1.0	500	680	100	
131-11-3	Dimethyl Phthalate	U	450	1.0	330	450	110	
606-20-2	2,6-Dinitrotoluene	U	450	1.0	330	450	110	
208-96-8	Acenaphthylene	U	450	1.0	330	450	95	
99-09-2	3-Nitroaniline	U	680	1.0	500	680	130	
83-32-9	Acenaphthene	U	450	1.0	330	450	88	
51-28-5	2,4-Dinitrophenol	U	1600	1.0	1200	1600	510	
132-64-9	Dibenzofuran	U	450	1.0	330	450	110	
100-02-7	4-Nitrophenol	U	1600	1.0	1200	1600	420	
121-14-2	2,4-Dinitrotoluene	U	450	1.0	330	450	120	
84-66-2	Diethylphthalate	U	450	1.0	330	450	110	
7005-72-3	4-Chlorophenyl-phenylether	U	450	1.0	330	450	110	
100-01-6	4-Nitroaniline	U	680	1.0	500	680	180	
534-52-1	4,6-Dinitro-2-Methylphenol	U	1600	1.0	1200	1600	460	
86-30-6	N-Nitrosodiphenylamine	U	900	1.0	660	900	300	
101-55-3	4-Bromophenyl-phenylether	U	450	1.0	330	450	120	
1912-24-9	Atrazine	U	450	1.0	330	450	120	
87-86-5	Pentachlorophenol	U	1100	1.0	820	1100	320	
120-12-7	Anthracene	U	450	1.0	330	450	110	
86-74-8	Carbazole	U	680	1.0	500	680	150	

RW 3/6/09

KATAHDIN ANALYTICAL SERVICES
Report of Analytical Results

5

Client: CH2MHill
Project: TO-009 Lejeune
PO No:
Sample Date: 12/19/08
Received Date: 12/20/08
Extraction Date: 12/29/08
Analysis Date: 14-JAN-2009 21:48
Report Date: 01/22/2009
Matrix: SOIL
% Solids: 73.4

Lab ID: SB7351-9
Client ID: MR08-SS139D-08D
SDG: TO9-22
Extracted by: CB
Extraction Method: SW846 3550
Analyst: JCG
Analysis Method: SW846 8270C
Lab Prep Batch: WG59445
Units: ug/Kgdrywt

CAS#	Compound	Flags	Results	DF	PQL	Adj.PQL	Adj.MDL
84-74-2	Di-n-butylphthalate	U	450	1.0	330	450	140
85-68-7	Butylbenzylphthalate	U	450	1.0	330	450	130
91-94-1	3,3'-Dichlorobenzidine	U	680	1.0	500	680	160
218-01-9	Chrysene	J	210	1.0	330	450	130
117-81-7	bis(2-Ethylhexyl)phthalate	U	450	1.0	330	450	130
117-84-0	Di-n-octylphthalate	U	450	1.0	330	450	290
367-12-4	2-Fluorophenol		57%				
13127-88-3	Phenol-D6		70%				
4165-60-0	Nitrobenzene-D5		52%				
321-60-8	2-Fluorobiphenyl		76%				
118-79-6	2,4,6-Tribromophenol		73%				
1718-51-0	Terphenyl-D14		94%				

RW 3/6/09

6

KATAHDIN ANALYTICAL SERVICES
Report of Analytical Results

Client: CH2MHill
Project: TO-009 Lejeune
PO No:
Sample Date: 12/19/08
Received Date: 12/20/08
Extraction Date: 12/29/08
Analysis Date: 14-JAN-2009 22:30
Report Date: 01/22/2009
Matrix: SOIL
% Solids: 88.2

Lab ID: SB7351-11
Client ID: MR08-IS139-.5-1.5
SDG: TO9-22
Extracted by: CB
Extraction Method: SW846 3550
Analyst: JCG
Analysis Method: SW846 8270C
Lab Prep Batch: WG59445
Units: ug/Kgdrywt

CAS#	Compound	Flags	Results	DF	PQL	Adj.PQL	Adj.MDL	
100-52-7	Benzaldehyde	~~U~~ UJ	570	1.0	500	570	140	ICB
108-95-2	Phenol	U	570	1.0	500	570	180	
111-44-4	Bis(2-Chloroethyl)ether	U	370	1.0	330	370	92	
95-57-8	2-Chlorophenol	U	570	1.0	500	570	180	
95-48-7	2-Methylphenol	U	680	1.0	600	680	230	
108-60-1	2,2'-Oxybis(1-chloropropane)	U	370	1.0	330	370	100	
98-86-2	Acetophenone	U	680	1.0	600	680	200	
621-64-7	N-Nitroso-di-n-propylamine	U	370	1.0	330	370	94	
65794-96-9	3&4-Methylphenol	U	680	1.0	600	680	210	
67-72-1	Hexachloroethane	U	370	1.0	330	370	110	
98-95-3	Nitrobenzene	U	370	1.0	330	370	100	
78-59-1	Isophorone	U	370	1.0	330	370	85	
88-75-5	2-Nitrophenol	U	680	1.0	600	680	190	
105-67-9	2,4-Dimethylphenol	~~U~~ UJ	570	1.0	500	570	190	BSL
111-91-1	Bis(2-Chloroethoxy)methane	U	370	1.0	330	370	110	
120-83-2	2,4-Dichlorophenol	U	570	1.0	500	570	170	
106-47-8	4-Chloroaniline	U	570	1.0	500	570	130	
105-60-2	Caprolactam	U	570	1.0	500	570	160	
59-50-7	4-Chloro-3-Methylphenol	U	570	1.0	500	570	190	
88-06-2	2,4,6-Trichlorophenol	U	570	1.0	500	570	180	
95-95-4	2,4,5-Trichlorophenol	U	570	1.0	500	570	180	
91-58-7	2-Chloronaphthalene	U	370	1.0	330	370	99	
92-52-4	1,1'-Biphenyl	U	370	1.0	330	370	83	
88-74-4	2-Nitroaniline	U	570	1.0	500	570	85	
131-11-3	Dimethyl Phthalate	U	370	1.0	330	370	88	
606-20-2	2,6-Dinitrotoluene	U	370	1.0	330	370	90	
208-96-8	Acenaphthylene	U	370	1.0	330	370	79	
99-09-2	3-Nitroaniline	U	570	1.0	500	570	110	
83-32-9	Acenaphthene	U	370	1.0	330	370	74	
51-28-5	2,4-Dinitrophenol	U	1400	1.0	1200	1400	430	
132-64-9	Dibenzofuran	U	370	1.0	330	370	90	
100-02-7	4-Nitrophenol	U	1400	1.0	1200	1400	350	
121-14-2	2,4-Dinitrotoluene	U	370	1.0	330	370	96	
84-66-2	Diethylphthalate	U	370	1.0	330	370	91	
7005-72-3	4-Chlorophenyl-phenylether	U	370	1.0	330	370	88	
100-01-6	4-Nitroaniline	U	570	1.0	500	570	150	
534-52-1	4,6-Dinitro-2-Methylphenol	U	1400	1.0	1200	1400	380	
86-30-6	N-Nitrosodiphenylamine	U	750	1.0	660	750	250	
101-55-3	4-Bromophenyl-phenylether	U	370	1.0	330	370	96	
1912-24-9	Atrazine	U	370	1.0	330	370	100	
87-86-5	Pentachlorophenol	U	930	1.0	820	930	270	
120-12-7	Anthracene	U	370	1.0	330	370	95	
86-74-8	Carbazole	U	570	1.0	500	570	120	

lw 3/6/09

KATAHDIN ANALYTICAL SERVICES
Report of Analytical Results

Client: CH2MHill
Project: TO-009 Lejeune
PO No:
Sample Date: 12/19/08
Received Date: 12/20/08
Extraction Date: 12/29/08
Analysis Date: 14-JAN-2009 22:30
Report Date: 01/22/2009
Matrix: SOIL
% Solids: 88.2

Lab ID: SB7351-11
Client ID: MR08-IS139-.5-1.5
SDG: TO9-22
Extracted by: CB
Extraction Method: SW846 3550
Analyst: JCG
Analysis Method: SW846 8270C
Lab Prep Batch: WG59445
Units: ug/Kgdrywt

CAS#	Compound	Flags	Results	DF	PQL	Adj.PQL	Adj.MDL
84-74-2	Di-n-butylphthalate	U	370	1.0	330	370	110
85-68-7	Butylbenzylphthalate	U	370	1.0	330	370	100
91-94-1	3,3'-Dichlorobenzidine	U	570	1.0	500	570	130
218-01-9	Chrysene	U	370	1.0	330	370	110
117-81-7	bis(2-Ethylhexyl)phthalate	J	160	1.0	330	370	110
117-84-0	Di-n-octylphthalate	U	370	1.0	330	370	240
367-12-4	2-Fluorophenol		71%				
13127-88-3	Phenol-D6		70%				
4165-60-0	Nitrobenzene-D5		69%				
321-60-8	2-Fluorobiphenyl		76%				
118-79-6	2,4,6-Tribromophenol		66%				
1718-51-0	Terphenyl-D14		87%				

lw 3/6/09

7

KATAHDIN ANALYTICAL SERVICES
Report of Analytical Results

Client: CH2MHill
Project: TO-009 Lejeune
PO No:
Sample Date: 12/19/08
Received Date: 12/20/08
Extraction Date: 12/29/08
Analysis Date: 14-JAN-2009 23:12
Report Date: 01/22/2009
Matrix: SOIL
% Solids: 87.4

Lab ID: SB7351-13
Client ID: MR08-IS139D-.5-1.5
SDG: TO9-22
Extracted by: CB
Extraction Method: SW846 3550
Analyst: JCG
Analysis Method: SW846 8270C
Lab Prep Batch: WG59445
Units: ug/Kgdrywt

CAS#	Compound	Flags	Results	DF	PQL	Adj.PQL	Adj.MDL	
100-52-7	Benzaldehyde	~~U~~ UJ	570	1.0	500	570	140	JCB
108-95-2	Phenol	U	570	1.0	500	570	180	
111-44-4	Bis(2-Chloroethyl)ether	U	380	1.0	330	380	93	
95-57-8	2-Chlorophenol	U	570	1.0	500	570	190	
95-48-7	2-Methylphenol	U	690	1.0	600	690	230	
108-60-1	2,2'-Oxybis(1-chloropropane)	U	380	1.0	330	380	100	
98-86-2	Acetophenone	U	690	1.0	600	690	200	
621-64-7	N-Nitroso-di-n-propylamine	U	380	1.0	330	380	95	
65794-96-9	3&4-Methylphenol	U	690	1.0	600	690	210	
67-72-1	Hexachloroethane	U	380	1.0	330	380	110	
98-95-3	Nitrobenzene	U	380	1.0	330	380	100	
78-59-1	Isophorone	U	380	1.0	330	380	86	
88-75-5	2-Nitrophenol	U	690	1.0	600	690	190	
105-67-9	2,4-Dimethylphenol	~~U~~ UJ	570	1.0	500	570	190	BSL
111-91-1	Bis(2-Chloroethoxy)methane	U	380	1.0	330	380	110	
120-83-2	2,4-Dichlorophenol	U	570	1.0	500	570	170	
106-47-8	4-Chloroaniline	U	570	1.0	500	570	140	
105-60-2	Caprolactam	U	570	1.0	500	570	160	
59-50-7	4-Chloro-3-Methylphenol	U	570	1.0	500	570	190	
88-06-2	2,4,6-Trichlorophenol	U	570	1.0	500	570	180	
95-95-4	2,4,5-Trichlorophenol	U	570	1.0	500	570	180	
91-58-7	2-Chloronaphthalene	U	380	1.0	330	380	100	
92-52-4	1,1'-Biphenyl	U	380	1.0	330	380	84	
88-74-4	2-Nitroaniline	U	570	1.0	500	570	86	
131-11-3	Dimethyl Phthalate	U	380	1.0	330	380	89	
606-20-2	2,6-Dinitrotoluene	U	380	1.0	330	380	90	
208-96-8	Acenaphthylene	U	380	1.0	330	380	80	
99-09-2	3-Nitroaniline	U	570	1.0	500	570	110	
83-32-9	Acenaphthene	U	380	1.0	330	380	74	
51-28-5	2,4-Dinitrophenol	U	1400	1.0	1200	1400	430	
132-64-9	Dibenzofuran	U	380	1.0	330	380	90	
100-02-7	4-Nitrophenol	U	1400	1.0	1200	1400	350	
121-14-2	2,4-Dinitrotoluene	U	380	1.0	330	380	97	
84-66-2	Diethylphthalate	U	380	1.0	330	380	92	
7005-72-3	4-Chlorophenyl-phenylether	U	380	1.0	330	380	89	
100-01-6	4-Nitroaniline	U	570	1.0	500	570	150	
534-52-1	4,6-Dinitro-2-Methylphenol	U	1400	1.0	1200	1400	380	
86-30-6	N-Nitrosodiphenylamine	U	760	1.0	660	760	250	
101-55-3	4-Bromophenyl-phenylether	U	380	1.0	330	380	97	
1912-24-9	Atrazine	U	380	1.0	330	380	100	
87-86-5	Pentachlorophenol	U	940	1.0	820	940	270	
120-12-7	Anthracene	U	380	1.0	330	380	96	
86-74-8	Carbazole	U	570	1.0	500	570	130	

RW 3/6/09

7

KATAHDIN ANALYTICAL SERVICES
Report of Analytical Results

Client: CH2MHill
Project: TO-009 Lejeune
PO No:
Sample Date: 12/19/08
Received Date: 12/20/08
Extraction Date: 12/29/08
Analysis Date: 14-JAN-2009 23:12
Report Date: 01/22/2009
Matrix: SOIL
% Solids: 87.4

Lab ID: SB7351-13
Client ID: MR08-IS139D-.5-1.5
SDG: TO9-22
Extracted by: CB
Extraction Method: SW846 3550
Analyst: JCG
Analysis Method: SW846 8270C
Lab Prep Batch: WG59445
Units: ug/Kgdrywt

CAS#	Compound	Flags	Results	DF	PQL	Adj.PQL	Adj.MDL
84-74-2	Di-n-butylphthalate	U	380	1.0	330	380	120
85-68-7	Butylbenzylphthalate	U	380	1.0	330	380	110
91-94-1	3,3'-Dichlorobenzidine	U	570	1.0	500	570	130
218-01-9	Chrysene	U	380	1.0	330	380	110
117-81-7	bis(2-Ethylhexyl)phthalate	J	110	1.0	330	380	110
117-84-0	Di-n-octylphthalate	U	380	1.0	330	380	240
367-12-4	2-Fluorophenol		71%				
13127-88-3	Phenol-D6		69%				
4165-60-0	Nitrobenzene-D5		68%				
321-60-8	2-Fluorobiphenyl		73%				
118-79-6	2,4,6-Tribromophenol		63%				
1718-51-0	Terphenyl-D14		83%				

JCW 3/6/09

B.

KATAHDIN ANALYTICAL SERVICES
Report of Analytical Results

Client: CH2MHill
Project: TO-009 Lejeune
PO No:
Sample Date: 12/19/08
Received Date: 12/23/08
Extraction Date: 12/29/08
Analysis Date: 14-JAN-2009 23:54
Report Date: 01/22/2009
Matrix: SOIL
% Solids: 92.1

Lab ID: SB7367-1
Client ID: MR08-SS138-08D
SDG: TO9-22
Extracted by: CB
Extraction Method: SW846 3550
Analyst: JCG
Analysis Method: SW846 8270C
Lab Prep Batch: WG59445
Units: ug/Kgdrywt

CAS#	Compound	Flags	Results	DF	PQL	Adj.PQL	Adj.MDL	
100-52-7	Benzaldehyde	~~U~~ UJ	540	1.0	500	540	130	ICB
108-95-2	Phenol	U	540	1.0	500	540	170	
111-44-4	Bis(2-Chloroethyl)ether	U	360	1.0	330	360	88	
95-57-8	2-Chlorophenol	U	540	1.0	500	540	180	
95-48-7	2-Methylphenol	U	650	1.0	600	650	220	
108-60-1	2,2'-Oxybis(1-chloropropane)	U	360	1.0	330	360	96	
98-86-2	Acetophenone	U	650	1.0	600	650	190	
621-64-7	N-Nitroso-di-n-propylamine	U	360	1.0	330	360	90	
65794-96-9	3&4-Methylphenol	U	650	1.0	600	650	200	
67-72-1	Hexachloroethane	U	360	1.0	330	360	100	
98-95-3	Nitrobenzene	U	360	1.0	330	360	99	
78-59-1	Isophorone	U	360	1.0	330	360	81	
88-75-5	2-Nitrophenol	U	650	1.0	600	650	180	
105-67-9	2,4-Dimethylphenol	~~U~~ UJ	540	1.0	500	540	180	BSL
111-91-1	Bis(2-Chloroethoxy)methane	U	360	1.0	330	360	100	
120-83-2	2,4-Dichlorophenol	U	540	1.0	500	540	160	
106-47-8	4-Chloroaniline	U	540	1.0	500	540	130	
105-60-2	Caprolactam	U	540	1.0	500	540	160	
59-50-7	4-Chloro-3-Methylphenol	U	540	1.0	500	540	180	
88-06-2	2,4,6-Trichlorophenol	U	540	1.0	500	540	170	
95-95-4	2,4,5-Trichlorophenol	U	540	1.0	500	540	170	
91-58-7	2-Chloronaphthalene	U	360	1.0	330	360	94	
92-52-4	1,1'-Biphenyl	U	360	1.0	330	360	79	
88-74-4	2-Nitroaniline	U	540	1.0	500	540	81	
131-11-3	Dimethyl Phthalate	U	360	1.0	330	360	85	
606-20-2	2,6-Dinitrotoluene	U	360	1.0	330	360	86	
208-96-8	Acenaphthylene	U	360	1.0	330	360	76	
99-09-2	3-Nitroaniline	U	540	1.0	500	540	100	
83-32-9	Acenaphthene	U	360	1.0	330	360	70	
51-28-5	2,4-Dinitrophenol	U	1300	1.0	1200	1300	410	
132-64-9	Dibenzofuran	U	360	1.0	330	360	86	
100-02-7	4-Nitrophenol	U	1300	1.0	1200	1300	340	
121-14-2	2,4-Dinitrotoluene	U	360	1.0	330	360	92	
84-66-2	Diethylphthalate	U	360	1.0	330	360	87	
7005-72-3	4-Chlorophenyl-phenylether	U	360	1.0	330	360	85	
100-01-6	4-Nitroaniline	U	540	1.0	500	540	140	
534-52-1	4,6-Dinitro-2-Methylphenol	U	1300	1.0	1200	1300	360	
86-30-6	N-Nitrosodiphenylamine	U	720	1.0	660	720	240	
101-55-3	4-Bromophenyl-phenylether	U	360	1.0	330	360	92	
1912-24-9	Atrazine	U	360	1.0	330	360	99	
87-86-5	Pentachlorophenol	U	890	1.0	820	890	260	
120-12-7	Anthracene	U	360	1.0	330	360	91	
86-74-8	Carbazole	U	540	1.0	500	540	120	

NW 3/6/09

KATAHDIN ANALYTICAL SERVICES
Report of Analytical Results

8

Client: CH2MHill
Project: TO-009 Lejeune
PO No:
Sample Date: 12/19/08
Received Date: 12/23/08
Extraction Date: 12/29/08
Analysis Date: 14-JAN-2009 23:54
Report Date: 01/22/2009
Matrix: SOIL
% Solids: 92.1

Lab ID: SB7367-1
Client ID: MR08-SS138-08D
SDG: TO9-22
Extracted by: CB
Extraction Method: SW846 3550
Analyst: JCG
Analysis Method: SW846 8270C
Lab Prep Batch: WG59445
Units: ug/Kgdrywt

CAS#	Compound	Flags	Results	DF	PQL	Adj.PQL	Adj.MDL
84-74-2	Di-n-butylphthalate	U	360	1.0	330	360	110
85-68-7	Butylbenzylphthalate	U	360	1.0	330	360	100
91-94-1	3,3'-Dichlorobenzidine	U	540	1.0	500	540	120
218-01-9	Chrysene	U	360	1.0	330	360	100
117-81-7	bis(2-Ethylhexyl)phthalate	J	120	1.0	330	360	110
117-84-0	Di-n-octylphthalate	U	360	1.0	330	360	230
367-12-4	2-Fluorophenol		64%				
13127-88-3	Phenol-D6		65%				
4165-60-0	Nitrobenzene-D5		69%				
321-60-8	2-Fluorobiphenyl		72%				
118-79-6	2,4,6-Tribromophenol		53%				
1718-51-0	Terphenyl-D14		85%				

LW 3/6/09

KATAHDIN ANALYTICAL SERVICES
Report of Analytical Results

Client: CH2MHill
Project: TO-009 Lejeune
PO No:
Sample Date: 12/19/08
Received Date: 12/23/08
Extraction Date: 12/29/08
Analysis Date: 15-JAN-2009 00:36
Report Date: 01/22/2009
Matrix: SOIL
% Solids: 89.2

Lab ID: SB7367-3
Client ID: MR08-IS138-2-3-08D
SDG: TO9-22
Extracted by: CB
Extraction Method: SW846 3550
Analyst: JCG
Analysis Method: SW846 8270C
Lab Prep Batch: WG59445
Units: ug/Kgdrywt

CAS#	Compound	Flags	Results	DF	PQL	Adj.PQL	Adj.MDL
100-52-7	Benzaldehyde	~~U~~ UJ	560	1.0	500	560	130 JCB
108-95-2	Phenol	U	560	1.0	500	560	170
111-44-4	Bis(2-Chloroethyl)ether	U	370	1.0	330	370	91
95-57-8	2-Chlorophenol	U	560	1.0	500	560	180
95-48-7	2-Methylphenol	U	670	1.0	600	670	220
108-60-1	2,2'-Oxybis(1-chloropropane)	U	370	1.0	330	370	100
98-86-2	Acetophenone	U	670	1.0	600	670	200
621-64-7	N-Nitroso-di-n-propylamine	U	370	1.0	330	370	93
65794-96-9	3&4-Methylphenol	U	670	1.0	600	670	210
67-72-1	Hexachloroethane	U	370	1.0	330	370	110
98-95-3	Nitrobenzene	U	370	1.0	330	370	100
78-59-1	Isophorone	U	370	1.0	330	370	84
88-75-5	2-Nitrophenol	U	670	1.0	600	670	190
105-67-9	2,4-Dimethylphenol	~~U~~ UJ	560	1.0	500	560	180 BSL
111-91-1	Bis(2-Chloroethoxy)methane	U	370	1.0	330	370	110
120-83-2	2,4-Dichlorophenol	U	560	1.0	500	560	170
106-47-8	4-Chloroaniline	U	560	1.0	500	560	130
105-60-2	Caprolactam	U	560	1.0	500	560	160
59-50-7	4-Chloro-3-Methylphenol	U	560	1.0	500	560	190
88-06-2	2,4,6-Trichlorophenol	U	560	1.0	500	560	170
95-95-4	2,4,5-Trichlorophenol	U	560	1.0	500	560	170
91-58-7	2-Chloronaphthalene	U	370	1.0	330	370	98
92-52-4	1,1'-Biphenyl	U	370	1.0	330	370	82
88-74-4	2-Nitroaniline	U	560	1.0	500	560	84
131-11-3	Dimethyl Phthalate	U	370	1.0	330	370	87
606-20-2	2,6-Dinitrotoluene	U	370	1.0	330	370	88
208-96-8	Acenaphthylene	U	370	1.0	330	370	78
99-09-2	3-Nitroaniline	U	560	1.0	500	560	100
83-32-9	Acenaphthene	U	370	1.0	330	370	73
51-28-5	2,4-Dinitrophenol	U	1300	1.0	1200	1300	420
132-64-9	Dibenzofuran	U	370	1.0	330	370	88
100-02-7	4-Nitrophenol	U	1300	1.0	1200	1300	350
121-14-2	2,4-Dinitrotoluene	U	370	1.0	330	370	95
84-66-2	Diethylphthalate	U	370	1.0	330	370	90
7005-72-3	4-Chlorophenyl-phenylether	U	370	1.0	330	370	87
100-01-6	4-Nitroaniline	U	560	1.0	500	560	150
534-52-1	4,6-Dinitro-2-Methylphenol	U	1300	1.0	1200	1300	380
86-30-6	N-Nitrosodiphenylamine	U	740	1.0	660	740	240
101-55-3	4-Bromophenyl-phenylether	U	370	1.0	330	370	95
1912-24-9	Atrazine	U	370	1.0	330	370	100
87-86-5	Pentachlorophenol	U	920	1.0	820	920	260
120-12-7	Anthracene	U	370	1.0	330	370	94
86-74-8	Carbazole	U	560	1.0	500	560	120

JCW 3/6/09

KATAHDIN ANALYTICAL SERVICES
Report of Analytical Results

Client: CH2MHill
Project: TO-009 Lejeune
PO No:
Sample Date: 12/19/08
Received Date: 12/23/08
Extraction Date: 12/29/08
Analysis Date: 15-JAN-2009 00:36
Report Date: 01/22/2009
Matrix: SOIL
% Solids: 89.2

Lab ID: SB7367-3
Client ID: MR08-IS138-2-3-08D
SDG: TO9-22
Extracted by: CB
Extraction Method: SW846 3550
Analyst: JCG
Analysis Method: SW846 8270C
Lab Prep Batch: WG59445
Units: ug/Kgdrywt

CAS#	Compound	Flags	Results	DF	PQL	Adj.PQL	Adj.MDL
84-74-2	Di-n-butylphthalate	U	370	1.0	330	370	110
85-68-7	Butylbenzylphthalate	U	370	1.0	330	370	100
91-94-1	3,3'-Dichlorobenzidine	U	560	1.0	500	560	130
218-01-9	Chrysene	U	370	1.0	330	370	110
117-81-7	bis(2-Ethylhexyl)phthalate	U	370	1.0	330	370	110
117-84-0	Di-n-octylphthalate	U	370	1.0	330	370	240
367-12-4	2-Fluorophenol		68%				
13127-88-3	Phenol-D6		69%				
4165-60-0	Nitrobenzene-D5		69%				
321-60-8	2-Fluorobiphenyl		74%				
118-79-6	2,4,6-Tribromophenol		54%				
1718-51-0	Terphenyl-D14		81%				

lw
3/6/09

10

KATAHDIN ANALYTICAL SERVICES
Report of Analytical Results

Client: CH2MHill
Project: TO-009 Lejeune
PO No:
Sample Date: 12/19/08
Received Date: 12/23/08
Extraction Date: 12/29/08
Analysis Date: 15-JAN-2009 01:18
Report Date: 01/22/2009
Matrix: SOIL
% Solids: 86.8

Lab ID: SB7367-5
Client ID: MR08-SS187-08D
SDG: TO9-22
Extracted by: CB
Extraction Method: SW846 3550
Analyst: JCG
Analysis Method: SW846 8270C
Lab Prep Batch: WG59445
Units: ug/Kgdrywt

CAS#	Compound	Flags	Results	DF	PQL	Adj.PQL	Adj.MDL	
100-52-7	Benzaldehyde	~~U~~ UJ	580	1.0	500	580	140	ICB
108-95-2	Phenol	U	580	1.0	500	580	180	
111-44-4	Bis(2-Chloroethyl)ether	U	380	1.0	330	380	93	
95-57-8	2-Chlorophenol	U	580	1.0	500	580	190	
95-48-7	2-Methylphenol	U	690	1.0	600	690	230	
108-60-1	2,2'-Oxybis(1-chloropropane)	U	380	1.0	330	380	100	
98-86-2	Acetophenone	U	690	1.0	600	690	200	
621-64-7	N-Nitroso-di-n-propylamine	U	380	1.0	330	380	96	
65794-96-9	3&4-Methylphenol	U	690	1.0	600	690	220	
67-72-1	Hexachloroethane	U	380	1.0	330	380	110	
98-95-3	Nitrobenzene	U	380	1.0	330	380	100	
78-59-1	Isophorone	U	380	1.0	330	380	86	
88-75-5	2-Nitrophenol	U	690	1.0	600	690	190	BSL
105-67-9	2,4-Dimethylphenol	~~U~~ UJ	580	1.0	500	580	190	
111-91-1	Bis(2-Chloroethoxy)methane	U	380	1.0	330	380	110	
120-83-2	2,4-Dichlorophenol	U	580	1.0	500	580	170	
106-47-8	4-Chloroaniline	U	580	1.0	500	580	140	
105-60-2	Caprolactam	U	580	1.0	500	580	160	
59-50-7	4-Chloro-3-Methylphenol	U	580	1.0	500	580	190	
88-06-2	2,4,6-Trichlorophenol	U	580	1.0	500	580	180	
95-95-4	2,4,5-Trichlorophenol	U	580	1.0	500	580	180	
91-58-7	2-Chloronaphthalene	U	380	1.0	330	380	100	
92-52-4	1,1'-Biphenyl	U	380	1.0	330	380	84	
88-74-4	2-Nitroaniline	U	580	1.0	500	580	86	
131-11-3	Dimethyl Phthalate	U	380	1.0	330	380	90	
606-20-2	2,6-Dinitrotoluene	U	380	1.0	330	380	91	
208-96-8	Acenaphthylene	U	380	1.0	330	380	81	
99-09-2	3-Nitroaniline	U	580	1.0	500	580	110	
83-32-9	Acenaphthene	U	380	1.0	330	380	75	
51-28-5	2,4-Dinitrophenol	U	1400	1.0	1200	1400	430	
132-64-9	Dibenzofuran	U	380	1.0	330	380	91	
100-02-7	4-Nitrophenol	U	1400	1.0	1200	1400	360	
121-14-2	2,4-Dinitrotoluene	U	380	1.0	330	380	98	
84-66-2	Diethylphthalate	U	380	1.0	330	380	92	
7005-72-3	4-Chlorophenyl-phenylether	U	380	1.0	330	380	90	
100-01-6	4-Nitroaniline	U	580	1.0	500	580	150	
534-52-1	4,6-Dinitro-2-Methylphenol	U	1400	1.0	1200	1400	390	
86-30-6	N-Nitrosodiphenylamine	U	760	1.0	660	760	250	
101-55-3	4-Bromophenyl-phenylether	U	380	1.0	330	380	98	
1912-24-9	Atrazine	U	380	1.0	330	380	100	
87-86-5	Pentachlorophenol	U	940	1.0	820	940	270	
120-12-7	Anthracene	U	380	1.0	330	380	97	
86-74-8	Carbazole	U	580	1.0	500	580	130	

RWJ 3/6/09

10

KATAHDIN ANALYTICAL SERVICES
Report of Analytical Results

Client: CH2MHill
Project: TO-009 Lejeune
PO No:
Sample Date: 12/19/08
Received Date: 12/23/08
Extraction Date: 12/29/08
Analysis Date: 15-JAN-2009 01:18
Report Date: 01/22/2009
Matrix: SOIL
% Solids: 86.8

Lab ID: SB7367-5
Client ID: MR08-SS187-08D
SDG: TO9-22
Extracted by: CB
Extraction Method: SW846 3550
Analyst: JCG
Analysis Method: SW846 8270C
Lab Prep Batch: WG59445
Units: ug/Kgdrywt

CAS#	Compound	Flags	Results	DF	PQL	Adj.PQL	Adj.MDL
84-74-2	Di-n-butylphthalate	U	380	1.0	330	380	120
85-68-7	Butylbenzylphthalate	U	380	1.0	330	380	110
91-94-1	3,3'-Dichlorobenzidine	U	580	1.0	500	580	130
218-01-9	Chrysene	J	140	1.0	330	380	110
117-81-7	bis(2-Ethylhexyl)phthalate	J	130	1.0	330	380	110
117-84-0	Di-n-octylphthalate	U	380	1.0	330	380	240
367-12-4	2-Fluorophenol		74%				
13127-88-3	Phenol-D6		72%				
4165-60-0	Nitrobenzene-D5		73%				
321-60-8	2-Fluorobiphenyl		80%				
118-79-6	2,4,6-Tribromophenol		77%				
1718-51-0	Terphenyl-D14		89%				

Qw 3/6/09

11

KATAHDIN ANALYTICAL SERVICES
Report of Analytical Results

Client: CH2MHill
Project: TO-009 Lejeune
PO No:
Sample Date: 12/19/08
Received Date: 12/23/08
Extraction Date: 12/29/08
Analysis Date: 15-JAN-2009 02:00
Report Date: 01/22/2009
Matrix: SOIL
% Solids: 91.4

Lab ID: SB7367-7
Client ID: MR08-IS187-4-5-08D
SDG: TO9-22
Extracted by: CB
Extraction Method: SW846 3550
Analyst: JCG
Analysis Method: SW846 8270C
Lab Prep Batch: WG59445
Units: ug/Kgdrywt

CAS#	Compound	Flags	Results	DF	PQL	Adj.PQL	Adj.MDL	
100-52-7	Benzaldehyde	~~U~~ UJ	550	1.0	500	550	130	JCB
108-95-2	Phenol	U	550	1.0	500	550	170	
111-44-4	Bis(2-Chloroethyl)ether	U	360	1.0	330	360	89	
95-57-8	2-Chlorophenol	U	550	1.0	500	550	180	
95-48-7	2-Methylphenol	U	660	1.0	600	660	220	
108-60-1	2,2'-Oxybis(1-chloropropane)	U	360	1.0	330	360	97	
98-86-2	Acetophenone	U	660	1.0	600	660	190	
621-64-7	N-Nitroso-di-n-propylamine	U	360	1.0	330	360	91	
65794-96-9	3&4-Methylphenol	U	660	1.0	600	660	200	
67-72-1	Hexachloroethane	U	360	1.0	330	360	100	
98-95-3	Nitrobenzene	U	360	1.0	330	360	100	
78-59-1	Isophorone	U	360	1.0	330	360	82	
88-75-5	2-Nitrophenol	U	660	1.0	600	660	180	
105-67-9	2,4-Dimethylphenol	~~U~~ UJ	550	1.0	500	550	180	BSL
111-91-1	Bis(2-Chloroethoxy)methane	U	360	1.0	330	360	100	
120-83-2	2,4-Dichlorophenol	U	550	1.0	500	550	160	
106-47-8	4-Chloroaniline	U	550	1.0	500	550	130	
105-60-2	Caprolactam	U	550	1.0	500	550	160	
59-50-7	4-Chloro-3-Methylphenol	U	550	1.0	500	550	180	
88-06-2	2,4,6-Trichlorophenol	U	550	1.0	500	550	170	
95-95-4	2,4,5-Trichlorophenol	U	550	1.0	500	550	170	
91-58-7	2-Chloronaphthalene	U	360	1.0	330	360	95	
92-52-4	1,1'-Biphenyl	U	360	1.0	330	360	80	
88-74-4	2-Nitroaniline	U	550	1.0	500	550	82	
131-11-3	Dimethyl Phthalate	U	360	1.0	330	360	85	
606-20-2	2,6-Dinitrotoluene	U	360	1.0	330	360	86	
208-96-8	Acenaphthylene	U	360	1.0	330	360	76	
99-09-2	3-Nitroaniline	U	550	1.0	500	550	100	
83-32-9	Acenaphthene	U	360	1.0	330	360	71	
51-28-5	2,4-Dinitrophenol	U	1300	1.0	1200	1300	410	
132-64-9	Dibenzofuran	U	360	1.0	330	360	86	
100-02-7	4-Nitrophenol	U	1300	1.0	1200	1300	340	
121-14-2	2,4-Dinitrotoluene	U	360	1.0	330	360	93	
84-66-2	Diethylphthalate	U	360	1.0	330	360	88	
7005-72-3	4-Chlorophenyl-phenylether	U	360	1.0	330	360	85	
100-01-6	4-Nitroaniline	U	550	1.0	500	550	150	
534-52-1	4,6-Dinitro-2-Methylphenol	U	1300	1.0	1200	1300	370	
86-30-6	N-Nitrosodiphenylamine	U	720	1.0	660	720	240	
101-55-3	4-Bromophenyl-phenylether	U	360	1.0	330	360	93	
1912-24-9	Atrazine	U	360	1.0	330	360	100	
87-86-5	Pentachlorophenol	U	900	1.0	820	900	260	
120-12-7	Anthracene	U	360	1.0	330	360	92	
86-74-8	Carbazole	U	550	1.0	500	550	120	

LW 3/6/09

11

KATAHDIN ANALYTICAL SERVICES
Report of Analytical Results

Client: CH2MHill
Project: TO-009 Lejeune
PO No:
Sample Date: 12/19/08
Received Date: 12/23/08
Extraction Date: 12/29/08
Analysis Date: 15-JAN-2009 02:00
Report Date: 01/22/2009
Matrix: SOIL
% Solids: 91.4

Lab ID: SB7367-7
Client ID: MR08-IS187-4-5-08D
SDG: TO9-22
Extracted by: CB
Extraction Method: SW846 3550
Analyst: JCG
Analysis Method: SW846 8270C
Lab Prep Batch: WG59445
Units: ug/Kgdrywt

CAS#	Compound	Flags	Results	DF	PQL	Adj.PQL	Adj.MDL
84-74-2	Di-n-butylphthalate	U	360	1.0	330	360	110
85-68-7	Butylbenzylphthalate	U	360	1.0	330	360	100
91-94-1	3,3'-Dichlorobenzidine	U	550	1.0	500	550	120
218-01-9	Chrysene	U	360	1.0	330	360	100
117-81-7	bis(2-Ethylhexyl)phthalate		830	1.0	330	360	110
117-84-0	Di-n-octylphthalate	U	360	1.0	330	360	230
367-12-4	2-Fluorophenol		46%				
13127-88-3	Phenol-D6		61%				
4165-60-0	Nitrobenzene-D5		70%				
321-60-8	2-Fluorobiphenyl		76%				
118-79-6	2,4,6-Tribromophenol		* 24%				
1718-51-0	Terphenyl-D14		87%				

lw 3/6/09

12

KATAHDIN ANALYTICAL SERVICES
Report of Analytical Results

Client: CH2MHill
Project: TO-009 Lejeune
PO No:
Sample Date: 12/19/08
Received Date: 12/23/08
Extraction Date: 12/29/08
Analysis Date: 15-JAN-2009 02:42
Report Date: 01/22/2009
Matrix: SOIL
% Solids: 93.8

Lab ID: SB7367-9
Client ID: MR08-SS188-08D
SDG: TO9-22
Extracted by: CB
Extraction Method: SW846 3550
Analyst: JCG
Analysis Method: SW846 8270C
Lab Prep Batch: WG59445
Units: ug/Kgdrywt

CAS#	Compound	Flags	Results	DF	PQL	Adj.PQL	Adj.MDL	
100-52-7	Benzaldehyde	~~U~~ UJ	530	1.0	500	530	130	JCB
108-95-2	Phenol	U	530	1.0	500	530	170	
111-44-4	Bis(2-Chloroethyl)ether	U	350	1.0	330	350	86	
95-57-8	2-Chlorophenol	U	530	1.0	500	530	170	
95-48-7	2-Methylphenol	U	640	1.0	600	640	210	
108-60-1	2,2'-Oxybis(1-chloropropane)	U	350	1.0	330	350	95	
98-86-2	Acetophenone	U	640	1.0	600	640	190	
621-64-7	N-Nitroso-di-n-propylamine	U	350	1.0	330	350	88	
65794-96-9	3&4-Methylphenol	U	640	1.0	600	640	200	
67-72-1	Hexachloroethane	U	350	1.0	330	350	100	
98-95-3	Nitrobenzene	U	350	1.0	330	350	97	
78-59-1	Isophorone	U	350	1.0	330	350	80	
88-75-5	2-Nitrophenol	U	640	1.0	600	640	180	
105-67-9	2,4-Dimethylphenol	~~U~~ UJ	530	1.0	500	530	180	BSL
111-91-1	Bis(2-Chloroethoxy)methane	U	350	1.0	330	350	100	
120-83-2	2,4-Dichlorophenol	U	530	1.0	500	530	160	
106-47-8	4-Chloroaniline	U	530	1.0	500	530	130	
105-60-2	Caprolactam	U	530	1.0	500	530	150	
59-50-7	4-Chloro-3-Methylphenol	U	530	1.0	500	530	180	
88-06-2	2,4,6-Trichlorophenol	U	530	1.0	500	530	160	
95-95-4	2,4,5-Trichlorophenol	U	530	1.0	500	530	160	
91-58-7	2-Chloronaphthalene	U	350	1.0	330	350	93	
92-52-4	1,1'-Biphenyl	U	350	1.0	330	350	78	
88-74-4	2-Nitroaniline	U	530	1.0	500	530	80	
131-11-3	Dimethyl Phthalate	U	350	1.0	330	350	83	
606-20-2	2,6-Dinitrotoluene	U	350	1.0	330	350	84	
208-96-8	Acenaphthylene	U	350	1.0	330	350	75	
99-09-2	3-Nitroaniline	U	530	1.0	500	530	100	
83-32-9	Acenaphthene	U	350	1.0	330	350	69	
51-28-5	2,4-Dinitrophenol	U	1300	1.0	1200	1300	400	
132-64-9	Dibenzofuran	U	350	1.0	330	350	84	
100-02-7	4-Nitrophenol	U	1300	1.0	1200	1300	330	
121-14-2	2,4-Dinitrotoluene	U	350	1.0	330	350	91	
84-66-2	Diethylphthalate	U	350	1.0	330	350	85	
7005-72-3	4-Chlorophenyl-phenylether	U	350	1.0	330	350	83	
100-01-6	4-Nitroaniline	U	530	1.0	500	530	140	
534-52-1	4,6-Dinitro-2-Methylphenol	U	1300	1.0	1200	1300	360	
86-30-6	N-Nitrosodiphenylamine	U	700	1.0	660	700	230	
101-55-3	4-Bromophenyl-phenylether	U	350	1.0	330	350	91	
1912-24-9	Atrazine	U	350	1.0	330	350	97	
87-86-5	Pentachlorophenol	U	870	1.0	820	870	250	
120-12-7	Anthracene	U	350	1.0	330	350	90	
86-74-8	Carbazole	U	530	1.0	500	530	120	

RW 3/6/09

12

KATAHDIN ANALYTICAL SERVICES
Report of Analytical Results

Client: CH2MHill
Project: TO-009 Lejeune
PO No:
Sample Date: 12/19/08
Received Date: 12/23/08
Extraction Date: 12/29/08
Analysis Date: 15-JAN-2009 02:42
Report Date: 01/22/2009
Matrix: SOIL
% Solids: 93.8

Lab ID: SB7367-9
Client ID: MR08-SS188-08D
SDG: TO9-22
Extracted by: CB
Extraction Method: SW846 3550
Analyst: JCG
Analysis Method: SW846 8270C
Lab Prep Batch: WG59445
Units: ug/Kgdrywt

CAS#	Compound	Flags	Results	DF	PQL	Adj.PQL	Adj.MDL
84-74-2	Di-n-butylphthalate	U	350	1.0	330	350	110
85-68-7	Butylbenzylphthalate	U	350	1.0	330	350	99
91-94-1	3,3'-Dichlorobenzidine	U	530	1.0	500	530	120
218-01-9	Chrysene	U	350	1.0	330	350	100
117-81-7	bis(2-Ethylhexyl)phthalate	J	330	1.0	330	350	100
117-84-0	Di-n-octylphthalate	U	350	1.0	330	350	220
367-12-4	2-Fluorophenol		55%				
13127-88-3	Phenol-D6		60%				
4165-60-0	Nitrobenzene-D5		65%				
321-60-8	2-Fluorobiphenyl		72%				
118-79-6	2,4,6-Tribromophenol		* 33%				
1718-51-0	Terphenyl-D14		87%				

KW 3/6/09

13

KATAHDIN ANALYTICAL SERVICES
Report of Analytical Results

Client: CH2MHill
Project: TO-009 Lejeune
PO No:
Sample Date: 12/19/08
Received Date: 12/23/08
Extraction Date: 12/29/08
Analysis Date: 15-JAN-2009 12:42
Report Date: 01/22/2009
Matrix: SOIL
% Solids: 93.7

Lab ID: SB7367-11
Client ID: MR08-IS188-1-2-08D
SDG: TO9-22
Extracted by: CB
Extraction Method: SW846 3550
Analyst: JLP
Analysis Method: SW846 8270C
Lab Prep Batch: WG59460
Units: ug/Kgdrywt

CAS#	Compound	Flags		Results	DF	PQL	Adj.PQL	Adj.MDL	
100-52-7	Benzaldehyde	U	UJ	530	1.0	500	530	130	SSL
108-95-2	Phenol	U		530	1.0	500	530	170	
111-44-4	Bis(2-Chloroethyl)ether	U		350	1.0	330	350	86	
95-57-8	2-Chlorophenol	U		530	1.0	500	530	180	
95-48-7	2-Methylphenol	U		640	1.0	600	640	210	
108-60-1	2,2'-Oxybis(1-chloropropane)	U		350	1.0	330	350	95	
98-86-2	Acetophenone	U		640	1.0	600	640	190	
621-64-7	N-Nitroso-di-n-propylamine	U		350	1.0	330	350	89	
65794-96-9	3&4-Methylphenol	U		640	1.0	600	640	200	
67-72-1	Hexachloroethane	U		350	1.0	330	350	100	
98-95-3	Nitrobenzene	U		350	1.0	330	350	97	
78-59-1	Isophorone	U		350	1.0	330	350	80	
88-75-5	2-Nitrophenol	U		640	1.0	600	640	180	
105-67-9	2,4-Dimethylphenol	U		530	1.0	500	530	180	
111-91-1	Bis(2-Chloroethoxy)methane	U		350	1.0	330	350	100	
120-83-2	2,4-Dichlorophenol	U		530	1.0	500	530	160	
106-47-8	4-Chloroaniline	U		530	1.0	500	530	130	
105-60-2	Caprolactam	U		530	1.0	500	530	150	
59-50-7	4-Chloro-3-Methylphenol	U		530	1.0	500	530	180	
88-06-2	2,4,6-Trichlorophenol	U		530	1.0	500	530	160	
95-95-4	2,4,5-Trichlorophenol	U		530	1.0	500	530	160	
91-58-7	2-Chloronaphthalene	U		350	1.0	330	350	93	
92-52-4	1,1'-Biphenyl	U		350	1.0	330	350	78	
88-74-4	2-Nitroaniline	U		530	1.0	500	530	80	
131-11-3	Dimethyl Phthalate	U		350	1.0	330	350	83	
606-20-2	2,6-Dinitrotoluene	U		350	1.0	330	350	84	
208-96-8	Acenaphthylene	U		350	1.0	330	350	75	
99-09-2	3-Nitroaniline	U		530	1.0	500	530	100	
83-32-9	Acenaphthene	U		350	1.0	330	350	69	
51-28-5	2,4-Dinitrophenol	U		1300	1.0	1200	1300	400	
132-64-9	Dibenzofuran	U		350	1.0	330	350	84	
100-02-7	4-Nitrophenol	U		1300	1.0	1200	1300	330	
121-14-2	2,4-Dinitrotoluene	U		350	1.0	330	350	91	
84-66-2	Diethylphthalate	U		350	1.0	330	350	85	
7005-72-3	4-Chlorophenyl-phenylether	U		350	1.0	330	350	83	
100-01-6	4-Nitroaniline	U		530	1.0	500	530	140	
534-52-1	4,6-Dinitro-2-Methylphenol	U		1300	1.0	1200	1300	360	
86-30-6	N-Nitrosodiphenylamine	U		700	1.0	660	700	230	
101-55-3	4-Bromophenyl-phenylether	U		350	1.0	330	350	91	
1912-24-9	Atrazine	U		350	1.0	330	350	97	
87-86-5	Pentachlorophenol	U		880	1.0	820	880	250	
120-12-7	Anthracene	U		350	1.0	330	350	90	
86-74-8	Carbazole	U		530	1.0	500	530	120	

LW 3/6/09

KATAHDIN ANALYTICAL SERVICES
Report of Analytical Results

Client: CH2MHill
Project: TO-009 Lejeune
PO No:
Sample Date: 12/19/08
Received Date: 12/23/08
Extraction Date: 12/29/08
Analysis Date: 15-JAN-2009 12:42
Report Date: 01/22/2009
Matrix: SOIL
% Solids: 93.7

Lab ID: SB7367-11
Client ID: MR08-IS188-1-2-08D
SDG: TO9-22
Extracted by: CB
Extraction Method: SW846 3550
Analyst: JLP
Analysis Method: SW846 8270C
Lab Prep Batch: WG59460
Units: ug/Kgdrywt

CAS#	Compound	Flags	Results	DF	PQL	Adj.PQL	Adj.MDL
84-74-2	Di-n-butylphthalate	U UJ	350	1.0	330	350	110 SSL
85-68-7	Butylbenzylphthalate	U	350	1.0	330	350	99
91-94-1	3,3'-Dichlorobenzidine	U	530	1.0	500	530	120
218-01-9	Chrysene	U	350	1.0	330	350	100
117-81-7	bis(2-Ethylhexyl)phthalate	U	350	1.0	330	350	100
117-84-0	Di-n-octylphthalate	U	350	1.0	330	350	220
367-12-4	2-Fluorophenol		* 26%				
13127-88-3	Phenol-D6		* 24%				
4165-60-0	Nitrobenzene-D5		* 24%				
321-60-8	2-Fluorobiphenyl		* 28%				
118-79-6	2,4,6-Tribromophenol		* 23%				
1718-51-0	Terphenyl-D14		33%				

RW 3/6/09

13RE

KATAHDIN ANALYTICAL SERVICES
Report of Analytical Results

Client: CH2MHill
Project: TO-009 Lejeune
PO No:
Sample Date: 12/19/08
Received Date: 12/23/08
Extraction Date: 01/14/09
Analysis Date: 16-JAN-2009 11:16
Report Date: 01/22/2009
Matrix: SOIL
% Solids: 93.7

Lab ID: SB7367-11RE
Client ID: MR08-IS188-1-2-08D
SDG: TO9-22
Extracted by: CB
Extraction Method: SW846 3550
Analyst: JLP
Analysis Method: SW846 8270C
Lab Prep Batch: WG59785
Units: ug/Kgdrywt

use original

R RE

CAS#	Compound	Flags		Results	DF	PQL	Adj.PQL	Adj.MDL	
100-52-7	Benzaldehyde	U	UJ	530	1.0	500	530	130	HT
108-95-2	Phenol	U		530	1.0	500	530	170	
111-44-4	Bis(2-Chloroethyl)ether	U		350	1.0	330	350	86	
95-57-8	2-Chlorophenol	U		530	1.0	500	530	180	
95-48-7	2-Methylphenol	U		640	1.0	600	640	210	
108-60-1	2,2'-Oxybis(1-chloropropane)	U		350	1.0	330	350	95	
98-86-2	Acetophenone	U		640	1.0	600	640	190	
621-64-7	N-Nitroso-di-n-propylamine	U		350	1.0	330	350	89	
65794-96-9	3&4-Methylphenol	U		640	1.0	600	640	200	
67-72-1	Hexachloroethane	U		350	1.0	330	350	100	
98-95-3	Nitrobenzene	U		350	1.0	330	350	97	
78-59-1	Isophorone	U		350	1.0	330	350	80	
88-75-5	2-Nitrophenol	U		640	1.0	600	640	180	
105-67-9	2,4-Dimethylphenol	U		530	1.0	500	530	180	
111-91-1	Bis(2-Chloroethoxy)methane	U		350	1.0	330	350	100	
120-83-2	2,4-Dichlorophenol	U		530	1.0	500	530	160	
106-47-8	4-Chloroaniline	U		530	1.0	500	530	130	
105-60-2	Caprolactam	U		530	1.0	500	530	150	
59-50-7	4-Chloro-3-Methylphenol	U		530	1.0	500	530	180	
88-06-2	2,4,6-Trichlorophenol	U		530	1.0	500	530	160	
95-95-4	2,4,5-Trichlorophenol	U		530	1.0	500	530	160	
91-58-7	2-Chloronaphthalene	U		350	1.0	330	350	93	
92-52-4	1,1'-Biphenyl	U		350	1.0	330	350	78	
88-74-4	2-Nitroaniline	U		530	1.0	500	530	80	
131-11-3	Dimethyl Phthalate	U		350	1.0	330	350	83	
606-20-2	2,6-Dinitrotoluene	U		350	1.0	330	350	84	
208-96-8	Acenaphthylene	U		350	1.0	330	350	75	
99-09-2	3-Nitroaniline	U		530	1.0	500	530	100	
83-32-9	Acenaphthene	U		350	1.0	330	350	69	
51-28-5	2,4-Dinitrophenol	U		1300	1.0	1200	1300	400	
132-64-9	Dibenzofuran	U		350	1.0	330	350	84	
100-02-7	4-Nitrophenol	U		1300	1.0	1200	1300	330	
121-14-2	2,4-Dinitrotoluene	U		350	1.0	330	350	91	
84-66-2	Diethylphthalate	U		350	1.0	330	350	85	
7005-72-3	4-Chlorophenyl-phenylether	U		350	1.0	330	350	83	
100-01-6	4-Nitroaniline	U		530	1.0	500	530	140	
534-52-1	4,6-Dinitro-2-Methylphenol	U		1300	1.0	1200	1300	360	
86-30-6	N-Nitrosodiphenylamine	U		700	1.0	660	700	230	
101-55-3	4-Bromophenyl-phenylether	U		350	1.0	330	350	91	
1912-24-9	Atrazine	U		350	1.0	330	350	97	
87-86-5	Pentachlorophenol	U		880	1.0	820	880	250	
120-12-7	Anthracene	U		350	1.0	330	350	90	
86-74-8	Carbazole	U		530	1.0	500	530	120	

MW 3/6/09

13RE

KATAHDIN ANALYTICAL SERVICES
Report of Analytical Results

Client: CH2MHill
Project: TO-009 Lejeune
PO No:
Sample Date: 12/19/08
Received Date: 12/23/08
Extraction Date: 01/14/09
Analysis Date: 16-JAN-2009 11:16
Report Date: 01/22/2009
Matrix: SOIL
% Solids: 93.7

Lab ID: SB7367-11RE
Client ID: MR08-IS188-1-2-08D
SDG: TO9-22
Extracted by: CB
Extraction Method: SW846 3550
Analyst: JLP
Analysis Method: SW846 8270C
Lab Prep Batch: WG59785
Units: ug/Kgdrywt

Use original

CAS#	Compound	Flags	Results	DF	PQL	Adj.PQL	Adj.MDL
84-74-2	Di-n-butylphthalate	U UJ	350	1.0	330	350	110 HT
85-68-7	Butylbenzylphthalate	U	350	1.0	330	350	99
91-94-1	3,3'-Dichlorobenzidine	U	530	1.0	500	530	120
218-01-9	Chrysene	U	350	1.0	330	350	100
117-81-7	bis(2-Ethylhexyl)phthalate	U	350	1.0	330	350	100
117-84-0	Di-n-octylphthalate	U	350	1.0	330	350	220
367-12-4	2-Fluorophenol		59%				
13127-88-3	Phenol-D6		52%				
4165-60-0	Nitrobenzene-D5		59%				
321-60-8	2-Fluorobiphenyl		70%				
118-79-6	2,4,6-Tribromophenol		49%				
1718-51-0	Terphenyl-D14		84%				

R RE

LWJ 3/6/09

KATAHDIN ANALYTICAL SERVICES
Report of Analytical Results

Client: CH2MHill
Project: TO-009 Lejeune
PO No:
Sample Date: 12/19/08
Received Date: 12/23/08
Extraction Date: 12/29/08
Analysis Date: 15-JAN-2009 13:24
Report Date: 01/22/2009
Matrix: SOIL
% Solids: 90.4

Lab ID: SB7367-13
Client ID: MR08-SS175-08D
SDG: TO9-22
Extracted by: CB
Extraction Method: SW846 3550
Analyst: JLP
Analysis Method: SW846 8270C
Lab Prep Batch: WG59460
Units: ug/Kgdrywt

CAS#	Compound	Flags	Results	DF	PQL	Adj.PQL	Adj.MDL	
100-52-7	Benzaldehyde	~~U~~ UJ	550	1.0	500	550	130	JCB
108-95-2	Phenol	U	550	1.0	500	550	170	
111-44-4	Bis(2-Chloroethyl)ether	~~U~~ UJ	360	1.0	330	360	90	BSL
95-57-8	2-Chlorophenol	U	550	1.0	500	550	180	
95-48-7	2-Methylphenol	U	660	1.0	600	660	220	
108-60-1	2,2'-Oxybis(1-chloropropane)	U	360	1.0	330	360	98	
98-86-2	Acetophenone	~~U~~ UJ	660	1.0	600	660	200	BSL
621-64-7	N-Nitroso-di-n-propylamine	U	360	1.0	330	360	92	
65794-96-9	3&4-Methylphenol	U	660	1.0	600	660	210	
67-72-1	Hexachloroethane	~~U~~ UJ	360	1.0	330	360	110	BSL
98-95-3	Nitrobenzene	U	360	1.0	330	360	100	
78-59-1	Isophorone	U	360	1.0	330	360	83	
88-75-5	2-Nitrophenol	U	660	1.0	600	660	180	
105-67-9	2,4-Dimethylphenol	~~U~~ UJ	550	1.0	500	550	180	BSL
111-91-1	Bis(2-Chloroethoxy)methane	U	360	1.0	330	360	110	
120-83-2	2,4-Dichlorophenol	U	550	1.0	500	550	160	
106-47-8	4-Chloroaniline	U	550	1.0	500	550	130	
105-60-2	Caprolactam	U	550	1.0	500	550	160	
59-50-7	4-Chloro-3-Methylphenol	U	550	1.0	500	550	180	
88-06-2	2,4,6-Trichlorophenol	U	550	1.0	500	550	170	
95-95-4	2,4,5-Trichlorophenol	U	550	1.0	500	550	170	
91-58-7	2-Chloronaphthalene	U	360	1.0	330	360	96	
92-52-4	1,1'-Biphenyl	U	360	1.0	330	360	81	
88-74-4	2-Nitroaniline	U	550	1.0	500	550	83	
131-11-3	Dimethyl Phthalate	U	360	1.0	330	360	86	
606-20-2	2,6-Dinitrotoluene	U	360	1.0	330	360	87	
208-96-8	Acenaphthylene	U	360	1.0	330	360	77	
99-09-2	3-Nitroaniline	U	550	1.0	500	550	100	
83-32-9	Acenaphthene	U	360	1.0	330	360	72	
51-28-5	2,4-Dinitrophenol	U	1300	1.0	1200	1300	420	
132-64-9	Dibenzofuran	U	360	1.0	330	360	87	
100-02-7	4-Nitrophenol	U	1300	1.0	1200	1300	340	
121-14-2	2,4-Dinitrotoluene	U	360	1.0	330	360	94	
84-66-2	Diethylphthalate	U	360	1.0	330	360	88	
7005-72-3	4-Chlorophenyl-phenylether	U	360	1.0	330	360	86	
100-01-6	4-Nitroaniline	U	550	1.0	500	550	150	
534-52-1	4,6-Dinitro-2-Methylphenol	U	1300	1.0	1200	1300	370	
86-30-6	N-Nitrosodiphenylamine	U	730	1.0	660	730	240	
101-55-3	4-Bromophenyl-phenylether	U	360	1.0	330	360	94	
1912-24-9	Atrazine	U	360	1.0	330	360	100	
87-86-5	Pentachlorophenol	U	910	1.0	820	910	260	
120-12-7	Anthracene	U	360	1.0	330	360	93	
86-74-8	Carbazole	U	550	1.0	500	550	120	

RW 3/6/09

14

KATAHDIN ANALYTICAL SERVICES
Report of Analytical Results

Client: CH2MHill
Project: TO-009 Lejeune
PO No:
Sample Date: 12/19/08
Received Date: 12/23/08
Extraction Date: 12/29/08
Analysis Date: 15-JAN-2009 13:24
Report Date: 01/22/2009
Matrix: SOIL
% Solids: 90.4

Lab ID: SB7367-13
Client ID: MR08-SS175-08D
SDG: TO9-22
Extracted by: CB
Extraction Method: SW846 3550
Analyst: JLP
Analysis Method: SW846 8270C
Lab Prep Batch: WG59460
Units: ug/Kgdrywt

CAS#	Compound	Flags	Results	DF	PQL	Adj.PQL	Adj.MDL
84-74-2	Di-n-butylphthalate	U	360	1.0	330	360	110
85-68-7	Butylbenzylphthalate	U	360	1.0	330	360	100
91-94-1	3,3'-Dichlorobenzidine	U	550	1.0	500	550	130
218-01-9	Chrysene	U	360	1.0	330	360	100
117-81-7	bis(2-Ethylhexyl)phthalate	J	120	1.0	330	360	110
117-84-0	Di-n-octylphthalate	U	360	1.0	330	360	230
367-12-4	2-Fluorophenol		60%				
13127-88-3	Phenol-D6		60%				
4165-60-0	Nitrobenzene-D5		61%				
321-60-8	2-Fluorobiphenyl		64%				
118-79-6	2,4,6-Tribromophenol		52%				
1718-51-0	Terphenyl-D14		71%				

LW 3/6/09

14RE

KATAHDIN ANALYTICAL SERVICES
Report of Analytical Results

Client: CH2MHill
Project: TO-009 Lejeune
PO No:
Sample Date: 12/19/08
Received Date: 12/23/08
Extraction Date: 01/20/09
Analysis Date: 21-JAN-2009 22:13
Report Date: 01/22/2009
Matrix: SOIL
% Solids: 90.4

Lab ID: SB7367-13RE
Client ID: MR08-SS175-08D
SDG: TO9-22
Extracted by: AC
Extraction Method: SW846 3550
Analyst: JCG
Analysis Method: SW846 8270C
Lab Prep Batch: WG59975
Units: ug/Kgdrywt

use original

CAS#	Compound	Flags	Results	DF	PQL	Adj.PQL	Adj.MDL
100-52-7	Benzaldehyde	~~U~~ R	550	1.0	500	550	130 HT
108-95-2	Phenol	U	550	1.0	500	550	170
111-44-4	Bis(2-Chloroethyl)ether	U	360	1.0	330	360	90
95-57-8	2-Chlorophenol	U	550	1.0	500	550	180
95-48-7	2-Methylphenol	U	660	1.0	600	660	220
108-60-1	2,2'-Oxybis(1-chloropropane)	U	360	1.0	330	360	98
98-86-2	Acetophenone	U	600	1.0	600	660	200
621-64-7	N-Nitroso-di-n-propylamine	U	360	1.0	330	360	92
65794-96-9	3&4-Methylphenol	U	660	1.0	600	660	210
67-72-1	Hexachloroethane	U	360	1.0	330	360	110
98-95-3	Nitrobenzene	U	360	1.0	330	360	100
78-59-1	Isophorone	U	360	1.0	330	360	83
88-75-5	2-Nitrophenol	U	660	1.0	600	660	180
105-67-9	2,4-Dimethylphenol	U	550	1.0	500	550	180
111-91-1	Bis(2-Chloroethoxy)methane	U	360	1.0	330	360	110
120-83-2	2,4-Dichlorophenol	U	550	1.0	500	550	160
106-47-8	4-Chloroaniline	U	550	1.0	500	550	130
105-60-2	Caprolactam	U	550	1.0	500	550	160
59-50-7	4-Chloro-3-Methylphenol	U	550	1.0	500	550	180
88-06-2	2,4,6-Trichlorophenol	U	550	1.0	500	550	170
95-95-4	2,4,5-Trichlorophenol	U	550	1.0	500	550	170
91-58-7	2-Chloronaphthalene	U	360	1.0	330	360	96
92-52-4	1,1'-Biphenyl	U	360	1.0	330	360	81
88-74-4	2-Nitroaniline	U	550	1.0	500	550	83
131-11-3	Dimethyl Phthalate	U	360	1.0	330	360	86
606-20-2	2,6-Dinitrotoluene	U	360	1.0	330	360	87
208-96-8	Acenaphthylene	U	360	1.0	330	360	77
99-09-2	3-Nitroaniline	U	550	1.0	500	550	100
83-32-9	Acenaphthene	U	360	1.0	330	360	72
51-28-5	2,4-Dinitrophenol	U	1300	1.0	1200	1300	420
132-64-9	Dibenzofuran	U	360	1.0	330	360	87
100-02-7	4-Nitrophenol	U	1300	1.0	1200	1300	340
121-14-2	2,4-Dinitrotoluene	U	360	1.0	330	360	94
84-66-2	Diethylphthalate	U	360	1.0	330	360	88
7005-72-3	4-Chlorophenyl-phenylether	U	360	1.0	330	360	86
100-01-6	4-Nitroaniline	U	550	1.0	500	550	150
534-52-1	4,6-Dinitro-2-Methylphenol	U	1300	1.0	1200	1300	370
86-30-6	N-Nitrosodiphenylamine	U	730	1.0	660	730	240
101-55-3	4-Bromophenyl-phenylether	U	360	1.0	330	360	94
1912-24-9	Atrazine	U	360	1.0	330	360	100
87-86-5	Pentachlorophenol	U	910	1.0	820	910	260
120-12-7	Anthracene	U	360	1.0	330	360	93
86-74-8	Carbazole	U	550	1.0	500	550	120

R RE

lw 3/6/09

KATAHDIN ANALYTICAL SERVICES
Report of Analytical Results

14R

Client: CH2MHill
Project: TO-009 Lejeune
PO No:
Sample Date: 12/19/08
Received Date: 12/23/08
Extraction Date: 01/20/09
Analysis Date: 21-JAN-2009 22:13
Report Date: 01/22/2009
Matrix: SOIL
% Solids: 90.4

Lab ID: SB7367-13RE
Client ID: MR08-SS175-08D
SDG: TO9-22
Extracted by: AC
Extraction Method: SW846 3550
Analyst: JCG
Analysis Method: SW846 8270C
Lab Prep Batch: WG59975
Units: ug/Kgdrywt

Use original

CAS#	Compound	Flags	Results	DF	PQL	Adj.PQL	Adj.MDL	
84-74-2	Di-n-butylphthalate	U R	360	1.0	330	360	110	HT
85-68-7	Butylbenzylphthalate	U	360	1.0	330	360	100	
91-94-1	3,3'-Dichlorobenzidine	U	550	1.0	500	550	130	
218-01-9	Chrysene	U	360	1.0	330	360	100	
117-81-7	bis(2-Ethylhexyl)phthalate	U	360	1.0	330	360	110	
117-84-0	Di-n-octylphthalate	U	360	1.0	330	360	230	
367-12-4	2-Fluorophenol		75%					
13127-88-3	Phenol-D6		76%					
4165-60-0	Nitrobenzene-D5		71%					
321-60-8	2-Fluorobiphenyl		74%					
118-79-6	2,4,6-Tribromophenol		84%					
1718-51-0	Terphenyl-D14		101%					

R RE

CW 3/6/09

KATAHDIN ANALYTICAL SERVICES
Report of Analytical Results

Client: CH2MHill
Project: TO-009 Lejeune
PO No:
Sample Date: 12/19/08
Received Date: 12/23/08
Extraction Date: 12/29/08
Analysis Date: 15-JAN-2009 14:07
Report Date: 01/22/2009
Matrix: SOIL
% Solids: 92.5

Lab ID: SB7367-15
Client ID: MR08-IS175-2-3-08D
SDG: TO9-22
Extracted by: CB
Extraction Method: SW846 3550
Analyst: JLP
Analysis Method: SW846 8270C
Lab Prep Batch: WG59460
Units: ug/Kgdrywt

CAS#	Compound	Flags	Results	DF	PQL	Adj.PQL	Adj.MDL	
100-52-7	Benzaldehyde	~~U~~ UJ	540	1.0	500	540	130	ICB
108-95-2	Phenol	~~U~~ R	540	1.0	500	540	170	SSL
111-44-4	Bis(2-Chloroethyl)ether	~~U~~ UJ	360	1.0	330	360	88	BSL
95-57-8	2-Chlorophenol	~~U~~ R	540	1.0	500	540	180	SSL
95-48-7	2-Methylphenol	~~U~~ R	650	1.0	600	650	220	SSL
108-60-1	2,2'-Oxybis(1-chloropropane)	U	360	1.0	330	360	96	
98-86-2	Acetophenone	~~U~~ UJ	650	1.0	600	650	190	BSL
621-64-7	N-Nitroso-di-n-propylamine	U	360	1.0	330	360	90	
65794-96-9	3&4-Methylphenol	~~U~~ R	650	1.0	600	650	200	SSL
67-72-1	Hexachloroethane	~~U~~ UJ	360	1.0	330	360	100	BSL
98-95-3	Nitrobenzene	U	360	1.0	330	360	98	
78-59-1	Isophorone	U	360	1.0	330	360	81	
88-75-5	2-Nitrophenol	~~U~~ R	650	1.0	600	650	180	SSL
105-67-9	2,4-Dimethylphenol	~~U~~ R	540	1.0	500	540	180	SSL
111-91-1	Bis(2-Chloroethoxy)methane	U	360	1.0	330	360	100	
120-83-2	2,4-Dichlorophenol	~~U~~ R	540	1.0	500	540	160	SSL
106-47-8	4-Chloroaniline	U	540	1.0	500	540	130	
105-60-2	Caprolactam	U	540	1.0	500	540	160	
59-50-7	4-Chloro-3-Methylphenol	~~U~~ R	540	1.0	500	540	180	SSL
88-06-2	2,4,6-Trichlorophenol	~~U~~ ↓	540	1.0	500	540	170	↓
95-95-4	2,4,5-Trichlorophenol	~~U~~ ↓	540	1.0	500	540	170	
91-58-7	2-Chloronaphthalene	U	360	1.0	330	360	94	
92-52-4	1,1'-Biphenyl	U	360	1.0	330	360	79	
88-74-4	2-Nitroaniline	U	540	1.0	500	540	81	
131-11-3	Dimethyl Phthalate	U	360	1.0	330	360	84	
606-20-2	2,6-Dinitrotoluene	U	360	1.0	330	360	85	
208-96-8	Acenaphthylene	U	360	1.0	330	360	76	
99-09-2	3-Nitroaniline	U	540	1.0	500	540	100	
83-32-9	Acenaphthene	U	360	1.0	330	360	70	
51-28-5	2,4-Dinitrophenol	~~U~~ R	1300	1.0	1200	1300	410	SSL
132-64-9	Dibenzofuran	U	360	1.0	330	360	85	
100-02-7	4-Nitrophenol	~~U~~ R	1300	1.0	1200	1300	330	SSL
121-14-2	2,4-Dinitrotoluene	U	360	1.0	330	360	92	
84-66-2	Diethylphthalate	U	360	1.0	330	360	86	
7005-72-3	4-Chlorophenyl-phenylether	U	360	1.0	330	360	84	
100-01-6	4-Nitroaniline	U	540	1.0	500	540	140	
534-52-1	4,6-Dinitro-2-Methylphenol	~~U~~ R	1300	1.0	1200	1300	360	SSL
86-30-6	N-Nitrosodiphenylamine	U	710	1.0	660	710	240	
101-55-3	4-Bromophenyl-phenylether	U	360	1.0	330	360	92	
1912-24-9	Atrazine	U	360	1.0	330	360	98	
87-86-5	Pentachlorophenol	~~U~~ R	890	1.0	820	890	260	SSL
120-12-7	Anthracene	U	360	1.0	330	360	91	
86-74-8	Carbazole	U	540	1.0	500	540	120	

MW 3/6/09

KATAHDIN ANALYTICAL SERVICES
Report of Analytical Results

Client: CH2MHill
Project: TO-009 Lejeune
PO No:
Sample Date: 12/19/08
Received Date: 12/23/08
Extraction Date: 12/29/08
Analysis Date: 15-JAN-2009 14:07
Report Date: 01/22/2009
Matrix: SOIL
% Solids: 92.5

Lab ID: SB7367-15
Client ID: MR08-IS175-2-3-08D
SDG: TO9-22
Extracted by: CB
Extraction Method: SW846 3550
Analyst: JLP
Analysis Method: SW846 8270C
Lab Prep Batch: WG59460
Units: ug/Kgdrywt

CAS#	Compound	Flags	Results	DF	PQL	Adj.PQL	Adj.MDL
84-74-2	Di-n-butylphthalate	U	360	1.0	330	360	110
85-68-7	Butylbenzylphthalate	U	360	1.0	330	360	100
91-94-1	3,3'-Dichlorobenzidine	U	540	1.0	500	540	120
218-01-9	Chrysene	U	360	1.0	330	360	100
117-81-7	bis(2-Ethylhexyl)phthalate	U	360	1.0	330	360	100
117-84-0	Di-n-octylphthalate	U	360	1.0	330	360	230
367-12-4	2-Fluorophenol		* 19%				
13127-88-3	Phenol-D6		44%				
4165-60-0	Nitrobenzene-D5		60%				
321-60-8	2-Fluorobiphenyl		64%				
118-79-6	2,4,6-Tribromophenol		* 0%				
1718-51-0	Terphenyl-D14		72%				

QW 3/6/09

15RE

KATAHDIN ANALYTICAL SERVICES
Report of Analytical Results

Client: CH2MHill
Project: TO-009 Lejeune
PO No:
Sample Date: 12/19/08
Received Date: 12/23/08
Extraction Date: 01/20/09
Analysis Date: 22-JAN-2009 02:24
Report Date: 01/22/2009
Matrix: SOIL
% Solids: 92.5

Lab ID: SB7367-15RE
Client ID: MR08-IS175-2-3-08D
SDG: TO9-22
Extracted by: AC
Extraction Method: SW846 3550
Analyst: JCG
Analysis Method: SW846 8270C
Lab Prep Batch: WG59975
Units: ug/Kgdrywt

Use ORIGINAL

CAS#	Compound	Flags	Results	DF	PQL	Adj.PQL	Adj.MDL	
100-52-7	Benzaldehyde	U R	540	1.0	500	540	130	HT
108-95-2	Phenol	U	540	1.0	500	540	170	
111-44-4	Bis(2-Chloroethyl)ether	U	360	1.0	330	360	88	
95-57-8	2-Chlorophenol	U	540	1.0	500	540	180	
95-48-7	2-Methylphenol	U	650	1.0	600	650	220	
108-60-1	2,2'-Oxybis(1-chloropropane)	U	360	1.0	330	360	96	
98-86-2	Acetophenone	U	650	1.0	600	650	190	
621-64-7	N-Nitroso-di-n-propylamine	U	360	1.0	330	360	90	
65794-96-9	3&4-Methylphenol	U	650	1.0	600	650	200	
67-72-1	Hexachloroethane	U	360	1.0	330	360	100	
98-95-3	Nitrobenzene	U	360	1.0	330	360	98	
78-59-1	Isophorone	U	360	1.0	330	360	81	
88-75-5	2-Nitrophenol	U	650	1.0	600	650	180	
105-67-9	2,4-Dimethylphenol	U	540	1.0	500	540	180	
111-91-1	Bis(2-Chloroethoxy)methane	U	360	1.0	330	360	100	
120-83-2	2,4-Dichlorophenol	U	540	1.0	500	540	160	
106-47-8	4-Chloroaniline	U	540	1.0	500	540	130	
105-60-2	Caprolactam	U	540	1.0	500	540	160	
59-50-7	4-Chloro-3-Methylphenol	U	540	1.0	500	540	180	
88-06-2	2,4,6-Trichlorophenol	U	540	1.0	500	540	170	
95-95-4	2,4,5-Trichlorophenol	U	540	1.0	500	540	170	
91-58-7	2-Chloronaphthalene	U	360	1.0	330	360	94	
92-52-4	1,1'-Biphenyl	U	360	1.0	330	360	79	
88-74-4	2-Nitroaniline	U	540	1.0	500	540	81	
131-11-3	Dimethyl Phthalate	U	360	1.0	330	360	84	
606-20-2	2,6-Dinitrotoluene	U	360	1.0	330	360	85	
208-96-8	Acenaphthylene	U	360	1.0	330	360	76	
99-09-2	3-Nitroaniline	U	540	1.0	500	540	100	
83-32-9	Acenaphthene	U	360	1.0	330	360	70	
51-28-5	2,4-Dinitrophenol	U	1300	1.0	1200	1300	410	
132-64-9	Dibenzofuran	U	360	1.0	330	360	85	
100-02-7	4-Nitrophenol	U	1300	1.0	1200	1300	330	
121-14-2	2,4-Dinitrotoluene	U	360	1.0	330	360	92	
84-66-2	Diethylphthalate	U	360	1.0	330	360	86	
7005-72-3	4-Chlorophenyl-phenylether	U	360	1.0	330	360	84	
100-01-6	4-Nitroaniline	U	540	1.0	500	540	140	
534-52-1	4,6-Dinitro-2-Methylphenol	U	1300	1.0	1200	1300	360	
86-30-6	N-Nitrosodiphenylamine	U	710	1.0	660	710	240	
101-55-3	4-Bromophenyl-phenylether	U	360	1.0	330	360	92	
1912-24-9	Atrazine	U	360	1.0	330	360	98	
87-86-5	Pentachlorophenol	U	890	1.0	820	890	260	
120-12-7	Anthracene	U	360	1.0	330	360	91	
86-74-8	Carbazole	U	540	1.0	500	540	120	

RRE

LLS 3/6/09

15RE

KATAHDIN ANALYTICAL SERVICES
Report of Analytical Results

Client: CH2MHill
Project: TO-009 Lejeune
PO No:
Sample Date: 12/19/08
Received Date: 12/23/08
Extraction Date: 01/20/09
Analysis Date: 22-JAN-2009 02:24
Report Date: 01/22/2009
Matrix: SOIL
% Solids: 92.5

Lab ID: SB7367-15RE
Client ID: MR08-IS175-2-3-08D
SDG: TO9-22
Extracted by: AC
Extraction Method: SW846 3550
Analyst: JCG
Analysis Method: SW846 8270C
Lab Prep Batch: WG59975
Units: ug/Kgdrywt

use original

CAS#	Compound	Flags	Results	DF	PQL	Adj.PQL	Adj.MDL
84-74-2	Di-n-butylphthalate	U R	360	1.0	330	360	110 HJ
85-68-7	Butylbenzylphthalate	U	360	1.0	330	360	100
91-94-1	3,3'-Dichlorobenzidine	U	540	1.0	500	540	120
218-01-9	Chrysene	U	360	1.0	330	360	100
117-81-7	bis(2-Ethylhexyl)phthalate	U	360	1.0	330	360	100
117-84-0	Di-n-octylphthalate	U	360	1.0	330	360	230
367-12-4	2-Fluorophenol		69%				
13127-88-3	Phenol-D6		73%				
4165-60-0	Nitrobenzene-D5		70%				
321-60-8	2-Fluorobiphenyl		74%				
118-79-6	2,4,6-Tribromophenol		84%				
1718-51-0	Terphenyl-D14		104%				

R RE

3/6/09

KATAHDIN ANALYTICAL SERVICES
Report of Analytical Results

Client: CH2MHill
Project: TO-009 Lejeune
PO No:
Sample Date: 12/20/08
Received Date: 12/23/08
Extraction Date: 12/29/08
Analysis Date: 15-JAN-2009 14:50
Report Date: 01/22/2009
Matrix: SOIL
% Solids: 86.1

Lab ID: SB7367-17
Client ID: MR08-SS164-08D
SDG: TO9-22
Extracted by: CB
Extraction Method: SW846 3550
Analyst: JLP
Analysis Method: SW846 8270C
Lab Prep Batch: WG59460
Units: ug/Kgdrywt

CAS#	Compound	Flags	Results	DF	PQL	Adj.PQL	Adj.MDL	
100-52-7	Benzaldehyde	~~U~~ UJ	580	1.0	500	580	140	ICB
108-95-2	Phenol	U	580	1.0	500	580	180	
111-44-4	Bis(2-Chloroethyl)ether	~~U~~ UJ	380	1.0	330	380	94	BSL
95-57-8	2-Chlorophenol	U	580	1.0	500	580	190	
95-48-7	2-Methylphenol	U	700	1.0	600	700	230	
108-60-1	2,2'-Oxybis(1-chloropropane)	U	380	1.0	330	380	100	
98-86-2	Acetophenone	~~U~~ UJ	700	1.0	600	700	210	BSL
621-64-7	N-Nitroso-di-n-propylamine	U	380	1.0	330	380	96	
65794-96-9	3&4-Methylphenol	U	700	1.0	600	700	220	
67-72-1	Hexachloroethane	~~U~~ UJ	380	1.0	330	380	110	BSL
98-95-3	Nitrobenzene	U	380	1.0	330	380	100	
78-59-1	Isophorone	U	380	1.0	330	380	87	
88-75-5	2-Nitrophenol	U	700	1.0	600	700	190	
105-67-9	2,4-Dimethylphenol	~~U~~ UJ	580	1.0	500	580	190	BSL
111-91-1	Bis(2-Chloroethoxy)methane	U	380	1.0	330	380	110	
120-83-2	2,4-Dichlorophenol	U	580	1.0	500	580	170	
106-47-8	4-Chloroaniline	U	580	1.0	500	580	140	
105-60-2	Caprolactam	U	580	1.0	500	580	170	
59-50-7	4-Chloro-3-Methylphenol	U	580	1.0	500	580	190	
88-06-2	2,4,6-Trichlorophenol	U	580	1.0	500	580	180	
95-95-4	2,4,5-Trichlorophenol	U	580	1.0	500	580	180	
91-58-7	2-Chloronaphthalene	U	380	1.0	330	380	100	
92-52-4	1,1'-Biphenyl	U	380	1.0	330	380	85	
88-74-4	2-Nitroaniline	U	580	1.0	500	580	87	
131-11-3	Dimethyl Phthalate	U	380	1.0	330	380	90	
606-20-2	2,6-Dinitrotoluene	U	380	1.0	330	380	92	
208-96-8	Acenaphthylene	U	380	1.0	330	380	81	
99-09-2	3-Nitroaniline	U	580	1.0	500	580	110	
83-32-9	Acenaphthene	U	380	1.0	330	380	75	
51-28-5	2,4-Dinitrophenol	U	1400	1.0	1200	1400	440	
132-64-9	Dibenzofuran	U	380	1.0	330	380	92	
100-02-7	4-Nitrophenol	U	1400	1.0	1200	1400	360	
121-14-2	2,4-Dinitrotoluene	U	380	1.0	330	380	99	
84-66-2	Diethylphthalate	U	380	1.0	330	380	93	
7005-72-3	4-Chlorophenyl-phenylether	U	380	1.0	330	380	90	
100-01-6	4-Nitroaniline	U	580	1.0	500	580	160	
534-52-1	4,6-Dinitro-2-Methylphenol	U	1400	1.0	1200	1400	390	
86-30-6	N-Nitrosodiphenylamine	U	770	1.0	660	770	250	
101-55-3	4-Bromophenyl-phenylether	U	380	1.0	330	380	99	
1912-24-9	Atrazine	U	380	1.0	330	380	100	
87-86-5	Pentachlorophenol	U	950	1.0	820	950	280	
120-12-7	Anthracene	U	380	1.0	330	380	98	
86-74-8	Carbazole	U	580	1.0	500	580	130	

LW 3/6/09

KATAHDIN ANALYTICAL SERVICES
Report of Analytical Results

Client: CH2MHill
Project: TO-009 Lejeune
PO No:
Sample Date: 12/20/08
Received Date: 12/23/08
Extraction Date: 12/29/08
Analysis Date: 15-JAN-2009 14:50
Report Date: 01/22/2009
Matrix: SOIL
% Solids: 86.1

Lab ID: SB7367-17
Client ID: MR08-SS164-08D
SDG: TO9-22
Extracted by: CB
Extraction Method: SW846 3550
Analyst: JLP
Analysis Method: SW846 8270C
Lab Prep Batch: WG59460
Units: ug/Kgdrywt

CAS#	Compound	Flags	Results	DF	PQL	Adj.PQL	Adj.MDL
84-74-2	Di-n-butylphthalate	U	380	1.0	330	380	120
85-68-7	Butylbenzylphthalate	U	380	1.0	330	380	110
91-94-1	3,3'-Dichlorobenzidine	U	580	1.0	500	580	130
218-01-9	Chrysene	U	380	1.0	330	380	110
117-81-7	bis(2-Ethylhexyl)phthalate		460	1.0	330	380	110
117-84-0	Di-n-octylphthalate	U	380	1.0	330	380	240
367-12-4	2-Fluorophenol		52%				
13127-88-3	Phenol-D6		56%				
4165-60-0	Nitrobenzene-D5		58%				
321-60-8	2-Fluorobiphenyl		63%				
118-79-6	2,4,6-Tribromophenol		44%				
1718-51-0	Terphenyl-D14		74%				

fuw 3/6/09

16RE

KATAHDIN ANALYTICAL SERVICES
Report of Analytical Results

Client: CH2MHill
Project: TO-009 Lejeune
PO No:
Sample Date: 12/20/08
Received Date: 12/23/08
Extraction Date: 01/20/09
Analysis Date: 22-JAN-2009 01:42
Report Date: 01/22/2009
Matrix: SOIL
% Solids: 86.1

Lab ID: SB7367-17RE
Client ID: MR08-SS164-08D
SDG: TO9-22
Extracted by: AC
Extraction Method: SW846 3550
Analyst: JCG
Analysis Method: SW846 8270C
Lab Prep Batch: WG59975
Units: ug/Kgdrywt

Use original

CAS#	Compound	Flags	Results	DF	PQL	Adj.PQL	Adj.MDL
100-52-7	Benzaldehyde	U R	580	1.0	500	580	140 HT
108-95-2	Phenol	U	580	1.0	500	580	180
111-44-4	Bis(2-Chloroethyl)ether	U	380	1.0	330	380	94
95-57-8	2-Chlorophenol	U	580	1.0	500	580	190
95-48-7	2-Methylphenol	U	700	1.0	600	700	230
108-60-1	2,2'-Oxybis(1-chloropropane)	U	380	1.0	330	380	100
98-86-2	Acetophenone	U	700	1.0	600	700	210
621-64-7	N-Nitroso-di-n-propylamine	U	380	1.0	330	380	96
65794-96-9	3&4-Methylphenol	U	700	1.0	600	700	220
67-72-1	Hexachloroethane	U	380	1.0	330	380	110
98-95-3	Nitrobenzene	U	380	1.0	330	380	100
78-59-1	Isophorone	U	380	1.0	330	380	87
88-75-5	2-Nitrophenol	U	700	1.0	600	700	190
105-67-9	2,4-Dimethylphenol	U	580	1.0	500	580	190
111-91-1	Bis(2-Chloroethoxy)methane	U	380	1.0	330	380	110
120-83-2	2,4-Dichlorophenol	U	580	1.0	500	580	170
106-47-8	4-Chloroaniline	U	580	1.0	500	580	140
105-60-2	Caprolactam	U	580	1.0	500	580	170
59-50-7	4-Chloro-3-Methylphenol	U	580	1.0	500	580	190
88-06-2	2,4,6-Trichlorophenol	U	580	1.0	500	580	180
95-95-4	2,4,5-Trichlorophenol	U	580	1.0	500	580	180
91-58-7	2-Chloronaphthalene	U	380	1.0	330	380	100
92-52-4	1,1'-Biphenyl	U	380	1.0	330	380	85
88-74-4	2-Nitroaniline	U	580	1.0	500	580	87
131-11-3	Dimethyl Phthalate	U	380	1.0	330	380	90
606-20-2	2,6-Dinitrotoluene	U	380	1.0	330	380	92
208-96-8	Acenaphthylene	U	380	1.0	330	380	81
99-09-2	3-Nitroaniline	U	580	1.0	500	580	110
83-32-9	Acenaphthene	U	380	1.0	330	380	75
51-28-5	2,4-Dinitrophenol	U	1400	1.0	1200	1400	440
132-64-9	Dibenzofuran	U	380	1.0	330	380	92
100-02-7	4-Nitrophenol	U	1400	1.0	1200	1400	360
121-14-2	2,4-Dinitrotoluene	U	380	1.0	330	380	99
84-66-2	Diethylphthalate	U	380	1.0	330	380	93
7005-72-3	4-Chlorophenyl-phenylether	U	380	1.0	330	380	90
100-01-6	4-Nitroaniline	U	580	1.0	500	580	160
534-52-1	4,6-Dinitro-2-Methylphenol	U	1400	1.0	1200	1400	390
86-30-6	N-Nitrosodiphenylamine	U	770	1.0	660	770	250
101-55-3	4-Bromophenyl-phenylether	U	380	1.0	330	380	99
1912-24-9	Atrazine	U	380	1.0	330	380	100
87-86-5	Pentachlorophenol	U	950	1.0	820	950	280
120-12-7	Anthracene	U	380	1.0	330	380	98
86-74-8	Carbazole	U	580	1.0	500	580	130

R RE

Rev 3/6/09

16RE

KATAHDIN ANALYTICAL SERVICES
Report of Analytical Results

Client: CH2MHill
Project: TO-009 Lejeune
PO No:
Sample Date: 12/20/08
Received Date: 12/23/08
Extraction Date: 01/20/09
Analysis Date: 22-JAN-2009 01:42
Report Date: 01/22/2009
Matrix: SOIL
% Solids: 86.1

Lab ID: SB7367-17RE
Client ID: MR08-SS164-08D
SDG: TO9-22
Extracted by: AC
Extraction Method: SW846 3550
Analyst: JCG
Analysis Method: SW846 8270C
Lab Prep Batch: WG59975
Units: ug/Kgdrywt

Use original

CAS#	Compound	Flags	Results	DF	PQL	Adj PQL	Adj.MDL	
84-74-2	Di-n-butylphthalate	~~U~~ R	380	1.0	330	380	120	HT
85-68-7	Butylbenzylphthalate	~~U~~	380	1.0	330	380	110	
91-94-1	3,3'-Dichlorobenzidine	~~U~~	580	1.0	500	580	130	
218-01-9	Chrysene	~~U~~	380	1.0	330	380	110	
117-81-7	bis(2-Ethylhexyl)phthalate	~~J~~ J	160	1.0	330	380	110	
117-84-0	Di-n-octylphthalate	~~U~~ R	380	1.0	330	380	240	
367-12-4	2-Fluorophenol		67%					
13127-88-3	Phenol-D6		66%					
4165-60-0	Nitrobenzene-D5		67%					
321-60-8	2-Fluorobiphenyl		69%					
118-79-6	2,4,6-Tribromophenol		76%					
1718-51-0	Terphenyl-D14		101%					

R RE

lw 3/6/09

KATAHDIN ANALYTICAL SERVICES
Report of Analytical Results

Client: CH2MHill
Project: TO-009 Lejeune
PO No:
Sample Date: 12/20/08
Received Date: 12/23/08
Extraction Date: 12/29/08
Analysis Date: 15-JAN-2009 15:32
Report Date: 01/22/2009
Matrix: SOIL
% Solids: 88.9

Lab ID: SB7367-19
Client ID: MR08-IS164-5-6-08D
SDG: TO9-22
Extracted by: CB
Extraction Method: SW846 3550
Analyst: JLP
Analysis Method: SW846 8270C
Lab Prep Batch: WG59460
Units: ug/Kgdrywt

CAS#	Compound	Flags	Results	DF	PQL	Adj.PQL	Adj.MDL	
100-52-7	Benzaldehyde	~~U~~ UJ	560	1.0	500	560	140	JCB
108-95-2	Phenol	U	560	1.0	500	560	180	
111-44-4	Bis(2-Chloroethyl)ether	~~U~~ UJ	370	1.0	330	370	91	BSL
95-57-8	2-Chlorophenol	U	560	1.0	500	560	180	
95-48-7	2-Methylphenol	U	680	1.0	600	680	220	
108-60-1	2,2'-Oxybis(1-chloropropane)	U	370	1.0	330	370	100	
98-86-2	Acetophenone	~~U~~ UJ	680	1.0	600	680	200	BSL
621-64-7	N-Nitroso-di-n-propylamine	U	370	1.0	330	370	93	
65794-96-9	3&4-Methylphenol	U	680	1.0	600	680	210	
67-72-1	Hexachloroethane	~~U~~ UJ	370	1.0	330	370	110	BSL
98-95-3	Nitrobenzene	U	370	1.0	330	370	100	
78-59-1	Isophorone	U	370	1.0	330	370	84	
88-75-5	2-Nitrophenol	U	680	1.0	600	680	190	
105-67-9	2,4-Dimethylphenol	~~U~~ UJ	560	1.0	500	560	180	BSL
111-91-1	Bis(2-Chloroethoxy)methane	U	370	1.0	330	370	110	
120-83-2	2,4-Dichlorophenol	U	560	1.0	500	560	170	
106-47-8	4-Chloroaniline	U	560	1.0	500	560	130	
105-60-2	Caprolactam	U	560	1.0	500	560	160	
59-50-7	4-Chloro-3-Methylphenol	U	560	1.0	500	560	190	
88-06-2	2,4,6-Trichlorophenol	U	560	1.0	500	560	170	
95-95-4	2,4,5-Trichlorophenol	U	560	1.0	500	560	170	
91-58-7	2-Chloronaphthalene	U	370	1.0	330	370	98	
92-52-4	1,1'-Biphenyl	U	370	1.0	330	370	82	
88-74-4	2-Nitroaniline	U	560	1.0	500	560	84	
131-11-3	Dimethyl Phthalate	U	370	1.0	330	370	88	
606-20-2	2,6-Dinitrotoluene	U	370	1.0	330	370	89	
208-96-8	Acenaphthylene	U	370	1.0	330	370	79	
99-09-2	3-Nitroaniline	U	560	1.0	500	560	100	
83-32-9	Acenaphthene	U	370	1.0	330	370	73	
51-28-5	2,4-Dinitrophenol	U	1400	1.0	1200	1400	420	
132-64-9	Dibenzofuran	U	370	1.0	330	370	89	
100-02-7	4-Nitrophenol	U	1400	1.0	1200	1400	350	
121-14-2	2,4-Dinitrotoluene	U	370	1.0	330	370	96	
84-66-2	Diethylphthalate	U	370	1.0	330	370	90	
7005-72-3	4-Chlorophenyl-phenylether	U	370	1.0	330	370	88	
100-01-6	4-Nitroaniline	U	560	1.0	500	560	150	
534-52-1	4,6-Dinitro-2-Methylphenol	U	1400	1.0	1200	1400	380	
86-30-6	N-Nitrosodiphenylamine	U	740	1.0	660	740	250	
101-55-3	4-Bromophenyl-phenylether	U	370	1.0	330	370	96	
1912-24-9	Atrazine	U	370	1.0	330	370	100	
87-86-5	Pentachlorophenol	U	920	1.0	820	920	270	
120-12-7	Anthracene	U	370	1.0	330	370	94	
86-74-8	Carbazole	U	560	1.0	500	560	120	

lw 3/6/09

KATAHDIN ANALYTICAL SERVICES
Report of Analytical Results

Client: CH2MHill
Project: TO-009 Lejeune
PO No:
Sample Date: 12/20/08
Received Date: 12/23/08
Extraction Date: 12/29/08
Analysis Date: 15-JAN-2009 15:32
Report Date: 01/22/2009
Matrix: SOIL
% Solids: 88.9

Lab ID: SB7367-19
Client ID: MR08-IS164-5-6-08D
SDG: TO9-22
Extracted by: CB
Extraction Method: SW846 3550
Analyst: JLP
Analysis Method: SW846 8270C
Lab Prep Batch: WG59460
Units: ug/Kgdrywt

CAS#	Compound	Flags	Results	DF	PQL	Adj.PQL	Adj.MDL
84-74-2	Di-n-butylphthalate	U	370	1.0	330	370	110
85-68-7	Butylbenzylphthalate	U	370	1.0	330	370	100
91-94-1	3,3'-Dichlorobenzidine	U	560	1.0	500	560	130
218-01-9	Chrysene	U	370	1.0	330	370	110
117-81-7	bis(2-Ethylhexyl)phthalate	J	150	1.0	330	370	110
117-84-0	Di-n-octylphthalate	U	370	1.0	330	370	240
367-12-4	2-Fluorophenol		52%				
13127-88-3	Phenol-D6		55%				
4165-60-0	Nitrobenzene-D5		54%				
321-60-8	2-Fluorobiphenyl		59%				
118-79-6	2,4,6-Tribromophenol		44%				
1718-51-0	Terphenyl-D14		69%				

lw
3/6/09

17RE

KATAHDIN ANALYTICAL SERVICES
Report of Analytical Results

Client: CH2MHill
Project: TO-009 Lejeune
PO No:
Sample Date: 12/20/08
Received Date: 12/23/08
Extraction Date: 01/20/09
Analysis Date: 21-JAN-2009 22:55
Report Date: 01/22/2009
Matrix: SOIL
% Solids: 88.9

Lab ID: SB7367-19RE
Client ID: MR08-IS164-5-6-08D
SDG: TO9-22
Extracted by: AC
Extraction Method: SW846 3550
Analyst: JCG
Analysis Method: SW846 8270C
Lab Prep Batch: WG59975
Units: ug/Kgdrywt

use original

CAS#	Compound	Flags	Results	DF	PQL	Adj.PQL	Adj.MDL
100-52-7	Benzaldehyde	U R	560	1.0	500	560	140 HT
108-95-2	Phenol	U	560	1.0	500	560	180
111-44-4	Bis(2-Chloroethyl)ether	U	370	1.0	330	370	91
95-57-8	2-Chlorophenol	U	560	1.0	500	560	180
95-48-7	2-Methylphenol	U	680	1.0	600	680	220
108-60-1	2,2'-Oxybis(1-chloropropane)	U	370	1.0	330	370	100
98-86-2	Acetophenone	U	680	1.0	600	680	200
621-64-7	N-Nitroso-di-n-propylamine	U	370	1.0	330	370	93
65794-96-9	3&4-Methylphenol	U	680	1.0	600	680	210
67-72-1	Hexachloroethane	U	370	1.0	330	370	110
98-95-3	Nitrobenzene	U	370	1.0	330	370	100
78-59-1	Isophorone	U	370	1.0	330	370	84
88-75-5	2-Nitrophenol	U	680	1.0	600	680	190
105-67-9	2,4-Dimethylphenol	U	560	1.0	500	560	180
111-91-1	Bis(2-Chloroethoxy)methane	U	370	1.0	330	370	110
120-83-2	2,4-Dichlorophenol	U	560	1.0	500	560	170
106-47-8	4-Chloroaniline	U	560	1.0	500	560	130
105-60-2	Caprolactam	U	560	1.0	500	560	160
59-50-7	4-Chloro-3-Methylphenol	U	560	1.0	500	560	190
88-06-2	2,4,6-Trichlorophenol	U	560	1.0	500	560	170
95-95-4	2,4,5-Trichlorophenol	U	560	1.0	500	560	170
91-58-7	2-Chloronaphthalene	U	370	1.0	330	370	98
92-52-4	1,1'-Biphenyl	U	370	1.0	330	370	82
88-74-4	2-Nitroaniline	U	560	1.0	500	560	84
131-11-3	Dimethyl Phthalate	U	370	1.0	330	370	88
606-20-2	2,6-Dinitrotoluene	U	370	1.0	330	370	89
208-96-8	Acenaphthylene	U	370	1.0	330	370	79
99-09-2	3-Nitroaniline	U	560	1.0	500	560	100
83-32-9	Acenaphthene	U	370	1.0	330	370	73
51-28-5	2,4-Dinitrophenol	U	1400	1.0	1200	1400	420
132-64-9	Dibenzofuran	U	370	1.0	330	370	89
100-02-7	4-Nitrophenol	U	1400	1.0	1200	1400	350
121-14-2	2,4-Dinitrotoluene	U	370	1.0	330	370	96
84-66-2	Diethylphthalate	U	370	1.0	330	370	90
7005-72-3	4-Chlorophenyl-phenylether	U	370	1.0	330	370	88
100-01-6	4-Nitroaniline	U	560	1.0	500	560	150
534-52-1	4,6-Dinitro-2-Methylphenol	U	1400	1.0	1200	1400	380
86-30-6	N-Nitrosodiphenylamine	U	740	1.0	660	740	250
101-55-3	4-Bromophenyl-phenylether	U	370	1.0	330	370	96
1912-24-9	Atrazine	U	370	1.0	330	370	100
87-86-5	Pentachlorophenol	U	920	1.0	820	920	270
120-12-7	Anthracene	U	370	1.0	330	370	94
86-74-8	Carbazole	U	560	1.0	500	560	120

R RE

QW 3/6/09

17RE

KATAHDIN ANALYTICAL SERVICES
Report of Analytical Results

Client: CH2MHill
Project: TO-009 Lejeune
PO No:
Sample Date: 12/20/08
Received Date: 12/23/08
Extraction Date: 01/20/09
Analysis Date: 21-JAN-2009 22:55
Report Date: 01/22/2009
Matrix: SOIL
% Solids: 88.9

Lab ID: SB7367-19RE
Client ID: MR08-IS164-5-6-08D
SDG: TO9-22
Extracted by: AC
Extraction Method: SW846 3550
Analyst: JCG
Analysis Method: SW846 8270C
Lab Prep Batch: WG59975
Units: ug/Kgdrywt

Use orig. NAR

CAS#	Compound	Flags	Results	DF	PQL	Adj.PQL	Adj.MDL	
84-74-2	Di-n-butylphthalate	U R	370	1.0	330	370	110	HT
85-68-7	Butylbenzylphthalate	U	370	1.0	330	370	100	
91-94-1	3,3'-Dichlorobenzidine	U	560	1.0	500	560	130	
218-01-9	Chrysene	U	370	1.0	330	370	110	
117-81-7	bis(2-Ethylhexyl)phthalate	J	170	1.0	330	370	110	
117-84-0	Di-n-octylphthalate	U R	370	1.0	330	370	240	
367-12-4	2-Fluorophenol		64%					
13127-88-3	Phenol-D6		67%					
4165-60-0	Nitrobenzene-D5		68%					
321-60-8	2-Fluorobiphenyl		65%					
118-79-6	2,4,6-Tribromophenol		71%					
1718-51-0	Terphenyl-D14		93%					

R RE

3/6/09

KATAHDIN ANALYTICAL SERVICES
Report of Analytical Results

Client: CH2MHill
Project: TO-009 Lejeune
PO No:
Sample Date: 12/20/08
Received Date: 12/23/08
Extraction Date: 12/29/08
Analysis Date: 15-JAN-2009 18:15
Report Date: 01/22/2009
Matrix: SOIL
% Solids: 92.8

Lab ID: SB7367-21
Client ID: MR08-SS165-08D
SDG: TO9-22
Extracted by: CB
Extraction Method: SW846 3550
Analyst: JCG
Analysis Method: SW846 8270C
Lab Prep Batch: WG59460
Units: ug/Kgdrywt

CAS#	Compound	Flags	Results	DF	PQL	Adj.PQL	Adj.MDL	
100-52-7	Benzaldehyde	~~U~~ UJ	540	1.0	500	540	130	ICB
108-95-2	Phenol	U	540	1.0	500	540	170	
111-44-4	Bis(2-Chloroethyl)ether	~~U~~ UJ	360	1.0	330	360	87	BSL
95-57-8	2-Chlorophenol	U	540	1.0	500	540	180	
95-48-7	2-Methylphenol	U	650	1.0	600	650	220	
108-60-1	2,2'-Oxybis(1-chloropropane)	U	360	1.0	330	360	96	
98-86-2	Acetophenone	~~U~~ UJ	650	1.0	600	650	190	BSL
621-64-7	N-Nitroso-di-n-propylamine	U	360	1.0	330	360	89	
65794-96-9	3&4-Methylphenol	U	650	1.0	600	650	200	
67-72-1	Hexachloroethane	~~U~~ UJ	360	1.0	330	360	100	BSL
98-95-3	Nitrobenzene	U	360	1.0	330	360	98	
78-59-1	Isophorone	U	360	1.0	330	360	81	
88-75-5	2-Nitrophenol	U	650	1.0	600	650	180	
105-67-9	2,4-Dimethylphenol	~~U~~ UJ	540	1.0	500	540	180	BSL
111-91-1	Bis(2-Chloroethoxy)methane	U	360	1.0	330	360	100	
120-83-2	2,4-Dichlorophenol	U	540	1.0	500	540	160	
106-47-8	4-Chloroaniline	U	540	1.0	500	540	130	
105-60-2	Caprolactam	U	540	1.0	500	540	160	
59-50-7	4-Chloro-3-Methylphenol	U	540	1.0	500	540	180	
88-06-2	2,4,6-Trichlorophenol	U	540	1.0	500	540	170	
95-95-4	2,4,5-Trichlorophenol	U	540	1.0	500	540	170	
91-58-7	2-Chloronaphthalene	U	360	1.0	330	360	94	
92-52-4	1,1'-Biphenyl	U	360	1.0	330	360	79	
88-74-4	2-Nitroaniline	U	540	1.0	500	540	81	
131-11-3	Dimethyl Phthalate	U	360	1.0	330	360	84	
606-20-2	2,6-Dinitrotoluene	U	360	1.0	330	360	85	
208-96-8	Acenaphthylene	U	360	1.0	330	360	75	
99-09-2	3-Nitroaniline	U	540	1.0	500	540	100	
83-32-9	Acenaphthene	U	360	1.0	330	360	70	
51-28-5	2,4-Dinitrophenol	U	1300	1.0	1200	1300	410	
132-64-9	Dibenzofuran	U	360	1.0	330	360	85	
100-02-7	4-Nitrophenol	U	1300	1.0	1200	1300	330	
121-14-2	2,4-Dinitrotoluene	U	360	1.0	330	360	92	
84-66-2	Diethylphthalate	U	360	1.0	330	360	86	
7005-72-3	4-Chlorophenyl-phenylether	U	360	1.0	330	360	84	
100-01-6	4-Nitroaniline	~~U~~ UJ	540	1.0	500	540	140	CCH
534-52-1	4,6-Dinitro-2-Methylphenol	U	1300	1.0	1200	1300	360	
86-30-6	N-Nitrosodiphenylamine	U	710	1.0	660	710	240	
101-55-3	4-Bromophenyl-phenylether	U	360	1.0	330	360	92	
1912-24-9	Atrazine	U	360	1.0	330	360	98	
87-86-5	Pentachlorophenol	U	880	1.0	820	880	260	
120-12-7	Anthracene	U	360	1.0	330	360	90	
86-74-8	Carbazole	U	540	1.0	500	540	120	

LW 31609

KATAHDIN ANALYTICAL SERVICES
Report of Analytical Results

Client: CH2MHill
Project: TO-009 Lejeune
PO No:
Sample Date: 12/20/08
Received Date: 12/23/08
Extraction Date: 12/29/08
Analysis Date: 15-JAN-2009 18:15
Report Date: 01/22/2009
Matrix: SOIL
% Solids: 92.8

Lab ID: SB7367-21
Client ID: MR08-SS165-08D
SDG: TO9-22
Extracted by: CB
Extraction Method: SW846 3550
Analyst: JCG
Analysis Method: SW846 8270C
Lab Prep Batch: WG59460
Units: ug/Kgdrywt

CAS#	Compound	Flags	Results	DF	PQL	Adj.PQL	Adj.MDL
84-74-2	Di-n-butylphthalate	U	360	1.0	330	360	110
85-68-7	Butylbenzylphthalate	U	360	1.0	330	360	100
91-94-1	3,3'-Dichlorobenzidine	U	540	1.0	500	540	120
218-01-9	Chrysene	U	360	1.0	330	360	100
117-81-7	bis(2-Ethylhexyl)phthalate	U	360	1.0	330	360	100
117-84-0	Di-n-octylphthalate	U	360	1.0	330	360	230
367-12-4	2-Fluorophenol		54%				
13127-88-3	Phenol-D6		57%				
4165-60-0	Nitrobenzene-D5		59%				
321-60-8	2-Fluorobiphenyl		64%				
118-79-6	2,4,6-Tribromophenol		45%				
1718-51-0	Terphenyl-D14		74%				

LWJ 3/6/09

18RE

KATAHDIN ANALYTICAL SERVICES
Report of Analytical Results

Client: CH2MHill
Project: TO-009 Lejeune
PO No:
Sample Date: 12/20/08
Received Date: 12/23/08
Extraction Date: 01/20/09
Analysis Date: 21-JAN-2009 23:37
Report Date: 01/22/2009
Matrix: SOIL
% Solids: 92.8

Lab ID: SB7367-21RE
Client ID: MR08-SS165-08D
SDG: TO9-22
Extracted by: AC
Extraction Method: SW846 3550
Analyst: JCG
Analysis Method: SW846 8270C
Lab Prep Batch: WG59975
Units: ug/Kgdrywt

Use original

CAS#	Compound	Flags	Results	DF	PQL	Adj.PQL	Adj.MDL
100-52-7	Benzaldehyde	U R	540	1.0	500	540	130 HT
108-95-2	Phenol	U	540	1.0	500	540	170
111-44-4	Bis(2-Chloroethyl)ether	U	360	1.0	330	360	87
95-57-8	2-Chlorophenol	U	540	1.0	500	540	180
95-48-7	2-Methylphenol	U	650	1.0	600	650	220
108-60-1	2,2'-Oxybis(1-chloropropane)	U	360	1.0	330	360	96
98-86-2	Acetophenone	U	650	1.0	600	650	190
621-64-7	N-Nitroso-di-n-propylamine	U	360	1.0	330	360	89
65794-96-9	3&4-Methylphenol	U	650	1.0	600	650	200
67-72-1	Hexachloroethane	U	360	1.0	330	360	100
98-95-3	Nitrobenzene	U	360	1.0	330	360	98
78-59-1	Isophorone	U	360	1.0	330	360	81
88-75-5	2-Nitrophenol	U	650	1.0	600	650	180
105-67-9	2,4-Dimethylphenol	U	540	1.0	500	540	180
111-91-1	Bis(2-Chloroethoxy)methane	U	360	1.0	330	360	100
120-83-2	2,4-Dichlorophenol	U	540	1.0	500	540	160
106-47-8	4-Chloroaniline	U	540	1.0	500	540	130
105-60-2	Caprolactam	U	540	1.0	500	540	160
59-50-7	4-Chloro-3-Methylphenol	U	540	1.0	500	540	180
88-06-2	2,4,6-Trichlorophenol	U	540	1.0	500	540	170
95-95-4	2,4,5-Trichlorophenol	U	540	1.0	500	540	170
91-58-7	2-Chloronaphthalene	U	360	1.0	330	360	94
92-52-4	1,1'-Biphenyl	U	360	1.0	330	360	79
88-74-4	2-Nitroaniline	U	540	1.0	500	540	81
131-11-3	Dimethyl Phthalate	U	360	1.0	330	360	84
606-20-2	2,6-Dinitrotoluene	U	360	1.0	330	360	85
208-96-8	Acenaphthylene	U	360	1.0	330	360	75
99-09-2	3-Nitroaniline	U	540	1.0	500	540	100
83-32-9	Acenaphthene	U	360	1.0	330	360	70
51-28-5	2,4-Dinitrophenol	U	1300	1.0	1200	1300	410
132-64-9	Dibenzofuran	U	360	1.0	330	360	85
100-02-7	4-Nitrophenol	U	1300	1.0	1200	1300	330
121-14-2	2,4-Dinitrotoluene	U	360	1.0	330	360	92
84-66-2	Diethylphthalate	U	360	1.0	330	360	86
7005-72-3	4-Chlorophenyl-phenylether	U	360	1.0	330	360	84
100-01-6	4-Nitroaniline	U	540	1.0	500	540	140
534-52-1	4,6-Dinitro-2-Methylphenol	U	1300	1.0	1200	1300	360
86-30-6	N-Nitrosodiphenylamine	U	710	1.0	660	710	240
101-55-3	4-Bromophenyl-phenylether	U	360	1.0	330	360	92
1912-24-9	Atrazine	U	360	1.0	330	360	98
87-86-5	Pentachlorophenol	U	880	1.0	820	880	260
120-12-7	Anthracene	U	360	1.0	330	360	90
86-74-8	Carbazole	U	540	1.0	500	540	120

RLW 3/6/09

18RE

KATAHDIN ANALYTICAL SERVICES
Report of Analytical Results

Client: CH2MHill
Project: TO-009 Lejeune
PO No:
Sample Date: 12/20/08
Received Date: 12/23/08
Extraction Date: 01/20/09
Analysis Date: 21-JAN-2009 23:37
Report Date: 01/22/2009
Matrix: SOIL
% Solids: 92.8

Lab ID: SB7367-21RE
Client ID: MR08-SS165-08D
SDG: TO9-22
Extracted by: AC
Extraction Method: SW846 3550
Analyst: JCG
Analysis Method: SW846 8270C
Lab Prep Batch: WG59975
Units: ug/Kgdrywt

Use original

CAS#	Compound	Flags	Results	DF	PQL	Adj.PQL	Adj.MDL	
84-74-2	Di-n-butylphthalate	~~U~~ R	360	1.0	330	360	110	HT
85-68-7	Butylbenzylphthalate	~~U~~	360	1.0	330	360	100	
91-94-1	3,3'-Dichlorobenzidine	~~U~~	540	1.0	500	540	120	
218-01-9	Chrysene	~~U~~	360	1.0	330	360	100	
117-81-7	bis(2-Ethylhexyl)phthalate	~~U~~	360	1.0	330	360	100	
117-84-0	Di-n-octylphthalate	~~U~~	360	1.0	330	360	230	
367-12-4	2-Fluorophenol		68%					
13127-88-3	Phenol-D6		71%					
4165-60-0	Nitrobenzene-D5		69%					
321-60-8	2-Fluorobiphenyl		73%					
118-79-6	2,4,6-Tribromophenol		77%					
1718-51-0	Terphenyl-D14		97%					

R RE

LW 3/6/09

KATAHDIN ANALYTICAL SERVICES
Report of Analytical Results

Client: CH2MHill
Project: TO-009 Lejeune
PO No:
Sample Date: 12/20/08
Received Date: 12/23/08
Extraction Date: 12/29/08
Analysis Date: 15-JAN-2009 18:58
Report Date: 01/22/2009
Matrix: SOIL
% Solids: 84.8

Lab ID: SB7367-23
Client ID: MR08-IS165-5-6-08D
SDG: TO9-22
Extracted by: CB
Extraction Method: SW846 3550
Analyst: JCG
Analysis Method: SW846 8270C
Lab Prep Batch: WG59460
Units: ug/Kgdrywt

CAS#	Compound	Flags		Results	DF	PQL	Adj.PQL	Adj.MDL	
100-52-7	Benzaldehyde	U	UJ	590	1.0	500	590	140	SSL
108-95-2	Phenol	U		590	1.0	500	590	180	
111-44-4	Bis(2-Chloroethyl)ether	U		390	1.0	330	390	95	
95-57-8	2-Chlorophenol	U		590	1.0	500	590	190	
95-48-7	2-Methylphenol	U		710	1.0	600	710	240	
108-60-1	2,2'-Oxybis(1-chloropropane)	U		390	1.0	330	390	100	
98-86-2	Acetophenone	U		710	1.0	600	710	210	
621-64-7	N-Nitroso-di-n-propylamine	U		390	1.0	330	390	98	
65794-96-9	3&4-Methylphenol	U		710	1.0	600	710	220	
67-72-1	Hexachloroethane	U		390	1.0	330	390	110	
98-95-3	Nitrobenzene	U		390	1.0	330	390	110	
78-59-1	Isophorone	U		390	1.0	330	390	88	
88-75-5	2-Nitrophenol	U		710	1.0	600	710	200	
105-67-9	2,4-Dimethylphenol	U		590	1.0	500	590	190	
111-91-1	Bis(2-Chloroethoxy)methane	U		390	1.0	330	390	110	
120-83-2	2,4-Dichlorophenol	U		590	1.0	500	590	180	
106-47-8	4-Chloroaniline	U		590	1.0	500	590	140	
105-60-2	Caprolactam	U		590	1.0	500	590	170	
59-50-7	4-Chloro-3-Methylphenol	U		590	1.0	500	590	200	
88-06-2	2,4,6-Trichlorophenol	U		590	1.0	500	590	180	
95-95-4	2,4,5-Trichlorophenol	U		590	1.0	500	590	180	
91-58-7	2-Chloronaphthalene	U		390	1.0	330	390	100	
92-52-4	1,1'-Biphenyl	U		390	1.0	330	390	86	
88-74-4	2-Nitroaniline	U		590	1.0	500	590	88	
131-11-3	Dimethyl Phthalate	U		390	1.0	330	390	92	
606-20-2	2,6-Dinitrotoluene	U		390	1.0	330	390	93	
208-96-8	Acenaphthylene	U		390	1.0	330	390	82	
99-09-2	3-Nitroaniline	U		590	1.0	500	590	110	
83-32-9	Acenaphthene	U		390	1.0	330	390	77	
51-28-5	2,4-Dinitrophenol	U		1400	1.0	1200	1400	440	
132-64-9	Dibenzofuran	U		390	1.0	330	390	93	
100-02-7	4-Nitrophenol	U		1400	1.0	1200	1400	360	
121-14-2	2,4-Dinitrotoluene	U		390	1.0	330	390	100	
84-66-2	Diethylphthalate	U		390	1.0	330	390	94	
7005-72-3	4-Chlorophenyl-phenylether	U		390	1.0	330	390	92	
100-01-6	4-Nitroaniline	U		590	1.0	500	590	160	
534-52-1	4,6-Dinitro-2-Methylphenol	U		1400	1.0	1200	1400	400	
86-30-6	N-Nitrosodiphenylamine	U		780	1.0	660	780	260	
101-55-3	4-Bromophenyl-phenylether	U		390	1.0	330	390	100	
1912-24-9	Atrazine	U		390	1.0	330	390	110	
87-86-5	Pentachlorophenol	U		970	1.0	820	970	280	
120-12-7	Anthracene	U		390	1.0	330	390	99	
86-74-8	Carbazole	U		590	1.0	500	590	130	

LW 31609

KATAHDIN ANALYTICAL SERVICES
Report of Analytical Results

Client: CH2MHill
Project: TO-009 Lejeune
PO No:
Sample Date: 12/20/08
Received Date: 12/23/08
Extraction Date: 12/29/08
Analysis Date: 15-JAN-2009 18:58
Report Date: 01/22/2009
Matrix: SOIL
% Solids: 84.8

Lab ID: SB7367-23
Client ID: MR08-IS165-5-6-08D
SDG: TO9-22
Extracted by: CB
Extraction Method: SW846 3550
Analyst: JCG
Analysis Method: SW846 8270C
Lab Prep Batch: WG59460
Units: ug/Kgdrywt

CAS#	Compound	Flags	Results	DF	PQL	Adj.PQL	Adj.MDL
84-74-2	Di-n-butylphthalate	U UJ	390	1.0	330	390	120 SSL
85-68-7	Butylbenzylphthalate	U	390	1.0	330	390	110
91-94-1	3,3'-Dichlorobenzidine	U	590	1.0	500	590	130
218-01-9	Chrysene	U	390	1.0	330	390	110
117-81-7	bis(2-Ethylhexyl)phthalate	U	390	1.0	330	390	120
117-84-0	Di-n-octylphthalate	U	390	1.0	330	390	250
367-12-4	2-Fluorophenol		* 21%				
13127-88-3	Phenol-D6		* 23%				
4165-60-0	Nitrobenzene-D5		* 15%				
321-60-8	2-Fluorobiphenyl		* 28%				
118-79-6	2,4,6-Tribromophenol		54%				
1718-51-0	Terphenyl-D14		66%				

UW 3/6/09

19RE

KATAHDIN ANALYTICAL SERVICES
Report of Analytical Results

Client: CH2MHill
Project: TO-009 Lejeune
PO No:
Sample Date: 12/20/08
Received Date: 12/23/08
Extraction Date: 01/14/09
Analysis Date: 16-JAN-2009 11:58
Report Date: 01/22/2009
Matrix: SOIL
% Solids: 84.8

Lab ID: SB7367-23RE
Client ID: MR08-IS165-5-6-08D
SDG: TO9-22
Extracted by: AC
Extraction Method: SW846 3550
Analyst: JLP
Analysis Method: SW846 8270C
Lab Prep Batch: WG59785
Units: ug/Kgdrywt

Use original

CAS#	Compound	Flags	Results	DF	PQL	Adj.PQL	Adj.MDL
100-52-7	Benzaldehyde	U UJ	590	1.0	500	590	140 HT
108-95-2	Phenol	U	590	1.0	500	590	180
111-44-4	Bis(2-Chloroethyl)ether	U	390	1.0	330	390	95
95-57-8	2-Chlorophenol	U	590	1.0	500	590	190
95-48-7	2-Methylphenol	U	710	1.0	600	710	240
108-60-1	2,2'-Oxybis(1-chloropropane)	U	390	1.0	330	390	100
98-86-2	Acetophenone	U	710	1.0	600	710	210
621-64-7	N-Nitroso-di-n-propylamine	U	390	1.0	330	390	98
65794-96-9	3&4-Methylphenol	U	710	1.0	600	710	220
67-72-1	Hexachloroethane	U	390	1.0	330	390	110
98-95-3	Nitrobenzene	U	390	1.0	330	390	110
78-59-1	Isophorone	U	390	1.0	330	390	88
88-75-5	2-Nitrophenol	U	710	1.0	600	710	200
105-67-9	2,4-Dimethylphenol	U	590	1.0	500	590	190
111-91-1	Bis(2-Chloroethoxy)methane	U	390	1.0	330	390	110
120-83-2	2,4-Dichlorophenol	U	590	1.0	500	590	180
106-47-8	4-Chloroaniline	U	590	1.0	500	590	140
105-60-2	Caprolactam	U	590	1.0	500	590	170
59-50-7	4-Chloro-3-Methylphenol	U	590	1.0	500	590	200
88-06-2	2,4,6-Trichlorophenol	U	590	1.0	500	590	180
95-95-4	2,4,5-Trichlorophenol	U	590	1.0	500	590	180
91-58-7	2-Chloronaphthalene	U	390	1.0	330	390	100
92-52-4	1,1'-Biphenyl	U	390	1.0	330	390	86
88-74-4	2-Nitroaniline	U	590	1.0	500	590	88
131-11-3	Dimethyl Phthalate	U	390	1.0	330	390	92
606-20-2	2,6-Dinitrotoluene	U	390	1.0	330	390	93
208-96-8	Acenaphthylene	U	390	1.0	330	390	82
99-09-2	3-Nitroaniline	U	590	1.0	500	590	110
83-32-9	Acenaphthene	U	390	1.0	330	390	77
51-28-5	2,4-Dinitrophenol	U	1400	1.0	1200	1400	440
132-64-9	Dibenzofuran	U	390	1.0	330	390	93
100-02-7	4-Nitrophenol	U	1400	1.0	1200	1400	360
121-14-2	2,4-Dinitrotoluene	U	390	1.0	330	390	100
84-66-2	Diethylphthalate	U	390	1.0	330	390	94
7005-72-3	4-Chlorophenyl-phenylether	U	390	1.0	330	390	92
100-01-6	4-Nitroaniline	U	590	1.0	500	590	160
534-52-1	4,6-Dinitro-2-Methylphenol	U	1400	1.0	1200	1400	400
86-30-6	N-Nitrosodiphenylamine	U	780	1.0	660	780	260
101-55-3	4-Bromophenyl-phenylether	U	390	1.0	330	390	100
1912-24-9	Atrazine	U	390	1.0	330	390	110
87-86-5	Pentachlorophenol	U	970	1.0	820	970	280
120-12-7	Anthracene	U	390	1.0	330	390	99
86-74-8	Carbazole	U	590	1.0	500	590	130

R RE

LW 3/6/09

19RE

KATAHDIN ANALYTICAL SERVICES
Report of Analytical Results

Client: CH2MHill
Project: TO-009 Lejeune
PO No:
Sample Date: 12/20/08
Received Date: 12/23/08
Extraction Date: 01/14/09
Analysis Date: 16-JAN-2009 11:58
Report Date: 01/22/2009
Matrix: SOIL
% Solids: 84.8

Lab ID: SB7367-23RE
Client ID: MR08-IS165-5-6-08D
SDG: TO9-22
Extracted by: AC
Extraction Method: SW846 3550
Analyst: JLP
Analysis Method: SW846 8270C
Lab Prep Batch: WG59785
Units: ug/Kgdrywt

Use original

CAS#	Compound	Flags	Results	DF	PQL	Adj.PQL	Adj.MDL
84-74-2	Di-n-butylphthalate	U	390	1.0	330	390	120
85-68-7	Butylbenzylphthalate	U	390	1.0	330	390	110
91-94-1	3,3'-Dichlorobenzidine	U	590	1.0	500	590	130
218-01-9	Chrysene	U	390	1.0	330	390	110
117-81-7	bis(2-Ethylhexyl)phthalate	U	390	1.0	330	390	120
117-84-0	Di-n-octylphthalate	U	390	1.0	330	390	250
367-12-4	2-Fluorophenol		63%				
13127-88-3	Phenol-D6		62%				
4165-60-0	Nitrobenzene-D5		62%				
321-60-8	2-Fluorobiphenyl		65%				
118-79-6	2,4,6-Tribromophenol		49%				
1718-51-0	Terphenyl-D14		74%				

ug

HT

R RE

fw 3/6/09

KATAHDIN ANALYTICAL SERVICES
Report of Analytical Results

Client: CH2MHill
Project: TO-009 Lejeune
PO No:
Sample Date: 12/20/08
Received Date: 12/23/08
Extraction Date: 12/29/08
Analysis Date: 16-JAN-2009 10:33
Report Date: 01/22/2009
Matrix: SOIL
% Solids: 91.7

Lab ID: SB7367-25
Client ID: MR08-SS166-08D
SDG: TO9-22
Extracted by: CB
Extraction Method: SW846 3550
Analyst: JLP
Analysis Method: SW846 8270C
Lab Prep Batch: WG59460
Units: ug/Kgdrywt

CAS#	Compound	Flags	Results	DF	PQL	Adj.PQL	Adj.MDL	
100-52-7	Benzaldehyde	~~J~~ J	490	1.0	500	540	130	ICB
108-95-2	Phenol	U	540	1.0	500	540	170	
111-44-4	Bis(2-Chloroethyl)ether	~~U~~ UJ	360	1.0	330	360	88	BSL
95-57-8	2-Chlorophenol	U	540	1.0	500	540	180	
95-48-7	2-Methylphenol	U	650	1.0	600	650	220	
108-60-1	2,2'-Oxybis(1-chloropropane)	U	360	1.0	330	360	97	
98-86-2	Acetophenone	~~U~~ UJ	650	1.0	600	650	190	BSL
621-64-7	N-Nitroso-di-n-propylamine	U	360	1.0	330	360	90	
65794-96-9	3&4-Methylphenol	U	650	1.0	600	650	200	
67-72-1	Hexachloroethane	~~U~~ UJ	360	1.0	330	360	100	BSL
98-95-3	Nitrobenzene	U	360	1.0	330	360	99	
78-59-1	Isophorone	U	360	1.0	330	360	82	
88-75-5	2-Nitrophenol	U	650	1.0	600	650	180	
105-67-9	2,4-Dimethylphenol	~~U~~ UJ	540	1.0	500	540	180	BSL
111-91-1	Bis(2-Chloroethoxy)methane	U	360	1.0	330	360	100	
120-83-2	2,4-Dichlorophenol	U	540	1.0	500	540	160	
106-47-8	4-Chloroaniline	U	540	1.0	500	540	130	
105-60-2	Caprolactam	U	540	1.0	500	540	160	
59-50-7	4-Chloro-3-Methylphenol	U	540	1.0	500	540	180	
88-06-2	2,4,6-Trichlorophenol	U	540	1.0	500	540	170	
95-95-4	2,4,5-Trichlorophenol	U	540	1.0	500	540	170	
91-58-7	2-Chloronaphthalene	U	360	1.0	330	360	95	
92-52-4	1,1'-Biphenyl	U	360	1.0	330	360	80	
88-74-4	2-Nitroaniline	U	540	1.0	500	540	82	
131-11-3	Dimethyl Phthalate	U	360	1.0	330	360	85	
606-20-2	2,6-Dinitrotoluene	U	360	1.0	330	360	86	
208-96-8	Acenaphthylene	U	360	1.0	330	360	76	
99-09-2	3-Nitroaniline	U	540	1.0	500	540	100	
83-32-9	Acenaphthene	U	360	1.0	330	360	71	
51-28-5	2,4-Dinitrophenol	U	1300	1.0	1200	1300	410	
132-64-9	Dibenzofuran	U	360	1.0	330	360	86	
100-02-7	4-Nitrophenol	U	1300	1.0	1200	1300	340	
121-14-2	2,4-Dinitrotoluene	U	360	1.0	330	360	93	
84-66-2	Diethylphthalate	U	360	1.0	330	360	87	
7005-72-3	4-Chlorophenyl-phenylether	U	360	1.0	330	360	85	
100-01-6	4-Nitroaniline	~~U~~ UJ	540	1.0	500	540	150	CCH
534-52-1	4,6-Dinitro-2-Methylphenol	U	1300	1.0	1200	1300	370	
86-30-6	N-Nitrosodiphenylamine	U	720	1.0	660	720	240	
101-55-3	4-Bromophenyl-phenylether	U	360	1.0	330	360	93	
1912-24-9	Atrazine	U	360	1.0	330	360	99	
87-86-5	Pentachlorophenol	U	890	1.0	820	890	260	
120-12-7	Anthracene	U	360	1.0	330	360	92	
86-74-8	Carbazole	U	540	1.0	500	540	120	

lcw 3/6/09

KATAHDIN ANALYTICAL SERVICES
Report of Analytical Results

Client: CH2MHill
Project: TO-009 Lejeune
PO No:
Sample Date: 12/20/08
Received Date: 12/23/08
Extraction Date: 12/29/08
Analysis Date: 16-JAN-2009 10:33
Report Date: 01/22/2009
Matrix: SOIL
% Solids: 91.7

Lab ID: SB7367-25
Client ID: MR08-SS166-08D
SDG: TO9-22
Extracted by: CB
Extraction Method: SW846 3550
Analyst: JLP
Analysis Method: SW846 8270C
Lab Prep Batch: WG59460
Units: ug/Kgdrywt

CAS#	Compound	Flags	Results	DF	PQL	Adj.PQL	Adj.MDL
84-74-2	Di-n-butylphthalate	U	360	1.0	330	360	110
85-68-7	Butylbenzylphthalate	U	360	1.0	330	360	100
91-94-1	3,3'-Dichlorobenzidine	U	540	1.0	500	540	120
218-01-9	Chrysene	U	360	1.0	330	360	100
117-81-7	bis(2-Ethylhexyl)phthalate	U	360	1.0	330	360	110
117-84-0	Di-n-octylphthalate	U	360	1.0	330	360	230
367-12-4	2-Fluorophenol		49%				
13127-88-3	Phenol-D6		54%				
4165-60-0	Nitrobenzene-D5		68%				
321-60-8	2-Fluorobiphenyl		71%				
118-79-6	2,4,6-Tribromophenol		* 25%				
1718-51-0	Terphenyl-D14		79%				

JCW
3/6/09

20RE

KATAHDIN ANALYTICAL SERVICES
Report of Analytical Results

Client: CH2MHill
Project: TO-009 Lejeune
PO No:
Sample Date: 12/20/08
Received Date: 12/23/08
Extraction Date: 01/20/09
Analysis Date: 22-JAN-2009 01:00
Report Date: 01/22/2009
Matrix: SOIL
% Solids: 91.7

Lab ID: SB7367-25RE
Client ID: MR08-SS166-08D
SDG: TO9-22
Extracted by: AC
Extraction Method: SW846 3550
Analyst: JCG
Analysis Method: SW846 8270C
Lab Prep Batch: WG59975
Units: ug/Kgdrywt

Use original

CAS#	Compound	Flags	Results	DF	PQL	Adj.PQL	Adj.MDL
100-52-7	Benzaldehyde	U	540	1.0	500	540	130
108-95-2	Phenol	U	540	1.0	500	540	170
111-44-4	Bis(2-Chloroethyl)ether	U	360	1.0	330	360	88
95-57-8	2-Chlorophenol	U	540	1.0	500	540	180
95-48-7	2-Methylphenol	U	650	1.0	600	650	220
108-60-1	2,2'-Oxybis(1-chloropropane)	U	360	1.0	330	360	97
98-86-2	Acetophenone	U	650	1.0	600	650	190
621-64-7	N-Nitroso-di-n-propylamine	U	360	1.0	330	360	90
65794-96-9	3&4-Methylphenol	U	650	1.0	600	650	200
67-72-1	Hexachloroethane	U	360	1.0	330	360	100
98-95-3	Nitrobenzene	U	360	1.0	330	360	99
78-59-1	Isophorone	U	360	1.0	330	360	82
88-75-5	2-Nitrophenol	U	650	1.0	600	650	180
105-67-9	2,4-Dimethylphenol	U	540	1.0	500	540	180
111-91-1	Bis(2-Chloroethoxy)methane	U	360	1.0	330	360	100
120-83-2	2,4-Dichlorophenol	U	540	1.0	500	540	160
106-47-8	4-Chloroaniline	U	540	1.0	500	540	130
105-60-2	Caprolactam	U	540	1.0	500	540	160
59-50-7	4-Chloro-3-Methylphenol	U	540	1.0	500	540	180
88-06-2	2,4,6-Trichlorophenol	U	540	1.0	500	540	170
95-95-4	2,4,5-Trichlorophenol	U	540	1.0	500	540	170
91-58-7	2-Chloronaphthalene	U	360	1.0	330	360	95
92-52-4	1,1'-Biphenyl	U	360	1.0	330	360	80
88-74-4	2-Nitroaniline	U	540	1.0	500	540	82
131-11-3	Dimethyl Phthalate	U	360	1.0	330	360	85
606-20-2	2,6-Dinitrotoluene	U	360	1.0	330	360	86
208-96-8	Acenaphthylene	U	360	1.0	330	360	76
99-09-2	3-Nitroaniline	U	540	1.0	500	540	100
83-32-9	Acenaphthene	U	360	1.0	330	360	71
51-28-5	2,4-Dinitrophenol	U	1300	1.0	1200	1300	410
132-64-9	Dibenzofuran	U	360	1.0	330	360	86
100-02-7	4-Nitrophenol	U	1300	1.0	1200	1300	340
121-14-2	2,4-Dinitrotoluene	U	360	1.0	330	360	93
84-66-2	Diethylphthalate	U	360	1.0	330	360	87
7005-72-3	4-Chlorophenyl-phenylether	U	360	1.0	330	360	85
100-01-6	4-Nitroaniline	U	540	1.0	500	540	150
534-52-1	4,6-Dinitro-2-Methylphenol	U	1300	1.0	1200	1300	370
86-30-6	N-Nitrosodiphenylamine	U	720	1.0	660	720	240
101-55-3	4-Bromophenyl-phenylether	U	360	1.0	330	360	93
1912-24-9	Atrazine	U	360	1.0	330	360	99
87-86-5	Pentachlorophenol	U	890	1.0	820	890	260
120-12-7	Anthracene	U	360	1.0	330	360	92
86-74-8	Carbazole	U	540	1.0	500	540	120

R RE R HT

lw 3/6/09

20RE

KATAHDIN ANALYTICAL SERVICES
Report of Analytical Results

Client: CH2MHill
Project: TO-009 Lejeune
PO No:
Sample Date: 12/20/08
Received Date: 12/23/08
Extraction Date: 01/20/09
Analysis Date: 22-JAN-2009 01:00
Report Date: 01/22/2009
Matrix: SOIL
% Solids: 91.7

Lab ID: SB7367-25RE
Client ID: MR08-SS166-08D
SDG: TO9-22
Extracted by: AC
Extraction Method: SW846 3550
Analyst: JCG
Analysis Method: SW846 8270C
Lab Prep Batch: WG59975
Units: ug/Kgdrywt

Use ORIGINAL

CAS#	Compound	Flags	Results	DF	PQL	Adj.PQL	Adj.MDL
84-74-2	Di-n-butylphthalate	~~U~~ R	360	1.0	330	360	110 HT
85-68-7	Butylbenzylphthalate	~~U~~	360	1.0	330	360	100
91-94-1	3,3'-Dichlorobenzidine	~~U~~	540	1.0	500	540	120
218-01-9	Chrysene	~~U~~	360	1.0	330	360	100
117-81-7	bis(2-Ethylhexyl)phthalate	~~U~~	360	1.0	330	360	110
117-84-0	Di-n-octylphthalate	~~U~~	360	1.0	330	360	230
367-12-4	2-Fluorophenol		68%				
13127-88-3	Phenol-D6		71%				
4165-60-0	Nitrobenzene-D5		65%				
321-60-8	2-Fluorobiphenyl		75%				
118-79-6	2,4,6-Tribromophenol		86%				
1718-51-0	Terphenyl-D14		110%				

R RE

3/6/09

ENVIRONMENTAL
Data Services, Inc.

POLYNUCLEAR AROMATIC COMPOUNDS BY 8270SIM

USEPA Region IV - Level IV Review

Site: MCB Camp Lejeune, TO-09 SDG #: TO9-23

Client: CH2M HILL, Inc., Virginia Beach, Virginia Date: March 6, 2009

Laboratory: Katahdin Analytical Services, Scarborough, Maine Reviewer: Nancy Weaver

EDS ID	Client Sample ID	Laboratory Sample ID	Matrix
1	MR08-IS166-5-6-08D	SB7368-2	Soil
2	MR08-SS173-08D	SB7368-4	Soil
3	MR08-IS173-5-6-08D	SB7368-6	Soil
4	MR08-SS174-08D	SB7368-8	Soil
5	MR08-IS174-5-6-08D	SB7368-10	Soil
6	MR08-SS167-08D	SB7368-12	Soil
7	MR08-IS167-2-3-08D	SB7368-14	Soil
8	MR08-SS172-08D	SB7368-16	Soil
8RE	MR08-SS172-08DRE	SB7368-16RE	Soil
9	MR08-IS172-1-2-08D	SB7368-18	Soil
10	MR08-SS191-08D	SB7368-20	Soil
11	MR08-IS191-2-3-08D	SB7368-22	Soil
12	MR08-SS190-08D	SB7368-24	Soil
13	MR08-IS190-1-2-08D	SB7368-26	Soil
14	MR08-SS189-08D	SB7368-28	Soil
15	MR08-SS189D-08D	SB7368-30	Soil
16	MR08-IS189-3-4-08D	SB7368-32	Soil
17	MR08-IS189D-3-4-08D	SB7368-34	Soil
18	MR08-SS199-08D	SB7368-36	Soil
19	MR08-SS199D-08D	SB7368-38	Soil
20	MR08-IS199-1-2-08D	SB7368-40	Soil

The USEPA "Contract Laboratory Program National Functional Guidelines for Organic Data Review," October 1999, and professional judgment were used in evaluating the data in this summary report.

Holding Times - All samples were extracted within 14 days for soil samples and analyzed within 40 days for all samples except the following.

Sample	Date Sampled	Date Extracted	# of Days	Qualifier
8RE	12/20/08	01/14/09	25	J/UJ

GC/MS Tuning - All of the DFTPP tunes in the initial and continuing calibrations met the percent relative abundance criteria.

Initial Calibration - The initial calibrations exhibited acceptable %RSD and mean RRF values.

Continuing Calibration - The continuing calibrations exhibited acceptable %D and RRF values except the following.

CCAL Date	Compound	%D/RRF	Qualifier	Affected Samples
01/12/09	Hexachlorobenzene	26.54%	J/UJ	1, 2, 4-6
	Hexachlorocyclopentadiene	47.73%	J/UJ	1, 2, 4-6
01/13/09	2-Methylnaphthalene	25.73%	J/UJ	3, 7, 9-12
	Fluoranthene	25.43%	J/UJ	3, 7, 9-12
	Indeno (1,2,3-cd) pyrene	29.24%	J/UJ	3, 7, 9-12
	Benzo (g,h,i) perylene	33.14%	J/UJ	3, 7, 9-12
	Hexachlorocyclopentadiene	50.72%	J/UJ	3, 7, 9-12
01/15/09	Several	High %D	None	Already qualified due to HT
01/16/09	2-Methylnaphthalene	34.60%	J/UJ	13-20
	Fluoranthene	43.38%	J/UJ	13-20
	Hexachlorobutadiene	52.77%	J/UJ	13-20
	Hexachlorocyclopentadiene	58.85%	J/UJ	13-20

Surrogates - All samples exhibited acceptable surrogate recoveries except the following.

Sample ID	Surrogate	%R	Qualifier
8	S1-2-Methylnaphthalene-d10	0%	J/R
	S2-2,4-Dibromophenol	0%	J/R
	S3-Fluorene-d10	0%	J/R
	S4-Pyrene-d10	0%	J/R
14	S1-2-Methylnaphthalene-d10	132%	None for 1 out
18	S1-2-Methylnaphthalene-d10	130%	None for 1 out

MS/MSD - A MS/MSD sample was not analyzed.

Laboratory Control Sample - The LCS samples exhibited acceptable %R values except the following.

LCS ID	Compound	%R	Qualifier	Affected Samples
WG59461-LCS	Pyrene	118%	J	2, 4, 6, 10, 11
	Benzo (k) fluoranthene	136%	J	2, 10
WG59476-LCS	Naphthalene	116%	None	All associated ND
	2-Methylnaphthalene	140%	None	All associated ND
	Hexachlorobutadiene	154%	None	All associated ND
WG59786	Naphthalene	107%	None	All associated ND

Internal Standard (IS) Area Performance - All internal standards met response and retention time (RT) criteria.

Method Blank - The method blanks were free of contamination.

Field, Equipment Blank - Field QC results are summarized below.

Blank ID	Compound	Conc. ug/L	Action Level ug/kg	Qualifier	Affected Samples
MR08-EB01-122008	Hexachlorocyclopentadiene	0.12	10	None	See FB
MR08-EB01-122108	Hexachlorocyclopentadiene	0.096	8.0	None	See FB
MR08-FB122008	Hexachlorocyclopentadiene	0.15	12.5	U	2

Field Duplicates - Field duplicate results are summarized below.

Compound	MR08-SS189-08D ug/kg	MR08-SS189D-08D ug/kg	RPD	Qualifier
Fluoranthene	4.4	3.8	15%	None
Pyrene	3.4	2.7	23%	None
Benzo (b) fluoranthene	6.6	10 U	NC	None

Compound	MR08-IS189-3-4-08D ug/kg	MR08-IS189D-3-4-08D ug/kg	RPD	Qualifier
None	ND	ND	-	-

Compound	MR08-SS199-08D ug/kg	MR08-SS199D-08D ug/kg	RPD	Qualifier
Phenanthrene	5.9	8.0	30%	None
Fluoranthene	53	61	14%	None
Pyrene	41	45	9%	None
Benzo (a) anthracene	20	21	5%	None
Benzo (b) fluoranthene	54	64	17%	None
Benzo (k) fluoranthene	29	32	10%	None
Benzo (a) pyrene	25	31	21%	None
Indeno (1,2,3-cd) pyrene	15	20	29%	None
Dibenzo (a,h) anthracene	5.6	8.2	38%	None
Benzo (g,h,i) perylene	14	18	25%	None

Compound	MR08-IS199-1-2-08D ug/kg	MR08-IS199D-1-2-08D (TO9-24) ug/kg	RPD	Qualifier
Phenanthrene	3.8	11U	NC	None
Fluoranthene	38	8.6	126%	None
Pyrene	51	10	134%	None
Benzo (a) anthracene	32	5.3	143%	None

Compound	MR08-IS199-1-2-08D ug/kg	MR08-IS199D-1-2-08D (TO9-24) ug/kg	RPD	Qualifier
Benzo (b) fluoranthene	53	11 U	NC	None
Benzo (k) fluoranthene	35	11 U	NC	None
Benzo (a) pyrene	30	11 U	NC	None
Indeno (1,2,3-cd) pyrene	21	3.1	149%	None
Benzo (g,h,i) perylene	20	4.8	123%	None

Tentatively Identified Compounds (TICs) - TICs were not reported.

Compound Quantitation - EDS sample ID# 8 exhibited surrogate deficiencies and reanalyzed due to the laboratory outside of the holding time. The reanalysis Form Is should be used for reporting purposes.

KATAHDIN ANALYTICAL SERVICES
Report of Analytical Results

Client: CH2MHill
Project: TO-009 Lejeune
PO No:
Sample Date: 12/20/08
Received Date: 12/23/08
Extraction Date: 12/29/08
Analysis Date: 13-JAN-2009 02:24
Report Date: 01/19/2009
Matrix: SOIL
% Solids: 85.0

Lab ID: SB7368-2
Client ID: MR08-IS166-5-6-08D
SDG: TO9-23
Extracted by: CB
Extraction Method: SW846 3550
Analyst: JCG
Analysis Method: SW846 M8270C
Lab Prep Batch: WG59461
Units: ug/Kgdrywt

CAS#	Compound	Flags	Results	DF	PQL	Adj.PQL	Adj.MDL	
91-20-3	Naphthalene	U	12	1.0	10	12	3.1	
91-57-6	2-Methylnaphthalene	U	12	1.0	10	12	2.6	
86-73-7	Fluorene	U	12	1.0	10	12	3.8	
85-01-8	Phenanthrene	U	12	1.0	10	12	2.1	
206-44-0	Fluoranthene	U	12	1.0	10	12	2.1	
129-00-0	Pyrene	U	12	1.0	10	12	2.5	
56-55-3	Benzo(a)anthracene	U	12	1.0	10	12	2.2	
205-99-2	Benzo(b)fluoranthene	U	12	1.0	10	12	2.8	
207-08-9	Benzo(k)fluoranthene	U	12	1.0	10	12	3.6	
50-32-8	Benzo(a)pyrene	U	12	1.0	10	12	3.9	
193-39-5	Indeno(1,2,3-cd)pyrene	U	12	1.0	10	12	2.2	
53-70-3	Dibenzo(a,h)anthracene	U	12	1.0	10	12	2.1	
191-24-2	Benzo(g,h,i)perylene	U	12	1.0	10	12	2.4	
118-74-1	Hexachlorobenzene	~~U~~ UJ	12	1.0	10	12	2.1	CCH
87-68-3	Hexachlorobutadiene	U	12	1.0	10	12	2.7	
77-47-4	Hexachlorocyclopentadiene	~~U~~ UJ	12	1.0	10	12	1.8	CCH
7297-45-2	2-Methylnaphthalene-D10		45%					
367-12-4	2,4-Dibromophenol		81%					
81103-79-9	Fluorene-d10		74%					
1718-51-1	Pyrene-D10		82%					

QW 3/6/09

2

KATAHDIN ANALYTICAL SERVICES
Report of Analytical Results

Client: CH2MHill
Project: TO-009 Lejeune
PO No:
Sample Date: 12/20/08
Received Date: 12/23/08
Extraction Date: 12/29/08
Analysis Date: 13-JAN-2009 03:04
Report Date: 01/19/2009
Matrix: SOIL
% Solids: 95.2

Lab ID: SB7368-4
Client ID: MR08-SS173-08D
SDG: TO9-23
Extracted by: CB
Extraction Method: SW846 3550
Analyst: JCG
Analysis Method: SW846 M8270C
Lab Prep Batch: WG59461
Units: ug/Kgdrywt

CAS#	Compound	Flags	Results	DF	PQL	Adj.PQL	Adj.MDL	
91-20-3	Naphthalene		12	1.0	10	10	2.7	
91-57-6	2-Methylnaphthalene		17	1.0	10	10	2.3	
86-73-7	Fluorene		20	1.0	10	10	3.4	
85-01-8	Phenanthrene		27	1.0	10	10	1.9	
206-44-0	Fluoranthene		98	1.0	10	10	1.9	
129-00-0	Pyrene	J	140	1.0	10	10	2.2	BSH
56-55-3	Benzo(a)anthracene		110	1.0	10	10	2.0	
205-99-2	Benzo(b)fluoranthene		120	1.0	10	10	2.5	
207-08-9	Benzo(k)fluoranthene	J	140	1.0	10	10	3.2	BSH
50-32-8	Benzo(a)pyrene		140	1.0	10	10	3.5	
193-39-5	Indeno(1,2,3-cd)pyrene		91	1.0	10	10	2.0	
53-70-3	Dibenzo(a,h)anthracene		50	1.0	10	10	1.9	
191-24-2	Benzo(g,h,i)perylene		95	1.0	10	10	2.1	
118-74-1	Hexachlorobenzene	J	14	1.0	10	10	1.9	CCH
87-68-3	Hexachlorobutadiene		14	1.0	10	10	2.4	
77-47-4	Hexachlorocyclopentadiene	~~J~~ UJ	10	1.0	10	10	1.6	BL CCH
7297-45-2	2-Methylnaphthalene-D10		51%					
367-12-4	2,4-Dibromophenol		80%					
81103-79-9	Fluorene-d10		81%					
1718-51-1	Pyrene-D10		83%					

QW 3/6/09

3

KATAHDIN ANALYTICAL SERVICES
Report of Analytical Results

Client: CH2MHill
Project: TO-009 Lejeune
PO No:
Sample Date: 12/20/08
Received Date: 12/23/08
Extraction Date: 12/29/08
Analysis Date: 13-JAN-2009 13:33
Report Date: 01/22/2009
Matrix: SOIL
% Solids: 93.8

Lab ID: SB7368-6
Client ID: MR08-IS173-5-6-08D
SDG: TO9-23
Extracted by: CB
Extraction Method: SW846 3550
Analyst: JLP
Analysis Method: SW846 M8270C
Lab Prep Batch: WG59461
Units: ug/Kgdrywt

CAS#	Compound	Flags	Results	DF	PQL	Adj.PQL	Adj.MDL	
91-20-3	Naphthalene	U	11	1.0	10	11	2.8	
91-57-6	2-Methylnaphthalene	~~U~~ UJ	11	1.0	10	11	2.3	CCH
86-73-7	Fluorene	U	11	1.0	10	11	3.4	
85-01-8	Phenanthrene	U	11	1.0	10	11	1.9	
206-44-0	Fluoranthene	~~U~~ UJ	11	1.0	10	11	1.9	CCH
129-00-0	Pyrene	U	11	1.0	10	11	2.2	
56-55-3	Benzo(a)anthracene	U	11	1.0	10	11	2.0	
205-99-2	Benzo(b)fluoranthene	U	11	1.0	10	11	2.6	
207-08-9	Benzo(k)fluoranthene	U	11	1.0	10	11	3.3	
50-32-8	Benzo(a)pyrene	U	11	1.0	10	11	3.5	
193-39-5	Indeno(1,2,3-cd)pyrene	~~U~~ UJ	11	1.0	10	11	2.0	CCH
53-70-3	Dibenzo(a,h)anthracene	U	11	1.0	10	11	1.9	
191-24-2	Benzo(g,h,i)perylene	~~U~~ UJ	11	1.0	10	11	2.1	CCH
118-74-1	Hexachlorobenzene	U	11	1.0	10	11	1.9	
87-68-3	Hexachlorobutadiene	U	11	1.0	10	11	2.4	
77-47-4	Hexachlorocyclopentadiene	~~U~~ UJ	11	1.0	10	11	1.6	CCH
7297-45-2	2-Methylnaphthalene-D10		36%					
367-12-4	2,4-Dibromophenol		61%					
81103-79-9	Fluorene-d10		64%					
1718-51-1	Pyrene-D10		78%					

lw 3/6/09

4

KATAHDIN ANALYTICAL SERVICES
Report of Analytical Results

Client: CH2MHill
Project: TO-009 Lejeune
PO No:
Sample Date: 12/20/08
Received Date: 12/23/08
Extraction Date: 12/29/08
Analysis Date: 13-JAN-2009 03:44
Report Date: 01/19/2009
Matrix: SOIL
% Solids: 94.3

Lab ID: SB7368-8
Client ID: MR08-SS174-08D
SDG: TO9-23
Extracted by: CB
Extraction Method: SW846 3550
Analyst: JCG
Analysis Method: SW846 M8270C
Lab Prep Batch: WG59461
Units: ug/Kgdrywt

CAS#	Compound	Flags	Results	DF	PQL	Adj.PQL	Adj.MDL	
91-20-3	Naphthalene	U	11	1.0	10	11	2.8	
91-57-6	2-Methylnaphthalene	U	11	1.0	10	11	2.3	
86-73-7	Fluorene	U	11	1.0	10	11	3.4	
85-01-8	Phenanthrene	J	2.0	1.0	10	11	1.9	
206-44-0	Fluoranthene	J	5.6	1.0	10	11	1.9	
129-00-0	Pyrene	~~J~~ J	6.1	1.0	10	11	2.2	BSH
56-55-3	Benzo(a)anthracene	J	3.1	1.0	10	11	2.0	
205-99-2	Benzo(b)fluoranthene	U	11	1.0	10	11	2.5	
207-08-9	Benzo(k)fluoranthene	U	11	1.0	10	11	3.3	
50-32-8	Benzo(a)pyrene	U	11	1.0	10	11	3.5	
193-39-5	Indeno(1,2,3-cd)pyrene	J	3.6	1.0	10	11	2.0	
53-70-3	Dibenzo(a,h)anthracene	U	11	1.0	10	11	1.9	
191-24-2	Benzo(g,h,i)perylene	J	3.0	1.0	10	11	2.1	
118-74-1	Hexachlorobenzene	~~U~~ UJ	11	1.0	10	11	1.9	CCH
87-68-3	Hexachlorobutadiene	U	11	1.0	10	11	2.4	
77-47-4	Hexachlorocyclopentadiene	~~U~~ UJ	11	1.0	10	11	1.6	CCH
7297-45-2	2-Methylnaphthalene-D10		44%					
367-12-4	2,4-Dibromophenol		78%					
81103-79-9	Fluorene-d10		74%					
1718-51-1	Pyrene-D10		95%					

lw 3/6/09

5

KATAHDIN ANALYTICAL SERVICES
Report of Analytical Results

Client: CH2MHill
Project: TO-009 Lejeune
PO No:
Sample Date: 12/20/08
Received Date: 12/23/08
Extraction Date: 12/29/08
Analysis Date: 13-JAN-2009 04:24
Report Date: 01/19/2009
Matrix: SOIL
% Solids: 91.4

Lab ID: SB7368-10
Client ID: MR08-IS174-5-6-08D
SDG: TO9-23
Extracted by: CB
Extraction Method: SW846 3550
Analyst: JCG
Analysis Method: SW846 M8270C
Lab Prep Batch: WG59461
Units: ug/Kgdrywt

CAS#	Compound	Flags	Results	DF	PQL	Adj.PQL	Adj.MDL	
91-20-3	Naphthalene	U	11	1.0	10	11	2.8	
91-57-6	2-Methylnaphthalene	U	11	1.0	10	11	2.4	
86-73-7	Fluorene	U	11	1.0	10	11	3.5	
85-01-8	Phenanthrene	U	11	1.0	10	11	2.0	
206-44-0	Fluoranthene	U	11	1.0	10	11	2.0	
129-00-0	Pyrene	U	11	1.0	10	11	2.3	
56-55-3	Benzo(a)anthracene	U	11	1.0	10	11	2.1	
205-99-2	Benzo(b)fluoranthene	U	11	1.0	10	11	2.6	
207-08-9	Benzo(k)fluoranthene	U	11	1.0	10	11	3.4	
50-32-8	Benzo(a)pyrene	U	11	1.0	10	11	3.6	
193-39-5	Indeno(1,2,3-cd)pyrene	U	11	1.0	10	11	2.1	
53-70-3	Dibenzo(a,h)anthracene	U	11	1.0	10	11	2.0	
191-24-2	Benzo(g,h,i)perylene	U	11	1.0	10	11	2.2	
118-74-1	Hexachlorobenzene	~~U~~ UJ	11	1.0	10	11	2.0	CCH
87-68-3	Hexachlorobutadiene	U	11	1.0	10	11	2.5	
77-47-4	Hexachlorocyclopentadiene	~~U~~ UJ	11	1.0	10	11	1.6	CCH
7297-45-2	2-Methylnaphthalene-D10		48%					
367-12-4	2,4-Dibromophenol		82%					
81103-79-9	Fluorene-d10		75%					
1718-51-1	Pyrene-D10		86%					

lw 3/6/09

6

KATAHDIN ANALYTICAL SERVICES
Report of Analytical Results

Client: CH2MHill
Project: TO-009 Lejeune
PO No:
Sample Date: 12/20/08
Received Date: 12/23/08
Extraction Date: 12/29/08
Analysis Date: 13-JAN-2009 05:04
Report Date: 01/19/2009
Matrix: SOIL
% Solids: 89.1

Lab ID: SB7368-12
Client ID: MR08-SS167-08D
SDG: TO9-23
Extracted by: CB
Extraction Method: SW846 3550
Analyst: JCG
Analysis Method: SW846 M8270C
Lab Prep Batch: WG59461
Units: ug/Kgdrywt

CAS#	Compound	Flags	Results	DF	PQL	Adj.PQL	Adj.MDL	
91-20-3	Naphthalene	U	11	1.0	10	11	2.9	
91-57-6	2-Methylnaphthalene	U	11	1.0	10	11	2.5	
86-73-7	Fluorene	U	11	1.0	10	11	3.6	
85-01-8	Phenanthrene		16	1.0	10	11	2.0	
206-44-0	Fluoranthene		61	1.0	10	11	2.0	
129-00-0	Pyrene	J	72	1.0	10	11	2.4	BSH
56-55-3	Benzo(a)anthracene		40	1.0	10	11	2.1	
205-99-2	Benzo(b)fluoranthene	U	11	1.0	10	11	2.7	
207-08-9	Benzo(k)fluoranthene	U	11	1.0	10	11	3.5	
50-32-8	Benzo(a)pyrene		58	1.0	10	11	3.7	
193-39-5	Indeno(1,2,3-cd)pyrene		43	1.0	10	11	2.1	
53-70-3	Dibenzo(a,h)anthracene		13	1.0	10	11	2.0	
191-24-2	Benzo(g,h,i)perylene		49	1.0	10	11	2.2	
118-74-1	Hexachlorobenzene	~~J~~ UJ	11	1.0	10	11	2.0	CCH
87-68-3	Hexachlorobutadiene	U	11	1.0	10	11	2.6	
77-47-4	Hexachlorocyclopentadiene	~~J~~ UJ	11	1.0	10	11	1.7	CCH
7297-45-2	2-Methylnaphthalene-D10		54%					
367-12-4	2,4-Dibromophenol		91%					
81103-79-9	Fluorene-d10		89%					
1718-51-1	Pyrene-D10		89%					

MW 3/6/09

7

KATAHDIN ANALYTICAL SERVICES
Report of Analytical Results

Client: CH2MHill
Project: TO-009 Lejeune
PO No:
Sample Date: 12/20/08
Received Date: 12/23/08
Extraction Date: 12/29/08
Analysis Date: 13-JAN-2009 10:12
Report Date: 01/19/2009
Matrix: SOIL
% Solids: 89.0

Lab ID: SB7368-14
Client ID: MR08-IS167-2-3-08D
SDG: TO9-23
Extracted by: CB
Extraction Method: SW846 3550
Analyst: JLP
Analysis Method: SW846 M8270C
Lab Prep Batch: WG59461
Units: ug/Kgdrywt

CAS#	Compound	Flags	Results	DF	PQL	Adj.PQL	Adj.MDL	
91-20-3	Naphthalene	U	11	1.0	10	11	2.9	
91-57-6	2-Methylnaphthalene	~~U~~ UJ	11	1.0	10	11	2.5	CCH
86-73-7	Fluorene	U	11	1.0	10	11	3.6	
85-01-8	Phenanthrene	U	11	1.0	10	11	2.0	
206-44-0	Fluoranthene	~~U~~ UJ	11	1.0	10	11	2.0	CCH
129-00-0	Pyrene	U	11	1.0	10	11	2.4	
56-55-3	Benzo(a)anthracene	U	11	1.0	10	11	2.1	
205-99-2	Benzo(b)fluoranthene	U	11	1.0	10	11	2.7	
207-08-9	Benzo(k)fluoranthene	U	11	1.0	10	11	3.5	
50-32-8	Benzo(a)pyrene	U	11	1.0	10	11	3.7	
193-39-5	Indeno(1,2,3-cd)pyrene	~~U~~ UJ	11	1.0	10	11	2.1	CCH
53-70-3	Dibenzo(a,h)anthracene	U	11	1.0	10	11	2.0	
191-24-2	Benzo(g,h,i)perylene	~~U~~ UJ	11	1.0	10	11	2.2	CCH
118-74-1	Hexachlorobenzene	U	11	1.0	10	11	2.0	
87-68-3	Hexachlorobutadiene	U	11	1.0	10	11	2.6	
77-47-4	Hexachlorocyclopentadiene	~~U~~ UJ	11	1.0	10	11	1.7	CCH
7297-45-2	2-Methylnaphthalene-D10		35%					
367-12-4	2,4-Dibromophenol		67%					
81103-79-9	Fluorene-d10		65%					
1718-51-1	Pyrene-D10		80%					

LW
3/6/09

8

KATAHDIN ANALYTICAL SERVICES
Report of Analytical Results

Client: CH2MHill
Project: TO-009 Lejeune
PO No:
Sample Date: 12/20/08
Received Date: 12/23/08
Extraction Date: 12/29/08
Analysis Date: 13-JAN-2009 10:52
Report Date: 01/19/2009
Matrix: SOIL
% Solids: 90.3

Lab ID: SB7368-16
Client ID: MR08-SS172-08D
SDG: TO9-23
Extracted by: CB
Extraction Method: SW846 3550
Analyst: JLP
Analysis Method: SW846 M8270C
Lab Prep Batch: WG59461
Units: ug/Kgdrywt

Use reanalysis

CAS#	Compound	Flags		Results	DF	PQL	Adj.PQL	Adj.MDL	
91-20-3	Naphthalene	J	J	3.8	1.0	10	11	2.9	SSL
91-57-6	2-Methylnaphthalene	U	R	11	1.0	10	11	2.4	
86-73-7	Fluorene	U	R	11	1.0	10	11	3.5	
85-01-8	Phenanthrene	J	J	7.7	1.0	10	11	2.0	
206-44-0	Fluoranthene			34	1.0	10	11	2.0	
129-00-0	Pyrene			34	1.0	10	11	2.3	
56-55-3	Benzo(a)anthracene			15	1.0	10	11	2.1	
205-99-2	Benzo(b)fluoranthene			44	1.0	10	11	2.6	
207-08-9	Benzo(k)fluoranthene			24	1.0	10	11	3.4	
50-32-8	Benzo(a)pyrene			24	1.0	10	11	3.6	
193-39-5	Indeno(1,2,3-cd)pyrene			18	1.0	10	11	2.1	
53-70-3	Dibenzo(a,h)anthracene	J		5.3	1.0	10	11	2.0	
191-24-2	Benzo(g,h,i)perylene			17	1.0	10	11	2.2	
118-74-1	Hexachlorobenzene	U	R	11	1.0	10	11	2.0	
87-68-3	Hexachlorobutadiene	U		11	1.0	10	11	2.5	
77-47-4	Hexachlorocyclopentadiene	U		11	1.0	10	11	1.7	
7297-45-2	2-Methylnaphthalene-D10			* 0%					
367-12-4	2,4-Dibromophenol			* 0%					
81103-79-9	Fluorene-d10			* 0%					
1718-51-1	Pyrene-D10			* 0%					

RRE

Page 01 of 01 R0724.D

LW
3/6/09

8RE

KATAHDIN ANALYTICAL SERVICES
Report of Analytical Results

Client: CH2MHill
Project: TO-009 Lejeune
PO No:
Sample Date: 12/20/08
Received Date: 12/23/08
Extraction Date: 01/14/09
Analysis Date: 16-JAN-2009 03:40
Report Date: 01/19/2009
Matrix: SOIL
% Solids: 90.3

Lab ID: SB7368-16RE
Client ID: MR08-SS172-08D
SDG: TO9-23
Extracted by: AC
Extraction Method: SW846 3550
Analyst: JCG
Analysis Method: SW846 M8270C
Lab Prep Batch: WG59786
Units: ug/Kgdrywt

CAS#	Compound	Flags		Results	DF	PQL	Adj.PQL	Adj.MDL	
91-20-3	Naphthalene	U	UJ	11	1.0	10	11	2.9	HT
91-57-6	2-Methylnaphthalene	U		11	1.0	10	11	2.4	
86-73-7	Fluorene	U		11	1.0	10	11	3.5	
85-01-8	Phenanthrene	U	J	8.6	1.0	10	11	2.0	
206-44-0	Fluoranthene			42	1.0	10	11	2.0	
129-00-0	Pyrene			42	1.0	10	11	2.3	
56-55-3	Benzo(a)anthracene			15	1.0	10	11	2.1	
205-99-2	Benzo(b)fluoranthene	U	UJ	11	1.0	10	11	2.6	
207-08-9	Benzo(k)fluoranthene	U	UJ	11	1.0	10	11	3.4	
50-32-8	Benzo(a)pyrene		J	23	1.0	10	11	3.6	
193-39-5	Indeno(1,2,3-cd)pyrene			15	1.0	10	11	2.1	
53-70-3	Dibenzo(a,h)anthracene	J		4.7	1.0	10	11	2.0	
191-24-2	Benzo(g,h,i)perylene			17	1.0	10	11	2.2	
118-74-1	Hexachlorobenzene	U	UJ	11	1.0	10	11	2.0	
87-68-3	Hexachlorobutadiene	U		11	1.0	10	11	2.5	
77-47-4	Hexachlorocyclopentadiene	U		11	1.0	10	11	1.7	
7297-45-2	2-Methylnaphthalene-D10			53%					
367-12-4	2,4-Dibromophenol			88%					
81103-79-9	Fluorene-d10			88%					
1718-51-1	Pyrene-D10			122%					

LW 3/6/09

9

KATAHDIN ANALYTICAL SERVICES
Report of Analytical Results

Client: CH2MHill
Project: TO-009 Lejeune
PO No:
Sample Date: 12/20/08
Received Date: 12/23/08
Extraction Date: 12/29/08
Analysis Date: 13-JAN-2009 11:33
Report Date: 01/19/2009
Matrix: SOIL
% Solids: 92.6

Lab ID: SB7368-18
Client ID: MR08-IS172-1-2-08D
SDG: TO9-23
Extracted by: CB
Extraction Method: SW846 3550
Analyst: JLP
Analysis Method: SW846 M8270C
Lab Prep Batch: WG59461
Units: ug/Kgdrywt

CAS#	Compound	Flags	Results	DF	PQL	Adj.PQL	Adj.MDL	
91-20-3	Naphthalene	U	11	1.0	10	11	2.8	
91-57-6	2-Methylnaphthalene	~~U~~ UJ	11	1.0	10	11	2.4	CCH
86-73-7	Fluorene	U	11	1.0	10	11	3.4	
85-01-8	Phenanthrene	U	11	1.0	10	11	1.9	
206-44-0	Fluoranthene	~~U~~ UJ	11	1.0	10	11	1.9	CCH
129-00-0	Pyrene	U	11	1.0	10	11	2.3	
56-55-3	Benzo(a)anthracene	U	11	1.0	10	11	2.0	
205-99-2	Benzo(b)fluoranthene	U	11	1.0	10	11	2.6	
207-08-9	Benzo(k)fluoranthene	U	11	1.0	10	11	3.3	
50-32-8	Benzo(a)pyrene	U	11	1.0	10	11	3.6	
193-39-5	Indeno(1,2,3-cd)pyrene	~~U~~ UJ	11	1.0	10	11	2.0	CCH
53-70-3	Dibenzo(a,h)anthracene	U	11	1.0	10	11	1.9	
191-24-2	Benzo(g,h,i)perylene	~~U~~ UJ	11	1.0	10	11	2.2	CCH
118-74-1	Hexachlorobenzene	U	11	1.0	10	11	1.9	
87-68-3	Hexachlorobutadiene	U	11	1.0	10	11	2.5	
77-47-4	Hexachlorocyclopentadiene	~~U~~ UJ	11	1.0	10	11	1.6	CCH
7297-45-2	2-Methylnaphthalene-D10		37%					
367-12-4	2,4-Dibromophenol		66%					
81103-79-9	Fluorene-d10		62%					
1718-51-1	Pyrene-D10		71%					

MW 3/6/09

KATAHDIN ANALYTICAL SERVICES
Report of Analytical Results

10

Client: CH2MHill
Project: TO-009 Lejeune
PO No:
Sample Date: 12/20/08
Received Date: 12/23/08
Extraction Date: 12/29/08
Analysis Date: 13-JAN-2009 12:13
Report Date: 01/19/2009
Matrix: SOIL
% Solids: 88.2

Lab ID: SB7368-20
Client ID: MR08-SS191-08D
SDG: TO9-23
Extracted by: CB
Extraction Method: SW846 3550
Analyst: JLP
Analysis Method: SW846 M8270C
Lab Prep Batch: WG59461
Units: ug/Kgdrywt

CAS#	Compound	Flags	Results	DF	PQL	Adj.PQL	Adj.MDL	
91-20-3	Naphthalene	J	4.3	1.0	10	11	2.9	
91-57-6	2-Methylnaphthalene	~~U~~ UJ	11	1.0	10	11	2.5	CCH
86-73-7	Fluorene	U	11	1.0	10	11	3.6	
85-01-8	Phenanthrene		13	1.0	10	11	2.0	
206-44-0	Fluoranthene	J	58	1.0	10	11	2.0	CCH
129-00-0	Pyrene	J	61	1.0	10	11	2.4	BSH
56-55-3	Benzo(a)anthracene		29	1.0	10	11	2.2	
205-99-2	Benzo(b)fluoranthene		85	1.0	10	11	2.7	
207-08-9	Benzo(k)fluoranthene	J	52	1.0	10	11	3.5	BSH
50-32-8	Benzo(a)pyrene		46	1.0	10	11	3.7	
193-39-5	Indeno(1,2,3-cd)pyrene	J	30	1.0	10	11	2.2	CCH
53-70-3	Dibenzo(a,h)anthracene	U	11	1.0	10	11	2.0	
191-24-2	Benzo(g,h,i)perylene	J	26	1.0	10	11	2.3	CCH
118-74-1	Hexachlorobenzene	U	11	1.0	10	11	2.0	
87-68-3	Hexachlorobutadiene	U	11	1.0	10	11	2.6	
77-47-4	Hexachlorocyclopentadiene	~~U~~ UJ	11	1.0	10	11	1.7	CCH
7297-45-2	2-Methylnaphthalene-D10		36%					
367-12-4	2,4-Dibromophenol		75%					
81103-79-9	Fluorene-d10		65%					
1718-51-1	Pyrene-D10		63%					

lw 3/6/09

11

KATAHDIN ANALYTICAL SERVICES
Report of Analytical Results

Client: CH2MHill
Project: TO-009 Lejeune
PO No:
Sample Date: 12/20/08
Received Date: 12/23/08
Extraction Date: 12/29/08
Analysis Date: 13-JAN-2009 09:32
Report Date: 01/19/2009
Matrix: SOIL
% Solids: 91.8

Lab ID: SB7368-22
Client ID: MR08-IS191-2-3-08D
SDG: TO9-23
Extracted by: CB
Extraction Method: SW846 3550
Analyst: JLP
Analysis Method: SW846 M8270C
Lab Prep Batch: WG59461
Units: ug/Kgdrywt

CAS#	Compound	Flags	Results	DF	PQL	Adj.PQL	Adj.MDL	
91-20-3	Naphthalene	U	11	1.0	10	11	2.8	
91-57-6	2-Methylnaphthalene	~~U~~ UJ	11	1.0	10	11	2.4	CCH
86-73-7	Fluorene	U	11	1.0	10	11	3.5	
85-01-8	Phenanthrene	J	2.4	1.0	10	11	2.0	
206-44-0	Fluoranthene	~~J~~ J	2.0	1.0	10	11	2.0	CCH
129-00-0	Pyrene	~~J~~ J	2.9	1.0	10	11	2.3	BSH
56-55-3	Benzo(a)anthracene	J	2.7	1.0	10	11	2.1	
205-99-2	Benzo(b)fluoranthene	U	11	1.0	10	11	2.6	
207-08-9	Benzo(k)fluoranthene	U	11	1.0	10	11	3.4	
50-32-8	Benzo(a)pyrene	U	11	1.0	10	11	3.6	
193-39-5	Indeno(1,2,3-cd)pyrene	~~U~~ UJ	11	1.0	10	11	2.1	CCH
53-70-3	Dibenzo(a,h)anthracene	U	11	1.0	10	11	2.0	
191-24-2	Benzo(g,h,i)perylene	~~U~~ UJ	11	1.0	10	11	2.2	CCH
118-74-1	Hexachlorobenzene	U	11	1.0	10	11	2.0	
87-68-3	Hexachlorobutadiene	U	11	1.0	10	11	2.5	
77-47-4	Hexachlorocyclopentadiene	~~U~~ UJ	11	1.0	10	11	1.6	CCH
7297-45-2	2-Methylnaphthalene-D10		36%					
367-12-4	2,4-Dibromophenol		64%					
81103-79-9	Fluorene-d10		69%					
1718-51-1	Pyrene-D10		90%					

3/6/09

12

KATAHDIN ANALYTICAL SERVICES
Report of Analytical Results

Client: CH2MHill
Project: TO-009 Lejeune
PO No:
Sample Date: 12/20/08
Received Date: 12/23/08
Extraction Date: 12/29/08
Analysis Date: 13-JAN-2009 12:53
Report Date: 01/19/2009
Matrix: SOIL
% Solids: 94.7

Lab ID: SB7368-24
Client ID: MR08-SS190-08D
SDG: TO9-23
Extracted by: CB
Extraction Method: SW846 3550
Analyst: JLP
Analysis Method: SW846 M8270C
Lab Prep Batch: WG59461
Units: ug/Kgdrywt

CAS#	Compound	Flags	Results	DF	PQL	Adj.PQL	Adj.MDL	
91-20-3	Naphthalene	U	10	1.0	10	10	2.7	
91-57-6	2-Methylnaphthalene	~~U~~ UJ	10	1.0	10	10	2.3	CCH
86-73-7	Fluorene	U	10	1.0	10	10	3.4	
85-01-8	Phenanthrene	U	10	1.0	10	10	1.9	
206-44-0	Fluoranthene	~~U~~ J	2.3	1.0	10	10	1.9	CCH
129-00-0	Pyrene	U	10	1.0	10	10	2.2	
56-55-3	Benzo(a)anthracene	U	10	1.0	10	10	2.0	
205-99-2	Benzo(b)fluoranthene	U	10	1.0	10	10	2.5	
207-08-9	Benzo(k)fluoranthene	U	10	1.0	10	10	3.3	
50-32-8	Benzo(a)pyrene	U	10	1.0	10	10	3.5	
193-39-5	Indeno(1,2,3-cd)pyrene	~~U~~ UJ	10	1.0	10	10	2.0	CCH
53-70-3	Dibenzo(a,h)anthracene	U	10	1.0	10	10	1.9	
191-24-2	Benzo(g,h,i)perylene	~~U~~ UJ	10	1.0	10	10	2.1	CCH
118-74-1	Hexachlorobenzene	U	10	1.0	10	10	1.9	
87-68-3	Hexachlorobutadiene	U	10	1.0	10	10	2.4	
77-47-4	Hexachlorocyclopentadiene	~~U~~ UJ	10	1.0	10	10	1.6	CCH
7297-45-2	2-Methylnaphthalene-D10		35%					
367-12-4	2,4-Dibromophenol		63%					
81103-79-9	Fluorene-d10		61%					
1718-51-1	Pyrene-D10		65%					

lw 3/6/09

13

KATAHDIN ANALYTICAL SERVICES
Report of Analytical Results

Client: CH2MHill
Project: TO-009 Lejeune
PO No:
Sample Date: 12/20/08
Received Date: 12/23/08
Extraction Date: 12/30/08
Analysis Date: 16-JAN-2009 19:35
Report Date: 01/19/2009
Matrix: SOIL
% Solids: 93.5

Lab ID: SB7368-26
Client ID: MR08-IS190-1-2-08D
SDG: TO9-23
Extracted by: CB
Extraction Method: SW846 3550
Analyst: JCG
Analysis Method: SW846 M8270C
Lab Prep Batch: WG59476
Units: ug/Kgdrywt

CAS#	Compound	Flags	Results	DF	PQL	Adj.PQL	Adj.MDL	
91-20-3	Naphthalene	U	11	1.0	10	11	2.8	
91-57-6	2-Methylnaphthalene	~~U~~ UJ	11	1.0	10	11	2.4	CCH
86-73-7	Fluorene	U	11	1.0	10	11	3.4	
85-01-8	Phenanthrene	U	11	1.0	10	11	1.9	
206-44-0	Fluoranthene	~~U~~ UJ	11	1.0	10	11	1.9	CCH
129-00-0	Pyrene	U	11	1.0	10	11	2.2	
56-55-3	Benzo(a)anthracene	U	11	1.0	10	11	2.0	
205-99-2	Benzo(b)fluoranthene	U	11	1.0	10	11	2.6	
207-08-9	Benzo(k)fluoranthene	U	11	1.0	10	11	3.3	
50-32-8	Benzo(a)pyrene	U	11	1.0	10	11	3.5	
193-39-5	Indeno(1,2,3-cd)pyrene	U	11	1.0	10	11	2.0	
53-70-3	Dibenzo(a,h)anthracene	U	11	1.0	10	11	1.9	
191-24-2	Benzo(g,h,i)perylene	U	11	1.0	10	11	2.1	
118-74-1	Hexachlorobenzene	U	11	1.0	10	11	1.9	
87-68-3	Hexachlorobutadiene	~~U~~ UJ	11	1.0	10	11	2.4	CCH
77-47-4	Hexachlorocyclopentadiene	~~U~~ UJ	11	1.0	10	11	1.6	CCH
7297-45-2	2-Methylnaphthalene-D10		96%					
367-12-4	2,4-Dibromophenol		60%					
81103-79-9	Fluorene-d10		74%					
1718-51-1	Pyrene-D10		94%					

fcw
3/6/09

KATAHDIN ANALYTICAL SERVICES
Report of Analytical Results

Client: CH2MHill
Project: TO-009 Lejeune
PO No:
Sample Date: 12/20/08
Received Date: 12/23/08
Extraction Date: 12/30/08
Analysis Date: 16-JAN-2009 20:15
Report Date: 01/19/2009
Matrix: SOIL
% Solids: 95.9

Lab ID: SB7368-28
Client ID: MR08-SS189-08D
SDG: TO9-23
Extracted by: CB
Extraction Method: SW846 3550
Analyst: JCG
Analysis Method: SW846 M8270C
Lab Prep Batch: WG59476
Units: ug/Kgdrywt

CAS#	Compound	Flags	Results	DF	PQL	Adj.PQL	Adj.MDL	
91-20-3	Naphthalene	U	10	1.0	10	10	2.7	
91-57-6	2-Methylnaphthalene	~~U~~ UJ	10	1.0	10	10	2.3	CCH
86-73-7	Fluorene	U	10	1.0	10	10	3.3	
85-01-8	Phenanthrene	U	10	1.0	10	10	1.9	
206-44-0	Fluoranthene	~~J~~ J	4.4	1.0	10	10	1.9	CCH
129-00-0	Pyrene	J	3.4	1.0	10	10	2.2	
56-55-3	Benzo(a)anthracene	U	10	1.0	10	10	2.0	
205-99-2	Benzo(b)fluoranthene	J	6.6	1.0	10	10	2.5	
207-08-9	Benzo(k)fluoranthene	U	10	1.0	10	10	3.2	
50-32-8	Benzo(a)pyrene	U	10	1.0	10	10	3.4	
193-39-5	Indeno(1,2,3-cd)pyrene	U	10	1.0	10	10	2.0	
53-70-3	Dibenzo(a,h)anthracene	U	10	1.0	10	10	1.9	
191-24-2	Benzo(g,h,i)perylene	U	10	1.0	10	10	2.1	
118-74-1	Hexachlorobenzene	U	10	1.0	10	10	1.9	
87-68-3	Hexachlorobutadiene	~~U~~ UJ	10	1.0	10	10	2.4	CCH
77-47-4	Hexachlorocyclopentadiene	~~U~~ UJ	10	1.0	10	10	1.6	CCH
7297-45-2	2-Methylnaphthalene-D10		*132%					
367-12-4	2,4-Dibromophenol		69%					
81103-79-9	Fluorene-d10		80%					
1718-51-1	Pyrene-D10		95%					

RW
3/6/09

KATAHDIN ANALYTICAL SERVICES
Report of Analytical Results

Client: CH2MHill
Project: TO-009 Lejeune
PO No:
Sample Date: 12/20/08
Received Date: 12/23/08
Extraction Date: 12/30/08
Analysis Date: 16-JAN-2009 20:55
Report Date: 01/19/2009
Matrix: SOIL
% Solids: 95.4

Lab ID: SB7368-30
Client ID: MR08-SS189D-08D
SDG: TO9-23
Extracted by: CB
Extraction Method: SW846 3550
Analyst: JCG
Analysis Method: SW846 M8270C
Lab Prep Batch: WG59476
Units: ug/Kgdrywt

CAS#	Compound	Flags	Results	DF	PQL	Adj.PQL	Adj.MDL	
91-20-3	Naphthalene	U	10	1.0	10	10	2.7	
91-57-6	2-Methylnaphthalene	~~J~~ UJ	10	1.0	10	10	2.3	CCH
86-73-7	Fluorene	U	10	1.0	10	10	3.4	
85-01-8	Phenanthrene	U	10	1.0	10	10	1.9	
206-44-0	Fluoranthene	~~J~~ J	3.8	1.0	10	10	1.9	CCH
129-00-0	Pyrene	J	2.7	1.0	10	10	2.2	
56-55-3	Benzo(a)anthracene	U	10	1.0	10	10	2.0	
205-99-2	Benzo(b)fluoranthene	U	10	1.0	10	10	2.5	
207-08-9	Benzo(k)fluoranthene	U	10	1.0	10	10	3.2	
50-32-8	Benzo(a)pyrene	U	10	1.0	10	10	3.4	
193-39-5	Indeno(1,2,3-cd)pyrene	U	10	1.0	10	10	2.0	
53-70-3	Dibenzo(a,h)anthracene	U	10	1.0	10	10	1.9	
191-24-2	Benzo(g,h,i)perylene	U	10	1.0	10	10	2.1	
118-74-1	Hexachlorobenzene	U	10	1.0	10	10	1.9	
87-68-3	Hexachlorobutadiene	~~U~~ UJ	10	1.0	10	10	2.4	CCH
77-47-4	Hexachlorocyclopentadiene	~~U~~ UJ	10	1.0	10	10	1.6	CCH
7297-45-2	2-Methylnaphthalene-D10		96%					
367-12-4	2,4-Dibromophenol		73%					
81103-79-9	Fluorene-d10		77%					
1718-51-1	Pyrene-D10		90%					

MW 3/6/09

16

KATAHDIN ANALYTICAL SERVICES
Report of Analytical Results

Client: CH2MHill
Project: TO-009 Lejeune
PO No:
Sample Date: 12/20/08
Received Date: 12/23/08
Extraction Date: 12/30/08
Analysis Date: 16-JAN-2009 21:35
Report Date: 01/19/2009
Matrix: SOIL
% Solids: 91.3

Lab ID: SB7368-32
Client ID: MR08-IS189-3-4-08D
SDG: TO9-23
Extracted by: CB
Extraction Method: SW846 3550
Analyst: JCG
Analysis Method: SW846 M8270C
Lab Prep Batch: WG59476
Units: ug/Kgdrywt

CAS#	Compound	Flags	Results	DF	PQL	Adj.PQL	Adj.MDL	
91-20-3	Naphthalene	U	11	1.0	10	11	2.8	
91-57-6	2-Methylnaphthalene	~~U~~ UJ	11	1.0	10	11	2.4	CCH
86-73-7	Fluorene	U	11	1.0	10	11	3.5	
85-01-8	Phenanthrene	U	11	1.0	10	11	2.0	
206-44-0	Fluoranthene	~~U~~ UJ	11	1.0	10	11	2.0	CCH
129-00-0	Pyrene	U	11	1.0	10	11	2.3	
56-55-3	Benzo(a)anthracene	U	11	1.0	10	11	2.1	
205-99-2	Benzo(b)fluoranthene	U	11	1.0	10	11	2.6	
207-08-9	Benzo(k)fluoranthene	U	11	1.0	10	11	3.4	
50-32-8	Benzo(a)pyrene	U	11	1.0	10	11	3.6	
193-39-5	Indeno(1,2,3-cd)pyrene	U	11	1.0	10	11	2.1	
53-70-3	Dibenzo(a,h)anthracene	U	11	1.0	10	11	2.0	
191-24-2	Benzo(g,h,i)perylene	U	11	1.0	10	11	2.2	
118-74-1	Hexachlorobenzene	U	11	1.0	10	11	2.0	
87-68-3	Hexachlorobutadiene	~~U~~ UJ	11	1.0	10	11	2.5	CCH
77-47-4	Hexachlorocyclopentadiene	~~U~~ UJ	11	1.0	10	11	1.6	CCH
7297-45-2	2-Methylnaphthalene-D10		96%					
367-12-4	2,4-Dibromophenol		69%					
81103-79-9	Fluorene-d10		77%					
1718-51-1	Pyrene-D10		96%					

fLW 3/6/09

17

KATAHDIN ANALYTICAL SERVICES
Report of Analytical Results

Client: CH2MHill
Project: TO-009 Lejeune
PO No:
Sample Date: 12/20/08
Received Date: 12/23/08
Extraction Date: 12/30/08
Analysis Date: 16-JAN-2009 22:15
Report Date: 01/19/2009
Matrix: SOIL
% Solids: 91.1

Lab ID: SB7368-34
Client ID: MR08-IS189D-3-4-08D
SDG: TO9-23
Extracted by: CB
Extraction Method: SW846 3550
Analyst: JCG
Analysis Method: SW846 M8270C
Lab Prep Batch: WG59476
Units: ug/Kgdrywt

CAS#	Compound	Flags	Results	DF	PQL	Adj.PQL	Adj.MDL	
91-20-3	Naphthalene	U	11	1.0	10	11	2.8	
91-57-6	2-Methylnaphthalene	~~U~~ UJ	11	1.0	10	11	2.4	CCH
86-73-7	Fluorene	U	11	1.0	10	11	3.5	
85-01-8	Phenanthrene	U	11	1.0	10	11	2.0	
206-44-0	Fluoranthene	~~U~~ UJ	11	1.0	10	11	2.0	CCH
129-00-0	Pyrene	U	11	1.0	10	11	2.3	
56-55-3	Benzo(a)anthracene	U	11	1.0	10	11	2.1	
205-99-2	Benzo(b)fluoranthene	U	11	1.0	10	11	2.6	
207-08-9	Benzo(k)fluoranthene	U	11	1.0	10	11	3.4	
50-32-8	Benzo(a)pyrene	U	11	1.0	10	11	3.6	
193-39-5	Indeno(1,2,3-cd)pyrene	U	11	1.0	10	11	2.1	
53-70-3	Dibenzo(a,h)anthracene	U	11	1.0	10	11	2.0	
191-24-2	Benzo(g,h,i)perylene	U	11	1.0	10	11	2.2	
118-74-1	Hexachlorobenzene	U	11	1.0	10	11	2.0	
87-68-3	Hexachlorobutadiene	~~U~~ UJ	11	1.0	10	11	2.5	CCH
77-47-4	Hexachlorocyclopentadiene	~~U~~ UJ	11	1.0	10	11	1.6	CCH
7297-45-2	2-Methylnaphthalene-D10		110%					
367-12-4	2,4-Dibromophenol		74%					
81103-79-9	Fluorene-d10		80%					
1718-51-1	Pyrene-D10		99%					

MW
3/6/09

KATAHDIN ANALYTICAL SERVICES
Report of Analytical Results

Client: CH2MHill
Project: TO-009 Lejeune
PO No:
Sample Date: 12/21/08
Received Date: 12/23/08
Extraction Date: 12/30/08
Analysis Date: 16-JAN-2009 22:55
Report Date: 01/19/2009
Matrix: SOIL
% Solids: 91.8

Lab ID: SB7368-36
Client ID: MR08-SS199-08D
SDG: TO9-23
Extracted by: CB
Extraction Method: SW846 3550
Analyst: JCG
Analysis Method: SW846 M8270C
Lab Prep Batch: WG59476
Units: ug/Kgdrywt

CAS#	Compound	Flags	Results	DF	PQL	Adj.PQL	Adj.MDL	
91-20-3	Naphthalene	U	11	1.0	10	11	2.8	
91-57-6	2-Methylnaphthalene	~~U~~ UJ	11	1.0	10	11	2.4	CCH
86-73-7	Fluorene	U	11	1.0	10	11	3.5	
85-01-8	Phenanthrene	J	5.9	1.0	10	11	2.0	
206-44-0	Fluoranthene	J	53	1.0	10	11	2.0	CCH
129-00-0	Pyrene		41	1.0	10	11	2.3	
56-55-3	Benzo(a)anthracene		20	1.0	10	11	2.1	
205-99-2	Benzo(b)fluoranthene		54	1.0	10	11	2.6	
207-08-9	Benzo(k)fluoranthene		29	1.0	10	11	3.4	
50-32-8	Benzo(a)pyrene		25	1.0	10	11	3.6	
193-39-5	Indeno(1,2,3-cd)pyrene		15	1.0	10	11	2.1	
53-70-3	Dibenzo(a,h)anthracene	J	5.6	1.0	10	11	2.0	
191-24-2	Benzo(g,h,i)perylene		14	1.0	10	11	2.2	
118-74-1	Hexachlorobenzene	U	11	1.0	10	11	2.0	
87-68-3	Hexachlorobutadiene	~~U~~ UJ	11	1.0	10	11	2.5	CCH
77-47-4	Hexachlorocyclopentadiene	~~U~~ UJ	11	1.0	10	11	1.6	CCH
7297-45-2	2-Methylnaphthalene-D10		*130%					
367-12-4	2,4-Dibromophenol		63%					
81103-79-9	Fluorene-d10		80%					
1718-51-1	Pyrene-D10		90%					

QW 3/6/09

KATAHDIN ANALYTICAL SERVICES
Report of Analytical Results

Client: CH2MHill
Project: TO-009 Lejeune
PO No:
Sample Date: 12/21/08
Received Date: 12/23/08
Extraction Date: 12/30/08
Analysis Date: 16-JAN-2009 23:35
Report Date: 01/19/2009
Matrix: SOIL
% Solids: 92.2

Lab ID: SB7368-38
Client ID: MR08-SS199D-08D
SDG: TO9-23
Extracted by: CB
Extraction Method: SW846 3550
Analyst: JCG
Analysis Method: SW846 M8270C
Lab Prep Batch: WG59476
Units: ug/Kgdrywt

CAS#	Compound	Flags	Results	DF	PQL	Adj.PQL	Adj.MDL	
91-20-3	Naphthalene	U	11	1.0	10	11	2.8	
91-57-6	2-Methylnaphthalene	~~U~~ UJ	11	1.0	10	11	2.4	CCH
86-73-7	Fluorene	U	11	1.0	10	11	3.5	
85-01-8	Phenanthrene	J	8.0	1.0	10	11	2.0	
206-44-0	Fluoranthene	J	61	1.0	10	11	2.0	CCH
129-00-0	Pyrene		45	1.0	10	11	2.3	
56-55-3	Benzo(a)anthracene		21	1.0	10	11	2.0	
205-99-2	Benzo(b)fluoranthene		64	1.0	10	11	2.6	
207-08-9	Benzo(k)fluoranthene		32	1.0	10	11	3.4	
50-32-8	Benzo(a)pyrene		31	1.0	10	11	3.6	
193-39-5	Indeno(1,2,3-cd)pyrene		20	1.0	10	11	2.0	
53-70-3	Dibenzo(a,h)anthracene	J	8.2	1.0	10	11	2.0	
191-24-2	Benzo(g,h,i)perylene		18	1.0	10	11	2.2	
118-74-1	Hexachlorobenzene	U	11	1.0	10	11	2.0	
87-68-3	Hexachlorobutadiene	~~U~~ UJ	11	1.0	10	11	2.5	CCH
77-47-4	Hexachlorocyclopentadiene	~~U~~ UJ	11	1.0	10	11	1.6	CCH
7297-45-2	2-Methylnaphthalene-D10		124%					
367-12-4	2,4-Dibromophenol		53%					
81103-79-9	Fluorene-d10		76%					
1718-51-1	Pyrene-D10		78%					

lw
3/6/09

20

KATAHDIN ANALYTICAL SERVICES
Report of Analytical Results

Client: CH2MHill
Project: TO-009 Lejeune
PO No:
Sample Date: 12/21/08
Received Date: 12/23/08
Extraction Date: 12/30/08
Analysis Date: 17-JAN-2009 00:15
Report Date: 01/19/2009
Matrix: SOIL
% Solids: 89.0

Lab ID: SB7368-40
Client ID: MR08-IS199-1-2-08D
SDG: TO9-23
Extracted by: CB
Extraction Method: SW846 3550
Analyst: JCG
Analysis Method: SW846 M8270C
Lab Prep Batch: WG59476
Units: ug/Kgdrywt

CAS#	Compound	Flags	Results	DF	PQL	Adj.PQL	Adj.MDL	
91-20-3	Naphthalene	U	11	1.0	10	11	2.9	
91-57-6	2-Methylnaphthalene	~~U~~ UJ	11	1.0	10	11	2.5	CCH
86-73-7	Fluorene	U	11	1.0	10	11	3.6	
85-01-8	Phenanthrene	J	3.8	1.0	10	11	2.0	
206-44-0	Fluoranthene	J	38	1.0	10	11	2.0	CCH
129-00-0	Pyrene		51	1.0	10	11	2.4	
56-55-3	Benzo(a)anthracene		32	1.0	10	11	2.1	
205-99-2	Benzo(b)fluoranthene		53	1.0	10	11	2.7	
207-08-9	Benzo(k)fluoranthene		35	1.0	10	11	3.5	
50-32-8	Benzo(a)pyrene		30	1.0	10	11	3.7	
193-39-5	Indeno(1,2,3-cd)pyrene		21	1.0	10	11	2.1	
53-70-3	Dibenzo(a,h)anthracene	U	11	1.0	10	11	2.0	
191-24-2	Benzo(g,h,i)perylene		20	1.0	10	11	2.2	
118-74-1	Hexachlorobenzene	U	11	1.0	10	11	2.0	
87-68-3	Hexachlorobutadiene	~~U~~ UJ	11	1.0	10	11	2.6	CCH
77-47-4	Hexachlorocyclopentadiene	~~U~~ UJ	11	1.0	10	11	1.7	CCH
7297-45-2	2-Methylnaphthalene-D10		123%					
367-12-4	2,4-Dibromophenol		41%					
81103-79-9	Fluorene-d10		78%					
1718-51-1	Pyrene-D10		102%					

LW
3/6/09

ENVIRONMENTAL
Data Services, Inc.

SEMIVOLATILE ORGANIC COMPOUNDS

USEPA Region IV - Level IV Review

Site: MCB Camp Lejeune, TO-09 SDG #: TO9-23

Client: CH2M HILL, Inc., Virginia Beach, Virginia Date: March 6, 2009

Laboratory: Katahdin Analytical Services, Scarborough, Maine Reviewer: Nancy Weaver

EDS ID	Client Sample ID	Laboratory Sample ID	Matrix
1	MR08-IS166-5-6-08D	SB7368-1	Soil
1RE	MR08-IS166-5-6-08DRE	SB7368-1RE	Soil
2	MR08-SS173-08D	SB7368-3	Soil
2RE	MR08-SS173-08DRE	SB7368-3RE	Soil
3	MR08-IS173-5-6-08D	SB7368-5	Soil
3RE	MR08-IS173-5-6-08DRE	SB7368-5RE	Soil
4	MR08-SS174-08D	SB7368-7	Soil
4RE	MR08-SS174-08DRE	SB7368-7RE	Soil
5	MR08-IS174-5-6-08D	SB7368-9	Soil
5RE	MR08-IS174-5-6-08DRE	SB7368-9RE	Soil
6	MR08-SS167-08D	SB7368-11	Soil
6RE	MR08-SS167-08DRE	SB7368-11RE	Soil
7	MR08-IS167-2-3-08D	SB7368-13	Soil
7RE	MR08-IS167-2-3-08DRE	SB7368-13RE	Soil
8	MR08-SS172-08D	SB7368-15	Soil
8RE	MR08-SS172-08DRE	SB7368-15RE	Soil
9	MR08-IS172-1-2-08D	SB7368-17	Soil
9RE	MR08-IS172-1-2-08DRE	SB7368-17RE	Soil
10	MR08-SS191-08D	SB7368-19	Soil
10RE	MR08-SS191-08DRE	SB7368-19RE	Soil
11	MR08-IS191-2-3-08D	SB7368-21	Soil
11RE	MR08-IS191-2-3-08DRE	SB7368-21RE	Soil
12	MR08-SS190-08D	SB7368-23	Soil
12RE	MR08-SS190-08DRE	SB7368-23RE	Soil
13	MR08-IS190-1-2-08D	SB7368-25	Soil
14	MR08-SS189-08D	SB7368-27	Soil
15	MR08-SS189D-08D	SB7368-29	Soil
16	MR08-IS189-3-4-08D	SB7368-31	Soil
17	MR08-IS189D-3-4-08D	SB7368-33	Soil
18	MR08-SS199-08D	SB7368-35	Soil
19	MR08-SS199D-08D	SB7368-37	Soil
20	MR08-IS199-1-2-08D	SB7368-39	Soil
20RE	MR08-IS199-1-2-08DRE	SB7368-39RE	Soil

The USEPA "Contract Laboratory Program National Functional Guidelines for Organic Data Review," October 1999, and professional judgment were used in evaluating the data in this summary report.

Holding Times - All samples were extracted within 14 days for soil samples and analyzed within 40 days for all samples except the following.

Sample	Date Sampled	Date Extracted	# of Days	Qualifier
1RE	12/20/08	01/20/09	31	J/R
2RE	12/20/08	01/20/09	31	J/R
3RE	12/20/08	01/20/09	31	J/R
4RE	12/20/08	01/20/09	31	J/R
5RE	12/20/08	01/20/09	31	J/R
6RE	12/20/08	01/20/09	31	J/R
7RE	12/20/08	01/20/09	31	J/R
8RE	12/20/08	01/20/09	31	J/R
9RE	12/20/08	01/14/09	25	J/UJ
10RE	12/20/08	01/20/09	31	J/R
11RE	12/20/08	01/20/09	31	J/R
12RE	12/20/08	01/20/09	31	J/R
20RE	12/21/08	01/20/08	20	J/R

GC/MS Tuning - All of the DFTPP tunes in the initial and continuing calibrations met the percent relative abundance criteria.

Initial Calibration - The initial calibrations exhibited acceptable %RSD and mean RRF values except the following.

ICAL Date	Compound	%RSD/RRF	Qualifier	Affected Samples
01/12/09	Benzaldehyde	90.97%	J/UJ	1-7, 9-20

Continuing Calibration - The continuing calibrations exhibited acceptable %D and RRF values except the following.

CCAL Date	Compound	%D/RRF	Qualifier	Affected Samples
01/15/09	Benzaldehyde	54.26%	None	Already qualified due to ICAL
	4-Nitroaniline	27.14%	J/UJ	1-7
01/16/09 (0744)	Benzaldehyde	53.82%	None	Already qualified due to ICAL
01/16/09 (0744	4-Nitroaniline	37.70%	J/UJ	9-13
01/16/09 (1803)	Benzaldehyde	45.04%	None	Already qualified due to ICAL
01/17/09	Benzaldehyde	55.85%	None	Already qualified due to ICAL
	2,4-Dinitrophenol	28.42%	None	Already qualified due to HT
01/21/09	Benzaldehyde	68.91%	None	Already qualified due to HT
	3-Nitroaniline	28.21%	None	Already qualified due to HT
	2,4-Dinitrophenol	31.39%	None	Already qualified due to HT

CCAL Date	Compound	%D/RRF	Qualifier	Affected Samples
01/21/09	4-Nitrophenol	41.26%	None	Already qualified due to HT
	3,3'-Dichlorobenzidine	27.34%	None	Already qualified due to HT

Surrogates - All samples exhibited acceptable surrogate recoveries except the following.

Sample ID	Surrogate	%R	Qualifier
8	S1-2-Fluorophenol	0%	J/R - All compounds
	S2-Phenol-d6	0%	J/R - All compounds
	S3-Nitrobenzene-d6	0%	J/R - All compounds
	S4-2-Fluorobiphenyl	0%	J/R - All compounds
	S5-2,4,6-Tribromophenol	0%	J/R - All compounds
	S6-Terphenyl-d14	0%	J/R - All compounds
12	S5-2,4,6-Tribromophenol	27%	None for 1 out
18	S5-2,4,6-Tribromophenol	24%	None for 1 out
19	S5-2,4,6-Tribromophenol	24%	None for 1 out
20	S1-2-Fluorophenol	18%	J/R - Acid compounds
	S5-2,4,6-Tribromophenol	0%	J/R - Acid compounds

MS/MSD - A MS/MSD sample was not analyzed.

Laboratory Control Sample - The LCS samples exhibited acceptable %R values except the following.

LCS ID	Compound	%R	Qualifier	Affected Samples
WG59460-LCS	bis (2-Chloroethyl) ether	29%	J/UJ	1-7, 9-12
	Acetophenone	51%	J/UJ	1-7, 9-12
	Hexachloroethane	19%	J/UJ	1-7, 9-12
	2,4-Dimethylphenol	12%	J/UJ	1-7, 9-12
WG59475-2-LCS	Benzaldehyde	246%	None	All ND
	Caprolactam	24%	J/UJ	13-20
WG59785-2-LCS	Benzaldehyde	142%	None	All ND

Internal Standard (IS) Area Performance - All internal standards met response and retention time (RT) criteria.

Method Blank - The method blanks were free of contamination.

Field, Equipment Blank - Field QC results are summarized below.

Blank ID	Compound	Conc. ug/L	Action Level ug/L	Qualifier	Affected Samples
MR08-EB01-122008	None - ND	-	-	-	-

Blank ID	Compound	Conc. ug/L	Action Level ug/L	Qualifier	Affected Samples
MR08-EB01-122108	None - ND	-	-	-	-
MR08-FB122008	None - ND	-	-	-	-

Field Duplicates - Field duplicate results are summarized below.

Compound	MR08-SS189-08D ug/kg	MR08-SS189D-08D ug/kg	RPD	Qualifier
None	ND	ND	-	-

Compound	MR08-IS189-3-4-08D ug/kg	MR08-IS189D-3-4-08D ug/kg	RPD	Qualifier
None	ND	ND	-	-

Compound	MR08-SS199-08D ug/kg	MR08-SS199D-08D ug/kg	RPD	Qualifier
bis (2-Ethylhexyl) phthalate	200	360 U	NC	None

Compound	MR08-IS199-1-2-08D ug/kg	MR08-IS199-1-2-08D (TO9-24) ug/kg	RPD	Qualifier
None	ND	ND	-	-

Tentatively Identified Compounds (TICs) - TICs were not reported.

Compound Quantitation - Many samples exhibited internal standard, laboratory control samples and/or surrogate recovery deficiencies. The laboratory reanalyzed these samples, however, these samples were analyzed outside of holding time and qualified estimated (J/UJ) or rejected (J/R). Refer to Form Is for which to use for reporting purposes.

KATAHDIN ANALYTICAL SERVICES
Report of Analytical Results

Client: CH2MHill
Project: TO-009 Lejeune
PO No:
Sample Date: 12/20/08
Received Date: 12/23/08
Extraction Date: 12/29/08
Analysis Date: 16-JAN-2009 00:35
Report Date: 01/23/2009
Matrix: SOIL
% Solids: 85.0

Lab ID: SB7368-1
Client ID: MR08-IS166-5-6-08D
SDG: TO9-23
Extracted by: CB
Extraction Method: SW846 3550
Analyst: JCG
Analysis Method: SW846 8270C
Lab Prep Batch: WG59460
Units: ug/Kgdrywt

CAS#	Compound	Flags	Results	DF	PQL	Adj.PQL	Adj.MDL	
100-52-7	Benzaldehyde	~~U~~ UJ	590	1.0	500	590	140	ICB
108-95-2	Phenol	U	590	1.0	500	590	180	
111-44-4	Bis(2-Chloroethyl)ether	~~U~~ UJ	390	1.0	330	390	95	BSL
95-57-8	2-Chlorophenol	U	590	1.0	500	590	190	
95-48-7	2-Methylphenol	U	710	1.0	600	710	240	
108-60-1	2,2'-Oxybis(1-chloropropane)	U	390	1.0	330	390	100	
98-86-2	Acetophenone	~~U~~ UJ	710	1.0	600	710	210	BSL
621-64-7	N-Nitroso-di-n-propylamine	U	390	1.0	330	390	98	
65794-96-9	3&4-Methylphenol	U	710	1.0	600	710	220	
67-72-1	Hexachloroethane	~~U~~ UJ	390	1.0	330	390	110	BSL
98-95-3	Nitrobenzene	U	390	1.0	330	390	110	
78-59-1	Isophorone	U	390	1.0	330	390	88	
88-75-5	2-Nitrophenol	U	710	1.0	600	710	200	
105-67-9	2,4-Dimethylphenol	~~U~~ UJ	590	1.0	500	590	190	BSL
111-91-1	Bis(2-Chloroethoxy)methane	U	390	1.0	330	390	110	
120-83-2	2,4-Dichlorophenol	U	590	1.0	500	590	180	
106-47-8	4-Chloroaniline	U	590	1.0	500	590	140	
105-60-2	Caprolactam	U	590	1.0	500	590	170	
59-50-7	4-Chloro-3-Methylphenol	U	590	1.0	500	590	200	
88-06-2	2,4,6-Trichlorophenol	U	590	1.0	500	590	180	
95-95-4	2,4,5-Trichlorophenol	U	590	1.0	500	590	180	
91-58-7	2-Chloronaphthalene	U	390	1.0	330	390	100	
92-52-4	1,1'-Biphenyl	U	390	1.0	330	390	86	
88-74-4	2-Nitroaniline	U	590	1.0	500	590	88	
131-11-3	Dimethyl Phthalate	U	390	1.0	330	390	92	
606-20-2	2,6-Dinitrotoluene	U	390	1.0	330	390	93	
208-96-8	Acenaphthylene	U	390	1.0	330	390	82	
99-09-2	3-Nitroaniline	U	590	1.0	500	590	110	
83-32-9	Acenaphthene	U	390	1.0	330	390	76	
51-28-5	2,4-Dinitrophenol	U	1400	1.0	1200	1400	440	
132-64-9	Dibenzofuran	U	390	1.0	330	390	93	
100-02-7	4-Nitrophenol	U	1400	1.0	1200	1400	360	
121-14-2	2,4-Dinitrotoluene	U	390	1.0	330	390	100	
84-66-2	Diethylphthalate	U	390	1.0	330	390	94	
7005-72-3	4-Chlorophenyl-phenylether	U	390	1.0	330	390	92	
100-01-6	4-Nitroaniline	~~U~~ UJ	590	1.0	500	590	160	CCH
534-52-1	4,6-Dinitro-2-Methylphenol	U	1400	1.0	1200	1400	400	
86-30-6	N-Nitrosodiphenylamine	U	780	1.0	660	780	260	
101-55-3	4-Bromophenyl-phenylether	U	390	1.0	330	390	100	
1912-24-9	Atrazine	U	390	1.0	330	390	110	
87-86-5	Pentachlorophenol	U	960	1.0	820	960	280	
120-12-7	Anthracene	U	390	1.0	330	390	99	
86-74-8	Carbazole	U	590	1.0	500	590	130	

lw 3/6/09

KATAHDIN ANALYTICAL SERVICES
Report of Analytical Results

Client: CH2MHill
Project: TO-009 Lejeune
PO No:
Sample Date: 12/20/08
Received Date: 12/23/08
Extraction Date: 12/29/08
Analysis Date: 16-JAN-2009 00:35
Report Date: 01/23/2009
Matrix: SOIL
% Solids: 85.0

Lab ID: SB7368-1
Client ID: MR08-IS166-5-6-08D
SDG: TO9-23
Extracted by: CB
Extraction Method: SW846 3550
Analyst: JCG
Analysis Method: SW846 8270C
Lab Prep Batch: WG59460
Units: ug/Kgdrywt

CAS#	Compound	Flags	Results	DF	PQL	Adj.PQL	Adj.MDL
84-74-2	Di-n-butylphthalate	U	390	1.0	330	390	120
85-68-7	Butylbenzylphthalate	U	390	1.0	330	390	110
91-94-1	3,3'-Dichlorobenzidine	U	590	1.0	500	590	130
218-01-9	Chrysene	U	390	1.0	330	390	110
117-81-7	bis(2-Ethylhexyl)phthalate	J	210	1.0	330	390	120
117-84-0	Di-n-octylphthalate	U	390	1.0	330	390	250
367-12-4	2-Fluorophenol		59%				
13127-88-3	Phenol-D6		58%				
4165-60-0	Nitrobenzene-D5		61%				
321-60-8	2-Fluorobiphenyl		64%				
118-79-6	2,4,6-Tribromophenol		56%				
1718-51-0	Terphenyl-D14		73%				

LEW 3/6/09

1RE

KATAHDIN ANALYTICAL SERVICES
Report of Analytical Results

Client: CH2MHill
Project: TO-009 Lejeune
PO No:
Sample Date: 12/20/08
Received Date: 12/23/08
Extraction Date: 01/20/09
Analysis Date: 21-JAN-2009 20:55
Report Date: 01/23/2009
Matrix: SOIL
% Solids: 85.0

Lab ID: SB7368-1RE
Client ID: MR08-IS166-5-6-08D
SDG: TO9-23
Extracted by: AC
Extraction Method: SW846 3550
Analyst: JCG
Analysis Method: SW846 8270C
Lab Prep Batch: WG59975
Units: ug/Kgdrywt

Use original

CAS#	Compound	Flags	Results	DF	PQL	Adj.PQL	Adj.MDL
100-52-7	Benzaldehyde	U R	590	1.0	500	590	140 HT
108-95-2	Phenol	U	590	1.0	500	590	180
111-44-4	Bis(2-Chloroethyl)ether	U	390	1.0	330	390	95
95-57-8	2-Chlorophenol	U	590	1.0	500	590	190
95-48-7	2-Methylphenol	U	710	1.0	600	710	240
108-60-1	2,2'-Oxybis(1-chloropropane)	U	390	1.0	330	390	100
98-86-2	Acetophenone	U	710	1.0	600	710	210
621-64-7	N-Nitroso-di-n-propylamine	U	390	1.0	330	390	98
65794-96-9	3&4-Methylphenol	U	710	1.0	600	710	220
67-72-1	Hexachloroethane	U	390	1.0	330	390	110
98-95-3	Nitrobenzene	U	390	1.0	330	390	110
78-59-1	Isophorone	U	390	1.0	330	390	88
88-75-5	2-Nitrophenol	U	710	1.0	600	710	200
105-67-9	2,4-Dimethylphenol	U	590	1.0	500	590	190
111-91-1	Bis(2-Chloroethoxy)methane	U	390	1.0	330	390	110
120-83-2	2,4-Dichlorophenol	U	590	1.0	500	590	180
106-47-8	4-Chloroaniline	U	590	1.0	500	590	140
105-60-2	Caprolactam	U	590	1.0	500	590	170
59-50-7	4-Chloro-3-Methylphenol	U	590	1.0	500	590	200
88-06-2	2,4,6-Trichlorophenol	U	590	1.0	500	590	180
95-95-4	2,4,5-Trichlorophenol	U	590	1.0	500	590	180
91-58-7	2-Chloronaphthalene	U	390	1.0	330	390	100
92-52-4	1,1'-Biphenyl	U	390	1.0	330	390	86
88-74-4	2-Nitroaniline	U	590	1.0	500	590	88
131-11-3	Dimethyl Phthalate	U	390	1.0	330	390	92
606-20-2	2,6-Dinitrotoluene	U	390	1.0	330	390	93
208-96-8	Acenaphthylene	U	390	1.0	330	390	82
99-09-2	3-Nitroaniline	U	590	1.0	500	590	110
83-32-9	Acenaphthene	U	390	1.0	330	390	76
51-28-5	2,4-Dinitrophenol	U	1400	1.0	1200	1400	440
132-64-9	Dibenzofuran	U	390	1.0	330	390	93
100-02-7	4-Nitrophenol	U	1400	1.0	1200	1400	360
121-14-2	2,4-Dinitrotoluene	U	390	1.0	330	390	100
84-66-2	Diethylphthalate	U	390	1.0	330	390	94
7005-72-3	4-Chlorophenyl-phenylether	U	390	1.0	330	390	92
100-01-6	4-Nitroaniline	U	590	1.0	500	590	160
534-52-1	4,6-Dinitro-2-Methylphenol	U	1400	1.0	1200	1400	400
86-30-6	N-Nitrosodiphenylamine	U	780	1.0	660	780	260
101-55-3	4-Bromophenyl-phenylether	U	390	1.0	330	390	100
1912-24-9	Atrazine	U	390	1.0	330	390	110
87-86-5	Pentachlorophenol	U	960	1.0	820	960	280
120-12-7	Anthracene	U	390	1.0	330	390	99
86-74-8	Carbazole	U	590	1.0	500	590	130

R

RE

lew 3/6/09

1RE

KATAHDIN ANALYTICAL SERVICES
Report of Analytical Results

Client: CH2MHill
Project: TO-009 Lejeune
PO No:
Sample Date: 12/20/08
Received Date: 12/23/08
Extraction Date: 01/20/09
Analysis Date: 21-JAN-2009 20:55
Report Date: 01/23/2009
Matrix: SOIL
% Solids: 85.0

Lab ID: SB7368-1RE
Client ID: MR08-IS166-5-6-08D
SDG: TO9-23
Extracted by: AC
Extraction Method: SW846 3550
Analyst: JCG
Analysis Method: SW846 8270C
Lab Prep Batch: WG59975
Units: ug/Kgdrywt

Use original

CAS#	Compound	Flags	Results	DF	PQL	Adj.PQL	Adj.MDL	
84-74-2	Di-n-butylphthalate	~~U~~ R	390	1.0	330	390	120	HT
85-68-7	Butylbenzylphthalate	~~U~~	390	1.0	330	390	110	
91-94-1	3,3'-Dichlorobenzidine	~~U~~	590	1.0	500	590	130	
218-01-9	Chrysene	~~U~~	390	1.0	330	390	110	
117-81-7	bis(2-Ethylhexyl)phthalate	~~U~~	390	1.0	330	390	120	
117-84-0	Di-n-octylphthalate	~~U~~	390	1.0	330	390	250	
367-12-4	2-Fluorophenol		68%					
13127-88-3	Phenol-D6		63%					
4165-60-0	Nitrobenzene-D5		68%					
321-60-8	2-Fluorobiphenyl		68%					
118-79-6	2,4,6-Tribromophenol		60%					
1718-51-0	Terphenyl-D14		100%					

R RE

lw 3/6/09

2

KATAHDIN ANALYTICAL SERVICES
Report of Analytical Results

Client: CH2MHill
Project: TO-009 Lejeune
PO No:
Sample Date: 12/20/08
Received Date: 12/23/08
Extraction Date: 12/29/08
Analysis Date: 16-JAN-2009 01:17
Report Date: 01/23/2009
Matrix: SOIL
% Solids: 95.2

Lab ID: SB7368-3
Client ID: MR08-SS173-08D
SDG: TO9-23
Extracted by: CB
Extraction Method: SW846 3550
Analyst: JCG
Analysis Method: SW846 8270C
Lab Prep Batch: WG59460
Units: ug/Kgdrywt

CAS#	Compound	Flags	Results	DF	PQL	Adj.PQL	Adj.MDL	
100-52-7	Benzaldehyde	~~U~~ UJ	520	1.0	500	520	130	JCB
108-95-2	Phenol	U	520	1.0	500	520	160	
111-44-4	Bis(2-Chloroethyl)ether	~~U~~ UJ	350	1.0	330	350	85	BSL
95-57-8	2-Chlorophenol	U	520	1.0	500	520	170	
95-48-7	2-Methylphenol	U	630	1.0	600	630	210	
108-60-1	2,2'-Oxybis(1-chloropropane)	U	350	1.0	330	350	94	
98-86-2	Acetophenone	~~U~~ UJ	630	1.0	600	630	190	BSL
621-64-7	N-Nitroso-di-n-propylamine	U	350	1.0	330	350	87	
65794-96-9	3&4-Methylphenol	U	630	1.0	600	630	200	
67-72-1	Hexachloroethane	~~U~~ UJ	350	1.0	330	350	100	BSL
98-95-3	Nitrobenzene	U	350	1.0	330	350	96	
78-59-1	Isophorone	U	350	1.0	330	350	79	
88-75-5	2-Nitrophenol	U	630	1.0	600	630	180	
105-67-9	2,4-Dimethylphenol	~~U~~ UJ	520	1.0	500	520	170	BSL
111-91-1	Bis(2-Chloroethoxy)methane	U	350	1.0	330	350	100	
120-83-2	2,4-Dichlorophenol	U	520	1.0	500	520	160	
106-47-8	4-Chloroaniline	U	520	1.0	500	520	120	
105-60-2	Caprolactam	U	520	1.0	500	520	150	
59-50-7	4-Chloro-3-Methylphenol	U	520	1.0	500	520	170	
88-06-2	2,4,6-Trichlorophenol	U	520	1.0	500	520	160	
95-95-4	2,4,5-Trichlorophenol	U	520	1.0	500	520	160	
91-58-7	2-Chloronaphthalene	U	350	1.0	330	350	91	
92-52-4	1,1'-Biphenyl	U	350	1.0	330	350	77	
88-74-4	2-Nitroaniline	U	520	1.0	500	520	79	
131-11-3	Dimethyl Phthalate	U	350	1.0	330	350	82	
606-20-2	2,6-Dinitrotoluene	U	350	1.0	330	350	83	
208-96-8	Acenaphthylene	U	350	1.0	330	350	74	
99-09-2	3-Nitroaniline	U	520	1.0	500	520	99	
83-32-9	Acenaphthene	U	350	1.0	330	350	68	
51-28-5	2,4-Dinitrophenol	U	1300	1.0	1200	1300	400	
132-64-9	Dibenzofuran	U	350	1.0	330	350	83	
100-02-7	4-Nitrophenol	U	1300	1.0	1200	1300	320	
121-14-2	2,4-Dinitrotoluene	U	350	1.0	330	350	89	
84-66-2	Diethylphthalate	U	350	1.0	330	350	84	
7005-72-3	4-Chlorophenyl-phenylether	U	350	1.0	330	350	82	
100-01-6	4-Nitroaniline	~~U~~ UJ	520	1.0	500	520	140	CCH
534-52-1	4,6-Dinitro-2-Methylphenol	U	1300	1.0	1200	1300	350	
86-30-6	N-Nitrosodiphenylamine	U	690	1.0	660	690	230	
101-55-3	4-Bromophenyl-phenylether	U	350	1.0	330	350	89	
1912-24-9	Atrazine	U	350	1.0	330	350	96	
87-86-5	Pentachlorophenol	U	860	1.0	820	860	250	
120-12-7	Anthracene	U	350	1.0	330	350	88	
86-74-8	Carbazole	U	520	1.0	500	520	120	

3/6/09

KATAHDIN ANALYTICAL SERVICES
Report of Analytical Results

Client: CH2MHill
Project: TO-009 Lejeune
PO No:
Sample Date: 12/20/08
Received Date: 12/23/08
Extraction Date: 12/29/08
Analysis Date: 16-JAN-2009 01:17
Report Date: 01/23/2009
Matrix: SOIL
% Solids: 95.2

Lab ID: SB7368-3
Client ID: MR08-SS173-08D
SDG: TO9-23
Extracted by: CB
Extraction Method: SW846 3550
Analyst: JCG
Analysis Method: SW846 8270C
Lab Prep Batch: WG59460
Units: ug/Kgdrywt

CAS#	Compound	Flags	Results	DF	PQL	Adj.PQL	Adj.MDL
84-74-2	Di-n-butylphthalate	U	350	1.0	330	350	110
85-68-7	Butylbenzylphthalate	U	350	1.0	330	350	98
91-94-1	3,3'-Dichlorobenzidine	U	520	1.0	500	520	120
218-01-9	Chrysene	U	350	1.0	330	350	100
117-81-7	bis(2-Ethylhexyl)phthalate	U	350	1.0	330	350	100
117-84-0	Di-n-octylphthalate	U	350	1.0	330	350	220
367-12-4	2-Fluorophenol		70%				
13127-88-3	Phenol-D6		64%				
4165-60-0	Nitrobenzene-D5		73%				
321-60-8	2-Fluorobiphenyl		78%				
118-79-6	2,4,6-Tribromophenol		57%				
1718-51-0	Terphenyl-D14		86%				

DW 3/6/09

2RE

KATAHDIN ANALYTICAL SERVICES
Report of Analytical Results

Client: CH2MHill
Project: TO-009 Lejeune
PO No:
Sample Date: 12/20/08
Received Date: 12/23/08
Extraction Date: 01/20/09
Analysis Date: 22-JAN-2009 03:15
Report Date: 01/23/2009
Matrix: SOIL
% Solids: 95.2

Lab ID: SB7368-3RE
Client ID: MR08-SS173-08D
SDG: TO9-23
Extracted by: AC
Extraction Method: SW846 3550
Analyst: JCG
Analysis Method: SW846 8270C
Lab Prep Batch: WG59975
Units: ug/Kgdrywt

Use original

CAS#	Compound	Flags	Results	DF	PQL	Adj.PQL	Adj.MDL
100-52-7	Benzaldehyde	U R	520	1.0	500	520	130 HT
108-95-2	Phenol	U	520	1.0	500	520	160
111-44-4	Bis(2-Chloroethyl)ether	U	350	1.0	330	350	85
95-57-8	2-Chlorophenol	U	520	1.0	500	520	170
95-48-7	2-Methylphenol	U	630	1.0	600	630	210
108-60-1	2,2'-Oxybis(1-chloropropane)	U	350	1.0	330	350	94
98-86-2	Acetophenone	U	630	1.0	600	630	190
621-64-7	N-Nitroso-di-n-propylamine	U	350	1.0	330	350	87
65794-96-9	3&4-Methylphenol	U	630	1.0	600	630	200
67-72-1	Hexachloroethane	U	350	1.0	330	350	100
98-95-3	Nitrobenzene	U	350	1.0	330	350	96
78-59-1	Isophorone	U	350	1.0	330	350	79
88-75-5	2-Nitrophenol	U	630	1.0	600	630	180
105-67-9	2,4-Dimethylphenol	U	520	1.0	500	520	170
111-91-1	Bis(2-Chloroethoxy)methane	U	350	1.0	330	350	100
120-83-2	2,4-Dichlorophenol	U	520	1.0	500	520	160
106-47-8	4-Chloroaniline	U	520	1.0	500	520	120
105-60-2	Caprolactam	U	520	1.0	500	520	150
59-50-7	4-Chloro-3-Methylphenol	U	520	1.0	500	520	170
88-06-2	2,4,6-Trichlorophenol	U	520	1.0	500	520	160
95-95-4	2,4,5-Trichlorophenol	U	520	1.0	500	520	160
91-58-7	2-Chloronaphthalene	U	350	1.0	330	350	91
92-52-4	1,1'-Biphenyl	U	350	1.0	330	350	77
88-74-4	2-Nitroaniline	U	520	1.0	500	520	79
131-11-3	Dimethyl Phthalate	U	350	1.0	330	350	82
606-20-2	2,6-Dinitrotoluene	U	350	1.0	330	350	83
208-96-8	Acenaphthylene	U	350	1.0	330	350	74
99-09-2	3-Nitroaniline	U	520	1.0	500	520	99
83-32-9	Acenaphthene	U	350	1.0	330	350	68
51-28-5	2,4-Dinitrophenol	U	1300	1.0	1200	1300	400
132-64-9	Dibenzofuran	U	350	1.0	330	350	83
100-02-7	4-Nitrophenol	U	1300	1.0	1200	1300	320
121-14-2	2,4-Dinitrotoluene	U	350	1.0	330	350	89
84-66-2	Diethylphthalate	U	350	1.0	330	350	84
7005-72-3	4-Chlorophenyl-phenylether	U	350	1.0	330	350	82
100-01-6	4-Nitroaniline	U	520	1.0	500	520	140
534-52-1	4,6-Dinitro-2-Methylphenol	U	1300	1.0	1200	1300	350
86-30-6	N-Nitrosodiphenylamine	U	690	1.0	660	690	230
101-55-3	4-Bromophenyl-phenylether	U	350	1.0	330	350	89
1912-24-9	Atrazine	U	350	1.0	330	350	96
87-86-5	Pentachlorophenol	U	860	1.0	820	860	250
120-12-7	Anthracene	U	350	1.0	330	350	88
86-74-8	Carbazole	U	520	1.0	500	520	120

QW 3/6/09

2RE

KATAHDIN ANALYTICAL SERVICES
Report of Analytical Results

Client: CH2MHill
Project: TO-009 Lejeune
PO No:
Sample Date: 12/20/08
Received Date: 12/23/08
Extraction Date: 01/20/09
Analysis Date: 22-JAN-2009 03:15
Report Date: 01/23/2009
Matrix: SOIL
% Solids: 95.2

Lab ID: SB7368-3RE
Client ID: MR08-SS173-08D
SDG: TO9-23
Extracted by: AC
Extraction Method: SW846 3550
Analyst: JCG
Analysis Method: SW846 8270C
Lab Prep Batch: WG59975
Units: ug/Kgdrywt

Use original

CAS#	Compound	Flags	Results	DF	PQL	Adj.PQL	Adj.MDL
84-74-2	Di-n-butylphthalate	~~U~~ R	350	1.0	330	350	110 HT
85-68-7	Butylbenzylphthalate	~~U~~	350	1.0	330	350	98
91-94-1	3,3'-Dichlorobenzidine	~~U~~	520	1.0	500	520	120
218-01-9	Chrysene	~~U~~ J	120	1.0	330	350	100
117-81-7	bis(2-Ethylhexyl)phthalate	~~U~~ R	350	1.0	330	350	100
117-84-0	Di-n-octylphthalate	~~U~~ R	350	1.0	330	350	220
367-12-4	2-Fluorophenol		63%				
13127-88-3	Phenol-D6		57%				
4165-60-0	Nitrobenzene-D5		62%				
321-60-8	2-Fluorobiphenyl		78%				
118-79-6	2,4,6-Tribromophenol		72%				
1718-51-0	Terphenyl-D14		108%				

R RE

lw 3/6/09

KATAHDIN ANALYTICAL SERVICES
Report of Analytical Results

Client: CH2MHill
Project: TO-009 Lejeune
PO No:
Sample Date: 12/20/08
Received Date: 12/23/08
Extraction Date: 12/29/08
Analysis Date: 16-JAN-2009 01:59
Report Date: 01/23/2009
Matrix: SOIL
% Solids: 93.8

Lab ID: SB7368-5
Client ID: MR08-IS173-5-6-08D
SDG: TO9-23
Extracted by: CB
Extraction Method: SW846 3550
Analyst: JCG
Analysis Method: SW846 8270C
Lab Prep Batch: WG59460
Units: ug/Kgdrywt

CAS#	Compound	Flags	Results	DF	PQL	Adj.PQL	Adj.MDL	
100-52-7	Benzaldehyde	~~U~~ UJ	530	1.0	500	530	130	ICB
108-95-2	Phenol	U	530	1.0	500	530	170	
111-44-4	Bis(2-Chloroethyl)ether	~~U~~ UJ	350	1.0	330	350	86	BSL
95-57-8	2-Chlorophenol	U	530	1.0	500	530	170	
95-48-7	2-Methylphenol	U	640	1.0	600	640	210	
108-60-1	2,2'-Oxybis(1-chloropropane)	U	350	1.0	330	350	95	
98-86-2	Acetophenone	~~U~~ UJ	640	1.0	600	640	190	BSL
621-64-7	N-Nitroso-di-n-propylamine	U	350	1.0	330	350	88	
65794-96-9	3&4-Methylphenol	U	640	1.0	600	640	200	
67-72-1	Hexachloroethane	~~U~~ UJ	350	1.0	330	350	100	BSL
98-95-3	Nitrobenzene	U	350	1.0	330	350	97	
78-59-1	Isophorone	U	350	1.0	330	350	80	
88-75-5	2-Nitrophenol	U	640	1.0	600	640	180	
105-67-9	2,4-Dimethylphenol	~~U~~ UJ	530	1.0	500	530	180	BSL
111-91-1	Bis(2-Chloroethoxy)methane	U	350	1.0	330	350	100	
120-83-2	2,4-Dichlorophenol	U	530	1.0	500	530	160	
106-47-8	4-Chloroaniline	U	530	1.0	500	530	130	
105-60-2	Caprolactam	U	530	1.0	500	530	150	
59-50-7	4-Chloro-3-Methylphenol	U	530	1.0	500	530	180	
88-06-2	2,4,6-Trichlorophenol	U	530	1.0	500	530	160	
95-95-4	2,4,5-Trichlorophenol	U	530	1.0	500	530	160	
91-58-7	2-Chloronaphthalene	U	350	1.0	330	350	93	
92-52-4	1,1'-Biphenyl	U	350	1.0	330	350	78	
88-74-4	2-Nitroaniline	U	530	1.0	500	530	80	
131-11-3	Dimethyl Phthalate	U	350	1.0	330	350	83	
606-20-2	2,6-Dinitrotoluene	U	350	1.0	330	350	84	
208-96-8	Acenaphthylene	U	350	1.0	330	350	75	
99-09-2	3-Nitroaniline	U	530	1.0	500	530	100	
83-32-9	Acenaphthene	U	350	1.0	330	350	69	
51-28-5	2,4-Dinitrophenol	U	1300	1.0	1200	1300	400	
132-64-9	Dibenzofuran	U	350	1.0	330	350	84	
100-02-7	4-Nitrophenol	U	1300	1.0	1200	1300	330	
121-14-2	2,4-Dinitrotoluene	U	350	1.0	330	350	91	
84-66-2	Diethylphthalate	U	350	1.0	330	350	85	
7005-72-3	4-Chlorophenyl-phenylether	U	350	1.0	330	350	83	
100-01-6	4-Nitroaniline	~~U~~ UJ	530	1.0	500	530	140	CCH
534-52-1	4,6-Dinitro-2-Methylphenol	U	1300	1.0	1200	1300	360	
86-30-6	N-Nitrosodiphenylamine	U	700	1.0	660	700	230	
101-55-3	4-Bromophenyl-phenylether	U	350	1.0	330	350	91	
1912-24-9	Atrazine	U	350	1.0	330	350	97	
87-86-5	Pentachlorophenol	U	870	1.0	820	870	250	
120-12-7	Anthracene	U	350	1.0	330	350	90	
86-74-8	Carbazole	U	530	1.0	500	530	120	

lmw 3/6/09

KATAHDIN ANALYTICAL SERVICES
Report of Analytical Results

Client: CH2MHill
Project: TO-009 Lejeune
PO No:
Sample Date: 12/20/08
Received Date: 12/23/08
Extraction Date: 12/29/08
Analysis Date: 16-JAN-2009 01:59
Report Date: 01/23/2009
Matrix: SOIL
% Solids: 93.8

Lab ID: SB7368-5
Client ID: MR08-IS173-5-6-08D
SDG: TO9-23
Extracted by: CB
Extraction Method: SW846 3550
Analyst: JCG
Analysis Method: SW846 8270C
Lab Prep Batch: WG59460
Units: ug/Kgdrywt

CAS#	Compound	Flags	Results	DF	PQL	Adj.PQL	Adj.MDL
84-74-2	Di-n-butylphthalate	U	350	1.0	330	350	110
85-68-7	Butylbenzylphthalate	U	350	1.0	330	350	99
91-94-1	3,3'-Dichlorobenzidine	U	530	1.0	500	530	120
218-01-9	Chrysene	U	350	1.0	330	350	100
117-81-7	bis(2-Ethylhexyl)phthalate	J	220	1.0	330	350	100
117-84-0	Di-n-octylphthalate	U	350	1.0	330	350	220
367-12-4	2-Fluorophenol		56%				
13127-88-3	Phenol-D6		62%				
4165-60-0	Nitrobenzene-D5		66%				
321-60-8	2-Fluorobiphenyl		67%				
118-79-6	2,4,6-Tribromophenol		46%				
1718-51-0	Terphenyl-D14		83%				

lw 3/6/09

3RE

KATAHDIN ANALYTICAL SERVICES
Report of Analytical Results

Client: CH2MHill
Project: TO-009 Lejeune
PO No:
Sample Date: 12/20/08
Received Date: 12/23/08
Extraction Date: 01/20/09
Analysis Date: 21-JAN-2009 21:37
Report Date: 01/23/2009
Matrix: SOIL
% Solids: 93.8

Lab ID: SB7368-5RE
Client ID: MR08-IS173-5-6-08D
SDG: TO9-23
Extracted by: AC
Extraction Method: SW846 3550
Analyst: JCG
Analysis Method: SW846 8270C
Lab Prep Batch: WG59975
Units: ug/Kgdrywt

use original

CAS#	Compound	Flags	Results	DF	PQL	Adj.PQL	Adj.MDL
100-52-7	Benzaldehyde	U R	530	1.0	500	530	130 HT
108-95-2	Phenol	U	530	1.0	500	530	170
111-44-4	Bis(2-Chloroethyl)ether	U	350	1.0	330	350	86
95-57-8	2-Chlorophenol	U	530	1.0	500	530	170
95-48-7	2-Methylphenol	U	640	1.0	600	640	210
108-60-1	2,2'-Oxybis(1-chloropropane)	U	350	1.0	330	350	95
98-86-2	Acetophenone	U	640	1.0	600	640	190
621-64-7	N-Nitroso-di-n-propylamine	U	350	1.0	330	350	88
65794-96-9	3&4-Methylphenol	U	640	1.0	600	640	200
67-72-1	Hexachloroethane	U	350	1.0	330	350	100
98-95-3	Nitrobenzene	U	350	1.0	330	350	97
78-59-1	Isophorone	U	350	1.0	330	350	80
88-75-5	2-Nitrophenol	U	640	1.0	600	640	180
105-67-9	2,4-Dimethylphenol	U	530	1.0	500	530	180
111-91-1	Bis(2-Chloroethoxy)methane	U	350	1.0	330	350	100
120-83-2	2,4-Dichlorophenol	U	530	1.0	500	530	160
106-47-8	4-Chloroaniline	U	530	1.0	500	530	130
105-60-2	Caprolactam	U	530	1.0	500	530	150
59-50-7	4-Chloro-3-Methylphenol	U	530	1.0	500	530	180
88-06-2	2,4,6-Trichlorophenol	U	530	1.0	500	530	160
95-95-4	2,4,5-Trichlorophenol	U	530	1.0	500	530	160
91-58-7	2-Chloronaphthalene	U	350	1.0	330	350	93
92-52-4	1,1'-Biphenyl	U	350	1.0	330	350	78
88-74-4	2-Nitroaniline	U	530	1.0	500	530	80
131-11-3	Dimethyl Phthalate	U	350	1.0	330	350	83
606-20-2	2,6-Dinitrotoluene	U	350	1.0	330	350	84
208-96-8	Acenaphthylene	U	350	1.0	330	350	75
99-09-2	3-Nitroaniline	U	530	1.0	500	530	100
83-32-9	Acenaphthene	U	350	1.0	330	350	69
51-28-5	2,4-Dinitrophenol	U	1300	1.0	1200	1300	400
132-64-9	Dibenzofuran	U	350	1.0	330	350	84
100-02-7	4-Nitrophenol	U	1300	1.0	1200	1300	330
121-14-2	2,4-Dinitrotoluene	U	350	1.0	330	350	91
84-66-2	Diethylphthalate	U	350	1.0	330	350	85
7005-72-3	4-Chlorophenyl-phenylether	U	350	1.0	330	350	83
100-01-6	4-Nitroaniline	U	530	1.0	500	530	140
534-52-1	4,6-Dinitro-2-Methylphenol	U	1300	1.0	1200	1300	360
86-30-6	N-Nitrosodiphenylamine	U	700	1.0	660	700	230
101-55-3	4-Bromophenyl-phenylether	U	350	1.0	330	350	91
1912-24-9	Atrazine	U	350	1.0	330	350	97
87-86-5	Pentachlorophenol	U	870	1.0	820	870	250
120-12-7	Anthracene	U	350	1.0	330	350	90
86-74-8	Carbazole	U	530	1.0	500	530	120

lw 3/6/09

3RE

KATAHDIN ANALYTICAL SERVICES
Report of Analytical Results

Client: CH2MHill
Project: TO-009 Lejeune
PO No:
Sample Date: 12/20/08
Received Date: 12/23/08
Extraction Date: 01/20/09
Analysis Date: 21-JAN-2009 21:37
Report Date: 01/23/2009
Matrix: SOIL
% Solids: 93.8

Lab ID: SB7368-5RE
Client ID: MR08-IS173-5-6-08D
SDG: TO9-23
Extracted by: AC
Extraction Method: SW846 3550
Analyst: JCG
Analysis Method: SW846 8270C
Lab Prep Batch: WG59975
Units: ug/Kgdrywt

Use original

CAS#	Compound	Flags	Results	DF	PQL	Adj.PQL	Adj.MDL	
84-74-2	Di-n-butylphthalate	~~U~~ R	350	1.0	330	350	110	HT
85-68-7	Butylbenzylphthalate	~~U~~	350	1.0	330	350	99	
91-94-1	3,3'-Dichlorobenzidine	~~U~~	530	1.0	500	530	120	
218-01-9	Chrysene	~~U~~	350	1.0	330	350	100	
117-81-7	bis(2-Ethylhexyl)phthalate	~~J~~ J	210	1.0	330	350	100	
117-84-0	Di-n-octylphthalate	~~U~~ R	350	1.0	330	350	220	
367-12-4	2-Fluorophenol		71%					
13127-88-3	Phenol-D6		56%					
4165-60-0	Nitrobenzene-D5		69%					
321-60-8	2-Fluorobiphenyl		72%					
118-79-6	2,4,6-Tribromophenol		68%					
1718-51-0	Terphenyl-D14		105%					

Page 02 of 02 G4107.D

R RE

LW 3/6/09

4

KATAHDIN ANALYTICAL SERVICES
Report of Analytical Results

Client: CH2MHill
Project: TO-009 Lejeune
PO No:
Sample Date: 12/20/08
Received Date: 12/23/08
Extraction Date: 12/29/08
Analysis Date: 16-JAN-2009 02:41
Report Date: 01/23/2009
Matrix: SOIL
% Solids: 94.3

Lab ID: SB7368-7
Client ID: MR08-SS174-08D
SDG: TO9-23
Extracted by: CB
Extraction Method: SW846 3550
Analyst: JCG
Analysis Method: SW846 8270C
Lab Prep Batch: WG59460
Units: ug/Kgdrywt

CAS#	Compound	Flags	Results	DF	PQL	Adj.PQL	Adj.MDL	
100-52-7	Benzaldehyde	~~U~~ UJ	530	1.0	500	530	130	JCB
108-95-2	Phenol	U	530	1.0	500	530	160	
111-44-4	Bis(2-Chloroethyl)ether	~~U~~ UJ	350	1.0	330	350	86	BSL
95-57-8	2-Chlorophenol	U	530	1.0	500	530	170	
95-48-7	2-Methylphenol	U	640	1.0	600	640	210	
108-60-1	2,2'-Oxybis(1-chloropropane)	U	350	1.0	330	350	94	
98-86-2	Acetophenone	~~U~~ UJ	640	1.0	600	640	190	BSL
621-64-7	N-Nitroso-di-n-propylamine	U	350	1.0	330	350	88	
65794-96-9	3&4-Methylphenol	U	640	1.0	600	640	200	
67-72-1	Hexachloroethane	~~U~~ UJ	350	1.0	330	350	100	BSL
98-95-3	Nitrobenzene	U	350	1.0	330	350	96	
78-59-1	Isophorone	U	350	1.0	330	350	80	
88-75-5	2-Nitrophenol	U	640	1.0	600	640	180	
105-67-9	2,4-Dimethylphenol	~~U~~ UJ	530	1.0	500	530	170	BSL
111-91-1	Bis(2-Chloroethoxy)methane	U	350	1.0	330	350	100	
120-83-2	2,4-Dichlorophenol	U	530	1.0	500	530	160	
106-47-8	4-Chloroaniline	U	530	1.0	500	530	130	
105-60-2	Caprolactam	U	530	1.0	500	530	150	
59-50-7	4-Chloro-3-Methylphenol	U	530	1.0	500	530	180	
88-06-2	2,4,6-Trichlorophenol	U	530	1.0	500	530	160	
95-95-4	2,4,5-Trichlorophenol	U	530	1.0	500	530	160	
91-58-7	2-Chloronaphthalene	U	350	1.0	330	350	92	
92-52-4	1,1'-Biphenyl	U	350	1.0	330	350	77	
88-74-4	2-Nitroaniline	U	530	1.0	500	530	80	
131-11-3	Dimethyl Phthalate	U	350	1.0	330	350	83	
606-20-2	2,6-Dinitrotoluene	U	350	1.0	330	350	84	
208-96-8	Acenaphthylene	U	350	1.0	330	350	74	
99-09-2	3-Nitroaniline	U	530	1.0	500	530	100	
83-32-9	Acenaphthene	U	350	1.0	330	350	69	
51-28-5	2,4-Dinitrophenol	U	1300	1.0	1200	1300	400	
132-64-9	Dibenzofuran	U	350	1.0	330	350	84	
100-02-7	4-Nitrophenol	U	1300	1.0	1200	1300	330	
121-14-2	2,4-Dinitrotoluene	U	350	1.0	330	350	90	
84-66-2	Diethylphthalate	U	350	1.0	330	350	85	
7005-72-3	4-Chlorophenyl-phenylether	U	350	1.0	330	350	83	
100-01-6	4-Nitroaniline	~~U~~ UJ	530	1.0	500	530	140	CCH
534-52-1	4,6-Dinitro-2-Methylphenol	U	1300	1.0	1200	1300	360	
86-30-6	N-Nitrosodiphenylamine	U	700	1.0	660	700	230	
101-55-3	4-Bromophenyl-phenylether	U	350	1.0	330	350	90	
1912-24-9	Atrazine	U	350	1.0	330	350	96	
87-86-5	Pentachlorophenol	U	870	1.0	820	870	250	
120-12-7	Anthracene	U	350	1.0	330	350	89	
86-74-8	Carbazole	U	530	1.0	500	530	120	

lw 3/6/09

KATAHDIN ANALYTICAL SERVICES
Report of Analytical Results

Client: CH2MHill
Project: TO-009 Lejeune
PO No:
Sample Date: 12/20/08
Received Date: 12/23/08
Extraction Date: 12/29/08
Analysis Date: 16-JAN-2009 02:41
Report Date: 01/23/2009
Matrix: SOIL
% Solids: 94.3

Lab ID: SB7368-7
Client ID: MR08-SS174-08D
SDG: TO9-23
Extracted by: CB
Extraction Method: SW846 3550
Analyst: JCG
Analysis Method: SW846 8270C
Lab Prep Batch: WG59460
Units: ug/Kgdrywt

CAS#	Compound	Flags	Results	DF	PQL	Adj.PQL	Adj.MDL
84-74-2	Di-n-butylphthalate	U	350	1.0	330	350	110
85-68-7	Butylbenzylphthalate	U	350	1.0	330	350	99
91-94-1	3,3'-Dichlorobenzidine	U	530	1.0	500	530	120
218-01-9	Chrysene	U	350	1.0	330	350	100
117-81-7	bis(2-Ethylhexyl)phthalate	U	350	1.0	330	350	100
117-84-0	Di-n-octylphthalate	U	350	1.0	330	350	220
367-12-4	2-Fluorophenol		54%				
13127-88-3	Phenol-D6		61%				
4165-60-0	Nitrobenzene-D5		65%				
321-60-8	2-Fluorobiphenyl		69%				
118-79-6	2,4,6-Tribromophenol		40%				
1718-51-0	Terphenyl-D14		86%				

3/6/09

4RE

KATAHDIN ANALYTICAL SERVICES
Report of Analytical Results

Client: CH2MHill
Project: TO-009 Lejeune
PO No:
Sample Date: 12/20/08
Received Date: 12/23/08
Extraction Date: 01/20/09
Analysis Date: 21-JAN-2009 22:19
Report Date: 01/23/2009
Matrix: SOIL
% Solids: 94.3

Lab ID: SB7368-7RE
Client ID: MR08-SS174-08D
SDG: TO9-23
Extracted by: AC
Extraction Method: SW846 3550
Analyst: JCG
Analysis Method: SW846 8270C
Lab Prep Batch: WG59975
Units: ug/Kgdrywt

Use original

CAS#	Compound	Flags	Results	DF	PQL	Adj.PQL	Adj.MDL
100-52-7	Benzaldehyde	U R	530	1.0	500	530	130 HT
108-95-2	Phenol	U	530	1.0	500	530	160
111-44-4	Bis(2-Chloroethyl)ether	U	350	1.0	330	350	86
95-57-8	2-Chlorophenol	U	530	1.0	500	530	170
95-48-7	2-Methylphenol	U	640	1.0	600	640	210
108-60-1	2,2'-Oxybis(1-chloropropane)	U	350	1.0	330	350	94
98-86-2	Acetophenone	U	640	1.0	600	640	190
621-64-7	N-Nitroso-di-n-propylamine	U	350	1.0	330	350	88
65794-96-9	3&4-Methylphenol	U	640	1.0	600	640	200
67-72-1	Hexachloroethane	U	350	1.0	330	350	100
98-95-3	Nitrobenzene	U	350	1.0	330	350	96
78-59-1	Isophorone	U	350	1.0	330	350	80
88-75-5	2-Nitrophenol	U	640	1.0	600	640	180
105-67-9	2,4-Dimethylphenol	U	530	1.0	500	530	170
111-91-1	Bis(2-Chloroethoxy)methane	U	350	1.0	330	350	100
120-83-2	2,4-Dichlorophenol	U	530	1.0	500	530	160
106-47-8	4-Chloroaniline	U	530	1.0	500	530	130
105-60-2	Caprolactam	U	530	1.0	500	530	150
59-50-7	4-Chloro-3-Methylphenol	U	530	1.0	500	530	180
88-06-2	2,4,6-Trichlorophenol	U	530	1.0	500	530	160
95-95-4	2,4,5-Trichlorophenol	U	530	1.0	500	530	160
91-58-7	2-Chloronaphthalene	U	350	1.0	330	350	92
92-52-4	1,1'-Biphenyl	U	350	1.0	330	350	77
88-74-4	2-Nitroaniline	U	530	1.0	500	530	80
131-11-3	Dimethyl Phthalate	U	350	1.0	330	350	83
606-20-2	2,6-Dinitrotoluene	U	350	1.0	330	350	84
208-96-8	Acenaphthylene	U	350	1.0	330	350	74
99-09-2	3-Nitroaniline	U	530	1.0	500	530	100
83-32-9	Acenaphthene	U	350	1.0	330	350	69
51-28-5	2,4-Dinitrophenol	U	1300	1.0	1200	1300	400
132-64-9	Dibenzofuran	U	350	1.0	330	350	84
100-02-7	4-Nitrophenol	U	1300	1.0	1200	1300	330
121-14-2	2,4-Dinitrotoluene	U	350	1.0	330	350	90
84-66-2	Diethylphthalate	U	350	1.0	330	350	85
7005-72-3	4-Chlorophenyl-phenylether	U	350	1.0	330	350	83
100-01-6	4-Nitroaniline	U	530	1.0	500	530	140
534-52-1	4,6-Dinitro-2-Methylphenol	U	1300	1.0	1200	1300	360
86-30-6	N-Nitrosodiphenylamine	U	700	1.0	660	700	230
101-55-3	4-Bromophenyl-phenylether	U	350	1.0	330	350	90
1912-24-9	Atrazine	U	350	1.0	330	350	96
87-86-5	Pentachlorophenol	U	870	1.0	820	870	250
120-12-7	Anthracene	U	350	1.0	330	350	89
86-74-8	Carbazole	U	530	1.0	500	530	120

R RE

lcw 3/6/09

KATAHDIN ANALYTICAL SERVICES
Report of Analytical Results

4RE

Use original

Client: CH2MHill
Project: TO-009 Lejeune
PO No:
Sample Date: 12/20/08
Received Date: 12/23/08
Extraction Date: 01/20/09
Analysis Date: 21-JAN-2009 22:19
Report Date: 01/23/2009
Matrix: SOIL
% Solids: 94.3

Lab ID: SB7368-7RE
Client ID: MR08-SS174-08D
SDG: TO9-23
Extracted by: AC
Extraction Method: SW846 3550
Analyst: JCG
Analysis Method: SW846 8270C
Lab Prep Batch: WG59975
Units: ug/Kgdrywt

CAS#	Compound	Flags	Results	DF	PQL	Adj.PQL	Adj.MDL
84-74-2	Di-n-butylphthalate	U R	350	1.0	330	350	110 HT
85-68-7	Butylbenzylphthalate	U	350	1.0	330	350	99
91-94-1	3,3'-Dichlorobenzidine	U	530	1.0	500	530	120
218-01-9	Chrysene	U	350	1.0	330	350	100
117-81-7	bis(2-Ethylhexyl)phthalate	U	350	1.0	330	350	100
117-84-0	Di-n-octylphthalate	U	350	1.0	330	350	220
367-12-4	2-Fluorophenol		70%				
13127-88-3	Phenol-D6		68%				
4165-60-0	Nitrobenzene-D5		64%				
321-60-8	2-Fluorobiphenyl		72%				
118-79-6	2,4,6-Tribromophenol		64%				
1718-51-0	Terphenyl-D14		96%				

R RE

lw 3/6/09

5

KATAHDIN ANALYTICAL SERVICES
Report of Analytical Results

Client: CH2MHill
Project: TO-009 Lejeune
PO No:
Sample Date: 12/20/08
Received Date: 12/23/08
Extraction Date: 12/29/08
Analysis Date: 16-JAN-2009 03:23
Report Date: 01/23/2009
Matrix: SOIL
% Solids: 91.4

Lab ID: SB7368-9
Client ID: MR08-IS174-5-6-08D
SDG: TO9-23
Extracted by: CB
Extraction Method: SW846 3550
Analyst: JCG
Analysis Method: SW846 8270C
Lab Prep Batch: WG59460
Units: ug/Kgdrywt

CAS#	Compound	Flags	Results	DF	PQL	Adj.PQL	Adj.MDL	
100-52-7	Benzaldehyde	~~U~~ UJ	550	1.0	500	550	130	IOB
108-95-2	Phenol	U	550	1.0	500	550	170	
111-44-4	Bis(2-Chloroethyl)ether	~~U~~ UJ	360	1.0	330	360	89	BSL
95-57-8	2-Chlorophenol	U	550	1.0	500	550	180	
95-48-7	2-Methylphenol	U	660	1.0	600	660	220	
108-60-1	2,2'-Oxybis(1-chloropropane)	U	360	1.0	330	360	97	
98-86-2	Acetophenone	~~U~~ UJ	660	1.0	600	660	190	BSL
621-64-7	N-Nitroso-di-n-propylamine	U	360	1.0	330	360	91	
65794-96-9	3&4-Methylphenol	U	660	1.0	600	660	200	
67-72-1	Hexachloroethane	~~U~~ UJ	360	1.0	330	360	100	BSL
98-95-3	Nitrobenzene	U	360	1.0	330	360	100	
78-59-1	Isophorone	U	360	1.0	330	360	82	
88-75-5	2-Nitrophenol	U	660	1.0	600	660	180	
105-67-9	2,4-Dimethylphenol	~~U~~ UJ	550	1.0	500	550	180	BSL
111-91-1	Bis(2-Chloroethoxy)methane	U	360	1.0	330	360	100	
120-83-2	2,4-Dichlorophenol	U	550	1.0	500	550	160	
106-47-8	4-Chloroaniline	U	550	1.0	500	550	130	
105-60-2	Caprolactam	U	550	1.0	500	550	160	
59-50-7	4-Chloro-3-Methylphenol	U	550	1.0	500	550	180	
88-06-2	2,4,6-Trichlorophenol	U	550	1.0	500	550	170	
95-95-4	2,4,5-Trichlorophenol	U	550	1.0	500	550	170	
91-58-7	2-Chloronaphthalene	U	360	1.0	330	360	95	
92-52-4	1,1'-Biphenyl	U	360	1.0	330	360	80	
88-74-4	2-Nitroaniline	U	550	1.0	500	550	82	
131-11-3	Dimethyl Phthalate	U	360	1.0	330	360	85	
606-20-2	2,6-Dinitrotoluene	U	360	1.0	330	360	86	
208-96-8	Acenaphthylene	U	360	1.0	330	360	77	
99-09-2	3-Nitroaniline	U	550	1.0	500	550	100	
83-32-9	Acenaphthene	U	360	1.0	330	360	71	
51-28-5	2,4-Dinitrophenol	U	1300	1.0	1200	1300	410	
132-64-9	Dibenzofuran	U	360	1.0	330	360	86	
100-02-7	4-Nitrophenol	U	1300	1.0	1200	1300	340	
121-14-2	2,4-Dinitrotoluene	U	360	1.0	330	360	93	
84-66-2	Diethylphthalate	U	360	1.0	330	360	88	
7005-72-3	4-Chlorophenyl-phenylether	U	360	1.0	330	360	85	
100-01-6	4-Nitroaniline	~~U~~ UJ	550	1.0	500	550	150	CCH
534-52-1	4,6-Dinitro-2-Methylphenol	U	1300	1.0	1200	1300	370	
86-30-6	N-Nitrosodiphenylamine	U	720	1.0	660	720	240	
101-55-3	4-Bromophenyl-phenylether	U	360	1.0	330	360	93	
1912-24-9	Atrazine	U	360	1.0	330	360	100	
87-86-5	Pentachlorophenol	U	900	1.0	820	900	260	
120-12-7	Anthracene	U	360	1.0	330	360	92	
86-74-8	Carbazole	U	550	1.0	500	550	120	

MW 3/6/09

5

KATAHDIN ANALYTICAL SERVICES
Report of Analytical Results

Client: CH2MHill
Project: TO-009 Lejeune
PO No:
Sample Date: 12/20/08
Received Date: 12/23/08
Extraction Date: 12/29/08
Analysis Date: 16-JAN-2009 03:23
Report Date: 01/23/2009
Matrix: SOIL
% Solids: 91.4

Lab ID: SB7368-9
Client ID: MR08-IS174-5-6-08D
SDG: TO9-23
Extracted by: CB
Extraction Method: SW846 3550
Analyst: JCG
Analysis Method: SW846 8270C
Lab Prep Batch: WG59460
Units: ug/Kgdrywt

CAS#	Compound	Flags	Results	DF	PQL	Adj.PQL	Adj.MDL
84-74-2	Di-n-butylphthalate	U	360	1.0	330	360	110
85-68-7	Butylbenzylphthalate	U	360	1.0	330	360	100
91-94-1	3,3'-Dichlorobenzidine	U	550	1.0	500	550	120
218-01-9	Chrysene	U	360	1.0	330	360	100
117-81-7	bis(2-Ethylhexyl)phthalate	U	360	1.0	330	360	110
117-84-0	Di-n-octylphthalate	U	360	1.0	330	360	230
367-12-4	2-Fluorophenol		69%				
13127-88-3	Phenol-D6		60%				
4165-60-0	Nitrobenzene-D5		71%				
321-60-8	2-Fluorobiphenyl		75%				
118-79-6	2,4,6-Tribromophenol		56%				
1718-51-0	Terphenyl-D14		82%				

lw 3/6/09

5RE

KATAHDIN ANALYTICAL SERVICES
Report of Analytical Results

Client: CH2MHill
Project: TO-009 Lejeune
PO No:
Sample Date: 12/20/08
Received Date: 12/23/08
Extraction Date: 01/20/09
Analysis Date: 21-JAN-2009 23:02
Report Date: 01/23/2009
Matrix: SOIL
% Solids: 91.4

Lab ID: SB7368-9RE
Client ID: MR08-IS174-5-6-08D
SDG: TO9-23
Extracted by: AC
Extraction Method: SW846 3550
Analyst: JCG
Analysis Method: SW846 8270C
Lab Prep Batch: WG59975
Units: ug/Kgdrywt

Use original

CAS#	Compound	Flags	Results	DF	PQL	Adj.PQL	Adj.MDL
100-52-7	Benzaldehyde	U R	550	1.0	500	550	130 HT
108-95-2	Phenol	U	550	1.0	500	550	170
111-44-4	Bis(2-Chloroethyl)ether	U	360	1.0	330	360	89
95-57-8	2-Chlorophenol	U	550	1.0	500	550	180
95-48-7	2-Methylphenol	U	660	1.0	600	660	220
108-60-1	2,2'-Oxybis(1-chloropropane)	U	360	1.0	330	360	97
98-86-2	Acetophenone	U	660	1.0	600	660	190
621-64-7	N-Nitroso-di-n-propylamine	U	360	1.0	330	360	91
65794-96-9	3&4-Methylphenol	U	660	1.0	600	660	200
67-72-1	Hexachloroethane	U	360	1.0	330	360	100
98-95-3	Nitrobenzene	U	360	1.0	330	360	100
78-59-1	Isophorone	U	360	1.0	330	360	82
88-75-5	2-Nitrophenol	U	660	1.0	600	660	180
105-67-9	2,4-Dimethylphenol	U	550	1.0	500	550	180
111-91-1	Bis(2-Chloroethoxy)methane	U	360	1.0	330	360	100
120-83-2	2,4-Dichlorophenol	U	550	1.0	500	550	160
106-47-8	4-Chloroaniline	U	550	1.0	500	550	130
105-60-2	Caprolactam	U	550	1.0	500	550	160
59-50-7	4-Chloro-3-Methylphenol	U	550	1.0	500	550	180
88-06-2	2,4,6-Trichlorophenol	U	550	1.0	500	550	170
95-95-4	2,4,5-Trichlorophenol	U	550	1.0	500	550	170
91-58-7	2-Chloronaphthalene	U	360	1.0	330	360	95
92-52-4	1,1'-Biphenyl	U	360	1.0	330	360	80
88-74-4	2-Nitroaniline	U	550	1.0	500	550	82
131-11-3	Dimethyl Phthalate	U	360	1.0	330	360	85
606-20-2	2,6-Dinitrotoluene	U	360	1.0	330	360	86
208-96-8	Acenaphthylene	U	360	1.0	330	360	77
99-09-2	3-Nitroaniline	U	550	1.0	500	550	100
83-32-9	Acenaphthene	U	360	1.0	330	360	71
51-28-5	2,4-Dinitrophenol	U	1300	1.0	1200	1300	410
132-64-9	Dibenzofuran	U	360	1.0	330	360	86
100-02-7	4-Nitrophenol	U	1300	1.0	1200	1300	340
121-14-2	2,4-Dinitrotoluene	U	360	1.0	330	360	93
84-66-2	Diethylphthalate	U	360	1.0	330	360	88
7005-72-3	4-Chlorophenyl-phenylether	U	360	1.0	330	360	85
100-01-6	4-Nitroaniline	U	550	1.0	500	550	150
534-52-1	4,6-Dinitro-2-Methylphenol	U	1300	1.0	1200	1300	370
86-30-6	N-Nitrosodiphenylamine	U	720	1.0	660	720	240
101-55-3	4-Bromophenyl-phenylether	U	360	1.0	330	360	93
1912-24-9	Atrazine	U	360	1.0	330	360	100
87-86-5	Pentachlorophenol	U	900	1.0	820	900	260
120-12-7	Anthracene	U	360	1.0	330	360	92
86-74-8	Carbazole	U	550	1.0	500	550	120

RE

DLW 3/6/09

5RE

KATAHDIN ANALYTICAL SERVICES
Report of Analytical Results

Client: CH2MHill
Project: TO-009 Lejeune
PO No:
Sample Date: 12/20/08
Received Date: 12/23/08
Extraction Date: 01/20/09
Analysis Date: 21-JAN-2009 23:02
Report Date: 01/23/2009
Matrix: SOIL
% Solids: 91.4

Lab ID: SB7368-9RE
Client ID: MR08-IS174-5-6-08D
SDG: TO9-23
Extracted by: AC
Extraction Method: SW846 3550
Analyst: JCG
Analysis Method: SW846 8270C
Lab Prep Batch: WG59975
Units: ug/Kgdrywt

Use original

CAS#	Compound	Flags	Results	DF	PQL	Adj.PQL	Adj.MDL	
84-74-2	Di-n-butylphthalate	~~U~~ R	360	1.0	~~330~~	360	110	HT
85-68-7	Butylbenzylphthalate	~~U~~	360	1.0	~~330~~	360	100	
91-94-1	3,3'-Dichlorobenzidine	~~U~~	550	1.0	500	550	120	
218-01-9	Chrysene	~~U~~	360	1.0	330	360	100	
117-81-7	bis(2-Ethylhexyl)phthalate	~~U~~	360	1.0	330	360	110	
117-84-0	Di-n-octylphthalate	~~U~~	360	1.0	330	360	230	
367-12-4	2-Fluorophenol		70%					
13127-88-3	Phenol-D6		65%					
4165-60-0	Nitrobenzene-D5		71%					
321-60-8	2-Fluorobiphenyl		71%					
118-79-6	2,4,6-Tribromophenol		58%					
1718-51-0	Terphenyl-D14		101%					

R RE

lew 3/6/09

6

KATAHDIN ANALYTICAL SERVICES
Report of Analytical Results

Client: CH2MHill
Project: TO-009 Lejeune
PO No:
Sample Date: 12/20/08
Received Date: 12/23/08
Extraction Date: 12/29/08
Analysis Date: 16-JAN-2009 04:05
Report Date: 01/23/2009
Matrix: SOIL
% Solids: 89.1

Lab ID: SB7368-11
Client ID: MR08-SS167-08D
SDG: TO9-23
Extracted by: CB
Extraction Method: SW846 3550
Analyst: JCG
Analysis Method: SW846 8270C
Lab Prep Batch: WG59460
Units: ug/Kgdrywt

CAS#	Compound	Flags	Results	DF	PQL	Adj.PQL	Adj.MDL	
100-52-7	Benzaldehyde	~~U~~ UJ	560	1.0	500	560	130	JCB
108-95-2	Phenol	U	560	1.0	500	560	180	
111-44-4	Bis(2-Chloroethyl)ether	~~U~~ UJ	370	1.0	330	370	91	BSL
95-57-8	2-Chlorophenol	U	560	1.0	500	560	180	
95-48-7	2-Methylphenol	U	670	1.0	600	670	220	
108-60-1	2,2'-Oxybis(1-chloropropane)	U	370	1.0	330	370	100	
98-86-2	Acetophenone	~~U~~ UJ	670	1.0	600	670	200	BSL
621-64-7	N-Nitroso-di-n-propylamine	U	370	1.0	330	370	93	
65794-96-9	3&4-Methylphenol	U	670	1.0	600	670	210	
67-72-1	Hexachloroethane	~~U~~ UJ	370	1.0	330	370	110	BSL
98-95-3	Nitrobenzene	U	370	1.0	330	370	100	
78-59-1	Isophorone	U	370	1.0	330	370	84	
88-75-5	2-Nitrophenol	U	670	1.0	600	670	190	
105-67-9	2,4-Dimethylphenol	~~U~~ UJ	560	1.0	500	560	180	BSL
111-91-1	Bis(2-Chloroethoxy)methane	U	370	1.0	330	370	110	
120-83-2	2,4-Dichlorophenol	U	560	1.0	500	560	170	
106-47-8	4-Chloroaniline	U	560	1.0	500	560	130	
105-60-2	Caprolactam	U	560	1.0	500	560	160	
59-50-7	4-Chloro-3-Methylphenol	U	560	1.0	500	560	190	
88-06-2	2,4,6-Trichlorophenol	U	560	1.0	500	560	170	
95-95-4	2,4,5-Trichlorophenol	U	560	1.0	500	560	170	
91-58-7	2-Chloronaphthalene	U	370	1.0	330	370	98	
92-52-4	1,1'-Biphenyl	U	370	1.0	330	370	82	
88-74-4	2-Nitroaniline	U	560	1.0	500	560	84	
131-11-3	Dimethyl Phthalate	U	370	1.0	330	370	88	
606-20-2	2,6-Dinitrotoluene	U	370	1.0	330	370	89	
208-96-8	Acenaphthylene	U	370	1.0	330	370	78	
99-09-2	3-Nitroaniline	U	560	1.0	500	560	100	
83-32-9	Acenaphthene	U	370	1.0	330	370	73	
51-28-5	2,4-Dinitrophenol	U	1300	1.0	1200	1300	420	
132-64-9	Dibenzofuran	U	370	1.0	330	370	89	
100-02-7	4-Nitrophenol	U	1300	1.0	1200	1300	350	
121-14-2	2,4-Dinitrotoluene	U	370	1.0	330	370	95	
84-66-2	Diethylphthalate	U	370	1.0	330	370	90	
7005-72-3	4-Chlorophenyl-phenylether	U	370	1.0	330	370	88	
100-01-6	4-Nitroaniline	~~U~~ UJ	560	1.0	500	560	150	CCH
534-52-1	4,6-Dinitro-2-Methylphenol	U	1300	1.0	1200	1300	380	
86-30-6	N-Nitrosodiphenylamine	U	740	1.0	660	740	240	
101-55-3	4-Bromophenyl-phenylether	U	370	1.0	330	370	95	
1912-24-9	Atrazine	U	370	1.0	330	370	100	
87-86-5	Pentachlorophenol	U	920	1.0	820	920	270	
120-12-7	Anthracene	U	370	1.0	330	370	94	
86-74-8	Carbazole	U	560	1.0	500	560	120	

LW 3/6/09

6

KATAHDIN ANALYTICAL SERVICES
Report of Analytical Results

Client: CH2MHill
Project: TO-009 Lejeune
PO No:
Sample Date: 12/20/08
Received Date: 12/23/08
Extraction Date: 12/29/08
Analysis Date: 16-JAN-2009 04:05
Report Date: 01/23/2009
Matrix: SOIL
% Solids: 89.1

Lab ID: SB7368-11
Client ID: MR08-SS167-08D
SDG: TO9-23
Extracted by: CB
Extraction Method: SW846 3550
Analyst: JCG
Analysis Method: SW846 8270C
Lab Prep Batch: WG59460
Units: ug/Kgdrywt

CAS#	Compound	Flags	Results	DF	PQL	Adj.PQL	Adj.MDL
84-74-2	Di-n-butylphthalate	U	370	1.0	330	370	110
85-68-7	Butylbenzylphthalate	U	370	1.0	330	370	100
91-94-1	3,3'-Dichlorobenzidine	U	560	1.0	500	560	130
218-01-9	Chrysene	U	370	1.0	330	370	110
117-81-7	bis(2-Ethylhexyl)phthalate	J	140	1.0	330	370	110
117-84-0	Di-n-octylphthalate	U	370	1.0	330	370	240
367-12-4	2-Fluorophenol		78%				
13127-88-3	Phenol-D6		71%				
4165-60-0	Nitrobenzene-D5		73%				
321-60-8	2-Fluorobiphenyl		83%				
118-79-6	2,4,6-Tribromophenol		75%				
1718-51-0	Terphenyl-D14		90%				

dw 3/6/09

6RE

KATAHDIN ANALYTICAL SERVICES
Report of Analytical Results

Client: CH2MHill
Project: TO-009 Lejeune
PO No:
Sample Date: 12/20/08
Received Date: 12/23/08
Extraction Date: 01/20/09
Analysis Date: 22-JAN-2009 02:33
Report Date: 01/23/2009
Matrix: SOIL
% Solids: 89.1

Lab ID: SB7368-11RE
Client ID: MR08-SS167-08D
SDG: TO9-23
Extracted by: AC
Extraction Method: SW846 3550
Analyst: JCG
Analysis Method: SW846 8270C
Lab Prep Batch: WG59975
Units: ug/Kgdrywt

Use original

CAS#	Compound	Flags	Results	DF	PQL	Adj.PQL	Adj.MDL
100-52-7	Benzaldehyde	U R	560	1.0	500	560	130 HT
108-95-2	Phenol	U	560	1.0	500	560	180
111-44-4	Bis(2-Chloroethyl)ether	U	370	1.0	330	370	91
95-57-8	2-Chlorophenol	U	560	1.0	500	560	180
95-48-7	2-Methylphenol	U	670	1.0	600	670	220
108-60-1	2,2'-Oxybis(1-chloropropane)	U	370	1.0	330	370	100
98-86-2	Acetophenone	U	670	1.0	600	670	200
621-64-7	N-Nitroso-di-n-propylamine	U	370	1.0	330	370	93
65794-96-9	3&4-Methylphenol	U	670	1.0	600	670	210
67-72-1	Hexachloroethane	U	370	1.0	330	370	110
98-95-3	Nitrobenzene	U	370	1.0	330	370	100
78-59-1	Isophorone	U	370	1.0	330	370	84
88-75-5	2-Nitrophenol	U	670	1.0	600	670	190
105-67-9	2,4-Dimethylphenol	U	560	1.0	500	560	180
111-91-1	Bis(2-Chloroethoxy)methane	U	370	1.0	330	370	110
120-83-2	2,4-Dichlorophenol	U	560	1.0	500	560	170
106-47-8	4-Chloroaniline	U	560	1.0	500	560	130
105-60-2	Caprolactam	U	560	1.0	500	560	160
59-50-7	4-Chloro-3-Methylphenol	U	560	1.0	500	560	190
88-06-2	2,4,6-Trichlorophenol	U	560	1.0	500	560	170
95-95-4	2,4,5-Trichlorophenol	U	560	1.0	500	560	170
91-58-7	2-Chloronaphthalene	U	370	1.0	330	370	98
92-52-4	1,1'-Biphenyl	U	370	1.0	330	370	82
88-74-4	2-Nitroaniline	U	560	1.0	500	560	84
131-11-3	Dimethyl Phthalate	U	370	1.0	330	370	88
606-20-2	2,6-Dinitrotoluene	U	370	1.0	330	370	89
208-96-8	Acenaphthylene	U	370	1.0	330	370	78
99-09-2	3-Nitroaniline	U	560	1.0	500	560	100
83-32-9	Acenaphthene	U	370	1.0	330	370	73
51-28-5	2,4-Dinitrophenol	U	1300	1.0	1200	1300	420
132-64-9	Dibenzofuran	U	370	1.0	330	370	89
100-02-7	4-Nitrophenol	U	1300	1.0	1200	1300	350
121-14-2	2,4-Dinitrotoluene	U	370	1.0	330	370	95
84-66-2	Diethylphthalate	U	370	1.0	330	370	90
7005-72-3	4-Chlorophenyl-phenylether	U	370	1.0	330	370	88
100-01-6	4-Nitroaniline	U	560	1.0	500	560	150
534-52-1	4,6-Dinitro-2-Methylphenol	U	1300	1.0	1200	1300	380
86-30-6	N-Nitrosodiphenylamine	U	740	1.0	660	740	240
101-55-3	4-Bromophenyl-phenylether	U	370	1.0	330	370	95
1912-24-9	Atrazine	U	370	1.0	330	370	100
87-86-5	Pentachlorophenol	U	920	1.0	820	920	270
120-12-7	Anthracene	U	370	1.0	330	370	94
86-74-8	Carbazole	U	560	1.0	500	560	120

R

RE

Rev 3/6/09

6RE

KATAHDIN ANALYTICAL SERVICES
Report of Analytical Results

Client: CH2MHill
Project: TO-009 Lejeune
PO No:
Sample Date: 12/20/08
Received Date: 12/23/08
Extraction Date: 01/20/09
Analysis Date: 22-JAN-2009 02:33
Report Date: 01/23/2009
Matrix: SOIL
% Solids: 89.1

Lab ID: SB7368-11RE
Client ID: MR08-SS167-08D
SDG: TO9-23
Extracted by: AC
Extraction Method: SW846 3550
Analyst: JCG
Analysis Method: SW846 8270C
Lab Prep Batch: WG59975
Units: ug/Kgdrywt

Use original

CAS#	Compound	Flags	Results	DF	PQL	Adj.PQL	Adj.MDL	
84-74-2	Di-n-butylphthalate	U R	370	1.0	330	370	110	HT
85-68-7	Butylbenzylphthalate	U	370	1.0	330	370	100	
91-94-1	3,3'-Dichlorobenzidine	U	560	1.0	500	560	130	
218-01-9	Chrysene	U	370	1.0	330	370	110	
117-81-7	bis(2-Ethylhexyl)phthalate	U	370	1.0	330	370	110	
117-84-0	Di-n-octylphthalate	U	370	1.0	330	370	240	
367-12-4	2-Fluorophenol		73%					
13127-88-3	Phenol-D6		62%					
4165-60-0	Nitrobenzene-D5		68%					
321-60-8	2-Fluorobiphenyl		82%					
118-79-6	2,4,6-Tribromophenol		77%					
1718-51-0	Terphenyl-D14		104%					

R RE

lew 3/6/09

7

KATAHDIN ANALYTICAL SERVICES
Report of Analytical Results

Client: CH2MHill
Project: TO-009 Lejeune
PO No:
Sample Date: 12/20/08
Received Date: 12/23/08
Extraction Date: 12/29/08
Analysis Date: 16-JAN-2009 04:47
Report Date: 01/23/2009
Matrix: SOIL
% Solids: 89.0

Lab ID: SB7368-13
Client ID: MR08-IS167-2-3-08D
SDG: TO9-23
Extracted by: CB
Extraction Method: SW846 3550
Analyst: JCG
Analysis Method: SW846 8270C
Lab Prep Batch: WG59460
Units: ug/Kgdrywt

CAS#	Compound	Flags	Results	DF	PQL	Adj.PQL	Adj.MDL	
100-52-7	Benzaldehyde	~~U~~ UJ	560	1.0	500	560	130	JCB
108-95-2	Phenol	U	560	1.0	500	560	180	
111-44-4	Bis(2-Chloroethyl)ether	~~U~~ UJ	370	1.0	330	370	91	BSL
95-57-8	2-Chlorophenol	U	560	1.0	500	560	180	
95-48-7	2-Methylphenol	U	670	1.0	600	670	220	
108-60-1	2,2'-Oxybis(1-chloropropane)	U	370	1.0	330	370	100	
98-86-2	Acetophenone	~~U~~ UJ	670	1.0	600	670	200	BSL
621-64-7	N-Nitroso-di-n-propylamine	U	370	1.0	330	370	93	
65794-96-9	3&4-Methylphenol	U	670	1.0	600	670	210	
67-72-1	Hexachloroethane	~~U~~ UJ	370	1.0	330	370	110	BSL
98-95-3	Nitrobenzene	U	370	1.0	330	370	100	
78-59-1	Isophorone	U	370	1.0	330	370	84	
88-75-5	2-Nitrophenol	U	670	1.0	600	670	190	
105-67-9	2,4-Dimethylphenol	~~U~~ UJ	560	1.0	500	560	180	BSL
111-91-1	Bis(2-Chloroethoxy)methane	U	370	1.0	330	370	110	
120-83-2	2,4-Dichlorophenol	U	560	1.0	500	560	170	
106-47-8	4-Chloroaniline	U	560	1.0	500	560	130	
105-60-2	Caprolactam	U	560	1.0	500	560	160	
59-50-7	4-Chloro-3-Methylphenol	U	560	1.0	500	560	190	
88-06-2	2,4,6-Trichlorophenol	U	560	1.0	500	560	170	
95-95-4	2,4,5-Trichlorophenol	U	560	1.0	500	560	170	
91-58-7	2-Chloronaphthalene	U	370	1.0	330	370	98	
92-52-4	1,1'-Biphenyl	U	370	1.0	330	370	82	
88-74-4	2-Nitroaniline	U	560	1.0	500	560	84	
131-11-3	Dimethyl Phthalate	U	370	1.0	330	370	88	
606-20-2	2,6-Dinitrotoluene	U	370	1.0	330	370	89	
208-96-8	Acenaphthylene	U	370	1.0	330	370	79	
99-09-2	3-Nitroaniline	U	560	1.0	500	560	100	
83-32-9	Acenaphthene	U	370	1.0	330	370	73	
51-28-5	2,4-Dinitrophenol	U	1300	1.0	1200	1300	420	
132-64-9	Dibenzofuran	U	370	1.0	330	370	89	
100-02-7	4-Nitrophenol	U	1300	1.0	1200	1300	350	
121-14-2	2,4-Dinitrotoluene	U	370	1.0	330	370	96	
84-66-2	Diethylphthalate	U	370	1.0	330	370	90	
7005-72-3	4-Chlorophenyl-phenylether	U	370	1.0	330	370	88	
100-01-6	4-Nitroaniline	~~U~~ UJ	560	1.0	500	560	150	CCH
534-52-1	4,6-Dinitro-2-Methylphenol	U	1300	1.0	1200	1300	380	
86-30-6	N-Nitrosodiphenylamine	U	740	1.0	660	740	250	
101-55-3	4-Bromophenyl-phenylether	U	370	1.0	330	370	96	
1912-24-9	Atrazine	U	370	1.0	330	370	100	
87-86-5	Pentachlorophenol	U	920	1.0	820	920	270	
120-12-7	Anthracene	U	370	1.0	330	370	94	
86-74-8	Carbazole	U	560	1.0	500	560	120	

KW 3/6/09

7

KATAHDIN ANALYTICAL SERVICES
Report of Analytical Results

Client: CH2MHill
Project: TO-009 Lejeune
PO No:
Sample Date: 12/20/08
Received Date: 12/23/08
Extraction Date: 12/29/08
Analysis Date: 16-JAN-2009 04:47
Report Date: 01/23/2009
Matrix: SOIL
% Solids: 89.0

Lab ID: SB7368-13
Client ID: MR08-IS167-2-3-08D
SDG: TO9-23
Extracted by: CB
Extraction Method: SW846 3550
Analyst: JCG
Analysis Method: SW846 8270C
Lab Prep Batch: WG59460
Units: ug/Kgdrywt

CAS#	Compound	Flags	Results	DF	PQL	Adj.PQL	Adj.MDL
84-74-2	Di-n-butylphthalate	U	370	1.0	330	370	110
85-68-7	Butylbenzylphthalate	U	370	1.0	330	370	100
91-94-1	3,3'-Dichlorobenzidine	U	560	1.0	500	560	130
218-01-9	Chrysene	U	370	1.0	330	370	110
117-81-7	bis(2-Ethylhexyl)phthalate	U	370	1.0	330	370	110
117-84-0	Di-n-octylphthalate	U	370	1.0	330	370	240
367-12-4	2-Fluorophenol		62%				
13127-88-3	Phenol-D6		61%				
4165-60-0	Nitrobenzene-D5		60%				
321-60-8	2-Fluorobiphenyl		68%				
118-79-6	2,4,6-Tribromophenol		64%				
1718-51-0	Terphenyl-D14		81%				

LW
3/6/09

7RE

KATAHDIN ANALYTICAL SERVICES
Report of Analytical Results

Client: CH2MHill
Project: TO-009 Lejeune
PO No:
Sample Date: 12/20/08
Received Date: 12/23/08
Extraction Date: 01/20/09
Analysis Date: 21-JAN-2009 23:44
Report Date: 01/23/2009
Matrix: SOIL
% Solids: 89.0

Lab ID: SB7368-13RE
Client ID: MR08-IS167-2-3-08D
SDG: TO9-23
Extracted by: AC
Extraction Method: SW846 3550
Analyst: JCG
Analysis Method: SW846 8270C
Lab Prep Batch: WG59975
Units: ug/Kgdrywt

Use original

CAS#	Compound	Flags	Results	DF	PQL	Adj.PQL	Adj.MDL
100-52-7	Benzaldehyde	U R	560	1.0	500	560	130 HT
108-95-2	Phenol	U	560	1.0	500	560	180
111-44-4	Bis(2-Chloroethyl)ether	U	370	1.0	330	370	91
95-57-8	2-Chlorophenol	U	560	1.0	500	560	180
95-48-7	2-Methylphenol	U	670	1.0	600	670	220
108-60-1	2,2'-Oxybis(1-chloropropane)	U	370	1.0	330	370	100
98-86-2	Acetophenone	U	670	1.0	600	670	200
621-64-7	N-Nitroso-di-n-propylamine	U	370	1.0	330	370	93
65794-96-9	3&4-Methylphenol	U	670	1.0	600	670	210
67-72-1	Hexachloroethane	U	370	1.0	330	370	110
98-95-3	Nitrobenzene	U	370	1.0	330	370	100
78-59-1	Isophorone	U	370	1.0	330	370	84
88-75-5	2-Nitrophenol	U	670	1.0	600	670	190
105-67-9	2,4-Dimethylphenol	U	560	1.0	500	560	180
111-91-1	Bis(2-Chloroethoxy)methane	U	370	1.0	330	370	110
120-83-2	2,4-Dichlorophenol	U	560	1.0	500	560	170
106-47-8	4-Chloroaniline	U	560	1.0	500	560	130
105-60-2	Caprolactam	U	560	1.0	500	560	160
59-50-7	4-Chloro-3-Methylphenol	U	560	1.0	500	560	190
88-06-2	2,4,6-Trichlorophenol	U	560	1.0	500	560	170
95-95-4	2,4,5-Trichlorophenol	U	560	1.0	500	560	170
91-58-7	2-Chloronaphthalene	U	370	1.0	330	370	98
92-52-4	1,1'-Biphenyl	U	370	1.0	330	370	82
88-74-4	2-Nitroaniline	U	560	1.0	500	560	84
131-11-3	Dimethyl Phthalate	U	370	1.0	330	370	88
606-20-2	2,6-Dinitrotoluene	U	370	1.0	330	370	89
208-96-8	Acenaphthylene	U	370	1.0	330	370	79
99-09-2	3-Nitroaniline	U	560	1.0	500	560	100
83-32-9	Acenaphthene	U	370	1.0	330	370	73
51-28-5	2,4-Dinitrophenol	U	1300	1.0	1200	1300	420
132-64-9	Dibenzofuran	U	370	1.0	330	370	89
100-02-7	4-Nitrophenol	U	1300	1.0	1200	1300	350
121-14-2	2,4-Dinitrotoluene	U	370	1.0	330	370	96
84-66-2	Diethylphthalate	U	370	1.0	330	370	90
7005-72-3	4-Chlorophenyl-phenylether	U	370	1.0	330	370	88
100-01-6	4-Nitroaniline	U	560	1.0	500	560	150
534-52-1	4,6-Dinitro-2-Methylphenol	U	1300	1.0	1200	1300	380
86-30-6	N-Nitrosodiphenylamine	U	740	1.0	660	740	250
101-55-3	4-Bromophenyl-phenylether	U	370	1.0	330	370	96
1912-24-9	Atrazine	U	370	1.0	330	370	100
87-86-5	Pentachlorophenol	U	920	1.0	820	920	270
120-12-7	Anthracene	U	370	1.0	330	370	94
86-74-8	Carbazole	U	560	1.0	500	560	120

RE

lw 3/6/09

7RE

KATAHDIN ANALYTICAL SERVICES
Report of Analytical Results

Client: CH2MHill
Project: TO-009 Lejeune
PO No:
Sample Date: 12/20/08
Received Date: 12/23/08
Extraction Date: 01/20/09
Analysis Date: 21-JAN-2009 23:44
Report Date: 01/23/2009
Matrix: SOIL
% Solids: 89.0

Lab ID: SB7368-13RE
Client ID: MR08-IS167-2-3-08D
SDG: TO9-23
Extracted by: AC
Extraction Method: SW846 3550
Analyst: JCG
Analysis Method: SW846 8270C
Lab Prep Batch: WG59975
Units: ug/Kgdrywt

Use original

CAS#	Compound	Flags	Results	DF	PQL	Adj.PQL	Adj.MDL	
84-74-2	Di-n-butylphthalate	U R	370	1.0	330	370	110	HT
85-68-7	Butylbenzylphthalate	U	370	1.0	330	370	100	
91-94-1	3,3'-Dichlorobenzidine	U	560	1.0	500	560	130	
218-01-9	Chrysene	U	370	1.0	330	370	110	
117-81-7	bis(2-Ethylhexyl)phthalate	U	370	1.0	330	370	110	
117-84-0	Di-n-octylphthalate	U	370	1.0	330	370	240	
367-12-4	2-Fluorophenol		74%					
13127-88-3	Phenol-D6		86%					
4165-60-0	Nitrobenzene-D5		65%					
321-60-8	2-Fluorobiphenyl		79%					
118-79-6	2,4,6-Tribromophenol		62%					
1718-51-0	Terphenyl-D14		102%					

R RE

MW 3/6/09

8

KATAHDIN ANALYTICAL SERVICES
Report of Analytical Results

Client: CH2MHill
Project: TO-009 Lejeune
PO No:
Sample Date: 12/20/08
Received Date: 12/23/08
Extraction Date: 12/29/08
Analysis Date: 16-JAN-2009 12:40
Report Date: 01/23/2009
Matrix: SOIL
% Solids: 90.3

Lab ID: SB7368-15
Client ID: MR08-SS172-08D
SDG: TO9-23
Extracted by: CB
Extraction Method: SW846 3550
Analyst: JLP
Analysis Method: SW846 8270C
Lab Prep Batch: WG59460
Units: ug/Kgdrywt

Use reanalysis

CAS#	Compound	Flags	Results	DF	PQL	Adj.PQL	Adj.MDL
100-52-7	Benzaldehyde	U R	550	1.0	500	550	130 SSL
108-95-2	Phenol	U	550	1.0	500	550	170
111-44-4	Bis(2-Chloroethyl)ether	U	360	1.0	330	360	90
95-57-8	2-Chlorophenol	U	550	1.0	500	550	180
95-48-7	2-Methylphenol	U	660	1.0	600	660	220
108-60-1	2,2'-Oxybis(1-chloropropane)	U	360	1.0	330	360	98
98-86-2	Acetophenone	U	660	1.0	600	660	200
621-64-7	N-Nitroso-di-n-propylamine	U	360	1.0	330	360	92
65794-96-9	3&4-Methylphenol	U	660	1.0	600	660	210
67-72-1	Hexachloroethane	U	360	1.0	330	360	110
98-95-3	Nitrobenzene	U	360	1.0	330	360	100
78-59-1	Isophorone	U	360	1.0	330	360	83
88-75-5	2-Nitrophenol	U	660	1.0	600	660	180
105-67-9	2,4-Dimethylphenol	U	550	1.0	500	550	180
111-91-1	Bis(2-Chloroethoxy)methane	U	360	1.0	330	360	110
120-83-2	2,4-Dichlorophenol	U	550	1.0	500	550	170
106-47-8	4-Chloroaniline	U	550	1.0	500	550	130
105-60-2	Caprolactam	U	550	1.0	500	550	160
59-50-7	4-Chloro-3-Methylphenol	U	550	1.0	500	550	180
88-06-2	2,4,6-Trichlorophenol	U	550	1.0	500	550	170
95-95-4	2,4,5-Trichlorophenol	U	550	1.0	500	550	170
91-58-7	2-Chloronaphthalene	U	360	1.0	330	360	96
92-52-4	1,1'-Biphenyl	U	360	1.0	330	360	81
88-74-4	2-Nitroaniline	U	550	1.0	500	550	83
131-11-3	Dimethyl Phthalate	U	360	1.0	330	360	86
606-20-2	2,6-Dinitrotoluene	U	360	1.0	330	360	87
208-96-8	Acenaphthylene	U	360	1.0	330	360	77
99-09-2	3-Nitroaniline	U	550	1.0	500	550	100
83-32-9	Acenaphthene	U	360	1.0	330	360	72
51-28-5	2,4-Dinitrophenol	U	1300	1.0	1200	1300	420
132-64-9	Dibenzofuran	U	360	1.0	330	360	87
100-02-7	4-Nitrophenol	U	1300	1.0	1200	1300	340
121-14-2	2,4-Dinitrotoluene	U	360	1.0	330	360	94
84-66-2	Diethylphthalate	U	360	1.0	330	360	88
7005-72-3	4-Chlorophenyl-phenylether	U	360	1.0	330	360	86
100-01-6	4-Nitroaniline	U	550	1.0	500	550	150
534-52-1	4,6-Dinitro-2-Methylphenol	U	1300	1.0	1200	1300	370
86-30-6	N-Nitrosodiphenylamine	U	730	1.0	660	730	240
101-55-3	4-Bromophenyl-phenylether	U	360	1.0	330	360	94
1912-24-9	Atrazine	U	360	1.0	330	360	100
87-86-5	Pentachlorophenol	U	910	1.0	820	910	260
120-12-7	Anthracene	U	360	1.0	330	360	93
86-74-8	Carbazole	U	550	1.0	500	550	120

lw 3/6/09

8

KATAHDIN ANALYTICAL SERVICES
Report of Analytical Results

Client: CH2MHill
Project: TO-009 Lejeune
PO No:
Sample Date: 12/20/08
Received Date: 12/23/08
Extraction Date: 12/29/08
Analysis Date: 16-JAN-2009 12:40
Report Date: 01/23/2009
Matrix: SOIL
% Solids: 90.3

Lab ID: SB7368-15
Client ID: MR08-SS172-08D
SDG: TO9-23
Extracted by: CB
Extraction Method: SW846 3550
Analyst: JLP
Analysis Method: SW846 8270C
Lab Prep Batch: WG59460
Units: ug/Kgdrywt

Use reanalysis

CAS#	Compound	Flags	Results	DF	PQL	Adj.PQL	Adj.MDL
84-74-2	Di-n-butylphthalate	U	360	1.0	330	360	110
85-68-7	Butylbenzylphthalate	U	360	1.0	330	360	100
91-94-1	3,3'-Dichlorobenzidine	U	550	1.0	500	550	130
218-01-9	Chrysene	U	360	1.0	330	360	100
117-81-7	bis(2-Ethylhexyl)phthalate	U	360	1.0	330	360	110
117-84-0	Di-n-octylphthalate	U	360	1.0	330	360	230
367-12-4	2-Fluorophenol		* 0%				
13127-88-3	Phenol-D6		* 0%				
4165-60-0	Nitrobenzene-D5		* 0%				
321-60-8	2-Fluorobiphenyl		* 0%				
118-79-6	2,4,6-Tribromophenol		* 0%				
1718-51-0	Terphenyl-D14		* 0%				

R

SSL

Page 02 of 02 G3989.D

R RE

RW 3/6/09

8RE

KATAHDIN ANALYTICAL SERVICES
Report of Analytical Results

Client: CH2MHill
Project: TO-009 Lejeune
PO No:
Sample Date: 12/20/08
Received Date: 12/23/08
Extraction Date: 01/14/09
Analysis Date: 17-JAN-2009 11:30
Report Date: 01/23/2009
Matrix: SOIL
% Solids: 90.3

Lab ID: SB7368-15RE
Client ID: MR08-SS172-08D
SDG: TO9-23
Extracted by: AC
Extraction Method: SW846 3550
Analyst: JCG
Analysis Method: SW846 8270C
Lab Prep Batch: WG59785
Units: ug/Kgdrywt

CAS#	Compound	Flags	Results	DF	PQL	Adj.PQL	Adj.MDL
100-52-7	Benzaldehyde	U UJ	550	1.0	500	550	130 HT
108-95-2	Phenol	U	550	1.0	500	550	170
111-44-4	Bis(2-Chloroethyl)ether	U	360	1.0	330	360	90
95-57-8	2-Chlorophenol	U	550	1.0	500	550	180
95-48-7	2-Methylphenol	U	660	1.0	600	660	220
108-60-1	2,2'-Oxybis(1-chloropropane)	U	360	1.0	330	360	98
98-86-2	Acetophenone	U	660	1.0	600	660	200
621-64-7	N-Nitroso-di-n-propylamine	U	360	1.0	330	360	92
65794-96-9	3&4-Methylphenol	U	660	1.0	600	660	210
67-72-1	Hexachloroethane	U	360	1.0	330	360	110
98-95-3	Nitrobenzene	U	360	1.0	330	360	100
78-59-1	Isophorone	U	360	1.0	330	360	83
88-75-5	2-Nitrophenol	U	660	1.0	600	660	180
105-67-9	2,4-Dimethylphenol	U	550	1.0	500	550	180
111-91-1	Bis(2-Chloroethoxy)methane	U	360	1.0	330	360	110
120-83-2	2,4-Dichlorophenol	U	550	1.0	500	550	170
106-47-8	4-Chloroaniline	U	550	1.0	500	550	130
105-60-2	Caprolactam	U	550	1.0	500	550	160
59-50-7	4-Chloro-3-Methylphenol	U	550	1.0	500	550	180
88-06-2	2,4,6-Trichlorophenol	U	550	1.0	500	550	170
95-95-4	2,4,5-Trichlorophenol	U	550	1.0	500	550	170
91-58-7	2-Chloronaphthalene	U	360	1.0	330	360	96
92-52-4	1,1'-Biphenyl	U	360	1.0	330	360	81
88-74-4	2-Nitroaniline	U	550	1.0	500	550	83
131-11-3	Dimethyl Phthalate	U	360	1.0	330	360	86
606-20-2	2,6-Dinitrotoluene	U	360	1.0	330	360	87
208-96-8	Acenaphthylene	U	360	1.0	330	360	77
99-09-2	3-Nitroaniline	U	550	1.0	500	550	100
83-32-9	Acenaphthene	U	360	1.0	330	360	72
51-28-5	2,4-Dinitrophenol	U	1300	1.0	1200	1300	420
132-64-9	Dibenzofuran	U	360	1.0	330	360	87
100-02-7	4-Nitrophenol	U	1300	1.0	1200	1300	340
121-14-2	2,4-Dinitrotoluene	U	360	1.0	330	360	94
84-66-2	Diethylphthalate	U	360	1.0	330	360	88
7005-72-3	4-Chlorophenyl-phenylether	U	360	1.0	330	360	86
100-01-6	4-Nitroaniline	U	550	1.0	500	550	150
534-52-1	4,6-Dinitro-2-Methylphenol	U	1300	1.0	1200	1300	370
86-30-6	N-Nitrosodiphenylamine	U	730	1.0	660	730	240
101-55-3	4-Bromophenyl-phenylether	U	360	1.0	330	360	94
1912-24-9	Atrazine	U	360	1.0	330	360	100
87-86-5	Pentachlorophenol	U	910	1.0	820	910	260
120-12-7	Anthracene	U	360	1.0	330	360	93
86-74-8	Carbazole	U	550	1.0	500	550	120

DW 3/6/09

8RE

KATAHDIN ANALYTICAL SERVICES
Report of Analytical Results

Client: CH2MHill
Project: TO-009 Lejeune
PO No:
Sample Date: 12/20/08
Received Date: 12/23/08
Extraction Date: 01/14/09
Analysis Date: 17-JAN-2009 11:30
Report Date: 01/23/2009
Matrix: SOIL
% Solids: 90.3

Lab ID: SB7368-15RE
Client ID: MR08-SS172-08D
SDG: TO9-23
Extracted by: AC
Extraction Method: SW846 3550
Analyst: JCG
Analysis Method: SW846 8270C
Lab Prep Batch: WG59785
Units: ug/Kgdrywt

CAS#	Compound	Flags	Results	DF	PQL	Adj.PQL	Adj.MDL
84-74-2	Di-n-butylphthalate	U UJ	360	1.0	330	360	110 HT
85-68-7	Butylbenzylphthalate	U	360	1.0	330	360	100
91-94-1	3,3'-Dichlorobenzidine	U	550	1.0	500	550	130
218-01-9	Chrysene	U	360	1.0	330	360	100
117-81-7	bis(2-Ethylhexyl)phthalate	U	360	1.0	330	360	110
117-84-0	Di-n-octylphthalate	U	360	1.0	330	360	230
367-12-4	2-Fluorophenol		64%				
13127-88-3	Phenol-D6		63%				
4165-60-0	Nitrobenzene-D5		62%				
321-60-8	2-Fluorobiphenyl		67%				
118-79-6	2,4,6-Tribromophenol		64%				
1718-51-0	Terphenyl-D14		75%				

lw 3/6/09

9

KATAHDIN ANALYTICAL SERVICES
Report of Analytical Results

Client: CH2MHill
Project: TO-009 Lejeune
PO No:
Sample Date: 12/20/08
Received Date: 12/23/08
Extraction Date: 12/29/08
Analysis Date: 16-JAN-2009 13:23
Report Date: 01/23/2009
Matrix: SOIL
% Solids: 92.6

Lab ID: SB7368-17
Client ID: MR08-IS172-1-2-08D
SDG: TO9-23
Extracted by: CB
Extraction Method: SW846 3550
Analyst: JLP
Analysis Method: SW846 8270C
Lab Prep Batch: WG59460
Units: ug/Kgdrywt

CAS#	Compound	Flags	Results	DF	PQL	Adj.PQL	Adj.MDL	
100-52-7	Benzaldehyde	~~U~~ UJ	540	1.0	500	540	130	ICB
108-95-2	Phenol	U	540	1.0	500	540	170	
111-44-4	Bis(2-Chloroethyl)ether	~~U~~ UJ	360	1.0	330	360	87	BSL
95-57-8	2-Chlorophenol	U	540	1.0	500	540	180	
95-48-7	2-Methylphenol	U	650	1.0	600	650	220	
108-60-1	2,2'-Oxybis(1-chloropropane)	U	360	1.0	330	360	96	
98-86-2	Acetophenone	~~U~~ UJ	650	1.0	600	650	190	BSL
621-64-7	N-Nitroso-di-n-propylamine	U	360	1.0	330	360	90	
65794-96-9	3&4-Methylphenol	U	650	1.0	600	650	200	
67-72-1	Hexachloroethane	~~U~~ UJ	360	1.0	330	360	100	BSL
98-95-3	Nitrobenzene	U	360	1.0	330	360	98	
78-59-1	Isophorone	U	360	1.0	330	360	81	
88-75-5	2-Nitrophenol	U	650	1.0	600	650	180	
105-67-9	2,4-Dimethylphenol	~~U~~ UJ	540	1.0	500	540	180	BSL
111-91-1	Bis(2-Chloroethoxy)methane	U	360	1.0	330	360	100	
120-83-2	2,4-Dichlorophenol	U	540	1.0	500	540	160	
106-47-8	4-Chloroaniline	U	540	1.0	500	540	130	
105-60-2	Caprolactam	U	540	1.0	500	540	160	
59-50-7	4-Chloro-3-Methylphenol	U	540	1.0	500	540	180	
88-06-2	2,4,6-Trichlorophenol	U	540	1.0	500	540	170	
95-95-4	2,4,5-Trichlorophenol	U	540	1.0	500	540	170	
91-58-7	2-Chloronaphthalene	U	360	1.0	330	360	94	
92-52-4	1,1'-Biphenyl	U	360	1.0	330	360	79	
88-74-4	2-Nitroaniline	U	540	1.0	500	540	81	
131-11-3	Dimethyl Phthalate	U	360	1.0	330	360	84	
606-20-2	2,6-Dinitrotoluene	U	360	1.0	330	360	85	
208-96-8	Acenaphthylene	U	360	1.0	330	360	76	
99-09-2	3-Nitroaniline	U	540	1.0	500	540	100	
83-32-9	Acenaphthene	U	360	1.0	330	360	70	
51-28-5	2,4-Dinitrophenol	U	1300	1.0	1200	1300	410	
132-64-9	Dibenzofuran	U	360	1.0	330	360	85	
100-02-7	4-Nitrophenol	U	1300	1.0	1200	1300	330	
121-14-2	2,4-Dinitrotoluene	U	360	1.0	330	360	92	
84-66-2	Diethylphthalate	U	360	1.0	330	360	86	
7005-72-3	4-Chlorophenyl-phenylether	U	360	1.0	330	360	84	
100-01-6	4-Nitroaniline	~~U~~ UJ	540	1.0	500	540	140	CCH
534-52-1	4,6-Dinitro-2-Methylphenol	U	1300	1.0	1200	1300	360	
86-30-6	N-Nitrosodiphenylamine	U	710	1.0	660	710	240	
101-55-3	4-Bromophenyl-phenylether	U	360	1.0	330	360	92	
1912-24-9	Atrazine	U	360	1.0	330	360	98	
87-86-5	Pentachlorophenol	U	880	1.0	820	880	260	
120-12-7	Anthracene	U	360	1.0	330	360	91	
86-74-8	Carbazole	U	540	1.0	500	540	120	

MW 3/6/09

9

KATAHDIN ANALYTICAL SERVICES
Report of Analytical Results

Client: CH2MHill
Project: TO-009 Lejeune
PO No:
Sample Date: 12/20/08
Received Date: 12/23/08
Extraction Date: 12/29/08
Analysis Date: 16-JAN-2009 13:23
Report Date: 01/23/2009
Matrix: SOIL
% Solids: 92.6

Lab ID: SB7368-17
Client ID: MR08-IS172-1-2-08D
SDG: TO9-23
Extracted by: CB
Extraction Method: SW846 3550
Analyst: JLP
Analysis Method: SW846 8270C
Lab Prep Batch: WG59460
Units: ug/Kgdrywt

CAS#	Compound	Flags	Results	DF	PQL	Adj.PQL	Adj.MDL
84-74-2	Di-n-butylphthalate	U	360	1.0	330	360	110
85-68-7	Butylbenzylphthalate	U	360	1.0	330	360	100
91-94-1	3,3'-Dichlorobenzidine	U	540	1.0	500	540	120
218-01-9	Chrysene	U	360	1.0	330	360	100
117-81-7	bis(2-Ethylhexyl)phthalate	J	130	1.0	330	360	100
117-84-0	Di-n-octylphthalate	U	360	1.0	330	360	230
367-12-4	2-Fluorophenol		53%				
13127-88-3	Phenol-D6		52%				
4165-60-0	Nitrobenzene-D5		58%				
321-60-8	2-Fluorobiphenyl		66%				
118-79-6	2,4,6-Tribromophenol		44%				
1718-51-0	Terphenyl-D14		73%				

RW
3/6/09

9RE

KATAHDIN ANALYTICAL SERVICES
Report of Analytical Results

Client: CH2MHill
Project: TO-009 Lejeune
PO No:
Sample Date: 12/20/08
Received Date: 12/23/08
Extraction Date: 01/20/09
Analysis Date: 22-JAN-2009 01:08
Report Date: 01/23/2009
Matrix: SOIL
% Solids: 92.6

Lab ID: SB7368-17RE
Client ID: MR08-IS172-1-2-08D
SDG: TO9-23
Extracted by: AC
Extraction Method: SW846 3550
Analyst: JCG
Analysis Method: SW846 8270C
Lab Prep Batch: WG59975
Units: ug/Kgdrywt

Use original

CAS#	Compound	Flags	Results	DF	PQL	Adj.PQL	Adj.MDL
100-52-7	Benzaldehyde	U R	540	1.0	500	540	130 HT
108-95-2	Phenol	U	540	1.0	500	540	170
111-44-4	Bis(2-Chloroethyl)ether	U	360	1.0	330	360	87
95-57-8	2-Chlorophenol	U	540	1.0	500	540	180
95-48-7	2-Methylphenol	U	650	1.0	600	650	220
108-60-1	2,2'-Oxybis(1-chloropropane)	U	360	1.0	330	360	96
98-86-2	Acetophenone	U	650	1.0	600	650	190
621-64-7	N-Nitroso-di-n-propylamine	U	360	1.0	330	360	90
65794-96-9	3&4-Methylphenol	U	650	1.0	600	650	200
67-72-1	Hexachloroethane	U	360	1.0	330	360	100
98-95-3	Nitrobenzene	U	360	1.0	330	360	98
78-59-1	Isophorone	U	360	1.0	330	360	81
88-75-5	2-Nitrophenol	U	650	1.0	600	650	180
105-67-9	2,4-Dimethylphenol	U	540	1.0	500	540	180
111-91-1	Bis(2-Chloroethoxy)methane	U	360	1.0	330	360	100
120-83-2	2,4-Dichlorophenol	U	540	1.0	500	540	160
106-47-8	4-Chloroaniline	U	540	1.0	500	540	130
105-60-2	Caprolactam	U	540	1.0	500	540	160
59-50-7	4-Chloro-3-Methylphenol	U	540	1.0	500	540	180
88-06-2	2,4,6-Trichlorophenol	U	540	1.0	500	540	170
95-95-4	2,4,5-Trichlorophenol	U	540	1.0	500	540	170
91-58-7	2-Chloronaphthalene	U	360	1.0	330	360	94
92-52-4	1,1'-Biphenyl	U	360	1.0	330	360	79
88-74-4	2-Nitroaniline	U	540	1.0	500	540	81
131-11-3	Dimethyl Phthalate	U	360	1.0	330	360	84
606-20-2	2,6-Dinitrotoluene	U	360	1.0	330	360	85
208-96-8	Acenaphthylene	U	360	1.0	330	360	76
99-09-2	3-Nitroaniline	U	540	1.0	500	540	100
83-32-9	Acenaphthene	U	360	1.0	330	360	70
51-28-5	2,4-Dinitrophenol	U	1300	1.0	1200	1300	410
132-64-9	Dibenzofuran	U	360	1.0	330	360	85
100-02-7	4-Nitrophenol	U	1300	1.0	1200	1300	330
121-14-2	2,4-Dinitrotoluene	U	360	1.0	330	360	92
84-66-2	Diethylphthalate	U	360	1.0	330	360	86
7005-72-3	4-Chlorophenyl-phenylether	U	360	1.0	330	360	84
100-01-6	4-Nitroaniline	U	540	1.0	500	540	140
534-52-1	4,6-Dinitro-2-Methylphenol	U	1300	1.0	1200	1300	360
86-30-6	N-Nitrosodiphenylamine	U	710	1.0	660	710	240
101-55-3	4-Bromophenyl-phenylether	U	360	1.0	330	360	92
1912-24-9	Atrazine	U	360	1.0	330	360	98
87-86-5	Pentachlorophenol	U	880	1.0	820	880	260
120-12-7	Anthracene	U	360	1.0	330	360	91
86-74-8	Carbazole	U R	540	1.0	500	540	120

R RE

3/6/09

9RE

KATAHDIN ANALYTICAL SERVICES
Report of Analytical Results

Client: CH2MHill
Project: TO-009 Lejeune
PO No:
Sample Date: 12/20/08
Received Date: 12/23/08
Extraction Date: 01/20/09
Analysis Date: 22-JAN-2009 01:08
Report Date: 01/23/2009
Matrix: SOIL
% Solids: 92.6

Lab ID: SB7368-17RE
Client ID: MR08-IS172-1-2-08D
SDG: TO9-23
Extracted by: AC
Extraction Method: SW846 3550
Analyst: JCG
Analysis Method: SW846 8270C
Lab Prep Batch: WG59975
Units: ug/Kgdrywt

Use orig. val

CAS#	Compound	Flags	Results	DF	PQL	Adj.PQL	Adj.MDL	
84-74-2	Di-n-butylphthalate	U R	360	1.0	330	360	110	HT
85-68-7	Butylbenzylphthalate	U	360	1.0	330	360	100	
91-94-1	3,3'-Dichlorobenzidine	U	540	1.0	500	540	120	
218-01-9	Chrysene	U	360	1.0	330	360	100	
117-81-7	bis(2-Ethylhexyl)phthalate	J J	160	1.0	330	360	100	
117-84-0	Di-n-octylphthalate	U R	360	1.0	330	360	230	
367-12-4	2-Fluorophenol		69%					
13127-88-3	Phenol-D6		63%					
4165-60-0	Nitrobenzene-D5		61%					
321-60-8	2-Fluorobiphenyl		75%					
118-79-6	2,4,6-Tribromophenol		65%					
1718-51-0	Terphenyl-D14		101%					

 G4112.D

R RE

LW 3/6/09

10

KATAHDIN ANALYTICAL SERVICES
Report of Analytical Results

Client: CH2MHill
Project: TO-009 Lejeune
PO No:
Sample Date: 12/20/08
Received Date: 12/23/08
Extraction Date: 12/29/08
Analysis Date: 16-JAN-2009 14:05
Report Date: 01/23/2009
Matrix: SOIL
% Solids: 88.2

Lab ID: SB7368-19
Client ID: MR08-SS191-08D
SDG: TO9-23
Extracted by: CB
Extraction Method: SW846 3550
Analyst: JLP
Analysis Method: SW846 8270C
Lab Prep Batch: WG59460
Units: ug/Kgdrywt

CAS#	Compound	Flags	Results	DF	PQL	Adj.PQL	Adj.MDL	
100-52-7	Benzaldehyde	~~U~~ UJ	570	1.0	500	570	140	ICB
108-95-2	Phenol	U	570	1.0	500	570	180	
111-44-4	Bis(2-Chloroethyl)ether	~~U~~ UJ	370	1.0	330	370	92	BSL
95-57-8	2-Chlorophenol	U	570	1.0	500	570	180	
95-48-7	2-Methylphenol	U	680	1.0	600	680	230	
108-60-1	2,2'-Oxybis(1-chloropropane)	U	370	1.0	330	370	100	
98-86-2	Acetophenone	~~U~~ UJ	680	1.0	600	680	200	BSL
621-64-7	N-Nitroso-di-n-propylamine	U	370	1.0	330	370	94	
65794-96-9	3&4-Methylphenol	U	680	1.0	600	680	210	
67-72-1	Hexachloroethane	~~U~~ UJ	370	1.0	330	370	110	BSL
98-95-3	Nitrobenzene	U	370	1.0	330	370	100	
78-59-1	Isophorone	U	370	1.0	330	370	85	
88-75-5	2-Nitrophenol	U	680	1.0	600	680	190	
105-67-9	2,4-Dimethylphenol	~~U~~ UJ	570	1.0	500	570	190	BSL
111-91-1	Bis(2-Chloroethoxy)methane	U	370	1.0	330	370	110	
120-83-2	2,4-Dichlorophenol	U	570	1.0	500	570	170	
106-47-8	4-Chloroaniline	U	570	1.0	500	570	130	
105-60-2	Caprolactam	U	570	1.0	500	570	160	
59-50-7	4-Chloro-3-Methylphenol	U	570	1.0	500	570	190	
88-06-2	2,4,6-Trichlorophenol	U	570	1.0	500	570	180	
95-95-4	2,4,5-Trichlorophenol	U	570	1.0	500	570	180	
91-58-7	2-Chloronaphthalene	U	370	1.0	330	370	99	
92-52-4	1,1'-Biphenyl	U	370	1.0	330	370	83	
88-74-4	2-Nitroaniline	U	570	1.0	500	570	85	
131-11-3	Dimethyl Phthalate	U	370	1.0	330	370	88	
606-20-2	2,6-Dinitrotoluene	U	370	1.0	330	370	90	
208-96-8	Acenaphthylene	U	370	1.0	330	370	79	
99-09-2	3-Nitroaniline	U	570	1.0	500	570	110	
83-32-9	Acenaphthene	U	370	1.0	330	370	74	
51-28-5	2,4-Dinitrophenol	U	1400	1.0	1200	1400	430	
132-64-9	Dibenzofuran	U	370	1.0	330	370	90	
100-02-7	4-Nitrophenol	U	1400	1.0	1200	1400	350	
121-14-2	2,4-Dinitrotoluene	U	370	1.0	330	370	96	
84-66-2	Diethylphthalate	U	370	1.0	330	370	91	
7005-72-3	4-Chlorophenyl-phenylether	U	370	1.0	330	370	88	
100-01-6	4-Nitroaniline	~~U~~ UJ	570	1.0	500	570	150	CCH
534-52-1	4,6-Dinitro-2-Methylphenol	U	1400	1.0	1200	1400	380	
86-30-6	N-Nitrosodiphenylamine	U	750	1.0	660	750	250	
101-55-3	4-Bromophenyl-phenylether	U	370	1.0	330	370	96	
1912-24-9	Atrazine	U	370	1.0	330	370	100	
87-86-5	Pentachlorophenol	U	930	1.0	820	930	270	
120-12-7	Anthracene	U	370	1.0	330	370	95	
86-74-8	Carbazole	U	570	1.0	500	570	120	

lw 3/6/09

KATAHDIN ANALYTICAL SERVICES
Report of Analytical Results

Client: CH2MHill
Project: TO-009 Lejeune
PO No:
Sample Date: 12/20/08
Received Date: 12/23/08
Extraction Date: 12/29/08
Analysis Date: 16-JAN-2009 14:05
Report Date: 01/23/2009
Matrix: SOIL
% Solids: 88.2

Lab ID: SB7368-19
Client ID: MR08-SS191-08D
SDG: TO9-23
Extracted by: CB
Extraction Method: SW846 3550
Analyst: JLP
Analysis Method: SW846 8270C
Lab Prep Batch: WG59460
Units: ug/Kgdrywt

CAS#	Compound	Flags	Results	DF	PQL	Adj.PQL	Adj.MDL
84-74-2	Di-n-butylphthalate	U	370	1.0	330	370	110
85-68-7	Butylbenzylphthalate	U	370	1.0	330	370	100
91-94-1	3,3'-Dichlorobenzidine	U	570	1.0	500	570	130
218-01-9	Chrysene	U	370	1.0	330	370	110
117-81-7	bis(2-Ethylhexyl)phthalate	U	370	1.0	330	370	110
117-84-0	Di-n-octylphthalate	U	370	1.0	330	370	240
367-12-4	2-Fluorophenol		56%				
13127-88-3	Phenol-D6		55%				
4165-60-0	Nitrobenzene-D5		58%				
321-60-8	2-Fluorobiphenyl		65%				
118-79-6	2,4,6-Tribromophenol		55%				
1718-51-0	Terphenyl-D14		69%				

MW 3/6/09

1ORE

KATAHDIN ANALYTICAL SERVICES
Report of Analytical Results

Client: CH2MHill
Project: TO-009 Lejeune
PO No:
Sample Date: 12/20/08
Received Date: 12/23/08
Extraction Date: 01/20/09
Analysis Date: 22-JAN-2009 01:51
Report Date: 01/23/2009
Matrix: SOIL
% Solids: 88.2

Lab ID: SB7368-19RE
Client ID: MR08-SS191-08D
SDG: TO9-23
Extracted by: AC
Extraction Method: SW846 3550
Analyst: JCG
Analysis Method: SW846 8270C
Lab Prep Batch: WG59975
Units: ug/Kgdrywt

Use original

CAS#	Compound	Flags	Results	DF	PQL	Adj.PQL	Adj.MDL
100-52-7	Benzaldehyde	U R	570	1.0	500	570	140 HT
108-95-2	Phenol	U	570	1.0	500	570	180
111-44-4	Bis(2-Chloroethyl)ether	U	370	1.0	330	370	92
95-57-8	2-Chlorophenol	U	570	1.0	500	570	180
95-48-7	2-Methylphenol	U	680	1.0	600	680	230
108-60-1	2,2'-Oxybis(1-chloropropane)	U	370	1.0	330	370	100
98-86-2	Acetophenone	U	680	1.0	600	680	200
621-64-7	N-Nitroso-di-n-propylamine	U	370	1.0	330	370	94
65794-96-9	3&4-Methylphenol	U	680	1.0	600	680	210
67-72-1	Hexachloroethane	U	370	1.0	330	370	110
98-95-3	Nitrobenzene	U	370	1.0	330	370	100
78-59-1	Isophorone	U	370	1.0	330	370	85
88-75-5	2-Nitrophenol	U	680	1.0	600	680	190
105-67-9	2,4-Dimethylphenol	U	570	1.0	500	570	190
111-91-1	Bis(2-Chloroethoxy)methane	U	370	1.0	330	370	110
120-83-2	2,4-Dichlorophenol	U	570	1.0	500	570	170
106-47-8	4-Chloroaniline	U	570	1.0	500	570	130
105-60-2	Caprolactam	U	570	1.0	500	570	160
59-50-7	4-Chloro-3-Methylphenol	U	570	1.0	500	570	190
88-06-2	2,4,6-Trichlorophenol	U	570	1.0	500	570	180
95-95-4	2,4,5-Trichlorophenol	U	570	1.0	500	570	180
91-58-7	2-Chloronaphthalene	U	370	1.0	330	370	99
92-52-4	1,1'-Biphenyl	U	370	1.0	330	370	83
88-74-4	2-Nitroaniline	U	570	1.0	500	570	85
131-11-3	Dimethyl Phthalate	U	370	1.0	330	370	88
606-20-2	2,6-Dinitrotoluene	U	370	1.0	330	370	90
208-96-8	Acenaphthylene	U	370	1.0	330	370	79
99-09-2	3-Nitroaniline	U	570	1.0	500	570	110
83-32-9	Acenaphthene	U	370	1.0	330	370	74
51-28-5	2,4-Dinitrophenol	U	1400	1.0	1200	1400	430
132-64-9	Dibenzofuran	U	370	1.0	330	370	90
100-02-7	4-Nitrophenol	U	1400	1.0	1200	1400	350
121-14-2	2,4-Dinitrotoluene	U	370	1.0	330	370	96
84-66-2	Diethylphthalate	U	370	1.0	330	370	91
7005-72-3	4-Chlorophenyl-phenylether	U	370	1.0	330	370	88
100-01-6	4-Nitroaniline	U	570	1.0	500	570	150
534-52-1	4,6-Dinitro-2-Methylphenol	U	1400	1.0	1200	1400	380
86-30-6	N-Nitrosodiphenylamine	U	750	1.0	660	750	250
101-55-3	4-Bromophenyl-phenylether	U	370	1.0	330	370	96
1912-24-9	Atrazine	U	370	1.0	330	370	100
87-86-5	Pentachlorophenol	U	930	1.0	820	930	270
120-12-7	Anthracene	U	370	1.0	330	370	95
86-74-8	Carbazole	U	570	1.0	500	570	120

RE

R

Lew 3/6/09

10RE

KATAHDIN ANALYTICAL SERVICES
Report of Analytical Results

Client: CH2MHill
Project: TO-009 Lejeune
PO No:
Sample Date: 12/20/08
Received Date: 12/23/08
Extraction Date: 01/20/09
Analysis Date: 22-JAN-2009 01:51
Report Date: 01/23/2009
Matrix: SOIL
% Solids: 88.2

Lab ID: SB7368-19RE
Client ID: MR08-SS191-08D
SDG: TO9-23
Extracted by: AC
Extraction Method: SW846 3550
Analyst: JCG
Analysis Method: SW846 8270C
Lab Prep Batch: WG59975
Units: ug/Kgdrywt

use original

CAS#	Compound	Flags	Results	DF	PQL	Adj.PQL	Adj.MDL
84-74-2	Di-n-butylphthalate	U R	370	1.0	330	370	110 HT
85-68-7	Butylbenzylphthalate	U	370	1.0	330	370	100
91-94-1	3,3'-Dichlorobenzidine	U	570	1.0	500	570	130
218-01-9	Chrysene	U	370	1.0	330	370	110
117-81-7	bis(2-Ethylhexyl)phthalate	U	370	1.0	330	370	110
117-84-0	Di-n-octylphthalate	U	370	1.0	330	370	240
367-12-4	2-Fluorophenol		64%				
13127-88-3	Phenol-D6		60%				
4165-60-0	Nitrobenzene-D5		67%				
321-60-8	2-Fluorobiphenyl		79%				
118-79-6	2,4,6-Tribromophenol		73%				
1718-51-0	Terphenyl-D14		98%				

R RE

lew 3/6/09

11

KATAHDIN ANALYTICAL SERVICES
Report of Analytical Results

Client: CH2MHill
Project: TO-009 Lejeune
PO No:
Sample Date: 12/20/08
Received Date: 12/23/08
Extraction Date: 12/29/08
Analysis Date: 16-JAN-2009 14:48
Report Date: 01/23/2009
Matrix: SOIL
% Solids: 91.8

Lab ID: SB7368-21
Client ID: MR08-IS191-2-3-08D
SDG: TO9-23
Extracted by: CB
Extraction Method: SW846 3550
Analyst: JLP
Analysis Method: SW846 8270C
Lab Prep Batch: WG59460
Units: ug/Kgdrywt

CAS#	Compound	Flags	Results	DF	PQL	Adj.PQL	Adj.MDL	
100-52-7	Benzaldehyde	~~U~~ UJ	540	1.0	500	540	130	ICB
108-95-2	Phenol	U	540	1.0	500	540	170	
111-44-4	Bis(2-Chloroethyl)ether	~~U~~ UJ	360	1.0	330	360	88	BSL
95-57-8	2-Chlorophenol	U	540	1.0	500	540	180	
95-48-7	2-Methylphenol	U	650	1.0	600	650	220	
108-60-1	2,2'-Oxybis(1-chloropropane)	U	360	1.0	330	360	97	
98-86-2	Acetophenone	~~U~~ UJ	650	1.0	600	650	190	BSL
621-64-7	N-Nitroso-di-n-propylamine	U	360	1.0	330	360	90	
65794-96-9	3&4-Methylphenol	U	650	1.0	600	650	200	
67-72-1	Hexachloroethane	~~U~~ UJ	360	1.0	330	360	100	BSL
98-95-3	Nitrobenzene	U	360	1.0	330	360	99	
78-59-1	Isophorone	U	360	1.0	330	360	82	
88-75-5	2-Nitrophenol	U	650	1.0	600	650	180	
105-67-9	2,4-Dimethylphenol	~~U~~ UJ	540	1.0	500	540	180	BSL
111-91-1	Bis(2-Chloroethoxy)methane	U	360	1.0	330	360	100	
120-83-2	2,4-Dichlorophenol	U	540	1.0	500	540	160	
106-47-8	4-Chloroaniline	U	540	1.0	500	540	130	
105-60-2	Caprolactam	U	540	1.0	500	540	160	
59-50-7	4-Chloro-3-Methylphenol	U	540	1.0	500	540	180	
88-06-2	2,4,6-Trichlorophenol	U	540	1.0	500	540	170	
95-95-4	2,4,5-Trichlorophenol	U	540	1.0	500	540	170	
91-58-7	2-Chloronaphthalene	U	360	1.0	330	360	95	
92-52-4	1,1'-Biphenyl	U	360	1.0	330	360	80	
88-74-4	2-Nitroaniline	U	540	1.0	500	540	82	
131-11-3	Dimethyl Phthalate	U	360	1.0	330	360	85	
606-20-2	2,6-Dinitrotoluene	U	360	1.0	330	360	86	
208-96-8	Acenaphthylene	U	360	1.0	330	360	76	
99-09-2	3-Nitroaniline	U	540	1.0	500	540	100	
83-32-9	Acenaphthene	U	360	1.0	330	360	71	
51-28-5	2,4-Dinitrophenol	U	1300	1.0	1200	1300	410	
132-64-9	Dibenzofuran	U	360	1.0	330	360	86	
100-02-7	4-Nitrophenol	U	1300	1.0	1200	1300	340	
121-14-2	2,4-Dinitrotoluene	U	360	1.0	330	360	93	
84-66-2	Diethylphthalate	U	360	1.0	330	360	87	
7005-72-3	4-Chlorophenyl-phenylether	U	360	1.0	330	360	85	
100-01-6	4-Nitroaniline	~~U~~ UJ	540	1.0	500	540	150	CCH
534-52-1	4,6-Dinitro-2-Methylphenol	U	1300	1.0	1200	1300	370	
86-30-6	N-Nitrosodiphenylamine	U	720	1.0	660	720	240	
101-55-3	4-Bromophenyl-phenylether	U	360	1.0	330	360	93	
1912-24-9	Atrazine	U	360	1.0	330	360	99	
87-86-5	Pentachlorophenol	U	890	1.0	820	890	260	
120-12-7	Anthracene	U	360	1.0	330	360	92	
86-74-8	Carbazole	U	540	1.0	500	540	120	

lw 3/6/09

11

KATAHDIN ANALYTICAL SERVICES
Report of Analytical Results

Client: CH2MHill
Project: TO-009 Lejeune
PO No:
Sample Date: 12/20/08
Received Date: 12/23/08
Extraction Date: 12/29/08
Analysis Date: 16-JAN-2009 14:48
Report Date: 01/23/2009
Matrix: SOIL
% Solids: 91.8

Lab ID: SB7368-21
Client ID: MR08-IS191-2-3-08D
SDG: TO9-23
Extracted by: CB
Extraction Method: SW846 3550
Analyst: JLP
Analysis Method: SW846 8270C
Lab Prep Batch: WG59460
Units: ug/Kgdrywt

CAS#	Compound	Flags	Results	DF	PQL	Adj.PQL	Adj.MDL
84-74-2	Di-n-butylphthalate	U	360	1.0	330	360	110
85-68-7	Butylbenzylphthalate	U	360	1.0	330	360	100
91-94-1	3,3'-Dichlorobenzidine	U	540	1.0	500	540	120
218-01-9	Chrysene	U	360	1.0	330	360	100
117-81-7	bis(2-Ethylhexyl)phthalate	J	180	1.0	330	360	110
117-84-0	Di-n-octylphthalate	U	360	1.0	330	360	230
367-12-4	2-Fluorophenol		58%				
13127-88-3	Phenol-D6		54%				
4165-60-0	Nitrobenzene-D5		61%				
321-60-8	2-Fluorobiphenyl		67%				
118-79-6	2,4,6-Tribromophenol		50%				
1718-51-0	Terphenyl-D14		79%				

lw 3/6/09

11RE

KATAHDIN ANALYTICAL SERVICES
Report of Analytical Results

Client: CH2MHill
Project: TO-009 Lejeune
PO No:
Sample Date: 12/20/08
Received Date: 12/23/08
Extraction Date: 01/20/09
Analysis Date: 22-JAN-2009 00:26
Report Date: 01/23/2009
Matrix: SOIL
% Solids: 91.8

Lab ID: SB7368-21RE
Client ID: MR08-IS191-2-3-08D
SDG: TO9-23
Extracted by: AC
Extraction Method: SW846 3550
Analyst: JCG
Analysis Method: SW846 8270C
Lab Prep Batch: WG59975
Units: ug/Kgdrywt

Use original

CAS#	Compound	Flags	Results	DF	PQL	Adj.PQL	Adj.MDL
100-52-7	Benzaldehyde	U R	540	1.0	500	540	130 HT
108-95-2	Phenol	U	540	1.0	500	540	170
111-44-4	Bis(2-Chloroethyl)ether	U	360	1.0	330	360	88
95-57-8	2-Chlorophenol	U	540	1.0	500	540	180
95-48-7	2-Methylphenol	U	650	1.0	600	650	220
108-60-1	2,2'-Oxybis(1-chloropropane)	U	360	1.0	330	360	97
98-86-2	Acetophenone	U	650	1.0	600	650	190
621-64-7	N-Nitroso-di-n-propylamine	U	360	1.0	330	360	90
65794-96-9	3&4-Methylphenol	U	650	1.0	600	650	200
67-72-1	Hexachloroethane	U	360	1.0	330	360	100
98-95-3	Nitrobenzene	U	360	1.0	330	360	99
78-59-1	Isophorone	U	360	1.0	330	360	82
88-75-5	2-Nitrophenol	U	650	1.0	600	650	180
105-67-9	2,4-Dimethylphenol	U	540	1.0	500	540	180
111-91-1	Bis(2-Chloroethoxy)methane	U	360	1.0	330	360	100
120-83-2	2,4-Dichlorophenol	U	540	1.0	500	540	160
106-47-8	4-Chloroaniline	U	540	1.0	500	540	130
105-60-2	Caprolactam	U	540	1.0	500	540	160
59-50-7	4-Chloro-3-Methylphenol	U	540	1.0	500	540	180
88-06-2	2,4,6-Trichlorophenol	U	540	1.0	500	540	170
95-95-4	2,4,5-Trichlorophenol	U	540	1.0	500	540	170
91-58-7	2-Chloronaphthalene	U	360	1.0	330	360	95
92-52-4	1,1'-Biphenyl	U	360	1.0	330	360	80
88-74-4	2-Nitroaniline	U	540	1.0	500	540	82
131-11-3	Dimethyl Phthalate	U	360	1.0	330	360	85
606-20-2	2,6-Dinitrotoluene	U	360	1.0	330	360	86
208-96-8	Acenaphthylene	U	360	1.0	330	360	76
99-09-2	3-Nitroaniline	U	540	1.0	500	540	100
83-32-9	Acenaphthene	U	360	1.0	330	360	71
51-28-5	2,4-Dinitrophenol	U	1300	1.0	1200	1300	410
132-64-9	Dibenzofuran	U	360	1.0	330	360	86
100-02-7	4-Nitrophenol	U	1300	1.0	1200	1300	340
121-14-2	2,4-Dinitrotoluene	U	360	1.0	330	360	93
84-66-2	Diethylphthalate	U	360	1.0	330	360	87
7005-72-3	4-Chlorophenyl-phenylether	U	360	1.0	330	360	85
100-01-6	4-Nitroaniline	U	540	1.0	500	540	150
534-52-1	4,6-Dinitro-2-Methylphenol	U	1300	1.0	1200	1300	370
86-30-6	N-Nitrosodiphenylamine	U	720	1.0	660	720	240
101-55-3	4-Bromophenyl-phenylether	U	360	1.0	330	360	93
1912-24-9	Atrazine	U	360	1.0	330	360	99
87-86-5	Pentachlorophenol	U	890	1.0	820	890	260
120-12-7	Anthracene	U	360	1.0	330	360	92
86-74-8	Carbazole	U	540	1.0	500	540	120

R

RE

3/6/09

11RE

KATAHDIN ANALYTICAL SERVICES
Report of Analytical Results

Client: CH2MHill
Project: TO-009 Lejeune
PO No:
Sample Date: 12/20/08
Received Date: 12/23/08
Extraction Date: 01/20/09
Analysis Date: 22-JAN-2009 00:26
Report Date: 01/23/2009
Matrix: SOIL
% Solids: 91.8

Lab ID: SB7368-21RE
Client ID: MR08-IS191-2-3-08D
SDG: TO9-23
Extracted by: AC
Extraction Method: SW846 3550
Analyst: JCG
Analysis Method: SW846 8270C
Lab Prep Batch: WG59975
Units: ug/Kgdrywt

Use original

CAS#	Compound	Flags	Results	DF	PQL	Adj.PQL	Adj.MDL	
84-74-2	Di-n-butylphthalate	~~U~~ R	360	1.0	330	360	110	HT
85-68-7	Butylbenzylphthalate	~~U~~	360	1.0	330	360	100	
91-94-1	3,3'-Dichlorobenzidine	~~U~~	540	1.0	500	540	120	
218-01-9	Chrysene	~~U~~	360	1.0	330	360	100	
117-81-7	bis(2-Ethylhexyl)phthalate	~~U~~	360	1.0	330	360	110	
117-84-0	Di-n-octylphthalate	~~U~~	360	1.0	330	360	230	
367-12-4	2-Fluorophenol		66%					
13127-88-3	Phenol-D6		60%					
4165-60-0	Nitrobenzene-D5		62%					
321-60-8	2-Fluorobiphenyl		68%					
118-79-6	2,4,6-Tribromophenol		53%					
1718-51-0	Terphenyl-D14		95%					

R RE

3/6/09

12

KATAHDIN ANALYTICAL SERVICES
Report of Analytical Results

Client: CH2MHill
Project: TO-009 Lejeune
PO No:
Sample Date: 12/20/08
Received Date: 12/23/08
Extraction Date: 12/29/08
Analysis Date: 16-JAN-2009 15:30
Report Date: 01/23/2009
Matrix: SOIL
% Solids: 94.7

Lab ID: SB7368-23
Client ID: MR08-SS190-08D
SDG: TO9-23
Extracted by: CB
Extraction Method: SW846 3550
Analyst: JLP
Analysis Method: SW846 8270C
Lab Prep Batch: WG59460
Units: ug/Kgdrywt

CAS#	Compound	Flags	Results	DF	PQL	Adj.PQL	Adj.MDL	
100-52-7	Benzaldehyde	~~U~~ UJ	530	1.0	500	530	130	JLB
108-95-2	Phenol	U	530	1.0	500	530	160	
111-44-4	Bis(2-Chloroethyl)ether	~~U~~ UJ	350	1.0	330	350	85	BSL
95-57-8	2-Chlorophenol	U	530	1.0	500	530	170	
95-48-7	2-Methylphenol	U	630	1.0	600	630	210	
108-60-1	2,2'-Oxybis(1-chloropropane)	U	350	1.0	330	350	94	
98-86-2	Acetophenone	~~U~~ UJ	630	1.0	600	630	190	BSL
621-64-7	N-Nitroso-di-n-propylamine	U	350	1.0	330	350	88	
65794-96-9	3&4-Methylphenol	U	630	1.0	600	630	200	
67-72-1	Hexachloroethane	~~U~~ UJ	350	1.0	330	350	100	BSL
98-95-3	Nitrobenzene	U	350	1.0	330	350	96	
78-59-1	Isophorone	U	350	1.0	330	350	79	
88-75-5	2-Nitrophenol	U	630	1.0	600	630	180	
105-67-9	2,4-Dimethylphenol	~~U~~ UJ	530	1.0	500	530	170	BSL
111-91-1	Bis(2-Chloroethoxy)methane	U	350	1.0	330	350	100	
120-83-2	2,4-Dichlorophenol	U	530	1.0	500	530	160	
106-47-8	4-Chloroaniline	U	530	1.0	500	530	120	
105-60-2	Caprolactam	U	530	1.0	500	530	150	
59-50-7	4-Chloro-3-Methylphenol	U	530	1.0	500	530	180	
88-06-2	2,4,6-Trichlorophenol	U	530	1.0	500	530	160	
95-95-4	2,4,5-Trichlorophenol	U	530	1.0	500	530	160	
91-58-7	2-Chloronaphthalene	U	350	1.0	330	350	92	
92-52-4	1,1'-Biphenyl	U	350	1.0	330	350	77	
88-74-4	2-Nitroaniline	U	530	1.0	500	530	79	
131-11-3	Dimethyl Phthalate	U	350	1.0	330	350	82	
606-20-2	2,6-Dinitrotoluene	U	350	1.0	330	350	83	
208-96-8	Acenaphthylene	U	350	1.0	330	350	74	
99-09-2	3-Nitroaniline	U	530	1.0	500	530	99	
83-32-9	Acenaphthene	U	350	1.0	330	350	69	
51-28-5	2,4-Dinitrophenol	U	1300	1.0	1200	1300	400	
132-64-9	Dibenzofuran	U	350	1.0	330	350	83	
100-02-7	4-Nitrophenol	U	1300	1.0	1200	1300	330	
121-14-2	2,4-Dinitrotoluene	U	350	1.0	330	350	90	
84-66-2	Diethylphthalate	U	350	1.0	330	350	84	
7005-72-3	4-Chlorophenyl-phenylether	U	350	1.0	330	350	82	
100-01-6	4-Nitroaniline	~~U~~ UJ	530	1.0	500	530	140	CCH
534-52-1	4,6-Dinitro-2-Methylphenol	U	1300	1.0	1200	1300	360	
86-30-6	N-Nitrosodiphenylamine	U	700	1.0	660	700	230	
101-55-3	4-Bromophenyl-phenylether	U	350	1.0	330	350	90	
1912-24-9	Atrazine	U	350	1.0	330	350	96	
87-86-5	Pentachlorophenol	U	860	1.0	820	860	250	
120-12-7	Anthracene	U	350	1.0	330	350	89	
86-74-8	Carbazole	U	530	1.0	500	530	120	

lcW 3/6/09

KATAHDIN ANALYTICAL SERVICES
Report of Analytical Results

Client: CH2MHill
Project: TO-009 Lejeune
PO No:
Sample Date: 12/20/08
Received Date: 12/23/08
Extraction Date: 12/29/08
Analysis Date: 16-JAN-2009 15:30
Report Date: 01/23/2009
Matrix: SOIL
% Solids: 94.7

Lab ID: SB7368-23
Client ID: MR08-SS190-08D
SDG: TO9-23
Extracted by: CB
Extraction Method: SW846 3550
Analyst: JLP
Analysis Method: SW846 8270C
Lab Prep Batch: WG59460
Units: ug/Kgdrywt

CAS#	Compound	Flags	Results	DF	PQL	Adj.PQL	Adj.MDL
84-74-2	Di-n-butylphthalate	U	350	1.0	330	350	110
85-68-7	Butylbenzylphthalate	U	350	1.0	330	350	98
91-94-1	3,3'-Dichlorobenzidine	U	530	1.0	500	530	120
218-01-9	Chrysene	U	350	1.0	330	350	100
117-81-7	bis(2-Ethylhexyl)phthalate		440	1.0	330	350	100
117-84-0	Di-n-octylphthalate	U	350	1.0	330	350	220
367-12-4	2-Fluorophenol		44%				
13127-88-3	Phenol-D6		45%				
4165-60-0	Nitrobenzene-D5		55%				
321-60-8	2-Fluorobiphenyl		61%				
118-79-6	2,4,6-Tribromophenol		* 27%				
1718-51-0	Terphenyl-D14		74%				

lw 3/6/09

12RE

KATAHDIN ANALYTICAL SERVICES
Report of Analytical Results

Client: CH2MHill
Project: TO-009 Lejeune
PO No:
Sample Date: 12/20/08
Received Date: 12/23/08
Extraction Date: 01/20/09
Analysis Date: 22-JAN-2009 03:57
Report Date: 01/23/2009
Matrix: SOIL
% Solids: 94.7

Lab ID: SB7368-23RE
Client ID: MR08-SS190-08D
SDG: TO9-23
Extracted by: AC
Extraction Method: SW846 3550
Analyst: JCG
Analysis Method: SW846 8270C
Lab Prep Batch: WG59975
Units: ug/Kgdrywt

Use original

CAS#	Compound	Flags	Results	DF	PQL	Adj.PQL	Adj.MDL
100-52-7	Benzaldehyde	U R	530	1.0	500	530	130 HT
108-95-2	Phenol	U	530	1.0	500	530	160
111-44-4	Bis(2-Chloroethyl)ether	U	350	1.0	330	350	85
95-57-8	2-Chlorophenol	U	530	1.0	500	530	170
95-48-7	2-Methylphenol	U	630	1.0	600	630	210
108-60-1	2,2'-Oxybis(1-chloropropane)	U	350	1.0	330	350	94
98-86-2	Acetophenone	U	630	1.0	600	630	190
621-64-7	N-Nitroso-di-n-propylamine	U	350	1.0	330	350	88
65794-96-9	3&4-Methylphenol	U	630	1.0	600	630	200
67-72-1	Hexachloroethane	U	350	1.0	330	350	100
98-95-3	Nitrobenzene	U	350	1.0	330	350	96
78-59-1	Isophorone	U	350	1.0	330	350	79
88-75-5	2-Nitrophenol	U	630	1.0	600	630	180
105-67-9	2,4-Dimethylphenol	U	530	1.0	500	530	170
111-91-1	Bis(2-Chloroethoxy)methane	U	350	1.0	330	350	100
120-83-2	2,4-Dichlorophenol	U	530	1.0	500	530	160
106-47-8	4-Chloroaniline	U	530	1.0	500	530	120
105-60-2	Caprolactam	U	530	1.0	500	530	150
59-50-7	4-Chloro-3-Methylphenol	U	530	1.0	500	530	180
88-06-2	2,4,6-Trichlorophenol	U	530	1.0	500	530	160
95-95-4	2,4,5-Trichlorophenol	U	530	1.0	500	530	160
91-58-7	2-Chloronaphthalene	U	350	1.0	330	350	92
92-52-4	1,1'-Biphenyl	U	350	1.0	330	350	77
88-74-4	2-Nitroaniline	U	530	1.0	500	530	79
131-11-3	Dimethyl Phthalate	U	350	1.0	330	350	82
606-20-2	2,6-Dinitrotoluene	U	350	1.0	330	350	83
208-96-8	Acenaphthylene	U	350	1.0	330	350	74
99-09-2	3-Nitroaniline	U	530	1.0	500	530	99
83-32-9	Acenaphthene	U	350	1.0	330	350	69
51-28-5	2,4-Dinitrophenol	U	1300	1.0	1200	1300	400
132-64-9	Dibenzofuran	U	350	1.0	330	350	83
100-02-7	4-Nitrophenol	U	1300	1.0	1200	1300	330
121-14-2	2,4-Dinitrotoluene	U	350	1.0	330	350	90
84-66-2	Diethylphthalate	U	350	1.0	330	350	84
7005-72-3	4-Chlorophenyl-phenylether	U	350	1.0	330	350	82
100-01-6	4-Nitroaniline	U	530	1.0	500	530	140
534-52-1	4,6-Dinitro-2-Methylphenol	U	1300	1.0	1200	1300	360
86-30-6	N-Nitrosodiphenylamine	U	700	1.0	660	700	230
101-55-3	4-Bromophenyl-phenylether	U	350	1.0	330	350	90
1912-24-9	Atrazine	U	350	1.0	330	350	96
87-86-5	Pentachlorophenol	U	860	1.0	820	860	250
120-12-7	Anthracene	U	350	1.0	330	350	89
86-74-8	Carbazole	U	530	1.0	500	530	120

lcs 3/6/09

1229

KATAHDIN ANALYTICAL SERVICES
Report of Analytical Results

Client: CH2MHill
Project: TO-009 Lejeune
PO No:
Sample Date: 12/20/08
Received Date: 12/23/08
Extraction Date: 01/20/09
Analysis Date: 22-JAN-2009 03:57
Report Date: 01/23/2009
Matrix: SOIL
% Solids: 94.7

Lab ID: SB7368-23RE
Client ID: MR08-SS190-08D
SDG: TO9-23
Extracted by: AC
Extraction Method: SW846 3550
Analyst: JCG
Analysis Method: SW846 8270C
Lab Prep Batch: WG59975
Units: ug/Kgdrywt

Use original

CAS#	Compound	Flags	Results	DF	PQL	Adj.PQL	Adj.MDL	
84-74-2	Di-n-butylphthalate	~~U~~ R	350	1.0	330	350	110	HT
85-68-7	Butylbenzylphthalate	~~U~~	350	1.0	330	350	98	
91-94-1	3,3'-Dichlorobenzidine	~~U~~	530	1.0	500	530	120	
218-01-9	Chrysene	~~U~~	350	1.0	330	350	100	
117-81-7	bis(2-Ethylhexyl)phthalate	J	640	1.0	330	350	100	
117-84-0	Di-n-octylphthalate	~~U~~ R	350	1.0	330	350	220	
367-12-4	2-Fluorophenol		64%					
13127-88-3	Phenol-D6		52%					
4165-60-0	Nitrobenzene-D5		66%					
321-60-8	2-Fluorobiphenyl		72%					
118-79-6	2,4,6-Tribromophenol		73%					
1718-51-0	Terphenyl-D14		113%					

lew 3/6/09

KATAHDIN ANALYTICAL SERVICES
Report of Analytical Results

Client: CH2MHill
Project: TO-009 Lejeune
PO No:
Sample Date: 12/20/08
Received Date: 12/23/08
Extraction Date: 12/30/08
Analysis Date: 16-JAN-2009 16:13
Report Date: 01/23/2009
Matrix: SOIL
% Solids: 93.5

Lab ID: SB7368-25
Client ID: MR08-IS190-1-2-08D
SDG: TO9-23
Extracted by: CB
Extraction Method: SW846 3550
Analyst: JLP
Analysis Method: SW846 8270C
Lab Prep Batch: WG59475
Units: ug/Kgdrywt

CAS#	Compound	Flags	Results	DF	PQL	Adj.PQL	Adj.MDL	
100-52-7	Benzaldehyde	~~U~~ UJ	530	1.0	500	530	130	ICB
108-95-2	Phenol	U	530	1.0	500	530	170	
111-44-4	Bis(2-Chloroethyl)ether	U	350	1.0	330	350	86	
95-57-8	2-Chlorophenol	U	530	1.0	500	530	180	
95-48-7	2-Methylphenol	U	640	1.0	600	640	210	
108-60-1	2,2'-Oxybis(1-chloropropane)	U	350	1.0	330	350	95	
98-86-2	Acetophenone	U	640	1.0	600	640	190	
621-64-7	N-Nitroso-di-n-propylamine	U	350	1.0	330	350	89	
65794-96-9	3&4-Methylphenol	U	640	1.0	600	640	200	
67-72-1	Hexachloroethane	U	350	1.0	330	350	100	
98-95-3	Nitrobenzene	U	350	1.0	330	350	97	
78-59-1	Isophorone	U	350	1.0	330	350	80	
88-75-5	2-Nitrophenol	U	640	1.0	600	640	180	
105-67-9	2,4-Dimethylphenol	U	530	1.0	500	530	180	
111-91-1	Bis(2-Chloroethoxy)methane	U	350	1.0	330	350	100	
120-83-2	2,4-Dichlorophenol	U	530	1.0	500	530	160	
106-47-8	4-Chloroaniline	U	530	1.0	500	530	130	
105-60-2	Caprolactam	~~U~~ UJ	530	1.0	500	530	150	BSL
59-50-7	4-Chloro-3-Methylphenol	U	530	1.0	500	530	180	
88-06-2	2,4,6-Trichlorophenol	U	530	1.0	500	530	160	
95-95-4	2,4,5-Trichlorophenol	U	530	1.0	500	530	160	
91-58-7	2-Chloronaphthalene	U	350	1.0	330	350	93	
92-52-4	1,1'-Biphenyl	U	350	1.0	330	350	78	
88-74-4	2-Nitroaniline	U	530	1.0	500	530	80	
131-11-3	Dimethyl Phthalate	U	350	1.0	330	350	83	
606-20-2	2,6-Dinitrotoluene	U	350	1.0	330	350	84	
208-96-8	Acenaphthylene	U	350	1.0	330	350	75	
99-09-2	3-Nitroaniline	U	530	1.0	500	530	100	
83-32-9	Acenaphthene	U	350	1.0	330	350	69	
51-28-5	2,4-Dinitrophenol	U	1300	1.0	1200	1300	400	
132-64-9	Dibenzofuran	U	350	1.0	330	350	84	
100-02-7	4-Nitrophenol	U	1300	1.0	1200	1300	330	
121-14-2	2,4-Dinitrotoluene	U	350	1.0	330	350	91	
84-66-2	Diethylphthalate	U	350	1.0	330	350	86	
7005-72-3	4-Chlorophenyl-phenylether	U	350	1.0	330	350	83	
100-01-6	4-Nitroaniline	~~U~~ UJ	530	1.0	500	530	140	CCH
534-52-1	4,6-Dinitro-2-Methylphenol	U	1300	1.0	1200	1300	360	
86-30-6	N-Nitrosodiphenylamine	U	700	1.0	660	700	230	
101-55-3	4-Bromophenyl-phenylether	U	350	1.0	330	350	91	
1912-24-9	Atrazine	U	350	1.0	330	350	97	
87-86-5	Pentachlorophenol	U	880	1.0	820	880	250	
120-12-7	Anthracene	U	350	1.0	330	350	90	
86-74-8	Carbazole	U	530	1.0	500	530	120	

lw 3/6/09

KATAHDIN ANALYTICAL SERVICES
Report of Analytical Results

Client: CH2MHill
Project: TO-009 Lejeune
PO No:
Sample Date: 12/20/08
Received Date: 12/23/08
Extraction Date: 12/30/08
Analysis Date: 16-JAN-2009 16:13
Report Date: 01/23/2009
Matrix: SOIL
% Solids: 93.5

Lab ID: SB7368-25
Client ID: MR08-IS190-1-2-08D
SDG: TO9-23
Extracted by: CB
Extraction Method: SW846 3550
Analyst: JLP
Analysis Method: SW846 8270C
Lab Prep Batch: WG59475
Units: ug/Kgdrywt

CAS#	Compound	Flags	Results	DF	PQL	Adj.PQL	Adj.MDL
84-74-2	Di-n-butylphthalate	U	350	1.0	330	350	110
85-68-7	Butylbenzylphthalate	U	350	1.0	330	350	99
91-94-1	3,3'-Dichlorobenzidine	U	530	1.0	500	530	120
218-01-9	Chrysene	U	350	1.0	330	350	100
117-81-7	bis(2-Ethylhexyl)phthalate	J	230	1.0	330	350	100
117-84-0	Di-n-octylphthalate	U	350	1.0	330	350	220
367-12-4	2-Fluorophenol		51%				
13127-88-3	Phenol-D6		45%				
4165-60-0	Nitrobenzene-D5		53%				
321-60-8	2-Fluorobiphenyl		60%				
118-79-6	2,4,6-Tribromophenol		41%				
1718-51-0	Terphenyl-D14		71%				

LW 3/6/09

KATAHDIN ANALYTICAL SERVICES
Report of Analytical Results

Client: CH2MHill
Project: TO-009 Lejeune
PO No:
Sample Date: 12/20/08
Received Date: 12/23/08
Extraction Date: 12/30/08
Analysis Date: 16-JAN-2009 18:46
Report Date: 01/23/2009
Matrix: SOIL
% Solids: 95.9

Lab ID: SB7368-27
Client ID: MR08-SS189-08D
SDG: TO9-23
Extracted by: CB
Extraction Method: SW846 3550
Analyst: JCG
Analysis Method: SW846 8270C
Lab Prep Batch: WG59475
Units: ug/Kgdrywt

CAS#	Compound	Flags	Results	DF	PQL	Adj.PQL	Adj.MDL	
100-52-7	Benzaldehyde	~~U~~ UJ	520	1.0	500	520	120	JCB
108-95-2	Phenol	U	520	1.0	500	520	160	
111-44-4	Bis(2-Chloroethyl)ether	U	340	1.0	330	340	84	
95-57-8	2-Chlorophenol	U	520	1.0	500	520	170	
95-48-7	2-Methylphenol	U	620	1.0	600	620	210	
108-60-1	2,2'-Oxybis(1-chloropropane)	U	340	1.0	330	340	93	
98-86-2	Acetophenone	U	620	1.0	600	620	180	
621-64-7	N-Nitroso-di-n-propylamine	U	340	1.0	330	340	86	
65794-96-9	3&4-Methylphenol	U	620	1.0	600	620	190	
67-72-1	Hexachloroethane	U	340	1.0	330	340	100	
98-95-3	Nitrobenzene	U	340	1.0	330	340	95	
78-59-1	Isophorone	U	340	1.0	330	340	78	
88-75-5	2-Nitrophenol	U	620	1.0	600	620	170	
105-67-9	2,4-Dimethylphenol	U	520	1.0	500	520	170	
111-91-1	Bis(2-Chloroethoxy)methane	U	340	1.0	330	340	100	
120-83-2	2,4-Dichlorophenol	U	520	1.0	500	520	160	
106-47-8	4-Chloroaniline	U	520	1.0	500	520	120	
105-60-2	Caprolactam	~~U~~ UJ	520	1.0	500	520	150	BSL
59-50-7	4-Chloro-3-Methylphenol	U	520	1.0	500	520	170	
88-06-2	2,4,6-Trichlorophenol	U	520	1.0	500	520	160	
95-95-4	2,4,5-Trichlorophenol	U	520	1.0	500	520	160	
91-58-7	2-Chloronaphthalene	U	340	1.0	330	340	91	
92-52-4	1,1'-Biphenyl	U	340	1.0	330	340	76	
88-74-4	2-Nitroaniline	U	520	1.0	500	520	78	
131-11-3	Dimethyl Phthalate	U	340	1.0	330	340	81	
606-20-2	2,6-Dinitrotoluene	U	340	1.0	330	340	82	
208-96-8	Acenaphthylene	U	340	1.0	330	340	73	
99-09-2	3-Nitroaniline	U	520	1.0	500	520	98	
83-32-9	Acenaphthene	U	340	1.0	330	340	68	
51-28-5	2,4-Dinitrophenol	U	1200	1.0	1200	1200	390	
132-64-9	Dibenzofuran	U	340	1.0	330	340	82	
100-02-7	4-Nitrophenol	U	1200	1.0	1200	1200	320	
121-14-2	2,4-Dinitrotoluene	U	340	1.0	330	340	89	
84-66-2	Diethylphthalate	U	340	1.0	330	340	83	
7005-72-3	4-Chlorophenyl-phenylether	U	340	1.0	330	340	81	
100-01-6	4-Nitroaniline	U	520	1.0	500	520	140	
534-52-1	4,6-Dinitro-2-Methylphenol	U	1200	1.0	1200	1200	350	
86-30-6	N-Nitrosodiphenylamine	U	690	1.0	660	690	230	
101-55-3	4-Bromophenyl-phenylether	U	340	1.0	330	340	89	
1912-24-9	Atrazine	U	340	1.0	330	340	95	
87-86-5	Pentachlorophenol	U	850	1.0	820	850	250	
120-12-7	Anthracene	U	340	1.0	330	340	88	
86-74-8	Carbazole	U	520	1.0	500	520	120	

DW
3/6/09

KATAHDIN ANALYTICAL SERVICES
Report of Analytical Results

Client: CH2MHill
Project: TO-009 Lejeune
PO No:
Sample Date: 12/20/08
Received Date: 12/23/08
Extraction Date: 12/30/08
Analysis Date: 16-JAN-2009 18:46
Report Date: 01/23/2009
Matrix: SOIL
% Solids: 95.9

Lab ID: SB7368-27
Client ID: MR08-SS189-08D
SDG: TO9-23
Extracted by: CB
Extraction Method: SW846 3550
Analyst: JCG
Analysis Method: SW846 8270C
Lab Prep Batch: WG59475
Units: ug/Kgdrywt

CAS#	Compound	Flags	Results	DF	PQL	Adj.PQL	Adj.MDL
84-74-2	Di-n-butylphthalate	U	340	1.0	330	340	100
85-68-7	Butylbenzylphthalate	U	340	1.0	330	340	97
91-94-1	3,3'-Dichlorobenzidine	U	520	1.0	500	520	120
218-01-9	Chrysene	U	340	1.0	330	340	99
117-81-7	bis(2-Ethylhexyl)phthalate	U	340	1.0	330	340	100
117-84-0	Di-n-octylphthalate	U	340	1.0	330	340	220
367-12-4	2-Fluorophenol		64%				
13127-88-3	Phenol-D6		70%				
4165-60-0	Nitrobenzene-D5		74%				
321-60-8	2-Fluorobiphenyl		73%				
118-79-6	2,4,6-Tribromophenol		47%				
1718-51-0	Terphenyl-D14		79%				

MW
3/6/09

KATAHDIN ANALYTICAL SERVICES
Report of Analytical Results

Client: CH2MHill
Project: TO-009 Lejeune
PO No:
Sample Date: 12/20/08
Received Date: 12/23/08
Extraction Date: 12/30/08
Analysis Date: 16-JAN-2009 19:29
Report Date: 01/23/2009
Matrix: SOIL
% Solids: 95.4

Lab ID: SB7368-29
Client ID: MR08-SS189D-08D
SDG: TO9-23
Extracted by: CB
Extraction Method: SW846 3550
Analyst: JCG
Analysis Method: SW846 8270C
Lab Prep Batch: WG59475
Units: ug/Kgdrywt

CAS#	Compound	Flags	Results	DF	PQL	Adj.PQL	Adj.MDL	
100-52-7	Benzaldehyde	~~U~~ UJ	520	1.0	500	520	120	ICB
108-95-2	Phenol	U	520	1.0	500	520	160	
111-44-4	Bis(2-Chloroethyl)ether	U	340	1.0	330	340	85	
95-57-8	2-Chlorophenol	U	520	1.0	500	520	170	
95-48-7	2-Methylphenol	U	630	1.0	600	630	210	
108-60-1	2,2'-Oxybis(1-chloropropane)	U	340	1.0	330	340	93	
98-86-2	Acetophenone	U	630	1.0	600	630	190	
621-64-7	N-Nitroso-di-n-propylamine	U	340	1.0	330	340	87	
65794-96-9	3&4-Methylphenol	U	630	1.0	600	630	200	
67-72-1	Hexachloroethane	U	340	1.0	330	340	100	
98-95-3	Nitrobenzene	U	340	1.0	330	340	95	
78-59-1	Isophorone	U	340	1.0	330	340	78	
88-75-5	2-Nitrophenol	U	630	1.0	600	630	170	
105-67-9	2,4-Dimethylphenol	U	520	1.0	500	520	170	
111-91-1	Bis(2-Chloroethoxy)methane	U	340	1.0	330	340	100	
120-83-2	2,4-Dichlorophenol	U	520	1.0	500	520	160	
106-47-8	4-Chloroaniline	U	520	1.0	500	520	120	
105-60-2	Caprolactam	~~U~~ UJ	520	1.0	500	520	150	BSL
59-50-7	4-Chloro-3-Methylphenol	U	520	1.0	500	520	170	
88-06-2	2,4,6-Trichlorophenol	U	520	1.0	500	520	160	
95-95-4	2,4,5-Trichlorophenol	U	520	1.0	500	520	160	
91-58-7	2-Chloronaphthalene	U	340	1.0	330	340	91	
92-52-4	1,1'-Biphenyl	U	340	1.0	330	340	76	
88-74-4	2-Nitroaniline	U	520	1.0	500	520	78	
131-11-3	Dimethyl Phthalate	U	340	1.0	330	340	82	
606-20-2	2,6-Dinitrotoluene	U	340	1.0	330	340	83	
208-96-8	Acenaphthylene	U	340	1.0	330	340	73	
99-09-2	3-Nitroaniline	U	520	1.0	500	520	98	
83-32-9	Acenaphthene	U	340	1.0	330	340	68	
51-28-5	2,4-Dinitrophenol	U	1200	1.0	1200	1200	400	
132-64-9	Dibenzofuran	U	340	1.0	330	340	83	
100-02-7	4-Nitrophenol	U	1200	1.0	1200	1200	320	
121-14-2	2,4-Dinitrotoluene	U	340	1.0	330	340	89	
84-66-2	Diethylphthalate	U	340	1.0	330	340	84	
7005-72-3	4-Chlorophenyl-phenylether	U	340	1.0	330	340	82	
100-01-6	4-Nitroaniline	U	520	1.0	500	520	140	
534-52-1	4,6-Dinitro-2-Methylphenol	U	1200	1.0	1200	1200	350	
86-30-6	N-Nitrosodiphenylamine	U	690	1.0	660	690	230	
101-55-3	4-Bromophenyl-phenylether	U	340	1.0	330	340	89	
1912-24-9	Atrazine	U	340	1.0	330	340	95	
87-86-5	Pentachlorophenol	U	860	1.0	820	860	250	
120-12-7	Anthracene	U	340	1.0	330	340	88	
86-74-8	Carbazole	U	520	1.0	500	520	120	

JCW
3/6/09

KATAHDIN ANALYTICAL SERVICES
Report of Analytical Results

Client: CH2MHill
Project: TO-009 Lejeune
PO No:
Sample Date: 12/20/08
Received Date: 12/23/08
Extraction Date: 12/30/08
Analysis Date: 16-JAN-2009 19:29
Report Date: 01/23/2009
Matrix: SOIL
% Solids: 95.4

Lab ID: SB7368-29
Client ID: MR08-SS189D-08D
SDG: TO9-23
Extracted by: CB
Extraction Method: SW846 3550
Analyst: JCG
Analysis Method: SW846 8270C
Lab Prep Batch: WG59475
Units: ug/Kgdrywt

CAS#	Compound	Flags	Results	DF	PQL	Adj.PQL	Adj.MDL
84-74-2	Di-n-butylphthalate	U	340	1.0	330	340	100
85-68-7	Butylbenzylphthalate	U	340	1.0	330	340	97
91-94-1	3,3'-Dichlorobenzidine	U	520	1.0	500	520	120
218-01-9	Chrysene	U	340	1.0	330	340	100
117-81-7	bis(2-Ethylhexyl)phthalate	U	340	1.0	330	340	100
117-84-0	Di-n-octylphthalate	U	340	1.0	330	340	220
367-12-4	2-Fluorophenol		64%				
13127-88-3	Phenol-D6		64%				
4165-60-0	Nitrobenzene-D5		64%				
321-60-8	2-Fluorobiphenyl		67%				
118-79-6	2,4,6-Tribromophenol		49%				
1718-51-0	Terphenyl-D14		79%				

lw
3/6/09

16

KATAHDIN ANALYTICAL SERVICES
Report of Analytical Results

Client: CH2MHill
Project: TO-009 Lejeune
PO No:
Sample Date: 12/20/08
Received Date: 12/23/08
Extraction Date: 12/30/08
Analysis Date: 16-JAN-2009 20:12
Report Date: 01/23/2009
Matrix: SOIL
% Solids: 91.3

Lab ID: SB7368-31
Client ID: MR08-IS189-3-4-08D
SDG: TO9-23
Extracted by: CB
Extraction Method: SW846 3550
Analyst: JCG
Analysis Method: SW846 8270C
Lab Prep Batch: WG59475
Units: ug/Kgdrywt

CAS#	Compound	Flags	Results	DF	PQL	Adj.PQL	Adj.MDL	
100-52-7	Benzaldehyde	~~U~~ UJ	550	1.0	500	550	130	ICB
108-95-2	Phenol	U	550	1.0	500	550	170	
111-44-4	Bis(2-Chloroethyl)ether	U	360	1.0	330	360	89	
95-57-8	2-Chlorophenol	U	550	1.0	500	550	180	
95-48-7	2-Methylphenol	U	660	1.0	600	660	220	
108-60-1	2,2'-Oxybis(1-chloropropane)	U	360	1.0	330	360	97	
98-86-2	Acetophenone	U	660	1.0	600	660	190	
621-64-7	N-Nitroso-di-n-propylamine	U	360	1.0	330	360	91	
65794-96-9	3&4-Methylphenol	U	660	1.0	600	660	200	
67-72-1	Hexachloroethane	U	360	1.0	330	360	100	
98-95-3	Nitrobenzene	U	360	1.0	330	360	100	
78-59-1	Isophorone	U	360	1.0	330	360	82	
88-75-5	2-Nitrophenol	U	660	1.0	600	660	180	
105-67-9	2,4-Dimethylphenol	U	550	1.0	500	550	180	
111-91-1	Bis(2-Chloroethoxy)methane	U	360	1.0	330	360	100	
120-83-2	2,4-Dichlorophenol	U	550	1.0	500	550	160	
106-47-8	4-Chloroaniline	U	550	1.0	500	550	130	
105-60-2	Caprolactam	~~U~~ UJ	550	1.0	500	550	160	BSL
59-50-7	4-Chloro-3-Methylphenol	U	550	1.0	500	550	180	
88-06-2	2,4,6-Trichlorophenol	U	550	1.0	500	550	170	
95-95-4	2,4,5-Trichlorophenol	U	550	1.0	500	550	170	
91-58-7	2-Chloronaphthalene	U	360	1.0	330	360	95	
92-52-4	1,1'-Biphenyl	U	360	1.0	330	360	80	
88-74-4	2-Nitroaniline	U	550	1.0	500	550	82	
131-11-3	Dimethyl Phthalate	U	360	1.0	330	360	85	
606-20-2	2,6-Dinitrotoluene	U	360	1.0	330	360	86	
208-96-8	Acenaphthylene	U	360	1.0	330	360	77	
99-09-2	3-Nitroaniline	U	550	1.0	500	550	100	
83-32-9	Acenaphthene	U	360	1.0	330	360	71	
51-28-5	2,4-Dinitrophenol	U	1300	1.0	1200	1300	410	
132-64-9	Dibenzofuran	U	360	1.0	330	360	86	
100-02-7	4-Nitrophenol	U	1300	1.0	1200	1300	340	
121-14-2	2,4-Dinitrotoluene	U	360	1.0	330	360	93	
84-66-2	Diethylphthalate	U	360	1.0	330	360	88	
7005-72-3	4-Chlorophenyl-phenylether	U	360	1.0	330	360	85	
100-01-6	4-Nitroaniline	U	550	1.0	500	550	150	
534-52-1	4,6-Dinitro-2-Methylphenol	U	1300	1.0	1200	1300	370	
86-30-6	N-Nitrosodiphenylamine	U	720	1.0	660	720	240	
101-55-3	4-Bromophenyl-phenylether	U	360	1.0	330	360	93	
1912-24-9	Atrazine	U	360	1.0	330	360	100	
87-86-5	Pentachlorophenol	U	900	1.0	820	900	260	
120-12-7	Anthracene	U	360	1.0	330	360	92	
86-74-8	Carbazole	U	550	1.0	500	550	120	

LW 3/6/09

16

KATAHDIN ANALYTICAL SERVICES
Report of Analytical Results

Client: CH2MHill
Project: TO-009 Lejeune
PO No:
Sample Date: 12/20/08
Received Date: 12/23/08
Extraction Date: 12/30/08
Analysis Date: 16-JAN-2009 20:12
Report Date: 01/23/2009
Matrix: SOIL
% Solids: 91.3

Lab ID: SB7368-31
Client ID: MR08-IS189-3-4-08D
SDG: TO9-23
Extracted by: CB
Extraction Method: SW846 3550
Analyst: JCG
Analysis Method: SW846 8270C
Lab Prep Batch: WG59475
Units: ug/Kgdrywt

CAS#	Compound	Flags	Results	DF	PQL	Adj.PQL	Adj.MDL
84-74-2	Di-n-butylphthalate	U	360	1.0	330	360	110
85-68-7	Butylbenzylphthalate	U	360	1.0	330	360	100
91-94-1	3,3'-Dichlorobenzidine	U	550	1.0	500	550	120
218-01-9	Chrysene	U	360	1.0	330	360	100
117-81-7	bis(2-Ethylhexyl)phthalate	U	360	1.0	330	360	110
117-84-0	Di-n-octylphthalate	U	360	1.0	330	360	230
367-12-4	2-Fluorophenol		69%				
13127-88-3	Phenol-D6		68%				
4165-60-0	Nitrobenzene-D5		64%				
321-60-8	2-Fluorobiphenyl		67%				
118-79-6	2,4,6-Tribromophenol		65%				
1718-51-0	Terphenyl-D14		76%				

LW
3/6/09

17

KATAHDIN ANALYTICAL SERVICES
Report of Analytical Results

Client: CH2MHill
Project: TO-009 Lejeune
PO No:
Sample Date: 12/20/08
Received Date: 12/23/08
Extraction Date: 12/30/08
Analysis Date: 16-JAN-2009 20:54
Report Date: 01/23/2009
Matrix: SOIL
% Solids: 91.1

Lab ID: SB7368-33
Client ID: MR08-IS189D-3-4-08D
SDG: TO9-23
Extracted by: CB
Extraction Method: SW846 3550
Analyst: JCG
Analysis Method: SW846 8270C
Lab Prep Batch: WG59475
Units: ug/Kgdrywt

CAS#	Compound	Flags	Results	DF	PQL	Adj.PQL	Adj.MDL
100-52-7	Benzaldehyde	~~U~~ UJ	550	1.0	500	550	130 ICB
108-95-2	Phenol	U	550	1.0	500	550	170
111-44-4	Bis(2-Chloroethyl)ether	U	360	1.0	330	360	89
95-57-8	2-Chlorophenol	U	550	1.0	500	550	180
95-48-7	2-Methylphenol	U	660	1.0	600	660	220
108-60-1	2,2'-Oxybis(1-chloropropane)	U	360	1.0	330	360	98
98-86-2	Acetophenone	U	660	1.0	600	660	200
621-64-7	N-Nitroso-di-n-propylamine	U	360	1.0	330	360	91
65794-96-9	3&4-Methylphenol	U	660	1.0	600	660	200
67-72-1	Hexachloroethane	U	360	1.0	330	360	100
98-95-3	Nitrobenzene	U	360	1.0	330	360	100
78-59-1	Isophorone	U	360	1.0	330	360	82
88-75-5	2-Nitrophenol	U	660	1.0	600	660	180
105-67-9	2,4-Dimethylphenol	U	550	1.0	500	550	180
111-91-1	Bis(2-Chloroethoxy)methane	U	360	1.0	330	360	100
120-83-2	2,4-Dichlorophenol	U	550	1.0	500	550	160
106-47-8	4-Chloroaniline	U	550	1.0	500	550	130
105-60-2	Caprolactam	~~U~~ UJ	550	1.0	500	550	160 BSL
59-50-7	4-Chloro-3-Methylphenol	U	550	1.0	500	550	180
88-06-2	2,4,6-Trichlorophenol	U	550	1.0	500	550	170
95-95-4	2,4,5-Trichlorophenol	U	550	1.0	500	550	170
91-58-7	2-Chloronaphthalene	U	360	1.0	330	360	96
92-52-4	1,1'-Biphenyl	U	360	1.0	330	360	80
88-74-4	2-Nitroaniline	U	550	1.0	500	550	82
131-11-3	Dimethyl Phthalate	U	360	1.0	330	360	86
606-20-2	2,6-Dinitrotoluene	U	360	1.0	330	360	87
208-96-8	Acenaphthylene	U	360	1.0	330	360	77
99-09-2	3-Nitroaniline	U	550	1.0	500	550	100
83-32-9	Acenaphthene	U	360	1.0	330	360	71
51-28-5	2,4-Dinitrophenol	U	1300	1.0	1200	1300	410
132-64-9	Dibenzofuran	U	360	1.0	330	360	87
100-02-7	4-Nitrophenol	U	1300	1.0	1200	1300	340
121-14-2	2,4-Dinitrotoluene	U	360	1.0	330	360	93
84-66-2	Diethylphthalate	U	360	1.0	330	360	88
7005-72-3	4-Chlorophenyl-phenylether	U	360	1.0	330	360	86
100-01-6	4-Nitroaniline	U	550	1.0	500	550	150
534-52-1	4,6-Dinitro-2-Methylphenol	U	1300	1.0	1200	1300	370
86-30-6	N-Nitrosodiphenylamine	U	720	1.0	660	720	240
101-55-3	4-Bromophenyl-phenylether	U	360	1.0	330	360	93
1912-24-9	Atrazine	U	360	1.0	330	360	100
87-86-5	Pentachlorophenol	U	900	1.0	820	900	260
120-12-7	Anthracene	U	360	1.0	330	360	92
86-74-8	Carbazole	U	550	1.0	500	550	120

lw 3/6/09

KATAHDIN ANALYTICAL SERVICES
Report of Analytical Results

Client: CH2MHill
Project: TO-009 Lejeune
PO No:
Sample Date: 12/20/08
Received Date: 12/23/08
Extraction Date: 12/30/08
Analysis Date: 16-JAN-2009 20:54
Report Date: 01/23/2009
Matrix: SOIL
% Solids: 91.1

Lab ID: SB7368-33
Client ID: MR08-IS189D-3-4-08D
SDG: TO9-23
Extracted by: CB
Extraction Method: SW846 3550
Analyst: JCG
Analysis Method: SW846 8270C
Lab Prep Batch: WG59475
Units: ug/Kgdrywt

CAS#	Compound	Flags	Results	DF	PQL	Adj.PQL	Adj.MDL
84-74-2	Di-n-butylphthalate	U	360	1.0	330	360	110
85-68-7	Butylbenzylphthalate	U	360	1.0	330	360	100
91-94-1	3,3'-Dichlorobenzidine	U	550	1.0	500	550	120
218-01-9	Chrysene	U	360	1.0	330	360	100
117-81-7	bis(2-Ethylhexyl)phthalate	U	360	1.0	330	360	110
117-84-0	Di-n-octylphthalate	U	360	1.0	330	360	230
367-12-4	2-Fluorophenol		70%				
13127-88-3	Phenol-D6		68%				
4165-60-0	Nitrobenzene-D5		68%				
321-60-8	2-Fluorobiphenyl		72%				
118-79-6	2,4,6-Tribromophenol		70%				
1718-51-0	Terphenyl-D14		79%				

MW 3/6/09

18

KATAHDIN ANALYTICAL SERVICES
Report of Analytical Results

Client: CH2MHill
Project: TO-009 Lejeune
PO No:
Sample Date: 12/21/08
Received Date: 12/23/08
Extraction Date: 12/30/08
Analysis Date: 16-JAN-2009 21:36
Report Date: 01/23/2009
Matrix: SOIL
% Solids: 91.8

Lab ID: SB7368-35
Client ID: MR08-SS199-08D
SDG: TO9-23
Extracted by: CB
Extraction Method: SW846 3550
Analyst: JCG
Analysis Method: SW846 8270C
Lab Prep Batch: WG59475
Units: ug/Kgdrywt

CAS#	Compound	Flags	Results	DF	PQL	Adj.PQL	Adj.MDL	
100-52-7	Benzaldehyde	~~U~~ UJ	540	1.0	500	540	130	ICB
108-95-2	Phenol	U	540	1.0	500	540	170	
111-44-4	Bis(2-Chloroethyl)ether	U	360	1.0	330	360	88	
95-57-8	2-Chlorophenol	U	540	1.0	500	540	180	
95-48-7	2-Methylphenol	U	650	1.0	600	650	220	
108-60-1	2,2'-Oxybis(1-chloropropane)	U	360	1.0	330	360	97	
98-86-2	Acetophenone	U	650	1.0	600	650	190	
621-64-7	N-Nitroso-di-n-propylamine	U	360	1.0	330	360	90	
65794-96-9	3&4-Methylphenol	U	650	1.0	600	650	200	
67-72-1	Hexachloroethane	U	360	1.0	330	360	100	
98-95-3	Nitrobenzene	U	360	1.0	330	360	99	
78-59-1	Isophorone	U	360	1.0	330	360	82	
88-75-5	2-Nitrophenol	U	650	1.0	600	650	180	
105-67-9	2,4-Dimethylphenol	U	540	1.0	500	540	180	
111-91-1	Bis(2-Chloroethoxy)methane	U	360	1.0	330	360	100	
120-83-2	2,4-Dichlorophenol	U	540	1.0	500	540	160	
106-47-8	4-Chloroaniline	U	540	1.0	500	540	130	
105-60-2	Caprolactam	~~U~~ UJ	540	1.0	500	540	160	BSL
59-50-7	4-Chloro-3-Methylphenol	U	540	1.0	500	540	180	
88-06-2	2,4,6-Trichlorophenol	U	540	1.0	500	540	170	
95-95-4	2,4,5-Trichlorophenol	U	540	1.0	500	540	170	
91-58-7	2-Chloronaphthalene	U	360	1.0	330	360	95	
92-52-4	1,1'-Biphenyl	U	360	1.0	330	360	80	
88-74-4	2-Nitroaniline	U	540	1.0	500	540	82	
131-11-3	Dimethyl Phthalate	U	360	1.0	330	360	85	
606-20-2	2,6-Dinitrotoluene	U	360	1.0	330	360	86	
208-96-8	Acenaphthylene	U	360	1.0	330	360	76	
99-09-2	3-Nitroaniline	U	540	1.0	500	540	100	
83-32-9	Acenaphthene	U	360	1.0	330	360	71	
51-28-5	2,4-Dinitrophenol	U	1300	1.0	1200	1300	410	
132-64-9	Dibenzofuran	U	360	1.0	330	360	86	
100-02-7	4-Nitrophenol	U	1300	1.0	1200	1300	340	
121-14-2	2,4-Dinitrotoluene	U	360	1.0	330	360	92	
84-66-2	Diethylphthalate	U	360	1.0	330	360	87	
7005-72-3	4-Chlorophenyl-phenylether	U	360	1.0	330	360	85	
100-01-6	4-Nitroaniline	U	540	1.0	500	540	140	
534-52-1	4,6-Dinitro-2-Methylphenol	U	1300	1.0	1200	1300	370	
86-30-6	N-Nitrosodiphenylamine	U	720	1.0	660	720	240	
101-55-3	4-Bromophenyl-phenylether	U	360	1.0	330	360	92	
1912-24-9	Atrazine	U	360	1.0	330	360	99	
87-86-5	Pentachlorophenol	U	890	1.0	820	890	260	
120-12-7	Anthracene	U	360	1.0	330	360	91	
86-74-8	Carbazole	U	540	1.0	500	540	120	

LW 3/6/09

KATAHDIN ANALYTICAL SERVICES
Report of Analytical Results

Client: CH2MHill
Project: TO-009 Lejeune
PO No:
Sample Date: 12/21/08
Received Date: 12/23/08
Extraction Date: 12/30/08
Analysis Date: 16-JAN-2009 21:36
Report Date: 01/23/2009
Matrix: SOIL
% Solids: 91.8

Lab ID: SB7368-35
Client ID: MR08-SS199-08D
SDG: TO9-23
Extracted by: CB
Extraction Method: SW846 3550
Analyst: JCG
Analysis Method: SW846 8270C
Lab Prep Batch: WG59475
Units: ug/Kgdrywt

CAS#	Compound	Flags	Results	DF	PQL	Adj.PQL	Adj.MDL
84-74-2	Di-n-butylphthalate	U	360	1.0	330	360	110
85-68-7	Butylbenzylphthalate	U	360	1.0	330	360	100
91-94-1	3,3'-Dichlorobenzidine	U	540	1.0	500	540	120
218-01-9	Chrysene	U	360	1.0	330	360	100
117-81-7	bis(2-Ethylhexyl)phthalate	J	200	1.0	330	360	110
117-84-0	Di-n-octylphthalate	U	360	1.0	330	360	230
367-12-4	2-Fluorophenol		43%				
13127-88-3	Phenol-D6		55%				
4165-60-0	Nitrobenzene-D5		61%				
321-60-8	2-Fluorobiphenyl		68%				
118-79-6	2,4,6-Tribromophenol		* 24%				
1718-51-0	Terphenyl-D14		78%				

LW
3/6/09

KATAHDIN ANALYTICAL SERVICES
Report of Analytical Results

Client: CH2MHill
Project: TO-009 Lejeune
PO No:
Sample Date: 12/21/08
Received Date: 12/23/08
Extraction Date: 12/30/08
Analysis Date: 16-JAN-2009 22:18
Report Date: 01/23/2009
Matrix: SOIL
% Solids: 92.2

Lab ID: SB7368-37
Client ID: MR08-SS199D-08D
SDG: TO9-23
Extracted by: CB
Extraction Method: SW846 3550
Analyst: JCG
Analysis Method: SW846 8270C
Lab Prep Batch: WG59475
Units: ug/Kgdrywt

CAS#	Compound	Flags	Results	DF	PQL	Adj.PQL	Adj.MDL	
100-52-7	Benzaldehyde	~~U~~ UJ	540	1.0	500	540	130	JEB
108-95-2	Phenol	U	540	1.0	500	540	170	
111-44-4	Bis(2-Chloroethyl)ether	U	360	1.0	330	360	88	
95-57-8	2-Chlorophenol	U	540	1.0	500	540	180	
95-48-7	2-Methylphenol	U	650	1.0	600	650	220	
108-60-1	2,2'-Oxybis(1-chloropropane)	U	360	1.0	330	360	96	
98-86-2	Acetophenone	U	650	1.0	600	650	190	
621-64-7	N-Nitroso-di-n-propylamine	U	360	1.0	330	360	90	
65794-96-9	3&4-Methylphenol	U	650	1.0	600	650	200	
67-72-1	Hexachloroethane	U	360	1.0	330	360	100	
98-95-3	Nitrobenzene	U	360	1.0	330	360	99	
78-59-1	Isophorone	U	360	1.0	330	360	81	
88-75-5	2-Nitrophenol	U	650	1.0	600	650	180	
105-67-9	2,4-Dimethylphenol	U	540	1.0	500	540	180	
111-91-1	Bis(2-Chloroethoxy)methane	U	360	1.0	330	360	100	
120-83-2	2,4-Dichlorophenol	U	540	1.0	500	540	160	
106-47-8	4-Chloroaniline	U	540	1.0	500	540	130	
105-60-2	Caprolactam	~~U~~ UJ	540	1.0	500	540	160	BSL
59-50-7	4-Chloro-3-Methylphenol	U	540	1.0	500	540	180	
88-06-2	2,4,6-Trichlorophenol	U	540	1.0	500	540	170	
95-95-4	2,4,5-Trichlorophenol	U	540	1.0	500	540	170	
91-58-7	2-Chloronaphthalene	U	360	1.0	330	360	94	
92-52-4	1,1'-Biphenyl	U	360	1.0	330	360	79	
88-74-4	2-Nitroaniline	U	540	1.0	500	540	81	
131-11-3	Dimethyl Phthalate	U	360	1.0	330	360	84	
606-20-2	2,6-Dinitrotoluene	U	360	1.0	330	360	86	
208-96-8	Acenaphthylene	U	360	1.0	330	360	76	
99-09-2	3-Nitroaniline	U	540	1.0	500	540	100	
83-32-9	Acenaphthene	U	360	1.0	330	360	70	
51-28-5	2,4-Dinitrophenol	U	1300	1.0	1200	1300	410	
132-64-9	Dibenzofuran	U	360	1.0	330	360	86	
100-02-7	4-Nitrophenol	U	1300	1.0	1200	1300	330	
121-14-2	2,4-Dinitrotoluene	U	360	1.0	330	360	92	
84-66-2	Diethylphthalate	U	360	1.0	330	360	87	
7005-72-3	4-Chlorophenyl-phenylether	U	360	1.0	330	360	84	
100-01-6	4-Nitroaniline	U	540	1.0	500	540	140	
534-52-1	4,6-Dinitro-2-Methylphenol	U	1300	1.0	1200	1300	360	
86-30-6	N-Nitrosodiphenylamine	U	720	1.0	660	720	240	
101-55-3	4-Bromophenyl-phenylether	U	360	1.0	330	360	92	
1912-24-9	Atrazine	U	360	1.0	330	360	99	
87-86-5	Pentachlorophenol	U	890	1.0	820	890	260	
120-12-7	Anthracene	U	360	1.0	330	360	91	
86-74-8	Carbazole	U	540	1.0	500	540	120	

LW 3/6/09

KATAHDIN ANALYTICAL SERVICES
Report of Analytical Results

Client: CH2MHill
Project: TO-009 Lejeune
PO No:
Sample Date: 12/21/08
Received Date: 12/23/08
Extraction Date: 12/30/08
Analysis Date: 16-JAN-2009 22:18
Report Date: 01/23/2009
Matrix: SOIL
% Solids: 92.2

Lab ID: SB7368-37
Client ID: MR08-SS199D-08D
SDG: TO9-23
Extracted by: CB
Extraction Method: SW846 3550
Analyst: JCG
Analysis Method: SW846 8270C
Lab Prep Batch: WG59475
Units: ug/Kgdrywt

CAS#	Compound	Flags	Results	DF	PQL	Adj.PQL	Adj.MDL
84-74-2	Di-n-butylphthalate	U	360	1.0	330	360	110
85-68-7	Butylbenzylphthalate	U	360	1.0	330	360	100
91-94-1	3,3'-Dichlorobenzidine	U	540	1.0	500	540	120
218-01-9	Chrysene	U	360	1.0	330	360	100
117-81-7	bis(2-Ethylhexyl)phthalate	U	360	1.0	330	360	110
117-84-0	Di-n-octylphthalate	U	360	1.0	330	360	230
367-12-4	2-Fluorophenol		45%				
13127-88-3	Phenol-D6		60%				
4165-60-0	Nitrobenzene-D5		64%				
321-60-8	2-Fluorobiphenyl		71%				
118-79-6	2,4,6-Tribromophenol		* 24%				
1718-51-0	Terphenyl-D14		78%				

3/6/09

KATAHDIN ANALYTICAL SERVICES
Report of Analytical Results

Client: CH2MHill
Project: TO-009 Lejeune
PO No:
Sample Date: 12/21/08
Received Date: 12/23/08
Extraction Date: 12/30/08
Analysis Date: 16-JAN-2009 23:00
Report Date: 01/23/2009
Matrix: SOIL
% Solids: 89.0

Lab ID: SB7368-39
Client ID: MR08-IS199-1-2-08D
SDG: TO9-23
Extracted by: CB
Extraction Method: SW846 3550
Analyst: JCG
Analysis Method: SW846 8270C
Lab Prep Batch: WG59475
Units: ug/Kgdrywt

CAS#	Compound	Flags	Results	DF	PQL	Adj.PQL	Adj.MDL	
100-52-7	Benzaldehyde	~~U~~ UJ	560	1.0	500	560	130	ICB
108-95-2	Phenol	~~U~~ R	560	1.0	500	560	180	SSL
111-44-4	Bis(2-Chloroethyl)ether	U	370	1.0	330	370	91	
95-57-8	2-Chlorophenol	~~U~~ R	560	1.0	500	560	180	SSL
95-48-7	2-Methylphenol	~~U~~ R	670	1.0	600	670	220	SSL
108-60-1	2,2'-Oxybis(1-chloropropane)	U	370	1.0	330	370	100	
98-86-2	Acetophenone	U	670	1.0	600	670	200	
621-64-7	N-Nitroso-di-n-propylamine	U	370	1.0	330	370	93	
65794-96-9	3&4-Methylphenol	~~U~~ R	670	1.0	600	670	210	SSL
67-72-1	Hexachloroethane	U	370	1.0	330	370	110	
98-95-3	Nitrobenzene	U	370	1.0	330	370	100	
78-59-1	Isophorone	U	370	1.0	330	370	84	
88-75-5	2-Nitrophenol	~~U~~ R	670	1.0	600	670	190	SSL
105-67-9	2,4-Dimethylphenol	~~U~~ R	560	1.0	500	560	180	SSL
111-91-1	Bis(2-Chloroethoxy)methane	U	370	1.0	330	370	110	
120-83-2	2,4-Dichlorophenol	~~U~~ R	560	1.0	500	560	170	SSL
106-47-8	4-Chloroaniline	U	560	1.0	500	560	130	
105-60-2	Caprolactam	~~U~~ UJ	560	1.0	500	560	160	BSL
59-50-7	4-Chloro-3-Methylphenol	~~U~~ R	560	1.0	500	560	190	SSL
88-06-2	2,4,6-Trichlorophenol	~~U~~ ↓	560	1.0	500	560	170	↓
95-95-4	2,4,5-Trichlorophenol	~~U~~ ↓	560	1.0	500	560	170	
91-58-7	2-Chloronaphthalene	U	370	1.0	330	370	98	
92-52-4	1,1'-Biphenyl	U	370	1.0	330	370	82	
88-74-4	2-Nitroaniline	U	560	1.0	500	560	84	
131-11-3	Dimethyl Phthalate	U	370	1.0	330	370	88	
606-20-2	2,6-Dinitrotoluene	U	370	1.0	330	370	89	
208-96-8	Acenaphthylene	U	370	1.0	330	370	79	
99-09-2	3-Nitroaniline	U	560	1.0	500	560	100	
83-32-9	Acenaphthene	U	370	1.0	330	370	73	
51-28-5	2,4-Dinitrophenol	~~U~~ R	1300	1.0	1200	1300	420	SSL
132-64-9	Dibenzofuran	U	370	1.0	330	370	89	
100-02-7	4-Nitrophenol	~~U~~ R	1300	1.0	1200	1300	350	SSL
121-14-2	2,4-Dinitrotoluene	U	370	1.0	330	370	95	
84-66-2	Diethylphthalate	U	370	1.0	330	370	90	
7005-72-3	4-Chlorophenyl-phenylether	U	370	1.0	330	370	88	
100-01-6	4-Nitroaniline	U	560	1.0	500	560	150	
534-52-1	4,6-Dinitro-2-Methylphenol	~~U~~ R	1300	1.0	1200	1300	380	SSL
86-30-6	N-Nitrosodiphenylamine	U	740	1.0	660	740	240	
101-55-3	4-Bromophenyl-phenylether	U	370	1.0	330	370	95	
1912-24-9	Atrazine	U	370	1.0	330	370	100	
87-86-5	Pentachlorophenol	~~U~~ R	920	1.0	820	920	270	SSL
120-12-7	Anthracene	U	370	1.0	330	370	94	
86-74-8	Carbazole	U	560	1.0	500	560	120	

MW 3/6/09

KATAHDIN ANALYTICAL SERVICES
Report of Analytical Results

Client: CH2MHill
Project: TO-009 Lejeune
PO No:
Sample Date: 12/21/08
Received Date: 12/23/08
Extraction Date: 12/30/08
Analysis Date: 16-JAN-2009 23:00
Report Date: 01/23/2009
Matrix: SOIL
% Solids: 89.0

Lab ID: SB7368-39
Client ID: MR08-IS199-1-2-08D
SDG: TO9-23
Extracted by: CB
Extraction Method: SW846 3550
Analyst: JCG
Analysis Method: SW846 8270C
Lab Prep Batch: WG59475
Units: ug/Kgdrywt

CAS#	Compound	Flags	Results	DF	PQL	Adj.PQL	Adj.MDL
84-74-2	Di-n-butylphthalate	U	370	1.0	330	370	110
85-68-7	Butylbenzylphthalate	U	370	1.0	330	370	100
91-94-1	3,3'-Dichlorobenzidine	U	560	1.0	500	560	130
218-01-9	Chrysene	U	370	1.0	330	370	110
117-81-7	bis(2-Ethylhexyl)phthalate	U	370	1.0	330	370	110
117-84-0	Di-n-octylphthalate	U	370	1.0	330	370	240
367-12-4	2-Fluorophenol		* 18%				
13127-88-3	Phenol-D6		45%				
4165-60-0	Nitrobenzene-D5		63%				
321-60-8	2-Fluorobiphenyl		68%				
118-79-6	2,4,6-Tribromophenol		* 0%				
1718-51-0	Terphenyl-D14		71%				

MW 3/6/09

20RE

KATAHDIN ANALYTICAL SERVICES
Report of Analytical Results

Client: CH2MHill
Project: TO-009 Lejeune
PO No:
Sample Date: 12/21/08
Received Date: 12/23/08
Extraction Date: 01/20/09
Analysis Date: 22-JAN-2009 04:39
Report Date: 01/23/2009
Matrix: SOIL
% Solids: 89.0

Lab ID: SB7368-39RE
Client ID: MR08-IS199-1-2-08D
SDG: TO9-23
Extracted by: AC
Extraction Method: SW846 3550
Analyst: JCG
Analysis Method: SW846 8270C
Lab Prep Batch: WG59975
Units: ug/Kgdrywt

Use original

CAS#	Compound	Flags	Results	DF	PQL	Adj.PQL	Adj.MDL	
100-52-7	Benzaldehyde	U R	560	1.0	500	560	130	HT
108-95-2	Phenol	U	560	1.0	500	560	180	
111-44-4	Bis(2-Chloroethyl)ether	U	370	1.0	330	370	91	
95-57-8	2-Chlorophenol	U	560	1.0	500	560	180	
95-48-7	2-Methylphenol	U	670	1.0	600	670	220	
108-60-1	2,2'-Oxybis(1-chloropropane)	U	370	1.0	330	370	100	
98-86-2	Acetophenone	U	670	1.0	600	670	200	
621-64-7	N-Nitroso-di-n-propylamine	U	370	1.0	330	370	93	
65794-96-9	3&4-Methylphenol	U	670	1.0	600	670	210	
67-72-1	Hexachloroethane	U	370	1.0	330	370	110	
98-95-3	Nitrobenzene	U	370	1.0	330	370	100	
78-59-1	Isophorone	U	370	1.0	330	370	84	
88-75-5	2-Nitrophenol	U	670	1.0	600	670	190	
105-67-9	2,4-Dimethylphenol	U	560	1.0	500	560	180	
111-91-1	Bis(2-Chloroethoxy)methane	U	370	1.0	330	370	110	
120-83-2	2,4-Dichlorophenol	U	560	1.0	500	560	170	
106-47-8	4-Chloroaniline	U	560	1.0	500	560	130	
105-60-2	Caprolactam	U	560	1.0	500	560	160	
59-50-7	4-Chloro-3-Methylphenol	U	560	1.0	500	560	190	
88-06-2	2,4,6-Trichlorophenol	U	560	1.0	500	560	170	
95-95-4	2,4,5-Trichlorophenol	U	560	1.0	500	560	170	
91-58-7	2-Chloronaphthalene	U	370	1.0	330	370	98	
92-52-4	1,1'-Biphenyl	U	370	1.0	330	370	82	
88-74-4	2-Nitroaniline	U	560	1.0	500	560	84	
131-11-3	Dimethyl Phthalate	U	370	1.0	330	370	88	
606-20-2	2,6-Dinitrotoluene	U	370	1.0	330	370	89	
208-96-8	Acenaphthylene	U	370	1.0	330	370	79	
99-09-2	3-Nitroaniline	U	560	1.0	500	560	100	
83-32-9	Acenaphthene	U	370	1.0	330	370	73	
51-28-5	2,4-Dinitrophenol	U	1300	1.0	1200	1300	420	
132-64-9	Dibenzofuran	U	370	1.0	330	370	89	
100-02-7	4-Nitrophenol	U	1300	1.0	1200	1300	350	
121-14-2	2,4-Dinitrotoluene	U	370	1.0	330	370	95	
84-66-2	Diethylphthalate	U	370	1.0	330	370	90	
7005-72-3	4-Chlorophenyl-phenylether	U	370	1.0	330	370	88	
100-01-6	4-Nitroaniline	U	560	1.0	500	560	150	
534-52-1	4,6-Dinitro-2-Methylphenol	U	1300	1.0	1200	1300	380	
86-30-6	N-Nitrosodiphenylamine	U	740	1.0	660	740	240	
101-55-3	4-Bromophenyl-phenylether	U	370	1.0	330	370	95	
1912-24-9	Atrazine	U	370	1.0	330	370	100	
87-86-5	Pentachlorophenol	U	920	1.0	820	920	270	
120-12-7	Anthracene	U	370	1.0	330	370	94	
86-74-8	Carbazole	U	560	1.0	500	560	120	

R

3/6/09

2RE 20

KATAHDIN ANALYTICAL SERVICES
Report of Analytical Results

Client: CH2MHill
Project: TO-009 Lejeune
PO No:
Sample Date: 12/21/08
Received Date: 12/23/08
Extraction Date: 01/20/09
Analysis Date: 22-JAN-2009 04:39
Report Date: 01/23/2009
Matrix: SOIL
% Solids: 89.0

Lab ID: SB7368-39RE
Client ID: MR08-IS199-1-2-08D
SDG: TO9-23
Extracted by: AC
Extraction Method: SW846 3550
Analyst: JCG
Analysis Method: SW846 8270C
Lab Prep Batch: WG59975
Units: ug/Kgdrywt

use original

CAS#	Compound	Flags	Results	DF	PQL	Adj PQL	Adj.MDL	
84-74-2	Di-n-butylphthalate	U R	370	1.0	330	370	110	HT
85-68-7	Butylbenzylphthalate	U	370	1.0	330	370	100	
91-94-1	3,3'-Dichlorobenzidine	U	560	1.0	500	560	130	
218-01-9	Chrysene	U	370	1.0	330	370	110	
117-81-7	bis(2-Ethylhexyl)phthalate	U	370	1.0	330	370	110	
117-84-0	Di-n-octylphthalate	U	370	1.0	330	370	240	
367-12-4	2-Fluorophenol		69%					
13127-88-3	Phenol-D6		66%					
4165-60-0	Nitrobenzene-D5		70%					
321-60-8	2-Fluorobiphenyl		80%					
118-79-6	2,4,6-Tribromophenol		65%					
1718-51-0	Terphenyl-D14		105%					

RE

lcw 3/6/09

ENVIRONMENTAL
Data Services, Inc.

POLYNUCLEAR AROMATIC COMPOUNDS BY 8270SIM

USEPA Region IV - Level IV Review

Site: MCB Camp Lejeune, TO-09 SDG #: TO9-24

Client: CH2M HILL, Inc., Virginia Beach, Virginia Date: March 6, 2009

Laboratory: Katahdin Analytical Services, Scarborough, Maine Reviewer: Nancy Weaver

EDS ID	Client Sample ID	Laboratory Sample ID	Matrix
1	MR08-IS199D-1-2-08D	SB7369-2	Soil
2	MR08-SS198-08D	SB7369-4	Soil
3	MR08-IS198-5-6-08D	SB7369-6	Soil
4	MR08-SS197-08D	SB7369-8	Soil
5	MR08-IS197-5-6-08D	SB7369-10	Soil
6	MR08-SS196-08D	SB7369-12	Soil
7	MR08-IS196-1-2-08D	SB7369-14	Soil
8	MR08-SS200-08D	SB7369-16	Soil
8DL	MR08-SS200-08DDL	SB7369-16DL	Soil
9	MR08-IS200-2-3-08D	SB7369-18	Soil
10	MR08-SS224-08D	SB7369-20	Soil
10DL	MR08-SS224-08DDL	SB7369-20DL	Soil
11	MR08-IS224-1-2-08D	SB7369-22	Soil
12	MR08-SS235-08D	SB7369-24	Soil
12DL	MR08-SS235-08DDL	SB7369-24DL	Soil
13	MR08-IS235-1-2-08D	SB7369-26	Soil
14	MR08-SS211-08D	SB7369-28	Soil
14DL	MR08-SS211-08DDL	SB7369-28DL	Soil
15	MR08-IS211-1-2-08D	SB7369-30	Soil
16	MR08-SS202-08D	SB7369-32	Soil
16DL	MR08-SS202-08DDL	SB7369-32DL	Soil
17	MR08-IS202-4-5-08D	SB7369-34	Soil
18	MR08-SS185-08D	SB7369-36	Soil
18DL	MR08-SS185-08DDL	SB7369-36DL	Soil
19	MR08-IS185-4-5-08D	SB7369-38	Soil
19DL	MR08-IS185-4-5-08DDL	SB7369-38DL	Soil
20	MR08-SS186-08D	SB7369-40	Soil

The USEPA "Contract Laboratory Program National Functional Guidelines for Organic Data Review," October 1999, and professional judgment were used in evaluating the data in this summary report.

Holding Times - All samples were extracted within 14 days for soil samples and analyzed within 40 days for all samples.

GC/MS Tuning - All of the DFTPP tunes in the initial and continuing calibrations met the percent relative abundance criteria.

Initial Calibration - The initial calibrations exhibited acceptable %RSD and mean RRF values.

Continuing Calibration - The continuing calibrations exhibited acceptable %D and RRF values except the following.

CCAL Date	Compound	%D/RRF	Qualifier	Affected Samples
01/15/09	Naphthalene	43.38%	J/UJ	1, 2
	Fluoranthene	26.98%	J/UJ	1, 2
	Hexachlorobutadiene	88.33%	J/UJ	1, 2
01/16/09	2-Methylnaphthalene	34.60%	J/UJ	1RE, 3-6, 19, 20
	Fluoranthene	43.38%	J/UJ	1RE, 3-6, 19, 20
	Hexachlorobutadiene	52.77%	J/UJ	1RE, 3-6, 19, 20
	Hexachlorocyclopentadiene	58.85%	J/UJ	1RE, 3-6, 19, 20
01/19/09	Naphthalene	27.49%	J/UJ	8, 10DL, 12DL
	Hexachlorobenzene	38.36%	J/UJ	8, 10DL, 12DL
	Hexachlorobutadiene	39.30%	J/UJ	8, 10DL, 12DL
	Hexachlorocyclopentadiene	38.17%	J/UJ	8, 10DL, 12DL
01/20/09 (0800)	Naphthalene	26.56%	J/UJ	8DL
	Benzo (k) fluoranthene	27.45%	J/UJ	8DL
	Indeno (1,2,3-cd) pyrene	28.56%	J/UJ	8DL
	Hexachlorobenzene	28.31%	J/UJ	8DL
	Hexachlorobutadiene	30.27%	J/UJ	8DL
	Hexachlorocyclopentadiene	47.51%	J/UJ	8DL
01/20/09 (1843)	Naphthalene	27.23%	J/UJ	13-18
	Indeno (1,2,3-cd) pyrene	43.76%	J/UJ	13-18
	Dibenzo (a,h) perylene	29.39%	J/UJ	13-18
	Hexachlorobutadiene	38.40%	J/UJ	13-18
	Hexachlorocyclopentadiene	43.43%	J/UJ	13-18
01/21/09	Hexachlorocyclopentadiene	68.59%	J/UJ	14DL, 16DL, 18DL

Surrogates - All samples exhibited acceptable surrogate recoveries except the following.

Sample ID	Surrogate	%R	Qualifier
1RE	S1-2-Methylnaphthalene-d10	129%	None for 1 out
19	S1-2-Methylnaphthalene-d10	137%	None for 1 out

MS/MSD - A MS/MSD sample was not analyzed.

Laboratory Control Sample - The LCS samples exhibited acceptable %R values.

LCS ID	Compound	%R	Qualifier	Affected Samples
WG59746	Naphthalene	116%	J	12
	Hexachlorobutadiene	154%	None	All associated ND

Internal Standard (IS) Area Performance - All internal standards met response and retention time (RT) criteria.

Sample ID	Internal Standard	Area Count	Qualifier
1	IS6-Perylene-d12	Low	J/UJ
1RE	IS6-Perylene-d12	Low	J/UJ
20	IS6-Perylene-d12	Low	J/UJ

Method Blank - The method blanks were free of contamination.

Field, Equipment Blank - Field QC results are summarized below.

Blank ID	Compound	Conc. ug/L	Action Level ug/kg	Qualifier	Affected Samples
MR08-EB01-122108	Hexachlorocyclopentadiene	0.096	8.0	None	All ND
MR08-FB122008	Hexachlorocyclopentadiene	0.15	12.5	None	All ND

Field Duplicates - Field duplicate sample results are reported with the parent sample in SDG TO9-23.

Tentatively Identified Compounds (TICs) - TICs were not reported.

Compound Quantitation - Several samples exhibited high concentrations of target compounds and were flagged (E) by the laboratory. The laboratory diluted and reanalyzed samples. The reviewer replaced the original results with the dilution results. The original form Is should be used for reporting purposes.

KATAHDIN ANALYTICAL SERVICES
Report of Analytical Results

Client: CH2MHill
Project: TO-009 Lejeune
PO No:
Sample Date: 12/21/08
Received Date: 12/23/08
Extraction Date: 12/30/08
Analysis Date: 16-JAN-2009 06:18
Report Date: 01/21/2009
Matrix: SOIL
% Solids: 87.1

Lab ID: SB7369-2
Client ID: MR08-IS199D-1-2-08D
SDG: TO9-24
Extracted by: CB
Extraction Method: SW846 3550
Analyst: JCG
Analysis Method: SW846 M8270C
Lab Prep Batch: WG59476
Units: ug/Kgdrywt

CAS#	Compound	Flags	Results	DF	PQL	Adj.PQL	Adj.MDL	
91-20-3	Naphthalene	~~U~~ UJ	11	1.0	10	11	3.0	CCH
91-57-6	2-Methylnaphthalene	U	11	1.0	10	11	2.5	
86-73-7	Fluorene	U	11	1.0	10	11	3.7	
85-01-8	Phenanthrene	U	11	1.0	10	11	2.1	
206-44-0	Fluoranthene	~~J~~ J	8.6	1.0	10	11	2.1	CCH
129-00-0	Pyrene	J	10	1.0	10	11	2.4	
56-55-3	Benzo(a)anthracene	J	5.3	1.0	10	11	2.2	
205-99-2	Benzo(b)fluoranthene	~~U~~ UJ	11	1.0	10	11	2.8	JSL
207-08-9	Benzo(k)fluoranthene	~~U~~	11	1.0	10	11	3.6	
50-32-8	Benzo(a)pyrene	~~U~~	11	1.0	10	11	3.8	
193-39-5	Indeno(1,2,3-cd)pyrene	~~J~~ J	3.1	1.0	10	11	2.2	
53-70-3	Dibenzo(a,h)anthracene	~~U~~ UJ	11	1.0	10	11	2.1	
191-24-2	Benzo(g,h,i)perylene	~~J~~ J	4.8	1.0	10	11	2.3	
118-74-1	Hexachlorobenzene	~~U~~ UJ	11	1.0	10	11	2.1	
87-68-3	Hexachlorobutadiene	~~U~~	11	1.0	10	11	2.6	
77-47-4	Hexachlorocyclopentadiene	~~U~~	11	1.0	10	11	1.7	
7297-45-2	2-Methylnaphthalene-D10		52%					
367-12-4	2,4-Dibromophenol		75%					
81103-79-9	Fluorene-d10		82%					
1718-51-1	Pyrene-D10		121%					

3/6/09

1RE

KATAHDIN ANALYTICAL SERVICES
Report of Analytical Results

Client: CH2MHill
Project: TO-009 Lejeune
PO No:
Sample Date: 12/21/08
Received Date: 12/23/08
Extraction Date: 12/30/08
Analysis Date: 17-JAN-2009 02:14
Report Date: 01/21/2009
Matrix: SOIL
% Solids: 87.1

Lab ID: SB7369-2RA
Client ID: MR08-IS199D-1-2-08D
SDG: TO9-24
Extracted by: CB
Extraction Method: SW846 3550
Analyst: JCG
Analysis Method: SW846 M8270C
Lab Prep Batch: WG59476
Units: ug/Kgdrywt

use original

RE

CAS#	Compound	Flags	Results	DF	PQL	Adj.PQL	Adj.MDL	
91-20-3	Naphthalene	U	11	1.0	10	11	3.0	
91-57-6	2-Methylnaphthalene	~~U~~ UJ	11	1.0	10	11	2.5	CCH
86-73-7	Fluorene	U	11	1.0	10	11	3.7	
85-01-8	Phenanthrene	J	3.8	1.0	10	11	2.1	
206-44-0	Fluoranthene	~~J~~ J	9.5	1.0	10	11	2.1	CCH
129-00-0	Pyrene		12	1.0	10	11	2.4	
56-55-3	Benzo(a)anthracene	J	5.5	1.0	10	11	2.2	
205-99-2	Benzo(b)fluoranthene	J	13	1.0	10	11	2.8	ISL
207-08-9	Benzo(k)fluoranthene	J J	6.6	1.0	10	11	3.6	
50-32-8	Benzo(a)pyrene	U UJ	11	1.0	10	11	3.8	
193-39-5	Indeno(1,2,3-cd)pyrene	U	11	1.0	10	11	2.2	
53-70-3	Dibenzo(a,h)anthracene	U	11	1.0	10	11	2.1	
191-24-2	Benzo(g,h,i)perylene	J J	7.3	1.0	10	11	2.3	
118-74-1	Hexachlorobenzene	U UJ	11	1.0	10	11	2.1	
87-68-3	Hexachlorobutadiene	U	11	1.0	10	11	2.6	
77-47-4	Hexachlorocyclopentadiene	U	11	1.0	10	11	1.7	
7297-45-2	2-Methylnaphthalene-D10		*137%					
367-12-4	2,4-Dibromophenol		79%					
81103-79-9	Fluorene-d10		93%					
1718-51-1	Pyrene-D10		134%					

lw
3/6/09

2

KATAHDIN ANALYTICAL SERVICES
Report of Analytical Results

Client: CH2MHill
Project: TO-009 Lejeune
PO No:
Sample Date: 12/21/08
Received Date: 12/23/08
Extraction Date: 12/30/08
Analysis Date: 16-JAN-2009 06:57
Report Date: 01/21/2009
Matrix: SOIL
% Solids: 93.2

Lab ID: SB7369-4
Client ID: MR08-SS198-08D
SDG: TO9-24
Extracted by: CB
Extraction Method: SW846 3550
Analyst: JCG
Analysis Method: SW846 M8270C
Lab Prep Batch: WG59476
Units: ug/Kgdrywt

CAS#	Compound	Flags	Results	DF	PQL	Adj.PQL	Adj.MDL	
91-20-3	Naphthalene	~~U~~ UJ	11	1.0	10	11	2.8	CCH
91-57-6	2-Methylnaphthalene	~~J~~ J	2.5	1.0	10	11	2.4	BSH
86-73-7	Fluorene	U	11	1.0	10	11	3.4	
85-01-8	Phenanthrene	U	11	1.0	10	11	1.9	
206-44-0	Fluoranthene	~~J~~ J	8.7	1.0	10	11	1.9	CCH
129-00-0	Pyrene	J	10	1.0	10	11	2.2	
56-55-3	Benzo(a)anthracene	J	4.7	1.0	10	11	2.0	
205-99-2	Benzo(b)fluoranthene		14	1.0	10	11	2.6	
207-08-9	Benzo(k)fluoranthene	J	8.0	1.0	10	11	3.3	
50-32-8	Benzo(a)pyrene	J	6.7	1.0	10	11	3.5	
193-39-5	Indeno(1,2,3-cd)pyrene	J	4.8	1.0	10	11	2.0	
53-70-3	Dibenzo(a,h)anthracene	U	11	1.0	10	11	1.9	
191-24-2	Benzo(g,h,i)perylene	J	3.9	1.0	10	11	2.1	
118-74-1	Hexachlorobenzene	U	11	1.0	10	11	1.9	
87-68-3	Hexachlorobutadiene	~~U~~ UJ	11	1.0	10	11	2.5	CCH
77-47-4	Hexachlorocyclopentadiene	U	11	1.0	10	11	1.6	
7297-45-2	2-Methylnaphthalene-D10		69%					
367-12-4	2,4-Dibromophenol		101%					
81103-79-9	Fluorene-d10		102%					
1718-51-1	Pyrene-D10		150%					

LW
3/6/09

3

KATAHDIN ANALYTICAL SERVICES
Report of Analytical Results

Client: CH2MHill
Project: TO-009 Lejeune
PO No:
Sample Date: 12/21/08
Received Date: 12/23/08
Extraction Date: 12/30/08
Analysis Date: 17-JAN-2009 02:54
Report Date: 01/21/2009
Matrix: SOIL
% Solids: 91.0

Lab ID: SB7369-6
Client ID: MR08-IS198-5-6-08D
SDG: TO9-24
Extracted by: CB
Extraction Method: SW846 3550
Analyst: JCG
Analysis Method: SW846 M8270C
Lab Prep Batch: WG59476
Units: ug/Kgdrywt

CAS#	Compound	Flags	Results	DF	PQL	Adj.PQL	Adj.MDL	
91-20-3	Naphthalene	U	11	1.0	10	11	2.8	
91-57-6	2-Methylnaphthalene	~~U~~ UJ	11	1.0	10	11	2.4	CCH
86-73-7	Fluorene	U	11	1.0	10	11	3.5	
85-01-8	Phenanthrene	U	11	1.0	10	11	2.0	
206-44-0	Fluoranthene	~~U~~ UJ	11	1.0	10	11	2.0	CCH
129-00-0	Pyrene	U	11	1.0	10	11	2.3	
56-55-3	Benzo(a)anthracene	U	11	1.0	10	11	2.1	
205-99-2	Benzo(b)fluoranthene	U	11	1.0	10	11	2.6	
207-08-9	Benzo(k)fluoranthene	U	11	1.0	10	11	3.4	
50-32-8	Benzo(a)pyrene	U	11	1.0	10	11	3.6	
193-39-5	Indeno(1,2,3-cd)pyrene	U	11	1.0	10	11	2.1	
53-70-3	Dibenzo(a,h)anthracene	U	11	1.0	10	11	2.0	
191-24-2	Benzo(g,h,i)perylene	U	11	1.0	10	11	2.2	
118-74-1	Hexachlorobenzene	U	11	1.0	10	11	2.0	
87-68-3	Hexachlorobutadiene	~~U~~ UJ	11	1.0	10	11	2.5	CCH
77-47-4	Hexachlorocyclopentadiene	~~U~~ UJ	11	1.0	10	11	1.6	CCH
7297-45-2	2-Methylnaphthalene-D10		115%					
367-12-4	2,4-Dibromophenol		77%					
81103-79-9	Fluorene-d10		84%					
1718-51-1	Pyrene-D10		97%					

lw 3/6/09

4

KATAHDIN ANALYTICAL SERVICES
Report of Analytical Results

Client: CH2MHill
Project: TO-009 Lejeune
PO No:
Sample Date: 12/21/08
Received Date: 12/23/08
Extraction Date: 12/30/08
Analysis Date: 17-JAN-2009 03:34
Report Date: 01/21/2009
Matrix: SOIL
% Solids: 94.0

Lab ID: SB7369-8
Client ID: MR08-SS197-08D
SDG: TO9-24
Extracted by: CB
Extraction Method: SW846 3550
Analyst: JCG
Analysis Method: SW846 M8270C
Lab Prep Batch: WG59476
Units: ug/Kgdrywt

CAS#	Compound	Flags	Results	DF	PQL	Adj.PQL	Adj.MDL	
91-20-3	Naphthalene	U	11	1.0	10	11	2.8	
91-57-6	2-Methylnaphthalene	~~J~~ UJ	11	1.0	10	11	2.3	CCH
86-73-7	Fluorene	U	11	1.0	10	11	3.4	
85-01-8	Phenanthrene	U	11	1.0	10	11	1.9	
206-44-0	Fluoranthene	~~J~~ J	2.1	1.0	10	11	1.9	CCH
129-00-0	Pyrene	J	2.4	1.0	10	11	2.2	
56-55-3	Benzo(a)anthracene	U	11	1.0	10	11	2.0	
205-99-2	Benzo(b)fluoranthene	U	11	1.0	10	11	2.6	
207-08-9	Benzo(k)fluoranthene	U	11	1.0	10	11	3.3	
50-32-8	Benzo(a)pyrene	U	11	1.0	10	11	3.5	
193-39-5	Indeno(1,2,3-cd)pyrene	U	11	1.0	10	11	2.0	
53-70-3	Dibenzo(a,h)anthracene	U	11	1.0	10	11	1.9	
191-24-2	Benzo(g,h,i)perylene	U	11	1.0	10	11	2.1	
118-74-1	Hexachlorobenzene	U	11	1.0	10	11	1.9	
87-68-3	Hexachlorobutadiene	~~J~~ UJ	11	1.0	10	11	2.4	CCH
77-47-4	Hexachlorocyclopentadiene	~~J~~ UJ	11	1.0	10	11	1.6	CCH
7297-45-2	2-Methylnaphthalene-D10		103%					
367-12-4	2,4-Dibromophenol		71%					
81103-79-9	Fluorene-d10		80%					
1718-51-1	Pyrene-D10		101%					

lw 3/6/09

5

KATAHDIN ANALYTICAL SERVICES
Report of Analytical Results

Client: CH2MHill
Project: TO-009 Lejeune
PO No:
Sample Date: 12/21/08
Received Date: 12/23/08
Extraction Date: 12/30/08
Analysis Date: 17-JAN-2009 04:13
Report Date: 01/21/2009
Matrix: SOIL
% Solids: 94.1

Lab ID: SB7369-10
Client ID: MR08-IS197-5-6-08D
SDG: TO9-24
Extracted by: CB
Extraction Method: SW846 3550
Analyst: JCG
Analysis Method: SW846 M8270C
Lab Prep Batch: WG59476
Units: ug/Kgdrywt

CAS#	Compound	Flags	Results	DF	PQL	Adj.PQL	Adj.MDL	
91-20-3	Naphthalene	U	11	1.0	10	11	2.8	
91-57-6	2-Methylnaphthalene	~~U~~ UJ	11	1.0	10	11	2.3	CCH
86-73-7	Fluorene	U	11	1.0	10	11	3.4	
85-01-8	Phenanthrene	U	11	1.0	10	11	1.9	
206-44-0	Fluoranthene	~~U~~ UJ	11	1.0	10	11	1.9	CCH
129-00-0	Pyrene	U	11	1.0	10	11	2.2	
56-55-3	Benzo(a)anthracene	U	11	1.0	10	11	2.0	
205-99-2	Benzo(b)fluoranthene	U	11	1.0	10	11	2.6	
207-08-9	Benzo(k)fluoranthene	U	11	1.0	10	11	3.3	
50-32-8	Benzo(a)pyrene	U	11	1.0	10	11	3.5	
193-39-5	Indeno(1,2,3-cd)pyrene	U	11	1.0	10	11	2.0	
53-70-3	Dibenzo(a,h)anthracene	U	11	1.0	10	11	1.9	
191-24-2	Benzo(g,h,i)perylene	U	11	1.0	10	11	2.1	
118-74-1	Hexachlorobenzene	U	11	1.0	10	11	1.9	
87-68-3	Hexachlorobutadiene	~~U~~ UJ	11	1.0	10	11	2.4	CCH
77-47-4	Hexachlorocyclopentadiene	~~U~~ UJ	11	1.0	10	11	1.6	CCH
7297-45-2	2-Methylnaphthalene-D10		98%					
367-12-4	2,4-Dibromophenol		64%					
81103-79-9	Fluorene-d10		71%					
1718-51-1	Pyrene-D10		88%					

DW 3/6/09

6

KATAHDIN ANALYTICAL SERVICES
Report of Analytical Results

Client: CH2MHill
Project: TO-009 Lejeune
PO No:
Sample Date: 12/21/08
Received Date: 12/23/08
Extraction Date: 12/30/08
Analysis Date: 17-JAN-2009 04:53
Report Date: 01/21/2009
Matrix: SOIL
% Solids: 94.1

Lab ID: SB7369-12
Client ID: MR08-SS196-08D
SDG: TO9-24
Extracted by: CB
Extraction Method: SW846 3550
Analyst: JCG
Analysis Method: SW846 M8270C
Lab Prep Batch: WG59476
Units: ug/Kgdrywt

CAS#	Compound	Flags	Results	DF	PQL	Adj.PQL	Adj.MDL	
91-20-3	Naphthalene	U	11	1.0	10	11	2.8	
91-57-6	2-Methylnaphthalene	~~U~~ UJ	11	1.0	10	11	2.3	CCH
86-73-7	Fluorene	U	11	1.0	10	11	3.4	
85-01-8	Phenanthrene	U	11	1.0	10	11	1.9	
206-44-0	Fluoranthene	~~J~~ J	6.4	1.0	10	11	1.9	CCH
129-00-0	Pyrene	J	7.9	1.0	10	11	2.2	
56-55-3	Benzo(a)anthracene	J	2.9	1.0	10	11	2.0	
205-99-2	Benzo(b)fluoranthene		11	1.0	10	11	2.6	
207-08-9	Benzo(k)fluoranthene	J	5.9	1.0	10	11	3.3	
50-32-8	Benzo(a)pyrene	J	4.8	1.0	10	11	3.5	
193-39-5	Indeno(1,2,3-cd)pyrene	J	2.9	1.0	10	11	2.0	
53-70-3	Dibenzo(a,h)anthracene	U	11	1.0	10	11	1.9	
191-24-2	Benzo(g,h,i)perylene	J	2.8	1.0	10	11	2.1	
118-74-1	Hexachlorobenzene	U	11	1.0	10	11	1.9	
87-68-3	Hexachlorobutadiene	~~U~~ UJ	11	1.0	10	11	2.4	CCH
77-47-4	Hexachlorocyclopentadiene	~~U~~ UJ	11	1.0	10	11	1.6	CCH
7297-45-2	2-Methylnaphthalene-D10		116%					
367-12-4	2,4-Dibromophenol		73%					
81103-79-9	Fluorene-d10		84%					
1718-51-1	Pyrene-D10		103%					

lw 3/6/09

7

KATAHDIN ANALYTICAL SERVICES
Report of Analytical Results

Client: CH2MHill
Project: TO-009 Lejeune
PO No:
Sample Date: 12/21/08
Received Date: 12/23/08
Extraction Date: 12/30/08
Analysis Date: 17-JAN-2009 15:44
Report Date: 01/24/2009
Matrix: SOIL
% Solids: 88.7

Lab ID: SB7369-14
Client ID: MR08-IS196-1-2-08D
SDG: TO9-24
Extracted by: CB
Extraction Method: SW846 3550
Analyst: JCG
Analysis Method: SW846 M8270C
Lab Prep Batch: WG59476
Units: ug/Kgdrywt

CAS#	Compound	Flags	Results	DF	PQL	Adj.PQL	Adj.MDL	
91-20-3	Naphthalene	U	11	1.0	10	11	2.9	
91-57-6	2-Methylnaphthalene	~~J~~ J	2.8	1.0	10	11	2.5	BSH
86-73-7	Fluorene	U	11	1.0	10	11	3.6	
85-01-8	Phenanthrene	J	11	1.0	10	11	2.0	
206-44-0	Fluoranthene		32	1.0	10	11	2.0	
129-00-0	Pyrene		34	1.0	10	11	2.4	
56-55-3	Benzo(a)anthracene		16	1.0	10	11	2.1	
205-99-2	Benzo(b)fluoranthene		19	1.0	10	11	2.7	
207-08-9	Benzo(k)fluoranthene		16	1.0	10	11	3.5	
50-32-8	Benzo(a)pyrene		15	1.0	10	11	3.7	
193-39-5	Indeno(1,2,3-cd)pyrene	J	8.4	1.0	10	11	2.1	
53-70-3	Dibenzo(a,h)anthracene	J	2.9	1.0	10	11	2.0	
191-24-2	Benzo(g,h,i)perylene	J	8.7	1.0	10	11	2.2	
118-74-1	Hexachlorobenzene	U	11	1.0	10	11	2.0	
87-68-3	Hexachlorobutadiene	U	11	1.0	10	11	2.6	
77-47-4	Hexachlorocyclopentadiene	U	11	1.0	10	11	1.7	
7297-45-2	2-Methylnaphthalene-D10		107%					
367-12-4	2,4-Dibromophenol		77%					
81103-79-9	Fluorene-d10		81%					
1718-51-1	Pyrene-D10		115%					

MW 3/6/09

8

KATAHDIN ANALYTICAL SERVICES
Report of Analytical Results

Client: CH2MHill
Project: TO-009 Lejeune
PO No:
Sample Date: 12/21/08
Received Date: 12/23/08
Extraction Date: 12/30/08
Analysis Date: 19-JAN-2009 18:13
Report Date: 01/24/2009
Matrix: SOIL
% Solids: 84.1

Lab ID: SB7369-16RA
Client ID: MR08-SS200-08D
SDG: TO9-24
Extracted by: CB
Extraction Method: SW846 3550
Analyst: JCG
Analysis Method: SW846 M8270C
Lab Prep Batch: WG59476
Units: ug/Kgdrywt

CAS#	Compound	Flags	Results	DF	PQL	Adj.PQL	Adj.MDL	
91-20-3	Naphthalene	~~U~~ UJ	12	1.0	10	12	3.1	CCH
91-57-6	2-Methylnaphthalene	~~U~~ J	10	1.0	10	12	2.6	BSH
86-73-7	Fluorene	J	4.7	1.0	10	12	3.8	
85-01-8	Phenanthrene		250	1.0	10	12	2.1	
206-44-0	Fluoranthene	~~E~~ 1300	~~1100~~	1.0	10	12	2.1	R DL
129-00-0	Pyrene	~~E~~ 910	~~830~~	1.0	10	12	2.5	
56-55-3	Benzo(a)anthracene	~~E~~ 380	~~420~~	1.0	10	12	2.2	
205-99-2	Benzo(b)fluoranthene	~~E~~ 1100	~~620~~	1.0	10	12	2.8	
207-08-9	Benzo(k)fluoranthene	~~E~~ 620J	~~480~~ CCH	1.0	10	12	3.7	
50-32-8	Benzo(a)pyrene	~~E~~ 640	~~590~~	1.0	10	12	3.9	
193-39-5	Indeno(1,2,3-cd)pyrene	~~E~~ 420J	~~550~~ CCH	1.0	10	12	2.2	
53-70-3	Dibenzo(a,h)anthracene		170	1.0	10	12	2.1	
191-24-2	Benzo(g,h,i)perylene	~~E~~ 440	~~610~~	1.0	10	12	2.4	R DL
118-74-1	Hexachlorobenzene	~~U~~ UJ	12	1.0	10	12	2.1	CCH
87-68-3	Hexachlorobutadiene	~~U~~	12	1.0	10	12	2.7	
77-47-4	Hexachlorocyclopentadiene	~~U~~	12	1.0	10	12	1.8	
7297-45-2	2-Methylnaphthalene-D10		94%					
367-12-4	2,4-Dibromophenol		102%					
81103-79-9	Fluorene-d10		91%					
1718-51-1	Pyrene-D10		101%					

LW 3/6/09

8DL

KATAHDIN ANALYTICAL SERVICES
Report of Analytical Results

Client: CH2MHill
Project: TO-009 Lejeune
PO No:
Sample Date: 12/21/08
Received Date: 12/23/08
Extraction Date: 12/30/08
Analysis Date: 20-JAN-2009 11:21
Report Date: 01/21/2009
Matrix: SOIL
% Solids: 84.1

Lab ID: SB7369-16DL
Client ID: MR08-SS200-08D
SDG: TO9-24
Extracted by: CB
Extraction Method: SW846 3550
Analyst: JLP
Analysis Method: SW846 M8270C
Lab Prep Batch: WG59476
Units: ug/Kgdrywt

Use original

CAS#	Compound	Flags	Results	DF	PQL	Adj.PQL	Adj.MDL	
91-20-3	Naphthalene	~~U~~ UJ	71	6.0	10	71	18	CCH
91-57-6	2-Methylnaphthalene	U	71	6.0	10	71	16	
86-73-7	Fluorene	U	71	6.0	10	71	23	
85-01-8	Phenanthrene		230	6.0	10	71	13	
206-44-0	Fluoranthene		1300	6.0	10	71	13	
129-00-0	Pyrene		910	6.0	10	71	15	
56-55-3	Benzo(a)anthracene		380	6.0	10	71	14	
205-99-2	Benzo(b)fluoranthene		1100	6.0	10	71	17	
207-08-9	Benzo(k)fluoranthene	J	620	6.0	10	71	22	CCH
50-32-8	Benzo(a)pyrene		640	6.0	10	71	24	
193-39-5	Indeno(1,2,3-cd)pyrene	J	420	6.0	10	71	14	CCH
53-70-3	Dibenzo(a,h)anthracene	U	71	6.0	10	71	13	
191-24-2	Benzo(g,h,i)perylene		440	6.0	10	71	14	
118-74-1	Hexachlorobenzene	~~U~~ UJ	71	6.0	10	71	13	CCH
87-68-3	Hexachlorobutadiene	~~U~~ UJ	71	6.0	10	71	16	CCH
77-47-4	Hexachlorocyclopentadiene	~~U~~ UJ	71	6.0	10	71	11	CCH
7297-45-2	2-Methylnaphthalene-D10		79%					
367-12-4	2,4-Dibromophenol		68%					
81103-79-9	Fluorene-d10		91%					
1718-51-1	Pyrene-D10		105%					

R DL

Page 01 of 01 R0883.D

lw 3/6/09

9

KATAHDIN ANALYTICAL SERVICES
Report of Analytical Results

Client: CH2MHill
Project: TO-009 Lejeune
PO No:
Sample Date: 12/21/08
Received Date: 12/23/08
Extraction Date: 12/30/08
Analysis Date: 17-JAN-2009 17:04
Report Date: 01/24/2009
Matrix: SOIL
% Solids: 92.7

Lab ID: SB7369-18
Client ID: MR08-IS200-2-3-08D
SDG: TO9-24
Extracted by: CB
Extraction Method: SW846 3550
Analyst: JCG
Analysis Method: SW846 M8270C
Lab Prep Batch: WG59476
Units: ug/Kgdrywt

CAS#	Compound	Flags	Results	DF	PQL	Adj.PQL	Adj.MDL
91-20-3	Naphthalene	U	11	1.0	10	11	2.8
91-57-6	2-Methylnaphthalene	U	11	1.0	10	11	2.4
86-73-7	Fluorene	U	11	1.0	10	11	3.4
85-01-8	Phenanthrene	U	11	1.0	10	11	1.9
206-44-0	Fluoranthene	J	6.1	1.0	10	11	1.9
129-00-0	Pyrene	J	6.1	1.0	10	11	2.3
56-55-3	Benzo(a)anthracene	J	2.4	1.0	10	11	2.0
205-99-2	Benzo(b)fluoranthene		12	1.0	10	11	2.6
207-08-9	Benzo(k)fluoranthene	U	11	1.0	10	11	3.3
50-32-8	Benzo(a)pyrene	U	11	1.0	10	11	3.6
193-39-5	Indeno(1,2,3-cd)pyrene	J	3.2	1.0	10	11	2.0
53-70-3	Dibenzo(a,h)anthracene	U	11	1.0	10	11	1.9
191-24-2	Benzo(g,h,i)perylene	J	2.2	1.0	10	11	2.2
118-74-1	Hexachlorobenzene	U	11	1.0	10	11	1.9
87-68-3	Hexachlorobutadiene	U	11	1.0	10	11	2.5
77-47-4	Hexachlorocyclopentadiene	U	11	1.0	10	11	1.6
7297-45-2	2-Methylnaphthalene-D10		92%				
367-12-4	2,4-Dibromophenol		71%				
81103-79-9	Fluorene-d10		73%				
1718-51-1	Pyrene-D10		106%				

lw 3/6/09

10

KATAHDIN ANALYTICAL SERVICES
Report of Analytical Results

Client: CH2MHill
Project: TO-009 Lejeune
PO No:
Sample Date: 12/21/08
Received Date: 12/23/08
Extraction Date: 12/30/08
Analysis Date: 17-JAN-2009 17:44
Report Date: 01/21/2009
Matrix: SOIL
% Solids: 78.0

Lab ID: SB7369-20
Client ID: MR08-SS224-08D
SDG: TO9-24
Extracted by: CB
Extraction Method: SW846 3550
Analyst: JCG
Analysis Method: SW846 M8270C
Lab Prep Batch: WG59476
Units: ug/Kgdrywt

CAS#	Compound	Flags	Results	DF	PQL	Adj.PQL	Adj.MDL	
91-20-3	Naphthalene	U	13	1.0	10	13	3.3	
91-57-6	2-Methylnaphthalene	~~U~~ J	4.3	1.0	10	13	2.8	BSH
86-73-7	Fluorene	U	13	1.0	10	13	4.1	
85-01-8	Phenanthrene		89	1.0	10	13	2.3	
206-44-0	Fluoranthene	~~E~~ 480	~~400~~	1.0	10	13	2.3	R DL
129-00-0	Pyrene	~~E~~ 330	~~390~~	1.0	10	13	2.7	R DL
56-55-3	Benzo(a)anthracene		170	1.0	10	13	2.4	
205-99-2	Benzo(b)fluoranthene		320	1.0	10	13	3.1	
207-08-9	Benzo(k)fluoranthene		300	1.0	10	13	4.0	
50-32-8	Benzo(a)pyrene		240	1.0	10	13	4.2	
193-39-5	Indeno(1,2,3-cd)pyrene		160	1.0	10	13	2.4	
53-70-3	Dibenzo(a,h)anthracene		51	1.0	10	13	2.3	
191-24-2	Benzo(g,h,i)perylene		140	1.0	10	13	2.6	
118-74-1	Hexachlorobenzene	U	13	1.0	10	13	2.3	
87-68-3	Hexachlorobutadiene	U	13	1.0	10	13	2.9	
77-47-4	Hexachlorocyclopentadiene	U	13	1.0	10	13	1.9	
7297-45-2	2-Methylnaphthalene-D10		98%					
367-12-4	2,4-Dibromophenol		82%					
81103-79-9	Fluorene-d10		80%					
1718-51-1	Pyrene-D10		110%					

lw 3/6/09

10DL

KATAHDIN ANALYTICAL SERVICES
Report of Analytical Results

Client: CH2MHill
Project: TO-009 Lejeune
PO No:
Sample Date: 12/21/08
Received Date: 12/23/08
Extraction Date: 12/30/08
Analysis Date: 19-JAN-2009 16:30
Report Date: 01/21/2009
Matrix: SOIL
% Solids: 78.0

Lab ID: SB7369-20DL
Client ID: MR08-SS224-08D
SDG: TO9-24
Extracted by: CB
Extraction Method: SW846 3550
Analyst: JCG
Analysis Method: SW846 M8270C
Lab Prep Batch: WG59476
Units: ug/Kgdrywt

Use original

CAS#	Compound	Flags	Results	DF	PQL	Adj.PQL	Adj.MDL	
91-20-3	Naphthalene	~~U~~ UJ	100	8.0	10	100	27	CCH
91-57-6	2-Methylnaphthalene	U	100	8.0	10	100	22	
86-73-7	Fluorene	U	100	8.0	10	100	33	
85-01-8	Phenanthrene		130	8.0	10	100	18	
206-44-0	Fluoranthene		480	8.0	10	100	18	
129-00-0	Pyrene		330	8.0	10	100	22	
56-55-3	Benzo(a)anthracene		160	8.0	10	100	19	
205-99-2	Benzo(b)fluoranthene		350	8.0	10	100	25	
207-08-9	Benzo(k)fluoranthene		250	8.0	10	100	32	
50-32-8	Benzo(a)pyrene		260	8.0	10	100	34	
193-39-5	Indeno(1,2,3-cd)pyrene		180	8.0	10	100	19	
53-70-3	Dibenzo(a,h)anthracene	J	42	8.0	10	100	18	
191-24-2	Benzo(g,h,i)perylene		180	8.0	10	100	20	
118-74-1	Hexachlorobenzene	~~U~~ UJ	100	8.0	10	100	18	CCH
87-68-3	Hexachlorobutadiene	~~U~~	100	8.0	10	100	24	
77-47-4	Hexachlorocyclopentadiene	~~U~~	100	8.0	10	100	15	
7297-45-2	2-Methylnaphthalene-D10		72%					
367-12-4	2,4-Dibromophenol		55%					
81103-79-9	Fluorene-d10		78%					
1718-51-1	Pyrene-D10		93%					

R DL

lw 3/6/09

11

KATAHDIN ANALYTICAL SERVICES
Report of Analytical Results

Client: CH2MHill
Project: TO-009 Lejeune
PO No:
Sample Date: 12/21/08
Received Date: 12/23/08
Extraction Date: 12/30/08
Analysis Date: 17-JAN-2009 18:25
Report Date: 01/21/2009
Matrix: SOIL
% Solids: 88.7

Lab ID: SB7369-22
Client ID: MR08-IS224-1-2-08D
SDG: TO9-24
Extracted by: CB
Extraction Method: SW846 3550
Analyst: JCG
Analysis Method: SW846 M8270C
Lab Prep Batch: WG59476
Units: ug/Kgdrywt

CAS#	Compound	Flags	Results	DF	PQL	Adj.PQL	Adj.MDL
91-20-3	Naphthalene	U	11	1.0	10	11	2.9
91-57-6	2-Methylnaphthalene	U	11	1.0	10	11	2.5
86-73-7	Fluorene	U	11	1.0	10	11	3.6
85-01-8	Phenanthrene	U	11	1.0	10	11	2.0
206-44-0	Fluoranthene	J	2.2	1.0	10	11	2.0
129-00-0	Pyrene	U	11	1.0	10	11	2.4
56-55-3	Benzo(a)anthracene	U	11	1.0	10	11	2.1
205-99-2	Benzo(b)fluoranthene	U	11	1.0	10	11	2.7
207-08-9	Benzo(k)fluoranthene	U	11	1.0	10	11	3.5
50-32-8	Benzo(a)pyrene	U	11	1.0	10	11	3.7
193-39-5	Indeno(1,2,3-cd)pyrene	U	11	1.0	10	11	2.1
53-70-3	Dibenzo(a,h)anthracene	U	11	1.0	10	11	2.0
191-24-2	Benzo(g,h,i)perylene	U	11	1.0	10	11	2.2
118-74-1	Hexachlorobenzene	U	11	1.0	10	11	2.0
87-68-3	Hexachlorobutadiene	U	11	1.0	10	11	2.6
77-47-4	Hexachlorocyclopentadiene	U	11	1.0	10	11	1.7
7297-45-2	2-Methylnaphthalene-D10		109%				
367-12-4	2,4-Dibromophenol		85%				
81103-79-9	Fluorene-d10		85%				
1718-51-1	Pyrene-D10		111%				

lw 3/6/09

KATAHDIN ANALYTICAL SERVICES
Report of Analytical Results

Client: CH2MHill
Project: TO-009 Lejeune
PO No:
Sample Date: 12/21/08
Received Date: 12/23/08
Extraction Date: 12/30/08
Analysis Date: 17-JAN-2009 19:05
Report Date: 01/21/2009
Matrix: SOIL
% Solids: 83.3

Lab ID: SB7369-24
Client ID: MR08-SS235-08D
SDG: TO9-24
Extracted by: CB
Extraction Method: SW846 3550
Analyst: JCG
Analysis Method: SW846 M8270C
Lab Prep Batch: WG59476
Units: ug/Kgdrywt

CAS#	Compound	Flags	Results	DF	PQL	Adj.PQL	Adj.MDL	
91-20-3	Naphthalene	~~J~~ J	6.0	1.0	10	12	3.1	BSH
91-57-6	2-Methylnaphthalene	~~J~~ J	11	1.0	10	12	2.6	BSH
86-73-7	Fluorene	J	7.0	1.0	10	12	3.8	
85-01-8	Phenanthrene		290	1.0	10	12	2.2	
206-44-0	Fluoranthene	~~E~~ 1400	~~960~~	1.0	10	12	2.2	R DL
129-00-0	Pyrene	~~E~~ 860	~~950~~	1.0	10	12	2.5	
56-55-3	Benzo(a)anthracene	~~E~~ 470	~~410~~	1.0	10	12	2.3	
205-99-2	Benzo(b)fluoranthene	~~E~~ 1100	~~930~~	1.0	10	12	2.9	
207-08-9	Benzo(k)fluoranthene	~~E~~ 440	~~440~~	1.0	10	12	3.7	
50-32-8	Benzo(a)pyrene	~~E~~ 610	~~510~~	1.0	10	12	4.0	
193-39-5	Indeno(1,2,3-cd)pyrene	~~E~~ 550	~~360~~	1.0	10	12	2.3	
53-70-3	Dibenzo(a,h)anthracene		120	1.0	10	12	2.2	
191-24-2	Benzo(g,h,i)perylene	~~E~~ 560	~~320~~	1.0	10	12	2.4	R DL
118-74-1	Hexachlorobenzene	U	12	1.0	10	12	2.2	
87-68-3	Hexachlorobutadiene	U	12	1.0	10	12	2.8	
77-47-4	Hexachlorocyclopentadiene	U	12	1.0	10	12	1.8	
7297-45-2	2-Methylnaphthalene-D10		119%					
367-12-4	2,4-Dibromophenol		80%					
81103-79-9	Fluorene-d10		91%					
1718-51-1	Pyrene-D10		119%					

MW
3/6/09

12DL

KATAHDIN ANALYTICAL SERVICES
Report of Analytical Results

Client: CH2MHill
Project: TO-009 Lejeune
PO No:
Sample Date: 12/21/08
Received Date: 12/23/08
Extraction Date: 12/30/08
Analysis Date: 19-JAN-2009 17:32
Report Date: 01/24/2009
Matrix: SOIL
% Solids: 83.3

Lab ID: SB7369-24DL
Client ID: MR08-SS235-08D
SDG: TO9-24
Extracted by: CB
Extraction Method: SW846 3550
Analyst: JCG
Analysis Method: SW846 M8270C
Lab Prep Batch: WG59476
Units: ug/Kgdrywt

Use original

RDL

CAS#	Compound	Flags	Results	DF	PQL	Adj.PQL	Adj.MDL	
91-20-3	Naphthalene	~~U~~ UJ	72	6.0	10	72	19	CCH
91-57-6	2-Methylnaphthalene	U	72	6.0	10	72	16	
86-73-7	Fluorene	U	72	6.0	10	72	23	
85-01-8	Phenanthrene		390	6.0	10	72	13	
206-44-0	Fluoranthene		1400	6.0	10	72	13	
129-00-0	Pyrene		860	6.0	10	72	15	
56-55-3	Benzo(a)anthracene		470	6.0	10	72	14	
205-99-2	Benzo(b)fluoranthene		1100	6.0	10	72	17	
207-08-9	Benzo(k)fluoranthene		440	6.0	10	72	22	
50-32-8	Benzo(a)pyrene		610	6.0	10	72	24	
193-39-5	Indeno(1,2,3-cd)pyrene		550	6.0	10	72	14	
53-70-3	Dibenzo(a,h)anthracene		110	6.0	10	72	13	
191-24-2	Benzo(g,h,i)perylene		560	6.0	10	72	14	
118-74-1	Hexachlorobenzene	U UJ	72	6.0	10	72	13	CCH
87-68-3	Hexachlorobutadiene	U	72	6.0	10	72	16	
77-47-4	Hexachlorocyclopentadiene	U	72	6.0	10	72	11	
7297-45-2	2-Methylnaphthalene-D10		87%					
367-12-4	2,4-Dibromophenol		74%					
81103-79-9	Fluorene-d10		94%					
1718-51-1	Pyrene-D10		95%					

lw 3/6/09

KATAHDIN ANALYTICAL SERVICES
Report of Analytical Results

Client: CH2MHill
Project: TO-009 Lejeune
PO No:
Sample Date: 12/21/08
Received Date: 12/23/08
Extraction Date: 12/31/08
Analysis Date: 20-JAN-2009 23:25
Report Date: 01/21/2009
Matrix: SOIL
% Solids: 90.8

Lab ID: SB7369-26
Client ID: MR08-IS235-1-2-08D
SDG: TO9-24
Extracted by: AC
Extraction Method: SW846 3550
Analyst: JCG
Analysis Method: SW846 M8270C
Lab Prep Batch: WG59487
Units: ug/Kgdrywt

CAS#	Compound	Flags	Results	DF	PQL	Adj.PQL	Adj.MDL	
91-20-3	Naphthalene	~~J~~ UJ	11	1.0	10	11	2.9	CCH
91-57-6	2-Methylnaphthalene	J	2.8	1.0	10	11	2.4	
86-73-7	Fluorene	U	11	1.0	10	11	3.5	
85-01-8	Phenanthrene	U	11	1.0	10	11	2.0	
206-44-0	Fluoranthene	J	2.2	1.0	10	11	2.0	
129-00-0	Pyrene	J	3.2	1.0	10	11	2.3	
56-55-3	Benzo(a)anthracene	J	2.2	1.0	10	11	2.1	
205-99-2	Benzo(b)fluoranthene	U	11	1.0	10	11	2.6	
207-08-9	Benzo(k)fluoranthene	U	11	1.0	10	11	3.4	
50-32-8	Benzo(a)pyrene	U	11	1.0	10	11	3.6	
193-39-5	Indeno(1,2,3-cd)pyrene	~~J~~ UJ	11	1.0	10	11	2.1	CCH
53-70-3	Dibenzo(a,h)anthracene	~~J~~ UJ	11	1.0	10	11	2.0	CCH
191-24-2	Benzo(g,h,i)perylene	U	11	1.0	10	11	2.2	
118-74-1	Hexachlorobenzene	U	11	1.0	10	11	2.0	
87-68-3	Hexachlorobutadiene	~~J~~ UJ	11	1.0	10	11	2.5	CCH
77-47-4	Hexachlorocyclopentadiene	~~J~~ UJ	11	1.0	10	11	1.6	CCH
7297-45-2	2-Methylnaphthalene-D10		78%					
367-12-4	2,4-Dibromophenol		65%					
81103-79-9	Fluorene-d10		81%					
1718-51-1	Pyrene-D10		111%					

LW 3/6/09

KATAHDIN ANALYTICAL SERVICES
Report of Analytical Results

Client: CH2MHill
Project: TO-009 Lejeune
PO No:
Sample Date: 12/21/08
Received Date: 12/23/08
Extraction Date: 12/31/08
Analysis Date: 21-JAN-2009 00:45
Report Date: 01/21/2009
Matrix: SOIL
% Solids: 81.8

Lab ID: SB7369-28
Client ID: MR08-SS211-08D
SDG: TO9-24
Extracted by: AC
Extraction Method: SW846 3550
Analyst: JCG
Analysis Method: SW846 M8270C
Lab Prep Batch: WG59487
Units: ug/Kgdrywt

CAS#	Compound	Flags	Results	DF	PQL	Adj.PQL	Adj.MDL	
91-20-3	Naphthalene	~~U~~ UJ	12	1.0	10	12	3.2	CCH
91-57-6	2-Methylnaphthalene	J	4.6	1.0	10	12	2.7	
86-73-7	Fluorene	J	7.4	1.0	10	12	3.9	
85-01-8	Phenanthrene		190	1.0	10	12	2.2	
206-44-0	Fluoranthene	~~E~~ 800	~~710~~	1.0	10	12	2.2	R DL
129-00-0	Pyrene	~~E~~ 540	~~550~~	1.0	10	12	2.6	R DL
56-55-3	Benzo(a)anthracene		270	1.0	10	12	2.3	
205-99-2	Benzo(b)fluoranthene	~~E~~ 600	~~500~~	1.0	10	12	2.9	R DL
207-08-9	Benzo(k)fluoranthene	~~E~~ 360	~~420~~	1.0	10	12	3.8	R DL
50-32-8	Benzo(a)pyrene		280	1.0	10	12	4.0	
193-39-5	Indeno(1,2,3-cd)pyrene	J	290	1.0	10	12	2.3	CCH
53-70-3	Dibenzo(a,h)anthracene	J	70	1.0	10	12	2.2	CCH
191-24-2	Benzo(g,h,i)perylene	~~E~~ 380 J	~~380~~ LR	1.0	10	12	2.4	R DL
118-74-1	Hexachlorobenzene	U	12	1.0	10	12	2.2	
87-68-3	Hexachlorobutadiene	~~U~~ UJ	12	1.0	10	12	2.8	CCH
77-47-4	Hexachlorocyclopentadiene	~~U~~ UJ	12	1.0	10	12	1.8	CCH
7297-45-2	2-Methylnaphthalene-D10		78%					
367-12-4	2,4-Dibromophenol		57%					
81103-79-9	Fluorene-d10		76%					
1718-51-1	Pyrene-D10		98%					

lw
3/6/09

14DL

KATAHDIN ANALYTICAL SERVICES
Report of Analytical Results

Client: CH2MHill
Project: TO-009 Lejeune
PO No:
Sample Date: 12/21/08
Received Date: 12/23/08
Extraction Date: 12/31/08
Analysis Date: 21-JAN-2009 12:06
Report Date: 01/21/2009
Matrix: SOIL
% Solids: 81.8

Lab ID: SB7369-28DL
Client ID: MR08-SS211-08D
SDG: TO9-24
Extracted by: AC
Extraction Method: SW846 3550
Analyst: JLP
Analysis Method: SW846 M8270C
Lab Prep Batch: WG59487
Units: ug/Kgdrywt

Use original

R DL

CAS#	Compound	Flags	Results	DF	PQL	Adj.PQL	Adj.MDL
91-20-3	Naphthalene	U	61	5.0	10	61	16
91-57-6	2-Methylnaphthalene	U	61	5.0	10	61	13
86-73-7	Fluorene	U	61	5.0	10	61	20
85-01-8	Phenanthrene		160	5.0	10	61	11
206-44-0	Fluoranthene		800	5.0	10	61	11
129-00-0	Pyrene		540	5.0	10	61	13
56-55-3	Benzo(a)anthracene		260	5.0	10	61	12
205-99-2	Benzo(b)fluoranthene		600	5.0	10	61	15
207-08-9	Benzo(k)fluoranthene		360	5.0	10	61	19
50-32-8	Benzo(a)pyrene		280	5.0	10	61	20
193-39-5	Indeno(1,2,3-cd)pyrene		380	5.0	10	61	12
53-70-3	Dibenzo(a,h)anthracene		98	5.0	10	61	11
191-24-2	Benzo(g,h,i)perylene		460	5.0	10	61	12
118-74-1	Hexachlorobenzene	U	61	5.0	10	61	11
87-68-3	Hexachlorobutadiene	U	61	5.0	10	61	14
77-47-4	Hexachlorocyclopentadiene	U UJ	61	5.0	10	61	9.2 CCH
7297-45-2	2-Methylnaphthalene-D10		58%				
367-12-4	2,4-Dibromophenol		37%				
81103-79-9	Fluorene-d10		62%				
1718-51-1	Pyrene-D10		84%				

lw 3/6/09

15

KATAHDIN ANALYTICAL SERVICES
Report of Analytical Results

Client: CH2MHill
Project: TO-009 Lejeune
PO No:
Sample Date: 12/21/08
Received Date: 12/23/08
Extraction Date: 12/31/08
Analysis Date: 21-JAN-2009 00:05
Report Date: 01/21/2009
Matrix: SOIL
% Solids: 89.8

Lab ID: SB7369-30
Client ID: MR08-IS211-1-2-08D
SDG: TO9-24
Extracted by: AC
Extraction Method: SW846 3550
Analyst: JCG
Analysis Method: SW846 M8270C
Lab Prep Batch: WG59487
Units: ug/Kgdrywt

CAS#	Compound	Flags	Results	DF	PQL	Adj.PQL	Adj.MDL	
91-20-3	Naphthalene	~~U~~ UJ	11	1.0	10	11	2.9	CCH
91-57-6	2-Methylnaphthalene	U	11	1.0	10	11	2.4	
86-73-7	Fluorene	U	11	1.0	10	11	3.6	
85-01-8	Phenanthrene	J	3.2	1.0	10	11	2.0	
206-44-0	Fluoranthene	J	9.2	1.0	10	11	2.0	
129-00-0	Pyrene	J	9.5	1.0	10	11	2.3	
56-55-3	Benzo(a)anthracene	J	3.3	1.0	10	11	2.1	
205-99-2	Benzo(b)fluoranthene	U	11	1.0	10	11	2.7	
207-08-9	Benzo(k)fluoranthene	U	11	1.0	10	11	3.4	
50-32-8	Benzo(a)pyrene	U	11	1.0	10	11	3.7	
193-39-5	Indeno(1,2,3-cd)pyrene	~~U~~ UJ	11	1.0	10	11	2.1	CCH
53-70-3	Dibenzo(a,h)anthracene	~~U~~ UJ	11	1.0	10	11	2.0	CCH
191-24-2	Benzo(g,h,i)perylene	J	9.1	1.0	10	11	2.2	
118-74-1	Hexachlorobenzene	U	11	1.0	10	11	2.0	
87-68-3	Hexachlorobutadiene	~~U~~ UJ	11	1.0	10	11	2.6	CCH
77-47-4	Hexachlorocyclopentadiene	~~U~~ UJ	11	1.0	10	11	1.7	CCH
7297-45-2	2-Methylnaphthalene-D10		79%					
367-12-4	2,4-Dibromophenol		38%					
81103-79-9	Fluorene-d10		85%					
1718-51-1	Pyrene-D10		106%					

lw 3/6/09

16

KATAHDIN ANALYTICAL SERVICES
Report of Analytical Results

Client: CH2MHill
Project: TO-009 Lejeune
PO No:
Sample Date: 12/22/08
Received Date: 12/23/08
Extraction Date: 12/31/08
Analysis Date: 21-JAN-2009 02:05
Report Date: 01/21/2009
Matrix: SOIL
% Solids: 93.7

Lab ID: SB7369-32
Client ID: MR08-SS202-08D
SDG: TO9-24
Extracted by: AC
Extraction Method: SW846 3550
Analyst: JCG
Analysis Method: SW846 M8270C
Lab Prep Batch: WG59487
Units: ug/Kgdrywt

CAS#	Compound	Flags	Results	DF	PQL	Adj.PQL	Adj.MDL	
91-20-3	Naphthalene	~~J~~ UJ	11	1.0	10	11	2.8	CCH
91-57-6	2-Methylnaphthalene	J	2.9	1.0	10	11	2.3	
86-73-7	Fluorene		11	1.0	10	11	3.4	
85-01-8	Phenanthrene	~~J~~ 310	~~370~~	1.0	10	11	1.9	R DL
206-44-0	Fluoranthene	~~J~~ 420	~~440~~	1.0	10	11	1.9	↓ ↓
129-00-0	Pyrene	~~J~~ 410	~~410~~	1.0	10	11	2.2	
56-55-3	Benzo(a)anthracene		100	1.0	10	11	2.0	
205-99-2	Benzo(b)fluoranthene		160	1.0	10	11	2.6	
207-08-9	Benzo(k)fluoranthene		78	1.0	10	11	3.3	
50-32-8	Benzo(a)pyrene		59	1.0	10	11	3.5	
193-39-5	Indeno(1,2,3-cd)pyrene	J	35	1.0	10	11	2.0	CCH
53-70-3	Dibenzo(a,h)anthracene	~~J~~ UJ	11	1.0	10	11	1.9	CCH
191-24-2	Benzo(g,h,i)perylene		40	1.0	10	11	2.1	
118-74-1	Hexachlorobenzene	U	11	1.0	10	11	1.9	
87-68-3	Hexachlorobutadiene	~~J~~ UJ	11	1.0	10	11	2.4	CCH
77-47-4	Hexachlorocyclopentadiene	~~J~~ UJ	11	1.0	10	11	1.6	CCH
7297-45-2	2-Methylnaphthalene-D10		80%					
367-12-4	2,4-Dibromophenol		94%					
81103-79-9	Fluorene-d10		87%					
1718-51-1	Pyrene-D10		116%					

LW 3/6/09

16DL

KATAHDIN ANALYTICAL SERVICES
Report of Analytical Results

Client: CH2MHill
Project: TO-009 Lejeune
PO No:
Sample Date: 12/22/08
Received Date: 12/23/08
Extraction Date: 12/31/08
Analysis Date: 21-JAN-2009 12:46
Report Date: 01/24/2009
Matrix: SOIL
% Solids: 93.7

Lab ID: SB7369-32DL
Client ID: MR08-SS202-08D
SDG: TO9-24
Extracted by: AC
Extraction Method: SW846 3550
Analyst: JLP
Analysis Method: SW846 M8270C
Lab Prep Batch: WG59487
Units: ug/Kgdrywt

Use - original

CAS#	Compound	Flags	Results	DF	PQL	Adj.PQL	Adj.MDL
91-20-3	Naphthalene	U	32	3.0	10	32	8.3
91-57-6	2-Methylnaphthalene	U	32	3.0	10	32	7.0
86-73-7	Fluorene	J	10	3.0	10	32	10
85-01-8	Phenanthrene		310	3.0	10	32	5.8
206-44-0	Fluoranthene		420	3.0	10	32	5.8
129-00-0	Pyrene		410	3.0	10	32	6.7
56-55-3	Benzo(a)anthracene		110	3.0	10	32	6.1
205-99-2	Benzo(b)fluoranthene		180	3.0	10	32	7.7
207-08-9	Benzo(k)fluoranthene		65	3.0	10	32	9.9
50-32-8	Benzo(a)pyrene		58	3.0	10	32	10
193-39-5	Indeno(1,2,3-cd)pyrene		50	3.0	10	32	6.1
53-70-3	Dibenzo(a,h)anthracene	U	32	3.0	10	32	5.8
191-24-2	Benzo(g,h,i)perylene		53	3.0	10	32	6.4
118-74-1	Hexachlorobenzene	U	32	3.0	10	32	5.8
87-68-3	Hexachlorobutadiene	U	32	3.0	10	32	7.4
77-47-4	Hexachlorocyclopentadiene	~~U~~ UJ	32	3.0	10	32	4.8
7297-45-2	2-Methylnaphthalene-D10		75%				
367-12-4	2,4-Dibromophenol		73%				
81103-79-9	Fluorene-d10		86%				
1718-51-1	Pyrene-D10		105%				

R DL

CCH

lw 3/6/09

KATAHDIN ANALYTICAL SERVICES
Report of Analytical Results

Client: CH2MHill
Project: TO-009 Lejeune
PO No:
Sample Date: 12/22/08
Received Date: 12/23/08
Extraction Date: 12/31/08
Analysis Date: 21-JAN-2009 01:25
Report Date: 01/21/2009
Matrix: SOIL
% Solids: 90.9

Lab ID: SB7369-34
Client ID: MR08-IS202-4-5-08D
SDG: TO9-24
Extracted by: AC
Extraction Method: SW846 3550
Analyst: JCG
Analysis Method: SW846 M8270C
Lab Prep Batch: WG59487
Units: ug/Kgdrywt

CAS#	Compound	Flags	Results	DF	PQL	Adj.PQL	Adj.MDL	
91-20-3	Naphthalene	~~U~~ UJ	11	1.0	10	11	2.9	CCH
91-57-6	2-Methylnaphthalene	U	11	1.0	10	11	2.4	
86-73-7	Fluorene	U	11	1.0	10	11	3.5	
85-01-8	Phenanthrene		96	1.0	10	11	2.0	
206-44-0	Fluoranthene		120	1.0	10	11	2.0	
129-00-0	Pyrene		110	1.0	10	11	2.3	
56-55-3	Benzo(a)anthracene		27	1.0	10	11	2.1	
205-99-2	Benzo(b)fluoranthene		35	1.0	10	11	2.6	
207-08-9	Benzo(k)fluoranthene		26	1.0	10	11	3.4	
50-32-8	Benzo(a)pyrene		15	1.0	10	11	3.6	
193-39-5	Indeno(1,2,3-cd)pyrene	J	13	1.0	10	11	2.1	CCH
53-70-3	Dibenzo(a,h)anthracene	~~U~~ UJ	11	1.0	10	11	2.0	CCH
191-24-2	Benzo(g,h,i)perylene		18	1.0	10	11	2.2	
118-74-1	Hexachlorobenzene	U	11	1.0	10	11	2.0	
87-68-3	Hexachlorobutadiene	~~U~~ UJ	11	1.0	10	11	2.5	CCH
77-47-4	Hexachlorocyclopentadiene	~~U~~ UJ	11	1.0	10	11	1.6	CCH
7297-45-2	2-Methylnaphthalene-D10		92%					
367-12-4	2,4-Dibromophenol		82%					
81103-79-9	Fluorene-d10		94%					
1718-51-1	Pyrene-D10		106%					

MW
3/6/09

18

KATAHDIN ANALYTICAL SERVICES
Report of Analytical Results

Client: CH2MHill
Project: TO-009 Lejeune
PO No:
Sample Date: 12/22/08
Received Date: 12/23/08
Extraction Date: 12/31/08
Analysis Date: 21-JAN-2009 02:45
Report Date: 01/21/2009
Matrix: SOIL
% Solids: 94.5

Lab ID: SB7369-36
Client ID: MR08-SS185-08D
SDG: TO9-24
Extracted by: AC
Extraction Method: SW846 3550
Analyst: JCG
Analysis Method: SW846 M8270C
Lab Prep Batch: WG59487
Units: ug/Kgdrywt

CAS#	Compound	Flags	Results	DF	PQL	Adj.PQL	Adj.MDL	
91-20-3	Naphthalene	~~J~~ UJ	10	1.0	10	10	2.7	CCH
91-57-6	2-Methylnaphthalene		15	1.0	10	10	2.3	
86-73-7	Fluorene	~~E~~ 440 J	~~430~~	1.0	10	10	3.4	R DL
85-01-8	Phenanthrene	~~E~~ 12000	~~8900~~	1.0	10	10	1.9	
206-44-0	Fluoranthene	~~E~~ 22000	~~9600~~	1.0	10	10	1.9	
129-00-0	Pyrene	~~E~~ 10000	~~8400~~	1.0	10	10	2.2	
56-55-3	Benzo(a)anthracene	~~E~~ 4500	~~3800~~	1.0	10	10	2.0	
205-99-2	Benzo(b)fluoranthene	~~J~~ 5600	~~0.00~~	1.0	10	10	2.5	
207-08-9	Benzo(k)fluoranthene	~~E~~ 3800	~~2500~~	1.0	10	10	3.3	R DL
50-32-8	Benzo(a)pyrene	~~E~~ 3700	~~2800~~	1.0	10	10	3.5	
193-39-5	Indeno(1,2,3-cd)pyrene	~~E~~ 2700	~~2100~~	1.0	10	10	2.0	
53-70-3	Dibenzo(a,h)anthracene	~~E~~ 950J	~~860~~	1.0	10	10	1.9	
191-24-2	Benzo(g,h,i)perylene	~~E~~ 2600	~~1900~~	1.0	10	10	2.1	
118-74-1	Hexachlorobenzene	U	10	1.0	10	10	1.9	
87-68-3	Hexachlorobutadiene	~~J~~ UJ	10	1.0	10	10	2.4	CCH
77-47-4	Hexachlorocyclopentadiene	~~J~~ UJ	10	1.0	10	10	1.6	CCH
7297-45-2	2-Methylnaphthalene-D10		75%					
367-12-4	2,4-Dibromophenol		96%					
81103-79-9	Fluorene-d10		92%					
1718-51-1	Pyrene-D10		100%					

hw
3/6/09

18DL

KATAHDIN ANALYTICAL SERVICES
Report of Analytical Results

Client: CH2MHill
Project: TO-009 Lejeune
PO No:
Sample Date: 12/22/08
Received Date: 12/23/08
Extraction Date: 12/31/08
Analysis Date: 21-JAN-2009 11:26
Report Date: 01/21/2009
Matrix: SOIL
% Solids: 94.5

Lab ID: SB7369-36DL
Client ID: MR08-SS185-08D
SDG: TO9-24
Extracted by: AC
Extraction Method: SW846 3550
Analyst: JLP
Analysis Method: SW846 M8270C
Lab Prep Batch: WG59487
Units: ug/Kgdrywt

use original

R DL

CAS#	Compound	Flags	Results	DF	PQL	Adj.PQL	Adj.MDL	
91-20-3	Naphthalene	U	1000	100	10	1000	270	
91-57-6	2-Methylnaphthalene	U	1000	100	10	1000	230	
86-73-7	Fluorene	J	440	100	10	1000	340	
85-01-8	Phenanthrene		12000	100	10	1000	190	
206-44-0	Fluoranthene		22000	100	10	1000	190	
129-00-0	Pyrene		10000	100	10	1000	220	
56-55-3	Benzo(a)anthracene		4500	100	10	1000	200	
205-99-2	Benzo(b)fluoranthene		5600	100	10	1000	250	
207-08-9	Benzo(k)fluoranthene		3800	100	10	1000	330	
50-32-8	Benzo(a)pyrene		3700	100	10	1000	350	
193-39-5	Indeno(1,2,3-cd)pyrene		2700	100	10	1000	200	
53-70-3	Dibenzo(a,h)anthracene	J	950	100	10	1000	190	
191-24-2	Benzo(g,h,i)perylene		2600	100	10	1000	210	
118-74-1	Hexachlorobenzene	U	1000	100	10	1000	190	
87-68-3	Hexachlorobutadiene	U	1000	100	10	1000	240	
77-47-4	Hexachlorocyclopentadiene	~~U~~ UJ	1000	100	10	1000	160	CCH
7297-45-2	2-Methylnaphthalene-D10		D					
367-12-4	2,4-Dibromophenol		D					
81103-79-9	Fluorene-d10		D					
1718-51-1	Pyrene-D10		D					

lw 3/6/09

KATAHDIN ANALYTICAL SERVICES
Report of Analytical Results

Client: CH2MHill
Project: TO-009 Lejeune
PO No:
Sample Date: 12/22/08
Received Date: 12/23/08
Extraction Date: 12/31/08
Analysis Date: 17-JAN-2009 00:55
Report Date: 01/21/2009
Matrix: SOIL
% Solids: 93.4

Lab ID: SB7369-38
Client ID: MR08-IS185-4-5-08D
SDG: TO9-24
Extracted by: AC
Extraction Method: SW846 3550
Analyst: JCG
Analysis Method: SW846 M8270C
Lab Prep Batch: WG59487
Units: ug/Kgdrywt

CAS#	Compound	Flags	Results	DF	PQL	Adj.PQL	Adj.MDL	
91-20-3	Naphthalene	U	11	1.0	10	11	2.8	
91-57-6	2-Methylnaphthalene	~~U~~ UJ	11	1.0	10	11	2.4	CCH
86-73-7	Fluorene	J	9.5	1.0	10	11	3.4	
85-01-8	Phenanthrene		180	1.0	10	11	1.9	
206-44-0	Fluoranthene	~~E~~ 390	~~340~~	1.0	10	11	1.9	RDL
129-00-0	Pyrene	~~E~~ 410	~~340~~	1.0	10	11	2.2	RDL
56-55-3	Benzo(a)anthracene		94	1.0	10	11	2.0	
205-99-2	Benzo(b)fluoranthene		120	1.0	10	11	2.6	
207-08-9	Benzo(k)fluoranthene		110	1.0	10	11	3.3	
50-32-8	Benzo(a)pyrene		70	1.0	10	11	3.5	
193-39-5	Indeno(1,2,3-cd)pyrene		39	1.0	10	11	2.0	
53-70-3	Dibenzo(a,h)anthracene		18	1.0	10	11	1.9	
191-24-2	Benzo(g,h,i)perylene		42	1.0	10	11	2.1	
118-74-1	Hexachlorobenzene	U	11	1.0	10	11	1.9	
87-68-3	Hexachlorobutadiene	~~U~~ UJ	11	1.0	10	11	2.5	CCH
77-47-4	Hexachlorocyclopentadiene	~~U~~ UJ	11	1.0	10	11	1.6	CCH
7297-45-2	2-Methylnaphthalene-D10		*129%					
367-12-4	2,4-Dibromophenol		59%					
81103-79-9	Fluorene-d10		87%					
1718-51-1	Pyrene-D10		105%					

MJ 3/6/09

19DL

KATAHDIN ANALYTICAL SERVICES
Report of Analytical Results

Client: CH2MHill
Project: TO-009 Lejeune
PO No:
Sample Date: 12/22/08
Received Date: 12/23/08
Extraction Date: 12/31/08
Analysis Date: 17-JAN-2009 15:03
Report Date: 01/21/2009
Matrix: SOIL
% Solids: 93.4

Lab ID: SB7369-38DL
Client ID: MR08-IS185-4-5-08D
SDG: TO9-24
Extracted by: AC
Extraction Method: SW846 3550
Analyst: JCG
Analysis Method: SW846 M8270C
Lab Prep Batch: WG59487
Units: ug/Kgdrywt

Use original

CAS#	Compound	Flags	Results	DF	PQL	Adj.PQL	Adj.MDL
91-20-3	Naphthalene	U	21	2.0	10	21	5.6
91-57-6	2-Methylnaphthalene	U	21	2.0	10	21	4.7
86-73-7	Fluorene	J	9.4	2.0	10	21	6.8
85-01-8	Phenanthrene		190	2.0	10	21	3.8
206-44-0	Fluoranthene		390	2.0	10	21	3.8
129-00-0	Pyrene		410	2.0	10	21	4.5
56-55-3	Benzo(a)anthracene		95	2.0	10	21	4.1
205-99-2	Benzo(b)fluoranthene		180	2.0	10	21	5.1
207-08-9	Benzo(k)fluoranthene		72	2.0	10	21	6.6
50-32-8	Benzo(a)pyrene		79	2.0	10	21	7.1
193-39-5	Indeno(1,2,3-cd)pyrene		44	2.0	10	21	4.1
53-70-3	Dibenzo(a,h)anthracene	J	15	2.0	10	21	3.8
191-24-2	Benzo(g,h,i)perylene		46	2.0	10	21	4.3
118-74-1	Hexachlorobenzene	U	21	2.0	10	21	3.8
87-68-3	Hexachlorobutadiene	U	21	2.0	10	21	4.9
77-47-4	Hexachlorocyclopentadiene	U	21	2.0	10	21	3.2
7297-45-2	2-Methylnaphthalene-D10		96%				
367-12-4	2,4-Dibromophenol		58%				
81103-79-9	Fluorene-d10		90%				
1718-51-1	Pyrene-D10		134%				

R DL

lw 3/6/09

KATAHDIN ANALYTICAL SERVICES
Report of Analytical Results

Client: CH2MHill
Project: TO-009 Lejeune
PO No:
Sample Date: 12/22/08
Received Date: 12/23/08
Extraction Date: 12/31/08
Analysis Date: 17-JAN-2009 01:35
Report Date: 01/24/2009
Matrix: SOIL
% Solids: 96.0

Lab ID: SB7369-40
Client ID: MR08-SS186-08D
SDG: TO9-24
Extracted by: AC
Extraction Method: SW846 3550
Analyst: JCG
Analysis Method: SW846 M8270C
Lab Prep Batch: WG59487
Units: ug/Kgdrywt

CAS#	Compound	Flags	Results	DF	PQL	Adj.PQL	Adj.MDL	
91-20-3	Naphthalene	U	10	1.0	10	10	2.7	
91-57-6	2-Methylnaphthalene	~~J~~ UJ	10	1.0	10	10	2.3	CCH
86-73-7	Fluorene	J	4.0	1.0	10	10	3.3	
85-01-8	Phenanthrene		140	1.0	10	10	1.9	
206-44-0	Fluoranthene	J	250	1.0	10	10	1.9	CCH
129-00-0	Pyrene		280	1.0	10	10	2.2	
56-55-3	Benzo(a)anthracene		56	1.0	10	10	2.0	
205-99-2	Benzo(b)fluoranthene	J	69	1.0	10	10	2.5	ISL
207-08-9	Benzo(k)fluoranthene		37	1.0	10	10	3.2	
50-32-8	Benzo(a)pyrene		21	1.0	10	10	3.4	
193-39-5	Indeno(1,2,3-cd)pyrene		15	1.0	10	10	2.0	
53-70-3	Dibenzo(a,h)anthracene	U UJ	10	1.0	10	10	1.9	
191-24-2	Benzo(g,h,i)perylene	J	19	1.0	10	10	2.1	
118-74-1	Hexachlorobenzene	U UJ	10	1.0	10	10	1.9	
87-68-3	Hexachlorobutadiene	U	10	1.0	10	10	2.4	
77-47-4	Hexachlorocyclopentadiene	U	10	1.0	10	10	1.6	
7297-45-2	2-Methylnaphthalene-D10		118%					
367-12-4	2,4-Dibromophenol		85%					
81103-79-9	Fluorene-d10		92%					
1718-51-1	Pyrene-D10		118%					

LW 3/6/09

ENVIRONMENTAL
Data Services, Inc.

SEMIVOLATILE ORGANIC COMPOUNDS

USEPA Region IV - Level IV Review

Site: MCB Camp Lejeune, TO-09 SDG #: TO9-24

Client: CH2M HILL, Inc., Virginia Beach, Virginia Date: March 6, 2009

Laboratory: Katahdin Analytical Services, Scarborough, Maine Reviewer: Nancy Weaver

EDS ID	Client Sample ID	Laboratory Sample ID	Matrix
1	MR08-IS199D-1-2-08D	SB7369-1	Soil
2	MR08-SS198-08D	SB7369-3	Soil
3	MR08-IS198-5-6-08D	SB7369-5	Soil
4	MR08-SS197-08D	SB7369-7	Soil
5	MR08-IS197-5-6-08D	SB7369-9	Soil
6	MR08-SS196-08D	SB7369-11	Soil
7	MR08-IS196-1-2-08D	SB7369-13	Soil
8	MR08-SS200-08D	SB7369-15	Soil
9	MR08-IS200-2-3-08D	SB7369-17	Soil
10	MR08-SS224-08D	SB7369-19	Soil
11	MR08-IS224-1-2-08D	SB7369-21	Soil
12	MR08-SS235-08D	SB7369-23	Soil
13	MR08-IS235-1-2-08D	SB7369-25	Soil
14	MR08-SS211-08D	SB7369-27	Soil
15	MR08-IS211-1-2-08D	SB7369-29	Soil
16	MR08-SS202-08D	SB7369-31	Soil
17	MR08-IS202-4-5-08D	SB7369-33	Soil
18	MR08-SS185-08D	SB7369-35	Soil
19	MR08-IS185-4-5-08D	SB7369-37	Soil
20	MR08-SS186-08D	SB7369-39	Soil

The USEPA "Contract Laboratory Program National Functional Guidelines for Organic Data Review," October 1999, and professional judgement were used in evaluating the data in this summary report.

Holding Times - All samples were extracted within 14 days for soil samples and analyzed within 40 days for all samples.

Sample	Date Sampled	Date Extracted	# of Days	Qualifier
14RE	12/21/08	01/20/09	30	J/R
15RE	12/21/08	01/20/09	30	J/R

GC/MS Tuning - All of the DFTPP tunes in the initial and continuing calibrations met the percent relative abundance criteria.

Initial Calibration - The initial calibrations exhibited acceptable %RSD and mean RRF values except the following.

ICAL Date	Compound	%RSD/RRF	Qualifier	Affected Samples
01/12/09	Benzaldehyde	90.97%	J/UJ	1-12
01/13/09	Benzaldehyde	44.95%	J/UJ	13-20

Continuing Calibration - The continuing calibrations exhibited acceptable %D and RRF values except the following.

CCAL Date	Compound	%D/RRF	Qualifier	Affected Samples
01/16/09 (1803)	Benzaldehyde	45.04%	None	Already qualified due to ICAL
01/16/09 (1201)	Benzaldehyde	73.32%	None	Already qualified due to ICAL
	bis (2-Ethylhexyl) phthalate	27.75%	J/UJ	13-19
	Di-n-octyl phthalate	28.58%	J/UJ	13-19
01/17/09 (1046)	Benzaldehyde	55.85%	None	Already qualified due to ICAL
	2,4-Dinitrophenol	28.42%	J/UJ	10-12
01/17/09 (1015)	Benzaldehyde	72.91%	None	Already qualified due to ICAL
	3,3'-Dichlorobenzidine	29.30%	J/UJ	20
	Di-n-octyl phthalate	29.48%	J/UJ	20
01/21/09	Benzaldehyde	79.39%	None	Already qualified due to ICAL

Surrogates - All samples exhibited acceptable surrogate recoveries except the following.

Sample ID	Surrogate	%R	Qualifier
14	S1-2-Fluorophenol	33%	J/UJ - acid compounds
	S5-2,4,6-Tribromophenol	11%	J/UJ - acid compounds
15	S1-2-Fluorophenol	14%	J/R - acid compounds
	S5-2,4,6-Tribromophenol	2%	J/R - acid compounds
19	S5-2,4,6-Tribromophenol	31%	None for 1 out

MS/MSD - A MS/MSD sample was not analyzed.

Laboratory Control Sample - The LCS samples exhibited acceptable %R values except the following.

LCS ID	Compound	%R	Qualifier	Affected Samples
WG59475-LCS	Benzaldehyde	246%	None	All ND
	Caprolactam	24%	J/UJ	1-12

LCS ID	Compound	%R	Qualifier	Affected Samples
WG59486-2-LCS	2,4-Dimethylphenol	29%	J/UJ	13, 16-20

Internal Standard (IS) Area Performance - All internal standards met response and retention time (RT) criteria.

Method Blank - The method blanks exhibited the following contamination.

Blank ID	Compound	Conc. ug/kg	Action Level ug/kg	Qualifier	Affected Samples
WG59476-BLANK	Diethylphthalate	83	830	U	13, 16, 19, 20

Field, Equipment Blank - Field QC results are summarized below.

Blank ID	Compound	Conc. ug/L	Action Level ug/L	Qualifier	Affected Samples
MR08-EB01-122108	None - ND	-	-	-	-
MR08-FB122008	None - ND	-	-	-	-

Field Duplicates - Field duplicate sample results are reported with the parent sample in SDG TO9-23.

Tentatively Identified Compounds (TICs) - TICs were not reported.

Compound Quantitation - Many samples exhibited internal standard, laboratory control samples and/or surrogate recovery deficiencies. The laboratory renalayzed these samples, however, these samples were analyzed outside of holding time and qualified estimated (J/UJ) or rejected (J/R). Refer to Form Is for which to use for reporting purposes.

KATAHDIN ANALYTICAL SERVICES
Report of Analytical Results

Client: CH2MHill
Project: TO-009 Lejeune
PO No:
Sample Date: 12/21/08
Received Date: 12/23/08
Extraction Date: 12/30/08
Analysis Date: 16-JAN-2009 23:42
Report Date: 01/22/2009
Matrix: SOIL
% Solids: 87.1

Lab ID: SB7369-1
Client ID: MR08-IS199D-1-2-08D
SDG: TO9-24
Extracted by: CB
Extraction Method: SW846 3550
Analyst: JCG
Analysis Method: SW846 8270C
Lab Prep Batch: WG59475
Units: ug/Kgdrywt

CAS#	Compound	Flags	Results	DF	PQL	Adj.PQL	Adj.MDL	
100-52-7	Benzaldehyde	~~U~~ UJ	570	1.0	500	570	140	JCB
108-95-2	Phenol	U	570	1.0	500	570	180	
111-44-4	Bis(2-Chloroethyl)ether	U	380	1.0	330	380	93	
95-57-8	2-Chlorophenol	U	570	1.0	500	570	190	
95-48-7	2-Methylphenol	U	690	1.0	600	690	230	
108-60-1	2,2'-Oxybis(1-chloropropane)	U	380	1.0	330	380	100	
98-86-2	Acetophenone	U	690	1.0	600	690	200	
621-64-7	N-Nitroso-di-n-propylamine	U	380	1.0	330	380	95	
65794-96-9	3&4-Methylphenol	U	690	1.0	600	690	210	
67-72-1	Hexachloroethane	U	380	1.0	330	380	110	
98-95-3	Nitrobenzene	U	380	1.0	330	380	100	
78-59-1	Isophorone	U	380	1.0	330	380	86	
88-75-5	2-Nitrophenol	U	690	1.0	600	690	190	
105-67-9	2,4-Dimethylphenol	U	570	1.0	500	570	190	
111-91-1	Bis(2-Chloroethoxy)methane	U	380	1.0	330	380	110	
120-83-2	2,4-Dichlorophenol	U	570	1.0	500	570	170	
106-47-8	4-Chloroaniline	U	570	1.0	500	570	140	
105-60-2	Caprolactam	~~U~~ UJ	570	1.0	500	570	160	BSL
59-50-7	4-Chloro-3-Methylphenol	U	570	1.0	500	570	190	
88-06-2	2,4,6-Trichlorophenol	U	570	1.0	500	570	180	
95-95-4	2,4,5-Trichlorophenol	U	570	1.0	500	570	180	
91-58-7	2-Chloronaphthalene	U	380	1.0	330	380	100	
92-52-4	1,1'-Biphenyl	U	380	1.0	330	380	84	
88-74-4	2-Nitroaniline	U	570	1.0	500	570	86	
131-11-3	Dimethyl Phthalate	U	380	1.0	330	380	90	
606-20-2	2,6-Dinitrotoluene	U	380	1.0	330	380	91	
208-96-8	Acenaphthylene	U	380	1.0	330	380	80	
99-09-2	3-Nitroaniline	U	570	1.0	500	570	110	
83-32-9	Acenaphthene	U	380	1.0	330	380	74	
51-28-5	2,4-Dinitrophenol	U	1400	1.0	1200	1400	430	
132-64-9	Dibenzofuran	U	380	1.0	330	380	91	
100-02-7	4-Nitrophenol	U	1400	1.0	1200	1400	350	
121-14-2	2,4-Dinitrotoluene	U	380	1.0	330	380	98	
84-66-2	Diethylphthalate	U	380	1.0	330	380	92	
7005-72-3	4-Chlorophenyl-phenylether	U	380	1.0	330	380	90	
100-01-6	4-Nitroaniline	U	570	1.0	500	570	150	
534-52-1	4,6-Dinitro-2-Methylphenol	U	1400	1.0	1200	1400	390	
86-30-6	N-Nitrosodiphenylamine	U	760	1.0	660	760	250	
101-55-3	4-Bromophenyl-phenylether	U	380	1.0	330	380	98	
1912-24-9	Atrazine	U	380	1.0	330	380	100	
87-86-5	Pentachlorophenol	U	940	1.0	820	940	270	
120-12-7	Anthracene	U	380	1.0	330	380	96	
86-74-8	Carbazole	U	570	1.0	500	570	130	

lw
3/6/09

KATAHDIN ANALYTICAL SERVICES
Report of Analytical Results

Client: CH2MHill
Project: TO-009 Lejeune
PO No:
Sample Date: 12/21/08
Received Date: 12/23/08
Extraction Date: 12/30/08
Analysis Date: 16-JAN-2009 23:42
Report Date: 01/22/2009
Matrix: SOIL
% Solids: 87.1

Lab ID: SB7369-1
Client ID: MR08-IS199D-1-2-08D
SDG: TO9-24
Extracted by: CB
Extraction Method: SW846 3550
Analyst: JCG
Analysis Method: SW846 8270C
Lab Prep Batch: WG59475
Units: ug/Kgdrywt

CAS#	Compound	Flags	Results	DF	PQL	Adj.PQL	Adj.MDL
84-74-2	Di-n-butylphthalate	U	380	1.0	330	380	120
85-68-7	Butylbenzylphthalate	U	380	1.0	330	380	110
91-94-1	3,3'-Dichlorobenzidine	U	570	1.0	500	570	130
218-01-9	Chrysene	U	380	1.0	330	380	110
117-81-7	bis(2-Ethylhexyl)phthalate	U	380	1.0	330	380	110
117-84-0	Di-n-octylphthalate	U	380	1.0	330	380	240
367-12-4	2-Fluorophenol		68%				
13127-88-3	Phenol-D6		69%				
4165-60-0	Nitrobenzene-D5		74%				
321-60-8	2-Fluorobiphenyl		82%				
118-79-6	2,4,6-Tribromophenol		49%				
1718-51-0	Terphenyl-D14		85%				

lcw
3/6/09

KATAHDIN ANALYTICAL SERVICES
Report of Analytical Results

2

Client: CH2MHill
Project: TO-009 Lejeune
PO No:
Sample Date: 12/21/08
Received Date: 12/23/08
Extraction Date: 12/30/08
Analysis Date: 17-JAN-2009 00:24
Report Date: 01/22/2009
Matrix: SOIL
% Solids: 93.2

Lab ID: SB7369-3
Client ID: MR08-SS198-08D
SDG: TO9-24
Extracted by: CB
Extraction Method: SW846 3550
Analyst: JCG
Analysis Method: SW846 8270C
Lab Prep Batch: WG59475
Units: ug/Kgdrywt

CAS#	Compound	Flags	Results	DF	PQL	Adj.PQL	Adj.MDL	
100-52-7	Benzaldehyde	~~U~~ UJ	540	1.0	500	540	130	JCB
108-95-2	Phenol	U	540	1.0	500	540	170	
111-44-4	Bis(2-Chloroethyl)ether	U	350	1.0	330	350	87	
95-57-8	2-Chlorophenol	U	540	1.0	500	540	180	
95-48-7	2-Methylphenol	U	640	1.0	600	640	210	
108-60-1	2,2'-Oxybis(1-chloropropane)	U	350	1.0	330	350	95	
98-86-2	Acetophenone	U	640	1.0	600	640	190	
621-64-7	N-Nitroso-di-n-propylamine	U	350	1.0	330	350	89	
65794-96-9	3&4-Methylphenol	U	640	1.0	600	640	200	
67-72-1	Hexachloroethane	U	350	1.0	330	350	100	
98-95-3	Nitrobenzene	U	350	1.0	330	350	98	
78-59-1	Isophorone	U	350	1.0	330	350	80	
88-75-5	2-Nitrophenol	U	640	1.0	600	640	180	
105-67-9	2,4-Dimethylphenol	U	540	1.0	500	540	180	
111-91-1	Bis(2-Chloroethoxy)methane	U	350	1.0	330	350	100	
120-83-2	2,4-Dichlorophenol	U	540	1.0	500	540	160	
106-47-8	4-Chloroaniline	U	540	1.0	500	540	130	
105-60-2	Caprolactam	~~U~~ UJ	540	1.0	500	540	150	BSL
59-50-7	4-Chloro-3-Methylphenol	U	540	1.0	500	540	180	
88-06-2	2,4,6-Trichlorophenol	U	540	1.0	500	540	170	
95-95-4	2,4,5-Trichlorophenol	U	540	1.0	500	540	170	
91-58-7	2-Chloronaphthalene	U	350	1.0	330	350	93	
92-52-4	1,1'-Biphenyl	U	350	1.0	330	350	78	
88-74-4	2-Nitroaniline	U	540	1.0	500	540	80	
131-11-3	Dimethyl Phthalate	U	350	1.0	330	350	84	
606-20-2	2,6-Dinitrotoluene	U	350	1.0	330	350	85	
208-96-8	Acenaphthylene	U	350	1.0	330	350	75	
99-09-2	3-Nitroaniline	U	540	1.0	500	540	100	
83-32-9	Acenaphthene	U	350	1.0	330	350	70	
51-28-5	2,4-Dinitrophenol	U	1300	1.0	1200	1300	400	
132-64-9	Dibenzofuran	U	350	1.0	330	350	85	
100-02-7	4-Nitrophenol	U	1300	1.0	1200	1300	330	
121-14-2	2,4-Dinitrotoluene	U	350	1.0	330	350	91	
84-66-2	Diethylphthalate	U	350	1.0	330	350	86	
7005-72-3	4-Chlorophenyl-phenylether	U	350	1.0	330	350	84	
100-01-6	4-Nitroaniline	U	540	1.0	500	540	140	
534-52-1	4,6-Dinitro-2-Methylphenol	U	1300	1.0	1200	1300	360	
86-30-6	N-Nitrosodiphenylamine	U	710	1.0	660	710	230	
101-55-3	4-Bromophenyl-phenylether	U	350	1.0	330	350	91	
1912-24-9	Atrazine	U	350	1.0	330	350	98	
87-86-5	Pentachlorophenol	U	880	1.0	820	880	250	
120-12-7	Anthracene	U	350	1.0	330	350	90	
86-74-8	Carbazole	U	540	1.0	500	540	120	

lcw
3/6/09

KATAHDIN ANALYTICAL SERVICES
Report of Analytical Results

2

Client: CH2MHill
Project: TO-009 Lejeune
PO No:
Sample Date: 12/21/08
Received Date: 12/23/08
Extraction Date: 12/30/08
Analysis Date: 17-JAN-2009 00:24
Report Date: 01/22/2009
Matrix: SOIL
% Solids: 93.2

Lab ID: SB7369-3
Client ID: MR08-SS198-08D
SDG: TO9-24
Extracted by: CB
Extraction Method: SW846 3550
Analyst: JCG
Analysis Method: SW846 8270C
Lab Prep Batch: WG59475
Units: ug/Kgdrywt

CAS#	Compound	Flags	Results	DF	PQL	Adj.PQL	Adj.MDL
84-74-2	Di-n-butylphthalate	U	350	1.0	330	350	110
85-68-7	Butylbenzylphthalate	U	350	1.0	330	350	100
91-94-1	3,3'-Dichlorobenzidine	U	540	1.0	500	540	120
218-01-9	Chrysene	U	350	1.0	330	350	100
117-81-7	bis(2-Ethylhexyl)phthalate	U	350	1.0	330	350	100
117-84-0	Di-n-octylphthalate	U	350	1.0	330	350	230
367-12-4	2-Fluorophenol		76%				
13127-88-3	Phenol-D6		81%				
4165-60-0	Nitrobenzene-D5		85%				
321-60-8	2-Fluorobiphenyl		87%				
118-79-6	2,4,6-Tribromophenol		56%				
1718-51-0	Terphenyl-D14		96%				

lw 3/6/09

KATAHDIN ANALYTICAL SERVICES
Report of Analytical Results

3

Client: CH2MHill
Project: TO-009 Lejeune
PO No:
Sample Date: 12/21/08
Received Date: 12/23/08
Extraction Date: 12/30/08
Analysis Date: 17-JAN-2009 01:06
Report Date: 01/22/2009
Matrix: SOIL
% Solids: 91.0

Lab ID: SB7369-5
Client ID: MR08-IS198-5-6-08D
SDG: TO9-24
Extracted by: CB
Extraction Method: SW846 3550
Analyst: JCG
Analysis Method: SW846 8270C
Lab Prep Batch: WG59475
Units: ug/Kgdrywt

CAS#	Compound	Flags	Results	DF	PQL	Adj.PQL	Adj.MDL	
100-52-7	Benzaldehyde	~~U~~ UJ	550	1.0	500	550	130	IEB
108-95-2	Phenol	U	550	1.0	500	550	170	
111-44-4	Bis(2-Chloroethyl)ether	U	360	1.0	330	360	89	
95-57-8	2-Chlorophenol	U	550	1.0	500	550	180	
95-48-7	2-Methylphenol	U	660	1.0	600	660	220	
108-60-1	2,2'-Oxybis(1-chloropropane)	U	360	1.0	330	360	98	
98-86-2	Acetophenone	U	660	1.0	600	660	200	
621-64-7	N-Nitroso-di-n-propylamine	U	360	1.0	330	360	91	
65794-96-9	3&4-Methylphenol	U	660	1.0	600	660	200	
67-72-1	Hexachloroethane	U	360	1.0	330	360	100	
98-95-3	Nitrobenzene	U	360	1.0	330	360	100	
78-59-1	Isophorone	U	360	1.0	330	360	82	
88-75-5	2-Nitrophenol	U	660	1.0	600	660	180	
105-67-9	2,4-Dimethylphenol	U	550	1.0	500	550	180	
111-91-1	Bis(2-Chloroethoxy)methane	U	360	1.0	330	360	100	
120-83-2	2,4-Dichlorophenol	U	550	1.0	500	550	160	
106-47-8	4-Chloroaniline	U	550	1.0	500	550	130	
105-60-2	Caprolactam	~~U~~ UJ	550	1.0	500	550	160	BSL
59-50-7	4-Chloro-3-Methylphenol	U	550	1.0	500	550	180	
88-06-2	2,4,6-Trichlorophenol	U	550	1.0	500	550	170	
95-95-4	2,4,5-Trichlorophenol	U	550	1.0	500	550	170	
91-58-7	2-Chloronaphthalene	U	360	1.0	330	360	96	
92-52-4	1,1'-Biphenyl	U	360	1.0	330	360	80	
88-74-4	2-Nitroaniline	U	550	1.0	500	550	82	
131-11-3	Dimethyl Phthalate	U	360	1.0	330	360	86	
606-20-2	2,6-Dinitrotoluene	U	360	1.0	330	360	87	
208-96-8	Acenaphthylene	U	360	1.0	330	360	77	
99-09-2	3-Nitroaniline	U	550	1.0	500	550	100	
83-32-9	Acenaphthene	U	360	1.0	330	360	71	
51-28-5	2,4-Dinitrophenol	U	1300	1.0	1200	1300	410	
132-64-9	Dibenzofuran	U	360	1.0	330	360	87	
100-02-7	4-Nitrophenol	U	1300	1.0	1200	1300	340	
121-14-2	2,4-Dinitrotoluene	U	360	1.0	330	360	93	
84-66-2	Diethylphthalate	U	360	1.0	330	360	88	
7005-72-3	4-Chlorophenyl-phenylether	U	360	1.0	330	360	86	
100-01-6	4-Nitroaniline	U	550	1.0	500	550	150	
534-52-1	4,6-Dinitro-2-Methylphenol	U	1300	1.0	1200	1300	370	
86-30-6	N-Nitrosodiphenylamine	U	720	1.0	660	720	240	
101-55-3	4-Bromophenyl-phenylether	U	360	1.0	330	360	93	
1912-24-9	Atrazine	U	360	1.0	330	360	100	
87-86-5	Pentachlorophenol	U	900	1.0	820	900	260	
120-12-7	Anthracene	U	360	1.0	330	360	92	
86-74-8	Carbazole	U	550	1.0	500	550	120	

DW 3/6/09

KATAHDIN ANALYTICAL SERVICES
Report of Analytical Results

3

Client: CH2MHill
Project: TO-009 Lejeune
PO No:
Sample Date: 12/21/08
Received Date: 12/23/08
Extraction Date: 12/30/08
Analysis Date: 17-JAN-2009 01:06
Report Date: 01/22/2009
Matrix: SOIL
% Solids: 91.0

Lab ID: SB7369-5
Client ID: MR08-IS198-5-6-08D
SDG: TO9-24
Extracted by: CB
Extraction Method: SW846 3550
Analyst: JCG
Analysis Method: SW846 8270C
Lab Prep Batch: WG59475
Units: ug/Kgdrywt

CAS#	Compound	Flags	Results	DF	PQL	Adj.PQL	Adj.MDL
84-74-2	Di-n-butylphthalate	U	360	1.0	330	360	110
85-68-7	Butylbenzylphthalate	U	360	1.0	330	360	100
91-94-1	3,3'-Dichlorobenzidine	U	550	1.0	500	550	120
218-01-9	Chrysene	U	360	1.0	330	360	100
117-81-7	bis(2-Ethylhexyl)phthalate	U	360	1.0	330	360	110
117-84-0	Di-n-octylphthalate	U	360	1.0	330	360	230
367-12-4	2-Fluorophenol		67%				
13127-88-3	Phenol-D6		68%				
4165-60-0	Nitrobenzene-D5		70%				
321-60-8	2-Fluorobiphenyl		67%				
118-79-6	2,4,6-Tribromophenol		58%				
1718-51-0	Terphenyl-D14		76%				

lw 3/8/09

KATAHDIN ANALYTICAL SERVICES
Report of Analytical Results

4

Client: CH2MHill
Project: TO-009 Lejeune
PO No:
Sample Date: 12/21/08
Received Date: 12/23/08
Extraction Date: 12/30/08
Analysis Date: 17-JAN-2009 01:49
Report Date: 01/22/2009
Matrix: SOIL
% Solids: 94.0

Lab ID: SB7369-7
Client ID: MR08-SS197-08D
SDG: TO9-24
Extracted by: CB
Extraction Method: SW846 3550
Analyst: JCG
Analysis Method: SW846 8270C
Lab Prep Batch: WG59475
Units: ug/Kgdrywt

CAS#	Compound	Flags	Results	DF	PQL	Adj.PQL	Adj.MDL	
100-52-7	Benzaldehyde	~~U~~ UJ	530	1.0	500	530	130	JEB
108-95-2	Phenol	U	530	1.0	500	530	160	
111-44-4	Bis(2-Chloroethyl)ether	U	350	1.0	330	350	86	
95-57-8	2-Chlorophenol	U	530	1.0	500	530	170	
95-48-7	2-Methylphenol	U	640	1.0	600	640	210	
108-60-1	2,2'-Oxybis(1-chloropropane)	U	350	1.0	330	350	95	
98-86-2	Acetophenone	U	640	1.0	600	640	190	
621-64-7	N-Nitroso-di-n-propylamine	U	350	1.0	330	350	88	
65794-96-9	3&4-Methylphenol	U	640	1.0	600	640	200	
67-72-1	Hexachloroethane	U	350	1.0	330	350	100	
98-95-3	Nitrobenzene	U	350	1.0	330	350	97	
78-59-1	Isophorone	U	350	1.0	330	350	80	
88-75-5	2-Nitrophenol	U	640	1.0	600	640	180	
105-67-9	2,4-Dimethylphenol	U	530	1.0	500	530	180	
111-91-1	Bis(2-Chloroethoxy)methane	U	350	1.0	330	350	100	
120-83-2	2,4-Dichlorophenol	U	530	1.0	500	530	160	
106-47-8	4-Chloroaniline	U	530	1.0	500	530	130	
105-60-2	Caprolactam	~~U~~ UJ	530	1.0	500	530	150	BSL
59-50-7	4-Chloro-3-Methylphenol	U	530	1.0	500	530	180	
88-06-2	2,4,6-Trichlorophenol	U	530	1.0	500	530	160	
95-95-4	2,4,5-Trichlorophenol	U	530	1.0	500	530	160	
91-58-7	2-Chloronaphthalene	U	350	1.0	330	350	92	
92-52-4	1,1'-Biphenyl	U	350	1.0	330	350	78	
88-74-4	2-Nitroaniline	U	530	1.0	500	530	80	
131-11-3	Dimethyl Phthalate	U	350	1.0	330	350	83	
606-20-2	2,6-Dinitrotoluene	U	350	1.0	330	350	84	
208-96-8	Acenaphthylene	U	350	1.0	330	350	74	
99-09-2	3-Nitroaniline	U	530	1.0	500	530	100	
83-32-9	Acenaphthene	U	350	1.0	330	350	69	
51-28-5	2,4-Dinitrophenol	U	1300	1.0	1200	1300	400	
132-64-9	Dibenzofuran	U	350	1.0	330	350	84	
100-02-7	4-Nitrophenol	U	1300	1.0	1200	1300	330	
121-14-2	2,4-Dinitrotoluene	U	350	1.0	330	350	90	
84-66-2	Diethylphthalate	U	350	1.0	330	350	85	
7005-72-3	4-Chlorophenyl-phenylether	U	350	1.0	330	350	83	
100-01-6	4-Nitroaniline	U	530	1.0	500	530	140	
534-52-1	4,6-Dinitro-2-Methylphenol	U	1300	1.0	1200	1300	360	
86-30-6	N-Nitrosodiphenylamine	U	700	1.0	660	700	230	
101-55-3	4-Bromophenyl-phenylether	U	350	1.0	330	350	90	
1912-24-9	Atrazine	U	350	1.0	330	350	97	
87-86-5	Pentachlorophenol	U	870	1.0	820	870	250	
120-12-7	Anthracene	U	350	1.0	330	350	89	
86-74-8	Carbazole	U	530	1.0	500	530	120	

lew
3/6/09

KATAHDIN ANALYTICAL SERVICES
Report of Analytical Results

Client: CH2MHill
Project: TO-009 Lejeune
PO No:
Sample Date: 12/21/08
Received Date: 12/23/08
Extraction Date: 12/30/08
Analysis Date: 17-JAN-2009 01:49
Report Date: 01/22/2009
Matrix: SOIL
% Solids: 94.0

Lab ID: SB7369-7
Client ID: MR08-SS197-08D
SDG: TO9-24
Extracted by: CB
Extraction Method: SW846 3550
Analyst: JCG
Analysis Method: SW846 8270C
Lab Prep Batch: WG59475
Units: ug/Kgdrywt

CAS#	Compound	Flags	Results	DF	PQL	Adj.PQL	Adj.MDL
84-74-2	Di-n-butylphthalate	U	350	1.0	330	350	110
85-68-7	Butylbenzylphthalate	U	350	1.0	330	350	99
91-94-1	3,3'-Dichlorobenzidine	U	530	1.0	500	530	120
218-01-9	Chrysene	U	350	1.0	330	350	100
117-81-7	bis(2-Ethylhexyl)phthalate	U	350	1.0	330	350	100
117-84-0	Di-n-octylphthalate	U	350	1.0	330	350	220
367-12-4	2-Fluorophenol		60%				
13127-88-3	Phenol-D6		64%				
4165-60-0	Nitrobenzene-D5		66%				
321-60-8	2-Fluorobiphenyl		72%				
118-79-6	2,4,6-Tribromophenol		41%				
1718-51-0	Terphenyl-D14		87%				

fcw
3/8/09

5

KATAHDIN ANALYTICAL SERVICES
Report of Analytical Results

Client: CH2MHill
Project: TO-009 Lejeune
PO No:
Sample Date: 12/21/08
Received Date: 12/23/08
Extraction Date: 12/30/08
Analysis Date: 17-JAN-2009 02:31
Report Date: 01/22/2009
Matrix: SOIL
% Solids: 94.1

Lab ID: SB7369-9
Client ID: MR08-IS197-5-6-08D
SDG: TO9-24
Extracted by: CB
Extraction Method: SW846 3550
Analyst: JCG
Analysis Method: SW846 8270C
Lab Prep Batch: WG59475
Units: ug/Kgdrywt

CAS#	Compound	Flags	Results	DF	PQL	Adj.PQL	Adj.MDL	
100-52-7	Benzaldehyde	~~U~~ UJ	530	1.0	500	530	130	JCB
108-95-2	Phenol	U	530	1.0	500	530	160	
111-44-4	Bis(2-Chloroethyl)ether	U	350	1.0	330	350	86	
95-57-8	2-Chlorophenol	U	530	1.0	500	530	170	
95-48-7	2-Methylphenol	U	640	1.0	600	640	210	
108-60-1	2,2'-Oxybis(1-chloropropane)	U	350	1.0	330	350	94	
98-86-2	Acetophenone	U	640	1.0	600	640	190	
621-64-7	N-Nitroso-di-n-propylamine	U	350	1.0	330	350	88	
65794-96-9	3&4-Methylphenol	U	640	1.0	600	640	200	
67-72-1	Hexachloroethane	U	350	1.0	330	350	100	
98-95-3	Nitrobenzene	U	350	1.0	330	350	97	
78-59-1	Isophorone	U	350	1.0	330	350	80	
88-75-5	2-Nitrophenol	U	640	1.0	600	640	180	
105-67-9	2,4-Dimethylphenol	U	530	1.0	500	530	180	
111-91-1	Bis(2-Chloroethoxy)methane	U	350	1.0	330	350	100	
120-83-2	2,4-Dichlorophenol	U	530	1.0	500	530	160	
106-47-8	4-Chloroaniline	U	530	1.0	500	530	130	
105-60-2	Caprolactam	~~U~~ UJ	530	1.0	500	530	150	BSL
59-50-7	4-Chloro-3-Methylphenol	U	530	1.0	500	530	180	
88-06-2	2,4,6-Trichlorophenol	U	530	1.0	500	530	160	
95-95-4	2,4,5-Trichlorophenol	U	530	1.0	500	530	160	
91-58-7	2-Chloronaphthalene	U	350	1.0	330	350	92	
92-52-4	1,1'-Biphenyl	U	350	1.0	330	350	78	
88-74-4	2-Nitroaniline	U	530	1.0	500	530	80	
131-11-3	Dimethyl Phthalate	U	350	1.0	330	350	83	
606-20-2	2,6-Dinitrotoluene	U	350	1.0	330	350	84	
208-96-8	Acenaphthylene	U	350	1.0	330	350	74	
99-09-2	3-Nitroaniline	U	530	1.0	500	530	100	
83-32-9	Acenaphthene	U	350	1.0	330	350	69	
51-28-5	2,4-Dinitrophenol	U	1300	1.0	1200	1300	400	
132-64-9	Dibenzofuran	U	350	1.0	330	350	84	
100-02-7	4-Nitrophenol	U	1300	1.0	1200	1300	330	
121-14-2	2,4-Dinitrotoluene	U	350	1.0	330	350	90	
84-66-2	Diethylphthalate	U	350	1.0	330	350	85	
7005-72-3	4-Chlorophenyl-phenylether	U	350	1.0	330	350	83	
100-01-6	4-Nitroaniline	U	530	1.0	500	530	140	
534-52-1	4,6-Dinitro-2-Methylphenol	U	1300	1.0	1200	1300	360	
86-30-6	N-Nitrosodiphenylamine	U	700	1.0	660	700	230	
101-55-3	4-Bromophenyl-phenylether	U	350	1.0	330	350	90	
1912-24-9	Atrazine	U	350	1.0	330	350	97	
87-86-5	Pentachlorophenol	U	870	1.0	820	870	250	
120-12-7	Anthracene	U	350	1.0	330	350	89	
86-74-8	Carbazole	U	530	1.0	500	530	120	

lw 3/6/09

KATAHDIN ANALYTICAL SERVICES
Report of Analytical Results

Client: CH2MHill
Project: TO-009 Lejeune
PO No:
Sample Date: 12/21/08
Received Date: 12/23/08
Extraction Date: 12/30/08
Analysis Date: 17-JAN-2009 02:31
Report Date: 01/22/2009
Matrix: SOIL
% Solids: 94.1

Lab ID: SB7369-9
Client ID: MR08-IS197-5-6-08D
SDG: TO9-24
Extracted by: CB
Extraction Method: SW846 3550
Analyst: JCG
Analysis Method: SW846 8270C
Lab Prep Batch: WG59475
Units: ug/Kgdrywt

CAS#	Compound	Flags	Results	DF	PQL	Adj.PQL	Adj.MDL
84-74-2	Di-n-butylphthalate	U	350	1.0	330	350	110
85-68-7	Butylbenzylphthalate	U	350	1.0	330	350	99
91-94-1	3,3'-Dichlorobenzidine	U	530	1.0	500	530	120
218-01-9	Chrysene	U	350	1.0	330	350	100
117-81-7	bis(2-Ethylhexyl)phthalate	U	350	1.0	330	350	100
117-84-0	Di-n-octylphthalate	U	350	1.0	330	350	220
367-12-4	2-Fluorophenol		64%				
13127-88-3	Phenol-D6		64%				
4165-60-0	Nitrobenzene-D5		60%				
321-60-8	2-Fluorobiphenyl		68%				
118-79-6	2,4,6-Tribromophenol		46%				
1718-51-0	Terphenyl-D14		72%				

JCW 3/6/09

6

KATAHDIN ANALYTICAL SERVICES
Report of Analytical Results

Client: CH2MHill
Project: TO-009 Lejeune
PO No:
Sample Date: 12/21/08
Received Date: 12/23/08
Extraction Date: 12/30/08
Analysis Date: 17-JAN-2009 03:13
Report Date: 01/22/2009
Matrix: SOIL
% Solids: 94.1

Lab ID: SB7369-11
Client ID: MR08-SS196-08D
SDG: TO9-24
Extracted by: CB
Extraction Method: SW846 3550
Analyst: JCG
Analysis Method: SW846 8270C
Lab Prep Batch: WG59475
Units: ug/Kgdrywt

CAS#	Compound	Flags	Results	DF	PQL	Adj.PQL	Adj.MDL	
100-52-7	Benzaldehyde	~~U~~ UJ	530	1.0	500	530	130	ICB
108-95-2	Phenol	U	530	1.0	500	530	160	
111-44-4	Bis(2-Chloroethyl)ether	U	350	1.0	330	350	86	
95-57-8	2-Chlorophenol	U	530	1.0	500	530	170	
95-48-7	2-Methylphenol	U	640	1.0	600	640	210	
108-60-1	2,2'-Oxybis(1-chloropropane)	U	350	1.0	330	350	94	
98-86-2	Acetophenone	U	640	1.0	600	640	190	
621-64-7	N-Nitroso-di-n-propylamine	U	350	1.0	330	350	88	
65794-96-9	3&4-Methylphenol	U	640	1.0	600	640	200	
67-72-1	Hexachloroethane	U	350	1.0	330	350	100	
98-95-3	Nitrobenzene	U	350	1.0	330	350	97	
78-59-1	Isophorone	U	350	1.0	330	350	80	
88-75-5	2-Nitrophenol	U	640	1.0	600	640	180	
105-67-9	2,4-Dimethylphenol	U	530	1.0	500	530	180	
111-91-1	Bis(2-Chloroethoxy)methane	U	350	1.0	330	350	100	
120-83-2	2,4-Dichlorophenol	U	530	1.0	500	530	160	
106-47-8	4-Chloroaniline	U	530	1.0	500	530	130	
105-60-2	Caprolactam	~~U~~ UJ	530	1.0	500	530	150	BSL
59-50-7	4-Chloro-3-Methylphenol	U	530	1.0	500	530	180	
88-06-2	2,4,6-Trichlorophenol	U	530	1.0	500	530	160	
95-95-4	2,4,5-Trichlorophenol	U	530	1.0	500	530	160	
91-58-7	2-Chloronaphthalene	U	350	1.0	330	350	92	
92-52-4	1,1'-Biphenyl	U	350	1.0	330	350	78	
88-74-4	2-Nitroaniline	U	530	1.0	500	530	80	
131-11-3	Dimethyl Phthalate	U	350	1.0	330	350	83	
606-20-2	2,6-Dinitrotoluene	U	350	1.0	330	350	84	
208-96-8	Acenaphthylene	U	350	1.0	330	350	74	
99-09-2	3-Nitroaniline	U	530	1.0	500	530	100	
83-32-9	Acenaphthene	U	350	1.0	330	350	69	
51-28-5	2,4-Dinitrophenol	U	1300	1.0	1200	1300	400	
132-64-9	Dibenzofuran	U	350	1.0	330	350	84	
100-02-7	4-Nitrophenol	U	1300	1.0	1200	1300	330	
121-14-2	2,4-Dinitrotoluene	U	350	1.0	330	350	90	
84-66-2	Diethylphthalate	U	350	1.0	330	350	85	
7005-72-3	4-Chlorophenyl-phenylether	U	350	1.0	330	350	83	
100-01-6	4-Nitroaniline	U	530	1.0	500	530	140	
534-52-1	4,6-Dinitro-2-Methylphenol	U	1300	1.0	1200	1300	360	
86-30-6	N-Nitrosodiphenylamine	U	700	1.0	660	700	230	
101-55-3	4-Bromophenyl-phenylether	U	350	1.0	330	350	90	
1912-24-9	Atrazine	U	350	1.0	330	350	97	
87-86-5	Pentachlorophenol	U	870	1.0	820	870	250	
120-12-7	Anthracene	U	350	1.0	330	350	89	
86-74-8	Carbazole	U	530	1.0	500	530	120	

KW 3/6/09

6

KATAHDIN ANALYTICAL SERVICES
Report of Analytical Results

Client: CH2MHill
Project: TO-009 Lejeune
PO No:
Sample Date: 12/21/08
Received Date: 12/23/08
Extraction Date: 12/30/08
Analysis Date: 17-JAN-2009 03:13
Report Date: 01/22/2009
Matrix: SOIL
% Solids: 94.1

Lab ID: SB7369-11
Client ID: MR08-SS196-08D
SDG: TO9-24
Extracted by: CB
Extraction Method: SW846 3550
Analyst: JCG
Analysis Method: SW846 8270C
Lab Prep Batch: WG59475
Units: ug/Kgdrywt

CAS#	Compound	Flags	Results	DF	PQL	Adj.PQL	Adj.MDL
84-74-2	Di-n-butylphthalate	U	350	1.0	330	350	110
85-68-7	Butylbenzylphthalate	U	350	1.0	330	350	99
91-94-1	3,3'-Dichlorobenzidine	U	530	1.0	500	530	120
218-01-9	Chrysene	U	350	1.0	330	350	100
117-81-7	bis(2-Ethylhexyl)phthalate	J	120	1.0	330	350	100
117-84-0	Di-n-octylphthalate	U	350	1.0	330	350	220
367-12-4	2-Fluorophenol		65%				
13127-88-3	Phenol-D6		64%				
4165-60-0	Nitrobenzene-D5		69%				
321-60-8	2-Fluorobiphenyl		70%				
118-79-6	2,4,6-Tribromophenol		54%				
1718-51-0	Terphenyl-D14		83%				

lew 3/6/09

KATAHDIN ANALYTICAL SERVICES
Report of Analytical Results

7

Client: CH2MHill
Project: TO-009 Lejeune
PO No:
Sample Date: 12/21/08
Received Date: 12/23/08
Extraction Date: 12/30/08
Analysis Date: 17-JAN-2009 03:55
Report Date: 01/22/2009
Matrix: SOIL
% Solids: 88.7

Lab ID: SB7369-13
Client ID: MR08-IS196-1-2-08D
SDG: TO9-24
Extracted by: CB
Extraction Method: SW846 3550
Analyst: JCG
Analysis Method: SW846 8270C
Lab Prep Batch: WG59475
Units: ug/Kgdrywt

CAS#	Compound	Flags	Results	DF	PQL	Adj.PQL	Adj.MDL	
100-52-7	Benzaldehyde	~~U~~ UJ	560	1.0	500	560	140	JCB
108-95-2	Phenol	U	560	1.0	500	560	180	
111-44-4	Bis(2-Chloroethyl)ether	U	370	1.0	330	370	91	
95-57-8	2-Chlorophenol	U	560	1.0	500	560	180	
95-48-7	2-Methylphenol	U	680	1.0	600	680	220	
108-60-1	2,2'-Oxybis(1-chloropropane)	U	370	1.0	330	370	100	
98-86-2	Acetophenone	U	680	1.0	600	680	200	
621-64-7	N-Nitroso-di-n-propylamine	U	370	1.0	330	370	94	
65794-96-9	3&4-Methylphenol	U	680	1.0	600	680	210	
67-72-1	Hexachloroethane	U	370	1.0	330	370	110	
98-95-3	Nitrobenzene	U	370	1.0	330	370	100	
78-59-1	Isophorone	U	370	1.0	330	370	84	
88-75-5	2-Nitrophenol	U	680	1.0	600	680	190	
105-67-9	2,4-Dimethylphenol	U	560	1.0	500	560	190	
111-91-1	Bis(2-Chloroethoxy)methane	U	370	1.0	330	370	110	
120-83-2	2,4-Dichlorophenol	U	560	1.0	500	560	170	
106-47-8	4-Chloroaniline	U	560	1.0	500	560	130	
105-60-2	Caprolactam	~~U~~ UJ	560	1.0	500	560	160	BSL
59-50-7	4-Chloro-3-Methylphenol	U	560	1.0	500	560	190	
88-06-2	2,4,6-Trichlorophenol	U	560	1.0	500	560	170	
95-95-4	2,4,5-Trichlorophenol	U	560	1.0	500	560	170	
91-58-7	2-Chloronaphthalene	U	370	1.0	330	370	98	
92-52-4	1,1'-Biphenyl	U	370	1.0	330	370	82	
88-74-4	2-Nitroaniline	U	560	1.0	500	560	84	
131-11-3	Dimethyl Phthalate	U	370	1.0	330	370	88	
606-20-2	2,6-Dinitrotoluene	U	370	1.0	330	370	89	
208-96-8	Acenaphthylene	U	370	1.0	330	370	79	
99-09-2	3-Nitroaniline	U	560	1.0	500	560	110	
83-32-9	Acenaphthene	U	370	1.0	330	370	73	
51-28-5	2,4-Dinitrophenol	U	1400	1.0	1200	1400	420	
132-64-9	Dibenzofuran	U	370	1.0	330	370	89	
100-02-7	4-Nitrophenol	U	1400	1.0	1200	1400	350	
121-14-2	2,4-Dinitrotoluene	U	370	1.0	330	370	96	
84-66-2	Diethylphthalate	U	370	1.0	330	370	90	
7005-72-3	4-Chlorophenyl-phenylether	U	370	1.0	330	370	88	
100-01-6	4-Nitroaniline	U	560	1.0	500	560	150	
534-52-1	4,6-Dinitro-2-Methylphenol	U	1400	1.0	1200	1400	380	
86-30-6	N-Nitrosodiphenylamine	U	740	1.0	660	740	250	
101-55-3	4-Bromophenyl-phenylether	U	370	1.0	330	370	96	
1912-24-9	Atrazine	U	370	1.0	330	370	100	
87-86-5	Pentachlorophenol	U	920	1.0	820	920	270	
120-12-7	Anthracene	U	370	1.0	330	370	95	
86-74-8	Carbazole	U	560	1.0	500	560	120	

dw 3/6/09

7

KATAHDIN ANALYTICAL SERVICES
Report of Analytical Results

Client: CH2MHill
Project: TO-009 Lejeune
PO No:
Sample Date: 12/21/08
Received Date: 12/23/08
Extraction Date: 12/30/08
Analysis Date: 17-JAN-2009 03:55
Report Date: 01/22/2009
Matrix: SOIL
% Solids: 88.7

Lab ID: SB7369-13
Client ID: MR08-IS196-1-2-08D
SDG: TO9-24
Extracted by: CB
Extraction Method: SW846 3550
Analyst: JCG
Analysis Method: SW846 8270C
Lab Prep Batch: WG59475
Units: ug/Kgdrywt

CAS#	Compound	Flags	Results	DF	PQL	Adj.PQL	Adj.MDL
84-74-2	Di-n-butylphthalate	U	370	1.0	330	370	110
85-68-7	Butylbenzylphthalate	U	370	1.0	330	370	100
91-94-1	3,3'-Dichlorobenzidine	U	560	1.0	500	560	130
218-01-9	Chrysene	U	370	1.0	330	370	110
117-81-7	bis(2-Ethylhexyl)phthalate	J	150	1.0	330	370	110
117-84-0	Di-n-octylphthalate	U	370	1.0	330	370	240
367-12-4	2-Fluorophenol		66%				
13127-88-3	Phenol-D6		64%				
4165-60-0	Nitrobenzene-D5		67%				
321-60-8	2-Fluorobiphenyl		72%				
118-79-6	2,4,6-Tribromophenol		46%				
1718-51-0	Terphenyl-D14		78%				

lew 3/6/09

KATAHDIN ANALYTICAL SERVICES
Report of Analytical Results

8

Client: CH2MHill
Project: TO-009 Lejeune
PO No:
Sample Date: 12/21/08
Received Date: 12/23/08
Extraction Date: 12/30/08
Analysis Date: 17-JAN-2009 04:37
Report Date: 01/22/2009
Matrix: SOIL
% Solids: 84.1

Lab ID: SB7369-15
Client ID: MR08-SS200-08D
SDG: TO9-24
Extracted by: CB
Extraction Method: SW846 3550
Analyst: JCG
Analysis Method: SW846 8270C
Lab Prep Batch: WG59475
Units: ug/Kgdrywt

CAS#	Compound	Flags	Results	DF	PQL	Adj.PQL	Adj.MDL	
100-52-7	Benzaldehyde	~~U~~ UJ	590	1.0	500	590	140	ICB
108-95-2	Phenol	U	590	1.0	500	590	180	
111-44-4	Bis(2-Chloroethyl)ether	U	390	1.0	330	390	96	
95-57-8	2-Chlorophenol	U	590	1.0	500	590	190	
95-48-7	2-Methylphenol	U	710	1.0	600	710	240	
108-60-1	2,2'-Oxybis(1-chloropropane)	U	390	1.0	330	390	100	
98-86-2	Acetophenone	U	710	1.0	600	710	210	
621-64-7	N-Nitroso-di-n-propylamine	U	390	1.0	330	390	99	
65794-96-9	3&4-Methylphenol	U	710	1.0	600	710	220	
67-72-1	Hexachloroethane	U	390	1.0	330	390	110	
98-95-3	Nitrobenzene	U	390	1.0	330	390	110	
78-59-1	Isophorone	U	390	1.0	330	390	89	
88-75-5	2-Nitrophenol	U	710	1.0	600	710	200	
105-67-9	2,4-Dimethylphenol	U	590	1.0	500	590	200	
111-91-1	Bis(2-Chloroethoxy)methane	U	390	1.0	330	390	110	
120-83-2	2,4-Dichlorophenol	U	590	1.0	500	590	180	
106-47-8	4-Chloroaniline	U	590	1.0	500	590	140	
105-60-2	Caprolactam	~~U~~ UJ	590	1.0	500	590	170	BSL
59-50-7	4-Chloro-3-Methylphenol	U	590	1.0	500	590	200	
88-06-2	2,4,6-Trichlorophenol	U	590	1.0	500	590	180	
95-95-4	2,4,5-Trichlorophenol	U	590	1.0	500	590	180	
91-58-7	2-Chloronaphthalene	U	390	1.0	330	390	100	
92-52-4	1,1'-Biphenyl	U	390	1.0	330	390	87	
88-74-4	2-Nitroaniline	U	590	1.0	500	590	89	
131-11-3	Dimethyl Phthalate	U	390	1.0	330	390	93	
606-20-2	2,6-Dinitrotoluene	U	390	1.0	330	390	94	
208-96-8	Acenaphthylene	U	390	1.0	330	390	83	
99-09-2	3-Nitroaniline	U	590	1.0	500	590	110	
83-32-9	Acenaphthene	U	390	1.0	330	390	77	
51-28-5	2,4-Dinitrophenol	U	1400	1.0	1200	1400	450	
132-64-9	Dibenzofuran	U	390	1.0	330	390	94	
100-02-7	4-Nitrophenol	U	1400	1.0	1200	1400	370	
121-14-2	2,4-Dinitrotoluene	U	390	1.0	330	390	100	
84-66-2	Diethylphthalate	U	390	1.0	330	390	95	
7005-72-3	4-Chlorophenyl-phenylether	U	390	1.0	330	390	93	
100-01-6	4-Nitroaniline	U	590	1.0	500	590	160	
534-52-1	4,6-Dinitro-2-Methylphenol	U	1400	1.0	1200	1400	400	
86-30-6	N-Nitrosodiphenylamine	U	780	1.0	660	780	260	
101-55-3	4-Bromophenyl-phenylether	U	390	1.0	330	390	100	
1912-24-9	Atrazine	U	390	1.0	330	390	110	
87-86-5	Pentachlorophenol	U	970	1.0	820	970	280	
120-12-7	Anthracene	U	390	1.0	330	390	100	
86-74-8	Carbazole	U	590	1.0	500	590	130	

fw 3/6/09

8

KATAHDIN ANALYTICAL SERVICES
Report of Analytical Results

Client: CH2MHill
Project: TO-009 Lejeune
PO No:
Sample Date: 12/21/08
Received Date: 12/23/08
Extraction Date: 12/30/08
Analysis Date: 17-JAN-2009 04:37
Report Date: 01/22/2009
Matrix: SOIL
% Solids: 84.1

Lab ID: SB7369-15
Client ID: MR08-SS200-08D
SDG: TO9-24
Extracted by: CB
Extraction Method: SW846 3550
Analyst: JCG
Analysis Method: SW846 8270C
Lab Prep Batch: WG59475
Units: ug/Kgdrywt

CAS#	Compound	Flags	Results	DF	PQL	Adj.PQL	Adj.MDL
84-74-2	Di-n-butylphthalate	U	390	1.0	330	390	120
85-68-7	Butylbenzylphthalate	U	390	1.0	330	390	110
91-94-1	3,3'-Dichlorobenzidine	U	590	1.0	500	590	140
218-01-9	Chrysene		580	1.0	330	390	110
117-81-7	bis(2-Ethylhexyl)phthalate	J	160	1.0	330	390	120
117-84-0	Di-n-octylphthalate	U	390	1.0	330	390	250
367-12-4	2-Fluorophenol		71%				
13127-88-3	Phenol-D6		68%				
4165-60-0	Nitrobenzene-D5		70%				
321-60-8	2-Fluorobiphenyl		76%				
118-79-6	2,4,6-Tribromophenol		74%				
1718-51-0	Terphenyl-D14		87%				

KW 3/6/09

9

KATAHDIN ANALYTICAL SERVICES
Report of Analytical Results

Client: CH2MHill
Project: TO-009 Lejeune
PO No:
Sample Date: 12/21/08
Received Date: 12/23/08
Extraction Date: 12/30/08
Analysis Date: 17-JAN-2009 05:18
Report Date: 01/22/2009
Matrix: SOIL
% Solids: 92.7

Lab ID: SB7369-17
Client ID: MR08-IS200-2-3-08D
SDG: TO9-24
Extracted by: CB
Extraction Method: SW846 3550
Analyst: JCG
Analysis Method: SW846 8270C
Lab Prep Batch: WG59475
Units: ug/Kgdrywt

CAS#	Compound	Flags	Results	DF	PQL	Adj.PQL	Adj.MDL
100-52-7	Benzaldehyde	~~U~~ UJ	540	1.0	500	540	130 JCB
108-95-2	Phenol	U	540	1.0	500	540	170
111-44-4	Bis(2-Chloroethyl)ether	U	360	1.0	330	360	87
95-57-8	2-Chlorophenol	U	540	1.0	500	540	180
95-48-7	2-Methylphenol	U	650	1.0	600	650	220
108-60-1	2,2'-Oxybis(1-chloropropane)	U	360	1.0	330	360	96
98-86-2	Acetophenone	U	650	1.0	600	650	190
621-64-7	N-Nitroso-di-n-propylamine	U	360	1.0	330	360	90
65794-96-9	3&4-Methylphenol	U	650	1.0	600	650	200
67-72-1	Hexachloroethane	U	360	1.0	330	360	100
98-95-3	Nitrobenzene	U	360	1.0	330	360	98
78-59-1	Isophorone	U	360	1.0	330	360	81
88-75-5	2-Nitrophenol	U	650	1.0	600	650	180
105-67-9	2,4-Dimethylphenol	U	540	1.0	500	540	180
111-91-1	Bis(2-Chloroethoxy)methane	U	360	1.0	330	360	100
120-83-2	2,4-Dichlorophenol	U	540	1.0	500	540	160
106-47-8	4-Chloroaniline	U	540	1.0	500	540	130
105-60-2	Caprolactam	~~U~~ UJ	540	1.0	500	540	160 BSL
59-50-7	4-Chloro-3-Methylphenol	U	540	1.0	500	540	180
88-06-2	2,4,6-Trichlorophenol	U	540	1.0	500	540	170
95-95-4	2,4,5-Trichlorophenol	U	540	1.0	500	540	170
91-58-7	2-Chloronaphthalene	U	360	1.0	330	360	94
92-52-4	1,1'-Biphenyl	U	360	1.0	330	360	79
88-74-4	2-Nitroaniline	U	540	1.0	500	540	81
131-11-3	Dimethyl Phthalate	U	360	1.0	330	360	84
606-20-2	2,6-Dinitrotoluene	U	360	1.0	330	360	85
208-96-8	Acenaphthylene	U	360	1.0	330	360	75
99-09-2	3-Nitroaniline	U	540	1.0	500	540	100
83-32-9	Acenaphthene	U	360	1.0	330	360	70
51-28-5	2,4-Dinitrophenol	U	1300	1.0	1200	1300	410
132-64-9	Dibenzofuran	U	360	1.0	330	360	85
100-02-7	4-Nitrophenol	U	1300	1.0	1200	1300	330
121-14-2	2,4-Dinitrotoluene	U	360	1.0	330	360	92
84-66-2	Diethylphthalate	U	360	1.0	330	360	86
7005-72-3	4-Chlorophenyl-phenylether	U	360	1.0	330	360	84
100-01-6	4-Nitroaniline	U	540	1.0	500	540	140
534-52-1	4,6-Dinitro-2-Methylphenol	U	1300	1.0	1200	1300	360
86-30-6	N-Nitrosodiphenylamine	U	710	1.0	660	710	240
101-55-3	4-Bromophenyl-phenylether	U	360	1.0	330	360	92
1912-24-9	Atrazine	U	360	1.0	330	360	98
87-86-5	Pentachlorophenol	U	880	1.0	820	880	260
120-12-7	Anthracene	U	360	1.0	330	360	90
86-74-8	Carbazole	U	540	1.0	500	540	120

3/6/09

KATAHDIN ANALYTICAL SERVICES
Report of Analytical Results

Client: CH2MHill
Project: TO-009 Lejeune
PO No:
Sample Date: 12/21/08
Received Date: 12/23/08
Extraction Date: 12/30/08
Analysis Date: 17-JAN-2009 05:18
Report Date: 01/22/2009
Matrix: SOIL
% Solids: 92.7

Lab ID: SB7369-17
Client ID: MR08-IS200-2-3-08D
SDG: TO9-24
Extracted by: CB
Extraction Method: SW846 3550
Analyst: JCG
Analysis Method: SW846 8270C
Lab Prep Batch: WG59475
Units: ug/Kgdrywt

CAS#	Compound	Flags	Results	DF	PQL	Adj.PQL	Adj.MDL
84-74-2	Di-n-butylphthalate	U	360	1.0	330	360	110
85-68-7	Butylbenzylphthalate	U	360	1.0	330	360	100
91-94-1	3,3'-Dichlorobenzidine	U	540	1.0	500	540	120
218-01-9	Chrysene	U	360	1.0	330	360	100
117-81-7	bis(2-Ethylhexyl)phthalate	U	360	1.0	330	360	100
117-84-0	Di-n-octylphthalate	U	360	1.0	330	360	230
367-12-4	2-Fluorophenol		59%				
13127-88-3	Phenol-D6		59%				
4165-60-0	Nitrobenzene-D5		58%				
321-60-8	2-Fluorobiphenyl		64%				
118-79-6	2,4,6-Tribromophenol		46%				
1718-51-0	Terphenyl-D14		78%				

RW 3/6/09

10

KATAHDIN ANALYTICAL SERVICES
Report of Analytical Results

Client: CH2MHill
Project: TO-009 Lejeune
PO No:
Sample Date: 12/21/08
Received Date: 12/23/08
Extraction Date: 12/30/08
Analysis Date: 17-JAN-2009 17:57
Report Date: 01/22/2009
Matrix: SOIL
% Solids: 78.0

Lab ID: SB7369-19
Client ID: MR08-SS224-08D
SDG: TO9-24
Extracted by: CB
Extraction Method: SW846 3550
Analyst: JCG
Analysis Method: SW846 8270C
Lab Prep Batch: WG59475
Units: ug/Kgdrywt

CAS#	Compound	Flags	Results	DF	PQL	Adj.PQL	Adj.MDL	
100-52-7	Benzaldehyde	~~U~~ UJ	640	1.0	500	640	150	ICB
108-95-2	Phenol	U	640	1.0	500	640	200	
111-44-4	Bis(2-Chloroethyl)ether	U	420	1.0	330	420	100	
95-57-8	2-Chlorophenol	U	640	1.0	500	640	210	
95-48-7	2-Methylphenol	U	770	1.0	600	770	260	
108-60-1	2,2'-Oxybis(1-chloropropane)	U	420	1.0	330	420	110	
98-86-2	Acetophenone	U	770	1.0	600	770	230	
621-64-7	N-Nitroso-di-n-propylamine	U	420	1.0	330	420	110	
65794-96-9	3&4-Methylphenol	U	770	1.0	600	770	240	
67-72-1	Hexachloroethane	U	420	1.0	330	420	120	
98-95-3	Nitrobenzene	U	420	1.0	330	420	120	
78-59-1	Isophorone	U	420	1.0	330	420	96	
88-75-5	2-Nitrophenol	U	770	1.0	600	770	210	
105-67-9	2,4-Dimethylphenol	U	640	1.0	500	640	210	
111-91-1	Bis(2-Chloroethoxy)methane	U	420	1.0	330	420	120	
120-83-2	2,4-Dichlorophenol	U	640	1.0	500	640	190	
106-47-8	4-Chloroaniline	U	640	1.0	500	640	150	
105-60-2	Caprolactam	~~U~~ UJ	640	1.0	500	640	180	BSL
59-50-7	4-Chloro-3-Methylphenol	U	640	1.0	500	640	210	
88-06-2	2,4,6-Trichlorophenol	U	640	1.0	500	640	200	
95-95-4	2,4,5-Trichlorophenol	U	640	1.0	500	640	200	
91-58-7	2-Chloronaphthalene	U	420	1.0	330	420	110	
92-52-4	1,1'-Biphenyl	U	420	1.0	330	420	94	
88-74-4	2-Nitroaniline	U	640	1.0	500	640	96	
131-11-3	Dimethyl Phthalate	U	420	1.0	330	420	100	
606-20-2	2,6-Dinitrotoluene	U	420	1.0	330	420	100	
208-96-8	Acenaphthylene	U	420	1.0	330	420	90	
99-09-2	3-Nitroaniline	U	640	1.0	500	640	120	
83-32-9	Acenaphthene	U	420	1.0	330	420	83	
51-28-5	2,4-Dinitrophenol	~~U~~ UJ	1500	1.0	1200	1500	480	CCH
132-64-9	Dibenzofuran	U	420	1.0	330	420	100	
100-02-7	4-Nitrophenol	U	1500	1.0	1200	1500	400	
121-14-2	2,4-Dinitrotoluene	U	420	1.0	330	420	110	
84-66-2	Diethylphthalate	U	420	1.0	330	420	100	
7005-72-3	4-Chlorophenyl-phenylether	U	420	1.0	330	420	100	
100-01-6	4-Nitroaniline	U	640	1.0	500	640	170	
534-52-1	4,6-Dinitro-2-Methylphenol	U	1500	1.0	1200	1500	430	
86-30-6	N-Nitrosodiphenylamine	U	840	1.0	660	840	280	
101-55-3	4-Bromophenyl-phenylether	U	420	1.0	330	420	110	
1912-24-9	Atrazine	U	420	1.0	330	420	120	
87-86-5	Pentachlorophenol	U	1000	1.0	820	1000	300	
120-12-7	Anthracene	U	420	1.0	330	420	110	
86-74-8	Carbazole	U	640	1.0	500	640	140	

hw
3/6/09

KATAHDIN ANALYTICAL SERVICES
Report of Analytical Results

Client: CH2MHill
Project: TO-009 Lejeune
PO No:
Sample Date: 12/21/08
Received Date: 12/23/08
Extraction Date: 12/30/08
Analysis Date: 17-JAN-2009 17:57
Report Date: 01/22/2009
Matrix: SOIL
% Solids: 78.0

Lab ID: SB7369-19
Client ID: MR08-SS224-08D
SDG: TO9-24
Extracted by: CB
Extraction Method: SW846 3550
Analyst: JCG
Analysis Method: SW846 8270C
Lab Prep Batch: WG59475
Units: ug/Kgdrywt

CAS#	Compound	Flags	Results	DF	PQL	Adj.PQL	Adj.MDL
84-74-2	Di-n-butylphthalate	U	420	1.0	330	420	130
85-68-7	Butylbenzylphthalate	U	420	1.0	330	420	120
91-94-1	3,3'-Dichlorobenzidine	U	640	1.0	500	640	150
218-01-9	Chrysene	J	210	1.0	330	420	120
117-81-7	bis(2-Ethylhexyl)phthalate		470	1.0	330	420	120
117-84-0	Di-n-octylphthalate	U	420	1.0	330	420	270
367-12-4	2-Fluorophenol		64%				
13127-88-3	Phenol-D6		61%				
4165-60-0	Nitrobenzene-D5		62%				
321-60-8	2-Fluorobiphenyl		68%				
118-79-6	2,4,6-Tribromophenol		63%				
1718-51-0	Terphenyl-D14		84%				

lw
3/6/09

11

KATAHDIN ANALYTICAL SERVICES
Report of Analytical Results

Client: CH2MHill
Project: TO-009 Lejeune
PO No:
Sample Date: 12/21/08
Received Date: 12/23/08
Extraction Date: 12/30/08
Analysis Date: 17-JAN-2009 18:39
Report Date: 01/22/2009
Matrix: SOIL
% Solids: 88.7

Lab ID: SB7369-21
Client ID: MR08-IS224-1-2-08D
SDG: TO9-24
Extracted by: CB
Extraction Method: SW846 3550
Analyst: JCG
Analysis Method: SW846 8270C
Lab Prep Batch: WG59475
Units: ug/Kgdrywt

CAS#	Compound	Flags	Results	DF	PQL	Adj.PQL	Adj.MDL	
100-52-7	Benzaldehyde	~~U~~ UJ	560	1.0	500	560	140	JCB
108-95-2	Phenol	U	560	1.0	500	560	180	
111-44-4	Bis(2-Chloroethyl)ether	U	370	1.0	330	370	91	
95-57-8	2-Chlorophenol	U	560	1.0	500	560	180	
95-48-7	2-Methylphenol	U	680	1.0	600	680	220	
108-60-1	2,2'-Oxybis(1-chloropropane)	U	370	1.0	330	370	100	
98-86-2	Acetophenone	U	680	1.0	600	680	200	
621-64-7	N-Nitroso-di-n-propylamine	U	370	1.0	330	370	94	
65794-96-9	3&4-Methylphenol	U	680	1.0	600	680	210	
67-72-1	Hexachloroethane	U	370	1.0	330	370	110	
98-95-3	Nitrobenzene	U	370	1.0	330	370	100	
78-59-1	Isophorone	U	370	1.0	330	370	84	
88-75-5	2-Nitrophenol	U	680	1.0	600	680	190	
105-67-9	2,4-Dimethylphenol	U	560	1.0	500	560	180	
111-91-1	Bis(2-Chloroethoxy)methane	U	370	1.0	330	370	110	
120-83-2	2,4-Dichlorophenol	U	560	1.0	500	560	170	
106-47-8	4-Chloroaniline	U	560	1.0	500	560	130	
105-60-2	Caprolactam	~~U~~ UJ	560	1.0	500	560	160	BSL
59-50-7	4-Chloro-3-Methylphenol	U	560	1.0	500	560	190	
88-06-2	2,4,6-Trichlorophenol	U	560	1.0	500	560	170	
95-95-4	2,4,5-Trichlorophenol	U	560	1.0	500	560	170	
91-58-7	2-Chloronaphthalene	U	370	1.0	330	370	98	
92-52-4	1,1'-Biphenyl	U	370	1.0	330	370	82	
88-74-4	2-Nitroaniline	U	560	1.0	500	560	84	
131-11-3	Dimethyl Phthalate	U	370	1.0	330	370	88	
606-20-2	2,6-Dinitrotoluene	U	370	1.0	330	370	89	
208-96-8	Acenaphthylene	U	370	1.0	330	370	79	
99-09-2	3-Nitroaniline	U	560	1.0	500	560	100	
83-32-9	Acenaphthene	U	370	1.0	330	370	73	
51-28-5	2,4-Dinitrophenol	~~U~~ UJ	1400	1.0	1200	1400	420	CCH
132-64-9	Dibenzofuran	U	370	1.0	330	370	89	
100-02-7	4-Nitrophenol	U	1400	1.0	1200	1400	350	
121-14-2	2,4-Dinitrotoluene	U	370	1.0	330	370	96	
84-66-2	Diethylphthalate	U	370	1.0	330	370	90	
7005-72-3	4-Chlorophenyl-phenylether	U	370	1.0	330	370	88	
100-01-6	4-Nitroaniline	U	560	1.0	500	560	150	
534-52-1	4,6-Dinitro-2-Methylphenol	U	1400	1.0	1200	1400	380	
86-30-6	N-Nitrosodiphenylamine	U	740	1.0	660	740	250	
101-55-3	4-Bromophenyl-phenylether	U	370	1.0	330	370	96	
1912-24-9	Atrazine	U	370	1.0	330	370	100	
87-86-5	Pentachlorophenol	U	920	1.0	820	920	270	
120-12-7	Anthracene	U	370	1.0	330	370	95	
86-74-8	Carbazole	U	560	1.0	500	560	120	

lw 3/6/09

11

KATAHDIN ANALYTICAL SERVICES
Report of Analytical Results

Client: CH2MHill
Project: TO-009 Lejeune
PO No:
Sample Date: 12/21/08
Received Date: 12/23/08
Extraction Date: 12/30/08
Analysis Date: 17-JAN-2009 18:39
Report Date: 01/22/2009
Matrix: SOIL
% Solids: 88.7

Lab ID: SB7369-21
Client ID: MR08-IS224-1-2-08D
SDG: TO9-24
Extracted by: CB
Extraction Method: SW846 3550
Analyst: JCG
Analysis Method: SW846 8270C
Lab Prep Batch: WG59475
Units: ug/Kgdrywt

CAS#	Compound	Flags	Results	DF	PQL	Adj.PQL	Adj.MDL
84-74-2	Di-n-butylphthalate	U	370	1.0	330	370	110
85-68-7	Butylbenzylphthalate	U	370	1.0	330	370	100
91-94-1	3,3'-Dichlorobenzidine	U	560	1.0	500	560	130
218-01-9	Chrysene	U	370	1.0	330	370	110
117-81-7	bis(2-Ethylhexyl)phthalate		1600	1.0	330	370	110
117-84-0	Di-n-octylphthalate	U	370	1.0	330	370	240
367-12-4	2-Fluorophenol		70%				
13127-88-3	Phenol-D6		64%				
4165-60-0	Nitrobenzene-D5		69%				
321-60-8	2-Fluorobiphenyl		74%				
118-79-6	2,4,6-Tribromophenol		60%				
1718-51-0	Terphenyl-D14		88%				

lw 3/6/09

KATAHDIN ANALYTICAL SERVICES
Report of Analytical Results

12

Client: CH2MHill
Project: TO-009 Lejeune
PO No:
Sample Date: 12/21/08
Received Date: 12/23/08
Extraction Date: 12/30/08
Analysis Date: 17-JAN-2009 19:21
Report Date: 01/22/2009
Matrix: SOIL
% Solids: 83.3

Lab ID: SB7369-23
Client ID: MR08-SS235-08D
SDG: TO9-24
Extracted by: CB
Extraction Method: SW846 3550
Analyst: JCG
Analysis Method: SW846 8270C
Lab Prep Batch: WG59475
Units: ug/Kgdrywt

CAS#	Compound	Flags	Results	DF	PQL	Adj.PQL	Adj.MDL	
100-52-7	Benzaldehyde	~~U~~ UJ	600	1.0	500	600	140	ICB
108-95-2	Phenol	U	600	1.0	500	600	190	
111-44-4	Bis(2-Chloroethyl)ether	U	400	1.0	330	400	97	
95-57-8	2-Chlorophenol	U	600	1.0	500	600	200	
95-48-7	2-Methylphenol	U	720	1.0	600	720	240	
108-60-1	2,2'-Oxybis(1-chloropropane)	U	400	1.0	330	400	110	
98-86-2	Acetophenone	U	720	1.0	600	720	210	
621-64-7	N-Nitroso-di-n-propylamine	U	400	1.0	330	400	100	
65794-96-9	3&4-Methylphenol	U	720	1.0	600	720	220	
67-72-1	Hexachloroethane	U	400	1.0	330	400	120	
98-95-3	Nitrobenzene	U	400	1.0	330	400	110	
78-59-1	Isophorone	U	400	1.0	330	400	90	
88-75-5	2-Nitrophenol	U	720	1.0	600	720	200	
105-67-9	2,4-Dimethylphenol	U	600	1.0	500	600	200	
111-91-1	Bis(2-Chloroethoxy)methane	U	400	1.0	330	400	120	
120-83-2	2,4-Dichlorophenol	U	600	1.0	500	600	180	
106-47-8	4-Chloroaniline	U	600	1.0	500	600	140	
105-60-2	Caprolactam	~~U~~ UJ	600	1.0	500	600	170	BSL
59-50-7	4-Chloro-3-Methylphenol	U	600	1.0	500	600	200	
88-06-2	2,4,6-Trichlorophenol	U	600	1.0	500	600	190	
95-95-4	2,4,5-Trichlorophenol	U	600	1.0	500	600	190	
91-58-7	2-Chloronaphthalene	U	400	1.0	330	400	100	
92-52-4	1,1'-Biphenyl	U	400	1.0	330	400	88	
88-74-4	2-Nitroaniline	U	600	1.0	500	600	90	
131-11-3	Dimethyl Phthalate	U	400	1.0	330	400	94	
606-20-2	2,6-Dinitrotoluene	U	400	1.0	330	400	95	
208-96-8	Acenaphthylene	U	400	1.0	330	400	84	
99-09-2	3-Nitroaniline	U	600	1.0	500	600	110	
83-32-9	Acenaphthene	U	400	1.0	330	400	78	
51-28-5	2,4-Dinitrophenol	~~U~~ UJ	1400	1.0	1200	1400	450	CCH
132-64-9	Dibenzofuran	U	400	1.0	330	400	95	
100-02-7	4-Nitrophenol	U	1400	1.0	1200	1400	370	
121-14-2	2,4-Dinitrotoluene	U	400	1.0	330	400	100	
84-66-2	Diethylphthalate	U	400	1.0	330	400	96	
7005-72-3	4-Chlorophenyl-phenylether	U	400	1.0	330	400	94	
100-01-6	4-Nitroaniline	U	600	1.0	500	600	160	
534-52-1	4,6-Dinitro-2-Methylphenol	U	1400	1.0	1200	1400	400	
86-30-6	N-Nitrosodiphenylamine	U	790	1.0	660	790	260	
101-55-3	4-Bromophenyl-phenylether	U	400	1.0	330	400	100	
1912-24-9	Atrazine	U	400	1.0	330	400	110	
87-86-5	Pentachlorophenol	U	980	1.0	820	980	280	
120-12-7	Anthracene	U	400	1.0	330	400	100	
86-74-8	Carbazole	U	600	1.0	500	600	130	

MW 3/6/09

KATAHDIN ANALYTICAL SERVICES
Report of Analytical Results

12

Client: CH2MHill
Project: TO-009 Lejeune
PO No:
Sample Date: 12/21/08
Received Date: 12/23/08
Extraction Date: 12/30/08
Analysis Date: 17-JAN-2009 19:21
Report Date: 01/22/2009
Matrix: SOIL
% Solids: 83.3

Lab ID: SB7369-23
Client ID: MR08-SS235-08D
SDG: TO9-24
Extracted by: CB
Extraction Method: SW846 3550
Analyst: JCG
Analysis Method: SW846 8270C
Lab Prep Batch: WG59475
Units: ug/Kgdrywt

CAS#	Compound	Flags	Results	DF	PQL	Adj.PQL	Adj.MDL
84-74-2	Di-n-butylphthalate	U	400	1.0	330	400	120
85-68-7	Butylbenzylphthalate	U	400	1.0	330	400	110
91-94-1	3,3'-Dichlorobenzidine	U	600	1.0	500	600	140
218-01-9	Chrysene		530	1.0	330	400	110
117-81-7	bis(2-Ethylhexyl)phthalate	J	120	1.0	330	400	120
117-84-0	Di-n-octylphthalate	U	400	1.0	330	400	250
367-12-4	2-Fluorophenol		70%				
13127-88-3	Phenol-D6		71%				
4165-60-0	Nitrobenzene-D5		72%				
321-60-8	2-Fluorobiphenyl		77%				
118-79-6	2,4,6-Tribromophenol		66%				
1718-51-0	Terphenyl-D14		88%				

fw 3/6/09

KATAHDIN ANALYTICAL SERVICES
Report of Analytical Results

13

Client: CH2MHill
Project: CTO-009 Lejeune
PO No:
Sample Date: 12/21/08
Received Date: 12/23/08
Extraction Date: 12/31/08
Analysis Date: 16-JAN-2009 15:50
Report Date: 01/26/2009
Matrix: SOIL
% Solids: 90.8

Lab ID: SB7369-25
Client ID: MR08-IS235-1-2-08D
SDG: TO9-24
Extracted by: AC
Extraction Method: SW846 3550
Analyst: JCG
Analysis Method: SW846 8270C
Lab Prep Batch: WG59486
Units: ug/Kgdrywt

CAS#	Compound	Flags	Results	DF	PQL	Adj.PQL	Adj.MDL	
100-52-7	Benzaldehyde	~~U~~ UJ	550	1.0	500	550	130	JCB
108-95-2	Phenol	U	550	1.0	500	550	170	
111-44-4	Bis(2-Chloroethyl)ether	U	360	1.0	330	360	89	
95-57-8	2-Chlorophenol	U	550	1.0	500	550	180	
95-48-7	2-Methylphenol	U	660	1.0	600	660	220	
108-60-1	2,2'-Oxybis(1-chloropropane)	U	360	1.0	330	360	98	
98-86-2	Acetophenone	U	660	1.0	600	660	200	
621-64-7	N-Nitroso-di-n-propylamine	U	360	1.0	330	360	91	
65794-96-9	3&4-Methylphenol	U	660	1.0	600	660	200	
67-72-1	Hexachloroethane	U	360	1.0	330	360	100	
98-95-3	Nitrobenzene	U	360	1.0	330	360	100	
78-59-1	Isophorone	U	360	1.0	330	360	82	
88-75-5	2-Nitrophenol	U	660	1.0	600	660	180	
105-67-9	2,4-Dimethylphenol	~~U~~ UJ	550	1.0	500	550	180	BSL
111-91-1	Bis(2-Chloroethoxy)methane	U	360	1.0	330	360	100	
120-83-2	2,4-Dichlorophenol	U	550	1.0	500	550	160	
106-47-8	4-Chloroaniline	U	550	1.0	500	550	130	
105-60-2	Caprolactam	U	550	1.0	500	550	160	
59-50-7	4-Chloro-3-Methylphenol	U	550	1.0	500	550	180	
88-06-2	2,4,6-Trichlorophenol	U	550	1.0	500	550	170	
95-95-4	2,4,5-Trichlorophenol	U	550	1.0	500	550	170	
91-58-7	2-Chloronaphthalene	U	360	1.0	330	360	96	
92-52-4	1,1'-Biphenyl	U	360	1.0	330	360	80	
88-74-4	2-Nitroaniline	U	550	1.0	500	550	82	
131-11-3	Dimethyl Phthalate	U	360	1.0	330	360	86	
606-20-2	2,6-Dinitrotoluene	U	360	1.0	330	360	87	
208-96-8	Acenaphthylene	U	360	1.0	330	360	77	
99-09-2	3-Nitroaniline	U	550	1.0	500	550	100	
83-32-9	Acenaphthene	U	360	1.0	330	360	72	
51-28-5	2,4-Dinitrophenol	U	1300	1.0	1200	1300	420	
132-64-9	Dibenzofuran	U	360	1.0	330	360	87	
100-02-7	4-Nitrophenol	U	1300	1.0	1200	1300	340	
121-14-2	2,4-Dinitrotoluene	U	360	1.0	330	360	94	
84-66-2	Diethylphthalate	~~JB~~ 360U	~~85~~	1.0	330	360	88	BL
7005-72-3	4-Chlorophenyl-phenylether	U	360	1.0	330	360	86	
100-01-6	4-Nitroaniline	U	550	1.0	500	550	150	
534-52-1	4,6-Dinitro-2-Methylphenol	U	1300	1.0	1200	1300	370	
86-30-6	N-Nitrosodiphenylamine	U	730	1.0	660	730	240	
101-55-3	4-Bromophenyl-phenylether	U	360	1.0	330	360	94	
1912-24-9	Atrazine	U	360	1.0	330	360	100	
87-86-5	Pentachlorophenol	U	900	1.0	820	900	260	
120-12-7	Anthracene	U	360	1.0	330	360	92	
86-74-8	Carbazole	U	550	1.0	500	550	120	

3/6/09

KATAHDIN ANALYTICAL SERVICES
Report of Analytical Results

Client: CH2MHill
Project: CTO-009 Lejeune
PO No:
Sample Date: 12/21/08
Received Date: 12/23/08
Extraction Date: 12/31/08
Analysis Date: 16-JAN-2009 15:50
Report Date: 01/26/2009
Matrix: SOIL
% Solids: 90.8

Lab ID: SB7369-25
Client ID: MR08-IS235-1-2-08D
SDG: TO9-24
Extracted by: AC
Extraction Method: SW846 3550
Analyst: JCG
Analysis Method: SW846 8270C
Lab Prep Batch: WG59486
Units: ug/Kgdrywt

CAS#	Compound	Flags	Results	DF	PQL	Adj.PQL	Adj.MDL	
84-74-2	Di-n-butylphthalate	U	360	1.0	330	360	110	
85-68-7	Butylbenzylphthalate	U	360	1.0	330	360	100	
91-94-1	3,3'-Dichlorobenzidine	U	550	1.0	500	550	120	
218-01-9	Chrysene	U	360	1.0	330	360	100	
117-81-7	bis(2-Ethylhexyl)phthalate	~~U~~ UJ	360	1.0	330	360	110	CCH
117-84-0	Di-n-octylphthalate	~~U~~ UJ	360	1.0	330	360	230	CCH
367-12-4	2-Fluorophenol		47%					
13127-88-3	Phenol-D6		61%					
4165-60-0	Nitrobenzene-D5		74%					
321-60-8	2-Fluorobiphenyl		71%					
118-79-6	2,4,6-Tribromophenol		39%					
1718-51-0	Terphenyl-D14		82%					

lw 3/6/09

KATAHDIN ANALYTICAL SERVICES
Report of Analytical Results

Client: CH2MHill
Project: TO-009 Lejeune
PO No:
Sample Date: 12/21/08
Received Date: 12/23/08
Extraction Date: 12/31/08
Analysis Date: 16-JAN-2009 20:21
Report Date: 01/23/2009
Matrix: SOIL
% Solids: 81.8

Lab ID: SB7369-27
Client ID: MR08-SS211-08D
SDG: TO9-24
Extracted by: AC
Extraction Method: SW846 3550
Analyst: JCG
Analysis Method: SW846 8270C
Lab Prep Batch: WG59486
Units: ug/Kgdrywt

CAS#	Compound	Flags	Results	DF	PQL	Adj.PQL	Adj.MDL	
100-52-7	Benzaldehyde	~~U~~ UJ	610	1.0	500	610	150	ICB
108-95-2	Phenol	~~U~~ UJ	610	1.0	500	610	190	SSL
111-44-4	Bis(2-Chloroethyl)ether	U	400	1.0	330	400	99	
95-57-8	2-Chlorophenol	~~U~~ UJ	610	1.0	500	610	200	SSL
95-48-7	2-Methylphenol	~~U~~ UJ	730	1.0	600	730	240	SSL
108-60-1	2,2'-Oxybis(1-chloropropane)	U	400	1.0	330	400	110	
98-86-2	Acetophenone	U	730	1.0	600	730	220	
621-64-7	N-Nitroso-di-n-propylamine	U	400	1.0	330	400	100	
65794-96-9	3&4-Methylphenol	~~U~~ UJ	730	1.0	600	730	230	SSL
67-72-1	Hexachloroethane	U	400	1.0	330	400	120	
98-95-3	Nitrobenzene	U	400	1.0	330	400	110	
78-59-1	Isophorone	U	400	1.0	330	400	92	
88-75-5	2-Nitrophenol	~~U~~ UJ	730	1.0	600	730	200	SSL
105-67-9	2,4-Dimethylphenol	~~U~~ UJ	610	1.0	500	610	200	SSL
111-91-1	Bis(2-Chloroethoxy)methane	U	400	1.0	330	400	120	
120-83-2	2,4-Dichlorophenol	~~U~~ UJ	610	1.0	500	610	180	SSL
106-47-8	4-Chloroaniline	U	610	1.0	500	610	140	
105-60-2	Caprolactam	U	610	1.0	500	610	180	SSL
59-50-7	4-Chloro-3-Methylphenol	U UJ	610	1.0	500	610	200	
88-06-2	2,4,6-Trichlorophenol	U	610	1.0	500	610	190	
95-95-4	2,4,5-Trichlorophenol	U	610	1.0	500	610	190	
91-58-7	2-Chloronaphthalene	U	400	1.0	330	400	110	
92-52-4	1,1'-Biphenyl	U	400	1.0	330	400	89	
88-74-4	2-Nitroaniline	U	610	1.0	500	610	92	
131-11-3	Dimethyl Phthalate	U	400	1.0	330	400	95	
606-20-2	2,6-Dinitrotoluene	U	400	1.0	330	400	96	
208-96-8	Acenaphthylene	U	400	1.0	330	400	86	
99-09-2	3-Nitroaniline	U	610	1.0	500	610	110	
83-32-9	Acenaphthene	U	400	1.0	330	400	79	
51-28-5	2,4-Dinitrophenol	~~U~~ UJ	1500	1.0	1200	1500	460	SSL
132-64-9	Dibenzofuran	U	400	1.0	330	400	96	
100-02-7	4-Nitrophenol	~~U~~ UJ	1500	1.0	1200	1500	380	SSL
121-14-2	2,4-Dinitrotoluene	U	400	1.0	330	400	100	
84-66-2	Diethylphthalate	U	400	1.0	330	400	98	
7005-72-3	4-Chlorophenyl-phenylether	U	400	1.0	330	400	95	
100-01-6	4-Nitroaniline	U	610	1.0	500	610	160	
534-52-1	4,6-Dinitro-2-Methylphenol	~~U~~ UJ	1500	1.0	1200	1500	410	SSL
86-30-6	N-Nitrosodiphenylamine	U	810	1.0	660	810	270	
101-55-3	4-Bromophenyl-phenylether	U	400	1.0	330	400	100	
1912-24-9	Atrazine	U	400	1.0	330	400	110	
87-86-5	Pentachlorophenol	~~U~~ UJ	1000	1.0	820	1000	290	SSL
120-12-7	Anthracene	U	400	1.0	330	400	100	
86-74-8	Carbazole	U	610	1.0	500	610	140	

lw 3/6/09

KATAHDIN ANALYTICAL SERVICES
Report of Analytical Results

Client: CH2MHill
Project: TO-009 Lejeune
PO No:
Sample Date: 12/21/08
Received Date: 12/23/08
Extraction Date: 12/31/08
Analysis Date: 16-JAN-2009 20:21
Report Date: 01/23/2009
Matrix: SOIL
% Solids: 81.8

Lab ID: SB7369-27
Client ID: MR08-SS211-08D
SDG: TO9-24
Extracted by: AC
Extraction Method: SW846 3550
Analyst: JCG
Analysis Method: SW846 8270C
Lab Prep Batch: WG59486
Units: ug/Kgdrywt

CAS#	Compound	Flags	Results	DF	PQL	Adj.PQL	Adj.MDL	
84-74-2	Di-n-butylphthalate	U	400	1.0	330	400	120	
85-68-7	Butylbenzylphthalate	U	400	1.0	330	400	110	
91-94-1	3,3'-Dichlorobenzidine	U	610	1.0	500	610	140	
218-01-9	Chrysene	J	350	1.0	330	400	120	
117-81-7	bis(2-Ethylhexyl)phthalate	~~J~~ UJ	400	1.0	330	400	120	CCH
117-84-0	Di-n-octylphthalate	~~J~~ UJ	400	1.0	330	400	260	CCH
367-12-4	2-Fluorophenol		* 33%					
13127-88-3	Phenol-D6		57%					
4165-60-0	Nitrobenzene-D5		70%					
321-60-8	2-Fluorobiphenyl		65%					
118-79-6	2,4,6-Tribromophenol		* 11%					
1718-51-0	Terphenyl-D14		98%					

RW 3/6/09

14RE

KATAHDIN ANALYTICAL SERVICES
Report of Analytical Results

Client: CH2MHill
Project: TO-009 Lejeune
PO No:
Sample Date: 12/21/08
Received Date: 12/23/08
Extraction Date: 01/20/09
Analysis Date: 22-JAN-2009 05:11
Report Date: 01/23/2009
Matrix: SOIL
% Solids: 81.8

Lab ID: SB7369-27RE
Client ID: MR08-SS211-08D
SDG: TO9-24
Extracted by: AC
Extraction Method: SW846 3550
Analyst: JCG
Analysis Method: SW846 8270C
Lab Prep Batch: WG59975
Units: ug/Kgdrywt

Use original

RE

CAS#	Compound	Flags	Results	DF	PQL	Adj.PQL	Adj.MDL
100-52-7	Benzaldehyde	U R	610	1.0	500	610	150 HT
108-95-2	Phenol	U	610	1.0	500	610	190
111-44-4	Bis(2-Chloroethyl)ether	U	400	1.0	330	400	99
95-57-8	2-Chlorophenol	U	610	1.0	500	610	200
95-48-7	2-Methylphenol	U	730	1.0	600	730	240
108-60-1	2,2'-Oxybis(1-chloropropane)	U	400	1.0	330	400	110
98-86-2	Acetophenone	U	730	1.0	600	730	220
621-64-7	N-Nitroso-di-n-propylamine	U	400	1.0	330	400	100
65794-96-9	3&4-Methylphenol	U	730	1.0	600	730	230
67-72-1	Hexachloroethane	U	400	1.0	330	400	120
98-95-3	Nitrobenzene	U	400	1.0	330	400	110
78-59-1	Isophorone	U	400	1.0	330	400	92
88-75-5	2-Nitrophenol	U	730	1.0	600	730	200
105-67-9	2,4-Dimethylphenol	U	610	1.0	500	610	200
111-91-1	Bis(2-Chloroethoxy)methane	U	400	1.0	330	400	120
120-83-2	2,4-Dichlorophenol	U	610	1.0	500	610	180
106-47-8	4-Chloroaniline	U	610	1.0	500	610	140
105-60-2	Caprolactam	U	610	1.0	500	610	180
59-50-7	4-Chloro-3-Methylphenol	U	610	1.0	500	610	200
88-06-2	2,4,6-Trichlorophenol	U	610	1.0	500	610	190
95-95-4	2,4,5-Trichlorophenol	U	610	1.0	500	610	190
91-58-7	2-Chloronaphthalene	U	400	1.0	330	400	110
92-52-4	1,1'-Biphenyl	U	400	1.0	330	400	89
88-74-4	2-Nitroaniline	U	610	1.0	500	610	92
131-11-3	Dimethyl Phthalate	U	400	1.0	330	400	95
606-20-2	2,6-Dinitrotoluene	U	400	1.0	330	400	96
208-96-8	Acenaphthylene	U	400	1.0	330	400	86
99-09-2	3-Nitroaniline	U	610	1.0	500	610	110
83-32-9	Acenaphthene	U	400	1.0	330	400	79
51-28-5	2,4-Dinitrophenol	U	1500	1.0	1200	1500	460
132-64-9	Dibenzofuran	U	400	1.0	330	400	96
100-02-7	4-Nitrophenol	U	1500	1.0	1200	1500	380
121-14-2	2,4-Dinitrotoluene	U	400	1.0	330	400	100
84-66-2	Diethylphthalate	U	400	1.0	330	400	98
7005-72-3	4-Chlorophenyl-phenylether	U	400	1.0	330	400	95
100-01-6	4-Nitroaniline	U	610	1.0	500	610	160
534-52-1	4,6-Dinitro-2-Methylphenol	U	1500	1.0	1200	1500	410
86-30-6	N-Nitrosodiphenylamine	U	810	1.0	660	810	270
101-55-3	4-Bromophenyl-phenylether	U	400	1.0	330	400	100
1912-24-9	Atrazine	U	400	1.0	330	400	110
87-86-5	Pentachlorophenol	U	1000	1.0	820	1000	290
120-12-7	Anthracene	U	400	1.0	330	400	100
86-74-8	Carbazole	U	610	1.0	500	610	140

3/6/09

KATAHDIN ANALYTICAL SERVICES
Report of Analytical Results

14RE

Client: CH2MHill
Project: TO-009 Lejeune
PO No:
Sample Date: 12/21/08
Received Date: 12/23/08
Extraction Date: 01/20/09
Analysis Date: 22-JAN-2009 05:11
Report Date: 01/23/2009
Matrix: SOIL
% Solids: 81.8

Lab ID: SB7369-27RE
Client ID: MR08-SS211-08D
SDG: TO9-24
Extracted by: AC
Extraction Method: SW846 3550
Analyst: JCG
Analysis Method: SW846 8270C
Lab Prep Batch: WG59975
Units: ug/Kgdrywt

Use original

CAS#	Compound	Flags	Results	DF	PQL	Adj.PQL	Adj.MDL	
84-74-2	Di-n-butylphthalate	U R	400	1.0	330	400	120	HT
85-68-7	Butylbenzylphthalate	U	400	1.0	330	400	110	
91-94-1	3,3'-Dichlorobenzidine	U	610	1.0	500	610	140	
218-01-9	Chrysene	J	390	1.0	330	400	120	
117-81-7	bis(2-Ethylhexyl)phthalate	U	400	1.0	330	400	120	
117-84-0	Di-n-octylphthalate	U R	400	1.0	330	400	260	
367-12-4	2-Fluorophenol		60%					
13127-88-3	Phenol-D6		64%					
4165-60-0	Nitrobenzene-D5		58%					
321-60-8	2-Fluorobiphenyl		75%					
118-79-6	2,4,6-Tribromophenol		72%					
1718-51-0	Terphenyl-D14		88%					

R RE

kes 3/6/09

KATAHDIN ANALYTICAL SERVICES
Report of Analytical Results

Client: CH2MHill
Project: TO-009 Lejeune
PO No:
Sample Date: 12/21/08
Received Date: 12/23/08
Extraction Date: 12/31/08
Analysis Date: 16-JAN-2009 16:36
Report Date: 01/23/2009
Matrix: SOIL
% Solids: 89.8

Lab ID: SB7369-29
Client ID: MR08-IS211-1-2-08D
SDG: TO9-24
Extracted by: AC
Extraction Method: SW846 3550
Analyst: JCG
Analysis Method: SW846 8270C
Lab Prep Batch: WG59486
Units: ug/Kgdrywt

CAS#	Compound	Flags	Results	DF	PQL	Adj.PQL	Adj.MDL	
100-52-7	Benzaldehyde	~~U~~ UJ	560	1.0	500	560	130	JCB
108-95-2	Phenol	~~U~~ R	560	1.0	500	560	170	SSL
111-44-4	Bis(2-Chloroethyl)ether	U	370	1.0	330	370	90	
95-57-8	2-Chlorophenol	~~U~~ R	560	1.0	500	560	180	SSL
95-48-7	2-Methylphenol	~~U~~ R	670	1.0	600	670	220	SSL
108-60-1	2,2'-Oxybis(1-chloropropane)	U	370	1.0	330	370	99	
98-86-2	Acetophenone	U	670	1.0	600	670	200	
621-64-7	N-Nitroso-di-n-propylamine	U	370	1.0	330	370	92	
65794-96-9	3&4-Methylphenol	~~U~~ R	670	1.0	600	670	210	SSL
67-72-1	Hexachloroethane	U	370	1.0	330	370	110	
98-95-3	Nitrobenzene	U	370	1.0	330	370	100	
78-59-1	Isophorone	U	370	1.0	330	370	84	
88-75-5	2-Nitrophenol	~~U~~ R	670	1.0	600	670	180	SSL
105-67-9	2,4-Dimethylphenol	~~U~~ R	560	1.0	500	560	180	SSL
111-91-1	Bis(2-Chloroethoxy)methane	U	370	1.0	330	370	110	
120-83-2	2,4-Dichlorophenol	~~U~~ R	560	1.0	500	560	170	SSL
106-47-8	4-Chloroaniline	U	560	1.0	500	560	130	
105-60-2	Caprolactam	U	560	1.0	500	560	160	
59-50-7	4-Chloro-3-Methylphenol	~~U~~ R	560	1.0	500	560	180	SSL
88-06-2	2,4,6-Trichlorophenol	~~U~~	560	1.0	500	560	170	↓
95-95-4	2,4,5-Trichlorophenol	~~U~~	560	1.0	500	560	170	↓
91-58-7	2-Chloronaphthalene	U	370	1.0	330	370	97	
92-52-4	1,1'-Biphenyl	U	370	1.0	330	370	81	
88-74-4	2-Nitroaniline	U	560	1.0	500	560	84	
131-11-3	Dimethyl Phthalate	U	370	1.0	330	370	87	
606-20-2	2,6-Dinitrotoluene	U	370	1.0	330	370	88	
208-96-8	Acenaphthylene	U	370	1.0	330	370	78	
99-09-2	3-Nitroaniline	U	560	1.0	500	560	100	
83-32-9	Acenaphthene	U	370	1.0	330	370	72	
51-28-5	2,4-Dinitrophenol	~~U~~ R	1300	1.0	1200	1300	420	SSL
132-64-9	Dibenzofuran	U	370	1.0	330	370	88	
100-02-7	4-Nitrophenol	~~U~~ R	1300	1.0	1200	1300	340	SSL
121-14-2	2,4-Dinitrotoluene	U	370	1.0	330	370	95	
84-66-2	Diethylphthalate	U	370	1.0	330	370	89	
7005-72-3	4-Chlorophenyl-phenylether	U	370	1.0	330	370	87	
100-01-6	4-Nitroaniline	U	560	1.0	500	560	150	
534-52-1	4,6-Dinitro-2-Methylphenol	~~U~~ R	1300	1.0	1200	1300	380	SSL
86-30-6	N-Nitrosodiphenylamine	U	730	1.0	660	730	240	
101-55-3	4-Bromophenyl-phenylether	U	370	1.0	330	370	95	
1912-24-9	Atrazine	U	370	1.0	330	370	100	
87-86-5	Pentachlorophenol	~~U~~ R	910	1.0	820	910	260	SSL
120-12-7	Anthracene	U	370	1.0	330	370	94	
86-74-8	Carbazole	U	560	1.0	500	560	120	

lw 3/6/09

15

KATAHDIN ANALYTICAL SERVICES
Report of Analytical Results

Client: CH2MHill
Project: TO-009 Lejeune
PO No:
Sample Date: 12/21/08
Received Date: 12/23/08
Extraction Date: 12/31/08
Analysis Date: 16-JAN-2009 16:36
Report Date: 01/23/2009
Matrix: SOIL
% Solids: 89.8

Lab ID: SB7369-29
Client ID: MR08-IS211-1-2-08D
SDG: TO9-24
Extracted by: AC
Extraction Method: SW846 3550
Analyst: JCG
Analysis Method: SW846 8270C
Lab Prep Batch: WG59486
Units: ug/Kgdrywt

CAS#	Compound	Flags	Results	DF	PQL	Adj.PQL	Adj.MDL	
84-74-2	Di-n-butylphthalate	U	370	1.0	330	370	110	
85-68-7	Butylbenzylphthalate	U	370	1.0	330	370	100	
91-94-1	3,3'-Dichlorobenzidine	U	560	1.0	500	560	130	
218-01-9	Chrysene	U	370	1.0	330	370	100	
117-81-7	bis(2-Ethylhexyl)phthalate	~~U~~ UJ	370	1.0	330	370	110	CCH
117-84-0	Di-n-octylphthalate	~~U~~ UJ	370	1.0	330	370	230	CCH
367-12-4	2-Fluorophenol		* 14%					
13127-88-3	Phenol-D6		45%					
4165-60-0	Nitrobenzene-D5		74%					
321-60-8	2-Fluorobiphenyl		72%					
118-79-6	2,4,6-Tribromophenol		* 2%					
1718-51-0	Terphenyl-D14		90%					

GW
3/6/09

KATAHDIN ANALYTICAL SERVICES
Report of Analytical Results

15RE

Client: CH2MHill
Project: TO-009 Lejeune
PO No:
Sample Date: 12/21/08
Received Date: 12/23/08
Extraction Date: 01/20/09
Analysis Date: 22-JAN-2009 03:06
Report Date: 01/23/2009
Matrix: SOIL
% Solids: 89.8

Lab ID: SB7369-29RE
Client ID: MR08-IS211-1-2-08D
SDG: TO9-24
Extracted by: AC
Extraction Method: SW846 3550
Analyst: JCG
Analysis Method: SW846 8270C
Lab Prep Batch: WG59975
Units: ug/Kgdrywt

use original

CAS#	Compound	Flags	Results	DF	PQL	Adj.PQL	Adj.MDL
100-52-7	Benzaldehyde	U R	560	1.0	500	560	130
108-95-2	Phenol	U	560	1.0	500	560	170
111-44-4	Bis(2-Chloroethyl)ether	U	370	1.0	330	370	90
95-57-8	2-Chlorophenol	U	560	1.0	500	560	180
95-48-7	2-Methylphenol	U	670	1.0	600	670	220
108-60-1	2,2'-Oxybis(1-chloropropane)	U	370	1.0	330	370	99
98-86-2	Acetophenone	U	670	1.0	600	670	200
621-64-7	N-Nitroso-di-n-propylamine	U	370	1.0	330	370	92
65794-96-9	3&4-Methylphenol	U	670	1.0	600	670	210
67-72-1	Hexachloroethane	U	370	1.0	330	370	110
98-95-3	Nitrobenzene	U	370	1.0	330	370	100
78-59-1	Isophorone	U	370	1.0	330	370	84
88-75-5	2-Nitrophenol	U	670	1.0	600	670	180
105-67-9	2,4-Dimethylphenol	U	560	1.0	500	560	180
111-91-1	Bis(2-Chloroethoxy)methane	U	370	1.0	330	370	110
120-83-2	2,4-Dichlorophenol	U	560	1.0	500	560	170
106-47-8	4-Chloroaniline	U	560	1.0	500	560	130
105-60-2	Caprolactam	U	560	1.0	500	560	160
59-50-7	4-Chloro-3-Methylphenol	U	560	1.0	500	560	180
88-06-2	2,4,6-Trichlorophenol	U	560	1.0	500	560	170
95-95-4	2,4,5-Trichlorophenol	U	560	1.0	500	560	170
91-58-7	2-Chloronaphthalene	U	370	1.0	330	370	97
92-52-4	1,1'-Biphenyl	U	370	1.0	330	370	81
88-74-4	2-Nitroaniline	U	560	1.0	500	560	84
131-11-3	Dimethyl Phthalate	U	370	1.0	330	370	87
606-20-2	2,6-Dinitrotoluene	U	370	1.0	330	370	88
208-96-8	Acenaphthylene	U	370	1.0	330	370	78
99-09-2	3-Nitroaniline	U	560	1.0	500	560	100
83-32-9	Acenaphthene	U	370	1.0	330	370	72
51-28-5	2,4-Dinitrophenol	U	1300	1.0	1200	1300	420
132-64-9	Dibenzofuran	U	370	1.0	330	370	88
100-02-7	4-Nitrophenol	U	1300	1.0	1200	1300	340
121-14-2	2,4-Dinitrotoluene	U	370	1.0	330	370	95
84-66-2	Diethylphthalate	U	370	1.0	330	370	89
7005-72-3	4-Chlorophenyl-phenylether	U	370	1.0	330	370	87
100-01-6	4-Nitroaniline	U	560	1.0	500	560	150
534-52-1	4,6-Dinitro-2-Methylphenol	U	1300	1.0	1200	1300	380
86-30-6	N-Nitrosodiphenylamine	U	730	1.0	660	730	240
101-55-3	4-Bromophenyl-phenylether	U	370	1.0	330	370	95
1912-24-9	Atrazine	U	370	1.0	330	370	100
87-86-5	Pentachlorophenol	U	910	1.0	820	910	260
120-12-7	Anthracene	U	370	1.0	330	370	94
86-74-8	Carbazole	U	560	1.0	500	560	120

HT

LW 3/6/09

KATAHDIN ANALYTICAL SERVICES
Report of Analytical Results

1524

Client: CH2MHill
Project: TO-009 Lejeune
PO No:
Sample Date: 12/21/08
Received Date: 12/23/08
Extraction Date: 01/20/09
Analysis Date: 22-JAN-2009 03:06
Report Date: 01/23/2009
Matrix: SOIL
% Solids: 89.8

Lab ID: SB7369-29RE
Client ID: MR08-IS211-1-2-08D
SDG: TO9-24
Extracted by: AC
Extraction Method: SW846 3550
Analyst: JCG
Analysis Method: SW846 8270C
Lab Prep Batch: WG59975
Units: ug/Kgdrywt

use original

CAS#	Compound	Flags	Results	DF	PQL	Adj.PQL	Adj.MDL	
84-74-2	Di-n-butylphthalate	U R	370	1.0	330	370	110	HT
85-68-7	Butylbenzylphthalate	U	370	1.0	330	370	100	
91-94-1	3,3'-Dichlorobenzidine	U	560	1.0	500	560	130	
218-01-9	Chrysene	U	370	1.0	330	370	100	
117-81-7	bis(2-Ethylhexyl)phthalate	U	370	1.0	330	370	110	
117-84-0	Di-n-octylphthalate	U	370	1.0	330	370	230	
367-12-4	2-Fluorophenol		58%					
13127-88-3	Phenol-D6		60%					
4165-60-0	Nitrobenzene-D5		53%					
321-60-8	2-Fluorobiphenyl		64%					
118-79-6	2,4,6-Tribromophenol		77%					
1718-51-0	Terphenyl-D14		108%					

R RE

lw 3/6/09

16

KATAHDIN ANALYTICAL SERVICES
Report of Analytical Results

Client: CH2MHill
Project: CTO-009 Lejeune
PO No:
Sample Date: 12/22/08
Received Date: 12/23/08
Extraction Date: 12/31/08
Analysis Date: 17-JAN-2009 21:12
Report Date: 01/26/2009
Matrix: SOIL
% Solids: 93.7

Lab ID: SB7369-31
Client ID: MR08-SS202-08D
SDG: TO9-24
Extracted by: AC
Extraction Method: SW846 3550
Analyst: JCG
Analysis Method: SW846 8270C
Lab Prep Batch: WG59486
Units: ug/Kgdrywt

CAS#	Compound	Flags	Results	DF	PQL	Adj.PQL	Adj.MDL	
100-52-7	Benzaldehyde	~~U~~ UJ	530	1.0	500	530	130	JCB
108-95-2	Phenol	U	530	1.0	500	530	170	
111-44-4	Bis(2-Chloroethyl)ether	U	350	1.0	330	350	86	
95-57-8	2-Chlorophenol	U	530	1.0	500	530	180	
95-48-7	2-Methylphenol	U	640	1.0	600	640	210	
108-60-1	2,2'-Oxybis(1-chloropropane)	U	350	1.0	330	350	95	
98-86-2	Acetophenone	U	640	1.0	600	640	190	
621-64-7	N-Nitroso-di-n-propylamine	U	350	1.0	330	350	88	
65794-96-9	3&4-Methylphenol	U	640	1.0	600	640	200	
67-72-1	Hexachloroethane	U	350	1.0	330	350	100	
98-95-3	Nitrobenzene	U	350	1.0	330	350	97	
78-59-1	Isophorone	U	350	1.0	330	350	80	
88-75-5	2-Nitrophenol	U	640	1.0	600	640	180	
105-67-9	2,4-Dimethylphenol	~~U~~ UJ	530	1.0	500	530	180	BSL
111-91-1	Bis(2-Chloroethoxy)methane	U	350	1.0	330	350	100	
120-83-2	2,4-Dichlorophenol	U	530	1.0	500	530	160	
106-47-8	4-Chloroaniline	U	530	1.0	500	530	130	
105-60-2	Caprolactam	U	530	1.0	500	530	150	
59-50-7	4-Chloro-3-Methylphenol	U	530	1.0	500	530	180	
88-06-2	2,4,6-Trichlorophenol	U	530	1.0	500	530	160	
95-95-4	2,4,5-Trichlorophenol	U	530	1.0	500	530	160	
91-58-7	2-Chloronaphthalene	U	350	1.0	330	350	93	
92-52-4	1,1'-Biphenyl	U	350	1.0	330	350	78	
88-74-4	2-Nitroaniline	U	530	1.0	500	530	80	
131-11-3	Dimethyl Phthalate	U	350	1.0	330	350	83	
606-20-2	2,6-Dinitrotoluene	U	350	1.0	330	350	84	
208-96-8	Acenaphthylene	U	350	1.0	330	350	75	
99-09-2	3-Nitroaniline	U	530	1.0	500	530	100	
83-32-9	Acenaphthene	U	350	1.0	330	350	69	
51-28-5	2,4-Dinitrophenol	U	1300	1.0	1200	1300	400	
132-64-9	Dibenzofuran	U	350	1.0	330	350	84	
100-02-7	4-Nitrophenol	U	1300	1.0	1200	1300	330	
121-14-2	2,4-Dinitrotoluene	U	350	1.0	330	350	91	
84-66-2	Diethylphthalate	~~JB~~ 350U	~~91~~	1.0	330	350	85	BL
7005-72-3	4-Chlorophenyl-phenylether	U	350	1.0	330	350	83	
100-01-6	4-Nitroaniline	U	530	1.0	500	530	140	
534-52-1	4,6-Dinitro-2-Methylphenol	U	1300	1.0	1200	1300	360	
86-30-6	N-Nitrosodiphenylamine	U	700	1.0	660	700	230	
101-55-3	4-Bromophenyl-phenylether	U	350	1.0	330	350	91	
1912-24-9	Atrazine	U	350	1.0	330	350	97	
87-86-5	Pentachlorophenol	U	880	1.0	820	880	250	
120-12-7	Anthracene	U	350	1.0	330	350	90	
86-74-8	Carbazole	U	530	1.0	500	530	120	

hw 3/6/09

16

KATAHDIN ANALYTICAL SERVICES
Report of Analytical Results

Client: CH2MHill
Project: CTO-009 Lejeune
PO No:
Sample Date: 12/22/08
Received Date: 12/23/08
Extraction Date: 12/31/08
Analysis Date: 17-JAN-2009 21:12
Report Date: 01/26/2009
Matrix: SOIL
% Solids: 93.7

Lab ID: SB7369-31
Client ID: MR08-SS202-08D
SDG: TO9-24
Extracted by: AC
Extraction Method: SW846 3550
Analyst: JCG
Analysis Method: SW846 8270C
Lab Prep Batch: WG59486
Units: ug/Kgdrywt

CAS#	Compound	Flags	Results	DF	PQL	Adj.PQL	Adj.MDL	
84-74-2	Di-n-butylphthalate	U	350	1.0	330	350	110	
85-68-7	Butylbenzylphthalate	U	350	1.0	330	350	99	
91-94-1	3,3'-Dichlorobenzidine	U	530	1.0	500	530	120	
218-01-9	Chrysene	J	110	1.0	330	350	100	
117-81-7	bis(2-Ethylhexyl)phthalate	~~U~~ UJ	350	1.0	330	350	100	CCH
117-84-0	Di-n-octylphthalate	~~U~~ UJ	350	1.0	330	350	220	CCH
367-12-4	2-Fluorophenol		63%					
13127-88-3	Phenol-D6		76%					
4165-60-0	Nitrobenzene-D5		77%					
321-60-8	2-Fluorobiphenyl		81%					
118-79-6	2,4,6-Tribromophenol		58%					
1718-51-0	Terphenyl-D14		115%					

LW 3/6/09

KATAHDIN ANALYTICAL SERVICES
Report of Analytical Results

17

Client: CH2MHill
Project: TO-009 Lejeune
PO No:
Sample Date: 12/22/08
Received Date: 12/23/08
Extraction Date: 12/31/08
Analysis Date: 16-JAN-2009 17:23
Report Date: 01/23/2009
Matrix: SOIL
% Solids: 90.9

Lab ID: SB7369-33
Client ID: MR08-IS202-4-5-08D
SDG: TO9-24
Extracted by: AC
Extraction Method: SW846 3550
Analyst: JCG
Analysis Method: SW846 8270C
Lab Prep Batch: WG59486
Units: ug/Kgdrywt

CAS#	Compound	Flags	Results	DF	PQL	Adj.PQL	Adj.MDL	
100-52-7	Benzaldehyde	~~U~~ UJ	550	1.0	500	550	130	JCB
108-95-2	Phenol	U	550	1.0	500	550	170	
111-44-4	Bis(2-Chloroethyl)ether	U	360	1.0	330	360	89	
95-57-8	2-Chlorophenol	U	550	1.0	500	550	180	
95-48-7	2-Methylphenol	U	660	1.0	600	660	220	
108-60-1	2,2'-Oxybis(1-chloropropane)	U	360	1.0	330	360	98	
98-86-2	Acetophenone	U	660	1.0	600	660	200	
621-64-7	N-Nitroso-di-n-propylamine	U	360	1.0	330	360	91	
65794-96-9	3&4-Methylphenol	U	660	1.0	600	660	200	
67-72-1	Hexachloroethane	U	360	1.0	330	360	100	
98-95-3	Nitrobenzene	U	360	1.0	330	360	100	
78-59-1	Isophorone	U	360	1.0	330	360	82	
88-75-5	2-Nitrophenol	U	660	1.0	600	660	180	
105-67-9	2,4-Dimethylphenol	~~U~~ UJ	550	1.0	500	550	180	BSL
111-91-1	Bis(2-Chloroethoxy)methane	U	360	1.0	330	360	100	
120-83-2	2,4-Dichlorophenol	U	550	1.0	500	550	160	
106-47-8	4-Chloroaniline	U	550	1.0	500	550	130	
105-60-2	Caprolactam	U	550	1.0	500	550	160	
59-50-7	4-Chloro-3-Methylphenol	U	550	1.0	500	550	180	
88-06-2	2,4,6-Trichlorophenol	U	550	1.0	500	550	170	
95-95-4	2,4,5-Trichlorophenol	U	550	1.0	500	550	170	
91-58-7	2-Chloronaphthalene	U	360	1.0	330	360	96	
92-52-4	1,1'-Biphenyl	U	360	1.0	330	360	80	
88-74-4	2-Nitroaniline	U	550	1.0	500	550	82	
131-11-3	Dimethyl Phthalate	U	360	1.0	330	360	86	
606-20-2	2,6-Dinitrotoluene	U	360	1.0	330	360	87	
208-96-8	Acenaphthylene	U	360	1.0	330	360	77	
99-09-2	3-Nitroaniline	U	550	1.0	500	550	100	
83-32-9	Acenaphthene	U	360	1.0	330	360	72	
51-28-5	2,4-Dinitrophenol	U	1300	1.0	1200	1300	410	
132-64-9	Dibenzofuran	U	360	1.0	330	360	87	
100-02-7	4-Nitrophenol	U	1300	1.0	1200	1300	340	
121-14-2	2,4-Dinitrotoluene	U	360	1.0	330	360	94	
84-66-2	Diethylphthalate	U	360	1.0	330	360	88	
7005-72-3	4-Chlorophenyl-phenylether	U	360	1.0	330	360	86	
100-01-6	4-Nitroaniline	U	550	1.0	500	550	150	
534-52-1	4,6-Dinitro-2-Methylphenol	U	1300	1.0	1200	1300	370	
86-30-6	N-Nitrosodiphenylamine	U	730	1.0	660	730	240	
101-55-3	4-Bromophenyl-phenylether	U	360	1.0	330	360	94	
1912-24-9	Atrazine	U	360	1.0	330	360	100	
87-86-5	Pentachlorophenol	U	900	1.0	820	900	260	
120-12-7	Anthracene	U	360	1.0	330	360	92	
86-74-8	Carbazole	U	550	1.0	500	550	120	

LW 3/6/09

17

KATAHDIN ANALYTICAL SERVICES
Report of Analytical Results

Client: CH2MHill
Project: TO-009 Lejeune
PO No:
Sample Date: 12/22/08
Received Date: 12/23/08
Extraction Date: 12/31/08
Analysis Date: 16-JAN-2009 17:23
Report Date: 01/23/2009
Matrix: SOIL
% Solids: 90.9

Lab ID: SB7369-33
Client ID: MR08-IS202-4-5-08D
SDG: TO9-24
Extracted by: AC
Extraction Method: SW846 3550
Analyst: JCG
Analysis Method: SW846 8270C
Lab Prep Batch: WG59486
Units: ug/Kgdrywt

CAS#	Compound	Flags	Results	DF	PQL	Adj.PQL	Adj.MDL	
84-74-2	Di-n-butylphthalate	U	360	1.0	330	360	110	
85-68-7	Butylbenzylphthalate	U	360	1.0	330	360	100	
91-94-1	3,3'-Dichlorobenzidine	U	550	1.0	500	550	120	
218-01-9	Chrysene	U	360	1.0	330	360	100	
117-81-7	bis(2-Ethylhexyl)phthalate	~~J~~ J	220	1.0	330	360	110	CCH
117-84-0	Di-n-octylphthalate	~~J~~ UJ	360	1.0	330	360	230	CCH
367-12-4	2-Fluorophenol		65%					
13127-88-3	Phenol-D6		77%					
4165-60-0	Nitrobenzene-D5		82%					
321-60-8	2-Fluorobiphenyl		80%					
118-79-6	2,4,6-Tribromophenol		64%					
1718-51-0	Terphenyl-D14		109%					

LW 3/6/09

KATAHDIN ANALYTICAL SERVICES
Report of Analytical Results

Client: CH2MHill
Project: TO-009 Lejeune
PO No:
Sample Date: 12/22/08
Received Date: 12/23/08
Extraction Date: 12/31/08
Analysis Date: 16-JAN-2009 21:44
Report Date: 01/23/2009
Matrix: SOIL
% Solids: 94.5

Lab ID: SB7369-35
Client ID: MR08-SS185-08D
SDG: TO9-24
Extracted by: AC
Extraction Method: SW846 3550
Analyst: JCG
Analysis Method: SW846 8270C
Lab Prep Batch: WG59486
Units: ug/Kgdrywt

CAS#	Compound	Flags	Results	DF	PQL	Adj.PQL	Adj.MDL	
100-52-7	Benzaldehyde	~~U~~ UJ	530	1.0	500	530	130	ICB
108-95-2	Phenol	U	530	1.0	500	530	160	
111-44-4	Bis(2-Chloroethyl)ether	U	350	1.0	330	350	86	
95-57-8	2-Chlorophenol	U	530	1.0	500	530	170	
95-48-7	2-Methylphenol	U	630	1.0	600	630	210	
108-60-1	2,2'-Oxybis(1-chloropropane)	U	350	1.0	330	350	94	
98-86-2	Acetophenone	U	630	1.0	600	630	190	
621-64-7	N-Nitroso-di-n-propylamine	U	350	1.0	330	350	88	
65794-96-9	3&4-Methylphenol	U	630	1.0	600	630	200	
67-72-1	Hexachloroethane	U	350	1.0	330	350	100	
98-95-3	Nitrobenzene	U	350	1.0	330	350	96	
78-59-1	Isophorone	U	350	1.0	330	350	79	
88-75-5	2-Nitrophenol	U	630	1.0	600	630	180	
105-67-9	2,4-Dimethylphenol	~~U~~ UJ	530	1.0	500	530	170	BSL
111-91-1	Bis(2-Chloroethoxy)methane	U	350	1.0	330	350	100	
120-83-2	2,4-Dichlorophenol	U	530	1.0	500	530	160	
106-47-8	4-Chloroaniline	U	530	1.0	500	530	120	
105-60-2	Caprolactam	U	530	1.0	500	530	150	
59-50-7	4-Chloro-3-Methylphenol	U	530	1.0	500	530	180	
88-06-2	2,4,6-Trichlorophenol	U	530	1.0	500	530	160	
95-95-4	2,4,5-Trichlorophenol	U	530	1.0	500	530	160	
91-58-7	2-Chloronaphthalene	U	350	1.0	330	350	92	
92-52-4	1,1'-Biphenyl	J	110	1.0	330	350	77	
88-74-4	2-Nitroaniline	U	530	1.0	500	530	79	
131-11-3	Dimethyl Phthalate	U	350	1.0	330	350	82	
606-20-2	2,6-Dinitrotoluene	U	350	1.0	330	350	84	
208-96-8	Acenaphthylene	U	350	1.0	330	350	74	
99-09-2	3-Nitroaniline	U	530	1.0	500	530	99	
83-32-9	Acenaphthene	J	320	1.0	330	350	69	
51-28-5	2,4-Dinitrophenol	U	1300	1.0	1200	1300	400	
132-64-9	Dibenzofuran		410	1.0	330	350	84	
100-02-7	4-Nitrophenol	U	1300	1.0	1200	1300	330	
121-14-2	2,4-Dinitrotoluene	U	350	1.0	330	350	90	
84-66-2	Diethylphthalate	U	350	1.0	330	350	85	
7005-72-3	4-Chlorophenyl-phenylether	U	350	1.0	330	350	82	
100-01-6	4-Nitroaniline	U	530	1.0	500	530	140	
534-52-1	4,6-Dinitro-2-Methylphenol	U	1300	1.0	1200	1300	360	
86-30-6	N-Nitrosodiphenylamine	U	700	1.0	660	700	230	
101-55-3	4-Bromophenyl-phenylether	U	350	1.0	330	350	90	
1912-24-9	Atrazine	U	350	1.0	330	350	96	
87-86-5	Pentachlorophenol	U	870	1.0	820	870	250	
120-12-7	Anthracene		620	1.0	330	350	89	
86-74-8	Carbazole		1000	1.0	500	530	120	

LW 3/6/09

KATAHDIN ANALYTICAL SERVICES
Report of Analytical Results

Client: CH2MHill
Project: TO-009 Lejeune
PO No:
Sample Date: 12/22/08
Received Date: 12/23/08
Extraction Date: 12/31/08
Analysis Date: 16-JAN-2009 21:44
Report Date: 01/23/2009
Matrix: SOIL
% Solids: 94.5

Lab ID: SB7369-35
Client ID: MR08-SS185-08D
SDG: TO9-24
Extracted by: AC
Extraction Method: SW846 3550
Analyst: JCG
Analysis Method: SW846 8270C
Lab Prep Batch: WG59486
Units: ug/Kgdrywt

CAS#	Compound	Flags	Results	DF	PQL	Adj.PQL	Adj.MDL	
84-74-2	Di-n-butylphthalate	U	350	1.0	330	350	110	
85-68-7	Butylbenzylphthalate	U	350	1.0	330	350	98	
91-94-1	3,3'-Dichlorobenzidine	U	530	1.0	500	530	120	
218-01-9	Chrysene		5300	1.0	330	350	100	
117-81-7	bis(2-Ethylhexyl)phthalate	J	420	1.0	330	350	100	CCH
117-84-0	Di-n-octylphthalate	pUJ	350	1.0	330	350	220	CCH
367-12-4	2-Fluorophenol		59%					
13127-88-3	Phenol-D6		76%					
4165-60-0	Nitrobenzene-D5		75%					
321-60-8	2-Fluorobiphenyl		80%					
118-79-6	2,4,6-Tribromophenol		60%					
1718-51-0	Terphenyl-D14		124%					

LW 5/6/09

KATAHDIN ANALYTICAL SERVICES
Report of Analytical Results

Client: CH2MHill
Project: CTO-009 Lejeune
PO No:
Sample Date: 12/22/08
Received Date: 12/23/08
Extraction Date: 12/31/08
Analysis Date: 16-JAN-2009 18:09
Report Date: 01/26/2009
Matrix: SOIL
% Solids: 93.4

Lab ID: SB7369-37
Client ID: MR08-IS185-4-5-08D
SDG: TO9-24
Extracted by: AC
Extraction Method: SW846 3550
Analyst: JCG
Analysis Method: SW846 8270C
Lab Prep Batch: WG59486
Units: ug/Kgdrywt

CAS#	Compound	Flags	Results	DF	PQL	Adj.PQL	Adj.MDL	
100-52-7	Benzaldehyde	~~U~~ UJ	540	1.0	500	540	130	ICB
108-95-2	Phenol	U	540	1.0	500	540	170	
111-44-4	Bis(2-Chloroethyl)ether	U	350	1.0	330	350	87	
95-57-8	2-Chlorophenol	U	540	1.0	500	540	180	
95-48-7	2-Methylphenol	U	640	1.0	600	640	210	
108-60-1	2,2'-Oxybis(1-chloropropane)	U	350	1.0	330	350	95	
98-86-2	Acetophenone	U	640	1.0	600	640	190	
621-64-7	N-Nitroso-di-n-propylamine	U	350	1.0	330	350	89	
65794-96-9	3&4-Methylphenol	U	640	1.0	600	640	200	
67-72-1	Hexachloroethane	U	350	1.0	330	350	100	
98-95-3	Nitrobenzene	U	350	1.0	330	350	97	
78-59-1	Isophorone	U	350	1.0	330	350	80	
88-75-5	2-Nitrophenol	U	640	1.0	600	640	180	
105-67-9	2,4-Dimethylphenol	~~U~~ UJ	540	1.0	500	540	180	BSL
111-91-1	Bis(2-Chloroethoxy)methane	U	350	1.0	330	350	100	
120-83-2	2,4-Dichlorophenol	U	540	1.0	500	540	160	
106-47-8	4-Chloroaniline	U	540	1.0	500	540	130	
105-60-2	Caprolactam	U	540	1.0	500	540	150	
59-50-7	4-Chloro-3-Methylphenol	U	540	1.0	500	540	180	
88-06-2	2,4,6-Trichlorophenol	U	540	1.0	500	540	170	
95-95-4	2,4,5-Trichlorophenol	U	540	1.0	500	540	170	
91-58-7	2-Chloronaphthalene	U	350	1.0	330	350	93	
92-52-4	1,1'-Biphenyl	U	350	1.0	330	350	78	
88-74-4	2-Nitroaniline	U	540	1.0	500	540	80	
131-11-3	Dimethyl Phthalate	U	350	1.0	330	350	84	
606-20-2	2,6-Dinitrotoluene	U	350	1.0	330	350	85	
208-96-8	Acenaphthylene	U	350	1.0	330	350	75	
99-09-2	3-Nitroaniline	U	540	1.0	500	540	100	
83-32-9	Acenaphthene	U	350	1.0	330	350	70	
51-28-5	2,4-Dinitrophenol	U	1300	1.0	1200	1300	400	
132-64-9	Dibenzofuran	U	350	1.0	330	350	85	
100-02-7	4-Nitrophenol	U	1300	1.0	1200	1300	330	
121-14-2	2,4-Dinitrotoluene	U	350	1.0	330	350	91	
84-66-2	Diethylphthalate	~~JB~~ 350u	~~88~~	1.0	330	350	86	BL
7005-72-3	4-Chlorophenyl-phenylether	U	350	1.0	330	350	84	
100-01-6	4-Nitroaniline	U	540	1.0	500	540	140	
534-52-1	4,6-Dinitro-2-Methylphenol	U	1300	1.0	1200	1300	360	
86-30-6	N-Nitrosodiphenylamine	U	710	1.0	660	710	230	
101-55-3	4-Bromophenyl-phenylether	U	350	1.0	330	350	91	
1912-24-9	Atrazine	U	350	1.0	330	350	97	
87-86-5	Pentachlorophenol	U	880	1.0	820	880	250	
120-12-7	Anthracene	U	350	1.0	330	350	90	
86-74-8	Carbazole	U	540	1.0	500	540	120	

fuw 3/6/09

KATAHDIN ANALYTICAL SERVICES
Report of Analytical Results

Client: CH2MHill
Project: CTO-009 Lejeune
PO No:
Sample Date: 12/22/08
Received Date: 12/23/08
Extraction Date: 12/31/08
Analysis Date: 16-JAN-2009 18:09
Report Date: 01/26/2009
Matrix: SOIL
% Solids: 93.4

Lab ID: SB7369-37
Client ID: MR08-IS185-4-5-08D
SDG: TO9-24
Extracted by: AC
Extraction Method: SW846 3550
Analyst: JCG
Analysis Method: SW846 8270C
Lab Prep Batch: WG59486
Units: ug/Kgdrywt

CAS#	Compound	Flags	Results	DF	PQL	Adj.PQL	Adj.MDL	
84-74-2	Di-n-butylphthalate	U	350	1.0	330	350	110	
85-68-7	Butylbenzylphthalate	U	350	1.0	330	350	100	
91-94-1	3,3'-Dichlorobenzidine	U	540	1.0	500	540	120	
218-01-9	Chrysene	U	350	1.0	330	350	100	
117-81-7	bis(2-Ethylhexyl)phthalate	~~J~~ J	160	1.0	330	350	100	CCY
117-84-0	Di-n-octylphthalate	~~U~~ UJ	350	1.0	330	350	220	CCY
367-12-4	2-Fluorophenol		48%					
13127-88-3	Phenol-D6		69%					
4165-60-0	Nitrobenzene-D5		78%					
321-60-8	2-Fluorobiphenyl		77%					
118-79-6	2,4,6-Tribromophenol		* 31%					
1718-51-0	Terphenyl-D14		109%					

LW 3/6/09

20

KATAHDIN ANALYTICAL SERVICES
Report of Analytical Results

Client: CH2MHill
Project: CTO-009 Lejeune
PO No:
Sample Date: 12/22/08
Received Date: 12/23/08
Extraction Date: 12/31/08
Analysis Date: 16-JAN-2009 22:25
Report Date: 01/26/2009
Matrix: SOIL
% Solids: 96.0

Lab ID: SB7369-39
Client ID: MR08-SS186-08D
SDG: TO9-24
Extracted by: AC
Extraction Method: SW846 3550
Analyst: JCG
Analysis Method: SW846 8270C
Lab Prep Batch: WG59486
Units: ug/Kgdrywt

CAS#	Compound	Flags	Results	DF	PQL	Adj.PQL	Adj.MDL	
100-52-7	Benzaldehyde	~~U~~ UJ	520	1.0	500	520	120	ICB
108-95-2	Phenol	U	520	1.0	500	520	160	
111-44-4	Bis(2-Chloroethyl)ether	U	340	1.0	330	340	84	
95-57-8	2-Chlorophenol	U	520	1.0	500	520	170	
95-48-7	2-Methylphenol	U	620	1.0	600	620	210	
108-60-1	2,2'-Oxybis(1-chloropropane)	U	340	1.0	330	340	93	
98-86-2	Acetophenone	U	620	1.0	600	620	180	
621-64-7	N-Nitroso-di-n-propylamine	U	340	1.0	330	340	86	
65794-96-9	3&4-Methylphenol	U	620	1.0	600	620	190	
67-72-1	Hexachloroethane	U	340	1.0	330	340	100	
98-95-3	Nitrobenzene	U	340	1.0	330	340	95	
78-59-1	Isophorone	U	340	1.0	330	340	78	
88-75-5	2-Nitrophenol	U	620	1.0	600	620	170	
105-67-9	2,4-Dimethylphenol	~~U~~ UJ	520	1.0	500	520	170	BSL
111-91-1	Bis(2-Chloroethoxy)methane	U	340	1.0	330	340	100	
120-83-2	2,4-Dichlorophenol	U	520	1.0	500	520	160	
106-47-8	4-Chloroaniline	U	520	1.0	500	520	120	
105-60-2	Caprolactam	U	520	1.0	500	520	150	
59-50-7	4-Chloro-3-Methylphenol	U	520	1.0	500	520	170	
88-06-2	2,4,6-Trichlorophenol	U	520	1.0	500	520	160	
95-95-4	2,4,5-Trichlorophenol	U	520	1.0	500	520	160	
91-58-7	2-Chloronaphthalene	U	340	1.0	330	340	90	
92-52-4	1,1'-Biphenyl	U	340	1.0	330	340	76	
88-74-4	2-Nitroaniline	U	520	1.0	500	520	78	
131-11-3	Dimethyl Phthalate	U	340	1.0	330	340	81	
606-20-2	2,6-Dinitrotoluene	U	340	1.0	330	340	82	
208-96-8	Acenaphthylene	U	340	1.0	330	340	73	
99-09-2	3-Nitroaniline	U	520	1.0	500	520	98	
83-32-9	Acenaphthene	U	340	1.0	330	340	68	
51-28-5	2,4-Dinitrophenol	U	1200	1.0	1200	1200	390	
132-64-9	Dibenzofuran	U	340	1.0	330	340	82	
100-02-7	4-Nitrophenol	U	1200	1.0	1200	1200	320	
121-14-2	2,4-Dinitrotoluene	U	340	1.0	330	340	88	
84-66-2	Diethylphthalate	~~JB~~ 340U	~~87~~	1.0	330	340	83	BL
7005-72-3	4-Chlorophenyl-phenylether	U	340	1.0	330	340	81	
100-01-6	4-Nitroaniline	U	520	1.0	500	520	140	
534-52-1	4,6-Dinitro-2-Methylphenol	U	1200	1.0	1200	1200	350	
86-30-6	N-Nitrosodiphenylamine	U	690	1.0	660	690	230	
101-55-3	4-Bromophenyl-phenylether	U	340	1.0	330	340	88	
1912-24-9	Atrazine	U	340	1.0	330	340	95	
87-86-5	Pentachlorophenol	U	850	1.0	820	850	250	
120-12-7	Anthracene	U	340	1.0	330	340	87	
86-74-8	Carbazole	U	520	1.0	500	520	120	

lw 3/6/09

KATAHDIN ANALYTICAL SERVICES
Report of Analytical Results

Client: CH2MHill
Project: CTO-009 Lejeune
PO No:
Sample Date: 12/22/08
Received Date: 12/23/08
Extraction Date: 12/31/08
Analysis Date: 16-JAN-2009 22:25
Report Date: 01/26/2009
Matrix: SOIL
% Solids: 96.0

Lab ID: SB7369-39
Client ID: MR08-SS186-08D
SDG: TO9-24
Extracted by: AC
Extraction Method: SW846 3550
Analyst: JCG
Analysis Method: SW846 8270C
Lab Prep Batch: WG59486
Units: ug/Kgdrywt

CAS#	Compound	Flags	Results	DF	PQL	Adj.PQL	Adj.MDL	
84-74-2	Di-n-butylphthalate	U	340	1.0	330	340	100	
85-68-7	Butylbenzylphthalate	U	340	1.0	330	340	97	
91-94-1	3,3'-Dichlorobenzidine	~~U~~ UJ	520	1.0	500	520	120	CCH
218-01-9	Chrysene	U	340	1.0	330	340	99	
117-81-7	bis(2-Ethylhexyl)phthalate	~~U~~	340	1.0	330	340	100	
117-84-0	Di-n-octylphthalate	~~U~~ UJ	340	1.0	330	340	220	CCH
367-12-4	2-Fluorophenol		66%					
13127-88-3	Phenol-D6		78%					
4165-60-0	Nitrobenzene-D5		76%					
321-60-8	2-Fluorobiphenyl		78%					
118-79-6	2,4,6-Tribromophenol		64%					
1718-51-0	Terphenyl-D14		107%					

LW 3/6/09

ENVIRONMENTAL
Data Services, Inc.

POLYNUCLEAR AROMATIC COMPOUNDS BY 8270SIM

USEPA Region IV - Level IV Review

Site: MCB Camp Lejeune, TO-09 SDG #: TO9-25

Client: CH2M HILL, Inc., Virginia Beach, Virginia Date: March 6, 2009

Laboratory: Katahdin Analytical Services, Scarborough, Maine Reviewer: Nancy Weaver

EDS ID	Client Sample ID	Laboratory Sample ID	Matrix
1	MR08-IS186-4-5-08D	SB7370-2	Soil
2	MR08-SS201-08D	SB7370-4	Soil
3	MR08-IS201-4-5-08D	SB7370-6	Soil

The USEPA "Contract Laboratory Program National Functional Guidelines for Organic Data Review," October 1999, and professional judgment were used in evaluating the data in this summary report.

Holding Times - All samples were extracted within 14 days for soil samples and analyzed within 40 days for all samples.

GC/MS Tuning - All of the DFTPP tunes in the initial and continuing calibrations met the percent relative abundance criteria.

Initial Calibration - The initial calibrations exhibited acceptable %RSD and mean RRF values.

Continuing Calibration - The continuing calibrations exhibited acceptable %D and RRF values except the following.

CCAL Date	Compound	%D/RRF	Qualifier	Affected Samples
01/15/09	Naphthalene	43.38%	J/UJ	1-3
	Fluoranthene	26.98%	J/UJ	1-3
	Hexachlorobutadiene	88.33%	J/UJ	1-3

Surrogates - All samples exhibited acceptable surrogate recoveries.

MS/MSD - A MS/MSD sample was not analyzed.

Laboratory Control Sample - The LCS samples exhibited acceptable %R values.

Internal Standard (IS) Area Performance - All internal standards met response and retention time (RT) criteria except the following.

Sample ID	Internal Standard	Area Count	Qualifier
2	IS5-Chrysene-d12	Low	J/UJ - All associated
	IS6-Perylene-d12	Low	J/UJ - All associated
3	IS5-Chrysene-d12	Low	J/UJ - All associated
	IS6-Perylene-d12	Low	J/UJ - All associated

Method Blank - The method blanks were free of contamination.

Field, Equipment Blank - Field QC results are summarized below.

Blank ID	Compound	Conc. ug/L	Action Level ug/kg	Qualifier	Affected Samples
MR08-FB122008	Hexachlorocyclopentadiene	0.15	12.5	None	All ND
MR08-EB01-122008	Hexachlorocyclopentadiene	0.15	12.5	None	All ND

Field Duplicates - Field duplicate samples were not included in this data package.

Tentatively Identified Compounds (TICs) - TICs were not reported.

Compound Quantitation - No discrepancies were identified.

1

KATAHDIN ANALYTICAL SERVICES
Report of Analytical Results

Client: CH2MHill
Project: TO-009 Lejeune
PO No:
Sample Date: 12/22/08
Received Date: 12/23/08
Extraction Date: 12/31/08
Analysis Date: 16-JAN-2009 04:19
Report Date: 01/17/2009
Matrix: SOIL
% Solids: 88.4

Lab ID: SB7370-2
Client ID: MR08-IS186-4-5-08D
SDG: TO9-25
Extracted by: AC
Extraction Method: SW846 3550
Analyst: JCG
Analysis Method: SW846 M8270C
Lab Prep Batch: WG59487
Units: ug/Kgdrywt

CAS#	Compound	Flags	Results	DF	PQL	Adj.PQL	Adj.MDL	
91-20-3	Naphthalene	~~U~~ UJ	11	1.0	10	11	2.9	CCH
91-57-6	2-Methylnaphthalene	U	11	1.0	10	11	2.5	
86-73-7	Fluorene	U	11	1.0	10	11	3.6	
85-01-8	Phenanthrene	J	8.4	1.0	10	11	2.0	
206-44-0	Fluoranthene	J	68	1.0	10	11	2.0	CCH
129-00-0	Pyrene		78	1.0	10	11	2.4	
56-55-3	Benzo(a)anthracene	J	10	1.0	10	11	2.1	
205-99-2	Benzo(b)fluoranthene	U	11	1.0	10	11	2.7	
207-08-9	Benzo(k)fluoranthene	U	11	1.0	10	11	3.5	
50-32-8	Benzo(a)pyrene	U	11	1.0	10	11	3.7	
193-39-5	Indeno(1,2,3-cd)pyrene	U	11	1.0	10	11	2.1	
53-70-3	Dibenzo(a,h)anthracene	U	11	1.0	10	11	2.0	
191-24-2	Benzo(g,h,i)perylene	U	11	1.0	10	11	2.3	
118-74-1	Hexachlorobenzene	U	11	1.0	10	11	2.0	
87-68-3	Hexachlorobutadiene	~~U~~ UJ	11	1.0	10	11	2.6	CCH
77-47-4	Hexachlorocyclopentadiene	U	11	1.0	10	11	1.7	
7297-45-2	2-Methylnaphthalene-D10		46%					
367-12-4	2,4-Dibromophenol		62%					
81103-79-9	Fluorene-d10		89%					
1718-51-1	Pyrene-D10		139%					

MW
3/6/09

KATAHDIN ANALYTICAL SERVICES
Report of Analytical Results

Client: CH2MHill
Project: TO-009 Lejeune
PO No:
Sample Date: 12/22/08
Received Date: 12/23/08
Extraction Date: 12/31/08
Analysis Date: 16-JAN-2009 04:59
Report Date: 01/17/2009
Matrix: SOIL
% Solids: 94.4

Lab ID: SB7370-4
Client ID: MR08-SS201-08D
SDG: TO9-25
Extracted by: AC
Extraction Method: SW846 3550
Analyst: JCG
Analysis Method: SW846 M8270C
Lab Prep Batch: WG59487
Units: ug/Kgdrywt

CAS#	Compound	Flags	Results	DF	PQL	Adj.PQL	Adj.MDL	
91-20-3	Naphthalene	~~U~~ UJ	10	1.0	10	10	2.8	CCH
91-57-6	2-Methylnaphthalene	U	10	1.0	10	10	2.3	
86-73-7	Fluorene	U	10	1.0	10	10	3.4	
85-01-8	Phenanthrene	U	10	1.0	10	10	1.9	
206-44-0	Fluoranthene	J	100	1.0	10	10	1.9	CCH
129-00-0	Pyrene	J	180	1.0	10	10	2.2	ISL
56-55-3	Benzo(a)anthracene	J	41	1.0	10	10	2.0	
205-99-2	Benzo(b)fluoranthene	~~U~~ UJ	10	1.0	10	10	2.5	
207-08-9	Benzo(k)fluoranthene	~~U~~	10	1.0	10	10	3.3	
50-32-8	Benzo(a)pyrene	~~U~~	10	1.0	10	10	3.5	
193-39-5	Indeno(1,2,3-cd)pyrene	J	12	1.0	10	10	2.0	
53-70-3	Dibenzo(a,h)anthracene	~~U~~ UJ	10	1.0	10	10	1.9	
191-24-2	Benzo(g,h,i)perylene	J	28	1.0	10	10	2.1	
118-74-1	Hexachlorobenzene	~~U~~ UJ	10	1.0	10	10	1.9	
87-68-3	Hexachlorobutadiene	~~U~~ UJ	10	1.0	10	10	2.4	CCH
77-47-4	Hexachlorocyclopentadiene	~~U~~ UJ	10	1.0	10	10	1.6	ISL
7297-45-2	2-Methylnaphthalene-D10		51%					
367-12-4	2,4-Dibromophenol		68%					
81103-79-9	Fluorene-d10		83%					
1718-51-1	Pyrene-D10		158%					

RW
3/6/09

3

KATAHDIN ANALYTICAL SERVICES
Report of Analytical Results

Client: CH2MHill
Project: TO-009 Lejeune
PO No:
Sample Date: 12/22/08
Received Date: 12/23/08
Extraction Date: 12/31/08
Analysis Date: 16-JAN-2009 05:38
Report Date: 01/17/2009
Matrix: SOIL
% Solids: 89.7

Lab ID: SB7370-6
Client ID: MR08-IS201-4-5-08D
SDG: TO9-25
Extracted by: AC
Extraction Method: SW846 3550
Analyst: JCG
Analysis Method: SW846 M8270C
Lab Prep Batch: WG59487
Units: ug/Kgdrywt

CAS#	Compound	Flags	Results	DF	PQL	Adj.PQL	Adj.MDL	
91-20-3	Naphthalene	~~U~~ UJ	11	1.0	10	11	2.9	CCH
91-57-6	2-Methylnaphthalene	U	11	1.0	10	11	2.4	
86-73-7	Fluorene	U	11	1.0	10	11	3.6	
85-01-8	Phenanthrene	U	11	1.0	10	11	2.0	
206-44-0	Fluoranthene	J	62	1.0	10	11	2.0	CCH
129-00-0	Pyrene	J	70	1.0	10	11	2.3	ISL
56-55-3	Benzo(a)anthracene	J	16	1.0	10	11	2.1	
205-99-2	Benzo(b)fluoranthene	U UJ	11	1.0	10	11	2.7	
207-08-9	Benzo(k)fluoranthene	U	11	1.0	10	11	3.4	
50-32-8	Benzo(a)pyrene	U	11	1.0	10	11	3.7	
193-39-5	Indeno(1,2,3-cd)pyrene	U J	3.2	1.0	10	11	2.1	
53-70-3	Dibenzo(a,h)anthracene	U UJ	11	1.0	10	11	2.0	
191-24-2	Benzo(g,h,i)perylene	U	11	1.0	10	11	2.2	
118-74-1	Hexachlorobenzene	U	11	1.0	10	11	2.0	
87-68-3	Hexachlorobutadiene	~~U~~ UJ	11	1.0	10	11	2.6	CCH
77-47-4	Hexachlorocyclopentadiene	U	11	1.0	10	11	1.7	ISL
7297-45-2	2-Methylnaphthalene-D10		50%					
367-12-4	2,4-Dibromophenol		58%					
81103-79-9	Fluorene-d10		84%					
1718-51-1	Pyrene-D10		131%					

hw
3/6/09

ENVIRONMENTAL
Data Services, Inc.

SEMIVOLATILE ORGANIC COMPOUNDS
USEPA Region IV - Level IV Review

Site: MCB Camp Lejeune, TO-09 SDG #: TO9-25

Client: CH2M HILL, Inc., Virginia Beach, Virginia Date: March 6, 2009

Laboratory: Katahdin Analytical Services, Scarborough, Maine Reviewer: Nancy Weaver

EDS ID	Client Sample ID	Laboratory Sample ID	Matrix
1	MR08-IS186-4-5-08D	SB7370-1	Soil
2	MR08-SS201-08D	SB7370-3	Soil
2RE	MR08-SS201-08DRE	SB7370-3RE	Soil
3	MR08-IS201-4-5-08D	SB7370-5	Soil

The USEPA "Contract Laboratory Program National Functional Guidelines for Organic Data Review," October 1999, and professional judgment were used in evaluating the data in this summary report.

Holding Times - All samples were extracted within 14 days for soil samples and analyzed within 40 days for all samples except the following.

Sample	Date Sampled	Date Extracted	# of Days	Qualifier
3RE	12/22/08	01/22/08	31	J/R

GC/MS Tuning - All of the DFTPP tunes in the initial and continuing calibrations met the percent relative abundance criteria.

Initial Calibration - The initial calibrations exhibited acceptable %RSD and mean RRF values except the following.

ICAL Date	Compound	%RSD/RRF	Qualifier	Affected Samples
01/13/09	Benzaldehyde	44.95%	J/UJ	1, 2, 2RE, 3

Continuing Calibration - The continuing calibrations exhibited acceptable %D and RRF values except the following.

CCAL Date	Compound	%D/RRF	Qualifier	Affected Samples
01/16/09	Benzaldehyde	73.32%	None	Already qualified due to ICAL

CCAL Date	Compound	%D/RRF	Qualifier	Affected Samples
01/16/09	bis (2-Ethylhexyl) phthalate	27.75%	J/UJ	1, 3
	di-n-Octyl phthalate	28.58%	J/UJ	1, 3
01/17/09	Benzaldehyde	72.91%	None	Already qualified due to ICAL
	3,3'-Dichlorobenzidine	29.30%	J/UJ	2
	di-n-Octyl phthalate	29.48%	J/UJ	2
01/19/09	Benzaldehyde	61.47%	None	Already qualified due to ICAL
	n-Nitroso-di-n-propyl amine	25.40%	J/UJ	2RE
	Dimethylphthalate	26.14%	J/UJ	2RE
	3,3'-Dichlorobenzidine	29.46%	J/UJ	2RE

Surrogates - All samples exhibited acceptable surrogate recoveries except the following.

Sample ID	Surrogate	%R	Qualifier
1	S5-2,4,6-Tribromophenol	19%	None for 1 out
2	S5-2,4,6-Tribromophenol	22%	None for 1 out
2RE	S5-2,4,6-Tribromophenol	33%	None for 1 out
3	S1-2-Fluorophenol	34%	J/R - acid compounds
	S5-2,4,6-Tribromophenol	8%	J/R - acid compounds

MS/MSD - A MS/MSD sample was not analyzed.

Laboratory Control Sample - The LCS samples exhibited acceptable %R values except the following.

LCS ID	Compound	%R	Qualifier	Affected Samples
WG59486-LCS	2,4-Dimethylphenol	29%	J/UJ	1, 2

Internal Standard (IS) Area Performance - All internal standards met response and retention time (RT) criteria except the following.

Sample ID	Internal Standard	Area Count	Qualifier
2	IS6-Perylene-d12	Low	J/UJ - All associated
2RE	IS5-Chrysene-d12	Low	J/UJ - All associated
	IS6-Perylene-d12	Low	J/UJ - All associated

Method Blank - The method blanks exhibited the following contamination.

Blank ID	Compound	Conc. ug/kg	Action Level ug/kg	Qualifier	Affected Samples
WG59486-BLANK	Diethylphthalate	83	830	U	1-3

Field, Equipment Blank - Field QC results are summarized below.

Blank ID	Compound	Conc. ug/L	Action Level ug/L	Qualifier	Affected Samples
MR08-EB01-122208	None - ND	-	-	-	-
MR08-FB122008	None - ND	-	-	-	-

Field Duplicates - Field duplicates samples were not included in this data package.

Tentatively Identified Compounds (TICs) - TICs were not reported.

Compound Quantitation - Several samples were reanalyzed due to surrogate and LCS recovery deficiencies. Refer to the Form Is for which to use.

KATAHDIN ANALYTICAL SERVICES
Report of Analytical Results

Client: CH2MHill
Project: TO-009 Lejeune
PO No:
Sample Date: 12/22/08
Received Date: 12/23/08
Extraction Date: 12/31/08
Analysis Date: 16-JAN-2009 18:54
Report Date: 01/27/2009
Matrix: SOIL
% Solids: 88.4

Lab ID: SB7370-1
Client ID: MR08-IS186-4-5-08D
SDG: TO9-25
Extracted by: AC
Extraction Method: SW846 3550
Analyst: JCG
Analysis Method: SW846 8270C
Lab Prep Batch: WG59486
Units: ug/Kgdrywt

CAS#	Compound	Flags	Results	DF	PQL	Adj.PQL	Adj.MDL	
100-52-7	Benzaldehyde	~~U~~ UJ	560	1.0	500	560	140	ICB
108-95-2	Phenol	U	560	1.0	500	560	180	
111-44-4	Bis(2-Chloroethyl)ether	U	370	1.0	330	370	92	
95-57-8	2-Chlorophenol	U	560	1.0	500	560	180	
95-48-7	2-Methylphenol	U	680	1.0	600	680	230	
108-60-1	2,2'-Oxybis(1-chloropropane)	U	370	1.0	330	370	100	
98-86-2	Acetophenone	U	680	1.0	600	680	200	
621-64-7	N-Nitroso-di-n-propylamine	U	370	1.0	330	370	94	
65794-96-9	3&4-Methylphenol	U	680	1.0	600	680	210	
67-72-1	Hexachloroethane	U	370	1.0	330	370	110	
98-95-3	Nitrobenzene	U	370	1.0	330	370	100	
78-59-1	Isophorone	U	370	1.0	330	370	85	
88-75-5	2-Nitrophenol	U	680	1.0	600	680	190	
105-67-9	2,4-Dimethylphenol	~~U~~ UJ	560	1.0	500	560	190	BSL
111-91-1	Bis(2-Chloroethoxy)methane	U	370	1.0	330	370	110	
120-83-2	2,4-Dichlorophenol	U	560	1.0	500	560	170	
106-47-8	4-Chloroaniline	U	560	1.0	500	560	130	
105-60-2	Caprolactam	U	560	1.0	500	560	160	
59-50-7	4-Chloro-3-Methylphenol	U	560	1.0	500	560	190	
88-06-2	2,4,6-Trichlorophenol	U	560	1.0	500	560	180	
95-95-4	2,4,5-Trichlorophenol	U	560	1.0	500	560	180	
91-58-7	2-Chloronaphthalene	U	370	1.0	330	370	98	
92-52-4	1,1'-Biphenyl	U	370	1.0	330	370	82	
88-74-4	2-Nitroaniline	U	560	1.0	500	560	85	
131-11-3	Dimethyl Phthalate	U	370	1.0	330	370	88	
606-20-2	2,6-Dinitrotoluene	U	370	1.0	330	370	89	
208-96-8	Acenaphthylene	U	370	1.0	330	370	79	
99-09-2	3-Nitroaniline	U	560	1.0	500	560	110	
83-32-9	Acenaphthene	U	370	1.0	330	370	74	
51-28-5	2,4-Dinitrophenol	U	1400	1.0	1200	1400	430	
132-64-9	Dibenzofuran	U	370	1.0	330	370	89	
100-02-7	4-Nitrophenol	U	1400	1.0	1200	1400	350	
121-14-2	2,4-Dinitrotoluene	U	370	1.0	330	370	96	
84-66-2	Diethylphthalate	~~UB~~ 370U	~~93~~	1.0	330	370	90	BL
7005-72-3	4-Chlorophenyl-phenylether	U	370	1.0	330	370	88	
100-01-6	4-Nitroaniline	U	560	1.0	500	560	150	
534-52-1	4,6-Dinitro-2-Methylphenol	U	1400	1.0	1200	1400	380	
86-30-6	N-Nitrosodiphenylamine	U	750	1.0	660	750	250	
101-55-3	4-Bromophenyl-phenylether	U	370	1.0	330	370	96	
1912-24-9	Atrazine	U	370	1.0	330	370	100	
87-86-5	Pentachlorophenol	U	930	1.0	820	930	270	
120-12-7	Anthracene	U	370	1.0	330	370	95	
86-74-8	Carbazole	U	560	1.0	500	560	120	

lw
3/6/09

KATAHDIN ANALYTICAL SERVICES
Report of Analytical Results

Client: CH2MHill
Project: TO-009 Lejeune
PO No:
Sample Date: 12/22/08
Received Date: 12/23/08
Extraction Date: 12/31/08
Analysis Date: 16-JAN-2009 18:54
Report Date: 01/27/2009
Matrix: SOIL
% Solids: 88.4

Lab ID: SB7370-1
Client ID: MR08-IS186-4-5-08D
SDG: TO9-25
Extracted by: AC
Extraction Method: SW846 3550
Analyst: JCG
Analysis Method: SW846 8270C
Lab Prep Batch: WG59486
Units: ug/Kgdrywt

CAS#	Compound	Flags	Results	DF	PQL	Adj.PQL	Adj.MDL	
84-74-2	Di-n-butylphthalate	U	370	1.0	330	370	110	
85-68-7	Butylbenzylphthalate	U	370	1.0	330	370	100	
91-94-1	3,3'-Dichlorobenzidine	U	560	1.0	500	560	130	
218-01-9	Chrysene	U	370	1.0	330	370	110	
117-81-7	bis(2-Ethylhexyl)phthalate	~~U~~ J	220	1.0	330	370	110	CCH
117-84-0	Di-n-octylphthalate	~~U~~ UJ	370	1.0	330	370	240	CCH
367-12-4	2-Fluorophenol		41%					
13127-88-3	Phenol-D6		63%					
4165-60-0	Nitrobenzene-D5		72%					
321-60-8	2-Fluorobiphenyl		73%					
118-79-6	2,4,6-Tribromophenol		* 19%					
1718-51-0	Terphenyl-D14		114%					

LW
3/6/09

2

KATAHDIN ANALYTICAL SERVICES
Report of Analytical Results

Client: CH2MHill
Project: TO-009 Lejeune
PO No:
Sample Date: 12/22/08
Received Date: 12/23/08
Extraction Date: 12/31/08
Analysis Date: 17-JAN-2009 21:53
Report Date: 01/27/2009
Matrix: SOIL
% Solids: 94.4

Lab ID: SB7370-3
Client ID: MR08-SS201-08D
SDG: TO9-25
Extracted by: AC
Extraction Method: SW846 3550
Analyst: JCG
Analysis Method: SW846 8270C
Lab Prep Batch: WG59486
Units: ug/Kgdrywt

CAS#	Compound	Flags	Results	DF	PQL	Adj.PQL	Adj.MDL	
100-52-7	Benzaldehyde	~~U~~ UJ	530	1.0	500	530	130	ICB
108-95-2	Phenol	U	530	1.0	500	530	160	
111-44-4	Bis(2-Chloroethyl)ether	U	350	1.0	330	350	86	
95-57-8	2-Chlorophenol	U	530	1.0	500	530	170	
95-48-7	2-Methylphenol	U	640	1.0	600	640	210	
108-60-1	2,2'-Oxybis(1-chloropropane)	U	350	1.0	330	350	94	
98-86-2	Acetophenone	U	640	1.0	600	640	190	
621-64-7	N-Nitroso-di-n-propylamine	U	350	1.0	330	350	88	
65794-96-9	3&4-Methylphenol	U	640	1.0	600	640	200	
67-72-1	Hexachloroethane	U	350	1.0	330	350	100	
98-95-3	Nitrobenzene	U	350	1.0	330	350	96	
78-59-1	Isophorone	U	350	1.0	330	350	79	
88-75-5	2-Nitrophenol	U	640	1.0	600	640	180	
105-67-9	2,4-Dimethylphenol	~~U~~ UJ	530	1.0	500	530	170	BSL
111-91-1	Bis(2-Chloroethoxy)methane	U	350	1.0	330	350	100	
120-83-2	2,4-Dichlorophenol	U	530	1.0	500	530	160	
106-47-8	4-Chloroaniline	U	530	1.0	500	530	130	
105-60-2	Caprolactam	U	530	1.0	500	530	150	
59-50-7	4-Chloro-3-Methylphenol	U	530	1.0	500	530	180	
88-06-2	2,4,6-Trichlorophenol	U	530	1.0	500	530	160	
95-95-4	2,4,5-Trichlorophenol	U	530	1.0	500	530	160	
91-58-7	2-Chloronaphthalene	U	350	1.0	330	350	92	
92-52-4	1,1'-Biphenyl	U	350	1.0	330	350	77	
88-74-4	2-Nitroaniline	U	530	1.0	500	530	79	
131-11-3	Dimethyl Phthalate	U	350	1.0	330	350	83	
606-20-2	2,6-Dinitrotoluene	U	350	1.0	330	350	84	
208-96-8	Acenaphthylene	U	350	1.0	330	350	74	
99-09-2	3-Nitroaniline	U	530	1.0	500	530	100	
83-32-9	Acenaphthene	U	350	1.0	330	350	69	
51-28-5	2,4-Dinitrophenol	U	1300	1.0	1200	1300	400	
132-64-9	Dibenzofuran	U	350	1.0	330	350	84	
100-02-7	4-Nitrophenol	U	1300	1.0	1200	1300	330	
121-14-2	2,4-Dinitrotoluene	U	350	1.0	330	350	90	
84-66-2	Diethylphthalate	~~JB~~ 350U	~~89~~	1.0	330	350	85	BL
7005-72-3	4-Chlorophenyl-phenylether	U	350	1.0	330	350	83	
100-01-6	4-Nitroaniline	U	530	1.0	500	530	140	
534-52-1	4,6-Dinitro-2-Methylphenol	U	1300	1.0	1200	1300	360	
86-30-6	N-Nitrosodiphenylamine	U	700	1.0	660	700	230	
101-55-3	4-Bromophenyl-phenylether	U	350	1.0	330	350	90	
1912-24-9	Atrazine	U	350	1.0	330	350	96	
87-86-5	Pentachlorophenol	U	870	1.0	820	870	250	
120-12-7	Anthracene	U	350	1.0	330	350	89	
86-74-8	Carbazole	U	530	1.0	500	530	120	

LW
3/6/09

KATAHDIN ANALYTICAL SERVICES
Report of Analytical Results

Client: CH2MHill
Project: TO-009 Lejeune
PO No:
Sample Date: 12/22/08
Received Date: 12/23/08
Extraction Date: 12/31/08
Analysis Date: 17-JAN-2009 21:53
Report Date: 01/27/2009
Matrix: SOIL
% Solids: 94.4

Lab ID: SB7370-3
Client ID: MR08-SS201-08D
SDG: TO9-25
Extracted by: AC
Extraction Method: SW846 3550
Analyst: JCG
Analysis Method: SW846 8270C
Lab Prep Batch: WG59486
Units: ug/Kgdrywt

CAS#	Compound	Flags	Results	DF	PQL	Adj.PQL	Adj.MDL	
84-74-2	Di-n-butylphthalate	U	350	1.0	330	350	110	
85-68-7	Butylbenzylphthalate	U	350	1.0	330	350	98	
91-94-1	3,3'-Dichlorobenzidine	~~U~~ UJ	530	1.0	500	530	120	CCH
218-01-9	Chrysene	U	350	1.0	330	350	100	
117-81-7	bis(2-Ethylhexyl)phthalate	J	530	1.0	330	350	100	JSL
117-84-0	Di-n-octylphthalate	~~U~~ UJ	350	1.0	330	350	220	CCH
367-12-4	2-Fluorophenol		47%					
13127-88-3	Phenol-D6		71%					
4165-60-0	Nitrobenzene-D5		78%					
321-60-8	2-Fluorobiphenyl		80%					
118-79-6	2,4,6-Tribromophenol		* 22%					
1718-51-0	Terphenyl-D14		102%					

MW
3/6/09

2RE

KATAHDIN ANALYTICAL SERVICES
Report of Analytical Results

Client: CH2MHill
Project: TO-009 Lejeune
PO No:
Sample Date: 12/22/08
Received Date: 12/23/08
Extraction Date: 12/31/08
Analysis Date: 19-JAN-2009 21:47
Report Date: 01/27/2009
Matrix: SOIL
% Solids: 94.4

Lab ID: SB7370-3RA
Client ID: MR08-SS201-08D
SDG: TO9-25
Extracted by: AC
Extraction Method: SW846 3550
Analyst: JCG
Analysis Method: SW846 8270C
Lab Prep Batch: WG59486
Units: ug/Kgdrywt

Use orig NAC

CAS#	Compound	Flags	Results	DF	PQL	Adj.PQL	Adj.MDL	
100-52-7	Benzaldehyde	~~U~~ UJ	530	1.0	500	530	130	ICB
108-95-2	Phenol	U	530	1.0	500	530	160	
111-44-4	Bis(2-Chloroethyl)ether	U	350	1.0	330	350	86	
95-57-8	2-Chlorophenol	U	530	1.0	500	530	170	
95-48-7	2-Methylphenol	U	640	1.0	600	640	210	
108-60-1	2,2'-Oxybis(1-chloropropane)	U	350	1.0	330	350	94	
98-86-2	Acetophenone	U	640	1.0	600	640	190	
621-64-7	N-Nitroso-di-n-propylamine	~~U~~ UJ	350	1.0	330	350	88	CCH
65794-96-9	3&4-Methylphenol	U	640	1.0	600	640	200	
67-72-1	Hexachloroethane	U	350	1.0	330	350	100	
98-95-3	Nitrobenzene	U	350	1.0	330	350	96	
78-59-1	Isophorone	U	350	1.0	330	350	79	
88-75-5	2-Nitrophenol	U	640	1.0	600	640	180	
105-67-9	2,4-Dimethylphenol	U	530	1.0	500	530	170	
111-91-1	Bis(2-Chloroethoxy)methane	U	350	1.0	330	350	100	
120-83-2	2,4-Dichlorophenol	U	530	1.0	500	530	160	
106-47-8	4-Chloroaniline	U	530	1.0	500	530	130	
105-60-2	Caprolactam	U	530	1.0	500	530	150	
59-50-7	4-Chloro-3-Methylphenol	U	530	1.0	500	530	180	
88-06-2	2,4,6-Trichlorophenol	U	530	1.0	500	530	160	
95-95-4	2,4,5-Trichlorophenol	U	530	1.0	500	530	160	
91-58-7	2-Chloronaphthalene	U	350	1.0	330	350	92	
92-52-4	1,1'-Biphenyl	U	350	1.0	330	350	77	
88-74-4	2-Nitroaniline	U	530	1.0	500	530	79	
131-11-3	Dimethyl Phthalate	~~U~~ UJ	350	1.0	330	350	83	CCH
606-20-2	2,6-Dinitrotoluene	U	350	1.0	330	350	84	
208-96-8	Acenaphthylene	U	350	1.0	330	350	74	
99-09-2	3-Nitroaniline	U	530	1.0	500	530	100	
83-32-9	Acenaphthene	U	350	1.0	330	350	69	
51-28-5	2,4-Dinitrophenol	U	1300	1.0	1200	1300	400	
132-64-9	Dibenzofuran	U	350	1.0	330	350	84	
100-02-7	4-Nitrophenol	U	1300	1.0	1200	1300	330	
121-14-2	2,4-Dinitrotoluene	U	350	1.0	330	350	90	
84-66-2	Diethylphthalate	U	350	1.0	330	350	85	
7005-72-3	4-Chlorophenyl-phenylether	U	350	1.0	330	350	83	
100-01-6	4-Nitroaniline	U	530	1.0	500	530	140	
534-52-1	4,6-Dinitro-2-Methylphenol	U	1300	1.0	1200	1300	360	
86-30-6	N-Nitrosodiphenylamine	U	700	1.0	660	700	230	
101-55-3	4-Bromophenyl-phenylether	U	350	1.0	330	350	90	
1912-24-9	Atrazine	U	350	1.0	330	350	96	
87-86-5	Pentachlorophenol	U	870	1.0	820	870	250	
120-12-7	Anthracene	U	350	1.0	330	350	89	
86-74-8	Carbazole	U	530	1.0	500	530	120	

RE

LW
3/6/09

2 RE

KATAHDIN ANALYTICAL SERVICES
Report of Analytical Results

Client: CH2MHill
Project: TO-009 Lejeune
PO No:
Sample Date: 12/22/08
Received Date: 12/23/08
Extraction Date: 12/31/08
Analysis Date: 19-JAN-2009 21:47
Report Date: 01/27/2009
Matrix: SOIL
% Solids: 94.4

Lab ID: SB7370-3RA
Client ID: MR08-SS201-08D
SDG: TO9-25
Extracted by: AC
Extraction Method: SW846 3550
Analyst: JCG
Analysis Method: SW846 8270C
Lab Prep Batch: WG59486
Units: ug/Kgdrywt

Use original

CAS#	Compound	Flags	Results	DF	PQL	Adj.PQL	Adj.MDL	
84-74-2	Di-n-butylphthalate	U	350	1.0	330	350	110	
85-68-7	Butylbenzylphthalate	U	350	1.0	330	350	98	
91-94-1	3,3'-Dichlorobenzidine	~~U~~ UJ	530	1.0	500	530	120	CCH
218-01-9	Chrysene	~~U~~ ↓	350	1.0	330	350	100	ISL
117-81-7	bis(2-Ethylhexyl)phthalate		590	1.0	330	350	100	
117-84-0	Di-n-octylphthalate	~~U~~ UJ	350	1.0	330	350	220	↓
367-12-4	2-Fluorophenol		52%					
13127-88-3	Phenol-D6		70%					
4165-60-0	Nitrobenzene-D5		77%					
321-60-8	2-Fluorobiphenyl		79%					
118-79-6	2,4,6-Tribromophenol		* 33%					
1718-51-0	Terphenyl-D14		114%					

R RE

LW 3/6/09

3

KATAHDIN ANALYTICAL SERVICES
Report of Analytical Results

Client: CH2MHill
Project: TO-009 Lejeune
PO No:
Sample Date: 12/22/08
Received Date: 12/23/08
Extraction Date: 12/31/08
Analysis Date: 16-JAN-2009 19:38
Report Date: 01/27/2009
Matrix: SOIL
% Solids: 89.7

Lab ID: SB7370-5
Client ID: MR08-IS201-4-5-08D
SDG: TO9-25
Extracted by: AC
Extraction Method: SW846 3550
Analyst: JCG
Analysis Method: SW846 8270C
Lab Prep Batch: WG59486
Units: ug/Kgdrywt

CAS#	Compound	Flags	Results	DF	PQL	Adj.PQL	Adj.MDL	
100-52-7	Benzaldehyde	~~U~~ UJ	560	1.0	500	560	130	ICB
108-95-2	Phenol	~~U~~ R	560	1.0	500	560	170	SSL
111-44-4	Bis(2-Chloroethyl)ether	U	370	1.0	330	370	90	
95-57-8	2-Chlorophenol	~~U~~ R	560	1.0	500	560	180	SSL
95-48-7	2-Methylphenol	~~U~~ R	670	1.0	600	670	220	SSL
108-60-1	2,2'-Oxybis(1-chloropropane)	U	370	1.0	330	370	99	
98-86-2	Acetophenone	U	670	1.0	600	670	200	
621-64-7	N-Nitroso-di-n-propylamine	U	370	1.0	330	370	92	
65794-96-9	3&4-Methylphenol	~~U~~ R	670	1.0	600	670	210	SSL
67-72-1	Hexachloroethane	U	370	1.0	330	370	110	
98-95-3	Nitrobenzene	U	370	1.0	330	370	100	
78-59-1	Isophorone	U	370	1.0	330	370	84	
88-75-5	2-Nitrophenol	~~U~~ R	670	1.0	600	670	190	SSL
105-67-9	2,4-Dimethylphenol	~~U~~ R	560	1.0	500	560	180	SSL
111-91-1	Bis(2-Chloroethoxy)methane	U	370	1.0	330	370	110	
120-83-2	2,4-Dichlorophenol	~~U~~ R	560	1.0	500	560	170	SSL
106-47-8	4-Chloroaniline	U	560	1.0	500	560	130	
105-60-2	Caprolactam	U	560	1.0	500	560	160	
59-50-7	4-Chloro-3-Methylphenol	~~U~~ R	560	1.0	500	560	180	SSL
88-06-2	2,4,6-Trichlorophenol	~~U~~ ↓	560	1.0	500	560	170	↓
95-95-4	2,4,5-Trichlorophenol	~~U~~ ↓	560	1.0	500	560	170	
91-58-7	2-Chloronaphthalene	U	370	1.0	330	370	97	
92-52-4	1,1'-Biphenyl	U	370	1.0	330	370	81	
88-74-4	2-Nitroaniline	U	560	1.0	500	560	84	
131-11-3	Dimethyl Phthalate	U	370	1.0	330	370	87	
606-20-2	2,6-Dinitrotoluene	U	370	1.0	330	370	88	
208-96-8	Acenaphthylene	U	370	1.0	330	370	78	
99-09-2	3-Nitroaniline	U	560	1.0	500	560	100	
83-32-9	Acenaphthene	U	370	1.0	330	370	72	
51-28-5	2,4-Dinitrophenol	~~U~~ R	1300	1.0	1200	1300	420	SSL
132-64-9	Dibenzofuran	U	370	1.0	330	370	88	
100-02-7	4-Nitrophenol	~~U~~ R	1300	1.0	1200	1300	340	SSL
121-14-2	2,4-Dinitrotoluene	U	370	1.0	330	370	95	
84-66-2	Diethylphthalate	~~JB~~ 370U	~~90~~	1.0	330	370	89	BL
7005-72-3	4-Chlorophenyl-phenylether	U	370	1.0	330	370	87	
100-01-6	4-Nitroaniline	U	560	1.0	500	560	150	
534-52-1	4,6-Dinitro-2-Methylphenol	~~U~~ R	1300	1.0	1200	1300	380	SSL
86-30-6	N-Nitrosodiphenylamine	U	740	1.0	660	740	240	
101-55-3	4-Bromophenyl-phenylether	U	370	1.0	330	370	95	
1912-24-9	Atrazine	U	370	1.0	330	370	100	
87-86-5	Pentachlorophenol	~~U~~ R	910	1.0	820	910	260	SSL
120-12-7	Anthracene	U	370	1.0	330	370	94	
86-74-8	Carbazole	U	560	1.0	500	560	120	

lew
3/6/09

3

KATAHDIN ANALYTICAL SERVICES
Report of Analytical Results

Client: CH2MHill
Project: TO-009 Lejeune
PO No:
Sample Date: 12/22/08
Received Date: 12/23/08
Extraction Date: 12/31/08
Analysis Date: 16-JAN-2009 19:38
Report Date: 01/27/2009
Matrix: SOIL
% Solids: 89.7

Lab ID: SB7370-5
Client ID: MR08-IS201-4-5-08D
SDG: TO9-25
Extracted by: AC
Extraction Method: SW846 3550
Analyst: JCG
Analysis Method: SW846 8270C
Lab Prep Batch: WG59486
Units: ug/Kgdrywt

CAS#	Compound	Flags	Results	DF	PQL	Adj.PQL	Adj.MDL	
84-74-2	Di-n-butylphthalate	U	370	1.0	330	370	110	
85-68-7	Butylbenzylphthalate	U	370	1.0	330	370	100	
91-94-1	3,3'-Dichlorobenzidine	U	560	1.0	500	560	130	
218-01-9	Chrysene	U	370	1.0	330	370	100	
117-81-7	bis(2-Ethylhexyl)phthalate	J	460	1.0	330	370	110	CCH
117-84-0	Di-n-octylphthalate	~~U~~ UJ	370	1.0	330	370	240	CCH
367-12-4	2-Fluorophenol		* 34%					
13127-88-3	Phenol-D6		63%					
4165-60-0	Nitrobenzene-D5		77%					
321-60-8	2-Fluorobiphenyl		77%					
118-79-6	2,4,6-Tribromophenol		* 8%					
1718-51-0	Terphenyl-D14		118%					

LW
3/6/09

3RE

KATAHDIN ANALYTICAL SERVICES
Report of Analytical Results

Client: CH2MHill
Project: TO-009 Lejeune
PO No:
Sample Date: 12/22/08
Received Date: 12/23/08
Extraction Date: 01/22/09
Analysis Date: 27-JAN-2009 07:00
Report Date: 01/27/2009
Matrix: SOIL
% Solids: 89.7

Lab ID: SB7370-5RE
Client ID: MR08-IS201-4-5-08D
SDG: TO9-25
Extracted by: CB
Extraction Method: SW846 3550
Analyst: JCG
Analysis Method: SW846 8270C
Lab Prep Batch: WG60086
Units: ug/Kgdrywt

use original

R RE

CAS#	Compound	Flags	Results	DF	PQL	Adj.PQL	Adj.MDL
100-52-7	Benzaldehyde	U R	560	1.0	500	560	130 HT
108-95-2	Phenol	U	560	1.0	500	560	170
111-44-4	Bis(2-Chloroethyl)ether	U	370	1.0	330	370	90
95-57-8	2-Chlorophenol	U	560	1.0	500	560	180
95-48-7	2-Methylphenol	U	670	1.0	600	670	220
108-60-1	2,2'-Oxybis(1-chloropropane)	U	370	1.0	330	370	99
98-86-2	Acetophenone	U	670	1.0	600	670	200
621-64-7	N-Nitroso-di-n-propylamine	U	370	1.0	330	370	92
65794-96-9	3&4-Methylphenol	U	670	1.0	600	670	210
67-72-1	Hexachloroethane	U	370	1.0	330	370	110
98-95-3	Nitrobenzene	U	370	1.0	330	370	100
78-59-1	Isophorone	U	370	1.0	330	370	84
88-75-5	2-Nitrophenol	U	670	1.0	600	670	190
105-67-9	2,4-Dimethylphenol	U	560	1.0	500	560	180
111-91-1	Bis(2-Chloroethoxy)methane	U	370	1.0	330	370	110
120-83-2	2,4-Dichlorophenol	U	560	1.0	500	560	170
106-47-8	4-Chloroaniline	U	560	1.0	500	560	130
105-60-2	Caprolactam	U	560	1.0	500	560	160
59-50-7	4-Chloro-3-Methylphenol	U	560	1.0	500	560	180
88-06-2	2,4,6-Trichlorophenol	U	560	1.0	500	560	170
95-95-4	2,4,5-Trichlorophenol	U	560	1.0	500	560	170
91-58-7	2-Chloronaphthalene	U	370	1.0	330	370	97
92-52-4	1,1'-Biphenyl	U	370	1.0	330	370	81
88-74-4	2-Nitroaniline	U	560	1.0	500	560	84
131-11-3	Dimethyl Phthalate	U	370	1.0	330	370	87
606-20-2	2,6-Dinitrotoluene	U	370	1.0	330	370	88
208-96-8	Acenaphthylene	U	370	1.0	330	370	78
99-09-2	3-Nitroaniline	U	560	1.0	500	560	100
83-32-9	Acenaphthene	U	370	1.0	330	370	72
51-28-5	2,4-Dinitrophenol	U	1300	1.0	1200	1300	420
132-64-9	Dibenzofuran	U	370	1.0	330	370	88
100-02-7	4-Nitrophenol	U	1300	1.0	1200	1300	340
121-14-2	2,4-Dinitrotoluene	U	370	1.0	330	370	95
84-66-2	Diethylphthalate	U	370	1.0	330	370	89
7005-72-3	4-Chlorophenyl-phenylether	U	370	1.0	330	370	87
100-01-6	4-Nitroaniline	U	560	1.0	500	560	150
534-52-1	4,6-Dinitro-2-Methylphenol	U	1300	1.0	1200	1300	380
86-30-6	N-Nitrosodiphenylamine	U	740	1.0	660	740	240
101-55-3	4-Bromophenyl-phenylether	U	370	1.0	330	370	95
1912-24-9	Atrazine	U	370	1.0	330	370	100
87-86-5	Pentachlorophenol	U	910	1.0	820	910	260
120-12-7	Anthracene	U	370	1.0	330	370	94
86-74-8	Carbazole	U	560	1.0	500	560	120

MW 3/6/09

3 RE

KATAHDIN ANALYTICAL SERVICES
Report of Analytical Results

Client: CH2MHill
Project: TO-009 Lejeune
PO No:
Sample Date: 12/22/08
Received Date: 12/23/08
Extraction Date: 01/22/09
Analysis Date: 27-JAN-2009 07:00
Report Date: 01/27/2009
Matrix: SOIL
% Solids: 89.7

Lab ID: SB7370-5RE
Client ID: MR08-IS201-4-5-08D
SDG: TO9-25
Extracted by: CB
Extraction Method: SW846 3550
Analyst: JCG
Analysis Method: SW846 8270C
Lab Prep Batch: WG60086
Units: ug/Kgdrywt

Use original

CAS#	Compound	Flags	Results	DF	PQL	Adj.PQL	Adj.MDL	
84-74-2	Di-n-butylphthalate	U R	370	1.0	330	370	110	HT
85-68-7	Butylbenzylphthalate	U	370	1.0	330	370	100	
91-94-1	3,3'-Dichlorobenzidine	U	560	1.0	500	560	130	
218-01-9	Chrysene	U	370	1.0	330	370	100	
117-81-7	bis(2-Ethylhexyl)phthalate	J J	330	1.0	330	370	110	
117-84-0	Di-n-octylphthalate	U R	370	1.0	330	370	240	
367-12-4	2-Fluorophenol		71%					
13127-88-3	Phenol-D6		79%					
4165-60-0	Nitrobenzene-D5		70%					
321-60-8	2-Fluorobiphenyl		69%					
118-79-6	2,4,6-Tribromophenol		82%					
1718-51-0	Terphenyl-D14		92%					

R RE

JW 3/6/09

ENVIRONMENTAL
Data Services, Inc.

POLYNUCLEAR AROMATIC COMPOUNDS BY 8270SIM

USEPA Region IV - Level IV Review

Site: MCB Camp Lejeune, TO-09 SDG #: TO9-9

Client: CH2M HILL, Inc., Virginia Beach, Virginia Date: March 1, 2009

Laboratory: Katahdin Analytical Services, Scarborough, Maine Reviewer: Nancy Weaver

EDS ID	Client Sample ID	Laboratory Sample ID	Matrix
1	MR08-SS051-08D	SB6918-13	Soil
2	MR08-IS051-5-6-08D	SB6918-14	Soil
3	MR08-SS050-08D	SB6918-15	Soil
4	MR08-IS050-5-6-08D	SB6918-16	Soil
5	SB6918-SS052-08D	SB6918-17	Soil
6	MR08-IS052-5-6-08D	SB6918-18	Soil
7	MR08-SS053-08D	SB6918-19	Soil
8	MR08-IS053-5-6-08D	SB6918-20	Soil
9	MR08-SS054-08D	SB6918-21	Soil
10	MR08-IS054-6-7-08D	SB6918-22	Soil
11	MR08-SS055-08D	SB6918-23	Soil
12	MR08-IS055-4-5-08D	SB6918-24	Soil
13	MR08-SS067-08D	SB6961-2	Soil
13RE	MR08-SS067-08DRE	SB6961-2RE	Soil
14	MR08-IS067-6-7-08D	SB6961-4	Soil
15	MR08-SS068-08D	SB6961-6	Soil
15MS	MR08-SS068-08DMS	SB6961-6MS	Soil
15MSD	MR08-SS068-08DMSD	SB6961-6MSD	Soil
15RE	MR08-SS068-08DRE	SB6961-6RE	Soil
16	MR08-SS069-08D	SB6961-8	Soil
16RE	MR08-SS069-08DRE	SB6961-8RE	Soil
17	MR08-SS069D-08D	SB6961-10	Soil
17RE	MR08-SS069D-08DRE	SB6961-10RE	Soil
18RE	MR08-IS069-6-7-08DRE	SB6961-12RE	Soil
19	MR08-IS069D-6-7-08D	SB6961-14	Soil
20	MR08-SS070-08D	SB6961-16	Soil

The USEPA "Contract Laboratory Program National Functional Guidelines for Organic Data Review," October 1999, and professional judgement were used in evaluating the data in this summary report.

Holding Times - All samples were extracted within 14 days for soil samples and analyzed within 40 days for all samples.

GC/MS Tuning - All of the DFTPP tunes in the initial and continuing calibrations met the percent relative abundance criteria.

Initial Calibration - The initial calibrations exhibited acceptable %RSD and mean RRF values.

Continuing Calibration - The continuing calibrations exhibited acceptable %D and RRF values except the following.

CCAL Date	Compound	%D/RRF	Qualifier	Affected Samples
12/18/08	Naphthalene	31.14%	J/UJ	2-12
12/20/08	Naphthalene	33.07%	J/UJ	13-17, 19, 20
	Phenanthrene	25.38%	J/UJ	13-17, 19, 20
	Hexachlorobenzene	37.69%	J/UJ	13-20 unless already qualified due to IS
12/22/08	Hexachlorocyclopentadiene	66.11%	None	Already qualified due to IS
12/23/08	Pyrene	29.64%	J/UJ	18RE
	Hexachlorocyclopentadiene	39.78%	J/UJ	18RE

Surrogates - All samples exhibited acceptable surrogate recoveries except the following.

Sample ID	Surrogate	%R	Qualifier
15	S3-Fluorene-d10	48%	None for 1 out
15RE	S3-Fluorene-d10	52%	None for 1 out

MS/MSD - The MS/MSD sample exhibited acceptable %R and RPD values except the following.

MS/MSD Sample ID	Compound	MS/MSD %R/RPD	Qualifier
15	Pyrene	Ok/116%/Ok	J

Laboratory Control Sample - The LCS samples exhibited acceptable %R values except the following.

LCS ID	Compound	%R	Qualifier	Affected Samples
WG59748-LCS	Naphthalene	106%	J	1
	2-Methylnaphtalene	143%	J	1, 3, 7, 9, 11

Internal Standard (IS) Area Performance - All internal standards met response and retention time (RT) criteria except the following.

Sample ID	Internal Standard	Area Count	Qualifier
5	IS6-Perylene-d12	Low	J/UJ - Associated compounds
7	IS6-Perylene-d12	Low	J/UJ - Associated compounds
9	IS6-Perylene-d12	Low	J/UJ - Associated compounds
11	IS6-Perylene-d12	Low	J/UJ - Associated compounds
13	IS6-Perylene-d12	Low	J/UJ - Associated compounds
13RE	IS6-Perylene-d12	Low	J/UJ - Associated compounds
15	IS6-Perylene-d12	Low	J/UJ - Associated compounds
15RE	IS6-Perylene-d12	Low	J/UJ - Associated compounds
16	IS5-Chrysene-d12	Low	J/UJ - Associated compounds
	IS6-Perylene-d12	Severely Low	J/R- Associated compounds
16RE	IS6-Perylene-d12	Low	J/UJ - Associated compounds
17	IS6-Perylene-d12	Low	J/UJ - Associated compounds
17RE	IS6-Perylene-d12	Low	J/UJ - Associated compounds

Method Blank - The method blanks were free of contamination.

Field, Equipment Blank - Field QC results are summarized below.

Blank ID	Compound	Conc. ug/L	Action Level ug/L	Qualifier	Affected Samples
MR08-EB-120208-SS	None - ND	-	-	-	-
MR08-EB-120208-IS	None - ND	-	-	-	-
MR08-FB01120608	None - ND	-	-	-	-

Field Duplicates - Field duplicate results are summarized below.

Compound	MR08-SS069-08D ug/kg	MR08-SS069D-08D ug/kg	RPD	Qualifier
2-Methylnaphthalene	4.0	4.6	14%	None
Fluoranthene	27	27	0%	None
Pyrene	23	23	0%	None
Benzo (a) anthracene	15	13	14%	None
Benzo (b) fluoranthene	34	38	11%	None
Benzo (k) fluoranthene	17	18	6%	None
Benzo (a) pyrene	13	15	14%	None
Indeno (1,2,3-cd) pyrene	13	16	21%	None
Benzo (g,h,i) perylene	10	14	33%	None
Hexachlorocyclopentadiene	16 U	9.6	NC	None

Compound	MR08-IS069-6-7-08D ug/kg	MR08-IS069D-6-7-08D ug/kg	RPD	Qualifier
None	ND	ND	-	-

Tentatively Identified Compounds (TICs) - TICs were not reported.

Compound Quantitation - Several samples were reanalyzed due to internal standard and surrogate recovery problems. Refer to Form Is for which to use for reporting purposes.

KATAHDIN ANALYTICAL SERVICES
Report of Analytical Results

Client: CH2MHill
Project: TO-009 Lejeune
PO No:
Sample Date: 12/02/08
Received Date: 12/03/08
Extraction Date: 12/04/08
Analysis Date: 18-DEC-2008 19:23
Report Date: 12/23/2008
Matrix: SOIL
% Solids: 59.6

Lab ID: SB6918-13
Client ID: MR08-SS051-08D
SDG: TO9-9
Extracted by: AC
Extraction Method: SW846 3550
Analyst: JCG
Analysis Method: SW846 M8270C
Lab Prep Batch: WG58748
Units: ug/Kgdrywt

CAS#	Compound	Flags	Results	DF	PQL	Adj.PQL	Adj.MDL	
91-20-3	Naphthalene	~~J~~ J	14	1.0	10	17	4.4	BSH
91-57-6	2-Methylnaphthalene	J	32	1.0	10	17	3.7	BSH
86-73-7	Fluorene	U	17	1.0	10	17	5.4	
85-01-8	Phenanthrene		45	1.0	10	17	3.0	
206-44-0	Fluoranthene		36	1.0	10	17	3.0	
129-00-0	Pyrene		40	1.0	10	17	3.5	
56-55-3	Benzo(a)anthracene		23	1.0	10	17	3.2	
205-99-2	Benzo(b)fluoranthene		54	1.0	10	17	4.0	
207-08-9	Benzo(k)fluoranthene		24	1.0	10	17	5.2	
50-32-8	Benzo(a)pyrene		21	1.0	10	17	5.5	
193-39-5	Indeno(1,2,3-cd)pyrene		19	1.0	10	17	3.2	
53-70-3	Dibenzo(a,h)anthracene	U	17	1.0	10	17	3.0	
191-24-2	Benzo(g,h,i)perylene		18	1.0	10	17	3.4	
118-74-1	Hexachlorobenzene	U	17	1.0	10	17	3.0	
87-68-3	Hexachlorobutadiene	U	17	1.0	10	17	3.9	
77-47-4	Hexachlorocyclopentadiene	U	17	1.0	10	17	2.5	
7297-45-2	2-Methylnaphthalene-D10		121%					
367-12-4	2,4-Dibromophenol		108%					
81103-79-9	Fluorene-d10		66%					
1718-51-1	Pyrene-D10		88%					

hw 3/1/09

2

KATAHDIN ANALYTICAL SERVICES
Report of Analytical Results

Client: CH2MHill
Project: TO-009 Lejeune
PO No:
Sample Date: 12/02/08
Received Date: 12/03/08
Extraction Date: 12/04/08
Analysis Date: 18-DEC-2008 14:27
Report Date: 12/23/2008
Matrix: SOIL
% Solids: 83.3

Lab ID: SB6918-14
Client ID: MR08-IS051-5-6-08D
SDG: TO9-9
Extracted by: AC
Extraction Method: SW846 3550
Analyst: JCG
Analysis Method: SW846 M8270C
Lab Prep Batch: WG58748
Units: ug/Kgdrywt

CAS#	Compound	Flags	Results	DF	PQL	Adj.PQL	Adj.MDL	
91-20-3	Naphthalene	~~U~~ UJ	12	1.0	10	12	3.1	CCH
91-57-6	2-Methylnaphthalene	U	12	1.0	10	12	2.6	
86-73-7	Fluorene	U	12	1.0	10	12	3.8	
85-01-8	Phenanthrene	U	12	1.0	10	12	2.2	
206-44-0	Fluoranthene	U	12	1.0	10	12	2.2	
129-00-0	Pyrene	U	12	1.0	10	12	2.5	
56-55-3	Benzo(a)anthracene	U	12	1.0	10	12	2.3	
205-99-2	Benzo(b)fluoranthene	U	12	1.0	10	12	2.9	
207-08-9	Benzo(k)fluoranthene	U	12	1.0	10	12	3.7	
50-32-8	Benzo(a)pyrene	U	12	1.0	10	12	4.0	
193-39-5	Indeno(1,2,3-cd)pyrene	U	12	1.0	10	12	2.3	
53-70-3	Dibenzo(a,h)anthracene	U	12	1.0	10	12	2.2	
191-24-2	Benzo(g,h,i)perylene	U	12	1.0	10	12	2.4	
118-74-1	Hexachlorobenzene	U	12	1.0	10	12	2.2	
87-68-3	Hexachlorobutadiene	U	12	1.0	10	12	2.8	
77-47-4	Hexachlorocyclopentadiene	U	12	1.0	10	12	1.8	
7297-45-2	2-Methylnaphthalene-D10		78%					
367-12-4	2,4-Dibromophenol		76%					
81103-79-9	Fluorene-d10		66%					
1718-51-1	Pyrene-D10		112%					

kw
3/1/09

KATAHDIN ANALYTICAL SERVICES
Report of Analytical Results

Client: CH2MHill
Project: TO-009 Lejeune
PO No:
Sample Date: 12/02/08
Received Date: 12/03/08
Extraction Date: 12/04/08
Analysis Date: 18-DEC-2008 18:41
Report Date: 12/23/2008
Matrix: SOIL
% Solids: 80.9

Lab ID: SB6918-15
Client ID: MR08-SS050-08D
SDG: TO9-9
Extracted by: AC
Extraction Method: SW846 3550
Analyst: JCG
Analysis Method: SW846 M8270C
Lab Prep Batch: WG58748
Units: ug/Kgdrywt

CAS#	Compound	Flags	Results	DF	PQL	Adj.PQL	Adj.MDL	
91-20-3	Naphthalene	~~U~~ UJ	12	1.0	10	12	3.2	CCH
91-57-6	2-Methylnaphthalene	~~J~~ J	3.1	1.0	10	12	2.7	BSH
86-73-7	Fluorene	U	12	1.0	10	12	4.0	
85-01-8	Phenanthrene		68	1.0	10	12	2.2	
206-44-0	Fluoranthene		130	1.0	10	12	2.2	
129-00-0	Pyrene		120	1.0	10	12	2.6	
56-55-3	Benzo(a)anthracene		77	1.0	10	12	2.3	
205-99-2	Benzo(b)fluoranthene		110	1.0	10	12	3.0	
207-08-9	Benzo(k)fluoranthene		48	1.0	10	12	3.8	
50-32-8	Benzo(a)pyrene		69	1.0	10	12	4.1	
193-39-5	Indeno(1,2,3-cd)pyrene		48	1.0	10	12	2.3	
53-70-3	Dibenzo(a,h)anthracene		19	1.0	10	12	2.2	
191-24-2	Benzo(g,h,i)perylene		43	1.0	10	12	2.5	
118-74-1	Hexachlorobenzene	U	12	1.0	10	12	2.2	
87-68-3	Hexachlorobutadiene	U	12	1.0	10	12	2.8	
77-47-4	Hexachlorocyclopentadiene	U	12	1.0	10	12	1.8	
7297-45-2	2-Methylnaphthalene-D10		77%					
367-12-4	2,4-Dibromophenol		85%					
81103-79-9	Fluorene-d10		66%					
1718-51-1	Pyrene-D10		98%					

MW 3/1/09

4

KATAHDIN ANALYTICAL SERVICES
Report of Analytical Results

Client: CH2MHill
Project: TO-009 Lejeune
PO No:
Sample Date: 12/02/08
Received Date: 12/03/08
Extraction Date: 12/04/08
Analysis Date: 18-DEC-2008 15:09
Report Date: 12/23/2008
Matrix: SOIL
% Solids: 78.5

Lab ID: SB6918-16
Client ID: MR08-IS050-5-6-08D
SDG: TO9-9
Extracted by: AC
Extraction Method: SW846 3550
Analyst: JCG
Analysis Method: SW846 M8270C
Lab Prep Batch: WG58748
Units: ug/Kgdrywt

CAS#	Compound	Flags	Results	DF	PQL	Adj.PQL	Adj.MDL
91-20-3	Naphthalene	~~U~~ UJ	13	1.0	10	13	3.3 CCH
91-57-6	2-Methylnaphthalene	U	13	1.0	10	13	2.8
86-73-7	Fluorene	U	13	1.0	10	13	4.1
85-01-8	Phenanthrene	U	13	1.0	10	13	2.3
206-44-0	Fluoranthene	U	13	1.0	10	13	2.3
129-00-0	Pyrene	U	13	1.0	10	13	2.7
56-55-3	Benzo(a)anthracene	U	13	1.0	10	13	2.4
205-99-2	Benzo(b)fluoranthene	U	13	1.0	10	13	3.0
207-08-9	Benzo(k)fluoranthene	U	13	1.0	10	13	4.0
50-32-8	Benzo(a)pyrene	U	13	1.0	10	13	4.2
193-39-5	Indeno(1,2,3-cd)pyrene	U	13	1.0	10	13	2.4
53-70-3	Dibenzo(a,h)anthracene	U	13	1.0	10	13	2.3
191-24-2	Benzo(g,h,i)perylene	U	13	1.0	10	13	2.5
118-74-1	Hexachlorobenzene	U	13	1.0	10	13	2.3
87-68-3	Hexachlorobutadiene	U	13	1.0	10	13	2.9
77-47-4	Hexachlorocyclopentadiene	U	13	1.0	10	13	1.9
7297-45-2	2-Methylnaphthalene-D10		60%				
367-12-4	2,4-Dibromophenol		87%				
81103-79-9	Fluorene-d10		59%				
1718-51-1	Pyrene-D10		103%				

GW
3/1/09

KATAHDIN ANALYTICAL SERVICES
Report of Analytical Results

Client: CH2MHill
Project: TO-009 Lejeune
PO No:
Sample Date: 12/02/08
Received Date: 12/03/08
Extraction Date: 12/04/08
Analysis Date: 18-DEC-2008 20:05
Report Date: 12/23/2008
Matrix: SOIL
% Solids: 70.1

Lab ID: SB6918-17
Client ID: MR08-SS052-08D
SDG: TO9-9
Extracted by: AC
Extraction Method: SW846 3550
Analyst: JCG
Analysis Method: SW846 M8270C
Lab Prep Batch: WG58748
Units: ug/Kgdrywt

CAS#	Compound	Flags	Results	DF	PQL	Adj.PQL	Adj.MDL	
91-20-3	Naphthalene	~~U~~ UJ	14	1.0	10	14	3.7	CCH
91-57-6	2-Methylnaphthalene	U	14	1.0	10	14	3.1	
86-73-7	Fluorene	U	14	1.0	10	14	4.6	
85-01-8	Phenanthrene		16	1.0	10	14	2.6	
206-44-0	Fluoranthene		30	1.0	10	14	2.6	
129-00-0	Pyrene		31	1.0	10	14	3.0	
56-55-3	Benzo(a)anthracene		16	1.0	10	14	2.7	
205-99-2	Benzo(b)fluoranthene	J	42	1.0	10	14	3.4	ISL
207-08-9	Benzo(k)fluoranthene		17	1.0	10	14	4.4	
50-32-8	Benzo(a)pyrene		16	1.0	10	14	4.7	
193-39-5	Indeno(1,2,3-cd)pyrene	~~J~~	13	1.0	10	14	2.7	
53-70-3	Dibenzo(a,h)anthracene	~~U~~ UJ	14	1.0	10	14	2.6	
191-24-2	Benzo(g,h,i)perylene	~~J~~ J	12	1.0	10	14	2.8	
118-74-1	Hexachlorobenzene	~~U~~ UJ	14	1.0	10	14	2.6	
87-68-3	Hexachlorobutadiene	~~U~~	14	1.0	10	14	3.3	
77-47-4	Hexachlorocyclopentadiene	~~U~~	14	1.0	10	14	2.1	
7297-45-2	2-Methylnaphthalene-D10		103%					
367-12-4	2,4-Dibromophenol		109%					
81103-79-9	Fluorene-d10		68%					
1718-51-1	Pyrene-D10		89%					

lus 3/1/09

6

KATAHDIN ANALYTICAL SERVICES
Report of Analytical Results

Client: CH2MHill
Project: TO-009 Lejeune
PO No:
Sample Date: 12/02/08
Received Date: 12/03/08
Extraction Date: 12/04/08
Analysis Date: 18-DEC-2008 15:52
Report Date: 12/23/2008
Matrix: SOIL
% Solids: 86.8

Lab ID: SB6918-18
Client ID: MR08-IS052-5-6-08D
SDG: TO9-9
Extracted by: AC
Extraction Method: SW846 3550
Analyst: JCG
Analysis Method: SW846 M8270C
Lab Prep Batch: WG58748
Units: ug/Kgdrywt

CAS#	Compound	Flags	Results	DF	PQL	Adj.PQL	Adj.MDL
91-20-3	Naphthalene	~~U~~ UJ	12	1.0	10	12	3.0 CCH
91-57-6	2-Methylnaphthalene	U	12	1.0	10	12	2.5
86-73-7	Fluorene	U	12	1.0	10	12	3.7
85-01-8	Phenanthrene	U	12	1.0	10	12	2.1
206-44-0	Fluoranthene	U	12	1.0	10	12	2.1
129-00-0	Pyrene	U	12	1.0	10	12	2.4
56-55-3	Benzo(a)anthracene	U	12	1.0	10	12	2.2
205-99-2	Benzo(b)fluoranthene	U	12	1.0	10	12	2.8
207-08-9	Benzo(k)fluoranthene	U	12	1.0	10	12	3.6
50-32-8	Benzo(a)pyrene	U	12	1.0	10	12	3.8
193-39-5	Indeno(1,2,3-cd)pyrene	U	12	1.0	10	12	2.2
53-70-3	Dibenzo(a,h)anthracene	U	12	1.0	10	12	2.1
191-24-2	Benzo(g,h,i)perylene	U	12	1.0	10	12	2.3
118-74-1	Hexachlorobenzene	U	12	1.0	10	12	2.1
87-68-3	Hexachlorobutadiene	U	12	1.0	10	12	2.6
77-47-4	Hexachlorocyclopentadiene	U	12	1.0	10	12	1.7
7297-45-2	2-Methylnaphthalene-D10		92%				
367-12-4	2,4-Dibromophenol		76%				
81103-79-9	Fluorene-d10		68%				
1718-51-1	Pyrene-D10		94%				

lw 3/1/09

7

KATAHDIN ANALYTICAL SERVICES
Report of Analytical Results

Client: CH2MHill
Project: TO-009 Lejeune
PO No:
Sample Date: 12/02/08
Received Date: 12/03/08
Extraction Date: 12/04/08
Analysis Date: 18-DEC-2008 20:47
Report Date: 12/23/2008
Matrix: SOIL
% Solids: 75.3

Lab ID: SB6918-19
Client ID: MR08-SS053-08D
SDG: TO9-9
Extracted by: AC
Extraction Method: SW846 3550
Analyst: JCG
Analysis Method: SW846 M8270C
Lab Prep Batch: WG58748
Units: ug/Kgdrywt

CAS#	Compound	Flags	Results	DF	PQL	Adj.PQL	Adj.MDL	
91-20-3	Naphthalene	~~U~~ UJ	13	1.0	10	13	3.4	CCH
91-57-6	2-Methylnaphthalene	~~J~~ J	3.6	1.0	10	13	2.9	BSH
86-73-7	Fluorene	U	13	1.0	10	13	4.2	
85-01-8	Phenanthrene		15	1.0	10	13	2.4	
206-44-0	Fluoranthene		28	1.0	10	13	2.4	
129-00-0	Pyrene		31	1.0	10	13	2.8	
56-55-3	Benzo(a)anthracene		16	1.0	10	13	2.5	
205-99-2	Benzo(b)fluoranthene	J	36	1.0	10	13	3.2	ISL
207-08-9	Benzo(k)fluoranthene	↓	16	1.0	10	13	4.1	
50-32-8	Benzo(a)pyrene	↓	20	1.0	10	13	4.4	↓
193-39-5	Indeno(1,2,3-cd)pyrene	~~J~~ J	12	1.0	10	13	2.5	↓
53-70-3	Dibenzo(a,h)anthracene	~~U~~ UJ	13	1.0	10	13	2.4	↓
191-24-2	Benzo(g,h,i)perylene	~~J~~ J	9.9	1.0	10	13	2.6	↓
118-74-1	Hexachlorobenzene	~~U~~ UJ	13	1.0	10	13	2.4	↓
87-68-3	Hexachlorobutadiene	~~U~~ ↓	13	1.0	10	13	3.0	↓
77-47-4	Hexachlorocyclopentadiene	U ↓	13	1.0	10	13	2.0	↓
7297-45-2	2-Methylnaphthalene-D10		124%					
367-12-4	2,4-Dibromophenol		125%					
81103-79-9	Fluorene-d10		71%					
1718-51-1	Pyrene-D10		106%					

lw 3/1/09

8

KATAHDIN ANALYTICAL SERVICES
Report of Analytical Results

Client: CH2MHill
Project: TO-009 Lejeune
PO No:
Sample Date: 12/02/08
Received Date: 12/03/08
Extraction Date: 12/04/08
Analysis Date: 18-DEC-2008 16:34
Report Date: 12/23/2008
Matrix: SOIL
% Solids: 82.8

Lab ID: SB6918-20
Client ID: MR08-IS053-5-6-08D
SDG: TO9-9
Extracted by: AC
Extraction Method: SW846 3550
Analyst: JCG
Analysis Method: SW846 M8270C
Lab Prep Batch: WG58748
Units: ug/Kgdrywt

CAS#	Compound	Flags	Results	DF	PQL	Adj.PQL	Adj.MDL
91-20-3	Naphthalene	~~U~~ UJ	12	1.0	10	12	3.1 CCH
91-57-6	2-Methylnaphthalene	U	12	1.0	10	12	2.6
86-73-7	Fluorene	U	12	1.0	10	12	3.9
85-01-8	Phenanthrene	U	12	1.0	10	12	2.2
206-44-0	Fluoranthene	U	12	1.0	10	12	2.2
129-00-0	Pyrene	U	12	1.0	10	12	2.5
56-55-3	Benzo(a)anthracene	U	12	1.0	10	12	2.3
205-99-2	Benzo(b)fluoranthene	U	12	1.0	10	12	2.9
207-08-9	Benzo(k)fluoranthene	U	12	1.0	10	12	3.7
50-32-8	Benzo(a)pyrene	U	12	1.0	10	12	4.0
193-39-5	Indeno(1,2,3-cd)pyrene	U	12	1.0	10	12	2.3
53-70-3	Dibenzo(a,h)anthracene	U	12	1.0	10	12	2.2
191-24-2	Benzo(g,h,i)perylene	U	12	1.0	10	12	2.4
118-74-1	Hexachlorobenzene	U	12	1.0	10	12	2.2
87-68-3	Hexachlorobutadiene	U	12	1.0	10	12	2.8
77-47-4	Hexachlorocyclopentadiene	U	12	1.0	10	12	1.8
7297-45-2	2-Methylnaphthalene-D10		78%				
367-12-4	2,4-Dibromophenol		97%				
81103-79-9	Fluorene-d10		67%				
1718-51-1	Pyrene-D10		100%				

LW 3/1/09

KATAHDIN ANALYTICAL SERVICES
Report of Analytical Results

Client: CH2MHill
Project: TO-009 Lejeune
PO No:
Sample Date: 12/02/08
Received Date: 12/03/08
Extraction Date: 12/04/08
Analysis Date: 18-DEC-2008 21:29
Report Date: 12/23/2008
Matrix: SOIL
% Solids: 62.5

Lab ID: SB6918-21
Client ID: MR08-SS054-08D
SDG: TO9-9
Extracted by: AC
Extraction Method: SW846 3550
Analyst: JCG
Analysis Method: SW846 M8270C
Lab Prep Batch: WG58748
Units: ug/Kgdrywt

CAS#	Compound	Flags		Results	DF	PQL	Adj.PQL	Adj.MDL	
91-20-3	Naphthalene	~~J~~	UJ	16	1.0	10	16	4.2	CCH
91-57-6	2-Methylnaphthalene	~~J~~	J	5.9	1.0	10	16	3.5	BSH
86-73-7	Fluorene	U		16	1.0	10	16	5.1	
85-01-8	Phenanthrene	U		16	1.0	10	16	2.9	
206-44-0	Fluoranthene			32	1.0	10	16	2.9	
129-00-0	Pyrene			44	1.0	10	16	3.4	
56-55-3	Benzo(a)anthracene			18	1.0	10	16	3.0	
205-99-2	Benzo(b)fluoranthene		J	44	1.0	10	16	3.8	ISL
207-08-9	Benzo(k)fluoranthene			21	1.0	10	16	5.0	
50-32-8	Benzo(a)pyrene			18	1.0	10	16	5.3	
193-39-5	Indeno(1,2,3-cd)pyrene	~~J~~		15	1.0	10	16	3.0	
53-70-3	Dibenzo(a,h)anthracene	U	UJ	16	1.0	10	16	2.9	
191-24-2	Benzo(g,h,i)perylene	J	J	12	1.0	10	16	3.2	
118-74-1	Hexachlorobenzene	U	UJ	16	1.0	10	16	2.9	
87-68-3	Hexachlorobutadiene	U		16	1.0	10	16	3.7	
77-47-4	Hexachlorocyclopentadiene	U		16	1.0	10	16	2.4	
7297-45-2	2-Methylnaphthalene-D10			117%					
367-12-4	2,4-Dibromophenol			117%					
81103-79-9	Fluorene-d10			70%					
1718-51-1	Pyrene-D10			109%					

BW 3/1/09

10

KATAHDIN ANALYTICAL SERVICES
Report of Analytical Results

Client: CH2MHill
Project: TO-009 Lejeune
PO No:
Sample Date: 12/02/08
Received Date: 12/03/08
Extraction Date: 12/04/08
Analysis Date: 18-DEC-2008 17:16
Report Date: 12/23/2008
Matrix: SOIL
% Solids: 79.4

Lab ID: SB6918-22
Client ID: MR08-IS054-6-7-08D
SDG: TO9-9
Extracted by: AC
Extraction Method: SW846 3550
Analyst: JCG
Analysis Method: SW846 M8270C
Lab Prep Batch: WG58748
Units: ug/Kgdrywt

CAS#	Compound	Flags	Results	DF	PQL	Adj.PQL	Adj.MDL
91-20-3	Naphthalene	~~U~~ UJ	12	1.0	10	12	3.3 CCH
91-57-6	2-Methylnaphthalene	U	12	1.0	10	12	2.8
86-73-7	Fluorene	U	12	1.0	10	12	4.0
85-01-8	Phenanthrene	U	12	1.0	10	12	2.3
206-44-0	Fluoranthene	U	12	1.0	10	12	2.3
129-00-0	Pyrene	U	12	1.0	10	12	2.6
56-55-3	Benzo(a)anthracene	U	12	1.0	10	12	2.4
205-99-2	Benzo(b)fluoranthene	U	12	1.0	10	12	3.0
207-08-9	Benzo(k)fluoranthene	U	12	1.0	10	12	3.9
50-32-8	Benzo(a)pyrene	U	12	1.0	10	12	4.2
193-39-5	Indeno(1,2,3-cd)pyrene	U	12	1.0	10	12	2.4
53-70-3	Dibenzo(a,h)anthracene	U	12	1.0	10	12	2.3
191-24-2	Benzo(g,h,i)perylene	U	12	1.0	10	12	2.5
118-74-1	Hexachlorobenzene	U	12	1.0	10	12	2.3
87-68-3	Hexachlorobutadiene	U	12	1.0	10	12	2.9
77-47-4	Hexachlorocyclopentadiene	U	12	1.0	10	12	1.9
7297-45-2	2-Methylnaphthalene-D10		78%				
367-12-4	2,4-Dibromophenol		90%				
81103-79-9	Fluorene-d10		67%				
1718-51-1	Pyrene-D10		94%				

lw 31,109

11

KATAHDIN ANALYTICAL SERVICES
Report of Analytical Results

Client: CH2MHill
Project: TO-009 Lejeune
PO No:
Sample Date: 12/02/08
Received Date: 12/03/08
Extraction Date: 12/04/08
Analysis Date: 18-DEC-2008 22:12
Report Date: 12/23/2008
Matrix: SOIL
% Solids: 57.2

Lab ID: SB6918-23
Client ID: MR08-SS055-08D
SDG: TO9-9
Extracted by: AC
Extraction Method: SW846 3550
Analyst: JCG
Analysis Method: SW846 M8270C
Lab Prep Batch: WG58748
Units: ug/Kgdrywt

CAS#	Compound	Flags		Results	DF	PQL	Adj.PQL	Adj.MDL	
91-20-3	Naphthalene	~~U~~	UJ	17	1.0	10	17	4.5	CCH
91-57-6	2-Methylnaphthalene	~~J~~	J	7.0	1.0	10	17	3.8	BSH
86-73-7	Fluorene	U		17	1.0	10	17	5.6	
85-01-8	Phenanthrene	U		17	1.0	10	17	3.1	
206-44-0	Fluoranthene			53	1.0	10	17	3.1	
129-00-0	Pyrene			84	1.0	10	17	3.7	
56-55-3	Benzo(a)anthracene			26	1.0	10	17	3.3	
205-99-2	Benzo(b)fluoranthene		J	53	1.0	10	17	4.2	TSL
207-08-9	Benzo(k)fluoranthene			30	1.0	10	17	5.4	
50-32-8	Benzo(a)pyrene			23	1.0	10	17	5.8	
193-39-5	Indeno(1,2,3-cd)pyrene			19	1.0	10	17	3.3	
53-70-3	Dibenzo(a,h)anthracene	U	UJ	17	1.0	10	17	3.1	
191-24-2	Benzo(g,h,i)perylene	J	J	15	1.0	10	17	3.5	
118-74-1	Hexachlorobenzene	U	UJ	17	1.0	10	17	3.1	
87-68-3	Hexachlorobutadiene	U		17	1.0	10	17	4.0	
77-47-4	Hexachlorocyclopentadiene	U		17	1.0	10	17	2.6	
7297-45-2	2-Methylnaphthalene-D10			108%					
367-12-4	2,4-Dibromophenol			104%					
81103-79-9	Fluorene-d10			64%					
1718-51-1	Pyrene-D10			150%					

3/1/09

KATAHDIN ANALYTICAL SERVICES
Report of Analytical Results

Client: CH2MHill
Project: TO-009 Lejeune
PO No:
Sample Date: 12/02/08
Received Date: 12/03/08
Extraction Date: 12/04/08
Analysis Date: 18-DEC-2008 17:58
Report Date: 12/23/2008
Matrix: SOIL
% Solids: 77.4

Lab ID: SB6918-24
Client ID: MR08-IS055-4-5-08D
SDG: TO9-9
Extracted by: AC
Extraction Method: SW846 3550
Analyst: JCG
Analysis Method: SW846 M8270C
Lab Prep Batch: WG58748
Units: ug/Kgdrywt

CAS#	Compound	Flags	Results	DF	PQL	Adj.PQL	Adj.MDL
91-20-3	Naphthalene	~~U~~ UJ	13	1.0	10	13	3.4 CCH
91-57-6	2-Methylnaphthalene	U	13	1.0	10	13	2.8
86-73-7	Fluorene	U	13	1.0	10	13	4.1
85-01-8	Phenanthrene	U	13	1.0	10	13	2.3
206-44-0	Fluoranthene	U	13	1.0	10	13	2.3
129-00-0	Pyrene	U	13	1.0	10	13	2.7
56-55-3	Benzo(a)anthracene	U	13	1.0	10	13	2.4
205-99-2	Benzo(b)fluoranthene	U	13	1.0	10	13	3.1
207-08-9	Benzo(k)fluoranthene	U	13	1.0	10	13	4.0
50-32-8	Benzo(a)pyrene	U	13	1.0	10	13	4.3
193-39-5	Indeno(1,2,3-cd)pyrene	U	13	1.0	10	13	2.4
53-70-3	Dibenzo(a,h)anthracene	U	13	1.0	10	13	2.3
191-24-2	Benzo(g,h,i)perylene	U	13	1.0	10	13	2.6
118-74-1	Hexachlorobenzene	U	13	1.0	10	13	2.3
87-68-3	Hexachlorobutadiene	U	13	1.0	10	13	3.0
77-47-4	Hexachlorocyclopentadiene	U	13	1.0	10	13	1.9
7297-45-2	2-Methylnaphthalene-D10		80%				
367-12-4	2,4-Dibromophenol		81%				
81103-79-9	Fluorene-d10		66%				
1718-51-1	Pyrene-D10		111%				

LW 3/1/09

KATAHDIN ANALYTICAL SERVICES
Report of Analytical Results

Client: CH2MHill
Project: TO-009 Lejeune
PO No:
Sample Date: 12/03/08
Received Date: 12/04/08
Extraction Date: 12/05/08
Analysis Date: 20-DEC-2008 19:09
Report Date: 12/23/2008
Matrix: SOIL
% Solids: 72.0

Lab ID: SB6961-2
Client ID: MR08-SS067-08D
SDG: TO9-9
Extracted by: AC
Extraction Method: SW846 3550
Analyst: JCG
Analysis Method: SW846 M8270C
Lab Prep Batch: WG58802
Units: ug/Kgdrywt

Use reanalysis

CAS#	Compound	Flags	Results	DF	PQL	Adj.PQL	Adj.MDL	
91-20-3	Naphthalene	~~U~~ UJ	14	1.0	10	14	3.6	CCH
91-57-6	2-Methylnaphthalene	U	14	1.0	10	14	3.0	
86-73-7	Fluorene	U	14	1.0	10	14	4.4	
85-01-8	Phenanthrene	~~J~~ J	14	1.0	10	14	2.5	CCH
206-44-0	Fluoranthene		22	1.0	10	14	2.5	
129-00-0	Pyrene		31	1.0	10	14	2.9	
56-55-3	Benzo(a)anthracene	J	12	1.0	10	14	2.6	
205-99-2	Benzo(b)fluoranthene	J	27	1.0	10	14	3.3	ISL
207-08-9	Benzo(k)fluoranthene	J	12	1.0	10	14	4.3	
50-32-8	Benzo(a)pyrene	J	10	1.0	10	14	4.6	
193-39-5	Indeno(1,2,3-cd)pyrene	J	11	1.0	10	14	2.6	
53-70-3	Dibenzo(a,h)anthracene	U UJ	14	1.0	10	14	2.5	
191-24-2	Benzo(g,h,i)perylene	J J	13	1.0	10	14	2.8	
118-74-1	Hexachlorobenzene	U UJ	14	1.0	10	14	2.5	
87-68-3	Hexachlorobutadiene	U UJ	14	1.0	10	14	3.2	
77-47-4	Hexachlorocyclopentadiene	~~J~~ J	8.2	1.0	10	14	2.1	
7297-45-2	2-Methylnaphthalene-D10		43%					
367-12-4	2,4-Dibromophenol		90%					
81103-79-9	Fluorene-d10		66%					
1718-51-1	Pyrene-D10		118%					

R RE

LWO 3/1/09

13RE

KATAHDIN ANALYTICAL SERVICES
Report of Analytical Results

Client: CH2MHill
Project: TO-009 Lejeune
PO No:
Sample Date: 12/03/08
Received Date: 12/04/08
Extraction Date: 12/05/08
Analysis Date: 22-DEC-2008 19:33
Report Date: 12/23/2008
Matrix: SOIL
% Solids: 72.0

Lab ID: SB6961-2RA
Client ID: MR08-SS067-08D
SDG: TO9-9
Extracted by: AC
Extraction Method: SW846 3550
Analyst: JCG
Analysis Method: SW846 M8270C
Lab Prep Batch: WG58802
Units: ug/Kgdrywt

CAS#	Compound	Flags		Results	DF	PQL	Adj.PQL	Adj.MDL	
91-20-3	Naphthalene	J		14	1.0	10	14	3.6	
91-57-6	2-Methylnaphthalene	J		3.8	1.0	10	14	3.0	
86-73-7	Fluorene	J		14	1.0	10	14	4.4	
85-01-8	Phenanthrene	J		12	1.0	10	14	2.5	
206-44-0	Fluoranthene			23	1.0	10	14	2.5	
129-00-0	Pyrene			25	1.0	10	14	2.9	
56-55-3	Benzo(a)anthracene	J		12	1.0	10	14	2.6	
205-99-2	Benzo(b)fluoranthene		J	30	1.0	10	14	3.3	ISL
207-08-9	Benzo(k)fluoranthene	J		10	1.0	10	14	4.3	
50-32-8	Benzo(a)pyrene	J		9.9	1.0	10	14	4.6	
193-39-5	Indeno(1,2,3-cd)pyrene	J		8.9	1.0	10	14	2.6	
53-70-3	Dibenzo(a,h)anthracene	U	UJ	14	1.0	10	14	2.5	
191-24-2	Benzo(g,h,i)perylene	J	J	8.0	1.0	10	14	2.8	
118-74-1	Hexachlorobenzene	U	UJ	14	1.0	10	14	2.5	
87-68-3	Hexachlorobutadiene	U	UJ	14	1.0	10	14	3.2	
77-47-4	Hexachlorocyclopentadiene	J	J	8.5	1.0	10	14	2.1	
7297-45-2	2-Methylnaphthalene-D10			97%					
367-12-4	2,4-Dibromophenol			101%					
81103-79-9	Fluorene-d10			66%					
1718-51-1	Pyrene-D10			114%					

JW 3/1/09

KATAHDIN ANALYTICAL SERVICES
Report of Analytical Results

Client: CH2MHill
Project: TO-009 Lejeune
PO No:
Sample Date: 12/03/08
Received Date: 12/04/08
Extraction Date: 12/05/08
Analysis Date: 20-DEC-2008 13:31
Report Date: 12/23/2008
Matrix: SOIL
% Solids: 86.2

Lab ID: SB6961-4
Client ID: MR08-IS067-6-7-08D
SDG: TO9-9
Extracted by: AC
Extraction Method: SW846 3550
Analyst: JCG
Analysis Method: SW846 M8270C
Lab Prep Batch: WG58802
Units: ug/Kgdrywt

CAS#	Compound	Flags	Results	DF	PQL	Adj.PQL	Adj.MDL	
91-20-3	Naphthalene	~~U~~ UJ	12	1.0	10	12	3.0	CCH
91-57-6	2-Methylnaphthalene	U	12	1.0	10	12	2.6	
86-73-7	Fluorene	U	12	1.0	10	12	3.7	
85-01-8	Phenanthrene	~~U~~ UJ	12	1.0	10	12	2.1	CCH
206-44-0	Fluoranthene	U	12	1.0	10	12	2.1	
129-00-0	Pyrene	U	12	1.0	10	12	2.4	
56-55-3	Benzo(a)anthracene	U	12	1.0	10	12	2.2	
205-99-2	Benzo(b)fluoranthene	U	12	1.0	10	12	2.8	
207-08-9	Benzo(k)fluoranthene	U	12	1.0	10	12	3.6	
50-32-8	Benzo(a)pyrene	U	12	1.0	10	12	3.8	
193-39-5	Indeno(1,2,3-cd)pyrene	U	12	1.0	10	12	2.2	
53-70-3	Dibenzo(a,h)anthracene	U	12	1.0	10	12	2.1	
191-24-2	Benzo(g,h,i)perylene	U	12	1.0	10	12	2.3	
118-74-1	Hexachlorobenzene	~~U~~ UJ	12	1.0	10	12	2.1	CCH
87-68-3	Hexachlorobutadiene	U	12	1.0	10	12	2.7	
77-47-4	Hexachlorocyclopentadiene	U	12	1.0	10	12	1.7	
7297-45-2	2-Methylnaphthalene-D10		41%					
367-12-4	2,4-Dibromophenol		87%					
81103-79-9	Fluorene-d10		62%					
1718-51-1	Pyrene-D10		106%					

lw
3/1/09

15

KATAHDIN ANALYTICAL SERVICES
Report of Analytical Results

Client: CH2MHill
Project: TO-009 Lejeune
PO No:
Sample Date: 12/03/08
Received Date: 12/04/08
Extraction Date: 12/05/08
Analysis Date: 20-DEC-2008 19:51
Report Date: 12/23/2008
Matrix: SOIL
% Solids: 48.0

Lab ID: SB6961-6
Client ID: MR08-SS068-08D
SDG: TO9-9
Extracted by: AC
Extraction Method: SW846 3550
Analyst: JCG
Analysis Method: SW846 M8270C
Lab Prep Batch: WG58802
Units: ug/Kgdrywt

Use reanalysis

CAS#	Compound	Flags		Results	DF	PQL	Adj.PQL	Adj.MDL	
91-20-3	Naphthalene	~~U~~	UJ	21	1.0	10	21	5.4	CCH
91-57-6	2-Methylnaphthalene	U		21	1.0	10	21	4.6	
86-73-7	Fluorene	U		21	1.0	10	21	6.7	
85-01-8	Phenanthrene			42	1.0	10	21	3.7	
206-44-0	Fluoranthene		J	50	1.0	10	21	3.7	CCH
129-00-0	Pyrene		J	74	1.0	10	21	4.4	MSH
56-55-3	Benzo(a)anthracene			32	1.0	10	21	4.0	
205-99-2	Benzo(b)fluoranthene		J	55	1.0	10	21	5.0	ISL
207-08-9	Benzo(k)fluoranthene			26	1.0	10	21	6.4	
50-32-8	Benzo(a)pyrene			25	1.0	10	21	6.9	
193-39-5	Indeno(1,2,3-cd)pyrene			24	1.0	10	21	4.0	
53-70-3	Dibenzo(a,h)anthracene			22	1.0	10	21	3.7	
191-24-2	Benzo(g,h,i)perylene			21	1.0	10	21	4.2	
118-74-1	Hexachlorobenzene	U	UJ	21	1.0	10	21	3.7	
87-68-3	Hexachlorobutadiene	U	UJ	21	1.0	10	21	4.8	
77-47-4	Hexachlorocyclopentadiene	U	J	12	1.0	10	21	3.1	
7297-45-2	2-Methylnaphthalene-D10			36%					
367-12-4	2,4-Dibromophenol			79%					
81103-79-9	Fluorene-d10			* 48%					
1718-51-1	Pyrene-D10			98%					

R RE

Page 01 of 01 R0403.D

KW 3/1/09

ISRE

KATAHDIN ANALYTICAL SERVICES
Report of Analytical Results

Client: CH2MHill
Project: TO-009 Lejeune
PO No:
Sample Date: 12/03/08
Received Date: 12/04/08
Extraction Date: 12/05/08
Analysis Date: 22-DEC-2008 20:15
Report Date: 12/23/2008
Matrix: SOIL
% Solids: 48.0

Lab ID: SB6961-6RA
Client ID: MR08-SS068-08D
SDG: TO9-9
Extracted by: AC
Extraction Method: SW846 3550
Analyst: JCG
Analysis Method: SW846 M8270C
Lab Prep Batch: WG58802
Units: ug/Kgdrywt

CAS#	Compound	Flags		Results	DF	PQL	Adj.PQL	Adj.MDL	
91-20-3	Naphthalene	U		21	1.0	10	21	5.4	
91-57-6	2-Methylnaphthalene	J		6.2	1.0	10	21	4.6	
86-73-7	Fluorene	U		21	1.0	10	21	6.7	
85-01-8	Phenanthrene	U		21	1.0	10	21	3.7	
206-44-0	Fluoranthene			58	1.0	10	21	3.7	
129-00-0	Pyrene			61	1.0	10	21	4.4	
56-55-3	Benzo(a)anthracene			30	1.0	10	21	4.0	
205-99-2	Benzo(b)fluoranthene		J	49	1.0	10	21	5.0	FSL
207-08-9	Benzo(k)fluoranthene			29	1.0	10	21	6.4	
50-32-8	Benzo(a)pyrene			21	1.0	10	21	6.9	
193-39-5	Indeno(1,2,3-cd)pyrene	~~J~~		18	1.0	10	21	4.0	
53-70-3	Dibenzo(a,h)anthracene	~~U~~	UJ	21	1.0	10	21	3.7	
191-24-2	Benzo(g,h,i)perylene	~~U~~	J	17	1.0	10	21	4.2	
118-74-1	Hexachlorobenzene	~~U~~	UJ	21	1.0	10	21	3.7	
87-68-3	Hexachlorobutadiene	~~U~~	UJ	21	1.0	10	21	4.8	
77-47-4	Hexachlorocyclopentadiene	~~U~~	J	12	1.0	10	21	3.1	
7297-45-2	2-Methylnaphthalene-D10			90%					
367-12-4	2,4-Dibromophenol			73%					
81103-79-9	Fluorene-d10			* 52%					
1718-51-1	Pyrene-D10			87%					

lw 3/1/09

16

KATAHDIN ANALYTICAL SERVICES
Report of Analytical Results

Client: CH2MHill
Project: TO-009 Lejeune
PO No:
Sample Date: 12/03/08
Received Date: 12/04/08
Extraction Date: 12/05/08
Analysis Date: 20-DEC-2008 20:33
Report Date: 12/23/2008
Matrix: SOIL
% Solids: 61.9

Lab ID: SB6961-8
Client ID: MR08-SS069-08D
SDG: TO9-9
Extracted by: AC
Extraction Method: SW846 3550
Analyst: JCG
Analysis Method: SW846 M8270C
Lab Prep Batch: WG58802
Units: ug/Kgdrywt

Use reanalysis

CAS#	Compound	Flags	Results	DF	PQL	Adj.PQL	Adj.MDL	
91-20-3	Naphthalene	~~U~~ UJ	16	1.0	10	16	4.2	CCH
91-57-6	2-Methylnaphthalene	U	16	1.0	10	16	3.6	
86-73-7	Fluorene	U	16	1.0	10	16	5.2	
85-01-8	Phenanthrene	~~J~~ J	16	1.0	10	16	2.9	CCH
206-44-0	Fluoranthene		27	1.0	10	16	2.9	
129-00-0	Pyrene	J	34	1.0	10	16	3.4	ISL
56-55-3	Benzo(a)anthracene	~~J~~ J	16	1.0	10	16	3.1	
205-99-2	Benzo(b)fluoranthene	J	38	1.0	10	16	3.9	
207-08-9	Benzo(k)fluoranthene		18	1.0	10	16	5.0	
50-32-8	Benzo(a)pyrene	~~J~~	15	1.0	10	16	5.3	
193-39-5	Indeno(1,2,3-cd)pyrene	~~J~~	13	1.0	10	16	3.1	
53-70-3	Dibenzo(a,h)anthracene	~~U~~ R	16	1.0	10	16	2.9	
191-24-2	Benzo(g,h,i)perylene	~~U~~	16	1.0	10	16	3.2	
118-74-1	Hexachlorobenzene	~~U~~	16	1.0	10	16	2.9	
87-68-3	Hexachlorobutadiene	~~U~~	16	1.0	10	16	3.7	
77-47-4	Hexachlorocyclopentadiene	~~U~~	16	1.0	10	16	2.4	
7297-45-2	2-Methylnaphthalene-D10		46%					
367-12-4	2,4-Dibromophenol		77%					
81103-79-9	Fluorene-d10		55%					
1718-51-1	Pyrene-D10		93%					

R RE

lw 3/1/09

16RE

KATAHDIN ANALYTICAL SERVICES
Report of Analytical Results

Client: CH2MHill
Project: TO-009 Lejeune
PO No:
Sample Date: 12/03/08
Received Date: 12/04/08
Extraction Date: 12/05/08
Analysis Date: 22-DEC-2008 20:58
Report Date: 12/29/2008
Matrix: SOIL
% Solids: 61.9

Lab ID: SB6961-8RA
Client ID: MR08-SS069-08D
SDG: TO9-9
Extracted by: AC
Extraction Method: SW846 3550
Analyst: JCG
Analysis Method: SW846 M8270C
Lab Prep Batch: WG58802
Units: ug/Kgdrywt

CAS#	Compound	Flags	Results	DF	PQL	Adj.PQL	Adj.MDL	
91-20-3	Naphthalene	U	16	1.0	10	16	4.2	
91-57-6	2-Methylnaphthalene	J	4.0	1.0	10	16	3.6	
86-73-7	Fluorene	U	16	1.0	10	16	5.2	
85-01-8	Phenanthrene	U	16	1.0	10	16	2.9	
206-44-0	Fluoranthene		27	1.0	10	16	2.9	
129-00-0	Pyrene		23	1.0	10	16	3.4	
56-55-3	Benzo(a)anthracene	J	15	1.0	10	16	3.1	
205-99-2	Benzo(b)fluoranthene	J	34	1.0	10	16	3.9	ISL
207-08-9	Benzo(k)fluoranthene		17	1.0	10	16	5.0	
50-32-8	Benzo(a)pyrene	J	13	1.0	10	16	5.3	
193-39-5	Indeno(1,2,3-cd)pyrene	J	13	1.0	10	16	3.1	
53-70-3	Dibenzo(a,h)anthracene	U	UJ 16	1.0	10	16	2.9	
191-24-2	Benzo(g,h,i)perylene	J	J 10	1.0	10	16	3.2	
118-74-1	Hexachlorobenzene	U	UJ 16	1.0	10	16	2.9	
87-68-3	Hexachlorobutadiene	U	16	1.0	10	16	3.7	
77-47-4	Hexachlorocyclopentadiene	U	16	1.0	10	16	2.4	
7297-45-2	2-Methylnaphthalene-D10		91%					
367-12-4	2,4-Dibromophenol		82%					
81103-79-9	Fluorene-d10		* 50%					
1718-51-1	Pyrene-D10		64%					

kw 3/1/09

KATAHDIN ANALYTICAL SERVICES
Report of Analytical Results

Client: CH2MHill
Project: TO-009 Lejeune
PO No:
Sample Date: 12/03/08
Received Date: 12/04/08
Extraction Date: 12/05/08
Analysis Date: 20-DEC-2008 22:40
Report Date: 12/23/2008
Matrix: SOIL
% Solids: 62.2

Lab ID: SB6961-10
Client ID: MR08-SS069D-08D
SDG: TO9-9
Extracted by: AC
Extraction Method: SW846 3550
Analyst: JCG
Analysis Method: SW846 8270C
Lab Prep Batch: WG588802
Units: ug/Kgdrywt

CAS#	Compound	Flags	Results	DF	PQL	Adj.PQL	Adj.MDL	
91-20-3	Naphthalene	~~U~~ UJ	16	1.0	10	16	4.2	CCH
91-57-6	2-Methylnaphthalene	U	16	1.0	10	16	3.5	
86-73-7	Fluorene	U	16	1.0	10	16	5.1	
85-01-8	Phenanthrene	~~U~~ UJ	16	1.0	10	16	2.9	CCH
206-44-0	Fluoranthene		31	1.0	10	16	2.9	
129-00-0	Pyrene		30	1.0	10	16	3.4	
56-55-3	Benzo(a)anthracene	J	15	1.0	10	16	3.0	
205-99-2	Benzo(b)fluoranthene	J	37	1.0	10	16	3.8	ISL
207-08-9	Benzo(k)fluoranthene		18	1.0	10	16	5.0	
50-32-8	Benzo(a)pyrene	J	14	1.0	10	16	5.3	
193-39-5	Indeno(1,2,3-cd)pyrene	J	14	1.0	10	16	3.0	
53-70-3	Dibenzo(a,h)anthracene	~~U~~ UJ	16	1.0	10	16	2.9	
191-24-2	Benzo(g,h,i)perylene	~~J~~ J	10	1.0	10	16	3.2	
118-74-1	Hexachlorobenzene	~~U~~ UJ	16	1.0	10	16	2.9	
87-68-3	Hexachlorobutadiene	U	16	1.0	10	16	3.7	
77-47-4	Hexachlorocyclopentadiene	U	16	1.0	10	16	2.4	
7297-45-2	2-Methylnaphthalene-D10		47%					
367-12-4	2,4-Dibromophenol		100%					
81103-79-9	Fluorene-d10		58%					
1718-51-1	Pyrene-D10		94%					

Page 01 of 01 R0407.D

lw
3/1/09

17RE

KATAHDIN ANALYTICAL SERVICES
Report of Analytical Results

Client: CH2MHill
Project: TO-009 Lejeune
PO No:
Sample Date: 12/03/08
Received Date: 12/04/08
Extraction Date: 12/05/08
Analysis Date: 22-DEC-2008 21:40
Report Date: 12/23/2008
Matrix: SOIL
% Solids: 62.2

Lab ID: SB6961-10RA
Client ID: MR08-SS069D-08D
SDG: TO9-9
Extracted by: AC
Extraction Method: SW846 3550
Analyst: JCG
Analysis Method: SW846 M8270C
Lab Prep Batch: WG58802
Units: ug/Kgdrywt

Use reanalysis

CAS#	Compound	Flags		Results	DF	PQL	Adj.PQL	Adj.MDL	
91-20-3	Naphthalene	U		16	1.0	10	16	4.2	
91-57-6	2-Methylnaphthalene	J		4.6	1.0	10	16	3.5	
86-73-7	Fluorene	U		16	1.0	10	16	5.1	
85-01-8	Phenanthrene	U		16	1.0	10	16	2.9	
206-44-0	Fluoranthene			27	1.0	10	16	2.9	
129-00-0	Pyrene			23	1.0	10	16	3.4	
56-55-3	Benzo(a)anthracene	J		13	1.0	10	16	3.0	
205-99-2	Benzo(b)fluoranthene		J	38	1.0	10	16	3.8	FSL
207-08-9	Benzo(k)fluoranthene			18	1.0	10	16	5.0	
50-32-8	Benzo(a)pyrene	~~J~~		15	1.0	10	16	5.3	
193-39-5	Indeno(1,2,3-cd)pyrene			16	1.0	10	16	3.0	
53-70-3	Dibenzo(a,h)anthracene	~~U~~	UJ	16	1.0	10	16	2.9	
191-24-2	Benzo(g,h,i)perylene	~~J~~	J	14	1.0	10	16	3.2	
118-74-1	Hexachlorobenzene	~~U~~	UJ	16	1.0	10	16	2.9	
87-68-3	Hexachlorobutadiene	~~U~~	UJ	16	1.0	10	16	3.7	
77-47-4	Hexachlorocyclopentadiene	~~J~~	J	9.6	1.0	10	16	2.4	
7297-45-2	2-Methylnaphthalene-D10			108%					
367-12-4	2,4-Dibromophenol			99%					
81103-79-9	Fluorene-d10			61%					
1718-51-1	Pyrene-D10			76%					

JW 3/1/09

18 RE

KATAHDIN ANALYTICAL SERVICES
Report of Analytical Results

Client: CH2MHill
Project: TO-009 Lejeune
PO No:
Sample Date: 12/03/08
Received Date: 12/04/08
Extraction Date: 12/05/08
Analysis Date: 23-DEC-2008 14:38
Report Date: 12/23/2008
Matrix: SOIL
% Solids: 75.1

Lab ID: SB6961-12RA
Client ID: MR08-IS069-6-7-08D
SDG: TO9-9
Extracted by: AC
Extraction Method: SW846 3550
Analyst: JCG
Analysis Method: SW846 M8270C
Lab Prep Batch: WG58802
Units: ug/Kgdrywt

CAS#	Compound	Flags	Results	DF	PQL	Adj.PQL	Adj.MDL	
91-20-3	Naphthalene	U	13	1.0	10	13	3.5	
91-57-6	2-Methylnaphthalene	U	13	1.0	10	13	2.9	
86-73-7	Fluorene	U	13	1.0	10	13	4.2	
85-01-8	Phenanthrene	U	13	1.0	10	13	2.4	
206-44-0	Fluoranthene	U	13	1.0	10	13	2.4	
129-00-0	Pyrene	~~U~~ UJ	13	1.0	10	13	2.8	CCH
56-55-3	Benzo(a)anthracene	U	13	1.0	10	13	2.5	
205-99-2	Benzo(b)fluoranthene	U	13	1.0	10	13	3.2	
207-08-9	Benzo(k)fluoranthene	U	13	1.0	10	13	4.1	
50-32-8	Benzo(a)pyrene	U	13	1.0	10	13	4.4	
193-39-5	Indeno(1,2,3-cd)pyrene	U	13	1.0	10	13	2.5	
53-70-3	Dibenzo(a,h)anthracene	U	13	1.0	10	13	2.4	
191-24-2	Benzo(g,h,i)perylene	U	13	1.0	10	13	2.7	
118-74-1	Hexachlorobenzene	U	13	1.0	10	13	2.4	
87-68-3	Hexachlorobutadiene	U	13	1.0	10	13	3.1	
77-47-4	Hexachlorocyclopentadiene	~~U~~ UJ	13	1.0	10	13	2.0	CCH
7297-45-2	2-Methylnaphthalene-D10		53%					
367-12-4	2,4-Dibromophenol		68%					
81103-79-9	Fluorene-d10		54%					
1718-51-1	Pyrene-D10		79%					

AW 3/1/09

KATAHDIN ANALYTICAL SERVICES
Report of Analytical Results

Client: CH2MHill
Project: TO-009 Lejeune
PO No:
Sample Date: 12/03/08
Received Date: 12/04/08
Extraction Date: 12/05/08
Analysis Date: 20-DEC-2008 14:56
Report Date: 12/23/2008
Matrix: SOIL
% Solids: 73.3

Lab ID: SB6961-14
Client ID: MR08-IS069D-6-7-08D
SDG: TO9-9
Extracted by: AC
Extraction Method: SW846 3550
Analyst: JCG
Analysis Method: SW846 M8270C
Lab Prep Batch: WG58802
Units: ug/Kgdrywt

CAS#	Compound	Flags	Results	DF	PQL	Adj.PQL	Adj.MDL	
91-20-3	Naphthalene	~~U~~ UJ	14	1.0	10	14	3.5	CCH
91-57-6	2-Methylnaphthalene	U	14	1.0	10	14	3.0	
86-73-7	Fluorene	U	14	1.0	10	14	4.4	
85-01-8	Phenanthrene	~~U~~ UJ	14	1.0	10	14	2.4	CCH
206-44-0	Fluoranthene	U	14	1.0	10	14	2.4	
129-00-0	Pyrene	U	14	1.0	10	14	2.9	
56-55-3	Benzo(a)anthracene	U	14	1.0	10	14	2.6	
205-99-2	Benzo(b)fluoranthene	U	14	1.0	10	14	3.3	
207-08-9	Benzo(k)fluoranthene	U	14	1.0	10	14	4.2	
50-32-8	Benzo(a)pyrene	U	14	1.0	10	14	4.5	
193-39-5	Indeno(1,2,3-cd)pyrene	U	14	1.0	10	14	2.6	
53-70-3	Dibenzo(a,h)anthracene	U	14	1.0	10	14	2.4	
191-24-2	Benzo(g,h,i)perylene	U	14	1.0	10	14	2.7	
118-74-1	Hexachlorobenzene	~~U~~ UJ	14	1.0	10	14	2.4	CCH
87-68-3	Hexachlorobutadiene	U	14	1.0	10	14	3.1	
77-47-4	Hexachlorocyclopentadiene	U	14	1.0	10	14	2.0	
7297-45-2	2-Methylnaphthalene-D10		42%					
367-12-4	2,4-Dibromophenol		79%					
81103-79-9	Fluorene-d10		53%					
1718-51-1	Pyrene-D10		88%					

MW
3/11/09

KATAHDIN ANALYTICAL SERVICES
Report of Analytical Results

Client: CH2MHill
Project: TO-009 Lejeune
PO No:
Sample Date: 12/03/08
Received Date: 12/04/08
Extraction Date: 12/05/08
Analysis Date: 20-DEC-2008 18:27
Report Date: 12/23/2008
Matrix: SOIL
% Solids: 80.2

Lab ID: SB6961-16
Client ID: MR08-SS070-08D
SDG: TO9-9
Extracted by: AC
Extraction Method: SW846 3550
Analyst: JCG
Analysis Method: SW846 M8270C
Lab Prep Batch: WG58802
Units: ug/Kgdrywt

CAS#	Compound	Flags	Results	DF	PQL	Adj.PQL	Adj.MDL	
91-20-3	Naphthalene	~~J~~ UJ	12	1.0	10	12	3.2	CCH
91-57-6	2-Methylnaphthalene	J	3.4	1.0	10	12	2.7	
86-73-7	Fluorene	U	12	1.0	10	12	4.0	
85-01-8	Phenanthrene	~~J~~ J	10	1.0	10	12	2.2	CCH
206-44-0	Fluoranthene		18	1.0	10	12	2.2	
129-00-0	Pyrene		20	1.0	10	12	2.6	
56-55-3	Benzo(a)anthracene	J	11	1.0	10	12	2.4	
205-99-2	Benzo(b)fluoranthene		21	1.0	10	12	3.0	
207-08-9	Benzo(k)fluoranthene	J	10	1.0	10	12	3.9	
50-32-8	Benzo(a)pyrene	J	9.5	1.0	10	12	4.1	
193-39-5	Indeno(1,2,3-cd)pyrene	J	8.0	1.0	10	12	2.4	
53-70-3	Dibenzo(a,h)anthracene	J	12	1.0	10	12	2.2	
191-24-2	Benzo(g,h,i)perylene	J	9.6	1.0	10	12	2.5	
118-74-1	Hexachlorobenzene	~~J~~ UJ	12	1.0	10	12	2.2	CCH
87-68-3	Hexachlorobutadiene	U	12	1.0	10	12	2.9	
77-47-4	Hexachlorocyclopentadiene	J	8.0	1.0	10	12	1.9	
7297-45-2	2-Methylnaphthalene-D10		49%					
367-12-4	2,4-Dibromophenol		94%					
81103-79-9	Fluorene-d10		64%					
1718-51-1	Pyrene-D10		101%					

lw 3/1/09

ENVIRONMENTAL
Data Services, Inc.

SEMIVOLATILE ORGANIC COMPOUNDS

USEPA Region IV - Level IV Review

Site: MCB Camp Lejeune, TO-09 SDG #: TO9-9

Client: CH2M HILL, Inc., Virginia Beach, Virginia Date: March 1, 2009

Laboratory: Katahdin Analytical Services, Scarborough, Maine Reviewer: Nancy Weaver

EDS ID	Client Sample ID	Laboratory Sample ID	Matrix
1	MR08-SS051-08D	SB6918-1	Soil
2	MR08-IS051-5-6-08D	SB6918-2	Soil
3	MR08-SS050-08D	SB6918-3	Soil
4	MR08-IS050-5-6-08D	SB6918-4	Soil
5	MR08-SS052-08D	SB6918-5	Soil
6	MR08-IS052-5-6-08D	SB6918-6	Soil
7	MR08-SS053-08D	SB6918-7	Soil
8	MR08-IS053-5-6-08D	SB6918-8	Soil
9	MR08-SS054-08D	SB6918-9	Soil
10	MR08-IS054-6-7-08D	SB6918-10	Soil
11	MR08-SS055-08D	SB6918-11	Soil
12	MR08-IS055-4-5-08D	SB6918-12	Soil
13	MR08-SS067-08D	SB6961-1	Soil
14	MR08-IS067-6-7-08D	SB6961-3	Soil
15	MR08-SS068-08D	SB6961-5	Soil
15MS	MR08-SS068-08DMS	SB6961-5MS	Soil
15MSD	MR08-SS068-08DMSD	SB6961-5MSD	Soil
16	MR08-SS069-08D	SB6961-7	Soil
17	MR08-SS054-08D	SB6961-9	Soil
18	MR08-IS069-6-7-08D	SB6961-11	Soil
19	MR08-IS069D-6-7-08D	SB6961-13	Soil
20	MR08-SS070-08D	SB6961-15	Soil

The USEPA "Contract Laboratory Program National Functional Guidelines for Organic Data Review," October 1999, and professional judgement were used in evaluating the data in this summary report.

Holding Times - All samples were extracted within 14 days for soil samples and analyzed within 40 days for all samples.

GC/MS Tuning - All of the DFTPP tunes in the initial and continuing calibrations met the percent relative abundance criteria.

Initial Calibration - The initial calibrations exhibited acceptable %RSD and mean RRF values.

Continuing Calibration - The continuing calibrations exhibited acceptable %D and RRF values except the following.

CCAL Date	Compound	%D/RRF	Qualifier	Affected Samples
12/16/08	Nitrobenzene	26.24%	J/UJ	13-15
	4-Nitrophenol	41.47%	J/UJ	13-15
12/17/08	Benzaldehyde	31.13%	J/UJ	1-6, 8, 10, 12
12/18/08 (0959)	Benzaldehyde	34.98%	J/UJ	7, 9
12/18/08 (2043)	Benzaldehyde	39.17%	J/UJ	11

Surrogates - All samples exhibited acceptable surrogate recoveries.

MS/MSD - The MS/MSD sample exhibited acceptable %R and RPD values except the following.

MS/MSD Sample ID	Compound	MS/MSD %R/RPD	Qualifier
15	4-Chloroaniline	0%/0%/Ok	J/R
	2-Nitroaniline	Ok/44%/Ok	J/UJ
	3-Nitroaniline	0%/0%/Ok	J/R
	4-Nitroaniline	0%/0%/Ok	J/R
	n-Nitrosodiphenylamine	45%/22%/67	J/UJ
	Atrazine	52%/Ok/Ok	J/UJ
	3,3'-Dichlorobenzidine	0%/0%/Ok	J/R

Laboratory Control Sample - The LCS samples exhibited acceptable %R values except the following.

LCS ID	Compound	%R	Qualifier	Affected Samples
W658801-LCS	Phenol	104%	None	All ND
	Butylbenzylphthalate	127%	None	All ND
	bis (2-Ethylhexyl) phthalate	127%	None	All ND

Internal Standard (IS) Area Performance - All internal standards met response and retention time (RT) criteria.

Method Blank - The method blanks exhibited the following contamination.

Blank ID	Compound	Conc. ug/kg	Action Level ug/kg	Qualifier	Affected Samples
WG58747-Blank	bis (2-Ethylhexyl) phthalate	120	1200	U	3

Field, Equipment Blank - Field QC results are summarized below.

Blank ID	Compound	Conc. ug/L	Action Level ug/L	Qualifier	Affected Samples
MR08-EB-120208-SS	None - ND	-	-	-	-
MR08-EB-120208-IS	None - ND	-	-	-	-
MR08-FB01120608	None - ND	-	-	-	-

Field Duplicates - Field duplicate results are summarized below.

Compound	MR08-IS069-6-7-08D ug/kg	MR08-IS069D-6-7-08D ug/kg	RPD	Qualifier
None	ND	ND	-	-

Tentatively Identified Compounds (TICs) - TICs were not reported.

Compound Quantitation - No discrepancies were identified.

KATAHDIN ANALYTICAL SERVICES
Report of Analytical Results

Client: CH2MHill
Project: TO-009 Lejeune
PO No:
Sample Date: 12/02/08
Received Date: 12/03/08
Extraction Date: 12/04/08
Analysis Date: 17-DEC-2008 14:28
Report Date: 12/20/2008
Matrix: SOIL
% Solids: 59.6

Lab ID: SB6918-1
Client ID: MR08-SS051-08D
SDG: TO9-9
Extracted by: AC
Extraction Method: SW846 3550
Analyst: JLP
Analysis Method: SW846 8270C
Lab Prep Batch: WG58747
Units: ug/Kgdrywt

CAS#	Compound	Flags	Results	DF	PQL	Adj.PQL	Adj.MDL
100-52-7	Benzaldehyde	~~U~~ UJ	840	1.0	500	840	200 CM
108-95-2	Phenol	U	840	1.0	500	840	260
111-44-4	Bis(2-Chloroethyl)ether	U	550	1.0	330	550	140
95-57-8	2-Chlorophenol	U	840	1.0	500	840	280
95-48-7	2-Methylphenol	U	1000	1.0	600	1000	340
108-60-1	2,2'-Oxybis(1-chloropropane)	U	550	1.0	330	550	150
98-86-2	Acetophenone	U	1000	1.0	600	1000	300
621-64-7	N-Nitroso-di-n-propylamine	U	550	1.0	330	550	140
65794-96-9	3&4-Methylphenol	U	1000	1.0	600	1000	310
67-72-1	Hexachloroethane	U	550	1.0	330	550	160
98-95-3	Nitrobenzene	U	550	1.0	330	550	150
78-59-1	Isophorone	U	550	1.0	330	550	120
88-75-5	2-Nitrophenol	U	1000	1.0	600	1000	280
105-67-9	2,4-Dimethylphenol	U	840	1.0	500	840	280
111-91-1	Bis(2-Chloroethoxy)methane	U	550	1.0	330	550	160
120-83-2	2,4-Dichlorophenol	U	840	1.0	500	840	250
106-47-8	4-Chloroaniline	U	840	1.0	500	840	200
105-60-2	Caprolactam	U	840	1.0	500	840	240
59-50-7	4-Chloro-3-Methylphenol	U	840	1.0	500	840	280
88-06-2	2,4,6-Trichlorophenol	U	840	1.0	500	840	260
95-95-4	2,4,5-Trichlorophenol	U	840	1.0	500	840	260
91-58-7	2-Chloronaphthalene	U	550	1.0	330	550	150
92-52-4	1,1'-Biphenyl	U	550	1.0	330	550	120
88-74-4	2-Nitroaniline	U	840	1.0	500	840	120
131-11-3	Dimethyl Phthalate	U	550	1.0	330	550	130
606-20-2	2,6-Dinitrotoluene	U	550	1.0	330	550	130
208-96-8	Acenaphthylene	U	550	1.0	330	550	120
99-09-2	3-Nitroaniline	U	840	1.0	500	840	160
83-32-9	Acenaphthene	U	550	1.0	330	550	110
51-28-5	2,4-Dinitrophenol	U	2000	1.0	1200	2000	630
132-64-9	Dibenzofuran	U	550	1.0	330	550	130
100-02-7	4-Nitrophenol	U	2000	1.0	1200	2000	520
121-14-2	2,4-Dinitrotoluene	U	550	1.0	330	550	140
84-66-2	Diethylphthalate	U	550	1.0	330	550	130
7005-72-3	4-Chlorophenyl-phenylether	U	550	1.0	330	550	130
100-01-6	4-Nitroaniline	U	840	1.0	500	840	220
534-52-1	4,6-Dinitro-2-Methylphenol	U	2000	1.0	1200	2000	560
86-30-6	N-Nitrosodiphenylamine	U	1100	1.0	660	1100	370
101-55-3	4-Bromophenyl-phenylether	U	550	1.0	330	550	140
1912-24-9	Atrazine	U	550	1.0	330	550	150
87-86-5	Pentachlorophenol	U	1400	1.0	820	1400	400
120-12-7	Anthracene	U	550	1.0	330	550	140
86-74-8	Carbazole	U	840	1.0	500	840	190

lw 3/1/09

KATAHDIN ANALYTICAL SERVICES
Report of Analytical Results

Client: CH2MHill
Project: TO-009 Lejeune
PO No:
Sample Date: 12/02/08
Received Date: 12/03/08
Extraction Date: 12/04/08
Analysis Date: 17-DEC-2008 14:28
Report Date: 12/20/2008
Matrix: SOIL
% Solids: 59.6

Lab ID: SB6918-1
Client ID: MR08-SS051-08D
SDG: TO9-9
Extracted by: AC
Extraction Method: SW846 3550
Analyst: JLP
Analysis Method: SW846 8270C
Lab Prep Batch: WG58747
Units: ug/Kgdrywt

CAS#	Compound	Flags	Results	DF	PQL	Adj.PQL	Adj.MDL
84-74-2	Di-n-butylphthalate	U	550	1.0	330	550	170
85-68-7	Butylbenzylphthalate	U	550	1.0	330	550	160
91-94-1	3,3'-Dichlorobenzidine	U	840	1.0	500	840	190
218-01-9	Chrysene	U	550	1.0	330	550	160
117-81-7	bis(2-Ethylhexyl)phthalate	U	550	1.0	330	550	160
117-84-0	Di-n-octylphthalate	U	550	1.0	330	550	350
367-12-4	2-Fluorophenol		79%				
13127-88-3	Phenol-D6		89%				
4165-60-0	Nitrobenzene-D5		80%				
321-60-8	2-Fluorobiphenyl		84%				
118-79-6	2,4,6-Tribromophenol		96%				
1718-51-0	Terphenyl-D14		94%				

lw 3/1/09

KATAHDIN ANALYTICAL SERVICES
Report of Analytical Results

Client: CH2MHill
Project: TO-009 Lejeune
PO No:
Sample Date: 12/02/08
Received Date: 12/03/08
Extraction Date: 12/04/08
Analysis Date: 17-DEC-2008 10:12
Report Date: 12/20/2008
Matrix: SOIL
% Solids: 83.3

Lab ID: SB6918-2
Client ID: MR08-IS051-5-6-08D
SDG: TO9-9
Extracted by: AC
Extraction Method: SW846 3550
Analyst: JLP
Analysis Method: SW846 8270C
Lab Prep Batch: WG58747
Units: ug/Kgdrywt

CAS#	Compound	Flags	Results	DF	PQL	Adj.PQL	Adj.MDL
100-52-7	Benzaldehyde	~~U~~ UJ	600	1.0	500	600	140 C4
108-95-2	Phenol	U	600	1.0	500	600	190
111-44-4	Bis(2-Chloroethyl)ether	U	400	1.0	330	400	97
95-57-8	2-Chlorophenol	U	600	1.0	500	600	200
95-48-7	2-Methylphenol	U	720	1.0	600	720	240
108-60-1	2,2'-Oxybis(1-chloropropane)	U	400	1.0	330	400	110
98-86-2	Acetophenone	U	720	1.0	600	720	210
621-64-7	N-Nitroso-di-n-propylamine	U	400	1.0	330	400	100
65794-96-9	3&4-Methylphenol	U	720	1.0	600	720	220
67-72-1	Hexachloroethane	U	400	1.0	330	400	120
98-95-3	Nitrobenzene	U	400	1.0	330	400	110
78-59-1	Isophorone	U	400	1.0	330	400	90
88-75-5	2-Nitrophenol	U	720	1.0	600	720	200
105-67-9	2,4-Dimethylphenol	U	600	1.0	500	600	200
111-91-1	Bis(2-Chloroethoxy)methane	U	400	1.0	330	400	120
120-83-2	2,4-Dichlorophenol	U	600	1.0	500	600	180
106-47-8	4-Chloroaniline	U	600	1.0	500	600	140
105-60-2	Caprolactam	U	600	1.0	500	600	170
59-50-7	4-Chloro-3-Methylphenol	U	600	1.0	500	600	200
88-06-2	2,4,6-Trichlorophenol	U	600	1.0	500	600	180
95-95-4	2,4,5-Trichlorophenol	U	600	1.0	500	600	180
91-58-7	2-Chloronaphthalene	U	400	1.0	330	400	100
92-52-4	1,1'-Biphenyl	U	400	1.0	330	400	88
88-74-4	2-Nitroaniline	U	600	1.0	500	600	90
131-11-3	Dimethyl Phthalate	U	400	1.0	330	400	94
606-20-2	2,6-Dinitrotoluene	U	400	1.0	330	400	95
208-96-8	Acenaphthylene	U	400	1.0	330	400	84
99-09-2	3-Nitroaniline	U	600	1.0	500	600	110
83-32-9	Acenaphthene	U	400	1.0	330	400	78
51-28-5	2,4-Dinitrophenol	U	1400	1.0	1200	1400	450
132-64-9	Dibenzofuran	U	400	1.0	330	400	95
100-02-7	4-Nitrophenol	U	1400	1.0	1200	1400	370
121-14-2	2,4-Dinitrotoluene	U	400	1.0	330	400	100
84-66-2	Diethylphthalate	U	400	1.0	330	400	96
7005-72-3	4-Chlorophenyl-phenylether	U	400	1.0	330	400	94
100-01-6	4-Nitroaniline	U	600	1.0	500	600	160
534-52-1	4,6-Dinitro-2-Methylphenol	U	1400	1.0	1200	1400	400
86-30-6	N-Nitrosodiphenylamine	U	790	1.0	660	790	260
101-55-3	4-Bromophenyl-phenylether	U	400	1.0	330	400	100
1912-24-9	Atrazine	U	400	1.0	330	400	110
87-86-5	Pentachlorophenol	U	980	1.0	820	980	280
120-12-7	Anthracene	U	400	1.0	330	400	100
86-74-8	Carbazole	U	600	1.0	500	600	130

MW 3/1/09

KATAHDIN ANALYTICAL SERVICES
Report of Analytical Results

Client: CH2MHill
Project: TO-009 Lejeune
PO No:
Sample Date: 12/02/08
Received Date: 12/03/08
Extraction Date: 12/04/08
Analysis Date: 17-DEC-2008 10:12
Report Date: 12/20/2008
Matrix: SOIL
% Solids: 83.3

Lab ID: SB6918-2
Client ID: MR08-IS051-5-6-08D
SDG: TO9-9
Extracted by: AC
Extraction Method: SW846 3550
Analyst: JLP
Analysis Method: SW846 8270C
Lab Prep Batch: WG58747
Units: ug/Kgdrywt

CAS#	Compound	Flags	Results	DF	PQL	Adj.PQL	Adj.MDL
84-74-2	Di-n-butylphthalate	U	400	1.0	330	400	120
85-68-7	Butylbenzylphthalate	U	400	1.0	330	400	110
91-94-1	3,3'-Dichlorobenzidine	U	600	1.0	500	600	140
218-01-9	Chrysene	U	400	1.0	330	400	110
117-81-7	bis(2-Ethylhexyl)phthalate	U	400	1.0	330	400	120
117-84-0	Di-n-octylphthalate	U	400	1.0	330	400	250
367-12-4	2-Fluorophenol		71%				
13127-88-3	Phenol-D6		86%				
4165-60-0	Nitrobenzene-D5		82%				
321-60-8	2-Fluorobiphenyl		80%				
118-79-6	2,4,6-Tribromophenol		77%				
1718-51-0	Terphenyl-D14		93%				

lw 3/1/09

3

KATAHDIN ANALYTICAL SERVICES
Report of Analytical Results

Client: CH2MHill
Project: TO-009 Lejeune
PO No:
Sample Date: 12/02/08
Received Date: 12/03/08
Extraction Date: 12/04/08
Analysis Date: 17-DEC-2008 15:10
Report Date: 12/20/2008
Matrix: SOIL
% Solids: 80.9

Lab ID: SB6918-3
Client ID: MR08-SS050-08D
SDG: TO9-9
Extracted by: AC
Extraction Method: SW846 3550
Analyst: JLP
Analysis Method: SW846 8270C
Lab Prep Batch: WG58747
Units: ug/Kgdrywt

CAS#	Compound	Flags	Results	DF	PQL	Adj.PQL	Adj.MDL
100-52-7	Benzaldehyde	~~U~~ UJ	620	1.0	500	620	150 CLH
108-95-2	Phenol	U	620	1.0	500	620	190
111-44-4	Bis(2-Chloroethyl)ether	U	410	1.0	330	410	100
95-57-8	2-Chlorophenol	U	620	1.0	500	620	200
95-48-7	2-Methylphenol	U	740	1.0	600	740	250
108-60-1	2,2'-Oxybis(1-chloropropane)	U	410	1.0	330	410	110
98-86-2	Acetophenone	U	740	1.0	600	740	220
621-64-7	N-Nitroso-di-n-propylamine	U	410	1.0	330	410	100
65794-96-9	3&4-Methylphenol	U	740	1.0	600	740	230
67-72-1	Hexachloroethane	U	410	1.0	330	410	120
98-95-3	Nitrobenzene	U	410	1.0	330	410	110
78-59-1	Isophorone	U	410	1.0	330	410	93
88-75-5	2-Nitrophenol	U	740	1.0	600	740	210
105-67-9	2,4-Dimethylphenol	U	620	1.0	500	620	200
111-91-1	Bis(2-Chloroethoxy)methane	U	410	1.0	330	410	120
120-83-2	2,4-Dichlorophenol	U	620	1.0	500	620	180
106-47-8	4-Chloroaniline	U	620	1.0	500	620	150
105-60-2	Caprolactam	U	620	1.0	500	620	180
59-50-7	4-Chloro-3-Methylphenol	U	620	1.0	500	620	200
88-06-2	2,4,6-Trichlorophenol	U	620	1.0	500	620	190
95-95-4	2,4,5-Trichlorophenol	U	620	1.0	500	620	190
91-58-7	2-Chloronaphthalene	U	410	1.0	330	410	110
92-52-4	1,1'-Biphenyl	U	410	1.0	330	410	90
88-74-4	2-Nitroaniline	U	620	1.0	500	620	93
131-11-3	Dimethyl Phthalate	U	410	1.0	330	410	96
606-20-2	2,6-Dinitrotoluene	U	410	1.0	330	410	98
208-96-8	Acenaphthylene	U	410	1.0	330	410	86
99-09-2	3-Nitroaniline	U	620	1.0	500	620	120
83-32-9	Acenaphthene	U	410	1.0	330	410	80
51-28-5	2,4-Dinitrophenol	U	1500	1.0	1200	1500	460
132-64-9	Dibenzofuran	U	410	1.0	330	410	98
100-02-7	4-Nitrophenol	U	1500	1.0	1200	1500	380
121-14-2	2,4-Dinitrotoluene	U	410	1.0	330	410	100
84-66-2	Diethylphthalate	U	410	1.0	330	410	99
7005-72-3	4-Chlorophenyl-phenylether	U	410	1.0	330	410	96
100-01-6	4-Nitroaniline	U	620	1.0	500	620	160
534-52-1	4,6-Dinitro-2-Methylphenol	U	1500	1.0	1200	1500	420
86-30-6	N-Nitrosodiphenylamine	U	820	1.0	660	820	270
101-55-3	4-Bromophenyl-phenylether	U	410	1.0	330	410	100
1912-24-9	Atrazine	U	410	1.0	330	410	110
87-86-5	Pentachlorophenol	U	1000	1.0	820	1000	290
120-12-7	Anthracene	U	410	1.0	330	410	100
86-74-8	Carbazole	U	620	1.0	500	620	140

lw 3/1/09

KATAHDIN ANALYTICAL SERVICES
Report of Analytical Results

Client: CH2MHill
Project: TO-009 Lejeune
PO No:
Sample Date: 12/02/08
Received Date: 12/03/08
Extraction Date: 12/04/08
Analysis Date: 17-DEC-2008 15:10
Report Date: 12/20/2008
Matrix: SOIL
% Solids: 80.9

Lab ID: SB6918-3
Client ID: MR08-SS050-08D
SDG: TO9-9
Extracted by: AC
Extraction Method: SW846 3550
Analyst: JLP
Analysis Method: SW846 8270C
Lab Prep Batch: WG58747
Units: ug/Kgdrywt

CAS#	Compound	Flags	Results	DF	PQL	Adj.PQL	Adj.MDL	
84-74-2	Di-n-butylphthalate	U	410	1.0	330	410	120	
85-68-7	Butylbenzylphthalate	U	410	1.0	330	410	110	
91-94-1	3,3'-Dichlorobenzidine	U	620	1.0	500	620	140	
218-01-9	Chrysene	U	410	1.0	330	410	120	
117-81-7	bis(2-Ethylhexyl)phthalate	~~JB~~ 410U	~~170~~	1.0	330	410	120	BL
117-84-0	Di-n-octylphthalate	U	410	1.0	330	410	260	
367-12-4	2-Fluorophenol		69%					
13127-88-3	Phenol-D6		73%					
4165-60-0	Nitrobenzene-D5		72%					
321-60-8	2-Fluorobiphenyl		76%					
118-79-6	2,4,6-Tribromophenol		96%					
1718-51-0	Terphenyl-D14		91%					

lcw 3/1/09

4

KATAHDIN ANALYTICAL SERVICES
Report of Analytical Results

Client: CH2MHill
Project: TO-009 Lejeune
PO No:
Sample Date: 12/02/08
Received Date: 12/03/08
Extraction Date: 12/04/08
Analysis Date: 17-DEC-2008 10:55
Report Date: 12/20/2008
Matrix: SOIL
% Solids: 78.5

Lab ID: SB6918-4
Client ID: MR08-IS050-5-6-08D
SDG: TO9-9
Extracted by: AC
Extraction Method: SW846 3550
Analyst: JLP
Analysis Method: SW846 8270C
Lab Prep Batch: WG58747
Units: ug/Kgdrywt

CAS#	Compound	Flags	Results	DF	PQL	Adj.PQL	Adj.MDL
100-52-7	Benzaldehyde	~~U~~ UJ	640	1.0	500	640	150 CH
108-95-2	Phenol	U	640	1.0	500	640	200
111-44-4	Bis(2-Chloroethyl)ether	U	420	1.0	330	420	100
95-57-8	2-Chlorophenol	U	640	1.0	500	640	210
95-48-7	2-Methylphenol	U	760	1.0	600	760	250
108-60-1	2,2'-Oxybis(1-chloropropane)	U	420	1.0	330	420	110
98-86-2	Acetophenone	U	760	1.0	600	760	230
621-64-7	N-Nitroso-di-n-propylamine	U	420	1.0	330	420	100
65794-96-9	3&4-Methylphenol	U	760	1.0	600	760	240
67-72-1	Hexachloroethane	U	420	1.0	330	420	120
98-95-3	Nitrobenzene	U	420	1.0	330	420	120
78-59-1	Isophorone	U	420	1.0	330	420	96
88-75-5	2-Nitrophenol	U	760	1.0	600	760	210
105-67-9	2,4-Dimethylphenol	U	640	1.0	500	640	210
111-91-1	Bis(2-Chloroethoxy)methane	U	420	1.0	330	420	120
120-83-2	2,4-Dichlorophenol	U	640	1.0	500	640	190
106-47-8	4-Chloroaniline	U	640	1.0	500	640	150
105-60-2	Caprolactam	U	640	1.0	500	640	180
59-50-7	4-Chloro-3-Methylphenol	U	640	1.0	500	640	210
88-06-2	2,4,6-Trichlorophenol	U	640	1.0	500	640	200
95-95-4	2,4,5-Trichlorophenol	U	640	1.0	500	640	200
91-58-7	2-Chloronaphthalene	U	420	1.0	330	420	110
92-52-4	1,1'-Biphenyl	U	420	1.0	330	420	93
88-74-4	2-Nitroaniline	U	640	1.0	500	640	96
131-11-3	Dimethyl Phthalate	U	420	1.0	330	420	99
606-20-2	2,6-Dinitrotoluene	U	420	1.0	330	420	100
208-96-8	Acenaphthylene	U	420	1.0	330	420	89
99-09-2	3-Nitroaniline	U	640	1.0	500	640	120
83-32-9	Acenaphthene	U	420	1.0	330	420	83
51-28-5	2,4-Dinitrophenol	U	1500	1.0	1200	1500	480
132-64-9	Dibenzofuran	U	420	1.0	330	420	100
100-02-7	4-Nitrophenol	U	1500	1.0	1200	1500	390
121-14-2	2,4-Dinitrotoluene	U	420	1.0	330	420	110
84-66-2	Diethylphthalate	U	420	1.0	330	420	100
7005-72-3	4-Chlorophenyl-phenylether	U	420	1.0	330	420	99
100-01-6	4-Nitroaniline	U	640	1.0	500	640	170
534-52-1	4,6-Dinitro-2-Methylphenol	U	1500	1.0	1200	1500	430
86-30-6	N-Nitrosodiphenylamine	U	840	1.0	660	840	280
101-55-3	4-Bromophenyl-phenylether	U	420	1.0	330	420	110
1912-24-9	Atrazine	U	420	1.0	330	420	120
87-86-5	Pentachlorophenol	U	1000	1.0	820	1000	300
120-12-7	Anthracene	U	420	1.0	330	420	110
86-74-8	Carbazole	U	640	1.0	500	640	140

DW
3/1/09

KATAHDIN ANALYTICAL SERVICES
Report of Analytical Results

Client: CH2MHill
Project: TO-009 Lejeune
PO No:
Sample Date: 12/02/08
Received Date: 12/03/08
Extraction Date: 12/04/08
Analysis Date: 17-DEC-2008 10:55
Report Date: 12/20/2008
Matrix: SOIL
% Solids: 78.5

Lab ID: SB6918-4
Client ID: MR08-IS050-5-6-08D
SDG: TO9-9
Extracted by: AC
Extraction Method: SW846 3550
Analyst: JLP
Analysis Method: SW846 8270C
Lab Prep Batch: WG58747
Units: ug/Kgdrywt

CAS#	Compound	Flags	Results	DF	PQL	Adj.PQL	Adj.MDL
84-74-2	Di-n-butylphthalate	U	420	1.0	330	420	130
85-68-7	Butylbenzylphthalate	U	420	1.0	330	420	120
91-94-1	3,3'-Dichlorobenzidine	U	640	1.0	500	640	140
218-01-9	Chrysene	U	420	1.0	330	420	120
117-81-7	bis(2-Ethylhexyl)phthalate	U	420	1.0	330	420	120
117-84-0	Di-n-octylphthalate	U	420	1.0	330	420	270
367-12-4	2-Fluorophenol		78%				
13127-88-3	Phenol-D6		86%				
4165-60-0	Nitrobenzene-D5		78%				
321-60-8	2-Fluorobiphenyl		80%				
118-79-6	2,4,6-Tribromophenol		97%				
1718-51-0	Terphenyl-D14		94%				

kw 3/1/09

5

KATAHDIN ANALYTICAL SERVICES
Report of Analytical Results

Client: CH2MHill
Project: TO-009 Lejeune
PO No:
Sample Date: 12/02/08
Received Date: 12/03/08
Extraction Date: 12/04/08
Analysis Date: 17-DEC-2008 15:52
Report Date: 12/20/2008
Matrix: SOIL
% Solids: 70.1

Lab ID: SB6918-5
Client ID: MR08-SS052-08D
SDG: TO9-9
Extracted by: AC
Extraction Method: SW846 3550
Analyst: JLP
Analysis Method: SW846 8270C
Lab Prep Batch: WG58747
Units: ug/Kgdrywt

CAS#	Compound	Flags	Results	DF	PQL	Adj.PQL	Adj.MDL
100-52-7	Benzaldehyde	~~U~~ UJ	710	1.0	500	710	170 CCH
108-95-2	Phenol	U	710	1.0	500	710	220
111-44-4	Bis(2-Chloroethyl)ether	U	470	1.0	330	470	120
95-57-8	2-Chlorophenol	U	710	1.0	500	710	230
95-48-7	2-Methylphenol	U	860	1.0	600	860	280
108-60-1	2,2'-Oxybis(1-chloropropane)	U	470	1.0	330	470	130
98-86-2	Acetophenone	U	860	1.0	600	860	250
621-64-7	N-Nitroso-di-n-propylamine	U	470	1.0	330	470	120
65794-96-9	3&4-Methylphenol	U	860	1.0	600	860	270
67-72-1	Hexachloroethane	U	470	1.0	330	470	140
98-95-3	Nitrobenzene	U	470	1.0	330	470	130
78-59-1	Isophorone	U	470	1.0	330	470	110
88-75-5	2-Nitrophenol	U	860	1.0	600	860	240
105-67-9	2,4-Dimethylphenol	U	710	1.0	500	710	240
111-91-1	Bis(2-Chloroethoxy)methane	U	470	1.0	330	470	140
120-83-2	2,4-Dichlorophenol	U	710	1.0	500	710	210
106-47-8	4-Chloroaniline	U	710	1.0	500	710	170
105-60-2	Caprolactam	U	710	1.0	500	710	200
59-50-7	4-Chloro-3-Methylphenol	U	710	1.0	500	710	240
88-06-2	2,4,6-Trichlorophenol	U	710	1.0	500	710	220
95-95-4	2,4,5-Trichlorophenol	U	710	1.0	500	710	220
91-58-7	2-Chloronaphthalene	U	470	1.0	330	470	120
92-52-4	1,1'-Biphenyl	U	470	1.0	330	470	100
88-74-4	2-Nitroaniline	U	710	1.0	500	710	110
131-11-3	Dimethyl Phthalate	U	470	1.0	330	470	110
606-20-2	2,6-Dinitrotoluene	U	470	1.0	330	470	110
208-96-8	Acenaphthylene	U	470	1.0	330	470	100
99-09-2	3-Nitroaniline	U	710	1.0	500	710	130
83-32-9	Acenaphthene	U	470	1.0	330	470	93
51-28-5	2,4-Dinitrophenol	U	1700	1.0	1200	1700	540
132-64-9	Dibenzofuran	U	470	1.0	330	470	110
100-02-7	4-Nitrophenol	U	1700	1.0	1200	1700	440
121-14-2	2,4-Dinitrotoluene	U	470	1.0	330	470	120
84-66-2	Diethylphthalate	U	470	1.0	330	470	110
7005-72-3	4-Chlorophenyl-phenylether	U	470	1.0	330	470	110
100-01-6	4-Nitroaniline	U	710	1.0	500	710	190
534-52-1	4,6-Dinitro-2-Methylphenol	U	1700	1.0	1200	1700	480
86-30-6	N-Nitrosodiphenylamine	U	940	1.0	660	940	310
101-55-3	4-Bromophenyl-phenylether	U	470	1.0	330	470	120
1912-24-9	Atrazine	U	470	1.0	330	470	130
87-86-5	Pentachlorophenol	U	1200	1.0	820	1200	340
120-12-7	Anthracene	U	470	1.0	330	470	120
86-74-8	Carbazole	U	710	1.0	500	710	160

lw 31/09

KATAHDIN ANALYTICAL SERVICES
Report of Analytical Results

Client: CH2MHill
Project: TO-009 Lejeune
PO No:
Sample Date: 12/02/08
Received Date: 12/03/08
Extraction Date: 12/04/08
Analysis Date: 17-DEC-2008 15:52
Report Date: 12/20/2008
Matrix: SOIL
% Solids: 70.1

Lab ID: SB6918-5
Client ID: MR08-SS052-08D
SDG: TO9-9
Extracted by: AC
Extraction Method: SW846 3550
Analyst: JLP
Analysis Method: SW846 8270C
Lab Prep Batch: WG58747
Units: ug/Kgdrywt

CAS#	Compound	Flags	Results	DF	PQL	Adj.PQL	Adj.MDL
84-74-2	Di-n-butylphthalate	U	470	1.0	330	470	140
85-68-7	Butylbenzylphthalate	U	470	1.0	330	470	130
91-94-1	3,3'-Dichlorobenzidine	U	710	1.0	500	710	160
218-01-9	Chrysene	U	470	1.0	330	470	140
117-81-7	bis(2-Ethylhexyl)phthalate	U	470	1.0	330	470	140
117-84-0	Di-n-octylphthalate	U	470	1.0	330	470	300
367-12-4	2-Fluorophenol		67%				
13127-88-3	Phenol-D6		82%				
4165-60-0	Nitrobenzene-D5		68%				
321-60-8	2-Fluorobiphenyl		72%				
118-79-6	2,4,6-Tribromophenol		92%				
1718-51-0	Terphenyl-D14		88%				

DW
3/1/09

6

KATAHDIN ANALYTICAL SERVICES
Report of Analytical Results

Client: CH2MHill
Project: TO-009 Lejeune
PO No:
Sample Date: 12/02/08
Received Date: 12/03/08
Extraction Date: 12/04/08
Analysis Date: 17-DEC-2008 11:37
Report Date: 12/20/2008
Matrix: SOIL
% Solids: 86.8

Lab ID: SB6918-6
Client ID: MR08-IS052-5-6-08D
SDG: TO9-9
Extracted by: AC
Extraction Method: SW846 3550
Analyst: JLP
Analysis Method: SW846 8270C
Lab Prep Batch: WG58747
Units: ug/Kgdrywt

CAS#	Compound	Flags	Results	DF	PQL	Adj.PQL	Adj.MDL
100-52-7	Benzaldehyde	~~U~~ UJ	580	1.0	500	580	140 CCH
108-95-2	Phenol	U	580	1.0	500	580	180
111-44-4	Bis(2-Chloroethyl)ether	U	380	1.0	330	380	93
95-57-8	2-Chlorophenol	U	580	1.0	500	580	190
95-48-7	2-Methylphenol	U	690	1.0	600	690	230
108-60-1	2,2'-Oxybis(1-chloropropane)	U	380	1.0	330	380	100
98-86-2	Acetophenone	U	690	1.0	600	690	200
621-64-7	N-Nitroso-di-n-propylamine	U	380	1.0	330	380	96
65794-96-9	3&4-Methylphenol	U	690	1.0	600	690	220
67-72-1	Hexachloroethane	U	380	1.0	330	380	110
98-95-3	Nitrobenzene	U	380	1.0	330	380	100
78-59-1	Isophorone	U	380	1.0	330	380	86
88-75-5	2-Nitrophenol	U	690	1.0	600	690	190
105-67-9	2,4-Dimethylphenol	U	580	1.0	500	580	190
111-91-1	Bis(2-Chloroethoxy)methane	U	380	1.0	330	380	110
120-83-2	2,4-Dichlorophenol	U	580	1.0	500	580	170
106-47-8	4-Chloroaniline	U	580	1.0	500	580	140
105-60-2	Caprolactam	U	580	1.0	500	580	160
59-50-7	4-Chloro-3-Methylphenol	U	580	1.0	500	580	190
88-06-2	2,4,6-Trichlorophenol	U	580	1.0	500	580	180
95-95-4	2,4,5-Trichlorophenol	U	580	1.0	500	580	180
91-58-7	2-Chloronaphthalene	U	380	1.0	330	380	100
92-52-4	1,1'-Biphenyl	U	380	1.0	330	380	84
88-74-4	2-Nitroaniline	U	580	1.0	500	580	86
131-11-3	Dimethyl Phthalate	U	380	1.0	330	380	90
606-20-2	2,6-Dinitrotoluene	U	380	1.0	330	380	91
208-96-8	Acenaphthylene	U	380	1.0	330	380	81
99-09-2	3-Nitroaniline	U	580	1.0	500	580	110
83-32-9	Acenaphthene	U	380	1.0	330	380	75
51-28-5	2,4-Dinitrophenol	U	1400	1.0	1200	1400	430
132-64-9	Dibenzofuran	U	380	1.0	330	380	91
100-02-7	4-Nitrophenol	U	1400	1.0	1200	1400	360
121-14-2	2,4-Dinitrotoluene	U	380	1.0	330	380	98
84-66-2	Diethylphthalate	U	380	1.0	330	380	92
7005-72-3	4-Chlorophenyl-phenylether	U	380	1.0	330	380	90
100-01-6	4-Nitroaniline	U	580	1.0	500	580	150
534-52-1	4,6-Dinitro-2-Methylphenol	U	1400	1.0	1200	1400	390
86-30-6	N-Nitrosodiphenylamine	U	760	1.0	660	760	250
101-55-3	4-Bromophenyl-phenylether	U	380	1.0	330	380	98
1912-24-9	Atrazine	U	380	1.0	330	380	100
87-86-5	Pentachlorophenol	U	940	1.0	820	940	270
120-12-7	Anthracene	U	380	1.0	330	380	97
86-74-8	Carbazole	U	580	1.0	500	580	130

MW 3/1/09

6

KATAHDIN ANALYTICAL SERVICES
Report of Analytical Results

Client: CH2MHill
Project: TO-009 Lejeune
PO No:
Sample Date: 12/02/08
Received Date: 12/03/08
Extraction Date: 12/04/08
Analysis Date: 17-DEC-2008 11:37
Report Date: 12/20/2008
Matrix: SOIL
% Solids: 86.8

Lab ID: SB6918-6
Client ID: MR08-IS052-5-6-08D
SDG: TO9-9
Extracted by: AC
Extraction Method: SW846 3550
Analyst: JLP
Analysis Method: SW846 8270C
Lab Prep Batch: WG58747
Units: ug/Kgdrywt

CAS#	Compound	Flags	Results	DF	PQL	Adj.PQL	Adj.MDL
84-74-2	Di-n-butylphthalate	U	380	1.0	330	380	120
85-68-7	Butylbenzylphthalate	U	380	1.0	330	380	110
91-94-1	3,3'-Dichlorobenzidine	U	580	1.0	500	580	130
218-01-9	Chrysene	U	380	1.0	330	380	110
117-81-7	bis(2-Ethylhexyl)phthalate	U	380	1.0	330	380	110
117-84-0	Di-n-octylphthalate	U	380	1.0	330	380	240
367-12-4	2-Fluorophenol		59%				
13127-88-3	Phenol-D6		72%				
4165-60-0	Nitrobenzene-D5		74%				
321-60-8	2-Fluorobiphenyl		73%				
118-79-6	2,4,6-Tribromophenol		52%				
1718-51-0	Terphenyl-D14		87%				

lw 31,109

7

KATAHDIN ANALYTICAL SERVICES
Report of Analytical Results

Client: CH2MHill
Project: TO-009 Lejeune
PO No:
Sample Date: 12/02/08
Received Date: 12/03/08
Extraction Date: 12/04/08
Analysis Date: 18-DEC-2008 16:23
Report Date: 12/20/2008
Matrix: SOIL
% Solids: 75.3

Lab ID: SB6918-7
Client ID: MR08-SS053-08D
SDG: TO9-9
Extracted by: AC
Extraction Method: SW846 3550
Analyst: JLP
Analysis Method: SW846 8270C
Lab Prep Batch: WG58747
Units: ug/Kgdrywt

CAS#	Compound	Flags	Results	DF	PQL	Adj.PQL	Adj.MDL
100-52-7	Benzaldehyde	~~U~~ UJ	660	1.0	500	660	160 CCH
108-95-2	Phenol	U	660	1.0	500	660	210
111-44-4	Bis(2-Chloroethyl)ether	U	440	1.0	330	440	110
95-57-8	2-Chlorophenol	U	660	1.0	500	660	220
95-48-7	2-Methylphenol	U	800	1.0	600	800	260
108-60-1	2,2'-Oxybis(1-chloropropane)	U	440	1.0	330	440	120
98-86-2	Acetophenone	U	800	1.0	600	800	240
621-64-7	N-Nitroso-di-n-propylamine	U	440	1.0	330	440	110
65794-96-9	3&4-Methylphenol	U	800	1.0	600	800	250
67-72-1	Hexachloroethane	U	440	1.0	330	440	130
98-95-3	Nitrobenzene	U	440	1.0	330	440	120
78-59-1	Isophorone	U	440	1.0	330	440	100
88-75-5	2-Nitrophenol	U	800	1.0	600	800	220
105-67-9	2,4-Dimethylphenol	U	660	1.0	500	660	220
111-91-1	Bis(2-Chloroethoxy)methane	U	440	1.0	330	440	130
120-83-2	2,4-Dichlorophenol	U	660	1.0	500	660	200
106-47-8	4-Chloroaniline	U	660	1.0	500	660	160
105-60-2	Caprolactam	U	660	1.0	500	660	190
59-50-7	4-Chloro-3-Methylphenol	U	660	1.0	500	660	220
88-06-2	2,4,6-Trichlorophenol	U	660	1.0	500	660	200
95-95-4	2,4,5-Trichlorophenol	U	660	1.0	500	660	200
91-58-7	2-Chloronaphthalene	U	440	1.0	330	440	120
92-52-4	1,1'-Biphenyl	U	440	1.0	330	440	97
88-74-4	2-Nitroaniline	U	660	1.0	500	660	100
131-11-3	Dimethyl Phthalate	U	440	1.0	330	440	100
606-20-2	2,6-Dinitrotoluene	U	440	1.0	330	440	100
208-96-8	Acenaphthylene	U	440	1.0	330	440	93
99-09-2	3-Nitroaniline	U	660	1.0	500	660	120
83-32-9	Acenaphthene	U	440	1.0	330	440	86
51-28-5	2,4-Dinitrophenol	U	1600	1.0	1200	1600	500
132-64-9	Dibenzofuran	U	440	1.0	330	440	100
100-02-7	4-Nitrophenol	U	1600	1.0	1200	1600	410
121-14-2	2,4-Dinitrotoluene	U	440	1.0	330	440	110
84-66-2	Diethylphthalate	U	440	1.0	330	440	110
7005-72-3	4-Chlorophenyl-phenylether	U	440	1.0	330	440	100
100-01-6	4-Nitroaniline	U	660	1.0	500	660	180
534-52-1	4,6-Dinitro-2-Methylphenol	U	1600	1.0	1200	1600	450
86-30-6	N-Nitrosodiphenylamine	U	880	1.0	660	880	290
101-55-3	4-Bromophenyl-phenylether	U	440	1.0	330	440	110
1912-24-9	Atrazine	U	440	1.0	330	440	120
87-86-5	Pentachlorophenol	U	1100	1.0	820	1100	310
120-12-7	Anthracene	U	440	1.0	330	440	110
86-74-8	Carbazole	U	660	1.0	500	660	150

RW
3/1/09

7

KATAHDIN ANALYTICAL SERVICES
Report of Analytical Results

Client: CH2MHill
Project: TO-009 Lejeune
PO No:
Sample Date: 12/02/08
Received Date: 12/03/08
Extraction Date: 12/04/08
Analysis Date: 18-DEC-2008 16:23
Report Date: 12/20/2008
Matrix: SOIL
% Solids: 75.3

Lab ID: SB6918-7
Client ID: MR08-SS053-08D
SDG: TO9-9
Extracted by: AC
Extraction Method: SW846 3550
Analyst: JLP
Analysis Method: SW846 8270C
Lab Prep Batch: WG58747
Units: ug/Kgdrywt

CAS#	Compound	Flags	Results	DF	PQL	Adj.PQL	Adj.MDL
84-74-2	Di-n-butylphthalate	U	440	1.0	330	440	130
85-68-7	Butylbenzylphthalate	U	440	1.0	330	440	120
91-94-1	3,3'-Dichlorobenzidine	U	660	1.0	500	660	150
218-01-9	Chrysene	U	440	1.0	330	440	130
117-81-7	bis(2-Ethylhexyl)phthalate	U	440	1.0	330	440	130
117-84-0	Di-n-octylphthalate	U	440	1.0	330	440	280
367-12-4	2-Fluorophenol		83%				
13127-88-3	Phenol-D6		97%				
4165-60-0	Nitrobenzene-D5		87%				
321-60-8	2-Fluorobiphenyl		90%				
118-79-6	2,4,6-Tribromophenol		96%				
1718-51-0	Terphenyl-D14		124%				

lw 3/1/09

8

KATAHDIN ANALYTICAL SERVICES
Report of Analytical Results

Client: CH2MHill
Project: TO-009 Lejeune
PO No:
Sample Date: 12/02/08
Received Date: 12/03/08
Extraction Date: 12/04/08
Analysis Date: 17-DEC-2008 12:20
Report Date: 12/20/2008
Matrix: SOIL
% Solids: 82.8

Lab ID: SB6918-8
Client ID: MR08-IS053-5-6-08D
SDG: TO9-9
Extracted by: AC
Extraction Method: SW846 3550
Analyst: JLP
Analysis Method: SW846 8270C
Lab Prep Batch: WG58747
Units: ug/Kgdrywt

CAS#	Compound	Flags	Results	DF	PQL	Adj.PQL	Adj.MDL
100-52-7	Benzaldehyde	~~U~~ UJ	600	1.0	500	600	140 CCH
108-95-2	Phenol	U	600	1.0	500	600	190
111-44-4	Bis(2-Chloroethyl)ether	U	400	1.0	330	400	98
95-57-8	2-Chlorophenol	U	600	1.0	500	600	200
95-48-7	2-Methylphenol	U	720	1.0	600	720	240
108-60-1	2,2'-Oxybis(1-chloropropane)	U	400	1.0	330	400	110
98-86-2	Acetophenone	U	720	1.0	600	720	210
621-64-7	N-Nitroso-di-n-propylamine	U	400	1.0	330	400	100
65794-96-9	3&4-Methylphenol	U	720	1.0	600	720	220
67-72-1	Hexachloroethane	U	400	1.0	330	400	120
98-95-3	Nitrobenzene	U	400	1.0	330	400	110
78-59-1	Isophorone	U	400	1.0	330	400	90
88-75-5	2-Nitrophenol	U	720	1.0	600	720	200
105-67-9	2,4-Dimethylphenol	U	600	1.0	500	600	200
111-91-1	Bis(2-Chloroethoxy)methane	U	400	1.0	330	400	120
120-83-2	2,4-Dichlorophenol	U	600	1.0	500	600	180
106-47-8	4-Chloroaniline	U	600	1.0	500	600	140
105-60-2	Caprolactam	U	600	1.0	500	600	170
59-50-7	4-Chloro-3-Methylphenol	U	600	1.0	500	600	200
88-06-2	2,4,6-Trichlorophenol	U	600	1.0	500	600	190
95-95-4	2,4,5-Trichlorophenol	U	600	1.0	500	600	190
91-58-7	2-Chloronaphthalene	U	400	1.0	330	400	100
92-52-4	1,1'-Biphenyl	U	400	1.0	330	400	88
88-74-4	2-Nitroaniline	U	600	1.0	500	600	90
131-11-3	Dimethyl Phthalate	U	400	1.0	330	400	94
606-20-2	2,6-Dinitrotoluene	U	400	1.0	330	400	95
208-96-8	Acenaphthylene	U	400	1.0	330	400	84
99-09-2	3-Nitroaniline	U	600	1.0	500	600	110
83-32-9	Acenaphthene	U	400	1.0	330	400	78
51-28-5	2,4-Dinitrophenol	U	1400	1.0	1200	1400	460
132-64-9	Dibenzofuran	U	400	1.0	330	400	95
100-02-7	4-Nitrophenol	U	1400	1.0	1200	1400	370
121-14-2	2,4-Dinitrotoluene	U	400	1.0	330	400	100
84-66-2	Diethylphthalate	U	400	1.0	330	400	96
7005-72-3	4-Chlorophenyl-phenylether	U	400	1.0	330	400	94
100-01-6	4-Nitroaniline	U	600	1.0	500	600	160
534-52-1	4,6-Dinitro-2-Methylphenol	U	1400	1.0	1200	1400	410
86-30-6	N-Nitrosodiphenylamine	U	800	1.0	660	800	260
101-55-3	4-Bromophenyl-phenylether	U	400	1.0	330	400	100
1912-24-9	Atrazine	U	400	1.0	330	400	110
87-86-5	Pentachlorophenol	U	990	1.0	820	990	290
120-12-7	Anthracene	U	400	1.0	330	400	100
86-74-8	Carbazole	U	600	1.0	500	600	130

MW 3/1/09

KATAHDIN ANALYTICAL SERVICES
Report of Analytical Results

Client: CH2MHill
Project: TO-009 Lejeune
PO No:
Sample Date: 12/02/08
Received Date: 12/03/08
Extraction Date: 12/04/08
Analysis Date: 17-DEC-2008 12:20
Report Date: 12/20/2008
Matrix: SOIL
% Solids: 82.8

Lab ID: SB6918-8
Client ID: MR08-IS053-5-6-08D
SDG: TO9-9
Extracted by: AC
Extraction Method: SW846 3550
Analyst: JLP
Analysis Method: SW846 8270C
Lab Prep Batch: WG58747
Units: ug/Kgdrywt

CAS#	Compound	Flags	Results	DF	PQL	Adj.PQL	Adj.MDL
84-74-2	Di-n-butylphthalate	U	400	1.0	330	400	120
85-68-7	Butylbenzylphthalate	U	400	1.0	330	400	110
91-94-1	3,3'-Dichlorobenzidine	U	600	1.0	500	600	140
218-01-9	Chrysene	U	400	1.0	330	400	110
117-81-7	bis(2-Ethylhexyl)phthalate	U	400	1.0	330	400	120
117-84-0	Di-n-octylphthalate	U	400	1.0	330	400	250
367-12-4	2-Fluorophenol		76%				
13127-88-3	Phenol-D6		84%				
4165-60-0	Nitrobenzene-D5		79%				
321-60-8	2-Fluorobiphenyl		77%				
118-79-6	2,4,6-Tribromophenol		81%				
1718-51-0	Terphenyl-D14		85%				

lw
3/1/09

KATAHDIN ANALYTICAL SERVICES
Report of Analytical Results

Client: CH2MHill
Project: TO-009 Lejeune
PO No:
Sample Date: 12/02/08
Received Date: 12/03/08
Extraction Date: 12/04/08
Analysis Date: 18-DEC-2008 17:05
Report Date: 12/20/2008
Matrix: SOIL
% Solids: 62.5

Lab ID: SB6918-9
Client ID: MR08-SS054-08D
SDG: TO9-9
Extracted by: AC
Extraction Method: SW846 3550
Analyst: JLP
Analysis Method: SW846 8270C
Lab Prep Batch: WG58747
Units: ug/Kgdrywt

CAS#	Compound	Flags	Results	DF	PQL	Adj.PQL	Adj.MDL
100-52-7	Benzaldehyde	~~U~~ UJ	800	1.0	500	800	190 CCH
108-95-2	Phenol	U	800	1.0	500	800	250
111-44-4	Bis(2-Chloroethyl)ether	U	530	1.0	330	530	130
95-57-8	2-Chlorophenol	U	800	1.0	500	800	260
95-48-7	2-Methylphenol	U	960	1.0	600	960	320
108-60-1	2,2'-Oxybis(1-chloropropane)	U	530	1.0	330	530	140
98-86-2	Acetophenone	U	960	1.0	600	960	280
621-64-7	N-Nitroso-di-n-propylamine	U	530	1.0	330	530	130
65794-96-9	3&4-Methylphenol	U	960	1.0	600	960	300
67-72-1	Hexachloroethane	U	530	1.0	330	530	150
98-95-3	Nitrobenzene	U	530	1.0	330	530	140
78-59-1	Isophorone	U	530	1.0	330	530	120
88-75-5	2-Nitrophenol	U	960	1.0	600	960	270
105-67-9	2,4-Dimethylphenol	U	800	1.0	500	800	260
111-91-1	Bis(2-Chloroethoxy)methane	U	530	1.0	330	530	150
120-83-2	2,4-Dichlorophenol	U	800	1.0	500	800	240
106-47-8	4-Chloroaniline	U	800	1.0	500	800	190
105-60-2	Caprolactam	U	800	1.0	500	800	230
59-50-7	4-Chloro-3-Methylphenol	U	800	1.0	500	800	260
88-06-2	2,4,6-Trichlorophenol	U	800	1.0	500	800	250
95-95-4	2,4,5-Trichlorophenol	U	800	1.0	500	800	250
91-58-7	2-Chloronaphthalene	U	530	1.0	330	530	140
92-52-4	1,1'-Biphenyl	U	530	1.0	330	530	120
88-74-4	2-Nitroaniline	U	800	1.0	500	800	120
131-11-3	Dimethyl Phthalate	U	530	1.0	330	530	120
606-20-2	2,6-Dinitrotoluene	U	530	1.0	330	530	130
208-96-8	Acenaphthylene	U	530	1.0	330	530	110
99-09-2	3-Nitroaniline	U	800	1.0	500	800	150
83-32-9	Acenaphthene	U	530	1.0	330	530	100
51-28-5	2,4-Dinitrophenol	U	1900	1.0	1200	1900	600
132-64-9	Dibenzofuran	U	530	1.0	330	530	130
100-02-7	4-Nitrophenol	U	1900	1.0	1200	1900	490
121-14-2	2,4-Dinitrotoluene	U	530	1.0	330	530	140
84-66-2	Diethylphthalate	U	530	1.0	330	530	130
7005-72-3	4-Chlorophenyl-phenylether	U	530	1.0	330	530	120
100-01-6	4-Nitroaniline	U	800	1.0	500	800	210
534-52-1	4,6-Dinitro-2-Methylphenol	U	1900	1.0	1200	1900	540
86-30-6	N-Nitrosodiphenylamine	U	1000	1.0	660	1000	350
101-55-3	4-Bromophenyl-phenylether	U	530	1.0	330	530	140
1912-24-9	Atrazine	U	530	1.0	330	530	140
87-86-5	Pentachlorophenol	U	1300	1.0	820	1300	380
120-12-7	Anthracene	U	530	1.0	330	530	130
86-74-8	Carbazole	U	800	1.0	500	800	180

lw 31109

KATAHDIN ANALYTICAL SERVICES
Report of Analytical Results

Client: CH2MHill
Project: TO-009 Lejeune
PO No:
Sample Date: 12/02/08
Received Date: 12/03/08
Extraction Date: 12/04/08
Analysis Date: 18-DEC-2008 17:05
Report Date: 12/20/2008
Matrix: SOIL
% Solids: 62.5

Lab ID: SB6918-9
Client ID: MR08-SS054-08D
SDG: TO9-9
Extracted by: AC
Extraction Method: SW846 3550
Analyst: JLP
Analysis Method: SW846 8270C
Lab Prep Batch: WG58747
Units: ug/Kgdrywt

CAS#	Compound	Flags	Results	DF	PQL	Adj.PQL	Adj.MDL
84-74-2	Di-n-butylphthalate	U	530	1.0	330	530	160
85-68-7	Butylbenzylphthalate	U	530	1.0	330	530	150
91-94-1	3,3'-Dichlorobenzidine	U	800	1.0	500	800	180
218-01-9	Chrysene	U	530	1.0	330	530	150
117-81-7	bis(2-Ethylhexyl)phthalate	U	530	1.0	330	530	160
117-84-0	Di-n-octylphthalate	U	530	1.0	330	530	340
367-12-4	2-Fluorophenol		77%				
13127-88-3	Phenol-D6		82%				
4165-60-0	Nitrobenzene-D5		79%				
321-60-8	2-Fluorobiphenyl		87%				
118-79-6	2,4,6-Tribromophenol		83%				
1718-51-0	Terphenyl-D14		111%				

lw 3/1/09

10

KATAHDIN ANALYTICAL SERVICES
Report of Analytical Results

Client: CH2MHill
Project: TO-009 Lejeune
PO No:
Sample Date: 12/02/08
Received Date: 12/03/08
Extraction Date: 12/04/08
Analysis Date: 17-DEC-2008 13:02
Report Date: 12/20/2008
Matrix: SOIL
% Solids: 79.4

Lab ID: SB6918-10
Client ID: MR08-IS054-6-7-08D
SDG: TO9-9
Extracted by: AC
Extraction Method: SW846 3550
Analyst: JLP
Analysis Method: SW846 8270C
Lab Prep Batch: WG58747
Units: ug/Kgdrywt

CAS#	Compound	Flags	Results	DF	PQL	Adj.PQL	Adj.MDL
100-52-7	Benzaldehyde	~~U~~ UJ	630	1.0	500	630	150 CCH
108-95-2	Phenol	U	630	1.0	500	630	200
111-44-4	Bis(2-Chloroethyl)ether	U	420	1.0	330	420	100
95-57-8	2-Chlorophenol	U	630	1.0	500	630	210
95-48-7	2-Methylphenol	U	760	1.0	600	760	250
108-60-1	2,2'-Oxybis(1-chloropropane)	U	420	1.0	330	420	110
98-86-2	Acetophenone	U	760	1.0	600	760	220
621-64-7	N-Nitroso-di-n-propylamine	U	420	1.0	330	420	100
65794-96-9	3&4-Methylphenol	U	760	1.0	600	760	240
67-72-1	Hexachloroethane	U	420	1.0	330	420	120
98-95-3	Nitrobenzene	U	420	1.0	330	420	110
78-59-1	Isophorone	U	420	1.0	330	420	94
88-75-5	2-Nitrophenol	U	760	1.0	600	760	210
105-67-9	2,4-Dimethylphenol	U	630	1.0	500	630	210
111-91-1	Bis(2-Chloroethoxy)methane	U	420	1.0	330	420	120
120-83-2	2,4-Dichlorophenol	U	630	1.0	500	630	190
106-47-8	4-Chloroaniline	U	630	1.0	500	630	150
105-60-2	Caprolactam	U	630	1.0	500	630	180
59-50-7	4-Chloro-3-Methylphenol	U	630	1.0	500	630	210
88-06-2	2,4,6-Trichlorophenol	U	630	1.0	500	630	200
95-95-4	2,4,5-Trichlorophenol	U	630	1.0	500	630	200
91-58-7	2-Chloronaphthalene	U	420	1.0	330	420	110
92-52-4	1,1'-Biphenyl	U	420	1.0	330	420	92
88-74-4	2-Nitroaniline	U	630	1.0	500	630	94
131-11-3	Dimethyl Phthalate	U	420	1.0	330	420	98
606-20-2	2,6-Dinitrotoluene	U	420	1.0	330	420	99
208-96-8	Acenaphthylene	U	420	1.0	330	420	88
99-09-2	3-Nitroaniline	U	630	1.0	500	630	120
83-32-9	Acenaphthene	U	420	1.0	330	420	82
51-28-5	2,4-Dinitrophenol	U	1500	1.0	1200	1500	470
132-64-9	Dibenzofuran	U	420	1.0	330	420	99
100-02-7	4-Nitrophenol	U	1500	1.0	1200	1500	390
121-14-2	2,4-Dinitrotoluene	U	420	1.0	330	420	110
84-66-2	Diethylphthalate	U	420	1.0	330	420	100
7005-72-3	4-Chlorophenyl-phenylether	U	420	1.0	330	420	98
100-01-6	4-Nitroaniline	U	630	1.0	500	630	170
534-52-1	4,6-Dinitro-2-Methylphenol	U	1500	1.0	1200	1500	420
86-30-6	N-Nitrosodiphenylamine	U	830	1.0	660	830	280
101-55-3	4-Bromophenyl-phenylether	U	420	1.0	330	420	110
1912-24-9	Atrazine	U	420	1.0	330	420	110
87-86-5	Pentachlorophenol	U	1000	1.0	820	1000	300
120-12-7	Anthracene	U	420	1.0	330	420	100
86-74-8	Carbazole	U	630	1.0	500	630	140

lw 3/1/09

KATAHDIN ANALYTICAL SERVICES
Report of Analytical Results

Client: CH2MHill
Project: TO-009 Lejeune
PO No:
Sample Date: 12/02/08
Received Date: 12/03/08
Extraction Date: 12/04/08
Analysis Date: 17-DEC-2008 13:02
Report Date: 12/20/2008
Matrix: SOIL
% Solids: 79.4

Lab ID: SB6918-10
Client ID: MR08-IS054-6-7-08D
SDG: TO9-9
Extracted by: AC
Extraction Method: SW846 3550
Analyst: JLP
Analysis Method: SW846 8270C
Lab Prep Batch: WG58747
Units: ug/Kgdrywt

CAS#	Compound	Flags	Results	DF	PQL	Adj.PQL	Adj.MDL
84-74-2	Di-n-butylphthalate	U	420	1.0	330	420	130
85-68-7	Butylbenzylphthalate	U	420	1.0	330	420	120
91-94-1	3,3'-Dichlorobenzidine	U	630	1.0	500	630	140
218-01-9	Chrysene	U	420	1.0	330	420	120
117-81-7	bis(2-Ethylhexyl)phthalate	U	420	1.0	330	420	120
117-84-0	Di-n-octylphthalate	U	420	1.0	330	420	260
367-12-4	2-Fluorophenol		72%				
13127-88-3	Phenol-D6		77%				
4165-60-0	Nitrobenzene-D5		70%				
321-60-8	2-Fluorobiphenyl		69%				
118-79-6	2,4,6-Tribromophenol		91%				
1718-51-0	Terphenyl-D14		84%				

RW 3/1/09

11

KATAHDIN ANALYTICAL SERVICES
Report of Analytical Results

Client: CH2MHill
Project: TO-009 Lejeune
PO No:
Sample Date: 12/02/08
Received Date: 12/03/08
Extraction Date: 12/04/08
Analysis Date: 19-DEC-2008 06:25
Report Date: 12/20/2008
Matrix: SOIL
% Solids: 57.2

Lab ID: SB6918-11
Client ID: MR08-SS055-08D
SDG: TO9-9
Extracted by: AC
Extraction Method: SW846 3550
Analyst: JCG
Analysis Method: SW846 8270C
Lab Prep Batch: WG58747
Units: ug/Kgdrywt

CAS#	Compound	Flags	Results	DF	PQL	Adj.PQL	Adj.MDL
100-52-7	Benzaldehyde	~~U~~ UJ	870	1.0	500	870	210 CCH
108-95-2	Phenol	U	870	1.0	500	870	270
111-44-4	Bis(2-Chloroethyl)ether	U	580	1.0	330	580	140
95-57-8	2-Chlorophenol	U	870	1.0	500	870	290
95-48-7	2-Methylphenol	U	1000	1.0	600	1000	350
108-60-1	2,2'-Oxybis(1-chloropropane)	U	580	1.0	330	580	160
98-86-2	Acetophenone	U	1000	1.0	600	1000	310
621-64-7	N-Nitroso-di-n-propylamine	U	580	1.0	330	580	140
65794-96-9	3&4-Methylphenol	U	1000	1.0	600	1000	330
67-72-1	Hexachloroethane	U	580	1.0	330	580	170
98-95-3	Nitrobenzene	U	580	1.0	330	580	160
78-59-1	Isophorone	U	580	1.0	330	580	130
88-75-5	2-Nitrophenol	U	1000	1.0	600	1000	290
105-67-9	2,4-Dimethylphenol	U	870	1.0	500	870	290
111-91-1	Bis(2-Chloroethoxy)methane	U	580	1.0	330	580	170
120-83-2	2,4-Dichlorophenol	U	870	1.0	500	870	260
106-47-8	4-Chloroaniline	U	870	1.0	500	870	210
105-60-2	Caprolactam	U	870	1.0	500	870	250
59-50-7	4-Chloro-3-Methylphenol	U	870	1.0	500	870	290
88-06-2	2,4,6-Trichlorophenol	U	870	1.0	500	870	270
95-95-4	2,4,5-Trichlorophenol	U	870	1.0	500	870	270
91-58-7	2-Chloronaphthalene	U	580	1.0	330	580	150
92-52-4	1,1'-Biphenyl	U	580	1.0	330	580	130
88-74-4	2-Nitroaniline	U	870	1.0	500	870	130
131-11-3	Dimethyl Phthalate	U	580	1.0	330	580	140
606-20-2	2,6-Dinitrotoluene	U	580	1.0	330	580	140
208-96-8	Acenaphthylene	U	580	1.0	330	580	120
99-09-2	3-Nitroaniline	U	870	1.0	500	870	160
83-32-9	Acenaphthene	U	580	1.0	330	580	110
51-28-5	2,4-Dinitrophenol	U	2100	1.0	1200	2100	660
132-64-9	Dibenzofuran	U	580	1.0	330	580	140
100-02-7	4-Nitrophenol	U	2100	1.0	1200	2100	540
121-14-2	2,4-Dinitrotoluene	U	580	1.0	330	580	150
84-66-2	Diethylphthalate	U	580	1.0	330	580	140
7005-72-3	4-Chlorophenyl-phenylether	U	580	1.0	330	580	140
100-01-6	4-Nitroaniline	U	870	1.0	500	870	230
534-52-1	4,6-Dinitro-2-Methylphenol	U	2100	1.0	1200	2100	590
86-30-6	N-Nitrosodiphenylamine	U	1200	1.0	660	1200	380
101-55-3	4-Bromophenyl-phenylether	U	580	1.0	330	580	150
1912-24-9	Atrazine	U	580	1.0	330	580	160
87-86-5	Pentachlorophenol	U	1400	1.0	820	1400	410
120-12-7	Anthracene	U	580	1.0	330	580	150
86-74-8	Carbazole	U	870	1.0	500	870	190

lw 3/1/09

11

KATAHDIN ANALYTICAL SERVICES
Report of Analytical Results

Client: CH2MHill
Project: TO-009 Lejeune
PO No:
Sample Date: 12/02/08
Received Date: 12/03/08
Extraction Date: 12/04/08
Analysis Date: 19-DEC-2008 06:25
Report Date: 12/20/2008
Matrix: SOIL
% Solids: 57.2

Lab ID: SB6918-11
Client ID: MR08-SS055-08D
SDG: TO9-9
Extracted by: AC
Extraction Method: SW846 3550
Analyst: JCG
Analysis Method: SW846 8270C
Lab Prep Batch: WG58747
Units: ug/Kgdrywt

CAS#	Compound	Flags	Results	DF	PQL	Adj.PQL	Adj.MDL
84-74-2	Di-n-butylphthalate	U	580	1.0	330	580	180
85-68-7	Butylbenzylphthalate	U	580	1.0	330	580	160
91-94-1	3,3'-Dichlorobenzidine	U	870	1.0	500	870	200
218-01-9	Chrysene	U	580	1.0	330	580	170
117-81-7	bis(2-Ethylhexyl)phthalate	U	580	1.0	330	580	170
117-84-0	Di-n-octylphthalate	U	580	1.0	330	580	370
367-12-4	2-Fluorophenol		68%				
13127-88-3	Phenol-D6		80%				
4165-60-0	Nitrobenzene-D5		72%				
321-60-8	2-Fluorobiphenyl		86%				
118-79-6	2,4,6-Tribromophenol		77%				
1718-51-0	Terphenyl-D14		91%				

lw 3/1/09

KATAHDIN ANALYTICAL SERVICES
Report of Analytical Results

Client: CH2MHill
Project: TO-009 Lejeune
PO No:
Sample Date: 12/02/08
Received Date: 12/03/08
Extraction Date: 12/04/08
Analysis Date: 17-DEC-2008 13:45
Report Date: 12/20/2008
Matrix: SOIL
% Solids: 77.4

Lab ID: SB6918-12
Client ID: MR08-IS055-4-5-08D
SDG: TO9-9
Extracted by: AC
Extraction Method: SW846 3550
Analyst: JLP
Analysis Method: SW846 8270C
Lab Prep Batch: WG58747
Units: ug/Kgdrywt

CAS#	Compound	Flags	Results	DF	PQL	Adj.PQL	Adj.MDL
100-52-7	Benzaldehyde	~~U~~ UJ	640	1.0	500	640	150 CCU
108-95-2	Phenol	U	640	1.0	500	640	200
111-44-4	Bis(2-Chloroethyl)ether	U	430	1.0	330	430	100
95-57-8	2-Chlorophenol	U	640	1.0	500	640	210
95-48-7	2-Methylphenol	U	770	1.0	600	770	260
108-60-1	2,2'-Oxybis(1-chloropropane)	U	430	1.0	330	430	110
98-86-2	Acetophenone	U	770	1.0	600	770	230
621-64-7	N-Nitroso-di-n-propylamine	U	430	1.0	330	430	110
65794-96-9	3&4-Methylphenol	U	770	1.0	600	770	240
67-72-1	Hexachloroethane	U	430	1.0	330	430	120
98-95-3	Nitrobenzene	U	430	1.0	330	430	120
78-59-1	Isophorone	U	430	1.0	330	430	97
88-75-5	2-Nitrophenol	U	770	1.0	600	770	220
105-67-9	2,4-Dimethylphenol	U	640	1.0	500	640	210
111-91-1	Bis(2-Chloroethoxy)methane	U	430	1.0	330	430	120
120-83-2	2,4-Dichlorophenol	U	640	1.0	500	640	190
106-47-8	4-Chloroaniline	U	640	1.0	500	640	150
105-60-2	Caprolactam	U	640	1.0	500	640	180
59-50-7	4-Chloro-3-Methylphenol	U	640	1.0	500	640	210
88-06-2	2,4,6-Trichlorophenol	U	640	1.0	500	640	200
95-95-4	2,4,5-Trichlorophenol	U	640	1.0	500	640	200
91-58-7	2-Chloronaphthalene	U	430	1.0	330	430	110
92-52-4	1,1'-Biphenyl	U	430	1.0	330	430	94
88-74-4	2-Nitroaniline	U	640	1.0	500	640	97
131-11-3	Dimethyl Phthalate	U	430	1.0	330	430	100
606-20-2	2,6-Dinitrotoluene	U	430	1.0	330	430	100
208-96-8	Acenaphthylene	U	430	1.0	330	430	90
99-09-2	3-Nitroaniline	U	640	1.0	500	640	120
83-32-9	Acenaphthene	U	430	1.0	330	430	84
51-28-5	2,4-Dinitrophenol	U	1500	1.0	1200	1500	490
132-64-9	Dibenzofuran	U	430	1.0	330	430	100
100-02-7	4-Nitrophenol	U	1500	1.0	1200	1500	400
121-14-2	2,4-Dinitrotoluene	U	430	1.0	330	430	110
84-66-2	Diethylphthalate	U	430	1.0	330	430	100
7005-72-3	4-Chlorophenyl-phenylether	U	430	1.0	330	430	100
100-01-6	4-Nitroaniline	U	640	1.0	500	640	170
534-52-1	4,6-Dinitro-2-Methylphenol	U	1500	1.0	1200	1500	440
86-30-6	N-Nitrosodiphenylamine	U	850	1.0	660	850	280
101-55-3	4-Bromophenyl-phenylether	U	430	1.0	330	430	110
1912-24-9	Atrazine	U	430	1.0	330	430	120
87-86-5	Pentachlorophenol	U	1000	1.0	820	1000	310
120-12-7	Anthracene	U	430	1.0	330	430	110
86-74-8	Carbazole	U	640	1.0	500	640	140

lcw 3/1/09

KATAHDIN ANALYTICAL SERVICES
Report of Analytical Results

Client: CH2MHill
Project: TO-009 Lejeune
PO No:
Sample Date: 12/02/08
Received Date: 12/03/08
Extraction Date: 12/04/08
Analysis Date: 17-DEC-2008 13:45
Report Date: 12/20/2008
Matrix: SOIL
% Solids: 77.4

Lab ID: SB6918-12
Client ID: MR08-IS055-4-5-08D
SDG: TO9-9
Extracted by: AC
Extraction Method: SW846 3550
Analyst: JLP
Analysis Method: SW846 8270C
Lab Prep Batch: WG58747
Units: ug/Kgdrywt

CAS#	Compound	Flags	Results	DF	PQL	Adj.PQL	Adj.MDL
84-74-2	Di-n-butylphthalate	U	430	1.0	330	430	130
85-68-7	Butylbenzylphthalate	U	430	1.0	330	430	120
91-94-1	3,3'-Dichlorobenzidine	U	640	1.0	500	640	150
218-01-9	Chrysene	U	430	1.0	330	430	120
117-81-7	bis(2-Ethylhexyl)phthalate	U	430	1.0	330	430	130
117-84-0	Di-n-octylphthalate	U	430	1.0	330	430	270
367-12-4	2-Fluorophenol		72%				
13127-88-3	Phenol-D6		79%				
4165-60-0	Nitrobenzene-D5		73%				
321-60-8	2-Fluorobiphenyl		74%				
118-79-6	2,4,6-Tribromophenol		89%				
1718-51-0	Terphenyl-D14		84%				

lw
3/1/09

KATAHDIN ANALYTICAL SERVICES
Report of Analytical Results

Client: CH2MHill
Project: TO-009 Lejeune
PO No:
Sample Date: 12/03/08
Received Date: 12/04/08
Extraction Date: 12/05/08
Analysis Date: 16-DEC-2008 16:30
Report Date: 12/20/2008
Matrix: SOIL
% Solids: 72.0

Lab ID: SB6961-1
Client ID: MR08-SS067-08D
SDG: TO9-9
Extracted by: AC
Extraction Method: SW846 3550
Analyst: JLP
Analysis Method: SW846 8270C
Lab Prep Batch: WG58801
Units: ug/Kgdrywt

CAS#	Compound	Flags	Results	DF	PQL	Adj.PQL	Adj.MDL	
100-52-7	Benzaldehyde	U	690	1.0	500	690	170	
108-95-2	Phenol	U	690	1.0	500	690	220	
111-44-4	Bis(2-Chloroethyl)ether	U	460	1.0	330	460	110	
95-57-8	2-Chlorophenol	U	690	1.0	500	690	230	
95-48-7	2-Methylphenol	U	830	1.0	600	830	280	
108-60-1	2,2'-Oxybis(1-chloropropane)	U	460	1.0	330	460	120	
98-86-2	Acetophenone	U	830	1.0	600	830	250	
621-64-7	N-Nitroso-di-n-propylamine	U	460	1.0	330	460	120	
65794-96-9	3&4-Methylphenol	U	830	1.0	600	830	260	
67-72-1	Hexachloroethane	U	460	1.0	330	460	130	
98-95-3	Nitrobenzene	~~U~~ UJ	460	1.0	330	460	130	CCH
78-59-1	Isophorone	U	460	1.0	330	460	100	
88-75-5	2-Nitrophenol	U	830	1.0	600	830	230	
105-67-9	2,4-Dimethylphenol	U	690	1.0	500	690	230	
111-91-1	Bis(2-Chloroethoxy)methane	U	460	1.0	330	460	130	
120-83-2	2,4-Dichlorophenol	U	690	1.0	500	690	210	
106-47-8	4-Chloroaniline	U	690	1.0	500	690	160	
105-60-2	Caprolactam	U	690	1.0	500	690	200	
59-50-7	4-Chloro-3-Methylphenol	U	690	1.0	500	690	230	
88-06-2	2,4,6-Trichlorophenol	U	690	1.0	500	690	220	
95-95-4	2,4,5-Trichlorophenol	U	690	1.0	500	690	220	
91-58-7	2-Chloronaphthalene	U	460	1.0	330	460	120	
92-52-4	1,1'-Biphenyl	U	460	1.0	330	460	100	
88-74-4	2-Nitroaniline	U	690	1.0	500	690	100	
131-11-3	Dimethyl Phthalate	U	460	1.0	330	460	110	
606-20-2	2,6-Dinitrotoluene	U	460	1.0	330	460	110	
208-96-8	Acenaphthylene	U	460	1.0	330	460	97	
99-09-2	3-Nitroaniline	U	690	1.0	500	690	130	
83-32-9	Acenaphthene	U	460	1.0	330	460	90	
51-28-5	2,4-Dinitrophenol	U	1700	1.0	1200	1700	520	
132-64-9	Dibenzofuran	U	460	1.0	330	460	110	
100-02-7	4-Nitrophenol	~~U~~ UJ	1700	1.0	1200	1700	430	CCH
121-14-2	2,4-Dinitrotoluene	U	460	1.0	330	460	120	
84-66-2	Diethylphthalate	U	460	1.0	330	460	110	
7005-72-3	4-Chlorophenyl-phenylether	U	460	1.0	330	460	110	
100-01-6	4-Nitroaniline	U	690	1.0	500	690	190	
534-52-1	4,6-Dinitro-2-Methylphenol	U	1700	1.0	1200	1700	470	
86-30-6	N-Nitrosodiphenylamine	U	920	1.0	660	920	300	
101-55-3	4-Bromophenyl-phenylether	U	460	1.0	330	460	120	
1912-24-9	Atrazine	U	460	1.0	330	460	130	
87-86-5	Pentachlorophenol	U	1100	1.0	820	1100	330	
120-12-7	Anthracene	U	460	1.0	330	460	120	
86-74-8	Carbazole	U	690	1.0	500	690	150	

3/1/09

KATAHDIN ANALYTICAL SERVICES
Report of Analytical Results

Client: CH2MHill
Project: TO-009 Lejeune
PO No:
Sample Date: 12/03/08
Received Date: 12/04/08
Extraction Date: 12/05/08
Analysis Date: 16-DEC-2008 16:30
Report Date: 12/20/2008
Matrix: SOIL
% Solids: 72.0

Lab ID: SB6961-1
Client ID: MR08-SS067-08D
SDG: TO9-9
Extracted by: AC
Extraction Method: SW846 3550
Analyst: JLP
Analysis Method: SW846 8270C
Lab Prep Batch: WG58801
Units: ug/Kgdrywt

CAS#	Compound	Flags	Results	DF	PQL	Adj.PQL	Adj.MDL
84-74-2	Di-n-butylphthalate	U	460	1.0	330	460	140
85-68-7	Butylbenzylphthalate	U	460	1.0	330	460	130
91-94-1	3,3'-Dichlorobenzidine	U	690	1.0	500	690	160
218-01-9	Chrysene	U	460	1.0	330	460	130
117-81-7	bis(2-Ethylhexyl)phthalate	U	460	1.0	330	460	140
117-84-0	Di-n-octylphthalate	U	460	1.0	330	460	290
367-12-4	2-Fluorophenol		78%				
13127-88-3	Phenol-D6		92%				
4165-60-0	Nitrobenzene-D5		78%				
321-60-8	2-Fluorobiphenyl		88%				
118-79-6	2,4,6-Tribromophenol		93%				
1718-51-0	Terphenyl-D14		95%				

MW 3/1/09

KATAHDIN ANALYTICAL SERVICES
Report of Analytical Results

Client: CH2MHill
Project: TO-009 Lejeune
PO No:
Sample Date: 12/03/08
Received Date: 12/04/08
Extraction Date: 12/05/08
Analysis Date: 16-DEC-2008 15:47
Report Date: 12/20/2008
Matrix: SOIL
% Solids: 86.2

Lab ID: SB6961-3
Client ID: MR08-IS067-6-7-08D
SDG: TO9-9
Extracted by: AC
Extraction Method: SW846 3550
Analyst: JLP
Analysis Method: SW846 8270C
Lab Prep Batch: WG58801
Units: ug/Kgdrywt

CAS#	Compound	Flags	Results	DF	PQL	Adj.PQL	Adj.MDL	
100-52-7	Benzaldehyde	U	580	1.0	500	580	140	
108-95-2	Phenol	U	580	1.0	500	580	180	
111-44-4	Bis(2-Chloroethyl)ether	U	380	1.0	330	380	94	
95-57-8	2-Chlorophenol	U	580	1.0	500	580	190	
95-48-7	2-Methylphenol	U	700	1.0	600	700	230	
108-60-1	2,2'-Oxybis(1-chloropropane)	U	380	1.0	330	380	100	
98-86-2	Acetophenone	U	700	1.0	600	700	210	
621-64-7	N-Nitroso-di-n-propylamine	U	380	1.0	330	380	96	
65794-96-9	3&4-Methylphenol	U	700	1.0	600	700	220	
67-72-1	Hexachloroethane	U	380	1.0	330	380	110	
98-95-3	Nitrobenzene	~~U~~ UJ	380	1.0	330	380	100	CCH
78-59-1	Isophorone	U	380	1.0	330	380	87	
88-75-5	2-Nitrophenol	U	700	1.0	600	700	190	
105-67-9	2,4-Dimethylphenol	U	580	1.0	500	580	190	
111-91-1	Bis(2-Chloroethoxy)methane	U	380	1.0	330	380	110	
120-83-2	2,4-Dichlorophenol	U	580	1.0	500	580	170	
106-47-8	4-Chloroaniline	U	580	1.0	500	580	140	
105-60-2	Caprolactam	U	580	1.0	500	580	170	
59-50-7	4-Chloro-3-Methylphenol	U	580	1.0	500	580	190	
88-06-2	2,4,6-Trichlorophenol	U	580	1.0	500	580	180	
95-95-4	2,4,5-Trichlorophenol	U	580	1.0	500	580	180	
91-58-7	2-Chloronaphthalene	U	380	1.0	330	380	100	
92-52-4	1,1'-Biphenyl	U	380	1.0	330	380	85	
88-74-4	2-Nitroaniline	U	580	1.0	500	580	87	
131-11-3	Dimethyl Phthalate	U	380	1.0	330	380	90	
606-20-2	2,6-Dinitrotoluene	U	380	1.0	330	380	92	
208-96-8	Acenaphthylene	U	380	1.0	330	380	81	
99-09-2	3-Nitroaniline	U	580	1.0	500	580	110	
83-32-9	Acenaphthene	U	380	1.0	330	380	75	
51-28-5	2,4-Dinitrophenol	U	1400	1.0	1200	1400	440	
132-64-9	Dibenzofuran	U	380	1.0	330	380	92	
100-02-7	4-Nitrophenol	~~U~~ UJ	1400	1.0	1200	1400	360	CCH
121-14-2	2,4-Dinitrotoluene	U	380	1.0	330	380	98	
84-66-2	Diethylphthalate	U	380	1.0	330	380	93	
7005-72-3	4-Chlorophenyl-phenylether	U	380	1.0	330	380	90	
100-01-6	4-Nitroaniline	U	580	1.0	500	580	160	
534-52-1	4,6-Dinitro-2-Methylphenol	U	1400	1.0	1200	1400	390	
86-30-6	N-Nitrosodiphenylamine	U	760	1.0	660	760	250	
101-55-3	4-Bromophenyl-phenylether	U	380	1.0	330	380	98	
1912-24-9	Atrazine	U	380	1.0	330	380	100	
87-86-5	Pentachlorophenol	U	950	1.0	820	950	270	
120-12-7	Anthracene	U	380	1.0	330	380	97	
86-74-8	Carbazole	U	580	1.0	500	580	130	

lw
3/1/09

KATAHDIN ANALYTICAL SERVICES
Report of Analytical Results

Client: CH2MHill
Project: TO-009 Lejeune
PO No:
Sample Date: 12/03/08
Received Date: 12/04/08
Extraction Date: 12/05/08
Analysis Date: 16-DEC-2008 15:47
Report Date: 12/20/2008
Matrix: SOIL
% Solids: 86.2

Lab ID: SB6961-3
Client ID: MR08-IS067-6-7-08D
SDG: TO9-9
Extracted by: AC
Extraction Method: SW846 3550
Analyst: JLP
Analysis Method: SW846 8270C
Lab Prep Batch: WG58801
Units: ug/Kgdrywt

CAS#	Compound	Flags	Results	DF	PQL	Adj.PQL	Adj.MDL
84-74-2	Di-n-butylphthalate	U	380	1.0	330	380	120
85-68-7	Butylbenzylphthalate	U	380	1.0	330	380	110
91-94-1	3,3'-Dichlorobenzidine	U	580	1.0	500	580	130
218-01-9	Chrysene	U	380	1.0	330	380	110
117-81-7	bis(2-Ethylhexyl)phthalate	U	380	1.0	330	380	110
117-84-0	Di-n-octylphthalate	U	380	1.0	330	380	240
367-12-4	2-Fluorophenol		78%				
13127-88-3	Phenol-D6		85%				
4165-60-0	Nitrobenzene-D5		79%				
321-60-8	2-Fluorobiphenyl		82%				
118-79-6	2,4,6-Tribromophenol		84%				
1718-51-0	Terphenyl-D14		98%				

LW 3/1/09

KATAHDIN ANALYTICAL SERVICES
Report of Analytical Results

Client: CH2MHill
Project: TO-009 Lejeune
PO No:
Sample Date: 12/03/08
Received Date: 12/04/08
Extraction Date: 12/05/08
Analysis Date: 16-DEC-2008 17:12
Report Date: 12/20/2008
Matrix: SOIL
% Solids: 48.0

Lab ID: SB6961-5
Client ID: MR08-SS068-08D
SDG: TO9-9
Extracted by: AC
Extraction Method: SW846 3550
Analyst: JLP
Analysis Method: SW846 8270C
Lab Prep Batch: WG58801
Units: ug/Kgdrywt

CAS#	Compound	Flags	Results	DF	PQL	Adj.PQL	Adj.MDL	
100-52-7	Benzaldehyde	U	1000	1.0	500	1000	250	
108-95-2	Phenol	U	1000	1.0	500	1000	320	
111-44-4	Bis(2-Chloroethyl)ether	U	690	1.0	330	690	170	
95-57-8	2-Chlorophenol	U	1000	1.0	500	1000	340	
95-48-7	2-Methylphenol	U	1200	1.0	600	1200	420	
108-60-1	2,2'-Oxybis(1-chloropropane)	U	690	1.0	330	690	180	
98-86-2	Acetophenone	U	1200	1.0	600	1200	370	
621-64-7	N-Nitroso-di-n-propylamine	U	690	1.0	330	690	170	
65794-96-9	3&4-Methylphenol	U	1200	1.0	600	1200	390	
67-72-1	Hexachloroethane	U	690	1.0	330	690	200	
98-95-3	Nitrobenzene	~~U~~ UJ	690	1.0	330	690	190	CCH
78-59-1	Isophorone	U	690	1.0	330	690	160	
88-75-5	2-Nitrophenol	U	1200	1.0	600	1200	350	
105-67-9	2,4-Dimethylphenol	U	1000	1.0	500	1000	340	
111-91-1	Bis(2-Chloroethoxy)methane	U	690	1.0	330	690	200	
120-83-2	2,4-Dichlorophenol	U	1000	1.0	500	1000	310	
106-47-8	4-Chloroaniline	~~U~~ R	1000	1.0	500	1000	250	MSL
105-60-2	Caprolactam	U	1000	1.0	500	1000	300	
59-50-7	4-Chloro-3-Methylphenol	U	1000	1.0	500	1000	340	
88-06-2	2,4,6-Trichlorophenol	U	1000	1.0	500	1000	320	
95-95-4	2,4,5-Trichlorophenol	U	1000	1.0	500	1000	320	
91-58-7	2-Chloronaphthalene	U	690	1.0	330	690	180	
92-52-4	1,1'-Biphenyl	U	690	1.0	330	690	150	
88-74-4	2-Nitroaniline	~~U~~ UJ	1000	1.0	500	1000	160	MSL
131-11-3	Dimethyl Phthalate	U	690	1.0	330	690	160	
606-20-2	2,6-Dinitrotoluene	U	690	1.0	330	690	160	
208-96-8	Acenaphthylene	U	690	1.0	330	690	140	
99-09-2	3-Nitroaniline	~~U~~ R	1000	1.0	500	1000	200	MSL
83-32-9	Acenaphthene	U	690	1.0	330	690	140	
51-28-5	2,4-Dinitrophenol	U	2500	1.0	1200	2500	780	
132-64-9	Dibenzofuran	U	690	1.0	330	690	160	
100-02-7	4-Nitrophenol	~~U~~ UJ	2500	1.0	1200	2500	640	CCH
121-14-2	2,4-Dinitrotoluene	U	690	1.0	330	690	180	
84-66-2	Diethylphthalate	U	690	1.0	330	690	170	
7005-72-3	4-Chlorophenyl-phenylether	U	690	1.0	330	690	160	
100-01-6	4-Nitroaniline	~~U~~ R	1000	1.0	500	1000	280	MSL
534-52-1	4,6-Dinitro-2-Methylphenol	U	2500	1.0	1200	2500	700	
86-30-6	N-Nitrosodiphenylamine	~~U~~ UJ	1400	1.0	660	1400	460	MSL
101-55-3	4-Bromophenyl-phenylether	U	690	1.0	330	690	180	
1912-24-9	Atrazine	~~U~~ UJ	690	1.0	330	690	190	MSL
87-86-5	Pentachlorophenol	U	1700	1.0	820	1700	490	
120-12-7	Anthracene	U	690	1.0	330	690	170	
86-74-8	Carbazole	U	1000	1.0	500	1000	230	

dw 3/1/09

KATAHDIN ANALYTICAL SERVICES
Report of Analytical Results

Client: CH2MHill
Project: TO-009 Lejeune
PO No:
Sample Date: 12/03/08
Received Date: 12/04/08
Extraction Date: 12/05/08
Analysis Date: 16-DEC-2008 17:12
Report Date: 12/20/2008
Matrix: SOIL
% Solids: 48.0

Lab ID: SB6961-5
Client ID: MR08-SS068-08D
SDG: TO9-9
Extracted by: AC
Extraction Method: SW846 3550
Analyst: JLP
Analysis Method: SW846 8270C
Lab Prep Batch: WG58801
Units: ug/Kgdrywt

CAS#	Compound	Flags	Results	DF	PQL	Adj.PQL	Adj.MDL
84-74-2	Di-n-butylphthalate	U	690	1.0	330	690	210
85-68-7	Butylbenzylphthalate	U	690	1.0	330	690	190
91-94-1	3,3'-Dichlorobenzidine	~~U~~ R	1000	1.0	500	1000	240 MSL
218-01-9	Chrysene	U	690	1.0	330	690	200
117-81-7	bis(2-Ethylhexyl)phthalate	U	690	1.0	330	690	200
117-84-0	Di-n-octylphthalate	U	690	1.0	330	690	440
367-12-4	2-Fluorophenol		67%				
13127-88-3	Phenol-D6		69%				
4165-60-0	Nitrobenzene-D5		71%				
321-60-8	2-Fluorobiphenyl		71%				
118-79-6	2,4,6-Tribromophenol		77%				
1718-51-0	Terphenyl-D14		86%				

lcw 3/1/09

KATAHDIN ANALYTICAL SERVICES
Report of Analytical Results

Client: CH2MHill
Project: TO-009 Lejeune
PO No:
Sample Date: 12/03/08
Received Date: 12/04/08
Extraction Date: 12/05/08
Analysis Date: 17-DEC-2008 01:12
Report Date: 12/20/2008
Matrix: SOIL
% Solids: 61.9

Lab ID: SB6961-7
Client ID: MR08-SS069-08D
SDG: TO9-9
Extracted by: AC
Extraction Method: SW846 3550
Analyst: JCG
Analysis Method: SW846 8270C
Lab Prep Batch: WG58801
Units: ug/Kgdrywt

CAS#	Compound	Flags	Results	DF	PQL	Adj.PQL	Adj.MDL
100-52-7	Benzaldehyde	U	810	1.0	500	810	190
108-95-2	Phenol	U	810	1.0	500	810	250
111-44-4	Bis(2-Chloroethyl)ether	U	530	1.0	330	530	130
95-57-8	2-Chlorophenol	U	810	1.0	500	810	260
95-48-7	2-Methylphenol	U	970	1.0	600	970	320
108-60-1	2,2'-Oxybis(1-chloropropane)	U	530	1.0	330	530	140
98-86-2	Acetophenone	U	970	1.0	600	970	290
621-64-7	N-Nitroso-di-n-propylamine	U	530	1.0	330	530	130
65794-96-9	3&4-Methylphenol	U	970	1.0	600	970	300
67-72-1	Hexachloroethane	U	530	1.0	330	530	160
98-95-3	Nitrobenzene	U	530	1.0	330	530	150
78-59-1	Isophorone	U	530	1.0	330	530	120
88-75-5	2-Nitrophenol	U	970	1.0	600	970	270
105-67-9	2,4-Dimethylphenol	U	810	1.0	500	810	270
111-91-1	Bis(2-Chloroethoxy)methane	U	530	1.0	330	530	160
120-83-2	2,4-Dichlorophenol	U	810	1.0	500	810	240
106-47-8	4-Chloroaniline	U	810	1.0	500	810	190
105-60-2	Caprolactam	U	810	1.0	500	810	230
59-50-7	4-Chloro-3-Methylphenol	U	810	1.0	500	810	270
88-06-2	2,4,6-Trichlorophenol	U	810	1.0	500	810	250
95-95-4	2,4,5-Trichlorophenol	U	810	1.0	500	810	250
91-58-7	2-Chloronaphthalene	U	530	1.0	330	530	140
92-52-4	1,1'-Biphenyl	U	530	1.0	330	530	120
88-74-4	2-Nitroaniline	U	810	1.0	500	810	120
131-11-3	Dimethyl Phthalate	U	530	1.0	330	530	120
606-20-2	2,6-Dinitrotoluene	U	530	1.0	330	530	130
208-96-8	Acenaphthylene	U	530	1.0	330	530	110
99-09-2	3-Nitroaniline	U	810	1.0	500	810	150
83-32-9	Acenaphthene	U	530	1.0	330	530	100
51-28-5	2,4-Dinitrophenol	U	1900	1.0	1200	1900	610
132-64-9	Dibenzofuran	U	530	1.0	330	530	130
100-02-7	4-Nitrophenol	U	1900	1.0	1200	1900	500
121-14-2	2,4-Dinitrotoluene	U	530	1.0	330	530	140
84-66-2	Diethylphthalate	U	530	1.0	330	530	130
7005-72-3	4-Chlorophenyl-phenylether	U	530	1.0	330	530	120
100-01-6	4-Nitroaniline	U	810	1.0	500	810	220
534-52-1	4,6-Dinitro-2-Methylphenol	U	1900	1.0	1200	1900	540
86-30-6	N-Nitrosodiphenylamine	U	1100	1.0	660	1100	350
101-55-3	4-Bromophenyl-phenylether	U	530	1.0	330	530	140
1912-24-9	Atrazine	U	530	1.0	330	530	150
87-86-5	Pentachlorophenol	U	1300	1.0	820	1300	380
120-12-7	Anthracene	U	530	1.0	330	530	140
86-74-8	Carbazole	U	810	1.0	500	810	180

ACV
3/1/09

KATAHDIN ANALYTICAL SERVICES
Report of Analytical Results

Client: CH2MHill
Project: TO-009 Lejeune
PO No:
Sample Date: 12/03/08
Received Date: 12/04/08
Extraction Date: 12/05/08
Analysis Date: 17-DEC-2008 01:12
Report Date: 12/20/2008
Matrix: SOIL
% Solids: 61.9

Lab ID: SB6961-7
Client ID: MR08-SS069-08D
SDG: TO9-9
Extracted by: AC
Extraction Method: SW846 3550
Analyst: JCG
Analysis Method: SW846 8270C
Lab Prep Batch: WG58801
Units: ug/Kgdrywt

CAS#	Compound	Flags	Results	DF	PQL	Adj.PQL	Adj.MDL
84-74-2	Di-n-butylphthalate	U	530	1.0	330	530	160
85-68-7	Butylbenzylphthalate	U	530	1.0	330	530	150
91-94-1	3,3'-Dichlorobenzidine	U	810	1.0	500	810	180
218-01-9	Chrysene	U	530	1.0	330	530	150
117-81-7	bis(2-Ethylhexyl)phthalate	U	530	1.0	330	530	160
117-84-0	Di-n-octylphthalate	U	530	1.0	330	530	340
367-12-4	2-Fluorophenol		80%				
13127-88-3	Phenol-D6		83%				
4165-60-0	Nitrobenzene-D5		84%				
321-60-8	2-Fluorobiphenyl		80%				
118-79-6	2,4,6-Tribromophenol		92%				
1718-51-0	Terphenyl-D14		96%				

RW 3/1/09

KATAHDIN ANALYTICAL SERVICES
Report of Analytical Results

Client: CH2MHill
Project: TO-009 Lejeune
PO No:
Sample Date: 12/02/08
Received Date: 12/03/08
Extraction Date: 12/04/08
Analysis Date: 18-DEC-2008 17:05
Report Date: 12/20/2008
Matrix: SOIL
% Solids: 62.5

Lab ID: SB6918-9
Client ID: MR08-SS054-08D
SDG: TO9-9
Extracted by: AC
Extraction Method: SW846 3550
Analyst: JLP
Analysis Method: SW846 8270C
Lab Prep Batch: WG58747
Units: ug/Kgdrywt

CAS#	Compound	Flags	Results	DF	PQL	Adj.PQL	Adj.MDL
100-52-7	Benzaldehyde	U	800	1.0	500	800	190
108-95-2	Phenol	U	800	1.0	500	800	250
111-44-4	Bis(2-Chloroethyl)ether	U	530	1.0	330	530	130
95-57-8	2-Chlorophenol	U	800	1.0	500	800	260
95-48-7	2-Methylphenol	U	960	1.0	600	960	320
108-60-1	2,2'-Oxybis(1-chloropropane)	U	530	1.0	330	530	140
98-86-2	Acetophenone	U	960	1.0	600	960	280
621-64-7	N-Nitroso-di-n-propylamine	U	530	1.0	330	530	130
65794-96-9	3&4-Methylphenol	U	960	1.0	600	960	300
67-72-1	Hexachloroethane	U	530	1.0	330	530	150
98-95-3	Nitrobenzene	U	530	1.0	330	530	140
78-59-1	Isophorone	U	530	1.0	330	530	120
88-75-5	2-Nitrophenol	U	960	1.0	600	960	270
105-67-9	2,4-Dimethylphenol	U	800	1.0	500	800	260
111-91-1	Bis(2-Chloroethoxy)methane	U	530	1.0	330	530	150
120-83-2	2,4-Dichlorophenol	U	800	1.0	500	800	240
106-47-8	4-Chloroaniline	U	800	1.0	500	800	190
105-60-2	Caprolactam	U	800	1.0	500	800	230
59-50-7	4-Chloro-3-Methylphenol	U	800	1.0	500	800	260
88-06-2	2,4,6-Trichlorophenol	U	800	1.0	500	800	250
95-95-4	2,4,5-Trichlorophenol	U	800	1.0	500	800	250
91-58-7	2-Chloronaphthalene	U	530	1.0	330	530	140
92-52-4	1,1'-Biphenyl	U	530	1.0	330	530	120
88-74-4	2-Nitroaniline	U	800	1.0	500	800	120
131-11-3	Dimethyl Phthalate	U	530	1.0	330	530	120
606-20-2	2,6-Dinitrotoluene	U	530	1.0	330	530	130
208-96-8	Acenaphthylene	U	530	1.0	330	530	110
99-09-2	3-Nitroaniline	U	800	1.0	500	800	150
83-32-9	Acenaphthene	U	530	1.0	330	530	100
51-28-5	2,4-Dinitrophenol	U	1900	1.0	1200	1900	600
132-64-9	Dibenzofuran	U	530	1.0	330	530	130
100-02-7	4-Nitrophenol	U	1900	1.0	1200	1900	490
121-14-2	2,4-Dinitrotoluene	U	530	1.0	330	530	140
84-66-2	Diethylphthalate	U	530	1.0	330	530	130
7005-72-3	4-Chlorophenyl-phenylether	U	530	1.0	330	530	120
100-01-6	4-Nitroaniline	U	800	1.0	500	800	210
534-52-1	4,6-Dinitro-2-Methylphenol	U	1900	1.0	1200	1900	540
86-30-6	N-Nitrosodiphenylamine	U	1000	1.0	660	1000	350
101-55-3	4-Bromophenyl-phenylether	U	530	1.0	330	530	140
1912-24-9	Atrazine	U	530	1.0	330	530	140
87-86-5	Pentachlorophenol	U	1300	1.0	820	1300	380
120-12-7	Anthracene	U	530	1.0	330	530	130
86-74-8	Carbazole	U	800	1.0	500	800	180

MW 3/1/09

17

KATAHDIN ANALYTICAL SERVICES
Report of Analytical Results

Client: CH2MHill
Project: TO-009 Lejeune
PO No:
Sample Date: 12/02/08
Received Date: 12/03/08
Extraction Date: 12/04/08
Analysis Date: 18-DEC-2008 17:05
Report Date: 12/20/2008
Matrix: SOIL
% Solids: 62.5

Lab ID: SB6918-9
Client ID: MR08-SS054-08D
SDG: TO9-9
Extracted by: AC
Extraction Method: SW846 3550
Analyst: JLP
Analysis Method: SW846 8270C
Lab Prep Batch: WG58747
Units: ug/Kgdrywt

CAS#	Compound	Flags	Results	DF	PQL	Adj.PQL	Adj.MDL
84-74-2	Di-n-butylphthalate	U	530	1.0	330	530	160
85-68-7	Butylbenzylphthalate	U	530	1.0	330	530	150
91-94-1	3,3'-Dichlorobenzidine	U	800	1.0	500	800	180
218-01-9	Chrysene	U	530	1.0	330	530	150
117-81-7	bis(2-Ethylhexyl)phthalate	U	530	1.0	330	530	160
117-84-0	Di-n-octylphthalate	U	530	1.0	330	530	340
367-12-4	2-Fluorophenol		77%				
13127-88-3	Phenol-D6		82%				
4165-60-0	Nitrobenzene-D5		79%				
321-60-8	2-Fluorobiphenyl		87%				
118-79-6	2,4,6-Tribromophenol		83%				
1718-51-0	Terphenyl-D14		111%				

MW
3/1/09

KATAHDIN ANALYTICAL SERVICES
Report of Analytical Results

Client: CH2MHill
Project: TO-009 Lejeune
PO No:
Sample Date: 12/03/08
Received Date: 12/04/08
Extraction Date: 12/05/08
Analysis Date: 17-DEC-2008 02:35
Report Date: 12/20/2008
Matrix: SOIL
% Solids: 75.1

Lab ID: SB6961-11
Client ID: MR08-IS069-6-7-08D
SDG: TO9-9
Extracted by: AC
Extraction Method: SW846 3550
Analyst: JCG
Analysis Method: SW846 8270C
Lab Prep Batch: WG58801
Units: ug/Kgdrywt

CAS#	Compound	Flags	Results	DF	PQL	Adj.PQL	Adj.MDL
100-52-7	Benzaldehyde	U	660	1.0	500	660	160
108-95-2	Phenol	U	660	1.0	500	660	210
111-44-4	Bis(2-Chloroethyl)ether	U	440	1.0	330	440	110
95-57-8	2-Chlorophenol	U	660	1.0	500	660	220
95-48-7	2-Methylphenol	U	800	1.0	600	800	270
108-60-1	2,2'-Oxybis(1-chloropropane)	U	440	1.0	330	440	120
98-86-2	Acetophenone	U	800	1.0	600	800	240
621-64-7	N-Nitroso-di-n-propylamine	U	440	1.0	330	440	110
65794-96-9	3&4-Methylphenol	U	800	1.0	600	800	250
67-72-1	Hexachloroethane	U	440	1.0	330	440	130
98-95-3	Nitrobenzene	U	440	1.0	330	440	120
78-59-1	Isophorone	U	440	1.0	330	440	100
88-75-5	2-Nitrophenol	U	800	1.0	600	800	220
105-67-9	2,4-Dimethylphenol	U	660	1.0	500	660	220
111-91-1	Bis(2-Chloroethoxy)methane	U	440	1.0	330	440	130
120-83-2	2,4-Dichlorophenol	U	660	1.0	500	660	200
106-47-8	4-Chloroaniline	U	660	1.0	500	660	160
105-60-2	Caprolactam	U	660	1.0	500	660	190
59-50-7	4-Chloro-3-Methylphenol	U	660	1.0	500	660	220
88-06-2	2,4,6-Trichlorophenol	U	660	1.0	500	660	210
95-95-4	2,4,5-Trichlorophenol	U	660	1.0	500	660	210
91-58-7	2-Chloronaphthalene	U	440	1.0	330	440	120
92-52-4	1,1'-Biphenyl	U	440	1.0	330	440	97
88-74-4	2-Nitroaniline	U	660	1.0	500	660	100
131-11-3	Dimethyl Phthalate	U	440	1.0	330	440	100
606-20-2	2,6-Dinitrotoluene	U	440	1.0	330	440	100
208-96-8	Acenaphthylene	U	440	1.0	330	440	93
99-09-2	3-Nitroaniline	U	660	1.0	500	660	120
83-32-9	Acenaphthene	U	440	1.0	330	440	86
51-28-5	2,4-Dinitrophenol	U	1600	1.0	1200	1600	500
132-64-9	Dibenzofuran	U	440	1.0	330	440	100
100-02-7	4-Nitrophenol	U	1600	1.0	1200	1600	410
121-14-2	2,4-Dinitrotoluene	U	440	1.0	330	440	110
84-66-2	Diethylphthalate	U	440	1.0	330	440	110
7005-72-3	4-Chlorophenyl-phenylether	U	440	1.0	330	440	100
100-01-6	4-Nitroaniline	U	660	1.0	500	660	180
534-52-1	4,6-Dinitro-2-Methylphenol	U	1600	1.0	1200	1600	450
86-30-6	N-Nitrosodiphenylamine	U	880	1.0	660	880	290
101-55-3	4-Bromophenyl-phenylether	U	440	1.0	330	440	110
1912-24-9	Atrazine	U	440	1.0	330	440	120
87-86-5	Pentachlorophenol	U	1100	1.0	820	1100	320
120-12-7	Anthracene	U	440	1.0	330	440	110
86-74-8	Carbazole	U	660	1.0	500	660	150

MW 3/1/09

KATAHDIN ANALYTICAL SERVICES
Report of Analytical Results

Client: CH2MHill
Project: TO-009 Lejeune
PO No:
Sample Date: 12/03/08
Received Date: 12/04/08
Extraction Date: 12/05/08
Analysis Date: 17-DEC-2008 02:35
Report Date: 12/20/2008
Matrix: SOIL
% Solids: 75.1

Lab ID: SB6961-11
Client ID: MR08-IS069-6-7-08D
SDG: TO9-9
Extracted by: AC
Extraction Method: SW846 3550
Analyst: JCG
Analysis Method: SW846 8270C
Lab Prep Batch: WG58801
Units: ug/Kgdrywt

CAS#	Compound	Flags	Results	DF	PQL	Adj.PQL	Adj.MDL
84-74-2	Di-n-butylphthalate	U	440	1.0	330	440	130
85-68-7	Butylbenzylphthalate	U	440	1.0	330	440	120
91-94-1	3,3'-Dichlorobenzidine	U	660	1.0	500	660	150
218-01-9	Chrysene	U	440	1.0	330	440	130
117-81-7	bis(2-Ethylhexyl)phthalate	U	440	1.0	330	440	130
117-84-0	Di-n-octylphthalate	U	440	1.0	330	440	280
367-12-4	2-Fluorophenol		65%				
13127-88-3	Phenol-D6		78%				
4165-60-0	Nitrobenzene-D5		66%				
321-60-8	2-Fluorobiphenyl		67%				
118-79-6	2,4,6-Tribromophenol		71%				
1718-51-0	Terphenyl-D14		85%				

lw
3/1/09

KATAHDIN ANALYTICAL SERVICES
Report of Analytical Results

Client: CH2MHill
Project: TO-009 Lejeune
PO No:
Sample Date: 12/03/08
Received Date: 12/04/08
Extraction Date: 12/05/08
Analysis Date: 17-DEC-2008 03:17
Report Date: 12/20/2008
Matrix: SOIL
% Solids: 73.3

Lab ID: SB6961-13
Client ID: MR08-IS069D-6-7-08D
SDG: TO9-9
Extracted by: AC
Extraction Method: SW846 3550
Analyst: JCG
Analysis Method: SW846 8270C
Lab Prep Batch: WG58801
Units: ug/Kgdrywt

CAS#	Compound	Flags	Results	DF	PQL	Adj.PQL	Adj.MDL
100-52-7	Benzaldehyde	U	680	1.0	500	680	160
108-95-2	Phenol	U	680	1.0	500	680	210
111-44-4	Bis(2-Chloroethyl)ether	U	450	1.0	330	450	110
95-57-8	2-Chlorophenol	U	680	1.0	500	680	220
95-48-7	2-Methylphenol	U	820	1.0	600	820	270
108-60-1	2,2'-Oxybis(1-chloropropane)	U	450	1.0	330	450	120
98-86-2	Acetophenone	U	820	1.0	600	820	240
621-64-7	N-Nitroso-di-n-propylamine	U	450	1.0	330	450	110
65794-96-9	3&4-Methylphenol	U	820	1.0	600	820	250
67-72-1	Hexachloroethane	U	450	1.0	330	450	130
98-95-3	Nitrobenzene	U	450	1.0	330	450	120
78-59-1	Isophorone	U	450	1.0	330	450	100
88-75-5	2-Nitrophenol	U	820	1.0	600	820	230
105-67-9	2,4-Dimethylphenol	U	680	1.0	500	680	220
111-91-1	Bis(2-Chloroethoxy)methane	U	450	1.0	330	450	130
120-83-2	2,4-Dichlorophenol	U	680	1.0	500	680	200
106-47-8	4-Chloroaniline	U	680	1.0	500	680	160
105-60-2	Caprolactam	U	680	1.0	500	680	200
59-50-7	4-Chloro-3-Methylphenol	U	680	1.0	500	680	230
88-06-2	2,4,6-Trichlorophenol	U	680	1.0	500	680	210
95-95-4	2,4,5-Trichlorophenol	U	680	1.0	500	680	210
91-58-7	2-Chloronaphthalene	U	450	1.0	330	450	120
92-52-4	1,1'-Biphenyl	U	450	1.0	330	450	100
88-74-4	2-Nitroaniline	U	680	1.0	500	680	100
131-11-3	Dimethyl Phthalate	U	450	1.0	330	450	110
606-20-2	2,6-Dinitrotoluene	U	450	1.0	330	450	110
208-96-8	Acenaphthylene	U	450	1.0	330	450	95
99-09-2	3-Nitroaniline	U	680	1.0	500	680	130
83-32-9	Acenaphthene	U	450	1.0	330	450	89
51-28-5	2,4-Dinitrophenol	U	1600	1.0	1200	1600	510
132-64-9	Dibenzofuran	U	450	1.0	330	450	110
100-02-7	4-Nitrophenol	U	1600	1.0	1200	1600	420
121-14-2	2,4-Dinitrotoluene	U	450	1.0	330	450	120
84-66-2	Diethylphthalate	U	450	1.0	330	450	110
7005-72-3	4-Chlorophenyl-phenylether	U	450	1.0	330	450	110
100-01-6	4-Nitroaniline	U	680	1.0	500	680	180
534-52-1	4,6-Dinitro-2-Methylphenol	U	1600	1.0	1200	1600	460
86-30-6	N-Nitrosodiphenylamine	U	900	1.0	660	900	300
101-55-3	4-Bromophenyl-phenylether	U	450	1.0	330	450	120
1912-24-9	Atrazine	U	450	1.0	330	450	120
87-86-5	Pentachlorophenol	U	1100	1.0	820	1100	320
120-12-7	Anthracene	U	450	1.0	330	450	110
86-74-8	Carbazole	U	680	1.0	500	680	150

MW 3/1/09

KATAHDIN ANALYTICAL SERVICES
Report of Analytical Results

Client: CH2MHill
Project: TO-009 Lejeune
PO No:
Sample Date: 12/03/08
Received Date: 12/04/08
Extraction Date: 12/05/08
Analysis Date: 17-DEC-2008 03:17
Report Date: 12/20/2008
Matrix: SOIL
% Solids: 73.3

Lab ID: SB6961-13
Client ID: MR08-IS069D-6-7-08D
SDG: TO9-9
Extracted by: AC
Extraction Method: SW846 3550
Analyst: JCG
Analysis Method: SW846 8270C
Lab Prep Batch: WG58801
Units: ug/Kgdrywt

CAS#	Compound	Flags	Results	DF	PQL	Adj.PQL	Adj.MDL
84-74-2	Di-n-butylphthalate	U	450	1.0	330	450	140
85-68-7	Butylbenzylphthalate	U	450	1.0	330	450	130
91-94-1	3,3'-Dichlorobenzidine	U	680	1.0	500	680	160
218-01-9	Chrysene	U	450	1.0	330	450	130
117-81-7	bis(2-Ethylhexyl)phthalate	U	450	1.0	330	450	130
117-84-0	Di-n-octylphthalate	U	450	1.0	330	450	290
367-12-4	2-Fluorophenol		72%				
13127-88-3	Phenol-D6		87%				
4165-60-0	Nitrobenzene-D5		77%				
321-60-8	2-Fluorobiphenyl		80%				
118-79-6	2,4,6-Tribromophenol		76%				
1718-51-0	Terphenyl-D14		97%				

MW 3/1/09

KATAHDIN ANALYTICAL SERVICES
Report of Analytical Results

Client: CH2MHill
Project: TO-009 Lejeune
PO No:
Sample Date: 12/03/08
Received Date: 12/04/08
Extraction Date: 12/05/08
Analysis Date: 17-DEC-2008 04:00
Report Date: 12/20/2008
Matrix: SOIL
% Solids: 80.2

Lab ID: SB6961-15
Client ID: MR08-SS070-08D
SDG: TO9-9
Extracted by: AC
Extraction Method: SW846 3550
Analyst: JCG
Analysis Method: SW846 8270C
Lab Prep Batch: WG58801
Units: ug/Kgdrywt

CAS#	Compound	Flags	Results	DF	PQL	Adj.PQL	Adj.MDL
100-52-7	Benzaldehyde	U	620	1.0	500	620	150
108-95-2	Phenol	U	620	1.0	500	620	190
111-44-4	Bis(2-Chloroethyl)ether	U	410	1.0	330	410	100
95-57-8	2-Chlorophenol	U	620	1.0	500	620	200
95-48-7	2-Methylphenol	U	750	1.0	600	750	250
108-60-1	2,2'-Oxybis(1-chloropropane)	U	410	1.0	330	410	110
98-86-2	Acetophenone	U	750	1.0	600	750	220
621-64-7	N-Nitroso-di-n-propylamine	U	410	1.0	330	410	100
65794-96-9	3&4-Methylphenol	U	750	1.0	600	750	230
67-72-1	Hexachloroethane	U	410	1.0	330	410	120
98-95-3	Nitrobenzene	U	410	1.0	330	410	110
78-59-1	Isophorone	U	410	1.0	330	410	93
88-75-5	2-Nitrophenol	U	750	1.0	600	750	210
105-67-9	2,4-Dimethylphenol	U	620	1.0	500	620	200
111-91-1	Bis(2-Chloroethoxy)methane	U	410	1.0	330	410	120
120-83-2	2,4-Dichlorophenol	U	620	1.0	500	620	190
106-47-8	4-Chloroaniline	U	620	1.0	500	620	150
105-60-2	Caprolactam	U	620	1.0	500	620	180
59-50-7	4-Chloro-3-Methylphenol	U	620	1.0	500	620	210
88-06-2	2,4,6-Trichlorophenol	U	620	1.0	500	620	190
95-95-4	2,4,5-Trichlorophenol	U	620	1.0	500	620	190
91-58-7	2-Chloronaphthalene	U	410	1.0	330	410	110
92-52-4	1,1'-Biphenyl	U	410	1.0	330	410	91
88-74-4	2-Nitroaniline	U	620	1.0	500	620	93
131-11-3	Dimethyl Phthalate	U	410	1.0	330	410	97
606-20-2	2,6-Dinitrotoluene	U	410	1.0	330	410	98
208-96-8	Acenaphthylene	U	410	1.0	330	410	87
99-09-2	3-Nitroaniline	U	620	1.0	500	620	120
83-32-9	Acenaphthene	U	410	1.0	330	410	81
51-28-5	2,4-Dinitrophenol	U	1500	1.0	1200	1500	470
132-64-9	Dibenzofuran	U	410	1.0	330	410	98
100-02-7	4-Nitrophenol	U	1500	1.0	1200	1500	380
121-14-2	2,4-Dinitrotoluene	U	410	1.0	330	410	100
84-66-2	Diethylphthalate	U	410	1.0	330	410	100
7005-72-3	4-Chlorophenyl-phenylether	U	410	1.0	330	410	97
100-01-6	4-Nitroaniline	U	620	1.0	500	620	170
534-52-1	4,6-Dinitro-2-Methylphenol	U	1500	1.0	1200	1500	420
86-30-6	N-Nitrosodiphenylamine	U	820	1.0	660	820	270
101-55-3	4-Bromophenyl-phenylether	U	410	1.0	330	410	100
1912-24-9	Atrazine	U	410	1.0	330	410	110
87-86-5	Pentachlorophenol	U	1000	1.0	820	1000	300
120-12-7	Anthracene	U	410	1.0	330	410	100
86-74-8	Carbazole	U	620	1.0	500	620	140

3/1/09

KATAHDIN ANALYTICAL SERVICES
Report of Analytical Results

Client: CH2MHill
Project: TO-009 Lejeune
PO No:
Sample Date: 12/03/08
Received Date: 12/04/08
Extraction Date: 12/05/08
Analysis Date: 17-DEC-2008 04:00
Report Date: 12/20/2008
Matrix: SOIL
% Solids: 80.2

Lab ID: SB6961-15
Client ID: MR08-SS070-08D
SDG: TO9-9
Extracted by: AC
Extraction Method: SW846 3550
Analyst: JCG
Analysis Method: SW846 8270C
Lab Prep Batch: WG58801
Units: ug/Kgdrywt

CAS#	Compound	Flags	Results	DF	PQL	Adj.PQL	Adj.MDL
84-74-2	Di-n-butylphthalate	U	410	1.0	330	410	120
85-68-7	Butylbenzylphthalate	U	410	1.0	330	410	120
91-94-1	3,3'-Dichlorobenzidine	U	620	1.0	500	620	140
218-01-9	Chrysene	U	410	1.0	330	410	120
117-81-7	bis(2-Ethylhexyl)phthalate	U	410	1.0	330	410	120
117-84-0	Di-n-octylphthalate	U	410	1.0	330	410	260
367-12-4	2-Fluorophenol		75%				
13127-88-3	Phenol-D6		90%				
4165-60-0	Nitrobenzene-D5		82%				
321-60-8	2-Fluorobiphenyl		85%				
118-79-6	2,4,6-Tribromophenol		92%				
1718-51-0	Terphenyl-D14		98%				

MW 3/1/09

ENVIRONMENTAL
Data Services, Inc.

METALS

USEPA Region IV - Level IV Review

Site: MCB Camp Lejeune, TO-09 SDG #: L09010073

Client: CH2M HILL, Inc., Virginia Beach, Virginia Date: March 29, 2009

Laboratory: Microbac Laboratories, Inc., Marietta, Ohio Reviewer: Nancy Weaver

EDS ID	Client Sample ID	Laboratory Sample ID	Matrix
1	MR08-SS149-09A	L09010073-01	Soil
2	MR08-IS149-3-4-09A	L09010073-02	Soil
3	MR08-SS142-09A	L09010073-03	Soil
4	MR08-IS142-2-3-09A	L09010073-04	Soil
5	MR08-SS149D-09A	L09010073-05	Soil
6	MR08-IS149D-3-4-09A	L09010073-06	Soil
7	MR08-SS143-09A	L09010073-07	Soil
8	MR08-IS143-2-3-09A	L09010073-08	Soil
9	MR08-SS144-09A	L09010073-09	Soil
10	MR08-IS144-3-4-09A	L09010073-10	Soil
11	MR08-SS145-09A	L09010073-11	Soil
12	MR08-IS145-3-4-09A	L09010073-12	Soil
13	MR08-SS146-09A	L09010073-13	Soil
14	MR08-IS146-2-3-09A	L09010073-14	Soil
15	MR08-SS147-09A	L09010073-15	Soil
16	MR08-IS147-2-3-09A	L09010073-16	Soil
17	MR08-SS148-09A	L09010073-17	Soil
18	MR08-IS148-2-3-09A	L09010073-18	Soil
19	MR08-EB01010509-SS	L09010073-19	Water
20	MR08-EB01010509-IS	L09010073-20	Water

The USEPA "Contract Laboratory Program National Functional Guidelines for Inorganic Data Review," October 2004, and professional judgement were used in evaluating the data in this summary report.

Holding Times - All samples were prepared and analyzed within 28 days for mercury and 180 days for all other metals.

Calibration - The ICV and CCV %R values were acceptable.

Method and Calibration Blanks - The method blanks were free of contamination.

Field and Equipment Blank - Field QC results are summarized below.

Blank ID	Compound	Conc. ug/L	Action Level ug/L	Qualifier	Affected Samples
MR08-FB01011009	None - ND	-	-	-	-
MR08-EB01010509-SS	None - ND	-	-	-	-
MR08-EB01010509-IS	None - ND	-	-	-	-

ICP Interference Check Sample - All %R values were acceptable.

MS/MSD - The MS/MSD samples exhibited acceptable %R and RPD values except the following.

MS/MSD Sample ID	Compound	MS/MSD %R/RPD	Qualifier	Affected Samples
Reference	Lead	Ok/53.3%/Ok	J/UJ	1-18

LCS - The LCS samples exhibited acceptable %R values.

ICP Serial Dilution - The ICP serial dilution sample exhibited acceptable %D values.

Field Duplicates - Field duplicate results are summarized below.

Compound	MR08-SS149-09A mg/kg	MR08-SS149D-09A mg/kg	RPD	Qualifier
Silver	0.802 U	0.273	NC	None
Barium	7.18	6.97	3%	None
Cadmium	1.39	1.16	18%	None
Chromium	11.4	12.5	9%	None
Arsenic	0.896	0.852	5%	None
Lead	60.3	34.7	54%	None

Compound	MR08-IS149-3-4-09A mg/kg	MR08-IS149D-3-4-09A mg/kg	RPD	Qualifier
Silver	0.826 U	0.209	NC	None
Barium	4.62	3.41	30%	None
Cadmium	0.0760	0.748	163%	None
Chromium	2.49	4.20	51%	None
Arsenic	0.716	0.753	5%	None
Lead	5.91	27.8	130%	None
Selenium	0.662	0.560	17%	None

Compound Quantitation - Several samples were analyzed at various dilutions due to high concentrations of target compounds.

Report Number: L09010073

Report Date : **February 3, 2009**

Sample Number: **L09010073-01**
Client ID: **MR08-SS149-09A**
Matrix: **Soil**
Workgroup Number: **WG292109**
Collect Date: **01/05/2009 11:10**
Sample Tag: **01**

PrePrep Method: **NONE**
Prep Method: **3051**
Analytical Method: **6010B**
Analyst: **KHR**
Dilution: **1**
Units: **mg/kg**

Instrument: **IRIS-ICP**
Prep Date: **01/08/2009 13:25**
Cal Date: **01/09/2009 10:07**
Run Date: **01/09/2009 23:31**
File ID: **IR.010909.233100**
Percent Solid: **89.8**

Analyte	CAS. Number	Result	Qual	RL	MDL
Silver, Total	**7440-22-4**		**U**	**0.802**	**0.201**
Barium, Total	**7440-39-3**	**7.18**		**0.401**	**0.0802**
Cadmium, Total	**7440-43-9**	**1.39**		**0.160**	**0.0401**
Chromium, Total	**7440-47-3**	**11.4**		**0.802**	**0.0963**

U Undetected; the analyte was analyzed for, but not detected.

Microbac

13 RW 3/27/09

Report Number: L09010073

Report Date : February 3, 2009

Sample Number:	L09010073-01	PrePrep Method:	NONE	Instrument:	ELAN-ICP
Client ID:	MR08-SS149-09A	Prep Method:	3051	Prep Date:	01/08/2009 09:00
Matrix:	Soil	Analytical Method:	6020	Cal Date:	01/14/2009 16:41
Workgroup Number:	WG292035	Analyst:	WTD	Run Date:	01/15/2009 03:28
Collect Date:	01/05/2009 11:10	Dilution:	5	File ID:	EL.011509.032813
Sample Tag:	DL02	Units:	mg/kg	Percent Solid:	89.8

Analyte	CAS. Number	Result	Qual	RL	MDL
Arsenic, Total	7440-38-2	0.896	J	1.67	0.417
Lead, Total	7439-92-1	60.3 J		2.22	0.556
Selenium, Total	7782-49-2		U	2.22	0.556

MSL

U Undetected; the analyte was analyzed for, but not detected.
J Estimated ; the analyte concentration was less than the low standard (LOQ)

Microbac

819 LW 3/27/09

Report Number: L09010073

Report Date : **February 3, 2009**

Sample Number:	L09010073-01	PrePrep Method:	NONE	Instrument:	HYDRA
Client ID:	MR08-SS149-09A	Prep Method:	7471A	Prep Date:	01/08/2009 08:10
Matrix:	Soil	Analytical Method:	7471A	Cal Date:	01/08/2009 13:47
Workgroup Number:	WG292054	Analyst:	ADC	Run Date:	01/08/2009 14:08
Collect Date:	01/05/2009 11:10	Dilution:	1	File ID:	HY.010809.140847
Sample Tag:	01	Units:	mg/kg	Percent Solid:	89.8

Analyte	CAS. Number	Result	Qual	RL	MDL
Mercury, Total	7439-97-6		U	0.111	0.0222

U Undetected; the analyte was analyzed for, but not detected.

Microbac

1584 LW 3/27/09

2

Sample Number: L09010073-02
Client ID: MR08-IS149-3-4-09A
Matrix: Soil
Workgroup Number: WG292109
Collect Date: 01/05/2009 11:30
Sample Tag: 01

PrePrep Method: NONE
Prep Method: 3051
Analytical Method: 6010B
Analyst: KHR
Dilution: 1
Units: mg/kg

Instrument: IRIS-ICP
Prep Date: 01/08/2009 13:25
Cal Date: 01/09/2009 10:07
Run Date: 01/09/2009 23:55
File ID: IR.010909.235500
Percent Solid: 89.2

Analyte	CAS. Number	Result	Qual	RL	MDL
Silver, Total	7440-22-4		U	0.826	0.207
Barium, Total	7440-39-3	4.62		0.413	0.0826
Cadmium, Total	7440-43-9	0.0760	J	0.165	0.0413
Chromium, Total	7440-47-3	2.49		0.826	0.0991

U Undetected; the analyte was analyzed for, but not detected.
J Estimated ; the analyte concentration was less than the low standard (LOQ)

Microbac

14 JW 3/27/09

2

Sample Number: L09010073-02
Client ID: MR08-IS149-3-4-09A
Matrix: Soil
Workgroup Number: WG292035
Collect Date: 01/05/2009 11:30
Sample Tag: 02

PrePrep Method: NONE
Prep Method: 3051
Analytical Method: 6020
Analyst: WTD
Dilution: 1
Units: mg/kg

Instrument: ELAN-ICP
Prep Date: 01/08/2009 09:01
Cal Date: 01/14/2009 16:41
Run Date: 01/15/2009 03:49
File ID: EL.011509.034924
Percent Solid: 89.2

Analyte	CAS. Number	Result	Qual	RL	MDL
Arsenic, Total	7440-38-2	0.716		0.316	0.0790
Lead, Total	7439-92-1	5.91 J		0.421	0.105
Selenium, Total	7782-49-2	0.662		0.421	0.105

MSL

Microbac

820 LW 3/27/09

2

Sample Number: L09010073-02
Client ID: MR08-IS149-3-4-09A
Matrix: Soil
Workgroup Number: WG292054
Collect Date: 01/05/2009 11:30
Sample Tag: 01

PrePrep Method: NONE
Prep Method: 7471A
Analytical Method: 7471A
Analyst: ADC
Dilution: 1
Units: mg/kg

Instrument: HYDRA
Prep Date: 01/08/2009 08:11
Cal Date: 01/08/2009 13:50
Run Date: 01/08/2009 14:19
File ID: HY.010809.141931
Percent Solid: 89.2

Analyte	CAS. Number	Result	Qual	RL	MDL
Mercury, Total	7439-97-6		U	0.112	0.0224

U Undetected; the analyte was analyzed for, but not detected.

Microbac

1585 LW 3/27/09

3

Sample Number: L09010073-03
Client ID: MR08-SS142-09A
Matrix: Soil
Workgroup Number: WG292109
Collect Date: 01/05/2009 11:45
Sample Tag: 01

PrePrep Method: NONE
Prep Method: 3051
Analytical Method: 6010B
Analyst: KHR
Dilution: 1
Units: mg/kg

Instrument: IRIS-ICP
Prep Date: 01/08/2009 13:25
Cal Date: 01/09/2009 10:07
Run Date: 01/10/2009 00:01
File ID: IR.011009.000100
Percent Solid: 94.3

Analyte	CAS. Number	Result	Qual	RL	MDL
Silver, Total	7440-22-4	0.267	J	0.805	0.201
Barium, Total	7440-39-3	3.97		0.403	0.0805
Cadmium, Total	7440-43-9	0.964		0.161	0.0403
Chromium, Total	7440-47-3	4.04		0.805	0.0966

J Estimated ; the analyte concentration was less than the low standard (LOQ)

Microbac

15 DW 3/27/09

3

Sample Number: L09010073-03
Client ID: MR08-SS142-09A
Matrix: Soil
Workgroup Number: WG292035
Collect Date: 01/05/2009 11:45
Sample Tag: 02

PrePrep Method: NONE
Prep Method: 3051
Analytical Method: 6020
Analyst: WTD
Dilution: 1
Units: mg/kg

Instrument: ELAN-ICP
Prep Date: 01/08/2009 09:01
Cal Date: 01/14/2009 16:41
Run Date: 01/15/2009 04:10
File ID: EL.011509.041032
Percent Solid: 94.3

Analyte	CAS. Number	Result	Qual	RL	MDL
Arsenic, Total	7440-38-2	2.32		0.318	0.0795
Lead, Total	7439-92-1	3.15 J		0.424	0.106
Selenium, Total	7782-49-2	0.257	J	0.424	0.106

MSL

J Estimated ; the analyte concentration was less than the low standard (LOQ)

Microbac

821 [illegible] 3/27/09

3

Sample Number: L09010073-03
Client ID: MR08-SS142-09A
Matrix: Soil
Workgroup Number: WG292054
Collect Date: 01/05/2009 11:45
Sample Tag: 01

PrePrep Method: NONE
Prep Method: 7471A
Analytical Method: 7471A
Analyst: ADC
Dilution: 1
Units: mg/kg

Instrument: HYDRA
Prep Date: 01/08/2009 08:12
Cal Date: 01/08/2009 13:50
Run Date: 01/08/2009 14:21
File ID: HY.010809.142133
Percent Solid: 94.3

Analyte	CAS. Number	Result	Qual	RL	MDL
Mercury, Total	7439-97-6		U	0.104	0.0207

U Undetected; the analyte was analyzed for, but not detected.

Microbac

1586 lw 3/27/09

4

Sample Number: L09010073-04
Client ID: MR08-IS142-2-3-09A
Matrix: Soil
Workgroup Number: WG292109
Collect Date: 01/05/2009 12:00
Sample Tag: 01

PrePrep Method: NONE
Prep Method: 3051
Analytical Method: 6010B
Analyst: KHR
Dilution: 1
Units: mg/kg

Instrument: IRIS-ICP
Prep Date: 01/08/2009 13:25
Cal Date: 01/09/2009 10:07
Run Date: 01/10/2009 00:08
File ID: IR.011009.000800
Percent Solid: 84.9

Analyte	CAS. Number	Result	Qual	RL	MDL
Silver, Total	7440-22-4		U	0.879	0.220
Barium, Total	7440-39-3	2.60		0.440	0.0879
Cadmium, Total	7440-43-9		U	0.176	0.0440
Chromium, Total	7440-47-3	2.45		0.879	0.106

U Undetected; the analyte was analyzed for, but not detected.

Microbac

16 MW 3/27/09

4

Sample Number: L09010073-04
Client ID: MR08-IS142-2-3-09A
Matrix: Soil
Workgroup Number: WG292035
Collect Date: 01/05/2009 12:00
Sample Tag: 02

PrePrep Method: NONE
Prep Method: 3051
Analytical Method: 6020
Analyst: WTD
Dilution: 1
Units: mg/kg

Instrument: ELAN-ICP
Prep Date: 01/08/2009 09:01
Cal Date: 01/14/2009 16:41
Run Date: 01/15/2009 04:17
File ID: EL.011509.041736
Percent Solid: 84.9

Analyte	CAS. Number	Result	Qual	RL	MDL
Arsenic, Total	7440-38-2	0.358		0.351	0.0877
Lead, Total	7439-92-1	3.32 J		0.468	0.117
Selenium, Total	7782-49-2	0.351	J	0.468	0.117

MSL

J Estimated ; the analyte concentration was less than the low standard (LOQ)

Microbac

822 LW 3/27/09

4

Sample Number: L09010073-04
Client ID: MR08-IS142-2-3-09A
Matrix: Soil
Workgroup Number: WG292054
Collect Date: 01/05/2009 12:00
Sample Tag: 01

PrePrep Method: NONE
Prep Method: 7471A
Analytical Method: 7471A
Analyst: ADC
Dilution: 1
Units: mg/kg

Instrument: HYDRA
Prep Date: 01/08/2009 08:12
Cal Date: 01/08/2009 13:50
Run Date: 01/08/2009 14:23
File ID: HY.010809.142352
Percent Solid: 84.9

Analyte	CAS. Number	Result	Qual	RL	MDL
Mercury, Total	7439-97-6	0.0287	J	0.116	0.0233

J Estimated ; the analyte concentration was less than the low standard (LOQ)

Microbac

1587 luw 3/27/09

5

Sample Number: L09010073-05
Client ID: MR08-SS149D-09A
Matrix: Soil
Workgroup Number: WG292109
Collect Date: 01/05/2009 12:30
Sample Tag: 01

PrePrep Method: NONE
Prep Method: 3051
Analytical Method: 6010B
Analyst: KHR
Dilution: 1
Units: mg/kg

Instrument: IRIS-ICP
Prep Date: 01/08/2009 13:25
Cal Date: 01/09/2009 10:07
Run Date: 01/10/2009 00:14
File ID: IR.011009.001400
Percent Solid: 92.3

Analyte	CAS. Number	Result	Qual	RL	MDL
Silver, Total	7440-22-4	0.273	J	0.732	0.183
Barium, Total	7440-39-3	6.97		0.366	0.0732
Cadmium, Total	7440-43-9	1.16		0.146	0.0366
Chromium, Total	7440-47-3	12.5		0.732	0.0878

J Estimated ; the analyte concentration was less than the low standard (LOQ)

Microbac

17 DLW 3/27/09

5

Sample Number: L09010073-05
Client ID: MR08-SS149D-09A
Matrix: Soil
Workgroup Number: WG292035
Collect Date: 01/05/2009 12:30
Sample Tag: DL02

PrePrep Method: NONE
Prep Method: 3051
Analytical Method: 6020
Analyst: WTD
Dilution: 5
Units: mg/kg

Instrument: ELAN-ICP
Prep Date: 01/08/2009 09:01
Cal Date: 01/14/2009 16:41
Run Date: 01/15/2009 04:39
File ID: EL.011509.043923
Percent Solid: 92.3

Analyte	CAS. Number	Result	Qual	RL	MDL
Arsenic, Total	7440-38-2	0.852	J	1.58	0.395
Lead, Total	7439-92-1	34.7 J		2.11	0.527
Selenium, Total	7782-49-2		U	2.11	0.527

MSL

U Undetected; the analyte was analyzed for, but not detected.
J Estimated ; the analyte concentration was less than the low standard (LOQ)

Microbac

823 JW 3/27/09

5

Sample Number: L09010073-05
Client ID: MR08-SS149D-09A
Matrix: Soil
Workgroup Number: WG292054
Collect Date: 01/05/2009 12:30
Sample Tag: 01

PrePrep Method: NONE
Prep Method: 7471A
Analytical Method: 7471A
Analyst: ADC
Dilution: 1
Units: mg/kg

Instrument: HYDRA
Prep Date: 01/08/2009 08:13
Cal Date: 01/08/2009 13:50
Run Date: 01/08/2009 14:26
File ID: HY.010809.142604
Percent Solid: 92.3

Analyte	CAS. Number	Result	Qual	RL	MDL
Mercury, Total	7439-97-6		U	0.100	0.0201

U Undetected; the analyte was analyzed for, but not detected.

Microbac

1588 lwo 3/27/09

6

Sample Number: L09010073-06
Client ID: MR08-IS149D-3-4-09A
Matrix: Soil
Workgroup Number: WG292109
Collect Date: 01/05/2009 12:40
Sample Tag: 01

PrePrep Method: NONE
Prep Method: 3051
Analytical Method: 6010B
Analyst: KHR
Dilution: 1
Units: mg/kg

Instrument: IRIS-ICP
Prep Date: 01/08/2009 13:25
Cal Date: 01/09/2009 10:07
Run Date: 01/10/2009 00:32
File ID: IR.011009.003200
Percent Solid: 92.2

Analyte	CAS. Number	Result	Qual	RL	MDL
Silver, Total	7440-22-4	0.209	J	0.812	0.203
Barium, Total	7440-39-3	3.41		0.406	0.0812
Cadmium, Total	7440-43-9	0.748		0.162	0.0406
Chromium, Total	7440-47-3	4.20		0.812	0.0974

J Estimated ; the analyte concentration was less than the low standard (LOQ)

Microbac

18 LW 3/27/09

6

Sample Number: L09010073-06
Client ID: MR08-IS149D-3-4-09A
Matrix: Soil
Workgroup Number: WG292035
Collect Date: 01/05/2009 12:40
Sample Tag: 02

PrePrep Method: NONE
Prep Method: 3051
Analytical Method: 6020
Analyst: WTD
Dilution: 1
Units: mg/kg

Instrument: ELAN-ICP
Prep Date: 01/08/2009 09:01
Cal Date: 01/14/2009 16:41
Run Date: 01/15/2009 04:46
File ID: EL.011509.044627
Percent Solid: 92.2

Analyte	CAS. Number	Result	Qual	RL	MDL
Arsenic, Total	7440-38-2	0.753		0.325	0.0814
Lead, Total	7439-92-1	27.8 J		0.434	0.108
Selenium, Total	7782-49-2	0.560		0.434	0.108

MSL

Microbac

824 RW 3/27/09

6

Sample Number: L09010073-06
Client ID: MR08-IS149D-3-4-09A
Matrix: Soil
Workgroup Number: WG292054
Collect Date: 01/05/2009 12:40
Sample Tag: 01

PrePrep Method: NONE
Prep Method: 7471A
Analytical Method: 7471A
Analyst: ADC
Dilution: 1
Units: mg/kg

Instrument: HYDRA
Prep Date: 01/08/2009 08:13
Cal Date: 01/08/2009 13:50
Run Date: 01/08/2009 14:27
File ID: HY.010809.142746
Percent Solid: 92.2

Analyte	CAS. Number	Result	Qual	RL	MDL
Mercury, Total	7439-97-6		U	0.106	0.0211

U Undetected; the analyte was analyzed for, but not detected.

Microbac

 JWD 3/27/09

7

Sample Number: L09010073-07
Client ID: MR08-SS143-09A
Matrix: Soil
Workgroup Number: WG292109
Collect Date: 01/05/2009 13:20
Sample Tag: 01

PrePrep Method: NONE
Prep Method: 3051
Analytical Method: 6010B
Analyst: KHR
Dilution: 1
Units: mg/kg

Instrument: IRIS-ICP
Prep Date: 01/08/2009 13:25
Cal Date: 01/09/2009 10:07
Run Date: 01/10/2009 00:38
File ID: IR.011009.003800
Percent Solid: 95.3

Analyte	CAS. Number	Result	Qual	RL	MDL
Silver, Total	7440-22-4		U	0.742	0.185
Barium, Total	7440-39-3	7.15		0.371	0.0742
Cadmium, Total	7440-43-9	0.888		0.148	0.0371
Chromium, Total	7440-47-3	8.48		0.742	0.0890

U Undetected; the analyte was analyzed for, but not detected.

Microbac

19 LW
3/27/09

7

Sample Number: L09010073-07
Client ID: MR08-SS143-09A
Matrix: Soil
Workgroup Number: WG292035
Collect Date: 01/05/2009 13:20
Sample Tag: 02

PrePrep Method: NONE
Prep Method: 3051
Analytical Method: 6020
Analyst: WTD
Dilution: 1
Units: mg/kg

Instrument: ELAN-ICP
Prep Date: 01/08/2009 09:01
Cal Date: 01/14/2009 16:41
Run Date: 01/15/2009 04:53
File ID: EL.011509.045331
Percent Solid: 95.3

Analyte	CAS. Number	Result	Qual	RL	MDL
Arsenic, Total	7440-38-2	1.05		0.314	0.0784
Lead, Total	7439-92-1	27.2 J		0.418	0.105
Selenium, Total	7782-49-2	0.239	J	0.418	0.105

MSL

J Estimated ; the analyte concentration was less than the low standard (LOQ)

Microbac

 lw 3/27/09

7

Sample Number: L09010073-07
Client ID: MR08-SS143-09A
Matrix: Soil
Workgroup Number: WG292054
Collect Date: 01/05/2009 13:20
Sample Tag: 01

PrePrep Method: NONE
Prep Method: 7471A
Analytical Method: 7471A
Analyst: ADC
Dilution: 1
Units: mg/kg

Instrument: HYDRA
Prep Date: 01/08/2009 08:14
Cal Date: 01/08/2009 13:50
Run Date: 01/08/2009 14:29
File ID: HY.010809.142932
Percent Solid: 95.3

Analyte	CAS. Number	Result	Qual	RL	MDL
Mercury, Total	7439-97-6		U	0.104	0.0207

U Undetected; the analyte was analyzed for, but not detected.

Microbac

1590 fw 3/27/09

8

Sample Number: L09010073-08
Client ID: MR08-IS143-2-3-09A
Matrix: Soil
Workgroup Number: WG292109
Collect Date: 01/05/2009 13:35
Sample Tag: 01

PrePrep Method: NONE
Prep Method: 3051
Analytical Method: 6010B
Analyst: KHR
Dilution: 1
Units: mg/kg

Instrument: IRIS-ICP
Prep Date: 01/08/2009 13:25
Cal Date: 01/09/2009 10:07
Run Date: 01/10/2009 00:44
File ID: IR.011009.004400
Percent Solid: 85.6

Analyte	CAS. Number	Result	Qual	RL	MDL
Silver, Total	7440-22-4		U	0.874	0.218
Barium, Total	7440-39-3	5.51		0.437	0.0874
Cadmium, Total	7440-43-9		U	0.175	0.0437
Chromium, Total	7440-47-3	5.27		0.874	0.105

U Undetected; the analyte was analyzed for, but not detected.

Microbac

20 lw
3/27/09

8

Sample Number: L09010073-08
Client ID: MR08-IS143-2-3-09A
Matrix: Soil
Workgroup Number: WG292035
Collect Date: 01/05/2009 13:35
Sample Tag: 02

PrePrep Method: NONE
Prep Method: 3051
Analytical Method: 6020
Analyst: WTD
Dilution: 1
Units: mg/kg

Instrument: ELAN-ICP
Prep Date: 01/08/2009 09:01
Cal Date: 01/14/2009 16:41
Run Date: 01/15/2009 05:00
File ID: EL.011509.050036
Percent Solid: 85.6

Analyte	CAS. Number	Result	Qual	RL	MDL
Arsenic, Total	7440-38-2	1.29		0.345	0.0862
Lead, Total	7439-92-1	3.61 J		0.460	0.115
Selenium, Total	7782-49-2		U	0.460	0.115

MSL

U Undetected; the analyte was analyzed for, but not detected.

Microbac

Rev 3/27/09

8

Sample Number: L09010073-08
Client ID: MR08-IS143-2-3-09A
Matrix: Soil
Workgroup Number: WG292054
Collect Date: 01/05/2009 13:35
Sample Tag: 01

PrePrep Method: NONE
Prep Method: 7471A
Analytical Method: 7471A
Analyst: ADC
Dilution: 1
Units: mg/kg

Instrument: HYDRA
Prep Date: 01/08/2009 08:14
Cal Date: 01/08/2009 13:50
Run Date: 01/08/2009 14:31
File ID: HY.010809.143134
Percent Solid: 85.6

Analyte	CAS. Number	Result	Qual	RL	MDL
Mercury, Total	7439-97-6		U	0.111	0.0223

U Undetected; the analyte was analyzed for, but not detected.

Microbac

1591 lw 3/27/09

9

Sample Number: L09010073-09
Client ID: MR08-SS144-09A
Matrix: Soil
Workgroup Number: WG292109
Collect Date: 01/05/2009 13:55
Sample Tag: 01

PrePrep Method: NONE
Prep Method: 3051
Analytical Method: 6010B
Analyst: KHR
Dilution: 1
Units: mg/kg

Instrument: IRIS-ICP
Prep Date: 01/08/2009 13:25
Cal Date: 01/09/2009 10:07
Run Date: 01/10/2009 00:50
File ID: IR.011009.005000
Percent Solid: 94.8

Analyte	CAS. Number	Result	Qual	RL	MDL
Silver, Total	7440-22-4	0.205	J	0.799	0.200
Barium, Total	7440-39-3	5.03		0.400	0.0799
Cadmium, Total	7440-43-9	0.440		0.160	0.0400
Chromium, Total	7440-47-3	5.76		0.799	0.0959

J Estimated ; the analyte concentration was less than the low standard (LOQ)

Microbac

21 lw 3/27/09

9

Sample Number: L09010073-09
Client ID: MR08-SS144-09A
Matrix: Soil
Workgroup Number: WG292035
Collect Date: 01/05/2009 13:55
Sample Tag: DL02

PrePrep Method: NONE
Prep Method: 3051
Analytical Method: 6020
Analyst: WTD
Dilution: 10
Units: mg/kg

Instrument: ELAN-ICP
Prep Date: 01/08/2009 09:01
Cal Date: 01/14/2009 16:41
Run Date: 01/15/2009 05:07
File ID: EL.011509.050741
Percent Solid: 94.8

Analyte	CAS. Number	Result	Qual	RL	MDL
Arsenic, Total	7440-38-2	2.79	J	3.15	0.788
Lead, Total	7439-92-1	94.3 J		4.20	1.05
Selenium, Total	7782-49-2		U	4.20	1.05

MSL

U Undetected; the analyte was analyzed for, but not detected.
J Estimated ; the analyte concentration was less than the low standard (LOQ)

Microbac

827 lcw 3/27/09

9

Sample Number: L09010073-09
Client ID: MR08-SS144-09A
Matrix: Soil
Workgroup Number: WG292054
Collect Date: 01/05/2009 13:55
Sample Tag: 01

PrePrep Method: NONE
Prep Method: 7471A
Analytical Method: 7471A
Analyst: ADC
Dilution: 1
Units: mg/kg

Instrument: HYDRA
Prep Date: 01/08/2009 08:15
Cal Date: 01/08/2009 13:50
Run Date: 01/08/2009 14:33
File ID: HY.010809.143326
Percent Solid: 94.8

Analyte	CAS. Number	Result	Qual	RL	MDL
Mercury, Total	7439-97-6		U	0.102	0.0205

U Undetected; the analyte was analyzed for, but not detected.

Microbac

1592 lw 3/27/09

10

Sample Number: L09010073-10
Client ID: MR08-IS144-3-4-09A
Matrix: Soil
Workgroup Number: WG292109
Collect Date: 01/05/2009 14:10
Sample Tag: 01

PrePrep Method: NONE
Prep Method: 3051
Analytical Method: 6010B
Analyst: KHR
Dilution: 1
Units: mg/kg

Instrument: IRIS-ICP
Prep Date: 01/08/2009 13:25
Cal Date: 01/09/2009 10:07
Run Date: 01/10/2009 00:56
File ID: IR.011009.005600
Percent Solid: 86.6

Analyte	CAS. Number	Result	Qual	RL	MDL
Silver, Total	7440-22-4		U	0.823	0.206
Barium, Total	7440-39-3	4.56		0.412	0.0823
Cadmium, Total	7440-43-9		U	0.165	0.0412
Chromium, Total	7440-47-3	4.30		0.823	0.0988

U Undetected; the analyte was analyzed for, but not detected.

Microbac

22 (W)
3/27/09

10

Sample Number: L09010073-10
Client ID: MR08-IS144-3-4-09A
Matrix: Soil
Workgroup Number: WG292035
Collect Date: 01/05/2009 14:10
Sample Tag: 02

PrePrep Method: NONE
Prep Method: 3051
Analytical Method: 6020
Analyst: WTD
Dilution: 1
Units: mg/kg

Instrument: ELAN-ICP
Prep Date: 01/08/2009 09:01
Cal Date: 01/14/2009 16:41
Run Date: 01/15/2009 05:14
File ID: EL.011509.051447
Percent Solid: 86.6

Analyte	CAS. Number	Result	Qual	RL	MDL
Arsenic, Total	7440-38-2	0.836		0.338	0.0845
Lead, Total	7439-92-1	2.45 J		0.451	0.113
Selenium, Total	7782-49-2		U	0.451	0.113

MSL

U Undetected; the analyte was analyzed for, but not detected.

Microbac

828 MS 3/27/09

10

Sample Number: L09010073-10
Client ID: MR08-IS144-3-4-09A
Matrix: Soil
Workgroup Number: WG292054
Collect Date: 01/05/2009 14:10
Sample Tag: 01

PrePrep Method: NONE
Prep Method: 7471A
Analytical Method: 7471A
Analyst: ADC
Dilution: 1
Units: mg/kg

Instrument: HYDRA
Prep Date: 01/08/2009 08:15
Cal Date: 01/08/2009 13:50
Run Date: 01/08/2009 14:38
File ID: HY.010809.143859
Percent Solid: 86.6

Analyte	CAS. Number	Result	Qual	RL	MDL
Mercury, Total	7439-97-6		U	0.115	0.0229

U Undetected; the analyte was analyzed for, but not detected.

Microbac

kw 3/27/09

11

Sample Number: L09010073-11
Client ID: MR08-SS145-09A
Matrix: Soil
Workgroup Number: WG292109
Collect Date: 01/05/2009 14:25
Sample Tag: 01

PrePrep Method: NONE
Prep Method: 3051
Analytical Method: 6010B
Analyst: KHR
Dilution: 1
Units: mg/kg

Instrument: IRIS-ICP
Prep Date: 01/08/2009 13:25
Cal Date: 01/09/2009 10:07
Run Date: 01/10/2009 01:02
File ID: IR.011009.010200
Percent Solid: 85.5

Analyte	CAS. Number	Result	Qual	RL	MDL
Silver, Total	7440-22-4	0.257	J	0.826	0.207
Barium, Total	7440-39-3	6.25		0.413	0.0826
Cadmium, Total	7440-43-9	1.47		0.165	0.0413
Chromium, Total	7440-47-3	8.67		0.826	0.0992

J Estimated ; the analyte concentration was less than the low standard (LOQ)

Microbac

23 lw 3/27/09

11

Sample Number: L09010073-11
Client ID: MR08-SS145-09A
Matrix: Soil
Workgroup Number: WG292035
Collect Date: 01/05/2009 14:25
Sample Tag: DL01

PrePrep Method: NONE
Prep Method: 3051
Analytical Method: 6020
Analyst: WTD
Dilution: 5
Units: mg/kg

Instrument: ELAN-ICP
Prep Date: 01/08/2009 09:01
Cal Date: 01/14/2009 16:41
Run Date: 01/15/2009 05:21
File ID: EL.011509.052151
Percent Solid: 85.5

Analyte	CAS. Number	Result	Qual	RL	MDL
Arsenic, Total	7440-38-2	1.09	J	1.64	0.410
Lead, Total	7439-92-1	30.5 J		2.19	0.546
Selenium, Total	7782-49-2		U	2.19	0.546

MSL

U Undetected; the analyte was analyzed for, but not detected.
J Estimated ; the analyte concentration was less than the low standard (LOQ)

Microbac

829 lw 3/27/09

11

Sample Number: L09010073-11
Client ID: MR08-SS145-09A
Matrix: Soil
Workgroup Number: WG292054
Collect Date: 01/05/2009 14:25
Sample Tag: 01

PrePrep Method: NONE
Prep Method: 7471A
Analytical Method: 7471A
Analyst: ADC
Dilution: 1
Units: mg/kg

Instrument: HYDRA
Prep Date: 01/08/2009 08:16
Cal Date: 01/08/2009 13:50
Run Date: 01/08/2009 14:40
File ID: HY.010809.144042
Percent Solid: 85.5

Analyte	CAS. Number	Result	Qual	RL	MDL
Mercury, Total	7439-97-6		U	0.113	0.0226

U Undetected; the analyte was analyzed for, but not detected.

Microbac

JEW
3/27/09

12

Sample Number: L09010073-12
Client ID: MR08-IS145-3-4-09A
Matrix: Soil
Workgroup Number: WG292109
Collect Date: 01/05/2009 14:40
Sample Tag: 01

PrePrep Method: NONE
Prep Method: 3051
Analytical Method: 6010B
Analyst: KHR
Dilution: 1
Units: mg/kg

Instrument: IRIS-ICP
Prep Date: 01/08/2009 13:25
Cal Date: 01/09/2009 10:07
Run Date: 01/10/2009 01:09
File ID: IR.011009.010900
Percent Solid: 76.1

Analyte	CAS. Number	Result	Qual	RL	MDL
Silver, Total	7440-22-4		U	0.953	0.238
Barium, Total	7440-39-3	6.80		0.477	0.0953
Cadmium, Total	7440-43-9		U	0.191	0.0477
Chromium, Total	7440-47-3	1.44		0.953	0.114

U Undetected; the analyte was analyzed for, but not detected.

Microbac

24 CLW 3/27/09

12

Sample Number: L09010073-12
Client ID: MR08-IS145-3-4-09A
Matrix: Soil
Workgroup Number: WG292035
Collect Date: 01/05/2009 14:40
Sample Tag: 02

PrePrep Method: NONE
Prep Method: 3051
Analytical Method: 6020
Analyst: WTD
Dilution: 1
Units: mg/kg

Instrument: ELAN-ICP
Prep Date: 01/08/2009 09:01
Cal Date: 01/14/2009 16:41
Run Date: 01/15/2009 05:28
File ID: EL.011509.052853
Percent Solid: 76.1

Analyte	CAS. Number	Result	Qual	RL	MDL
Arsenic, Total	7440-38-2	0.195	J	0.387	0.0968
Lead, Total	7439-92-1	1.62 J		0.516	0.129
Selenium, Total	7782-49-2	0.131	J	0.516	0.129

MSL

J Estimated ; the analyte concentration was less than the low standard (LOQ)

Microbac

830 DLW 3/27/09

12

Sample Number: L09010073-12
Client ID: MR08-IS145-3-4-09A
Matrix: Soil
Workgroup Number: WG292054
Collect Date: 01/05/2009 14:40
Sample Tag: 01

PrePrep Method: NONE
Prep Method: 7471A
Analytical Method: 7471A
Analyst: ADC
Dilution: 1
Units: mg/kg

Instrument: HYDRA
Prep Date: 01/08/2009 08:16
Cal Date: 01/08/2009 13:50
Run Date: 01/08/2009 14:42
File ID: HY.010809.144250
Percent Solid: 76.1

Analyte	CAS. Number	Result	Qual	RL	MDL
Mercury, Total	7439-97-6		U	0.123	0.0246

U Undetected; the analyte was analyzed for, but not detected.

Microbac

1595 QW 3/27/09

13

Sample Number: L09010073-13
Client ID: MR08-SS146-09A
Matrix: Soil
Workgroup Number: WG292109
Collect Date: 01/05/2009 15:10
Sample Tag: 01

PrePrep Method: NONE
Prep Method: 3051
Analytical Method: 6010B
Analyst: KHR
Dilution: 1
Units: mg/kg

Instrument: IRIS-ICP
Prep Date: 01/08/2009 13:25
Cal Date: 01/09/2009 10:07
Run Date: 01/10/2009 01:15
File ID: IR.011009.011500
Percent Solid: 94.8

Analyte	CAS. Number	Result	Qual	RL	MDL
Silver, Total	7440-22-4	0.335	J	0.718	0.180
Barium, Total	7440-39-3	4.17		0.359	0.0718
Cadmium, Total	7440-43-9	0.800		0.144	0.0359
Chromium, Total	7440-47-3	5.11		0.718	0.0862

J Estimated ; the analyte concentration was less than the low standard (LOQ)

Microbac

25 lew
3/27/09

13

Sample Number: L09010073-13
Client ID: MR08-SS146-09A
Matrix: Soil
Workgroup Number: WG292035
Collect Date: 01/05/2009 15:10
Sample Tag: DL01

PrePrep Method: NONE
Prep Method: 3051
Analytical Method: 6020
Analyst: WTD
Dilution: 5
Units: mg/kg

Instrument: ELAN-ICP
Prep Date: 01/08/2009 09:01
Cal Date: 01/14/2009 16:41
Run Date: 01/15/2009 05:35
File ID: EL.011509.053556
Percent Solid: 94.8

Analyte	CAS. Number	Result	Qual	RL	MDL
Arsenic, Total	7440-38-2	1.36	J	1.50	0.375
Lead, Total	7439-92-1	3.18 J		2.00	0.499
Selenium, Total	7782-49-2		U	2.00	0.499

MSL

U Undetected; the analyte was analyzed for, but not detected.
J Estimated ; the analyte concentration was less than the low standard (LOQ)

Microbac

831 LW 3/27/09

13

Sample Number: L09010073-13
Client ID: MR08-SS146-09A
Matrix: Soil
Workgroup Number: WG292054
Collect Date: 01/05/2009 15:10
Sample Tag: 01

PrePrep Method: NONE
Prep Method: 7471A
Analytical Method: 7471A
Analyst: ADC
Dilution: 1
Units: mg/kg

Instrument: HYDRA
Prep Date: 01/08/2009 08:17
Cal Date: 01/08/2009 13:50
Run Date: 01/08/2009 14:44
File ID: HY.010809.144442
Percent Solid: 94.8

Analyte	CAS. Number	Result	Qual	RL	MDL
Mercury, Total	7439-97-6		U	0.105	0.0209

U Undetected; the analyte was analyzed for, but not detected.

Microbac

 lw 3/27/09

14

Sample Number: L09010073-14
Client ID: MR08-IS146-2-3-09A
Matrix: Soil
Workgroup Number: WG292109
Collect Date: 01/05/2009 15:25
Sample Tag: 01

PrePrep Method: NONE
Prep Method: 3051
Analytical Method: 6010B
Analyst: KHR
Dilution: 1
Units: mg/kg

Instrument: IRIS-ICP
Prep Date: 01/08/2009 13:25
Cal Date: 01/09/2009 10:07
Run Date: 01/10/2009 01:21
File ID: IR.011009.012100
Percent Solid: 87.5

Analyte	CAS. Number	Result	Qual	RL	MDL
Silver, Total	7440-22-4		U	0.821	0.205
Barium, Total	7440-39-3	4.24		0.410	0.0821
Cadmium, Total	7440-43-9	0.0817	J	0.164	0.0410
Chromium, Total	7440-47-3	1.90		0.821	0.0985

U Undetected; the analyte was analyzed for, but not detected.
J Estimated ; the analyte concentration was less than the low standard (LOQ)

Microbac®

26 lw 3/27/09

14

Sample Number: L09010073-14
Client ID: MR08-IS146-2-3-09A
Matrix: Soil
Workgroup Number: WG292035
Collect Date: 01/05/2009 15:25
Sample Tag: DL01

PrePrep Method: NONE
Prep Method: 3051
Analytical Method: 6020
Analyst: WTD
Dilution: 5
Units: mg/kg

Instrument: ELAN-ICP
Prep Date: 01/08/2009 09:01
Cal Date: 01/14/2009 16:41
Run Date: 01/15/2009 05:43
File ID: EL.011509.054300
Percent Solid: 87.5

Analyte	CAS. Number	Result	Qual	RL	MDL
Arsenic, Total	7440-38-2	0.801	J	1.65	0.413
Lead, Total	7439-92-1	3.36 J		2.20	0.550
Selenium, Total	7782-49-2		U	2.20	0.550

MSL

U Undetected; the analyte was analyzed for, but not detected.
J Estimated ; the analyte concentration was less than the low standard (LOQ)

Microbac

832 RW 3/27/09

14

Sample Number: L09010073-14
Client ID: MR08-IS146-2-3-09A
Matrix: Soil
Workgroup Number: WG292054
Collect Date: 01/05/2009 15:25
Sample Tag: 01

PrePrep Method: NONE
Prep Method: 7471A
Analytical Method: 7471A
Analyst: ADC
Dilution: 1
Units: mg/kg

Instrument: HYDRA
Prep Date: 01/08/2009 08:18
Cal Date: 01/08/2009 13:50
Run Date: 01/08/2009 14:46
File ID: HY.010809.144640
Percent Solid: 87.5

Analyte	CAS. Number	Result	Qual	RL	MDL
Mercury, Total	7439-97-6		U	0.110	0.0219

U Undetected; the analyte was analyzed for, but not detected.

Microbac

 hw 3/27/09

15

Sample Number: L09010073-15
Client ID: MR08-SS147-09A
Matrix: Soil
Workgroup Number: WG292109
Collect Date: 01/05/2009 15:50
Sample Tag: 01

PrePrep Method: NONE
Prep Method: 3051
Analytical Method: 6010B
Analyst: KHR
Dilution: 1
Units: mg/kg

Instrument: IRIS-ICP
Prep Date: 01/08/2009 13:25
Cal Date: 01/09/2009 10:07
Run Date: 01/10/2009 01:27
File ID: IR.011009.012700
Percent Solid: 90.0

Analyte	CAS. Number	Result	Qual	RL	MDL
Silver, Total	7440-22-4	0.363	J	0.804	0.201
Barium, Total	7440-39-3	5.91		0.402	0.0804
Cadmium, Total	7440-43-9	1.69		0.161	0.0402
Chromium, Total	7440-47-3	5.60		0.804	0.0965

J Estimated ; the analyte concentration was less than the low standard (LOQ)

Microbac®

27 LW
3/27/09

15

Sample Number: L09010073-15
Client ID: MR08-SS147-09A
Matrix: Soil
Workgroup Number: WG292035
Collect Date: 01/05/2009 15:50
Sample Tag: DL01

PrePrep Method: NONE
Prep Method: 3051
Analytical Method: 6020
Analyst: WTD
Dilution: 5
Units: mg/kg

Instrument: ELAN-ICP
Prep Date: 01/08/2009 09:01
Cal Date: 01/14/2009 16:41
Run Date: 01/15/2009 06:04
File ID: EL.011509.060446
Percent Solid: 90.0

Analyte	CAS. Number	Result	Qual	RL	MDL
Arsenic, Total	7440-38-2	1.63		1.63	0.408
Lead, Total	7439-92-1	11.1 J		2.18	0.545
Selenium, Total	7782-49-2	0.594	J	2.18	0.545

MSL

J Estimated ; the analyte concentration was less than the low standard (LOQ)

Microbac®

833 lw 3/27/09

15

Sample Number: L09010073-15
Client ID: MR08-SS147-09A
Matrix: Soil
Workgroup Number: WG292054
Collect Date: 01/05/2009 15:50
Sample Tag: 01

PrePrep Method: NONE
Prep Method: 7471A
Analytical Method: 7471A
Analyst: ADC
Dilution: 1
Units: mg/kg

Instrument: HYDRA
Prep Date: 01/08/2009 08:19
Cal Date: 01/08/2009 13:50
Run Date: 01/08/2009 14:48
File ID: HY.010809.144825
Percent Solid: 90.0

Analyte	CAS. Number	Result	Qual	RL	MDL
Mercury, Total	7439-97-6		U	0.107	0.0214

U Undetected; the analyte was analyzed for, but not detected.

Microbac

 MW 3/27/09

16

Sample Number: L09010073-16
Client ID: MR08-IS147-2-3-09A
Matrix: Soil
Workgroup Number: WG292109
Collect Date: 01/05/2009 16:05
Sample Tag: 01

PrePrep Method: NONE
Prep Method: 3051
Analytical Method: 6010B
Analyst: KHR
Dilution: 1
Units: mg/kg

Instrument: IRIS-ICP
Prep Date: 01/08/2009 13:25
Cal Date: 01/09/2009 10:07
Run Date: 01/10/2009 01:46
File ID: IR.011009.014600
Percent Solid: 88.6

Analyte	CAS. Number	Result	Qual	RL	MDL
Silver, Total	7440-22-4		U	0.812	0.203
Barium, Total	7440-39-3	4.24		0.406	0.0812
Cadmium, Total	7440-43-9	0.0857	J	0.162	0.0406
Chromium, Total	7440-47-3	2.05		0.812	0.0975

U Undetected; the analyte was analyzed for, but not detected.
J Estimated ; the analyte concentration was less than the low standard (LOQ)

Microbac

28 RW 3/27/09

16

Sample Number: L09010073-16
Client ID: MR08-IS147-2-3-09A
Matrix: Soil
Workgroup Number: WG292035
Collect Date: 01/05/2009 16:05
Sample Tag: 02

PrePrep Method: NONE
Prep Method: 3051
Analytical Method: 6020
Analyst: WTD
Dilution: 1
Units: mg/kg

Instrument: ELAN-ICP
Prep Date: 01/08/2009 09:01
Cal Date: 01/14/2009 16:41
Run Date: 01/15/2009 06:11
File ID: EL.011509.061150
Percent Solid: 88.6

Analyte	CAS. Number	Result	Qual	RL	MDL
Arsenic, Total	7440-38-2	0.712		0.317	0.0793
Lead, Total	7439-92-1	3.23 J		0.423	0.106
Selenium, Total	7782-49-2	0.196	J	0.423	0.106

MSL

J Estimated ; the analyte concentration was less than the low standard (LOQ)

Microbac

834 RW 3/27/09

16

Sample Number: L09010073-16
Client ID: MR08-IS147-2-3-09A
Matrix: Soil
Workgroup Number: WG292054
Collect Date: 01/05/2009 16:05
Sample Tag: 01

PrePrep Method: NONE
Prep Method: 7471A
Analytical Method: 7471A
Analyst: ADC
Dilution: 1
Units: mg/kg

Instrument: HYDRA
Prep Date: 01/08/2009 08:19
Cal Date: 01/08/2009 13:50
Run Date: 01/08/2009 14:50
File ID: HY.010809.145019
Percent Solid: 88.6

Analyte	CAS. Number	Result	Qual	RL	MDL
Mercury, Total	7439-97-6		U	0.110	0.0221

U Undetected; the analyte was analyzed for, but not detected.

Microbac

1599 MW 3/27/09

17

Sample Number: L09010073-17
Client ID: MR08-SS148-09A
Matrix: Soil
Workgroup Number: WG292109
Collect Date: 01/05/2009 16:20
Sample Tag: DL01

PrePrep Method: NONE
Prep Method: 3051
Analytical Method: 6010B
Analyst: KHR
Dilution: 2
Units: mg/kg

Instrument: IRIS-ICP
Prep Date: 01/08/2009 13:25
Cal Date: 01/12/2009 11:41
Run Date: 01/12/2009 13:07
File ID: IR.011209.130700
Percent Solid: 83.7

Analyte	CAS. Number	Result	Qual	RL	MDL
Silver, Total	7440-22-4		U	1.76	0.440
Barium, Total	7440-39-3	12.3		0.881	0.176
Cadmium, Total	7440-43-9	3.13		0.352	0.0881
Chromium, Total	7440-47-3	12.6		1.76	0.211

U Undetected; the analyte was analyzed for, but not detected.

Microbac

29 lw
3/27/09

17

Sample Number: L09010073-17
Client ID: MR08-SS148-09A
Matrix: Soil
Workgroup Number: WG292035
Collect Date: 01/05/2009 16:20
Sample Tag: DL01

PrePrep Method: NONE
Prep Method: 3051
Analytical Method: 6020
Analyst: WTD
Dilution: 5
Units: mg/kg

Instrument: ELAN-ICP
Prep Date: 01/08/2009 09:01
Cal Date: 01/14/2009 16:41
Run Date: 01/15/2009 06:18
File ID: EL.011509.061855
Percent Solid: 83.7

Analyte	CAS. Number	Result	Qual	RL	MDL
Arsenic, Total	7440-38-2	2.65		1.79	0.446
Lead, Total	7439-92-1	23.7 J		2.38	0.595
Selenium, Total	7782-49-2		U	2.38	0.595

MSL

U Undetected; the analyte was analyzed for, but not detected.

Microbac

835 lw 3/27/09

17

Sample Number: L09010073-17
Client ID: MR08-SS148-09A
Matrix: Soil
Workgroup Number: WG292054
Collect Date: 01/05/2009 16:20
Sample Tag: 01

PrePrep Method: NONE
Prep Method: 7471A
Analytical Method: 7471A
Analyst: ADC
Dilution: 1
Units: mg/kg

Instrument: HYDRA
Prep Date: 01/08/2009 08:20
Cal Date: 01/08/2009 13:50
Run Date: 01/08/2009 14:53
File ID: HY.010809.145302
Percent Solid: 83.7

Analyte	CAS. Number	Result	Qual	RL	MDL
Mercury, Total	7439-97-6		U	0.117	0.0234

U Undetected; the analyte was analyzed for, but not detected.

Microbac

1600 MW 3/27/09

18

Sample Number: L09010073-18
Client ID: MR08-IS148-2-3-09A
Matrix: Soil
Workgroup Number: WG292109
Collect Date: 01/05/2009 16:40
Sample Tag: 01

PrePrep Method: NONE
Prep Method: 3051
Analytical Method: 6010B
Analyst: KHR
Dilution: 1
Units: mg/kg

Instrument: IRIS-ICP
Prep Date: 01/08/2009 13:25
Cal Date: 01/09/2009 10:07
Run Date: 01/10/2009 01:58
File ID: IR.011009.015800
Percent Solid: 86.5

Analyte	CAS. Number	Result	Qual	RL	MDL
Silver, Total	7440-22-4		U	0.850	0.212
Barium, Total	7440-39-3	2.45		0.425	0.0850
Cadmium, Total	7440-43-9		U	0.170	0.0425
Chromium, Total	7440-47-3	0.509	J	0.850	0.102

U Undetected; the analyte was analyzed for, but not detected.
J Estimated ; the analyte concentration was less than the low standard (LOQ)

Microbac

30 lw
3/27/09

18

Sample Number: L09010073-18
Client ID: MR08-IS148-2-3-09A
Matrix: Soil
Workgroup Number: WG292035
Collect Date: 01/05/2009 16:40
Sample Tag: 02

PrePrep Method: NONE
Prep Method: 3051
Analytical Method: 6020
Analyst: WTD
Dilution: 1
Units: mg/kg

Instrument: ELAN-ICP
Prep Date: 01/08/2009 09:01
Cal Date: 01/14/2009 16:41
Run Date: 01/15/2009 06:25
File ID: EL.011509.062559
Percent Solid: 86.5

Analyte	CAS. Number	Result	Qual	RL	MDL
Arsenic, Total	7440-38-2	0.148	J	0.342	0.0855
Lead, Total	7439-92-1	3.75 J		0.456	0.114
Selenium, Total	7782-49-2	0.466		0.456	0.114

MSL

J Estimated ; the analyte concentration was less than the low standard (LOQ)

Microbac

 3/27/09

18

Sample Number:	L09010073-18	PrePrep Method:	NONE	Instrument:	HYDRA
Client ID:	MR08-IS148-2-3-09A	Prep Method:	7471A	Prep Date:	01/08/2009 08:20
Matrix:	Soil	Analytical Method:	7471A	Cal Date:	01/08/2009 13:50
Workgroup Number:	WG292054	Analyst:	ADC	Run Date:	01/08/2009 14:54
Collect Date:	01/05/2009 16:40	Dilution:	1	File ID:	HY.010809.145446
Sample Tag:	01	Units:	mg/kg	Percent Solid:	86.5

Analyte	CAS. Number	Result	Qual	RL	MDL
Mercury, Total	7439-97-6		U	0.113	0.0225

U Undetected; the analyte was analyzed for, but not detected.

Microbac

1601 lw 3/27/09

19

Sample Number: L09010073-19
Client ID: MR08-EB01010509-SS
Matrix: Water
Workgroup Number: WG292052
Collect Date: 01/05/2009 16:20
Sample Tag: 01

PrePrep Method: NONE
Prep Method: 3005A
Analytical Method: 6010B
Analyst: SLP
Dilution: 1
Units: ug/L

Instrument: PE-ICP2
Prep Date: 01/08/2009 07:31
Cal Date: 01/09/2009 12:50
Run Date: 01/09/2009 21:00
File ID: P2.010909.210004

Analyte	CAS. Number	Result	Qual	RL	MDL
Barium, Total	7440-39-3		U	10.0	2.50
Cadmium, Total	7440-43-9		U	1.00	0.250
Chromium, Total	7440-47-3		U	10.0	2.50
Silver, Total	7440-22-4		U	6.00	2.00

U Undetected; the analyte was analyzed for, but not detected.

Microbac

31 CW
3/27/09

19

Sample Number: L09010073-19
Client ID: MR08-EB01010509-SS
Matrix: Water
Workgroup Number: WG292411
Collect Date: 01/05/2009 16:20
Sample Tag: 01

PrePrep Method: NONE
Prep Method: 3015
Analytical Method: 6020
Analyst: WTD
Dilution: 1
Units: ug/L

Instrument: ELAN-ICP
Prep Date: 01/09/2009 06:57
Cal Date: 01/13/2009 17:19
Run Date: 01/13/2009 23:26
File ID: EL.011309.232652

Analyte	CAS. Number	Result	Qual	RL	MDL
Arsenic, Total	7440-38-2		U	1.00	0.250
Lead, Total	7439-92-1		U	1.00	0.250
Selenium, Total	7782-49-2		U	2.00	0.500

U Undetected; the analyte was analyzed for, but not detected.

Microbac

837 MW 3/27/09

19

Sample Number: L09010073-19
Client ID: MR08-EB01010509-SS
Matrix: Water
Workgroup Number: WG292152
Collect Date: 01/05/2009 16:20
Sample Tag: 01

PrePrep Method: NONE
Prep Method: 7470A
Analytical Method: 7470A
Analyst: ADC
Dilution: 1
Units: ug/L

Instrument: HYDRA
Prep Date: 01/09/2009 09:05
Cal Date: 01/09/2009 13:12
Run Date: 01/09/2009 13:44
File ID: HY.010909.134437

Analyte	CAS. Number	Result	Qual	RL	MDL
Mercury	7439-97-6		U	0.400	0.100

U Undetected; the analyte was analyzed for, but not detected.

Microbac

1602 lw 3/27/09

20

Sample Number: L09010073-20
Client ID: MR08-EB01010509-IS
Matrix: Water
Workgroup Number: WG292052
Collect Date: 01/05/2009 16:40
Sample Tag: 01

PrePrep Method: NONE
Prep Method: 3005A
Analytical Method: 6010B
Analyst: SLP
Dilution: 1
Units: ug/L

Instrument: PE-ICP2
Prep Date: 01/08/2009 07:31
Cal Date: 01/09/2009 12:50
Run Date: 01/09/2009 21:06
File ID: P2.010909.210626

Analyte	CAS. Number	Result	Qual	RL	MDL
Barium, Total	7440-39-3		U	10.0	2.50
Cadmium, Total	7440-43-9		U	1.00	0.250
Chromium, Total	7440-47-3		U	10.0	2.50
Silver, Total	7440-22-4		U	6.00	2.00

U Undetected; the analyte was analyzed for, but not detected.

Microbac

32 LW
3/27/09

20

Sample Number: L09010073-20
Client ID: MR08-EB01010509-IS
Matrix: Water
Workgroup Number: WG292411
Collect Date: 01/05/2009 16:40
Sample Tag: 01

PrePrep Method: NONE
Prep Method: 3015
Analytical Method: 6020
Analyst: WTD
Dilution: 1
Units: ug/L

Instrument: ELAN-ICP
Prep Date: 01/09/2009 06:57
Cal Date: 01/13/2009 17:19
Run Date: 01/13/2009 23:34
File ID: EL.011309.233446

Analyte	CAS. Number	Result	Qual	RL	MDL
Arsenic, Total	7440-38-2		U	1.00	0.250
Lead, Total	7439-92-1		U	1.00	0.250
Selenium, Total	7782-49-2		U	2.00	0.500

U Undetected; the analyte was analyzed for, but not detected.

Microbac

KW 3/27/09

20

Sample Number: L09010073-20
Client ID: MR08-EB01010509-IS
Matrix: Water
Workgroup Number: WG292152
Collect Date: 01/05/2009 16:40
Sample Tag: 01

PrePrep Method: NONE
Prep Method: 7470A
Analytical Method: 7470A
Analyst: ADC
Dilution: 1
Units: ug/L

Instrument: HYDRA
Prep Date: 01/09/2009 09:05
Cal Date: 01/09/2009 13:12
Run Date: 01/09/2009 13:48
File ID: HY.010909.134807

Analyte	CAS. Number	Result	Qual	RL	MDL
Mercury	7439-97-6		U	0.400	0.100

U Undetected; the analyte was analyzed for, but not detected.

Microbac

1603 lw 3/27/09

ENVIRONMENTAL
Data Services, Inc.

METALS

USEPA Region IV - Level IV Review

Site: MCB Camp Lejeune, TO-09 SDG #: L09010112

Client: CH2M HILL, Inc., Virginia Beach, Virginia Date: March 29, 2009

Laboratory: Microbac Laboratories, Inc., Marietta, Ohio Reviewer: Nancy Weaver

EDS ID	Client Sample ID	Laboratory Sample ID	Matrix
1	MR08-SS195-09A	L09010112-01	Soil
2	MR08-IS195-6-7-09A	L09010112-02	Soil
3	MR08-SS192-09A	L09010112-03	Soil
4	MR08-IS192-5-6-09A	L09010112-04	Soil
5	MR08-SS171-09A	L09010112-05	Soil
6	MR08-IS171-8-9-09A	L09010112-06	Soil
7	MR08-SS168-09A	L09010112-07	Soil
8	MR08-IS168-2-3-09A	L09010112-08	Soil
9	MR08-SS151-09A	L09010112-09	Soil
10	MR08-IS151-4-5-09A	L09010112-10	Soil
11	MR08-SS150-09A	L09010112-11	Soil
12	MR08-IS150-2-3-09A	L09010112-12	Soil
13	MR08-SS141-09A	L09010112-13	Soil
14MS	MR08-SS141-09A MS	L09010112-14MS	Soil
15MSD	MR08-SS141-09A MSD	L09010112-15MSD	Soil
16	MR08-IS141-2-3-09A	L09010112-16	Soil
17MS	MR08-IS141-2-3-09A MS	L09010112-17MS	Soil
18MSD	MR08-IS141-2-3-09A MSD	L09010112-18MSD	Soil
19	MR08-SS140-09A	L09010112-19	Soil
20	MR08-IS140-2-3-09A	L09010112-20	Soil
21	MR08-IS209-2-3-09A	L09010112-23	Soil
22	MR08-IS209D-2-3-09A	L09010112-24	Soil
23	MR08-SS210-09A	L09010112-25	Soil
24	MR08-IS210-2-3-09A	L09010112-26	Soil
25	MR08-EB01010609-SS	L09010112-27	Soil

The USEPA "Contract Laboratory Program National Functional Guidelines for Inorganic Data Review," October 2004, and professional judgement were used in evaluating the data in this summary report.

Holding Times - All samples were prepared and analyzed within 28 days for mercury and 180 days for all other metals.

Calibration - The ICV and CCV %R values were acceptable.

Method and Calibration Blanks - The method blanks were free of contamination.

Field and Equipment Blank - Field QC results are summarized below.

Blank ID	Compound	Conc. ug/L	Action Level ug/L	Qualifier	Affected Samples
MR08-EB01010609-SS	None - ND	-	-	-	-
MR08-FB01011009	None - ND	-	-	-	-

ICP Interference Check Sample - All %R values were acceptable.

MS/MSD - The MS/MSD sample exhibited acceptable %R and RPD values except the following.

MS/MSD Sample ID	Compound	MS/MSD %R/RPD	Qualifier	Affected Samples
13 (WG292236)	Barium, total	Ok/74.3%/Ok	J/UJ	1-10, 13
	Cadmium, total	55.5%/73.5%/Ok	J/UJ	1-10, 13
	Chromium, total	73.5%/57.7%/Ok	J/UJ	1-10, 13
13 (WG292657)	Lead, total	254%/137%/42.8	J	1-13
16 (WG292235)	Chromium, total	Ok/57.2%/Ok	J/UJ	11, 12, 16, 19-24

LCS - The LCS samples exhibited acceptable %R values.

ICP Serial Dilution - The ICP serial dilution sample exhibited acceptable %D values except the following.

ICP Sample ID	Compound	%D	Qualifier	Affected Samples
11	Chromium	10.40%	None	Already qualified due to MS/MSD

Field Duplicates - Field duplicate samples were not included in this data package.

Compound Quantitation - Several samples were analyzed at various dilutions for various analytes due to high concentrations.

Report Number: L09010112

Report Date : February 5, 2009

Sample Number:	L09010112-01	PrePrep Method:	NONE	Instrument:	IRIS-ICP
Client ID:	MR08-SS195-09A	Prep Method:	3051	Prep Date:	01/09/2009 08:46
Matrix:	Soil	Analytical Method:	6010B	Cal Date:	01/12/2009 11:41
Workgroup Number:	WG292236	Analyst:	KHR	Run Date:	01/12/2009 13:43
Collect Date:	01/06/2009 08:25	Dilution:	1	File ID:	IR.011209.134300
Sample Tag:	01	Units:	mg/kg	Percent Solid:	83.5

Analyte	CAS. Number	Result	Qual	RL	MDL
Silver, Total	7440-22-4		U	0.903	0.226
Barium, Total	7440-39-3	16.9 J		0.451	0.0903
Cadmium, Total	7440-43-9	0.168 J	~~J~~	0.181	0.0451
Chromium, Total	7440-47-3	2.70 J		0.903	0.108

MSL

U Undetected; the analyte was analyzed for, but not detected.
J Estimated ; the analyte concentration was less than the low standard (LOQ)

Microbac

13 lw 3/29/09

Report Number: L09010112
Report Date : February 5, 2009

Sample Number: L09010112-01
Client ID: MR08-SS195-09A
Matrix: Soil
Workgroup Number: WG292657
Collect Date: 01/06/2009 08:25
Sample Tag: 01

PrePrep Method: NONE
Prep Method: 3051
Analytical Method: 6020
Analyst: WTD
Dilution: 1
Units: mg/kg

Instrument: ELAN-ICP
Prep Date: 01/09/2009 07:16
Cal Date: 01/15/2009 15:09
Run Date: 01/15/2009 22:47
File ID: EL.011509.224710
Percent Solid: 83.5

Analyte	CAS. Number	Result	Qual	RL	MDL
Arsenic, Total	7440-38-2	0.625		0.359	0.0898
Lead, Total	7439-92-1	34.0 J		0.479	0.120
Selenium, Total	7782-49-2	0.417	J	0.479	0.120

MSH

J Estimated ; the analyte concentration was less than the low standard (LOQ)

Microbac

482 lw 3/29/09

Report Number: L09010112

Report Date : February 5, 2009

Sample Number:	L09010112-01	PrePrep Method:	NONE	Instrument:	HYDRA
Client ID:	MR08-SS195-09A	Prep Method:	7471A	Prep Date:	01/09/2009 09:20
Matrix:	Soil	Analytical Method:	7471A	Cal Date:	01/09/2009 14:31
Workgroup Number:	WG292165	Analyst:	ADC	Run Date:	01/09/2009 14:57
Collect Date:	01/06/2009 08:25	Dilution:	1	File ID:	HY.010909.145711
Sample Tag:	01	Units:	mg/kg	Percent Solid:	83.5

Analyte	CAS. Number	Result	Qual	RL	MDL
Mercury, Total	7439-97-6	0.0512	J	0.113	0.0226

J Estimated ; the analyte concentration was less than the low standard (LOQ)

Microbac

2109 MW 3/29/09

2

Sample Number: L09010112-02
Client ID: MR08-IS195-6-7-09A
Matrix: Soil
Workgroup Number: WG292236
Collect Date: 01/06/2009 08:45
Sample Tag: 01

PrePrep Method: NONE
Prep Method: 3051
Analytical Method: 6010B
Analyst: KHR
Dilution: 1
Units: mg/kg

Instrument: IRIS-ICP
Prep Date: 01/09/2009 08:46
Cal Date: 01/12/2009 11:41
Run Date: 01/12/2009 14:08
File ID: IR.011209.140800
Percent Solid: 92.9

Analyte	CAS. Number	Result	Qual	RL	MDL
Silver, Total	7440-22-4		U	0.735	0.184
Barium, Total	7440-39-3	7.35 J		0.367	0.0735
Cadmium, Total	7440-43-9	iJ	~~J~~	0.147	0.0367
Chromium, Total	7440-47-3	5.93 J		0.735	0.0882

MSL ↓

U Undetected; the analyte was analyzed for, but not detected.

Microbac

14 lw 3/29/09

2

Sample Number: L09010112-02
Client ID: MR08-IS195-6-7-09A
Matrix: Soil
Workgroup Number: WG292657
Collect Date: 01/06/2009 08:45
Sample Tag: 01

PrePrep Method: NONE
Prep Method: 3051
Analytical Method: 6020
Analyst: WTD
Dilution: 1
Units: mg/kg

Instrument: ELAN-ICP
Prep Date: 01/09/2009 07:16
Cal Date: 01/15/2009 15:09
Run Date: 01/15/2009 23:05
File ID: EL.011509.230551
Percent Solid: 92.9

Analyte	CAS. Number	Result	Qual	RL	MDL
Arsenic, Total	7440-38-2	0.216	J	0.320	0.0800
Lead, Total	7439-92-1	3.94 J		0.427	0.107
Selenium, Total	7782-49-2		U	0.427	0.107

MSH

U Undetected; the analyte was analyzed for, but not detected.
J Estimated ; the analyte concentration was less than the low standard (LOQ)

Microbac

483 RW
3/29/09

2

Sample Number: L09010112-02
Client ID: MR08-IS195-6-7-09A
Matrix: Soil
Workgroup Number: WG292165
Collect Date: 01/06/2009 08:45
Sample Tag: 01

PrePrep Method: NONE
Prep Method: 7471A
Analytical Method: 7471A
Analyst: ADC
Dilution: 1
Units: mg/kg

Instrument: HYDRA
Prep Date: 01/09/2009 09:20
Cal Date: 01/09/2009 14:31
Run Date: 01/09/2009 14:59
File ID: HY.010909.145905
Percent Solid: 92.9

Analyte	CAS. Number	Result	Qual	RL	MDL
Mercury, Total	7439-97-6		U	0.103	0.0207

U Undetected; the analyte was analyzed for, but not detected.

Microbac

2110 MW 3/29/09

3

Sample Number: L09010112-03
Client ID: MR08-SS192-09A
Matrix: Soil
Workgroup Number: WG292236
Collect Date: 01/06/2009 09:00
Sample Tag: 01

PrePrep Method: NONE
Prep Method: 3051
Analytical Method: 6010B
Analyst: KHR
Dilution: 1
Units: mg/kg

Instrument: IRIS-ICP
Prep Date: 01/09/2009 08:46
Cal Date: 01/12/2009 11:41
Run Date: 01/12/2009 14:14
File ID: IR.011209.141400
Percent Solid: 70.9

Analyte	CAS. Number	Result	Qual	RL	MDL
Silver, Total	7440-22-4		U	0.995	0.249
Barium, Total	7440-39-3	28.7 J		0.498	0.0995
Cadmium, Total	7440-43-9	1.49 J		0.199	0.0498
Chromium, Total	7440-47-3	10.9 J		0.995	0.119

MSL

U Undetected; the analyte was analyzed for, but not detected.

Microbac

15 LW 3/29/09

3

Sample Number: L09010112-03
Client ID: MR08-SS192-09A
Matrix: Soil
Workgroup Number: WG292657
Collect Date: 01/06/2009 09:00
Sample Tag: 01

PrePrep Method: NONE
Prep Method: 3051
Analytical Method: 6020
Analyst: WTD
Dilution: 1
Units: mg/kg

Instrument: ELAN-ICP
Prep Date: 01/09/2009 07:16
Cal Date: 01/15/2009 15:09
Run Date: 01/15/2009 23:12
File ID: EL.011509.231203
Percent Solid: 70.9

Analyte	CAS. Number	Result	Qual	RL	MDL
Arsenic, Total	7440-38-2	1.63		0.408	0.102
Selenium, Total	7782-49-2	0.646		0.545	0.136

Microbac

484 lw 3/29/09

13

Sample Number: L09010112-03
Client ID: MR08-SS192-09A
Matrix: Soil
Workgroup Number: WG292657
Collect Date: 01/06/2009 09:00
Sample Tag: DL01

PrePrep Method: NONE
Prep Method: 3051
Analytical Method: 6020
Analyst: WTD
Dilution: 10
Units: mg/kg

Instrument: ELAN-ICP
Prep Date: 01/09/2009 07:16
Cal Date: 01/16/2009 16:35
Run Date: 01/17/2009 00:49
File ID: EL.011709.004926
Percent Solid: 70.9

Analyte	CAS. Number	Result	Qual	RL	MDL
Lead, Total	7439-92-1	103 J		5.45	1.36

MSH

Microbac

 RW 3/29/09

3

Sample Number: L09010112-03
Client ID: MR08-SS192-09A
Matrix: Soil
Workgroup Number: WG292165
Collect Date: 01/06/2009 09:00
Sample Tag: 01

PrePrep Method: NONE
Prep Method: 7471A
Analytical Method: 7471A
Analyst: ADC
Dilution: 1
Units: mg/kg

Instrument: HYDRA
Prep Date: 01/09/2009 09:20
Cal Date: 01/09/2009 14:31
Run Date: 01/09/2009 14:59
File ID: HY.010909.145949
Percent Solid: 70.9

Analyte	CAS. Number	Result	Qual	RL	MDL
Mercury, Total	7439-97-6	0.0652	J	0.134	0.0268

J Estimated ; the analyte concentration was less than the low standard (LOQ)

Microbac

2111 lw 3/29/09

4

Sample Number: L09010112-04
Client ID: MR08-IS192-5-6-09A
Matrix: Soil
Workgroup Number: WG292236
Collect Date: 01/06/2009 09:15
Sample Tag: 01

PrePrep Method: NONE
Prep Method: 3051
Analytical Method: 6010B
Analyst: KHR
Dilution: 1
Units: mg/kg

Instrument: IRIS-ICP
Prep Date: 01/09/2009 08:46
Cal Date: 01/12/2009 11:41
Run Date: 01/12/2009 14:20
File ID: IR.011209.142000
Percent Solid: 88.9

Analyte	CAS. Number	Result	Qual	RL	MDL
Silver, Total	7440-22-4		U	0.773	0.193
Barium, Total	7440-39-3	13.0 J		0.386	0.0773
Cadmium, Total	7440-43-9	0.0533		0.155	0.0386
Chromium, Total	7440-47-3	3.31		0.773	0.0927

MSL

U Undetected; the analyte was analyzed for, but not detected.
J Estimated ; the analyte concentration was less than the low standard (LOQ)

Microbac

16 DW 3/29/09

4

Sample Number: L09010112-04
Client ID: MR08-IS192-5-6-09A
Matrix: Soil
Workgroup Number: WG292657
Collect Date: 01/06/2009 09:15
Sample Tag: 01

PrePrep Method: NONE
Prep Method: 3051
Analytical Method: 6020
Analyst: WTD
Dilution: 1
Units: mg/kg

Instrument: ELAN-ICP
Prep Date: 01/09/2009 07:16
Cal Date: 01/15/2009 15:09
Run Date: 01/15/2009 23:31
File ID: EL.011509.233119
Percent Solid: 88.9

Analyte	CAS. Number	Result	Qual	RL	MDL
Arsenic, Total	7440-38-2	0.585		0.326	0.0814
Lead, Total	7439-92-1	20.4 J		0.434	0.109
Selenium, Total	7782-49-2	0.120	J	0.434	0.109

MSH

J Estimated ; the analyte concentration was less than the low standard (LOQ)

Microbac

 3/29/09

4

Sample Number: L09010112-04
Client ID: MR08-IS192-5-6-09A
Matrix: Soil
Workgroup Number: WG292165
Collect Date: 01/06/2009 09:15
Sample Tag: 01

PrePrep Method: NONE
Prep Method: 7471A
Analytical Method: 7471A
Analyst: ADC
Dilution: 1
Units: mg/kg

Instrument: HYDRA
Prep Date: 01/09/2009 09:20
Cal Date: 01/09/2009 14:31
Run Date: 01/09/2009 15:01
File ID: HY.010909.150132
Percent Solid: 88.9

Analyte	CAS. Number	Result	Qual	RL	MDL
Mercury, Total	7439-97-6		U	0.112	0.0224

U Undetected; the analyte was analyzed for, but not detected.

Microbac

2112 lw 3/29/09

5

Sample Number: L09010112-05
Client ID: MR08-SS171-09A
Matrix: Soil
Workgroup Number: WG292236
Collect Date: 01/06/2009 09:30
Sample Tag: 01

PrePrep Method: NONE
Prep Method: 3051
Analytical Method: 6010B
Analyst: KHR
Dilution: 1
Units: mg/kg

Instrument: IRIS-ICP
Prep Date: 01/09/2009 08:46
Cal Date: 01/12/2009 11:41
Run Date: 01/12/2009 14:26
File ID: IR.011209.142600
Percent Solid: 85.0

Analyte	CAS. Number	Result	Qual	RL	MDL
Silver, Total	7440-22-4		U	0.865	0.216
Barium, Total	7440-39-3	6.09 J		0.432	0.0865
Cadmium, Total	7440-43-9	0.0891	J	0.173	0.0432
Chromium, Total	7440-47-3	1.28		0.865	0.104

MSL

U Undetected; the analyte was analyzed for, but not detected.
J Estimated ; the analyte concentration was less than the low standard (LOQ)

Microbac

17 DW 3/29/09

5

Sample Number: L09010112-05
Client ID: MR08-SS171-09A
Matrix: Soil
Workgroup Number: WG292657
Collect Date: 01/06/2009 09:30
Sample Tag: 01

PrePrep Method: NONE
Prep Method: 3051
Analytical Method: 6020
Analyst: WTD
Dilution: 1
Units: mg/kg

Instrument: ELAN-ICP
Prep Date: 01/09/2009 07:16
Cal Date: 01/15/2009 15:09
Run Date: 01/15/2009 23:37
File ID: EL.011509.233732
Percent Solid: 85.0

Analyte	CAS. Number	Result	Qual	RL	MDL
Arsenic, Total	7440-38-2	0.252	J	0.348	0.0871
Lead, Total	7439-92-1	16.2 J		0.464	0.116
Selenium, Total	7782-49-2	0.188	J	0.464	0.116

MSH

J Estimated ; the analyte concentration was less than the low standard (LOQ)

Microbac

lw 3/29/09

5

Sample Number: L09010112-05
Client ID: MR08-SS171-09A
Matrix: Soil
Workgroup Number: WG292165
Collect Date: 01/06/2009 09:30
Sample Tag: 01

PrePrep Method: NONE
Prep Method: 7471A
Analytical Method: 7471A
Analyst: ADC
Dilution: 1
Units: mg/kg

Instrument: HYDRA
Prep Date: 01/09/2009 09:20
Cal Date: 01/09/2009 14:31
Run Date: 01/09/2009 15:03
File ID: HY.010909.150336
Percent Solid: 85.0

Analyte	CAS. Number	Result	Qual	RL	MDL
Mercury, Total	7439-97-6		U	0.109	0.0219

U Undetected; the analyte was analyzed for, but not detected.

Microbac

2113 lw 3/29/09

6

Sample Number: L09010112-06
Client ID: MR08-IS171-8-9-09A
Matrix: Soil
Workgroup Number: WG292236
Collect Date: 01/06/2009 09:45
Sample Tag: 01

PrePrep Method: NONE
Prep Method: 3051
Analytical Method: 6010B
Analyst: KHR
Dilution: 1
Units: mg/kg

Instrument: IRIS-ICP
Prep Date: 01/09/2009 08:46
Cal Date: 01/12/2009 11:41
Run Date: 01/12/2009 14:32
File ID: IR.011209.143200
Percent Solid: 84.9

Analyte	CAS. Number	Result	Qual	RL	MDL
Silver, Total	7440-22-4		U	0.857	0.214
Barium, Total	7440-39-3	13.1 J		0.428	0.0857
Cadmium, Total	7440-43-9	UJ	~~U~~	0.171	0.0428
Chromium, Total	7440-47-3	6.14 J		0.857	0.103

MSL

U Undetected; the analyte was analyzed for, but not detected.

Microbac

18 fw 3/29/09

6

Sample Number: L09010112-06
Client ID: MR08-IS171-8-9-09A
Matrix: Soil
Workgroup Number: WG292657
Collect Date: 01/06/2009 09:45
Sample Tag: 01

PrePrep Method: NONE
Prep Method: 3051
Analytical Method: 6020
Analyst: WTD
Dilution: 1
Units: mg/kg

Instrument: ELAN-ICP
Prep Date: 01/09/2009 07:16
Cal Date: 01/15/2009 15:09
Run Date: 01/15/2009 23:43
File ID: EL.011509.234345
Percent Solid: 84.9

Analyte	CAS. Number	Result	Qual	RL	MDL
Arsenic, Total	7440-38-2	0.360		0.342	0.0856
Lead, Total	7439-92-1	6.88 J		0.457	0.114
Selenium, Total	7782-49-2		U	0.457	0.114

MSH

U Undetected; the analyte was analyzed for, but not detected.

Microbac

488 QW 3/29/09

6

Sample Number: L09010112-06
Client ID: MR08-IS171-8-9-09A
Matrix: Soil
Workgroup Number: WG292165
Collect Date: 01/06/2009 09:45
Sample Tag: 01

PrePrep Method: NONE
Prep Method: 7471A
Analytical Method: 7471A
Analyst: ADC
Dilution: 1
Units: mg/kg

Instrument: HYDRA
Prep Date: 01/09/2009 09:20
Cal Date: 01/09/2009 14:31
Run Date: 01/09/2009 15:05
File ID: HY.010909.150538
Percent Solid: 84.9

Analyte	CAS. Number	Result	Qual	RL	MDL
Mercury, Total	7439-97-6		U	0.114	0.0227

U Undetected; the analyte was analyzed for, but not detected.

Microbac

2114 lw
3/29/09

7

Sample Number: L09010112-07
Client ID: MR08-SS168-09A
Matrix: Soil
Workgroup Number: WG292236
Collect Date: 01/06/2009 10:15
Sample Tag: 01

PrePrep Method: NONE
Prep Method: 3051
Analytical Method: 6010B
Analyst: KHR
Dilution: 1
Units: mg/kg

Instrument: IRIS-ICP
Prep Date: 01/09/2009 08:46
Cal Date: 01/12/2009 11:41
Run Date: 01/12/2009 14:50
File ID: IR.011209.145000
Percent Solid: 86.2

Analyte	CAS. Number	Result	Qual	RL	MDL
Silver, Total	7440-22-4		U	0.843	0.211
Barium, Total	7440-39-3	19.4 J		0.422	0.0843
Cadmium, Total	7440-43-9	0.307		0.169	0.0422
Chromium, Total	7440-47-3	6.16		0.843	0.101

MSL

U Undetected; the analyte was analyzed for, but not detected.

Microbac

19 LW
3/29/09

7

Sample Number: L09010112-07
Client ID: MR08-SS168-09A
Matrix: Soil
Workgroup Number: WG292657
Collect Date: 01/06/2009 10:15
Sample Tag: 01

PrePrep Method: NONE
Prep Method: 3051
Analytical Method: 6020
Analyst: WTD
Dilution: 1
Units: mg/kg

Instrument: ELAN-ICP
Prep Date: 01/09/2009 07:16
Cal Date: 01/15/2009 15:09
Run Date: 01/15/2009 23:49
File ID: EL.011509.234959
Percent Solid: 86.2

Analyte	CAS. Number	Result	Qual	RL	MDL
Arsenic, Total	7440-38-2	0.861		0.348	0.0870
Selenium, Total	7782-49-2	0.319	J	0.464	0.116

J Estimated ; the analyte concentration was less than the low standard (LOQ)

Microbac

lw
3/29/09

7

Sample Number: L09010112-07
Client ID: MR08-SS168-09A
Matrix: Soil
Workgroup Number: WG292657
Collect Date: 01/06/2009 10:15
Sample Tag: DL01

PrePrep Method: NONE
Prep Method: 3051
Analytical Method: 6020
Analyst: WTD
Dilution: 10
Units: mg/kg

Instrument: ELAN-ICP
Prep Date: 01/09/2009 07:16
Cal Date: 01/16/2009 16:35
Run Date: 01/17/2009 00:55
File ID: EL.011709.005540
Percent Solid: 86.2

Analyte	CAS. Number	Result	Qual	RL	MDL
Lead, Total	7439-92-1	47.9 J		4.64	1.16

MSH

Microbac

LW
3/29/09

7

Sample Number: L09010112-07
Client ID: MR08-SS168-09A
Matrix: Soil
Workgroup Number: WG292165
Collect Date: 01/06/2009 10:15
Sample Tag: 01

PrePrep Method: NONE
Prep Method: 7471A
Analytical Method: 7471A
Analyst: ADC
Dilution: 1
Units: mg/kg

Instrument: HYDRA
Prep Date: 01/09/2009 09:20
Cal Date: 01/09/2009 14:31
Run Date: 01/09/2009 15:07
File ID: HY.010909.150720
Percent Solid: 86.2

Analyte	CAS. Number	Result	Qual	RL	MDL
Mercury, Total	7439-97-6	0.0457	J	0.109	0.0218

J Estimated ; the analyte concentration was less than the low standard (LOQ)

Microbac®

2115 MW 3/29/09

8

Sample Number: L09010112-08
Client ID: MR08-IS168-2-3-09A
Matrix: Soil
Workgroup Number: WG292236
Collect Date: 01/06/2009 10:30
Sample Tag: 01

PrePrep Method: NONE
Prep Method: 3051
Analytical Method: 6010B
Analyst: KHR
Dilution: 1
Units: mg/kg

Instrument: IRIS-ICP
Prep Date: 01/09/2009 08:46
Cal Date: 01/12/2009 11:41
Run Date: 01/12/2009 14:56
File ID: IR.011209.145600
Percent Solid: 85.8

Analyte	CAS. Number	Result	Qual	RL	MDL
Silver, Total	7440-22-4		U	0.799	0.200
Barium, Total	7440-39-3	18.5 J		0.399	0.0799
Cadmium, Total	7440-43-9	UJ	~~U~~	0.160	0.0399
Chromium, Total	7440-47-3	7.96 J		0.799	0.0959

MSL

U Undetected; the analyte was analyzed for, but not detected.

Microbac

20 hw 3/29/09

8

Sample Number: L09010112-08
Client ID: MR08-IS168-2-3-09A
Matrix: Soil
Workgroup Number: WG292657
Collect Date: 01/06/2009 10:30
Sample Tag: 01

PrePrep Method: NONE
Prep Method: 3051
Analytical Method: 6020
Analyst: WTD
Dilution: 1
Units: mg/kg

Instrument: ELAN-ICP
Prep Date: 01/09/2009 07:16
Cal Date: 01/15/2009 15:09
Run Date: 01/15/2009 23:56
File ID: EL.011509.235613
Percent Solid: 85.8

Analyte	CAS. Number	Result	Qual	RL	MDL
Arsenic, Total	7440-38-2	1.78		0.347	0.0867
Lead, Total	7439-92-1	5.58 J		0.463	0.116
Selenium, Total	7782-49-2	0.147	J	0.463	0.116

MSH

J Estimated ; the analyte concentration was less than the low standard (LOQ)

Microbac

 LW 3/29/09

8

Sample Number:	L09010112-08	PrePrep Method:	NONE	Instrument:	HYDRA
Client ID:	MR08-IS168-2-3-09A	Prep Method:	7471A	Prep Date:	01/09/2009 09:20
Matrix:	Soil	Analytical Method:	7471A	Cal Date:	01/09/2009 14:31
Workgroup Number:	WG292165	Analyst:	ADC	Run Date:	01/09/2009 15:09
Collect Date:	01/06/2009 10:30	Dilution:	1	File ID:	HY.010909.150911
Sample Tag:	01	Units:	mg/kg	Percent Solid:	85.8

Analyte	CAS. Number	Result	Qual	RL	MDL
Mercury, Total	7439-97-6	0.0228	J	0.109	0.0219

J Estimated ; the analyte concentration was less than the low standard (LOQ)

Microbac

2116 lw 3/29/09

9

Sample Number: L09010112-09
Client ID: MR08-SS151-09A
Matrix: Soil
Workgroup Number: WG292236
Collect Date: 01/06/2009 11:15
Sample Tag: 01

PrePrep Method: NONE
Prep Method: 3051
Analytical Method: 6010B
Analyst: KHR
Dilution: 1
Units: mg/kg

Instrument: IRIS-ICP
Prep Date: 01/09/2009 08:46
Cal Date: 01/12/2009 11:41
Run Date: 01/12/2009 15:02
File ID: IR.011209.150200
Percent Solid: 79.6

Analyte	CAS. Number	Result	Qual	RL	MDL
Silver, Total	7440-22-4	0.215	J	0.856	0.214
Barium, Total	7440-39-3	8.06 J		0.428	0.0856
Cadmium, Total	7440-43-9	2.07		0.171	0.0428
Chromium, Total	7440-47-3	13.8		0.856	0.103

MSL

J Estimated ; the analyte concentration was less than the low standard (LOQ)

Microbac

21 lw
3/29/09

9

Sample Number: L09010112-09
Client ID: MR08-SS151-09A
Matrix: Soil
Workgroup Number: WG292657
Collect Date: 01/06/2009 11:15
Sample Tag: 01

PrePrep Method: NONE
Prep Method: 3051
Analytical Method: 6020
Analyst: WTD
Dilution: 1
Units: mg/kg

Instrument: ELAN-ICP
Prep Date: 01/09/2009 07:16
Cal Date: 01/15/2009 15:09
Run Date: 01/16/2009 00:02
File ID: EL.011609.000228
Percent Solid: 79.6

Analyte	CAS. Number	Result	Qual	RL	MDL
Arsenic, Total	7440-38-2	1.13		0.369	0.0922
Selenium, Total	7782-49-2	0.350	J	0.492	0.123

J Estimated ; the analyte concentration was less than the low standard (LOQ)

Microbac

492 PW 3/29/09

9

Sample Number: L09010112-09
Client ID: MR08-SS151-09A
Matrix: Soil
Workgroup Number: WG292657
Collect Date: 01/06/2009 11:15
Sample Tag: DL01

PrePrep Method: NONE
Prep Method: 3051
Analytical Method: 6020
Analyst: WTD
Dilution: 10
Units: mg/kg

Instrument: ELAN-ICP
Prep Date: 01/09/2009 07:16
Cal Date: 01/16/2009 16:35
Run Date: 01/17/2009 01:01
File ID: EL.011709.010155
Percent Solid: 79.6

Analyte	CAS. Number	Result	Qual	RL	MDL
Lead, Total	7439-92-1	56.0 J		4.92	1.23

MSH

Microbac

3/29/09

9

Sample Number: L09010112-09
Client ID: MR08-SS151-09A
Matrix: Soil
Workgroup Number: WG292165
Collect Date: 01/06/2009 11:15
Sample Tag: 01

PrePrep Method: NONE
Prep Method: 7471A
Analytical Method: 7471A
Analyst: ADC
Dilution: 1
Units: mg/kg

Instrument: HYDRA
Prep Date: 01/09/2009 09:20
Cal Date: 01/09/2009 14:31
Run Date: 01/09/2009 15:14
File ID: HY.010909.151442
Percent Solid: 79.6

Analyte	CAS. Number	Result	Qual	RL	MDL
Mercury, Total	7439-97-6		U	0.119	0.0238

U Undetected; the analyte was analyzed for, but not detected.

Microbac

2117 MW 3 2/9/09

10

Sample Number: L09010112-10
Client ID: MR08-IS151-4-5-09A
Matrix: Soil
Workgroup Number: WG292236
Collect Date: 01/06/2009 11:35
Sample Tag: 01

PrePrep Method: NONE
Prep Method: 3051
Analytical Method: 6010B
Analyst: KHR
Dilution: 1
Units: mg/kg

Instrument: IRIS-ICP
Prep Date: 01/09/2009 08:46
Cal Date: 01/12/2009 11:41
Run Date: 01/12/2009 15:08
File ID: IR.011209.150800
Percent Solid: 78.4

Analyte	CAS. Number	Result	Qual	RL	MDL
Silver, Total	7440-22-4		U	0.977	0.244
Barium, Total	7440-39-3	10.8 J		0.488	0.0977
Cadmium, Total	7440-43-9	UJ	~~U~~	0.195	0.0488
Chromium, Total	7440-47-3	7.91 J		0.977	0.117

MSL

U Undetected; the analyte was analyzed for, but not detected.

Microbac

22 MW
3/29/09

10

Sample Number: L09010112-10
Client ID: MR08-IS151-4-5-09A
Matrix: Soil
Workgroup Number: WG292657
Collect Date: 01/06/2009 11:35
Sample Tag: 01

PrePrep Method: NONE
Prep Method: 3051
Analytical Method: 6020
Analyst: WTD
Dilution: 1
Units: mg/kg

Instrument: ELAN-ICP
Prep Date: 01/09/2009 07:16
Cal Date: 01/15/2009 15:09
Run Date: 01/16/2009 00:08
File ID: EL.011609.000842
Percent Solid: 78.4

Analyte	CAS. Number	Result	Qual	RL	MDL
Arsenic, Total	7440-38-2	1.74		0.372	0.0930
Lead, Total	7439-92-1	6.05 J		0.496	0.124
Selenium, Total	7782-49-2	0.211	J	0.496	0.124

MSH

J Estimated ; the analyte concentration was less than the low standard (LOQ)

Microbac

494 hus 3/29/09

10

Sample Number: L09010112-10
Client ID: MR08-IS151-4-5-09A
Matrix: Soil
Workgroup Number: WG292165
Collect Date: 01/06/2009 11:35
Sample Tag: 01

PrePrep Method: NONE
Prep Method: 7471A
Analytical Method: 7471A
Analyst: ADC
Dilution: 1
Units: mg/kg

Instrument: HYDRA
Prep Date: 01/09/2009 09:20
Cal Date: 01/09/2009 14:31
Run Date: 01/09/2009 15:16
File ID: HY.010909.151634
Percent Solid: 78.4

Analyte	CAS. Number	Result	Qual	RL	MDL
Mercury, Total	7439-97-6		U	0.122	0.0244

U Undetected; the analyte was analyzed for, but not detected.

Microbac

2118 hw 3/29/09

11

Sample Number: L09010112-11
Client ID: MR08-SS150-09A
Matrix: Soil
Workgroup Number: WG292235
Collect Date: 01/06/2009 12:50
Sample Tag: 01

PrePrep Method: NONE
Prep Method: 3051
Analytical Method: 6010B
Analyst: KHR
Dilution: 1
Units: mg/kg

Instrument: IRIS-ICP
Prep Date: 01/09/2009 09:11
Cal Date: 01/12/2009 11:41
Run Date: 01/12/2009 15:45
File ID: IR.011209.154500
Percent Solid: 85.8

Analyte	CAS. Number	Result	Qual	RL	MDL
Silver, Total	7440-22-4	0.240	J	0.820	0.205
Barium, Total	7440-39-3	8.98		0.410	0.0820
Cadmium, Total	7440-43-9	2.18		0.164	0.0410
Chromium, Total	7440-47-3	7.90 J		0.820	0.0984

MSL

J Estimated ; the analyte concentration was less than the low standard (LOQ)

Microbac

23 LW 3/29/09

11

Sample Number: L09010112-11
Client ID: MR08-SS150-09A
Matrix: Soil
Workgroup Number: WG292657
Collect Date: 01/06/2009 12:50
Sample Tag: 01

PrePrep Method: NONE
Prep Method: 3051
Analytical Method: 6020
Analyst: WTD
Dilution: 1
Units: mg/kg

Instrument: ELAN-ICP
Prep Date: 01/09/2009 07:16
Cal Date: 01/15/2009 15:09
Run Date: 01/16/2009 00:14
File ID: EL.011609.001457
Percent Solid: 85.8

Analyte	CAS. Number	Result	Qual	RL	MDL
Arsenic, Total	7440-38-2	1.00		0.332	0.0831
Lead, Total	7439-92-1	34.4 J		0.443	0.111
Selenium, Total	7782-49-2	0.367	J	0.443	0.111

MSH

J Estimated ; the analyte concentration was less than the low standard (LOQ)

Microbac

 LW 3/29/09

11

Sample Number: L09010112-11
Client ID: MR08-SS150-09A
Matrix: Soil
Workgroup Number: WG292165
Collect Date: 01/06/2009 12:50
Sample Tag: 01

PrePrep Method: NONE
Prep Method: 7471A
Analytical Method: 7471A
Analyst: ADC
Dilution: 1
Units: mg/kg

Instrument: HYDRA
Prep Date: 01/09/2009 09:20
Cal Date: 01/09/2009 14:31
Run Date: 01/09/2009 15:18
File ID: HY.010909.151839
Percent Solid: 85.8

Analyte	CAS. Number	Result	Qual	RL	MDL
Mercury, Total	7439-97-6		U	0.111	0.0223

U Undetected; the analyte was analyzed for, but not detected.

Microbac

2119 JW 3/29/09

12

Sample Number: L09010112-12
Client ID: MR08-IS150-2-3-09A
Matrix: Soil
Workgroup Number: WG292235
Collect Date: 01/06/2009 13:10
Sample Tag: 01

PrePrep Method: NONE
Prep Method: 3051
Analytical Method: 6010B
Analyst: KHR
Dilution: 1
Units: mg/kg

Instrument: IRIS-ICP
Prep Date: 01/09/2009 09:11
Cal Date: 01/12/2009 11:41
Run Date: 01/12/2009 16:21
File ID: IR.011209.162100
Percent Solid: 77.8

Analyte	CAS. Number	Result	Qual	RL	MDL
Silver, Total	7440-22-4		U	0.953	0.238
Barium, Total	7440-39-3	12.5		0.477	0.0953
Cadmium, Total	7440-43-9		U	0.191	0.0477
Chromium, Total	7440-47-3	1.97 J		0.953	0.114

MSL

U Undetected; the analyte was analyzed for, but not detected.

Microbac

24 lw 3/29/09

12

Sample Number: L09010112-12
Client ID: MR08-IS150-2-3-09A
Matrix: Soil
Workgroup Number: WG292657
Collect Date: 01/06/2009 13:10
Sample Tag: 01

PrePrep Method: NONE
Prep Method: 3051
Analytical Method: 6020
Analyst: WTD
Dilution: 1
Units: mg/kg

Instrument: ELAN-ICP
Prep Date: 01/09/2009 07:16
Cal Date: 01/15/2009 15:09
Run Date: 01/16/2009 00:21
File ID: EL.011609.002113
Percent Solid: 77.8

Analyte	CAS. Number	Result	Qual	RL	MDL
Arsenic, Total	7440-38-2	0.250	J	0.368	0.0920
Lead, Total	7439-92-1	4.47 J		0.491	0.123
Selenium, Total	7782-49-2	0.241	J	0.491	0.123

MSH

J Estimated ; the analyte concentration was less than the low standard (LOQ)

Microbac

496 lw 3/29/09

12

Sample Number: L09010112-12
Client ID: MR08-IS150-2-3-09A
Matrix: Soil
Workgroup Number: WG292165
Collect Date: 01/06/2009 13:10
Sample Tag: 01

PrePrep Method: NONE
Prep Method: 7471A
Analytical Method: 7471A
Analyst: ADC
Dilution: 1
Units: mg/kg

Instrument: HYDRA
Prep Date: 01/09/2009 09:20
Cal Date: 01/09/2009 14:31
Run Date: 01/09/2009 15:20
File ID: HY.010909.152021
Percent Solid: 77.8

Analyte	CAS. Number	Result	Qual	RL	MDL
Mercury, Total	7439-97-6		U	0.120	0.0241

U Undetected; the analyte was analyzed for, but not detected.

Microbac

2120 lcw 3/29/09

13

Sample Number: L09010112-13
Client ID: MR08-SS141-09A
Matrix: Soil
Workgroup Number: WG292236
Collect Date: 01/06/2009 13:35
Sample Tag: 01

PrePrep Method: NONE
Prep Method: 3051
Analytical Method: 6010B
Analyst: KHR
Dilution: 1
Units: mg/kg

Instrument: IRIS-ICP
Prep Date: 01/09/2009 08:46
Cal Date: 01/12/2009 11:41
Run Date: 01/12/2009 15:15
File ID: IR.011209.151500
Percent Solid: 79.2

Analyte	CAS. Number	Result	Qual	RL	MDL
Silver, Total	7440-22-4		U	0.922	0.230
Barium, Total	7440-39-3	8.22 J		0.461	0.0922
Cadmium, Total	7440-43-9	1.01		0.184	0.0461
Chromium, Total	7440-47-3	11.2		0.922	0.111

MSL

U Undetected; the analyte was analyzed for, but not detected.

Microbac

25 MW 3/29/09

13

Sample Number:	L09010112-13	PrePrep Method:	NONE	Instrument:	ELAN-ICP
Client ID:	MR08-SS141-09A	Prep Method:	3051	Prep Date:	01/09/2009 07:16
Matrix:	Soil	Analytical Method:	6020	Cal Date:	01/15/2009 15:09
Workgroup Number:	WG292657	Analyst:	WTD	Run Date:	01/15/2009 22:28
Collect Date:	01/06/2009 13:35	Dilution:	1	File ID:	EL.011509.222827
Sample Tag:	01	Units:	mg/kg	Percent Solid:	79.2

Analyte	CAS. Number	Result	Qual	RL	MDL
Arsenic, Total	7440-38-2	1.07		0.375	0.0938
Lead, Total	7439-92-1	9.55 J		0.500	0.125
Selenium, Total	7782-49-2	0.285	J	0.500	0.125

MSH

J Estimated ; the analyte concentration was less than the low standard (LOQ)

Microbac

497 LW 3/29/09

13

Sample Number: L09010112-13
Client ID: MR08-SS141-09A
Matrix: Soil
Workgroup Number: WG292165
Collect Date: 01/06/2009 13:35
Sample Tag: 01

PrePrep Method: NONE
Prep Method: 7471A
Analytical Method: 7471A
Analyst: ADC
Dilution: 1
Units: mg/kg

Instrument: HYDRA
Prep Date: 01/09/2009 09:20
Cal Date: 01/09/2009 14:31
Run Date: 01/09/2009 14:46
File ID: HY.010909.144609
Percent Solid: 79.2

Analyte	CAS. Number	Result	Qual	RL	MDL
Mercury, Total	7439-97-6		U	0.117	0.0233

U Undetected; the analyte was analyzed for, but not detected.

Microbac

2121 fw 3/29/09

16

Sample Number: L09010112-16
Client ID: MR08-IS141-2-3-09A
Matrix: Soil
Workgroup Number: WG292235
Collect Date: 01/06/2009 13:55
Sample Tag: 01

PrePrep Method: NONE
Prep Method: 3051
Analytical Method: 6010B
Analyst: KHR
Dilution: 1
Units: mg/kg

Instrument: IRIS-ICP
Prep Date: 01/09/2009 09:11
Cal Date: 01/12/2009 11:41
Run Date: 01/12/2009 16:27
File ID: IR.011209.162700
Percent Solid: 83.6

Analyte	CAS. Number	Result	Qual	RL	MDL
Silver, Total	7440-22-4		U	0.886	0.221
Barium, Total	7440-39-3	6.06		0.443	0.0886
Cadmium, Total	7440-43-9		U	0.177	0.0443
Chromium, Total	7440-47-3	7.09 J		0.886	0.106

MSL

U Undetected; the analyte was analyzed for, but not detected.

Microbac

AW
3/29/09

16

Sample Number: L09010112-16
Client ID: MR08-IS141-2-3-09A
Matrix: Soil
Workgroup Number: WG292231
Collect Date: 01/06/2009 13:55
Sample Tag: DL01

PrePrep Method: NONE
Prep Method: 3051
Analytical Method: 6020
Analyst: WTD
Dilution: 5
Units: mg/kg

Instrument: ELAN-ICP
Prep Date: 01/09/2009 07:46
Cal Date: 01/14/2009 16:41
Run Date: 01/15/2009 01:13
File ID: EL.011509.011303
Percent Solid: 83.6

Analyte	CAS. Number	Result	Qual	RL	MDL
Arsenic, Total	7440-38-2	0.683	J	1.77	0.442
Lead, Total	7439-92-1	2.84		2.36	0.590
Selenium, Total	7782-49-2		U	2.36	0.590

U Undetected; the analyte was analyzed for, but not detected.
J Estimated ; the analyte concentration was less than the low standard (LOQ)

Microbac

500 lw
3/29/09

16

Sample Number: L09010112-16
Client ID: MR08-IS141-2-3-09A
Matrix: Soil
Workgroup Number: WG292210
Collect Date: 01/06/2009 13:55
Sample Tag: 01

PrePrep Method: NONE
Prep Method: 7471A
Analytical Method: 7471A
Analyst: ADC
Dilution: 1
Units: mg/kg

Instrument: HYDRA
Prep Date: 01/09/2009 09:32
Cal Date: 01/14/2009 11:19
Run Date: 01/14/2009 11:35
File ID: HY.011409.113501
Percent Solid: 83.6

Analyte	CAS. Number	Result	Qual	RL	MDL
Mercury, Total	7439-97-6		U	0.114	0.0228

U Undetected; the analyte was analyzed for, but not detected.

Microbac

2124 lw 3/29/09

19

Sample Number: L09010112-19
Client ID: MR08-SS140-09A
Matrix: Soil
Workgroup Number: WG292235
Collect Date: 01/06/2009 14:25
Sample Tag: 01

PrePrep Method: NONE
Prep Method: 3051
Analytical Method: 6010B
Analyst: KHR
Dilution: 1
Units: mg/kg

Instrument: IRIS-ICP
Prep Date: 01/09/2009 09:11
Cal Date: 01/12/2009 11:41
Run Date: 01/12/2009 16:46
File ID: IR.011209.164600
Percent Solid: 89.9

Analyte	CAS. Number	Result	Qual	RL	MDL
Silver, Total	7440-22-4		U	0.779	0.195
Barium, Total	7440-39-3	3.96		0.390	0.0779
Cadmium, Total	7440-43-9	0.297		0.156	0.0390
Chromium, Total	7440-47-3	5.34 J		0.779	0.0935

MSL

U Undetected; the analyte was analyzed for, but not detected.

Microbac

31 [illegible] 3/29/09

19

Sample Number: L09010112-19
Client ID: MR08-SS140-09A
Matrix: Soil
Workgroup Number: WG292231
Collect Date: 01/06/2009 14:25
Sample Tag: 02

PrePrep Method: NONE
Prep Method: 3051
Analytical Method: 6020
Analyst: WTD
Dilution: 1
Units: mg/kg

Instrument: ELAN-ICP
Prep Date: 01/09/2009 07:46
Cal Date: 01/14/2009 16:41
Run Date: 01/15/2009 01:34
File ID: EL.011509.013407
Percent Solid: 89.9

Analyte	CAS. Number	Result	Qual	RL	MDL
Arsenic, Total	7440-38-2	0.830		0.330	0.0824
Lead, Total	7439-92-1	4.88		0.439	0.110
Selenium, Total	7782-49-2	0.376	J	0.439	0.110

J Estimated ; the analyte concentration was less than the low standard (LOQ)

Microbac

503 hw
3/29/09

19

Sample Number: L09010112-19
Client ID: MR08-SS140-09A
Matrix: Soil
Workgroup Number: WG292210
Collect Date: 01/06/2009 14:25
Sample Tag: 01

PrePrep Method: NONE
Prep Method: 7471A
Analytical Method: 7471A
Analyst: ADC
Dilution: 1
Units: mg/kg

Instrument: HYDRA
Prep Date: 01/09/2009 09:32
Cal Date: 01/14/2009 11:22
Run Date: 01/14/2009 11:40
File ID: HY.011409.114053
Percent Solid: 89.9

Analyte	CAS. Number	Result	Qual	RL	MDL
Mercury, Total	7439-97-6		U	0.110	0.0221

U Undetected; the analyte was analyzed for, but not detected.

Microbac

2127 luw 3/29/09

20

Sample Number: L09010112-20
Client ID: MR08-IS140-2-3-09A
Matrix: Soil
Workgroup Number: WG292235
Collect Date: 01/06/2009 14:45
Sample Tag: 01

PrePrep Method: NONE
Prep Method: 3051
Analytical Method: 6010B
Analyst: KHR
Dilution: 1
Units: mg/kg

Instrument: IRIS-ICP
Prep Date: 01/09/2009 09:11
Cal Date: 01/12/2009 11:41
Run Date: 01/12/2009 16:52
File ID: IR.011209.165200
Percent Solid: 85.2

Analyte	CAS. Number	Result	Qual	RL	MDL
Silver, Total	7440-22-4		U	0.841	0.210
Barium, Total	7440-39-3	4.74		0.420	0.0841
Cadmium, Total	7440-43-9		U	0.168	0.0420
Chromium, Total	7440-47-3	6.47 J		0.841	0.101

MSL

U Undetected; the analyte was analyzed for, but not detected.

Microbac

32 LW
3/29/09

20

Sample Number: L09010112-20
Client ID: MR08-IS140-2-3-09A
Matrix: Soil
Workgroup Number: WG292231
Collect Date: 01/06/2009 14:45
Sample Tag: 02

PrePrep Method: NONE
Prep Method: 3051
Analytical Method: 6020
Analyst: WTD
Dilution: 1
Units: mg/kg

Instrument: ELAN-ICP
Prep Date: 01/09/2009 07:46
Cal Date: 01/14/2009 16:41
Run Date: 01/15/2009 01:55
File ID: EL.011509.015514
Percent Solid: 85.2

Analyte	CAS. Number	Result	Qual	RL	MDL
Arsenic, Total	7440-38-2	0.766		0.327	0.0818
Lead, Total	7439-92-1	2.94		0.436	0.109
Selenium, Total	7782-49-2	0.381	J	0.436	0.109

J Estimated ; the analyte concentration was less than the low standard (LOQ)

Microbac

504 lw 3/29/09

20

Sample Number: L09010112-20
Client ID: MR08-IS140-2-3-09A
Matrix: Soil
Workgroup Number: WG292210
Collect Date: 01/06/2009 14:45
Sample Tag: 01

PrePrep Method: NONE
Prep Method: 7471A
Analytical Method: 7471A
Analyst: ADC
Dilution: 1
Units: mg/kg

Instrument: HYDRA
Prep Date: 01/09/2009 09:32
Cal Date: 01/14/2009 11:22
Run Date: 01/14/2009 11:48
File ID: HY.011409.114831
Percent Solid: 85.2

Analyte	CAS. Number	Result	Qual	RL	MDL
Mercury, Total	7439-97-6		U	0.114	0.0228

U Undetected; the analyte was analyzed for, but not detected.

Microbac

2128 MW 3/29/09

21

Sample Number: L09010112-23
Client ID: MR08-IS209-2-3-09A
Matrix: Soil
Workgroup Number: WG292235
Collect Date: 01/06/2009 15:15
Sample Tag: 01

PrePrep Method: NONE
Prep Method: 3051
Analytical Method: 6010B
Analyst: KHR
Dilution: 1
Units: mg/kg

Instrument: IRIS-ICP
Prep Date: 01/09/2009 09:11
Cal Date: 01/12/2009 11:41
Run Date: 01/12/2009 17:22
File ID: IR.011209.172200
Percent Solid: 90.5

Analyte	CAS. Number	Result	Qual	RL	MDL
Silver, Total	7440-22-4		U	0.787	0.197
Barium, Total	7440-39-3	2.16		0.393	0.0787
Cadmium, Total	7440-43-9		U	0.157	0.0393
Chromium, Total	7440-47-3	1.78 J		0.787	0.0944

MSL

U Undetected; the analyte was analyzed for, but not detected.

Microbac

33 MW 3/29/09

21

Sample Number: L09010112-23
Client ID: MR08-IS209-2-3-09A
Matrix: Soil
Workgroup Number: WG292231
Collect Date: 01/06/2009 15:15
Sample Tag: 02

PrePrep Method: NONE
Prep Method: 3051
Analytical Method: 6020
Analyst: WTD
Dilution: 1
Units: mg/kg

Instrument: ELAN-ICP
Prep Date: 01/09/2009 07:46
Cal Date: 01/14/2009 16:41
Run Date: 01/15/2009 02:31
File ID: EL.011509.023107
Percent Solid: 90.5

Analyte	CAS. Number	Result	Qual	RL	MDL
Arsenic, Total	7440-38-2	0.991		0.332	0.0829
Lead, Total	7439-92-1	1.97		0.442	0.111
Selenium, Total	7782-49-2		U	0.442	0.111

U Undetected; the analyte was analyzed for, but not detected.

Microbac

505 lw 3/29/09

21

Sample Number: L09010112-23
Client ID: MR08-IS209-2-3-09A
Matrix: Soil
Workgroup Number: WG292210
Collect Date: 01/06/2009 15:15
Sample Tag: 01

PrePrep Method: NONE
Prep Method: 7471A
Analytical Method: 7471A
Analyst: ADC
Dilution: 1
Units: mg/kg

Instrument: HYDRA
Prep Date: 01/09/2009 09:32
Cal Date: 01/14/2009 11:22
Run Date: 01/14/2009 11:50
File ID: HY.011409.115013
Percent Solid: 90.5

Analyte	CAS. Number	Result	Qual	RL	MDL
Mercury, Total	7439-97-6		U	0.108	0.0216

U Undetected; the analyte was analyzed for, but not detected.

Microbac

2129 lw
3/29/09

22

Sample Number: L09010112-24
Client ID: MR08-IS209D-2-3-09A
Matrix: Soil
Workgroup Number: WG292235
Collect Date: 01/06/2009 15:45
Sample Tag: 01

PrePrep Method: NONE
Prep Method: 3051
Analytical Method: 6010B
Analyst: KHR
Dilution: 1
Units: mg/kg

Instrument: IRIS-ICP
Prep Date: 01/09/2009 09:11
Cal Date: 01/12/2009 11:41
Run Date: 01/12/2009 17:28
File ID: IR.011209.172800
Percent Solid: 86.7

Analyte	CAS. Number	Result	Qual	RL	MDL
Silver, Total	7440-22-4		U	0.791	0.198
Barium, Total	7440-39-3	2.63		0.395	0.0791
Cadmium, Total	7440-43-9		U	0.158	0.0395
Chromium, Total	7440-47-3	2.19 J		0.791	0.0949

MSL

U Undetected; the analyte was analyzed for, but not detected.

Microbac

34 MW
3/29/09

22

Sample Number: L09010112-24
Client ID: MR08-IS209D-2-3-09A
Matrix: Soil
Workgroup Number: WG292231
Collect Date: 01/06/2009 15:45
Sample Tag: 02

PrePrep Method: NONE
Prep Method: 3051
Analytical Method: 6020
Analyst: WTD
Dilution: 1
Units: mg/kg

Instrument: ELAN-ICP
Prep Date: 01/09/2009 07:46
Cal Date: 01/14/2009 16:41
Run Date: 01/15/2009 02:38
File ID: EL.011509.023811
Percent Solid: 86.7

Analyte	CAS. Number	Result	Qual	RL	MDL
Arsenic, Total	7440-38-2	0.915		0.334	0.0835
Lead, Total	7439-92-1	1.76		0.445	0.111
Selenium, Total	7782-49-2		U	0.445	0.111

U Undetected; the analyte was analyzed for, but not detected.

Microbac

506 lw 3/29/09

22

Sample Number: L09010112-24
Client ID: MR08-IS209D-2-3-09A
Matrix: Soil
Workgroup Number: WG292210
Collect Date: 01/06/2009 15:45
Sample Tag: 01

PrePrep Method: NONE
Prep Method: 7471A
Analytical Method: 7471A
Analyst: ADC
Dilution: 1
Units: mg/kg

Instrument: HYDRA
Prep Date: 01/09/2009 09:32
Cal Date: 01/14/2009 11:22
Run Date: 01/14/2009 11:51
File ID: HY.011409.115155
Percent Solid: 86.7

Analyte	CAS. Number	Result	Qual	RL	MDL
Mercury, Total	7439-97-6		U	0.112	0.0224

U Undetected; the analyte was analyzed for, but not detected.

Microbac

2130 hw 3/29/09

23

Sample Number: L09010112-25
Client ID: MR08-SS210-09A
Matrix: Soil
Workgroup Number: WG292235
Collect Date: 01/06/2009 16:00
Sample Tag: 01

PrePrep Method: NONE
Prep Method: 3051
Analytical Method: 6010B
Analyst: KHR
Dilution: 1
Units: mg/kg

Instrument: IRIS-ICP
Prep Date: 01/09/2009 09:11
Cal Date: 01/12/2009 11:41
Run Date: 01/12/2009 17:34
File ID: IR.011209.173400
Percent Solid: 88.9

Analyte	CAS. Number	Result	Qual	RL	MDL
Silver, Total	7440-22-4		U	0.830	0.208
Barium, Total	7440-39-3	26.2		0.415	0.0830
Cadmium, Total	7440-43-9	1.83		0.166	0.0415
Chromium, Total	7440-47-3	20.4 J		0.830	0.0997

MSL

U Undetected; the analyte was analyzed for, but not detected.

Microbac

35 MW 3/29/09

23

Sample Number: L09010112-25
Client ID: MR08-SS210-09A
Matrix: Soil
Workgroup Number: WG292231
Collect Date: 01/06/2009 16:00
Sample Tag: DL02

PrePrep Method: NONE
Prep Method: 3051
Analytical Method: 6020
Analyst: WTD
Dilution: 50
Units: mg/kg

Instrument: ELAN-ICP
Prep Date: 01/09/2009 07:46
Cal Date: 01/14/2009 16:41
Run Date: 01/15/2009 02:45
File ID: EL.011509.024516
Percent Solid: 88.9

Analyte	CAS. Number	Result	Qual	RL	MDL
Arsenic, Total	7440-38-2		U	16.1	4.02
Lead, Total	7439-92-1	308		21.4	5.36
Selenium, Total	7782-49-2		U	21.4	5.36

U Undetected; the analyte was analyzed for, but not detected.

Microbac

507 lw
3/29/09

23

Sample Number: L09010112-25
Client ID: MR08-SS210-09A
Matrix: Soil
Workgroup Number: WG292210
Collect Date: 01/06/2009 16:00
Sample Tag: 01

PrePrep Method: NONE
Prep Method: 7471A
Analytical Method: 7471A
Analyst: ADC
Dilution: 1
Units: mg/kg

Instrument: HYDRA
Prep Date: 01/09/2009 09:32
Cal Date: 01/14/2009 11:22
Run Date: 01/14/2009 11:53
File ID: HY.011409.115342
Percent Solid: 88.9

Analyte	CAS. Number	Result	Qual	RL	MDL
Mercury, Total	7439-97-6	0.0641	J	0.112	0.0224

J Estimated ; the analyte concentration was less than the low standard (LOQ)

Microbac

2131 kw
3/29/09

24

Sample Number: L09010112-26
Client ID: MR08-IS210-2-3-09A
Matrix: Soil
Workgroup Number: WG292235
Collect Date: 01/06/2009 16:15
Sample Tag: 01

PrePrep Method: NONE
Prep Method: 3051
Analytical Method: 6010B
Analyst: KHR
Dilution: 1
Units: mg/kg

Instrument: IRIS-ICP
Prep Date: 01/09/2009 09:11
Cal Date: 01/12/2009 11:41
Run Date: 01/12/2009 17:41
File ID: IR.011209.174100
Percent Solid: 88.3

Analyte	CAS. Number	Result	Qual	RL	MDL
Silver, Total	7440-22-4		U	0.816	0.204
Barium, Total	7440-39-3	7.57		0.408	0.0816
Cadmium, Total	7440-43-9	0.0477	J	0.163	0.0408
Chromium, Total	7440-47-3	4.67 J		0.816	0.0979

MSL

U Undetected; the analyte was analyzed for, but not detected.
J Estimated ; the analyte concentration was less than the low standard (LOQ)

Microbac

MW
3/29/09

24

Sample Number: L09010112-26
Client ID: MR08-IS210-2-3-09A
Matrix: Soil
Workgroup Number: WG292231
Collect Date: 01/06/2009 16:15
Sample Tag: 02

PrePrep Method: NONE
Prep Method: 3051
Analytical Method: 6020
Analyst: WTD
Dilution: 1
Units: mg/kg

Instrument: ELAN-ICP
Prep Date: 01/09/2009 07:46
Cal Date: 01/14/2009 16:41
Run Date: 01/15/2009 02:52
File ID: EL.011509.025218
Percent Solid: 88.3

Analyte	CAS. Number	Result	Qual	RL	MDL
Arsenic, Total	7440-38-2	0.698		0.332	0.0830
Lead, Total	7439-92-1	13.7		0.443	0.111
Selenium, Total	7782-49-2	0.323	J	0.443	0.111

J Estimated ; the analyte concentration was less than the low standard (LOQ)

Microbac

508 luw
3/29/09

24

Sample Number:	L09010112-26	PrePrep Method:	NONE	Instrument:	HYDRA
Client ID:	MR08-IS210-2-3-09A	Prep Method:	7471A	Prep Date:	01/09/2009 09:32
Matrix:	Soil	Analytical Method:	7471A	Cal Date:	01/14/2009 11:22
Workgroup Number:	WG292210	Analyst:	ADC	Run Date:	01/14/2009 11:55
Collect Date:	01/06/2009 16:15	Dilution:	1	File ID:	HY.011409.115526
Sample Tag:	01	Units:	mg/kg	Percent Solid:	88.3

Analyte	CAS. Number	Result	Qual	RL	MDL
Mercury, Total	7439-97-6		U	0.110	0.0220

U Undetected; the analyte was analyzed for, but not detected.

Microbac

2132 RW 3/29/09

25

Sample Number: L09010112-27
Client ID: MR08-EB01010609-SS
Matrix: Water
Workgroup Number: WG292166
Collect Date: 01/06/2009 14:00
Sample Tag: 02

PrePrep Method: NONE
Prep Method: 3005A
Analytical Method: 6010B
Analyst: SLP
Dilution: 1
Units: ug/L

Instrument: PE-ICP2
Prep Date: 01/09/2009 11:08
Cal Date: 01/15/2009 11:00
Run Date: 01/15/2009 15:18
File ID: P2.011509.151820

Analyte	CAS. Number	Result	Qual	RL	MDL
Barium, Total	7440-39-3		U	10.0	2.50
Cadmium, Total	7440-43-9		U	1.00	0.250
Chromium, Total	7440-47-3		U	10.0	2.50
Silver, Total	7440-22-4		U	6.00	2.00

U Undetected; the analyte was analyzed for, but not detected.

Microbac

37 fw 3/29/09

25

Sample Number: L09010112-27
Client ID: MR08-EB01010609-SS
Matrix: Water
Workgroup Number: WG292411
Collect Date: 01/06/2009 14:00
Sample Tag: 01

PrePrep Method: NONE
Prep Method: 3015
Analytical Method: 6020
Analyst: WTD
Dilution: 1
Units: ug/L

Instrument: ELAN-ICP
Prep Date: 01/09/2009 06:57
Cal Date: 01/13/2009 17:19
Run Date: 01/14/2009 01:58
File ID: EL.011409.015814

Analyte	CAS. Number	Result	Qual	RL	MDL
Lead, Total	7439-92-1		U	1.00	0.250

U Undetected; the analyte was analyzed for, but not detected.

Microbac

 fw 3/29/09

25

Sample Number: L09010112-27
Client ID: MR08-EB01010609-SS
Matrix: Water
Workgroup Number: WG292411
Collect Date: 01/06/2009 14:00
Sample Tag: DL01

PrePrep Method: NONE
Prep Method: 3015
Analytical Method: 6020
Analyst: WTD
Dilution: 5
Units: ug/L

Instrument: ELAN-ICP
Prep Date: 01/09/2009 06:57
Cal Date: 01/14/2009 16:41
Run Date: 01/14/2009 21:46
File ID: EL.011409.214620

Analyte	CAS. Number	Result	Qual	RL	MDL
Arsenic, Total	7440-38-2		U	5.00	1.25
Selenium, Total	7782-49-2		U	10.0	2.50

U Undetected; the analyte was analyzed for, but not detected.

Microbac

510 lw
3/29/09

25

Sample Number: L09010112-27
Client ID: MR08-EB01010609-SS
Matrix: Water
Workgroup Number: WG292152
Collect Date: 01/06/2009 14:00
Sample Tag: 01

PrePrep Method: NONE
Prep Method: 7470A
Analytical Method: 7470A
Analyst: ADC
Dilution: 1
Units: ug/L

Instrument: HYDRA
Prep Date: 01/09/2009 09:05
Cal Date: 01/09/2009 13:12
Run Date: 01/09/2009 13:58
File ID: HY.010909.135807

Analyte	CAS. Number	Result	Qual	RL	MDL
Mercury	7439-97-6		U	0.400	0.100

U Undetected; the analyte was analyzed for, but not detected.

Microbac

2133 hw 3/29/09

ENVIRONMENTAL
Data Services, Inc.

METALS

USEPA Region IV - Level IV Review

Site: MCB Camp Lejeune, TO-09 SDG #: L09010132

Client: CH2M HILL, Inc., Virginia Beach, Virginia Date: March 27, 2009

Laboratory: Microbac Laboratories, Inc., Marietta, Ohio Reviewer: Nancy Weaver

EDS ID	Client Sample ID	Laboratory Sample ID	Matrix
1	MR08-SS225-09A	L09010132-01	Soil
2MS	MR08-SS225-09AMS	L09010132-02MS	Soil
3MSD	MR08-SS225-09AMSD	L09010132-03MSD	Soil
4	MR08-IS225-2-3-09A	L09010132-04	Soil
5MS	MR08-IS225-2-3-09AMS	L09010132-05MS	Soil
6MSD	MR08-IS225-2-3-09AMSD	L09010132-06MSD	Soil
7	MR08-SS226-09A	L09010132-07	Soil
8	MR08-IS226-2-3-09A	L09010132-08	Soil
9	MR08-SS233-09A	L09010132-09	Soil
10	MR08-IS223-5-6-09A	L09010132-10	Soil
11	MR08-SS234-09A	L09010132-11	Soil
12	MR08-IS234-5-6-09A	L09010132-12	Soil
13	MR08-SS249-09A	L09010132-13	Soil
14	MR08-SS249D-09A	L09010132-14	Soil
15	MR08-IS249-5-6-09A	L09010132-15	Soil
16	MR08-IS249D-5-6-09A	L09010132-16	Soil
17	MR08-SS248-09A	L09010132-17	Soil
18	MR08-IS248-5-6-09A	L09010132-18	Soil
19	MR08-SS250-09A	L09010132-19	Soil
20	MR08-IS250-5-6-09A	L09010132-20	Soil
21	MR08-SS257-09A	L09010132-21	Soil
22	MR08-IS257-9-10-09A	L09010132-22	Soil
23	MR08-SS258-09A	L09010132-23	Soil
24	MR08-IS258-9-10-09A	L09010132-24	Soil
25	MR08-SS273-09A	L09010132-25	Soil
26	MR08-IS273-8-9-09A	L09010132-26	Soil
27	MR08-SS274-09A	L09010132-27	Soil
28	MR08-IS274-9-10-09A	L09010132-28	Soil
29	MR08-EB01010709-SS	L09010132-29	Water

The USEPA "Contract Laboratory Program National Functional Guidelines for Inorganic Data Review," October 2004, and professional judgement were used in evaluating the data in this summary report.

Holding Times - All samples were prepared and analyzed within 28 days for mercury and 180 days for all other metals.

Calibration - The ICV and CCV %R values were acceptable.

Method and Calibration Blanks - The method blanks exhibited the following contamination.

Compound	Conc. mg/kg	Action Level mg/kg	Qualifier	Affected Samples
Chromium	0.192	0.96	None	All >5X

Field and Equipment Blank - Field QC results are summarized below.

Blank ID	Compound	Conc. ug/L	Action Level ug/L	Qualifier	Affected Samples
MR08-FB01011009	None - ND	-	-	-	-
MR08-EB01010709	None - ND	-	-	-	-

ICP Interference Check Sample - All %R values were acceptable.

MS/MSD - The MS/MSD sample exhibited acceptable %R and RPD values except the following.

MS/MSD Sample ID	Compound	MS/MSD %R/RPD	Qualifier	Affected Samples
1	Lead	Ok/143%/Ok	J	1, 7-17
4	Selenium	69.7%/55.8%/22.1%	J/UJ	4, 18-28

LCS - The LCS samples exhibited acceptable %R values.

ICP Serial Dilution - The ICP serial dilution sample exhibited acceptable %D values.

Field Duplicates - Field duplicate results are summarized below.

Compound	MR08-SS249-09A mg/kg	MR08-SS249D-09A mg/kg	RPD	Qualifier
Barium	21.1	20.8	1%	None
Cadmium	0.513	0.301	52%	None
Chromium	15.9	12.4	25%	None
Arsenic	0.773	0.520	39%	None
Lead	143	42.6	108%	None
Selenium	0.180	0.224	22%	None

Compound	MR08-SS249-09A mg/kg	MR08-SS249D-09A mg/kg	RPD	Qualifier
Mercury	0.0339	0.0255	28%	None

Compound	MR08-IS249-5-6-09A mg/kg	MR08-IS249D-5-6-09A mg/kg	RPD	Qualifier
Barium	5.45	6.46	17%	None
Chromium	5.16	6.83	28%	None
Arsenic	0.319 U	0.180	NC	None
Lead	1.22	1.51	21%	None

Compound Quantitation - Several samples were analyzed at various dilutions for various analytes due to high concentrations.

Report Number: L09010132
Report Date : February 3, 2009

Sample Number: L09010132-01
Client ID: MRO8-SS225-09A
Matrix: Soil
Workgroup Number: WG292238
Collect Date: 01/07/2009 08:00
Sample Tag: 01

PrePrep Method: NONE
Prep Method: 3051
Analytical Method: 6010B
Analyst: KHR
Dilution: 1
Units: mg/kg

Instrument: IRIS-ICP
Prep Date: 01/12/2009 06:54
Cal Date: 01/12/2009 11:41
Run Date: 01/12/2009 20:31
File ID: IR.011209.203100
Percent Solid: 93.3

Analyte	CAS. Number	Result	Qual	RL	MDL
Silver, Total	7440-22-4		U	0.791	0.198
Barium, Total	7440-39-3	8.73		0.396	0.0791
Cadmium, Total	7440-43-9	0.133	J	0.158	0.0396
Chromium, Total	7440-47-3	4.15		0.791	0.0950

U Undetected; the analyte was analyzed for, but not detected.
J Estimated ; the analyte concentration was less than the low standard (LOQ)

Microbac

15 3/27/09

Report Number: L09010132

Report Date : February 3, 2009

1

Sample Number:	L09010132-01	PrePrep Method:	NONE	Instrument:	ELAN-ICP
Client ID:	MRO8-SS225-09A	Prep Method:	3051	Prep Date:	01/12/2009 07:27
Matrix:	Soil	Analytical Method:	6020	Cal Date:	01/15/2009 15:09
Workgroup Number:	WG292658	Analyst:	WTD	Run Date:	01/16/2009 00:52
Collect Date:	01/07/2009 08:00	Dilution:	1	File ID:	EL.011609.005256
Sample Tag:	01	Units:	mg/kg	Percent Solid:	93.3

Analyte	CAS. Number	Result	Qual	RL	MDL
Arsenic, Total	7440-38-2	0.356		0.321	0.0804
Lead, Total	7439-92-1	4.47 J		0.429	0.107
Selenium, Total	7782-49-2	0.136	J	0.429	0.107

MSH

J Estimated ; the analyte concentration was less than the low standard (LOQ)

Microbac

513 MW 3/27/09

Report Number: L09010132

Report Date : **February 3, 2009**

Sample Number:	L09010132-01	PrePrep Method:	NONE	Instrument:	HYDRA
Client ID:	MRO8-SS225-09A	Prep Method:	7471A	Prep Date:	01/12/2009 08:05
Matrix:	Soil	Analytical Method:	7471A	Cal Date:	01/12/2009 12:55
Workgroup Number:	WG292250	Analyst:	ADC	Run Date:	01/12/2009 13:34
Collect Date:	01/07/2009 08:00	Dilution:	1	File ID:	HY.011209.133448
Sample Tag:	01	Units:	mg/kg	Percent Solid:	93.3

Analyte	CAS. Number	Result	Qual	RL	MDL
Mercury, Total	7439-97-6		U	0.100	0.0201

U Undetected; the analyte was analyzed for, but not detected.

Microbac

2053 LW 3/27/09

4

Sample Number: L09010132-04
Client ID: MRO8-IS225-2-3-09A
Matrix: Soil
Workgroup Number: WG292237
Collect Date: 01/07/2009 08:20
Sample Tag: 01

PrePrep Method: NONE
Prep Method: 3051
Analytical Method: 6010B
Analyst: KHR
Dilution: 1
Units: mg/kg

Instrument: IRIS-ICP
Prep Date: 01/12/2009 07:26
Cal Date: 01/12/2009 11:41
Run Date: 01/12/2009 19:12
File ID: IR.011209.191200
Percent Solid: 91.5

Analyte	CAS. Number	Result	Qual	RL	MDL
Silver, Total	7440-22-4		U	0.809	0.202
Barium, Total	7440-39-3	4.51		0.405	0.0809
Cadmium, Total	7440-43-9		U	0.162	0.0405
Chromium, Total	7440-47-3	2.25		0.809	0.0971

U Undetected; the analyte was analyzed for, but not detected.

Microbac

18 lcw 3/27/09

4

Sample Number: L09010132-04
Client ID: MRO8-IS225-2-3-09A
Matrix: Soil
Workgroup Number: WG292706
Collect Date: 01/07/2009 08:20
Sample Tag: 01

PrePrep Method: NONE
Prep Method: 3051
Analytical Method: 6020
Analyst: WTD
Dilution: 1
Units: mg/kg

Instrument: ELAN-ICP
Prep Date: 01/12/2009 07:06
Cal Date: 01/16/2009 16:35
Run Date: 01/17/2009 05:26
File ID: EL.011709.052620
Percent Solid: 91.5

Analyte	CAS. Number	Result	Qual	RL	MDL
Arsenic, Total	7440-38-2	0.249	J	0.328	0.0820
Lead, Total	7439-92-1	1.74		0.437	0.109

J Estimated ; the analyte concentration was less than the low standard (LOQ)

Microbac

516 lw 3/27/09

4

Sample Number: L09010132-04
Client ID: MRO8-IS225-2-3-09A
Matrix: Soil
Workgroup Number: WG292706
Collect Date: 01/07/2009 08:20
Sample Tag: 02

PrePrep Method: NONE
Prep Method: 3051
Analytical Method: 6020
Analyst: WTD
Dilution: 1
Units: mg/kg

Instrument: ELAN-ICP
Prep Date: 01/12/2009 07:06
Cal Date: 01/19/2009 15:28
Run Date: 01/19/2009 19:02
File ID: EL.011909.190258
Percent Solid: 91.5

Analyte	CAS. Number	Result	Qual	RL	MDL
Selenium, Total	7782-49-2	UJ	~~U~~	0.437	0.109

MSL

U Undetected; the analyte was analyzed for, but not detected.

Microbac

517 MW 3/27/09

4

Sample Number: L09010132-04
Client ID: MRO8-IS225-2-3-09A
Matrix: Soil
Workgroup Number: WG292253
Collect Date: 01/07/2009 08:20
Sample Tag: 01

PrePrep Method: NONE
Prep Method: 7471A
Analytical Method: 7471A
Analyst: ADC
Dilution: 1
Units: mg/kg

Instrument: HYDRA
Prep Date: 01/12/2009 08:19
Cal Date: 01/12/2009 12:55
Run Date: 01/12/2009 14:06
File ID: HY.011209.140603
Percent Solid: 91.5

Analyte	CAS. Number	Result	Qual	RL	MDL
Mercury, Total	7439-97-6		U	0.102	0.0204

U Undetected; the analyte was analyzed for, but not detected.

Microbac

2056/MW 3/27/09

7

Sample Number: L09010132-07
Client ID: MR08-SS226-09A
Matrix: Soil
Workgroup Number: WG292238
Collect Date: 01/07/2009 08:45
Sample Tag: 01

PrePrep Method: NONE
Prep Method: 3051
Analytical Method: 6010B
Analyst: KHR
Dilution: 1
Units: mg/kg

Instrument: IRIS-ICP
Prep Date: 01/12/2009 06:54
Cal Date: 01/12/2009 11:41
Run Date: 01/12/2009 21:02
File ID: IR.011209.210200
Percent Solid: 90.2

Analyte	CAS. Number	Result	Qual	RL	MDL
Silver, Total	7440-22-4		U	0.797	0.199
Barium, Total	7440-39-3	18.1		0.399	0.0797
Cadmium, Total	7440-43-9	1.14		0.159	0.0399
Chromium, Total	7440-47-3	16.9		0.797	0.0957

U Undetected; the analyte was analyzed for, but not detected.

Microbac®

21 Rev 3/27/09

7

Sample Number: L09010132-07
Client ID: MRO8-SS226-09A
Matrix: Soil
Workgroup Number: WG292658
Collect Date: 01/07/2009 08:45
Sample Tag: 01

PrePrep Method: NONE
Prep Method: 3051
Analytical Method: 6020
Analyst: WTD
Dilution: 1
Units: mg/kg

Instrument: ELAN-ICP
Prep Date: 01/12/2009 07:27
Cal Date: 01/15/2009 15:09
Run Date: 01/16/2009 01:11
File ID: EL.011609.011137
Percent Solid: 90.2

Analyte	CAS. Number	Result	Qual	RL	MDL
Arsenic, Total	7440-38-2	0.833		0.329	0.0822
Selenium, Total	7782-49-2	0.131	J	0.438	0.110

J Estimated ; the analyte concentration was less than the low standard (LOQ)

Microbac

522 lw 3/27/09

7

Sample Number:	L09010132-07	PrePrep Method:	NONE	Instrument:	ELAN-ICP
Client ID:	MRO8-SS226-09A	Prep Method:	3051	Prep Date:	01/12/2009 07:27
Matrix:	Soil	Analytical Method:	6020	Cal Date:	01/16/2009 16:35
Workgroup Number:	WG292658	Analyst:	WTD	Run Date:	01/17/2009 01:08
Collect Date:	01/07/2009 08:45	Dilution:	20	File ID:	EL.011709.010810
Sample Tag:	DL01	Units:	mg/kg	Percent Solid:	90.2

Analyte	CAS. Number	Result	Qual	RL	MDL
Lead, Total	7439-92-1	235 J		8.77	2.19

MSH

Microbac

523 LW 3/27/09

7

Sample Number: L09010132-07
Client ID: MRO8-SS226-09A
Matrix: Soil
Workgroup Number: WG292250
Collect Date: 01/07/2009 08:45
Sample Tag: 01

PrePrep Method: NONE
Prep Method: 7471A
Analytical Method: 7471A
Analyst: ADC
Dilution: 1
Units: mg/kg

Instrument: HYDRA
Prep Date: 01/12/2009 08:05
Cal Date: 01/12/2009 12:55
Run Date: 01/12/2009 13:48
File ID: HY.011209.134803
Percent Solid: 90.2

Analyte	CAS. Number	Result	Qual	RL	MDL
Mercury, Total	7439-97-6		U	0.104	0.0208

U Undetected; the analyte was analyzed for, but not detected.

Microbac

2059 lcw 3/27/09

8

Sample Number: L09010132-08
Client ID: MR08-IS226-2-3-09A
Matrix: Soil
Workgroup Number: WG292238
Collect Date: 01/07/2009 09:00
Sample Tag: 01

PrePrep Method: NONE
Prep Method: 3051
Analytical Method: 6010B
Analyst: KHR
Dilution: 1
Units: mg/kg

Instrument: IRIS-ICP
Prep Date: 01/12/2009 06:54
Cal Date: 01/12/2009 11:41
Run Date: 01/12/2009 21:26
File ID: IR.011209.212600
Percent Solid: 84.5

Analyte	CAS. Number	Result	Qual	RL	MDL
Silver, Total	7440-22-4		U	0.871	0.218
Barium, Total	7440-39-3	13.4		0.435	0.0871
Cadmium, Total	7440-43-9		U	0.174	0.0435
Chromium, Total	7440-47-3	5.48		0.871	0.105

U Undetected; the analyte was analyzed for, but not detected.

Microbac

22 [illegible] 3/27/09

8

Sample Number: L09010132-08
Client ID: MRO8-IS226-2-3-09A
Matrix: Soil
Workgroup Number: WG292658
Collect Date: 01/07/2009 09:00
Sample Tag: 01

PrePrep Method: NONE
Prep Method: 3051
Analytical Method: 6020
Analyst: WTD
Dilution: 1
Units: mg/kg

Instrument: ELAN-ICP
Prep Date: 01/12/2009 07:27
Cal Date: 01/15/2009 15:09
Run Date: 01/16/2009 01:30
File ID: EL.011609.013021
Percent Solid: 84.5

Analyte	CAS. Number	Result	Qual	RL	MDL
Arsenic, Total	7440-38-2	0.274	J	0.349	0.0873
Lead, Total	7439-92-1	2.93 J		0.466	0.116
Selenium, Total	7782-49-2	0.263	J	0.466	0.116

MSH

J Estimated ; the analyte concentration was less than the low standard (LOQ)

Microbac

524 MW 3/27/09

8

Sample Number: L09010132-08
Client ID: MRO8-IS226-2-3-09A
Matrix: Soil
Workgroup Number: WG292250
Collect Date: 01/07/2009 09:00
Sample Tag: 01

PrePrep Method: NONE
Prep Method: 7471A
Analytical Method: 7471A
Analyst: ADC
Dilution: 1
Units: mg/kg

Instrument: HYDRA
Prep Date: 01/12/2009 08:05
Cal Date: 01/12/2009 12:55
Run Date: 01/12/2009 13:49
File ID: HY.011209.134949
Percent Solid: 84.5

Analyte	CAS. Number	Result	Qual	RL	MDL
Mercury, Total	7439-97-6		U	0.118	0.0236

U Undetected; the analyte was analyzed for, but not detected.

Microbac

2060 LW 3/27/09

9

Sample Number: L09010132-09
Client ID: MRO8-SS233-09A
Matrix: Soil
Workgroup Number: WG292238
Collect Date: 01/07/2009 09:15
Sample Tag: 01

PrePrep Method: NONE
Prep Method: 3051
Analytical Method: 6010B
Analyst: KHR
Dilution: 1
Units: mg/kg

Instrument: IRIS-ICP
Prep Date: 01/12/2009 06:54
Cal Date: 01/12/2009 11:41
Run Date: 01/12/2009 21:32
File ID: IR.011209.213200
Percent Solid: 94.9

Analyte	CAS. Number	Result	Qual	RL	MDL
Silver, Total	7440-22-4		U	0.757	0.189
Barium, Total	7440-39-3	4.73		0.379	0.0757
Cadmium, Total	7440-43-9		U	0.151	0.0379
Chromium, Total	7440-47-3	3.41		0.757	0.0909

U Undetected; the analyte was analyzed for, but not detected.

Microbac

23 lw 3/27/09

9

Sample Number:	L09010132-09	PrePrep Method:	NONE	Instrument:	ELAN-ICP
Client ID:	MR08-SS233-09A	Prep Method:	3051	Prep Date:	01/12/2009 07:27
Matrix:	Soil	Analytical Method:	6020	Cal Date:	01/15/2009 15:09
Workgroup Number:	WG292658	Analyst:	WTD	Run Date:	01/16/2009 01:36
Collect Date:	01/07/2009 09:15	Dilution:	1	File ID:	EL.011609.013636
Sample Tag:	01	Units:	mg/kg	Percent Solid:	94.9

Analyte	CAS. Number	Result	Qual	RL	MDL
Arsenic, Total	7440-38-2	0.618		0.302	0.0754
Lead, Total	7439-92-1	2.29 J		0.402	0.101
Selenium, Total	7782-49-2	0.154	J	0.402	0.101

MSH

J Estimated ; the analyte concentration was less than the low standard (LOQ)

Microbac

525 lw 3/27/09

9

Sample Number: L09010132-09
Client ID: MR08-SS233-09A
Matrix: Soil
Workgroup Number: WG292250
Collect Date: 01/07/2009 09:15
Sample Tag: 01

PrePrep Method: NONE
Prep Method: 7471A
Analytical Method: 7471A
Analyst: ADC
Dilution: 1
Units: mg/kg

Instrument: HYDRA
Prep Date: 01/12/2009 08:05
Cal Date: 01/12/2009 12:55
Run Date: 01/12/2009 13:51
File ID: HY.011209.135135
Percent Solid: 94.9

Analyte	CAS. Number	Result	Qual	RL	MDL
Mercury, Total	7439-97-6	0.0435	J	0.105	0.0210

J Estimated ; the analyte concentration was less than the low standard (LOQ)

Microbac

2061 lw 3/27/09

10

Sample Number: L09010132-10
Client ID: MRO8-IS233-5-6-09A
Matrix: Soil
Workgroup Number: WG292238
Collect Date: 01/07/2009 09:30
Sample Tag: 01

PrePrep Method: NONE
Prep Method: 3051
Analytical Method: 6010B
Analyst: KHR
Dilution: 1
Units: mg/kg

Instrument: IRIS-ICP
Prep Date: 01/12/2009 06:54
Cal Date: 01/12/2009 11:41
Run Date: 01/12/2009 21:38
File ID: IR.011209.213800
Percent Solid: 87.6

Analyte	CAS. Number	Result	Qual	RL	MDL
Silver, Total	7440-22-4		U	0.819	0.205
Barium, Total	7440-39-3	11.7		0.410	0.0819
Cadmium, Total	7440-43-9		U	0.164	0.0410
Chromium, Total	7440-47-3	10.2		0.819	0.0983

U Undetected; the analyte was analyzed for, but not detected.

Microbac

24 MW 3/27/09

10

Sample Number: L09010132-10
Client ID: MRO8-IS233-5-6-09A
Matrix: Soil
Workgroup Number: WG292658
Collect Date: 01/07/2009 09:30
Sample Tag: 01

PrePrep Method: NONE
Prep Method: 3051
Analytical Method: 6020
Analyst: WTD
Dilution: 1
Units: mg/kg

Instrument: ELAN-ICP
Prep Date: 01/12/2009 07:27
Cal Date: 01/15/2009 15:09
Run Date: 01/16/2009 01:55
File ID: EL.011609.015555
Percent Solid: 87.6

Analyte	CAS. Number	Result	Qual	RL	MDL
Arsenic, Total	7440-38-2	1.76		0.340	0.0850
Lead, Total	7439-92-1	3.21 J		0.453	0.113
Selenium, Total	7782-49-2		U	0.453	0.113

MSH

U Undetected; the analyte was analyzed for, but not detected.

Microbac

 lw 3/27/09

10

Sample Number: L09010132-10
Client ID: MRO8-IS233-5-6-09A
Matrix: Soil
Workgroup Number: WG292250
Collect Date: 01/07/2009 09:30
Sample Tag: 01

PrePrep Method: NONE
Prep Method: 7471A
Analytical Method: 7471A
Analyst: ADC
Dilution: 1
Units: mg/kg

Instrument: HYDRA
Prep Date: 01/12/2009 08:05
Cal Date: 01/12/2009 12:55
Run Date: 01/12/2009 13:54
File ID: HY.011209.135402
Percent Solid: 87.6

Analyte	CAS. Number	Result	Qual	RL	MDL
Mercury, Total	7439-97-6		U	0.114	0.0228

U Undetected; the analyte was analyzed for, but not detected.

Microbac

2062 MW 3/27/09

11

Sample Number: L09010132-11
Client ID: MRO8-SS234-09A
Matrix: Soil
Workgroup Number: WG292238
Collect Date: 01/07/2009 09:45
Sample Tag: 01

PrePrep Method: NONE
Prep Method: 3051
Analytical Method: 6010B
Analyst: KHR
Dilution: 1
Units: mg/kg

Instrument: IRIS-ICP
Prep Date: 01/12/2009 06:54
Cal Date: 01/12/2009 11:41
Run Date: 01/12/2009 21:44
File ID: IR.011209.214400
Percent Solid: 92.7

Analyte	CAS. Number	Result	Qual	RL	MDL
Silver, Total	7440-22-4		U	0.817	0.204
Barium, Total	7440-39-3	3.74		0.409	0.0817
Cadmium, Total	7440-43-9		U	0.163	0.0409
Chromium, Total	7440-47-3	2.61		0.817	0.0981

U Undetected; the analyte was analyzed for, but not detected.

Microbac

25 MW 3/27/09

11

Sample Number: L09010132-11
Client ID: MRO8-SS234-09A
Matrix: Soil
Workgroup Number: WG292658
Collect Date: 01/07/2009 09:45
Sample Tag: 01

PrePrep Method: NONE
Prep Method: 3051
Analytical Method: 6020
Analyst: WTD
Dilution: 1
Units: mg/kg

Instrument: ELAN-ICP
Prep Date: 01/12/2009 07:27
Cal Date: 01/15/2009 15:09
Run Date: 01/16/2009 02:02
File ID: EL.011609.020211
Percent Solid: 92.7

Analyte	CAS. Number	Result	Qual	RL	MDL
Arsenic, Total	7440-38-2	0.326		0.311	0.0777
Lead, Total	7439-92-1	6.18 J		0.414	0.104
Selenium, Total	7782-49-2	0.104	J	0.414	0.104

MSH

J Estimated ; the analyte concentration was less than the low standard (LOQ)

Microbac

527 MW 3/27/09

11

Sample Number: L09010132-11
Client ID: MRO8-SS234-09A
Matrix: Soil
Workgroup Number: WG292250
Collect Date: 01/07/2009 09:45
Sample Tag: 01

PrePrep Method: NONE
Prep Method: 7471A
Analytical Method: 7471A
Analyst: ADC
Dilution: 1
Units: mg/kg

Instrument: HYDRA
Prep Date: 01/12/2009 08:05
Cal Date: 01/12/2009 12:55
Run Date: 01/12/2009 13:55
File ID: HY.011209.135545
Percent Solid: 92.7

Analyte	CAS. Number	Result	Qual	RL	MDL
Mercury, Total	7439-97-6		U	0.107	0.0215

U Undetected; the analyte was analyzed for, but not detected.

Microbac

2063 LW 3/27/09

12

Sample Number: L09010132-12
Client ID: MRO8-IS234-5-6-09A
Matrix: Soil
Workgroup Number: WG292238
Collect Date: 01/07/2009 10:00
Sample Tag: 01

PrePrep Method: NONE
Prep Method: 3051
Analytical Method: 6010B
Analyst: KHR
Dilution: 1
Units: mg/kg

Instrument: IRIS-ICP
Prep Date: 01/12/2009 06:54
Cal Date: 01/12/2009 11:41
Run Date: 01/12/2009 21:50
File ID: IR.011209.215000
Percent Solid: 91.1

Analyte	CAS. Number	Result	Qual	RL	MDL
Silver, Total	7440-22-4		U	0.805	0.201
Barium, Total	7440-39-3	4.90		0.403	0.0805
Cadmium, Total	7440-43-9		U	0.161	0.0403
Chromium, Total	7440-47-3	5.09		0.805	0.0966

U Undetected; the analyte was analyzed for, but not detected.

Microbac

 DW 3/27/09

12

Sample Number: L09010132-12
Client ID: MRO8-IS234-5-6-09A
Matrix: Soil
Workgroup Number: WG292658
Collect Date: 01/07/2009 10:00
Sample Tag: 01

PrePrep Method: NONE
Prep Method: 3051
Analytical Method: 6020
Analyst: WTD
Dilution: 1
Units: mg/kg

Instrument: ELAN-ICP
Prep Date: 01/12/2009 07:27
Cal Date: 01/15/2009 15:09
Run Date: 01/16/2009 02:08
File ID: EL.011609.020826
Percent Solid: 91.1

Analyte	CAS. Number	Result	Qual	RL	MDL
Arsenic, Total	7440-38-2	1.86		0.323	0.0809
Lead, Total	7439-92-1	2.59 J		0.431	0.108
Selenium, Total	7782-49-2	0.142	J	0.431	0.108

MSH

J Estimated ; the analyte concentration was less than the low standard (LOQ)

Microbac

528 lw 3/27/09

12

Sample Number: L09010132-12
Client ID: MRO8-IS234-5-6-09A
Matrix: Soil
Workgroup Number: WG292250
Collect Date: 01/07/2009 10:00
Sample Tag: 01

PrePrep Method: NONE
Prep Method: 7471A
Analytical Method: 7471A
Analyst: ADC
Dilution: 1
Units: mg/kg

Instrument: HYDRA
Prep Date: 01/12/2009 08:05
Cal Date: 01/12/2009 12:55
Run Date: 01/12/2009 13:56
File ID: HY.011209.135635
Percent Solid: 91.1

Analyte	CAS. Number	Result	Qual	RL	MDL
Mercury, Total	7439-97-6		U	0.107	0.0214

U Undetected; the analyte was analyzed for, but not detected.

Microbac

2064 LW 3/27/09

13

Sample Number: L09010132-13
Client ID: MRO8-SS249-09A
Matrix: Soil
Workgroup Number: WG292238
Collect Date: 01/07/2009 10:15
Sample Tag: 01

PrePrep Method: NONE
Prep Method: 3051
Analytical Method: 6010B
Analyst: KHR
Dilution: 1
Units: mg/kg

Instrument: IRIS-ICP
Prep Date: 01/12/2009 06:54
Cal Date: 01/12/2009 11:41
Run Date: 01/12/2009 22:09
File ID: IR.011209.220900
Percent Solid: 90.7

Analyte	CAS. Number	Result	Qual	RL	MDL
Silver, Total	7440-22-4		U	0.795	0.199
Barium, Total	7440-39-3	21.1		0.397	0.0795
Cadmium, Total	7440-43-9	0.513		0.159	0.0397
Chromium, Total	7440-47-3	15.9		0.795	0.0953

U Undetected; the analyte was analyzed for, but not detected.

Microbac

27 LWD 3/27/09

13

Sample Number: L09010132-13
Client ID: MRO8-SS249-09A
Matrix: Soil
Workgroup Number: WG292658
Collect Date: 01/07/2009 10:15
Sample Tag: 01

PrePrep Method: NONE
Prep Method: 3051
Analytical Method: 6020
Analyst: WTD
Dilution: 1
Units: mg/kg

Instrument: ELAN-ICP
Prep Date: 01/12/2009 07:27
Cal Date: 01/15/2009 15:09
Run Date: 01/16/2009 02:14
File ID: EL.011609.021439
Percent Solid: 90.7

Analyte	CAS. Number	Result	Qual	RL	MDL
Arsenic, Total	7440-38-2	0.773		0.330	0.0825
Selenium, Total	7782-49-2	0.180	J	0.440	0.110

J Estimated ; the analyte concentration was less than the low standard (LOQ)

Microbac

MW 3/27/09

13

Sample Number:	L09010132-13	PrePrep Method:	NONE	Instrument:	ELAN-ICP
Client ID:	MRO8-SS249-09A	Prep Method:	3051	Prep Date:	01/12/2009 07:27
Matrix:	Soil	Analytical Method:	6020	Cal Date:	01/16/2009 16:35
Workgroup Number:	WG292658	Analyst:	WTD	Run Date:	01/17/2009 01:26
Collect Date:	01/07/2009 10:15	Dilution:	10	File ID:	EL.011709.012652
Sample Tag:	DL01	Units:	mg/kg	Percent Solid:	90.7

Analyte	CAS. Number	Result	Qual	RL	MDL
Lead, Total	7439-92-1	143 J		4.40	1.10

MSH

Microbac

530 MW 3/27/09

13

Sample Number: L09010132-13
Client ID: MRO8-SS249-09A
Matrix: Soil
Workgroup Number: WG292253
Collect Date: 01/07/2009 10:15
Sample Tag: 01

PrePrep Method: NONE
Prep Method: 7471A
Analytical Method: 7471A
Analyst: ADC
Dilution: 1
Units: mg/kg

Instrument: HYDRA
Prep Date: 01/12/2009 08:21
Cal Date: 01/12/2009 12:55
Run Date: 01/12/2009 14:18
File ID: HY.011209.141809
Percent Solid: 90.7

Analyte	CAS. Number	Result	Qual	RL	MDL
Mercury, Total	7439-97-6	0.0339	J	0.102	0.0204

J Estimated ; the analyte concentration was less than the low standard (LOQ)

Microbac

2065 lew 3/27/09

14

Sample Number: L09010132-14
Client ID: MRO8-SS249D-09A
Matrix: Soil
Workgroup Number: WG292238
Collect Date: 01/07/2009 10:20
Sample Tag: 01

PrePrep Method: NONE
Prep Method: 3051
Analytical Method: 6010B
Analyst: KHR
Dilution: 1
Units: mg/kg

Instrument: IRIS-ICP
Prep Date: 01/12/2009 06:54
Cal Date: 01/12/2009 11:41
Run Date: 01/12/2009 22:15
File ID: IR.011209.221500
Percent Solid: 89.4

Analyte	CAS. Number	Result	Qual	RL	MDL
Silver, Total	7440-22-4		U	0.799	0.200
Barium, Total	7440-39-3	20.8		0.400	0.0799
Cadmium, Total	7440-43-9	0.301		0.160	0.0400
Chromium, Total	7440-47-3	12.4		0.799	0.0959

U Undetected; the analyte was analyzed for, but not detected.

Microbac

28 MW 3/27/09

14

Sample Number: L09010132-14
Client ID: MRO8-SS249D-09A
Matrix: Soil
Workgroup Number: WG292658
Collect Date: 01/07/2009 10:20
Sample Tag: 01

PrePrep Method: NONE
Prep Method: 3051
Analytical Method: 6020
Analyst: WTD
Dilution: 1
Units: mg/kg

Instrument: ELAN-ICP
Prep Date: 01/12/2009 07:27
Cal Date: 01/15/2009 15:09
Run Date: 01/16/2009 02:20
File ID: EL.011609.022052
Percent Solid: 89.4

Analyte	CAS. Number	Result	Qual	RL	MDL
Arsenic, Total	7440-38-2	0.520		0.321	0.0804
Lead, Total	7439-92-1	42.6 J		0.429	0.107
Selenium, Total	7782-49-2	0.224	J	0.429	0.107

MSH

J Estimated ; the analyte concentration was less than the low standard (LOQ)

Microbac

531 kw 3/27/09

14

Sample Number:	L09010132-14	PrePrep Method:	NONE	Instrument:	HYDRA
Client ID:	MRO8-SS249D-09A	Prep Method:	7471A	Prep Date:	01/12/2009 08:21
Matrix:	Soil	Analytical Method:	7471A	Cal Date:	01/12/2009 12:55
Workgroup Number:	WG292253	Analyst:	ADC	Run Date:	01/12/2009 14:19
Collect Date:	01/07/2009 10:20	Dilution:	1	File ID:	HY.011209.141954
Sample Tag:	01	Units:	mg/kg	Percent Solid:	89.4

Analyte	CAS. Number	Result	Qual	RL	MDL
Mercury, Total	7439-97-6	0.0255	J	0.107	0.0214

J Estimated ; the analyte concentration was less than the low standard (LOQ)

Microbac

2066 QW 3/27/09

15

Sample Number: L09010132-15
Client ID: MRO8-IS249-5-6-09A
Matrix: Soil
Workgroup Number: WG292238
Collect Date: 01/07/2009 10:35
Sample Tag: 01

PrePrep Method: NONE
Prep Method: 3051
Analytical Method: 6010B
Analyst: KHR
Dilution: 1
Units: mg/kg

Instrument: IRIS-ICP
Prep Date: 01/12/2009 06:54
Cal Date: 01/12/2009 11:41
Run Date: 01/12/2009 22:21
File ID: IR.011209.222100
Percent Solid: 91.5

Analyte	CAS. Number	Result	Qual	RL	MDL
Silver, Total	7440-22-4		U	0.738	0.185
Barium, Total	7440-39-3	5.45		0.369	0.0738
Cadmium, Total	7440-43-9		U	0.148	0.0369
Chromium, Total	7440-47-3	5.16		0.738	0.0886

U Undetected; the analyte was analyzed for, but not detected.

Microbac

29 lcw 3/27/09

15

Sample Number: L09010132-15
Client ID: MR08-IS249-5-6-09A
Matrix: Soil
Workgroup Number: WG292658
Collect Date: 01/07/2009 10:35
Sample Tag: 01

PrePrep Method: NONE
Prep Method: 3051
Analytical Method: 6020
Analyst: WTD
Dilution: 1
Units: mg/kg

Instrument: ELAN-ICP
Prep Date: 01/12/2009 07:27
Cal Date: 01/15/2009 15:09
Run Date: 01/16/2009 02:27
File ID: EL.011609.022705
Percent Solid: 91.5

Analyte	CAS. Number	Result	Qual	RL	MDL
Arsenic, Total	7440-38-2		U	0.319	0.0797
Lead, Total	7439-92-1	1.22 J		0.425	0.106
Selenium, Total	7782-49-2		U	0.425	0.106

MSH

U Undetected; the analyte was analyzed for, but not detected.

Microbac

532 LW 3/27/09

15

Sample Number: L09010132-15
Client ID: MRO8-IS249-5-6-09A
Matrix: Soil
Workgroup Number: WG292253
Collect Date: 01/07/2009 10:35
Sample Tag: 01

PrePrep Method: NONE
Prep Method: 7471A
Analytical Method: 7471A
Analyst: ADC
Dilution: 1
Units: mg/kg

Instrument: HYDRA
Prep Date: 01/12/2009 08:22
Cal Date: 01/12/2009 12:55
Run Date: 01/12/2009 14:21
File ID: HY.011209.142137
Percent Solid: 91.5

Analyte	CAS. Number	Result	Qual	RL	MDL
Mercury, Total	7439-97-6		U	0.108	0.0216

U Undetected; the analyte was analyzed for, but not detected.

Microbac

2067 DW 3/24/09

16

Sample Number: L09010132-16
Client ID: MRO8-IS249D-5-6-09A
Matrix: Soil
Workgroup Number: WG292238
Collect Date: 01/07/2009 10:45
Sample Tag: 01

PrePrep Method: NONE
Prep Method: 3051
Analytical Method: 6010B
Analyst: KHR
Dilution: 1
Units: mg/kg

Instrument: IRIS-ICP
Prep Date: 01/12/2009 06:54
Cal Date: 01/12/2009 11:41
Run Date: 01/12/2009 22:27
File ID: IR.011209.222700
Percent Solid: 89.8

Analyte	CAS. Number	Result	Qual	RL	MDL
Silver, Total	7440-22-4		U	0.830	0.208
Barium, Total	7440-39-3	6.46		0.415	0.0830
Cadmium, Total	7440-43-9		U	0.166	0.0415
Chromium, Total	7440-47-3	6.83		0.830	0.0997

U Undetected; the analyte was analyzed for, but not detected.

Microbac

30 MW 3/27/09

16

Sample Number: L09010132-16
Client ID: MRO8-IS249D-5-6-09A
Matrix: Soil
Workgroup Number: WG292658
Collect Date: 01/07/2009 10:45
Sample Tag: 01

PrePrep Method: NONE
Prep Method: 3051
Analytical Method: 6020
Analyst: WTD
Dilution: 1
Units: mg/kg

Instrument: ELAN-ICP
Prep Date: 01/12/2009 07:27
Cal Date: 01/15/2009 15:09
Run Date: 01/16/2009 02:33
File ID: EL.011609.023319
Percent Solid: 89.8

Analyte	CAS. Number	Result	Qual	RL	MDL
Arsenic, Total	7440-38-2	0.180	J	0.322	0.0805
Lead, Total	7439-92-1	1.51 J		0.429	0.107
Selenium, Total	7782-49-2		U	0.429	0.107

MSH

U Undetected; the analyte was analyzed for, but not detected.
J Estimated ; the analyte concentration was less than the low standard (LOQ)

Microbac

533 QW 3/27/09

16

Sample Number:	L09010132-16	PrePrep Method:	NONE	Instrument:	HYDRA
Client ID:	MRO8-IS249D-5-6-09A	Prep Method:	7471A	Prep Date:	01/12/2009 08:22
Matrix:	Soil	Analytical Method:	7471A	Cal Date:	01/12/2009 12:55
Workgroup Number:	WG292253	Analyst:	ADC	Run Date:	01/12/2009 14:23
Collect Date:	01/07/2009 10:45	Dilution:	1	File ID:	HY.011209.142323
Sample Tag:	01	Units:	mg/kg	Percent Solid:	89.8

Analyte	CAS. Number	Result	Qual	RL	MDL
Mercury, Total	7439-97-6		U	0.109	0.0218

U Undetected; the analyte was analyzed for, but not detected.

Microbac

2068 MW 3/27/09

17

Sample Number: L09010132-17
Client ID: MRO8-SS248-09A
Matrix: Soil
Workgroup Number: WG292238
Collect Date: 01/07/2009 11:00
Sample Tag: 01

PrePrep Method: NONE
Prep Method: 3051
Analytical Method: 6010B
Analyst: KHR
Dilution: 1
Units: mg/kg

Instrument: IRIS-ICP
Prep Date: 01/12/2009 06:54
Cal Date: 01/12/2009 11:41
Run Date: 01/12/2009 22:33
File ID: IR.011209.223300
Percent Solid: 91.1

Analyte	CAS. Number	Result	Qual	RL	MDL
Silver, Total	7440-22-4	1.39		0.789	0.197
Barium, Total	7440-39-3	25.8		0.395	0.0789
Cadmium, Total	7440-43-9	0.547		0.158	0.0395
Chromium, Total	7440-47-3	9.62		0.789	0.0947

Microbac

31 MW 3/27/09

17

Sample Number: L09010132-17
Client ID: MRO8-SS248-09A
Matrix: Soil
Workgroup Number: WG292658
Collect Date: 01/07/2009 11:00
Sample Tag: DL01

PrePrep Method: NONE
Prep Method: 3051
Analytical Method: 6020
Analyst: WTD
Dilution: 10
Units: mg/kg

Instrument: ELAN-ICP
Prep Date: 01/12/2009 07:27
Cal Date: 01/16/2009 16:35
Run Date: 01/17/2009 01:33
File ID: EL.011709.013305
Percent Solid: 91.1

Analyte	CAS. Number	Result	Qual	RL	MDL
Lead, Total	7439-92-1	88.9 J		4.37	1.09

MSH

Microbac

534 lw 3/27/09

17

Sample Number: L09010132-17
Client ID: MRO8-SS248-09A
Matrix: Soil
Workgroup Number: WG292658
Collect Date: 01/07/2009 11:00
Sample Tag: 01

PrePrep Method: NONE
Prep Method: 3051
Analytical Method: 6020
Analyst: WTD
Dilution: 1
Units: mg/kg

Instrument: ELAN-ICP
Prep Date: 01/12/2009 07:27
Cal Date: 01/15/2009 15:09
Run Date: 01/16/2009 02:39
File ID: EL.011609.023934
Percent Solid: 91.1

Analyte	CAS. Number	Result	Qual	RL	MDL
Arsenic, Total	7440-38-2	0.835		0.327	0.0819
Selenium, Total	7782-49-2	0.168	J	0.437	0.109

J Estimated ; the analyte concentration was less than the low standard (LOQ)

Microbac

535 Mw 3/27/09

17

Sample Number: L09010132-17
Client ID: MRO8-SS248-09A
Matrix: Soil
Workgroup Number: WG292253
Collect Date: 01/07/2009 11:00
Sample Tag: 01

PrePrep Method: NONE
Prep Method: 7471A
Analytical Method: 7471A
Analyst: ADC
Dilution: 1
Units: mg/kg

Instrument: HYDRA
Prep Date: 01/12/2009 08:23
Cal Date: 01/12/2009 12:55
Run Date: 01/12/2009 14:25
File ID: HY.011209.142510
Percent Solid: 91.1

Analyte	CAS. Number	Result	Qual	RL	MDL
Mercury, Total	7439-97-6	0.158		0.110	0.0219

Microbac

2069 MW 3/27/09

18

Sample Number: L09010132-18
Client ID: MRO8-IS248-5-6-09A
Matrix: Soil
Workgroup Number: WG292238
Collect Date: 01/07/2009 11:15
Sample Tag: 01

PrePrep Method: NONE
Prep Method: 3051
Analytical Method: 6010B
Analyst: KHR
Dilution: 1
Units: mg/kg

Instrument: IRIS-ICP
Prep Date: 01/12/2009 06:54
Cal Date: 01/12/2009 11:41
Run Date: 01/12/2009 22:39
File ID: IR.011209.223900
Percent Solid: 89.9

Analyte	CAS. Number	Result	Qual	RL	MDL
Silver, Total	7440-22-4		U	0.822	0.205
Barium, Total	7440-39-3	6.71		0.411	0.0822
Cadmium, Total	7440-43-9		U	0.164	0.0411
Chromium, Total	7440-47-3	5.23		0.822	0.0986

U Undetected; the analyte was analyzed for, but not detected.

Microbac

32 DW 3/27/09

18

Sample Number: L09010132-18
Client ID: MR08-IS248-5-6-09A
Matrix: Soil
Workgroup Number: WG292706
Collect Date: 01/07/2009 11:15
Sample Tag: 02

PrePrep Method: NONE
Prep Method: 3051
Analytical Method: 6020
Analyst: WTD
Dilution: 1
Units: mg/kg

Instrument: ELAN-ICP
Prep Date: 01/12/2009 07:06
Cal Date: 01/19/2009 15:28
Run Date: 01/19/2009 19:21
File ID: EL.011909.192140
Percent Solid: 89.9

Analyte	CAS. Number	Result	Qual	RL	MDL
Selenium, Total	7782-49-2		UJ ~~B~~	0.435	0.109

MSL

U Undetected; the analyte was analyzed for, but not detected.

Microbac

536

lw 3/27/09

18

Sample Number: L09010132-18
Client ID: MRO8-IS248-5-6-09A
Matrix: Soil
Workgroup Number: WG292706
Collect Date: 01/07/2009 11:15
Sample Tag: 01

PrePrep Method: NONE
Prep Method: 3051
Analytical Method: 6020
Analyst: WTD
Dilution: 1
Units: mg/kg

Instrument: ELAN-ICP
Prep Date: 01/12/2009 07:06
Cal Date: 01/16/2009 16:35
Run Date: 01/17/2009 05:45
File ID: EL.011709.054508
Percent Solid: 89.9

Analyte	CAS. Number	Result	Qual	RL	MDL
Arsenic, Total	7440-38-2	1.38		0.326	0.0815
Lead, Total	7439-92-1	1.62		0.435	0.109

Microbac

MW 3/27/09

18

Sample Number: L09010132-18
Client ID: MR08-IS248-5-6-09A
Matrix: Soil
Workgroup Number: WG292253
Collect Date: 01/07/2009 11:15
Sample Tag: 01

PrePrep Method: NONE
Prep Method: 7471A
Analytical Method: 7471A
Analyst: ADC
Dilution: 1
Units: mg/kg

Instrument: HYDRA
Prep Date: 01/12/2009 08:23
Cal Date: 01/12/2009 12:55
Run Date: 01/12/2009 14:26
File ID: HY.011209.142655
Percent Solid: 89.9

Analyte	CAS. Number	Result	Qual	RL	MDL
Mercury, Total	7439-97-6		U	0.108	0.0216

U Undetected; the analyte was analyzed for, but not detected.

Microbac

2070 RW 3/27/09

19

Sample Number: L09010132-19
Client ID: MRO8-SS250-09A
Matrix: Soil
Workgroup Number: WG292238
Collect Date: 01/07/2009 12:55
Sample Tag: 01

PrePrep Method: NONE
Prep Method: 3051
Analytical Method: 6010B
Analyst: KHR
Dilution: 1
Units: mg/kg

Instrument: IRIS-ICP
Prep Date: 01/12/2009 06:54
Cal Date: 01/12/2009 11:41
Run Date: 01/12/2009 22:45
File ID: IR.011209.224500
Percent Solid: 90.4

Analyte	CAS. Number	Result	Qual	RL	MDL
Silver, Total	7440-22-4		U	0.798	0.199
Barium, Total	7440-39-3	12.6		0.399	0.0798
Cadmium, Total	7440-43-9	0.114	J	0.160	0.0399
Chromium, Total	7440-47-3	5.13		0.798	0.0957

U Undetected; the analyte was analyzed for, but not detected.
J Estimated ; the analyte concentration was less than the low standard (LOQ)

Microbac

33 LW 3/27/09

19

Sample Number: L09010132-19
Client ID: MRO8-SS250-09A
Matrix: Soil
Workgroup Number: WG292706
Collect Date: 01/07/2009 12:55
Sample Tag: 01

PrePrep Method: NONE
Prep Method: 3051
Analytical Method: 6020
Analyst: WTD
Dilution: 1
Units: mg/kg

Instrument: ELAN-ICP
Prep Date: 01/12/2009 07:06
Cal Date: 01/16/2009 16:35
Run Date: 01/17/2009 06:03
File ID: EL.011709.060353
Percent Solid: 90.4

Analyte	CAS. Number	Result	Qual	RL	MDL
Arsenic, Total	7440-38-2	0.587		0.315	0.0787
Lead, Total	7439-92-1	37.2		0.420	0.105

Microbac

lcw 3/27/09

19

Sample Number: L09010132-19
Client ID: MRO8-SS250-09A
Matrix: Soil
Workgroup Number: WG292706
Collect Date: 01/07/2009 12:55
Sample Tag: 02

PrePrep Method: NONE
Prep Method: 3051
Analytical Method: 6020
Analyst: WTD
Dilution: 1
Units: mg/kg

Instrument: ELAN-ICP
Prep Date: 01/12/2009 07:06
Cal Date: 01/19/2009 15:28
Run Date: 01/19/2009 19:40
File ID: EL.011909.194014
Percent Solid: 90.4

Analyte	CAS. Number	Result	Qual	RL	MDL
Selenium, Total	7782-49-2	0.134 J	~~J~~	0.420	0.105

MSL

J Estimated ; the analyte concentration was less than the low standard (LOQ)

Microbac

lw 3/27/09

19

Sample Number:	L09010132-19	PrePrep Method:	NONE	Instrument:	HYDRA
Client ID:	MRO8-SS250-09A	Prep Method:	7471A	Prep Date:	01/12/2009 08:24
Matrix:	Soil	Analytical Method:	7471A	Cal Date:	01/12/2009 12:55
Workgroup Number:	WG292253	Analyst:	ADC	Run Date:	01/12/2009 14:29
Collect Date:	01/07/2009 12:55	Dilution:	1	File ID:	HY.011209.142910
Sample Tag:	01	Units:	mg/kg	Percent Solid:	90.4

Analyte	CAS. Number	Result	Qual	RL	MDL
Mercury, Total	7439-97-6		U	0.107	0.0215

U Undetected; the analyte was analyzed for, but not detected.

Microbac

2071 lw 3/27/09

20

Sample Number: L09010132-20
Client ID: MRO8-IS250-5-6-09A
Matrix: Soil
Workgroup Number: WG292238
Collect Date: 01/07/2009 13:15
Sample Tag: 01

PrePrep Method: NONE
Prep Method: 3051
Analytical Method: 6010B
Analyst: KHR
Dilution: 1
Units: mg/kg

Instrument: IRIS-ICP
Prep Date: 01/12/2009 06:54
Cal Date: 01/12/2009 11:41
Run Date: 01/12/2009 22:52
File ID: IR.011209.225200
Percent Solid: 87.1

Analyte	CAS. Number	Result	Qual	RL	MDL
Silver, Total	7440-22-4		U	0.797	0.199
Barium, Total	7440-39-3	8.20		0.398	0.0797
Cadmium, Total	7440-43-9		U	0.159	0.0398
Chromium, Total	7440-47-3	5.15		0.797	0.0956

U Undetected; the analyte was analyzed for, but not detected.

Microbac

34 lw 3/27/09

20

Sample Number: L09010132-20
Client ID: MRO8-IS250-5-6-09A
Matrix: Soil
Workgroup Number: WG292706
Collect Date: 01/07/2009 13:15
Sample Tag: 02

PrePrep Method: NONE
Prep Method: 3051
Analytical Method: 6020
Analyst: WTD
Dilution: 1
Units: mg/kg

Instrument: ELAN-ICP
Prep Date: 01/12/2009 07:06
Cal Date: 01/19/2009 15:28
Run Date: 01/19/2009 19:46
File ID: EL.011909.194627
Percent Solid: 87.1

Analyte	CAS. Number	Result	Qual	RL	MDL
Selenium, Total	7782-49-2	0.117 J	~~J~~	0.459	0.115

MSL

J Estimated ; the analyte concentration was less than the low standard (LOQ)

Microbac

540 MW 3/27/09

20

Sample Number: L09010132-20
Client ID: MRO8-IS250-5-6-09A
Matrix: Soil
Workgroup Number: WG292706
Collect Date: 01/07/2009 13:15
Sample Tag: 01

PrePrep Method: NONE
Prep Method: 3051
Analytical Method: 6020
Analyst: WTD
Dilution: 1
Units: mg/kg

Instrument: ELAN-ICP
Prep Date: 01/12/2009 07:06
Cal Date: 01/16/2009 16:35
Run Date: 01/17/2009 06:10
File ID: EL.011709.061007
Percent Solid: 87.1

Analyte	CAS. Number	Result	Qual	RL	MDL
Arsenic, Total	7440-38-2	1.49		0.344	0.0861
Lead, Total	7439-92-1	3.32		0.459	0.115

Microbac

JW 3/27/09

20

Sample Number: L09010132-20
Client ID: MRO8-IS250-5-6-09A
Matrix: Soil
Workgroup Number: WG292253
Collect Date: 01/07/2009 13:15
Sample Tag: 01

PrePrep Method: NONE
Prep Method: 7471A
Analytical Method: 7471A
Analyst: ADC
Dilution: 1
Units: mg/kg

Instrument: HYDRA
Prep Date: 01/12/2009 08:24
Cal Date: 01/12/2009 12:55
Run Date: 01/12/2009 14:30
File ID: HY.011209.143055
Percent Solid: 87.1

Analyte	CAS. Number	Result	Qual	RL	MDL
Mercury, Total	7439-97-6		U	0.113	0.0226

U Undetected; the analyte was analyzed for, but not detected.

Microbac

2072 LW 3/27/09

21

Sample Number: L09010132-21
Client ID: MRO8-SS257-09A
Matrix: Soil
Workgroup Number: WG292238
Collect Date: 01/07/2009 13:30
Sample Tag: 01

PrePrep Method: NONE
Prep Method: 3051
Analytical Method: 6010B
Analyst: KHR
Dilution: 1
Units: mg/kg

Instrument: IRIS-ICP
Prep Date: 01/12/2009 06:54
Cal Date: 01/12/2009 11:41
Run Date: 01/12/2009 22:58
File ID: IR.011209.225800
Percent Solid: 94.2

Analyte	CAS. Number	Result	Qual	RL	MDL
Silver, Total	7440-22-4		U	0.798	0.200
Barium, Total	7440-39-3	7.30		0.399	0.0798
Cadmium, Total	7440-43-9		U	0.160	0.0399
Chromium, Total	7440-47-3	4.97		0.798	0.0958

U Undetected; the analyte was analyzed for, but not detected.

Microbac

35 MW 3/27/09

21

Sample Number: L09010132-21
Client ID: MRO8-SS257-09A
Matrix: Soil
Workgroup Number: WG292706
Collect Date: 01/07/2009 13:30
Sample Tag: 01

PrePrep Method: NONE
Prep Method: 3051
Analytical Method: 6020
Analyst: WTD
Dilution: 1
Units: mg/kg

Instrument: ELAN-ICP
Prep Date: 01/12/2009 07:06
Cal Date: 01/16/2009 16:35
Run Date: 01/17/2009 06:29
File ID: EL.011709.062924
Percent Solid: 94.2

Analyte	CAS. Number	Result	Qual	RL	MDL
Arsenic, Total	7440-38-2	8.13		0.301	0.0751
Lead, Total	7439-92-1	2.67		0.401	0.100

Microbac

 DW 3/27/09

21

Sample Number:	L09010132-21	PrePrep Method:	NONE	Instrument:	ELAN-ICP
Client ID:	MRO8-SS257-09A	Prep Method:	3051	Prep Date:	01/12/2009 07:06
Matrix:	Soil	Analytical Method:	6020	Cal Date:	01/20/2009 11:44
Workgroup Number:	WG292706	Analyst:	WTD	Run Date:	01/20/2009 13:57
Collect Date:	01/07/2009 13:30	Dilution:	1	File ID:	EL.012009.135753
Sample Tag:	02	Units:	mg/kg	Percent Solid:	94.2

Analyte	CAS. Number	Result	Qual	RL	MDL
Selenium, Total	7782-49-2	0.339 J	~~J~~	0.401	0.100

MSL

J Estimated ; the analyte concentration was less than the low standard (LOQ)

Microbac

543 DW 3/27/09

21

Sample Number:	L09010132-21	PrePrep Method:	NONE	Instrument:	HYDRA
Client ID:	MRO8-SS257-09A	Prep Method:	7471A	Prep Date:	01/12/2009 08:25
Matrix:	Soil	Analytical Method:	7471A	Cal Date:	01/12/2009 12:55
Workgroup Number:	WG292253	Analyst:	ADC	Run Date:	01/12/2009 14:36
Collect Date:	01/07/2009 13:30	Dilution:	1	File ID:	HY.011209.143640
Sample Tag:	01	Units:	mg/kg	Percent Solid:	94.2

Analyte	CAS. Number	Result	Qual	RL	MDL
Mercury, Total	7439-97-6		U	0.104	0.0208

U Undetected; the analyte was analyzed for, but not detected.

Microbac

2073 fw 3/27/09

22

Sample Number: L09010132-22
Client ID: MRO8-IS257-9-10-09A
Matrix: Soil
Workgroup Number: WG292238
Collect Date: 01/07/2009 13:50
Sample Tag: 01

PrePrep Method: NONE
Prep Method: 3051
Analytical Method: 6010B
Analyst: KHR
Dilution: 1
Units: mg/kg

Instrument: IRIS-ICP
Prep Date: 01/12/2009 06:54
Cal Date: 01/12/2009 11:41
Run Date: 01/12/2009 23:04
File ID: IR.011209.230400
Percent Solid: 84.5

Analyte	CAS. Number	Result	Qual	RL	MDL
Silver, Total	7440-22-4		U	0.838	0.209
Barium, Total	7440-39-3	5.98		0.419	0.0838
Cadmium, Total	7440-43-9		U	0.168	0.0419
Chromium, Total	7440-47-3	6.92		0.838	0.101

U Undetected; the analyte was analyzed for, but not detected.

Microbac

36 MW 3/27/09

22

Sample Number:	L09010132-22	PrePrep Method:	NONE	Instrument:	ELAN-ICP
Client ID:	MRO8-IS257-9-10-09A	Prep Method:	3051	Prep Date:	01/12/2009 07:06
Matrix:	Soil	Analytical Method:	6020	Cal Date:	01/20/2009 11:44
Workgroup Number:	WG292706	Analyst:	WTD	Run Date:	01/20/2009 14:04
Collect Date:	01/07/2009 13:50	Dilution:	1	File ID:	EL.012009.140407
Sample Tag:	02	Units:	mg/kg	Percent Solid:	84.5

Analyte	CAS. Number	Result	Qual	RL	MDL
Selenium, Total	7782-49-2	0.191 J	J	0.470	0.117

MSL

J Estimated ; the analyte concentration was less than the low standard (LOQ)

Microbac

544 3/27/09

22

Sample Number: L09010132-22
Client ID: MRO8-IS257-9-10-09A
Matrix: Soil
Workgroup Number: WG292706
Collect Date: 01/07/2009 13:50
Sample Tag: 01

PrePrep Method: NONE
Prep Method: 3051
Analytical Method: 6020
Analyst: WTD
Dilution: 1
Units: mg/kg

Instrument: ELAN-ICP
Prep Date: 01/12/2009 07:06
Cal Date: 01/16/2009 16:35
Run Date: 01/17/2009 06:35
File ID: EL.011709.063539
Percent Solid: 84.5

Analyte	CAS. Number	Result	Qual	RL	MDL
Arsenic, Total	7440-38-2	2.02		0.352	0.0881
Lead, Total	7439-92-1	2.66		0.470	0.117

Microbac

QW
3/27/09

22

Sample Number: L09010132-22
Client ID: MRO8-IS257-9-10-09A
Matrix: Soil
Workgroup Number: WG292253
Collect Date: 01/07/2009 13:50
Sample Tag: 01

PrePrep Method: NONE
Prep Method: 7471A
Analytical Method: 7471A
Analyst: ADC
Dilution: 1
Units: mg/kg

Instrument: HYDRA
Prep Date: 01/12/2009 08:25
Cal Date: 01/12/2009 12:55
Run Date: 01/12/2009 14:38
File ID: HY.011209.143842
Percent Solid: 84.5

Analyte	CAS. Number	Result	Qual	RL	MDL
Mercury, Total	7439-97-6		U	0.117	0.0234

U Undetected; the analyte was analyzed for, but not detected.

Microbac

2074 LW 3/27/09

23

Sample Number: L09010132-23
Client ID: MRO8-SS258-09A
Matrix: Soil
Workgroup Number: WG292238
Collect Date: 01/07/2009 14:05
Sample Tag: 01

PrePrep Method: NONE
Prep Method: 3051
Analytical Method: 6010B
Analyst: KHR
Dilution: 1
Units: mg/kg

Instrument: IRIS-ICP
Prep Date: 01/12/2009 06:54
Cal Date: 01/12/2009 11:41
Run Date: 01/12/2009 23:22
File ID: IR.011209.232200
Percent Solid: 95.4

Analyte	CAS. Number	Result	Qual	RL	MDL
Silver, Total	7440-22-4	0.354	J	0.789	0.197
Barium, Total	7440-39-3	5.67		0.395	0.0789
Cadmium, Total	7440-43-9	0.365		0.158	0.0395
Chromium, Total	7440-47-3	11.1		0.789	0.0947

J Estimated ; the analyte concentration was less than the low standard (LOQ)

Microbac

37 lew 3/27/09

23

Sample Number: L09010132-23
Client ID: MRO8-SS258-09A
Matrix: Soil
Workgroup Number: WG292706
Collect Date: 01/07/2009 14:05
Sample Tag: 02

PrePrep Method: NONE
Prep Method: 3051
Analytical Method: 6020
Analyst: WTD
Dilution: 1
Units: mg/kg

Instrument: ELAN-ICP
Prep Date: 01/12/2009 07:06
Cal Date: 01/20/2009 11:44
Run Date: 01/20/2009 14:10
File ID: EL.012009.141019
Percent Solid: 95.4

Analyte	CAS. Number	Result	Qual	RL	MDL
Selenium, Total	7782-49-2	0.451 J		0.418	0.105

MSL

Microbac

lw 3/27/09

23

Sample Number: L09010132-23
Client ID: MRO8-SS258-09A
Matrix: Soil
Workgroup Number: WG292706
Collect Date: 01/07/2009 14:05
Sample Tag: 01

PrePrep Method: NONE
Prep Method: 3051
Analytical Method: 6020
Analyst: WTD
Dilution: 1
Units: mg/kg

Instrument: ELAN-ICP
Prep Date: 01/12/2009 07:06
Cal Date: 01/16/2009 16:35
Run Date: 01/17/2009 06:41
File ID: EL.011709.064154
Percent Solid: 95.4

Analyte	CAS. Number	Result	Qual	RL	MDL
Arsenic, Total	7440-38-2	1.24		0.314	0.0784
Lead, Total	7439-92-1	4.61		0.418	0.105

Microbac

547 MW 3/27/09

23

Sample Number:	L09010132-23	PrePrep Method:	NONE	Instrument:	HYDRA
Client ID:	MRO8-SS258-09A	Prep Method:	7471A	Prep Date:	01/12/2009 08:25
Matrix:	Soil	Analytical Method:	7471A	Cal Date:	01/12/2009 12:55
Workgroup Number:	WG292253	Analyst:	ADC	Run Date:	01/12/2009 14:40
Collect Date:	01/07/2009 14:05	Dilution:	1	File ID:	HY.011209.144025
Sample Tag:	01	Units:	mg/kg	Percent Solid:	95.4

Analyte	CAS. Number	Result	Qual	RL	MDL
Mercury, Total	7439-97-6		U	0.0973	0.0195

U Undetected; the analyte was analyzed for, but not detected.

Microbac

2075 lw 3/27/09

24

Sample Number: L09010132-24
Client ID: MRO8-IS258-9-10-09A
Matrix: Soil
Workgroup Number: WG292238
Collect Date: 01/07/2009 14:25
Sample Tag: 01

PrePrep Method: NONE
Prep Method: 3051
Analytical Method: 6010B
Analyst: KHR
Dilution: 1
Units: mg/kg

Instrument: IRIS-ICP
Prep Date: 01/12/2009 06:54
Cal Date: 01/12/2009 11:41
Run Date: 01/12/2009 23:28
File ID: IR.011209.232800
Percent Solid: 89.7

Analyte	CAS. Number	Result	Qual	RL	MDL
Silver, Total	7440-22-4		U	0.848	0.212
Barium, Total	7440-39-3	3.21		0.424	0.0848
Cadmium, Total	7440-43-9		U	0.170	0.0424
Chromium, Total	7440-47-3	3.46		0.848	0.102

U Undetected; the analyte was analyzed for, but not detected.

Microbac

38 MW 3/27/09

24

Sample Number: L09010132-24
Client ID: MRO8-IS258-9-10-09A
Matrix: Soil
Workgroup Number: WG292706
Collect Date: 01/07/2009 14:25
Sample Tag: 02

PrePrep Method: NONE
Prep Method: 3051
Analytical Method: 6020
Analyst: WTD
Dilution: 1
Units: mg/kg

Instrument: ELAN-ICP
Prep Date: 01/12/2009 07:06
Cal Date: 01/20/2009 11:44
Run Date: 01/20/2009 14:16
File ID: EL.012009.141630
Percent Solid: 89.7

Analyte	CAS. Number	Result	Qual	RL	MDL
Selenium, Total	7782-49-2	0.170 J	J	0.446	0.112

MSL

J Estimated ; the analyte concentration was less than the low standard (LOQ)

Microbac

548 lw 3/27/09

24

Sample Number: L09010132-24
Client ID: MRO8-IS258-9-10-09A
Matrix: Soil
Workgroup Number: WG292706
Collect Date: 01/07/2009 14:25
Sample Tag: 01

PrePrep Method: NONE
Prep Method: 3051
Analytical Method: 6020
Analyst: WTD
Dilution: 1
Units: mg/kg

Instrument: ELAN-ICP
Prep Date: 01/12/2009 07:06
Cal Date: 01/16/2009 16:35
Run Date: 01/17/2009 06:48
File ID: EL.011709.064809
Percent Solid: 89.7

Analyte	CAS. Number	Result	Qual	RL	MDL
Arsenic, Total	7440-38-2	9.73		0.335	0.0837
Lead, Total	7439-92-1	2.32		0.446	0.112

Microbac

JW 3/27/09

24

Sample Number: L09010132-24
Client ID: MRO8-IS258-9-10-09A
Matrix: Soil
Workgroup Number: WG292253
Collect Date: 01/07/2009 14:25
Sample Tag: 01

PrePrep Method: NONE
Prep Method: 7471A
Analytical Method: 7471A
Analyst: ADC
Dilution: 1
Units: mg/kg

Instrument: HYDRA
Prep Date: 01/12/2009 08:26
Cal Date: 01/12/2009 12:55
Run Date: 01/12/2009 14:43
File ID: HY.011209.144309
Percent Solid: 89.7

Analyte	CAS. Number	Result	Qual	RL	MDL
Mercury, Total	7439-97-6		U	0.111	0.0222

U Undetected; the analyte was analyzed for, but not detected.

Microbac

2076 MW 3/27/09

25

Sample Number: L09010132-25
Client ID: MRO8-SS273-09A
Matrix: Soil
Workgroup Number: WG292238
Collect Date: 01/07/2009 14:45
Sample Tag: 01

PrePrep Method: NONE
Prep Method: 3051
Analytical Method: 6010B
Analyst: KHR
Dilution: 1
Units: mg/kg

Instrument: IRIS-ICP
Prep Date: 01/12/2009 06:54
Cal Date: 01/12/2009 11:41
Run Date: 01/12/2009 23:34
File ID: IR.011209.233400
Percent Solid: 95.3

Analyte	CAS. Number	Result	Qual	RL	MDL
Silver, Total	7440-22-4	0.264	J	0.699	0.175
Barium, Total	7440-39-3	3.96		0.350	0.0699
Cadmium, Total	7440-43-9	0.155		0.140	0.0350
Chromium, Total	7440-47-3	5.66		0.699	0.0839

J Estimated ; the analyte concentration was less than the low standard (LOQ)

Microbac

39 fcw 3/27/09

25

Sample Number:	L09010132-25	PrePrep Method:	NONE	Instrument:	ELAN-ICP
Client ID:	MRO8-SS273-09A	Prep Method:	3051	Prep Date:	01/12/2009 07:06
Matrix:	Soil	Analytical Method:	6020	Cal Date:	01/20/2009 11:44
Workgroup Number:	WG292706	Analyst:	WTD	Run Date:	01/20/2009 14:22
Collect Date:	01/07/2009 14:45	Dilution:	1	File ID:	EL.012009.142241
Sample Tag:	02	Units:	mg/kg	Percent Solid:	95.3

Analyte	CAS. Number	Result	Qual	RL	MDL
Selenium, Total	7782-49-2	0.360 J	J	0.418	0.105

MSL

J Estimated ; the analyte concentration was less than the low standard (LOQ)

Microbac

550 MW 3/27/09

25

Sample Number: L09010132-25
Client ID: MRO8-SS273-09A
Matrix: Soil
Workgroup Number: WG292706
Collect Date: 01/07/2009 14:45
Sample Tag: 01

PrePrep Method: NONE
Prep Method: 3051
Analytical Method: 6020
Analyst: WTD
Dilution: 1
Units: mg/kg

Instrument: ELAN-ICP
Prep Date: 01/12/2009 07:06
Cal Date: 01/16/2009 16:35
Run Date: 01/17/2009 06:54
File ID: EL.011709.065425
Percent Solid: 95.3

Analyte	CAS. Number	Result	Qual	RL	MDL
Arsenic, Total	7440-38-2	1.05		0.314	0.0784
Lead, Total	7439-92-1	3.19		0.418	0.105

Microbac

551 MW 3/27/09

25

Sample Number:	L09010132-25	PrePrep Method:	NONE	Instrument:	HYDRA
Client ID:	MRO8-SS273-09A	Prep Method:	7471A	Prep Date:	01/12/2009 08:27
Matrix:	Soil	Analytical Method:	7471A	Cal Date:	01/12/2009 12:55
Workgroup Number:	WG292253	Analyst:	ADC	Run Date:	01/12/2009 14:44
Collect Date:	01/07/2009 14:45	Dilution:	1	File ID:	HY.011209.144455
Sample Tag:	01	Units:	mg/kg	Percent Solid:	95.3

Analyte	CAS. Number	Result	Qual	RL	MDL
Mercury, Total	7439-97-6		U	0.0973	0.0195

U Undetected; the analyte was analyzed for, but not detected.

Microbac®

2077 LW 3/27/09

26

Sample Number: L09010132-26
Client ID: MRO8-IS273-8-9-09A
Matrix: Soil
Workgroup Number: WG292237
Collect Date: 01/07/2009 15:05
Sample Tag: 01

PrePrep Method: NONE
Prep Method: 3051
Analytical Method: 6010B
Analyst: KHR
Dilution: 1
Units: mg/kg

Instrument: IRIS-ICP
Prep Date: 01/12/2009 07:26
Cal Date: 01/12/2009 11:41
Run Date: 01/12/2009 19:42
File ID: IR.011209.194200
Percent Solid: 91.9

Analyte	CAS. Number	Result	Qual	RL	MDL
Silver, Total	7440-22-4		U	0.737	0.184
Barium, Total	7440-39-3	3.74		0.368	0.0737
Cadmium, Total	7440-43-9		U	0.147	0.0368
Chromium, Total	7440-47-3	3.59		0.737	0.0884

U Undetected; the analyte was analyzed for, but not detected.

Microbac

40 lw
3/27/09

26

Sample Number: L09010132-26
Client ID: MRO8-IS273-8-9-09A
Matrix: Soil
Workgroup Number: WG292706
Collect Date: 01/07/2009 15:05
Sample Tag: 01

PrePrep Method: NONE
Prep Method: 3051
Analytical Method: 6020
Analyst: WTD
Dilution: 1
Units: mg/kg

Instrument: ELAN-ICP
Prep Date: 01/12/2009 07:06
Cal Date: 01/16/2009 16:35
Run Date: 01/17/2009 07:00
File ID: EL.011709.070040
Percent Solid: 91.9

Analyte	CAS. Number	Result	Qual	RL	MDL
Arsenic, Total	7440-38-2	2.25		0.319	0.0797
Lead, Total	7439-92-1	1.97		0.425	0.106

Microbac

GW 3/27/09

Report Number: L09010132
Report Date : February 3, 2009

26

Sample Number: L09010132-26
Client ID: MRO8-IS273-8-9-09A
Matrix: Soil
Workgroup Number: WG292706
Collect Date: 01/07/2009 15:05
Sample Tag: 02

PrePrep Method: NONE
Prep Method: 3051
Analytical Method: 6020
Analyst: WTD
Dilution: 1
Units: mg/kg

Instrument: ELAN-ICP
Prep Date: 01/12/2009 07:06
Cal Date: 01/20/2009 11:44
Run Date: 01/20/2009 14:28
File ID: EL.012009.142852
Percent Solid: 91.9

Analyte	CAS. Number	Result	Qual	RL	MDL
Selenium, Total	7782-49-2	UJ	~~U~~	0.425	0.106

MSL

U Undetected; the analyte was analyzed for, but not detected.

Microbac

553 LW 3/27/09

26

Sample Number: L09010132-26
Client ID: MRO8-IS273-8-9-09A
Matrix: Soil
Workgroup Number: WG292253
Collect Date: 01/07/2009 15:05
Sample Tag: 01

PrePrep Method: NONE
Prep Method: 7471A
Analytical Method: 7471A
Analyst: ADC
Dilution: 1
Units: mg/kg

Instrument: HYDRA
Prep Date: 01/12/2009 08:27
Cal Date: 01/12/2009 12:55
Run Date: 01/12/2009 14:46
File ID: HY.011209.144654
Percent Solid: 91.9

Analyte	CAS. Number	Result	Qual	RL	MDL
Mercury, Total	7439-97-6		U	0.103	0.0206

U Undetected; the analyte was analyzed for, but not detected.

Microbac

2078 LW 3/27/09

27

Sample Number: L09010132-27
Client ID: MRO8-SS274-09A
Matrix: Soil
Workgroup Number: WG292237
Collect Date: 01/07/2009 15:45
Sample Tag: 01

PrePrep Method: NONE
Prep Method: 3051
Analytical Method: 6010B
Analyst: KHR
Dilution: 1
Units: mg/kg

Instrument: IRIS-ICP
Prep Date: 01/12/2009 07:26
Cal Date: 01/12/2009 11:41
Run Date: 01/12/2009 20:07
File ID: IR.011209.200700
Percent Solid: 95.4

Analyte	CAS. Number	Result	Qual	RL	MDL
Silver, Total	7440-22-4		U	0.792	0.198
Barium, Total	7440-39-3	6.39		0.396	0.0792
Cadmium, Total	7440-43-9	0.0459	J	0.158	0.0396
Chromium, Total	7440-47-3	1.53		0.792	0.0950

U Undetected; the analyte was analyzed for, but not detected.
J Estimated ; the analyte concentration was less than the low standard (LOQ)

Microbac

41 lw 3/27/09

27

Sample Number: L09010132-27
Client ID: MRO8-SS274-09A
Matrix: Soil
Workgroup Number: WG292706
Collect Date: 01/07/2009 15:45
Sample Tag: 01

PrePrep Method: NONE
Prep Method: 3051
Analytical Method: 6020
Analyst: WTD
Dilution: 1
Units: mg/kg

Instrument: ELAN-ICP
Prep Date: 01/12/2009 07:06
Cal Date: 01/16/2009 16:35
Run Date: 01/17/2009 07:06
File ID: EL.011709.070657
Percent Solid: 95.4

Analyte	CAS. Number	Result	Qual	RL	MDL
Arsenic, Total	7440-38-2	0.222	J	0.309	0.0772
Lead, Total	7439-92-1	1.74		0.412	0.103

J Estimated ; the analyte concentration was less than the low standard (LOQ)

Microbac

554 LW 3/27/09

27

Sample Number: L09010132-27
Client ID: MRO8-SS274-09A
Matrix: Soil
Workgroup Number: WG292706
Collect Date: 01/07/2009 15:45
Sample Tag: 02

PrePrep Method: NONE
Prep Method: 3051
Analytical Method: 6020
Analyst: WTD
Dilution: 1
Units: mg/kg

Instrument: ELAN-ICP
Prep Date: 01/12/2009 07:06
Cal Date: 01/20/2009 11:44
Run Date: 01/20/2009 14:35
File ID: EL.012009.143504
Percent Solid: 95.4

Analyte	CAS. Number	Result	Qual	RL	MDL
Selenium, Total	7782-49-2	0.141 J	J	0.412	0.103

MSL

J Estimated ; the analyte concentration was less than the low standard (LOQ)

Microbac

555 MW 3/27/09

27

Sample Number: L09010132-27
Client ID: MRO8-SS274-09A
Matrix: Soil
Workgroup Number: WG292253
Collect Date: 01/07/2009 15:45
Sample Tag: 01

PrePrep Method: NONE
Prep Method: 7471A
Analytical Method: 7471A
Analyst: ADC
Dilution: 1
Units: mg/kg

Instrument: HYDRA
Prep Date: 01/12/2009 08:27
Cal Date: 01/12/2009 12:55
Run Date: 01/12/2009 14:48
File ID: HY.011209.144847
Percent Solid: 95.4

Analyte	CAS. Number	Result	Qual	RL	MDL
Mercury, Total	7439-97-6	0.0318	J	0.103	0.0205

J Estimated ; the analyte concentration was less than the low standard (LOQ)

Microbac

2079 QW 3/27/09

28

Sample Number: L09010132-28
Client ID: MRO8-IS274-9-10-09A
Matrix: Soil
Workgroup Number: WG292237
Collect Date: 01/07/2009 16:25
Sample Tag: 01

PrePrep Method: NONE
Prep Method: 3051
Analytical Method: 6010B
Analyst: KHR
Dilution: 1
Units: mg/kg

Instrument: IRIS-ICP
Prep Date: 01/12/2009 07:26
Cal Date: 01/12/2009 11:41
Run Date: 01/12/2009 20:13
File ID: IR.011209.201300
Percent Solid: 91.9

Analyte	CAS. Number	Result	Qual	RL	MDL
Silver, Total	7440-22-4		U	0.801	0.200
Barium, Total	7440-39-3	4.64		0.400	0.0801
Cadmium, Total	7440-43-9		U	0.160	0.0400
Chromium, Total	7440-47-3	4.52		0.801	0.0961

U Undetected; the analyte was analyzed for, but not detected.

Microbac

42 MW 3/27/09

28

Sample Number: L09010132-28
Client ID: MRO8-IS274-9-10-09A
Matrix: Soil
Workgroup Number: WG292706
Collect Date: 01/07/2009 16:25
Sample Tag: 01

PrePrep Method: NONE
Prep Method: 3051
Analytical Method: 6020
Analyst: WTD
Dilution: 1
Units: mg/kg

Instrument: ELAN-ICP
Prep Date: 01/12/2009 07:06
Cal Date: 01/16/2009 16:35
Run Date: 01/17/2009 07:13
File ID: EL.011709.071313
Percent Solid: 91.9

Analyte	CAS. Number	Result	Qual	RL	MDL
Arsenic, Total	7440-38-2	0.924		0.326	0.0816
Lead, Total	7439-92-1	2.26		0.435	0.109

Microbac

RW
3/27/09

28

Sample Number: L09010132-28
Client ID: MRO8-IS274-9-10-09A
Matrix: Soil
Workgroup Number: WG292706
Collect Date: 01/07/2009 16:25
Sample Tag: 02

PrePrep Method: NONE
Prep Method: 3051
Analytical Method: 6020
Analyst: WTD
Dilution: 1
Units: mg/kg

Instrument: ELAN-ICP
Prep Date: 01/12/2009 07:06
Cal Date: 01/20/2009 11:44
Run Date: 01/20/2009 14:41
File ID: EL.012009.144116
Percent Solid: 91.9

Analyte	CAS. Number	Result	Qual	RL	MDL
Selenium, Total	7782-49-2	UJ	~~U~~	0.435	0.109

MSL

U Undetected; the analyte was analyzed for, but not detected.

Microbac

557 MW 3/27/09

28

Sample Number: L09010132-28
Client ID: MRO8-IS274-9-10-09A
Matrix: Soil
Workgroup Number: WG292253
Collect Date: 01/07/2009 16:25
Sample Tag: 01

PrePrep Method: NONE
Prep Method: 7471A
Analytical Method: 7471A
Analyst: ADC
Dilution: 1
Units: mg/kg

Instrument: HYDRA
Prep Date: 01/12/2009 08:28
Cal Date: 01/12/2009 12:55
Run Date: 01/12/2009 14:50
File ID: HY.011209.145056
Percent Solid: 91.9

Analyte	CAS. Number	Result	Qual	RL	MDL
Mercury, Total	7439-97-6		U	0.104	0.0207

U Undetected; the analyte was analyzed for, but not detected.

Microbac

2080 lew 3/27/09

29

Sample Number: L09010132-29
Client ID: MR08-EB01010709-SS
Matrix: Water
Workgroup Number: WG292350
Collect Date: 01/07/2009 11:00
Sample Tag: 01

PrePrep Method: NONE
Prep Method: 3005A
Analytical Method: 6010B
Analyst: SLP
Dilution: 1
Units: ug/L

Instrument: PE-ICP2
Prep Date: 01/12/2009 07:24
Cal Date: 01/13/2009 11:07
Run Date: 01/13/2009 17:28
File ID: P2.011309.172843

Analyte	CAS. Number	Result	Qual	RL	MDL
Barium, Total	7440-39-3		U	10.0	2.50
Cadmium, Total	7440-43-9		U	1.00	0.250
Chromium, Total	7440-47-3		U	10.0	2.50
Silver, Total	7440-22-4		U	6.00	2.00

U Undetected; the analyte was analyzed for, but not detected.

Microbac

 3/27/09

29

Sample Number: L09010132-29
Client ID: MRO8-EB01010709-SS
Matrix: Water
Workgroup Number: WG292597
Collect Date: 01/07/2009 11:00
Sample Tag: 01

PrePrep Method: NONE
Prep Method: 3015
Analytical Method: 6020
Analyst: WTD
Dilution: 1
Units: ug/L

Instrument: ELAN-ICP
Prep Date: 01/12/2009 06:45
Cal Date: 01/15/2009 15:09
Run Date: 01/15/2009 17:14
File ID: EL.011509.171417

Analyte	CAS. Number	Result	Qual	RL	MDL
Arsenic, Total	7440-38-2		U	1.00	0.250
Lead, Total	7439-92-1		U	1.00	0.250
Selenium, Total	7782-49-2		U	2.00	0.500

U Undetected; the analyte was analyzed for, but not detected.

Microbac

MW 3/27/09

29

Sample Number: L09010132-29
Client ID: MRO8-EB01010709-SS
Matrix: Water
Workgroup Number: WG292364
Collect Date: 01/07/2009 11:00
Sample Tag: 01

PrePrep Method: NONE
Prep Method: 7470A
Analytical Method: 7470A
Analyst: ADC
Dilution: 1
Units: ug/L

Instrument: HYDRA
Prep Date: 01/13/2009 07:51
Cal Date: 01/13/2009 11:40
Run Date: 01/13/2009 12:06
File ID: HY.011309.120630

Analyte	CAS. Number	Result	Qual	RL	MDL
Mercury	7439-97-6		U	0.400	0.100

U Undetected; the analyte was analyzed for, but not detected.

Microbac

2081 MW 3/27/09

ENVIRONMENTAL
Data Services, Inc.

METALS

USEPA Region IV - Level IV Review

Site: MCB Camp Lejeune, TO-09 SDG #: L09010169

Client: CH2M HILL, Inc., Virginia Beach, Virginia Date: March 28, 2009

Laboratory: Microbac Laboratories, Inc., Marietta, Ohio Reviewer: Nancy Weaver

EDS ID	Client Sample ID	Laboratory Sample ID	Matrix
1	MR08-SS281-09A	L09010169-01	Soil
2	MR08-IS281-9-10-09A	L09010169-02	Soil
3	MR08-SS282-09A	L09010169-03	Soil
4	MR08-IS282-9-10-09A	L09010169-04	Soil
5	MR08-SS297-09A	L09010169-05	Soil
6	MR08-IS297-6-7-09A	L09010169-06	Soil
7	MR08-SS298-09A	L09010169-07	Soil
8	MR08-IS298-6-7-09A	L09010169-08	Soil
9	MR08-SS305-09A	L09010169-09	Soil
10	MR08-IS305-6-7-09A	L09010169-10	Soil
11	MR08-SS306-09A	L09010169-11	Soil
12	MR08-IS306-5-6-09A	L09010169-12	Soil
13	MR08-SS206-09A	L09010169-13	Soil
14	MR08-IS206-6-7-09A	L09010169-14	Soil
15	MR08-SS207-09A	L09010169-15	Soil
16	MR08-IS207-6-7-09A	L09010169-16	Soil
17	MR08-SS208-09A	L09010169-17	Soil
18	MR08-IS208-6-7-09A	L09010169-18	Soil
19	MR08-SS228-09A	L09010169-19	Soil
20	MR08-IS228-7-8-09A	L09010169-20	Soil
21	MR08-SS229-09A	L09010169-21	Soil
22	MR08-SS229D-09A	L09010169-22	Soil
23	MR08-IS229-6-7-09A	L09010169-23	Soil
24	MR08-IS229D-6-7-09A	L09010169-24	Soil
25	MR08-SS227-09A	L09010169-25	Soil
26	MR08-IS227-6-7-09A	L09010169-26	Soil
27	MR08-SS209-09A	L09010169-27	Soil
28	MR08-SS209D-09A	L09010169-28	Soil
29	MR08-EB-010108-09-SS	L09010169-29	Water

The USEPA "Contract Laboratory Program National Functional Guidelines for Inorganic Data Review," October 2004, and professional judgement were used in evaluating the data in this summary report.

Holding Times - All samples were prepared and analyzed within 28 days for mercury and 180 days for all other metals.

Calibration - The ICV and CCV %R values were acceptable.

Method and Calibration Blanks - The method blanks and continuing calibration blanks exhibited the following contamination.

Compound	Conc. ug/L	Action Level ug/L	Qualifier	Affected Samples
Barium	3.79	18.95	U	29

Field and Equipment Blank - Field QC results are summarized below.

Blank ID	Compound	Conc. ug/L	Action Level mg/kg	Qualifier	Affected Samples
MR08-FB01011009	None - ND	-	-	-	-
MR08-EB-010108-09-SS	Chromium	2.69	0.45	None	All >5X

ICP Interference Check Sample - All %R values were acceptable.

MS/MSD - The MS/MSD sample exhibited acceptable %R and RPD values except the following.

MS/MSD Sample ID	Compound	MS/MSD %R/RPD	Qualifier	Affected Samples
Reference (WG292429)	Chromium	128%/Ok/Ok	J	1-12
Reference (WG292704)	Lead	69.4%/17.7%/55.8	J/UJ	1-14

LCS - The LCS samples exhibited acceptable %R values.

ICP Serial Dilution - The ICP serial dilution sample exhibited acceptable %D values except the following.

ICP Sample ID	Compound	%D	Qualifier	Affected Samples
Reference	Mercury	16.90%	None	All ND

Field Duplicates - Field duplicate results are summarized below.

Compound	MR08-SS229-09A mg/kg	MR08-SS229D-09A mg/kg	RPD	Qualifier
Silver	0.213	0.778 U	NC	None
Barium	7.72	6.57	16%	None
Cadmium	0.0643	0.158 U	NC	None
Chromium	6.13	3.69	50%	None
Arsenic	0.587	0.652	10%	None
Lead	2.30	2.78	19%	None
Selenium	0.110	0.254	79%	None

Compound	MR08-IS229-6-7-09A mg/kg	MR08-IS229D-6-7-09A mg/kg	RPD	Qualifier
Barium	15.8	11.6	31%	None
Chromium	10.5	4.89	73%	None
Arsenic	0.293	0.284	3%	None
Lead	6.51	4.71	32%	None
Selenium	0.138	0.195	34%	None
Mercury	0.0283	0.0355	23%	None

Compound	MR08-SS209-09A mg/kg	MR08-SS209D-09A mg/kg	RPD	Qualifier
Barium	8.22	10.6	25%	None
Cadmium	0.154	0.102	41%	None
Chromium	6.50	7.01	8%	None
Arsenic	1.89	1.29	38%	None
Lead	18.1	20.5	12%	None
Selenium	0.240	0.178	30%	None

Compound Quantitation - No discrepancies were identified.

Report Number: L09010169

Report Date : February 3, 2009

Sample Number: L09010169-01
Client ID: MR08-SS281-09A
Matrix: Soil
Workgroup Number: WG292429
Collect Date: 01/08/2009 08:10
Sample Tag: 01

PrePrep Method: NONE
Prep Method: 3051
Analytical Method: 6010B
Analyst: KHR
Dilution: 1
Units: mg/kg

Instrument: IRIS-ICP
Prep Date: 01/13/2009 11:58
Cal Date: 01/14/2009 10:00
Run Date: 01/14/2009 12:15
File ID: IR.011409.121500
Percent Solid: 97.4

Analyte	CAS. Number	Result	Qual	RL	MDL
Silver, Total	7440-22-4	0.297	J	0.784	0.196
Barium, Total	7440-39-3	4.68		0.392	0.0784
Cadmium, Total	7440-43-9	0.0490	J	0.157	0.0392
Chromium, Total	7440-47-3	2.44 J		0.784	0.0940

MSH

J Estimated ; the analyte concentration was less than the low standard (LOQ)

Microbac

15 QW 3/28/09

Report Number: L09010169

Report Date : February 3, 2009

1

Sample Number:	L09010169-01	PrePrep Method:	NONE	Instrument:	ELAN-ICP
Client ID:	MR08-SS281-09A	Prep Method:	3051	Prep Date:	01/13/2009 06:41
Matrix:	Soil	Analytical Method:	6020	Cal Date:	01/20/2009 17:55
Workgroup Number:	WG292704	Analyst:	WTD	Run Date:	01/20/2009 19:06
Collect Date:	01/08/2009 08:10	Dilution:	1	File ID:	EL.012009.190641
Sample Tag:	01	Units:	mg/kg	Percent Solid:	97.4

Analyte	CAS. Number	Result	Qual	RL	MDL
Arsenic, Total	7440-38-2	0.325		0.307	0.0768
Lead, Total	7439-92-1	13.3 J		0.410	0.102
Selenium, Total	7782-49-2	0.144	J	0.410	0.102

MSL

J Estimated ; the analyte concentration was less than the low standard (LOQ)

Microbac

961 lw 3/28/09

Report Number: L09010169
Report Date : February 3, 2009

Sample Number: L09010169-01
Client ID: MR08-SS281-09A
Matrix: Soil
Workgroup Number: WG292370
Collect Date: 01/08/2009 08:10
Sample Tag: 01

PrePrep Method: NONE
Prep Method: 7471A
Analytical Method: 7471A
Analyst: ADC
Dilution: 1
Units: mg/kg

Instrument: HYDRA
Prep Date: 01/13/2009 08:23
Cal Date: 01/14/2009 09:59
Run Date: 01/14/2009 10:21
File ID: HY.011409.102115
Percent Solid: 97.4

Analyte	CAS. Number	Result	Qual	RL	MDL
Mercury, Total	7439-97-6		U	0.0962	0.0192

U Undetected; the analyte was analyzed for, but not detected.

Microbac

2116 MW 3/28/09

2

Sample Number: L09010169-02
Client ID: MR08-IS281-9-10-09A
Matrix: Soil
Workgroup Number: WG292429
Collect Date: 01/08/2009 08:35
Sample Tag: 01

PrePrep Method: NONE
Prep Method: 3051
Analytical Method: 6010B
Analyst: KHR
Dilution: 1
Units: mg/kg

Instrument: IRIS-ICP
Prep Date: 01/13/2009 11:58
Cal Date: 01/14/2009 10:00
Run Date: 01/14/2009 12:40
File ID: IR.011409.124000
Percent Solid: 88.5

Analyte	CAS. Number	Result	Qual	RL	MDL
Silver, Total	7440-22-4		U	0.833	0.208
Barium, Total	7440-39-3	4.72		0.417	0.0833
Cadmium, Total	7440-43-9		U	0.167	0.0417
Chromium, Total	7440-47-3	3.93 J		0.833	0.100

MSH

U Undetected; the analyte was analyzed for, but not detected.

Microbac

16 LW
3/28/09

2

Sample Number: L09010169-02
Client ID: MR08-IS281-9-10-09A
Matrix: Soil
Workgroup Number: WG292704
Collect Date: 01/08/2009 08:35
Sample Tag: 01

PrePrep Method: NONE
Prep Method: 3051
Analytical Method: 6020
Analyst: WTD
Dilution: 1
Units: mg/kg

Instrument: ELAN-ICP
Prep Date: 01/13/2009 06:41
Cal Date: 01/20/2009 17:55
Run Date: 01/20/2009 19:25
File ID: EL.012009.192516
Percent Solid: 88.5

Analyte	CAS. Number	Result	Qual	RL	MDL
Arsenic, Total	7440-38-2	9.59		0.338	0.0844
Lead, Total	7439-92-1	1.59 J		0.450	0.113
Selenium, Total	7782-49-2		U	0.450	0.113

MSL

U Undetected; the analyte was analyzed for, but not detected.

Microbac

962 lw 3/28/09

2

Sample Number:	L09010169-02	PrePrep Method:	NONE	Instrument:	HYDRA
Client ID:	MR08-IS281-9-10-09A	Prep Method:	7471A	Prep Date:	01/13/2009 08:24
Matrix:	Soil	Analytical Method:	7471A	Cal Date:	01/14/2009 09:59
Workgroup Number:	WG292370	Analyst:	ADC	Run Date:	01/14/2009 10:23
Collect Date:	01/08/2009 08:35	Dilution:	1	File ID:	HY.011409.102303
Sample Tag:	01	Units:	mg/kg	Percent Solid:	88.5

Analyte	CAS. Number	Result	Qual	RL	MDL
Mercury, Total	7439-97-6		U	0.112	0.0225

U Undetected; the analyte was analyzed for, but not detected.

Microbac

2117 JW 3/28/09

3

Sample Number: L09010169-03
Client ID: MR08-SS282-09A
Matrix: Soil
Workgroup Number: WG292429
Collect Date: 01/08/2009 08:50
Sample Tag: 01

PrePrep Method: NONE
Prep Method: 3051
Analytical Method: 6010B
Analyst: KHR
Dilution: 1
Units: mg/kg

Instrument: IRIS-ICP
Prep Date: 01/13/2009 11:58
Cal Date: 01/14/2009 10:00
Run Date: 01/14/2009 12:46
File ID: IR.011409.124600
Percent Solid: 95.3

Analyte	CAS. Number	Result	Qual	RL	MDL
Silver, Total	7440-22-4	0.208	J	0.759	0.190
Barium, Total	7440-39-3	5.11		0.379	0.0759
Cadmium, Total	7440-43-9	0.0873	J	0.152	0.0379
Chromium, Total	7440-47-3	4.21 J		0.759	0.0910

MSH

J Estimated ; the analyte concentration was less than the low standard (LOQ)

Microbac

KLW
3/28/09

3

Sample Number: L09010169-03
Client ID: MR08-SS282-09A
Matrix: Soil
Workgroup Number: WG292704
Collect Date: 01/08/2009 08:50
Sample Tag: 01

PrePrep Method: NONE
Prep Method: 3051
Analytical Method: 6020
Analyst: WTD
Dilution: 1
Units: mg/kg

Instrument: ELAN-ICP
Prep Date: 01/13/2009 06:41
Cal Date: 01/20/2009 17:55
Run Date: 01/20/2009 19:43
File ID: EL.012009.194355
Percent Solid: 95.3

Analyte	CAS. Number	Result	Qual	RL	MDL
Arsenic, Total	7440-38-2	0.823		0.312	0.0781
Lead, Total	7439-92-1	1.44 J		0.416	0.104
Selenium, Total	7782-49-2	0.135	J	0.416	0.104

MSL

J Estimated ; the analyte concentration was less than the low standard (LOQ)

Microbac

963 aw 3/28/09

3

Sample Number:	L09010169-03	PrePrep Method:	NONE	Instrument:	HYDRA
Client ID:	MR08-SS282-09A	Prep Method:	7471A	Prep Date:	01/13/2009 08:24
Matrix:	Soil	Analytical Method:	7471A	Cal Date:	01/14/2009 09:59
Workgroup Number:	WG292370	Analyst:	ADC	Run Date:	01/14/2009 10:25
Collect Date:	01/08/2009 08:50	Dilution:	1	File ID:	HY.011409.102509
Sample Tag:	01	Units:	mg/kg	Percent Solid:	95.3

Analyte	CAS. Number	Result	Qual	RL	MDL
Mercury, Total	7439-97-6		U	0.104	0.0208

U Undetected; the analyte was analyzed for, but not detected.

Microbac

2118 lw 3/28/09

4

Sample Number: L09010169-04
Client ID: MR08-IS282-9-10-09A
Matrix: Soil
Workgroup Number: WG292429
Collect Date: 01/08/2009 09:05
Sample Tag: 01

PrePrep Method: NONE
Prep Method: 3051
Analytical Method: 6010B
Analyst: KHR
Dilution: 1
Units: mg/kg

Instrument: IRIS-ICP
Prep Date: 01/13/2009 11:58
Cal Date: 01/14/2009 10:00
Run Date: 01/14/2009 12:52
File ID: IR.011409.125200
Percent Solid: 84.9

Analyte	CAS. Number	Result	Qual	RL	MDL
Silver, Total	7440-22-4		U	0.884	0.221
Barium, Total	7440-39-3	10.7		0.442	0.0884
Cadmium, Total	7440-43-9		U	0.177	0.0442
Chromium, Total	7440-47-3	13.6 J		0.884	0.106

MSH

U Undetected; the analyte was analyzed for, but not detected.

Microbac

18 lew 3/2/09

4

Sample Number: L09010169-04
Client ID: MR08-IS282-9-10-09A
Matrix: Soil
Workgroup Number: WG292704
Collect Date: 01/08/2009 09:05
Sample Tag: 01

PrePrep Method: NONE
Prep Method: 3051
Analytical Method: 6020
Analyst: WTD
Dilution: 1
Units: mg/kg

Instrument: ELAN-ICP
Prep Date: 01/13/2009 06:41
Cal Date: 01/20/2009 17:55
Run Date: 01/20/2009 19:50
File ID: EL.012009.195009
Percent Solid: 84.9

Analyte	CAS. Number	Result	Qual	RL	MDL
Arsenic, Total	7440-38-2	0.806		0.347	0.0867
Lead, Total	7439-92-1	3.14 J		0.463	0.116
Selenium, Total	7782-49-2		U	0.463	0.116

MSL

U Undetected; the analyte was analyzed for, but not detected.

Microbac

964 MW 3/28/09

4

Sample Number: L09010169-04
Client ID: MR08-IS282-9-10-09A
Matrix: Soil
Workgroup Number: WG292370
Collect Date: 01/08/2009 09:05
Sample Tag: 01

PrePrep Method: NONE
Prep Method: 7471A
Analytical Method: 7471A
Analyst: ADC
Dilution: 1
Units: mg/kg

Instrument: HYDRA
Prep Date: 01/13/2009 08:25
Cal Date: 01/14/2009 09:59
Run Date: 01/14/2009 10:26
File ID: HY.011409.102651
Percent Solid: 84.9

Analyte	CAS. Number	Result	Qual	RL	MDL
Mercury, Total	7439-97-6		U	0.109	0.0219

U Undetected; the analyte was analyzed for, but not detected.

Microbac

2119 lus 3/28/09

5

Sample Number: L09010169-05
Client ID: MR08-SS297-09A
Matrix: Soil
Workgroup Number: WG292429
Collect Date: 01/08/2009 09:25
Sample Tag: 01

PrePrep Method: NONE
Prep Method: 3051
Analytical Method: 6010B
Analyst: KHR
Dilution: 1
Units: mg/kg

Instrument: IRIS-ICP
Prep Date: 01/13/2009 11:58
Cal Date: 01/14/2009 10:00
Run Date: 01/14/2009 13:10
File ID: IR.011409.131000
Percent Solid: 91.3

Analyte	CAS. Number	Result	Qual	RL	MDL
Silver, Total	7440-22-4		U	0.796	0.199
Barium, Total	7440-39-3	3.95		0.398	0.0796
Cadmium, Total	7440-43-9		U	0.159	0.0398
Chromium, Total	7440-47-3	2.59 J		0.796	0.0956

MSH

U Undetected; the analyte was analyzed for, but not detected.

Microbac

19 QW 3/28/09

5

Sample Number: L09010169-05
Client ID: MR08-SS297-09A
Matrix: Soil
Workgroup Number: WG292704
Collect Date: 01/08/2009 09:25
Sample Tag: 01

PrePrep Method: NONE
Prep Method: 3051
Analytical Method: 6020
Analyst: WTD
Dilution: 1
Units: mg/kg

Instrument: ELAN-ICP
Prep Date: 01/13/2009 06:41
Cal Date: 01/20/2009 17:55
Run Date: 01/20/2009 20:09
File ID: EL.012009.200925
Percent Solid: 91.3

Analyte	CAS. Number	Result	Qual	RL	MDL
Arsenic, Total	7440-38-2	0.238	J	0.323	0.0808
Lead, Total	7439-92-1	1.93 J		0.431	0.108
Selenium, Total	7782-49-2	0.116	J	0.431	0.108

MSL

J Estimated ; the analyte concentration was less than the low standard (LOQ)

Microbac

965 lw 3/28/09

5

Sample Number: L09010169-05
Client ID: MR08-SS297-09A
Matrix: Soil
Workgroup Number: WG292370
Collect Date: 01/08/2009 09:25
Sample Tag: 01

PrePrep Method: NONE
Prep Method: 7471A
Analytical Method: 7471A
Analyst: ADC
Dilution: 1
Units: mg/kg

Instrument: HYDRA
Prep Date: 01/13/2009 08:25
Cal Date: 01/14/2009 09:59
Run Date: 01/14/2009 10:32
File ID: HY.011409.103252
Percent Solid: 91.3

Analyte	CAS. Number	Result	Qual	RL	MDL
Mercury, Total	7439-97-6		U	0.104	0.0209

U Undetected; the analyte was analyzed for, but not detected.

Microbac

2120 aw 3/28/09

6

Sample Number: L09010169-06
Client ID: MR08-IS297-6-7-09A
Matrix: Soil
Workgroup Number: WG292429
Collect Date: 01/08/2009 09:40
Sample Tag: 01

PrePrep Method: NONE
Prep Method: 3051
Analytical Method: 6010B
Analyst: KHR
Dilution: 1
Units: mg/kg

Instrument: IRIS-ICP
Prep Date: 01/13/2009 11:58
Cal Date: 01/14/2009 10:00
Run Date: 01/14/2009 13:16
File ID: IR.011409.131600
Percent Solid: 89.3

Analyte	CAS. Number	Result	Qual	RL	MDL
Silver, Total	7440-22-4		U	0.856	0.214
Barium, Total	7440-39-3	8.63		0.428	0.0856
Cadmium, Total	7440-43-9		U	0.171	0.0428
Chromium, Total	7440-47-3	5.11 J		0.856	0.103

MSH

U Undetected; the analyte was analyzed for, but not detected.

Microbac

20 lw 3/28/09

6

Sample Number: L09010169-06
Client ID: MR08-IS297-6-7-09A
Matrix: Soil
Workgroup Number: WG292704
Collect Date: 01/08/2009 09:40
Sample Tag: 01

PrePrep Method: NONE
Prep Method: 3051
Analytical Method: 6020
Analyst: WTD
Dilution: 1
Units: mg/kg

Instrument: ELAN-ICP
Prep Date: 01/13/2009 06:41
Cal Date: 01/20/2009 17:55
Run Date: 01/20/2009 20:15
File ID: EL.012009.201540
Percent Solid: 89.3

Analyte	CAS. Number	Result	Qual	RL	MDL
Arsenic, Total	7440-38-2	0.266	J	0.321	0.0803
Lead, Total	7439-92-1	1.94 J		0.428	0.107
Selenium, Total	7782-49-2		U	0.428	0.107

MSL

U Undetected; the analyte was analyzed for, but not detected.
J Estimated ; the analyte concentration was less than the low standard (LOQ)

Microbac

 lw 3/28/09

6

Sample Number:	L09010169-06	PrePrep Method:	NONE	Instrument:	HYDRA
Client ID:	MR08-IS297-6-7-09A	Prep Method:	7471A	Prep Date:	01/13/2009 08:26
Matrix:	Soil	Analytical Method:	7471A	Cal Date:	01/14/2009 09:59
Workgroup Number:	WG292370	Analyst:	ADC	Run Date:	01/14/2009 10:35
Collect Date:	01/08/2009 09:40	Dilution:	1	File ID:	HY.011409.103530
Sample Tag:	01	Units:	mg/kg	Percent Solid:	89.3

Analyte	CAS. Number	Result	Qual	RL	MDL
Mercury, Total	7439-97-6		U	0.106	0.0212

U Undetected; the analyte was analyzed for, but not detected.

Microbac

2121 lw 3/28/09

7

Sample Number: L09010169-07
Client ID: MR08-SS298-09A
Matrix: Soil
Workgroup Number: WG292429
Collect Date: 01/08/2009 09:55
Sample Tag: 01

PrePrep Method: NONE
Prep Method: 3051
Analytical Method: 6010B
Analyst: KHR
Dilution: 1
Units: mg/kg

Instrument: IRIS-ICP
Prep Date: 01/13/2009 11:58
Cal Date: 01/14/2009 10:00
Run Date: 01/14/2009 13:22
File ID: IR.011409.132200
Percent Solid: 83.9

Analyte	CAS. Number	Result	Qual	RL	MDL
Silver, Total	7440-22-4	0.216	J	0.818	0.204
Barium, Total	7440-39-3	8.43		0.409	0.0818
Cadmium, Total	7440-43-9	0.193		0.164	0.0409
Chromium, Total	7440-47-3	9.02 J		0.818	0.0981

MSH

J Estimated ; the analyte concentration was less than the low standard (LOQ)

Microbac

21 lw 3/28/09

7

Sample Number: L09010169-07
Client ID: MR08-SS298-09A
Matrix: Soil
Workgroup Number: WG292704
Collect Date: 01/08/2009 09:55
Sample Tag: 01

PrePrep Method: NONE
Prep Method: 3051
Analytical Method: 6020
Analyst: WTD
Dilution: 1
Units: mg/kg

Instrument: ELAN-ICP
Prep Date: 01/13/2009 06:41
Cal Date: 01/20/2009 17:55
Run Date: 01/20/2009 20:21
File ID: EL.012009.202153
Percent Solid: 83.9

Analyte	CAS. Number	Result	Qual	RL	MDL
Arsenic, Total	7440-38-2	0.715		0.339	0.0848
Lead, Total	7439-92-1	3.37 J		0.452	0.113
Selenium, Total	7782-49-2	0.358	J	0.452	0.113

MSL

J Estimated ; the analyte concentration was less than the low standard (LOQ)

Microbac

967 lw 3/28/09

7

Sample Number:	L09010169-07	PrePrep Method:	NONE	Instrument:	HYDRA
Client ID:	MR08-SS298-09A	Prep Method:	7471A	Prep Date:	01/13/2009 08:26
Matrix:	Soil	Analytical Method:	7471A	Cal Date:	01/14/2009 09:59
Workgroup Number:	WG292370	Analyst:	ADC	Run Date:	01/14/2009 10:37
Collect Date:	01/08/2009 09:55	Dilution:	1	File ID:	HY.011409.103715
Sample Tag:	01	Units:	mg/kg	Percent Solid:	83.9

Analyte	CAS. Number	Result	Qual	RL	MDL
Mercury, Total	7439-97-6		U	0.115	0.0230

U Undetected; the analyte was analyzed for, but not detected.

Microbac

2122

lw
3/28/09

8

Sample Number: L09010169-08
Client ID: MR08-IS298-6-7-09A
Matrix: Soil
Workgroup Number: WG292429
Collect Date: 01/08/2009 10:10
Sample Tag: 01

PrePrep Method: NONE
Prep Method: 3051
Analytical Method: 6010B
Analyst: KHR
Dilution: 1
Units: mg/kg

Instrument: IRIS-ICP
Prep Date: 01/13/2009 11:58
Cal Date: 01/14/2009 10:00
Run Date: 01/14/2009 13:28
File ID: IR.011409.132800
Percent Solid: 79.1

Analyte	CAS. Number	Result	Qual	RL	MDL
Silver, Total	7440-22-4		U	0.964	0.241
Barium, Total	7440-39-3	5.57		0.482	0.0964
Cadmium, Total	7440-43-9		U	0.193	0.0482
Chromium, Total	7440-47-3	4.45 J		0.964	0.116

MSH

U Undetected; the analyte was analyzed for, but not detected.

Microbac

22 DW 3/28/09

8

Sample Number: L09010169-08
Client ID: MR08-IS298-6-7-09A
Matrix: Soil
Workgroup Number: WG292704
Collect Date: 01/08/2009 10:10
Sample Tag: 01

PrePrep Method: NONE
Prep Method: 3051
Analytical Method: 6020
Analyst: WTD
Dilution: 1
Units: mg/kg

Instrument: ELAN-ICP
Prep Date: 01/13/2009 06:41
Cal Date: 01/20/2009 17:55
Run Date: 01/20/2009 20:28
File ID: EL.012009.202804
Percent Solid: 79.1

Analyte	CAS. Number	Result	Qual	RL	MDL
Arsenic, Total	7440-38-2	0.436		0.368	0.0921
Lead, Total	7439-92-1	1.20 J		0.491	0.123
Selenium, Total	7782-49-2		U	0.491	0.123

MSL

U Undetected; the analyte was analyzed for, but not detected.

Microbac

968 lw 3/28/09

8

Sample Number: L09010169-08
Client ID: MR08-IS298-6-7-09A
Matrix: Soil
Workgroup Number: WG292370
Collect Date: 01/08/2009 10:10
Sample Tag: 01

PrePrep Method: NONE
Prep Method: 7471A
Analytical Method: 7471A
Analyst: ADC
Dilution: 1
Units: mg/kg

Instrument: HYDRA
Prep Date: 01/13/2009 08:27
Cal Date: 01/14/2009 09:59
Run Date: 01/14/2009 10:38
File ID: HY.011409.103859
Percent Solid: 79.1

Analyte	CAS. Number	Result	Qual	RL	MDL
Mercury, Total	7439-97-6		U	0.117	0.0234

U Undetected; the analyte was analyzed for, but not detected.

Microbac

2123

3/28/09

9

Sample Number: L09010169-09
Client ID: MR08-SS305-09A
Matrix: Soil
Workgroup Number: WG292429
Collect Date: 01/08/2009 10:45
Sample Tag: 01

PrePrep Method: NONE
Prep Method: 3051
Analytical Method: 6010B
Analyst: KHR
Dilution: 1
Units: mg/kg

Instrument: IRIS-ICP
Prep Date: 01/13/2009 11:58
Cal Date: 01/14/2009 10:00
Run Date: 01/14/2009 13:34
File ID: IR.011409.133400
Percent Solid: 93.5

Analyte	CAS. Number	Result	Qual	RL	MDL
Silver, Total	7440-22-4		U	0.818	0.204
Barium, Total	7440-39-3	7.33		0.409	0.0818
Cadmium, Total	7440-43-9	0.198		0.164	0.0409
Chromium, Total	7440-47-3	4.52 J		0.818	0.0982

MSH

U Undetected; the analyte was analyzed for, but not detected.

Microbac

23 OW 3/28/09

9.

Sample Number: L09010169-09
Client ID: MR08-SS305-09A
Matrix: Soil
Workgroup Number: WG292704
Collect Date: 01/08/2009 10:45
Sample Tag: 01

PrePrep Method: NONE
Prep Method: 3051
Analytical Method: 6020
Analyst: WTD
Dilution: 1
Units: mg/kg

Instrument: ELAN-ICP
Prep Date: 01/13/2009 06:41
Cal Date: 01/20/2009 17:55
Run Date: 01/20/2009 20:34
File ID: EL.012009.203416
Percent Solid: 93.5

Analyte	CAS. Number	Result	Qual	RL	MDL
Arsenic, Total	7440-38-2	0.304	J	0.314	0.0785
Lead, Total	7439-92-1	9.99 J		0.419	0.105
Selenium, Total	7782-49-2	0.189	J	0.419	0.105

MSL

J Estimated ; the analyte concentration was less than the low standard (LOQ)

Microbac

969 lew 3/28/09

9

Sample Number:	L09010169-09	PrePrep Method:	NONE	Instrument:	HYDRA
Client ID:	MR08-SS305-09A	Prep Method:	7471A	Prep Date:	01/13/2009 08:28
Matrix:	Soil	Analytical Method:	7471A	Cal Date:	01/14/2009 09:59
Workgroup Number:	WG292370	Analyst:	ADC	Run Date:	01/14/2009 10:41
Collect Date:	01/08/2009 10:45	Dilution:	1	File ID:	HY.011409.104125
Sample Tag:	01	Units:	mg/kg	Percent Solid:	93.5

Analyte	CAS. Number	Result	Qual	RL	MDL
Mercury, Total	7439-97-6		U	0.104	0.0208

U Undetected; the analyte was analyzed for, but not detected.

Microbac

2124 JLW 3/28/09

10

Sample Number: L09010169-10
Client ID: MR08-IS305-6-7-09A
Matrix: Soil
Workgroup Number: WG292429
Collect Date: 01/08/2009 11:00
Sample Tag: 01

PrePrep Method: NONE
Prep Method: 3051
Analytical Method: 6010B
Analyst: KHR
Dilution: 1
Units: mg/kg

Instrument: IRIS-ICP
Prep Date: 01/13/2009 11:58
Cal Date: 01/14/2009 10:00
Run Date: 01/14/2009 13:40
File ID: IR.011409.134000
Percent Solid: 93.5

Analyte	CAS. Number	Result	Qual	RL	MDL
Silver, Total	7440-22-4		U	0.763	0.191
Barium, Total	7440-39-3	1.80		0.381	0.0763
Cadmium, Total	7440-43-9		U	0.153	0.0381
Chromium, Total	7440-47-3	2.01 J		0.763	0.0915

MSH

U Undetected; the analyte was analyzed for, but not detected.

Microbac

24 LW 3/28/09

10

Sample Number: L09010169-10
Client ID: MR08-IS305-6-7-09A
Matrix: Soil
Workgroup Number: WG292704
Collect Date: 01/08/2009 11:00
Sample Tag: 01

PrePrep Method: NONE
Prep Method: 3051
Analytical Method: 6020
Analyst: WTD
Dilution: 1
Units: mg/kg

Instrument: ELAN-ICP
Prep Date: 01/13/2009 06:41
Cal Date: 01/20/2009 17:55
Run Date: 01/20/2009 20:40
File ID: EL.012009.204028
Percent Solid: 93.5

Analyte	CAS. Number	Result	Qual	RL	MDL
Arsenic, Total	7440-38-2	0.800		0.303	0.0757
Lead, Total	7439-92-1	2.05 J		0.404	0.101
Selenium, Total	7782-49-2	0.357	J	0.404	0.101

MSL

J Estimated ; the analyte concentration was less than the low standard (LOQ)

Microbac

970 MW 3/28/09

10

Sample Number: L09010169-10
Client ID: MR08-IS305-6-7-09A
Matrix: Soil
Workgroup Number: WG292370
Collect Date: 01/08/2009 11:00
Sample Tag: 01

PrePrep Method: NONE
Prep Method: 7471A
Analytical Method: 7471A
Analyst: ADC
Dilution: 1
Units: mg/kg

Instrument: HYDRA
Prep Date: 01/13/2009 08:28
Cal Date: 01/14/2009 09:59
Run Date: 01/14/2009 10:44
File ID: HY.011409.104407
Percent Solid: 93.5

Analyte	CAS. Number	Result	Qual	RL	MDL
Mercury, Total	7439-97-6		U	0.100	0.0201

U Undetected; the analyte was analyzed for, but not detected.

Microbac

MW
3/28/09

11

Sample Number: L09010169-11
Client ID: MR08-SS306-09A
Matrix: Soil
Workgroup Number: WG292429
Collect Date: 01/08/2009 11:10
Sample Tag: 01

PrePrep Method: NONE
Prep Method: 3051
Analytical Method: 6010B
Analyst: KHR
Dilution: 1
Units: mg/kg

Instrument: IRIS-ICP
Prep Date: 01/13/2009 11:58
Cal Date: 01/14/2009 10:00
Run Date: 01/14/2009 13:47
File ID: IR.011409.134700
Percent Solid: 93.9

Analyte	CAS. Number	Result	Qual	RL	MDL
Silver, Total	7440-22-4	0.342	J	0.796	0.199
Barium, Total	7440-39-3	8.41		0.398	0.0796
Cadmium, Total	7440-43-9	0.188		0.159	0.0398
Chromium, Total	7440-47-3	6.68 J		0.796	0.0955

MSH

J Estimated ; the analyte concentration was less than the low standard (LOQ)

Microbac

 lw 3/28/09

11

Sample Number: L09010169-11
Client ID: MR08-SS306-09A
Matrix: Soil
Workgroup Number: WG292704
Collect Date: 01/08/2009 11:10
Sample Tag: 01

PrePrep Method: NONE
Prep Method: 3051
Analytical Method: 6020
Analyst: WTD
Dilution: 1
Units: mg/kg

Instrument: ELAN-ICP
Prep Date: 01/13/2009 06:41
Cal Date: 01/20/2009 17:55
Run Date: 01/20/2009 20:46
File ID: EL.012009.204640
Percent Solid: 93.9

Analyte	CAS. Number	Result	Qual	RL	MDL
Arsenic, Total	7440-38-2		U	0.313	0.0783
Lead, Total	7439-92-1	0.610 J		0.418	0.104
Selenium, Total	7782-49-2		U	0.418	0.104

MSL

U Undetected; the analyte was analyzed for, but not detected.

Microbac

971 lus 3/28/09

11

Sample Number: L09010169-11
Client ID: MR08-SS306-09A
Matrix: Soil
Workgroup Number: WG292370
Collect Date: 01/08/2009 11:10
Sample Tag: 01

PrePrep Method: NONE
Prep Method: 7471A
Analytical Method: 7471A
Analyst: ADC
Dilution: 1
Units: mg/kg

Instrument: HYDRA
Prep Date: 01/13/2009 08:29
Cal Date: 01/14/2009 09:59
Run Date: 01/14/2009 10:46
File ID: HY.011409.104609
Percent Solid: 93.9

Analyte	CAS. Number	Result	Qual	RL	MDL
Mercury, Total	7439-97-6		U	0.100	0.0200

U Undetected; the analyte was analyzed for, but not detected.

Microbac

2126 lw 3/28/09

12

Sample Number: L09010169-12
Client ID: MR08-IS306-5-6-09A
Matrix: Soil
Workgroup Number: WG292429
Collect Date: 01/08/2009 11:30
Sample Tag: 01

PrePrep Method: NONE
Prep Method: 3051
Analytical Method: 6010B
Analyst: KHR
Dilution: 1
Units: mg/kg

Instrument: IRIS-ICP
Prep Date: 01/13/2009 11:58
Cal Date: 01/14/2009 10:00
Run Date: 01/14/2009 13:53
File ID: IR.011409.135300
Percent Solid: 88.7

Analyte	CAS. Number	Result	Qual	RL	MDL
Silver, Total	7440-22-4		U	0.845	0.211
Barium, Total	7440-39-3	5.41		0.423	0.0845
Cadmium, Total	7440-43-9		U	0.169	0.0423
Chromium, Total	7440-47-3	6.18 J		0.845	0.101

MSH

U Undetected; the analyte was analyzed for, but not detected.

Microbac

 lw 3/28/09

12

Sample Number: L09010169-12
Client ID: MR08-IS306-5-6-09A
Matrix: Soil
Workgroup Number: WG292704
Collect Date: 01/08/2009 11:30
Sample Tag: 01

PrePrep Method: NONE
Prep Method: 3051
Analytical Method: 6020
Analyst: WTD
Dilution: 1
Units: mg/kg

Instrument: ELAN-ICP
Prep Date: 01/13/2009 06:41
Cal Date: 01/20/2009 17:55
Run Date: 01/20/2009 20:52
File ID: EL.012009.205253
Percent Solid: 88.7

Analyte	CAS. Number	Result	Qual	RL	MDL
Arsenic, Total	7440-38-2	0.897		0.319	0.0798
Lead, Total	7439-92-1	2.21 J		0.425	0.106
Selenium, Total	7782-49-2		U	0.425	0.106

MSL

U Undetected; the analyte was analyzed for, but not detected.

Microbac

LW 3/28/09

12

Sample Number: L09010169-12
Client ID: MR08-IS306-5-6-09A
Matrix: Soil
Workgroup Number: WG292370
Collect Date: 01/08/2009 11:30
Sample Tag: 01

PrePrep Method: NONE
Prep Method: 7471A
Analytical Method: 7471A
Analyst: ADC
Dilution: 1
Units: mg/kg

Instrument: HYDRA
Prep Date: 01/13/2009 08:30
Cal Date: 01/14/2009 09:59
Run Date: 01/14/2009 10:47
File ID: HY.011409.104754
Percent Solid: 88.7

Analyte	CAS. Number	Result	Qual	RL	MDL
Mercury, Total	7439-97-6		U	0.111	0.0222

U Undetected; the analyte was analyzed for, but not detected.

Microbac

2127 lw 3/2/09

13

Sample Number: L09010169-13
Client ID: MR08-SS206-09A
Matrix: Soil
Workgroup Number: WG292550
Collect Date: 01/08/2009 13:00
Sample Tag: 01

PrePrep Method: NONE
Prep Method: 3051
Analytical Method: 6010B
Analyst: KHR
Dilution: 1
Units: mg/kg

Instrument: IRIS-ICP
Prep Date: 01/14/2009 06:41
Cal Date: 01/15/2009 09:29
Run Date: 01/15/2009 10:25
File ID: IR.011509.102500
Percent Solid: 87.4

Analyte	CAS. Number	Result	Qual	RL	MDL
Silver, Total	7440-22-4	1.01		0.828	0.207
Barium, Total	7440-39-3	31.4		0.414	0.0828
Cadmium, Total	7440-43-9	3.28		0.166	0.0414
Chromium, Total	7440-47-3	27.7		0.828	0.0994

Microbac

27 lw 3/28/09

13

Sample Number: L09010169-13
Client ID: MR08-SS206-09A
Matrix: Soil
Workgroup Number: WG292704
Collect Date: 01/08/2009 13:00
Sample Tag: DL01

PrePrep Method: NONE
Prep Method: 3051
Analytical Method: 6020
Analyst: WTD
Dilution: 20
Units: mg/kg

Instrument: ELAN-ICP
Prep Date: 01/13/2009 06:41
Cal Date: 01/20/2009 17:55
Run Date: 01/20/2009 20:59
File ID: EL.012009.205906
Percent Solid: 87.4

Analyte	CAS. Number	Result	Qual	RL	MDL
Arsenic, Total	7440-38-2		U	6.66	1.67
Lead, Total	7439-92-1	294 J		8.88	2.22
Selenium, Total	7782-49-2		U	8.88	2.22

MSL

U Undetected; the analyte was analyzed for, but not detected.

Microbac

973 lw 3/28/09

13

Sample Number: L09010169-13
Client ID: MR08-SS206-09A
Matrix: Soil
Workgroup Number: WG292370
Collect Date: 01/08/2009 13:00
Sample Tag: 01

PrePrep Method: NONE
Prep Method: 7471A
Analytical Method: 7471A
Analyst: ADC
Dilution: 1
Units: mg/kg

Instrument: HYDRA
Prep Date: 01/13/2009 08:30
Cal Date: 01/14/2009 09:59
Run Date: 01/14/2009 10:49
File ID: HY.011409.104949
Percent Solid: 87.4

Analyte	CAS. Number	Result	Qual	RL	MDL
Mercury, Total	7439-97-6	0.103	J	0.111	0.0221

J Estimated ; the analyte concentration was less than the low standard (LOQ)

Microbac

2128 JW 3/28/09

14

Sample Number: L09010169-14
Client ID: MR08-IS206-6-7-09A
Matrix: Soil
Workgroup Number: WG292550
Collect Date: 01/08/2009 13:15
Sample Tag: 01

PrePrep Method: NONE
Prep Method: 3051
Analytical Method: 6010B
Analyst: KHR
Dilution: 1
Units: mg/kg

Instrument: IRIS-ICP
Prep Date: 01/14/2009 06:41
Cal Date: 01/15/2009 09:29
Run Date: 01/15/2009 10:50
File ID: IR.011509.105000
Percent Solid: 92.0

Analyte	CAS. Number	Result	Qual	RL	MDL
Silver, Total	7440-22-4		U	0.808	0.202
Barium, Total	7440-39-3	2.84		0.404	0.0808
Cadmium, Total	7440-43-9		U	0.162	0.0404
Chromium, Total	7440-47-3	3.67		0.808	0.0969

U Undetected; the analyte was analyzed for, but not detected.

Microbac

28 LW 3/28/09

14

Sample Number: L09010169-14
Client ID: MR08-IS206-6-7-09A
Matrix: Soil
Workgroup Number: WG292704
Collect Date: 01/08/2009 13:15
Sample Tag: 01

PrePrep Method: NONE
Prep Method: 3051
Analytical Method: 6020
Analyst: WTD
Dilution: 1
Units: mg/kg

Instrument: ELAN-ICP
Prep Date: 01/13/2009 06:41
Cal Date: 01/20/2009 17:55
Run Date: 01/20/2009 21:05
File ID: EL.012009.210519
Percent Solid: 92.0

Analyte	CAS. Number	Result	Qual	RL	MDL
Arsenic, Total	7440-38-2	0.0894	J	0.304	0.0760
Lead, Total	7439-92-1	1.31 J		0.405	0.101
Selenium, Total	7782-49-2		U	0.405	0.101

MSL

U Undetected; the analyte was analyzed for, but not detected.
J Estimated ; the analyte concentration was less than the low standard (LOQ)

Microbac

974 lw 3/28/09

14

Sample Number:	L09010169-14	PrePrep Method:	NONE	Instrument:	HYDRA
Client ID:	MR08-IS206-6-7-09A	Prep Method:	7471A	Prep Date:	01/13/2009 08:31
Matrix:	Soil	Analytical Method:	7471A	Cal Date:	01/14/2009 09:59
Workgroup Number:	WG292370	Analyst:	ADC	Run Date:	01/14/2009 10:12
Collect Date:	01/08/2009 13:15	Dilution:	1	File ID:	HY.011409.101255
Sample Tag:	01	Units:	mg/kg	Percent Solid:	92.0

Analyte	CAS. Number	Result	Qual	RL	MDL
Mercury, Total	7439-97-6		U	0.107	0.0213

U Undetected; the analyte was analyzed for, but not detected.

Microbac

2129 llw 3/28/09

15

Sample Number: L09010169-15
Client ID: MR08-SS207-09A
Matrix: Soil
Workgroup Number: WG292550
Collect Date: 01/08/2009 13:25
Sample Tag: 01

PrePrep Method: NONE
Prep Method: 3051
Analytical Method: 6010B
Analyst: KHR
Dilution: 1
Units: mg/kg

Instrument: IRIS-ICP
Prep Date: 01/14/2009 06:41
Cal Date: 01/15/2009 09:29
Run Date: 01/15/2009 10:56
File ID: IR.011509.105600
Percent Solid: 74.9

Analyte	CAS. Number	Result	Qual	RL	MDL
Silver, Total	7440-22-4	2.71		0.945	0.236
Barium, Total	7440-39-3	30.6		0.472	0.0945
Cadmium, Total	7440-43-9	2.51		0.189	0.0472
Chromium, Total	7440-47-3	20.8		0.945	0.113

Microbac

29 lw 3/28/09

15

Sample Number: L09010169-15
Client ID: MR08-SS207-09A
Matrix: Soil
Workgroup Number: WG292705
Collect Date: 01/08/2009 13:25
Sample Tag: DL01

PrePrep Method: NONE
Prep Method: 3051
Analytical Method: 6020
Analyst: WTD
Dilution: 20
Units: mg/kg

Instrument: ELAN-ICP
Prep Date: 01/13/2009 07:08
Cal Date: 01/20/2009 17:55
Run Date: 01/20/2009 21:55
File ID: EL.012009.215543
Percent Solid: 74.9

Analyte	CAS. Number	Result	Qual	RL	MDL
Lead, Total	7439-92-1	365		10.6	2.65

Microbac

975 RW 3/28/09

15

Sample Number:	L09010169-15	PrePrep Method:	NONE	Instrument:	HYDRA
Client ID:	MR08-SS207-09A	Prep Method:	7471A	Prep Date:	01/13/2009 08:34
Matrix:	Soil	Analytical Method:	7471A	Cal Date:	01/13/2009 14:17
Workgroup Number:	WG292383	Analyst:	ADC	Run Date:	01/13/2009 14:52
Collect Date:	01/08/2009 13:25	Dilution:	1	File ID:	HY.011309.145210
Sample Tag:	01	Units:	mg/kg	Percent Solid:	74.9

Analyte	CAS. Number	Result	Qual	RL	MDL
Mercury, Total	7439-97-6	0.0723	J	0.123	0.0247

J Estimated ; the analyte concentration was less than the low standard (LOQ)

Microbac

2130 lw 3/28/09

16

Sample Number: L09010169-16
Client ID: MR08-IS207-6-7-09A
Matrix: Soil
Workgroup Number: WG292550
Collect Date: 01/08/2009 13:50
Sample Tag: 01

PrePrep Method: NONE
Prep Method: 3051
Analytical Method: 6010B
Analyst: KHR
Dilution: 1
Units: mg/kg

Instrument: IRIS-ICP
Prep Date: 01/14/2009 06:41
Cal Date: 01/15/2009 09:29
Run Date: 01/15/2009 11:02
File ID: IR.011509.110200
Percent Solid: 79.0

Analyte	CAS. Number	Result	Qual	RL	MDL
Silver, Total	7440-22-4		U	0.940	0.235
Barium, Total	7440-39-3	4.69		0.470	0.0940
Cadmium, Total	7440-43-9		U	0.188	0.0470
Chromium, Total	7440-47-3	3.69		0.940	0.113

U Undetected; the analyte was analyzed for, but not detected.

Microbac

30 lew 3/28/09

16

Sample Number:	L09010169-15	PrePrep Method:	NONE	Instrument:	ELAN-ICP
Client ID:	MR08-SS207-09A	Prep Method:	3051	Prep Date:	01/13/2009 07:08
Matrix:	Soil	Analytical Method:	6020	Cal Date:	01/20/2009 17:55
Workgroup Number:	WG292705	Analyst:	WTD	Run Date:	01/20/2009 21:37
Collect Date:	01/08/2009 13:25	Dilution:	1	File ID:	EL.012009.213704
Sample Tag:	01	Units:	mg/kg	Percent Solid:	74.9

Analyte	CAS. Number	Result	Qual	RL	MDL
Arsenic, Total	7440-38-2	1.94		0.397	0.0992
Selenium, Total	7782-49-2	0.401	J	0.529	0.132

J Estimated ; the analyte concentration was less than the low standard (LOQ)

Microbac

RW 3/28/09

16

Sample Number: L09010169-16
Client ID: MR08-IS207-6-7-09A
Matrix: Soil
Workgroup Number: WG292705
Collect Date: 01/08/2009 13:50
Sample Tag: 02

PrePrep Method: NONE
Prep Method: 3051
Analytical Method: 6020
Analyst: WTD
Dilution: 1
Units: mg/kg

Instrument: ELAN-ICP
Prep Date: 01/13/2009 07:08
Cal Date: 01/22/2009 11:38
Run Date: 01/22/2009 17:49
File ID: EL.012209.174939
Percent Solid: 79.0

Analyte	CAS. Number	Result	Qual	RL	MDL
Selenium, Total	7782-49-2	0.128	J	0.493	0.123

J Estimated ; the analyte concentration was less than the low standard (LOQ)

Microbac

977 LW 3/28/09

16

Sample Number: L09010169-16
Client ID: MR08-IS207-6-7-09A
Matrix: Soil
Workgroup Number: WG292705
Collect Date: 01/08/2009 13:50
Sample Tag: 01

PrePrep Method: NONE
Prep Method: 3051
Analytical Method: 6020
Analyst: WTD
Dilution: 1
Units: mg/kg

Instrument: ELAN-ICP
Prep Date: 01/13/2009 07:08
Cal Date: 01/20/2009 17:55
Run Date: 01/20/2009 22:27
File ID: EL.012009.222723
Percent Solid: 79.0

Analyte	CAS. Number	Result	Qual	RL	MDL
Arsenic, Total	7440-38-2	0.318	J	0.370	0.0924
Lead, Total	7439-92-1	1.35		0.493	0.123

J Estimated ; the analyte concentration was less than the low standard (LOQ)

Microbac

978 lw 3/28/09

16

Sample Number:	L09010169-16	PrePrep Method:	NONE	Instrument:	HYDRA
Client ID:	MR08-IS207-6-7-09A	Prep Method:	7471A	Prep Date:	01/13/2009 08:34
Matrix:	Soil	Analytical Method:	7471A	Cal Date:	01/13/2009 14:17
Workgroup Number:	WG292383	Analyst:	ADC	Run Date:	01/13/2009 14:54
Collect Date:	01/08/2009 13:50	Dilution:	1	File ID:	HY.011309.145414
Sample Tag:	01	Units:	mg/kg	Percent Solid:	79.0

Analyte	CAS. Number	Result	Qual	RL	MDL
Mercury, Total	7439-97-6		U	0.124	0.0248

U Undetected; the analyte was analyzed for, but not detected.

Microbac

2131 lw 3/28/09

17

Sample Number: L09010169-17
Client ID: MR08-SS208-09A
Matrix: Soil
Workgroup Number: WG292550
Collect Date: 01/08/2009 14:10
Sample Tag: 01

PrePrep Method: NONE
Prep Method: 3051
Analytical Method: 6010B
Analyst: KHR
Dilution: 1
Units: mg/kg

Instrument: IRIS-ICP
Prep Date: 01/14/2009 06:41
Cal Date: 01/15/2009 09:29
Run Date: 01/15/2009 11:08
File ID: IR.011509.110800
Percent Solid: 91.8

Analyte	CAS. Number	Result	Qual	RL	MDL
Silver, Total	7440-22-4	0.201	J	0.790	0.197
Barium, Total	7440-39-3	13.2		0.395	0.0790
Cadmium, Total	7440-43-9	0.0920	J	0.158	0.0395
Chromium, Total	7440-47-3	9.13		0.790	0.0948

J Estimated ; the analyte concentration was less than the low standard (LOQ)

Microbac

31 lw 3/28/09

17

Sample Number:	L09010169-17	PrePrep Method:	NONE	Instrument:	ELAN-ICP
Client ID:	MR08-SS208-09A	Prep Method:	3051	Prep Date:	01/13/2009 07:08
Matrix:	Soil	Analytical Method:	6020	Cal Date:	01/22/2009 11:38
Workgroup Number:	WG292705	Analyst:	WTD	Run Date:	01/22/2009 18:08
Collect Date:	01/08/2009 14:10	Dilution:	1	File ID:	EL.012209.180819
Sample Tag:	02	Units:	mg/kg	Percent Solid:	91.8

Analyte	CAS. Number	Result	Qual	RL	MDL
Selenium, Total	7782-49-2	0.324	J	0.422	0.106

J Estimated ; the analyte concentration was less than the low standard (LOQ)

Microbac

979 lw 3/28/09

17

Sample Number: L09010169-17
Client ID: MR08-SS208-09A
Matrix: Soil
Workgroup Number: WG292705
Collect Date: 01/08/2009 14:10
Sample Tag: 01

PrePrep Method: NONE
Prep Method: 3051
Analytical Method: 6020
Analyst: WTD
Dilution: 1
Units: mg/kg

Instrument: ELAN-ICP
Prep Date: 01/13/2009 07:08
Cal Date: 01/20/2009 17:55
Run Date: 01/20/2009 22:46
File ID: EL.012009.224603
Percent Solid: 91.8

Analyte	CAS. Number	Result	Qual	RL	MDL
Arsenic, Total	7440-38-2	0.696		0.317	0.0792
Lead, Total	7439-92-1	7.27		0.422	0.106

Microbac

980 lew 3/28/09

17

Sample Number:	L09010169-17	PrePrep Method:	NONE	Instrument:	HYDRA
Client ID:	MR08-SS208-09A	Prep Method:	7471A	Prep Date:	01/13/2009 08:34
Matrix:	Soil	Analytical Method:	7471A	Cal Date:	01/13/2009 14:17
Workgroup Number:	WG292383	Analyst:	ADC	Run Date:	01/13/2009 14:55
Collect Date:	01/08/2009 14:10	Dilution:	1	File ID:	HY.011309.145555
Sample Tag:	01	Units:	mg/kg	Percent Solid:	91.8

Analyte	CAS. Number	Result	Qual	RL	MDL
Mercury, Total	7439-97-6		U	0.108	0.0216

U Undetected; the analyte was analyzed for, but not detected.

Microbac

2132 lew 3/28/09

18

Sample Number: L09010169-18
Client ID: MR08-IS208-6-7-09A
Matrix: Soil
Workgroup Number: WG292550
Collect Date: 01/08/2009 14:20
Sample Tag: 01

PrePrep Method: NONE
Prep Method: 3051
Analytical Method: 6010B
Analyst: KHR
Dilution: 1
Units: mg/kg

Instrument: IRIS-ICP
Prep Date: 01/14/2009 06:41
Cal Date: 01/15/2009 09:29
Run Date: 01/15/2009 11:26
File ID: IR.011509.112600
Percent Solid: 91.2

Analyte	CAS. Number	Result	Qual	RL	MDL
Silver, Total	7440-22-4		U	0.794	0.198
Barium, Total	7440-39-3	10.9		0.397	0.0794
Cadmium, Total	7440-43-9	0.0762	J	0.159	0.0397
Chromium, Total	7440-47-3	6.47		0.794	0.0953

U Undetected; the analyte was analyzed for, but not detected.
J Estimated ; the analyte concentration was less than the low standard (LOQ)

Microbac

32 LW 3/28/09

18

Sample Number: L09010169-18
Client ID: MR08-IS208-6-7-09A
Matrix: Soil
Workgroup Number: WG292705
Collect Date: 01/08/2009 14:20
Sample Tag: 01

PrePrep Method: NONE
Prep Method: 3051
Analytical Method: 6020
Analyst: WTD
Dilution: 1
Units: mg/kg

Instrument: ELAN-ICP
Prep Date: 01/13/2009 07:08
Cal Date: 01/20/2009 17:55
Run Date: 01/20/2009 22:52
File ID: EL.012009.225217
Percent Solid: 91.2

Analyte	CAS. Number	Result	Qual	RL	MDL
Arsenic, Total	7440-38-2	0.598		0.324	0.0811
Lead, Total	7439-92-1	6.46		0.432	0.108

Microbac

981 lw 3/28/09

18

Sample Number:	L09010169-18	PrePrep Method:	NONE	Instrument:	ELAN-ICP
Client ID:	MR08-IS208-6-7-09A	Prep Method:	3051	Prep Date:	01/13/2009 07:08
Matrix:	Soil	Analytical Method:	6020	Cal Date:	01/22/2009 11:38
Workgroup Number:	WG292705	Analyst:	WTD	Run Date:	01/22/2009 18:14
Collect Date:	01/08/2009 14:20	Dilution:	1	File ID:	EL.012209.181434
Sample Tag:	02	Units:	mg/kg	Percent Solid:	91.2

Analyte	CAS. Number	Result	Qual	RL	MDL
Selenium, Total	7782-49-2	0.188	J	0.432	0.108

J Estimated ; the analyte concentration was less than the low standard (LOQ)

Microbac

982 hw 3/28/09

18

Sample Number: L09010169-18
Client ID: MR08-IS208-6-7-09A
Matrix: Soil
Workgroup Number: WG292383
Collect Date: 01/08/2009 14:20
Sample Tag: 01

PrePrep Method: NONE
Prep Method: 7471A
Analytical Method: 7471A
Analyst: ADC
Dilution: 1
Units: mg/kg

Instrument: HYDRA
Prep Date: 01/13/2009 08:34
Cal Date: 01/13/2009 14:17
Run Date: 01/13/2009 14:57
File ID: HY.011309.145753
Percent Solid: 91.2

Analyte	CAS. Number	Result	Qual	RL	MDL
Mercury, Total	7439-97-6		U	0.108	0.0216

U Undetected; the analyte was analyzed for, but not detected.

Microbac

3/28/09

19

Sample Number: L09010169-19
Client ID: MR08-SS228-09A
Matrix: Soil
Workgroup Number: WG292550
Collect Date: 01/08/2009 14:35
Sample Tag: 01

PrePrep Method: NONE
Prep Method: 3051
Analytical Method: 6010B
Analyst: KHR
Dilution: 1
Units: mg/kg

Instrument: IRIS-ICP
Prep Date: 01/14/2009 06:41
Cal Date: 01/15/2009 09:29
Run Date: 01/15/2009 11:32
File ID: IR.011509.113200
Percent Solid: 93.4

Analyte	CAS. Number	Result	Qual	RL	MDL
Silver, Total	7440-22-4		U	0.802	0.201
Barium, Total	7440-39-3	12.7		0.401	0.0802
Cadmium, Total	7440-43-9	0.0642	J	0.160	0.0401
Chromium, Total	7440-47-3	4.63		0.802	0.0963

U Undetected; the analyte was analyzed for, but not detected.
J Estimated ; the analyte concentration was less than the low standard (LOQ)

Microbac

33 lew 3/28/09

19

Sample Number: L09010169-19
Client ID: MR08-SS228-09A
Matrix: Soil
Workgroup Number: WG292705
Collect Date: 01/08/2009 14:35
Sample Tag: 01

PrePrep Method: NONE
Prep Method: 3051
Analytical Method: 6020
Analyst: WTD
Dilution: 1
Units: mg/kg

Instrument: ELAN-ICP
Prep Date: 01/13/2009 07:08
Cal Date: 01/20/2009 17:55
Run Date: 01/20/2009 22:58
File ID: EL.012009.225831
Percent Solid: 93.4

Analyte	CAS. Number	Result	Qual	RL	MDL
Arsenic, Total	7440-38-2	0.602		0.297	0.0743
Lead, Total	7439-92-1	3.30		0.396	0.0990

Microbac

983 lw 3/28/09

19

Sample Number: L09010169-19
Client ID: MR08-SS228-09A
Matrix: Soil
Workgroup Number: WG292705
Collect Date: 01/08/2009 14:35
Sample Tag: 02

PrePrep Method: NONE
Prep Method: 3051
Analytical Method: 6020
Analyst: WTD
Dilution: 1
Units: mg/kg

Instrument: ELAN-ICP
Prep Date: 01/13/2009 07:08
Cal Date: 01/22/2009 11:38
Run Date: 01/22/2009 18:20
File ID: EL.012209.182048
Percent Solid: 93.4

Analyte	CAS. Number	Result	Qual	RL	MDL
Selenium, Total	7782-49-2	0.129	J	0.396	0.0990

J Estimated ; the analyte concentration was less than the low standard (LOQ)

Microbac

984 lw 3/28/09

19

Sample Number: L09010169-19
Client ID: MR08-SS228-09A
Matrix: Soil
Workgroup Number: WG292383
Collect Date: 01/08/2009 14:35
Sample Tag: 01

PrePrep Method: NONE
Prep Method: 7471A
Analytical Method: 7471A
Analyst: ADC
Dilution: 1
Units: mg/kg

Instrument: HYDRA
Prep Date: 01/13/2009 08:34
Cal Date: 01/13/2009 14:17
Run Date: 01/13/2009 15:00
File ID: HY.011309.150005
Percent Solid: 93.4

Analyte	CAS. Number	Result	Qual	RL	MDL
Mercury, Total	7439-97-6		U	0.103	0.0205

U Undetected; the analyte was analyzed for, but not detected.

Microbac

 lw 3/28/09

20

Sample Number: L09010169-20
Client ID: MR08-IS228-7-8-09A
Matrix: Soil
Workgroup Number: WG292550
Collect Date: 01/08/2009 14:55
Sample Tag: 01

PrePrep Method: NONE
Prep Method: 3051
Analytical Method: 6010B
Analyst: KHR
Dilution: 1
Units: mg/kg

Instrument: IRIS-ICP
Prep Date: 01/14/2009 06:41
Cal Date: 01/15/2009 09:29
Run Date: 01/15/2009 11:38
File ID: IR.011509.113800
Percent Solid: 93.3

Analyte	CAS. Number	Result	Qual	RL	MDL
Silver, Total	7440-22-4		U	0.770	0.193
Barium, Total	7440-39-3	8.58		0.385	0.0770
Cadmium, Total	7440-43-9		U	0.154	0.0385
Chromium, Total	7440-47-3	4.92		0.770	0.0924

U Undetected; the analyte was analyzed for, but not detected.

Microbac

34 lw 3/28/09

20

Sample Number: L09010169-20
Client ID: MR08-IS228-7-8-09A
Matrix: Soil
Workgroup Number: WG292705
Collect Date: 01/08/2009 14:55
Sample Tag: 01

PrePrep Method: NONE
Prep Method: 3051
Analytical Method: 6020
Analyst: WTD
Dilution: 1
Units: mg/kg

Instrument: ELAN-ICP
Prep Date: 01/13/2009 07:08
Cal Date: 01/20/2009 17:55
Run Date: 01/20/2009 23:04
File ID: EL.012009.230446
Percent Solid: 93.3

Analyte	CAS. Number	Result	Qual	RL	MDL
Arsenic, Total	7440-38-2	0.0779	J	0.307	0.0769
Lead, Total	7439-92-1	2.75		0.410	0.102

J Estimated ; the analyte concentration was less than the low standard (LOQ)

Microbac

985 lw 3/28/09

20

Sample Number: L09010169-20
Client ID: MR08-IS228-7-8-09A
Matrix: Soil
Workgroup Number: WG292705
Collect Date: 01/08/2009 14:55
Sample Tag: 02

PrePrep Method: NONE
Prep Method: 3051
Analytical Method: 6020
Analyst: WTD
Dilution: 1
Units: mg/kg

Instrument: ELAN-ICP
Prep Date: 01/13/2009 07:08
Cal Date: 01/22/2009 11:38
Run Date: 01/22/2009 18:27
File ID: EL.012209.182703
Percent Solid: 93.3

Analyte	CAS. Number	Result	Qual	RL	MDL
Selenium, Total	7782-49-2		U	0.410	0.102

U Undetected; the analyte was analyzed for, but not detected.

Microbac

 Aes 3/28/09

20

Sample Number: L09010169-20
Client ID: MR08-IS228-7-8-09A
Matrix: Soil
Workgroup Number: WG292383
Collect Date: 01/08/2009 14:55
Sample Tag: 01

PrePrep Method: NONE
Prep Method: 7471A
Analytical Method: 7471A
Analyst: ADC
Dilution: 1
Units: mg/kg

Instrument: HYDRA
Prep Date: 01/13/2009 08:34
Cal Date: 01/13/2009 14:17
Run Date: 01/13/2009 15:02
File ID: HY.011309.150209
Percent Solid: 93.3

Analyte	CAS. Number	Result	Qual	RL	MDL
Mercury, Total	7439-97-6		U	0.103	0.0206

U Undetected; the analyte was analyzed for, but not detected.

Microbac

 MW 3/28/09

21

Sample Number: L09010169-21
Client ID: MR08-SS229-09A
Matrix: Soil
Workgroup Number: WG292550
Collect Date: 01/08/2009 15:05
Sample Tag: 01

PrePrep Method: NONE
Prep Method: 3051
Analytical Method: 6010B
Analyst: KHR
Dilution: 1
Units: mg/kg

Instrument: IRIS-ICP
Prep Date: 01/14/2009 06:41
Cal Date: 01/15/2009 09:29
Run Date: 01/15/2009 11:44
File ID: IR.011509.114400
Percent Solid: 92.5

Analyte	CAS. Number	Result	Qual	RL	MDL
Silver, Total	7440-22-4	0.213	J	0.747	0.187
Barium, Total	7440-39-3	7.72		0.374	0.0747
Cadmium, Total	7440-43-9	0.0643	J	0.149	0.0374
Chromium, Total	7440-47-3	6.13		0.747	0.0897

J Estimated ; the analyte concentration was less than the low standard (LOQ)

Microbac

35 GW 3/28/09

21

Sample Number:	L09010169-21	PrePrep Method:	NONE	Instrument:	ELAN-ICP
Client ID:	MR08-SS229-09A	Prep Method:	3051	Prep Date:	01/13/2009 07:08
Matrix:	Soil	Analytical Method:	6020	Cal Date:	01/22/2009 11:38
Workgroup Number:	WG292705	Analyst:	WTD	Run Date:	01/22/2009 18:33
Collect Date:	01/08/2009 15:05	Dilution:	1	File ID:	EL.012209.183318
Sample Tag:	02	Units:	mg/kg	Percent Solid:	92.5

Analyte	CAS. Number	Result	Qual	RL	MDL
Selenium, Total	7782-49-2	0.110	J	0.422	0.106

J Estimated ; the analyte concentration was less than the low standard (LOQ)

Microbac

987 fw 3/28/09

21

Sample Number: L09010169-21
Client ID: MR08-SS229-09A
Matrix: Soil
Workgroup Number: WG292705
Collect Date: 01/08/2009 15:05
Sample Tag: 01

PrePrep Method: NONE
Prep Method: 3051
Analytical Method: 6020
Analyst: WTD
Dilution: 1
Units: mg/kg

Instrument: ELAN-ICP
Prep Date: 01/13/2009 07:08
Cal Date: 01/20/2009 17:55
Run Date: 01/20/2009 23:11
File ID: EL.012009.231101
Percent Solid: 92.5

Analyte	CAS. Number	Result	Qual	RL	MDL
Arsenic, Total	7440-38-2	0.587		0.317	0.0792
Lead, Total	7439-92-1	2.30		0.422	0.106

Microbac

988 lew 3/28/09

21

Sample Number: L09010169-21
Client ID: MR08-SS229-09A
Matrix: Soil
Workgroup Number: WG292383
Collect Date: 01/08/2009 15:05
Sample Tag: 01

PrePrep Method: NONE
Prep Method: 7471A
Analytical Method: 7471A
Analyst: ADC
Dilution: 1
Units: mg/kg

Instrument: HYDRA
Prep Date: 01/13/2009 08:34
Cal Date: 01/13/2009 14:17
Run Date: 01/13/2009 15:03
File ID: HY.011309.150354
Percent Solid: 92.5

Analyte	CAS. Number	Result	Qual	RL	MDL
Mercury, Total	7439-97-6		U	0.107	0.0213

U Undetected; the analyte was analyzed for, but not detected.

Microbac

2136 lw 3/28/09

22

Sample Number: L09010169-22
Client ID: MR08-SS229D-09A
Matrix: Soil
Workgroup Number: WG292550
Collect Date: 01/08/2009 15:15
Sample Tag: 01

PrePrep Method: NONE
Prep Method: 3051
Analytical Method: 6010B
Analyst: KHR
Dilution: 1
Units: mg/kg

Instrument: IRIS-ICP
Prep Date: 01/14/2009 06:41
Cal Date: 01/15/2009 09:29
Run Date: 01/15/2009 11:50
File ID: IR.011509.115000
Percent Solid: 91.9

Analyte	CAS. Number	Result	Qual	RL	MDL
Silver, Total	7440-22-4		U	0.788	0.197
Barium, Total	7440-39-3	6.57		0.394	0.0788
Cadmium, Total	7440-43-9		U	0.158	0.0394
Chromium, Total	7440-47-3	3.69		0.788	0.0946

U Undetected; the analyte was analyzed for, but not detected.

Microbac

 LW 3/28/09

22

Sample Number: L09010169-22
Client ID: MR08-SS229D-09A
Matrix: Soil
Workgroup Number: WG292705
Collect Date: 01/08/2009 15:15
Sample Tag: 01

PrePrep Method: NONE
Prep Method: 3051
Analytical Method: 6020
Analyst: WTD
Dilution: 1
Units: mg/kg

Instrument: ELAN-ICP
Prep Date: 01/13/2009 07:08
Cal Date: 01/20/2009 17:55
Run Date: 01/20/2009 23:17
File ID: EL.012009.231715
Percent Solid: 91.9

Analyte	CAS. Number	Result	Qual	RL	MDL
Arsenic, Total	7440-38-2	0.652		0.326	0.0814
Lead, Total	7439-92-1	2.78		0.434	0.109

Microbac

RW 3/28/09

22

Sample Number:	L09010169-22	PrePrep Method:	NONE	Instrument:	ELAN-ICP
Client ID:	MR08-SS229D-09A	Prep Method:	3051	Prep Date:	01/13/2009 07:08
Matrix:	Soil	Analytical Method:	6020	Cal Date:	01/22/2009 11:38
Workgroup Number:	WG292705	Analyst:	WTD	Run Date:	01/22/2009 18:39
Collect Date:	01/08/2009 15:15	Dilution:	1	File ID:	EL.012209.183931
Sample Tag:	02	Units:	mg/kg	Percent Solid:	91.9

Analyte	CAS. Number	Result	Qual	RL	MDL
Selenium, Total	7782-49-2	0.254	J	0.434	0.109

J Estimated ; the analyte concentration was less than the low standard (LOQ)

Microbac

990 RW 3/28/09

22

Sample Number: L09010169-22
Client ID: MR08-SS229D-09A
Matrix: Soil
Workgroup Number: WG292383
Collect Date: 01/08/2009 15:15
Sample Tag: 01

PrePrep Method: NONE
Prep Method: 7471A
Analytical Method: 7471A
Analyst: ADC
Dilution: 1
Units: mg/kg

Instrument: HYDRA
Prep Date: 01/13/2009 08:34
Cal Date: 01/13/2009 14:17
Run Date: 01/13/2009 15:06
File ID: HY.011309.150641
Percent Solid: 91.9

Analyte	CAS. Number	Result	Qual	RL	MDL
Mercury, Total	7439-97-6		U	0.104	0.0207

U Undetected; the analyte was analyzed for, but not detected.

Microbac

2137 lw 3/28/09

23

Sample Number: L09010169-23
Client ID: MR08-IS229-6-7-09A
Matrix: Soil
Workgroup Number: WG292550
Collect Date: 01/08/2009 15:35
Sample Tag: 01

PrePrep Method: NONE
Prep Method: 3051
Analytical Method: 6010B
Analyst: KHR
Dilution: 1
Units: mg/kg

Instrument: IRIS-ICP
Prep Date: 01/14/2009 06:41
Cal Date: 01/15/2009 09:29
Run Date: 01/15/2009 11:56
File ID: IR.011509.115600
Percent Solid: 88.0

Analyte	CAS. Number	Result	Qual	RL	MDL
Silver, Total	7440-22-4		U	0.786	0.197
Barium, Total	7440-39-3	15.8		0.393	0.0786
Cadmium, Total	7440-43-9		U	0.157	0.0393
Chromium, Total	7440-47-3	10.5		0.786	0.0943

U Undetected; the analyte was analyzed for, but not detected.

Microbac

lew 3/28/09

23

Sample Number: L09010169-23
Client ID: MR08-IS229-6-7-09A
Matrix: Soil
Workgroup Number: WG292705
Collect Date: 01/08/2009 15:35
Sample Tag: 01

PrePrep Method: NONE
Prep Method: 3051
Analytical Method: 6020
Analyst: WTD
Dilution: 1
Units: mg/kg

Instrument: ELAN-ICP
Prep Date: 01/13/2009 07:08
Cal Date: 01/20/2009 17:55
Run Date: 01/20/2009 23:23
File ID: EL.012009.232327
Percent Solid: 88.0

Analyte	CAS. Number	Result	Qual	RL	MDL
Arsenic, Total	7440-38-2	0.293	J	0.341	0.0853
Lead, Total	7439-92-1	6.51		0.455	0.114

J Estimated ; the analyte concentration was less than the low standard (LOQ)

Microbac

991 lw 3/28/09

23

Sample Number:	L09010169-23	PrePrep Method:	NONE	Instrument:	ELAN-ICP
Client ID:	MR08-IS229-6-7-09A	Prep Method:	3051	Prep Date:	01/13/2009 07:08
Matrix:	Soil	Analytical Method:	6020	Cal Date:	01/22/2009 11:38
Workgroup Number:	WG292705	Analyst:	WTD	Run Date:	01/22/2009 18:58
Collect Date:	01/08/2009 15:35	Dilution:	1	File ID:	EL.012209.185846
Sample Tag:	02	Units:	mg/kg	Percent Solid:	88.0

Analyte	CAS. Number	Result	Qual	RL	MDL
Selenium, Total	7782-49-2	0.138	J	0.455	0.114

J Estimated ; the analyte concentration was less than the low standard (LOQ)

Microbac

992 RW 3/28/09

23

Sample Number: L09010169-23
Client ID: MR08-IS229-6-7-09A
Matrix: Soil
Workgroup Number: WG292383
Collect Date: 01/08/2009 15:35
Sample Tag: 01

PrePrep Method: NONE
Prep Method: 7471A
Analytical Method: 7471A
Analyst: ADC
Dilution: 1
Units: mg/kg

Instrument: HYDRA
Prep Date: 01/13/2009 08:34
Cal Date: 01/13/2009 14:17
Run Date: 01/13/2009 15:12
File ID: HY.011309.151221
Percent Solid: 88.0

Analyte	CAS. Number	Result	Qual	RL	MDL
Mercury, Total	7439-97-6	0.0283	J	0.109	0.0218

J Estimated ; the analyte concentration was less than the low standard (LOQ)

Microbac®

2138 LW 3/28/09

24

Sample Number: L09010169-24
Client ID: MR08-IS229D-6-7-09A
Matrix: Soil
Workgroup Number: WG292550
Collect Date: 01/08/2009 15:45
Sample Tag: 01

PrePrep Method: NONE
Prep Method: 3051
Analytical Method: 6010B
Analyst: KHR
Dilution: 1
Units: mg/kg

Instrument: IRIS-ICP
Prep Date: 01/14/2009 06:41
Cal Date: 01/15/2009 09:29
Run Date: 01/15/2009 12:02
File ID: IR.011509.120200
Percent Solid: 89.4

Analyte	CAS. Number	Result	Qual	RL	MDL
Silver, Total	7440-22-4		U	0.822	0.206
Barium, Total	7440-39-3	11.6		0.411	0.0822
Cadmium, Total	7440-43-9		U	0.164	0.0411
Chromium, Total	7440-47-3	4.89		0.822	0.0986

U Undetected; the analyte was analyzed for, but not detected.

Microbac

38 lcw 3/28/09

24

Sample Number: L09010169-24
Client ID: MR08-IS229D-6-7-09A
Matrix: Soil
Workgroup Number: WG292705
Collect Date: 01/08/2009 15:45
Sample Tag: 02

PrePrep Method: NONE
Prep Method: 3051
Analytical Method: 6020
Analyst: WTD
Dilution: 1
Units: mg/kg

Instrument: ELAN-ICP
Prep Date: 01/13/2009 07:08
Cal Date: 01/22/2009 11:38
Run Date: 01/22/2009 19:04
File ID: EL.012209.190459
Percent Solid: 89.4

Analyte	CAS. Number	Result	Qual	RL	MDL
Selenium, Total	7782-49-2	0.195	J	0.441	0.110

J Estimated ; the analyte concentration was less than the low standard (LOQ)

Microbac

993 MW 3/28/09

24

Sample Number: L09010169-24
Client ID: MR08-IS229D-6-7-09A
Matrix: Soil
Workgroup Number: WG292705
Collect Date: 01/08/2009 15:45
Sample Tag: 01

PrePrep Method: NONE
Prep Method: 3051
Analytical Method: 6020
Analyst: WTD
Dilution: 1
Units: mg/kg

Instrument: ELAN-ICP
Prep Date: 01/13/2009 07:08
Cal Date: 01/20/2009 17:55
Run Date: 01/20/2009 23:42
File ID: EL.012009.234243
Percent Solid: 89.4

Analyte	CAS. Number	Result	Qual	RL	MDL
Arsenic, Total	7440-38-2	0.284	J	0.331	0.0827
Lead, Total	7439-92-1	4.71		0.441	0.110

J Estimated ; the analyte concentration was less than the low standard (LOQ)

Microbac

994 JW 3/28/09

24

Sample Number: L09010169-24
Client ID: MR08-IS229D-6-7-09A
Matrix: Soil
Workgroup Number: WG292383
Collect Date: 01/08/2009 15:45
Sample Tag: 01

PrePrep Method: NONE
Prep Method: 7471A
Analytical Method: 7471A
Analyst: ADC
Dilution: 1
Units: mg/kg

Instrument: HYDRA
Prep Date: 01/13/2009 08:34
Cal Date: 01/13/2009 14:17
Run Date: 01/13/2009 15:14
File ID: HY.011309.151407
Percent Solid: 89.4

Analyte	CAS. Number	Result	Qual	RL	MDL
Mercury, Total	7439-97-6	0.0355	J	0.109	0.0218

J Estimated ; the analyte concentration was less than the low standard (LOQ)

Microbac

dw 3/28/09

25

Sample Number: L09010169-25
Client ID: MR08-SS227-09A
Matrix: Soil
Workgroup Number: WG292550
Collect Date: 01/08/2009 16:10
Sample Tag: DL01

PrePrep Method: NONE
Prep Method: 3051
Analytical Method: 6010B
Analyst: KHR
Dilution: 5
Units: mg/kg

Instrument: IRIS-ICP
Prep Date: 01/14/2009 06:41
Cal Date: 01/16/2009 11:30
Run Date: 01/16/2009 12:57
File ID: IR.011609.125700
Percent Solid: 88.0

Analyte	CAS. Number	Result	Qual	RL	MDL
Silver, Total	7440-22-4	34.5		3.93	0.983

Microbac

39 lw 3/28/09

25

Sample Number: L09010169-25
Client ID: MR08-SS227-09A
Matrix: Soil
Workgroup Number: WG292550
Collect Date: 01/08/2009 16:10
Sample Tag: 01

PrePrep Method: NONE
Prep Method: 3051
Analytical Method: 6010B
Analyst: KHR
Dilution: 1
Units: mg/kg

Instrument: IRIS-ICP
Prep Date: 01/14/2009 06:41
Cal Date: 01/15/2009 09:29
Run Date: 01/15/2009 12:08
File ID: IR.011509.120800
Percent Solid: 88.0

Analyte	CAS. Number	Result	Qual	RL	MDL
Barium, Total	7440-39-3	15.4		0.393	0.0787
Cadmium, Total	7440-43-9	2.44		0.157	0.0393
Chromium, Total	7440-47-3	25.5		0.787	0.0944

Microbac

40 lin 3/28/09

25

Sample Number: L09010169-25
Client ID: MR08-SS227-09A
Matrix: Soil
Workgroup Number: WG292705
Collect Date: 01/08/2009 16:10
Sample Tag: 01

PrePrep Method: NONE
Prep Method: 3051
Analytical Method: 6020
Analyst: WTD
Dilution: 1
Units: mg/kg

Instrument: ELAN-ICP
Prep Date: 01/13/2009 07:08
Cal Date: 01/22/2009 11:38
Run Date: 01/22/2009 19:11
File ID: EL.012209.191112
Percent Solid: 88.0

Analyte	CAS. Number	Result	Qual	RL	MDL
Arsenic, Total	7440-38-2	1.37		0.334	0.0835
Selenium, Total	7782-49-2	0.453		0.446	0.111

Microbac

3/28/09

25

Sample Number: L09010169-25
Client ID: MR08-SS227-09A
Matrix: Soil
Workgroup Number: WG292705
Collect Date: 01/08/2009 16:10
Sample Tag: DL01

PrePrep Method: NONE
Prep Method: 3051
Analytical Method: 6020
Analyst: WTD
Dilution: 20
Units: mg/kg

Instrument: ELAN-ICP
Prep Date: 01/13/2009 07:08
Cal Date: 01/20/2009 17:55
Run Date: 01/20/2009 23:48
File ID: EL.012009.234856
Percent Solid: 88.0

Analyte	CAS. Number	Result	Qual	RL	MDL
Lead, Total	7439-92-1	292		8.91	2.23

Microbac

fw
3/28/09

25

Sample Number: L09010169-25
Client ID: MR08-SS227-09A
Matrix: Soil
Workgroup Number: WG292383
Collect Date: 01/08/2009 16:10
Sample Tag: 01

PrePrep Method: NONE
Prep Method: 7471A
Analytical Method: 7471A
Analyst: ADC
Dilution: 1
Units: mg/kg

Instrument: HYDRA
Prep Date: 01/13/2009 08:34
Cal Date: 01/13/2009 14:17
Run Date: 01/13/2009 15:15
File ID: HY.011309.151554
Percent Solid: 88.0

Analyte	CAS. Number	Result	Qual	RL	MDL
Mercury, Total	7439-97-6	0.148		0.110	0.0220

Microbac

2140 lw 3/28/09

26

Sample Number: L09010169-26
Client ID: MR08-IS227-6-7-09A
Matrix: Soil
Workgroup Number: WG292550
Collect Date: 01/08/2009 16:30
Sample Tag: 01

PrePrep Method: NONE
Prep Method: 3051
Analytical Method: 6010B
Analyst: KHR
Dilution: 1
Units: mg/kg

Instrument: IRIS-ICP
Prep Date: 01/14/2009 06:41
Cal Date: 01/15/2009 09:29
Run Date: 01/15/2009 12:14
File ID: IR.011509.121400
Percent Solid: 86.3

Analyte	CAS. Number	Result	Qual	RL	MDL
Silver, Total	7440-22-4		U	0.776	0.194
Barium, Total	7440-39-3	11.8		0.388	0.0776
Cadmium, Total	7440-43-9		U	0.155	0.0388
Chromium, Total	7440-47-3	6.01		0.776	0.0932

U Undetected; the analyte was analyzed for, but not detected.

Microbac

lew 3/28/09

26

Sample Number: L09010169-26
Client ID: MR08-IS227-6-7-09A
Matrix: Soil
Workgroup Number: WG292705
Collect Date: 01/08/2009 16:30
Sample Tag: 01

PrePrep Method: NONE
Prep Method: 3051
Analytical Method: 6020
Analyst: WTD
Dilution: 1
Units: mg/kg

Instrument: ELAN-ICP
Prep Date: 01/13/2009 07:08
Cal Date: 01/20/2009 17:55
Run Date: 01/20/2009 23:55
File ID: EL.012009.235509
Percent Solid: 86.3

Analyte	CAS. Number	Result	Qual	RL	MDL
Arsenic, Total	7440-38-2	0.501		0.336	0.0839
Lead, Total	7439-92-1	6.27		0.448	0.112

Microbac

997 lw 3/28/09

26

Sample Number:	L09010169-26	PrePrep Method:	NONE	Instrument:	ELAN-ICP
Client ID:	MR08-IS227-6-7-09A	Prep Method:	3051	Prep Date:	01/13/2009 07:08
Matrix:	Soil	Analytical Method:	6020	Cal Date:	01/22/2009 11:38
Workgroup Number:	WG292705	Analyst:	WTD	Run Date:	01/22/2009 19:17
Collect Date:	01/08/2009 16:30	Dilution:	1	File ID:	EL.012209.191725
Sample Tag:	02	Units:	mg/kg	Percent Solid:	86.3

Analyte	CAS. Number	Result	Qual	RL	MDL
Selenium, Total	7782-49-2	0.220	J	0.448	0.112

J Estimated ; the analyte concentration was less than the low standard (LOQ)

Microbac

lw 3/28/09

26

Sample Number: L09010169-26
Client ID: MR08-IS227-6-7-09A
Matrix: Soil
Workgroup Number: WG292383
Collect Date: 01/08/2009 16:30
Sample Tag: 01

PrePrep Method: NONE
Prep Method: 7471A
Analytical Method: 7471A
Analyst: ADC
Dilution: 1
Units: mg/kg

Instrument: HYDRA
Prep Date: 01/13/2009 08:34
Cal Date: 01/13/2009 14:17
Run Date: 01/13/2009 15:17
File ID: HY.011309.151738
Percent Solid: 86.3

Analyte	CAS. Number	Result	Qual	RL	MDL
Mercury, Total	7439-97-6	0.0241	J	0.108	0.0217

J Estimated ; the analyte concentration was less than the low standard (LOQ)

Microbac

2141 lew 3/28/09

27

Sample Number: L09010169-27
Client ID: MR08-SS209-09A
Matrix: Soil
Workgroup Number: WG292550
Collect Date: 01/08/2009 16:35
Sample Tag: 01

PrePrep Method: NONE
Prep Method: 3051
Analytical Method: 6010B
Analyst: KHR
Dilution: 1
Units: mg/kg

Instrument: IRIS-ICP
Prep Date: 01/14/2009 06:41
Cal Date: 01/15/2009 09:29
Run Date: 01/15/2009 12:20
File ID: IR.011509.122000
Percent Solid: 91.1

Analyte	CAS. Number	Result	Qual	RL	MDL
Silver, Total	7440-22-4		U	0.776	0.194
Barium, Total	7440-39-3	8.22		0.388	0.0776
Cadmium, Total	7440-43-9	0.154	J	0.155	0.0388
Chromium, Total	7440-47-3	6.50		0.776	0.0931

U Undetected; the analyte was analyzed for, but not detected.
J Estimated ; the analyte concentration was less than the low standard (LOQ)

Microbac

42 lw
3/28/09

27

Sample Number: L09010169-27
Client ID: MR08-SS209-09A
Matrix: Soil
Workgroup Number: WG292705
Collect Date: 01/08/2009 16:35
Sample Tag: 01

PrePrep Method: NONE
Prep Method: 3051
Analytical Method: 6020
Analyst: WTD
Dilution: 1
Units: mg/kg

Instrument: ELAN-ICP
Prep Date: 01/13/2009 07:08
Cal Date: 01/20/2009 17:55
Run Date: 01/21/2009 00:01
File ID: EL.012109.000123
Percent Solid: 91.1

Analyte	CAS. Number	Result	Qual	RL	MDL
Arsenic, Total	7440-38-2	1.89		0.329	0.0822
Lead, Total	7439-92-1	18.1		0.438	0.110

Microbac

999 MW
3/28/09

27

Sample Number: L09010169-27
Client ID: MR08-SS209-09A
Matrix: Soil
Workgroup Number: WG292705
Collect Date: 01/08/2009 16:35
Sample Tag: 02

PrePrep Method: NONE
Prep Method: 3051
Analytical Method: 6020
Analyst: WTD
Dilution: 1
Units: mg/kg

Instrument: ELAN-ICP
Prep Date: 01/13/2009 07:08
Cal Date: 01/22/2009 11:38
Run Date: 01/22/2009 19:23
File ID: EL.012209.192338
Percent Solid: 91.1

Analyte	CAS. Number	Result	Qual	RL	MDL
Selenium, Total	7782-49-2	0.240	J	0.438	0.110

J Estimated ; the analyte concentration was less than the low standard (LOQ)

Microbac

1000 lw 3/28/09

27

Sample Number: L09010169-27
Client ID: MR08-SS209-09A
Matrix: Soil
Workgroup Number: WG292383
Collect Date: 01/08/2009 16:35
Sample Tag: 01

PrePrep Method: NONE
Prep Method: 7471A
Analytical Method: 7471A
Analyst: ADC
Dilution: 1
Units: mg/kg

Instrument: HYDRA
Prep Date: 01/13/2009 08:34
Cal Date: 01/13/2009 14:17
Run Date: 01/13/2009 15:19
File ID: HY.011309.151941
Percent Solid: 91.1

Analyte	CAS. Number	Result	Qual	RL	MDL
Mercury, Total	7439-97-6		U	0.108	0.0216

U Undetected; the analyte was analyzed for, but not detected.

Microbac

2142 lew 3/28/09

28

Sample Number: L09010169-28
Client ID: MR08-SS209D-09A
Matrix: Soil
Workgroup Number: WG292550
Collect Date: 01/08/2009 16:45
Sample Tag: 01

PrePrep Method: NONE
Prep Method: 3051
Analytical Method: 6010B
Analyst: KHR
Dilution: 1
Units: mg/kg

Instrument: IRIS-ICP
Prep Date: 01/14/2009 06:41
Cal Date: 01/15/2009 09:29
Run Date: 01/15/2009 12:52
File ID: IR.011509.125200
Percent Solid: 91.6

Analyte	CAS. Number	Result	Qual	RL	MDL
Silver, Total	7440-22-4		U	0.769	0.192
Barium, Total	7440-39-3	10.6		0.384	0.0769
Cadmium, Total	7440-43-9	0.102	J	0.154	0.0384
Chromium, Total	7440-47-3	7.01		0.769	0.0922

U Undetected; the analyte was analyzed for, but not detected.
J Estimated ; the analyte concentration was less than the low standard (LOQ)

Microbac

48 LW 3/28/09

28

Sample Number: L09010169-28
Client ID: MR08-SS209D-09A
Matrix: Soil
Workgroup Number: WG292705
Collect Date: 01/08/2009 16:45
Sample Tag: 02

PrePrep Method: NONE
Prep Method: 3051
Analytical Method: 6020
Analyst: WTD
Dilution: 1
Units: mg/kg

Instrument: ELAN-ICP
Prep Date: 01/13/2009 07:08
Cal Date: 01/22/2009 11:38
Run Date: 01/22/2009 19:29
File ID: EL.012209.192952
Percent Solid: 91.6

Analyte	CAS. Number	Result	Qual	RL	MDL
Selenium, Total	7782-49-2	0.178	J	0.437	0.109

J Estimated ; the analyte concentration was less than the low standard (LOQ)

Microbac

1001 [illegible] 3/28/09

28

Sample Number: L09010169-28
Client ID: MR08-SS209D-09A
Matrix: Soil
Workgroup Number: WG292705
Collect Date: 01/08/2009 16:45
Sample Tag: 01

PrePrep Method: NONE
Prep Method: 3051
Analytical Method: 6020
Analyst: WTD
Dilution: 1
Units: mg/kg

Instrument: ELAN-ICP
Prep Date: 01/13/2009 07:08
Cal Date: 01/20/2009 17:55
Run Date: 01/21/2009 00:07
File ID: EL.012109.000738
Percent Solid: 91.6

Analyte	CAS. Number	Result	Qual	RL	MDL
Arsenic, Total	7440-38-2	1.29		0.327	0.0819
Lead, Total	7439-92-1	20.5		0.437	0.109

Microbac

1002 fcw 3/28/09

28

Sample Number: L09010169-28
Client ID: MR08-SS209D-09A
Matrix: Soil
Workgroup Number: WG292383
Collect Date: 01/08/2009 16:45
Sample Tag: 01

PrePrep Method: NONE
Prep Method: 7471A
Analytical Method: 7471A
Analyst: ADC
Dilution: 1
Units: mg/kg

Instrument: HYDRA
Prep Date: 01/13/2009 08:34
Cal Date: 01/13/2009 14:17
Run Date: 01/13/2009 14:40
File ID: HY.011309.144056
Percent Solid: 91.6

Analyte	CAS. Number	Result	Qual	RL	MDL
Mercury, Total	7439-97-6		U	0.104	0.0208

U Undetected; the analyte was analyzed for, but not detected.

Microbac

2143 lew 3/28/09

29

Sample Number: L09010169-29
Client ID: MR08-EB-010108-09-SS
Matrix: Water
Workgroup Number: WG292393
Collect Date: 01/08/2009 09:30
Sample Tag: 02

PrePrep Method: NONE
Prep Method: 3005A
Analytical Method: 6010B
Analyst: SLP
Dilution: 1
Units: ug/L

Instrument: PE-ICP2
Prep Date: 01/13/2009 07:43
Cal Date: 01/17/2009 17:25
Run Date: 01/17/2009 19:47
File ID: P2.011709.194736

Analyte	CAS. Number	Result	Qual	RL	MDL
Barium, Total	7440-39-3	10 U ~~3.72~~	~~J~~	10.0	2.50
Cadmium, Total	7440-43-9		U	1.00	0.250
Chromium, Total	7440-47-3	2.69	J	10.0	2.50
Silver, Total	7440-22-4		U	6.00	2.00

BL

U Undetected; the analyte was analyzed for, but not detected.
J Estimated ; the analyte concentration was less than the low standard (LOQ)

Microbac

44 LW 3/28/09

29

Sample Number: L09010169-29
Client ID: MR08-EB-010108-09-SS
Matrix: Water
Workgroup Number: WG292534
Collect Date: 01/08/2009 09:30
Sample Tag: 01

PrePrep Method: NONE
Prep Method: 3015
Analytical Method: 6020
Analyst: WTD
Dilution: 1
Units: ug/L

Instrument: ELAN-ICP
Prep Date: 01/14/2009 08:52
Cal Date: 01/14/2009 16:41
Run Date: 01/14/2009 22:43
File ID: EL.011409.224330

Analyte	CAS. Number	Result	Qual	RL	MDL
Arsenic, Total	7440-38-2		U	1.00	0.250
Lead, Total	7439-92-1		U	1.00	0.250
Selenium, Total	7782-49-2		U	2.00	0.500

U Undetected; the analyte was analyzed for, but not detected.

Microbac

1003 lw 3/28/09

29

Sample Number: L09010169-29
Client ID: MR08-EB-010108-09-SS
Matrix: Water
Workgroup Number: WG292364
Collect Date: 01/08/2009 09:30
Sample Tag: 01

PrePrep Method: NONE
Prep Method: 7470A
Analytical Method: 7470A
Analyst: ADC
Dilution: 1
Units: ug/L

Instrument: HYDRA
Prep Date: 01/13/2009 07:51
Cal Date: 01/13/2009 11:40
Run Date: 01/13/2009 12:15
File ID: HY.011309.121516

Analyte	CAS. Number	Result	Qual	RL	MDL
Mercury	7439-97-6		U	0.400	0.100

U Undetected; the analyte was analyzed for, but not detected.

Microbac

2144 fcw 3/28/09

ENVIRONMENTAL
Data Services, Inc.

METALS

USEPA Region IV - Level IV Review

Site: MCB Camp Lejeune, TO-09 SDG #: L09010202

Client: CH2M HILL, Inc., Virginia Beach, Virginia Date: March 30, 2009

Laboratory: Microbac Laboratories, Inc., Marietta, Ohio Reviewer: Nancy Weaver

EDS ID	Client Sample ID	Laboratory Sample ID	Matrix
1	MR08-SS180-09A	L09010202-01	Soil
2	MR08-SS182-09A	L09010202-02	Soil
3	MR08-IS182-8-9-09A	L09010202-03	Soil
4	MR08-SS183-09A	L09010202-04	Soil
5MS	MR08-SS183-09AMS	L09010202-05MS	Soil
6MSD	MR08-SS183-09AMSD	L09010202-06MSD	Soil
7	MR08-IS183-6-7-09A	L09010202-07	Soil
8MS	MR08-IS183-6-7-09AMS	L09010202-08MS	Soil
9MSD	MR08-IS183-6-7-09AMSD	L09010202-09MSD	Soil
10	MR08-SS205-09A	L09010202-10	Soil
11	MR08-IS205-9-10-09A	L09010202-11	Soil
12	MR08-SS204-09A	L09010202-12	Soil
13MS	MR08-SS204-09AMS	L09010202-13MS	Soil
14MSD	MR08-SS204-09AMSD	L09010202-14MSD	Soil
15	MR08-IS204-6-7-09A	L09010202-15	Soil
16MS	MR08-IS204-6-7-09AMS	L09010202-16MS	Soil
17MSD	MR08-IS204-6-7-09AMSD	L09010202-17MSD	Soil
18	MR08-IS180-6-7-09A	L09010202-18	Soil
19	MR08-SS203-09A	L09010202-19	Soil
20	MR08-IS203-6-7-09A	L09010202-20	Soil
21	MR08-SS184-09A	L09010202-21	Soil
22	MR08-IS184-8-9-09A	L09010202-23	Soil
23	MR08-SS255-09A	L09010202-24	Soil
24	MR08-IS255-6-7-09A	L09010202-25	Soil
25	MR08-SS276-09A	L09010202-26	Soil
26	MR08-IS276-6-7-09A	L09010202-27	Soil
27	MR08-SS254-09A	L09010202-28	Soil
28	MR08-IS254-3-4-09A	L09010202-29	Soil
29	MR08-SS277-09A	L09010202-30	Soil
30	MR08-IS277-3-4-09A	L09010202-31	Soil
31	MR08-SS278-09A	L09010202-32	Soil
32	MR08-IS278-6-7-09A	L09010202-34	Soil
33	MR08-EB01010909-SS	L09010202-36	Water
34	MR08-EB01010909-IS	L09010202-37	Water

The USEPA "Contract Laboratory Program National Functional Guidelines for Inorganic Data Review," October 2004, and professional judgement were used in evaluating the data in this summary report.

Holding Times - All samples were prepared and analyzed within 28 days for mercury and 180 days for all other metals.

Calibration - The ICV and CCV %R values were acceptable.

Method and Calibration Blanks - The method blanks were free of contamination.

Field and Equipment Blank - Field QC results are summarized below.

Blank ID	Compound	Conc. ug/L	Action Level ug/L	Qualifier	Affected Samples
MR08-FB01011009	None - ND	-	-	-	-
MR08-EB01010909-IS	None - ND	-	-	-	-
MR08-EB01010909-SS	None - ND	-	-	-	-

ICP Interference Check Sample - All %R values were acceptable.

MS/MSD - The MS/MSD sample exhibited acceptable %R and RPD values except the following.

MS/MSD Sample ID	Compound	MS/MSD %R/RPD	Qualifier	Affected Samples
7 (WG292553)	Chromium	127%/Ok/27.9	J	7, 31, 32
7 (WG293286)	Lead	130%/Ok/Ok	J	7, 31, 32
15 (WG292551)	Barium	Ok/64.5%/32.0	J/UJ	15
	Chromium	Ok/52.2%/30.0%	J/UJ	15

LCS - The LCS samples exhibited acceptable %R values.

ICP Serial Dilution - The ICP serial dilution sample exhibited acceptable %D values.

Field Duplicates - Field duplicate samples were not included in this data package.

Compound Quantitation - No discrepancies were identified.

Report Number: L09010202

Report Date : **February 10, 2009**

Sample Number:	L09010202-01	PrePrep Method:	NONE	Instrument:	ELAN-ICP
Client ID:	MR08-SS180-09A	Prep Method:	3051	Prep Date:	01/14/2009 09:16
Matrix:	Soil	Analytical Method:	6020	Cal Date:	01/26/2009 14:27
Workgroup Number:	WG292708	Analyst:	WTD	Run Date:	01/26/2009 21:32
Collect Date:	01/09/2009 08:25	Dilution:	1	File ID:	EL.012609.213243
Sample Tag:	02	Units:	mg/kg	Percent Solid:	95.3

Analyte	CAS. Number	Result	Qual	RL	MDL
Selenium, Total	7782-49-2	0.229	J	0.417	0.104

J Estimated ; the analyte concentration was less than the low standard (LOQ)

Microbac

623 LW 3/30/09

Sample Number: L09010202-01
Client ID: MR08-SS180-09A
Matrix: Soil
Workgroup Number: WG292708
Collect Date: 01/09/2009 08:25
Sample Tag: 01

PrePrep Method: NONE
Prep Method: 3051
Analytical Method: 6020
Analyst: WTD
Dilution: 1
Units: mg/kg

Instrument: ELAN-ICP
Prep Date: 01/14/2009 09:16
Cal Date: 01/20/2009 17:55
Run Date: 01/21/2009 04:19
File ID: EL.012109.041944
Percent Solid: 95.3

Analyte	CAS. Number	Result	Qual	RL	MDL
Arsenic, Total	7440-38-2	0.573		0.313	0.0782
Lead, Total	7439-92-1	2.81		0.417	0.104

Microbac

624 MW 3/30/09

Report Number: L09010202

Report Date : February 10, 2009

Sample Number: L09010202-01
Client ID: MR08-SS180-09A
Matrix: Soil
Workgroup Number: WG292547
Collect Date: 01/09/2009 08:25
Sample Tag: 01

PrePrep Method: NONE
Prep Method: 3051
Analytical Method: 6010B
Analyst: KHR
Dilution: 1
Units: mg/kg

Instrument: IRIS-ICP
Prep Date: 01/14/2009 08:05
Cal Date: 01/15/2009 09:29
Run Date: 01/15/2009 13:29
File ID: IR.011509.132900
Percent Solid: 95.3

Analyte	CAS. Number	Result	Qual	RL	MDL
Silver, Total	7440-22-4		U	0.775	0.194
Barium, Total	7440-39-3	5.81		0.387	0.0775
Cadmium, Total	7440-43-9	0.0875	J	0.155	0.0387
Chromium, Total	7440-47-3	2.52		0.775	0.0930

U Undetected; the analyte was analyzed for, but not detected.
J Estimated ; the analyte concentration was less than the low standard (LOQ)

Microbac

15 MW 3/30/09

Report Number: L09010202
Report Date : February 10, 2009

Sample Number:	L09010202-01	PrePrep Method:	NONE	Instrument:	HYDRA
Client ID:	MR08-SS180-09A	Prep Method:	7471A	Prep Date:	01/14/2009 07:42
Matrix:	Soil	Analytical Method:	7471A	Cal Date:	01/15/2009 09:30
Workgroup Number:	WG292562	Analyst:	ADC	Run Date:	01/15/2009 09:46
Collect Date:	01/09/2009 08:25	Dilution:	1	File ID:	HY.011509.094621
Sample Tag:	01	Units:	mg/kg	Percent Solid:	95.3

Analyte	CAS. Number	Result	Qual	RL	MDL
Mercury, Total	7439-97-6		U	0.104	0.0208

U Undetected; the analyte was analyzed for, but not detected.

Microbac

3175 MW 3/30/09

2

Sample Number:	L09010202-02	PrePrep Method:	NONE	Instrument:	ELAN-ICP
Client ID:	MR08-SS182-09A	Prep Method:	3051	Prep Date:	01/14/2009 09:16
Matrix:	Soil	Analytical Method:	6020	Cal Date:	01/26/2009 14:27
Workgroup Number:	WG292708	Analyst:	WTD	Run Date:	01/26/2009 22:04
Collect Date:	01/09/2009 09:00	Dilution:	5	File ID:	EL.012609.220428
Sample Tag:	DL01	Units:	mg/kg	Percent Solid:	94.6

Analyte	CAS. Number	Result	Qual	RL	MDL
Selenium, Total	7782-49-2		U	2.03	0.507

U Undetected; the analyte was analyzed for, but not detected.

Microbac

625 kw 3/30/09

2

Sample Number: L09010202-02
Client ID: MR08-SS182-09A
Matrix: Soil
Workgroup Number: WG292708
Collect Date: 01/09/2009 09:00
Sample Tag: 01

PrePrep Method: NONE
Prep Method: 3051
Analytical Method: 6020
Analyst: WTD
Dilution: 1
Units: mg/kg

Instrument: ELAN-ICP
Prep Date: 01/14/2009 09:16
Cal Date: 01/20/2009 17:55
Run Date: 01/21/2009 04:38
File ID: EL.012109.043827
Percent Solid: 94.6

Analyte	CAS. Number	Result	Qual	RL	MDL
Arsenic, Total	7440-38-2	1.55		0.304	0.0761
Lead, Total	7439-92-1	1.12		0.406	0.101

Microbac

AW 3/30/09

2

Sample Number: L09010202-02
Client ID: MR08-SS182-09A
Matrix: Soil
Workgroup Number: WG292547
Collect Date: 01/09/2009 09:00
Sample Tag: 01

PrePrep Method: NONE
Prep Method: 3051
Analytical Method: 6010B
Analyst: KHR
Dilution: 1
Units: mg/kg

Instrument: IRIS-ICP
Prep Date: 01/14/2009 08:05
Cal Date: 01/15/2009 09:29
Run Date: 01/15/2009 14:05
File ID: IR.011509.140500
Percent Solid: 94.6

Analyte	CAS. Number	Result	Qual	RL	MDL
Silver, Total	7440-22-4	0.249	J	0.757	0.189
Barium, Total	7440-39-3	4.65		0.378	0.0757
Cadmium, Total	7440-43-9	0.402		0.151	0.0378
Chromium, Total	7440-47-3	6.63		0.757	0.0908

J Estimated ; the analyte concentration was less than the low standard (LOQ)

Microbac

16 lw
3/30/09

2

Sample Number: L09010202-02
Client ID: MR08-SS182-09A
Matrix: Soil
Workgroup Number: WG292562
Collect Date: 01/09/2009 09:00
Sample Tag: 01

PrePrep Method: NONE
Prep Method: 7471A
Analytical Method: 7471A
Analyst: ADC
Dilution: 1
Units: mg/kg

Instrument: HYDRA
Prep Date: 01/14/2009 07:42
Cal Date: 01/15/2009 09:30
Run Date: 01/15/2009 09:48
File ID: HY.011509.094819
Percent Solid: 94.6

Analyte	CAS. Number	Result	Qual	RL	MDL
Mercury, Total	7439-97-6		U	0.0986	0.0197

U Undetected; the analyte was analyzed for, but not detected.

Microbac

3176 hw 3/30/09

3

Sample Number:	L09010202-03	PrePrep Method:	NONE	Instrument:	ELAN-ICP
Client ID:	MR08-IS182-8-9-09A	Prep Method:	3051	Prep Date:	01/14/2009 09:16
Matrix:	Soil	Analytical Method:	6020	Cal Date:	01/26/2009 14:27
Workgroup Number:	WG292708	Analyst:	WTD	Run Date:	01/26/2009 22:10
Collect Date:	01/09/2009 09:15	Dilution:	1	File ID:	EL.012609.221042
Sample Tag:	02	Units:	mg/kg	Percent Solid:	87.1

Analyte	CAS. Number	Result	Qual	RL	MDL
Selenium, Total	7782-49-2	0.711		0.456	0.114

Microbac

 lw 3/30/09

3

Sample Number: L09010202-03
Client ID: MR08-IS182-8-9-09A
Matrix: Soil
Workgroup Number: WG292708
Collect Date: 01/09/2009 09:15
Sample Tag: 01

PrePrep Method: NONE
Prep Method: 3051
Analytical Method: 6020
Analyst: WTD
Dilution: 1
Units: mg/kg

Instrument: ELAN-ICP
Prep Date: 01/14/2009 09:16
Cal Date: 01/20/2009 17:55
Run Date: 01/21/2009 04:44
File ID: EL.012109.044442
Percent Solid: 87.1

Analyte	CAS. Number	Result	Qual	RL	MDL
Arsenic, Total	7440-38-2	7.53		0.342	0.0856
Lead, Total	7439-92-1	4.16		0.456	0.114

Microbac

 lw 3/30/09

3

Sample Number: L09010202-03
Client ID: MR08-IS182-8-9-09A
Matrix: Soil
Workgroup Number: WG292547
Collect Date: 01/09/2009 09:15
Sample Tag: 01

PrePrep Method: NONE
Prep Method: 3051
Analytical Method: 6010B
Analyst: KHR
Dilution: 1
Units: mg/kg

Instrument: IRIS-ICP
Prep Date: 01/14/2009 08:05
Cal Date: 01/15/2009 09:29
Run Date: 01/15/2009 14:11
File ID: IR.011509.141100
Percent Solid: 87.1

Analyte	CAS. Number	Result	Qual	RL	MDL
Silver, Total	7440-22-4		U	0.847	0.212
Barium, Total	7440-39-3	3.75		0.424	0.0847
Cadmium, Total	7440-43-9		U	0.169	0.0424
Chromium, Total	7440-47-3	2.84		0.847	0.102

U Undetected; the analyte was analyzed for, but not detected.

Microbac

17 lw 3/30/09

3

Sample Number: L09010202-03
Client ID: MR08-IS182-8-9-09A
Matrix: Soil
Workgroup Number: WG292562
Collect Date: 01/09/2009 09:15
Sample Tag: 01

PrePrep Method: NONE
Prep Method: 7471A
Analytical Method: 7471A
Analyst: ADC
Dilution: 1
Units: mg/kg

Instrument: HYDRA
Prep Date: 01/14/2009 07:42
Cal Date: 01/15/2009 09:30
Run Date: 01/15/2009 09:53
File ID: HY.011509.095347
Percent Solid: 87.1

Analyte	CAS. Number	Result	Qual	RL	MDL
Mercury, Total	7439-97-6		U	0.109	0.0218

U Undetected; the analyte was analyzed for, but not detected.

Microbac

3177 LW 3/30/09

4

Sample Number: L09010202-04
Client ID: MR08-SS183-09A
Matrix: Soil
Workgroup Number: WG292708
Collect Date: 01/09/2009 09:30
Sample Tag: 01

PrePrep Method: NONE
Prep Method: 3051
Analytical Method: 6020
Analyst: WTD
Dilution: 1
Units: mg/kg

Instrument: ELAN-ICP
Prep Date: 01/14/2009 09:16
Cal Date: 01/20/2009 17:55
Run Date: 01/21/2009 04:01
File ID: EL.012109.040101
Percent Solid: 94.4

Analyte	CAS. Number	Result	Qual	RL	MDL
Arsenic, Total	7440-38-2	0.236	J	0.316	0.0790
Lead, Total	7439-92-1	1.81		0.421	0.105

J Estimated ; the analyte concentration was less than the low standard (LOQ)

Microbac

629 lw 3/30/09

4

Sample Number:	L09010202-04	PrePrep Method:	NONE	Instrument:	ELAN-ICP
Client ID:	MR08-SS183-09A	Prep Method:	3051	Prep Date:	01/14/2009 09:16
Matrix:	Soil	Analytical Method:	6020	Cal Date:	01/26/2009 14:27
Workgroup Number:	WG292708	Analyst:	WTD	Run Date:	01/26/2009 21:14
Collect Date:	01/09/2009 09:30	Dilution:	1	File ID:	EL.012609.211405
Sample Tag:	02	Units:	mg/kg	Percent Solid:	94.4

Analyte	CAS. Number	Result	Qual	RL	MDL
Selenium, Total	7782-49-2	0.242	J	0.421	0.105

J Estimated ; the analyte concentration was less than the low standard (LOQ)

Microbac

DLW 3/30/09

4

Sample Number: L09010202-04
Client ID: MR08-SS183-09A
Matrix: Soil
Workgroup Number: WG292547
Collect Date: 01/09/2009 09:30
Sample Tag: 01

PrePrep Method: NONE
Prep Method: 3051
Analytical Method: 6010B
Analyst: KHR
Dilution: 1
Units: mg/kg

Instrument: IRIS-ICP
Prep Date: 01/14/2009 08:05
Cal Date: 01/15/2009 09:29
Run Date: 01/15/2009 14:18
File ID: IR.011509.141800
Percent Solid: 94.4

Analyte	CAS. Number	Result	Qual	RL	MDL
Silver, Total	7440-22-4		U	0.780	0.195
Barium, Total	7440-39-3	4.88		0.390	0.0780
Cadmium, Total	7440-43-9	0.0702	J	0.156	0.0390
Chromium, Total	7440-47-3	1.38		0.780	0.0936

U Undetected; the analyte was analyzed for, but not detected.
J Estimated ; the analyte concentration was less than the low standard (LOQ)

Microbac

18 kw 3/30/09

4

Sample Number:	L09010202-04	PrePrep Method:	NONE	Instrument:	HYDRA
Client ID:	MR08-SS183-09A	Prep Method:	7471A	Prep Date:	01/14/2009 07:42
Matrix:	Soil	Analytical Method:	7471A	Cal Date:	01/15/2009 09:30
Workgroup Number:	WG292562	Analyst:	ADC	Run Date:	01/15/2009 09:55
Collect Date:	01/09/2009 09:30	Dilution:	1	File ID:	HY.011509.095551
Sample Tag:	01	Units:	mg/kg	Percent Solid:	94.4

Analyte	CAS. Number	Result	Qual	RL	MDL
Mercury, Total	7439-97-6		U	0.101	0.0201

U Undetected; the analyte was analyzed for, but not detected.

Microbac

3178 hw 3/30/09

7

Sample Number:	L09010202-07	PrePrep Method:	NONE	Instrument:	ELAN-ICP
Client ID:	MR08-IS183-6-7-09A	Prep Method:	3051	Prep Date:	01/22/2009 06:50
Matrix:	Soil	Analytical Method:	6020	Cal Date:	01/26/2009 14:27
Workgroup Number:	WG293286	Analyst:	WTD	Run Date:	01/27/2009 00:35
Collect Date:	01/09/2009 10:00	Dilution:	1	File ID:	EL.012709.003526
Sample Tag:	01	Units:	mg/kg	Percent Solid:	97.1

Analyte	CAS. Number	Result	Qual	RL	MDL
Arsenic, Total	7440-38-2		U	0.308	0.0769
Lead, Total	7439-92-1	0.677 J		0.410	0.103 MSH
Selenium, Total	7782-49-2		U	0.410	0.103

U Undetected; the analyte was analyzed for, but not detected.

Microbac

635 lw 3/30/09

7

Sample Number: L09010202-07
Client ID: MR08-IS183-6-7-09A
Matrix: Soil
Workgroup Number: WG292553
Collect Date: 01/09/2009 10:00
Sample Tag: 01

PrePrep Method: NONE
Prep Method: 3051
Analytical Method: 6010B
Analyst: KHR
Dilution: 1
Units: mg/kg

Instrument: IRIS-ICP
Prep Date: 01/14/2009 08:37
Cal Date: 01/15/2009 09:29
Run Date: 01/15/2009 23:13
File ID: IR.011509.231300
Percent Solid: 97.1

Analyte	CAS. Number	Result	Qual	RL	MDL
Silver, Total	7440-22-4		U	0.733	0.183
Barium, Total	7440-39-3	0.453		0.366	0.0733
Cadmium, Total	7440-43-9		U	0.147	0.0366
Chromium, Total	7440-47-3	0.397 J	~~J~~	0.733	0.0879

MSH

U Undetected; the analyte was analyzed for, but not detected.
J Estimated ; the analyte concentration was less than the low standard (LOQ)

Microbac

21 lw 3/30/09

7

Sample Number: L09010202-07
Client ID: MR08-IS183-6-7-09A
Matrix: Soil
Workgroup Number: WG292566
Collect Date: 01/09/2009 10:00
Sample Tag: 01

PrePrep Method: NONE
Prep Method: 7471A
Analytical Method: 7471A
Analyst: ADC
Dilution: 1
Units: mg/kg

Instrument: HYDRA
Prep Date: 01/14/2009 10:16
Cal Date: 01/22/2009 13:28
Run Date: 01/22/2009 14:08
File ID: HY.012209.140835
Percent Solid: 97.1

Analyte	CAS. Number	Result	Qual	RL	MDL
Mercury, Total	7439-97-6		U	0.102	0.0203

U Undetected; the analyte was analyzed for, but not detected.

Microbac

3181 RLW 3/30/09

10

Sample Number: L09010202-10
Client ID: MR08-SS205-09A
Matrix: Soil
Workgroup Number: WG292708
Collect Date: 01/09/2009 10:35
Sample Tag: 01

PrePrep Method: NONE
Prep Method: 3051
Analytical Method: 6020
Analyst: WTD
Dilution: 1
Units: mg/kg

Instrument: ELAN-ICP
Prep Date: 01/14/2009 09:16
Cal Date: 01/20/2009 17:55
Run Date: 01/21/2009 05:04
File ID: EL.012109.050401
Percent Solid: 89.6

Analyte	CAS. Number	Result	Qual	RL	MDL
Arsenic, Total	7440-38-2	0.809		0.332	0.0831
Lead, Total	7439-92-1	3.80		0.443	0.111

Microbac

638 lw 3/30/09

10

Sample Number: L09010202-10
Client ID: MR08-SS205-09A
Matrix: Soil
Workgroup Number: WG292708
Collect Date: 01/09/2009 10:35
Sample Tag: 02

PrePrep Method: NONE
Prep Method: 3051
Analytical Method: 6020
Analyst: WTD
Dilution: 1
Units: mg/kg

Instrument: ELAN-ICP
Prep Date: 01/14/2009 09:16
Cal Date: 01/26/2009 14:27
Run Date: 01/26/2009 22:16
File ID: EL.012609.221657
Percent Solid: 89.6

Analyte	CAS. Number	Result	Qual	RL	MDL
Selenium, Total	7782-49-2	0.257	J	0.443	0.111

J Estimated ; the analyte concentration was less than the low standard (LOQ)

Microbac

639 MW 3/30/09

10

Sample Number: L09010202-10
Client ID: MR08-SS205-09A
Matrix: Soil
Workgroup Number: WG292547
Collect Date: 01/09/2009 10:35
Sample Tag: 01

PrePrep Method: NONE
Prep Method: 3051
Analytical Method: 6010B
Analyst: KHR
Dilution: 1
Units: mg/kg

Instrument: IRIS-ICP
Prep Date: 01/14/2009 08:05
Cal Date: 01/15/2009 09:29
Run Date: 01/15/2009 14:36
File ID: IR.011509.143600
Percent Solid: 89.6

Analyte	CAS. Number	Result	Qual	RL	MDL
Silver, Total	7440-22-4		U	0.822	0.206
Barium, Total	7440-39-3	7.44		0.411	0.0822
Cadmium, Total	7440-43-9	0.0978	J	0.164	0.0411
Chromium, Total	7440-47-3	4.48		0.822	0.0987

U Undetected; the analyte was analyzed for, but not detected.
J Estimated ; the analyte concentration was less than the low standard (LOQ)

Microbac

24 KW 3/30/09

10

Sample Number: L09010202-10
Client ID: MR08-SS205-09A
Matrix: Soil
Workgroup Number: WG292562
Collect Date: 01/09/2009 10:35
Sample Tag: 01

PrePrep Method: NONE
Prep Method: 7471A
Analytical Method: 7471A
Analyst: ADC
Dilution: 1
Units: mg/kg

Instrument: HYDRA
Prep Date: 01/14/2009 07:42
Cal Date: 01/15/2009 09:30
Run Date: 01/15/2009 10:03
File ID: HY.011509.100331
Percent Solid: 89.6

Analyte	CAS. Number	Result	Qual	RL	MDL
Mercury, Total	7439-97-6		U	0.108	0.0216

U Undetected; the analyte was analyzed for, but not detected.

Microbac

3184 lw 3/30/09

11

Sample Number: L09010202-11
Client ID: MR08-IS205-9-10-09A
Matrix: Soil
Workgroup Number: WG292708
Collect Date: 01/09/2009 10:45
Sample Tag: 01

PrePrep Method: NONE
Prep Method: 3051
Analytical Method: 6020
Analyst: WTD
Dilution: 1
Units: mg/kg

Instrument: ELAN-ICP
Prep Date: 01/14/2009 09:16
Cal Date: 01/20/2009 17:55
Run Date: 01/21/2009 05:10
File ID: EL.012109.051017
Percent Solid: 86.7

Analyte	CAS. Number	Result	Qual	RL	MDL
Arsenic, Total	7440-38-2	0.405		0.324	0.0811
Lead, Total	7439-92-1	4.52		0.433	0.108

Microbac®

640 MW 3/30/09

11

Sample Number: L09010202-11
Client ID: MR08-IS205-9-10-09A
Matrix: Soil
Workgroup Number: WG292708
Collect Date: 01/09/2009 10:45
Sample Tag: 02

PrePrep Method: NONE
Prep Method: 3051
Analytical Method: 6020
Analyst: WTD
Dilution: 1
Units: mg/kg

Instrument: ELAN-ICP
Prep Date: 01/14/2009 09:16
Cal Date: 01/26/2009 14:27
Run Date: 01/26/2009 22:23
File ID: EL.012609.222312
Percent Solid: 86.7

Analyte	CAS. Number	Result	Qual	RL	MDL
Selenium, Total	7782-49-2		U	0.433	0.108

U Undetected; the analyte was analyzed for, but not detected.

Microbac

641 WW 3/30/09

11

Sample Number: L09010202-11
Client ID: MR08-IS205-9-10-09A
Matrix: Soil
Workgroup Number: WG292547
Collect Date: 01/09/2009 10:45
Sample Tag: 01

PrePrep Method: NONE
Prep Method: 3051
Analytical Method: 6010B
Analyst: KHR
Dilution: 1
Units: mg/kg

Instrument: IRIS-ICP
Prep Date: 01/14/2009 08:05
Cal Date: 01/15/2009 09:29
Run Date: 01/15/2009 14:42
File ID: IR.011509.144200
Percent Solid: 86.7

Analyte	CAS. Number	Result	Qual	RL	MDL
Silver, Total	7440-22-4		U	0.821	0.205
Barium, Total	7440-39-3	5.60		0.411	0.0821
Cadmium, Total	7440-43-9		U	0.164	0.0411
Chromium, Total	7440-47-3	3.80		0.821	0.0985

U Undetected; the analyte was analyzed for, but not detected.

Microbac

25 lw 3/30/09

11

Sample Number:	L09010202-11	PrePrep Method:	NONE	Instrument:	HYDRA
Client ID:	MR08-IS205-9-10-09A	Prep Method:	7471A	Prep Date:	01/14/2009 07:42
Matrix:	Soil	Analytical Method:	7471A	Cal Date:	01/15/2009 09:30
Workgroup Number:	WG292562	Analyst:	ADC	Run Date:	01/15/2009 10:05
Collect Date:	01/09/2009 10:45	Dilution:	1	File ID:	HY.011509.100518
Sample Tag:	01	Units:	mg/kg	Percent Solid:	86.7

Analyte	CAS. Number	Result	Qual	RL	MDL
Mercury, Total	7439-97-6		U	0.115	0.0231

U Undetected; the analyte was analyzed for, but not detected.

Microbac®

3185 lw 3/30/09

12

Sample Number: L09010202-12
Client ID: MR08-SS204-09A
Matrix: Soil
Workgroup Number: WG293287
Collect Date: 01/09/2009 11:05
Sample Tag: 01

PrePrep Method: NONE
Prep Method: 3051
Analytical Method: 6020
Analyst: JYH
Dilution: 1
Units: mg/kg

Instrument: ELAN-ICP
Prep Date: 01/15/2009 08:49
Cal Date: 01/30/2009 11:12
Run Date: 01/30/2009 16:44
File ID: EL.013009.164419
Percent Solid: 94.3

Analyte	CAS. Number	Result	Qual	RL	MDL
Arsenic, Total	7440-38-2	0.414		0.314	0.0786
Lead, Total	7439-92-1	1.85		0.419	0.105
Selenium, Total	7782-49-2		U	0.419	0.105

U Undetected; the analyte was analyzed for, but not detected.

Microbac

642 lw 3/30/09

12

Sample Number: L09010202-12
Client ID: MR08-SS204-09A
Matrix: Soil
Workgroup Number: WG292548
Collect Date: 01/09/2009 11:05
Sample Tag: 01

PrePrep Method: NONE
Prep Method: 3051
Analytical Method: 6010B
Analyst: KHR
Dilution: 1
Units: mg/kg

Instrument: IRIS-ICP
Prep Date: 01/14/2009 09:23
Cal Date: 01/15/2009 09:29
Run Date: 01/15/2009 16:43
File ID: IR.011509.164300
Percent Solid: 94.3

Analyte	CAS. Number	Result	Qual	RL	MDL
Silver, Total	7440-22-4		U	0.792	0.198
Barium, Total	7440-39-3	4.60		0.396	0.0792
Cadmium, Total	7440-43-9	0.0542	J	0.158	0.0396
Chromium, Total	7440-47-3	3.30		0.792	0.0950

U Undetected; the analyte was analyzed for, but not detected.
J Estimated ; the analyte concentration was less than the low standard (LOQ)

Microbac

26 LW 3/30/09

12

Sample Number: L09010202-12
Client ID: MR08-SS204-09A
Matrix: Soil
Workgroup Number: WG292570
Collect Date: 01/09/2009 11:05
Sample Tag: 01

PrePrep Method: NONE
Prep Method: 7471A
Analytical Method: 7471A
Analyst: ADC
Dilution: 1
Units: mg/kg

Instrument: HYDRA
Prep Date: 01/14/2009 12:39
Cal Date: 01/15/2009 09:30
Run Date: 01/15/2009 12:07
File ID: HY.011509.120755
Percent Solid: 94.3

Analyte	CAS. Number	Result	Qual	RL	MDL
Mercury, Total	7439-97-6		U	0.106	0.0212

U Undetected; the analyte was analyzed for, but not detected.

Microbac

3186 MH 3/30/09

15

Sample Number: L09010202-15
Client ID: MR08-IS204-6-7-09A
Matrix: Soil
Workgroup Number: WG293561
Collect Date: 01/09/2009 11:25
Sample Tag: 01

PrePrep Method: NONE
Prep Method: 3051
Analytical Method: 6020
Analyst: JYH
Dilution: 1
Units: mg/kg

Instrument: ELAN-ICP
Prep Date: 01/15/2009 12:27
Cal Date: 01/27/2009 12:41
Run Date: 01/28/2009 01:24
File ID: EL.012809.012454
Percent Solid: 90.2

Analyte	CAS. Number	Result	Qual	RL	MDL
Arsenic, Total	7440-38-2	1.49		0.331	0.0826
Lead, Total	7439-92-1	2.97		0.441	0.110

Microbac

645 MW 3/30/09

15

Sample Number: L09010202-15
Client ID: MR08-IS204-6-7-09A
Matrix: Soil
Workgroup Number: WG293561
Collect Date: 01/09/2009 11:25
Sample Tag: DL01

PrePrep Method: NONE
Prep Method: 3051
Analytical Method: 6020
Analyst: JYH
Dilution: 2
Units: mg/kg

Instrument: ELAN-ICP
Prep Date: 01/15/2009 12:27
Cal Date: 01/30/2009 11:12
Run Date: 01/31/2009 00:36
File ID: EL.013109.003655
Percent Solid: 90.2

Analyte	CAS. Number	Result	Qual	RL	MDL
Selenium, Total	7782-49-2	0.269	J	0.881	0.220

J Estimated ; the analyte concentration was less than the low standard (LOQ)

Microbac

646 MW 3/30/09

15

Sample Number: L09010202-15
Client ID: MR08-IS204-6-7-09A
Matrix: Soil
Workgroup Number: WG292551
Collect Date: 01/09/2009 11:25
Sample Tag: 01

PrePrep Method: NONE
Prep Method: 3051
Analytical Method: 6010B
Analyst: KHR
Dilution: 1
Units: mg/kg

Instrument: IRIS-ICP
Prep Date: 01/14/2009 10:03
Cal Date: 01/15/2009 09:29
Run Date: 01/15/2009 19:52
File ID: IR.011509.195200
Percent Solid: 90.2

Analyte	CAS. Number	Result	Qual	RL	MDL	
Silver, Total	7440-22-4		U	0.813	0.203	
Barium, Total	7440-39-3	12.7 J		0.407	0.0813	MSL
Cadmium, Total	7440-43-9	0.0492	J	0.163	0.0407	
Chromium, Total	7440-47-3	9.61 J		0.813	0.0976	MSL

U Undetected; the analyte was analyzed for, but not detected.
J Estimated ; the analyte concentration was less than the low standard (LOQ)

Microbac

29 MW 3/30/09

15

Sample Number: L09010202-15
Client ID: MR08-IS204-6-7-09A
Matrix: Soil
Workgroup Number: WG293423
Collect Date: 01/09/2009 11:25
Sample Tag: 01

PrePrep Method: NONE
Prep Method: 7471A
Analytical Method: 7471A
Analyst: ADC
Dilution: 1
Units: mg/kg

Instrument: HYDRA
Prep Date: 01/15/2009 09:34
Cal Date: 01/26/2009 13:07
Run Date: 01/26/2009 13:28
File ID: HY.012609.132850
Percent Solid: 90.2

Analyte	CAS. Number	Result	Qual	RL	MDL
Mercury, Total	7439-97-6		U	0.111	0.0222

U Undetected; the analyte was analyzed for, but not detected.

Microbac

3189 kw 3/30/09

18

Sample Number:	L09010202-18	PrePrep Method:	NONE	Instrument:	ELAN-ICP
Client ID:	MR08-IS180-6-7-09A	Prep Method:	3051	Prep Date:	01/14/2009 09:16
Matrix:	Soil	Analytical Method:	6020	Cal Date:	01/26/2009 14:27
Workgroup Number:	WG292708	Analyst:	WTD	Run Date:	01/26/2009 22:29
Collect Date:	01/09/2009 08:45	Dilution:	1	File ID:	EL.012609.222927
Sample Tag:	02	Units:	mg/kg	Percent Solid:	87.7

Analyte	CAS. Number	Result	Qual	RL	MDL
Selenium, Total	7782-49-2		U	0.452	0.113

U Undetected; the analyte was analyzed for, but not detected.

Microbac

651 lw 3/30/09

18

Sample Number: L09010202-18
Client ID: MR08-IS180-6-7-09A
Matrix: Soil
Workgroup Number: WG292708
Collect Date: 01/09/2009 08:45
Sample Tag: 01

PrePrep Method: NONE
Prep Method: 3051
Analytical Method: 6020
Analyst: WTD
Dilution: 1
Units: mg/kg

Instrument: ELAN-ICP
Prep Date: 01/14/2009 09:16
Cal Date: 01/20/2009 17:55
Run Date: 01/21/2009 05:16
File ID: EL.012109.051633
Percent Solid: 87.7

Analyte	CAS. Number	Result	Qual	RL	MDL
Arsenic, Total	7440-38-2	10.3		0.339	0.0848
Lead, Total	7439-92-1	1.87		0.452	0.113

Microbac

652 MW 3/30/09

18

Sample Number: L09010202-18
Client ID: MR08-IS180-6-7-09A
Matrix: Soil
Workgroup Number: WG292547
Collect Date: 01/09/2009 08:45
Sample Tag: 01

PrePrep Method: NONE
Prep Method: 3051
Analytical Method: 6010B
Analyst: KHR
Dilution: 1
Units: mg/kg

Instrument: IRIS-ICP
Prep Date: 01/14/2009 08:05
Cal Date: 01/15/2009 09:29
Run Date: 01/15/2009 14:48
File ID: IR.011509.144800
Percent Solid: 87.7

Analyte	CAS. Number	Result	Qual	RL	MDL
Silver, Total	7440-22-4		U	0.810	0.203
Barium, Total	7440-39-3	0.675		0.405	0.0810
Cadmium, Total	7440-43-9		U	0.162	0.0405
Chromium, Total	7440-47-3	0.696	J	0.810	0.0972

U Undetected; the analyte was analyzed for, but not detected.
J Estimated ; the analyte concentration was less than the low standard (LOQ)

Microbac

32 lw 3/30/09

18

Sample Number: L09010202-18
Client ID: MR08-IS180-6-7-09A
Matrix: Soil
Workgroup Number: WG292562
Collect Date: 01/09/2009 08:45
Sample Tag: 01

PrePrep Method: NONE
Prep Method: 7471A
Analytical Method: 7471A
Analyst: ADC
Dilution: 1
Units: mg/kg

Instrument: HYDRA
Prep Date: 01/14/2009 07:42
Cal Date: 01/15/2009 09:30
Run Date: 01/15/2009 10:07
File ID: HY.011509.100710
Percent Solid: 87.7

Analyte	CAS. Number	Result	Qual	RL	MDL
Mercury, Total	7439-97-6		U	0.114	0.0228

U Undetected; the analyte was analyzed for, but not detected.

Microbac

3192 LW 3/30/09

19

Sample Number: L09010202-19
Client ID: MR08-SS203-09A
Matrix: Soil
Workgroup Number: WG292708
Collect Date: 01/09/2009 13:00
Sample Tag: 02

PrePrep Method: NONE
Prep Method: 3051
Analytical Method: 6020
Analyst: WTD
Dilution: 1
Units: mg/kg

Instrument: ELAN-ICP
Prep Date: 01/14/2009 09:16
Cal Date: 01/26/2009 14:27
Run Date: 01/26/2009 22:35
File ID: EL.012609.223543
Percent Solid: 89.2

Analyte	CAS. Number	Result	Qual	RL	MDL
Selenium, Total	7782-49-2	0.345	J	0.436	0.109

J Estimated ; the analyte concentration was less than the low standard (LOQ)

Microbac

653 LW 3/30/09

19

Sample Number: L09010202-19
Client ID: MR08-SS203-09A
Matrix: Soil
Workgroup Number: WG292708
Collect Date: 01/09/2009 13:00
Sample Tag: 01

PrePrep Method: NONE
Prep Method: 3051
Analytical Method: 6020
Analyst: WTD
Dilution: 1
Units: mg/kg

Instrument: ELAN-ICP
Prep Date: 01/14/2009 09:16
Cal Date: 01/20/2009 17:55
Run Date: 01/21/2009 05:22
File ID: EL.012109.052250
Percent Solid: 89.2

Analyte	CAS. Number	Result	Qual	RL	MDL
Arsenic, Total	7440-38-2	0.536		0.327	0.0818
Lead, Total	7439-92-1	21.2		0.436	0.109

Microbac

 3/30/09

19

Sample Number: L09010202-19
Client ID: MR08-SS203-09A
Matrix: Soil
Workgroup Number: WG292547
Collect Date: 01/09/2009 13:00
Sample Tag: 01

PrePrep Method: NONE
Prep Method: 3051
Analytical Method: 6010B
Analyst: KHR
Dilution: 1
Units: mg/kg

Instrument: IRIS-ICP
Prep Date: 01/14/2009 08:05
Cal Date: 01/15/2009 09:29
Run Date: 01/15/2009 14:54
File ID: IR.011509.145400
Percent Solid: 89.2

Analyte	CAS. Number	Result	Qual	RL	MDL
Silver, Total	7440-22-4		U	0.855	0.214
Barium, Total	7440-39-3	9.78		0.428	0.0855
Cadmium, Total	7440-43-9	0.162	J	0.171	0.0428
Chromium, Total	7440-47-3	3.71		0.855	0.103

U Undetected; the analyte was analyzed for, but not detected.
J Estimated ; the analyte concentration was less than the low standard (LOQ)

Microbac

 lew 3/30/09

19

Sample Number: L09010202-19
Client ID: MR08-SS203-09A
Matrix: Soil
Workgroup Number: WG292562
Collect Date: 01/09/2009 13:00
Sample Tag: 01

PrePrep Method: NONE
Prep Method: 7471A
Analytical Method: 7471A
Analyst: ADC
Dilution: 1
Units: mg/kg

Instrument: HYDRA
Prep Date: 01/14/2009 07:42
Cal Date: 01/15/2009 09:30
Run Date: 01/15/2009 10:08
File ID: HY.011509.100853
Percent Solid: 89.2

Analyte	CAS. Number	Result	Qual	RL	MDL
Mercury, Total	7439-97-6		U	0.111	0.0223

U Undetected; the analyte was analyzed for, but not detected.

Microbac

3193 lw 3/30/09

20

Sample Number: L09010202-20
Client ID: MR08-IS203-6-7-09A
Matrix: Soil
Workgroup Number: WG292708
Collect Date: 01/09/2009 13:25
Sample Tag: 01

PrePrep Method: NONE
Prep Method: 3051
Analytical Method: 6020
Analyst: WTD
Dilution: 1
Units: mg/kg

Instrument: ELAN-ICP
Prep Date: 01/14/2009 09:16
Cal Date: 01/20/2009 17:55
Run Date: 01/21/2009 05:29
File ID: EL.012109.052907
Percent Solid: 88.5

Analyte	CAS. Number	Result	Qual	RL	MDL
Arsenic, Total	7440-38-2	0.475		0.338	0.0846
Lead, Total	7439-92-1	3.77		0.451	0.113

Microbac

655 lus 3/30/09

20

Sample Number: L09010202-20
Client ID: MR08-IS203-6-7-09A
Matrix: Soil
Workgroup Number: WG292708
Collect Date: 01/09/2009 13:25
Sample Tag: 02

PrePrep Method: NONE
Prep Method: 3051
Analytical Method: 6020
Analyst: WTD
Dilution: 1
Units: mg/kg

Instrument: ELAN-ICP
Prep Date: 01/14/2009 09:16
Cal Date: 01/26/2009 14:27
Run Date: 01/26/2009 22:41
File ID: EL.012609.224157
Percent Solid: 88.5

Analyte	CAS. Number	Result	Qual	RL	MDL
Selenium, Total	7782-49-2	0.171	J	0.451	0.113

J Estimated ; the analyte concentration was less than the low standard (LOQ)

Microbac

656 hw 3/30/09

20

Sample Number: L09010202-20
Client ID: MR08-IS203-6-7-09A
Matrix: Soil
Workgroup Number: WG292547
Collect Date: 01/09/2009 13:25
Sample Tag: 01

PrePrep Method: NONE
Prep Method: 3051
Analytical Method: 6010B
Analyst: KHR
Dilution: 1
Units: mg/kg

Instrument: IRIS-ICP
Prep Date: 01/14/2009 08:05
Cal Date: 01/15/2009 09:29
Run Date: 01/15/2009 15:00
File ID: IR.011509.150000
Percent Solid: 88.5

Analyte	CAS. Number	Result	Qual	RL	MDL
Silver, Total	7440-22-4		U	0.769	0.192
Barium, Total	7440-39-3	12.8		0.385	0.0769
Cadmium, Total	7440-43-9		U	0.154	0.0385
Chromium, Total	7440-47-3	4.94		0.769	0.0923

U Undetected; the analyte was analyzed for, but not detected.

Microbac

34 lwl 3/30/09

20

Sample Number: L09010202-20
Client ID: MR08-IS203-6-7-09A
Matrix: Soil
Workgroup Number: WG292562
Collect Date: 01/09/2009 13:25
Sample Tag: 01

PrePrep Method: NONE
Prep Method: 7471A
Analytical Method: 7471A
Analyst: ADC
Dilution: 1
Units: mg/kg

Instrument: HYDRA
Prep Date: 01/14/2009 07:42
Cal Date: 01/15/2009 09:30
Run Date: 01/15/2009 10:10
File ID: HY.011509.101058
Percent Solid: 88.5

Analyte	CAS. Number	Result	Qual	RL	MDL
Mercury, Total	7439-97-6		U	0.106	0.0213

U Undetected; the analyte was analyzed for, but not detected.

Microbac

3194 lw 3/30/09

21

Sample Number: L09010202-21
Client ID: MR08-SS184-09A
Matrix: Soil
Workgroup Number: WG292708
Collect Date: 01/09/2009 13:45
Sample Tag: 02

PrePrep Method: NONE
Prep Method: 3051
Analytical Method: 6020
Analyst: WTD
Dilution: 1
Units: mg/kg

Instrument: ELAN-ICP
Prep Date: 01/14/2009 09:16
Cal Date: 01/26/2009 14:27
Run Date: 01/26/2009 22:48
File ID: EL.012609.224810
Percent Solid: 86.6

Analyte	CAS. Number	Result	Qual	RL	MDL
Selenium, Total	7782-49-2	0.366	J	0.453	0.113

J Estimated ; the analyte concentration was less than the low standard (LOQ)

Microbac

657 LW 3/30/09

21

Sample Number: L09010202-21
Client ID: MR08-SS184-09A
Matrix: Soil
Workgroup Number: WG292708
Collect Date: 01/09/2009 13:45
Sample Tag: 01

PrePrep Method: NONE
Prep Method: 3051
Analytical Method: 6020
Analyst: WTD
Dilution: 1
Units: mg/kg

Instrument: ELAN-ICP
Prep Date: 01/14/2009 09:16
Cal Date: 01/20/2009 17:55
Run Date: 01/21/2009 05:35
File ID: EL.012109.053522
Percent Solid: 86.6

Analyte	CAS. Number	Result	Qual	RL	MDL
Arsenic, Total	7440-38-2	0.539		0.340	0.0849
Lead, Total	7439-92-1	18.1		0.453	0.113

Microbac

658 hw 3/30/09

21

Sample Number: L09010202-21
Client ID: MR08-SS184-09A
Matrix: Soil
Workgroup Number: WG292547
Collect Date: 01/09/2009 13:45
Sample Tag: 01

PrePrep Method: NONE
Prep Method: 3051
Analytical Method: 6010B
Analyst: KHR
Dilution: 1
Units: mg/kg

Instrument: IRIS-ICP
Prep Date: 01/14/2009 08:05
Cal Date: 01/15/2009 09:29
Run Date: 01/15/2009 15:18
File ID: IR.011509.151800
Percent Solid: 86.6

Analyte	CAS. Number	Result	Qual	RL	MDL
Silver, Total	7440-22-4		U	0.780	0.195
Barium, Total	7440-39-3	14.6		0.390	0.0780
Cadmium, Total	7440-43-9	0.183		0.156	0.0390
Chromium, Total	7440-47-3	4.93		0.780	0.0935

U Undetected; the analyte was analyzed for, but not detected.

Microbac

35 LWD 3/30/09

21

Sample Number: L09010202-21
Client ID: MR08-SS184-09A
Matrix: Soil
Workgroup Number: WG292562
Collect Date: 01/09/2009 13:45
Sample Tag: 01

PrePrep Method: NONE
Prep Method: 7471A
Analytical Method: 7471A
Analyst: ADC
Dilution: 1
Units: mg/kg

Instrument: HYDRA
Prep Date: 01/14/2009 07:42
Cal Date: 01/15/2009 09:30
Run Date: 01/15/2009 10:16
File ID: HY.011509.101620
Percent Solid: 86.6

Analyte	CAS. Number	Result	Qual	RL	MDL
Mercury, Total	7439-97-6		U	0.115	0.0230

U Undetected; the analyte was analyzed for, but not detected.

Microbac

3195 lus 3/30/09

22

Sample Number: L09010202-23
Client ID: MR08-IS184-8-9-09A
Matrix: Soil
Workgroup Number: WG292708
Collect Date: 01/09/2009 14:10
Sample Tag: 01

PrePrep Method: NONE
Prep Method: 3051
Analytical Method: 6020
Analyst: WTD
Dilution: 1
Units: mg/kg

Instrument: ELAN-ICP
Prep Date: 01/14/2009 09:16
Cal Date: 01/20/2009 17:55
Run Date: 01/21/2009 05:41
File ID: EL.012109.054136
Percent Solid: 95.5

Analyte	CAS. Number	Result	Qual	RL	MDL
Arsenic, Total	7440-38-2	6.50		0.313	0.0783
Lead, Total	7439-92-1	1.19		0.418	0.104

Microbac

659 MW 3/30/09

22

Sample Number: L09010202-23
Client ID: MR08-IS184-8-9-09A
Matrix: Soil
Workgroup Number: WG292708
Collect Date: 01/09/2009 14:10
Sample Tag: 02

PrePrep Method: NONE
Prep Method: 3051
Analytical Method: 6020
Analyst: WTD
Dilution: 1
Units: mg/kg

Instrument: ELAN-ICP
Prep Date: 01/14/2009 09:16
Cal Date: 01/26/2009 14:27
Run Date: 01/26/2009 22:54
File ID: EL.012609.225423
Percent Solid: 95.5

Analyte	CAS. Number	Result	Qual	RL	MDL
Selenium, Total	7782-49-2		U	0.418	0.104

U Undetected; the analyte was analyzed for, but not detected.

Microbac

660 lw 3/30/09

Sample Number: L09010202-23
Client ID: MR08-IS184-8-9-09A
Matrix: Soil
Workgroup Number: WG292547
Collect Date: 01/09/2009 14:10
Sample Tag: 01

PrePrep Method: NONE
Prep Method: 3051
Analytical Method: 6010B
Analyst: KHR
Dilution: 1
Units: mg/kg

Instrument: IRIS-ICP
Prep Date: 01/14/2009 08:05
Cal Date: 01/15/2009 09:29
Run Date: 01/15/2009 15:24
File ID: IR.011509.152400
Percent Solid: 95.5

Analyte	CAS. Number	Result	Qual	RL	MDL
Silver, Total	7440-22-4		U	0.700	0.175
Barium, Total	7440-39-3	1.01		0.350	0.0700
Cadmium, Total	7440-43-9		U	0.140	0.0350
Chromium, Total	7440-47-3	0.602	J	0.700	0.0840

U Undetected; the analyte was analyzed for, but not detected.
J Estimated ; the analyte concentration was less than the low standard (LOQ)

Microbac

36 LCW 3/30/09

22

Sample Number: L09010202-23
Client ID: MR08-IS184-8-9-09A
Matrix: Soil
Workgroup Number: WG292562
Collect Date: 01/09/2009 14:10
Sample Tag: 01

PrePrep Method: NONE
Prep Method: 7471A
Analytical Method: 7471A
Analyst: ADC
Dilution: 1
Units: mg/kg

Instrument: HYDRA
Prep Date: 01/14/2009 07:42
Cal Date: 01/15/2009 09:30
Run Date: 01/15/2009 10:18
File ID: HY.011509.101824
Percent Solid: 95.5

Analyte	CAS. Number	Result	Qual	RL	MDL
Mercury, Total	7439-97-6		U	0.101	0.0203

U Undetected; the analyte was analyzed for, but not detected.

Microbac

3196 lw 3/30/09

23

Sample Number:	L09010202-24	PrePrep Method:	NONE	Instrument:	ELAN-ICP
Client ID:	MR08-SS255-09A	Prep Method:	3051	Prep Date:	01/14/2009 09:16
Matrix:	Soil	Analytical Method:	6020	Cal Date:	01/26/2009 14:27
Workgroup Number:	WG292708	Analyst:	WTD	Run Date:	01/26/2009 23:00
Collect Date:	01/09/2009 14:30	Dilution:	5	File ID:	EL.012609.230036
Sample Tag:	DL01	Units:	mg/kg	Percent Solid:	93.4

Analyte	CAS. Number	Result	Qual	RL	MDL
Selenium, Total	7782-49-2	1.70	J	2.08	0.521

J Estimated ; the analyte concentration was less than the low standard (LOQ)

Microbac

lus
3/30/09

23

Sample Number: L09010202-24
Client ID: MR08-SS255-09A
Matrix: Soil
Workgroup Number: WG292708
Collect Date: 01/09/2009 14:30
Sample Tag: 01

PrePrep Method: NONE
Prep Method: 3051
Analytical Method: 6020
Analyst: WTD
Dilution: 1
Units: mg/kg

Instrument: ELAN-ICP
Prep Date: 01/14/2009 09:16
Cal Date: 01/20/2009 17:55
Run Date: 01/21/2009 05:47
File ID: EL.012109.054750
Percent Solid: 93.4

Analyte	CAS. Number	Result	Qual	RL	MDL
Arsenic, Total	7440-38-2	0.534		0.312	0.0781
Lead, Total	7439-92-1	3.01		0.417	0.104

Microbac

662 lw 3/30/09

23

Sample Number: L09010202-24
Client ID: MR08-SS255-09A
Matrix: Soil
Workgroup Number: WG292547
Collect Date: 01/09/2009 14:30
Sample Tag: 01

PrePrep Method: NONE
Prep Method: 3051
Analytical Method: 6010B
Analyst: KHR
Dilution: 1
Units: mg/kg

Instrument: IRIS-ICP
Prep Date: 01/14/2009 08:05
Cal Date: 01/15/2009 09:29
Run Date: 01/15/2009 15:30
File ID: IR.011509.153000
Percent Solid: 93.4

Analyte	CAS. Number	Result	Qual	RL	MDL
Silver, Total	7440-22-4	0.218	J	0.745	0.186
Barium, Total	7440-39-3	4.92		0.373	0.0745
Cadmium, Total	7440-43-9	0.240		0.149	0.0373
Chromium, Total	7440-47-3	4.24		0.745	0.0894

J Estimated ; the analyte concentration was less than the low standard (LOQ)

Microbac

37 lw 3/30/09

23

Sample Number: L09010202-24
Client ID: MR08-SS255-09A
Matrix: Soil
Workgroup Number: WG292562
Collect Date: 01/09/2009 14:30
Sample Tag: 01

PrePrep Method: NONE
Prep Method: 7471A
Analytical Method: 7471A
Analyst: ADC
Dilution: 1
Units: mg/kg

Instrument: HYDRA
Prep Date: 01/14/2009 07:42
Cal Date: 01/15/2009 09:30
Run Date: 01/15/2009 10:20
File ID: HY.011509.102008
Percent Solid: 93.4

Analyte	CAS. Number	Result	Qual	RL	MDL
Mercury, Total	7439-97-6		U	0.101	0.0202

U Undetected; the analyte was analyzed for, but not detected.

Microbac

3197 DW 3/30/09

24

Sample Number: L09010202-25
Client ID: MR08-IS255-6-7-09A
Matrix: Soil
Workgroup Number: WG292708
Collect Date: 01/09/2009 14:50
Sample Tag: 01

PrePrep Method: NONE
Prep Method: 3051
Analytical Method: 6020
Analyst: WTD
Dilution: 1
Units: mg/kg

Instrument: ELAN-ICP
Prep Date: 01/14/2009 09:16
Cal Date: 01/20/2009 17:55
Run Date: 01/21/2009 05:54
File ID: EL.012109.055405
Percent Solid: 83.6

Analyte	CAS. Number	Result	Qual	RL	MDL
Arsenic, Total	7440-38-2	9.09		0.346	0.0865
Lead, Total	7439-92-1	3.84		0.461	0.115

Microbac

663 lw 3/30/09

24

Sample Number:	L09010202-25	PrePrep Method:	NONE	Instrument:	ELAN-ICP
Client ID:	MR08-IS255-6-7-09A	Prep Method:	3051	Prep Date:	01/14/2009 09:16
Matrix:	Soil	Analytical Method:	6020	Cal Date:	01/26/2009 14:27
Workgroup Number:	WG292708	Analyst:	WTD	Run Date:	01/26/2009 23:19
Collect Date:	01/09/2009 14:50	Dilution:	1	File ID:	EL.012609.231954
Sample Tag:	02	Units:	mg/kg	Percent Solid:	83.6

Analyte	CAS. Number	Result	Qual	RL	MDL
Selenium, Total	7782-49-2	0.144	J	0.461	0.115

J Estimated ; the analyte concentration was less than the low standard (LOQ)

Microbac

664 MW 3/30/09

24

Sample Number: L09010202-25
Client ID: MR08-IS255-6-7-09A
Matrix: Soil
Workgroup Number: WG292547
Collect Date: 01/09/2009 14:50
Sample Tag: 01

PrePrep Method: NONE
Prep Method: 3051
Analytical Method: 6010B
Analyst: KHR
Dilution: 1
Units: mg/kg

Instrument: IRIS-ICP
Prep Date: 01/14/2009 08:05
Cal Date: 01/15/2009 09:29
Run Date: 01/15/2009 15:36
File ID: IR.011509.153600
Percent Solid: 83.6

Analyte	CAS. Number	Result	Qual	RL	MDL
Silver, Total	7440-22-4		U	0.820	0.205
Barium, Total	7440-39-3	4.21		0.410	0.0820
Cadmium, Total	7440-43-9		U	0.164	0.0410
Chromium, Total	7440-47-3	2.87		0.820	0.0984

U Undetected; the analyte was analyzed for, but not detected.

Microbac

38 RW 3/30/09

24

Sample Number: L09010202-25
Client ID: MR08-IS255-6-7-09A
Matrix: Soil
Workgroup Number: WG292562
Collect Date: 01/09/2009 14:50
Sample Tag: 01

PrePrep Method: NONE
Prep Method: 7471A
Analytical Method: 7471A
Analyst: ADC
Dilution: 1
Units: mg/kg

Instrument: HYDRA
Prep Date: 01/14/2009 07:42
Cal Date: 01/15/2009 09:30
Run Date: 01/15/2009 10:21
File ID: HY.011509.102150
Percent Solid: 83.6

Analyte	CAS. Number	Result	Qual	RL	MDL
Mercury, Total	7439-97-6		U	0.111	0.0223

U Undetected; the analyte was analyzed for, but not detected.

Microbac

3198

lew
3/3/09

25

Sample Number: L09010202-26
Client ID: MR08-SS276-09A
Matrix: Soil
Workgroup Number: WG292708
Collect Date: 01/09/2009 15:00
Sample Tag: 01

PrePrep Method: NONE
Prep Method: 3051
Analytical Method: 6020
Analyst: WTD
Dilution: 1
Units: mg/kg

Instrument: ELAN-ICP
Prep Date: 01/14/2009 09:16
Cal Date: 01/20/2009 17:55
Run Date: 01/21/2009 06:00
File ID: EL.012109.060020
Percent Solid: 92.8

Analyte	CAS. Number	Result	Qual	RL	MDL
Arsenic, Total	7440-38-2	0.738		0.316	0.0789
Lead, Total	7439-92-1	2.96		0.421	0.105

Microbac

665 LW 3/30/09

25

Sample Number:	L09010202-26	PrePrep Method:	NONE	Instrument:	ELAN-ICP
Client ID:	MR08-SS276-09A	Prep Method:	3051	Prep Date:	01/14/2009 09:16
Matrix:	Soil	Analytical Method:	6020	Cal Date:	01/26/2009 14:27
Workgroup Number:	WG292708	Analyst:	WTD	Run Date:	01/26/2009 23:26
Collect Date:	01/09/2009 15:00	Dilution:	5	File ID:	EL.012609.232608
Sample Tag:	DL01	Units:	mg/kg	Percent Solid:	92.8

Analyte	CAS. Number	Result	Qual	RL	MDL
Selenium, Total	7782-49-2	1.36	J	2.10	0.526

J Estimated ; the analyte concentration was less than the low standard (LOQ)

Microbac

666 LW 3/30/09

25

Sample Number: L09010202-26
Client ID: MR08-SS276-09A
Matrix: Soil
Workgroup Number: WG292547
Collect Date: 01/09/2009 15:00
Sample Tag: 01

PrePrep Method: NONE
Prep Method: 3051
Analytical Method: 6010B
Analyst: KHR
Dilution: 1
Units: mg/kg

Instrument: IRIS-ICP
Prep Date: 01/14/2009 08:05
Cal Date: 01/15/2009 09:29
Run Date: 01/15/2009 15:43
File ID: IR.011509.154300
Percent Solid: 92.8

Analyte	CAS. Number	Result	Qual	RL	MDL
Silver, Total	7440-22-4		U	0.729	0.182
Barium, Total	7440-39-3	6.65		0.364	0.0729
Cadmium, Total	7440-43-9	0.222		0.146	0.0364
Chromium, Total	7440-47-3	3.78		0.729	0.0874

U Undetected; the analyte was analyzed for, but not detected.

Microbac

39 RW
3/30/09

25

Sample Number: L09010202-26
Client ID: MR08-SS276-09A
Matrix: Soil
Workgroup Number: WG292562
Collect Date: 01/09/2009 15:00
Sample Tag: 01

PrePrep Method: NONE
Prep Method: 7471A
Analytical Method: 7471A
Analyst: ADC
Dilution: 1
Units: mg/kg

Instrument: HYDRA
Prep Date: 01/14/2009 07:42
Cal Date: 01/15/2009 09:30
Run Date: 01/15/2009 10:24
File ID: HY.011509.102448
Percent Solid: 92.8

Analyte	CAS. Number	Result	Qual	RL	MDL
Mercury, Total	7439-97-6		U	0.101	0.0202

U Undetected; the analyte was analyzed for, but not detected.

Microbac

3199 lw 3/3/09

26

Sample Number: L09010202-27
Client ID: MR08-IS276-6-7-09A
Matrix: Soil
Workgroup Number: WG292708
Collect Date: 01/09/2009 15:20
Sample Tag: 01

PrePrep Method: NONE
Prep Method: 3051
Analytical Method: 6020
Analyst: WTD
Dilution: 1
Units: mg/kg

Instrument: ELAN-ICP
Prep Date: 01/14/2009 09:16
Cal Date: 01/20/2009 17:55
Run Date: 01/21/2009 06:19
File ID: EL.012109.061938
Percent Solid: 87.7

Analyte	CAS. Number	Result	Qual	RL	MDL
Lead, Total	7439-92-1	2.24		0.454	0.114

Microbac

667 lus 3/30/09

26

Sample Number: L09010202-27
Client ID: MR08-IS276-6-7-09A
Matrix: Soil
Workgroup Number: WG292708
Collect Date: 01/09/2009 15:20
Sample Tag: 02

PrePrep Method: NONE
Prep Method: 3051
Analytical Method: 6020
Analyst: WTD
Dilution: 1
Units: mg/kg

Instrument: ELAN-ICP
Prep Date: 01/14/2009 09:16
Cal Date: 01/26/2009 14:27
Run Date: 01/26/2009 23:32
File ID: EL.012609.233223
Percent Solid: 87.7

Analyte	CAS. Number	Result	Qual	RL	MDL
Arsenic, Total	7440-38-2	1.31		0.341	0.0852
Selenium, Total	7782-49-2	0.130	J	0.454	0.114

J Estimated ; the analyte concentration was less than the low standard (LOQ)

Microbac

668 lus 3/30/09

26

Sample Number: L09010202-27
Client ID: MR08-IS276-6-7-09A
Matrix: Soil
Workgroup Number: WG292547
Collect Date: 01/09/2009 15:20
Sample Tag: 01

PrePrep Method: NONE
Prep Method: 3051
Analytical Method: 6010B
Analyst: KHR
Dilution: 1
Units: mg/kg

Instrument: IRIS-ICP
Prep Date: 01/14/2009 08:05
Cal Date: 01/15/2009 09:29
Run Date: 01/15/2009 15:49
File ID: IR.011509.154900
Percent Solid: 87.7

Analyte	CAS. Number	Result	Qual	RL	MDL
Silver, Total	7440-22-4		U	0.809	0.202
Barium, Total	7440-39-3	2.49		0.405	0.0809
Cadmium, Total	7440-43-9		U	0.162	0.0405
Chromium, Total	7440-47-3	3.08		0.809	0.0971

U Undetected; the analyte was analyzed for, but not detected.

Microbac

40 lbs
3/30/09

26

Sample Number: L09010202-27
Client ID: MR08-IS276-6-7-09A
Matrix: Soil
Workgroup Number: WG292562
Collect Date: 01/09/2009 15:20
Sample Tag: 01

PrePrep Method: NONE
Prep Method: 7471A
Analytical Method: 7471A
Analyst: ADC
Dilution: 1
Units: mg/kg

Instrument: HYDRA
Prep Date: 01/14/2009 07:42
Cal Date: 01/15/2009 09:30
Run Date: 01/15/2009 10:26
File ID: HY.011509.102630
Percent Solid: 87.7

Analyte	CAS. Number	Result	Qual	RL	MDL
Mercury, Total	7439-97-6		U	0.113	0.0226

U Undetected; the analyte was analyzed for, but not detected.

Microbac

3200 luo 3/3/09

27

Sample Number: L09010202-28
Client ID: MR08-SS254-09A
Matrix: Soil
Workgroup Number: WG292708
Collect Date: 01/09/2009 15:35
Sample Tag: 01

PrePrep Method: NONE
Prep Method: 3051
Analytical Method: 6020
Analyst: WTD
Dilution: 1
Units: mg/kg

Instrument: ELAN-ICP
Prep Date: 01/14/2009 09:16
Cal Date: 01/20/2009 17:55
Run Date: 01/21/2009 06:25
File ID: EL.012109.062554
Percent Solid: 85.6

Analyte	CAS. Number	Result	Qual	RL	MDL
Lead, Total	7439-92-1	14.4		0.465	0.116

Microbac

669 lw 3/30/09

27

Sample Number: L09010202-28
Client ID: MR08-SS254-09A
Matrix: Soil
Workgroup Number: WG292708
Collect Date: 01/09/2009 15:35
Sample Tag: 02

PrePrep Method: NONE
Prep Method: 3051
Analytical Method: 6020
Analyst: WTD
Dilution: 1
Units: mg/kg

Instrument: ELAN-ICP
Prep Date: 01/14/2009 09:16
Cal Date: 01/26/2009 14:27
Run Date: 01/26/2009 23:38
File ID: EL.012609.233838
Percent Solid: 85.6

Analyte	CAS. Number	Result	Qual	RL	MDL
Arsenic, Total	7440-38-2	0.617		0.349	0.0873
Selenium, Total	7782-49-2	0.280	J	0.465	0.116

J Estimated ; the analyte concentration was less than the low standard (LOQ)

Microbac

670 lw 3/30/09

27

Sample Number: L09010202-28
Client ID: MR08-SS254-09A
Matrix: Soil
Workgroup Number: WG292547
Collect Date: 01/09/2009 15:35
Sample Tag: 01

PrePrep Method: NONE
Prep Method: 3051
Analytical Method: 6010B
Analyst: KHR
Dilution: 1
Units: mg/kg

Instrument: IRIS-ICP
Prep Date: 01/14/2009 08:05
Cal Date: 01/15/2009 09:29
Run Date: 01/15/2009 15:55
File ID: IR.011509.155500
Percent Solid: 85.6

Analyte	CAS. Number	Result	Qual	RL	MDL
Silver, Total	7440-22-4		U	0.844	0.211
Barium, Total	7440-39-3	8.55		0.422	0.0844
Cadmium, Total	7440-43-9	0.104	J	0.169	0.0422
Chromium, Total	7440-47-3	3.25		0.844	0.101

U Undetected; the analyte was analyzed for, but not detected.
J Estimated ; the analyte concentration was less than the low standard (LOQ)

Microbac

41 OLW 3/30/09

27

Sample Number:	L09010202-28	PrePrep Method:	NONE	Instrument:	HYDRA
Client ID:	MR08-SS254-09A	Prep Method:	7471A	Prep Date:	01/14/2009 07:42
Matrix:	Soil	Analytical Method:	7471A	Cal Date:	01/15/2009 09:30
Workgroup Number:	WG292562	Analyst:	ADC	Run Date:	01/15/2009 10:28
Collect Date:	01/09/2009 15:35	Dilution:	1	File ID:	HY.011509.102816
Sample Tag:	01	Units:	mg/kg	Percent Solid:	85.6

Analyte	CAS. Number	Result	Qual	RL	MDL
Mercury, Total	7439-97-6		U	0.110	0.0219

U Undetected; the analyte was analyzed for, but not detected.

Microbac

3201 lw 3/30/09

28

Sample Number: L09010202-29
Client ID: MR08-IS254-3-4-09A
Matrix: Soil
Workgroup Number: WG292708
Collect Date: 01/09/2009 15:50
Sample Tag: 01

PrePrep Method: NONE
Prep Method: 3051
Analytical Method: 6020
Analyst: WTD
Dilution: 1
Units: mg/kg

Instrument: ELAN-ICP
Prep Date: 01/14/2009 09:16
Cal Date: 01/20/2009 17:55
Run Date: 01/21/2009 06:32
File ID: EL.012109.063210
Percent Solid: 89.8

Analyte	CAS. Number	Result	Qual	RL	MDL
Lead, Total	7439-92-1	3.54		0.434	0.109

Microbac

671 LW 3/30/09

28

Sample Number: L09010202-29
Client ID: MR08-IS254-3-4-09A
Matrix: Soil
Workgroup Number: WG292708
Collect Date: 01/09/2009 15:50
Sample Tag: 02

PrePrep Method: NONE
Prep Method: 3051
Analytical Method: 6020
Analyst: WTD
Dilution: 1
Units: mg/kg

Instrument: ELAN-ICP
Prep Date: 01/14/2009 09:16
Cal Date: 01/26/2009 14:27
Run Date: 01/26/2009 23:44
File ID: EL.012609.234453
Percent Solid: 89.8

Analyte	CAS. Number	Result	Qual	RL	MDL
Arsenic, Total	7440-38-2	0.765		0.326	0.0814
Selenium, Total	7782-49-2		U	0.434	0.109

U Undetected; the analyte was analyzed for, but not detected.

Microbac

672 JW 3/30/09

28

Sample Number: L09010202-29
Client ID: MR08-IS254-3-4-09A
Matrix: Soil
Workgroup Number: WG292547
Collect Date: 01/09/2009 15:50
Sample Tag: 01

PrePrep Method: NONE
Prep Method: 3051
Analytical Method: 6010B
Analyst: KHR
Dilution: 1
Units: mg/kg

Instrument: IRIS-ICP
Prep Date: 01/14/2009 08:05
Cal Date: 01/15/2009 09:29
Run Date: 01/15/2009 16:01
File ID: IR.011509.160100
Percent Solid: 89.8

Analyte	CAS. Number	Result	Qual	RL	MDL
Silver, Total	7440-22-4		U	0.800	0.200
Barium, Total	7440-39-3	6.46		0.400	0.0800
Cadmium, Total	7440-43-9		U	0.160	0.0400
Chromium, Total	7440-47-3	4.23		0.800	0.0960

U Undetected; the analyte was analyzed for, but not detected.

Microbac

42 DW 3/30/09

28

Sample Number: L09010202-29
Client ID: MR08-IS254-3-4-09A
Matrix: Soil
Workgroup Number: WG292562
Collect Date: 01/09/2009 15:50
Sample Tag: 01

PrePrep Method: NONE
Prep Method: 7471A
Analytical Method: 7471A
Analyst: ADC
Dilution: 1
Units: mg/kg

Instrument: HYDRA
Prep Date: 01/14/2009 07:42
Cal Date: 01/15/2009 09:30
Run Date: 01/15/2009 10:29
File ID: HY.011509.102958
Percent Solid: 89.8

Analyte	CAS. Number	Result	Qual	RL	MDL
Mercury, Total	7439-97-6		U	0.104	0.0208

U Undetected; the analyte was analyzed for, but not detected.

Microbac

3202

LW 3/30/09

29

Sample Number: L09010202-30
Client ID: MR08-SS277-09A
Matrix: Soil
Workgroup Number: WG292708
Collect Date: 01/09/2009 16:05
Sample Tag: DL01

PrePrep Method: NONE
Prep Method: 3051
Analytical Method: 6020
Analyst: JYH
Dilution: 10
Units: mg/kg

Instrument: ELAN-ICP
Prep Date: 01/14/2009 09:16
Cal Date: 01/27/2009 12:41
Run Date: 01/27/2009 20:00
File ID: EL.012709.200016
Percent Solid: 91.7

Analyte	CAS. Number	Result	Qual	RL	MDL
Lead, Total	7439-92-1	105		4.19	1.05

Microbac

 JWS 3/30/09

29

Sample Number: L09010202-30
Client ID: MR08-SS277-09A
Matrix: Soil
Workgroup Number: WG292708
Collect Date: 01/09/2009 16:05
Sample Tag: 02

PrePrep Method: NONE
Prep Method: 3051
Analytical Method: 6020
Analyst: WTD
Dilution: 1
Units: mg/kg

Instrument: ELAN-ICP
Prep Date: 01/14/2009 09:16
Cal Date: 01/26/2009 14:27
Run Date: 01/26/2009 23:51
File ID: EL.012609.235108
Percent Solid: 91.7

Analyte	CAS. Number	Result	Qual	RL	MDL
Arsenic, Total	7440-38-2	2.05		0.314	0.0785
Selenium, Total	7782-49-2	0.201	J	0.419	0.105

J Estimated ; the analyte concentration was less than the low standard (LOQ)

Microbac

 lus 3/30/09

29

Sample Number: L09010202-30
Client ID: MR08-SS277-09A
Matrix: Soil
Workgroup Number: WG292547
Collect Date: 01/09/2009 16:05
Sample Tag: 01

PrePrep Method: NONE
Prep Method: 3051
Analytical Method: 6010B
Analyst: KHR
Dilution: 1
Units: mg/kg

Instrument: IRIS-ICP
Prep Date: 01/14/2009 08:05
Cal Date: 01/15/2009 09:29
Run Date: 01/15/2009 16:07
File ID: IR.011509.160700
Percent Solid: 91.7

Analyte	CAS. Number	Result	Qual	RL	MDL
Silver, Total	7440-22-4		U	0.836	0.209
Barium, Total	7440-39-3	6.24		0.418	0.0836
Cadmium, Total	7440-43-9	0.196		0.167	0.0418
Chromium, Total	7440-47-3	4.44		0.836	0.100

U Undetected; the analyte was analyzed for, but not detected.

Microbac

43 HW
3/30/09

29

Sample Number:	L09010202-30	PrePrep Method:	NONE	Instrument:	HYDRA
Client ID:	MR08-SS277-09A	Prep Method:	7471A	Prep Date:	01/14/2009 07:42
Matrix:	Soil	Analytical Method:	7471A	Cal Date:	01/15/2009 09:30
Workgroup Number:	WG292562	Analyst:	ADC	Run Date:	01/15/2009 10:31
Collect Date:	01/09/2009 16:05	Dilution:	1	File ID:	HY.011509.103141
Sample Tag:	01	Units:	mg/kg	Percent Solid:	91.7

Analyte	CAS. Number	Result	Qual	RL	MDL
Mercury, Total	7439-97-6		U	0.105	0.0210

U Undetected; the analyte was analyzed for, but not detected.

Microbac

3203 MW 3/30/09

30

Sample Number: L09010202-31
Client ID: MR08-IS277-3-4-09A
Matrix: Soil
Workgroup Number: WG292708
Collect Date: 01/09/2009 16:20
Sample Tag: 02

PrePrep Method: NONE
Prep Method: 3051
Analytical Method: 6020
Analyst: WTD
Dilution: 1
Units: mg/kg

Instrument: ELAN-ICP
Prep Date: 01/14/2009 09:16
Cal Date: 01/26/2009 14:27
Run Date: 01/26/2009 23:57
File ID: EL.012609.235724
Percent Solid: 89.6

Analyte	CAS. Number	Result	Qual	RL	MDL
Arsenic, Total	7440-38-2	0.240	J	0.333	0.0832
Selenium, Total	7782-49-2		U	0.444	0.111

U Undetected; the analyte was analyzed for, but not detected.
J Estimated ; the analyte concentration was less than the low standard (LOQ)

Microbac

675 lus 3/30/09

30

Sample Number: L09010202-31
Client ID: MR08-IS277-3-4-09A
Matrix: Soil
Workgroup Number: WG292708
Collect Date: 01/09/2009 16:20
Sample Tag: 01

PrePrep Method: NONE
Prep Method: 3051
Analytical Method: 6020
Analyst: WTD
Dilution: 1
Units: mg/kg

Instrument: ELAN-ICP
Prep Date: 01/14/2009 09:16
Cal Date: 01/20/2009 17:55
Run Date: 01/21/2009 06:44
File ID: EL.012109.064443
Percent Solid: 89.6

Analyte	CAS. Number	Result	Qual	RL	MDL
Lead, Total	7439-92-1	7.23		0.444	0.111

Microbac

lw 3/30/09

30

Sample Number: L09010202-31
Client ID: MR08-IS277-3-4-09A
Matrix: Soil
Workgroup Number: WG292547
Collect Date: 01/09/2009 16:20
Sample Tag: 01

PrePrep Method: NONE
Prep Method: 3051
Analytical Method: 6010B
Analyst: KHR
Dilution: 1
Units: mg/kg

Instrument: IRIS-ICP
Prep Date: 01/14/2009 08:05
Cal Date: 01/15/2009 09:29
Run Date: 01/15/2009 16:13
File ID: IR.011509.161300
Percent Solid: 89.6

Analyte	CAS. Number	Result	Qual	RL	MDL
Silver, Total	7440-22-4		U	0.824	0.206
Barium, Total	7440-39-3	8.29		0.412	0.0824
Cadmium, Total	7440-43-9		U	0.165	0.0412
Chromium, Total	7440-47-3	5.57		0.824	0.0988

U Undetected; the analyte was analyzed for, but not detected.

Microbac

44 RW
3/30/09

30

Sample Number: L09010202-31
Client ID: MR08-IS277-3-4-09A
Matrix: Soil
Workgroup Number: WG292562
Collect Date: 01/09/2009 16:20
Sample Tag: 01

PrePrep Method: NONE
Prep Method: 7471A
Analytical Method: 7471A
Analyst: ADC
Dilution: 1
Units: mg/kg

Instrument: HYDRA
Prep Date: 01/14/2009 07:42
Cal Date: 01/15/2009 09:30
Run Date: 01/15/2009 10:33
File ID: HY.011509.103339
Percent Solid: 89.6

Analyte	CAS. Number	Result	Qual	RL	MDL
Mercury, Total	7439-97-6		U	0.107	0.0214

U Undetected; the analyte was analyzed for, but not detected.

Microbac

3204

3/30/09

31

Sample Number: L09010202-32
Client ID: MR08-SS278-09A
Matrix: Soil
Workgroup Number: WG293286
Collect Date: 01/09/2009 16:35
Sample Tag: DL01

PrePrep Method: NONE
Prep Method: 3051
Analytical Method: 6020
Analyst: WTD
Dilution: 5
Units: mg/kg

Instrument: ELAN-ICP
Prep Date: 01/22/2009 06:50
Cal Date: 01/26/2009 14:27
Run Date: 01/27/2009 00:54
File ID: EL.012709.005408
Percent Solid: 87.0

Analyte	CAS. Number	Result	Qual	RL	MDL
Arsenic, Total	7440-38-2	1.05	J	1.69	0.423
Lead, Total	7439-92-1	47.0 J		2.25	0.564
Selenium, Total	7782-49-2	0.668	J	2.25	0.564

MSH

J Estimated ; the analyte concentration was less than the low standard (LOQ)

Microbac

677 DW 3/30/09

31

Sample Number: L09010202-32
Client ID: MR08-SS278-09A
Matrix: Soil
Workgroup Number: WG292553
Collect Date: 01/09/2009 16:35
Sample Tag: 01

PrePrep Method: NONE
Prep Method: 3051
Analytical Method: 6010B
Analyst: KHR
Dilution: 1
Units: mg/kg

Instrument: IRIS-ICP
Prep Date: 01/14/2009 08:37
Cal Date: 01/15/2009 09:29
Run Date: 01/15/2009 23:32
File ID: IR.011509.233200
Percent Solid: 87.0

Analyte	CAS. Number	Result	Qual	RL	MDL
Silver, Total	7440-22-4		U	0.862	0.216
Barium, Total	7440-39-3	13.5		0.431	0.0862
Cadmium, Total	7440-43-9	1.61		0.172	0.0431
Chromium, Total	7440-47-3	3.90 J		0.862	0.103

MSH

U Undetected; the analyte was analyzed for, but not detected.

Microbac

45 AW 3/30/09

31

Sample Number:	L09010202-32	PrePrep Method:	NONE	Instrument:	HYDRA
Client ID:	MR08-SS278-09A	Prep Method:	7471A	Prep Date:	01/14/2009 10:16
Matrix:	Soil	Analytical Method:	7471A	Cal Date:	01/22/2009 13:28
Workgroup Number:	WG292566	Analyst:	ADC	Run Date:	01/22/2009 14:15
Collect Date:	01/09/2009 16:35	Dilution:	1	File ID:	HY.012209.141542
Sample Tag:	01	Units:	mg/kg	Percent Solid:	87.0

Analyte	CAS. Number	Result	Qual	RL	MDL
Mercury, Total	7439-97-6	0.0795	J	0.113	0.0225

J Estimated ; the analyte concentration was less than the low standard (LOQ)

Microbac

3205

MW
3/30/09

32

Sample Number: L09010202-34
Client ID: MR08-IS278-6-7-09A
Matrix: Soil
Workgroup Number: WG292553
Collect Date: 01/09/2009 16:55
Sample Tag: 01

PrePrep Method: NONE
Prep Method: 3051
Analytical Method: 6010B
Analyst: KHR
Dilution: 1
Units: mg/kg

Instrument: IRIS-ICP
Prep Date: 01/14/2009 08:37
Cal Date: 01/15/2009 09:29
Run Date: 01/16/2009 00:08
File ID: IR.011609.000800
Percent Solid: 89.8

Analyte	CAS. Number	Result	Qual	RL	MDL
Silver, Total	7440-22-4		U	0.820	0.205
Barium, Total	7440-39-3	3.18		0.410	0.0820
Cadmium, Total	7440-43-9		U	0.164	0.0410
Chromium, Total	7440-47-3	3.78 J		0.820	0.0983

MS4

U Undetected; the analyte was analyzed for, but not detected.

Microbac

 RW 3/30/09

32

Sample Number: L09010202-34
Client ID: MR08-IS278-6-7-09A
Matrix: Soil
Workgroup Number: WG292566
Collect Date: 01/09/2009 16:55
Sample Tag: 01

PrePrep Method: NONE
Prep Method: 7471A
Analytical Method: 7471A
Analyst: ADC
Dilution: 1
Units: mg/kg

Instrument: HYDRA
Prep Date: 01/14/2009 10:16
Cal Date: 01/22/2009 13:28
Run Date: 01/22/2009 14:17
File ID: HY.012209.141726
Percent Solid: 89.8

Analyte	CAS. Number	Result	Qual	RL	MDL
Mercury, Total	7439-97-6		U	0.107	0.0213

U Undetected; the analyte was analyzed for, but not detected.

Microbac®

3206 hw
3/30/09

32

Sample Number: L09010202-34
Client ID: MR08-IS278-6-7-09A
Matrix: Soil
Workgroup Number: WG293286
Collect Date: 01/09/2009 16:55
Sample Tag: DL01

PrePrep Method: NONE
Prep Method: 3051
Analytical Method: 6020
Analyst: JYH
Dilution: 2
Units: mg/kg

Instrument: ELAN-ICP
Prep Date: 01/22/2009 06:50
Cal Date: 01/27/2009 12:41
Run Date: 01/27/2009 20:19
File ID: EL.012709.201911
Percent Solid: 89.8

Analyte	CAS. Number	Result	Qual	RL	MDL
Lead, Total	7439-92-1	2.95 J		0.886	0.221

MSH

Microbac

678 lw 3/30/09

32

Sample Number:	L09010202-34	PrePrep Method:	NONE	Instrument:	ELAN-ICP
Client ID:	MR08-IS278-6-7-09A	Prep Method:	3051	Prep Date:	01/22/2009 06:50
Matrix:	Soil	Analytical Method:	6020	Cal Date:	01/26/2009 14:27
Workgroup Number:	WG293286	Analyst:	WTD	Run Date:	01/27/2009 01:00
Collect Date:	01/09/2009 16:55	Dilution:	1	File ID:	EL.012709.010023
Sample Tag:	01	Units:	mg/kg	Percent Solid:	89.8

Analyte	CAS. Number	Result	Qual	RL	MDL
Arsenic, Total	7440-38-2	0.301	J	0.332	0.0830
Selenium, Total	7782-49-2	0.182	J	0.443	0.111

J Estimated ; the analyte concentration was less than the low standard (LOQ)

Microbac

lw 3/3/09

33

Sample Number: L09010202-36
Client ID: MR08-EB01010909-SS
Matrix: Water
Workgroup Number: WG292534
Collect Date: 01/09/2009 10:00
Sample Tag: 01

PrePrep Method: NONE
Prep Method: 3015
Analytical Method: 6020
Analyst: WTD
Dilution: 1
Units: ug/L

Instrument: ELAN-ICP
Prep Date: 01/14/2009 08:52
Cal Date: 01/14/2009 16:41
Run Date: 01/14/2009 23:04
File ID: EL.011409.230439

Analyte	CAS. Number	Result	Qual	RL	MDL
Arsenic, Total	7440-38-2		U	1.00	0.250
Lead, Total	7439-92-1		U	1.00	0.250
Selenium, Total	7782-49-2		U	2.00	0.500

U Undetected; the analyte was analyzed for, but not detected.

Microbac

680 MW 3/30/09

33

Sample Number: L09010202-36
Client ID: MR08-EB01010909-SS
Matrix: Water
Workgroup Number: WG292516
Collect Date: 01/09/2009 10:00
Sample Tag: 01

PrePrep Method: NONE
Prep Method: 3005A
Analytical Method: 6010B
Analyst: SLP
Dilution: 1
Units: ug/L

Instrument: PE-ICP2
Prep Date: 01/14/2009 09:32
Cal Date: 01/15/2009 11:00
Run Date: 01/15/2009 17:44
File ID: P2.011509.174425

Analyte	CAS. Number	Result	Qual	RL	MDL
Barium, Total	7440-39-3		U	10.0	2.50
Cadmium, Total	7440-43-9		U	1.00	0.250
Chromium, Total	7440-47-3		U	10.0	2.50
Silver, Total	7440-22-4		U	6.00	2.00

U Undetected; the analyte was analyzed for, but not detected.

Microbac

47 MW 3/30/09

33

Sample Number: L09010202-36
Client ID: MR08-EB01010909-SS
Matrix: Water
Workgroup Number: WG292494
Collect Date: 01/09/2009 10:00
Sample Tag: 01

PrePrep Method: NONE
Prep Method: 7470A
Analytical Method: 7470A
Analyst: ADC
Dilution: 1
Units: ug/L

Instrument: HYDRA
Prep Date: 01/14/2009 09:41
Cal Date: 01/14/2009 13:24
Run Date: 01/14/2009 14:20
File ID: HY.011409.142014

Analyte	CAS. Number	Result	Qual	RL	MDL
Mercury	7439-97-6		U	0.400	0.100

U Undetected; the analyte was analyzed for, but not detected.

Microbac

3207 QW 3/30/09

34

Sample Number: L09010202-37
Client ID: MR08-EB01010909-IS
Matrix: Water
Workgroup Number: WG292534
Collect Date: 01/09/2009 10:20
Sample Tag: 01

PrePrep Method: NONE
Prep Method: 3015
Analytical Method: 6020
Analyst: WTD
Dilution: 1
Units: ug/L

Instrument: ELAN-ICP
Prep Date: 01/14/2009 08:52
Cal Date: 01/14/2009 16:41
Run Date: 01/14/2009 23:11
File ID: EL.011409.231143

Analyte	CAS. Number	Result	Qual	RL	MDL
Arsenic, Total	7440-38-2		U	1.00	0.250
Lead, Total	7439-92-1		U	1.00	0.250
Selenium, Total	7782-49-2		U	2.00	0.500

U Undetected; the analyte was analyzed for, but not detected.

Microbac

681 lw 3/30/09

34

Sample Number: L09010202-37
Client ID: MR08-EB01010909-IS
Matrix: Water
Workgroup Number: WG292516
Collect Date: 01/09/2009 10:20
Sample Tag: 01

PrePrep Method: NONE
Prep Method: 3005A
Analytical Method: 6010B
Analyst: SLP
Dilution: 1
Units: ug/L

Instrument: PE-ICP2
Prep Date: 01/14/2009 09:32
Cal Date: 01/15/2009 11:00
Run Date: 01/15/2009 18:16
File ID: P2.011509.181601

Analyte	CAS. Number	Result	Qual	RL	MDL
Barium, Total	7440-39-3		U	10.0	2.50
Cadmium, Total	7440-43-9		U	1.00	0.250
Chromium, Total	7440-47-3		U	10.0	2.50
Silver, Total	7440-22-4		U	6.00	2.00

U Undetected; the analyte was analyzed for, but not detected.

Microbac

lw
3/30/09

34

Sample Number: L09010202-37
Client ID: MR08-EB01010909-IS
Matrix: Water
Workgroup Number: WG292494
Collect Date: 01/09/2009 10:20
Sample Tag: 01

PrePrep Method: NONE
Prep Method: 7470A
Analytical Method: 7470A
Analyst: ADC
Dilution: 1
Units: ug/L

Instrument: HYDRA
Prep Date: 01/14/2009 09:41
Cal Date: 01/14/2009 13:24
Run Date: 01/14/2009 14:23
File ID: HY.011409.142349

Analyte	CAS. Number	Result	Qual	RL	MDL
Mercury	7439-97-6		U	0.400	0.100

U Undetected; the analyte was analyzed for, but not detected.

Microbac

3208 fuw 3/30/09

ENVIRONMENTAL
Data Services, Inc.

METALS

USEPA Region IV - Level IV Review

Site: MCB Camp Lejeune, TO-09 SDG #: L09010203

Client: CH2M HILL, Inc., Virginia Beach, Virginia Date: March 29, 2009

Laboratory: Microbac Laboratories, Inc., Marietta, Ohio Reviewer: Nancy Weaver

EDS ID	Client Sample ID	Laboratory Sample ID	Matrix
1	MR08-SS280-09A	L09010203-01	Soil
2	MR08-IS280-7-8-09A	L09010203-02	Soil
3	MR08-SS275-09A	L09010203-03	Soil
4	MR08-IS275-3-4-09A	L09010203-04	Soil
5	MR08-SS256-09A	L09010203-05	Soil
6	MR08-IS256-3-4-09A	L09010203-06	Soil
7	MR08-SS251-09A	L09010203-07	Soil
8	MR08-IS251-8-9-09A	L09010203-08	Soil
9	MR08-SS232-09A	L09010203-09	Soil
10	MR08-IS232-5-6-09A	L09010203-10	Soil
11	MR08-SS252-09A	L09010203-11	Soil
12	MR08-IS252-6-7-09A	L09010203-12	Soil
13	MR08-SS253-09A	L09010203-13	Soil
14	MR08-IS253-6-7-09A	L09010203-14	Soil
15	MR08-SS231-09A	L09010203-15	Soil
16	MR08-IS231-8-9-09A	L09010203-16	Soil
17	MR08-SS230-09A	L09010203-17	Soil
18	MR08-IS230-8-9-09A	L09010203-18	Soil
19	MR08-SS259-09A	L09010203-19	Soil
20	MR08-SS259D-09A	L09010203-20	Soil
21	MR08-IS259-5-6-09A	L09010203-21	Soil
22	MR08-IS259D-5-6-09A	L09010203-22	Soil
23	MR08-SS272-09A	L09010203-23	Soil
24	MR08-IS272-8-9-09A	L09010203-24	Soil
25	MR08-SS283-09A	L09010203-25	Soil
26	MR08-IS283-6-7-09A	L09010203-26	Soil
27	MR08-EB01011009-SS	L09010203-27	Water
28	MR08-FB01011009	L09010203-28	Water

The USEPA "Contract Laboratory Program National Functional Guidelines for Inorganic Data Review," October 2004, and professional judgement were used in evaluating the data in this summary report.

Holding Times - All samples were prepared and analyzed within 28 days for mercury and 180 days for all other metals.

Calibration - The ICV and CCV %R values were acceptable.

Method and Calibration Blanks - The method blanks were free of contamination.

Field and Equipment Blank - Field QC results are summarized below.

Blank ID	Compound	Conc. ug/L	Action Level ug/L	Qualifier	Affected Samples
MR08-FB01011009	None - ND	-	-	-	-
MR08-EB01011009-SS	None - ND	-	-	-	-

ICP Interference Check Sample - All %R values were acceptable.

MS/MSD - The MS/MSD sample exhibited acceptable %R and RPD values except the following.

MS/MSD Sample ID	Compound	MS/MSD %R/RPD	Qualifier	Affected Samples
Reference (WG292553)	Chromium	127%/Ok/27.9%	J	1-17
Reference (WG293286)	Lead	130%/Ok/Ok	J	1-17

LCS - The LCS samples exhibited acceptable %R values.

ICP Serial Dilution - The ICP serial dilution sample exhibited acceptable %D values.

Field Duplicates - Field duplicate results are summarized below.

Compound	MR08-SS259-09A mg/kg	MR08-SS259D-09A mg/kg	RPD	Qualifier
Silver	1.30	3.19	84%	None
Barium	25.7	32.8	24%	None
Cadmium	0.931	1.03	10%	None
Chromium	38.8	17.1	78%	None
Arsenic	0.713	0.879	21%	None
Lead	95.8	116	19%	None
Selenium	0.857 U	0.439	NC	None
Mercury	0.656	0.673	3%	None

Compound	MR08-IS259-5-6-09A mg/kg	MR08-IS259D-5-6-09A mg/kg	RPD	Qualifier
Barium	9.25	7.93	15%	None
Chromium	6.06	4.25	35%	None
Arsenic	0.496	0.618	22%	None
Lead	2.53	3.06	19%	None

Compound Quantitation - Several samples were analyzed at various dilutions due to high concentrations of target compounds.

Report Number: L09010203

Report Date : February 9, 2009

Sample Number: L09010203-01
Client ID: MR08-SS280-09A
Matrix: Soil
Workgroup Number: WG292553
Collect Date: 01/10/2009 08:00
Sample Tag: 01

PrePrep Method: NONE
Prep Method: 3051
Analytical Method: 6010B
Analyst: KHR
Dilution: 1
Units: mg/kg

Instrument: IRIS-ICP
Prep Date: 01/14/2009 08:37
Cal Date: 01/15/2009 09:29
Run Date: 01/16/2009 00:15
File ID: IR.011609.001500
Percent Solid: 92.7

Analyte	CAS. Number	Result	Qual	RL	MDL
Silver, Total	7440-22-4		U	0.786	0.197
Barium, Total	7440-39-3	7.19		0.393	0.0786
Cadmium, Total	7440-43-9	0.192		0.157	0.0393
Chromium, Total	7440-47-3	2.87 J		0.786	0.0944

MSH

U Undetected; the analyte was analyzed for, but not detected.

Microbac

15 JW 3/29/09

Report Number: L09010203

Report Date : February 9, 2009

Sample Number:	L09010203-01	PrePrep Method:	NONE	Instrument:	ELAN-ICP
Client ID:	MR08-SS280-09A	Prep Method:	3051	Prep Date:	01/22/2009 06:50
Matrix:	Soil	Analytical Method:	6020	Cal Date:	01/26/2009 14:27
Workgroup Number:	WG293286	Analyst:	WTD	Run Date:	01/27/2009 01:32
Collect Date:	01/10/2009 08:00	Dilution:	1	File ID:	EL.012709.013213
Sample Tag:	01	Units:	mg/kg	Percent Solid:	92.7

Analyte	CAS. Number	Result	Qual	RL	MDL
Arsenic, Total	7440-38-2	0.387		0.321	0.0802
Lead, Total	7439-92-1	21.6 J		0.428	0.107
Selenium, Total	7782-49-2	0.161	J	0.428	0.107

MSH

J Estimated ; the analyte concentration was less than the low standard (LOQ)

Microbac

695 LW 3/29/09

Report Number: L09010203

Report Date : **February 9, 2009**

Sample Number:	L09010203-01	PrePrep Method:	NONE	Instrument:	HYDRA
Client ID:	MR08-SS280-09A	Prep Method:	7471A	Prep Date:	01/14/2009 10:16
Matrix:	Soil	Analytical Method:	7471A	Cal Date:	01/22/2009 13:28
Workgroup Number:	WG292566	Analyst:	ADC	Run Date:	01/22/2009 14:19
Collect Date:	01/10/2009 08:00	Dilution:	1	File ID:	HY.012209.141912
Sample Tag:	01	Units:	mg/kg	Percent Solid:	92.7

Analyte	CAS. Number	Result	Qual	RL	MDL
Mercury, Total	7439-97-6		U	0.106	0.0212

U Undetected; the analyte was analyzed for, but not detected.

Microbac

3219 lw 3/29/09

2

Sample Number: L09010203-02
Client ID: MR08-IS280-7-8-09A
Matrix: Soil
Workgroup Number: WG292553
Collect Date: 01/10/2009 08:25
Sample Tag: 01

PrePrep Method: NONE
Prep Method: 3051
Analytical Method: 6010B
Analyst: KHR
Dilution: 1
Units: mg/kg

Instrument: IRIS-ICP
Prep Date: 01/14/2009 08:37
Cal Date: 01/15/2009 09:29
Run Date: 01/16/2009 00:21
File ID: IR.011609.002100
Percent Solid: 88.8

Analyte	CAS. Number	Result	Qual	RL	MDL
Silver, Total	7440-22-4		U	0.835	0.209
Barium, Total	7440-39-3	2.34		0.417	0.0835
Cadmium, Total	7440-43-9		U	0.167	0.0417
Chromium, Total	7440-47-3	2.60 J		0.835	0.100

MSH

U Undetected; the analyte was analyzed for, but not detected.

Microbac

16 lw 3/29/09

2

Sample Number: L09010203-02
Client ID: MR08-IS280-7-8-09A
Matrix: Soil
Workgroup Number: WG293286
Collect Date: 01/10/2009 08:25
Sample Tag: 01

PrePrep Method: NONE
Prep Method: 3051
Analytical Method: 6020
Analyst: WTD
Dilution: 1
Units: mg/kg

Instrument: ELAN-ICP
Prep Date: 01/22/2009 06:50
Cal Date: 01/26/2009 14:27
Run Date: 01/27/2009 01:38
File ID: EL.012709.013830
Percent Solid: 88.8

Analyte	CAS. Number	Result	Qual	RL	MDL
Arsenic, Total	7440-38-2	3.72		0.324	0.0811
Lead, Total	7439-92-1	2.85 J		0.432	0.108
Selenium, Total	7782-49-2	0.137	J	0.432	0.108

MSH

J Estimated ; the analyte concentration was less than the low standard (LOQ)

Microbac

696 lw 3/29/09

2

Sample Number: L09010203-02
Client ID: MR08-IS280-7-8-09A
Matrix: Soil
Workgroup Number: WG292566
Collect Date: 01/10/2009 08:25
Sample Tag: 01

PrePrep Method: NONE
Prep Method: 7471A
Analytical Method: 7471A
Analyst: ADC
Dilution: 1
Units: mg/kg

Instrument: HYDRA
Prep Date: 01/14/2009 10:16
Cal Date: 01/22/2009 13:28
Run Date: 01/22/2009 14:27
File ID: HY.012209.142709
Percent Solid: 88.8

Analyte	CAS. Number	Result	Qual	RL	MDL
Mercury, Total	7439-97-6		U	0.108	0.0216

U Undetected; the analyte was analyzed for, but not detected.

Microbac

3220 lw
3/29/09

3

Sample Number: L09010203-03
Client ID: MR08-SS275-09A
Matrix: Soil
Workgroup Number: WG292553
Collect Date: 01/10/2009 08:40
Sample Tag: 01

PrePrep Method: NONE
Prep Method: 3051
Analytical Method: 6010B
Analyst: KHR
Dilution: 1
Units: mg/kg

Instrument: IRIS-ICP
Prep Date: 01/14/2009 08:37
Cal Date: 01/15/2009 09:29
Run Date: 01/16/2009 00:27
File ID: IR.011609.002700
Percent Solid: 89.8

Analyte	CAS. Number	Result	Qual	RL	MDL
Silver, Total	7440-22-4	0.381	J	0.749	0.187
Barium, Total	7440-39-3	10.3		0.375	0.0749
Cadmium, Total	7440-43-9	0.275		0.150	0.0375
Chromium, Total	7440-47-3	4.26 J		0.749	0.0899

MSH

J Estimated ; the analyte concentration was less than the low standard (LOQ)

Microbac

17 LW 3/29/09

3

Sample Number: L09010203-03
Client ID: MR08-SS275-09A
Matrix: Soil
Workgroup Number: WG293286
Collect Date: 01/10/2009 08:40
Sample Tag: DL01

PrePrep Method: NONE
Prep Method: 3051
Analytical Method: 6020
Analyst: WTD
Dilution: 5
Units: mg/kg

Instrument: ELAN-ICP
Prep Date: 01/22/2009 06:50
Cal Date: 01/26/2009 14:27
Run Date: 01/27/2009 01:44
File ID: EL.012709.014446
Percent Solid: 89.8

Analyte	CAS. Number	Result	Qual	RL	MDL
Arsenic, Total	7440-38-2	0.961	J	1.66	0.415
Lead, Total	7439-92-1	72.1 J		2.22	0.554
Selenium, Total	7782-49-2	0.607	J	2.22	0.554

MSH

J Estimated ; the analyte concentration was less than the low standard (LOQ)

Microbac

697 lw 3/29/09

3

Sample Number: L09010203-03
Client ID: MR08-SS275-09A
Matrix: Soil
Workgroup Number: WG292566
Collect Date: 01/10/2009 08:40
Sample Tag: 01

PrePrep Method: NONE
Prep Method: 7471A
Analytical Method: 7471A
Analyst: ADC
Dilution: 1
Units: mg/kg

Instrument: HYDRA
Prep Date: 01/14/2009 10:16
Cal Date: 01/22/2009 13:28
Run Date: 01/22/2009 14:29
File ID: HY.012209.142908
Percent Solid: 89.8

Analyte	CAS. Number	Result	Qual	RL	MDL
Mercury, Total	7439-97-6	0.166		0.107	0.0213

Microbac

3221 lw 3/29/09

4

Sample Number: L09010203-04
Client ID: MR08-IS275-3-4-09A
Matrix: Soil
Workgroup Number: WG292553
Collect Date: 01/10/2009 09:00
Sample Tag: 01

PrePrep Method: NONE
Prep Method: 3051
Analytical Method: 6010B
Analyst: KHR
Dilution: 1
Units: mg/kg

Instrument: IRIS-ICP
Prep Date: 01/14/2009 08:37
Cal Date: 01/15/2009 09:29
Run Date: 01/16/2009 00:33
File ID: IR.011609.003300
Percent Solid: 88.7

Analyte	CAS. Number	Result	Qual	RL	MDL
Silver, Total	7440-22-4		U	0.834	0.208
Barium, Total	7440-39-3	8.70		0.417	0.0834
Cadmium, Total	7440-43-9		U	0.167	0.0417
Chromium, Total	7440-47-3	5.18 J		0.834	0.100

MSH

U Undetected; the analyte was analyzed for, but not detected.

Microbac

18 LW 3/29/09

4

Sample Number: L09010203-04
Client ID: MR08-IS275-3-4-09A
Matrix: Soil
Workgroup Number: WG293286
Collect Date: 01/10/2009 09:00
Sample Tag: 01

PrePrep Method: NONE
Prep Method: 3051
Analytical Method: 6020
Analyst: WTD
Dilution: 1
Units: mg/kg

Instrument: ELAN-ICP
Prep Date: 01/22/2009 06:50
Cal Date: 01/26/2009 14:27
Run Date: 01/27/2009 01:51
File ID: EL.012709.015101
Percent Solid: 88.7

Analyte	CAS. Number	Result	Qual	RL	MDL
Arsenic, Total	7440-38-2	1.12		0.335	0.0837
Lead, Total	7439-92-1	4.26 J		0.446	0.112
Selenium, Total	7782-49-2		U	0.446	0.112

MSH

U Undetected; the analyte was analyzed for, but not detected.

Microbac

698 BW 3/29/09

4

Sample Number: L09010203-04
Client ID: MR08-IS275-3-4-09A
Matrix: Soil
Workgroup Number: WG292566
Collect Date: 01/10/2009 09:00
Sample Tag: 01

PrePrep Method: NONE
Prep Method: 7471A
Analytical Method: 7471A
Analyst: ADC
Dilution: 1
Units: mg/kg

Instrument: HYDRA
Prep Date: 01/14/2009 10:16
Cal Date: 01/22/2009 13:28
Run Date: 01/22/2009 14:31
File ID: HY.012209.143112
Percent Solid: 88.7

Analyte	CAS. Number	Result	Qual	RL	MDL
Mercury, Total	7439-97-6		U	0.110	0.0221

U Undetected; the analyte was analyzed for, but not detected.

Microbac

3222 LW 3/29/09

5

Sample Number: L09010203-05
Client ID: MR08-SS256-09A
Matrix: Soil
Workgroup Number: WG292553
Collect Date: 01/10/2009 09:15
Sample Tag: 01

PrePrep Method: NONE
Prep Method: 3051
Analytical Method: 6010B
Analyst: KHR
Dilution: 1
Units: mg/kg

Instrument: IRIS-ICP
Prep Date: 01/14/2009 08:37
Cal Date: 01/15/2009 09:29
Run Date: 01/16/2009 00:39
File ID: IR.011609.003900
Percent Solid: 90.2

Analyte	CAS. Number	Result	Qual	RL	MDL
Silver, Total	7440-22-4	0.787		0.745	0.186
Barium, Total	7440-39-3	12.3		0.373	0.0745
Cadmium, Total	7440-43-9	0.330		0.149	0.0373
Chromium, Total	7440-47-3	6.92 J		0.745	0.0894

MSH

Microbac

19 JW 3/29/09

5

Sample Number: L09010203-05
Client ID: MR08-SS256-09A
Matrix: Soil
Workgroup Number: WG293286
Collect Date: 01/10/2009 09:15
Sample Tag: DL01

PrePrep Method: NONE
Prep Method: 3051
Analytical Method: 6020
Analyst: JYH
Dilution: 10
Units: mg/kg

Instrument: ELAN-ICP
Prep Date: 01/22/2009 06:50
Cal Date: 01/27/2009 12:41
Run Date: 01/27/2009 20:36
File ID: EL.012709.203650
Percent Solid: 90.2

Analyte	CAS. Number	Result	Qual	RL	MDL
Lead, Total	7439-92-1	43.8 J		4.16	1.04

MSH

Microbac

699 lw 3/29/09

5

Sample Number:	L09010203-05	PrePrep Method:	NONE	Instrument:	ELAN-ICP
Client ID:	MR08-SS256-09A	Prep Method:	3051	Prep Date:	01/22/2009 06:50
Matrix:	Soil	Analytical Method:	6020	Cal Date:	01/26/2009 14:27
Workgroup Number:	WG293286	Analyst:	WTD	Run Date:	01/27/2009 01:57
Collect Date:	01/10/2009 09:15	Dilution:	1	File ID:	EL.012709.015715
Sample Tag:	01	Units:	mg/kg	Percent Solid:	90.2

Analyte	CAS. Number	Result	Qual	RL	MDL
Arsenic, Total	7440-38-2	0.809		0.312	0.0780
Selenium, Total	7782-49-2	0.214	J	0.416	0.104

J Estimated ; the analyte concentration was less than the low standard (LOQ)

Microbac

700 lw 3/29/09

5

Sample Number: L09010203-05
Client ID: MR08-SS256-09A
Matrix: Soil
Workgroup Number: WG292566
Collect Date: 01/10/2009 09:15
Sample Tag: 01

PrePrep Method: NONE
Prep Method: 7471A
Analytical Method: 7471A
Analyst: ADC
Dilution: 1
Units: mg/kg

Instrument: HYDRA
Prep Date: 01/14/2009 10:16
Cal Date: 01/22/2009 13:28
Run Date: 01/22/2009 14:33
File ID: HY.012209.143311
Percent Solid: 90.2

Analyte	CAS. Number	Result	Qual	RL	MDL
Mercury, Total	7439-97-6	0.241		0.105	0.0210

Microbac

3223 lw 3/29/09

b

Sample Number: L09010203-06
Client ID: MR08-IS256-3-4-09A
Matrix: Soil
Workgroup Number: WG292553
Collect Date: 01/10/2009 09:35
Sample Tag: 01

PrePrep Method: NONE
Prep Method: 3051
Analytical Method: 6010B
Analyst: KHR
Dilution: 1
Units: mg/kg

Instrument: IRIS-ICP
Prep Date: 01/14/2009 08:37
Cal Date: 01/15/2009 09:29
Run Date: 01/16/2009 00:45
File ID: IR.011609.004500
Percent Solid: 87.9

Analyte	CAS. Number	Result	Qual	RL	MDL
Silver, Total	7440-22-4		U	0.784	0.196
Barium, Total	7440-39-3	5.13		0.392	0.0784
Cadmium, Total	7440-43-9		U	0.157	0.0392
Chromium, Total	7440-47-3	3.23 J		0.784	0.0941

MSH

U Undetected; the analyte was analyzed for, but not detected.

Microbac

20 hw 3/29/09

6

Sample Number: L09010203-06
Client ID: MR08-IS256-3-4-09A
Matrix: Soil
Workgroup Number: WG293286
Collect Date: 01/10/2009 09:35
Sample Tag: 01

PrePrep Method: NONE
Prep Method: 3051
Analytical Method: 6020
Analyst: WTD
Dilution: 1
Units: mg/kg

Instrument: ELAN-ICP
Prep Date: 01/22/2009 06:50
Cal Date: 01/26/2009 14:27
Run Date: 01/27/2009 02:03
File ID: EL.012709.020329
Percent Solid: 87.9

Analyte	CAS. Number	Result	Qual	RL	MDL
Arsenic, Total	7440-38-2	0.684		0.334	0.0835
Lead, Total	7439-92-1	2.23 J		0.445	0.111
Selenium, Total	7782-49-2		U	0.445	0.111

MSH

U Undetected; the analyte was analyzed for, but not detected.

Microbac

701 MW 3/29/09

6

Sample Number: L09010203-06
Client ID: MR08-IS256-3-4-09A
Matrix: Soil
Workgroup Number: WG292566
Collect Date: 01/10/2009 09:35
Sample Tag: 01

PrePrep Method: NONE
Prep Method: 7471A
Analytical Method: 7471A
Analyst: ADC
Dilution: 1
Units: mg/kg

Instrument: HYDRA
Prep Date: 01/14/2009 10:16
Cal Date: 01/22/2009 13:28
Run Date: 01/22/2009 14:34
File ID: HY.012209.143454
Percent Solid: 87.9

Analyte	CAS. Number	Result	Qual	RL	MDL
Mercury, Total	7439-97-6		U	0.109	0.0217

U Undetected; the analyte was analyzed for, but not detected.

Microbac

3224 fw 3/29/09

7

Sample Number: L09010203-07
Client ID: MR08-SS251-09A
Matrix: Soil
Workgroup Number: WG292553
Collect Date: 01/10/2009 09:50
Sample Tag: 01

PrePrep Method: NONE
Prep Method: 3051
Analytical Method: 6010B
Analyst: KHR
Dilution: 1
Units: mg/kg

Instrument: IRIS-ICP
Prep Date: 01/14/2009 08:37
Cal Date: 01/15/2009 09:29
Run Date: 01/16/2009 01:03
File ID: IR.011609.010300
Percent Solid: 87.5

Analyte	CAS. Number	Result	Qual	RL	MDL
Silver, Total	7440-22-4	0.488	J	0.760	0.190
Barium, Total	7440-39-3	17.2		0.380	0.0760
Cadmium, Total	7440-43-9	0.312		0.152	0.0380
Chromium, Total	7440-47-3	3.50 J		0.760	0.0911

MS14

J Estimated ; the analyte concentration was less than the low standard (LOQ)

Microbac

21 lw 3/29/09

7

Sample Number: L09010203-07
Client ID: MR08-SS251-09A
Matrix: Soil
Workgroup Number: WG293286
Collect Date: 01/10/2009 09:50
Sample Tag: DL01

PrePrep Method: NONE
Prep Method: 3051
Analytical Method: 6020
Analyst: WTD
Dilution: 5
Units: mg/kg

Instrument: ELAN-ICP
Prep Date: 01/22/2009 06:50
Cal Date: 01/26/2009 14:27
Run Date: 01/27/2009 02:09
File ID: EL.012709.020943
Percent Solid: 87.5

Analyte	CAS. Number	Result	Qual	RL	MDL
Arsenic, Total	7440-38-2	0.627	J	1.64	0.410
Lead, Total	7439-92-1	113 J		2.18	0.546
Selenium, Total	7782-49-2		U	2.18	0.546

MSH

U Undetected; the analyte was analyzed for, but not detected.
J Estimated ; the analyte concentration was less than the low standard (LOQ)

Microbac

702 [illegible] 3/29/09

7

Sample Number:	L09010203-07	PrePrep Method:	NONE	Instrument:	HYDRA
Client ID:	MR08-SS251-09A	Prep Method:	7471A	Prep Date:	01/14/2009 10:16
Matrix:	Soil	Analytical Method:	7471A	Cal Date:	01/22/2009 13:28
Workgroup Number:	WG292566	Analyst:	ADC	Run Date:	01/22/2009 14:36
Collect Date:	01/10/2009 09:50	Dilution:	1	File ID:	HY.012209.143650
Sample Tag:	01	Units:	mg/kg	Percent Solid:	87.5

Analyte	CAS. Number	Result	Qual	RL	MDL
Mercury, Total	7439-97-6	0.0623	J	0.112	0.0224

J Estimated ; the analyte concentration was less than the low standard (LOQ)

Microbac

3225 lw 3/29/09

8

Sample Number: L09010203-08
Client ID: MR08-IS251-8-9-09A
Matrix: Soil
Workgroup Number: WG292553
Collect Date: 01/10/2009 10:00
Sample Tag: 01

PrePrep Method: NONE
Prep Method: 3051
Analytical Method: 6010B
Analyst: KHR
Dilution: 1
Units: mg/kg

Instrument: IRIS-ICP
Prep Date: 01/14/2009 08:37
Cal Date: 01/15/2009 09:29
Run Date: 01/16/2009 01:10
File ID: IR.011609.011000
Percent Solid: 84.4

Analyte	CAS. Number	Result	Qual	RL	MDL
Silver, Total	7440-22-4		U	0.847	0.212
Barium, Total	7440-39-3	1.12		0.424	0.0847
Cadmium, Total	7440-43-9		U	0.169	0.0424
Chromium, Total	7440-47-3	0.772 J	~~J~~	0.847	0.102

MSH

U Undetected; the analyte was analyzed for, but not detected.
J Estimated ; the analyte concentration was less than the low standard (LOQ)

Microbac

22 lw 3/29/09

8

Sample Number: L09010203-08
Client ID: MR08-IS251-8-9-09A
Matrix: Soil
Workgroup Number: WG293286
Collect Date: 01/10/2009 10:00
Sample Tag: 01

PrePrep Method: NONE
Prep Method: 3051
Analytical Method: 6020
Analyst: WTD
Dilution: 1
Units: mg/kg

Instrument: ELAN-ICP
Prep Date: 01/22/2009 06:50
Cal Date: 01/26/2009 14:27
Run Date: 01/27/2009 02:15
File ID: EL.012709.021557
Percent Solid: 84.4

Analyte	CAS. Number	Result	Qual	RL	MDL
Arsenic, Total	7440-38-2	0.426		0.350	0.0876
Lead, Total	7439-92-1	0.897 J		0.467	0.117
Selenium, Total	7782-49-2		U	0.467	0.117

MSH

U Undetected; the analyte was analyzed for, but not detected.

Microbac

703 RW 3/29/09

8

Sample Number: L09010203-08
Client ID: MR08-IS251-8-9-09A
Matrix: Soil
Workgroup Number: WG292566
Collect Date: 01/10/2009 10:00
Sample Tag: 01

PrePrep Method: NONE
Prep Method: 7471A
Analytical Method: 7471A
Analyst: ADC
Dilution: 1
Units: mg/kg

Instrument: HYDRA
Prep Date: 01/14/2009 10:16
Cal Date: 01/22/2009 13:28
Run Date: 01/22/2009 14:38
File ID: HY.012209.143833
Percent Solid: 84.4

Analyte	CAS. Number	Result	Qual	RL	MDL
Mercury, Total	7439-97-6		U	0.118	0.0237

U Undetected; the analyte was analyzed for, but not detected.

Microbac

3226 lw 3/29/09

9

Sample Number: L09010203-09
Client ID: MR08-SS232-09A
Matrix: Soil
Workgroup Number: WG292553
Collect Date: 01/10/2009 10:20
Sample Tag: 01

PrePrep Method: NONE
Prep Method: 3051
Analytical Method: 6010B
Analyst: KHR
Dilution: 1
Units: mg/kg

Instrument: IRIS-ICP
Prep Date: 01/14/2009 08:37
Cal Date: 01/15/2009 09:29
Run Date: 01/16/2009 01:16
File ID: IR.011609.011600
Percent Solid: 83.1

Analyte	CAS. Number	Result	Qual	RL	MDL
Silver, Total	7440-22-4	0.946		0.913	0.228
Barium, Total	7440-39-3	16.1		0.456	0.0913
Cadmium, Total	7440-43-9	0.106	J	0.183	0.0456
Chromium, Total	7440-47-3	8.63 J		0.913	0.110

MSH

J Estimated ; the analyte concentration was less than the low standard (LOQ)

Microbac

23 lw 3/29/09

9

Sample Number: L09010203-09
Client ID: MR08-SS232-09A
Matrix: Soil
Workgroup Number: WG293286
Collect Date: 01/10/2009 10:20
Sample Tag: 01

PrePrep Method: NONE
Prep Method: 3051
Analytical Method: 6020
Analyst: WTD
Dilution: 1
Units: mg/kg

Instrument: ELAN-ICP
Prep Date: 01/22/2009 06:50
Cal Date: 01/26/2009 14:27
Run Date: 01/27/2009 02:22
File ID: EL.012709.022212
Percent Solid: 83.1

Analyte	CAS. Number	Result	Qual	RL	MDL
Arsenic, Total	7440-38-2	0.368		0.342	0.0855
Lead, Total	7439-92-1	16.8 J		0.456	0.114
Selenium, Total	7782-49-2	0.709		0.456	0.114

MSH

Microbac

704 LW 3/29/09

9

Sample Number:	L09010203-09	PrePrep Method:	NONE	Instrument:	HYDRA
Client ID:	MR08-SS232-09A	Prep Method:	7471A	Prep Date:	01/14/2009 10:16
Matrix:	Soil	Analytical Method:	7471A	Cal Date:	01/22/2009 13:28
Workgroup Number:	WG292566	Analyst:	ADC	Run Date:	01/22/2009 14:40
Collect Date:	01/10/2009 10:20	Dilution:	1	File ID:	HY.012209.144028
Sample Tag:	01	Units:	mg/kg	Percent Solid:	83.1

Analyte	CAS. Number	Result	Qual	RL	MDL
Mercury, Total	7439-97-6	0.0565	J	0.114	0.0228

J Estimated ; the analyte concentration was less than the low standard (LOQ)

Microbac

3227 lw 3/29/09

10

Sample Number: L09010203-10
Client ID: MR08-IS232-5-6-09A
Matrix: Soil
Workgroup Number: WG292553
Collect Date: 01/10/2009 10:30
Sample Tag: 01

PrePrep Method: NONE
Prep Method: 3051
Analytical Method: 6010B
Analyst: KHR
Dilution: 1
Units: mg/kg

Instrument: IRIS-ICP
Prep Date: 01/14/2009 08:37
Cal Date: 01/15/2009 09:29
Run Date: 01/16/2009 01:22
File ID: IR.011609.012200
Percent Solid: 91.2

Analyte	CAS. Number	Result	Qual	RL	MDL
Silver, Total	7440-22-4		U	0.743	0.186
Barium, Total	7440-39-3	1.74		0.372	0.0743
Cadmium, Total	7440-43-9		U	0.149	0.0372
Chromium, Total	7440-47-3	1.07 J		0.743	0.0892

MSH

U Undetected; the analyte was analyzed for, but not detected.

Microbac

24 LW 3/29/09

10

Sample Number: L09010203-10
Client ID: MR08-IS232-5-6-09A
Matrix: Soil
Workgroup Number: WG293286
Collect Date: 01/10/2009 10:30
Sample Tag: 01

PrePrep Method: NONE
Prep Method: 3051
Analytical Method: 6020
Analyst: WTD
Dilution: 1
Units: mg/kg

Instrument: ELAN-ICP
Prep Date: 01/22/2009 06:50
Cal Date: 01/26/2009 14:27
Run Date: 01/27/2009 02:28
File ID: EL.012709.022827
Percent Solid: 91.2

Analyte	CAS. Number	Result	Qual	RL	MDL
Arsenic, Total	7440-38-2		U	0.328	0.0821
Lead, Total	7439-92-1	1.57 J		0.438	0.109
Selenium, Total	7782-49-2		U	0.438	0.109

MSH

U Undetected; the analyte was analyzed for, but not detected.

Microbac

705 MW 3/29/09

10

Sample Number: L09010203-10
Client ID: MR08-IS232-5-6-09A
Matrix: Soil
Workgroup Number: WG292566
Collect Date: 01/10/2009 10:30
Sample Tag: 01

PrePrep Method: NONE
Prep Method: 7471A
Analytical Method: 7471A
Analyst: ADC
Dilution: 1
Units: mg/kg

Instrument: HYDRA
Prep Date: 01/14/2009 10:16
Cal Date: 01/22/2009 13:28
Run Date: 01/22/2009 14:42
File ID: HY.012209.144237
Percent Solid: 91.2

Analyte	CAS. Number	Result	Qual	RL	MDL
Mercury, Total	7439-97-6		U	0.105	0.0209

U Undetected; the analyte was analyzed for, but not detected.

Microbac

3228 JLW 3/29/09

11

Sample Number: L09010203-11
Client ID: MR08-SS252-09A
Matrix: Soil
Workgroup Number: WG292553
Collect Date: 01/10/2009 10:40
Sample Tag: 01

PrePrep Method: NONE
Prep Method: 3051
Analytical Method: 6010B
Analyst: KHR
Dilution: 1
Units: mg/kg

Instrument: IRIS-ICP
Prep Date: 01/14/2009 08:37
Cal Date: 01/15/2009 09:29
Run Date: 01/16/2009 01:28
File ID: IR.011609.012800
Percent Solid: 92.0

Analyte	CAS. Number	Result	Qual	RL	MDL
Silver, Total	7440-22-4		U	0.761	0.190
Barium, Total	7440-39-3	8.33		0.380	0.0761
Cadmium, Total	7440-43-9	0.0612	J	0.152	0.0380
Chromium, Total	7440-47-3	8.27 J		0.761	0.0913

MSH

U Undetected; the analyte was analyzed for, but not detected.
J Estimated ; the analyte concentration was less than the low standard (LOQ)

Microbac

25 RW 3/29/09

11

Sample Number: L09010203-11
Client ID: MR08-SS252-09A
Matrix: Soil
Workgroup Number: WG293286
Collect Date: 01/10/2009 10:40
Sample Tag: DL01

PrePrep Method: NONE
Prep Method: 3051
Analytical Method: 6020
Analyst: WTD
Dilution: 5
Units: mg/kg

Instrument: ELAN-ICP
Prep Date: 01/22/2009 06:50
Cal Date: 01/26/2009 14:27
Run Date: 01/27/2009 02:47
File ID: EL.012709.024747
Percent Solid: 92.0

Analyte	CAS. Number	Result	Qual	RL	MDL
Arsenic, Total	7440-38-2	11.8		1.62	0.405
Lead, Total	7439-92-1	60.2 J		2.16	0.541
Selenium, Total	7782-49-2	0.687	J	2.16	0.541

MSH

J Estimated ; the analyte concentration was less than the low standard (LOQ)

Microbac

706 lw 3/29/09

11

Sample Number: L09010203-11
Client ID: MR08-SS252-09A
Matrix: Soil
Workgroup Number: WG292566
Collect Date: 01/10/2009 10:40
Sample Tag: 01

PrePrep Method: NONE
Prep Method: 7471A
Analytical Method: 7471A
Analyst: ADC
Dilution: 1
Units: mg/kg

Instrument: HYDRA
Prep Date: 01/14/2009 10:16
Cal Date: 01/22/2009 13:28
Run Date: 01/22/2009 14:44
File ID: HY.012209.144434
Percent Solid: 92.0

Analyte	CAS. Number	Result	Qual	RL	MDL
Mercury, Total	7439-97-6		U	0.104	0.0208

U Undetected; the analyte was analyzed for, but not detected.

Microbac

3229 lw 3/29/09

12

Sample Number: L09010203-12
Client ID: MRO8-IS252-6-7-09A
Matrix: Soil
Workgroup Number: WG292553
Collect Date: 01/10/2009 11:00
Sample Tag: 01

PrePrep Method: NONE
Prep Method: 3051
Analytical Method: 6010B
Analyst: KHR
Dilution: 1
Units: mg/kg

Instrument: IRIS-ICP
Prep Date: 01/14/2009 08:37
Cal Date: 01/15/2009 09:29
Run Date: 01/16/2009 01:34
File ID: IR.011609.013400
Percent Solid: 87.1

Analyte	CAS. Number	Result	Qual	RL	MDL
Silver, Total	7440-22-4		U	0.807	0.202
Barium, Total	7440-39-3	5.20		0.403	0.0807
Cadmium, Total	7440-43-9		U	0.161	0.0403
Chromium, Total	7440-47-3	3.88 J		0.807	0.0968

MSH

U Undetected; the analyte was analyzed for, but not detected.

Microbac

 JW 3/29/09

12

Sample Number: L09010203-12
Client ID: MRO8-IS252-6-7-09A
Matrix: Soil
Workgroup Number: WG293286
Collect Date: 01/10/2009 11:00
Sample Tag: 01

PrePrep Method: NONE
Prep Method: 3051
Analytical Method: 6020
Analyst: WTD
Dilution: 1
Units: mg/kg

Instrument: ELAN-ICP
Prep Date: 01/22/2009 06:50
Cal Date: 01/26/2009 14:27
Run Date: 01/27/2009 02:54
File ID: EL.012709.025403
Percent Solid: 87.1

Analyte	CAS. Number	Result	Qual	RL	MDL
Arsenic, Total	7440-38-2	12.9		0.320	0.0799
Lead, Total	7439-92-1	4.72 J		0.426	0.107
Selenium, Total	7782-49-2		U	0.426	0.107

MSH

U Undetected; the analyte was analyzed for, but not detected.

Microbac

707 lw 3/29/09

12

Sample Number: L09010203-12
Client ID: MRO8-IS252-6-7-09A
Matrix: Soil
Workgroup Number: WG292566
Collect Date: 01/10/2009 11:00
Sample Tag: 01

PrePrep Method: NONE
Prep Method: 7471A
Analytical Method: 7471A
Analyst: ADC
Dilution: 1
Units: mg/kg

Instrument: HYDRA
Prep Date: 01/14/2009 10:16
Cal Date: 01/22/2009 13:28
Run Date: 01/22/2009 14:49
File ID: HY.012209.144951
Percent Solid: 87.1

Analyte	CAS. Number	Result	Qual	RL	MDL
Mercury, Total	7439-97-6		U	0.110	0.0221

U Undetected; the analyte was analyzed for, but not detected.

Microbac

3230 3/29/09

13

Sample Number: L09010203-13
Client ID: MRO8-SS253-09A
Matrix: Soil
Workgroup Number: WG292553
Collect Date: 01/10/2009 11:15
Sample Tag: 01

PrePrep Method: NONE
Prep Method: 3051
Analytical Method: 6010B
Analyst: KHR
Dilution: 1
Units: mg/kg

Instrument: IRIS-ICP
Prep Date: 01/14/2009 08:37
Cal Date: 01/15/2009 09:29
Run Date: 01/16/2009 01:40
File ID: IR.011609.014000
Percent Solid: 88.8

Analyte	CAS. Number	Result	Qual	RL	MDL
Silver, Total	7440-22-4		U	0.752	0.188
Barium, Total	7440-39-3	43.9		0.376	0.0752
Cadmium, Total	7440-43-9	0.435		0.150	0.0376
Chromium, Total	7440-47-3	5.45 J		0.752	0.0902

MSH

U Undetected; the analyte was analyzed for, but not detected.

Microbac

27 JW 3/29/09

13

Sample Number: L09010203-13
Client ID: MRO8-SS253-09A
Matrix: Soil
Workgroup Number: WG293286
Collect Date: 01/10/2009 11:15
Sample Tag: DL01

PrePrep Method: NONE
Prep Method: 3051
Analytical Method: 6020
Analyst: WTD
Dilution: 5
Units: mg/kg

Instrument: ELAN-ICP
Prep Date: 01/22/2009 06:50
Cal Date: 01/26/2009 14:27
Run Date: 01/27/2009 03:00
File ID: EL.012709.030019
Percent Solid: 88.8

Analyte	CAS. Number	Result	Qual	RL	MDL
Arsenic, Total	7440-38-2	0.768	J	1.64	0.409
Lead, Total	7439-92-1	164 J		2.18	0.546
Selenium, Total	7782-49-2		U	2.18	0.546

MSH

U Undetected; the analyte was analyzed for, but not detected.
J Estimated ; the analyte concentration was less than the low standard (LOQ)

Microbac

708 lw 3/29/09

13

Sample Number:	L09010203-13	PrePrep Method:	NONE	Instrument:	HYDRA
Client ID:	MRO8-SS253-09A	Prep Method:	7471A	Prep Date:	01/14/2009 10:16
Matrix:	Soil	Analytical Method:	7471A	Cal Date:	01/22/2009 13:28
Workgroup Number:	WG292566	Analyst:	ADC	Run Date:	01/22/2009 14:51
Collect Date:	01/10/2009 11:15	Dilution:	1	File ID:	HY.012209.145138
Sample Tag:	01	Units:	mg/kg	Percent Solid:	88.8

Analyte	CAS. Number	Result	Qual	RL	MDL
Mercury, Total	7439-97-6	0.0263	J	0.113	0.0225

J Estimated ; the analyte concentration was less than the low standard (LOQ)

Microbac

3231 DW 3/29/09

14

Sample Number: L09010203-14
Client ID: MRO8-IS253-6-7-09A
Matrix: Soil
Workgroup Number: WG292553
Collect Date: 01/10/2009 11:30
Sample Tag: 01

PrePrep Method: NONE
Prep Method: 3051
Analytical Method: 6010B
Analyst: KHR
Dilution: 1
Units: mg/kg

Instrument: IRIS-ICP
Prep Date: 01/14/2009 08:37
Cal Date: 01/15/2009 09:29
Run Date: 01/16/2009 01:46
File ID: IR.011609.014600
Percent Solid: 86.8

Analyte	CAS. Number	Result	Qual	RL	MDL
Silver, Total	7440-22-4		U	0.791	0.198
Barium, Total	7440-39-3	5.72		0.396	0.0791
Cadmium, Total	7440-43-9		U	0.158	0.0396
Chromium, Total	7440-47-3	2.86 J		0.791	0.0950

MSH

U Undetected; the analyte was analyzed for, but not detected.

Microbac

28 LW 3/29/09

14

Sample Number: L09010203-14
Client ID: MRO8-IS253-6-7-09A
Matrix: Soil
Workgroup Number: WG293286
Collect Date: 01/10/2009 11:30
Sample Tag: 01

PrePrep Method: NONE
Prep Method: 3051
Analytical Method: 6020
Analyst: WTD
Dilution: 1
Units: mg/kg

Instrument: ELAN-ICP
Prep Date: 01/22/2009 06:50
Cal Date: 01/26/2009 14:27
Run Date: 01/27/2009 03:06
File ID: EL.012709.030635
Percent Solid: 86.8

Analyte	CAS. Number	Result	Qual	RL	MDL
Arsenic, Total	7440-38-2	0.290	J	0.333	0.0834
Lead, Total	7439-92-1	4.68 J		0.445	0.111
Selenium, Total	7782-49-2		U	0.445	0.111

MSH

U Undetected; the analyte was analyzed for, but not detected.
J Estimated ; the analyte concentration was less than the low standard (LOQ)

Microbac

709 MW 3/29/09

14

Sample Number:	L09010203-14	PrePrep Method:	NONE	Instrument:	HYDRA
Client ID:	MRO8-IS253-6-7-09A	Prep Method:	7471A	Prep Date:	01/14/2009 10:16
Matrix:	Soil	Analytical Method:	7471A	Cal Date:	01/22/2009 13:28
Workgroup Number:	WG292566	Analyst:	ADC	Run Date:	01/22/2009 14:53
Collect Date:	01/10/2009 11:30	Dilution:	1	File ID:	HY.012209.145323
Sample Tag:	01	Units:	mg/kg	Percent Solid:	86.8

Analyte	CAS. Number	Result	Qual	RL	MDL
Mercury, Total	7439-97-6		U	0.110	0.0219

U Undetected; the analyte was analyzed for, but not detected.

Microbac

3232 lew 3/29/09

15

Sample Number: L09010203-15
Client ID: MRO8-SS231-09A
Matrix: Soil
Workgroup Number: WG292553
Collect Date: 01/10/2009 13:00
Sample Tag: 01

PrePrep Method: NONE
Prep Method: 3051
Analytical Method: 6010B
Analyst: KHR
Dilution: 1
Units: mg/kg

Instrument: IRIS-ICP
Prep Date: 01/14/2009 08:37
Cal Date: 01/15/2009 09:29
Run Date: 01/16/2009 01:53
File ID: IR.011609.015300
Percent Solid: 91.8

Analyte	CAS. Number	Result	Qual	RL	MDL
Silver, Total	7440-22-4		U	0.760	0.190
Barium, Total	7440-39-3	6.24		0.380	0.0760
Cadmium, Total	7440-43-9	0.0783	J	0.152	0.0380
Chromium, Total	7440-47-3	2.51 J		0.760	0.0912

MSH

U Undetected; the analyte was analyzed for, but not detected.
J Estimated ; the analyte concentration was less than the low standard (LOQ)

Microbac

29 LW 3/29/09

15

Sample Number: L09010203-15
Client ID: MRO8-SS231-09A
Matrix: Soil
Workgroup Number: WG293286
Collect Date: 01/10/2009 13:00
Sample Tag: 01

PrePrep Method: NONE
Prep Method: 3051
Analytical Method: 6020
Analyst: WTD
Dilution: 1
Units: mg/kg

Instrument: ELAN-ICP
Prep Date: 01/22/2009 06:50
Cal Date: 01/26/2009 14:27
Run Date: 01/27/2009 03:12
File ID: EL.012709.031252
Percent Solid: 91.8

Analyte	CAS. Number	Result	Qual	RL	MDL
Arsenic, Total	7440-38-2	0.759		0.314	0.0784
Lead, Total	7439-92-1	3.69 J		0.418	0.105
Selenium, Total	7782-49-2	0.260	J	0.418	0.105

MSH

J Estimated ; the analyte concentration was less than the low standard (LOQ)

Microbac

710 [illegible] 3/29/09

15

Sample Number: L09010203-15
Client ID: MRO8-SS231-09A
Matrix: Soil
Workgroup Number: WG292566
Collect Date: 01/10/2009 13:00
Sample Tag: 01

PrePrep Method: NONE
Prep Method: 7471A
Analytical Method: 7471A
Analyst: ADC
Dilution: 1
Units: mg/kg

Instrument: HYDRA
Prep Date: 01/14/2009 10:16
Cal Date: 01/22/2009 13:28
Run Date: 01/22/2009 14:56
File ID: HY.012209.145613
Percent Solid: 91.8

Analyte	CAS. Number	Result	Qual	RL	MDL
Mercury, Total	7439-97-6		U	0.109	0.0218

U Undetected; the analyte was analyzed for, but not detected.

Microbac

3233 lw 3/29/09

16

Sample Number: L09010203-16
Client ID: MRO8-IS231-8-9-09A
Matrix: Soil
Workgroup Number: WG292553
Collect Date: 01/10/2009 13:20
Sample Tag: 01

PrePrep Method: NONE
Prep Method: 3051
Analytical Method: 6010B
Analyst: KHR
Dilution: 1
Units: mg/kg

Instrument: IRIS-ICP
Prep Date: 01/14/2009 08:37
Cal Date: 01/15/2009 09:29
Run Date: 01/16/2009 01:59
File ID: IR.011609.015900
Percent Solid: 92.9

Analyte	CAS. Number	Result	Qual	RL	MDL
Silver, Total	7440-22-4		U	0.794	0.198
Barium, Total	7440-39-3	1.89		0.397	0.0794
Cadmium, Total	7440-43-9		U	0.159	0.0397
Chromium, Total	7440-47-3	1.06 J		0.794	0.0952

MSH

U Undetected; the analyte was analyzed for, but not detected.

Microbac

30 MW 3/29/09

16

Sample Number: L09010203-16
Client ID: MRO8-IS231-8-9-09A
Matrix: Soil
Workgroup Number: WG293286
Collect Date: 01/10/2009 13:20
Sample Tag: 01

PrePrep Method: NONE
Prep Method: 3051
Analytical Method: 6020
Analyst: WTD
Dilution: 1
Units: mg/kg

Instrument: ELAN-ICP
Prep Date: 01/22/2009 06:50
Cal Date: 01/26/2009 14:27
Run Date: 01/27/2009 03:19
File ID: EL.012709.031908
Percent Solid: 92.9

Analyte	CAS. Number	Result	Qual	RL	MDL
Arsenic, Total	7440-38-2	0.331		0.322	0.0805
Lead, Total	7439-92-1	2.40 J		0.430	0.107
Selenium, Total	7782-49-2	0.133	J	0.430	0.107

MSH

J Estimated ; the analyte concentration was less than the low standard (LOQ)

Microbac

711 LW 3/29/09

16

Sample Number: L09010203-16
Client ID: MRO8-IS231-8-9-09A
Matrix: Soil
Workgroup Number: WG292566
Collect Date: 01/10/2009 13:20
Sample Tag: 01

PrePrep Method: NONE
Prep Method: 7471A
Analytical Method: 7471A
Analyst: ADC
Dilution: 1
Units: mg/kg

Instrument: HYDRA
Prep Date: 01/14/2009 10:16
Cal Date: 01/22/2009 13:28
Run Date: 01/22/2009 14:58
File ID: HY.012209.145857
Percent Solid: 92.9

Analyte	CAS. Number	Result	Qual	RL	MDL
Mercury, Total	7439-97-6		U	0.100	0.0201

U Undetected; the analyte was analyzed for, but not detected.

Microbac

3234 lw 3/29/09

17

Sample Number: L09010203-17
Client ID: MRO8-SS230-09A
Matrix: Soil
Workgroup Number: WG292553
Collect Date: 01/10/2009 13:45
Sample Tag: 01

PrePrep Method: NONE
Prep Method: 3051
Analytical Method: 6010B
Analyst: KHR
Dilution: 1
Units: mg/kg

Instrument: IRIS-ICP
Prep Date: 01/14/2009 08:37
Cal Date: 01/15/2009 09:29
Run Date: 01/16/2009 02:17
File ID: IR.011609.021700
Percent Solid: 90.8

Analyte	CAS. Number	Result	Qual	RL	MDL
Silver, Total	7440-22-4		U	0.734	0.184
Barium, Total	7440-39-3	4.80		0.367	0.0734
Cadmium, Total	7440-43-9	0.304		0.147	0.0367
Chromium, Total	7440-47-3	4.73 J		0.734	0.0881

MSH

U Undetected; the analyte was analyzed for, but not detected.

Microbac

31 lw 3/29/09

17

Sample Number: L09010203-17
Client ID: MRO8-SS230-09A
Matrix: Soil
Workgroup Number: WG293286
Collect Date: 01/10/2009 13:45
Sample Tag: 01

PrePrep Method: NONE
Prep Method: 3051
Analytical Method: 6020
Analyst: WTD
Dilution: 1
Units: mg/kg

Instrument: ELAN-ICP
Prep Date: 01/22/2009 06:50
Cal Date: 01/26/2009 14:27
Run Date: 01/27/2009 03:25
File ID: EL.012709.032521
Percent Solid: 90.8

Analyte	CAS. Number	Result	Qual	RL	MDL
Arsenic, Total	7440-38-2	0.625		0.318	0.0795
Lead, Total	7439-92-1	2.46 J		0.424	0.106
Selenium, Total	7782-49-2	0.198	J	0.424	0.106

MSH

J Estimated ; the analyte concentration was less than the low standard (LOQ)

Microbac

712 DW 3/29/09

17

Sample Number: L09010203-17
Client ID: MRO8-SS230-09A
Matrix: Soil
Workgroup Number: WG292566
Collect Date: 01/10/2009 13:45
Sample Tag: 01

PrePrep Method: NONE
Prep Method: 7471A
Analytical Method: 7471A
Analyst: ADC
Dilution: 1
Units: mg/kg

Instrument: HYDRA
Prep Date: 01/14/2009 10:16
Cal Date: 01/22/2009 13:28
Run Date: 01/22/2009 15:01
File ID: HY.012209.150136
Percent Solid: 90.8

Analyte	CAS. Number	Result	Qual	RL	MDL
Mercury, Total	7439-97-6		U	0.109	0.0217

U Undetected; the analyte was analyzed for, but not detected.

Microbac

3235 MW 3/29/09

18

Sample Number: L09010203-18
Client ID: MRO8-IS230-8-9-09A
Matrix: Soil
Workgroup Number: WG292548
Collect Date: 01/10/2009 14:05
Sample Tag: 01

PrePrep Method: NONE
Prep Method: 3051
Analytical Method: 6010B
Analyst: KHR
Dilution: 1
Units: mg/kg

Instrument: IRIS-ICP
Prep Date: 01/14/2009 09:23
Cal Date: 01/15/2009 09:29
Run Date: 01/15/2009 17:01
File ID: IR.011509.170100
Percent Solid: 86.3

Analyte	CAS. Number	Result	Qual	RL	MDL
Silver, Total	7440-22-4		U	0.806	0.201
Barium, Total	7440-39-3	18.6		0.403	0.0806
Cadmium, Total	7440-43-9		U	0.161	0.0403
Chromium, Total	7440-47-3	15.5		0.806	0.0967

U Undetected; the analyte was analyzed for, but not detected.

Microbac

32 lw 3/29/09

18

Sample Number: L09010203-18
Client ID: MRO8-IS230-8-9-09A
Matrix: Soil
Workgroup Number: WG293287
Collect Date: 01/10/2009 14:05
Sample Tag: 01

PrePrep Method: NONE
Prep Method: 3051
Analytical Method: 6020
Analyst: JYH
Dilution: 1
Units: mg/kg

Instrument: ELAN-ICP
Prep Date: 01/15/2009 08:49
Cal Date: 01/30/2009 11:12
Run Date: 01/30/2009 17:14
File ID: EL.013009.171435
Percent Solid: 86.3

Analyte	CAS. Number	Result	Qual	RL	MDL
Arsenic, Total	7440-38-2	1.28		0.336	0.0840
Lead, Total	7439-92-1	4.54		0.448	0.112
Selenium, Total	7782-49-2	0.158	J	0.448	0.112

J Estimated ; the analyte concentration was less than the low standard (LOQ)

Microbac

713 PW 3/29/09

18

Sample Number: L09010203-18
Client ID: MRO8-IS230-8-9-09A
Matrix: Soil
Workgroup Number: WG292570
Collect Date: 01/10/2009 14:05
Sample Tag: 01

PrePrep Method: NONE
Prep Method: 7471A
Analytical Method: 7471A
Analyst: ADC
Dilution: 1
Units: mg/kg

Instrument: HYDRA
Prep Date: 01/14/2009 12:39
Cal Date: 01/15/2009 09:30
Run Date: 01/15/2009 12:20
File ID: HY.011509.122039
Percent Solid: 86.3

Analyte	CAS. Number	Result	Qual	RL	MDL
Mercury, Total	7439-97-6		U	0.109	0.0219

U Undetected; the analyte was analyzed for, but not detected.

Microbac

3236 lw 3/29/09

19

Sample Number: L09010203-19
Client ID: MRO8-SS259-09A
Matrix: Soil
Workgroup Number: WG292548
Collect Date: 01/10/2009 14:20
Sample Tag: 01

PrePrep Method: NONE
Prep Method: 3051
Analytical Method: 6010B
Analyst: KHR
Dilution: 1
Units: mg/kg

Instrument: IRIS-ICP
Prep Date: 01/14/2009 09:23
Cal Date: 01/15/2009 09:29
Run Date: 01/15/2009 17:26
File ID: IR.011509.172600
Percent Solid: 92.5

Analyte	CAS. Number	Result	Qual	RL	MDL
Silver, Total	7440-22-4	1.30		0.761	0.190
Barium, Total	7440-39-3	25.7		0.380	0.0761
Cadmium, Total	7440-43-9	0.931		0.152	0.0380

Microbac

33 hw 3/29/09

19

Sample Number: L09010203-19
Client ID: MRO8-SS259-09A
Matrix: Soil
Workgroup Number: WG292548
Collect Date: 01/10/2009 14:20
Sample Tag: DL01

PrePrep Method: NONE
Prep Method: 3051
Analytical Method: 6010B
Analyst: KHR
Dilution: 2
Units: mg/kg

Instrument: IRIS-ICP
Prep Date: 01/14/2009 09:23
Cal Date: 01/16/2009 11:30
Run Date: 01/16/2009 13:03
File ID: IR.011609.130300
Percent Solid: 92.5

Analyte	CAS. Number	Result	Qual	RL	MDL
Chromium, Total	7440-47-3	38.8		1.52	0.183

Microbac

34 LW 3/29/09

19

Sample Number: L09010203-19
Client ID: MRO8-SS259-09A
Matrix: Soil
Workgroup Number: WG293287
Collect Date: 01/10/2009 14:20
Sample Tag: DL01

PrePrep Method: NONE
Prep Method: 3051
Analytical Method: 6020
Analyst: JYH
Dilution: 2
Units: mg/kg

Instrument: ELAN-ICP
Prep Date: 01/15/2009 08:49
Cal Date: 01/30/2009 11:12
Run Date: 01/30/2009 17:20
File ID: EL.013009.172037
Percent Solid: 92.5

Analyte	CAS. Number	Result	Qual	RL	MDL
Arsenic, Total	7440-38-2	0.713		0.642	0.161
Selenium, Total	7782-49-2		U	0.857	0.214

U Undetected; the analyte was analyzed for, but not detected.

Microbac

714 MW 3/29/09

19

Sample Number: L09010203-19
Client ID: MRO8-SS259-09A
Matrix: Soil
Workgroup Number: WG293287
Collect Date: 01/10/2009 14:20
Sample Tag: DL02

PrePrep Method: NONE
Prep Method: 3051
Analytical Method: 6020
Analyst: JYH
Dilution: 10
Units: mg/kg

Instrument: ELAN-ICP
Prep Date: 01/15/2009 08:49
Cal Date: 02/02/2009 11:02
Run Date: 02/02/2009 21:10
File ID: EL.020209.211016
Percent Solid: 92.5

Analyte	CAS. Number	Result	Qual	RL	MDL
Lead, Total	7439-92-1	95.8		4.28	1.07

Microbac

715 lw 3/29/09

19

Sample Number: L09010203-19
Client ID: MRO8-SS259-09A
Matrix: Soil
Workgroup Number: WG292570
Collect Date: 01/10/2009 14:20
Sample Tag: 01

PrePrep Method: NONE
Prep Method: 7471A
Analytical Method: 7471A
Analyst: ADC
Dilution: 1
Units: mg/kg

Instrument: HYDRA
Prep Date: 01/14/2009 12:39
Cal Date: 01/15/2009 09:30
Run Date: 01/15/2009 12:24
File ID: HY.011509.122433
Percent Solid: 92.5

Analyte	CAS. Number	Result	Qual	RL	MDL
Mercury, Total	7439-97-6	0.656		0.106	0.0212

Microbac

3237 MW 3/29/09

20

Sample Number: L09010203-20
Client ID: MRO8-SS259D-09A
Matrix: Soil
Workgroup Number: WG292548
Collect Date: 01/10/2009 14:25
Sample Tag: 01

PrePrep Method: NONE
Prep Method: 3051
Analytical Method: 6010B
Analyst: KHR
Dilution: 1
Units: mg/kg

Instrument: IRIS-ICP
Prep Date: 01/14/2009 09:23
Cal Date: 01/15/2009 09:29
Run Date: 01/15/2009 17:44
File ID: IR.011509.174400
Percent Solid: 93.0

Analyte	CAS. Number	Result	Qual	RL	MDL
Silver, Total	7440-22-4	3.19		0.810	0.202
Barium, Total	7440-39-3	32.8		0.405	0.0810
Cadmium, Total	7440-43-9	1.03		0.162	0.0405
Chromium, Total	7440-47-3	17.1		0.810	0.0972

Microbac

35 lw 3/29/09

20

Sample Number: L09010203-20
Client ID: MRO8-SS259D-09A
Matrix: Soil
Workgroup Number: WG293287
Collect Date: 01/10/2009 14:25
Sample Tag: DL01

PrePrep Method: NONE
Prep Method: 3051
Analytical Method: 6020
Analyst: JYH
Dilution: 2
Units: mg/kg

Instrument: ELAN-ICP
Prep Date: 01/15/2009 08:49
Cal Date: 01/30/2009 11:12
Run Date: 01/30/2009 17:26
File ID: EL.013009.172638
Percent Solid: 93.0

Analyte	CAS. Number	Result	Qual	RL	MDL
Arsenic, Total	7440-38-2	0.879		0.640	0.160
Selenium, Total	7782-49-2	0.439	J	0.854	0.213

J Estimated ; the analyte concentration was less than the low standard (LOQ)

Microbac

716 RW 3/29/09

20

Sample Number:	L09010203-20	PrePrep Method:	NONE	Instrument:	ELAN-ICP
Client ID:	MRO8-SS259D-09A	Prep Method:	3051	Prep Date:	01/15/2009 08:49
Matrix:	Soil	Analytical Method:	6020	Cal Date:	02/02/2009 11:02
Workgroup Number:	WG293287	Analyst:	JYH	Run Date:	02/02/2009 21:16
Collect Date:	01/10/2009 14:25	Dilution:	10	File ID:	EL.020209.211618
Sample Tag:	DL02	Units:	mg/kg	Percent Solid:	93.0

Analyte	CAS. Number	Result	Qual	RL	MDL
Lead, Total	7439-92-1	116		4.27	1.07

Microbac

717 RW 3/29/09

20

Sample Number: L09010203-20
Client ID: MRO8-SS259D-09A
Matrix: Soil
Workgroup Number: WG292570
Collect Date: 01/10/2009 14:25
Sample Tag: DL01

PrePrep Method: NONE
Prep Method: 7471A
Analytical Method: 7471A
Analyst: ADC
Dilution: 2
Units: mg/kg

Instrument: HYDRA
Prep Date: 01/14/2009 12:39
Cal Date: 01/15/2009 09:30
Run Date: 01/15/2009 13:09
File ID: HY.011509.130941
Percent Solid: 93.0

Analyte	CAS. Number	Result	Qual	RL	MDL
Mercury, Total	7439-97-6	0.673		0.213	0.0425

Microbac

3238 MW 3/29/09

21

Sample Number: L09010203-21
Client ID: MRO8-IS259-5-6-09A
Matrix: Soil
Workgroup Number: WG292548
Collect Date: 01/10/2009 14:45
Sample Tag: 01

PrePrep Method: NONE
Prep Method: 3051
Analytical Method: 6010B
Analyst: KHR
Dilution: 1
Units: mg/kg

Instrument: IRIS-ICP
Prep Date: 01/14/2009 09:23
Cal Date: 01/15/2009 09:29
Run Date: 01/15/2009 17:50
File ID: IR.011509.175000
Percent Solid: 89.0

Analyte	CAS. Number	Result	Qual	RL	MDL
Silver, Total	7440-22-4		U	0.770	0.192
Barium, Total	7440-39-3	9.25		0.385	0.0770
Cadmium, Total	7440-43-9		U	0.154	0.0385
Chromium, Total	7440-47-3	6.06		0.770	0.0924

U Undetected; the analyte was analyzed for, but not detected.

Microbac

36 DW 3/29/09

21

Sample Number: L09010203-21
Client ID: MRO8-IS259-5-6-09A
Matrix: Soil
Workgroup Number: WG293287
Collect Date: 01/10/2009 14:45
Sample Tag: 01

PrePrep Method: NONE
Prep Method: 3051
Analytical Method: 6020
Analyst: JYH
Dilution: 1
Units: mg/kg

Instrument: ELAN-ICP
Prep Date: 01/15/2009 08:49
Cal Date: 01/30/2009 11:12
Run Date: 01/30/2009 17:32
File ID: EL.013009.173241
Percent Solid: 89.0

Analyte	CAS. Number	Result	Qual	RL	MDL
Arsenic, Total	7440-38-2	0.496		0.313	0.0781
Lead, Total	7439-92-1	2.53		0.417	0.104
Selenium, Total	7782-49-2		U	0.417	0.104

U Undetected; the analyte was analyzed for, but not detected.

Microbac

718 fw 3/29/09

21

Sample Number:	L09010203-21	PrePrep Method:	NONE	Instrument:	HYDRA
Client ID:	MRO8-IS259-5-6-09A	Prep Method:	7471A	Prep Date:	01/14/2009 12:39
Matrix:	Soil	Analytical Method:	7471A	Cal Date:	01/15/2009 09:30
Workgroup Number:	WG292570	Analyst:	ADC	Run Date:	01/15/2009 12:28
Collect Date:	01/10/2009 14:45	Dilution:	1	File ID:	HY.011509.122809
Sample Tag:	01	Units:	mg/kg	Percent Solid:	89.0

Analyte	CAS. Number	Result	Qual	RL	MDL
Mercury, Total	7439-97-6		U	0.108	0.0216

U Undetected; the analyte was analyzed for, but not detected.

Microbac

3239 lw 3/29/09

22

Sample Number: L09010203-22
Client ID: MRO8-IS259D-5-6-09A
Matrix: Soil
Workgroup Number: WG292548
Collect Date: 01/10/2009 14:55
Sample Tag: 01

PrePrep Method: NONE
Prep Method: 3051
Analytical Method: 6010B
Analyst: KHR
Dilution: 1
Units: mg/kg

Instrument: IRIS-ICP
Prep Date: 01/14/2009 09:23
Cal Date: 01/15/2009 09:29
Run Date: 01/15/2009 17:56
File ID: IR.011509.175600
Percent Solid: 91.6

Analyte	CAS. Number	Result	Qual	RL	MDL
Silver, Total	7440-22-4		U	0.760	0.190
Barium, Total	7440-39-3	7.93		0.380	0.0760
Cadmium, Total	7440-43-9		U	0.152	0.0380
Chromium, Total	7440-47-3	4.25		0.760	0.0911

U Undetected; the analyte was analyzed for, but not detected.

Microbac

37 lw 3/29/09

22

Sample Number: L09010203-22
Client ID: MRO8-IS259D-5-6-09A
Matrix: Soil
Workgroup Number: WG293287
Collect Date: 01/10/2009 14:55
Sample Tag: 01

PrePrep Method: NONE
Prep Method: 3051
Analytical Method: 6020
Analyst: JYH
Dilution: 1
Units: mg/kg

Instrument: ELAN-ICP
Prep Date: 01/15/2009 08:49
Cal Date: 01/30/2009 11:12
Run Date: 01/30/2009 17:38
File ID: EL.013009.173843
Percent Solid: 91.6

Analyte	CAS. Number	Result	Qual	RL	MDL
Arsenic, Total	7440-38-2	0.618		0.326	0.0814
Lead, Total	7439-92-1	3.06		0.434	0.109
Selenium, Total	7782-49-2		U	0.434	0.109

U Undetected; the analyte was analyzed for, but not detected.

Microbac

719 lw 3/29/09

22

Sample Number: L09010203-22
Client ID: MRO8-IS259D-5-6-09A
Matrix: Soil
Workgroup Number: WG292570
Collect Date: 01/10/2009 14:55
Sample Tag: 01

PrePrep Method: NONE
Prep Method: 7471A
Analytical Method: 7471A
Analyst: ADC
Dilution: 1
Units: mg/kg

Instrument: HYDRA
Prep Date: 01/14/2009 12:39
Cal Date: 01/15/2009 09:30
Run Date: 01/15/2009 12:29
File ID: HY.011509.122953
Percent Solid: 91.6

Analyte	CAS. Number	Result	Qual	RL	MDL
Mercury, Total	7439-97-6		U	0.109	0.0218

U Undetected; the analyte was analyzed for, but not detected.

Microbac

3240 lw 3/29/09

23

Sample Number: L09010203-23
Client ID: MRO8-SS272-09A
Matrix: Soil
Workgroup Number: WG292548
Collect Date: 01/10/2009 15:15
Sample Tag: 01

PrePrep Method: NONE
Prep Method: 3051
Analytical Method: 6010B
Analyst: KHR
Dilution: 1
Units: mg/kg

Instrument: IRIS-ICP
Prep Date: 01/14/2009 09:23
Cal Date: 01/15/2009 09:29
Run Date: 01/15/2009 18:02
File ID: IR.011509.180200
Percent Solid: 93.6

Analyte	CAS. Number	Result	Qual	RL	MDL
Silver, Total	7440-22-4		U	0.816	0.204
Barium, Total	7440-39-3	16.0		0.408	0.0816
Cadmium, Total	7440-43-9	0.509		0.163	0.0408
Chromium, Total	7440-47-3	7.29		0.816	0.0980

U Undetected; the analyte was analyzed for, but not detected.

Microbac

38 lw 3/29/09

23

Sample Number: L09010203-23
Client ID: MRO8-SS272-09A
Matrix: Soil
Workgroup Number: WG293287
Collect Date: 01/10/2009 15:15
Sample Tag: DL01

PrePrep Method: NONE
Prep Method: 3051
Analytical Method: 6020
Analyst: JYH
Dilution: 2
Units: mg/kg

Instrument: ELAN-ICP
Prep Date: 01/15/2009 08:49
Cal Date: 01/30/2009 11:12
Run Date: 01/30/2009 17:57
File ID: EL.013009.175749
Percent Solid: 93.6

Analyte	CAS. Number	Result	Qual	RL	MDL
Arsenic, Total	7440-38-2	0.677		0.641	0.160
Lead, Total	7439-92-1	82.3		0.855	0.214

Microbac

720 lw 3/29/09

23

Sample Number:	L09010203-23	PrePrep Method:	NONE	Instrument:	ELAN-ICP
Client ID:	MRO8-SS272-09A	Prep Method:	3051	Prep Date:	01/15/2009 08:49
Matrix:	Soil	Analytical Method:	6020	Cal Date:	02/02/2009 11:02
Workgroup Number:	WG293287	Analyst:	JYH	Run Date:	02/02/2009 20:32
Collect Date:	01/10/2009 15:15	Dilution:	2	File ID:	EL.020209.203253
Sample Tag:	DL02	Units:	mg/kg	Percent Solid:	93.6

Analyte	CAS. Number	Result	Qual	RL	MDL
Selenium, Total	7782-49-2		U	0.855	0.214

U Undetected; the analyte was analyzed for, but not detected.

Microbac

721 LW 3/29/09

23

Sample Number: L09010203-23
Client ID: MRO8-SS272-09A
Matrix: Soil
Workgroup Number: WG292570
Collect Date: 01/10/2009 15:15
Sample Tag: 01

PrePrep Method: NONE
Prep Method: 7471A
Analytical Method: 7471A
Analyst: ADC
Dilution: 1
Units: mg/kg

Instrument: HYDRA
Prep Date: 01/14/2009 12:39
Cal Date: 01/15/2009 09:30
Run Date: 01/15/2009 12:31
File ID: HY.011509.123141
Percent Solid: 93.6

Analyte	CAS. Number	Result	Qual	RL	MDL
Mercury, Total	7439-97-6	0.0934	J	0.105	0.0209

J Estimated ; the analyte concentration was less than the low standard (LOQ)

Microbac

3241 3/29/09

24

Sample Number: L09010203-24
Client ID: MRO8-IS272-8-9-09A
Matrix: Soil
Workgroup Number: WG292548
Collect Date: 01/10/2009 15:35
Sample Tag: 01

PrePrep Method: NONE
Prep Method: 3051
Analytical Method: 6010B
Analyst: KHR
Dilution: 1
Units: mg/kg

Instrument: IRIS-ICP
Prep Date: 01/14/2009 09:23
Cal Date: 01/15/2009 09:29
Run Date: 01/15/2009 18:08
File ID: IR.011509.180800
Percent Solid: 89.6

Analyte	CAS. Number	Result	Qual	RL	MDL
Silver, Total	7440-22-4		U	0.747	0.187
Barium, Total	7440-39-3	6.79		0.373	0.0747
Cadmium, Total	7440-43-9		U	0.149	0.0373
Chromium, Total	7440-47-3	5.08		0.747	0.0896

U Undetected; the analyte was analyzed for, but not detected.

Microbac

39 lw 3/29/09

24

Sample Number: L09010203-24
Client ID: MRO8-IS272-8-9-09A
Matrix: Soil
Workgroup Number: WG293287
Collect Date: 01/10/2009 15:35
Sample Tag: 01

PrePrep Method: NONE
Prep Method: 3051
Analytical Method: 6020
Analyst: JYH
Dilution: 1
Units: mg/kg

Instrument: ELAN-ICP
Prep Date: 01/15/2009 08:49
Cal Date: 01/30/2009 11:12
Run Date: 01/30/2009 18:03
File ID: EL.013009.180352
Percent Solid: 89.6

Analyte	CAS. Number	Result	Qual	RL	MDL
Arsenic, Total	7440-38-2	1.58		0.320	0.0799
Lead, Total	7439-92-1	2.61		0.426	0.107

Microbac

722 lw 3/29/09

24

Sample Number:	L09010203-24	PrePrep Method:	NONE	Instrument:	ELAN-ICP
Client ID:	MRO8-IS272-8-9-09A	Prep Method:	3051	Prep Date:	01/15/2009 08:49
Matrix:	Soil	Analytical Method:	6020	Cal Date:	02/02/2009 11:02
Workgroup Number:	WG293287	Analyst:	JYH	Run Date:	02/02/2009 20:38
Collect Date:	01/10/2009 15:35	Dilution:	2	File ID:	EL.020209.203858
Sample Tag:	DL01	Units:	mg/kg	Percent Solid:	89.6

Analyte	CAS. Number	Result	Qual	RL	MDL
Selenium, Total	7782-49-2		U	0.852	0.213

U Undetected; the analyte was analyzed for, but not detected.

Microbac

723 lw 3/29/09

24

Sample Number: L09010203-24
Client ID: MRO8-IS272-8-9-09A
Matrix: Soil
Workgroup Number: WG292570
Collect Date: 01/10/2009 15:35
Sample Tag: 01

PrePrep Method: NONE
Prep Method: 7471A
Analytical Method: 7471A
Analyst: ADC
Dilution: 1
Units: mg/kg

Instrument: HYDRA
Prep Date: 01/14/2009 12:39
Cal Date: 01/15/2009 09:30
Run Date: 01/15/2009 12:33
File ID: HY.011509.123324
Percent Solid: 89.6

Analyte	CAS. Number	Result	Qual	RL	MDL
Mercury, Total	7439-97-6		U	0.105	0.0210

U Undetected; the analyte was analyzed for, but not detected.

Microbac

3242 LW 3/29/09

25

Sample Number: L09010203-25
Client ID: MRO8-SS283-09A
Matrix: Soil
Workgroup Number: WG292548
Collect Date: 01/10/2009 15:55
Sample Tag: 01

PrePrep Method: NONE
Prep Method: 3051
Analytical Method: 6010B
Analyst: KHR
Dilution: 1
Units: mg/kg

Instrument: IRIS-ICP
Prep Date: 01/14/2009 09:23
Cal Date: 01/15/2009 09:29
Run Date: 01/15/2009 18:14
File ID: IR.011509.181400
Percent Solid: 91.3

Analyte	CAS. Number	Result	Qual	RL	MDL
Silver, Total	7440-22-4	0.840		0.809	0.202
Barium, Total	7440-39-3	35.7		0.404	0.0809
Cadmium, Total	7440-43-9	1.10		0.162	0.0404
Chromium, Total	7440-47-3	10.4		0.809	0.0971

Microbac

40 lw 3/29/09

25

Sample Number:	L09010203-25	PrePrep Method:	NONE	Instrument:	ELAN-ICP
Client ID:	MRO8-SS283-09A	Prep Method:	3051	Prep Date:	01/15/2009 08:49
Matrix:	Soil	Analytical Method:	6020	Cal Date:	02/02/2009 11:02
Workgroup Number:	WG293287	Analyst:	JYH	Run Date:	02/02/2009 20:45
Collect Date:	01/10/2009 15:55	Dilution:	2	File ID:	EL.020209.204503
Sample Tag:	DL02	Units:	mg/kg	Percent Solid:	91.3

Analyte	CAS. Number	Result	Qual	RL	MDL
Selenium, Total	7782-49-2	0.402	J	0.829	0.207

J Estimated ; the analyte concentration was less than the low standard (LOQ)

Microbac®

724 MW 3/29/09

25

Sample Number: L09010203-25
Client ID: MRO8-SS283-09A
Matrix: Soil
Workgroup Number: WG293287
Collect Date: 01/10/2009 15:55
Sample Tag: DL01

PrePrep Method: NONE
Prep Method: 3051
Analytical Method: 6020
Analyst: JYH
Dilution: 2
Units: mg/kg

Instrument: ELAN-ICP
Prep Date: 01/15/2009 08:49
Cal Date: 01/30/2009 11:12
Run Date: 01/30/2009 18:09
File ID: EL.013009.180956
Percent Solid: 91.3

Analyte	CAS. Number	Result	Qual	RL	MDL
Arsenic, Total	7440-38-2	0.949		0.621	0.155

Microbac

725 WW 3/29/09

25

Sample Number: L09010203-25
Client ID: MRO8-SS283-09A
Matrix: Soil
Workgroup Number: WG293287
Collect Date: 01/10/2009 15:55
Sample Tag: DL03

PrePrep Method: NONE
Prep Method: 3051
Analytical Method: 6020
Analyst: JYH
Dilution: 10
Units: mg/kg

Instrument: ELAN-ICP
Prep Date: 01/15/2009 08:49
Cal Date: 02/02/2009 11:02
Run Date: 02/02/2009 21:22
File ID: EL.020209.212220
Percent Solid: 91.3

Analyte	CAS. Number	Result	Qual	RL	MDL
Lead, Total	7439-92-1	231		4.14	1.04

Microbac

726 LW 3/29/09

25

Sample Number: L09010203-25
Client ID: MRO8-SS283-09A
Matrix: Soil
Workgroup Number: WG292570
Collect Date: 01/10/2009 15:55
Sample Tag: 01

PrePrep Method: NONE
Prep Method: 7471A
Analytical Method: 7471A
Analyst: ADC
Dilution: 1
Units: mg/kg

Instrument: HYDRA
Prep Date: 01/14/2009 12:39
Cal Date: 01/15/2009 09:30
Run Date: 01/15/2009 12:38
File ID: HY.011509.123842
Percent Solid: 91.3

Analyte	CAS. Number	Result	Qual	RL	MDL
Mercury, Total	7439-97-6	0.117		0.105	0.0209

Microbac

3243 ELW 3/29/09

26

Sample Number: L09010203-26
Client ID: MRO8-IS283-6-7-09A
Matrix: Soil
Workgroup Number: WG292548
Collect Date: 01/10/2009 16:25
Sample Tag: 01

PrePrep Method: NONE
Prep Method: 3051
Analytical Method: 6010B
Analyst: KHR
Dilution: 1
Units: mg/kg

Instrument: IRIS-ICP
Prep Date: 01/14/2009 09:23
Cal Date: 01/15/2009 09:29
Run Date: 01/15/2009 18:21
File ID: IR.011509.182100
Percent Solid: 91.7

Analyte	CAS. Number	Result	Qual	RL	MDL
Silver, Total	7440-22-4		U	0.744	0.186
Barium, Total	7440-39-3	5.54		0.372	0.0744
Cadmium, Total	7440-43-9		U	0.149	0.0372
Chromium, Total	7440-47-3	3.39		0.744	0.0893

U Undetected; the analyte was analyzed for, but not detected.

Microbac

41 lw
3/29/09

26

Sample Number: L09010203-26
Client ID: MRO8-IS283-6-7-09A
Matrix: Soil
Workgroup Number: WG293287
Collect Date: 01/10/2009 16:25
Sample Tag: 01

PrePrep Method: NONE
Prep Method: 3051
Analytical Method: 6020
Analyst: JYH
Dilution: 1
Units: mg/kg

Instrument: ELAN-ICP
Prep Date: 01/15/2009 08:49
Cal Date: 01/30/2009 11:12
Run Date: 01/30/2009 18:16
File ID: EL.013009.181600
Percent Solid: 91.7

Analyte	CAS. Number	Result	Qual	RL	MDL
Arsenic, Total	7440-38-2	0.145	J	0.326	0.0814
Lead, Total	7439-92-1	2.33		0.434	0.109

J Estimated ; the analyte concentration was less than the low standard (LOQ)

Microbac

727 lw
3/29/09

26

Sample Number:	L09010203-26	PrePrep Method:	NONE	Instrument:	ELAN-ICP
Client ID:	MRO8-IS283-6-7-09A	Prep Method:	3051	Prep Date:	01/15/2009 08:49
Matrix:	Soil	Analytical Method:	6020	Cal Date:	02/02/2009 11:02
Workgroup Number:	WG293287	Analyst:	JYH	Run Date:	02/02/2009 21:04
Collect Date:	01/10/2009 16:25	Dilution:	2	File ID:	EL.020209.210412
Sample Tag:	DL01	Units:	mg/kg	Percent Solid:	91.7

Analyte	CAS. Number	Result	Qual	RL	MDL
Selenium, Total	7782-49-2		U	0.869	0.217

U Undetected; the analyte was analyzed for, but not detected.

Microbac

728 hw 3/29/09

26

Sample Number: L09010203-26
Client ID: MRO8-IS283-6-7-09A
Matrix: Soil
Workgroup Number: WG292570
Collect Date: 01/10/2009 16:25
Sample Tag: 01

PrePrep Method: NONE
Prep Method: 7471A
Analytical Method: 7471A
Analyst: ADC
Dilution: 1
Units: mg/kg

Instrument: HYDRA
Prep Date: 01/14/2009 12:39
Cal Date: 01/15/2009 09:30
Run Date: 01/15/2009 12:40
File ID: HY.011509.124056
Percent Solid: 91.7

Analyte	CAS. Number	Result	Qual	RL	MDL
Mercury, Total	7439-97-6		U	0.104	0.0208

U Undetected; the analyte was analyzed for, but not detected.

Microbac

3244 luw 3/29/09

27

Sample Number: L09010203-27
Client ID: MRO8-EB01011009-SS
Matrix: Water
Workgroup Number: WG292516
Collect Date: 01/10/2009 08:30
Sample Tag: 01

PrePrep Method: NONE
Prep Method: 3005A
Analytical Method: 6010B
Analyst: SLP
Dilution: 1
Units: ug/L

Instrument: PE-ICP2
Prep Date: 01/14/2009 09:32
Cal Date: 01/15/2009 11:00
Run Date: 01/15/2009 18:22
File ID: P2.011509.182215

Analyte	CAS. Number	Result	Qual	RL	MDL
Barium, Total	7440-39-3		U	10.0	2.50
Cadmium, Total	7440-43-9		U	1.00	0.250
Chromium, Total	7440-47-3		U	10.0	2.50
Silver, Total	7440-22-4		U	6.00	2.00

U Undetected; the analyte was analyzed for, but not detected.

Microbac

42 lw
3/29/09

27

Sample Number: L09010203-27
Client ID: MRO8-EB01011009-SS
Matrix: Water
Workgroup Number: WG292534
Collect Date: 01/10/2009 08:30
Sample Tag: 01

PrePrep Method: NONE
Prep Method: 3015
Analytical Method: 6020
Analyst: WTD
Dilution: 1
Units: ug/L

Instrument: ELAN-ICP
Prep Date: 01/14/2009 08:52
Cal Date: 01/14/2009 16:41
Run Date: 01/14/2009 23:33
File ID: EL.011409.233330

Analyte	CAS. Number	Result	Qual	RL	MDL
Arsenic, Total	7440-38-2		U	1.00	0.250
Lead, Total	7439-92-1		U	1.00	0.250
Selenium, Total	7782-49-2		U	2.00	0.500

U Undetected; the analyte was analyzed for, but not detected.

Microbac

729 MW 3/29/09

27

Sample Number: L09010203-27
Client ID: MRO8-EB01011009-SS
Matrix: Water
Workgroup Number: WG292494
Collect Date: 01/10/2009 08:30
Sample Tag: 01

PrePrep Method: NONE
Prep Method: 7470A
Analytical Method: 7470A
Analyst: ADC
Dilution: 1
Units: ug/L

Instrument: HYDRA
Prep Date: 01/14/2009 09:41
Cal Date: 01/14/2009 13:24
Run Date: 01/14/2009 14:25
File ID: HY.011409.142542

Analyte	CAS. Number	Result	Qual	RL	MDL
Mercury	7439-97-6		U	0.400	0.100

U Undetected; the analyte was analyzed for, but not detected.

Microbac

3245

lw 3/29/09

28

Sample Number: L09010203-28
Client ID: MRO8-FB01011009
Matrix: Water
Workgroup Number: WG292516
Collect Date: 01/10/2009 10:00
Sample Tag: 01

PrePrep Method: NONE
Prep Method: 3005A
Analytical Method: 6010B
Analyst: SLP
Dilution: 1
Units: ug/L

Instrument: PE-ICP2
Prep Date: 01/14/2009 09:32
Cal Date: 01/15/2009 11:00
Run Date: 01/15/2009 18:28
File ID: P2.011509.182838

Analyte	CAS. Number	Result	Qual	RL	MDL
Barium, Total	7440-39-3		U	10.0	2.50
Cadmium, Total	7440-43-9		U	1.00	0.250
Chromium, Total	7440-47-3		U	10.0	2.50
Silver, Total	7440-22-4		U	6.00	2.00

U Undetected; the analyte was analyzed for, but not detected.

Microbac

43 HW 3/29/09

28

Sample Number: L09010203-28
Client ID: MRO8-FB01011009
Matrix: Water
Workgroup Number: WG292534
Collect Date: 01/10/2009 10:00
Sample Tag: 01

PrePrep Method: NONE
Prep Method: 3015
Analytical Method: 6020
Analyst: WTD
Dilution: 1
Units: ug/L

Instrument: ELAN-ICP
Prep Date: 01/14/2009 08:52
Cal Date: 01/14/2009 16:41
Run Date: 01/14/2009 23:40
File ID: EL.011409.234035

Analyte	CAS. Number	Result	Qual	RL	MDL
Arsenic, Total	7440-38-2		U	1.00	0.250
Lead, Total	7439-92-1		U	1.00	0.250
Selenium, Total	7782-49-2		U	2.00	0.500

U Undetected; the analyte was analyzed for, but not detected.

Microbac

730 MW 3/29/09

28

Sample Number: L09010203-28
Client ID: MRO8-FB01011009
Matrix: Water
Workgroup Number: WG292494
Collect Date: 01/10/2009 10:00
Sample Tag: 01

PrePrep Method: NONE
Prep Method: 7470A
Analytical Method: 7470A
Analyst: ADC
Dilution: 1
Units: ug/L

Instrument: HYDRA
Prep Date: 01/14/2009 09:41
Cal Date: 01/14/2009 13:24
Run Date: 01/14/2009 14:28
File ID: HY.011409.142817

Analyte	CAS. Number	Result	Qual	RL	MDL
Mercury	7439-97-6		U	0.400	0.100

U Undetected; the analyte was analyzed for, but not detected.

Microbac

3246 fw 3/29/09

ENVIRONMENTAL
Data Services, Inc.

METALS

USEPA Region IV - Level IV Review

Site: MCB Camp Lejeune, TO-09 SDG #: L09010204

Client: CH2M HILL, Inc., Virginia Beach, Virginia Date: March 30, 2009

Laboratory: Microbac Laboratories, Inc., Marietta, Ohio Reviewer: Nancy Weaver

EDS ID	Client Sample ID	Laboratory Sample ID	Matrix
1	MR08-SS170-09A	L09010204-01	Soil
2	MR08-IS170-6-7-09A	L09010204-02	Soil
3	MR08-SS169-09A	L09010204-03	Soil
4	MR08-SS169D-09A	L09010204-04	Soil
5	MR08-IS169-7-8-09A	L09010204-05	Soil
6	MR08-IS169D-7-8-09A	L09010204-06	Soil
7	MR08-SS193-09A	L09010204-07	Soil
8	MR08-IS193-6-7-09A	L09010204-08	Soil
9	MR08-SS194-09A	L09010204-09	Soil
10	MR08-IS194-8-9-09A	L09010204-10	Soil
11	MR08-SS217-09A	L09010204-11	Soil
12	MR08-IS217-8-9-09A	L09010204-12	Soil
13	MR08-SS-218-09A	L09010204-13	Soil
14	MR08-IS218-7-8-09A	L09010204-14	Soil
15	MR08-SS241-09A	L09010204-15	Soil
16	MR08-IS241-8-9-09A	L09010204-16	Soil
17	MR08-SS242-09A	L09010204-17	Soil
18	MR08-IS242-6-7-09A	L09010204-18	Soil
19	MR08-SS265-09A	L09010204-19	Soil
20	MR08-IS265-3-4-09A	L09010204-20	Soil
21	MR08-SS266-09A	L09010204-21	Soil
22	MR08-IS266-5-6-09A	L09010204-22	Soil
23	MR08-SS289-09A	L09010204-23	Soil
24	MR08-SS289D-09A	L09010204-24	Soil
25	MR08-IS289-2-3-09A	L09010204-25	Soil
26	MR08-IS289D-2-3-09A	L09010204-26	Soil
27	MR08-SS290-09A	L09010204-27	Soil
28	MR08-IS290-4-5-09A	L09010204-28	Soil
29	MR08-SS313-09A	L09010204-30	Soil
30	MR08-IS313-5-6-09A	L09010204-31	Soil
31	MR08-EB01011109-SS	L09010204-32	Water

The USEPA "Contract Laboratory Program National Functional Guidelines for Inorganic Data Review," October 2004, and professional judgement were used in evaluating the data in this summary report.

Holding Times - All samples were prepared and analyzed within 28 days for mercury and 180 days for all other metals.

Calibration - The ICV and CCV %R values were acceptable.

Method and Calibration Blanks - The method blanks and continuing calibration blanks exhibited the following contamination.

Compound	Conc. ug/L	Action Level ug/L	Qualifier	Affected Samples
Cadmium	0.301	1.505	U	31

Field and Equipment Blank - Field QC results are summarized below.

Blank ID	Compound	Conc. ug/L	Action Level ug/L	Qualifier	Affected Samples
MR08-FB01011009	None - ND	-	-	-	-
MR08-EB01011109-SS	None - ND	-	-	-	-

ICP Interference Check Sample - All %R values were acceptable.

MS/MSD - The MS/MSD sample exhibited acceptable %R and RPD values except the following.

MS/MSD Sample ID	Compound	MS/MSD %R/RPD	Qualifier	Affected Samples
Reference (WG292551)	Barium	Ok/64.5%/32.0	J/UJ	11-29
	Chromium	Ok/52.2%/30.0	J/UJ	11-29

LCS - The LCS samples exhibited acceptable %R values.

ICP Serial Dilution - The ICP serial dilution sample exhibited acceptable %D values.

Field Duplicates - Field duplicate results are summarized below.

Compound	MR08-SS169-09A mg/kg	MR08-SS169D-09A mg/kg	RPD	Qualifier
Silver	0.202	0.218	8%	None

Compound	MR08-SS169-09A mg/kg	MR08-SS169D-09A mg/kg	RPD	Qualifier
Barium	19.3	44.1	78%	None
Cadmium	0.452	0.550	20%	None
Chromium	7.83	6.52	18%	None
Arsenic	1.63	1.16	34%	None
Lead	57.9	54.9	5%	None
Selenium	0.230	0.294	24%	None
Mercury	0.0719	0.104	36%	None

Compound	MR08-IS169-7-8-09A mg/kg	MR08-IS169D-7-8-09A mg/kg	RPD	Qualifier
Barium	12.8	9.86	26%	None
Chromium	11.2	9.45	17%	None
Arsenic	0.255	0.375	38%	None
Lead	3.20	3.22	1%	None

Compound	MR08-SS289-09A mg/kg	MR08-SS289D-09A mg/kg	RPD	Qualifier
Barium	11.3	11.7	3%	None
Cadmium	0.0729	0.124	52%	None
Chromium	5.12	6.40	22%	None
Arsenic	0.287	0.458	46%	None
Lead	8.38	21.2	87%	None

Compound	MR08-IS289-2-3-09A mg/kg	MR08-IS289D-2-3-09A mg/kg	RPD	Qualifier
Barium	15.4	16.3	6%	None
Cadmium	0.0886	0.0772	14%	None
Chromium	4.10	7.13	54%	None
Arsenic	0.519	0.430	19%	None
Lead	18.1	33.6	60%	None
Selenium	0.443 U	0.260	NC	None
Mercury	0.0576	0.0334	53%	None

Compound Quantitation - Several samples were analyzed at various dilutions for various analytes due to high concentrations.

Report Number: L09010204

Report Date : February 10, 2009

Sample Number: L09010204-01
Client ID: MR08-SS170-09A
Matrix: Soil
Workgroup Number: WG292548
Collect Date: 01/11/2009 08:20
Sample Tag: 01

PrePrep Method: NONE
Prep Method: 3051
Analytical Method: 6010B
Analyst: KHR
Dilution: 1
Units: mg/kg

Instrument: IRIS-ICP
Prep Date: 01/14/2009 09:23
Cal Date: 01/15/2009 09:29
Run Date: 01/15/2009 18:27
File ID: IR.011509.182700
Percent Solid: 92.4

Analyte	CAS. Number	Result	Qual	RL	MDL
Silver, Total	7440-22-4	0.599	J	0.771	0.193
Barium, Total	7440-39-3	11.3		0.385	0.0771
Cadmium, Total	7440-43-9	0.376		0.154	0.0385
Chromium, Total	7440-47-3	8.72		0.771	0.0925

J Estimated ; the analyte concentration was less than the low standard (LOQ)

Microbac

15 kw 3/30/09

Report Number: L09010204

Report Date : February 10, 2009

Sample Number:	L09010204-01	PrePrep Method:	NONE	Instrument:	ELAN-ICP
Client ID:	MR08-SS170-09A	Prep Method:	3051	Prep Date:	01/15/2009 08:49
Matrix:	Soil	Analytical Method:	6020	Cal Date:	02/02/2009 11:02
Workgroup Number:	WG293287	Analyst:	JYH	Run Date:	02/02/2009 19:19
Collect Date:	01/11/2009 08:20	Dilution:	2	File ID:	EL.020209.191918
Sample Tag:	DL02	Units:	mg/kg	Percent Solid:	92.4

Analyte	CAS. Number	Result	Qual	RL	MDL
Selenium, Total	7782-49-2	0.351	J	0.817	0.204

J Estimated ; the analyte concentration was less than the low standard (LOQ)

Microbac

874 lw 3/30/09

1

Sample Number: L09010204-01
Client ID: MR08-SS170-09A
Matrix: Soil
Workgroup Number: WG293287
Collect Date: 01/11/2009 08:20
Sample Tag: DL01

PrePrep Method: NONE
Prep Method: 3051
Analytical Method: 6020
Analyst: JYH
Dilution: 2
Units: mg/kg

Instrument: ELAN-ICP
Prep Date: 01/15/2009 08:49
Cal Date: 01/30/2009 11:12
Run Date: 01/30/2009 18:22
File ID: EL.013009.182204
Percent Solid: 92.4

Analyte	CAS. Number	Result	Qual	RL	MDL
Arsenic, Total	7440-38-2	1.31		0.613	0.153
Lead, Total	7439-92-1	64.7		0.817	0.204

Microbac

875 lw 3/30/09

Report Number: L09010204

Report Date : February 10, 2009

Sample Number: L09010204-01
Client ID: MR08-SS170-09A
Matrix: Soil
Workgroup Number: WG292570
Collect Date: 01/11/2009 08:20
Sample Tag: 01

PrePrep Method: NONE
Prep Method: 7471A
Analytical Method: 7471A
Analyst: ADC
Dilution: 1
Units: mg/kg

Instrument: HYDRA
Prep Date: 01/14/2009 12:39
Cal Date: 01/15/2009 09:30
Run Date: 01/15/2009 12:43
File ID: HY.011509.124319
Percent Solid: 92.4

Analyte	CAS. Number	Result	Qual	RL	MDL
Mercury, Total	7439-97-6	0.140		0.104	0.0207

Microbac

3147 MW
3/30/09

2

Sample Number: L09010204-02
Client ID: MR08-IS170-6-7-09A
Matrix: Soil
Workgroup Number: WG292548
Collect Date: 01/11/2009 08:45
Sample Tag: 01

PrePrep Method: NONE
Prep Method: 3051
Analytical Method: 6010B
Analyst: KHR
Dilution: 1
Units: mg/kg

Instrument: IRIS-ICP
Prep Date: 01/14/2009 09:23
Cal Date: 01/15/2009 09:29
Run Date: 01/15/2009 18:33
File ID: IR.011509.183300
Percent Solid: 86.7

Analyte	CAS. Number	Result	Qual	RL	MDL
Silver, Total	7440-22-4		U	0.867	0.217
Barium, Total	7440-39-3	7.67		0.433	0.0867
Cadmium, Total	7440-43-9		U	0.173	0.0433
Chromium, Total	7440-47-3	3.33		0.867	0.104

U Undetected; the analyte was analyzed for, but not detected.

Microbac

16 RW 3/30/09

2

Sample Number:	L09010204-02	PrePrep Method:	NONE	Instrument:	ELAN-ICP
Client ID:	MR08-IS170-6-7-09A	Prep Method:	3051	Prep Date:	01/15/2009 08:49
Matrix:	Soil	Analytical Method:	6020	Cal Date:	02/02/2009 11:02
Workgroup Number:	WG293287	Analyst:	JYH	Run Date:	02/02/2009 19:25
Collect Date:	01/11/2009 08:45	Dilution:	2	File ID:	EL.020209.192522
Sample Tag:	DL01	Units:	mg/kg	Percent Solid:	86.7

Analyte	CAS. Number	Result	Qual	RL	MDL
Selenium, Total	7782-49-2		U	0.917	0.229

U Undetected; the analyte was analyzed for, but not detected.

Microbac

876 lw 3/30/09

2

Sample Number: L09010204-02
Client ID: MR08-IS170-6-7-09A
Matrix: Soil
Workgroup Number: WG293287
Collect Date: 01/11/2009 08:45
Sample Tag: 01

PrePrep Method: NONE
Prep Method: 3051
Analytical Method: 6020
Analyst: JYH
Dilution: 1
Units: mg/kg

Instrument: ELAN-ICP
Prep Date: 01/15/2009 08:49
Cal Date: 01/30/2009 11:12
Run Date: 01/30/2009 18:28
File ID: EL.013009.182809
Percent Solid: 86.7

Analyte	CAS. Number	Result	Qual	RL	MDL
Arsenic, Total	7440-38-2	0.427		0.344	0.0859
Lead, Total	7439-92-1	6.96		0.458	0.115

Microbac

877 MW 3/30/09

2

Sample Number: L09010204-02
Client ID: MR08-IS170-6-7-09A
Matrix: Soil
Workgroup Number: WG292570
Collect Date: 01/11/2009 08:45
Sample Tag: 01

PrePrep Method: NONE
Prep Method: 7471A
Analytical Method: 7471A
Analyst: ADC
Dilution: 1
Units: mg/kg

Instrument: HYDRA
Prep Date: 01/14/2009 12:39
Cal Date: 01/15/2009 09:30
Run Date: 01/15/2009 12:47
File ID: HY.011509.124700
Percent Solid: 86.7

Analyte	CAS. Number	Result	Qual	RL	MDL
Mercury, Total	7439-97-6		U	0.108	0.0215

U Undetected; the analyte was analyzed for, but not detected.

Microbac

3148 LW 3/30/09

3

Sample Number: L09010204-03
Client ID: MR08-SS169-09A
Matrix: Soil
Workgroup Number: WG292548
Collect Date: 01/11/2009 09:00
Sample Tag: 01

PrePrep Method: NONE
Prep Method: 3051
Analytical Method: 6010B
Analyst: KHR
Dilution: 1
Units: mg/kg

Instrument: IRIS-ICP
Prep Date: 01/14/2009 09:23
Cal Date: 01/15/2009 09:29
Run Date: 01/15/2009 18:39
File ID: IR.011509.183900
Percent Solid: 91.9

Analyte	CAS. Number	Result	Qual	RL	MDL
Silver, Total	7440-22-4	0.202	J	0.734	0.184
Barium, Total	7440-39-3	19.3		0.367	0.0734
Cadmium, Total	7440-43-9	0.452		0.147	0.0367
Chromium, Total	7440-47-3	7.83		0.734	0.0881

J Estimated ; the analyte concentration was less than the low standard (LOQ)

Microbac

17 lw
3/30/09

3

Sample Number:	L09010204-03	PrePrep Method:	NONE	Instrument:	ELAN-ICP
Client ID:	MR08-SS169-09A	Prep Method:	3051	Prep Date:	01/15/2009 08:49
Matrix:	Soil	Analytical Method:	6020	Cal Date:	02/02/2009 11:02
Workgroup Number:	WG293287	Analyst:	JYH	Run Date:	02/02/2009 19:31
Collect Date:	01/11/2009 09:00	Dilution:	2	File ID:	EL.020209.193125
Sample Tag:	DL02	Units:	mg/kg	Percent Solid:	91.9

Analyte	CAS. Number	Result	Qual	RL	MDL
Selenium, Total	7782-49-2	0.230	J	0.853	0.213

J Estimated ; the analyte concentration was less than the low standard (LOQ)

Microbac

878 lw 3/30/09

3

Sample Number: L09010204-03
Client ID: MR08-SS169-09A
Matrix: Soil
Workgroup Number: WG293287
Collect Date: 01/11/2009 09:00
Sample Tag: DL01

PrePrep Method: NONE
Prep Method: 3051
Analytical Method: 6020
Analyst: JYH
Dilution: 2
Units: mg/kg

Instrument: ELAN-ICP
Prep Date: 01/15/2009 08:49
Cal Date: 01/30/2009 11:12
Run Date: 01/30/2009 18:34
File ID: EL.013009.183412
Percent Solid: 91.9

Analyte	CAS. Number	Result	Qual	RL	MDL
Arsenic, Total	7440-38-2	1.63		0.640	0.160
Lead, Total	7439-92-1	57.9		0.853	0.213

Microbac

879 lw 3/30/09

3

Sample Number:	L09010204-03	PrePrep Method:	NONE	Instrument:	HYDRA
Client ID:	MR08-SS169-09A	Prep Method:	7471A	Prep Date:	01/14/2009 12:39
Matrix:	Soil	Analytical Method:	7471A	Cal Date:	01/15/2009 09:30
Workgroup Number:	WG292570	Analyst:	ADC	Run Date:	01/15/2009 12:49
Collect Date:	01/11/2009 09:00	Dilution:	1	File ID:	HY.011509.124906
Sample Tag:	01	Units:	mg/kg	Percent Solid:	91.9

Analyte	CAS. Number	Result	Qual	RL	MDL
Mercury, Total	7439-97-6	0.0719	J	0.108	0.0216

J Estimated ; the analyte concentration was less than the low standard (LOQ)

Microbac

3149 lw 3/30/09

4

Sample Number: L09010204-04
Client ID: MR08-SS169D-09A
Matrix: Soil
Workgroup Number: WG292548
Collect Date: 01/11/2009 09:10
Sample Tag: 01

PrePrep Method: NONE
Prep Method: 3051
Analytical Method: 6010B
Analyst: KHR
Dilution: 1
Units: mg/kg

Instrument: IRIS-ICP
Prep Date: 01/14/2009 09:23
Cal Date: 01/15/2009 09:29
Run Date: 01/15/2009 18:57
File ID: IR.011509.185700
Percent Solid: 93.2

Analyte	CAS. Number	Result	Qual	RL	MDL
Silver, Total	7440-22-4	0.218	J	0.746	0.187
Barium, Total	7440-39-3	44.1		0.373	0.0746
Cadmium, Total	7440-43-9	0.550		0.149	0.0373
Chromium, Total	7440-47-3	6.52		0.746	0.0895

J Estimated ; the analyte concentration was less than the low standard (LOQ)

Microbac

18 lw 3/30/09

4

Sample Number:	L09010204-04	PrePrep Method:	NONE	Instrument:	ELAN-ICP
Client ID:	MR08-SS169D-09A	Prep Method:	3051	Prep Date:	01/15/2009 08:49
Matrix:	Soil	Analytical Method:	6020	Cal Date:	02/02/2009 11:02
Workgroup Number:	WG293287	Analyst:	JYH	Run Date:	02/02/2009 19:50
Collect Date:	01/11/2009 09:10	Dilution:	2	File ID:	EL.020209.195030
Sample Tag:	DL02	Units:	mg/kg	Percent Solid:	93.2

Analyte	CAS. Number	Result	Qual	RL	MDL
Selenium, Total	7782-49-2	0.294	J	0.841	0.210

J Estimated ; the analyte concentration was less than the low standard (LOQ)

Microbac

880 LW 3/30/09

4

Sample Number: L09010204-04
Client ID: MR08-SS169D-09A
Matrix: Soil
Workgroup Number: WG293287
Collect Date: 01/11/2009 09:10
Sample Tag: DL01

PrePrep Method: NONE
Prep Method: 3051
Analytical Method: 6020
Analyst: JYH
Dilution: 2
Units: mg/kg

Instrument: ELAN-ICP
Prep Date: 01/15/2009 08:49
Cal Date: 01/30/2009 11:12
Run Date: 01/30/2009 18:40
File ID: EL.013009.184013
Percent Solid: 93.2

Analyte	CAS. Number	Result	Qual	RL	MDL
Arsenic, Total	7440-38-2	1.16		0.631	0.158
Lead, Total	7439-92-1	54.9		0.841	0.210

Microbac

881 lw 3/30/09

4

Sample Number: L09010204-04
Client ID: MR08-SS169D-09A
Matrix: Soil
Workgroup Number: WG292570
Collect Date: 01/11/2009 09:10
Sample Tag: 01

PrePrep Method: NONE
Prep Method: 7471A
Analytical Method: 7471A
Analyst: ADC
Dilution: 1
Units: mg/kg

Instrument: HYDRA
Prep Date: 01/14/2009 12:39
Cal Date: 01/15/2009 09:30
Run Date: 01/15/2009 12:50
File ID: HY.011509.125052
Percent Solid: 93.2

Analyte	CAS. Number	Result	Qual	RL	MDL
Mercury, Total	7439-97-6	0.104		0.104	0.0208

Microbac

3150 LW 3/30/09

5

Sample Number: L09010204-05
Client ID: MR08-IS169-7-8-09A
Matrix: Soil
Workgroup Number: WG292548
Collect Date: 01/11/2009 09:25
Sample Tag: 01

PrePrep Method: NONE
Prep Method: 3051
Analytical Method: 6010B
Analyst: KHR
Dilution: 1
Units: mg/kg

Instrument: IRIS-ICP
Prep Date: 01/14/2009 09:23
Cal Date: 01/15/2009 09:29
Run Date: 01/15/2009 19:03
File ID: IR.011509.190300
Percent Solid: 83.8

Analyte	CAS. Number	Result	Qual	RL	MDL
Silver, Total	7440-22-4		U	0.905	0.226
Barium, Total	7440-39-3	12.8		0.453	0.0905
Cadmium, Total	7440-43-9		U	0.181	0.0453
Chromium, Total	7440-47-3	11.2		0.905	0.109

U Undetected; the analyte was analyzed for, but not detected.

Microbac

19 JW
3/30/09

5

Sample Number: L09010204-05
Client ID: MR08-IS169-7-8-09A
Matrix: Soil
Workgroup Number: WG293287
Collect Date: 01/11/2009 09:25
Sample Tag: 01

PrePrep Method: NONE
Prep Method: 3051
Analytical Method: 6020
Analyst: JYH
Dilution: 1
Units: mg/kg

Instrument: ELAN-ICP
Prep Date: 01/15/2009 08:49
Cal Date: 01/30/2009 11:12
Run Date: 01/30/2009 18:46
File ID: EL.013009.184615
Percent Solid: 83.8

Analyte	CAS. Number	Result	Qual	RL	MDL
Arsenic, Total	7440-38-2	0.255	J	0.339	0.0848
Lead, Total	7439-92-1	3.20		0.452	0.113

J Estimated ; the analyte concentration was less than the low standard (LOQ)

Microbac

882 LW
3/30/09

5

Sample Number: L09010204-05
Client ID: MR08-IS169-7-8-09A
Matrix: Soil
Workgroup Number: WG293287
Collect Date: 01/11/2009 09:25
Sample Tag: DL01

PrePrep Method: NONE
Prep Method: 3051
Analytical Method: 6020
Analyst: JYH
Dilution: 2
Units: mg/kg

Instrument: ELAN-ICP
Prep Date: 01/15/2009 08:49
Cal Date: 02/02/2009 11:02
Run Date: 02/02/2009 19:56
File ID: EL.020209.195632
Percent Solid: 83.8

Analyte	CAS. Number	Result	Qual	RL	MDL
Selenium, Total	7782-49-2		U	0.904	0.226

U Undetected; the analyte was analyzed for, but not detected.

Microbac

883 lw 3/30/09

5

Sample Number: L09010204-05
Client ID: MR08-IS169-7-8-09A
Matrix: Soil
Workgroup Number: WG292570
Collect Date: 01/11/2009 09:25
Sample Tag: 01

PrePrep Method: NONE
Prep Method: 7471A
Analytical Method: 7471A
Analyst: ADC
Dilution: 1
Units: mg/kg

Instrument: HYDRA
Prep Date: 01/14/2009 12:39
Cal Date: 01/15/2009 09:30
Run Date: 01/15/2009 12:52
File ID: HY.011509.125237
Percent Solid: 83.8

Analyte	CAS. Number	Result	Qual	RL	MDL
Mercury, Total	7439-97-6		U	0.115	0.0229

U Undetected; the analyte was analyzed for, but not detected.

Microbac

3151 JW 3/30/09

6

Sample Number: L09010204-06
Client ID: MR08-IS169D-7-8-09A
Matrix: Soil
Workgroup Number: WG292548
Collect Date: 01/11/2009 09:35
Sample Tag: 01

PrePrep Method: NONE
Prep Method: 3051
Analytical Method: 6010B
Analyst: KHR
Dilution: 1
Units: mg/kg

Instrument: IRIS-ICP
Prep Date: 01/14/2009 09:23
Cal Date: 01/15/2009 09:29
Run Date: 01/15/2009 19:09
File ID: IR.011509.190900
Percent Solid: 85.2

Analyte	CAS. Number	Result	Qual	RL	MDL
Silver, Total	7440-22-4		U	0.809	0.202
Barium, Total	7440-39-3	9.86		0.404	0.0809
Cadmium, Total	7440-43-9		U	0.162	0.0404
Chromium, Total	7440-47-3	9.45		0.809	0.0970

U Undetected; the analyte was analyzed for, but not detected.

Microbac

20 lw
3/30/09

6

Sample Number: L09010204-06
Client ID: MR08-IS169D-7-8-09A
Matrix: Soil
Workgroup Number: WG293287
Collect Date: 01/11/2009 09:35
Sample Tag: 01

PrePrep Method: NONE
Prep Method: 3051
Analytical Method: 6020
Analyst: JYH
Dilution: 1
Units: mg/kg

Instrument: ELAN-ICP
Prep Date: 01/15/2009 08:49
Cal Date: 01/30/2009 11:12
Run Date: 01/30/2009 18:52
File ID: EL.013009.185218
Percent Solid: 85.2

Analyte	CAS. Number	Result	Qual	RL	MDL
Arsenic, Total	7440-38-2	0.373		0.349	0.0871
Lead, Total	7439-92-1	3.22		0.465	0.116

Microbac

 QW 3/30/09

6

Sample Number: L09010204-06
Client ID: MR08-IS169D-7-8-09A
Matrix: Soil
Workgroup Number: WG293287
Collect Date: 01/11/2009 09:35
Sample Tag: DL01

PrePrep Method: NONE
Prep Method: 3051
Analytical Method: 6020
Analyst: JYH
Dilution: 2
Units: mg/kg

Instrument: ELAN-ICP
Prep Date: 01/15/2009 08:49
Cal Date: 02/02/2009 11:02
Run Date: 02/02/2009 20:02
File ID: EL.020209.200235
Percent Solid: 85.2

Analyte	CAS. Number	Result	Qual	RL	MDL
Selenium, Total	7782-49-2		U	0.929	0.232

U Undetected; the analyte was analyzed for, but not detected.

Microbac

JLW 3/30/09

6

Sample Number: L09010204-06
Client ID: MR08-IS169D-7-8-09A
Matrix: Soil
Workgroup Number: WG292570
Collect Date: 01/11/2009 09:35
Sample Tag: 01

PrePrep Method: NONE
Prep Method: 7471A
Analytical Method: 7471A
Analyst: ADC
Dilution: 1
Units: mg/kg

Instrument: HYDRA
Prep Date: 01/14/2009 12:39
Cal Date: 01/15/2009 09:30
Run Date: 01/15/2009 12:54
File ID: HY.011509.125424
Percent Solid: 85.2

Analyte	CAS. Number	Result	Qual	RL	MDL
Mercury, Total	7439-97-6		U	0.116	0.0232

U Undetected; the analyte was analyzed for, but not detected.

Microbac

3152 LW 3/30/09

7

Sample Number: L09010204-07
Client ID: MR08-SS193-09A
Matrix: Soil
Workgroup Number: WG292548
Collect Date: 01/11/2009 09:50
Sample Tag: 01

PrePrep Method: NONE
Prep Method: 3051
Analytical Method: 6010B
Analyst: KHR
Dilution: 1
Units: mg/kg

Instrument: IRIS-ICP
Prep Date: 01/14/2009 09:23
Cal Date: 01/15/2009 09:29
Run Date: 01/15/2009 19:15
File ID: IR.011509.191500
Percent Solid: 92.9

Analyte	CAS. Number	Result	Qual	RL	MDL
Silver, Total	7440-22-4		U	0.801	0.200
Cadmium, Total	7440-43-9	0.701		0.160	0.0400
Chromium, Total	7440-47-3	10.4		0.801	0.0961

U Undetected; the analyte was analyzed for, but not detected.

Microbac

21 lew 3/30/09

7

Sample Number: L09010204-07
Client ID: MR08-SS193-09A
Matrix: Soil
Workgroup Number: WG292548
Collect Date: 01/11/2009 09:50
Sample Tag: DL01

PrePrep Method: NONE
Prep Method: 3051
Analytical Method: 6010B
Analyst: KHR
Dilution: 5
Units: mg/kg

Instrument: IRIS-ICP
Prep Date: 01/14/2009 09:23
Cal Date: 01/16/2009 11:30
Run Date: 01/16/2009 13:09
File ID: IR.011609.130900
Percent Solid: 92.9

Analyte	CAS. Number	Result	Qual	RL	MDL
Barium, Total	7440-39-3	79.7		2.00	0.400

Microbac

22 DCW 3/30/09

7

Sample Number:	L09010204-07	PrePrep Method:	NONE	Instrument:	ELAN-ICP
Client ID:	MR08-SS193-09A	Prep Method:	3051	Prep Date:	01/15/2009 08:49
Matrix:	Soil	Analytical Method:	6020	Cal Date:	02/02/2009 11:02
Workgroup Number:	WG293287	Analyst:	JYH	Run Date:	02/02/2009 20:08
Collect Date:	01/11/2009 09:50	Dilution:	2	File ID:	EL.020209.200838
Sample Tag:	DL02	Units:	mg/kg	Percent Solid:	92.9

Analyte	CAS. Number	Result	Qual	RL	MDL
Selenium, Total	7782-49-2	0.293	J	0.822	0.205

J Estimated ; the analyte concentration was less than the low standard (LOQ)

Microbac

886 RW 3/30/09

7

Sample Number: L09010204-07
Client ID: MR08-SS193-09A
Matrix: Soil
Workgroup Number: WG293287
Collect Date: 01/11/2009 09:50
Sample Tag: DL01

PrePrep Method: NONE
Prep Method: 3051
Analytical Method: 6020
Analyst: JYH
Dilution: 2
Units: mg/kg

Instrument: ELAN-ICP
Prep Date: 01/15/2009 08:49
Cal Date: 01/30/2009 11:12
Run Date: 01/30/2009 19:11
File ID: EL.013009.191123
Percent Solid: 92.9

Analyte	CAS. Number	Result	Qual	RL	MDL
Arsenic, Total	7440-38-2	2.27		0.616	0.154
Lead, Total	7439-92-1	51.8		0.822	0.205

Microbac

887 LW 3/30/09

7

Sample Number: L09010204-07
Client ID: MR08-SS193-09A
Matrix: Soil
Workgroup Number: WG292570
Collect Date: 01/11/2009 09:50
Sample Tag: 01

PrePrep Method: NONE
Prep Method: 7471A
Analytical Method: 7471A
Analyst: ADC
Dilution: 1
Units: mg/kg

Instrument: HYDRA
Prep Date: 01/14/2009 12:39
Cal Date: 01/15/2009 09:30
Run Date: 01/15/2009 12:56
File ID: HY.011509.125612
Percent Solid: 92.9

Analyte	CAS. Number	Result	Qual	RL	MDL
Mercury, Total	7439-97-6		U	0.104	0.0208

U Undetected; the analyte was analyzed for, but not detected.

Microbac

3153 LW 3/30/09

8

Sample Number: L09010204-08
Client ID: MR08-IS193-6-7-09A
Matrix: Soil
Workgroup Number: WG292548
Collect Date: 01/11/2009 10:10
Sample Tag: 01

PrePrep Method: NONE
Prep Method: 3051
Analytical Method: 6010B
Analyst: KHR
Dilution: 1
Units: mg/kg

Instrument: IRIS-ICP
Prep Date: 01/14/2009 09:23
Cal Date: 01/15/2009 09:29
Run Date: 01/15/2009 19:21
File ID: IR.011509.192100
Percent Solid: 83.4

Analyte	CAS. Number	Result	Qual	RL	MDL
Silver, Total	7440-22-4		U	0.820	0.205
Barium, Total	7440-39-3	13.7		0.410	0.0820
Cadmium, Total	7440-43-9		U	0.164	0.0410
Chromium, Total	7440-47-3	13.9		0.820	0.0984

U Undetected; the analyte was analyzed for, but not detected.

Microbac

23 fcw
3/30/09

8

Sample Number: L09010204-08
Client ID: MR08-IS193-6-7-09A
Matrix: Soil
Workgroup Number: WG293287
Collect Date: 01/11/2009 10:10
Sample Tag: DL01

PrePrep Method: NONE
Prep Method: 3051
Analytical Method: 6020
Analyst: JYH
Dilution: 2
Units: mg/kg

Instrument: ELAN-ICP
Prep Date: 01/15/2009 08:49
Cal Date: 02/02/2009 11:02
Run Date: 02/02/2009 20:14
File ID: EL.020209.201441
Percent Solid: 83.4

Analyte	CAS. Number	Result	Qual	RL	MDL
Selenium, Total	7782-49-2		U	0.940	0.235

U Undetected; the analyte was analyzed for, but not detected.

Microbac

888 LW
3/30/09

8

Sample Number: L09010204-08
Client ID: MR08-IS193-6-7-09A
Matrix: Soil
Workgroup Number: WG293287
Collect Date: 01/11/2009 10:10
Sample Tag: 01

PrePrep Method: NONE
Prep Method: 3051
Analytical Method: 6020
Analyst: JYH
Dilution: 1
Units: mg/kg

Instrument: ELAN-ICP
Prep Date: 01/15/2009 08:49
Cal Date: 01/30/2009 11:12
Run Date: 01/30/2009 19:17
File ID: EL.013009.191726
Percent Solid: 83.4

Analyte	CAS. Number	Result	Qual	RL	MDL
Arsenic, Total	7440-38-2	0.873		0.353	0.0882
Lead, Total	7439-92-1	6.01		0.470	0.118

Microbac

889 MD 3/30/09

8

Sample Number: L09010204-08
Client ID: MR08-IS193-6-7-09A
Matrix: Soil
Workgroup Number: WG293423
Collect Date: 01/11/2009 10:10
Sample Tag: 01

PrePrep Method: NONE
Prep Method: 7471A
Analytical Method: 7471A
Analyst: ADC
Dilution: 1
Units: mg/kg

Instrument: HYDRA
Prep Date: 01/15/2009 09:34
Cal Date: 01/26/2009 13:15
Run Date: 01/26/2009 13:36
File ID: HY.012609.133639
Percent Solid: 83.4

Analyte	CAS. Number	Result	Qual	RL	MDL
Mercury, Total	7439-97-6		U	0.116	0.0232

U Undetected; the analyte was analyzed for, but not detected.

Microbac

3154 MW
3/30/09

9

Sample Number: L09010204-09
Client ID: MR08-SS194-09A
Matrix: Soil
Workgroup Number: WG292548
Collect Date: 01/11/2009 10:20
Sample Tag: 01

PrePrep Method: NONE
Prep Method: 3051
Analytical Method: 6010B
Analyst: KHR
Dilution: 1
Units: mg/kg

Instrument: IRIS-ICP
Prep Date: 01/14/2009 09:23
Cal Date: 01/15/2009 09:29
Run Date: 01/15/2009 19:27
File ID: IR.011509.192700
Percent Solid: 92.7

Analyte	CAS. Number	Result	Qual	RL	MDL
Silver, Total	7440-22-4	0.494	J	0.774	0.194
Barium, Total	7440-39-3	9.42		0.387	0.0774
Cadmium, Total	7440-43-9	0.406		0.155	0.0387
Chromium, Total	7440-47-3	7.07		0.774	0.0929

J Estimated ; the analyte concentration was less than the low standard (LOQ)

Microbac

24 lus
3/30/09

9

Sample Number: L09010204-09
Client ID: MR08-SS194-09A
Matrix: Soil
Workgroup Number: WG293287
Collect Date: 01/11/2009 10:20
Sample Tag: DL01

PrePrep Method: NONE
Prep Method: 3051
Analytical Method: 6020
Analyst: JYH
Dilution: 2
Units: mg/kg

Instrument: ELAN-ICP
Prep Date: 01/15/2009 08:49
Cal Date: 01/30/2009 11:12
Run Date: 01/30/2009 19:23
File ID: EL.013009.192329
Percent Solid: 92.7

Analyte	CAS. Number	Result	Qual	RL	MDL
Arsenic, Total	7440-38-2	1.59		0.647	0.162
Lead, Total	7439-92-1	75.3		0.863	0.216

Microbac

890 lw 3/30/09

9

Sample Number:	L09010204-09	PrePrep Method:	NONE	Instrument:	ELAN-ICP
Client ID:	MR08-SS194-09A	Prep Method:	3051	Prep Date:	01/15/2009 08:49
Matrix:	Soil	Analytical Method:	6020	Cal Date:	02/02/2009 11:02
Workgroup Number:	WG293287	Analyst:	JYH	Run Date:	02/02/2009 20:20
Collect Date:	01/11/2009 10:20	Dilution:	2	File ID:	EL.020209.202045
Sample Tag:	DL02	Units:	mg/kg	Percent Solid:	92.7

Analyte	CAS. Number	Result	Qual	RL	MDL
Selenium, Total	7782-49-2	0.235	J	0.863	0.216

J Estimated ; the analyte concentration was less than the low standard (LOQ)

Microbac

RW 3/30/09

9

Sample Number: L09010204-09
Client ID: MR08-SS194-09A
Matrix: Soil
Workgroup Number: WG293423
Collect Date: 01/11/2009 10:20
Sample Tag: 01

PrePrep Method: NONE
Prep Method: 7471A
Analytical Method: 7471A
Analyst: ADC
Dilution: 1
Units: mg/kg

Instrument: HYDRA
Prep Date: 01/15/2009 09:34
Cal Date: 01/26/2009 13:15
Run Date: 01/26/2009 13:44
File ID: HY.012609.134432
Percent Solid: 92.7

Analyte	CAS. Number	Result	Qual	RL	MDL
Mercury, Total	7439-97-6	0.134		0.102	0.0205

Microbac

3155 [illegible] 3/30/09

10

Sample Number: L09010204-10
Client ID: MR08-IS194-8-9-09A
Matrix: Soil
Workgroup Number: WG292548
Collect Date: 01/11/2009 10:30
Sample Tag: 01

PrePrep Method: NONE
Prep Method: 3051
Analytical Method: 6010B
Analyst: KHR
Dilution: 1
Units: mg/kg

Instrument: IRIS-ICP
Prep Date: 01/14/2009 09:23
Cal Date: 01/15/2009 09:29
Run Date: 01/15/2009 19:34
File ID: IR.011509.193400
Percent Solid: 87.3

Analyte	CAS. Number	Result	Qual	RL	MDL
Silver, Total	7440-22-4		U	0.809	0.202
Barium, Total	7440-39-3	2.22		0.404	0.0809
Cadmium, Total	7440-43-9		U	0.162	0.0404
Chromium, Total	7440-47-3	3.47		0.809	0.0970

U Undetected; the analyte was analyzed for, but not detected.

Microbac

25 lus 3/30/09

10

Sample Number: L09010204-10
Client ID: MR08-IS194-8-9-09A
Matrix: Soil
Workgroup Number: WG293287
Collect Date: 01/11/2009 10:30
Sample Tag: DL01

PrePrep Method: NONE
Prep Method: 3051
Analytical Method: 6020
Analyst: JYH
Dilution: 2
Units: mg/kg

Instrument: ELAN-ICP
Prep Date: 01/15/2009 08:49
Cal Date: 02/02/2009 11:02
Run Date: 02/02/2009 20:26
File ID: EL.020209.202649
Percent Solid: 87.3

Analyte	CAS. Number	Result	Qual	RL	MDL
Selenium, Total	7782-49-2		U	0.888	0.222

U Undetected; the analyte was analyzed for, but not detected.

Microbac

QW 3/30/09

10

Sample Number: L09010204-10
Client ID: MR08-IS194-8-9-09A
Matrix: Soil
Workgroup Number: WG293287
Collect Date: 01/11/2009 10:30
Sample Tag: 01

PrePrep Method: NONE
Prep Method: 3051
Analytical Method: 6020
Analyst: JYH
Dilution: 1
Units: mg/kg

Instrument: ELAN-ICP
Prep Date: 01/15/2009 08:49
Cal Date: 01/30/2009 11:12
Run Date: 01/30/2009 19:29
File ID: EL.013009.192933
Percent Solid: 87.3

Analyte	CAS. Number	Result	Qual	RL	MDL
Arsenic, Total	7440-38-2	0.159	J	0.333	0.0832
Lead, Total	7439-92-1	2.07		0.444	0.111

J Estimated ; the analyte concentration was less than the low standard (LOQ)

Microbac

3/30/09

10

Sample Number: L09010204-10
Client ID: MR08-IS194-8-9-09A
Matrix: Soil
Workgroup Number: WG293423
Collect Date: 01/11/2009 10:30
Sample Tag: 01

PrePrep Method: NONE
Prep Method: 7471A
Analytical Method: 7471A
Analyst: ADC
Dilution: 1
Units: mg/kg

Instrument: HYDRA
Prep Date: 01/15/2009 09:34
Cal Date: 01/26/2009 13:15
Run Date: 01/26/2009 13:46
File ID: HY.012609.134647
Percent Solid: 87.3

Analyte	CAS. Number	Result	Qual	RL	MDL
Mercury, Total	7439-97-6		U	0.112	0.0223

U Undetected; the analyte was analyzed for, but not detected.

Microbac

3156 LW 3/30/09

11

Sample Number: L09010204-11
Client ID: MR08-SS217-09A
Matrix: Soil
Workgroup Number: WG292551
Collect Date: 01/11/2009 10:50
Sample Tag: 01

PrePrep Method: NONE
Prep Method: 3051
Analytical Method: 6010B
Analyst: KHR
Dilution: 1
Units: mg/kg

Instrument: IRIS-ICP
Prep Date: 01/14/2009 10:03
Cal Date: 01/15/2009 09:29
Run Date: 01/15/2009 20:22
File ID: IR.011509.202200
Percent Solid: 93.1

Analyte	CAS. Number	Result	Qual	RL	MDL	
Silver, Total	7440-22-4	0.315	J	0.753	0.188	
Barium, Total	7440-39-3	10.5 J		0.377	0.0753	MSL
Cadmium, Total	7440-43-9	0.466		0.151	0.0377	
Chromium, Total	7440-47-3	6.93 J		0.753	0.0904	MSL

J Estimated ; the analyte concentration was less than the low standard (LOQ)

Microbac

26 lus
3/30/09

11

Sample Number: L09010204-11
Client ID: MR08-SS217-09A
Matrix: Soil
Workgroup Number: WG293561
Collect Date: 01/11/2009 10:50
Sample Tag: 01

PrePrep Method: NONE
Prep Method: 3051
Analytical Method: 6020
Analyst: JYH
Dilution: 1
Units: mg/kg

Instrument: ELAN-ICP
Prep Date: 01/15/2009 12:27
Cal Date: 01/27/2009 12:41
Run Date: 01/28/2009 01:54
File ID: EL.012809.015423
Percent Solid: 93.1

Analyte	CAS. Number	Result	Qual	RL	MDL
Arsenic, Total	7440-38-2	1.23		0.306	0.0764

Microbac

894 lw 3/30/09

Sample Number: L09010204-11
Client ID: MR08-SS217-09A
Matrix: Soil
Workgroup Number: WG293561
Collect Date: 01/11/2009 10:50
Sample Tag: DL02

PrePrep Method: NONE
Prep Method: 3051
Analytical Method: 6020
Analyst: JYH
Dilution: 10
Units: mg/kg

Instrument: ELAN-ICP
Prep Date: 01/15/2009 12:27
Cal Date: 01/30/2009 11:12
Run Date: 01/31/2009 01:26
File ID: EL.013109.012627
Percent Solid: 93.1

Analyte	CAS. Number	Result	Qual	RL	MDL
Lead, Total	7439-92-1	80.6		4.08	1.02

Microbac

895 fw 3/30/09

11

Sample Number:	L09010204-11	PrePrep Method:	NONE	Instrument:	ELAN-ICP
Client ID:	MR08-SS217-09A	Prep Method:	3051	Prep Date:	01/15/2009 12:27
Matrix:	Soil	Analytical Method:	6020	Cal Date:	01/30/2009 11:12
Workgroup Number:	WG293561	Analyst:	JYH	Run Date:	01/31/2009 01:20
Collect Date:	01/11/2009 10:50	Dilution:	2	File ID:	EL.013109.012021
Sample Tag:	DL01	Units:	mg/kg	Percent Solid:	93.1

Analyte	CAS. Number	Result	Qual	RL	MDL
Selenium, Total	7782-49-2	0.347	J	0.815	0.204

J Estimated ; the analyte concentration was less than the low standard (LOQ)

Microbac

896 LW 3/30/09

Sample Number:	L09010204-11	PrePrep Method:	NONE	Instrument:	HYDRA
Client ID:	MR08-SS217-09A	Prep Method:	7471A	Prep Date:	01/15/2009 09:34
Matrix:	Soil	Analytical Method:	7471A	Cal Date:	01/26/2009 13:15
Workgroup Number:	WG293423	Analyst:	ADC	Run Date:	01/26/2009 13:48
Collect Date:	01/11/2009 10:50	Dilution:	1	File ID:	HY.012609.134832
Sample Tag:	01	Units:	mg/kg	Percent Solid:	93.1

Analyte	CAS. Number	Result	Qual	RL	MDL
Mercury, Total	7439-97-6	0.0593	J	0.107	0.0214

J Estimated ; the analyte concentration was less than the low standard (LOQ)

Microbac

3157 lw 3/30/09

12

Sample Number: L09010204-12
Client ID: MR08-IS217-8-9-09A
Matrix: Soil
Workgroup Number: WG292551
Collect Date: 01/11/2009 11:00
Sample Tag: 01

PrePrep Method: NONE
Prep Method: 3051
Analytical Method: 6010B
Analyst: KHR
Dilution: 1
Units: mg/kg

Instrument: IRIS-ICP
Prep Date: 01/14/2009 10:03
Cal Date: 01/15/2009 09:29
Run Date: 01/15/2009 20:47
File ID: IR.011509.204700
Percent Solid: 91.6

Analyte	CAS. Number	Result	Qual	RL	MDL	
Silver, Total	7440-22-4		U	0.767	0.192	
Barium, Total	7440-39-3	1.60 J		0.384	0.0767	MSL
Cadmium, Total	7440-43-9		U	0.153	0.0384	
Chromium, Total	7440-47-3	1.06 J		0.767	0.0921	MSL

U Undetected; the analyte was analyzed for, but not detected.

Microbac

27 lcw 3/30/09

12

Sample Number:	L09010204-12	PrePrep Method:	NONE	Instrument:	ELAN-ICP
Client ID:	MR08-IS217-8-9-09A	Prep Method:	3051	Prep Date:	01/15/2009 12:27
Matrix:	Soil	Analytical Method:	6020	Cal Date:	01/30/2009 11:12
Workgroup Number:	WG293561	Analyst:	JYH	Run Date:	01/31/2009 01:32
Collect Date:	01/11/2009 11:00	Dilution:	1	File ID:	EL.013109.013233
Sample Tag:	02	Units:	mg/kg	Percent Solid:	91.6

Analyte	CAS. Number	Result	Qual	RL	MDL
Selenium, Total	7782-49-2		U	0.436	0.109

U Undetected; the analyte was analyzed for, but not detected.

Microbac

897 hW
3/30/09

12

Sample Number: L09010204-12
Client ID: MR08-IS217-8-9-09A
Matrix: Soil
Workgroup Number: WG293561
Collect Date: 01/11/2009 11:00
Sample Tag: 01

PrePrep Method: NONE
Prep Method: 3051
Analytical Method: 6020
Analyst: JYH
Dilution: 1
Units: mg/kg

Instrument: ELAN-ICP
Prep Date: 01/15/2009 12:27
Cal Date: 01/27/2009 12:41
Run Date: 01/28/2009 02:00
File ID: EL.012809.020018
Percent Solid: 91.6

Analyte	CAS. Number	Result	Qual	RL	MDL
Arsenic, Total	7440-38-2		U	0.327	0.0817
Lead, Total	7439-92-1	0.865		0.436	0.109

U Undetected; the analyte was analyzed for, but not detected.

Microbac

898 LW 3/30/09

12

Sample Number: L09010204-12
Client ID: MR08-IS217-8-9-09A
Matrix: Soil
Workgroup Number: WG293423
Collect Date: 01/11/2009 11:00
Sample Tag: 01

PrePrep Method: NONE
Prep Method: 7471A
Analytical Method: 7471A
Analyst: ADC
Dilution: 1
Units: mg/kg

Instrument: HYDRA
Prep Date: 01/15/2009 09:34
Cal Date: 01/26/2009 13:15
Run Date: 01/26/2009 13:50
File ID: HY.012609.135035
Percent Solid: 91.6

Analyte	CAS. Number	Result	Qual	RL	MDL
Mercury, Total	7439-97-6		U	0.106	0.0213

U Undetected; the analyte was analyzed for, but not detected.

Microbac

3158 MW 3/30/09

13

Sample Number: L09010204-13
Client ID: MR08-SS-218-09A
Matrix: Soil
Workgroup Number: WG292551
Collect Date: 01/11/2009 11:20
Sample Tag: 01

PrePrep Method: NONE
Prep Method: 3051
Analytical Method: 6010B
Analyst: KHR
Dilution: 1
Units: mg/kg

Instrument: IRIS-ICP
Prep Date: 01/14/2009 10:03
Cal Date: 01/15/2009 09:29
Run Date: 01/15/2009 20:53
File ID: IR.011509.205300
Percent Solid: 94.6

Analyte	CAS. Number	Result	Qual	RL	MDL	
Silver, Total	7440-22-4		U	0.725	0.181	
Barium, Total	7440-39-3	23.4 J		0.362	0.0725	MSL
Cadmium, Total	7440-43-9	0.499		0.145	0.0362	
Chromium, Total	7440-47-3	7.44 J		0.725	0.0870	MSL

U Undetected; the analyte was analyzed for, but not detected.

Microbac

28 MW 3/30/09

13

Sample Number:	L09010204-13	PrePrep Method:	NONE	Instrument:	ELAN-ICP
Client ID:	MR08-SS-218-09A	Prep Method:	3051	Prep Date:	01/15/2009 12:27
Matrix:	Soil	Analytical Method:	6020	Cal Date:	01/27/2009 12:41
Workgroup Number:	WG293561	Analyst:	JYH	Run Date:	01/28/2009 02:19
Collect Date:	01/11/2009 11:20	Dilution:	1	File ID:	EL.012809.021916
Sample Tag:	01	Units:	mg/kg	Percent Solid:	94.6

Analyte	CAS. Number	Result	Qual	RL	MDL
Arsenic, Total	7440-38-2	0.945		0.315	0.0786
Selenium, Total	7782-49-2	0.197	J	0.419	0.105

J Estimated ; the analyte concentration was less than the low standard (LOQ)

Microbac

899 MW 3/30/09

13

Sample Number: L09010204-13
Client ID: MR08-SS-218-09A
Matrix: Soil
Workgroup Number: WG293561
Collect Date: 01/11/2009 11:20
Sample Tag: DL01

PrePrep Method: NONE
Prep Method: 3051
Analytical Method: 6020
Analyst: JYH
Dilution: 10
Units: mg/kg

Instrument: ELAN-ICP
Prep Date: 01/15/2009 12:27
Cal Date: 01/30/2009 11:12
Run Date: 01/31/2009 01:38
File ID: EL.013109.013839
Percent Solid: 94.6

Analyte	CAS. Number	Result	Qual	RL	MDL
Lead, Total	7439-92-1	74.0		4.19	1.05

Microbac

900 lus 3/30/09

13

Sample Number:	L09010204-13	PrePrep Method:	NONE	Instrument:	HYDRA
Client ID:	MR08-SS-218-09A	Prep Method:	7471A	Prep Date:	01/15/2009 09:34
Matrix:	Soil	Analytical Method:	7471A	Cal Date:	01/26/2009 13:15
Workgroup Number:	WG293423	Analyst:	ADC	Run Date:	01/26/2009 13:52
Collect Date:	01/11/2009 11:20	Dilution:	1	File ID:	HY.012609.135246
Sample Tag:	01	Units:	mg/kg	Percent Solid:	94.6

Analyte	CAS. Number	Result	Qual	RL	MDL
Mercury, Total	7439-97-6	0.0379	J	0.102	0.0203

J Estimated ; the analyte concentration was less than the low standard (LOQ)

Microbac

3159 LW 3/30/09

14

Sample Number: L09010204-14
Client ID: MR08-IS218-7-8-09A
Matrix: Soil
Workgroup Number: WG292551
Collect Date: 01/11/2009 11:30
Sample Tag: 01

PrePrep Method: NONE
Prep Method: 3051
Analytical Method: 6010B
Analyst: KHR
Dilution: 1
Units: mg/kg

Instrument: IRIS-ICP
Prep Date: 01/14/2009 10:03
Cal Date: 01/15/2009 09:29
Run Date: 01/15/2009 20:59
File ID: IR.011509.205900
Percent Solid: 94.6

Analyte	CAS. Number	Result	Qual	RL	MDL	
Silver, Total	7440-22-4		U	0.733	0.183	
Barium, Total	7440-39-3	0.874 J		0.367	0.0733	MSL
Cadmium, Total	7440-43-9		U	0.147	0.0367	
Chromium, Total	7440-47-3	3.17 J		0.733	0.0880	MSL

U Undetected; the analyte was analyzed for, but not detected.

Microbac

29 lw 3/30/09

14

Sample Number:	L09010204-14	PrePrep Method:	NONE	Instrument:	ELAN-ICP
Client ID:	MR08-IS218-7-8-09A	Prep Method:	3051	Prep Date:	01/15/2009 12:27
Matrix:	Soil	Analytical Method:	6020	Cal Date:	01/27/2009 12:41
Workgroup Number:	WG293561	Analyst:	JYH	Run Date:	01/28/2009 02:25
Collect Date:	01/11/2009 11:30	Dilution:	1	File ID:	EL.012809.022512
Sample Tag:	01	Units:	mg/kg	Percent Solid:	94.6

Analyte	CAS. Number	Result	Qual	RL	MDL
Arsenic, Total	7440-38-2		U	0.317	0.0793
Lead, Total	7439-92-1	1.18		0.423	0.106
Selenium, Total	7782-49-2	0.349	J	0.423	0.106

U Undetected; the analyte was analyzed for, but not detected.
J Estimated ; the analyte concentration was less than the low standard (LOQ)

Microbac

901 [illegible] 3/30/09

14

Sample Number: L09010204-14
Client ID: MR08-IS218-7-8-09A
Matrix: Soil
Workgroup Number: WG293423
Collect Date: 01/11/2009 11:30
Sample Tag: 01

PrePrep Method: NONE
Prep Method: 7471A
Analytical Method: 7471A
Analyst: ADC
Dilution: 1
Units: mg/kg

Instrument: HYDRA
Prep Date: 01/15/2009 09:34
Cal Date: 01/26/2009 13:15
Run Date: 01/26/2009 13:54
File ID: HY.012609.135452
Percent Solid: 94.6

Analyte	CAS. Number	Result	Qual	RL	MDL
Mercury, Total	7439-97-6		U	0.102	0.0204

U Undetected; the analyte was analyzed for, but not detected.

Microbac

3160 lw 3/30/09

15

Sample Number: L09010204-15
Client ID: MR08-SS241-09A
Matrix: Soil
Workgroup Number: WG292551
Collect Date: 01/11/2009 12:30
Sample Tag: 01

PrePrep Method: NONE
Prep Method: 3051
Analytical Method: 6010B
Analyst: KHR
Dilution: 1
Units: mg/kg

Instrument: IRIS-ICP
Prep Date: 01/14/2009 10:03
Cal Date: 01/15/2009 09:29
Run Date: 01/15/2009 21:05
File ID: IR.011509.210500
Percent Solid: 86.1

Analyte	CAS. Number	Result	Qual	RL	MDL	
Silver, Total	7440-22-4	0.805	J	0.827	0.207	
Barium, Total	7440-39-3	22.9 J		0.414	0.0827	MSL
Cadmium, Total	7440-43-9	0.409		0.165	0.0414	
Chromium, Total	7440-47-3	10.7 J		0.827	0.0992	MSL

J Estimated ; the analyte concentration was less than the low standard (LOQ)

Microbac

30 LW 3/30/09

15

Sample Number: L09010204-15
Client ID: MR08-SS241-09A
Matrix: Soil
Workgroup Number: WG293561
Collect Date: 01/11/2009 12:30
Sample Tag: 01

PrePrep Method: NONE
Prep Method: 3051
Analytical Method: 6020
Analyst: JYH
Dilution: 1
Units: mg/kg

Instrument: ELAN-ICP
Prep Date: 01/15/2009 12:27
Cal Date: 01/27/2009 12:41
Run Date: 01/28/2009 02:31
File ID: EL.012809.023107
Percent Solid: 86.1

Analyte	CAS. Number	Result	Qual	RL	MDL
Arsenic, Total	7440-38-2	1.33		0.333	0.0832
Selenium, Total	7782-49-2	0.370	J	0.444	0.111

J Estimated ; the analyte concentration was less than the low standard (LOQ)

Microbac

902 LW 3/30/09

15

Sample Number: L09010204-15
Client ID: MR08-SS241-09A
Matrix: Soil
Workgroup Number: WG293561
Collect Date: 01/11/2009 12:30
Sample Tag: DL01

PrePrep Method: NONE
Prep Method: 3051
Analytical Method: 6020
Analyst: JYH
Dilution: 10
Units: mg/kg

Instrument: ELAN-ICP
Prep Date: 01/15/2009 12:27
Cal Date: 01/30/2009 11:12
Run Date: 01/31/2009 01:44
File ID: EL.013109.014445
Percent Solid: 86.1

Analyte	CAS. Number	Result	Qual	RL	MDL
Lead, Total	7439-92-1	132		4.44	1.11

Microbac

903 MW 3/30/09

15

Sample Number: L09010204-15
Client ID: MR08-SS241-09A
Matrix: Soil
Workgroup Number: WG293423
Collect Date: 01/11/2009 12:30
Sample Tag: 01

PrePrep Method: NONE
Prep Method: 7471A
Analytical Method: 7471A
Analyst: ADC
Dilution: 1
Units: mg/kg

Instrument: HYDRA
Prep Date: 01/15/2009 09:34
Cal Date: 01/26/2009 13:15
Run Date: 01/26/2009 13:57
File ID: HY.012609.135709
Percent Solid: 86.1

Analyte	CAS. Number	Result	Qual	RL	MDL
Mercury, Total	7439-97-6	0.142		0.110	0.0219

Microbac

3161 MW 3/30/09

16

Sample Number: L09010204-16
Client ID: MR08-IS241-8-9-09A
Matrix: Soil
Workgroup Number: WG292551
Collect Date: 01/11/2009 12:50
Sample Tag: 01

PrePrep Method: NONE
Prep Method: 3051
Analytical Method: 6010B
Analyst: KHR
Dilution: 1
Units: mg/kg

Instrument: IRIS-ICP
Prep Date: 01/14/2009 10:03
Cal Date: 01/15/2009 09:29
Run Date: 01/15/2009 21:23
File ID: IR.011509.212300
Percent Solid: 88.2

Analyte	CAS. Number	Result	Qual	RL	MDL	
Silver, Total	7440-22-4	0.276	J	0.822	0.206	
Barium, Total	7440-39-3	16.6 J		0.411	0.0822	MSL
Cadmium, Total	7440-43-9	0.285		0.164	0.0411	
Chromium, Total	7440-47-3	7.22 J		0.822	0.0987	MSL

J Estimated ; the analyte concentration was less than the low standard (LOQ)

Microbac

31 lw
3/30/09

16

Sample Number: L09010204-16
Client ID: MR08-IS241-8-9-09A
Matrix: Soil
Workgroup Number: WG293561
Collect Date: 01/11/2009 12:50
Sample Tag: 01

PrePrep Method: NONE
Prep Method: 3051
Analytical Method: 6020
Analyst: JYH
Dilution: 1
Units: mg/kg

Instrument: ELAN-ICP
Prep Date: 01/15/2009 12:27
Cal Date: 01/27/2009 12:41
Run Date: 01/28/2009 02:37
File ID: EL.012809.023703
Percent Solid: 88.2

Analyte	CAS. Number	Result	Qual	RL	MDL
Arsenic, Total	7440-38-2	0.804		0.333	0.0832
Lead, Total	7439-92-1	25.9		0.444	0.111
Selenium, Total	7782-49-2	0.180	J	0.444	0.111

J Estimated ; the analyte concentration was less than the low standard (LOQ)

Microbac

904 lw 3/30/09

16

Sample Number:	L09010204-16	PrePrep Method:	NONE	Instrument:	HYDRA
Client ID:	MR08-IS241-8-9-09A	Prep Method:	7471A	Prep Date:	01/15/2009 09:34
Matrix:	Soil	Analytical Method:	7471A	Cal Date:	01/26/2009 13:15
Workgroup Number:	WG293423	Analyst:	ADC	Run Date:	01/26/2009 13:59
Collect Date:	01/11/2009 12:50	Dilution:	1	File ID:	HY.012609.135906
Sample Tag:	01	Units:	mg/kg	Percent Solid:	88.2

Analyte	CAS. Number	Result	Qual	RL	MDL
Mercury, Total	7439-97-6	0.0388	J	0.107	0.0214

J Estimated ; the analyte concentration was less than the low standard (LOQ)

Microbac

3162 lw 3/30/09

17

Sample Number: L09010204-17
Client ID: MR08-SS242-09A
Matrix: Soil
Workgroup Number: WG292551
Collect Date: 01/11/2009 13:25
Sample Tag: 01

PrePrep Method: NONE
Prep Method: 3051
Analytical Method: 6010B
Analyst: KHR
Dilution: 1
Units: mg/kg

Instrument: IRIS-ICP
Prep Date: 01/14/2009 10:03
Cal Date: 01/15/2009 09:29
Run Date: 01/15/2009 21:30
File ID: IR.011509.213000
Percent Solid: 88.1

Analyte	CAS. Number	Result	Qual	RL	MDL	
Silver, Total	7440-22-4		U	0.756	0.189	
Barium, Total	7440-39-3	14.4 J		0.378	0.0756	MSL
Cadmium, Total	7440-43-9	0.197		0.151	0.0378	
Chromium, Total	7440-47-3	5.45 J		0.756	0.0907	MSL

U Undetected; the analyte was analyzed for, but not detected.

Microbac

32 MW 3/30/09

17

Sample Number:	L09010204-17	PrePrep Method:	NONE	Instrument:	ELAN-ICP
Client ID:	MR08-SS242-09A	Prep Method:	3051	Prep Date:	01/15/2009 12:27
Matrix:	Soil	Analytical Method:	6020	Cal Date:	01/27/2009 12:41
Workgroup Number:	WG293561	Analyst:	JYH	Run Date:	01/28/2009 02:43
Collect Date:	01/11/2009 13:25	Dilution:	1	File ID:	EL.012809.024300
Sample Tag:	01	Units:	mg/kg	Percent Solid:	88.1

Analyte	CAS. Number	Result	Qual	RL	MDL
Arsenic, Total	7440-38-2	1.10		0.341	0.0852
Selenium, Total	7782-49-2	0.311	J	0.454	0.114

J Estimated ; the analyte concentration was less than the low standard (LOQ)

Microbac

905 LW 3/30/09

17

Sample Number:	L09010204-17	PrePrep Method:	NONE	Instrument:	ELAN-ICP
Client ID:	MR08-SS242-09A	Prep Method:	3051	Prep Date:	01/15/2009 12:27
Matrix:	Soil	Analytical Method:	6020	Cal Date:	01/30/2009 11:12
Workgroup Number:	WG293561	Analyst:	JYH	Run Date:	01/31/2009 01:50
Collect Date:	01/11/2009 13:25	Dilution:	10	File ID:	EL.013109.015052
Sample Tag:	DL01	Units:	mg/kg	Percent Solid:	88.1

Analyte	CAS. Number	Result	Qual	RL	MDL
Lead, Total	7439-92-1	60.9		4.54	1.14

Microbac

906 lcw 3/30/09

17

Sample Number:	L09010204-17	PrePrep Method:	NONE	Instrument:	HYDRA
Client ID:	MR08-SS242-09A	Prep Method:	7471A	Prep Date:	01/15/2009 09:34
Matrix:	Soil	Analytical Method:	7471A	Cal Date:	01/26/2009 13:15
Workgroup Number:	WG293423	Analyst:	ADC	Run Date:	01/26/2009 14:00
Collect Date:	01/11/2009 13:25	Dilution:	1	File ID:	HY.012609.140048
Sample Tag:	01	Units:	mg/kg	Percent Solid:	88.1

Analyte	CAS. Number	Result	Qual	RL	MDL
Mercury, Total	7439-97-6	0.0808	J	0.112	0.0225

J Estimated ; the analyte concentration was less than the low standard (LOQ)

Microbac

3163 MW 3/30/09

18

Sample Number: L09010204-18
Client ID: MR08-IS242-6-7-09A
Matrix: Soil
Workgroup Number: WG292551
Collect Date: 01/11/2009 13:45
Sample Tag: 01

PrePrep Method: NONE
Prep Method: 3051
Analytical Method: 6010B
Analyst: KHR
Dilution: 1
Units: mg/kg

Instrument: IRIS-ICP
Prep Date: 01/14/2009 10:03
Cal Date: 01/15/2009 09:29
Run Date: 01/15/2009 21:36
File ID: IR.011509.213600
Percent Solid: 91.6

Analyte	CAS. Number	Result	Qual	RL	MDL	
Silver, Total	7440-22-4		U	0.792	0.198	
Barium, Total	7440-39-3	4.22 J		0.396	0.0792	MSL
Cadmium, Total	7440-43-9		U	0.158	0.0396	
Chromium, Total	7440-47-3	3.03 J		0.792	0.0950	MSL

U Undetected; the analyte was analyzed for, but not detected.

Microbac

 QW 3/30/09

18

Sample Number: L09010204-18
Client ID: MR08-IS242-6-7-09A
Matrix: Soil
Workgroup Number: WG293561
Collect Date: 01/11/2009 13:45
Sample Tag: 01

PrePrep Method: NONE
Prep Method: 3051
Analytical Method: 6020
Analyst: JYH
Dilution: 1
Units: mg/kg

Instrument: ELAN-ICP
Prep Date: 01/15/2009 12:27
Cal Date: 01/27/2009 12:41
Run Date: 01/28/2009 02:48
File ID: EL.012809.024855
Percent Solid: 91.6

Analyte	CAS. Number	Result	Qual	RL	MDL
Arsenic, Total	7440-38-2	0.274	J	0.322	0.0804
Lead, Total	7439-92-1	1.85		0.429	0.107
Selenium, Total	7782-49-2		U	0.429	0.107

U Undetected; the analyte was analyzed for, but not detected.
J Estimated ; the analyte concentration was less than the low standard (LOQ)

Microbac

907 fuw 3/30/09

18

Sample Number: L09010204-18
Client ID: MR08-IS242-6-7-09A
Matrix: Soil
Workgroup Number: WG293423
Collect Date: 01/11/2009 13:45
Sample Tag: 01

PrePrep Method: NONE
Prep Method: 7471A
Analytical Method: 7471A
Analyst: ADC
Dilution: 1
Units: mg/kg

Instrument: HYDRA
Prep Date: 01/15/2009 09:34
Cal Date: 01/26/2009 13:15
Run Date: 01/26/2009 14:06
File ID: HY.012609.140622
Percent Solid: 91.6

Analyte	CAS. Number	Result	Qual	RL	MDL
Mercury, Total	7439-97-6		U	0.106	0.0213

U Undetected; the analyte was analyzed for, but not detected.

Microbac

3164 lw 3/30/09

19

Sample Number: L09010204-19
Client ID: MR08-SS265-09A
Matrix: Soil
Workgroup Number: WG292551
Collect Date: 01/11/2009 14:00
Sample Tag: 01

PrePrep Method: NONE
Prep Method: 3051
Analytical Method: 6010B
Analyst: KHR
Dilution: 1
Units: mg/kg

Instrument: IRIS-ICP
Prep Date: 01/14/2009 10:03
Cal Date: 01/15/2009 09:29
Run Date: 01/15/2009 21:42
File ID: IR.011509.214200
Percent Solid: 90.6

Analyte	CAS. Number	Result	Qual	RL	MDL	
Silver, Total	7440-22-4		U	0.832	0.208	
Barium, Total	7440-39-3	8.27 J		0.416	0.0832	MSL
Cadmium, Total	7440-43-9	0.0553	J	0.166	0.0416	
Chromium, Total	7440-47-3	3.89 J		0.832	0.0998	MSL

U Undetected; the analyte was analyzed for, but not detected.
J Estimated ; the analyte concentration was less than the low standard (LOQ)

Microbac

34 MW 3/30/09

19

Sample Number: L09010204-19
Client ID: MR08-SS265-09A
Matrix: Soil
Workgroup Number: WG293561
Collect Date: 01/11/2009 14:00
Sample Tag: 01

PrePrep Method: NONE
Prep Method: 3051
Analytical Method: 6020
Analyst: JYH
Dilution: 1
Units: mg/kg

Instrument: ELAN-ICP
Prep Date: 01/15/2009 12:27
Cal Date: 01/27/2009 12:41
Run Date: 01/28/2009 02:54
File ID: EL.012809.025448
Percent Solid: 90.6

Analyte	CAS. Number	Result	Qual	RL	MDL
Arsenic, Total	7440-38-2	0.364		0.319	0.0798
Lead, Total	7439-92-1	5.25		0.425	0.106
Selenium, Total	7782-49-2		U	0.425	0.106

U Undetected; the analyte was analyzed for, but not detected.

Microbac

908 lew
3/30/09

19

Sample Number:	L09010204-19	PrePrep Method:	NONE	Instrument:	HYDRA
Client ID:	MR08-SS265-09A	Prep Method:	7471A	Prep Date:	01/15/2009 09:34
Matrix:	Soil	Analytical Method:	7471A	Cal Date:	01/26/2009 13:15
Workgroup Number:	WG293423	Analyst:	ADC	Run Date:	01/26/2009 14:08
Collect Date:	01/11/2009 14:00	Dilution:	1	File ID:	HY.012609.140858
Sample Tag:	01	Units:	mg/kg	Percent Solid:	90.6

Analyte	CAS. Number	Result	Qual	RL	MDL
Mercury, Total	7439-97-6		U	0.110	0.0219

U Undetected; the analyte was analyzed for, but not detected.

Microbac

3165 MW 3/30/09

20

Sample Number: L09010204-20
Client ID: MR08-IS265-3-4-09A
Matrix: Soil
Workgroup Number: WG292551
Collect Date: 01/11/2009 14:15
Sample Tag: 01

PrePrep Method: NONE
Prep Method: 3051
Analytical Method: 6010B
Analyst: KHR
Dilution: 1
Units: mg/kg

Instrument: IRIS-ICP
Prep Date: 01/14/2009 10:03
Cal Date: 01/15/2009 09:29
Run Date: 01/15/2009 21:48
File ID: IR.011509.214800
Percent Solid: 90.5

Analyte	CAS. Number	Result	Qual	RL	MDL	
Silver, Total	7440-22-4		U	0.795	0.199	
Barium, Total	7440-39-3	15.4 J		0.398	0.0795	MSL
Cadmium, Total	7440-43-9	0.253		0.159	0.0398	
Chromium, Total	7440-47-3	4.41 J		0.795	0.0954	MSL

U Undetected; the analyte was analyzed for, but not detected.

Microbac

35 lw
3/30/09

20

Sample Number: L09010204-20
Client ID: MR08-IS265-3-4-09A
Matrix: Soil
Workgroup Number: WG293561
Collect Date: 01/11/2009 14:15
Sample Tag: 01

PrePrep Method: NONE
Prep Method: 3051
Analytical Method: 6020
Analyst: JYH
Dilution: 1
Units: mg/kg

Instrument: ELAN-ICP
Prep Date: 01/15/2009 12:27
Cal Date: 01/27/2009 12:41
Run Date: 01/28/2009 03:00
File ID: EL.012809.030042
Percent Solid: 90.5

Analyte	CAS. Number	Result	Qual	RL	MDL
Arsenic, Total	7440-38-2	6.63		0.323	0.0808
Selenium, Total	7782-49-2	0.179	J	0.431	0.108

J Estimated ; the analyte concentration was less than the low standard (LOQ)

Microbac

909 MW 3/30/09

20

Sample Number: L09010204-20
Client ID: MR08-IS265-3-4-09A
Matrix: Soil
Workgroup Number: WG293561
Collect Date: 01/11/2009 14:15
Sample Tag: DL01

PrePrep Method: NONE
Prep Method: 3051
Analytical Method: 6020
Analyst: JYH
Dilution: 10
Units: mg/kg

Instrument: ELAN-ICP
Prep Date: 01/15/2009 12:27
Cal Date: 01/30/2009 11:12
Run Date: 01/31/2009 01:56
File ID: EL.013109.015658
Percent Solid: 90.5

Analyte	CAS. Number	Result	Qual	RL	MDL
Lead, Total	7439-92-1	46.5		4.31	1.08

Microbac

910 RW 3/30/09

20

Sample Number:	L09010204-20	PrePrep Method:	NONE	Instrument:	HYDRA
Client ID:	MR08-IS265-3-4-09A	Prep Method:	7471A	Prep Date:	01/15/2009 09:34
Matrix:	Soil	Analytical Method:	7471A	Cal Date:	01/26/2009 13:15
Workgroup Number:	WG293423	Analyst:	ADC	Run Date:	01/26/2009 14:10
Collect Date:	01/11/2009 14:15	Dilution:	1	File ID:	HY.012609.141040
Sample Tag:	01	Units:	mg/kg	Percent Solid:	90.5

Analyte	CAS. Number	Result	Qual	RL	MDL
Mercury, Total	7439-97-6	0.0621	J	0.104	0.0209

J Estimated ; the analyte concentration was less than the low standard (LOQ)

Microbac

3166 JWS 3/30/09

21

Sample Number: L09010204-21
Client ID: MR08-SS266-09A
Matrix: Soil
Workgroup Number: WG292551
Collect Date: 01/11/2009 14:30
Sample Tag: 01

PrePrep Method: NONE
Prep Method: 3051
Analytical Method: 6010B
Analyst: KHR
Dilution: 1
Units: mg/kg

Instrument: IRIS-ICP
Prep Date: 01/14/2009 10:03
Cal Date: 01/15/2009 09:29
Run Date: 01/15/2009 21:54
File ID: IR.011509.215400
Percent Solid: 88.8

Analyte	CAS. Number	Result	Qual	RL	MDL	
Silver, Total	7440-22-4		U	0.837	0.209	
Barium, Total	7440-39-3	8.42 J		0.418	0.0837	MSL
Cadmium, Total	7440-43-9	0.120	J	0.167	0.0418	
Chromium, Total	7440-47-3	4.07 J		0.837	0.100	MSL

U Undetected; the analyte was analyzed for, but not detected.
J Estimated ; the analyte concentration was less than the low standard (LOQ)

Microbac

36 lw 3/30/09

21

Sample Number: L09010204-21
Client ID: MR08-SS266-09A
Matrix: Soil
Workgroup Number: WG293561
Collect Date: 01/11/2009 14:30
Sample Tag: 01

PrePrep Method: NONE
Prep Method: 3051
Analytical Method: 6020
Analyst: JYH
Dilution: 1
Units: mg/kg

Instrument: ELAN-ICP
Prep Date: 01/15/2009 12:27
Cal Date: 01/27/2009 12:41
Run Date: 01/28/2009 03:06
File ID: EL.012809.030636
Percent Solid: 88.8

Analyte	CAS. Number	Result	Qual	RL	MDL
Arsenic, Total	7440-38-2	0.505		0.338	0.0844
Lead, Total	7439-92-1	25.7		0.450	0.113
Selenium, Total	7782-49-2	0.116	J	0.450	0.113

J Estimated ; the analyte concentration was less than the low standard (LOQ)

Microbac

911 fw 3/30/09

21

Sample Number: L09010204-21
Client ID: MR08-SS266-09A
Matrix: Soil
Workgroup Number: WG293423
Collect Date: 01/11/2009 14:30
Sample Tag: 01

PrePrep Method: NONE
Prep Method: 7471A
Analytical Method: 7471A
Analyst: ADC
Dilution: 1
Units: mg/kg

Instrument: HYDRA
Prep Date: 01/15/2009 09:34
Cal Date: 01/26/2009 13:15
Run Date: 01/26/2009 14:12
File ID: HY.012609.141227
Percent Solid: 88.8

Analyte	CAS. Number	Result	Qual	RL	MDL
Mercury, Total	7439-97-6		U	0.110	0.0220

U Undetected; the analyte was analyzed for, but not detected.

Microbac

3167 lw 3/30/09

22

Sample Number: L09010204-22
Client ID: MR08-IS266-5-6-09A
Matrix: Soil
Workgroup Number: WG292551
Collect Date: 01/11/2009 14:45
Sample Tag: 01

PrePrep Method: NONE
Prep Method: 3051
Analytical Method: 6010B
Analyst: KHR
Dilution: 1
Units: mg/kg

Instrument: IRIS-ICP
Prep Date: 01/14/2009 10:03
Cal Date: 01/15/2009 09:29
Run Date: 01/15/2009 22:00
File ID: IR.011509.220000
Percent Solid: 89.4

Analyte	CAS. Number	Result	Qual	RL	MDL	
Silver, Total	7440-22-4		U	0.766	0.191	
Barium, Total	7440-39-3	5.38 J		0.383	0.0766	MSL
Cadmium, Total	7440-43-9		U	0.153	0.0383	
Chromium, Total	7440-47-3	3.31 J		0.766	0.0919	MSL

U Undetected; the analyte was analyzed for, but not detected.

Microbac

37 lus
3/30/09

22

Sample Number: L09010204-22
Client ID: MR08-IS266-5-6-09A
Matrix: Soil
Workgroup Number: WG293561
Collect Date: 01/11/2009 14:45
Sample Tag: 01

PrePrep Method: NONE
Prep Method: 3051
Analytical Method: 6020
Analyst: JYH
Dilution: 1
Units: mg/kg

Instrument: ELAN-ICP
Prep Date: 01/15/2009 12:27
Cal Date: 01/27/2009 12:41
Run Date: 01/28/2009 03:12
File ID: EL.012809.031230
Percent Solid: 89.4

Analyte	CAS. Number	Result	Qual	RL	MDL
Arsenic, Total	7440-38-2	0.244	J	0.331	0.0828
Lead, Total	7439-92-1	1.89		0.441	0.110
Selenium, Total	7782-49-2		U	0.441	0.110

U Undetected; the analyte was analyzed for, but not detected.
J Estimated ; the analyte concentration was less than the low standard (LOQ)

Microbac

912 lw 3/30/09

22

Sample Number: L09010204-22
Client ID: MR08-IS266-5-6-09A
Matrix: Soil
Workgroup Number: WG293423
Collect Date: 01/11/2009 14:45
Sample Tag: 01

PrePrep Method: NONE
Prep Method: 7471A
Analytical Method: 7471A
Analyst: ADC
Dilution: 1
Units: mg/kg

Instrument: HYDRA
Prep Date: 01/15/2009 09:34
Cal Date: 01/26/2009 13:15
Run Date: 01/26/2009 14:14
File ID: HY.012609.141415
Percent Solid: 89.4

Analyte	CAS. Number	Result	Qual	RL	MDL
Mercury, Total	7439-97-6		U	0.107	0.0213

U Undetected; the analyte was analyzed for, but not detected.

Microbac

3168 MW 3/30/09

23

Sample Number: L09010204-23
Client ID: MR08-SS289-09A
Matrix: Soil
Workgroup Number: WG292551
Collect Date: 01/11/2009 15:00
Sample Tag: 01

PrePrep Method: NONE
Prep Method: 3051
Analytical Method: 6010B
Analyst: KHR
Dilution: 1
Units: mg/kg

Instrument: IRIS-ICP
Prep Date: 01/14/2009 10:03
Cal Date: 01/15/2009 09:29
Run Date: 01/15/2009 22:06
File ID: IR.011509.220600
Percent Solid: 89.9

Analyte	CAS. Number	Result	Qual	RL	MDL	
Silver, Total	7440-22-4		U	0.805	0.201	
Barium, Total	7440-39-3	11.3 J		0.403	0.0805	MSL
Cadmium, Total	7440-43-9	0.0729	J	0.161	0.0403	
Chromium, Total	7440-47-3	5.12 J		0.805	0.0966	MSL

U Undetected; the analyte was analyzed for, but not detected.
J Estimated ; the analyte concentration was less than the low standard (LOQ)

Microbac

38 lw 3/30/09

23

Sample Number: L09010204-23
Client ID: MR08-SS289-09A
Matrix: Soil
Workgroup Number: WG293561
Collect Date: 01/11/2009 15:00
Sample Tag: 01

PrePrep Method: NONE
Prep Method: 3051
Analytical Method: 6020
Analyst: JYH
Dilution: 1
Units: mg/kg

Instrument: ELAN-ICP
Prep Date: 01/15/2009 12:27
Cal Date: 01/27/2009 12:41
Run Date: 01/28/2009 03:31
File ID: EL.012809.033128
Percent Solid: 89.9

Analyte	CAS. Number	Result	Qual	RL	MDL
Arsenic, Total	7440-38-2	0.287	J	0.332	0.0831
Lead, Total	7439-92-1	8.38		0.443	0.111
Selenium, Total	7782-49-2		U	0.443	0.111

U Undetected; the analyte was analyzed for, but not detected.
J Estimated ; the analyte concentration was less than the low standard (LOQ)

Microbac

913 lw 3/30/09

23

Sample Number:	L09010204-23	PrePrep Method:	NONE	Instrument:	HYDRA
Client ID:	MR08-SS289-09A	Prep Method:	7471A	Prep Date:	01/15/2009 09:34
Matrix:	Soil	Analytical Method:	7471A	Cal Date:	01/26/2009 13:15
Workgroup Number:	WG293423	Analyst:	ADC	Run Date:	01/26/2009 14:16
Collect Date:	01/11/2009 15:00	Dilution:	1	File ID:	HY.012609.141647
Sample Tag:	01	Units:	mg/kg	Percent Solid:	89.9

Analyte	CAS. Number	Result	Qual	RL	MDL
Mercury, Total	7439-97-6		U	0.108	0.0215

U Undetected; the analyte was analyzed for, but not detected.

Microbac

3169 lus 3/30/09

24

Sample Number: L09010204-24
Client ID: MR08-SS289D-09A
Matrix: Soil
Workgroup Number: WG292551
Collect Date: 01/11/2009 15:10
Sample Tag: 01

PrePrep Method: NONE
Prep Method: 3051
Analytical Method: 6010B
Analyst: KHR
Dilution: 1
Units: mg/kg

Instrument: IRIS-ICP
Prep Date: 01/14/2009 10:03
Cal Date: 01/15/2009 09:29
Run Date: 01/15/2009 22:12
File ID: IR.011509.221200
Percent Solid: 89.4

Analyte	CAS. Number	Result	Qual	RL	MDL	
Silver, Total	7440-22-4		U	0.787	0.197	
Barium, Total	7440-39-3	11.7 J		0.393	0.0787	MSL
Cadmium, Total	7440-43-9	0.124	J	0.157	0.0393	
Chromium, Total	7440-47-3	6.40 J		0.787	0.0944	MSL

U Undetected; the analyte was analyzed for, but not detected.
J Estimated ; the analyte concentration was less than the low standard (LOQ)

Microbac

DW 3/30/09

24

Sample Number: L09010204-24
Client ID: MR08-SS289D-09A
Matrix: Soil
Workgroup Number: WG293561
Collect Date: 01/11/2009 15:10
Sample Tag: 01

PrePrep Method: NONE
Prep Method: 3051
Analytical Method: 6020
Analyst: JYH
Dilution: 1
Units: mg/kg

Instrument: ELAN-ICP
Prep Date: 01/15/2009 12:27
Cal Date: 01/27/2009 12:41
Run Date: 01/28/2009 03:37
File ID: EL.012809.033723
Percent Solid: 89.4

Analyte	CAS. Number	Result	Qual	RL	MDL
Arsenic, Total	7440-38-2	0.458		0.316	0.0790
Lead, Total	7439-92-1	21.2		0.421	0.105
Selenium, Total	7782-49-2		U	0.421	0.105

U Undetected; the analyte was analyzed for, but not detected.

Microbac

914 LW
3/30/09

24

Sample Number: L09010204-24
Client ID: MR08-SS289D-09A
Matrix: Soil
Workgroup Number: WG293423
Collect Date: 01/11/2009 15:10
Sample Tag: 01

PrePrep Method: NONE
Prep Method: 7471A
Analytical Method: 7471A
Analyst: ADC
Dilution: 1
Units: mg/kg

Instrument: HYDRA
Prep Date: 01/15/2009 09:34
Cal Date: 01/26/2009 13:15
Run Date: 01/26/2009 14:18
File ID: HY.012609.141839
Percent Solid: 89.4

Analyte	CAS. Number	Result	Qual	RL	MDL
Mercury, Total	7439-97-6		U	0.107	0.0214

U Undetected; the analyte was analyzed for, but not detected.

Microbac

3170 lw 3/30/09

25

Sample Number: L09010204-25
Client ID: MR08-IS289-2-3-09A
Matrix: Soil
Workgroup Number: WG292551
Collect Date: 01/11/2009 15:30
Sample Tag: 01

PrePrep Method: NONE
Prep Method: 3051
Analytical Method: 6010B
Analyst: KHR
Dilution: 1
Units: mg/kg

Instrument: IRIS-ICP
Prep Date: 01/14/2009 10:03
Cal Date: 01/15/2009 09:29
Run Date: 01/15/2009 22:18
File ID: IR.011509.221800
Percent Solid: 66.0

Analyte	CAS. Number	Result	Qual	RL	MDL	
Silver, Total	7440-22-4		U	1.09	0.274	
Barium, Total	7440-39-3	15.4 J		0.547	0.109	MSL
Cadmium, Total	7440-43-9	0.0886	J	0.219	0.0547	
Chromium, Total	7440-47-3	4.10 J		1.09	0.131	MSL

U Undetected; the analyte was analyzed for, but not detected.
J Estimated ; the analyte concentration was less than the low standard (LOQ)

Microbac

40 lw 3/30/09

25

Sample Number: L09010204-25
Client ID: MR08-IS289-2-3-09A
Matrix: Soil
Workgroup Number: WG293561
Collect Date: 01/11/2009 15:30
Sample Tag: 01

PrePrep Method: NONE
Prep Method: 3051
Analytical Method: 6020
Analyst: JYH
Dilution: 1
Units: mg/kg

Instrument: ELAN-ICP
Prep Date: 01/15/2009 12:27
Cal Date: 01/27/2009 12:41
Run Date: 01/28/2009 03:43
File ID: EL.012809.034319
Percent Solid: 66.0

Analyte	CAS. Number	Result	Qual	RL	MDL
Arsenic, Total	7440-38-2	0.519		0.439	0.110
Lead, Total	7439-92-1	18.1		0.586	0.146
Selenium, Total	7782-49-2		U	0.586	0.146

U Undetected; the analyte was analyzed for, but not detected.

Microbac

915 LW 3/3/09

25

Sample Number: L09010204-25
Client ID: MR08-IS289-2-3-09A
Matrix: Soil
Workgroup Number: WG293423
Collect Date: 01/11/2009 15:30
Sample Tag: 01

PrePrep Method: NONE
Prep Method: 7471A
Analytical Method: 7471A
Analyst: ADC
Dilution: 1
Units: mg/kg

Instrument: HYDRA
Prep Date: 01/15/2009 09:34
Cal Date: 01/26/2009 13:15
Run Date: 01/26/2009 14:20
File ID: HY.012609.142022
Percent Solid: 66.0

Analyte	CAS. Number	Result	Qual	RL	MDL
Mercury, Total	7439-97-6	0.0576	J	0.141	0.0282

J Estimated ; the analyte concentration was less than the low standard (LOQ)

Microbac

3171 MW 3/30/09

26

Sample Number: L09010204-26
Client ID: MR08-IS289D-2-3-09A
Matrix: Soil
Workgroup Number: WG292551
Collect Date: 01/11/2009 15:40
Sample Tag: 01

PrePrep Method: NONE
Prep Method: 3051
Analytical Method: 6010B
Analyst: KHR
Dilution: 1
Units: mg/kg

Instrument: IRIS-ICP
Prep Date: 01/14/2009 10:03
Cal Date: 01/15/2009 09:29
Run Date: 01/15/2009 22:37
File ID: IR.011509.223700
Percent Solid: 81.7

Analyte	CAS. Number	Result	Qual	RL	MDL	
Silver, Total	7440-22-4		U	0.877	0.219	
Barium, Total	7440-39-3	16.3 J		0.439	0.0877	MSL
Cadmium, Total	7440-43-9	0.0772	J	0.175	0.0439	
Chromium, Total	7440-47-3	7.13 J		0.877	0.105	MSL

U Undetected; the analyte was analyzed for, but not detected.
J Estimated ; the analyte concentration was less than the low standard (LOQ)

Microbac

41 fw 3/30/09

26

Sample Number: L09010204-26
Client ID: MR08-IS289D-2-3-09A
Matrix: Soil
Workgroup Number: WG293561
Collect Date: 01/11/2009 15:40
Sample Tag: 01

PrePrep Method: NONE
Prep Method: 3051
Analytical Method: 6020
Analyst: JYH
Dilution: 1
Units: mg/kg

Instrument: ELAN-ICP
Prep Date: 01/15/2009 12:27
Cal Date: 01/27/2009 12:41
Run Date: 01/28/2009 03:49
File ID: EL.012809.034914
Percent Solid: 81.7

Analyte	CAS. Number	Result	Qual	RL	MDL
Arsenic, Total	7440-38-2	0.430		0.365	0.0913
Lead, Total	7439-92-1	33.6		0.487	0.122
Selenium, Total	7782-49-2	0.260	J	0.487	0.122

J Estimated ; the analyte concentration was less than the low standard (LOQ)

Microbac

916 QW 3/30/09

26

Sample Number: L09010204-26
Client ID: MR08-IS289D-2-3-09A
Matrix: Soil
Workgroup Number: WG293423
Collect Date: 01/11/2009 15:40
Sample Tag: 01

PrePrep Method: NONE
Prep Method: 7471A
Analytical Method: 7471A
Analyst: ADC
Dilution: 1
Units: mg/kg

Instrument: HYDRA
Prep Date: 01/15/2009 09:34
Cal Date: 01/26/2009 13:15
Run Date: 01/26/2009 14:22
File ID: HY.012609.142226
Percent Solid: 81.7

Analyte	CAS. Number	Result	Qual	RL	MDL
Mercury, Total	7439-97-6	0.0334	J	0.116	0.0232

J Estimated ; the analyte concentration was less than the low standard (LOQ)

Microbac

3172 LW
3/30/09

27

Sample Number: L09010204-27
Client ID: MR08-SS290-09A
Matrix: Soil
Workgroup Number: WG292551
Collect Date: 01/11/2009 16:00
Sample Tag: 01

PrePrep Method: NONE
Prep Method: 3051
Analytical Method: 6010B
Analyst: KHR
Dilution: 1
Units: mg/kg

Instrument: IRIS-ICP
Prep Date: 01/14/2009 10:03
Cal Date: 01/15/2009 09:29
Run Date: 01/15/2009 22:43
File ID: IR.011509.224300
Percent Solid: 91.7

Analyte	CAS. Number	Result	Qual	RL	MDL	
Silver, Total	7440-22-4	0.214	J	0.785	0.196	
Barium, Total	7440-39-3	11.6 J		0.392	0.0785	MSL
Cadmium, Total	7440-43-9	0.218		0.157	0.0392	
Chromium, Total	7440-47-3	4.32 J		0.785	0.0942	MSL

J Estimated ; the analyte concentration was less than the low standard (LOQ)

Microbac

42 [illegible] 3/30/09

27

Sample Number: L09010204-27
Client ID: MR08-SS290-09A
Matrix: Soil
Workgroup Number: WG293561
Collect Date: 01/11/2009 16:00
Sample Tag: DL01

PrePrep Method: NONE
Prep Method: 3051
Analytical Method: 6020
Analyst: JYH
Dilution: 10
Units: mg/kg

Instrument: ELAN-ICP
Prep Date: 01/15/2009 12:27
Cal Date: 01/30/2009 11:12
Run Date: 01/31/2009 02:03
File ID: EL.013109.020302
Percent Solid: 91.7

Analyte	CAS. Number	Result	Qual	RL	MDL
Lead, Total	7439-92-1	84.9		4.32	1.08

Microbac

917/MW
3/30/09

27

Sample Number: L09010204-27
Client ID: MR08-SS290-09A
Matrix: Soil
Workgroup Number: WG293561
Collect Date: 01/11/2009 16:00
Sample Tag: 01

PrePrep Method: NONE
Prep Method: 3051
Analytical Method: 6020
Analyst: JYH
Dilution: 1
Units: mg/kg

Instrument: ELAN-ICP
Prep Date: 01/15/2009 12:27
Cal Date: 01/27/2009 12:41
Run Date: 01/28/2009 03:55
File ID: EL.012809.035510
Percent Solid: 91.7

Analyte	CAS. Number	Result	Qual	RL	MDL
Arsenic, Total	7440-38-2	0.497		0.324	0.0810
Selenium, Total	7782-49-2	0.112	J	0.432	0.108

J Estimated ; the analyte concentration was less than the low standard (LOQ)

Microbac

918 lw 3/30/09

27

Sample Number: L09010204-27
Client ID: MR08-SS290-09A
Matrix: Soil
Workgroup Number: WG293431
Collect Date: 01/11/2009 16:00
Sample Tag: 01

PrePrep Method: NONE
Prep Method: 7471A
Analytical Method: 7471A
Analyst: ADC
Dilution: 1
Units: mg/kg

Instrument: HYDRA
Prep Date: 01/15/2009 10:06
Cal Date: 01/26/2009 13:15
Run Date: 01/26/2009 14:32
File ID: HY.012609.143226
Percent Solid: 91.7

Analyte	CAS. Number	Result	Qual	RL	MDL
Mercury, Total	7439-97-6	0.0502	J	0.108	0.0216

J Estimated ; the analyte concentration was less than the low standard (LOQ)

Microbac

3173 lw 3/30/09

28

Sample Number: L09010204-28
Client ID: MR08-IS290-4-5-09A
Matrix: Soil
Workgroup Number: WG292551
Collect Date: 01/11/2009 16:20
Sample Tag: 01

PrePrep Method: NONE
Prep Method: 3051
Analytical Method: 6010B
Analyst: KHR
Dilution: 1
Units: mg/kg

Instrument: IRIS-ICP
Prep Date: 01/14/2009 10:03
Cal Date: 01/15/2009 09:29
Run Date: 01/15/2009 22:49
File ID: IR.011509.224900
Percent Solid: 87.4

Analyte	CAS. Number	Result	Qual	RL	MDL	
Silver, Total	7440-22-4		U	0.824	0.206	
Barium, Total	7440-39-3	17.3 J		0.412	0.0824	MSL
Cadmium, Total	7440-43-9		U	0.165	0.0412	
Chromium, Total	7440-47-3	4.97 J		0.824	0.0989	MSL

U Undetected; the analyte was analyzed for, but not detected.

Microbac

43 LW 3/30/09

28

Sample Number: L09010204-28
Client ID: MR08-IS290-4-5-09A
Matrix: Soil
Workgroup Number: WG293561
Collect Date: 01/11/2009 16:20
Sample Tag: 01

PrePrep Method: NONE
Prep Method: 3051
Analytical Method: 6020
Analyst: JYH
Dilution: 1
Units: mg/kg

Instrument: ELAN-ICP
Prep Date: 01/15/2009 12:27
Cal Date: 01/27/2009 12:41
Run Date: 01/28/2009 04:01
File ID: EL.012809.040106
Percent Solid: 87.4

Analyte	CAS. Number	Result	Qual	RL	MDL
Arsenic, Total	7440-38-2	0.207	J	0.328	0.0820
Lead, Total	7439-92-1	2.48		0.437	0.109
Selenium, Total	7782-49-2		U	0.437	0.109

U Undetected; the analyte was analyzed for, but not detected.
J Estimated ; the analyte concentration was less than the low standard (LOQ)

Microbac

919 MW 3/30/09

28

Sample Number: L09010204-28
Client ID: MR08-IS290-4-5-09A
Matrix: Soil
Workgroup Number: WG293431
Collect Date: 01/11/2009 16:20
Sample Tag: 01

PrePrep Method: NONE
Prep Method: 7471A
Analytical Method: 7471A
Analyst: ADC
Dilution: 1
Units: mg/kg

Instrument: HYDRA
Prep Date: 01/15/2009 10:06
Cal Date: 01/26/2009 13:15
Run Date: 01/26/2009 14:36
File ID: HY.012609.143658
Percent Solid: 87.4

Analyte	CAS. Number	Result	Qual	RL	MDL
Mercury, Total	7439-97-6		U	0.114	0.0228

U Undetected; the analyte was analyzed for, but not detected.

Microbac

3174 fw
3/30/09

29

Sample Number: L09010204-30
Client ID: MRO8-SS313-09A
Matrix: Soil
Workgroup Number: WG292551
Collect Date: 01/11/2009 16:40
Sample Tag: 01

PrePrep Method: NONE
Prep Method: 3051
Analytical Method: 6010B
Analyst: KHR
Dilution: 1
Units: mg/kg

Instrument: IRIS-ICP
Prep Date: 01/14/2009 10:03
Cal Date: 01/15/2009 09:29
Run Date: 01/15/2009 22:55
File ID: IR.011509.225500
Percent Solid: 89.4

Analyte	CAS. Number	Result	Qual	RL	MDL	
Silver, Total	7440-22-4		U	0.778	0.195	
Barium, Total	7440-39-3	6.01 J		0.389	0.0778	MSL
Cadmium, Total	7440-43-9	0.0510	J	0.156	0.0389	
Chromium, Total	7440-47-3	3.01 J		0.778	0.0934	MSL

U Undetected; the analyte was analyzed for, but not detected.
J Estimated ; the analyte concentration was less than the low standard (LOQ)

Microbac

44 LW 3/30/09

29

Sample Number: L09010204-30
Client ID: MRO8-SS313-09A
Matrix: Soil
Workgroup Number: WG293561
Collect Date: 01/11/2009 16:40
Sample Tag: 01

PrePrep Method: NONE
Prep Method: 3051
Analytical Method: 6020
Analyst: JYH
Dilution: 1
Units: mg/kg

Instrument: ELAN-ICP
Prep Date: 01/15/2009 12:27
Cal Date: 01/27/2009 12:41
Run Date: 01/28/2009 04:07
File ID: EL.012809.040703
Percent Solid: 89.4

Analyte	CAS. Number	Result	Qual	RL	MDL
Arsenic, Total	7440-38-2	0.333		0.332	0.0829
Lead, Total	7439-92-1	4.42		0.442	0.111
Selenium, Total	7782-49-2	0.149	J	0.442	0.111

J Estimated ; the analyte concentration was less than the low standard (LOQ)

Microbac

920 lew 3/30/09

29

Sample Number:	L09010204-30	PrePrep Method:	NONE	Instrument:	HYDRA
Client ID:	MRO8-SS313-09A	Prep Method:	7471A	Prep Date:	01/15/2009 10:06
Matrix:	Soil	Analytical Method:	7471A	Cal Date:	01/26/2009 13:15
Workgroup Number:	WG293431	Analyst:	ADC	Run Date:	01/26/2009 14:40
Collect Date:	01/11/2009 16:40	Dilution:	1	File ID:	HY.012609.144004
Sample Tag:	01	Units:	mg/kg	Percent Solid:	89.4

Analyte	CAS. Number	Result	Qual	RL	MDL
Mercury, Total	7439-97-6		U	0.111	0.0223

U Undetected; the analyte was analyzed for, but not detected.

Microbac

3175 QW 3/30/09

30

Sample Number: L09010204-31
Client ID: MRO8-IS313-5-6-09A
Matrix: Soil
Workgroup Number: WG292627
Collect Date: 01/11/2009 16:55
Sample Tag: 01

PrePrep Method: NONE
Prep Method: 3051
Analytical Method: 6010B
Analyst: EDA
Dilution: 1
Units: mg/kg

Instrument: ICP-THERMO2
Prep Date: 01/15/2009 06:55
Cal Date: 01/15/2009 10:55
Run Date: 01/15/2009 14:53
File ID: T2.011509.145349
Percent Solid: 85.4

Analyte	CAS. Number	Result	Qual	RL	MDL
Silver, Total	7440-22-4	0.255	J	0.421	0.210
Barium, Total	7440-39-3	13.0		0.421	0.0842
Cadmium, Total	7440-43-9		U	0.0842	0.0421
Chromium, Total	7440-47-3	12.7		0.842	0.101

U Undetected; the analyte was analyzed for, but not detected.
J Estimated ; the analyte concentration was less than the low standard (LOQ)

Microbac

45 MW 3/30/09

30

Sample Number: L09010204-31
Client ID: MRO8-IS313-5-6-09A
Matrix: Soil
Workgroup Number: WG292785
Collect Date: 01/11/2009 16:55
Sample Tag: 01

PrePrep Method: NONE
Prep Method: 3051
Analytical Method: 6020
Analyst: WTD
Dilution: 1
Units: mg/kg

Instrument: ELAN-ICP
Prep Date: 01/16/2009 12:47
Cal Date: 01/16/2009 16:35
Run Date: 01/17/2009 02:48
File ID: EL.011709.024835
Percent Solid: 85.4

Analyte	CAS. Number	Result	Qual	RL	MDL
Arsenic, Total	7440-38-2	2.07		0.342	0.0856
Lead, Total	7439-92-1	3.20		0.456	0.114
Selenium, Total	7782-49-2	0.124	J	0.456	0.114

J Estimated ; the analyte concentration was less than the low standard (LOQ)

Microbac

921 lw 3/30/09

30

Sample Number: L09010204-31
Client ID: MR08-IS313-5-6-09A
Matrix: Soil
Workgroup Number: WG293431
Collect Date: 01/11/2009 16:55
Sample Tag: 01

PrePrep Method: NONE
Prep Method: 7471A
Analytical Method: 7471A
Analyst: ADC
Dilution: 1
Units: mg/kg

Instrument: HYDRA
Prep Date: 01/15/2009 10:06
Cal Date: 01/26/2009 13:15
Run Date: 01/26/2009 14:42
File ID: HY.012609.144213
Percent Solid: 85.4

Analyte	CAS. Number	Result	Qual	RL	MDL
Mercury, Total	7439-97-6		U	0.117	0.0234

U Undetected; the analyte was analyzed for, but not detected.

Microbac

3176 fw
3/30/09

31

Sample Number: L09010204-32
Client ID: MR08-EB01011109-SS
Matrix: Water
Workgroup Number: WG292516
Collect Date: 01/11/2009 09:00
Sample Tag: 01

PrePrep Method: NONE
Prep Method: 3005A
Analytical Method: 6010B
Analyst: SLP
Dilution: 1
Units: ug/L

Instrument: PE-ICP2
Prep Date: 01/14/2009 09:32
Cal Date: 01/15/2009 11:00
Run Date: 01/15/2009 18:34
File ID: P2.011509.183458

Analyte	CAS. Number	Result	Qual	RL	MDL
Barium, Total	7440-39-3		U	10.0	2.50
Cadmium, Total	7440-43-9	~~0.251~~ 1.00	~~J~~ U	1.00	0.250
Chromium, Total	7440-47-3		U	10.0	2.50
Silver, Total	7440-22-4		U	6.00	2.00

BL

U Undetected; the analyte was analyzed for, but not detected.
J Estimated ; the analyte concentration was less than the low standard (LOQ)

Microbac

MW 3/30/09

31

Sample Number: L09010204-32
Client ID: MR08-EB01011109-SS
Matrix: Water
Workgroup Number: WG292534
Collect Date: 01/11/2009 09:00
Sample Tag: 01

PrePrep Method: NONE
Prep Method: 3015
Analytical Method: 6020
Analyst: WTD
Dilution: 1
Units: ug/L

Instrument: ELAN-ICP
Prep Date: 01/14/2009 08:52
Cal Date: 01/14/2009 16:41
Run Date: 01/14/2009 23:47
File ID: EL.011409.234739

Analyte	CAS. Number	Result	Qual	RL	MDL
Arsenic, Total	7440-38-2		U	1.00	0.250
Lead, Total	7439-92-1		U	1.00	0.250
Selenium, Total	7782-49-2		U	2.00	0.500

U Undetected; the analyte was analyzed for, but not detected.

Microbac

UW
3/30/09

31

Sample Number: L09010204-32
Client ID: MR08-EB01011109-SS
Matrix: Water
Workgroup Number: WG292494
Collect Date: 01/11/2009 09:00
Sample Tag: 01

PrePrep Method: NONE
Prep Method: 7470A
Analytical Method: 7470A
Analyst: ADC
Dilution: 1
Units: ug/L

Instrument: HYDRA
Prep Date: 01/14/2009 09:41
Cal Date: 01/14/2009 13:24
Run Date: 01/14/2009 14:30
File ID: HY.011409.143004

Analyte	CAS. Number	Result	Qual	RL	MDL
Mercury	7439-97-6		U	0.400	0.100

U Undetected; the analyte was analyzed for, but not detected.

Microbac

3177 JWS 3/30/09

ENVIRONMENTAL
Data Services, Inc.

METALS

USEPA Region IV - Level IV Review

Site: MCB Camp Lejeune, TO-09 SDG #: L09010268

Client: CH2M HILL, Inc., Virginia Beach, Virginia Date: March 31, 2009

Laboratory: Microbac Laboratories, Inc., Marietta, Ohio Reviewer: Nancy Weaver

EDS ID	Client Sample ID	Laboratory Sample ID	Matrix
1	MR08-SS291-09A	L09010268-01	Soil
2	MR08-IS291-8-9-09A	L09010268-02	Soil
3	MR08-SS292-09A	L09010268-03	Soil
4	MR08-IS292-5-6-09A	L09010268-04	Soil
5	MR08-SS293-09A	L09010268-05	Soil
6	MR08-IS293-2-3-09A	L09010268-06	Soil
7	MR08-SS294-09A	L09010268-07	Soil
8	MR08-IS294-8-9-09A	L09010268-08	Soil
9	MR08-SS295-09A	L09010268-09	Soil
10	MR08-IS295-2-3-09A	L09010268-10	Soil
11	MR08-SS296-09A	L09010268-11	Soil
12	MR08-IS296-5-6-09A	L09010268-12	Soil
13	MR08-SS300-09A	L09010268-13	Soil
14	MR08-IS300-8-9-09A	L09010268-14	Soil
15	MR08-SS301-09A	L09010268-15	Soil
16	MR08-IS301-7-8-09A	L09010268-16	Soil
17	MR08-SS302-09A	L09010268-17	Soil
18	MR08-IS302-8-9-09A	L09010268-18	Soil
19	MR08-SS303-09A	L09010268-19	Soil
20	MR08-IS303-6-7-09A	L09010268-20	Soil
21	MR08-EB01011209-SS	L09010268-21	Water

The USEPA "Contract Laboratory Program National Functional Guidelines for Inorganic Data Review," October 2004, and professional judgement were used in evaluating the data in this summary report.

Holding Times - All samples were prepared and analyzed within 28 days for mercury and 180 days for all other metals.

Calibration - The ICV and CCV %R values were acceptable.

Method and Calibration Blanks - The method blanks and continuing calibration blanks exhibited contamination for several compounds, however, all sample results are non-detect or greater than 5X the blank concentration with the exception of the following:

Compound	Conc ug/L.	Action Level ug/L	Qualifier	Affected Samples
Barium	3.91	19.55	U	21

Field and Equipment Blank - Field QC results are summarized below.

Blank ID	Compound	Conc. ug/L	Action Level ug/L	Qualifier	Affected Samples
MR08-FB01011009-ND	None-ND	-	-	-	-
MR08-EB01011209-SS	None-ND	-	-	-	-

ICP Interference Check Sample - All %R values were acceptable.

MS/MSD - The MS/MSD sample exhibited acceptable %R and RPD values except the following.

MS/MSD Sample ID	Compound	MS/MSD %R/RPD	Qualifier	Affected Samples
Reference (WG293755)	Lead	188%/167%/Ok	J	18, 19, 20

LCS - The LCS samples exhibited acceptable %R values.

ICP Serial Dilution - The ICP serial dilution sample exhibited acceptable %D values except the following.

ICP Sample ID	Compound	%D	Qualifier	Affected Samples
Reference (WG292664)	Barium	96.8%	J	19, 20
Reference (WG292713)	Selenium	15.4%	None	All samples ND
Reference (WG293755)	Lead	12.5%	None	Already qualified due to MS/MSD

Field Duplicates - Field duplicate samples were not included in this data package.

Compound Quantitation - Several samples were analyzed at various dilutions for various analytes due to high concentrations.

Report Number: L09010268

Report Date : February 10, 2009

Sample Number:	L09010268-01	PrePrep Method:	NONE	Instrument:	ICP-THERMO2
Client ID:	MR08-SS291-09A	Prep Method:	3051	Prep Date:	01/15/2009 06:55
Matrix:	Soil	Analytical Method:	6010B	Cal Date:	01/15/2009 10:55
Workgroup Number:	WG292627	Analyst:	EDA	Run Date:	01/15/2009 14:59
Collect Date:	01/12/2009 08:05	Dilution:	1	File ID:	T2.011509.145947
Sample Tag:	01	Units:	mg/kg	Percent Solid:	88.4

Analyte	CAS. Number	Result	Qual	RL	MDL
Silver, Total	7440-22-4		U	0.407	0.204
Barium, Total	7440-39-3	11.4		0.407	0.0814
Cadmium, Total	7440-43-9	0.201		0.0814	0.0407
Chromium, Total	7440-47-3	2.77		0.814	0.0977

U Undetected; the analyte was analyzed for, but not detected.

Microbac

13 RW 3/31/09

Report Number: L09010268
Report Date : February 10, 2009

Sample Number:	L09010268-01	PrePrep Method:	NONE	Instrument:	ELAN-ICP
Client ID:	MR08-SS291-09A	Prep Method:	3051	Prep Date:	01/16/2009 12:47
Matrix:	Soil	Analytical Method:	6020	Cal Date:	01/16/2009 16:35
Workgroup Number:	WG292785	Analyst:	WTD	Run Date:	01/17/2009 02:04
Collect Date:	01/12/2009 08:05	Dilution:	1	File ID:	EL.011709.020449
Sample Tag:	01	Units:	mg/kg	Percent Solid:	88.4

Analyte	CAS. Number	Result	Qual	RL	MDL
Arsenic, Total	7440-38-2	0.657		0.335	0.0837
Lead, Total	7439-92-1	23.4		0.446	0.112
Selenium, Total	7782-49-2	0.196	J	0.446	0.112

J Estimated ; the analyte concentration was less than the low standard (LOQ)

Microbac

416 lw 3/31/09

Report Number: L09010268
Report Date : February 10, 2009

Sample Number: L09010268-01
Client ID: MR08-SS291-09A
Matrix: Soil
Workgroup Number: WG293431
Collect Date: 01/12/2009 08:05
Sample Tag: 01

PrePrep Method: NONE
Prep Method: 7471A
Analytical Method: 7471A
Analyst: ADC
Dilution: 1
Units: mg/kg

Instrument: HYDRA
Prep Date: 01/15/2009 10:06
Cal Date: 01/26/2009 13:15
Run Date: 01/26/2009 14:44
File ID: HY.012609.144417
Percent Solid: 88.4

Analyte	CAS. Number	Result	Qual	RL	MDL
Mercury, Total	7439-97-6	0.0227	J	0.112	0.0224

J Estimated ; the analyte concentration was less than the low standard (LOQ)

Microbac

2068 lew 3/31/09

2

Sample Number: L09010268-02
Client ID: MR08-IS291-8-9-09A
Matrix: Soil
Workgroup Number: WG292627
Collect Date: 01/12/2009 08:25
Sample Tag: 01

PrePrep Method: NONE
Prep Method: 3051
Analytical Method: 6010B
Analyst: EDA
Dilution: 1
Units: mg/kg

Instrument: ICP-THERMO2
Prep Date: 01/15/2009 06:55
Cal Date: 01/15/2009 10:55
Run Date: 01/15/2009 15:23
File ID: T2.011509.152344
Percent Solid: 87.7

Analyte	CAS. Number	Result	Qual	RL	MDL
Silver, Total	7440-22-4	0.321	J	0.419	0.209
Barium, Total	7440-39-3	17.5		0.419	0.0838
Cadmium, Total	7440-43-9		U	0.0838	0.0419
Chromium, Total	7440-47-3	21.8		0.838	0.101

U Undetected; the analyte was analyzed for, but not detected.
J Estimated ; the analyte concentration was less than the low standard (LOQ)

Microbac

14 LW 3/31/09

2

Sample Number: L09010268-02
Client ID: MR08-IS291-8-9-09A
Matrix: Soil
Workgroup Number: WG292785
Collect Date: 01/12/2009 08:25
Sample Tag: 01

PrePrep Method: NONE
Prep Method: 3051
Analytical Method: 6020
Analyst: WTD
Dilution: 1
Units: mg/kg

Instrument: ELAN-ICP
Prep Date: 01/16/2009 12:47
Cal Date: 01/16/2009 16:35
Run Date: 01/17/2009 03:07
File ID: EL.011709.030751
Percent Solid: 87.7

Analyte	CAS. Number	Result	Qual	RL	MDL
Arsenic, Total	7440-38-2	0.764		0.342	0.0855
Lead, Total	7439-92-1	4.06		0.456	0.114
Selenium, Total	7782-49-2		U	0.456	0.114

U Undetected; the analyte was analyzed for, but not detected.

Microbac

417 MW 3/31/09

2

Sample Number: L09010268-02
Client ID: MR08-IS291-8-9-09A
Matrix: Soil
Workgroup Number: WG293431
Collect Date: 01/12/2009 08:25
Sample Tag: 01

PrePrep Method: NONE
Prep Method: 7471A
Analytical Method: 7471A
Analyst: ADC
Dilution: 1
Units: mg/kg

Instrument: HYDRA
Prep Date: 01/15/2009 10:06
Cal Date: 01/26/2009 13:15
Run Date: 01/26/2009 14:52
File ID: HY.012609.145248
Percent Solid: 87.7

Analyte	CAS. Number	Result	Qual	RL	MDL
Mercury, Total	7439-97-6		U	0.113	0.0226

U Undetected; the analyte was analyzed for, but not detected.

Microbac®

2069 lw 3/31/09

3

Sample Number: L09010268-03
Client ID: MR08-SS292-09A
Matrix: Soil
Workgroup Number: WG292627
Collect Date: 01/12/2009 09:05
Sample Tag: 01

PrePrep Method: NONE
Prep Method: 3051
Analytical Method: 6010B
Analyst: EDA
Dilution: 1
Units: mg/kg

Instrument: ICP-THERMO2
Prep Date: 01/15/2009 06:55
Cal Date: 01/15/2009 10:55
Run Date: 01/15/2009 15:29
File ID: T2.011509.152943
Percent Solid: 92.3

Analyte	CAS. Number	Result	Qual	RL	MDL
Silver, Total	7440-22-4		U	0.386	0.193
Barium, Total	7440-39-3	9.71		0.386	0.0772
Cadmium, Total	7440-43-9		U	0.0772	0.0386
Chromium, Total	7440-47-3	5.66		0.772	0.0927

U Undetected; the analyte was analyzed for, but not detected.

Microbac

15 lw 3/31/09

3

Sample Number: L09010268-03
Client ID: MR08-SS292-09A
Matrix: Soil
Workgroup Number: WG292785
Collect Date: 01/12/2009 09:05
Sample Tag: 01

PrePrep Method: NONE
Prep Method: 3051
Analytical Method: 6020
Analyst: WTD
Dilution: 1
Units: mg/kg

Instrument: ELAN-ICP
Prep Date: 01/16/2009 12:47
Cal Date: 01/16/2009 16:35
Run Date: 01/17/2009 03:14
File ID: EL.011709.031404
Percent Solid: 92.3

Analyte	CAS. Number	Result	Qual	RL	MDL
Arsenic, Total	7440-38-2	0.731		0.317	0.0792
Lead, Total	7439-92-1	18.6		0.422	0.106
Selenium, Total	7782-49-2	0.115	J	0.422	0.106

J Estimated ; the analyte concentration was less than the low standard (LOQ)

Microbac®

418 RW 3/3/09

3

Sample Number: L09010268-03
Client ID: MR08-SS292-09A
Matrix: Soil
Workgroup Number: WG293431
Collect Date: 01/12/2009 09:05
Sample Tag: 01

PrePrep Method: NONE
Prep Method: 7471A
Analytical Method: 7471A
Analyst: ADC
Dilution: 1
Units: mg/kg

Instrument: HYDRA
Prep Date: 01/15/2009 10:06
Cal Date: 01/26/2009 13:15
Run Date: 01/26/2009 14:54
File ID: HY.012609.145458
Percent Solid: 92.3

Analyte	CAS. Number	Result	Qual	RL	MDL
Mercury, Total	7439-97-6		U	0.107	0.0214

U Undetected; the analyte was analyzed for, but not detected.

Microbac

2070 lw 3/31/09

4

Sample Number: L09010268-04
Client ID: MR08-IS292-5-6-09A
Matrix: Soil
Workgroup Number: WG292627
Collect Date: 01/12/2009 09:20
Sample Tag: 01

PrePrep Method: NONE
Prep Method: 3051
Analytical Method: 6010B
Analyst: EDA
Dilution: 1
Units: mg/kg

Instrument: ICP-THERMO2
Prep Date: 01/15/2009 06:55
Cal Date: 01/15/2009 10:55
Run Date: 01/15/2009 15:47
File ID: T2.011509.154740
Percent Solid: 87.5

Analyte	CAS. Number	Result	Qual	RL	MDL
Silver, Total	7440-22-4		U	0.429	0.214
Barium, Total	7440-39-3	11.8		0.429	0.0857
Cadmium, Total	7440-43-9		U	0.0857	0.0429
Chromium, Total	7440-47-3	7.44		0.857	0.103

U Undetected; the analyte was analyzed for, but not detected.

Microbac

16 lw 3/31/09

4

Sample Number: L09010268-04
Client ID: MR08-IS292-5-6-09A
Matrix: Soil
Workgroup Number: WG292785
Collect Date: 01/12/2009 09:20
Sample Tag: 01

PrePrep Method: NONE
Prep Method: 3051
Analytical Method: 6020
Analyst: WTD
Dilution: 1
Units: mg/kg

Instrument: ELAN-ICP
Prep Date: 01/16/2009 12:47
Cal Date: 01/16/2009 16:35
Run Date: 01/17/2009 03:20
File ID: EL.011709.032018
Percent Solid: 87.5

Analyte	CAS. Number	Result	Qual	RL	MDL
Arsenic, Total	7440-38-2	0.633		0.326	0.0815
Lead, Total	7439-92-1	9.79		0.435	0.109
Selenium, Total	7782-49-2		U	0.435	0.109

U Undetected; the analyte was analyzed for, but not detected.

Microbac

419 lcw 3/31/09

4

Sample Number: L09010268-04
Client ID: MR08-IS292-5-6-09A
Matrix: Soil
Workgroup Number: WG293431
Collect Date: 01/12/2009 09:20
Sample Tag: 01

PrePrep Method: NONE
Prep Method: 7471A
Analytical Method: 7471A
Analyst: ADC
Dilution: 1
Units: mg/kg

Instrument: HYDRA
Prep Date: 01/15/2009 10:06
Cal Date: 01/26/2009 13:15
Run Date: 01/26/2009 14:57
File ID: HY.012609.145731
Percent Solid: 87.5

Analyte	CAS. Number	Result	Qual	RL	MDL
Mercury, Total	7439-97-6		U	0.114	0.0229

U Undetected; the analyte was analyzed for, but not detected.

Microbac

2071 LWS 3/31/09

5

Sample Number: L09010268-05
Client ID: MR08-SS293-09A
Matrix: Soil
Workgroup Number: WG292627
Collect Date: 01/12/2009 09:35
Sample Tag: 01

PrePrep Method: NONE
Prep Method: 3051
Analytical Method: 6010B
Analyst: EDA
Dilution: 1
Units: mg/kg

Instrument: ICP-THERMO2
Prep Date: 01/15/2009 06:55
Cal Date: 01/15/2009 10:55
Run Date: 01/15/2009 15:53
File ID: T2.011509.155340
Percent Solid: 84.3

Analyte	CAS. Number	Result	Qual	RL	MDL
Silver, Total	7440-22-4	0.217	J	0.418	0.209
Barium, Total	7440-39-3	13.6		0.418	0.0837
Cadmium, Total	7440-43-9	0.304		0.0837	0.0418
Chromium, Total	7440-47-3	8.16		0.837	0.100

J Estimated ; the analyte concentration was less than the low standard (LOQ)

Microbac

17 lw 3/31/09

5

Sample Number: L09010268-05
Client ID: MR08-SS293-09A
Matrix: Soil
Workgroup Number: WG292785
Collect Date: 01/12/2009 09:35
Sample Tag: 01

PrePrep Method: NONE
Prep Method: 3051
Analytical Method: 6020
Analyst: WTD
Dilution: 1
Units: mg/kg

Instrument: ELAN-ICP
Prep Date: 01/16/2009 12:47
Cal Date: 01/16/2009 16:35
Run Date: 01/17/2009 03:26
File ID: EL.011709.032632
Percent Solid: 84.3

Analyte	CAS. Number	Result	Qual	RL	MDL
Arsenic, Total	7440-38-2	0.892		0.354	0.0884
Selenium, Total	7782-49-2	0.234	J	0.472	0.118

J Estimated ; the analyte concentration was less than the low standard (LOQ)

Microbac

420 LW 3/31/09

5

Sample Number: L09010268-05
Client ID: MR08-SS293-09A
Matrix: Soil
Workgroup Number: WG292785
Collect Date: 01/12/2009 09:35
Sample Tag: DL01

PrePrep Method: NONE
Prep Method: 3051
Analytical Method: 6020
Analyst: WTD
Dilution: 5
Units: mg/kg

Instrument: ELAN-ICP
Prep Date: 01/16/2009 12:47
Cal Date: 01/19/2009 15:28
Run Date: 01/19/2009 20:55
File ID: EL.011909.205530
Percent Solid: 84.3

Analyte	CAS. Number	Result	Qual	RL	MDL
Lead, Total	7439-92-1	57.2		2.36	0.590

Microbac

421 lew 3/31/09

5

Sample Number: L09010268-05
Client ID: MR08-SS293-09A
Matrix: Soil
Workgroup Number: WG293431
Collect Date: 01/12/2009 09:35
Sample Tag: 01

PrePrep Method: NONE
Prep Method: 7471A
Analytical Method: 7471A
Analyst: ADC
Dilution: 1
Units: mg/kg

Instrument: HYDRA
Prep Date: 01/15/2009 10:06
Cal Date: 01/26/2009 13:15
Run Date: 01/26/2009 14:59
File ID: HY.012609.145926
Percent Solid: 84.3

Analyte	CAS. Number	Result	Qual	RL	MDL
Mercury, Total	7439-97-6	0.0285	J	0.118	0.0236

J Estimated ; the analyte concentration was less than the low standard (LOQ)

Microbac

2072 LW 3/31/09

6

Sample Number: L09010268-06
Client ID: MR08-IS293-2-3-09A
Matrix: Soil
Workgroup Number: WG292627
Collect Date: 01/12/2009 09:55
Sample Tag: 01

PrePrep Method: NONE
Prep Method: 3051
Analytical Method: 6010B
Analyst: EDA
Dilution: 1
Units: mg/kg

Instrument: ICP-THERMO2
Prep Date: 01/15/2009 06:55
Cal Date: 01/15/2009 10:55
Run Date: 01/15/2009 15:59
File ID: T2.011509.155938
Percent Solid: 91.3

Analyte	CAS. Number	Result	Qual	RL	MDL
Silver, Total	7440-22-4		U	0.381	0.190
Barium, Total	7440-39-3	7.63		0.381	0.0762
Cadmium, Total	7440-43-9		U	0.0762	0.0381
Chromium, Total	7440-47-3	4.36		0.762	0.0914

U Undetected; the analyte was analyzed for, but not detected.

Microbac

18 lw 3/31/09

6

Sample Number: L09010268-06
Client ID: MR08-IS293-2-3-09A
Matrix: Soil
Workgroup Number: WG292785
Collect Date: 01/12/2009 09:55
Sample Tag: 01

PrePrep Method: NONE
Prep Method: 3051
Analytical Method: 6020
Analyst: WTD
Dilution: 1
Units: mg/kg

Instrument: ELAN-ICP
Prep Date: 01/16/2009 12:47
Cal Date: 01/16/2009 16:35
Run Date: 01/17/2009 03:32
File ID: EL.011709.033246
Percent Solid: 91.3

Analyte	CAS. Number	Result	Qual	RL	MDL
Arsenic, Total	7440-38-2	0.455		0.307	0.0768
Lead, Total	7439-92-1	3.95		0.410	0.102
Selenium, Total	7782-49-2	0.114	J	0.410	0.102

J Estimated ; the analyte concentration was less than the low standard (LOQ)

Microbac

422 lw 3/31/09

6

Sample Number: L09010268-06
Client ID: MR08-IS293-2-3-09A
Matrix: Soil
Workgroup Number: WG293431
Collect Date: 01/12/2009 09:55
Sample Tag: 01

PrePrep Method: NONE
Prep Method: 7471A
Analytical Method: 7471A
Analyst: ADC
Dilution: 1
Units: mg/kg

Instrument: HYDRA
Prep Date: 01/15/2009 10:06
Cal Date: 01/26/2009 13:15
Run Date: 01/26/2009 15:01
File ID: HY.012609.150155
Percent Solid: 91.3

Analyte	CAS. Number	Result	Qual	RL	MDL
Mercury, Total	7439-97-6		U	0.109	0.0219

U Undetected; the analyte was analyzed for, but not detected.

Microbac

2073 lw 3/31/09

7

Sample Number: L09010268-07
Client ID: MR08-SS294-09A
Matrix: Soil
Workgroup Number: WG292627
Collect Date: 01/12/2009 10:10
Sample Tag: 01

PrePrep Method: NONE
Prep Method: 3051
Analytical Method: 6010B
Analyst: EDA
Dilution: 1
Units: mg/kg

Instrument: ICP-THERMO2
Prep Date: 01/15/2009 06:55
Cal Date: 01/15/2009 10:55
Run Date: 01/15/2009 16:05
File ID: T2.011509.160537
Percent Solid: 93.0

Analyte	CAS. Number	Result	Qual	RL	MDL
Silver, Total	7440-22-4	0.207	J	0.366	0.183
Barium, Total	7440-39-3	12.3		0.366	0.0732
Cadmium, Total	7440-43-9	0.0563	J	0.0732	0.0366
Chromium, Total	7440-47-3	5.96		0.732	0.0878

J Estimated ; the analyte concentration was less than the low standard (LOQ)

Microbac

19 Qw 3/31/09

7

Sample Number: L09010268-07
Client ID: MR08-SS294-09A
Matrix: Soil
Workgroup Number: WG292785
Collect Date: 01/12/2009 10:10
Sample Tag: 01

PrePrep Method: NONE
Prep Method: 3051
Analytical Method: 6020
Analyst: WTD
Dilution: 1
Units: mg/kg

Instrument: ELAN-ICP
Prep Date: 01/16/2009 12:47
Cal Date: 01/16/2009 16:35
Run Date: 01/17/2009 03:39
File ID: EL.011709.033901
Percent Solid: 93.0

Analyte	CAS. Number	Result	Qual	RL	MDL
Arsenic, Total	7440-38-2	0.609		0.305	0.0762
Lead, Total	7439-92-1	4.74		0.406	0.102
Selenium, Total	7782-49-2	0.358	J	0.406	0.102

J Estimated ; the analyte concentration was less than the low standard (LOQ)

Microbac®

423 lw 3/31/09

7

Sample Number: L09010268-07
Client ID: MR08-SS294-09A
Matrix: Soil
Workgroup Number: WG293431
Collect Date: 01/12/2009 10:10
Sample Tag: 01

PrePrep Method: NONE
Prep Method: 7471A
Analytical Method: 7471A
Analyst: ADC
Dilution: 1
Units: mg/kg

Instrument: HYDRA
Prep Date: 01/15/2009 10:06
Cal Date: 01/26/2009 13:15
Run Date: 01/26/2009 15:04
File ID: HY.012609.150400
Percent Solid: 93.0

Analyte	CAS. Number	Result	Qual	RL	MDL
Mercury, Total	7439-97-6	0.0229	J	0.106	0.0212

J Estimated ; the analyte concentration was less than the low standard (LOQ)

Microbac

2074 MW 3/31/09

8

Sample Number: L09010268-08
Client ID: MR08-IS294-8-9-09A
Matrix: Soil
Workgroup Number: WG292627
Collect Date: 01/12/2009 10:30
Sample Tag: 01

PrePrep Method: NONE
Prep Method: 3051
Analytical Method: 6010B
Analyst: EDA
Dilution: 1
Units: mg/kg

Instrument: ICP-THERMO2
Prep Date: 01/15/2009 06:55
Cal Date: 01/15/2009 10:55
Run Date: 01/15/2009 16:11
File ID: T2.011509.161136
Percent Solid: 92.6

Analyte	CAS. Number	Result	Qual	RL	MDL
Silver, Total	7440-22-4		U	0.371	0.185
Barium, Total	7440-39-3	2.85		0.371	0.0741
Cadmium, Total	7440-43-9		U	0.0741	0.0371
Chromium, Total	7440-47-3	2.90		0.741	0.0889

U Undetected; the analyte was analyzed for, but not detected.

Microbac

20 lw 3/31/09

8

Sample Number: L09010268-08
Client ID: MR08-IS294-8-9-09A
Matrix: Soil
Workgroup Number: WG292785
Collect Date: 01/12/2009 10:30
Sample Tag: 01

PrePrep Method: NONE
Prep Method: 3051
Analytical Method: 6020
Analyst: WTD
Dilution: 1
Units: mg/kg

Instrument: ELAN-ICP
Prep Date: 01/16/2009 12:47
Cal Date: 01/16/2009 16:35
Run Date: 01/17/2009 03:45
File ID: EL.011709.034516
Percent Solid: 92.6

Analyte	CAS. Number	Result	Qual	RL	MDL
Arsenic, Total	7440-38-2	0.260	J	0.322	0.0805
Lead, Total	7439-92-1	1.91		0.429	0.107
Selenium, Total	7782-49-2		U	0.429	0.107

U Undetected; the analyte was analyzed for, but not detected.
J Estimated ; the analyte concentration was less than the low standard (LOQ)

Microbac

424 MW 3/31/09

8

Sample Number:	L09010268-08	PrePrep Method:	NONE	Instrument:	HYDRA
Client ID:	MR08-IS294-8-9-09A	Prep Method:	7471A	Prep Date:	01/15/2009 10:06
Matrix:	Soil	Analytical Method:	7471A	Cal Date:	01/26/2009 13:15
Workgroup Number:	WG293431	Analyst:	ADC	Run Date:	01/26/2009 15:05
Collect Date:	01/12/2009 10:30	Dilution:	1	File ID:	HY.012609.150546
Sample Tag:	01	Units:	mg/kg	Percent Solid:	92.6

Analyte	CAS. Number	Result	Qual	RL	MDL
Mercury, Total	7439-97-6		U	0.107	0.0215

U Undetected; the analyte was analyzed for, but not detected.

Microbac

2075 lw 3/3/09

9

Sample Number: L09010268-09
Client ID: MR08-SS295-09A
Matrix: Soil
Workgroup Number: WG292627
Collect Date: 01/12/2009 10:45
Sample Tag: 01

PrePrep Method: NONE
Prep Method: 3051
Analytical Method: 6010B
Analyst: EDA
Dilution: 1
Units: mg/kg

Instrument: ICP-THERMO2
Prep Date: 01/15/2009 06:55
Cal Date: 01/15/2009 10:55
Run Date: 01/15/2009 16:17
File ID: T2.011509.161737
Percent Solid: 90.2

Analyte	CAS. Number	Result	Qual	RL	MDL
Silver, Total	7440-22-4	0.238	J	0.395	0.197
Barium, Total	7440-39-3	13.2		0.395	0.0789
Cadmium, Total	7440-43-9	0.0572	J	0.0789	0.0395
Chromium, Total	7440-47-3	8.14		0.789	0.0947

J Estimated ; the analyte concentration was less than the low standard (LOQ)

Microbac

21 LEW 3/31/09

9

Sample Number: L09010268-09
Client ID: MR08-SS295-09A
Matrix: Soil
Workgroup Number: WG292785
Collect Date: 01/12/2009 10:45
Sample Tag: 01

PrePrep Method: NONE
Prep Method: 3051
Analytical Method: 6020
Analyst: WTD
Dilution: 1
Units: mg/kg

Instrument: ELAN-ICP
Prep Date: 01/16/2009 12:47
Cal Date: 01/16/2009 16:35
Run Date: 01/17/2009 03:51
File ID: EL.011709.035131
Percent Solid: 90.2

Analyte	CAS. Number	Result	Qual	RL	MDL
Arsenic, Total	7440-38-2	0.745		0.331	0.0827
Lead, Total	7439-92-1	14.2		0.441	0.110
Selenium, Total	7782-49-2	0.185	J	0.441	0.110

J Estimated ; the analyte concentration was less than the low standard (LOQ)

Microbac®

425 lw 3/31/09

9

Sample Number:	L09010268-09	PrePrep Method:	NONE	Instrument:	HYDRA
Client ID:	MR08-SS295-09A	Prep Method:	7471A	Prep Date:	01/15/2009 10:06
Matrix:	Soil	Analytical Method:	7471A	Cal Date:	01/26/2009 13:15
Workgroup Number:	WG293431	Analyst:	ADC	Run Date:	01/26/2009 15:07
Collect Date:	01/12/2009 10:45	Dilution:	1	File ID:	HY.012609.150744
Sample Tag:	01	Units:	mg/kg	Percent Solid:	90.2

Analyte	CAS. Number	Result	Qual	RL	MDL
Mercury, Total	7439-97-6		U	0.110	0.0221

U Undetected; the analyte was analyzed for, but not detected.

Microbac

2076 lcw 3/31/09

10

Sample Number: L09010268-10
Client ID: MR08-IS295-2-3-09A
Matrix: Soil
Workgroup Number: WG292627
Collect Date: 01/12/2009 11:10
Sample Tag: 01

PrePrep Method: NONE
Prep Method: 3051
Analytical Method: 6010B
Analyst: EDA
Dilution: 1
Units: mg/kg

Instrument: ICP-THERMO2
Prep Date: 01/15/2009 06:55
Cal Date: 01/15/2009 10:55
Run Date: 01/15/2009 16:23
File ID: T2.011509.162334
Percent Solid: 89.7

Analyte	CAS. Number	Result	Qual	RL	MDL
Silver, Total	7440-22-4		U	0.388	0.194
Barium, Total	7440-39-3	7.82		0.388	0.0776
Cadmium, Total	7440-43-9		U	0.0776	0.0388
Chromium, Total	7440-47-3	4.02		0.776	0.0931

U Undetected; the analyte was analyzed for, but not detected.

Microbac

22 lw 3/31/09

10

Sample Number: L09010268-10
Client ID: MR08-IS295-2-3-09A
Matrix: Soil
Workgroup Number: WG292785
Collect Date: 01/12/2009 11:10
Sample Tag: 01

PrePrep Method: NONE
Prep Method: 3051
Analytical Method: 6020
Analyst: WTD
Dilution: 1
Units: mg/kg

Instrument: ELAN-ICP
Prep Date: 01/16/2009 12:47
Cal Date: 01/16/2009 16:35
Run Date: 01/17/2009 03:57
File ID: EL.011709.035747
Percent Solid: 89.7

Analyte	CAS. Number	Result	Qual	RL	MDL
Arsenic, Total	7440-38-2	0.309	J	0.332	0.0830
Lead, Total	7439-92-1	1.85		0.443	0.111
Selenium, Total	7782-49-2	0.116	J	0.443	0.111

J Estimated ; the analyte concentration was less than the low standard (LOQ)

Microbac

426 MW 3/31/09

10

Sample Number: L09010268-10
Client ID: MR08-IS295-2-3-09A
Matrix: Soil
Workgroup Number: WG293431
Collect Date: 01/12/2009 11:10
Sample Tag: 01

PrePrep Method: NONE
Prep Method: 7471A
Analytical Method: 7471A
Analyst: ADC
Dilution: 1
Units: mg/kg

Instrument: HYDRA
Prep Date: 01/15/2009 10:06
Cal Date: 01/26/2009 13:15
Run Date: 01/26/2009 15:09
File ID: HY.012609.150928
Percent Solid: 89.7

Analyte	CAS. Number	Result	Qual	RL	MDL
Mercury, Total	7439-97-6		U	0.111	0.0221

U Undetected; the analyte was analyzed for, but not detected.

Microbac

2077 lee 3/31/09

11

Sample Number: L09010268-11
Client ID: MR08-SS296-09A
Matrix: Soil
Workgroup Number: WG292627
Collect Date: 01/12/2009 12:15
Sample Tag: 01

PrePrep Method: NONE
Prep Method: 3051
Analytical Method: 6010B
Analyst: EDA
Dilution: 1
Units: mg/kg

Instrument: ICP-THERMO2
Prep Date: 01/15/2009 06:55
Cal Date: 01/15/2009 10:55
Run Date: 01/15/2009 16:29
File ID: T2.011509.162935
Percent Solid: 91.0

Analyte	CAS. Number	Result	Qual	RL	MDL
Silver, Total	7440-22-4	0.251	J	0.379	0.190
Barium, Total	7440-39-3	127		0.379	0.0758
Cadmium, Total	7440-43-9	1.31		0.0758	0.0379
Chromium, Total	7440-47-3	10.4		0.758	0.0910

J Estimated ; the analyte concentration was less than the low standard (LOQ)

Microbac

23 MW 3/31/09

11

Sample Number:	L09010268-11	PrePrep Method:	NONE	Instrument:	ELAN-ICP
Client ID:	MR08-SS296-09A	Prep Method:	3051	Prep Date:	01/16/2009 12:47
Matrix:	Soil	Analytical Method:	6020	Cal Date:	01/19/2009 15:28
Workgroup Number:	WG292785	Analyst:	WTD	Run Date:	01/19/2009 21:01
Collect Date:	01/12/2009 12:15	Dilution:	10	File ID:	EL.011909.210142
Sample Tag:	DL01	Units:	mg/kg	Percent Solid:	91.0

Analyte	CAS. Number	Result	Qual	RL	MDL
Lead, Total	7439-92-1	103		4.23	1.06

Microbac

 fcw 3/31/09

11

Sample Number:	L09010268-11	PrePrep Method:	NONE	Instrument:	ELAN-ICP
Client ID:	MR08-SS296-09A	Prep Method:	3051	Prep Date:	01/16/2009 12:47
Matrix:	Soil	Analytical Method:	6020	Cal Date:	01/16/2009 16:35
Workgroup Number:	WG292785	Analyst:	WTD	Run Date:	01/17/2009 04:04
Collect Date:	01/12/2009 12:15	Dilution:	1	File ID:	EL.011709.040403
Sample Tag:	01	Units:	mg/kg	Percent Solid:	91.0

Analyte	CAS. Number	Result	Qual	RL	MDL
Arsenic, Total	7440-38-2	1.88		0.318	0.0794
Selenium, Total	7782-49-2	0.285	J	0.423	0.106

J Estimated ; the analyte concentration was less than the low standard (LOQ)

Microbac

428 MW 3/31/09

11

Sample Number: L09010268-11
Client ID: MR08-SS296-09A
Matrix: Soil
Workgroup Number: WG293431
Collect Date: 01/12/2009 12:15
Sample Tag: 01

PrePrep Method: NONE
Prep Method: 7471A
Analytical Method: 7471A
Analyst: ADC
Dilution: 1
Units: mg/kg

Instrument: HYDRA
Prep Date: 01/15/2009 10:06
Cal Date: 01/26/2009 13:15
Run Date: 01/26/2009 15:15
File ID: HY.012609.151511
Percent Solid: 91.0

Analyte	CAS. Number	Result	Qual	RL	MDL
Mercury, Total	7439-97-6		U	0.110	0.0220

U Undetected; the analyte was analyzed for, but not detected.

Microbac

2078 KW 3/31/09

12

Sample Number: L09010268-12
Client ID: MR08-IS296-5-6-09A
Matrix: Soil
Workgroup Number: WG292627
Collect Date: 01/12/2009 12:30
Sample Tag: 01

PrePrep Method: NONE
Prep Method: 3051
Analytical Method: 6010B
Analyst: EDA
Dilution: 1
Units: mg/kg

Instrument: ICP-THERMO2
Prep Date: 01/15/2009 06:55
Cal Date: 01/15/2009 10:55
Run Date: 01/15/2009 16:35
File ID: T2.011509.163538
Percent Solid: 90.2

Analyte	CAS. Number	Result	Qual	RL	MDL
Silver, Total	7440-22-4		U	0.399	0.199
Barium, Total	7440-39-3	5.60		0.399	0.0798
Cadmium, Total	7440-43-9		U	0.0798	0.0399
Chromium, Total	7440-47-3	4.76		0.798	0.0958

U Undetected; the analyte was analyzed for, but not detected.

Microbac

24 lw 3/31/09

12

Sample Number: L09010268-12
Client ID: MR08-IS296-5-6-09A
Matrix: Soil
Workgroup Number: WG292785
Collect Date: 01/12/2009 12:30
Sample Tag: 02

PrePrep Method: NONE
Prep Method: 3051
Analytical Method: 6020
Analyst: WTD
Dilution: 1
Units: mg/kg

Instrument: ELAN-ICP
Prep Date: 01/16/2009 12:47
Cal Date: 01/20/2009 11:44
Run Date: 01/20/2009 15:01
File ID: EL.012009.150121
Percent Solid: 90.2

Analyte	CAS. Number	Result	Qual	RL	MDL
Selenium, Total	7782-49-2		U	0.427	0.107

U Undetected; the analyte was analyzed for, but not detected.

Microbac

429 lw 3/31/09

12

Sample Number: L09010268-12
Client ID: MR08-IS296-5-6-09A
Matrix: Soil
Workgroup Number: WG292785
Collect Date: 01/12/2009 12:30
Sample Tag: 01

PrePrep Method: NONE
Prep Method: 3051
Analytical Method: 6020
Analyst: WTD
Dilution: 1
Units: mg/kg

Instrument: ELAN-ICP
Prep Date: 01/16/2009 12:47
Cal Date: 01/16/2009 16:35
Run Date: 01/17/2009 04:23
File ID: EL.011709.042322
Percent Solid: 90.2

Analyte	CAS. Number	Result	Qual	RL	MDL
Arsenic, Total	7440-38-2	0.263	J	0.320	0.0800
Lead, Total	7439-92-1	2.03		0.427	0.107

J Estimated ; the analyte concentration was less than the low standard (LOQ)

Microbac

430 lw 3/31/09

12

Sample Number: L09010268-12
Client ID: MR08-IS296-5-6-09A
Matrix: Soil
Workgroup Number: WG293431
Collect Date: 01/12/2009 12:30
Sample Tag: 01

PrePrep Method: NONE
Prep Method: 7471A
Analytical Method: 7471A
Analyst: ADC
Dilution: 1
Units: mg/kg

Instrument: HYDRA
Prep Date: 01/15/2009 10:06
Cal Date: 01/26/2009 13:15
Run Date: 01/26/2009 15:17
File ID: HY.012609.151704
Percent Solid: 90.2

Analyte	CAS. Number	Result	Qual	RL	MDL
Mercury, Total	7439-97-6		U	0.109	0.0219

U Undetected; the analyte was analyzed for, but not detected.

Microbac

2079 lw 3/31/09

13

Sample Number: L09010268-13
Client ID: MR08-SS300-09A
Matrix: Soil
Workgroup Number: WG292627
Collect Date: 01/12/2009 13:00
Sample Tag: 01

PrePrep Method: NONE
Prep Method: 3051
Analytical Method: 6010B
Analyst: EDA
Dilution: 1
Units: mg/kg

Instrument: ICP-THERMO2
Prep Date: 01/15/2009 06:55
Cal Date: 01/15/2009 10:55
Run Date: 01/15/2009 16:41
File ID: T2.011509.164139
Percent Solid: 89.6

Analyte	CAS. Number	Result	Qual	RL	MDL
Silver, Total	7440-22-4		U	0.384	0.192
Barium, Total	7440-39-3	9.80		0.384	0.0768
Cadmium, Total	7440-43-9	0.121		0.0768	0.0384
Chromium, Total	7440-47-3	6.76		0.768	0.0921

U Undetected; the analyte was analyzed for, but not detected.

Microbac

25 lw 3/31/09

13

Sample Number: L09010268-13
Client ID: MR08-SS300-09A
Matrix: Soil
Workgroup Number: WG292785
Collect Date: 01/12/2009 13:00
Sample Tag: 01

PrePrep Method: NONE
Prep Method: 3051
Analytical Method: 6020
Analyst: WTD
Dilution: 1
Units: mg/kg

Instrument: ELAN-ICP
Prep Date: 01/16/2009 12:47
Cal Date: 01/16/2009 16:35
Run Date: 01/17/2009 04:29
File ID: EL.011709.042937
Percent Solid: 89.6

Analyte	CAS. Number	Result	Qual	RL	MDL
Arsenic, Total	7440-38-2	0.606		0.308	0.0770
Lead, Total	7439-92-1	2.70		0.411	0.103

Microbac®

431 LW 3/31/09

13

Sample Number:	L09010268-13	PrePrep Method:	NONE	Instrument:	ELAN-ICP
Client ID:	MR08-SS300-09A	Prep Method:	3051	Prep Date:	01/16/2009 12:47
Matrix:	Soil	Analytical Method:	6020	Cal Date:	01/20/2009 11:44
Workgroup Number:	WG292785	Analyst:	WTD	Run Date:	01/20/2009 15:07
Collect Date:	01/12/2009 13:00	Dilution:	1	File ID:	EL.012009.150734
Sample Tag:	02	Units:	mg/kg	Percent Solid:	89.6

Analyte	CAS. Number	Result	Qual	RL	MDL
Selenium, Total	7782-49-2	0.445		0.411	0.103

Microbac

432 KW 3/31/09

13

Sample Number: L09010268-13
Client ID: MR08-SS300-09A
Matrix: Soil
Workgroup Number: WG293431
Collect Date: 01/12/2009 13:00
Sample Tag: 01

PrePrep Method: NONE
Prep Method: 7471A
Analytical Method: 7471A
Analyst: ADC
Dilution: 1
Units: mg/kg

Instrument: HYDRA
Prep Date: 01/15/2009 10:06
Cal Date: 01/26/2009 13:15
Run Date: 01/26/2009 15:18
File ID: HY.012609.151859
Percent Solid: 89.6

Analyte	CAS. Number	Result	Qual	RL	MDL
Mercury, Total	7439-97-6		U	0.110	0.0221

U Undetected; the analyte was analyzed for, but not detected.

Microbac

2080 LWJ 3/31/09

14

Sample Number: L09010268-14
Client ID: MR08-IS300-8-9-09A
Matrix: Soil
Workgroup Number: WG292627
Collect Date: 01/12/2009 13:25
Sample Tag: 01

PrePrep Method: NONE
Prep Method: 3051
Analytical Method: 6010B
Analyst: EDA
Dilution: 1
Units: mg/kg

Instrument: ICP-THERMO2
Prep Date: 01/15/2009 06:55
Cal Date: 01/15/2009 10:55
Run Date: 01/15/2009 16:59
File ID: T2.011509.165945
Percent Solid: 86.7

Analyte	CAS. Number	Result	Qual	RL	MDL
Silver, Total	7440-22-4		U	0.426	0.213
Barium, Total	7440-39-3	5.25		0.426	0.0853
Cadmium, Total	7440-43-9		U	0.0853	0.0426
Chromium, Total	7440-47-3	5.79		0.853	0.102

U Undetected; the analyte was analyzed for, but not detected.

Microbac

26 MW 3/31/09

14

Sample Number: L09010268-14
Client ID: MR08-IS300-8-9-09A
Matrix: Soil
Workgroup Number: WG292785
Collect Date: 01/12/2009 13:25
Sample Tag: 01

PrePrep Method: NONE
Prep Method: 3051
Analytical Method: 6020
Analyst: WTD
Dilution: 1
Units: mg/kg

Instrument: ELAN-ICP
Prep Date: 01/16/2009 12:47
Cal Date: 01/16/2009 16:35
Run Date: 01/17/2009 04:35
File ID: EL.011709.043550
Percent Solid: 86.7

Analyte	CAS. Number	Result	Qual	RL	MDL
Arsenic, Total	7440-38-2	0.129	J	0.326	0.0816
Lead, Total	7439-92-1	2.27		0.435	0.109

J Estimated ; the analyte concentration was less than the low standard (LOQ)

Microbac

433 lw 3/31/09

14

Sample Number: L09010268-14
Client ID: MR08-IS300-8-9-09A
Matrix: Soil
Workgroup Number: WG292785
Collect Date: 01/12/2009 13:25
Sample Tag: 02

PrePrep Method: NONE
Prep Method: 3051
Analytical Method: 6020
Analyst: WTD
Dilution: 1
Units: mg/kg

Instrument: ELAN-ICP
Prep Date: 01/16/2009 12:47
Cal Date: 01/20/2009 11:44
Run Date: 01/20/2009 15:13
File ID: EL.012009.151347
Percent Solid: 86.7

Analyte	CAS. Number	Result	Qual	RL	MDL
Selenium, Total	7782-49-2		U	0.435	0.109

U Undetected; the analyte was analyzed for, but not detected.

Microbac

434 JW 3/31/09

14

Sample Number: L09010268-14
Client ID: MR08-IS300-8-9-09A
Matrix: Soil
Workgroup Number: WG293431
Collect Date: 01/12/2009 13:25
Sample Tag: 01

PrePrep Method: NONE
Prep Method: 7471A
Analytical Method: 7471A
Analyst: ADC
Dilution: 1
Units: mg/kg

Instrument: HYDRA
Prep Date: 01/15/2009 10:06
Cal Date: 01/26/2009 13:15
Run Date: 01/26/2009 15:21
File ID: HY.012609.152104
Percent Solid: 86.7

Analyte	CAS. Number	Result	Qual	RL	MDL
Mercury, Total	7439-97-6		U	0.114	0.0228

U Undetected; the analyte was analyzed for, but not detected.

Microbac

2081 LW 3/31/09

15

Sample Number: L09010268-15
Client ID: MR08-SS301-09A
Matrix: Soil
Workgroup Number: WG292627
Collect Date: 01/12/2009 13:40
Sample Tag: 01

PrePrep Method: NONE
Prep Method: 3051
Analytical Method: 6010B
Analyst: EDA
Dilution: 1
Units: mg/kg

Instrument: ICP-THERMO2
Prep Date: 01/15/2009 06:55
Cal Date: 01/15/2009 10:55
Run Date: 01/15/2009 17:05
File ID: T2.011509.170545
Percent Solid: 94.8

Analyte	CAS. Number	Result	Qual	RL	MDL
Silver, Total	7440-22-4		U	0.361	0.181
Barium, Total	7440-39-3	5.17		0.361	0.0723
Cadmium, Total	7440-43-9	0.296		0.0723	0.0361
Chromium, Total	7440-47-3	8.98		0.723	0.0867

U Undetected; the analyte was analyzed for, but not detected.

Microbac

27 lew
3/31/09

15

Sample Number: L09010268-15
Client ID: MR08-SS301-09A
Matrix: Soil
Workgroup Number: WG292785
Collect Date: 01/12/2009 13:40
Sample Tag: 02

PrePrep Method: NONE
Prep Method: 3051
Analytical Method: 6020
Analyst: WTD
Dilution: 1
Units: mg/kg

Instrument: ELAN-ICP
Prep Date: 01/16/2009 12:47
Cal Date: 01/20/2009 11:44
Run Date: 01/20/2009 15:20
File ID: EL.012009.152000
Percent Solid: 94.8

Analyte	CAS. Number	Result	Qual	RL	MDL
Selenium, Total	7782-49-2	0.485		0.384	0.0959

Microbac

 fw 3/31/09

15

Sample Number: L09010268-15
Client ID: MR08-SS301-09A
Matrix: Soil
Workgroup Number: WG292785
Collect Date: 01/12/2009 13:40
Sample Tag: 01

PrePrep Method: NONE
Prep Method: 3051
Analytical Method: 6020
Analyst: WTD
Dilution: 1
Units: mg/kg

Instrument: ELAN-ICP
Prep Date: 01/16/2009 12:47
Cal Date: 01/16/2009 16:35
Run Date: 01/17/2009 04:42
File ID: EL.011709.044204
Percent Solid: 94.8

Analyte	CAS. Number	Result	Qual	RL	MDL
Arsenic, Total	7440-38-2	1.59		0.288	0.0720
Lead, Total	7439-92-1	1.14		0.384	0.0959

Microbac

436 JW 3/31/09

15

Sample Number:	L09010268-15	PrePrep Method:	NONE	Instrument:	HYDRA
Client ID:	MR08-SS301-09A	Prep Method:	7471A	Prep Date:	01/15/2009 10:06
Matrix:	Soil	Analytical Method:	7471A	Cal Date:	01/26/2009 13:15
Workgroup Number:	WG293431	Analyst:	ADC	Run Date:	01/26/2009 15:22
Collect Date:	01/12/2009 13:40	Dilution:	1	File ID:	HY.012609.152250
Sample Tag:	01	Units:	mg/kg	Percent Solid:	94.8

Analyte	CAS. Number	Result	Qual	RL	MDL
Mercury, Total	7439-97-6		U	0.105	0.0211

U Undetected; the analyte was analyzed for, but not detected.

Microbac

2082 lw
3/31/09

16

Sample Number: L09010268-16
Client ID: MR08-IS301-7-8-09A
Matrix: Soil
Workgroup Number: WG292627
Collect Date: 01/12/2009 14:10
Sample Tag: 01

PrePrep Method: NONE
Prep Method: 3051
Analytical Method: 6010B
Analyst: EDA
Dilution: 1
Units: mg/kg

Instrument: ICP-THERMO2
Prep Date: 01/15/2009 06:55
Cal Date: 01/15/2009 10:55
Run Date: 01/15/2009 17:12
File ID: T2.011509.171201
Percent Solid: 93.5

Analyte	CAS. Number	Result	Qual	RL	MDL
Silver, Total	7440-22-4		U	0.368	0.184
Barium, Total	7440-39-3	5.32		0.368	0.0735
Cadmium, Total	7440-43-9		U	0.0735	0.0368
Chromium, Total	7440-47-3	6.40		0.735	0.0882

U Undetected; the analyte was analyzed for, but not detected.

Microbac

28 MW 3/3/09

16

Sample Number: L09010268-16
Client ID: MR08-IS301-7-8-09A
Matrix: Soil
Workgroup Number: WG292785
Collect Date: 01/12/2009 14:10
Sample Tag: 01

PrePrep Method: NONE
Prep Method: 3051
Analytical Method: 6020
Analyst: WTD
Dilution: 1
Units: mg/kg

Instrument: ELAN-ICP
Prep Date: 01/16/2009 12:47
Cal Date: 01/16/2009 16:35
Run Date: 01/17/2009 04:48
File ID: EL.011709.044818
Percent Solid: 93.5

Analyte	CAS. Number	Result	Qual	RL	MDL
Arsenic, Total	7440-38-2	0.892		0.313	0.0782
Lead, Total	7439-92-1	2.75		0.417	0.104

Microbac

 fw 3/31/09

16

Sample Number: L09010268-16
Client ID: MR08-IS301-7-8-09A
Matrix: Soil
Workgroup Number: WG292785
Collect Date: 01/12/2009 14:10
Sample Tag: 02

PrePrep Method: NONE
Prep Method: 3051
Analytical Method: 6020
Analyst: WTD
Dilution: 1
Units: mg/kg

Instrument: ELAN-ICP
Prep Date: 01/16/2009 12:47
Cal Date: 01/20/2009 11:44
Run Date: 01/20/2009 15:26
File ID: EL.012009.152614
Percent Solid: 93.5

Analyte	CAS. Number	Result	Qual	RL	MDL
Selenium, Total	7782-49-2		U	0.417	0.104

U Undetected; the analyte was analyzed for, but not detected.

Microbac

 3/31/09

16

Sample Number:	L09010268-16	PrePrep Method:	NONE	Instrument:	HYDRA
Client ID:	MR08-IS301-7-8-09A	Prep Method:	7471A	Prep Date:	01/15/2009 10:06
Matrix:	Soil	Analytical Method:	7471A	Cal Date:	01/26/2009 13:15
Workgroup Number:	WG293431	Analyst:	ADC	Run Date:	01/26/2009 15:24
Collect Date:	01/12/2009 14:10	Dilution:	1	File ID:	HY.012609.152434
Sample Tag:	01	Units:	mg/kg	Percent Solid:	93.5

Analyte	CAS. Number	Result	Qual	RL	MDL
Mercury, Total	7439-97-6		U	0.106	0.0211

U Undetected; the analyte was analyzed for, but not detected.

Microbac

2083 JW 3/31/09

17

Sample Number: L09010268-17
Client ID: MR08-SS302-09A
Matrix: Soil
Workgroup Number: WG292627
Collect Date: 01/12/2009 14:30
Sample Tag: 01

PrePrep Method: NONE
Prep Method: 3051
Analytical Method: 6010B
Analyst: EDA
Dilution: 1
Units: mg/kg

Instrument: ICP-THERMO2
Prep Date: 01/15/2009 06:55
Cal Date: 01/15/2009 10:55
Run Date: 01/15/2009 17:18
File ID: T2.011509.171801
Percent Solid: 94.0

Analyte	CAS. Number	Result	Qual	RL	MDL
Silver, Total	7440-22-4	0.217	J	0.377	0.189
Barium, Total	7440-39-3	7.77		0.377	0.0754
Cadmium, Total	7440-43-9	0.233		0.0754	0.0377
Chromium, Total	7440-47-3	10.2		0.754	0.0905

J Estimated ; the analyte concentration was less than the low standard (LOQ)

Microbac

 lw 3/31/09

17

Sample Number: L09010268-17
Client ID: MR08-SS302-09A
Matrix: Soil
Workgroup Number: WG292785
Collect Date: 01/12/2009 14:30
Sample Tag: 02

PrePrep Method: NONE
Prep Method: 3051
Analytical Method: 6020
Analyst: WTD
Dilution: 1
Units: mg/kg

Instrument: ELAN-ICP
Prep Date: 01/16/2009 12:47
Cal Date: 01/20/2009 11:44
Run Date: 01/20/2009 15:32
File ID: EL.012009.153228
Percent Solid: 94.0

Analyte	CAS. Number	Result	Qual	RL	MDL
Selenium, Total	7782-49-2	0.419		0.409	0.102

Microbac

439 MW 3/31/09

17

Sample Number: L09010268-17
Client ID: MR08-SS302-09A
Matrix: Soil
Workgroup Number: WG292785
Collect Date: 01/12/2009 14:30
Sample Tag: 01

PrePrep Method: NONE
Prep Method: 3051
Analytical Method: 6020
Analyst: WTD
Dilution: 1
Units: mg/kg

Instrument: ELAN-ICP
Prep Date: 01/16/2009 12:47
Cal Date: 01/16/2009 16:35
Run Date: 01/17/2009 04:54
File ID: EL.011709.045432
Percent Solid: 94.0

Analyte	CAS. Number	Result	Qual	RL	MDL
Arsenic, Total	7440-38-2	1.32		0.307	0.0767
Lead, Total	7439-92-1	3.14		0.409	0.102

Microbac

440 fuw 3/31/09

17

Sample Number: L09010268-17
Client ID: MR08-SS302-09A
Matrix: Soil
Workgroup Number: WG292878
Collect Date: 01/12/2009 14:30
Sample Tag: 01

PrePrep Method: NONE
Prep Method: 7471A
Analytical Method: 7471A
Analyst: ADC
Dilution: 1
Units: mg/kg

Instrument: HYDRA
Prep Date: 01/16/2009 08:25
Cal Date: 01/20/2009 09:36
Run Date: 01/20/2009 09:52
File ID: HY.012009.095215
Percent Solid: 94.0

Analyte	CAS. Number	Result	Qual	RL	MDL
Mercury, Total	7439-97-6		U	0.103	0.0207

U Undetected; the analyte was analyzed for, but not detected.

Microbac

2084 MW
3/31/09

18

Sample Number: L09010268-18
Client ID: MR08-IS302-8-9-09A
Matrix: Soil
Workgroup Number: WG292627
Collect Date: 01/12/2009 15:00
Sample Tag: 01

PrePrep Method: NONE
Prep Method: 3051
Analytical Method: 6010B
Analyst: EDA
Dilution: 1
Units: mg/kg

Instrument: ICP-THERMO2
Prep Date: 01/15/2009 06:55
Cal Date: 01/15/2009 10:55
Run Date: 01/15/2009 17:24
File ID: T2.011509.172417
Percent Solid: 88.7

Analyte	CAS. Number	Result	Qual	RL	MDL
Silver, Total	7440-22-4	0.247	J	0.383	0.191
Barium, Total	7440-39-3	5.79		0.383	0.0765
Cadmium, Total	7440-43-9		U	0.0765	0.0383
Chromium, Total	7440-47-3	6.90		0.765	0.0918

U Undetected; the analyte was analyzed for, but not detected.
J Estimated ; the analyte concentration was less than the low standard (LOQ)

Microbac

30 lw 3/31/09

18

Sample Number: L09010268-18
Client ID: MR08-IS302-8-9-09A
Matrix: Soil
Workgroup Number: WG293755
Collect Date: 01/12/2009 15:00
Sample Tag: 01

PrePrep Method: NONE
Prep Method: 3051
Analytical Method: 6020
Analyst: JYH
Dilution: 1
Units: mg/kg

Instrument: ELAN-ICP
Prep Date: 01/19/2009 06:50
Cal Date: 01/30/2009 11:12
Run Date: 01/30/2009 21:50
File ID: EL.013009.215057
Percent Solid: 88.7

Analyte	CAS. Number	Result	Qual	RL	MDL
Arsenic, Total	7440-38-2	0.298	J	0.336	0.0841
Lead, Total	7439-92-1	2.96 J		0.448	0.112
Selenium, Total	7782-49-2		U	0.448	0.112

MSH

U Undetected; the analyte was analyzed for, but not detected.
J Estimated ; the analyte concentration was less than the low standard (LOQ)

Microbac

441 lw
3/31/09

18

Sample Number: L09010268-18
Client ID: MR08-IS302-8-9-09A
Matrix: Soil
Workgroup Number: WG292878
Collect Date: 01/12/2009 15:00
Sample Tag: 01

PrePrep Method: NONE
Prep Method: 7471A
Analytical Method: 7471A
Analyst: ADC
Dilution: 1
Units: mg/kg

Instrument: HYDRA
Prep Date: 01/16/2009 08:26
Cal Date: 01/20/2009 09:36
Run Date: 01/20/2009 09:56
File ID: HY.012009.095632
Percent Solid: 88.7

Analyte	CAS. Number	Result	Qual	RL	MDL
Mercury, Total	7439-97-6		U	0.107	0.0214

U Undetected; the analyte was analyzed for, but not detected.

Microbac

2085 lw 3/31/09

19

Sample Number: L09010268-19
Client ID: MR08-SS303-09A
Matrix: Soil
Workgroup Number: WG292664
Collect Date: 01/12/2009 15:30
Sample Tag: 01

PrePrep Method: NONE
Prep Method: 3051
Analytical Method: 6010B
Analyst: EDA
Dilution: 1
Units: mg/kg

Instrument: ICP-THERMO2
Prep Date: 01/15/2009 07:43
Cal Date: 01/15/2009 10:55
Run Date: 01/15/2009 18:41
File ID: T2.011509.184141
Percent Solid: 94.1

Analyte	CAS. Number	Result	Qual	RL	MDL
Silver, Total	7440-22-4		U	0.378	0.189
Barium, Total	7440-39-3	2.42 J		0.378	0.0757
Cadmium, Total	7440-43-9		U	0.0757	0.0378
Chromium, Total	7440-47-3	1.90		0.757	0.0908

SD

U Undetected; the analyte was analyzed for, but not detected.

Microbac

31 LW 3/31/09

19

Sample Number: L09010268-19
Client ID: MR08-SS303-09A
Matrix: Soil
Workgroup Number: WG293755
Collect Date: 01/12/2009 15:30
Sample Tag: 01

PrePrep Method: NONE
Prep Method: 3051
Analytical Method: 6020
Analyst: JYH
Dilution: 1
Units: mg/kg

Instrument: ELAN-ICP
Prep Date: 01/19/2009 06:50
Cal Date: 01/30/2009 11:12
Run Date: 01/30/2009 21:57
File ID: EL.013009.215700
Percent Solid: 94.1

Analyte	CAS. Number	Result	Qual	RL	MDL
Arsenic, Total	7440-38-2		U	0.308	0.0771
Lead, Total	7439-92-1	2.48 J		0.411	0.103
Selenium, Total	7782-49-2	0.129	J	0.411	0.103

MSH

U Undetected; the analyte was analyzed for, but not detected.
J Estimated ; the analyte concentration was less than the low standard (LOQ)

Microbac

442 lw 3/31/09

10

Sample Number:	L09010268-19	PrePrep Method:	NONE	Instrument:	HYDRA
Client ID:	MR08-SS303-09A	Prep Method:	7471A	Prep Date:	01/16/2009 08:26
Matrix:	Soil	Analytical Method:	7471A	Cal Date:	01/20/2009 09:36
Workgroup Number:	WG292878	Analyst:	ADC	Run Date:	01/20/2009 09:58
Collect Date:	01/12/2009 15:30	Dilution:	1	File ID:	HY.012009.095843
Sample Tag:	01	Units:	mg/kg	Percent Solid:	94.1

Analyte	CAS. Number	Result	Qual	RL	MDL
Mercury, Total	7439-97-6		U	0.103	0.0205

U Undetected; the analyte was analyzed for, but not detected.

Microbac

2086 LW 3/31/09

20

Sample Number: L09010268-20
Client ID: MR08-IS303-6-7-09A
Matrix: Soil
Workgroup Number: WG292664
Collect Date: 01/12/2009 10:10
Sample Tag: 01

PrePrep Method: NONE
Prep Method: 3051
Analytical Method: 6010B
Analyst: EDA
Dilution: 1
Units: mg/kg

Instrument: ICP-THERMO2
Prep Date: 01/15/2009 07:43
Cal Date: 01/15/2009 10:55
Run Date: 01/15/2009 18:47
File ID: T2.011509.184743
Percent Solid: 88.8

Analyte	CAS. Number	Result	Qual	RL	MDL
Silver, Total	7440-22-4		U	0.409	0.204
Barium, Total	7440-39-3	8.70 J		0.409	0.0818
Cadmium, Total	7440-43-9		U	0.0818	0.0409
Chromium, Total	7440-47-3	3.62		0.818	0.0981

SD

U Undetected; the analyte was analyzed for, but not detected.

Microbac

32 fuw 3/31/09

20

Sample Number: L09010268-20
Client ID: MR08-IS303-6-7-09A
Matrix: Soil
Workgroup Number: WG293755
Collect Date: 01/12/2009 10:10
Sample Tag: DL01

PrePrep Method: NONE
Prep Method: 3051
Analytical Method: 6020
Analyst: JYH
Dilution: 2
Units: mg/kg

Instrument: ELAN-ICP
Prep Date: 01/19/2009 06:50
Cal Date: 01/30/2009 11:12
Run Date: 01/30/2009 22:03
File ID: EL.013009.220304
Percent Solid: 88.8

Analyte	CAS. Number	Result	Qual	RL	MDL
Arsenic, Total	7440-38-2	0.658		0.645	0.161
Lead, Total	7439-92-1	2.53 J		0.859	0.215
Selenium, Total	7782-49-2		U	0.859	0.215

MSH

U Undetected; the analyte was analyzed for, but not detected.

Microbac

443 MW 3/31/09

20

Sample Number: L09010268-20
Client ID: MR08-IS303-6-7-09A
Matrix: Soil
Workgroup Number: WG292878
Collect Date: 01/12/2009 10:10
Sample Tag: 01

PrePrep Method: NONE
Prep Method: 7471A
Analytical Method: 7471A
Analyst: ADC
Dilution: 1
Units: mg/kg

Instrument: HYDRA
Prep Date: 01/16/2009 08:26
Cal Date: 01/20/2009 09:36
Run Date: 01/20/2009 10:00
File ID: HY.012009.100037
Percent Solid: 88.8

Analyte	CAS. Number	Result	Qual	RL	MDL
Mercury, Total	7439-97-6		U	0.111	0.0223

U Undetected; the analyte was analyzed for, but not detected.

Microbac

2087 LW 3/31/09

21

Sample Number: L09010268-21
Client ID: MR08-EB01011209-SS
Matrix: Water
Workgroup Number: WG292752
Collect Date: 01/12/2009 08:00
Sample Tag: 01

PrePrep Method: NONE
Prep Method: 3005A
Analytical Method: 6010B
Analyst: SLP
Dilution: 1
Units: ug/L

Instrument: PE-ICP2
Prep Date: 01/15/2009 08:08
Cal Date: 01/17/2009 17:25
Run Date: 01/17/2009 23:09
File ID: P2.011709.230927

Analyte	CAS. Number	Result	Qual	RL	MDL
Barium, Total	7440-39-3	10.0 ~~3.77~~	U ~~J~~	10.0	2.50
Cadmium, Total	7440-43-9		U	1.00	0.250
Chromium, Total	7440-47-3		U	10.0	2.50
Silver, Total	7440-22-4		U	6.00	2.00

U Undetected; the analyte was analyzed for, but not detected.
J Estimated ; the analyte concentration was less than the low standard (LOQ)

Microbac

33 lw 3/31/09

21

Sample Number: L09010268-21
Client ID: MR08-EB01011209-SS
Matrix: Water
Workgroup Number: WG292713
Collect Date: 01/12/2009 08:00
Sample Tag: 01

PrePrep Method: NONE
Prep Method: 3015
Analytical Method: 6020
Analyst: WTD
Dilution: 1
Units: ug/L

Instrument: ELAN-ICP
Prep Date: 01/16/2009 08:59
Cal Date: 01/16/2009 16:35
Run Date: 01/16/2009 19:22
File ID: EL.011609.192232

Analyte	CAS. Number	Result	Qual	RL	MDL
Arsenic, Total	7440-38-2		U	1.00	0.250
Lead, Total	7439-92-1		U	1.00	0.250
Selenium, Total	7782-49-2		U	2.00	0.500

U Undetected; the analyte was analyzed for, but not detected.

Microbac

444 [illegible] 3/31/09

21

Sample Number: L09010268-21
Client ID: MR08-EB01011209-SS
Matrix: Water
Workgroup Number: WG292821
Collect Date: 01/12/2009 08:00
Sample Tag: 01

PrePrep Method: NONE
Prep Method: 7470A
Analytical Method: 7470A
Analyst: ADC
Dilution: 1
Units: ug/L

Instrument: HYDRA
Prep Date: 01/15/2009 09:11
Cal Date: 01/19/2009 11:28
Run Date: 01/19/2009 12:16
File ID: HY.011909.121642

Analyte	CAS. Number	Result	Qual	RL	MDL
Mercury	7439-97-6		U	0.516	0.100

U Undetected; the analyte was analyzed for, but not detected.

Microbac

2088 LW 3/31/09

ENVIRONMENTAL
Data Services, Inc.

METALS

USEPA Region IV - Level IV Review

Site: MCB Camp Lejeune, TO-09 SDG #: L09010300

Client: CH2M HILL, Inc., Virginia Beach, Virginia Date: March 31, 2009

Laboratory: Microbac Laboratories, Inc., Marietta, Ohio Reviewer: Nancy Weaver

EDS ID	Client Sample ID	Laboratory Sample ID	Matrix
1	MR08-SS286-09A	L09010300-01	Soil
2	MR08-IS286-6-7-09A	L09010300-02	Soil
3	MR08-SS287-09A	L09010300-03	Soil
4	MR08-IS287-5-6-09A	L09010300-04	Soil
5	MR08-SS288-09A	L09010300-05	Soil
6MS	MR08-SS288-09AMS	L09010300-06MS	Soil
7MSD	MR08-SS288-09AMSD	L09010300-07MSD	Soil
8	MR08-IS288-6-7-09A	L09010300-08	Soil
9MS	MR08-IS288-6-7-09AMS	L09010300-09MS	Soil
10MSD	MR08-IS288-6-7-09AMSD	L09010300-10MSD	Soil
11	MR08-SS264-09A	L09010300-11	Soil
12	MR08-IS264-10-11-09A	L09010300-12	Soil
13	MR08-SS263-09A	L09010300-13	Soil
14	MR08-IS263-2-3-09A	L09010300-14	Soil
15	MR08-SS262-09A	L09010300-15	Soil
16	MR08-IS262-4-5-09A	L09010300-16	Soil
17	MR08-SS261-09A	L09010300-17	Soil
18	MR08-IS261-4-5-09A	L09010300-18	Soil
19	MR08-SS260-09A	L09010300-19	Soil
20	MR08-IS260-6-7-09A	L09010300-20	Soil
21	MR08-EB01011409-SS	L09010300-21	Water

The USEPA "Contract Laboratory Program National Functional Guidelines for Inorganic Data Review," October 2004, and professional judgement were used in evaluating the data in this summary report.

Holding Times - All samples were prepared and analyzed within 28 days for mercury and 180 days for all other metals.

Calibration - The ICV and CCV %R values were acceptable.

Method and Calibration Blanks - The method blanks and continuing calibration blanks exhibited the following contamination.

Compound	Conc. ug/L	Action Level ug/L	Qualifier	Affected Samples
Barium	3.82	19.1	U	21

Field and Equipment Blank - Field QC results are summarized below.

Blank ID	Compound	Conc. ug/L	Action Level ug/L	Qualifier	Affected Samples
MR08-EB01011409-SS	None-ND	-	-	-	-
MR08-FB01011009	None-ND	-	-	-	-

ICP Interference Check Sample - All %R values were acceptable.

MS/MSD - The MS/MSD sample exhibited acceptable %R and RPD values except the following.

MS/MSD Sample ID	Compound	MS/MSD %R/RPD	Qualifier	Affected Samples
8 (WG292760)	Barium	73.2%/Ok/Ok	J/UJ	1-5, 8, 11-20
	Chromium	52.4%/Ok/24.7	J/UJ	
5 (WG293755)	Lead	188%/167%/Ok	J	1-5, 8, 11-19

LCS - The LCS samples exhibited acceptable %R values.

ICP Serial Dilution - The ICP serial dilution sample exhibited acceptable %D values except the following.

ICP Sample ID	Compound	%D	Qualifier	Affected Samples
Reference (WG293755)	Selenium	12.5%	J	1, 3, 5, 8, 11, 13-17, 19

Field Duplicates - Field duplicate samples were not included in this data package.

Compound Quantitation - Several dilutions were analyzed at various dilutions for various analytes due to high concentrations.

Report Number: L09010300

Report Date : **February 12, 2009**

1

Sample Number:	L09010300-01	PrePrep Method:	NONE	Instrument:	ICP-THERMO2
Client ID:	MR08-SS286-09A	Prep Method:	3051	Prep Date:	01/16/2009 06:30
Matrix:	Soil	Analytical Method:	6010B	Cal Date:	01/16/2009 15:46
Workgroup Number:	WG292760	Analyst:	EDA	Run Date:	01/16/2009 16:47
Collect Date:	01/14/2009 08:10	Dilution:	1	File ID:	T2.011609.164737
Sample Tag:	01	Units:	mg/kg	Percent Solid:	86.5

Analyte	CAS. Number	Result	Qual	RL	MDL	
Silver, Total	7440-22-4		U	0.868	0.217	
Barium, Total	7440-39-3	10.1 J		0.434	0.0868	MSL
Cadmium, Total	7440-43-9		U	0.174	0.0434	
Chromium, Total	7440-47-3	6.25 J		0.868	0.104	MSL

U Undetected; the analyte was analyzed for, but not detected.

Microbac®

13 lw 3/31/09

Report Number: L09010300

Report Date : February 12, 2009

Sample Number:	L09010300-01	PrePrep Method:	NONE	Instrument:	ELAN-ICP
Client ID:	MR08-SS286-09A	Prep Method:	3051	Prep Date:	01/19/2009 06:50
Matrix:	Soil	Analytical Method:	6020	Cal Date:	01/30/2009 11:12
Workgroup Number:	WG293755	Analyst:	JYH	Run Date:	01/30/2009 22:09
Collect Date:	01/14/2009 08:10	Dilution:	1	File ID:	EL.013009.220908
Sample Tag:	01	Units:	mg/kg	Percent Solid:	86.5

Analyte	CAS. Number	Result	Qual	RL	MDL	
Arsenic, Total	7440-38-2	0.752		0.342	0.0854	
Lead, Total	7439-92-1	25.4 J		0.455	0.114	MSH
Selenium, Total	7782-49-2	0.265 J	J	0.455	0.114	SD

J Estimated ; the analyte concentration was less than the low standard (LOQ)

Microbac

495 lw 3/31/09

Report Number: L09010300

Report Date : February 12, 2009

Sample Number:	L09010300-01	PrePrep Method:	NONE	Instrument:	HYDRA
Client ID:	MR08-SS286-09A	Prep Method:	7471A	Prep Date:	01/16/2009 08:28
Matrix:	Soil	Analytical Method:	7471A	Cal Date:	01/20/2009 09:36
Workgroup Number:	WG292878	Analyst:	ADC	Run Date:	01/20/2009 10:12
Collect Date:	01/14/2009 08:10	Dilution:	1	File ID:	HY.012009.101258
Sample Tag:	01	Units:	mg/kg	Percent Solid:	86.5

Analyte	CAS. Number	Result	Qual	RL	MDL
Mercury, Total	7439-97-6		U	0.112	0.0225

U Undetected; the analyte was analyzed for, but not detected.

Microbac

2751 LW 3/31/09

2

Sample Number: L09010300-02
Client ID: MR08-IS286-6-7-09A
Matrix: Soil
Workgroup Number: WG292760
Collect Date: 01/14/2009 08:30
Sample Tag: 01

PrePrep Method: NONE
Prep Method: 3051
Analytical Method: 6010B
Analyst: EDA
Dilution: 1
Units: mg/kg

Instrument: ICP-THERMO2
Prep Date: 01/16/2009 06:30
Cal Date: 01/16/2009 15:46
Run Date: 01/16/2009 17:11
File ID: T2.011609.171134
Percent Solid: 93.0

Analyte	CAS. Number	Result	Qual	RL	MDL	
Silver, Total	7440-22-4	0.222	J	0.787	0.197	
Barium, Total	7440-39-3	2.83 J		0.394	0.0787	MSL
Cadmium, Total	7440-43-9		U	0.157	0.0394	
Chromium, Total	7440-47-3	2.04 J		0.787	0.0945	MSL

U Undetected; the analyte was analyzed for, but not detected.
J Estimated ; the analyte concentration was less than the low standard (LOQ)

Microbac

14 lw 3/31/09

2

Sample Number: L09010300-02
Client ID: MR08-IS286-6-7-09A
Matrix: Soil
Workgroup Number: WG293755
Collect Date: 01/14/2009 08:30
Sample Tag: 01

PrePrep Method: NONE
Prep Method: 3051
Analytical Method: 6020
Analyst: JYH
Dilution: 1
Units: mg/kg

Instrument: ELAN-ICP
Prep Date: 01/19/2009 06:50
Cal Date: 01/30/2009 11:12
Run Date: 01/30/2009 22:27
File ID: EL.013009.222723
Percent Solid: 93.0

Analyte	CAS. Number	Result	Qual	RL	MDL
Arsenic, Total	7440-38-2	0.326		0.313	0.0781
Lead, Total	7439-92-1	1.57 J		0.417	0.104
Selenium, Total	7782-49-2		U	0.417	0.104

MSH

U Undetected; the analyte was analyzed for, but not detected.

Microbac

496 lw 3/31/09

2

Sample Number: L09010300-02
Client ID: MR08-IS286-6-7-09A
Matrix: Soil
Workgroup Number: WG292878
Collect Date: 01/14/2009 08:30
Sample Tag: 01

PrePrep Method: NONE
Prep Method: 7471A
Analytical Method: 7471A
Analyst: ADC
Dilution: 1
Units: mg/kg

Instrument: HYDRA
Prep Date: 01/16/2009 08:29
Cal Date: 01/20/2009 09:36
Run Date: 01/20/2009 10:14
File ID: HY.012009.101439
Percent Solid: 93.0

Analyte	CAS. Number	Result	Qual	RL	MDL
Mercury, Total	7439-97-6		U	0.106	0.0213

U Undetected; the analyte was analyzed for, but not detected.

Microbac

2752

RLW
3/31/09

3

Sample Number: L09010300-03
Client ID: MR08-SS287-09A
Matrix: Soil
Workgroup Number: WG292760
Collect Date: 01/14/2009 09:15
Sample Tag: 01

PrePrep Method: NONE
Prep Method: 3051
Analytical Method: 6010B
Analyst: EDA
Dilution: 1
Units: mg/kg

Instrument: ICP-THERMO2
Prep Date: 01/16/2009 06:30
Cal Date: 01/16/2009 15:46
Run Date: 01/16/2009 17:17
File ID: T2.011609.171737
Percent Solid: 86.9

Analyte	CAS. Number	Result	Qual	RL	MDL	
Silver, Total	7440-22-4		U	0.770	0.192	
Barium, Total	7440-39-3	9.54 J		0.385	0.0770	MSL
Cadmium, Total	7440-43-9	0.0666	J	0.154	0.0385	
Chromium, Total	7440-47-3	2.06 J		0.770	0.0924	MSL

U Undetected; the analyte was analyzed for, but not detected.
J Estimated ; the analyte concentration was less than the low standard (LOQ)

Microbac

15 lw 3/31/09

3

Sample Number: L09010300-03
Client ID: MR08-SS287-09A
Matrix: Soil
Workgroup Number: WG293755
Collect Date: 01/14/2009 09:15
Sample Tag: 01

PrePrep Method: NONE
Prep Method: 3051
Analytical Method: 6020
Analyst: JYH
Dilution: 1
Units: mg/kg

Instrument: ELAN-ICP
Prep Date: 01/19/2009 06:50
Cal Date: 01/30/2009 11:12
Run Date: 01/30/2009 22:33
File ID: EL.013009.223329
Percent Solid: 86.9

Analyte	CAS. Number	Result	Qual	RL	MDL
Arsenic, Total	7440-38-2	0.442		0.333	0.0832
Lead, Total	7439-92-1	22.0 J		0.444	0.111
Selenium, Total	7782-49-2	0.126 J	~~J~~	0.444	0.111

MSH
SD

J Estimated ; the analyte concentration was less than the low standard (LOQ)

Microbac

497 fw 3/31/09

3

Sample Number: L09010300-03
Client ID: MR08-SS287-09A
Matrix: Soil
Workgroup Number: WG292878
Collect Date: 01/14/2009 09:15
Sample Tag: 01

PrePrep Method: NONE
Prep Method: 7471A
Analytical Method: 7471A
Analyst: ADC
Dilution: 1
Units: mg/kg

Instrument: HYDRA
Prep Date: 01/16/2009 08:29
Cal Date: 01/20/2009 09:36
Run Date: 01/20/2009 10:16
File ID: HY.012009.101646
Percent Solid: 86.9

Analyte	CAS. Number	Result	Qual	RL	MDL
Mercury, Total	7439-97-6		U	0.113	0.0227

U Undetected; the analyte was analyzed for, but not detected.

Microbac

2753 lw 3/3/09

4

Sample Number: L09010300-04
Client ID: MR08-IS287-5-6-09A
Matrix: Soil
Workgroup Number: WG292760
Collect Date: 01/14/2009 09:30
Sample Tag: 01

PrePrep Method: NONE
Prep Method: 3051
Analytical Method: 6010B
Analyst: EDA
Dilution: 1
Units: mg/kg

Instrument: ICP-THERMO2
Prep Date: 01/16/2009 06:30
Cal Date: 01/16/2009 15:46
Run Date: 01/16/2009 17:23
File ID: T2.011609.172337
Percent Solid: 90.8

Analyte	CAS. Number	Result	Qual	RL	MDL	
Silver, Total	7440-22-4		U	0.769	0.192	
Barium, Total	7440-39-3	2.62 J		0.385	0.0769	MSL
Cadmium, Total	7440-43-9		U	0.154	0.0385	
Chromium, Total	7440-47-3	1.69 J		0.769	0.0923	MSL

U Undetected; the analyte was analyzed for, but not detected.

Microbac

16 LW 3/31/09

4

Sample Number: L09010300-04
Client ID: MR08-IS287-5-6-09A
Matrix: Soil
Workgroup Number: WG293755
Collect Date: 01/14/2009 09:30
Sample Tag: DL01

PrePrep Method: NONE
Prep Method: 3051
Analytical Method: 6020
Analyst: JYH
Dilution: 2
Units: mg/kg

Instrument: ELAN-ICP
Prep Date: 01/19/2009 06:50
Cal Date: 02/02/2009 11:02
Run Date: 02/02/2009 21:28
File ID: EL.020209.212823
Percent Solid: 90.8

Analyte	CAS. Number	Result	Qual	RL	MDL
Lead, Total	7439-92-1	1.84 J		0.847	0.212

MSH

Microbac

498 lw 3/31/09

4

Sample Number: L09010300-04
Client ID: MR08-IS287-5-6-09A
Matrix: Soil
Workgroup Number: WG293755
Collect Date: 01/14/2009 09:30
Sample Tag: 01

PrePrep Method: NONE
Prep Method: 3051
Analytical Method: 6020
Analyst: JYH
Dilution: 1
Units: mg/kg

Instrument: ELAN-ICP
Prep Date: 01/19/2009 06:50
Cal Date: 01/30/2009 11:12
Run Date: 01/30/2009 22:52
File ID: EL.013009.225238
Percent Solid: 90.8

Analyte	CAS. Number	Result	Qual	RL	MDL
Arsenic, Total	7440-38-2	0.158	J	0.318	0.0794
Selenium, Total	7782-49-2		U	0.424	0.106

U Undetected; the analyte was analyzed for, but not detected.
J Estimated ; the analyte concentration was less than the low standard (LOQ)

Microbac

499 JW 3/31/09

4

Sample Number: L09010300-04
Client ID: MR08-IS287-5-6-09A
Matrix: Soil
Workgroup Number: WG292878
Collect Date: 01/14/2009 09:30
Sample Tag: 01

PrePrep Method: NONE
Prep Method: 7471A
Analytical Method: 7471A
Analyst: ADC
Dilution: 1
Units: mg/kg

Instrument: HYDRA
Prep Date: 01/16/2009 08:30
Cal Date: 01/20/2009 09:36
Run Date: 01/20/2009 10:18
File ID: HY.012009.101842
Percent Solid: 90.8

Analyte	CAS. Number	Result	Qual	RL	MDL
Mercury, Total	7439-97-6		U	0.105	0.0210

U Undetected; the analyte was analyzed for, but not detected.

Microbac

2754 fw 3/31/09

5

Sample Number: L09010300-05
Client ID: MR08-SS288-09A
Matrix: Soil
Workgroup Number: WG292760
Collect Date: 01/14/2009 09:50
Sample Tag: 01

PrePrep Method: NONE
Prep Method: 3051
Analytical Method: 6010B
Analyst: EDA
Dilution: 1
Units: mg/kg

Instrument: ICP-THERMO2
Prep Date: 01/16/2009 06:30
Cal Date: 01/16/2009 15:46
Run Date: 01/16/2009 17:41
File ID: T2.011609.174138
Percent Solid: 90.5

Analyte	CAS. Number	Result	Qual	RL	MDL	
Silver, Total	7440-22-4	0.272	J	0.739	0.185	
Barium, Total	7440-39-3	6.01 J		0.369	0.0739	MSL
Cadmium, Total	7440-43-9		U	0.148	0.0369	
Chromium, Total	7440-47-3	2.22 J		0.739	0.0887	MSL

U Undetected; the analyte was analyzed for, but not detected.
J Estimated ; the analyte concentration was less than the low standard (LOQ)

Microbac

17 lw 3/3/09

5

Sample Number: L09010300-05
Client ID: MR08-SS288-09A
Matrix: Soil
Workgroup Number: WG293755
Collect Date: 01/14/2009 09:50
Sample Tag: 01

PrePrep Method: NONE
Prep Method: 3051
Analytical Method: 6020
Analyst: JYH
Dilution: 1
Units: mg/kg

Instrument: ELAN-ICP
Prep Date: 01/19/2009 06:50
Cal Date: 01/30/2009 11:12
Run Date: 01/30/2009 21:01
File ID: EL.013009.210127
Percent Solid: 90.5

Analyte	CAS. Number	Result	Qual	RL	MDL
Arsenic, Total	7440-38-2	0.293	J	0.322	0.0804
Lead, Total	7439-92-1	7.95 J		0.429	0.107
Selenium, Total	7782-49-2	0.172 J	~~J~~	0.429	0.107

MSH SD

J Estimated ; the analyte concentration was less than the low standard (LOQ)

Microbac®

500 JW 3/31/09

5

Sample Number: L09010300-05
Client ID: MR08-SS288-09A
Matrix: Soil
Workgroup Number: WG292878
Collect Date: 01/14/2009 09:50
Sample Tag: 01

PrePrep Method: NONE
Prep Method: 7471A
Analytical Method: 7471A
Analyst: ADC
Dilution: 1
Units: mg/kg

Instrument: HYDRA
Prep Date: 01/16/2009 08:30
Cal Date: 01/20/2009 09:36
Run Date: 01/20/2009 10:20
File ID: HY.012009.102033
Percent Solid: 90.5

Analyte	CAS. Number	Result	Qual	RL	MDL
Mercury, Total	7439-97-6		U	0.104	0.0209

U Undetected; the analyte was analyzed for, but not detected.

Microbac

2755 lw 3/31/09

8

Sample Number: L09010300-08
Client ID: MR08-IS288-6-7-09A
Matrix: Soil
Workgroup Number: WG292760
Collect Date: 01/14/2009 10:15
Sample Tag: 01

PrePrep Method: NONE
Prep Method: 3051
Analytical Method: 6010B
Analyst: EDA
Dilution: 1
Units: mg/kg

Instrument: ICP-THERMO2
Prep Date: 01/16/2009 06:30
Cal Date: 01/16/2009 15:46
Run Date: 01/16/2009 17:59
File ID: T2.011609.175926
Percent Solid: 86.5

Analyte	CAS. Number	Result	Qual	RL	MDL	
Silver, Total	7440-22-4	0.246	J	0.878	0.219	
Barium, Total	7440-39-3	11.0 J		0.439	0.0878	MSL
Cadmium, Total	7440-43-9		U	0.176	0.0439	
Chromium, Total	7440-47-3	8.84 J		0.878	0.105	MSL

U Undetected; the analyte was analyzed for, but not detected.
J Estimated ; the analyte concentration was less than the low standard (LOQ)

Microbac

20 LEW 3/31/09

8

Sample Number: L09010300-08
Client ID: MR08-IS288-6-7-09A
Matrix: Soil
Workgroup Number: WG293755
Collect Date: 01/14/2009 10:15
Sample Tag: 01

PrePrep Method: NONE
Prep Method: 3051
Analytical Method: 6020
Analyst: JYH
Dilution: 1
Units: mg/kg

Instrument: ELAN-ICP
Prep Date: 01/19/2009 06:50
Cal Date: 01/30/2009 11:12
Run Date: 01/30/2009 21:19
File ID: EL.013009.211943
Percent Solid: 86.5

Analyte	CAS. Number	Result	Qual	RL	MDL
Arsenic, Total	7440-38-2	1.06		0.342	0.0854
Lead, Total	7439-92-1	4.25 J		0.455	0.114
Selenium, Total	7782-49-2	0.154 J	J	0.455	0.114

MSH
SD

J Estimated ; the analyte concentration was less than the low standard (LOQ)

Microbac

503 lcw 3/31/09

8

Sample Number: L09010300-08
Client ID: MR08-IS288-6-7-09A
Matrix: Soil
Workgroup Number: WG292761
Collect Date: 01/14/2009 10:15
Sample Tag: 01

PrePrep Method: NONE
Prep Method: 7471A
Analytical Method: 7471A
Analyst: ADC
Dilution: 1
Units: mg/kg

Instrument: HYDRA
Prep Date: 01/16/2009 11:25
Cal Date: 01/16/2009 15:26
Run Date: 01/16/2009 15:50
File ID: HY.011609.155000
Percent Solid: 86.5

Analyte	CAS. Number	Result	Qual	RL	MDL
Mercury, Total	7439-97-6		U	0.112	0.0224

U Undetected; the analyte was analyzed for, but not detected.

Microbac

 MW 3/3/09

11

Sample Number: L09010300-11
Client ID: MR08-SS264-09A
Matrix: Soil
Workgroup Number: WG292760
Collect Date: 01/14/2009 10:50
Sample Tag: 01

PrePrep Method: NONE
Prep Method: 3051
Analytical Method: 6010B
Analyst: EDA
Dilution: 1
Units: mg/kg

Instrument: ICP-THERMO2
Prep Date: 01/16/2009 06:30
Cal Date: 01/16/2009 15:46
Run Date: 01/16/2009 18:17
File ID: T2.011609.181709
Percent Solid: 93.8

Analyte	CAS. Number	Result	Qual	RL	MDL	
Silver, Total	7440-22-4		U	0.748	0.187	
Barium, Total	7440-39-3	7.45 J		0.374	0.0748	MSL
Cadmium, Total	7440-43-9		U	0.150	0.0374	
Chromium, Total	7440-47-3	6.12 J		0.748	0.0898	MSL

U Undetected; the analyte was analyzed for, but not detected.

Microbac

23 LW 3/31/09

11

Sample Number: L09010300-11
Client ID: MR08-SS264-09A
Matrix: Soil
Workgroup Number: WG293755
Collect Date: 01/14/2009 10:50
Sample Tag: 01

PrePrep Method: NONE
Prep Method: 3051
Analytical Method: 6020
Analyst: JYH
Dilution: 1
Units: mg/kg

Instrument: ELAN-ICP
Prep Date: 01/19/2009 06:50
Cal Date: 01/30/2009 11:12
Run Date: 01/30/2009 22:58
File ID: EL.013009.225845
Percent Solid: 93.8

Analyte	CAS. Number	Result	Qual	RL	MDL
Arsenic, Total	7440-38-2	0.519		0.320	0.0799
Selenium, Total	7782-49-2	0.239	J	0.426	0.107

SD

J Estimated ; the analyte concentration was less than the low standard (LOQ)

Microbac

 fcw 3/31/09

11

Sample Number: L09010300-11
Client ID: MR08-SS264-09A
Matrix: Soil
Workgroup Number: WG293755
Collect Date: 01/14/2009 10:50
Sample Tag: DL01

PrePrep Method: NONE
Prep Method: 3051
Analytical Method: 6020
Analyst: JYH
Dilution: 2
Units: mg/kg

Instrument: ELAN-ICP
Prep Date: 01/19/2009 06:50
Cal Date: 02/02/2009 11:02
Run Date: 02/02/2009 21:34
File ID: EL.020209.213427
Percent Solid: 93.8

Analyte	CAS. Number	Result	Qual	RL	MDL
Lead, Total	7439-92-1	14.1 J		0.852	0.213

MSH

Microbac

507 lcw
3/31/09

11

Sample Number:	L09010300-11	PrePrep Method:	NONE	Instrument:	HYDRA
Client ID:	MR08-SS264-09A	Prep Method:	7471A	Prep Date:	01/16/2009 08:32
Matrix:	Soil	Analytical Method:	7471A	Cal Date:	01/20/2009 09:36
Workgroup Number:	WG292878	Analyst:	ADC	Run Date:	01/20/2009 10:30
Collect Date:	01/14/2009 10:50	Dilution:	1	File ID:	HY.012009.103003
Sample Tag:	01	Units:	mg/kg	Percent Solid:	93.8

Analyte	CAS. Number	Result	Qual	RL	MDL
Mercury, Total	7439-97-6		U	0.104	0.0209

U Undetected; the analyte was analyzed for, but not detected.

Microbac

2761 kW 3/31/09

12

Sample Number: L09010300-12
Client ID: MR08-IS264-10-11-09A
Matrix: Soil
Workgroup Number: WG292760
Collect Date: 01/14/2009 11:05
Sample Tag: 01

PrePrep Method: NONE
Prep Method: 3051
Analytical Method: 6010B
Analyst: EDA
Dilution: 1
Units: mg/kg

Instrument: ICP-THERMO2
Prep Date: 01/16/2009 06:30
Cal Date: 01/16/2009 15:46
Run Date: 01/16/2009 18:23
File ID: T2.011609.182308
Percent Solid: 88.8

Analyte	CAS. Number	Result	Qual	RL	MDL	
Silver, Total	7440-22-4		U	0.813	0.203	
Barium, Total	7440-39-3	0.589 J		0.406	0.0813	MSL
Cadmium, Total	7440-43-9		U	0.163	0.0406	
Chromium, Total	7440-47-3	0.662 J	J	0.813	0.0975	MSL

U Undetected; the analyte was analyzed for, but not detected.
J Estimated ; the analyte concentration was less than the low standard (LOQ)

Microbac

24 LW 3/31/09

12

Sample Number: L09010300-12
Client ID: MR08-IS264-10-11-09A
Matrix: Soil
Workgroup Number: WG293755
Collect Date: 01/14/2009 11:05
Sample Tag: DL01

PrePrep Method: NONE
Prep Method: 3051
Analytical Method: 6020
Analyst: JYH
Dilution: 2
Units: mg/kg

Instrument: ELAN-ICP
Prep Date: 01/19/2009 06:50
Cal Date: 02/02/2009 11:02
Run Date: 02/02/2009 21:40
File ID: EL.020209.214030
Percent Solid: 88.8

Analyte	CAS. Number	Result	Qual	RL	MDL
Lead, Total	7439-92-1	0.934 J		0.901	0.225

MS1-1

Microbac

508 fw 3/31/09

12

Sample Number: L09010300-12
Client ID: MR08-IS264-10-11-09A
Matrix: Soil
Workgroup Number: WG293755
Collect Date: 01/14/2009 11:05
Sample Tag: 01

PrePrep Method: NONE
Prep Method: 3051
Analytical Method: 6020
Analyst: JYH
Dilution: 1
Units: mg/kg

Instrument: ELAN-ICP
Prep Date: 01/19/2009 06:50
Cal Date: 01/30/2009 11:12
Run Date: 01/30/2009 23:04
File ID: EL.013009.230449
Percent Solid: 88.8

Analyte	CAS. Number	Result	Qual	RL	MDL
Arsenic, Total	7440-38-2		U	0.338	0.0845
Selenium, Total	7782-49-2		U	0.451	0.113

U Undetected; the analyte was analyzed for, but not detected.

Microbac

JW
3/3/09

12

Sample Number: L09010300-12
Client ID: MR08-IS264-10-11-09A
Matrix: Soil
Workgroup Number: WG292878
Collect Date: 01/14/2009 11:05
Sample Tag: 01

PrePrep Method: NONE
Prep Method: 7471A
Analytical Method: 7471A
Analyst: ADC
Dilution: 1
Units: mg/kg

Instrument: HYDRA
Prep Date: 01/16/2009 08:33
Cal Date: 01/20/2009 09:36
Run Date: 01/20/2009 10:31
File ID: HY.012009.103156
Percent Solid: 88.8

Analyte	CAS. Number	Result	Qual	RL	MDL
Mercury, Total	7439-97-6		U	0.111	0.0222

U Undetected; the analyte was analyzed for, but not detected.

Microbac

2762 lew 3/3/09

13

Sample Number: L09010300-13
Client ID: MR08-SS263-09A
Matrix: Soil
Workgroup Number: WG292760
Collect Date: 01/14/2009 11:15
Sample Tag: 01

PrePrep Method: NONE
Prep Method: 3051
Analytical Method: 6010B
Analyst: EDA
Dilution: 1
Units: mg/kg

Instrument: ICP-THERMO2
Prep Date: 01/16/2009 06:30
Cal Date: 01/16/2009 15:46
Run Date: 01/16/2009 18:29
File ID: T2.011609.182910
Percent Solid: 88.2

Analyte	CAS. Number	Result	Qual	RL	MDL	
Silver, Total	7440-22-4		U	0.852	0.213	
Barium, Total	7440-39-3	14.1 J		0.426	0.0852	MSL
Cadmium, Total	7440-43-9	0.133	J	0.170	0.0426	
Chromium, Total	7440-47-3	8.07 J		0.852	0.102	MSL

U Undetected; the analyte was analyzed for, but not detected.
J Estimated ; the analyte concentration was less than the low standard (LOQ)

Microbac

25 MW 3/31/09

13

Sample Number: L09010300-13
Client ID: MR08-SS263-09A
Matrix: Soil
Workgroup Number: WG293755
Collect Date: 01/14/2009 11:15
Sample Tag: 01

PrePrep Method: NONE
Prep Method: 3051
Analytical Method: 6020
Analyst: JYH
Dilution: 1
Units: mg/kg

Instrument: ELAN-ICP
Prep Date: 01/19/2009 06:50
Cal Date: 01/30/2009 11:12
Run Date: 01/30/2009 23:10
File ID: EL.013009.231052
Percent Solid: 88.2

Analyte	CAS. Number	Result	Qual	RL	MDL
Arsenic, Total	7440-38-2	0.721		0.332	0.0829
Selenium, Total	7782-49-2	0.200 J	J	0.442	0.111

50

J Estimated ; the analyte concentration was less than the low standard (LOQ)

Microbac

510 LW 3/31/09

13

Sample Number: L09010300-13
Client ID: MR08-SS263-09A
Matrix: Soil
Workgroup Number: WG293755
Collect Date: 01/14/2009 11:15
Sample Tag: DL01

PrePrep Method: NONE
Prep Method: 3051
Analytical Method: 6020
Analyst: JYH
Dilution: 2
Units: mg/kg

Instrument: ELAN-ICP
Prep Date: 01/19/2009 06:50
Cal Date: 02/02/2009 11:02
Run Date: 02/02/2009 21:46
File ID: EL.020209.214634
Percent Solid: 88.2

Analyte	CAS. Number	Result	Qual	RL	MDL
Lead, Total	7439-92-1	34.3 J		0.884	0.221

MSH

Microbac

511 lw 3/31/09

13

Sample Number: L09010300-13
Client ID: MR08-SS263-09A
Matrix: Soil
Workgroup Number: WG292878
Collect Date: 01/14/2009 11:15
Sample Tag: 01

PrePrep Method: NONE
Prep Method: 7471A
Analytical Method: 7471A
Analyst: ADC
Dilution: 1
Units: mg/kg

Instrument: HYDRA
Prep Date: 01/16/2009 08:34
Cal Date: 01/20/2009 09:36
Run Date: 01/20/2009 10:37
File ID: HY.012009.103741
Percent Solid: 88.2

Analyte	CAS. Number	Result	Qual	RL	MDL
Mercury, Total	7439-97-6	0.0302	J	0.111	0.0222

J Estimated ; the analyte concentration was less than the low standard (LOQ)

Microbac

2763 lw 3/31/09

14

Sample Number: L09010300-14
Client ID: MR08-IS263-2-3-09A
Matrix: Soil
Workgroup Number: WG292760
Collect Date: 01/14/2009 11:30
Sample Tag: 01

PrePrep Method: NONE
Prep Method: 3051
Analytical Method: 6010B
Analyst: EDA
Dilution: 1
Units: mg/kg

Instrument: ICP-THERMO2
Prep Date: 01/16/2009 06:30
Cal Date: 01/16/2009 15:46
Run Date: 01/16/2009 18:35
File ID: T2.011609.183508
Percent Solid: 87.2

Analyte	CAS. Number	Result	Qual	RL	MDL	
Silver, Total	7440-22-4	0.261	J	0.790	0.197	
Barium, Total	7440-39-3	15.2 J		0.395	0.0790	MSL
Cadmium, Total	7440-43-9	0.237		0.158	0.0395	
Chromium, Total	7440-47-3	7.86 J		0.790	0.0948	MSL

J Estimated ; the analyte concentration was less than the low standard (LOQ)

Microbac

26 fdw 3/31/09

14

Sample Number: L09010300-14
Client ID: MR08-IS263-2-3-09A
Matrix: Soil
Workgroup Number: WG293755
Collect Date: 01/14/2009 11:30
Sample Tag: 01

PrePrep Method: NONE
Prep Method: 3051
Analytical Method: 6020
Analyst: JYH
Dilution: 1
Units: mg/kg

Instrument: ELAN-ICP
Prep Date: 01/19/2009 06:50
Cal Date: 01/30/2009 11:12
Run Date: 01/30/2009 23:16
File ID: EL.013009.231656
Percent Solid: 87.2

Analyte	CAS. Number	Result	Qual	RL	MDL
Arsenic, Total	7440-38-2	0.792		0.341	0.0853
Selenium, Total	7782-49-2	0.311 J	~~J~~	0.455	0.114

5D

J Estimated ; the analyte concentration was less than the low standard (LOQ)

Microbac

512 fw 3/31/09

14

Sample Number: L09010300-14
Client ID: MR08-IS263-2-3-09A
Matrix: Soil
Workgroup Number: WG293755
Collect Date: 01/14/2009 11:30
Sample Tag: DL01

PrePrep Method: NONE
Prep Method: 3051
Analytical Method: 6020
Analyst: JYH
Dilution: 2
Units: mg/kg

Instrument: ELAN-ICP
Prep Date: 01/19/2009 06:50
Cal Date: 02/02/2009 11:02
Run Date: 02/02/2009 21:52
File ID: EL.020209.215239
Percent Solid: 87.2

Analyte	CAS. Number	Result	Qual	RL	MDL
Lead, Total	7439-92-1	54.8 J		0.910	0.227

MSH

Microbac

513 JLH 3/31/09

14

Sample Number: L09010300-14
Client ID: MR08-IS263-2-3-09A
Matrix: Soil
Workgroup Number: WG292878
Collect Date: 01/14/2009 11:30
Sample Tag: 01

PrePrep Method: NONE
Prep Method: 7471A
Analytical Method: 7471A
Analyst: ADC
Dilution: 1
Units: mg/kg

Instrument: HYDRA
Prep Date: 01/16/2009 08:34
Cal Date: 01/20/2009 09:36
Run Date: 01/20/2009 10:39
File ID: HY.012009.103928
Percent Solid: 87.2

Analyte	CAS. Number	Result	Qual	RL	MDL
Mercury, Total	7439-97-6	0.0430	J	0.114	0.0228

J Estimated ; the analyte concentration was less than the low standard (LOQ)

Microbac

2764 MW 3/31/09

15

Sample Number: L09010300-15
Client ID: MR08-SS262-09A
Matrix: Soil
Workgroup Number: WG292760
Collect Date: 01/14/2009 12:30
Sample Tag: 01

PrePrep Method: NONE
Prep Method: 3051
Analytical Method: 6010B
Analyst: EDA
Dilution: 1
Units: mg/kg

Instrument: ICP-THERMO2
Prep Date: 01/16/2009 06:30
Cal Date: 01/16/2009 15:46
Run Date: 01/16/2009 18:53
File ID: T2.011609.185304
Percent Solid: 90.5

Analyte	CAS. Number	Result	Qual	RL	MDL	
Silver, Total	7440-22-4	0.280	J	0.748	0.187	
Barium, Total	7440-39-3	16.9 J		0.374	0.0748	MSL
Cadmium, Total	7440-43-9		U	0.150	0.0374	
Chromium, Total	7440-47-3	9.76 J		0.748	0.0898	MSL

U Undetected; the analyte was analyzed for, but not detected.
J Estimated ; the analyte concentration was less than the low standard (LOQ)

Microbac

27. LW
3/31/09

15

Sample Number: L09010300-15
Client ID: MR08-SS262-09A
Matrix: Soil
Workgroup Number: WG293755
Collect Date: 01/14/2009 12:30
Sample Tag: 01

PrePrep Method: NONE
Prep Method: 3051
Analytical Method: 6020
Analyst: JYH
Dilution: 1
Units: mg/kg

Instrument: ELAN-ICP
Prep Date: 01/19/2009 06:50
Cal Date: 01/30/2009 11:12
Run Date: 01/30/2009 23:23
File ID: EL.013009.232300
Percent Solid: 90.5

Analyte	CAS. Number	Result	Qual	RL	MDL
Arsenic, Total	7440-38-2	0.687		0.328	0.0819
Selenium, Total	7782-49-2	0.175 J	~~J~~	0.437	0.109

SD

J Estimated ; the analyte concentration was less than the low standard (LOQ)

Microbac

514. lus 3/31/09

15

Sample Number: L09010300-15
Client ID: MR08-SS262-09A
Matrix: Soil
Workgroup Number: WG293755
Collect Date: 01/14/2009 12:30
Sample Tag: DL01

PrePrep Method: NONE
Prep Method: 3051
Analytical Method: 6020
Analyst: JYH
Dilution: 2
Units: mg/kg

Instrument: ELAN-ICP
Prep Date: 01/19/2009 06:50
Cal Date: 02/02/2009 11:02
Run Date: 02/02/2009 21:58
File ID: EL.020209.215843
Percent Solid: 90.5

Analyte	CAS. Number	Result	Qual	RL	MDL
Lead, Total	7439-92-1	6.67 J		0.874	0.218

MSH

Microbac

515 lw 3/31/09

15

Sample Number: L09010300-15
Client ID: MR08-SS262-09A
Matrix: Soil
Workgroup Number: WG292878
Collect Date: 01/14/2009 12:30
Sample Tag: 01

PrePrep Method: NONE
Prep Method: 7471A
Analytical Method: 7471A
Analyst: ADC
Dilution: 1
Units: mg/kg

Instrument: HYDRA
Prep Date: 01/16/2009 08:34
Cal Date: 01/20/2009 09:36
Run Date: 01/20/2009 10:41
File ID: HY.012009.104132
Percent Solid: 90.5

Analyte	CAS. Number	Result	Qual	RL	MDL
Mercury, Total	7439-97-6		U	0.106	0.0213

U Undetected; the analyte was analyzed for, but not detected.

Microbac

2765 lew 3/31/09

16

Sample Number: L09010300-16
Client ID: MR08-IS262-4-5-09A
Matrix: Soil
Workgroup Number: WG292760
Collect Date: 01/14/2009 12:50
Sample Tag: 01

PrePrep Method: NONE
Prep Method: 3051
Analytical Method: 6010B
Analyst: EDA
Dilution: 1
Units: mg/kg

Instrument: ICP-THERMO2
Prep Date: 01/16/2009 06:30
Cal Date: 01/16/2009 15:46
Run Date: 01/16/2009 18:59
File ID: T2.011609.185903
Percent Solid: 89.5

Analyte	CAS. Number	Result	Qual	RL	MDL	
Silver, Total	7440-22-4		U	0.777	0.194	
Barium, Total	7440-39-3	6.36 J		0.388	0.0777	MSL
Cadmium, Total	7440-43-9		U	0.155	0.0388	
Chromium, Total	7440-47-3	8.05 J		0.777	0.0932	MSL

U Undetected; the analyte was analyzed for, but not detected.

Microbac

 3/31/09

16

Sample Number: L09010300-16
Client ID: MR08-IS262-4-5-09A
Matrix: Soil
Workgroup Number: WG293755
Collect Date: 01/14/2009 12:50
Sample Tag: 01

PrePrep Method: NONE
Prep Method: 3051
Analytical Method: 6020
Analyst: JYH
Dilution: 1
Units: mg/kg

Instrument: ELAN-ICP
Prep Date: 01/19/2009 06:50
Cal Date: 01/30/2009 11:12
Run Date: 01/30/2009 23:29
File ID: EL.013009.232904
Percent Solid: 89.5

Analyte	CAS. Number	Result	Qual	RL	MDL
Arsenic, Total	7440-38-2	0.535		0.334	0.0834
Selenium, Total	7782-49-2	0.168 J		0.445	0.111

SD

J Estimated ; the analyte concentration was less than the low standard (LOQ)

Microbac

fw
3/31/09

16

Sample Number: L09010300-16
Client ID: MR08-IS262-4-5-09A
Matrix: Soil
Workgroup Number: WG293755
Collect Date: 01/14/2009 12:50
Sample Tag: DL01

PrePrep Method: NONE
Prep Method: 3051
Analytical Method: 6020
Analyst: JYH
Dilution: 2
Units: mg/kg

Instrument: ELAN-ICP
Prep Date: 01/19/2009 06:50
Cal Date: 02/02/2009 11:02
Run Date: 02/02/2009 22:17
File ID: EL.020209.221752
Percent Solid: 89.5

Analyte	CAS. Number	Result	Qual	RL	MDL
Lead, Total	7439-92-1	2.59 J		0.890	0.222

MSH

Microbac

517 MW 3/31/09

16

Sample Number: L09010300-16
Client ID: MR08-IS262-4-5-09A
Matrix: Soil
Workgroup Number: WG292878
Collect Date: 01/14/2009 12:50
Sample Tag: 01

PrePrep Method: NONE
Prep Method: 7471A
Analytical Method: 7471A
Analyst: ADC
Dilution: 1
Units: mg/kg

Instrument: HYDRA
Prep Date: 01/16/2009 08:35
Cal Date: 01/20/2009 09:36
Run Date: 01/20/2009 10:43
File ID: HY.012009.104314
Percent Solid: 89.5

Analyte	CAS. Number	Result	Qual	RL	MDL
Mercury, Total	7439-97-6		U	0.109	0.0218

U Undetected; the analyte was analyzed for, but not detected.

Microbac

2766 lus 3/31/09

17

Sample Number: L09010300-17
Client ID: MR08-SS261-09A
Matrix: Soil
Workgroup Number: WG292760
Collect Date: 01/14/2009 13:30
Sample Tag: 01

PrePrep Method: NONE
Prep Method: 3051
Analytical Method: 6010B
Analyst: EDA
Dilution: 1
Units: mg/kg

Instrument: ICP-THERMO2
Prep Date: 01/16/2009 06:30
Cal Date: 01/16/2009 15:46
Run Date: 01/16/2009 19:05
File ID: T2.011609.190505
Percent Solid: 89.6

Analyte	CAS. Number	Result	Qual	RL	MDL	
Silver, Total	7440-22-4		U	0.823	0.206	
Barium, Total	7440-39-3	10.5 J		0.411	0.0823	MSL
Cadmium, Total	7440-43-9	0.0913	J	0.165	0.0411	
Chromium, Total	7440-47-3	6.03 J		0.823	0.0987	MSL

U Undetected; the analyte was analyzed for, but not detected.
J Estimated ; the analyte concentration was less than the low standard (LOQ)

Microbac

29 JW
3/31/09

17

Sample Number: L09010300-17
Client ID: MR08-SS261-09A
Matrix: Soil
Workgroup Number: WG293755
Collect Date: 01/14/2009 13:30
Sample Tag: 01

PrePrep Method: NONE
Prep Method: 3051
Analytical Method: 6020
Analyst: JYH
Dilution: 1
Units: mg/kg

Instrument: ELAN-ICP
Prep Date: 01/19/2009 06:50
Cal Date: 01/30/2009 11:12
Run Date: 01/30/2009 23:35
File ID: EL.013009.233509
Percent Solid: 89.6

Analyte	CAS. Number	Result	Qual	RL	MDL
Arsenic, Total	7440-38-2	0.591		0.332	0.0829
Selenium, Total	7782-49-2	0.184 J	~~J~~	0.442	0.111

SD

J Estimated ; the analyte concentration was less than the low standard (LOQ)

Microbac

518 lw 3/31/09

17

Sample Number: L09010300-17
Client ID: MR08-SS261-09A
Matrix: Soil
Workgroup Number: WG293755
Collect Date: 01/14/2009 13:30
Sample Tag: DL01

PrePrep Method: NONE
Prep Method: 3051
Analytical Method: 6020
Analyst: JYH
Dilution: 2
Units: mg/kg

Instrument: ELAN-ICP
Prep Date: 01/19/2009 06:50
Cal Date: 02/02/2009 11:02
Run Date: 02/02/2009 22:23
File ID: EL.020209.222357
Percent Solid: 89.6

Analyte	CAS. Number	Result	Qual	RL	MDL
Lead, Total	7439-92-1	25.5 J		0.884	0.221

MSH

Microbac

519 MW 3/31/09

17

Sample Number: L09010300-17
Client ID: MR08-SS261-09A
Matrix: Soil
Workgroup Number: WG292878
Collect Date: 01/14/2009 13:30
Sample Tag: 01

PrePrep Method: NONE
Prep Method: 7471A
Analytical Method: 7471A
Analyst: ADC
Dilution: 1
Units: mg/kg

Instrument: HYDRA
Prep Date: 01/16/2009 08:36
Cal Date: 01/20/2009 09:36
Run Date: 01/20/2009 10:45
File ID: HY.012009.104502
Percent Solid: 89.6

Analyte	CAS. Number	Result	Qual	RL	MDL
Mercury, Total	7439-97-6	0.0246	J	0.105	0.0211

J Estimated ; the analyte concentration was less than the low standard (LOQ)

Microbac

2767 lus 3/3/09

18

Sample Number: L09010300-18
Client ID: MR08-IS261-4-5-09A
Matrix: Soil
Workgroup Number: WG292760
Collect Date: 01/14/2009 13:45
Sample Tag: 01

PrePrep Method: NONE
Prep Method: 3051
Analytical Method: 6010B
Analyst: EDA
Dilution: 1
Units: mg/kg

Instrument: ICP-THERMO2
Prep Date: 01/16/2009 06:30
Cal Date: 01/16/2009 15:46
Run Date: 01/16/2009 19:11
File ID: T2.011609.191104
Percent Solid: 88.5

Analyte	CAS. Number	Result	Qual	RL	MDL	
Silver, Total	7440-22-4		U	0.866	0.217	
Barium, Total	7440-39-3	7.43 J		0.433	0.0866	MSL
Cadmium, Total	7440-43-9		U	0.173	0.0433	
Chromium, Total	7440-47-3	6.99 J		0.866	0.104	MSL

U Undetected; the analyte was analyzed for, but not detected.

Microbac

30 LEW 3/31/09

18

Sample Number: L09010300-18
Client ID: MR08-IS261-4-5-09A
Matrix: Soil
Workgroup Number: WG293755
Collect Date: 01/14/2009 13:45
Sample Tag: 01

PrePrep Method: NONE
Prep Method: 3051
Analytical Method: 6020
Analyst: JYH
Dilution: 1
Units: mg/kg

Instrument: ELAN-ICP
Prep Date: 01/19/2009 06:50
Cal Date: 01/30/2009 11:12
Run Date: 01/30/2009 23:41
File ID: EL.013009.234113
Percent Solid: 88.5

Analyte	CAS. Number	Result	Qual	RL	MDL
Arsenic, Total	7440-38-2	1.62		0.337	0.0843
Selenium, Total	7782-49-2		U	0.449	0.112

U Undetected; the analyte was analyzed for, but not detected.

Microbac

521 LW
3/3/09

18

Sample Number: L09010300-18
Client ID: MR08-IS261-4-5-09A
Matrix: Soil
Workgroup Number: WG293755
Collect Date: 01/14/2009 13:45
Sample Tag: DL01

PrePrep Method: NONE
Prep Method: 3051
Analytical Method: 6020
Analyst: JYH
Dilution: 2
Units: mg/kg

Instrument: ELAN-ICP
Prep Date: 01/19/2009 06:50
Cal Date: 02/02/2009 11:02
Run Date: 02/02/2009 22:30
File ID: EL.020209.223003
Percent Solid: 88.5

Analyte	CAS. Number	Result	Qual	RL	MDL
Lead, Total	7439-92-1	4.53 J		0.899	0.225

MSH

Microbac

520 fw 3/31/09

18

Sample Number: L09010300-18
Client ID: MR08-IS261-4-5-09A
Matrix: Soil
Workgroup Number: WG292878
Collect Date: 01/14/2009 13:45
Sample Tag: 01

PrePrep Method: NONE
Prep Method: 7471A
Analytical Method: 7471A
Analyst: ADC
Dilution: 1
Units: mg/kg

Instrument: HYDRA
Prep Date: 01/16/2009 08:36
Cal Date: 01/20/2009 09:36
Run Date: 01/20/2009 10:47
File ID: HY.012009.104727
Percent Solid: 88.5

Analyte	CAS. Number	Result	Qual	RL	MDL
Mercury, Total	7439-97-6		U	0.111	0.0221

U Undetected; the analyte was analyzed for, but not detected.

Microbac

2768 MW 3/31/09

19

Sample Number: L09010300-19
Client ID: MR08-SS260-09A
Matrix: Soil
Workgroup Number: WG292760
Collect Date: 01/14/2009 14:00
Sample Tag: 01

PrePrep Method: NONE
Prep Method: 3051
Analytical Method: 6010B
Analyst: EDA
Dilution: 1
Units: mg/kg

Instrument: ICP-THERMO2
Prep Date: 01/16/2009 06:30
Cal Date: 01/16/2009 15:46
Run Date: 01/16/2009 19:17
File ID: T2.011609.191705
Percent Solid: 94.1

Analyte	CAS. Number	Result	Qual	RL	MDL	
Silver, Total	7440-22-4	0.280	J	0.788	0.197	
Barium, Total	7440-39-3	11.7 J		0.394	0.0788	MSL
Cadmium, Total	7440-43-9	0.104	J	0.158	0.0394	
Chromium, Total	7440-47-3	7.57 J		0.788	0.0945	MSL

J Estimated ; the analyte concentration was less than the low standard (LOQ)

Microbac

31 RW 3/31/09

19

Sample Number: L09010300-19
Client ID: MR08-SS260-09A
Matrix: Soil
Workgroup Number: WG293755
Collect Date: 01/14/2009 14:00
Sample Tag: 01

PrePrep Method: NONE
Prep Method: 3051
Analytical Method: 6020
Analyst: JYH
Dilution: 1
Units: mg/kg

Instrument: ELAN-ICP
Prep Date: 01/19/2009 06:50
Cal Date: 01/30/2009 11:12
Run Date: 01/30/2009 23:47
File ID: EL.013009.234719
Percent Solid: 94.1

Analyte	CAS. Number	Result	Qual	RL	MDL
Arsenic, Total	7440-38-2	0.694		0.313	0.0783
Selenium, Total	7782-49-2	0.395 J	J	0.418	0.104

SD

J Estimated ; the analyte concentration was less than the low standard (LOQ)

Microbac

522 LW 3/3/09

19

Sample Number: L09010300-19
Client ID: MR08-SS260-09A
Matrix: Soil
Workgroup Number: WG293755
Collect Date: 01/14/2009 14:00
Sample Tag: DL01

PrePrep Method: NONE
Prep Method: 3051
Analytical Method: 6020
Analyst: JYH
Dilution: 2
Units: mg/kg

Instrument: ELAN-ICP
Prep Date: 01/19/2009 06:50
Cal Date: 02/02/2009 11:02
Run Date: 02/02/2009 22:36
File ID: EL.020209.223607
Percent Solid: 94.1

Analyte	CAS. Number	Result	Qual	RL	MDL
Lead, Total	7439-92-1	14.9 J		0.835	0.209

MSH

Microbac

523 MW
3/3/09

19

Sample Number: L09010300-19
Client ID: MR08-SS260-09A
Matrix: Soil
Workgroup Number: WG292878
Collect Date: 01/14/2009 14:00
Sample Tag: 01

PrePrep Method: NONE
Prep Method: 7471A
Analytical Method: 7471A
Analyst: ADC
Dilution: 1
Units: mg/kg

Instrument: HYDRA
Prep Date: 01/16/2009 08:36
Cal Date: 01/20/2009 09:36
Run Date: 01/20/2009 10:49
File ID: HY.012009.104912
Percent Solid: 94.1

Analyte	CAS. Number	Result	Qual	RL	MDL
Mercury, Total	7439-97-6	0.0266	J	0.103	0.0206

J Estimated ; the analyte concentration was less than the low standard (LOQ)

Microbac

2769 lw 3/31/09

20

Sample Number: L09010300-20
Client ID: MR08-IS260-6-7-09A
Matrix: Soil
Workgroup Number: WG292760
Collect Date: 01/14/2009 14:20
Sample Tag: 01

PrePrep Method: NONE
Prep Method: 3051
Analytical Method: 6010B
Analyst: EDA
Dilution: 1
Units: mg/kg

Instrument: ICP-THERMO2
Prep Date: 01/16/2009 06:30
Cal Date: 01/16/2009 15:46
Run Date: 01/16/2009 19:23
File ID: T2.011609.192313
Percent Solid: 98.5

Analyte	CAS. Number	Result	Qual	RL	MDL	
Silver, Total	7440-22-4		U	0.758	0.189	
Barium, Total	7440-39-3	1.89 J		0.379	0.0758	MSL
Cadmium, Total	7440-43-9		U	0.152	0.0379	
Chromium, Total	7440-47-3	1.51 J		0.758	0.0909	MSL

U Undetected; the analyte was analyzed for, but not detected.

Microbac

32 MW 3/31/09

20

Sample Number:	L09010300-20	PrePrep Method:	NONE	Instrument:	ELAN-ICP
Client ID:	MR08-IS260-6-7-09A	Prep Method:	3051	Prep Date:	01/19/2009 07:31
Matrix:	Soil	Analytical Method:	6020	Cal Date:	02/03/2009 14:36
Workgroup Number:	WG293944	Analyst:	JYH	Run Date:	02/03/2009 23:05
Collect Date:	01/14/2009 14:20	Dilution:	2	File ID:	EL.020309.230549
Sample Tag:	DL02	Units:	mg/kg	Percent Solid:	98.5

Analyte	CAS. Number	Result	Qual	RL	MDL
Selenium, Total	7782-49-2		U	0.763	0.191

U Undetected; the analyte was analyzed for, but not detected.

Microbac

 RW 3/31/09

20

Sample Number: L09010300-20
Client ID: MR08-IS260-6-7-09A
Matrix: Soil
Workgroup Number: WG293944
Collect Date: 01/14/2009 14:20
Sample Tag: DL01

PrePrep Method: NONE
Prep Method: 3051
Analytical Method: 6020
Analyst: JYH
Dilution: 2
Units: mg/kg

Instrument: ELAN-ICP
Prep Date: 01/19/2009 07:31
Cal Date: 02/02/2009 11:02
Run Date: 02/02/2009 23:00
File ID: EL.020209.230021
Percent Solid: 98.5

Analyte	CAS. Number	Result	Qual	RL	MDL
Arsenic, Total	7440-38-2	0.322	J	0.572	0.143
Lead, Total	7439-92-1	0.658	J	0.763	0.191

J Estimated ; the analyte concentration was less than the low standard (LOQ)

Microbac

 MW 3/31/09

20

Sample Number: L09010300-20
Client ID: MR08-IS260-6-7-09A
Matrix: Soil
Workgroup Number: WG292761
Collect Date: 01/14/2009 14:20
Sample Tag: 01

PrePrep Method: NONE
Prep Method: 7471A
Analytical Method: 7471A
Analyst: ADC
Dilution: 1
Units: mg/kg

Instrument: HYDRA
Prep Date: 01/16/2009 11:25
Cal Date: 01/16/2009 15:26
Run Date: 01/16/2009 16:01
File ID: HY.011609.160137
Percent Solid: 98.5

Analyte	CAS. Number	Result	Qual	RL	MDL
Mercury, Total	7439-97-6		U	0.0950	0.0190

U Undetected; the analyte was analyzed for, but not detected.

Microbac

2770 QW 3/3/09

21

Sample Number: L09010300-21
Client ID: MR08-EB01011409-SS
Matrix: Water
Workgroup Number: WG292764
Collect Date: 01/14/2009 08:30
Sample Tag: 01

PrePrep Method: NONE
Prep Method: 3005A
Analytical Method: 6010B
Analyst: SLP
Dilution: 1
Units: ug/L

Instrument: PE-ICP2
Prep Date: 01/16/2009 07:26
Cal Date: 01/17/2009 17:25
Run Date: 01/18/2009 01:31
File ID: P2.011809.013115

Analyte	CAS. Number	Result	Qual	RL	MDL
Barium, Total	7440-39-3	10.0 ~~2.64~~	U ~~J~~	10.0	2.50
Cadmium, Total	7440-43-9		U	1.00	0.250
Chromium, Total	7440-47-3		U	10.0	2.50
Silver, Total	7440-22-4		U	6.00	2.00

BL

U Undetected; the analyte was analyzed for, but not detected.
J Estimated ; the analyte concentration was less than the low standard (LOQ)

Microbac

33 fcw 3/31/09

21

Sample Number: L09010300-21
Client ID: MR08-EB01011409-SS
Matrix: Water
Workgroup Number: WG292713
Collect Date: 01/14/2009 08:30
Sample Tag: 01

PrePrep Method: NONE
Prep Method: 3015
Analytical Method: 6020
Analyst: WTD
Dilution: 1
Units: ug/L

Instrument: ELAN-ICP
Prep Date: 01/16/2009 08:59
Cal Date: 01/16/2009 16:35
Run Date: 01/16/2009 19:41
File ID: EL.011609.194107

Analyte	CAS. Number	Result	Qual	RL	MDL
Arsenic, Total	7440-38-2		U	1.00	0.250
Lead, Total	7439-92-1		U	1.00	0.250
Selenium, Total	7782-49-2		U	2.00	0.500

U Undetected; the analyte was analyzed for, but not detected.

Microbac

MW 3/31/09

21

Sample Number: L09010300-21
Client ID: MR08-EB01011409-SS
Matrix: Water
Workgroup Number: WG292820
Collect Date: 01/14/2009 08:30
Sample Tag: 01

PrePrep Method: NONE
Prep Method: 7470A
Analytical Method: 7470A
Analyst: ADC
Dilution: 1
Units: ug/L

Instrument: HYDRA
Prep Date: 01/16/2009 09:55
Cal Date: 01/19/2009 09:54
Run Date: 01/19/2009 10:46
File ID: HY.011909.104616

Analyte	CAS. Number	Result	Qual	RL	MDL
Mercury	7439-97-6		U	0.400	0.100

U Undetected; the analyte was analyzed for, but not detected.

Microbac

2771 dw 3/31/09

ENVIRONMENTAL
Data Services, Inc.

METALS

USEPA Region IV - Level IV Review

Site: MCB Camp Lejeune, TO-09 SDG #: L09010304

Client: CH2M HILL, Inc., Virginia Beach, Virginia Date: March 31, 2009

Laboratory: Microbac Laboratories, Inc., Marietta, Ohio Reviewer: Nancy Weaver

EDS ID	Client Sample ID	Laboratory Sample ID	Matrix
1	MR08-SS299-09A	L09010304-01	Soil
2	MR08-SS299D-09A	L09010304-02	Soil
3	MR08-IS299-6-7-09A	L09010304-03	Soil
4	MR08-IS299D-6-7-09A	L09010304-04	Soil
5	MR08-SS304-09A	L09010304-05	Soil
6	MR08-IS304-6-7-09A	L09010304-06	Soil
7	MR08-SS312-09A	L09010304-07	Soil
8	MR08-IS312-5-6-09A	L09010304-08	Soil
9	MR08-SS311-09A	L09010304-09	Soil
10	MR08-IS311-8-9-09A	L09010304-10	Soil
11	MR08-SS308-09A	L09010304-11	Soil
12MS	MR08-SS308-09AMS	L09010304-12MS	Soil
13MSD	MR08-SS308-09AMSD	L09010304-13MSD	Soil
14	MR08-IS308-9-10-09A	L09010304-14	Soil
15MS	MR08-IS308-9-10-09AMS	L09010304-15MS	Soil
16MSD	MR08-IS308-9-10-09AMSD	L09010304-16MSD	Soil
17	MR08-SS309-09A	L09010304-17	Soil
18	MR08-SS309D-09A	L09010304-18	Soil
19	MR08-IS309-6-7-09A	L09010304-19	Soil
20	MR08-IS309D-6-7-09A	L09010304-20	Soil
21	MR08-SS310-09A	L09010304-21	Soil
22	MR08-IS310-9-10-09A	L09010304-22	Soil
23	MR08-SS307-09A	L09010304-23	Soil
24	MR08-IS307-6-7-09A	L09010304-24	Soil
25	MR08-SS284-09A	L09010304-25	Soil
26	MR08-IS284-6-7-09A	L09010304-26	Soil
27	MR08-SS285-09A	L09010304-27	Soil
28	MR08-IS285-8-9-09A	L09010304-28	Soil
29	MR08-EB01011309-SS	L09010304-29	Water

The USEPA "Contract Laboratory Program National Functional Guidelines for Inorganic Data Review," October 2004, and professional judgement were used in evaluating the data in this summary report.

Holding Times - All samples were prepared and analyzed within 28 days for mercury and 180 days for all other metals.

Calibration - The ICV and CCV %R values were acceptable.

Method and Calibration Blanks - The method blanks and continuing calibration blanks exhibited the following contamination.

Compound	Conc. ug/L	Action Level ug/L	Qualifier	Affected Samples
Barium	3.82	19.1	U	29

Field and Equipment Blank - Field QC results are summarized below.

Blank ID	Compound	Conc. ug/L	Action Level ug/L	Qualifier	Affected Samples
MR08-FB01011009	None-ND	-	-	-	-
MR08-EB01011309-SS	None-ND	-	-	-	-

ICP Interference Check Sample - All %R values were acceptable.

MS/MSD - The MS/MSD sample exhibited acceptable %R and RPD values except the following.

MS/MSD Sample ID	Compound	MS/MSD %R/RPD	Qualifier	Affected Samples
Reference (WG292760)	Barium	73.2%/Ok/Ok	J/UJ	1
	Chromium	52.4%/Ok/24.7	J/UJ	1
11 (WG293944)	Lead	246%/262%/Ok	J	1-11

LCS - The LCS samples exhibited acceptable %R values.

ICP Serial Dilution - The ICP serial dilution sample exhibited acceptable %D values except the following.

ICP Sample ID	Compound	%D	Qualifier	Affected Samples
Reference (WG292763)	Chromium	16.60%	J	2-11, 17-26
Reference (WG292713)	Selenium	15.40%	None	All associated ND

Field Duplicates - Field duplicate results are summarized below.

Compound	MR08-SS299-09A mg/kg	MR08-SS299D-09A mg/kg	RPD	Qualifier
Silver	0.230	0.735 U	NC	None
Barium	14.0	7.33	63%	None
Cadmium	1.28	0.555	79%	None
Chromium	11.81	6.53	58%	None
Arsenic	1.17	0.277	123%	None
Lead	154	5.97	185%	None
Selenium	0.241	0.830 U	NC	None
Mercury	0.111	0.0286	118%	None

Compound	MR08-IS299-6-7-09A mg/kg	MR08-IS299D-6-7-09A mg/kg	RPD	Qualifier
Barium	8.46	6.14	32%	None
Chromium	1.68	1.66	1%	None
Lead	1.61	1.79	11%	None

Compound	MR08-SS309-09A mg/kg	MR08-SS309D-09A mg/kg	RPD	Qualifier
Barium	5.75	6.38	10%	None
Cadmium	0.0965	0.0680	35%	None
Chromium	3.23	2.98	8%	None
Arsenic	0.631	0.546	14%	None
Lead	1.99	3.48	54%	None
Selenium	0.341	0.903 U	NC	None

Compound	MR08-IS309-6-7-09A mg/kg	MR08-IS309D-6-7-09A mg/kg	RPD	Qualifier
Barium	11.4	7.46	42%	None
Chromium	4.81	4.70	2%	None
Lead	3.90	4.59	16%	None

Compound Quantitation - Several samples were analyzed at various dilutions for various analytes due to high concentrations.

Report Number: L09010304
Report Date : February 13, 2009

1

Sample Number:	L09010304-01	PrePrep Method:	NONE	Instrument:	ICP-THERMO2
Client ID:	MR08-SS299-09A	Prep Method:	3051	Prep Date:	01/16/2009 06:30
Matrix:	Soil	Analytical Method:	6010B	Cal Date:	01/16/2009 15:46
Workgroup Number:	WG292760	Analyst:	EDA	Run Date:	01/16/2009 19:29
Collect Date:	01/13/2009 08:50	Dilution:	1	File ID:	T2.011609.192915
Sample Tag:	01	Units:	mg/kg	Percent Solid:	92.4

Analyte	CAS. Number	Result	Qual	RL	MDL	
Silver, Total	7440-22-4	0.230	J	0.733	0.183	
Barium, Total	7440-39-3	14.0 J		0.367	0.0733	MSL
Cadmium, Total	7440-43-9	1.28		0.147	0.0367	
Chromium, Total	7440-47-3	11.8 J		0.733	0.0880	MSL

J Estimated ; the analyte concentration was less than the low standard (LOQ)

Microbac

15 lw 3/31/09

Report Number: L09010304
Report Date : February 13, 2009

Sample Number:	L09010304-01	PrePrep Method:	NONE	Instrument:	ELAN-ICP
Client ID:	MR08-SS299-09A	Prep Method:	3051	Prep Date:	01/19/2009 07:31
Matrix:	Soil	Analytical Method:	6020	Cal Date:	02/02/2009 11:02
Workgroup Number:	WG293944	Analyst:	JYH	Run Date:	02/02/2009 23:37
Collect Date:	01/13/2009 08:50	Dilution:	2	File ID:	EL.020209.233743
Sample Tag:	DL01	Units:	mg/kg	Percent Solid:	92.4

Analyte	CAS. Number	Result	Qual	RL	MDL
Arsenic, Total	7440-38-2	1.17		0.619	0.155

Microbac

663 lw 3/31/09

Report Number: L09010304

Report Date : **February 13, 2009**

Sample Number:	L09010304-01	PrePrep Method:	NONE	Instrument:	ELAN-ICP
Client ID:	MR08-SS299-09A	Prep Method:	3051	Prep Date:	01/19/2009 07:31
Matrix:	Soil	Analytical Method:	6020	Cal Date:	02/03/2009 14:36
Workgroup Number:	WG293944	Analyst:	JYH	Run Date:	02/04/2009 03:17
Collect Date:	01/13/2009 08:50	Dilution:	10	File ID:	EL.020409.031746
Sample Tag:	DL03	Units:	mg/kg	Percent Solid:	92.4

Analyte	CAS. Number	Result	Qual	RL	MDL
Lead, Total	7439-92-1	154 J		4.12	1.03

MSH

Microbac

664 lw 3/31/09

Report Number: L09010304
Report Date : February 13, 2009

Sample Number: L09010304-01
Client ID: MR08-SS299-09A
Matrix: Soil
Workgroup Number: WG293944
Collect Date: 01/13/2009 08:50
Sample Tag: DL02

PrePrep Method: NONE
Prep Method: 3051
Analytical Method: 6020
Analyst: JYH
Dilution: 2
Units: mg/kg

Instrument: ELAN-ICP
Prep Date: 01/19/2009 07:31
Cal Date: 02/03/2009 14:36
Run Date: 02/03/2009 23:30
File ID: EL.020309.233003
Percent Solid: 92.4

Analyte	CAS. Number	Result	Qual	RL	MDL
Selenium, Total	7782-49-2	0.241	J	0.825	0.206

J Estimated ; the analyte concentration was less than the low standard (LOQ)

Microbac

662 lw 3/31/09

Report Number: L09010304

Report Date : February 13, 2009

Sample Number:	L09010304-01	PrePrep Method:	NONE	Instrument:	HYDRA
Client ID:	MR08-SS299-09A	Prep Method:	7471A	Prep Date:	01/16/2009 11:25
Matrix:	Soil	Analytical Method:	7471A	Cal Date:	01/16/2009 15:26
Workgroup Number:	WG292761	Analyst:	ADC	Run Date:	01/16/2009 16:04
Collect Date:	01/13/2009 08:50	Dilution:	1	File ID:	HY.011609.160403
Sample Tag:	01	Units:	mg/kg	Percent Solid:	92.4

Analyte	CAS. Number	Result	Qual	RL	MDL
Mercury, Total	7439-97-6	0.111		0.104	0.0208

Microbac®

2476 MH 3/31/09

2

Sample Number: L09010304-02
Client ID: MR08-SS299D-09A
Matrix: Soil
Workgroup Number: WG292763
Collect Date: 01/13/2009 09:00
Sample Tag: 01

PrePrep Method: NONE
Prep Method: 3051
Analytical Method: 6010B
Analyst: EDA
Dilution: 1
Units: mg/kg

Instrument: ICP-THERMO2
Prep Date: 01/16/2009 07:22
Cal Date: 01/16/2009 15:46
Run Date: 01/16/2009 19:59
File ID: T2.011609.195919
Percent Solid: 93.1

Analyte	CAS. Number	Result	Qual	RL	MDL
Silver, Total	7440-22-4		U	0.735	0.184
Barium, Total	7440-39-3	7.33		0.367	0.0735
Cadmium, Total	7440-43-9	0.555		0.147	0.0367
Chromium, Total	7440-47-3	6.53 J		0.735	0.0881

SD

U Undetected; the analyte was analyzed for, but not detected.

Microbac

16 lew 3/31/09

2

Sample Number: L09010304-02
Client ID: MR08-SS299D-09A
Matrix: Soil
Workgroup Number: WG293944
Collect Date: 01/13/2009 09:00
Sample Tag: DL01

PrePrep Method: NONE
Prep Method: 3051
Analytical Method: 6020
Analyst: JYH
Dilution: 2
Units: mg/kg

Instrument: ELAN-ICP
Prep Date: 01/19/2009 07:31
Cal Date: 02/02/2009 11:02
Run Date: 02/02/2009 23:56
File ID: EL.020209.235601
Percent Solid: 93.1

Analyte	CAS. Number	Result	Qual	RL	MDL
Arsenic, Total	7440-38-2	0.277	J	0.622	0.156
Lead, Total	7439-92-1	5.97 J		0.830	0.207

MSH

J Estimated ; the analyte concentration was less than the low standard (LOQ)

Microbac

665 JW 3/31/09

2

Sample Number:	L09010304-02	PrePrep Method:	NONE	Instrument:	ELAN-ICP
Client ID:	MR08-SS299D-09A	Prep Method:	3051	Prep Date:	01/19/2009 07:31
Matrix:	Soil	Analytical Method:	6020	Cal Date:	02/03/2009 14:36
Workgroup Number:	WG293944	Analyst:	JYH	Run Date:	02/03/2009 23:48
Collect Date:	01/13/2009 09:00	Dilution:	2	File ID:	EL.020309.234817
Sample Tag:	DL02	Units:	mg/kg	Percent Solid:	93.1

Analyte	CAS. Number	Result	Qual	RL	MDL
Selenium, Total	7782-49-2		U	0.830	0.207

U Undetected; the analyte was analyzed for, but not detected.

Microbac

666 MW 3/3/09

2

Sample Number:	L09010304-02	PrePrep Method:	NONE	Instrument:	HYDRA
Client ID:	MR08-SS299D-09A	Prep Method:	7471A	Prep Date:	01/16/2009 11:25
Matrix:	Soil	Analytical Method:	7471A	Cal Date:	01/16/2009 15:26
Workgroup Number:	WG292761	Analyst:	ADC	Run Date:	01/16/2009 16:08
Collect Date:	01/13/2009 09:00	Dilution:	1	File ID:	HY.011609.160823
Sample Tag:	01	Units:	mg/kg	Percent Solid:	93.1

Analyte	CAS. Number	Result	Qual	RL	MDL
Mercury, Total	7439-97-6	0.0286	J	0.106	0.0212

J Estimated ; the analyte concentration was less than the low standard (LOQ)

Microbac

2477 DW 3/31/09

3

Sample Number: L09010304-03
Client ID: MR08-IS299-6-7-09A
Matrix: Soil
Workgroup Number: WG292763
Collect Date: 01/13/2009 09:20
Sample Tag: 01

PrePrep Method: NONE
Prep Method: 3051
Analytical Method: 6010B
Analyst: EDA
Dilution: 1
Units: mg/kg

Instrument: ICP-THERMO2
Prep Date: 01/16/2009 07:22
Cal Date: 01/16/2009 15:46
Run Date: 01/16/2009 20:23
File ID: T2.011609.202358
Percent Solid: 88.5

Analyte	CAS. Number	Result	Qual	RL	MDL
Silver, Total	7440-22-4		U	0.765	0.191
Barium, Total	7440-39-3	8.46		0.383	0.0765
Cadmium, Total	7440-43-9		U	0.153	0.0383
Chromium, Total	7440-47-3	1.68 J		0.765	0.0918

SD

U Undetected; the analyte was analyzed for, but not detected.

Microbac

17 Cew 2/31/09

3

Sample Number: L09010304-03
Client ID: MR08-IS299-6-7-09A
Matrix: Soil
Workgroup Number: WG293944
Collect Date: 01/13/2009 09:20
Sample Tag: DL02

PrePrep Method: NONE
Prep Method: 3051
Analytical Method: 6020
Analyst: JYH
Dilution: 2
Units: mg/kg

Instrument: ELAN-ICP
Prep Date: 01/19/2009 07:31
Cal Date: 02/03/2009 14:36
Run Date: 02/03/2009 23:54
File ID: EL.020309.235422
Percent Solid: 88.5

Analyte	CAS. Number	Result	Qual	RL	MDL
Selenium, Total	7782-49-2		U	0.874	0.219

U Undetected; the analyte was analyzed for, but not detected.

Microbac

 kw 3/31/09

3

Sample Number: L09010304-03
Client ID: MR08-IS299-6-7-09A
Matrix: Soil
Workgroup Number: WG293944
Collect Date: 01/13/2009 09:20
Sample Tag: DL01

PrePrep Method: NONE
Prep Method: 3051
Analytical Method: 6020
Analyst: JYH
Dilution: 2
Units: mg/kg

Instrument: ELAN-ICP
Prep Date: 01/19/2009 07:31
Cal Date: 02/02/2009 11:02
Run Date: 02/03/2009 00:02
File ID: EL.020309.000206
Percent Solid: 88.5

Analyte	CAS. Number	Result	Qual	RL	MDL
Arsenic, Total	7440-38-2		U	0.656	0.164
Lead, Total	7439-92-1	1.61 J		0.874	0.219

MSH

U Undetected; the analyte was analyzed for, but not detected.

Microbac

668 lew 3/31/09

3

Sample Number: L09010304-03
Client ID: MR08-IS299-6-7-09A
Matrix: Soil
Workgroup Number: WG292761
Collect Date: 01/13/2009 09:20
Sample Tag: 01

PrePrep Method: NONE
Prep Method: 7471A
Analytical Method: 7471A
Analyst: ADC
Dilution: 1
Units: mg/kg

Instrument: HYDRA
Prep Date: 01/16/2009 11:25
Cal Date: 01/16/2009 15:26
Run Date: 01/16/2009 16:10
File ID: HY.011609.161008
Percent Solid: 88.5

Analyte	CAS. Number	Result	Qual	RL	MDL
Mercury, Total	7439-97-6		U	0.112	0.0224

U Undetected; the analyte was analyzed for, but not detected.

Microbac

2478 lw 3/31/09

4

Sample Number: L09010304-04
Client ID: MR08-IS299D-6-7-09A
Matrix: Soil
Workgroup Number: WG292763
Collect Date: 01/13/2009 09:25
Sample Tag: 01

PrePrep Method: NONE
Prep Method: 3051
Analytical Method: 6010B
Analyst: EDA
Dilution: 1
Units: mg/kg

Instrument: ICP-THERMO2
Prep Date: 01/16/2009 07:22
Cal Date: 01/16/2009 15:46
Run Date: 01/16/2009 20:30
File ID: T2.011609.203002
Percent Solid: 89.2

Analyte	CAS. Number	Result	Qual	RL	MDL
Silver, Total	7440-22-4		U	0.770	0.193
Barium, Total	7440-39-3	6.14		0.385	0.0770
Cadmium, Total	7440-43-9		U	0.154	0.0385
Chromium, Total	7440-47-3	1.66 J		0.770	0.0924

SD

U Undetected; the analyte was analyzed for, but not detected.

Microbac

18 LW 3/31/09

4

Sample Number: L09010304-04
Client ID: MR08-IS299D-6-7-09A
Matrix: Soil
Workgroup Number: WG293944
Collect Date: 01/13/2009 09:25
Sample Tag: DL01

PrePrep Method: NONE
Prep Method: 3051
Analytical Method: 6020
Analyst: JYH
Dilution: 2
Units: mg/kg

Instrument: ELAN-ICP
Prep Date: 01/19/2009 07:31
Cal Date: 02/02/2009 11:02
Run Date: 02/03/2009 00:08
File ID: EL.020309.000809
Percent Solid: 89.2

Analyte	CAS. Number	Result	Qual	RL	MDL
Arsenic, Total	7440-38-2		U	0.656	0.164
Lead, Total	7439-92-1	1.79 J		0.874	0.219

MSH

U Undetected; the analyte was analyzed for, but not detected.

Microbac

669 lwo 3/3/09

4

Sample Number:	L09010304-04	PrePrep Method:	NONE	Instrument:	ELAN-ICP
Client ID:	MR08-IS299D-6-7-09A	Prep Method:	3051	Prep Date:	01/19/2009 07:31
Matrix:	Soil	Analytical Method:	6020	Cal Date:	02/03/2009 14:36
Workgroup Number:	WG293944	Analyst:	JYH	Run Date:	02/04/2009 00:13
Collect Date:	01/13/2009 09:25	Dilution:	2	File ID:	EL.020409.001332
Sample Tag:	DL02	Units:	mg/kg	Percent Solid:	89.2

Analyte	CAS. Number	Result	Qual	RL	MDL
Selenium, Total	7782-49-2		U	0.874	0.219

U Undetected; the analyte was analyzed for, but not detected.

Microbac

670 JW 3/31/09

4

Sample Number:	L09010304-04	PrePrep Method:	NONE	Instrument:	HYDRA
Client ID:	MR08-IS299D-6-7-09A	Prep Method:	7471A	Prep Date:	01/16/2009 11:25
Matrix:	Soil	Analytical Method:	7471A	Cal Date:	01/16/2009 15:26
Workgroup Number:	WG292761	Analyst:	ADC	Run Date:	01/16/2009 16:11
Collect Date:	01/13/2009 09:25	Dilution:	1	File ID:	HY.011609.161151
Sample Tag:	01	Units:	mg/kg	Percent Solid:	89.2

Analyte	CAS. Number	Result	Qual	RL	MDL
Mercury, Total	7439-97-6		U	0.106	0.0212

U Undetected; the analyte was analyzed for, but not detected.

Microbac

2479 lew 3/31/09

5

Sample Number: L09010304-05
Client ID: MR08-SS304-09A
Matrix: Soil
Workgroup Number: WG292763
Collect Date: 01/13/2009 09:40
Sample Tag: 01

PrePrep Method: NONE
Prep Method: 3051
Analytical Method: 6010B
Analyst: EDA
Dilution: 1
Units: mg/kg

Instrument: ICP-THERMO2
Prep Date: 01/16/2009 07:22
Cal Date: 01/16/2009 15:46
Run Date: 01/16/2009 20:36
File ID: T2.011609.203606
Percent Solid: 92.6

Analyte	CAS. Number	Result	Qual	RL	MDL
Silver, Total	7440-22-4		U	0.729	0.182
Barium, Total	7440-39-3	7.84		0.364	0.0729
Cadmium, Total	7440-43-9	0.396		0.146	0.0364
Chromium, Total	7440-47-3	5.26 J		0.729	0.0875

SD

U Undetected; the analyte was analyzed for, but not detected.

Microbac

19 lw 3/31/09

5

Sample Number: L09010304-05
Client ID: MR08-SS304-09A
Matrix: Soil
Workgroup Number: WG293944
Collect Date: 01/13/2009 09:40
Sample Tag: DL01

PrePrep Method: NONE
Prep Method: 3051
Analytical Method: 6020
Analyst: JYH
Dilution: 2
Units: mg/kg

Instrument: ELAN-ICP
Prep Date: 01/19/2009 07:31
Cal Date: 02/02/2009 11:02
Run Date: 02/03/2009 00:14
File ID: EL.020309.001413
Percent Solid: 92.6

Analyte	CAS. Number	Result	Qual	RL	MDL
Arsenic, Total	7440-38-2	1.03		0.635	0.159
Lead, Total	7439-92-1	43.8 J		0.847	0.212

MSH

Microbac

671 Les 3/31/09

5

Sample Number: L09010304-05
Client ID: MR08-SS304-09A
Matrix: Soil
Workgroup Number: WG293944
Collect Date: 01/13/2009 09:40
Sample Tag: DL02

PrePrep Method: NONE
Prep Method: 3051
Analytical Method: 6020
Analyst: JYH
Dilution: 2
Units: mg/kg

Instrument: ELAN-ICP
Prep Date: 01/19/2009 07:31
Cal Date: 02/03/2009 14:36
Run Date: 02/04/2009 00:19
File ID: EL.020409.001938
Percent Solid: 92.6

Analyte	CAS. Number	Result	Qual	RL	MDL
Selenium, Total	7782-49-2	0.216	J	0.847	0.212

J Estimated ; the analyte concentration was less than the low standard (LOQ)

Microbac

672 RLW 3/3/09

5

Sample Number: L09010304-05
Client ID: MR08-SS304-09A
Matrix: Soil
Workgroup Number: WG292761
Collect Date: 01/13/2009 09:40
Sample Tag: 01

PrePrep Method: NONE
Prep Method: 7471A
Analytical Method: 7471A
Analyst: ADC
Dilution: 1
Units: mg/kg

Instrument: HYDRA
Prep Date: 01/16/2009 11:25
Cal Date: 01/16/2009 15:26
Run Date: 01/16/2009 16:13
File ID: HY.011609.161335
Percent Solid: 92.6

Analyte	CAS. Number	Result	Qual	RL	MDL
Mercury, Total	7439-97-6		U	0.107	0.0213

U Undetected; the analyte was analyzed for, but not detected.

Microbac

2480 MW 3/3/09

6

Sample Number: L09010304-06
Client ID: MR08-IS304-6-7-09A
Matrix: Soil
Workgroup Number: WG292763
Collect Date: 01/13/2009 10:00
Sample Tag: 01

PrePrep Method: NONE
Prep Method: 3051
Analytical Method: 6010B
Analyst: EDA
Dilution: 1
Units: mg/kg

Instrument: ICP-THERMO2
Prep Date: 01/16/2009 07:22
Cal Date: 01/16/2009 15:46
Run Date: 01/16/2009 20:42
File ID: T2.011609.204222
Percent Solid: 89.7

Analyte	CAS. Number	Result	Qual	RL	MDL
Silver, Total	7440-22-4		U	0.838	0.210
Barium, Total	7440-39-3	3.89		0.419	0.0838
Cadmium, Total	7440-43-9		U	0.168	0.0419
Chromium, Total	7440-47-3	2.57 J		0.838	0.101

SD

U Undetected; the analyte was analyzed for, but not detected.

Microbac

20 LW 3/31/09

6

Sample Number: L09010304-06
Client ID: MR08-IS304-6-7-09A
Matrix: Soil
Workgroup Number: WG293944
Collect Date: 01/13/2009 10:00
Sample Tag: DL01

PrePrep Method: NONE
Prep Method: 3051
Analytical Method: 6020
Analyst: JYH
Dilution: 2
Units: mg/kg

Instrument: ELAN-ICP
Prep Date: 01/19/2009 07:31
Cal Date: 02/02/2009 11:02
Run Date: 02/03/2009 00:20
File ID: EL.020309.002016
Percent Solid: 89.7

Analyte	CAS. Number	Result	Qual	RL	MDL
Arsenic, Total	7440-38-2		U	0.652	0.163
Lead, Total	7439-92-1	2.74 J		0.869	0.217

MSH

U Undetected; the analyte was analyzed for, but not detected.

Microbac

673 lw 3/3/09

6

Sample Number: L09010304-06
Client ID: MR08-IS304-6-7-09A
Matrix: Soil
Workgroup Number: WG293944
Collect Date: 01/13/2009 10:00
Sample Tag: DL02

PrePrep Method: NONE
Prep Method: 3051
Analytical Method: 6020
Analyst: JYH
Dilution: 2
Units: mg/kg

Instrument: ELAN-ICP
Prep Date: 01/19/2009 07:31
Cal Date: 02/03/2009 14:36
Run Date: 02/04/2009 00:25
File ID: EL.020409.002543
Percent Solid: 89.7

Analyte	CAS. Number	Result	Qual	RL	MDL
Selenium, Total	7782-49-2		U	0.869	0.217

U Undetected; the analyte was analyzed for, but not detected.

Microbac

 fw 3/31/09

6

Sample Number: L09010304-06
Client ID: MR08-IS304-6-7-09A
Matrix: Soil
Workgroup Number: WG292761
Collect Date: 01/13/2009 10:00
Sample Tag: 01

PrePrep Method: NONE
Prep Method: 7471A
Analytical Method: 7471A
Analyst: ADC
Dilution: 1
Units: mg/kg

Instrument: HYDRA
Prep Date: 01/16/2009 11:25
Cal Date: 01/16/2009 15:26
Run Date: 01/16/2009 16:15
File ID: HY.011609.161523
Percent Solid: 89.7

Analyte	CAS. Number	Result	Qual	RL	MDL
Mercury, Total	7439-97-6		U	0.110	0.0221

U Undetected; the analyte was analyzed for, but not detected.

Microbac

2481 kw 3/3/09

7

Sample Number: L09010304-07
Client ID: MR08-SS312-09A
Matrix: Soil
Workgroup Number: WG292763
Collect Date: 01/13/2009 10:10
Sample Tag: 01

PrePrep Method: NONE
Prep Method: 3051
Analytical Method: 6010B
Analyst: EDA
Dilution: 1
Units: mg/kg

Instrument: ICP-THERMO2
Prep Date: 01/16/2009 07:22
Cal Date: 01/16/2009 15:46
Run Date: 01/16/2009 21:00
File ID: T2.011609.210024
Percent Solid: 89.6

Analyte	CAS. Number	Result	Qual	RL	MDL
Silver, Total	7440-22-4		U	0.783	0.196
Barium, Total	7440-39-3	5.67		0.391	0.0783
Cadmium, Total	7440-43-9	0.0509	J	0.157	0.0391
Chromium, Total	7440-47-3	2.38 J		0.783	0.0939

SD

U Undetected; the analyte was analyzed for, but not detected.
J Estimated ; the analyte concentration was less than the low standard (LOQ)

Microbac

21 MW 3/31/09

7

Sample Number: L09010304-07
Client ID: MR08-SS312-09A
Matrix: Soil
Workgroup Number: WG293944
Collect Date: 01/13/2009 10:10
Sample Tag: DL02

PrePrep Method: NONE
Prep Method: 3051
Analytical Method: 6020
Analyst: JYH
Dilution: 2
Units: mg/kg

Instrument: ELAN-ICP
Prep Date: 01/19/2009 07:31
Cal Date: 02/03/2009 14:36
Run Date: 02/04/2009 00:31
File ID: EL.020409.003145
Percent Solid: 89.6

Analyte	CAS. Number	Result	Qual	RL	MDL
Selenium, Total	7782-49-2		U	0.836	0.209

U Undetected; the analyte was analyzed for, but not detected.

Microbac

675 lew 3/31/09

7

Sample Number: L09010304-07
Client ID: MR08-SS312-09A
Matrix: Soil
Workgroup Number: WG293944
Collect Date: 01/13/2009 10:10
Sample Tag: DL01

PrePrep Method: NONE
Prep Method: 3051
Analytical Method: 6020
Analyst: JYH
Dilution: 2
Units: mg/kg

Instrument: ELAN-ICP
Prep Date: 01/19/2009 07:31
Cal Date: 02/02/2009 11:02
Run Date: 02/03/2009 00:26
File ID: EL.020309.002621
Percent Solid: 89.6

Analyte	CAS. Number	Result	Qual	RL	MDL
Arsenic, Total	7440-38-2	0.776		0.627	0.157
Lead, Total	7439-92-1	12.9 J		0.836	0.209

MSH

Microbac

676 LW 3/31/09

7

Sample Number: L09010304-07
Client ID: MR08-SS312-09A
Matrix: Soil
Workgroup Number: WG292761
Collect Date: 01/13/2009 10:10
Sample Tag: 01

PrePrep Method: NONE
Prep Method: 7471A
Analytical Method: 7471A
Analyst: ADC
Dilution: 1
Units: mg/kg

Instrument: HYDRA
Prep Date: 01/16/2009 11:25
Cal Date: 01/16/2009 15:26
Run Date: 01/16/2009 16:21
File ID: HY.011609.162126
Percent Solid: 89.6

Analyte	CAS. Number	Result	Qual	RL	MDL
Mercury, Total	7439-97-6	0.0215	J	0.106	0.0213

J Estimated ; the analyte concentration was less than the low standard (LOQ)

Microbac

2482 lw 3/31/09

8

Sample Number: L09010304-08
Client ID: MR08-IS312-5-6-09A
Matrix: Soil
Workgroup Number: WG292763
Collect Date: 01/13/2009 10:30
Sample Tag: 01

PrePrep Method: NONE
Prep Method: 3051
Analytical Method: 6010B
Analyst: EDA
Dilution: 1
Units: mg/kg

Instrument: ICP-THERMO2
Prep Date: 01/16/2009 07:22
Cal Date: 01/16/2009 15:46
Run Date: 01/16/2009 21:06
File ID: T2.011609.210625
Percent Solid: 92.8

Analyte	CAS. Number	Result	Qual	RL	MDL
Silver, Total	7440-22-4		U	0.756	0.189
Barium, Total	7440-39-3	1.08		0.378	0.0756
Cadmium, Total	7440-43-9		U	0.151	0.0378
Chromium, Total	7440-47-3	0.637 J	~~J~~	0.756	0.0908

SO

U Undetected; the analyte was analyzed for, but not detected.
J Estimated ; the analyte concentration was less than the low standard (LOQ)

Microbac

22 lew 3/31/09

8

Sample Number: L09010304-08
Client ID: MR08-IS312-5-6-09A
Matrix: Soil
Workgroup Number: WG293944
Collect Date: 01/13/2009 10:30
Sample Tag: DL02

PrePrep Method: NONE
Prep Method: 3051
Analytical Method: 6020
Analyst: JYH
Dilution: 2
Units: mg/kg

Instrument: ELAN-ICP
Prep Date: 01/19/2009 07:31
Cal Date: 02/03/2009 14:36
Run Date: 02/04/2009 00:37
File ID: EL.020409.003749
Percent Solid: 92.8

Analyte	CAS. Number	Result	Qual	RL	MDL
Selenium, Total	7782-49-2		U	0.861	0.215

U Undetected; the analyte was analyzed for, but not detected.

Microbac

677 lew 3/31/09

8

Sample Number: L09010304-08
Client ID: MR08-IS312-5-6-09A
Matrix: Soil
Workgroup Number: WG293944
Collect Date: 01/13/2009 10:30
Sample Tag: DL01

PrePrep Method: NONE
Prep Method: 3051
Analytical Method: 6020
Analyst: JYH
Dilution: 2
Units: mg/kg

Instrument: ELAN-ICP
Prep Date: 01/19/2009 07:31
Cal Date: 02/02/2009 11:02
Run Date: 02/03/2009 00:45
File ID: EL.020309.004529
Percent Solid: 92.8

Analyte	CAS. Number	Result	Qual	RL	MDL
Arsenic, Total	7440-38-2		U	0.645	0.161
Lead, Total	7439-92-1	0.583 J	~~J~~	0.861	0.215

MSH

U Undetected; the analyte was analyzed for, but not detected.
J Estimated ; the analyte concentration was less than the low standard (LOQ)

Microbac

678 fcW 3/3/09

8

Sample Number: L09010304-08
Client ID: MR08-IS312-5-6-09A
Matrix: Soil
Workgroup Number: WG292761
Collect Date: 01/13/2009 10:30
Sample Tag: 01

PrePrep Method: NONE
Prep Method: 7471A
Analytical Method: 7471A
Analyst: ADC
Dilution: 1
Units: mg/kg

Instrument: HYDRA
Prep Date: 01/16/2009 11:25
Cal Date: 01/16/2009 15:26
Run Date: 01/16/2009 16:23
File ID: HY.011609.162322
Percent Solid: 92.8

Analyte	CAS. Number	Result	Qual	RL	MDL
Mercury, Total	7439-97-6		U	0.105	0.0210

U Undetected; the analyte was analyzed for, but not detected.

Microbac

2483 lw 3/31/09

9

Sample Number: L09010304-09
Client ID: MR08-SS311-09A
Matrix: Soil
Workgroup Number: WG292763
Collect Date: 01/13/2009 10:40
Sample Tag: 01

PrePrep Method: NONE
Prep Method: 3051
Analytical Method: 6010B
Analyst: EDA
Dilution: 1
Units: mg/kg

Instrument: ICP-THERMO2
Prep Date: 01/16/2009 07:22
Cal Date: 01/16/2009 15:46
Run Date: 01/16/2009 21:12
File ID: T2.011609.211229
Percent Solid: 83.6

Analyte	CAS. Number	Result	Qual	RL	MDL
Silver, Total	7440-22-4		U	0.847	0.212
Barium, Total	7440-39-3	15.7		0.423	0.0847
Cadmium, Total	7440-43-9	0.117	J	0.169	0.0423
Chromium, Total	7440-47-3	2.70 J		0.847	0.102

SD

U Undetected; the analyte was analyzed for, but not detected.
J Estimated ; the analyte concentration was less than the low standard (LOQ)

Microbac

23 fw 3/31/09

9

Sample Number:	L09010304-09	PrePrep Method:	NONE	Instrument:	ELAN-ICP
Client ID:	MR08-SS311-09A	Prep Method:	3051	Prep Date:	01/19/2009 07:31
Matrix:	Soil	Analytical Method:	6020	Cal Date:	02/02/2009 11:02
Workgroup Number:	WG293944	Analyst:	JYH	Run Date:	02/03/2009 00:51
Collect Date:	01/13/2009 10:40	Dilution:	2	File ID:	EL.020309.005134
Sample Tag:	DL01	Units:	mg/kg	Percent Solid:	83.6

Analyte	CAS. Number	Result	Qual	RL	MDL
Arsenic, Total	7440-38-2	0.664	J	0.718	0.179
Lead, Total	7439-92-1	64.4 J		0.957	0.239

MSH

J Estimated ; the analyte concentration was less than the low standard (LOQ)

Microbac

 kw 3/31/09

9

Sample Number: L09010304-09
Client ID: MR08-SS311-09A
Matrix: Soil
Workgroup Number: WG293944
Collect Date: 01/13/2009 10:40
Sample Tag: DL02

PrePrep Method: NONE
Prep Method: 3051
Analytical Method: 6020
Analyst: JYH
Dilution: 2
Units: mg/kg

Instrument: ELAN-ICP
Prep Date: 01/19/2009 07:31
Cal Date: 02/03/2009 14:36
Run Date: 02/04/2009 00:43
File ID: EL.020409.004353
Percent Solid: 83.6

Analyte	CAS. Number	Result	Qual	RL	MDL
Selenium, Total	7782-49-2		U	0.957	0.239

U Undetected; the analyte was analyzed for, but not detected.

Microbac

680 kw 3/3/09

9

Sample Number:	L09010304-09	PrePrep Method:	NONE	Instrument:	HYDRA
Client ID:	MR08-SS311-09A	Prep Method:	7471A	Prep Date:	01/16/2009 11:25
Matrix:	Soil	Analytical Method:	7471A	Cal Date:	01/16/2009 15:26
Workgroup Number:	WG292761	Analyst:	ADC	Run Date:	01/16/2009 16:27
Collect Date:	01/13/2009 10:40	Dilution:	1	File ID:	HY.011609.162702
Sample Tag:	01	Units:	mg/kg	Percent Solid:	83.6

Analyte	CAS. Number	Result	Qual	RL	MDL
Mercury, Total	7439-97-6	0.0574	J	0.111	0.0223

J Estimated ; the analyte concentration was less than the low standard (LOQ)

Microbac

2484 lew 3/3/09

10

Sample Number: L09010304-10
Client ID: MR08-IS311-8-9-09A
Matrix: Soil
Workgroup Number: WG292763
Collect Date: 01/13/2009 10:55
Sample Tag: 01

PrePrep Method: NONE
Prep Method: 3051
Analytical Method: 6010B
Analyst: EDA
Dilution: 1
Units: mg/kg

Instrument: ICP-THERMO2
Prep Date: 01/16/2009 07:22
Cal Date: 01/16/2009 15:46
Run Date: 01/16/2009 21:18
File ID: T2.011609.211829
Percent Solid: 89.9

Analyte	CAS. Number	Result	Qual	RL	MDL
Silver, Total	7440-22-4		U	0.752	0.188
Barium, Total	7440-39-3	6.39		0.376	0.0752
Cadmium, Total	7440-43-9		U	0.150	0.0376
Chromium, Total	7440-47-3	4.12 J		0.752	0.0902

SD

U Undetected; the analyte was analyzed for, but not detected.

Microbac

 3/31/09

10

Sample Number: L09010304-10
Client ID: MR08-IS311-8-9-09A
Matrix: Soil
Workgroup Number: WG293944
Collect Date: 01/13/2009 10:55
Sample Tag: DL01

PrePrep Method: NONE
Prep Method: 3051
Analytical Method: 6020
Analyst: JYH
Dilution: 2
Units: mg/kg

Instrument: ELAN-ICP
Prep Date: 01/19/2009 07:31
Cal Date: 02/02/2009 11:02
Run Date: 02/03/2009 00:57
File ID: EL.020309.005739
Percent Solid: 89.9

Analyte	CAS. Number	Result	Qual	RL	MDL
Arsenic, Total	7440-38-2	0.850		0.662	0.165
Lead, Total	7439-92-1	3.33 J		0.882	0.221

MSH

Microbac

681 JCW 3/31/09

10

Sample Number:	L09010304-10	PrePrep Method:	NONE	Instrument:	ELAN-ICP
Client ID:	MR08-IS311-8-9-09A	Prep Method:	3051	Prep Date:	01/19/2009 07:31
Matrix:	Soil	Analytical Method:	6020	Cal Date:	02/03/2009 14:36
Workgroup Number:	WG293944	Analyst:	JYH	Run Date:	02/04/2009 00:49
Collect Date:	01/13/2009 10:55	Dilution:	2	File ID:	EL.020409.004957
Sample Tag:	DL02	Units:	mg/kg	Percent Solid:	89.9

Analyte	CAS. Number	Result	Qual	RL	MDL
Selenium, Total	7782-49-2		U	0.882	0.221

U Undetected; the analyte was analyzed for, but not detected.

Microbac

lw 3/31/09

10

Sample Number: L09010304-10
Client ID: MR08-IS311-8-9-09A
Matrix: Soil
Workgroup Number: WG292761
Collect Date: 01/13/2009 10:55
Sample Tag: 01

PrePrep Method: NONE
Prep Method: 7471A
Analytical Method: 7471A
Analyst: ADC
Dilution: 1
Units: mg/kg

Instrument: HYDRA
Prep Date: 01/16/2009 11:25
Cal Date: 01/16/2009 15:26
Run Date: 01/16/2009 16:29
File ID: HY.011609.162920
Percent Solid: 89.9

Analyte	CAS. Number	Result	Qual	RL	MDL
Mercury, Total	7439-97-6		U	0.108	0.0216

U Undetected; the analyte was analyzed for, but not detected.

Microbac

2485 JW 3/31/09

11

Sample Number: L09010304-11
Client ID: MR08-SS308-09A
Matrix: Soil
Workgroup Number: WG292763
Collect Date: 01/13/2009 11:10
Sample Tag: 01

PrePrep Method: NONE
Prep Method: 3051
Analytical Method: 6010B
Analyst: EDA
Dilution: 1
Units: mg/kg

Instrument: ICP-THERMO2
Prep Date: 01/16/2009 07:22
Cal Date: 01/16/2009 15:46
Run Date: 01/16/2009 21:24
File ID: T2.011609.212431
Percent Solid: 87.8

Analyte	CAS. Number	Result	Qual	RL	MDL
Silver, Total	7440-22-4		U	0.786	0.196
Barium, Total	7440-39-3	7.54		0.393	0.0786
Cadmium, Total	7440-43-9		U	0.157	0.0393
Chromium, Total	7440-47-3	4.42 J		0.786	0.0943

SD

U Undetected; the analyte was analyzed for, but not detected.

Microbac

25 lw 3/3/09

Sample Number:	L09010304-11	PrePrep Method:	NONE	Instrument:	ELAN-ICP
Client ID:	MR08-SS308-09A	Prep Method:	3051	Prep Date:	01/19/2009 07:31
Matrix:	Soil	Analytical Method:	6020	Cal Date:	02/03/2009 14:36
Workgroup Number:	WG293944	Analyst:	JYH	Run Date:	02/03/2009 23:11
Collect Date:	01/13/2009 11:10	Dilution:	2	File ID:	EL.020309.231152
Sample Tag:	DL02	Units:	mg/kg	Percent Solid:	87.8

Analyte	CAS. Number	Result	Qual	RL	MDL
Selenium, Total	7782-49-2		U	0.888	0.222

U Undetected; the analyte was analyzed for, but not detected.

Microbac

JW 3/3/09

11

Sample Number: L09010304-11
Client ID: MR08-SS308-09A
Matrix: Soil
Workgroup Number: WG293944
Collect Date: 01/13/2009 11:10
Sample Tag: DL01

PrePrep Method: NONE
Prep Method: 3051
Analytical Method: 6020
Analyst: JYH
Dilution: 2
Units: mg/kg

Instrument: ELAN-ICP
Prep Date: 01/19/2009 07:31
Cal Date: 02/02/2009 11:02
Run Date: 02/02/2009 23:06
File ID: EL.020209.230625
Percent Solid: 87.8

Analyte	CAS. Number	Result	Qual	RL	MDL
Arsenic, Total	7440-38-2	0.714		0.666	0.166
Lead, Total	7439-92-1	24.0 J		0.888	0.222

MSH

Microbac

684 lw 3/31/09

11

Sample Number: L09010304-11
Client ID: MR08-SS308-09A
Matrix: Soil
Workgroup Number: WG292761
Collect Date: 01/13/2009 11:10
Sample Tag: 01

PrePrep Method: NONE
Prep Method: 7471A
Analytical Method: 7471A
Analyst: ADC
Dilution: 1
Units: mg/kg

Instrument: HYDRA
Prep Date: 01/16/2009 11:25
Cal Date: 01/16/2009 15:26
Run Date: 01/16/2009 16:31
File ID: HY.011609.163134
Percent Solid: 87.8

Analyte	CAS. Number	Result	Qual	RL	MDL
Mercury, Total	7439-97-6	0.0255	J	0.111	0.0223

J Estimated ; the analyte concentration was less than the low standard (LOQ)

Microbac

2486 MW 3/31/09

14

Sample Number: L09010304-14
Client ID: MR08-IS308-9-10-09A
Matrix: Soil
Workgroup Number: WG292750
Collect Date: 01/13/2009 11:45
Sample Tag: 01

PrePrep Method: NONE
Prep Method: 3051
Analytical Method: 6010B
Analyst: KHR
Dilution: 1
Units: mg/kg

Instrument: IRIS-ICP
Prep Date: 01/16/2009 08:22
Cal Date: 01/16/2009 11:30
Run Date: 01/16/2009 15:42
File ID: IR.011609.154200
Percent Solid: 96.6

Analyte	CAS. Number	Result	Qual	RL	MDL
Silver, Total	7440-22-4		U	0.715	0.179
Barium, Total	7440-39-3	1.72		0.357	0.0715
Cadmium, Total	7440-43-9		U	0.143	0.0357
Chromium, Total	7440-47-3	1.34		0.715	0.0858

U Undetected; the analyte was analyzed for, but not detected.

Microbac

LW
3/31/09

14

Sample Number: L09010304-14
Client ID: MR08-IS308-9-10-09A
Matrix: Soil
Workgroup Number: WG293943
Collect Date: 01/13/2009 11:45
Sample Tag: DL01

PrePrep Method: NONE
Prep Method: 3051
Analytical Method: 6020
Analyst: JYH
Dilution: 2
Units: mg/kg

Instrument: ELAN-ICP
Prep Date: 01/19/2009 08:12
Cal Date: 02/02/2009 11:02
Run Date: 02/03/2009 01:15
File ID: EL.020309.011557
Percent Solid: 96.6

Analyte	CAS. Number	Result	Qual	RL	MDL
Arsenic, Total	7440-38-2		U	0.611	0.153
Lead, Total	7439-92-1	1.11		0.815	0.204

U Undetected; the analyte was analyzed for, but not detected.

Microbac

689 MW 3/31/09

14

Sample Number: L09010304-14
Client ID: MR08-IS308-9-10-09A
Matrix: Soil
Workgroup Number: WG293943
Collect Date: 01/13/2009 11:45
Sample Tag: DL02

PrePrep Method: NONE
Prep Method: 3051
Analytical Method: 6020
Analyst: JYH
Dilution: 2
Units: mg/kg

Instrument: ELAN-ICP
Prep Date: 01/19/2009 08:12
Cal Date: 02/03/2009 14:36
Run Date: 02/04/2009 01:08
File ID: EL.020409.010811
Percent Solid: 96.6

Analyte	CAS. Number	Result	Qual	RL	MDL
Selenium, Total	7782-49-2		U	0.815	0.204

U Undetected; the analyte was analyzed for, but not detected.

Microbac

690 MW 3/31/09

14

Sample Number:	L09010304-14	PrePrep Method:	NONE	Instrument:	HYDRA
Client ID:	MR08-IS308-9-10-09A	Prep Method:	7471A	Prep Date:	01/19/2009 08:25
Matrix:	Soil	Analytical Method:	7471A	Cal Date:	01/23/2009 09:35
Workgroup Number:	WG293245	Analyst:	ADC	Run Date:	01/23/2009 10:15
Collect Date:	01/13/2009 11:45	Dilution:	1	File ID:	HY.012309.101541
Sample Tag:	01	Units:	mg/kg	Percent Solid:	96.6

Analyte	CAS. Number	Result	Qual	RL	MDL
Mercury, Total	7439-97-6		U	0.0987	0.0197

U Undetected; the analyte was analyzed for, but not detected.

Microbac

2489 lw 3/31/09

17

Sample Number: L09010304-17
Client ID: MR08-SS309-09A
Matrix: Soil
Workgroup Number: WG292763
Collect Date: 01/13/2009 13:30
Sample Tag: 01

PrePrep Method: NONE
Prep Method: 3051
Analytical Method: 6010B
Analyst: EDA
Dilution: 1
Units: mg/kg

Instrument: ICP-THERMO2
Prep Date: 01/16/2009 07:22
Cal Date: 01/16/2009 15:46
Run Date: 01/16/2009 21:42
File ID: T2.011609.214218
Percent Solid: 85.3

Analyte	CAS. Number	Result	Qual	RL	MDL
Silver, Total	7440-22-4		U	0.839	0.210
Barium, Total	7440-39-3	5.75		0.419	0.0839
Cadmium, Total	7440-43-9	0.0965	J	0.168	0.0419
Chromium, Total	7440-47-3	3.23 J		0.839	0.101

SO

U Undetected; the analyte was analyzed for, but not detected.
J Estimated ; the analyte concentration was less than the low standard (LOQ)

Microbac

31 lus 3/31/09

17

Sample Number: L09010304-17
Client ID: MR08-SS309-09A
Matrix: Soil
Workgroup Number: WG293943
Collect Date: 01/13/2009 13:30
Sample Tag: DL01

PrePrep Method: NONE
Prep Method: 3051
Analytical Method: 6020
Analyst: JYH
Dilution: 2
Units: mg/kg

Instrument: ELAN-ICP
Prep Date: 01/19/2009 08:12
Cal Date: 02/02/2009 11:02
Run Date: 02/03/2009 01:34
File ID: EL.020309.013412
Percent Solid: 85.3

Analyte	CAS. Number	Result	Qual	RL	MDL
Arsenic, Total	7440-38-2	0.631	J	0.677	0.169
Lead, Total	7439-92-1	1.99		0.902	0.226

J Estimated ; the analyte concentration was less than the low standard (LOQ)

Microbac

695 MW
3/31/09

17

Sample Number:	L09010304-17	PrePrep Method:	NONE	Instrument:	ELAN-ICP
Client ID:	MR08-SS309-09A	Prep Method:	3051	Prep Date:	01/19/2009 08:12
Matrix:	Soil	Analytical Method:	6020	Cal Date:	02/03/2009 14:36
Workgroup Number:	WG293943	Analyst:	JYH	Run Date:	02/04/2009 01:39
Collect Date:	01/13/2009 13:30	Dilution:	2	File ID:	EL.020409.013932
Sample Tag:	DL02	Units:	mg/kg	Percent Solid:	85.3

Analyte	CAS. Number	Result	Qual	RL	MDL
Selenium, Total	7782-49-2	0.341	J	0.902	0.226

J Estimated ; the analyte concentration was less than the low standard (LOQ)

Microbac

696 lw 3/31/09

17

Sample Number: L09010304-17
Client ID: MR08-SS309-09A
Matrix: Soil
Workgroup Number: WG292761
Collect Date: 01/13/2009 13:30
Sample Tag: 01

PrePrep Method: NONE
Prep Method: 7471A
Analytical Method: 7471A
Analyst: ADC
Dilution: 1
Units: mg/kg

Instrument: HYDRA
Prep Date: 01/16/2009 11:25
Cal Date: 01/16/2009 15:26
Run Date: 01/16/2009 16:37
File ID: HY.011609.163705
Percent Solid: 85.3

Analyte	CAS. Number	Result	Qual	RL	MDL
Mercury, Total	7439-97-6		U	0.117	0.0235

U Undetected; the analyte was analyzed for, but not detected.

Microbac

2492 lw 3/31/09

18

Sample Number: L09010304-18
Client ID: MR08-SS309D-09A
Matrix: Soil
Workgroup Number: WG292763
Collect Date: 01/13/2009 13:40
Sample Tag: 01

PrePrep Method: NONE
Prep Method: 3051
Analytical Method: 6010B
Analyst: EDA
Dilution: 1
Units: mg/kg

Instrument: ICP-THERMO2
Prep Date: 01/16/2009 07:22
Cal Date: 01/16/2009 15:46
Run Date: 01/16/2009 21:48
File ID: T2.011609.214826
Percent Solid: 84.7

Analyte	CAS. Number	Result	Qual	RL	MDL
Silver, Total	7440-22-4		U	0.907	0.227
Barium, Total	7440-39-3	6.38		0.454	0.0907
Cadmium, Total	7440-43-9	0.0680	J	0.181	0.0454
Chromium, Total	7440-47-3	2.98 J		0.907	0.109

SD

U Undetected; the analyte was analyzed for, but not detected.
J Estimated ; the analyte concentration was less than the low standard (LOQ)

Microbac

32 AW 3/31/09

18

Sample Number: L09010304-18
Client ID: MR08-SS309D-09A
Matrix: Soil
Workgroup Number: WG293943
Collect Date: 01/13/2009 13:40
Sample Tag: DL02

PrePrep Method: NONE
Prep Method: 3051
Analytical Method: 6020
Analyst: JYH
Dilution: 2
Units: mg/kg

Instrument: ELAN-ICP
Prep Date: 01/19/2009 08:12
Cal Date: 02/03/2009 14:36
Run Date: 02/04/2009 01:57
File ID: EL.020409.015746
Percent Solid: 84.7

Analyte	CAS. Number	Result	Qual	RL	MDL
Selenium, Total	7782-49-2		U	0.903	0.226

U Undetected; the analyte was analyzed for, but not detected.

Microbac

 RW 3/31/09

18

Sample Number: L09010304-18
Client ID: MR08-SS309D-09A
Matrix: Soil
Workgroup Number: WG293943
Collect Date: 01/13/2009 13:40
Sample Tag: DL01

PrePrep Method: NONE
Prep Method: 3051
Analytical Method: 6020
Analyst: JYH
Dilution: 2
Units: mg/kg

Instrument: ELAN-ICP
Prep Date: 01/19/2009 08:12
Cal Date: 02/02/2009 11:02
Run Date: 02/03/2009 02:05
File ID: EL.020309.020528
Percent Solid: 84.7

Analyte	CAS. Number	Result	Qual	RL	MDL
Arsenic, Total	7440-38-2	0.546	J	0.677	0.169
Lead, Total	7439-92-1	3.48		0.903	0.226

J Estimated ; the analyte concentration was less than the low standard (LOQ)

Microbac

698 JCW 3/3/09

18

Sample Number: L09010304-18
Client ID: MR08-SS309D-09A
Matrix: Soil
Workgroup Number: WG292761
Collect Date: 01/13/2009 13:40
Sample Tag: 01

PrePrep Method: NONE
Prep Method: 7471A
Analytical Method: 7471A
Analyst: ADC
Dilution: 1
Units: mg/kg

Instrument: HYDRA
Prep Date: 01/16/2009 11:25
Cal Date: 01/16/2009 15:26
Run Date: 01/16/2009 16:40
File ID: HY.011609.164017
Percent Solid: 84.7

Analyte	CAS. Number	Result	Qual	RL	MDL
Mercury, Total	7439-97-6		U	0.116	0.0231

U Undetected; the analyte was analyzed for, but not detected.

Microbac

2493 lw 3/3/09

19

Sample Number: L09010304-19
Client ID: MR08-IS309-6-7-09A
Matrix: Soil
Workgroup Number: WG292763
Collect Date: 01/13/2009 13:55
Sample Tag: 01

PrePrep Method: NONE
Prep Method: 3051
Analytical Method: 6010B
Analyst: EDA
Dilution: 1
Units: mg/kg

Instrument: ICP-THERMO2
Prep Date: 01/16/2009 07:22
Cal Date: 01/16/2009 15:46
Run Date: 01/16/2009 21:54
File ID: T2.011609.215427
Percent Solid: 88.3

Analyte	CAS. Number	Result	Qual	RL	MDL
Silver, Total	7440-22-4		U	0.794	0.198
Barium, Total	7440-39-3	11.4		0.397	0.0794
Cadmium, Total	7440-43-9		U	0.159	0.0397
Chromium, Total	7440-47-3	4.81 J		0.794	0.0953

SD

U Undetected; the analyte was analyzed for, but not detected.

Microbac

33 LW 3/31/09

19

Sample Number: L09010304-19
Client ID: MR08-IS309-6-7-09A
Matrix: Soil
Workgroup Number: WG293943
Collect Date: 01/13/2009 13:55
Sample Tag: DL01

PrePrep Method: NONE
Prep Method: 3051
Analytical Method: 6020
Analyst: JYH
Dilution: 2
Units: mg/kg

Instrument: ELAN-ICP
Prep Date: 01/19/2009 08:12
Cal Date: 02/02/2009 11:02
Run Date: 02/03/2009 02:11
File ID: EL.020309.021133
Percent Solid: 88.3

Analyte	CAS. Number	Result	Qual	RL	MDL
Arsenic, Total	7440-38-2		U	0.632	0.158
Lead, Total	7439-92-1	3.90		0.842	0.211

U Undetected; the analyte was analyzed for, but not detected.

Microbac

 fcw 3/31/09

19

Sample Number:	L09010304-19	PrePrep Method:	NONE	Instrument:	ELAN-ICP
Client ID:	MR08-IS309-6-7-09A	Prep Method:	3051	Prep Date:	01/19/2009 08:12
Matrix:	Soil	Analytical Method:	6020	Cal Date:	02/03/2009 14:36
Workgroup Number:	WG293943	Analyst:	JYH	Run Date:	02/04/2009 02:03
Collect Date:	01/13/2009 13:55	Dilution:	2	File ID:	EL.020409.020350
Sample Tag:	DL02	Units:	mg/kg	Percent Solid:	88.3

Analyte	CAS. Number	Result	Qual	RL	MDL
Selenium, Total	7782-49-2		U	0.842	0.211

U Undetected; the analyte was analyzed for, but not detected.

Microbac

700 lew 3/31/09

19

Sample Number: L09010304-19
Client ID: MR08-IS309-6-7-09A
Matrix: Soil
Workgroup Number: WG293245
Collect Date: 01/13/2009 13:55
Sample Tag: 01

PrePrep Method: NONE
Prep Method: 7471A
Analytical Method: 7471A
Analyst: ADC
Dilution: 1
Units: mg/kg

Instrument: HYDRA
Prep Date: 01/19/2009 08:25
Cal Date: 01/23/2009 09:35
Run Date: 01/23/2009 10:22
File ID: HY.012309.102244
Percent Solid: 88.3

Analyte	CAS. Number	Result	Qual	RL	MDL
Mercury, Total	7439-97-6		U	0.110	0.0219

U Undetected; the analyte was analyzed for, but not detected.

Microbac

2494 hw 3/3/09

20

Sample Number: L09010304-20
Client ID: MR08-IS309D-6-7-09A
Matrix: Soil
Workgroup Number: WG292763
Collect Date: 01/13/2009 14:05
Sample Tag: 01

PrePrep Method: NONE
Prep Method: 3051
Analytical Method: 6010B
Analyst: EDA
Dilution: 1
Units: mg/kg

Instrument: ICP-THERMO2
Prep Date: 01/16/2009 07:22
Cal Date: 01/16/2009 15:46
Run Date: 01/16/2009 22:12
File ID: T2.011609.221226
Percent Solid: 88.6

Analyte	CAS. Number	Result	Qual	RL	MDL
Silver, Total	7440-22-4		U	0.786	0.197
Barium, Total	7440-39-3	7.46		0.393	0.0786
Cadmium, Total	7440-43-9		U	0.157	0.0393
Chromium, Total	7440-47-3	4.70 J		0.786	0.0944

SD

U Undetected; the analyte was analyzed for, but not detected.

Microbac

34 lew 3/31/09

20

Sample Number: L09010304-20
Client ID: MR08-IS309D-6-7-09A
Matrix: Soil
Workgroup Number: WG293943
Collect Date: 01/13/2009 14:05
Sample Tag: DL01

PrePrep Method: NONE
Prep Method: 3051
Analytical Method: 6020
Analyst: JYH
Dilution: 2
Units: mg/kg

Instrument: ELAN-ICP
Prep Date: 01/19/2009 08:12
Cal Date: 02/02/2009 11:02
Run Date: 02/03/2009 02:17
File ID: EL.020309.021738
Percent Solid: 88.6

Analyte	CAS. Number	Result	Qual	RL	MDL
Arsenic, Total	7440-38-2		U	0.666	0.167
Lead, Total	7439-92-1	4.59		0.889	0.222

U Undetected; the analyte was analyzed for, but not detected.

Microbac

701 LW 3/31/09

20

Sample Number: L09010304-20
Client ID: MR08-IS309D-6-7-09A
Matrix: Soil
Workgroup Number: WG293943
Collect Date: 01/13/2009 14:05
Sample Tag: DL02

PrePrep Method: NONE
Prep Method: 3051
Analytical Method: 6020
Analyst: JYH
Dilution: 2
Units: mg/kg

Instrument: ELAN-ICP
Prep Date: 01/19/2009 08:12
Cal Date: 02/03/2009 14:36
Run Date: 02/04/2009 02:09
File ID: EL.020409.020954
Percent Solid: 88.6

Analyte	CAS. Number	Result	Qual	RL	MDL
Selenium, Total	7782-49-2		U	0.889	0.222

U Undetected; the analyte was analyzed for, but not detected.

Microbac

fcw
3/31/09

20

Sample Number: L09010304-20
Client ID: MR08-IS309D-6-7-09A
Matrix: Soil
Workgroup Number: WG293245
Collect Date: 01/13/2009 14:05
Sample Tag: 01

PrePrep Method: NONE
Prep Method: 7471A
Analytical Method: 7471A
Analyst: ADC
Dilution: 1
Units: mg/kg

Instrument: HYDRA
Prep Date: 01/19/2009 08:25
Cal Date: 01/23/2009 09:35
Run Date: 01/23/2009 10:24
File ID: HY.012309.102430
Percent Solid: 88.6

Analyte	CAS. Number	Result	Qual	RL	MDL
Mercury, Total	7439-97-6		U	0.113	0.0225

U Undetected; the analyte was analyzed for, but not detected.

Microbac

lus
3/31/09

21

Sample Number: L09010304-21
Client ID: MR08-SS310-09A
Matrix: Soil
Workgroup Number: WG292763
Collect Date: 01/13/2009 14:15
Sample Tag: 01

PrePrep Method: NONE
Prep Method: 3051
Analytical Method: 6010B
Analyst: EDA
Dilution: 1
Units: mg/kg

Instrument: ICP-THERMO2
Prep Date: 01/16/2009 07:22
Cal Date: 01/16/2009 15:46
Run Date: 01/16/2009 22:18
File ID: T2.011609.221829
Percent Solid: 87.9

Analyte	CAS. Number	Result	Qual	RL	MDL
Silver, Total	7440-22-4		U	0.834	0.209
Barium, Total	7440-39-3	12.9		0.417	0.0834
Cadmium, Total	7440-43-9	0.0801	J	0.167	0.0417
Chromium, Total	7440-47-3	4.42 J		0.834	0.100

SD

U Undetected; the analyte was analyzed for, but not detected.
J Estimated ; the analyte concentration was less than the low standard (LOQ)

Microbac

35 DW 3/31/09

21

Sample Number: L09010304-21
Client ID: MR08-SS310-09A
Matrix: Soil
Workgroup Number: WG293943
Collect Date: 01/13/2009 14:15
Sample Tag: DL02

PrePrep Method: NONE
Prep Method: 3051
Analytical Method: 6020
Analyst: JYH
Dilution: 2
Units: mg/kg

Instrument: ELAN-ICP
Prep Date: 01/19/2009 08:12
Cal Date: 02/03/2009 14:36
Run Date: 02/04/2009 02:15
File ID: EL.020409.021558
Percent Solid: 87.9

Analyte	CAS. Number	Result	Qual	RL	MDL
Selenium, Total	7782-49-2	0.363	J	0.877	0.219

J Estimated ; the analyte concentration was less than the low standard (LOQ)

Microbac

703 lew 3/31/09

21

Sample Number: L09010304-21
Client ID: MR08-SS310-09A
Matrix: Soil
Workgroup Number: WG293943
Collect Date: 01/13/2009 14:15
Sample Tag: DL01

PrePrep Method: NONE
Prep Method: 3051
Analytical Method: 6020
Analyst: JYH
Dilution: 2
Units: mg/kg

Instrument: ELAN-ICP
Prep Date: 01/19/2009 08:12
Cal Date: 02/02/2009 11:02
Run Date: 02/03/2009 02:23
File ID: EL.020309.022344
Percent Solid: 87.9

Analyte	CAS. Number	Result	Qual	RL	MDL
Arsenic, Total	7440-38-2	0.636	J	0.658	0.164
Lead, Total	7439-92-1	39.8		0.877	0.219

J Estimated ; the analyte concentration was less than the low standard (LOQ)

Microbac

704 [illegible]
3/31/09

21

Sample Number: L09010304-21
Client ID: MR08-SS310-09A
Matrix: Soil
Workgroup Number: WG293245
Collect Date: 01/13/2009 14:15
Sample Tag: 01

PrePrep Method: NONE
Prep Method: 7471A
Analytical Method: 7471A
Analyst: ADC
Dilution: 1
Units: mg/kg

Instrument: HYDRA
Prep Date: 01/19/2009 08:25
Cal Date: 01/23/2009 09:35
Run Date: 01/23/2009 10:26
File ID: HY.012309.102622
Percent Solid: 87.9

Analyte	CAS. Number	Result	Qual	RL	MDL
Mercury, Total	7439-97-6		U	0.113	0.0227

U Undetected; the analyte was analyzed for, but not detected.

Microbac

2496 MW 3/31/09

22

Sample Number: L09010304-22
Client ID: MR08-IS310-9-10-09A
Matrix: Soil
Workgroup Number: WG292763
Collect Date: 01/13/2009 14:25
Sample Tag: 01

PrePrep Method: NONE
Prep Method: 3051
Analytical Method: 6010B
Analyst: EDA
Dilution: 1
Units: mg/kg

Instrument: ICP-THERMO2
Prep Date: 01/16/2009 07:22
Cal Date: 01/16/2009 15:46
Run Date: 01/16/2009 22:24
File ID: T2.011609.222428
Percent Solid: 83.5

Analyte	CAS. Number	Result	Qual	RL	MDL
Silver, Total	7440-22-4		U	0.918	0.230
Barium, Total	7440-39-3	9.41		0.459	0.0918
Cadmium, Total	7440-43-9		U	0.184	0.0459
Chromium, Total	7440-47-3	5.20 J		0.918	0.110

SD

U Undetected; the analyte was analyzed for, but not detected.

Microbac

AW
3/31/09

22

Sample Number: L09010304-22
Client ID: MR08-IS310-9-10-09A
Matrix: Soil
Workgroup Number: WG293943
Collect Date: 01/13/2009 14:25
Sample Tag: DL01

PrePrep Method: NONE
Prep Method: 3051
Analytical Method: 6020
Analyst: JYH
Dilution: 2
Units: mg/kg

Instrument: ELAN-ICP
Prep Date: 01/19/2009 08:12
Cal Date: 02/02/2009 11:02
Run Date: 02/03/2009 02:29
File ID: EL.020309.022949
Percent Solid: 83.5

Analyte	CAS. Number	Result	Qual	RL	MDL
Arsenic, Total	7440-38-2	0.352	J	0.678	0.169
Lead, Total	7439-92-1	4.07		0.904	0.226

J Estimated ; the analyte concentration was less than the low standard (LOQ)

Microbac

705 lw 3/31/09

22

Sample Number: L09010304-22
Client ID: MR08-IS310-9-10-09A
Matrix: Soil
Workgroup Number: WG293943
Collect Date: 01/13/2009 14:25
Sample Tag: DL02

PrePrep Method: NONE
Prep Method: 3051
Analytical Method: 6020
Analyst: JYH
Dilution: 2
Units: mg/kg

Instrument: ELAN-ICP
Prep Date: 01/19/2009 08:12
Cal Date: 02/03/2009 14:36
Run Date: 02/04/2009 02:22
File ID: EL.020409.022203
Percent Solid: 83.5

Analyte	CAS. Number	Result	Qual	RL	MDL
Selenium, Total	7782-49-2		U	0.904	0.226

U Undetected; the analyte was analyzed for, but not detected.

Microbac

706 MW 3/3/09

22

Sample Number: L09010304-22
Client ID: MR08-IS310-9-10-09A
Matrix: Soil
Workgroup Number: WG293245
Collect Date: 01/13/2009 14:25
Sample Tag: 01

PrePrep Method: NONE
Prep Method: 7471A
Analytical Method: 7471A
Analyst: ADC
Dilution: 1
Units: mg/kg

Instrument: HYDRA
Prep Date: 01/19/2009 08:25
Cal Date: 01/23/2009 09:35
Run Date: 01/23/2009 10:28
File ID: HY.012309.102815
Percent Solid: 83.5

Analyte	CAS. Number	Result	Qual	RL	MDL
Mercury, Total	7439-97-6		U	0.118	0.0236

U Undetected; the analyte was analyzed for, but not detected.

Microbac

2497 MW 3/31/09

23

Sample Number: L09010304-23
Client ID: MR08-SS307-09A
Matrix: Soil
Workgroup Number: WG292763
Collect Date: 01/13/2009 14:55
Sample Tag: 01

PrePrep Method: NONE
Prep Method: 3051
Analytical Method: 6010B
Analyst: EDA
Dilution: 1
Units: mg/kg

Instrument: ICP-THERMO2
Prep Date: 01/16/2009 07:22
Cal Date: 01/16/2009 15:46
Run Date: 01/16/2009 22:30
File ID: T2.011609.223030
Percent Solid: 87.1

Analyte	CAS. Number	Result	Qual	RL	MDL
Silver, Total	7440-22-4		U	0.795	0.199
Barium, Total	7440-39-3	22.6		0.398	0.0795
Cadmium, Total	7440-43-9	1.20		0.159	0.0398
Chromium, Total	7440-47-3	26.8 J		0.795	0.0954

SD

U Undetected; the analyte was analyzed for, but not detected.

Microbac

37 MW 3/31/09

23

Sample Number: L09010304-23
Client ID: MR08-SS307-09A
Matrix: Soil
Workgroup Number: WG293943
Collect Date: 01/13/2009 14:55
Sample Tag: DL01

PrePrep Method: NONE
Prep Method: 3051
Analytical Method: 6020
Analyst: JYH
Dilution: 2
Units: mg/kg

Instrument: ELAN-ICP
Prep Date: 01/19/2009 08:12
Cal Date: 02/02/2009 11:02
Run Date: 02/03/2009 02:35
File ID: EL.020309.023556
Percent Solid: 87.1

Analyte	CAS. Number	Result	Qual	RL	MDL
Arsenic, Total	7440-38-2	0.891		0.661	0.165

Microbac

707 MW 3/3/09

23

Sample Number: L09010304-23
Client ID: MR08-SS307-09A
Matrix: Soil
Workgroup Number: WG293943
Collect Date: 01/13/2009 14:55
Sample Tag: DL03

PrePrep Method: NONE
Prep Method: 3051
Analytical Method: 6020
Analyst: JYH
Dilution: 10
Units: mg/kg

Instrument: ELAN-ICP
Prep Date: 01/19/2009 08:12
Cal Date: 02/03/2009 14:36
Run Date: 02/04/2009 03:23
File ID: EL.020409.032350
Percent Solid: 87.1

Analyte	CAS. Number	Result	Qual	RL	MDL
Lead, Total	7439-92-1	238		4.41	1.10

Microbac

708 lew
3/31/09

23

Sample Number:	L09010304-23	PrePrep Method:	NONE	Instrument:	ELAN-ICP
Client ID:	MR08-SS307-09A	Prep Method:	3051	Prep Date:	01/19/2009 08:12
Matrix:	Soil	Analytical Method:	6020	Cal Date:	02/03/2009 14:36
Workgroup Number:	WG293943	Analyst:	JYH	Run Date:	02/04/2009 02:41
Collect Date:	01/13/2009 14:55	Dilution:	2	File ID:	EL.020409.024112
Sample Tag:	DL02	Units:	mg/kg	Percent Solid:	87.1

Analyte	CAS. Number	Result	Qual	RL	MDL
Selenium, Total	7782-49-2		U	0.882	0.220

U Undetected; the analyte was analyzed for, but not detected.

Microbac

709 lew 3/31/09

23

Sample Number:	L09010304-23	PrePrep Method:	NONE	Instrument:	HYDRA
Client ID:	MR08-SS307-09A	Prep Method:	7471A	Prep Date:	01/19/2009 08:25
Matrix:	Soil	Analytical Method:	7471A	Cal Date:	01/23/2009 09:35
Workgroup Number:	WG293245	Analyst:	ADC	Run Date:	01/23/2009 10:30
Collect Date:	01/13/2009 14:55	Dilution:	1	File ID:	HY.012309.103023
Sample Tag:	01	Units:	mg/kg	Percent Solid:	87.1

Analyte	CAS. Number	Result	Qual	RL	MDL
Mercury, Total	7439-97-6	0.112	J	0.115	0.0230

J Estimated ; the analyte concentration was less than the low standard (LOQ)

Microbac

2498 MW 3/31/09

24

Sample Number: L09010304-24
Client ID: MR08-IS307-6-7-09A
Matrix: Soil
Workgroup Number: WG292763
Collect Date: 01/13/2009 15:25
Sample Tag: 01

PrePrep Method: NONE
Prep Method: 3051
Analytical Method: 6010B
Analyst: EDA
Dilution: 1
Units: mg/kg

Instrument: ICP-THERMO2
Prep Date: 01/16/2009 07:22
Cal Date: 01/16/2009 15:46
Run Date: 01/16/2009 22:36
File ID: T2.011609.223627
Percent Solid: 87.1

Analyte	CAS. Number	Result	Qual	RL	MDL
Silver, Total	7440-22-4		U	0.794	0.198
Barium, Total	7440-39-3	4.40		0.397	0.0794
Cadmium, Total	7440-43-9		U	0.159	0.0397
Chromium, Total	7440-47-3	3.51 J		0.794	0.0952

SD

U Undetected; the analyte was analyzed for, but not detected.

Microbac

38 LW 3/31/09

24

Sample Number: L09010304-24
Client ID: MR08-IS307-6-7-09A
Matrix: Soil
Workgroup Number: WG293943
Collect Date: 01/13/2009 15:25
Sample Tag: DL01

PrePrep Method: NONE
Prep Method: 3051
Analytical Method: 6020
Analyst: JYH
Dilution: 2
Units: mg/kg

Instrument: ELAN-ICP
Prep Date: 01/19/2009 08:12
Cal Date: 02/02/2009 11:02
Run Date: 02/03/2009 02:42
File ID: EL.020309.024202
Percent Solid: 87.1

Analyte	CAS. Number	Result	Qual	RL	MDL
Arsenic, Total	7440-38-2	1.25		0.661	0.165
Lead, Total	7439-92-1	3.54		0.881	0.220

Microbac

710 lcw 3/31/09

24

Sample Number: L09010304-24
Client ID: MR08-IS307-6-7-09A
Matrix: Soil
Workgroup Number: WG293943
Collect Date: 01/13/2009 15:25
Sample Tag: DL02

PrePrep Method: NONE
Prep Method: 3051
Analytical Method: 6020
Analyst: JYH
Dilution: 2
Units: mg/kg

Instrument: ELAN-ICP
Prep Date: 01/19/2009 08:12
Cal Date: 02/03/2009 14:36
Run Date: 02/04/2009 02:47
File ID: EL.020409.024717
Percent Solid: 87.1

Analyte	CAS. Number	Result	Qual	RL	MDL
Selenium, Total	7782-49-2		U	0.881	0.220

U Undetected; the analyte was analyzed for, but not detected.

Microbac

711 lew 3/31/09

24

Sample Number:	L09010304-24	PrePrep Method:	NONE	Instrument:	HYDRA
Client ID:	MR08-IS307-6-7-09A	Prep Method:	7471A	Prep Date:	01/19/2009 08:25
Matrix:	Soil	Analytical Method:	7471A	Cal Date:	01/23/2009 09:35
Workgroup Number:	WG293245	Analyst:	ADC	Run Date:	01/23/2009 10:36
Collect Date:	01/13/2009 15:25	Dilution:	1	File ID:	HY.012309.103616
Sample Tag:	01	Units:	mg/kg	Percent Solid:	87.1

Analyte	CAS. Number	Result	Qual	RL	MDL
Mercury, Total	7439-97-6		U	0.110	0.0221

U Undetected; the analyte was analyzed for, but not detected.

Microbac

2499 MW 3/31/09

25

Sample Number: L09010304-25
Client ID: MR08-SS284-09A
Matrix: Soil
Workgroup Number: WG292763
Collect Date: 01/13/2009 16:00
Sample Tag: 01

PrePrep Method: NONE
Prep Method: 3051
Analytical Method: 6010B
Analyst: EDA
Dilution: 1
Units: mg/kg

Instrument: ICP-THERMO2
Prep Date: 01/16/2009 07:22
Cal Date: 01/16/2009 15:46
Run Date: 01/16/2009 22:42
File ID: T2.011609.224231
Percent Solid: 84.1

Analyte	CAS. Number	Result	Qual	RL	MDL
Silver, Total	7440-22-4		U	0.860	0.215
Barium, Total	7440-39-3	4.29		0.430	0.0860
Cadmium, Total	7440-43-9		U	0.172	0.0430
Chromium, Total	7440-47-3	2.30 J		0.860	0.103

SD

U Undetected; the analyte was analyzed for, but not detected.

Microbac

39 LW 3/31/09

25

Sample Number: L09010304-25
Client ID: MR08-SS284-09A
Matrix: Soil
Workgroup Number: WG293943
Collect Date: 01/13/2009 16:00
Sample Tag: DL01

PrePrep Method: NONE
Prep Method: 3051
Analytical Method: 6020
Analyst: JYH
Dilution: 2
Units: mg/kg

Instrument: ELAN-ICP
Prep Date: 01/19/2009 08:12
Cal Date: 02/02/2009 11:02
Run Date: 02/03/2009 02:48
File ID: EL.020309.024809
Percent Solid: 84.1

Analyte	CAS. Number	Result	Qual	RL	MDL
Arsenic, Total	7440-38-2	0.388	J	0.698	0.175
Lead, Total	7439-92-1	9.66		0.931	0.233

J Estimated ; the analyte concentration was less than the low standard (LOQ)

Microbac

712 LCW 3/3/09

25

Sample Number:	L09010304-25	PrePrep Method:	NONE	Instrument:	ELAN-ICP
Client ID:	MR08-SS284-09A	Prep Method:	3051	Prep Date:	01/19/2009 08:12
Matrix:	Soil	Analytical Method:	6020	Cal Date:	02/03/2009 14:36
Workgroup Number:	WG293943	Analyst:	JYH	Run Date:	02/04/2009 02:53
Collect Date:	01/13/2009 16:00	Dilution:	2	File ID:	EL.020409.025322
Sample Tag:	DL02	Units:	mg/kg	Percent Solid:	84.1

Analyte	CAS. Number	Result	Qual	RL	MDL
Selenium, Total	7782-49-2		U	0.931	0.233

U Undetected; the analyte was analyzed for, but not detected.

Microbac

713 MW 3/31/09

25

Sample Number: L09010304-25
Client ID: MR08-SS284-09A
Matrix: Soil
Workgroup Number: WG293245
Collect Date: 01/13/2009 16:00
Sample Tag: 01

PrePrep Method: NONE
Prep Method: 7471A
Analytical Method: 7471A
Analyst: ADC
Dilution: 1
Units: mg/kg

Instrument: HYDRA
Prep Date: 01/19/2009 08:25
Cal Date: 01/23/2009 09:35
Run Date: 01/23/2009 10:38
File ID: HY.012309.103839
Percent Solid: 84.1

Analyte	CAS. Number	Result	Qual	RL	MDL
Mercury, Total	7439-97-6		U	0.115	0.0229

U Undetected; the analyte was analyzed for, but not detected.

Microbac

2500 MW 3/31/09

26

Sample Number: L09010304-26
Client ID: MR08-IS284-6-7-09A
Matrix: Soil
Workgroup Number: WG292763
Collect Date: 01/13/2009 16:20
Sample Tag: 01

PrePrep Method: NONE
Prep Method: 3051
Analytical Method: 6010B
Analyst: EDA
Dilution: 1
Units: mg/kg

Instrument: ICP-THERMO2
Prep Date: 01/16/2009 07:22
Cal Date: 01/16/2009 15:46
Run Date: 01/16/2009 22:48
File ID: T2.011609.224833
Percent Solid: 91.4

Analyte	CAS. Number	Result	Qual	RL	MDL
Silver, Total	7440-22-4		U	0.805	0.201
Barium, Total	7440-39-3	3.15		0.402	0.0805
Cadmium, Total	7440-43-9		U	0.161	0.0402
Chromium, Total	7440-47-3	2.42 J		0.805	0.0966

SD

U Undetected; the analyte was analyzed for, but not detected.

Microbac

MW
3/31/09

26

Sample Number: L09010304-26
Client ID: MR08-IS284-6-7-09A
Matrix: Soil
Workgroup Number: WG293943
Collect Date: 01/13/2009 16:20
Sample Tag: DL01

PrePrep Method: NONE
Prep Method: 3051
Analytical Method: 6020
Analyst: JYH
Dilution: 2
Units: mg/kg

Instrument: ELAN-ICP
Prep Date: 01/19/2009 08:12
Cal Date: 02/02/2009 11:02
Run Date: 02/03/2009 02:54
File ID: EL.020309.025415
Percent Solid: 91.4

Analyte	CAS. Number	Result	Qual	RL	MDL
Arsenic, Total	7440-38-2		U	0.633	0.158
Lead, Total	7439-92-1	1.86		0.845	0.211

U Undetected; the analyte was analyzed for, but not detected.

Microbac

714 fcw 3/3/09

26

Sample Number: L09010304-26
Client ID: MR08-IS284-6-7-09A
Matrix: Soil
Workgroup Number: WG293943
Collect Date: 01/13/2009 16:20
Sample Tag: DL02

PrePrep Method: NONE
Prep Method: 3051
Analytical Method: 6020
Analyst: JYH
Dilution: 2
Units: mg/kg

Instrument: ELAN-ICP
Prep Date: 01/19/2009 08:12
Cal Date: 02/03/2009 14:36
Run Date: 02/04/2009 02:59
File ID: EL.020409.025928
Percent Solid: 91.4

Analyte	CAS. Number	Result	Qual	RL	MDL
Selenium, Total	7782-49-2		U	0.845	0.211

U Undetected; the analyte was analyzed for, but not detected.

Microbac

715 lew 3/31/09

26

Sample Number: L09010304-26
Client ID: MR08-IS284-6-7-09A
Matrix: Soil
Workgroup Number: WG293245
Collect Date: 01/13/2009 16:20
Sample Tag: 01

PrePrep Method: NONE
Prep Method: 7471A
Analytical Method: 7471A
Analyst: ADC
Dilution: 1
Units: mg/kg

Instrument: HYDRA
Prep Date: 01/19/2009 08:25
Cal Date: 01/23/2009 09:35
Run Date: 01/23/2009 10:41
File ID: HY.012309.104111
Percent Solid: 91.4

Analyte	CAS. Number	Result	Qual	RL	MDL
Mercury, Total	7439-97-6		U	0.108	0.0217

U Undetected; the analyte was analyzed for, but not detected.

Microbac

2501 3/31/09

27

Sample Number: L09010304-27
Client ID: MR08-SS285-09A
Matrix: Soil
Workgroup Number: WG292750
Collect Date: 01/13/2009 16:40
Sample Tag: 01

PrePrep Method: NONE
Prep Method: 3051
Analytical Method: 6010B
Analyst: KHR
Dilution: 1
Units: mg/kg

Instrument: IRIS-ICP
Prep Date: 01/16/2009 08:22
Cal Date: 01/16/2009 11:30
Run Date: 01/16/2009 16:00
File ID: IR.011609.160000
Percent Solid: 87.8

Analyte	CAS. Number	Result	Qual	RL	MDL
Silver, Total	7440-22-4		U	0.800	0.200
Barium, Total	7440-39-3	12.4		0.400	0.0800
Cadmium, Total	7440-43-9		U	0.160	0.0400
Chromium, Total	7440-47-3	9.77		0.800	0.0960

U Undetected; the analyte was analyzed for, but not detected.

Microbac

41 MW 3/31/09

27

Sample Number: L09010304-27
Client ID: MR08-SS285-09A
Matrix: Soil
Workgroup Number: WG293943
Collect Date: 01/13/2009 16:40
Sample Tag: DL01

PrePrep Method: NONE
Prep Method: 3051
Analytical Method: 6020
Analyst: JYH
Dilution: 2
Units: mg/kg

Instrument: ELAN-ICP
Prep Date: 01/19/2009 08:12
Cal Date: 02/02/2009 11:02
Run Date: 02/03/2009 03:13
File ID: EL.020309.031322
Percent Solid: 87.8

Analyte	CAS. Number	Result	Qual	RL	MDL
Arsenic, Total	7440-38-2	0.904		0.665	0.166
Lead, Total	7439-92-1	13.5		0.886	0.222

Microbac

716 fw 3/31/09

27

Sample Number: L09010304-27
Client ID: MR08-SS285-09A
Matrix: Soil
Workgroup Number: WG293943
Collect Date: 01/13/2009 16:40
Sample Tag: DL02

PrePrep Method: NONE
Prep Method: 3051
Analytical Method: 6020
Analyst: JYH
Dilution: 2
Units: mg/kg

Instrument: ELAN-ICP
Prep Date: 01/19/2009 08:12
Cal Date: 02/03/2009 14:36
Run Date: 02/04/2009 03:05
File ID: EL.020409.030535
Percent Solid: 87.8

Analyte	CAS. Number	Result	Qual	RL	MDL
Selenium, Total	7782-49-2		U	0.886	0.222

U Undetected; the analyte was analyzed for, but not detected.

Microbac

717 fw 3/3/09

27

Sample Number: L09010304-27
Client ID: MR08-SS285-09A
Matrix: Soil
Workgroup Number: WG293245
Collect Date: 01/13/2009 16:40
Sample Tag: 01

PrePrep Method: NONE
Prep Method: 7471A
Analytical Method: 7471A
Analyst: ADC
Dilution: 1
Units: mg/kg

Instrument: HYDRA
Prep Date: 01/19/2009 08:25
Cal Date: 01/23/2009 09:35
Run Date: 01/23/2009 10:43
File ID: HY.012309.104344
Percent Solid: 87.8

Analyte	CAS. Number	Result	Qual	RL	MDL
Mercury, Total	7439-97-6		U	0.110	0.0220

U Undetected; the analyte was analyzed for, but not detected.

Microbac®

2502 MW 3/3/09

28

Sample Number: L09010304-28
Client ID: MR08-IS285-8-9-09A
Matrix: Soil
Workgroup Number: WG292750
Collect Date: 01/13/2009 16:55
Sample Tag: 01

PrePrep Method: NONE
Prep Method: 3051
Analytical Method: 6010B
Analyst: KHR
Dilution: 1
Units: mg/kg

Instrument: IRIS-ICP
Prep Date: 01/16/2009 08:22
Cal Date: 01/16/2009 11:30
Run Date: 01/16/2009 16:36
File ID: IR.011609.163600
Percent Solid: 94.3

Analyte	CAS. Number	Result	Qual	RL	MDL
Silver, Total	7440-22-4		U	0.721	0.180
Barium, Total	7440-39-3	8.09		0.361	0.0721
Cadmium, Total	7440-43-9		U	0.144	0.0361
Chromium, Total	7440-47-3	8.11		0.721	0.0865

U Undetected; the analyte was analyzed for, but not detected.

Microbac

42 MW 3/31/09

28

Sample Number: L09010304-28
Client ID: MR08-IS285-8-9-09A
Matrix: Soil
Workgroup Number: WG293943
Collect Date: 01/13/2009 16:55
Sample Tag: DL02

PrePrep Method: NONE
Prep Method: 3051
Analytical Method: 6020
Analyst: JYH
Dilution: 2
Units: mg/kg

Instrument: ELAN-ICP
Prep Date: 01/19/2009 08:12
Cal Date: 02/03/2009 14:36
Run Date: 02/04/2009 03:11
File ID: EL.020409.031141
Percent Solid: 94.3

Analyte	CAS. Number	Result	Qual	RL	MDL
Selenium, Total	7782-49-2		U	0.827	0.207

U Undetected; the analyte was analyzed for, but not detected.

Microbac

718 MW 3/3/09

28

Sample Number: L09010304-28
Client ID: MR08-IS285-8-9-09A
Matrix: Soil
Workgroup Number: WG293943
Collect Date: 01/13/2009 16:55
Sample Tag: DL01

PrePrep Method: NONE
Prep Method: 3051
Analytical Method: 6020
Analyst: JYH
Dilution: 2
Units: mg/kg

Instrument: ELAN-ICP
Prep Date: 01/19/2009 08:12
Cal Date: 02/02/2009 11:02
Run Date: 02/03/2009 03:19
File ID: EL.020309.031926
Percent Solid: 94.3

Analyte	CAS. Number	Result	Qual	RL	MDL
Arsenic, Total	7440-38-2	3.24		0.620	0.155
Lead, Total	7439-92-1	1.89		0.827	0.207

Microbac

JW 3/31/09

28

Sample Number: L09010304-28
Client ID: MR08-IS285-8-9-09A
Matrix: Soil
Workgroup Number: WG293245
Collect Date: 01/13/2009 16:55
Sample Tag: 01

PrePrep Method: NONE
Prep Method: 7471A
Analytical Method: 7471A
Analyst: ADC
Dilution: 1
Units: mg/kg

Instrument: HYDRA
Prep Date: 01/19/2009 08:25
Cal Date: 01/23/2009 09:35
Run Date: 01/23/2009 10:45
File ID: HY.012309.104549
Percent Solid: 94.3

Analyte	CAS. Number	Result	Qual	RL	MDL
Mercury, Total	7439-97-6		U	0.104	0.0208

U Undetected; the analyte was analyzed for, but not detected.

Microbac

2503 fw 3/31/09

29

Sample Number: L09010304-29
Client ID: MR08-EB01011309-SS
Matrix: Water
Workgroup Number: WG292764
Collect Date: 01/13/2009 10:00
Sample Tag: 01

PrePrep Method: NONE
Prep Method: 3005A
Analytical Method: 6010B
Analyst: SLP
Dilution: 1
Units: ug/L

Instrument: PE-ICP2
Prep Date: 01/16/2009 07:26
Cal Date: 01/17/2009 17:25
Run Date: 01/18/2009 01:38
File ID: P2.011809.013812

Analyte	CAS. Number	Result	Qual	RL	MDL
Barium, Total	7440-39-3	10.0 ~~3.71~~ u	~~J~~	10.0	2.50
Cadmium, Total	7440-43-9		U	1.00	0.250
Chromium, Total	7440-47-3		U	10.0	2.50
Silver, Total	7440-22-4		U	6.00	2.00

BL

U Undetected; the analyte was analyzed for, but not detected.
J Estimated ; the analyte concentration was less than the low standard (LOQ)

Microbac

43 JW 3/31/09

29

Sample Number: L09010304-29
Client ID: MR08-EB01011309-SS
Matrix: Water
Workgroup Number: WG292713
Collect Date: 01/13/2009 10:00
Sample Tag: 01

PrePrep Method: NONE
Prep Method: 3015
Analytical Method: 6020
Analyst: WTD
Dilution: 1
Units: ug/L

Instrument: ELAN-ICP
Prep Date: 01/16/2009 08:59
Cal Date: 01/16/2009 16:35
Run Date: 01/16/2009 20:00
File ID: EL.011609.200021

Analyte	CAS. Number	Result	Qual	RL	MDL
Arsenic, Total	7440-38-2		U	1.00	0.250
Lead, Total	7439-92-1		U	1.00	0.250
Selenium, Total	7782-49-2		U	2.00	0.500

U Undetected; the analyte was analyzed for, but not detected.

Microbac

720 Jew 3/31/09

29

Sample Number: L09010304-29
Client ID: MR08-EB01011309-SS
Matrix: Water
Workgroup Number: WG292820
Collect Date: 01/13/2009 10:00
Sample Tag: 01

PrePrep Method: NONE
Prep Method: 7470A
Analytical Method: 7470A
Analyst: ADC
Dilution: 1
Units: ug/L

Instrument: HYDRA
Prep Date: 01/16/2009 09:55
Cal Date: 01/19/2009 09:54
Run Date: 01/19/2009 10:50
File ID: HY.011909.105057

Analyte	CAS. Number	Result	Qual	RL	MDL
Mercury	7439-97-6		U	0.400	0.100

U Undetected; the analyte was analyzed for, but not detected.

Microbac

2504 MW 3/3/09

ENVIRONMENTAL
Data Services, Inc.

METALS

USEPA Region IV - Level IV Review

Site: MCB Camp Lejeune, TO-09 SDG #: L09010436

Client: CH2M HILL, Inc., Virginia Beach, Virginia Date: April 1, 2009

Laboratory: Microbac Laboratories, Inc., Marietta, Ohio Reviewer: Nancy Weaver

EDS ID	Client Sample ID	Laboratory Sample ID	Matrix
1	MR08-SS271-09A	L09010436-01	Soil
2	MR08-IS271-4-5-09A	L09010436-02	Soil
3	MR08-SS270-09A	L09010436-03	Soil
4	MR08-IS270-9-10-09A	L09010436-04	Soil
5	MR08-SS269-09A	L09010436-05	Soil
6	MR08-SS269D-09A	L09010436-06	Soil
7	MR08-IS269-7-8-09A	L09010436-07	Soil
8	MR08-IS269D-7-8-09A	L09010436-08	Soil
9	MR08-SS268-09A	L09010436-09	Soil
10MS	MR08-SS268-09AMS	L09010436-10MS	Soil
11MSD	MR08-SS268-09AMSD	L09010436-11MSD	Soil
12	MR08-IS268-7-8-09A	L09010436-12	Soil
13MS	MR08-IS268-7-8-09AMS	L09010436-13MS	Soil
14MSD	MR08-IS268-7-8-09AMSD	L09010436-14MSD	Soil
15	MR08-SS267-09A	L09010436-15	Soil
16	MR08-IS267-7-8-09A	L09010436-16	Soil
17	MR08-EB012009	L09010436-17	Soil
18	MR08-IS236-7-8-09A	L09010436-18	Soil
19	MR08-SS236-08A	L09010436-19	Soil
20	MR08-SS222-09A	L09010436-20	Soil
21	MR08-IS222-4-5-09A	L09010436-21	Soil
22	MR08-IS223-4-5-09A	L09010436-22	Soil
23	MR08-SS223-09A	L09010436-23	Soil
24	MR08-IS212-4-5-09A	L09010436-24	Soil
25	MR08-SS212-09A	L09010436-25	Soil
26	MR08-IS213-4-5-09A	L09010436-26	Soil
27	MR08-SS213-09A	L09010436-27	Soil

The USEPA "Contract Laboratory Program National Functional Guidelines for Inorganic Data Review," October 2004, and professional judgement were used in evaluating the data in this summary report.

Holding Times - All samples were prepared and analyzed within 28 days for mercury and 180 days for all other metals.

Calibration - The ICV and CCV %R values were acceptable.

Method and Calibration Blanks - The method blanks were free of contamination.

Field and Equipment Blank - Field QC results are summarized below.

Blank ID	Compound	Conc. ug/L	Action Level ug/L	Qualifier	Affected Samples
MR08-FB012609	None - ND	-	-	-	-
MR08-EB012009	None - ND	-	-	-	-

ICP Interference Check Sample - All %R values were acceptable.

MS/MSD - The MS/MSD samples exhibited acceptable %R and RPD values.

LCS - The LCS samples exhibited acceptable %R values.

ICP Serial Dilution - The ICP serial dilution sample exhibited acceptable %D values except the following.

ICP Sample ID	Compound	%D	Qualifier	Affected Samples
Reference (WG293379)	Chromium	12.40%	J	12, 27

Field Duplicates - Field duplicate results are summarized below.

Compound	MR08-SS269-09A mg/kg	MR08-SS269D-09A mg/kg	RPD	Qualifier
Silver	0.362	0.328	10%	None
Barium	7.59	7.45	2%	None
Cadmium	0.120	0.122	2%	None
Chromium	3.28	3.27	0%	None
Arsenic	0.501	0.702	33%	None
Lead	18.6	18.4	1%	None
Selenium	0.902 U	0.261	NC	None
Mercury	0.0398	0.0377	5%	None

Compound	MR08-IS269-7-8-09A mg/kg	MR08-IS269D-7-8-09A mg/kg	RPD	Qualifier
Silver	0.196	0.271	32%	None
Barium	0.620	0.420	38%	None
Chromium	0.777	0.467	50%	None
Lead	1.17	0.936	22%	None

Compound Quantitation - Several samples were analyzed at various dilutions for various analytes due to high concentrations.

Report Number: L09010436

Report Date : **February 16, 2009**

Sample Number:	L09010436-01	PrePrep Method:	NONE	Instrument:	IRIS-ICP
Client ID:	MR08-SS271-09A	Prep Method:	3051	Prep Date:	01/23/2009 14:34
Matrix:	Soil	Analytical Method:	6010B	Cal Date:	01/26/2009 10:59
Workgroup Number:	WG293380	Analyst:	KHR	Run Date:	01/26/2009 15:55
Collect Date:	01/19/2009 11:00	Dilution:	1	File ID:	IR.012609.155500
Sample Tag:	01	Units:	mg/kg	Percent Solid:	95.6

Analyte	CAS. Number	Result	Qual	RL	MDL
Silver, Total	7440-22-4	0.496	J	0.783	0.196
Barium, Total	7440-39-3	2.63		0.392	0.0783
Cadmium, Total	7440-43-9	0.235		0.157	0.0392
Chromium, Total	7440-47-3	4.46		0.783	0.0940

J Estimated ; the analyte concentration was less than the low standard (LOQ)

Microbac

14 lew 4/1/09

Report Number: L09010436
Report Date : February 16, 2009

Sample Number:	L09010436-01	PrePrep Method:	NONE	Instrument:	ELAN-ICP
Client ID:	MR08-SS271-09A	Prep Method:	3051	Prep Date:	01/23/2009 09:02
Matrix:	Soil	Analytical Method:	6020	Cal Date:	02/05/2009 10:09
Workgroup Number:	WG294159	Analyst:	JYH	Run Date:	02/06/2009 02:36
Collect Date:	01/19/2009 11:00	Dilution:	2	File ID:	EL.020609.023606
Sample Tag:	DL01	Units:	mg/kg	Percent Solid:	95.6

Analyte	CAS. Number	Result	Qual	RL	MDL
Arsenic, Total	7440-38-2	0.822		0.615	0.154
Lead, Total	7439-92-1	1.85		0.820	0.205
Selenium, Total	7782-49-2	0.285	J	0.820	0.205

J Estimated ; the analyte concentration was less than the low standard (LOQ)

Microbac®

670 lw 4/1/09

Report Number: L09010436
Report Date : February 16, 2009

Sample Number: L09010436-01
Client ID: MR08-SS271-09A
Matrix: Soil
Workgroup Number: WG293894
Collect Date: 01/19/2009 11:00
Sample Tag: 01

PrePrep Method: NONE
Prep Method: 7471A
Analytical Method: 7471A
Analyst: ADC
Dilution: 1
Units: mg/kg

Instrument: HYDRA
Prep Date: 01/23/2009 06:41
Cal Date: 02/02/2009 09:42
Run Date: 02/02/2009 09:55
File ID: HY.020209.095521
Percent Solid: 95.6

Analyte	CAS. Number	Result	Qual	RL	MDL
Mercury, Total	7439-97-6		U	0.101	0.0201

U Undetected; the analyte was analyzed for, but not detected.

Microbac

2240 lw
4/11/09

2

Sample Number: L09010436-02
Client ID: MR08-IS271-4-5-09A
Matrix: Soil
Workgroup Number: WG293380
Collect Date: 01/19/2009 11:20
Sample Tag: 01

PrePrep Method: NONE
Prep Method: 3051
Analytical Method: 6010B
Analyst: KHR
Dilution: 1
Units: mg/kg

Instrument: IRIS-ICP
Prep Date: 01/23/2009 14:35
Cal Date: 01/26/2009 10:59
Run Date: 01/26/2009 16:20
File ID: IR.012609.162000
Percent Solid: 93.7

Analyte	CAS. Number	Result	Qual	RL	MDL
Silver, Total	7440-22-4		U	0.784	0.196
Barium, Total	7440-39-3	4.45		0.392	0.0784
Cadmium, Total	7440-43-9		U	0.157	0.0392
Chromium, Total	7440-47-3	2.37		0.784	0.0940

U Undetected; the analyte was analyzed for, but not detected.

Microbac

15 lew 4/1/09

2

Sample Number: L09010436-02
Client ID: MR08-IS271-4-5-09A
Matrix: Soil
Workgroup Number: WG294159
Collect Date: 01/19/2009 11:20
Sample Tag: DL01

PrePrep Method: NONE
Prep Method: 3051
Analytical Method: 6020
Analyst: JYH
Dilution: 2
Units: mg/kg

Instrument: ELAN-ICP
Prep Date: 01/23/2009 09:02
Cal Date: 02/05/2009 10:09
Run Date: 02/06/2009 02:42
File ID: EL.020609.024210
Percent Solid: 93.7

Analyte	CAS. Number	Result	Qual	RL	MDL
Arsenic, Total	7440-38-2	0.165	J	0.629	0.157
Lead, Total	7439-92-1	1.32		0.839	0.210
Selenium, Total	7782-49-2		U	0.839	0.210

U Undetected; the analyte was analyzed for, but not detected.
J Estimated ; the analyte concentration was less than the low standard (LOQ)

Microbac

671 [illegible]
4/1/09

2

Sample Number: L09010436-02
Client ID: MR08-IS271-4-5-09A
Matrix: Soil
Workgroup Number: WG293894
Collect Date: 01/19/2009 11:20
Sample Tag: 01

PrePrep Method: NONE
Prep Method: 7471A
Analytical Method: 7471A
Analyst: ADC
Dilution: 1
Units: mg/kg

Instrument: HYDRA
Prep Date: 01/23/2009 06:41
Cal Date: 02/02/2009 09:42
Run Date: 02/02/2009 09:57
File ID: HY.020209.095706
Percent Solid: 93.7

Analyte	CAS. Number	Result	Qual	RL	MDL
Mercury, Total	7439-97-6		U	0.100	0.0201

U Undetected; the analyte was analyzed for, but not detected.

Microbac

2241 RLW
4/1/09

3

Sample Number: L09010436-03
Client ID: MR08-SS270-09A
Matrix: Soil
Workgroup Number: WG293380
Collect Date: 01/19/2009 11:45
Sample Tag: 01

PrePrep Method: NONE
Prep Method: 3051
Analytical Method: 6010B
Analyst: KHR
Dilution: 1
Units: mg/kg

Instrument: IRIS-ICP
Prep Date: 01/23/2009 14:36
Cal Date: 01/26/2009 10:59
Run Date: 01/26/2009 16:26
File ID: IR.012609.162600
Percent Solid: 82.0

Analyte	CAS. Number	Result	Qual	RL	MDL
Silver, Total	7440-22-4	1.01		0.909	0.227
Barium, Total	7440-39-3	12.4		0.455	0.0909
Cadmium, Total	7440-43-9	0.235		0.182	0.0455
Chromium, Total	7440-47-3	4.67		0.909	0.109

Microbac

16 QW 4/1/09

3

Sample Number: L09010436-03
Client ID: MR08-SS270-09A
Matrix: Soil
Workgroup Number: WG294159
Collect Date: 01/19/2009 11:45
Sample Tag: DL01

PrePrep Method: NONE
Prep Method: 3051
Analytical Method: 6020
Analyst: JYH
Dilution: 2
Units: mg/kg

Instrument: ELAN-ICP
Prep Date: 01/23/2009 09:02
Cal Date: 02/05/2009 10:09
Run Date: 02/06/2009 03:00
File ID: EL.020609.030024
Percent Solid: 82.0

Analyte	CAS. Number	Result	Qual	RL	MDL
Arsenic, Total	7440-38-2	0.619	J	0.732	0.183
Lead, Total	7439-92-1	23.0		0.975	0.244
Selenium, Total	7782-49-2		U	0.975	0.244

U Undetected; the analyte was analyzed for, but not detected.
J Estimated ; the analyte concentration was less than the low standard (LOQ)

Microbac

 lew 4/1/09

3

Sample Number: L09010436-03
Client ID: MR08-SS270-09A
Matrix: Soil
Workgroup Number: WG293894
Collect Date: 01/19/2009 11:45
Sample Tag: 01

PrePrep Method: NONE
Prep Method: 7471A
Analytical Method: 7471A
Analyst: ADC
Dilution: 1
Units: mg/kg

Instrument: HYDRA
Prep Date: 01/23/2009 06:41
Cal Date: 02/02/2009 09:42
Run Date: 02/02/2009 09:58
File ID: HY.020209.095859
Percent Solid: 82.0

Analyte	CAS. Number	Result	Qual	RL	MDL
Mercury, Total	7439-97-6	0.114	J	0.121	0.0242

J Estimated ; the analyte concentration was less than the low standard (LOQ)

Microbac

2242 MW 4/11/09

4

Sample Number: L09010436-04
Client ID: MR08-IS270-9-10-09A
Matrix: Soil
Workgroup Number: WG293380
Collect Date: 01/19/2009 12:05
Sample Tag: 01

PrePrep Method: NONE
Prep Method: 3051
Analytical Method: 6010B
Analyst: KHR
Dilution: 1
Units: mg/kg

Instrument: IRIS-ICP
Prep Date: 01/23/2009 14:36
Cal Date: 01/26/2009 10:59
Run Date: 01/26/2009 16:32
File ID: IR.012609.163200
Percent Solid: 91.5

Analyte	CAS. Number	Result	Qual	RL	MDL
Silver, Total	7440-22-4		U	0.737	0.184
Barium, Total	7440-39-3	4.25		0.368	0.0737
Cadmium, Total	7440-43-9		U	0.147	0.0368
Chromium, Total	7440-47-3	1.99		0.737	0.0884

U Undetected; the analyte was analyzed for, but not detected.

Microbac

17 lew 4/1/09

4

Sample Number: L09010436-04
Client ID: MR08-IS270-9-10-09A
Matrix: Soil
Workgroup Number: WG294159
Collect Date: 01/19/2009 12:05
Sample Tag: DL01

PrePrep Method: NONE
Prep Method: 3051
Analytical Method: 6020
Analyst: JYH
Dilution: 2
Units: mg/kg

Instrument: ELAN-ICP
Prep Date: 01/23/2009 09:02
Cal Date: 02/05/2009 10:09
Run Date: 02/06/2009 03:06
File ID: EL.020609.030629
Percent Solid: 91.5

Analyte	CAS. Number	Result	Qual	RL	MDL
Arsenic, Total	7440-38-2	0.700		0.650	0.162
Lead, Total	7439-92-1	2.03		0.866	0.217
Selenium, Total	7782-49-2		U	0.866	0.217

U Undetected; the analyte was analyzed for, but not detected.

Microbac

673 lw
4/1/09

4

Sample Number: L09010436-04
Client ID: MR08-IS270-9-10-09A
Matrix: Soil
Workgroup Number: WG293894
Collect Date: 01/19/2009 12:05
Sample Tag: 01

PrePrep Method: NONE
Prep Method: 7471A
Analytical Method: 7471A
Analyst: ADC
Dilution: 1
Units: mg/kg

Instrument: HYDRA
Prep Date: 01/23/2009 06:41
Cal Date: 02/02/2009 09:42
Run Date: 02/02/2009 10:04
File ID: HY.020209.100452
Percent Solid: 91.5

Analyte	CAS. Number	Result	Qual	RL	MDL
Mercury, Total	7439-97-6		U	0.105	0.0209

U Undetected; the analyte was analyzed for, but not detected.

Microbac

2243 JW 4/1/09

5

Sample Number: L09010436-05
Client ID: MR08-SS269-09A
Matrix: Soil
Workgroup Number: WG293380
Collect Date: 01/19/2009 13:50
Sample Tag: 01

PrePrep Method: NONE
Prep Method: 3051
Analytical Method: 6010B
Analyst: KHR
Dilution: 1
Units: mg/kg

Instrument: IRIS-ICP
Prep Date: 01/23/2009 14:37
Cal Date: 01/26/2009 10:59
Run Date: 01/26/2009 16:38
File ID: IR.012609.163800
Percent Solid: 85.8

Analyte	CAS. Number	Result	Qual	RL	MDL
Silver, Total	7440-22-4	0.362	J	0.825	0.206
Barium, Total	7440-39-3	7.59		0.412	0.0825
Cadmium, Total	7440-43-9	0.120	J	0.165	0.0412
Chromium, Total	7440-47-3	3.28		0.825	0.0990

J Estimated ; the analyte concentration was less than the low standard (LOQ)

Microbac

18 fcw 1/11/09

5

Sample Number: L09010436-05
Client ID: MR08-SS269-09A
Matrix: Soil
Workgroup Number: WG294159
Collect Date: 01/19/2009 13:50
Sample Tag: DL01

PrePrep Method: NONE
Prep Method: 3051
Analytical Method: 6020
Analyst: JYH
Dilution: 2
Units: mg/kg

Instrument: ELAN-ICP
Prep Date: 01/23/2009 09:02
Cal Date: 02/05/2009 10:09
Run Date: 02/06/2009 03:25
File ID: EL.020609.032538
Percent Solid: 85.8

Analyte	CAS. Number	Result	Qual	RL	MDL
Arsenic, Total	7440-38-2	0.501	J	0.676	0.169
Lead, Total	7439-92-1	18.6		0.902	0.225
Selenium, Total	7782-49-2		U	0.902	0.225

U Undetected; the analyte was analyzed for, but not detected.
J Estimated ; the analyte concentration was less than the low standard (LOQ)

Microbac

674 LW
4/1/09

5

Sample Number: L09010436-05
Client ID: MR08-SS269-09A
Matrix: Soil
Workgroup Number: WG293894
Collect Date: 01/19/2009 13:50
Sample Tag: 01

PrePrep Method: NONE
Prep Method: 7471A
Analytical Method: 7471A
Analyst: ADC
Dilution: 1
Units: mg/kg

Instrument: HYDRA
Prep Date: 01/23/2009 06:41
Cal Date: 02/02/2009 09:42
Run Date: 02/02/2009 10:06
File ID: HY.020209.100654
Percent Solid: 85.8

Analyte	CAS. Number	Result	Qual	RL	MDL
Mercury, Total	7439-97-6	0.0398	J	0.115	0.0229

J Estimated ; the analyte concentration was less than the low standard (LOQ)

Microbac

2244 LW 4/1/09

6

Sample Number: L09010436-06
Client ID: MR08-SS269D-09A
Matrix: Soil
Workgroup Number: WG293380
Collect Date: 01/19/2009 13:50
Sample Tag: 01

PrePrep Method: NONE
Prep Method: 3051
Analytical Method: 6010B
Analyst: KHR
Dilution: 1
Units: mg/kg

Instrument: IRIS-ICP
Prep Date: 01/23/2009 14:37
Cal Date: 01/26/2009 10:59
Run Date: 01/26/2009 16:56
File ID: IR.012609.165600
Percent Solid: 86.0

Analyte	CAS. Number	Result	Qual	RL	MDL
Silver, Total	7440-22-4	0.328	J	0.853	0.213
Barium, Total	7440-39-3	7.45		0.426	0.0853
Cadmium, Total	7440-43-9	0.122	J	0.171	0.0426
Chromium, Total	7440-47-3	3.27		0.853	0.102

J Estimated ; the analyte concentration was less than the low standard (LOQ)

Microbac

19 LW
4/1/09

6

Sample Number:	L09010436-06	PrePrep Method:	NONE	Instrument:	ELAN-ICP
Client ID:	MR08-SS269D-09A	Prep Method:	3051	Prep Date:	01/23/2009 09:02
Matrix:	Soil	Analytical Method:	6020	Cal Date:	02/05/2009 10:09
Workgroup Number:	WG294159	Analyst:	JYH	Run Date:	02/06/2009 03:31
Collect Date:	01/19/2009 13:50	Dilution:	2	File ID:	EL.020609.033144
Sample Tag:	DL01	Units:	mg/kg	Percent Solid:	86.0

Analyte	CAS. Number	Result	Qual	RL	MDL
Arsenic, Total	7440-38-2	0.702		0.686	0.171
Lead, Total	7439-92-1	18.4		0.914	0.229
Selenium, Total	7782-49-2	0.261	J	0.914	0.229

J Estimated ; the analyte concentration was less than the low standard (LOQ)

Microbac

675 lew 4/1/09

6

Sample Number:	L09010436-06	PrePrep Method:	NONE	Instrument:	HYDRA
Client ID:	MR08-SS269D-09A	Prep Method:	7471A	Prep Date:	01/23/2009 06:41
Matrix:	Soil	Analytical Method:	7471A	Cal Date:	02/02/2009 09:42
Workgroup Number:	WG293894	Analyst:	ADC	Run Date:	02/02/2009 10:08
Collect Date:	01/19/2009 13:50	Dilution:	1	File ID:	HY.020209.100859
Sample Tag:	01	Units:	mg/kg	Percent Solid:	86.0

Analyte	CAS. Number	Result	Qual	RL	MDL
Mercury, Total	7439-97-6	0.0377	J	0.116	0.0231

J Estimated ; the analyte concentration was less than the low standard (LOQ)

Microbac

2245 [illegible] 4/1/09

7

Sample Number: L09010436-07
Client ID: MR08-IS269-7-8-09A
Matrix: Soil
Workgroup Number: WG293380
Collect Date: 01/19/2009 13:55
Sample Tag: 01

PrePrep Method: NONE
Prep Method: 3051
Analytical Method: 6010B
Analyst: KHR
Dilution: 1
Units: mg/kg

Instrument: IRIS-ICP
Prep Date: 01/23/2009 14:38
Cal Date: 01/26/2009 10:59
Run Date: 01/26/2009 17:02
File ID: IR.012609.170200
Percent Solid: 96.4

Analyte	CAS. Number	Result	Qual	RL	MDL
Silver, Total	7440-22-4	0.196	J	0.760	0.190
Barium, Total	7440-39-3	0.620		0.380	0.0760
Cadmium, Total	7440-43-9		U	0.152	0.0380
Chromium, Total	7440-47-3	0.777		0.760	0.0912

U Undetected; the analyte was analyzed for, but not detected.
J Estimated ; the analyte concentration was less than the low standard (LOQ)

Microbac

20 lw 4/1/09

7

Sample Number: L09010436-07
Client ID: MR08-IS269-7-8-09A
Matrix: Soil
Workgroup Number: WG294159
Collect Date: 01/19/2009 13:55
Sample Tag: DL01

PrePrep Method: NONE
Prep Method: 3051
Analytical Method: 6020
Analyst: JYH
Dilution: 2
Units: mg/kg

Instrument: ELAN-ICP
Prep Date: 01/23/2009 09:02
Cal Date: 02/05/2009 10:09
Run Date: 02/06/2009 03:37
File ID: EL.020609.033750
Percent Solid: 96.4

Analyte	CAS. Number	Result	Qual	RL	MDL
Arsenic, Total	7440-38-2		U	0.619	0.155
Lead, Total	7439-92-1	1.17		0.825	0.206
Selenium, Total	7782-49-2		U	0.825	0.206

U Undetected; the analyte was analyzed for, but not detected.

Microbac

 4/1/09

7

Sample Number: L09010436-07
Client ID: MR08-IS269-7-8-09A
Matrix: Soil
Workgroup Number: WG293894
Collect Date: 01/19/2009 13:55
Sample Tag: 01

PrePrep Method: NONE
Prep Method: 7471A
Analytical Method: 7471A
Analyst: ADC
Dilution: 1
Units: mg/kg

Instrument: HYDRA
Prep Date: 01/23/2009 06:41
Cal Date: 02/02/2009 09:42
Run Date: 02/02/2009 10:11
File ID: HY.020209.101103
Percent Solid: 96.4

Analyte	CAS. Number	Result	Qual	RL	MDL
Mercury, Total	7439-97-6		U	0.101	0.0202

U Undetected; the analyte was analyzed for, but not detected.

Microbac

2246 MW 4/1/09

8

Sample Number: L09010436-08
Client ID: MR08-IS269D-7-8-09A
Matrix: Soil
Workgroup Number: WG293380
Collect Date: 01/19/2009 13:55
Sample Tag: 01

PrePrep Method: NONE
Prep Method: 3051
Analytical Method: 6010B
Analyst: KHR
Dilution: 1
Units: mg/kg

Instrument: IRIS-ICP
Prep Date: 01/23/2009 14:38
Cal Date: 01/26/2009 10:59
Run Date: 01/26/2009 17:08
File ID: IR.012609.170800
Percent Solid: 96.2

Analyte	CAS. Number	Result	Qual	RL	MDL
Silver, Total	7440-22-4	0.271	J	0.764	0.191
Barium, Total	7440-39-3	0.420		0.382	0.0764
Cadmium, Total	7440-43-9		U	0.153	0.0382
Chromium, Total	7440-47-3	0.467	J	0.764	0.0916

U Undetected; the analyte was analyzed for, but not detected.
J Estimated ; the analyte concentration was less than the low standard (LOQ)

Microbac

21 lew 4/11/09

8

Sample Number: L09010436-08
Client ID: MR08-IS269D-7-8-09A
Matrix: Soil
Workgroup Number: WG294159
Collect Date: 01/19/2009 13:55
Sample Tag: DL01

PrePrep Method: NONE
Prep Method: 3051
Analytical Method: 6020
Analyst: JYH
Dilution: 2
Units: mg/kg

Instrument: ELAN-ICP
Prep Date: 01/23/2009 09:02
Cal Date: 02/05/2009 10:09
Run Date: 02/06/2009 03:43
File ID: EL.020609.034357
Percent Solid: 96.2

Analyte	CAS. Number	Result	Qual	RL	MDL
Arsenic, Total	7440-38-2		U	0.599	0.150
Lead, Total	7439-92-1	0.936		0.798	0.200
Selenium, Total	7782-49-2		U	0.798	0.200

U Undetected; the analyte was analyzed for, but not detected.

Microbac

677 LW
4/1/09

8

Sample Number: L09010436-08
Client ID: MR08-IS269D-7-8-09A
Matrix: Soil
Workgroup Number: WG293894
Collect Date: 01/19/2009 13:55
Sample Tag: 01

PrePrep Method: NONE
Prep Method: 7471A
Analytical Method: 7471A
Analyst: ADC
Dilution: 1
Units: mg/kg

Instrument: HYDRA
Prep Date: 01/23/2009 06:41
Cal Date: 02/02/2009 09:42
Run Date: 02/02/2009 10:13
File ID: HY.020209.101309
Percent Solid: 96.2

Analyte	CAS. Number	Result	Qual	RL	MDL
Mercury, Total	7439-97-6		U	0.0995	0.0199

U Undetected; the analyte was analyzed for, but not detected.

Microbac

2247 lw
4/1/09

9

Sample Number: L09010436-09
Client ID: MR08-SS268-09A
Matrix: Soil
Workgroup Number: WG293380
Collect Date: 01/19/2009 15:00
Sample Tag: 01

PrePrep Method: NONE
Prep Method: 3051
Analytical Method: 6010B
Analyst: KHR
Dilution: 1
Units: mg/kg

Instrument: IRIS-ICP
Prep Date: 01/23/2009 14:39
Cal Date: 01/26/2009 10:59
Run Date: 01/26/2009 17:15
File ID: IR.012609.171500
Percent Solid: 81.1

Analyte	CAS. Number	Result	Qual	RL	MDL
Silver, Total	7440-22-4	0.293	J	0.831	0.208
Barium, Total	7440-39-3	9.25		0.416	0.0831
Cadmium, Total	7440-43-9	0.161	J	0.166	0.0416
Chromium, Total	7440-47-3	3.73		0.831	0.0997

J Estimated ; the analyte concentration was less than the low standard (LOQ)

Microbac

22 MW 4/1/09

9

Sample Number: L09010436-09
Client ID: MR08-SS268-09A
Matrix: Soil
Workgroup Number: WG294159
Collect Date: 01/19/2009 15:00
Sample Tag: DL01

PrePrep Method: NONE
Prep Method: 3051
Analytical Method: 6020
Analyst: JYH
Dilution: 2
Units: mg/kg

Instrument: ELAN-ICP
Prep Date: 01/23/2009 09:02
Cal Date: 02/05/2009 10:09
Run Date: 02/06/2009 02:17
File ID: EL.020609.021754
Percent Solid: 81.1

Analyte	CAS. Number	Result	Qual	RL	MDL
Arsenic, Total	7440-38-2	0.666	J	0.725	0.181
Lead, Total	7439-92-1	31.1		0.967	0.242
Selenium, Total	7782-49-2		U	0.967	0.242

U Undetected; the analyte was analyzed for, but not detected.
J Estimated ; the analyte concentration was less than the low standard (LOQ)

Microbac

678 MW 4/1/09

9

Sample Number:	L09010436-09	PrePrep Method:	NONE	Instrument:	HYDRA
Client ID:	MR08-SS268-09A	Prep Method:	7471A	Prep Date:	01/23/2009 06:41
Matrix:	Soil	Analytical Method:	7471A	Cal Date:	02/02/2009 09:42
Workgroup Number:	WG293894	Analyst:	ADC	Run Date:	02/02/2009 10:16
Collect Date:	01/19/2009 15:00	Dilution:	1	File ID:	HY.020209.101649
Sample Tag:	01	Units:	mg/kg	Percent Solid:	81.1

Analyte	CAS. Number	Result	Qual	RL	MDL
Mercury, Total	7439-97-6	0.0267	J	0.122	0.0244

J Estimated ; the analyte concentration was less than the low standard (LOQ)

Microbac

2248 MW
4/1/09

12

Sample Number: L09010436-12
Client ID: MR08-IS268-7-8-09A
Matrix: Soil
Workgroup Number: WG293379
Collect Date: 01/19/2009 14:45
Sample Tag: 01

PrePrep Method: NONE
Prep Method: 3051
Analytical Method: 6010B
Analyst: KHR
Dilution: 1
Units: mg/kg

Instrument: IRIS-ICP
Prep Date: 01/23/2009 14:54
Cal Date: 01/26/2009 10:59
Run Date: 01/26/2009 14:10
File ID: IR.012609.141000
Percent Solid: 88.5

Analyte	CAS. Number	Result	Qual	RL	MDL
Barium, Total	7440-39-3	10.3		0.409	0.0818
Cadmium, Total	7440-43-9		U	0.164	0.0409
Chromium, Total	7440-47-3	8.11 J		0.818	0.0982

SD

U Undetected; the analyte was analyzed for, but not detected.

Microbac

25 MW 4/1/09

12

Sample Number: L09010436-12
Client ID: MR08-IS268-7-8-09A
Matrix: Soil
Workgroup Number: WG293379
Collect Date: 01/19/2009 14:45
Sample Tag: 02

PrePrep Method: NONE
Prep Method: 3051
Analytical Method: 6010B
Analyst: KHR
Dilution: 1
Units: mg/kg

Instrument: IRIS-ICP
Prep Date: 01/23/2009 14:54
Cal Date: 01/28/2009 10:38
Run Date: 01/28/2009 11:34
File ID: IR.012809.113400
Percent Solid: 88.5

Analyte	CAS. Number	Result	Qual	RL	MDL
Silver, Total	7440-22-4		U	0.818	0.205

U Undetected; the analyte was analyzed for, but not detected.

Microbac

26 llw
4/1/09

12

Sample Number: L09010436-12
Client ID: MR08-IS268-7-8-09A
Matrix: Soil
Workgroup Number: WG294156
Collect Date: 01/19/2009 14:45
Sample Tag: DL01

PrePrep Method: NONE
Prep Method: 3051
Analytical Method: 6020
Analyst: JYH
Dilution: 2
Units: mg/kg

Instrument: ELAN-ICP
Prep Date: 01/23/2009 10:56
Cal Date: 02/05/2009 10:09
Run Date: 02/06/2009 00:08
File ID: EL.020609.000826
Percent Solid: 88.5

Analyte	CAS. Number	Result	Qual	RL	MDL
Arsenic, Total	7440-38-2	0.265	J	0.668	0.167
Lead, Total	7439-92-1	1.92		0.891	0.223
Selenium, Total	7782-49-2		U	0.891	0.223

U Undetected; the analyte was analyzed for, but not detected.
J Estimated ; the analyte concentration was less than the low standard (LOQ)

Microbac

681 MW 2/1/09

12

Sample Number:	L09010436-12	PrePrep Method:	NONE	Instrument:	HYDRA
Client ID:	MR08-IS268-7-8-09A	Prep Method:	7471A	Prep Date:	01/26/2009 08:39
Matrix:	Soil	Analytical Method:	7471A	Cal Date:	01/29/2009 13:25
Workgroup Number:	WG293715	Analyst:	ADC	Run Date:	01/29/2009 13:38
Collect Date:	01/19/2009 14:45	Dilution:	1	File ID:	HY.012909.133837
Sample Tag:	01	Units:	mg/kg	Percent Solid:	88.5

Analyte	CAS. Number	Result	Qual	RL	MDL
Mercury, Total	7439-97-6		U	0.109	0.0217

U Undetected; the analyte was analyzed for, but not detected.

Microbac

2251 lw 02/1/09

15

Sample Number: L09010436-15
Client ID: MR08-SS267-09A
Matrix: Soil
Workgroup Number: WG293380
Collect Date: 01/19/2009 15:35
Sample Tag: 01

PrePrep Method: NONE
Prep Method: 3051
Analytical Method: 6010B
Analyst: KHR
Dilution: 1
Units: mg/kg

Instrument: IRIS-ICP
Prep Date: 01/23/2009 14:42
Cal Date: 01/26/2009 10:59
Run Date: 01/26/2009 17:33
File ID: IR.012609.173300
Percent Solid: 95.9

Analyte	CAS. Number	Result	Qual	RL	MDL
Silver, Total	7440-22-4	0.497	J	0.743	0.186
Barium, Total	7440-39-3	3.67		0.371	0.0743
Cadmium, Total	7440-43-9	0.175		0.149	0.0371
Chromium, Total	7440-47-3	3.89		0.743	0.0892

J Estimated ; the analyte concentration was less than the low standard (LOQ)

Microbac

 lw 4/1/09

15

Sample Number: L09010436-15
Client ID: MR08-SS267-09A
Matrix: Soil
Workgroup Number: WG294159
Collect Date: 01/19/2009 15:35
Sample Tag: DL01

PrePrep Method: NONE
Prep Method: 3051
Analytical Method: 6020
Analyst: JYH
Dilution: 2
Units: mg/kg

Instrument: ELAN-ICP
Prep Date: 01/23/2009 09:02
Cal Date: 02/05/2009 10:09
Run Date: 02/06/2009 03:50
File ID: EL.020609.035002
Percent Solid: 95.9

Analyte	CAS. Number	Result	Qual	RL	MDL
Arsenic, Total	7440-38-2	0.810		0.620	0.155
Lead, Total	7439-92-1	1.59		0.826	0.207
Selenium, Total	7782-49-2	0.226	J	0.826	0.207

J Estimated ; the analyte concentration was less than the low standard (LOQ)

Microbac

684 lew
4/1/09

15

Sample Number: L09010436-15
Client ID: MR08-SS267-09A
Matrix: Soil
Workgroup Number: WG293894
Collect Date: 01/19/2009 15:35
Sample Tag: 01

PrePrep Method: NONE
Prep Method: 7471A
Analytical Method: 7471A
Analyst: ADC
Dilution: 1
Units: mg/kg

Instrument: HYDRA
Prep Date: 01/23/2009 06:41
Cal Date: 02/02/2009 09:42
Run Date: 02/02/2009 10:24
File ID: HY.020209.102410
Percent Solid: 95.9

Analyte	CAS. Number	Result	Qual	RL	MDL
Mercury, Total	7439-97-6		U	0.0982	0.0196

U Undetected; the analyte was analyzed for, but not detected.

Microbac

2254 PLW
4/1/09

16

Sample Number: L09010436-16
Client ID: MR08-IS267-7-8-09A
Matrix: Soil
Workgroup Number: WG293380
Collect Date: 01/19/2009 15:55
Sample Tag: 01

PrePrep Method: NONE
Prep Method: 3051
Analytical Method: 6010B
Analyst: KHR
Dilution: 1
Units: mg/kg

Instrument: IRIS-ICP
Prep Date: 01/23/2009 14:44
Cal Date: 01/26/2009 10:59
Run Date: 01/26/2009 17:39
File ID: IR.012609.173900
Percent Solid: 88.6

Analyte	CAS. Number	Result	Qual	RL	MDL
Silver, Total	7440-22-4		U	0.865	0.216
Barium, Total	7440-39-3	6.59		0.433	0.0865
Cadmium, Total	7440-43-9		U	0.173	0.0433
Chromium, Total	7440-47-3	4.12		0.865	0.104

U Undetected; the analyte was analyzed for, but not detected.

Microbac

32 JW
4/1/09

16

Sample Number: L09010436-16
Client ID: MR08-IS267-7-8-09A
Matrix: Soil
Workgroup Number: WG294159
Collect Date: 01/19/2009 15:55
Sample Tag: DL01

PrePrep Method: NONE
Prep Method: 3051
Analytical Method: 6020
Analyst: JYH
Dilution: 2
Units: mg/kg

Instrument: ELAN-ICP
Prep Date: 01/23/2009 09:02
Cal Date: 02/05/2009 10:09
Run Date: 02/06/2009 03:56
File ID: EL.020609.035606
Percent Solid: 88.6

Analyte	CAS. Number	Result	Qual	RL	MDL
Arsenic, Total	7440-38-2	0.543	J	0.655	0.164
Lead, Total	7439-92-1	3.90		0.873	0.218
Selenium, Total	7782-49-2		U	0.873	0.218

U Undetected; the analyte was analyzed for, but not detected.
J Estimated ; the analyte concentration was less than the low standard (LOQ)

Microbac

 RW 4/1/09

16

Sample Number: L09010436-16
Client ID: MR08-IS267-7-8-09A
Matrix: Soil
Workgroup Number: WG293894
Collect Date: 01/19/2009 15:55
Sample Tag: 01

PrePrep Method: NONE
Prep Method: 7471A
Analytical Method: 7471A
Analyst: ADC
Dilution: 1
Units: mg/kg

Instrument: HYDRA
Prep Date: 01/23/2009 06:41
Cal Date: 02/02/2009 09:42
Run Date: 02/02/2009 10:29
File ID: HY.020209.102955
Percent Solid: 88.6

Analyte	CAS. Number	Result	Qual	RL	MDL
Mercury, Total	7439-97-6		U	0.108	0.0215

U Undetected; the analyte was analyzed for, but not detected.

Microbac

2255 RES
4/1/09

17

Sample Number: L09010436-17
Client ID: MR08-EB012009
Matrix: Water
Workgroup Number: WG293349
Collect Date: 01/20/2009 07:10
Sample Tag: 01

PrePrep Method: NONE
Prep Method: 3005A
Analytical Method: 6010B
Analyst: SLP
Dilution: 1
Units: ug/L

Instrument: PE-ICP2
Prep Date: 01/23/2009 06:27
Cal Date: 01/25/2009 21:02
Run Date: 01/26/2009 02:51
File ID: P2.012609.025120

Analyte	CAS. Number	Result	Qual	RL	MDL
Barium, Total	7440-39-3	3.47	J	10.0	2.50
Cadmium, Total	7440-43-9		U	1.00	0.250
Chromium, Total	7440-47-3		U	10.0	2.50
Silver, Total	7440-22-4		U	6.00	2.00

U Undetected; the analyte was analyzed for, but not detected.
J Estimated ; the analyte concentration was less than the low standard (LOQ)

Microbac

33 MW 4/1/09

17

Sample Number: L09010436-17
Client ID: MR08-EB012009
Matrix: Water
Workgroup Number: WG293584
Collect Date: 01/20/2009 07:10
Sample Tag: 01

PrePrep Method: NONE
Prep Method: 3015
Analytical Method: 6020
Analyst: JYH
Dilution: 1
Units: ug/L

Instrument: ELAN-ICP
Prep Date: 01/23/2009 07:14
Cal Date: 01/27/2009 12:41
Run Date: 01/27/2009 19:06
File ID: EL.012709.190606

Analyte	CAS. Number	Result	Qual	RL	MDL
Arsenic, Total	7440-38-2		U	1.00	0.250
Lead, Total	7439-92-1		U	1.00	0.250
Selenium, Total	7782-49-2	0.788	J	2.00	0.500

U Undetected; the analyte was analyzed for, but not detected.
J Estimated ; the analyte concentration was less than the low standard (LOQ)

Microbac

 lew 4/1/09

17

Sample Number: L09010436-17
Client ID: MR08-EB012009
Matrix: Water
Workgroup Number: WG293521
Collect Date: 01/20/2009 07:10
Sample Tag: 01

PrePrep Method: NONE
Prep Method: 7470A
Analytical Method: 7470A
Analyst: ADC
Dilution: 1
Units: ug/L

Instrument: HYDRA
Prep Date: 01/23/2009 07:32
Cal Date: 01/27/2009 09:56
Run Date: 01/27/2009 10:23
File ID: HY.012709.102317

Analyte	CAS. Number	Result	Qual	RL	MDL
Mercury	7439-97-6		U	0.400	0.100

U Undetected; the analyte was analyzed for, but not detected.

Microbac

2256 lw
4/1/09

18

Sample Number: L09010436-18
Client ID: MR08-IS236-7-8-09A
Matrix: Soil
Workgroup Number: WG293380
Collect Date: 01/20/2009 09:15
Sample Tag: 01

PrePrep Method: NONE
Prep Method: 3051
Analytical Method: 6010B
Analyst: KHR
Dilution: 1
Units: mg/kg

Instrument: IRIS-ICP
Prep Date: 01/23/2009 14:45
Cal Date: 01/26/2009 10:59
Run Date: 01/26/2009 17:45
File ID: IR.012609.174500
Percent Solid: 83.8

Analyte	CAS. Number	Result	Qual	RL	MDL
Silver, Total	7440-22-4		U	0.800	0.200
Barium, Total	7440-39-3	2.81		0.400	0.0800
Cadmium, Total	7440-43-9		U	0.160	0.0400
Chromium, Total	7440-47-3	2.77		0.800	0.0960

U Undetected; the analyte was analyzed for, but not detected.

Microbac

34 DLW 4/1/09

18

Sample Number: L09010436-18
Client ID: MR08-IS236-7-8-09A
Matrix: Soil
Workgroup Number: WG294156
Collect Date: 01/20/2009 09:15
Sample Tag: DL01

PrePrep Method: NONE
Prep Method: 3051
Analytical Method: 6020
Analyst: JYH
Dilution: 2
Units: mg/kg

Instrument: ELAN-ICP
Prep Date: 01/23/2009 10:56
Cal Date: 02/05/2009 10:09
Run Date: 02/06/2009 00:26
File ID: EL.020609.002641
Percent Solid: 83.8

Analyte	CAS. Number	Result	Qual	RL	MDL
Arsenic, Total	7440-38-2	1.43		0.709	0.177
Lead, Total	7439-92-1	3.66		0.946	0.236
Selenium, Total	7782-49-2		U	0.946	0.236

U Undetected; the analyte was analyzed for, but not detected.

Microbac

687 LW
4/1/09

18

Sample Number: L09010436-18
Client ID: MR08-IS236-7-8-09A
Matrix: Soil
Workgroup Number: WG293894
Collect Date: 01/20/2009 09:15
Sample Tag: 01

PrePrep Method: NONE
Prep Method: 7471A
Analytical Method: 7471A
Analyst: ADC
Dilution: 1
Units: mg/kg

Instrument: HYDRA
Prep Date: 01/23/2009 06:41
Cal Date: 02/02/2009 09:42
Run Date: 02/02/2009 10:31
File ID: HY.020209.103138
Percent Solid: 83.8

Analyte	CAS. Number	Result	Qual	RL	MDL
Mercury, Total	7439-97-6		U	0.113	0.0226

U Undetected; the analyte was analyzed for, but not detected.

Microbac

2257 MW 4/1/09

19

Sample Number: L09010436-19
Client ID: MR08-SS236-09A
Matrix: Soil
Workgroup Number: WG293380
Collect Date: 01/20/2009 09:10
Sample Tag: 01

PrePrep Method: NONE
Prep Method: 3051
Analytical Method: 6010B
Analyst: KHR
Dilution: 1
Units: mg/kg

Instrument: IRIS-ICP
Prep Date: 01/23/2009 14:46
Cal Date: 01/26/2009 10:59
Run Date: 01/26/2009 17:51
File ID: IR.012609.175100
Percent Solid: 85.7

Analyte	CAS. Number	Result	Qual	RL	MDL
Silver, Total	7440-22-4	0.472	J	0.815	0.204
Barium, Total	7440-39-3	3.92		0.407	0.0815
Cadmium, Total	7440-43-9	0.777		0.163	0.0407
Chromium, Total	7440-47-3	2.27		0.815	0.0978

J Estimated ; the analyte concentration was less than the low standard (LOQ)

Microbac

 dw
4/1/09

19

Sample Number: L09010436-19
Client ID: MR08-SS236-09A
Matrix: Soil
Workgroup Number: WG294156
Collect Date: 01/20/2009 09:10
Sample Tag: DL01

PrePrep Method: NONE
Prep Method: 3051
Analytical Method: 6020
Analyst: JYH
Dilution: 2
Units: mg/kg

Instrument: ELAN-ICP
Prep Date: 01/23/2009 10:56
Cal Date: 02/06/2009 11:09
Run Date: 02/06/2009 22:13
File ID: EL.020609.221334
Percent Solid: 85.7

Analyte	CAS. Number	Result	Qual	RL	MDL
Arsenic, Total	7440-38-2	3.10		0.700	0.175
Lead, Total	7439-92-1	4.49		0.933	0.233
Selenium, Total	7782-49-2		U	0.933	0.233

U Undetected; the analyte was analyzed for, but not detected.

Microbac

688 LW 4/1/09

19

Sample Number: L09010436-19
Client ID: MR08-SS236-09A
Matrix: Soil
Workgroup Number: WG293894
Collect Date: 01/20/2009 09:10
Sample Tag: 01

PrePrep Method: NONE
Prep Method: 7471A
Analytical Method: 7471A
Analyst: ADC
Dilution: 1
Units: mg/kg

Instrument: HYDRA
Prep Date: 01/23/2009 06:41
Cal Date: 02/02/2009 09:42
Run Date: 02/02/2009 10:33
File ID: HY.020209.103330
Percent Solid: 85.7

Analyte	CAS. Number	Result	Qual	RL	MDL
Mercury, Total	7439-97-6		U	0.111	0.0222

U Undetected; the analyte was analyzed for, but not detected.

Microbac

2258 LW 4/1/09

20

Sample Number: L09010436-20
Client ID: MR08-SS222-09A
Matrix: Soil
Workgroup Number: WG293380
Collect Date: 01/20/2009 09:20
Sample Tag: 01

PrePrep Method: NONE
Prep Method: 3051
Analytical Method: 6010B
Analyst: KHR
Dilution: 1
Units: mg/kg

Instrument: IRIS-ICP
Prep Date: 01/23/2009 14:47
Cal Date: 01/26/2009 10:59
Run Date: 01/26/2009 18:09
File ID: IR.012609.180900
Percent Solid: 90.6

Analyte	CAS. Number	Result	Qual	RL	MDL
Silver, Total	7440-22-4	0.591	J	0.813	0.203
Barium, Total	7440-39-3	4.45		0.406	0.0813
Cadmium, Total	7440-43-9	0.871		0.163	0.0406
Chromium, Total	7440-47-3	4.09		0.813	0.0975

J Estimated ; the analyte concentration was less than the low standard (LOQ)

Microbac

36 hw 4/1/09

20

Sample Number: L09010436-20
Client ID: MR08-SS222-09A
Matrix: Soil
Workgroup Number: WG294156
Collect Date: 01/20/2009 09:20
Sample Tag: DL01

PrePrep Method: NONE
Prep Method: 3051
Analytical Method: 6020
Analyst: JYH
Dilution: 2
Units: mg/kg

Instrument: ELAN-ICP
Prep Date: 01/23/2009 10:56
Cal Date: 02/06/2009 11:09
Run Date: 02/06/2009 22:19
File ID: EL.020609.221939
Percent Solid: 90.6

Analyte	CAS. Number	Result	Qual	RL	MDL
Arsenic, Total	7440-38-2	4.12		0.633	0.158
Lead, Total	7439-92-1	18.9		0.844	0.211
Selenium, Total	7782-49-2	0.222	J	0.844	0.211

J Estimated ; the analyte concentration was less than the low standard (LOQ)

Microbac

689 MJ 4/1/09

20

Sample Number: L09010436-20
Client ID: MR08-SS222-09A
Matrix: Soil
Workgroup Number: WG293894
Collect Date: 01/20/2009 09:20
Sample Tag: 01

PrePrep Method: NONE
Prep Method: 7471A
Analytical Method: 7471A
Analyst: ADC
Dilution: 1
Units: mg/kg

Instrument: HYDRA
Prep Date: 01/23/2009 06:41
Cal Date: 02/02/2009 09:42
Run Date: 02/02/2009 10:35
File ID: HY.020209.103543
Percent Solid: 90.6

Analyte	CAS. Number	Result	Qual	RL	MDL
Mercury, Total	7439-97-6		U	0.106	0.0212

U Undetected; the analyte was analyzed for, but not detected.

Microbac

2259 Leo
4/1/09

21

Sample Number: L09010436-21
Client ID: MR08-IS222-4-5-09A
Matrix: Soil
Workgroup Number: WG293380
Collect Date: 01/20/2009 09:25
Sample Tag: 01

PrePrep Method: NONE
Prep Method: 3051
Analytical Method: 6010B
Analyst: KHR
Dilution: 1
Units: mg/kg

Instrument: IRIS-ICP
Prep Date: 01/23/2009 14:47
Cal Date: 01/26/2009 10:59
Run Date: 01/26/2009 18:15
File ID: IR.012609.181500
Percent Solid: 89.3

Analyte	CAS. Number	Result	Qual	RL	MDL
Silver, Total	7440-22-4		U	0.765	0.191
Barium, Total	7440-39-3	6.30		0.382	0.0765
Cadmium, Total	7440-43-9		U	0.153	0.0382
Chromium, Total	7440-47-3	4.51		0.765	0.0918

U Undetected; the analyte was analyzed for, but not detected.

Microbac

37 MD
4/1/09

21

Sample Number: L09010436-21
Client ID: MR08-IS222-4-5-09A
Matrix: Soil
Workgroup Number: WG294156
Collect Date: 01/20/2009 09:25
Sample Tag: DL01

PrePrep Method: NONE
Prep Method: 3051
Analytical Method: 6020
Analyst: JYH
Dilution: 2
Units: mg/kg

Instrument: ELAN-ICP
Prep Date: 01/23/2009 10:56
Cal Date: 02/06/2009 11:09
Run Date: 02/06/2009 22:25
File ID: EL.020609.222542
Percent Solid: 89.3

Analyte	CAS. Number	Result	Qual	RL	MDL
Arsenic, Total	7440-38-2		U	0.650	0.163
Lead, Total	7439-92-1	7.04		0.867	0.217
Selenium, Total	7782-49-2		U	0.867	0.217

U Undetected; the analyte was analyzed for, but not detected.

Microbac

 MW 4/1/09

21

Sample Number: L09010436-21
Client ID: MR08-IS222-4-5-09A
Matrix: Soil
Workgroup Number: WG293894
Collect Date: 01/20/2009 09:25
Sample Tag: 01

PrePrep Method: NONE
Prep Method: 7471A
Analytical Method: 7471A
Analyst: ADC
Dilution: 1
Units: mg/kg

Instrument: HYDRA
Prep Date: 01/23/2009 06:41
Cal Date: 02/02/2009 09:42
Run Date: 02/02/2009 10:37
File ID: HY.020209.103730
Percent Solid: 89.3

Analyte	CAS. Number	Result	Qual	RL	MDL
Mercury, Total	7439-97-6		U	0.111	0.0221

U Undetected; the analyte was analyzed for, but not detected.

Microbac

2260 JW 4/1/09

22

Sample Number: L09010436-22
Client ID: MR08-IS223-4-5-09A
Matrix: Soil
Workgroup Number: WG293380
Collect Date: 01/20/2009 09:55
Sample Tag: 01

PrePrep Method: NONE
Prep Method: 3051
Analytical Method: 6010B
Analyst: KHR
Dilution: 1
Units: mg/kg

Instrument: IRIS-ICP
Prep Date: 01/23/2009 14:48
Cal Date: 01/26/2009 10:59
Run Date: 01/26/2009 18:22
File ID: IR.012609.182200
Percent Solid: 90.0

Analyte	CAS. Number	Result	Qual	RL	MDL
Silver, Total	7440-22-4	0.362	J	0.820	0.205
Barium, Total	7440-39-3	6.60		0.410	0.0820
Cadmium, Total	7440-43-9		U	0.164	0.0410
Chromium, Total	7440-47-3	3.10		0.820	0.0984

U Undetected; the analyte was analyzed for, but not detected.
J Estimated ; the analyte concentration was less than the low standard (LOQ)

Microbac

38 lcw 4/1/09

22

Sample Number: L09010436-22
Client ID: MR08-IS223-4-5-09A
Matrix: Soil
Workgroup Number: WG294156
Collect Date: 01/20/2009 09:55
Sample Tag: DL01

PrePrep Method: NONE
Prep Method: 3051
Analytical Method: 6020
Analyst: JYH
Dilution: 2
Units: mg/kg

Instrument: ELAN-ICP
Prep Date: 01/23/2009 10:56
Cal Date: 02/06/2009 11:09
Run Date: 02/06/2009 22:31
File ID: EL.020609.223146
Percent Solid: 90.0

Analyte	CAS. Number	Result	Qual	RL	MDL
Arsenic, Total	7440-38-2		U	0.659	0.165
Lead, Total	7439-92-1	2.97		0.878	0.220
Selenium, Total	7782-49-2		U	0.878	0.220

U Undetected; the analyte was analyzed for, but not detected.

Microbac

691 [illegible]
4/1/09

22

Sample Number: L09010436-22
Client ID: MR08-IS223-4-5-09A
Matrix: Soil
Workgroup Number: WG293894
Collect Date: 01/20/2009 09:55
Sample Tag: 01

PrePrep Method: NONE
Prep Method: 7471A
Analytical Method: 7471A
Analyst: ADC
Dilution: 1
Units: mg/kg

Instrument: HYDRA
Prep Date: 01/23/2009 06:41
Cal Date: 02/02/2009 09:42
Run Date: 02/02/2009 10:39
File ID: HY.020209.103926
Percent Solid: 90.0

Analyte	CAS. Number	Result	Qual	RL	MDL
Mercury, Total	7439-97-6		U	0.109	0.0219

U Undetected; the analyte was analyzed for, but not detected.

Microbac

2261 lew
4/1/09

23

Sample Number: L09010436-23
Client ID: MR08-SS223-09A
Matrix: Soil
Workgroup Number: WG293380
Collect Date: 01/20/2009 10:00
Sample Tag: 01

PrePrep Method: NONE
Prep Method: 3051
Analytical Method: 6010B
Analyst: KHR
Dilution: 1
Units: mg/kg

Instrument: IRIS-ICP
Prep Date: 01/23/2009 14:49
Cal Date: 01/26/2009 10:59
Run Date: 01/26/2009 18:28
File ID: IR.012609.182800
Percent Solid: 88.8

Analyte	CAS. Number	Result	Qual	RL	MDL
Silver, Total	7440-22-4	0.485	J	0.823	0.206
Barium, Total	7440-39-3	3.06		0.411	0.0823
Cadmium, Total	7440-43-9	0.689		0.165	0.0411
Chromium, Total	7440-47-3	2.62		0.823	0.0988

J Estimated ; the analyte concentration was less than the low standard (LOQ)

Microbac

39 MW 4/1/09

23

Sample Number: L09010436-23
Client ID: MR08-SS223-09A
Matrix: Soil
Workgroup Number: WG294156
Collect Date: 01/20/2009 10:00
Sample Tag: DL01

PrePrep Method: NONE
Prep Method: 3051
Analytical Method: 6020
Analyst: JYH
Dilution: 2
Units: mg/kg

Instrument: ELAN-ICP
Prep Date: 01/23/2009 10:56
Cal Date: 02/06/2009 11:09
Run Date: 02/06/2009 22:37
File ID: EL.020609.223750
Percent Solid: 88.8

Analyte	CAS. Number	Result	Qual	RL	MDL
Arsenic, Total	7440-38-2	5.54		0.664	0.166
Lead, Total	7439-92-1	2.03		0.885	0.221
Selenium, Total	7782-49-2		U	0.885	0.221

U Undetected; the analyte was analyzed for, but not detected.

Microbac

692 LW 4/1/09

23

Sample Number: L09010436-23
Client ID: MR08-SS223-09A
Matrix: Soil
Workgroup Number: WG293894
Collect Date: 01/20/2009 10:00
Sample Tag: 01

PrePrep Method: NONE
Prep Method: 7471A
Analytical Method: 7471A
Analyst: ADC
Dilution: 1
Units: mg/kg

Instrument: HYDRA
Prep Date: 01/23/2009 06:41
Cal Date: 02/02/2009 09:42
Run Date: 02/02/2009 10:41
File ID: HY.020209.104113
Percent Solid: 88.8

Analyte	CAS. Number	Result	Qual	RL	MDL
Mercury, Total	7439-97-6		U	0.104	0.0209

U Undetected; the analyte was analyzed for, but not detected.

Microbac

2262 MW
4/1/09

24

Sample Number: L09010436-24
Client ID: MR08-IS212-4-5-09A
Matrix: Soil
Workgroup Number: WG293380
Collect Date: 01/20/2009 10:25
Sample Tag: 01

PrePrep Method: NONE
Prep Method: 3051
Analytical Method: 6010B
Analyst: KHR
Dilution: 1
Units: mg/kg

Instrument: IRIS-ICP
Prep Date: 01/23/2009 14:49
Cal Date: 01/26/2009 10:59
Run Date: 01/26/2009 18:34
File ID: IR.012609.183400
Percent Solid: 87.3

Analyte	CAS. Number	Result	Qual	RL	MDL
Silver, Total	7440-22-4		U	0.788	0.197
Barium, Total	7440-39-3	4.51		0.394	0.0788
Cadmium, Total	7440-43-9		U	0.158	0.0394
Chromium, Total	7440-47-3	2.89		0.788	0.0946

U Undetected; the analyte was analyzed for, but not detected.

Microbac

40 LW
4/1/09

24

Sample Number: L09010436-24
Client ID: MR08-IS212-4-5-09A
Matrix: Soil
Workgroup Number: WG294156
Collect Date: 01/20/2009 10:25
Sample Tag: DL01

PrePrep Method: NONE
Prep Method: 3051
Analytical Method: 6020
Analyst: JYH
Dilution: 2
Units: mg/kg

Instrument: ELAN-ICP
Prep Date: 01/23/2009 10:56
Cal Date: 02/06/2009 11:09
Run Date: 02/06/2009 22:43
File ID: EL.020609.224354
Percent Solid: 87.3

Analyte	CAS. Number	Result	Qual	RL	MDL
Arsenic, Total	7440-38-2	1.13		0.679	0.170
Lead, Total	7439-92-1	3.28		0.905	0.226
Selenium, Total	7782-49-2		U	0.905	0.226

U Undetected; the analyte was analyzed for, but not detected.

Microbac

693 MW 4/1/09

24

Sample Number: L09010436-24
Client ID: MR08-IS212-4-5-09A
Matrix: Soil
Workgroup Number: WG293894
Collect Date: 01/20/2009 10:25
Sample Tag: 01

PrePrep Method: NONE
Prep Method: 7471A
Analytical Method: 7471A
Analyst: ADC
Dilution: 1
Units: mg/kg

Instrument: HYDRA
Prep Date: 01/23/2009 06:41
Cal Date: 02/02/2009 09:42
Run Date: 02/02/2009 10:43
File ID: HY.020209.104310
Percent Solid: 87.3

Analyte	CAS. Number	Result	Qual	RL	MDL
Mercury, Total	7439-97-6		U	0.110	0.0221

U Undetected; the analyte was analyzed for, but not detected.

Microbac

2263 MW 4/1/09

25

Sample Number: L09010436-25
Client ID: MR08-SS212-09A
Matrix: Soil
Workgroup Number: WG293380
Collect Date: 01/20/2009 10:30
Sample Tag: 01

PrePrep Method: NONE
Prep Method: 3051
Analytical Method: 6010B
Analyst: KHR
Dilution: 1
Units: mg/kg

Instrument: IRIS-ICP
Prep Date: 01/23/2009 14:50
Cal Date: 01/26/2009 10:59
Run Date: 01/26/2009 18:40
File ID: IR.012609.184000
Percent Solid: 89.4

Analyte	CAS. Number	Result	Qual	RL	MDL
Silver, Total	7440-22-4	0.444	J	0.762	0.191
Barium, Total	7440-39-3	4.29		0.381	0.0762
Cadmium, Total	7440-43-9	0.156		0.152	0.0381
Chromium, Total	7440-47-3	3.75		0.762	0.0915

J Estimated ; the analyte concentration was less than the low standard (LOQ)

Microbac

41 MW
4/1/09

25

Sample Number: L09010436-25
Client ID: MR08-SS212-09A
Matrix: Soil
Workgroup Number: WG294156
Collect Date: 01/20/2009 10:30
Sample Tag: DL01

PrePrep Method: NONE
Prep Method: 3051
Analytical Method: 6020
Analyst: JYH
Dilution: 2
Units: mg/kg

Instrument: ELAN-ICP
Prep Date: 01/23/2009 10:56
Cal Date: 02/06/2009 11:09
Run Date: 02/06/2009 22:49
File ID: EL.020609.224959
Percent Solid: 89.4

Analyte	CAS. Number	Result	Qual	RL	MDL
Arsenic, Total	7440-38-2	1.25		0.625	0.156
Lead, Total	7439-92-1	21.2		0.833	0.208
Selenium, Total	7782-49-2		U	0.833	0.208

U Undetected; the analyte was analyzed for, but not detected.

Microbac

694 LW
4/1/09

25

Sample Number: L09010436-25
Client ID: MR08-SS212-09A
Matrix: Soil
Workgroup Number: WG293894
Collect Date: 01/20/2009 10:30
Sample Tag: 01

PrePrep Method: NONE
Prep Method: 7471A
Analytical Method: 7471A
Analyst: ADC
Dilution: 1
Units: mg/kg

Instrument: HYDRA
Prep Date: 01/23/2009 06:41
Cal Date: 02/02/2009 09:42
Run Date: 02/02/2009 10:45
File ID: HY.020209.104503
Percent Solid: 89.4

Analyte	CAS. Number	Result	Qual	RL	MDL
Mercury, Total	7439-97-6		U	0.106	0.0212

U Undetected; the analyte was analyzed for, but not detected.

Microbac

2264 JW 4/1/09

26

Sample Number: L09010436-26
Client ID: MR08-IS213-4-5-09A
Matrix: Soil
Workgroup Number: WG293380
Collect Date: 01/20/2009 10:50
Sample Tag: 01

PrePrep Method: NONE
Prep Method: 3051
Analytical Method: 6010B
Analyst: KHR
Dilution: 1
Units: mg/kg

Instrument: IRIS-ICP
Prep Date: 01/23/2009 14:51
Cal Date: 01/26/2009 10:59
Run Date: 01/26/2009 18:46
File ID: IR.012609.184600
Percent Solid: 84.6

Analyte	CAS. Number	Result	Qual	RL	MDL
Silver, Total	7440-22-4	0.345	J	0.845	0.211
Barium, Total	7440-39-3	10.6		0.422	0.0845
Cadmium, Total	7440-43-9		U	0.169	0.0422
Chromium, Total	7440-47-3	4.98		0.845	0.101

U Undetected; the analyte was analyzed for, but not detected.
J Estimated ; the analyte concentration was less than the low standard (LOQ)

Microbac

42 KW
4/1/09

26

Sample Number: L09010436-26
Client ID: MR08-IS213-4-5-09A
Matrix: Soil
Workgroup Number: WG294156
Collect Date: 01/20/2009 10:50
Sample Tag: DL01

PrePrep Method: NONE
Prep Method: 3051
Analytical Method: 6020
Analyst: JYH
Dilution: 2
Units: mg/kg

Instrument: ELAN-ICP
Prep Date: 01/23/2009 10:56
Cal Date: 02/06/2009 11:09
Run Date: 02/06/2009 23:09
File ID: EL.020609.230907
Percent Solid: 84.6

Analyte	CAS. Number	Result	Qual	RL	MDL
Arsenic, Total	7440-38-2	0.292	J	0.702	0.176
Lead, Total	7439-92-1	3.83		0.936	0.234
Selenium, Total	7782-49-2		U	0.936	0.234

U Undetected; the analyte was analyzed for, but not detected.
J Estimated ; the analyte concentration was less than the low standard (LOQ)

Microbac

695 fw
4/1/09

26

Sample Number: L09010436-26
Client ID: MR08-IS213-4-5-09A
Matrix: Soil
Workgroup Number: WG293894
Collect Date: 01/20/2009 10:50
Sample Tag: 01

PrePrep Method: NONE
Prep Method: 7471A
Analytical Method: 7471A
Analyst: ADC
Dilution: 1
Units: mg/kg

Instrument: HYDRA
Prep Date: 01/23/2009 06:41
Cal Date: 02/02/2009 09:42
Run Date: 02/02/2009 10:47
File ID: HY.020209.104756
Percent Solid: 84.6

Analyte	CAS. Number	Result	Qual	RL	MDL
Mercury, Total	7439-97-6		U	0.115	0.0230

U Undetected; the analyte was analyzed for, but not detected.

Microbac

JWO
4/1/09

27

Sample Number: L09010436-27
Client ID: MR08-SS213-09A
Matrix: Soil
Workgroup Number: WG293379
Collect Date: 01/20/2009 10:55
Sample Tag: 02

PrePrep Method: NONE
Prep Method: 3051
Analytical Method: 6010B
Analyst: KHR
Dilution: 1
Units: mg/kg

Instrument: IRIS-ICP
Prep Date: 01/23/2009 14:54
Cal Date: 01/28/2009 10:38
Run Date: 01/28/2009 11:52
File ID: IR.012809.115200
Percent Solid: 89.4

Analyte	CAS. Number	Result	Qual	RL	MDL
Silver, Total	7440-22-4	0.579	J	0.841	0.210

J Estimated ; the analyte concentration was less than the low standard (LOQ)

Microbac

43 RW
4/1/09

27

Sample Number: L09010436-27
Client ID: MR08-SS213-09A
Matrix: Soil
Workgroup Number: WG293379
Collect Date: 01/20/2009 10:55
Sample Tag: 01

PrePrep Method: NONE
Prep Method: 3051
Analytical Method: 6010B
Analyst: KHR
Dilution: 1
Units: mg/kg

Instrument: IRIS-ICP
Prep Date: 01/23/2009 14:54
Cal Date: 01/26/2009 10:59
Run Date: 01/26/2009 14:40
File ID: IR.012609.144000
Percent Solid: 89.4

Analyte	CAS. Number	Result	Qual	RL	MDL
Barium, Total	7440-39-3	8.41		0.421	0.0841
Cadmium, Total	7440-43-9	0.492		0.168	0.0421
Chromium, Total	7440-47-3	9.82 J		0.841	0.101

SD

Microbac

44 lw
4/1/09

27

Sample Number: L09010436-27
Client ID: MR08-SS213-09A
Matrix: Soil
Workgroup Number: WG294156
Collect Date: 01/20/2009 10:55
Sample Tag: DL01

PrePrep Method: NONE
Prep Method: 3051
Analytical Method: 6020
Analyst: JYH
Dilution: 2
Units: mg/kg

Instrument: ELAN-ICP
Prep Date: 01/23/2009 10:56
Cal Date: 02/06/2009 11:09
Run Date: 02/06/2009 23:15
File ID: EL.020609.231512
Percent Solid: 89.4

Analyte	CAS. Number	Result	Qual	RL	MDL
Arsenic, Total	7440-38-2	4.22		0.663	0.166
Lead, Total	7439-92-1	4.77		0.885	0.221
Selenium, Total	7782-49-2		U	0.885	0.221

U Undetected; the analyte was analyzed for, but not detected.

Microbac

696 Lew
4.1.09

27

Sample Number: L09010436-27
Client ID: MR08-SS213-09A
Matrix: Soil
Workgroup Number: WG293715
Collect Date: 01/20/2009 10:55
Sample Tag: 01

PrePrep Method: NONE
Prep Method: 7471A
Analytical Method: 7471A
Analyst: ADC
Dilution: 1
Units: mg/kg

Instrument: HYDRA
Prep Date: 01/26/2009 08:39
Cal Date: 01/29/2009 13:25
Run Date: 01/29/2009 13:46
File ID: HY.012909.134600
Percent Solid: 89.4

Analyte	CAS. Number	Result	Qual	RL	MDL
Mercury, Total	7439-97-6		U	0.106	0.0211

U Undetected; the analyte was analyzed for, but not detected.

Microbac

 lw 4/1/09

ENVIRONMENTAL
Data Services, Inc.

METALS

USEPA Region IV - Level IV Review

Site: MCB Camp Lejeune, TO-09 SDG #: L09010495

Client: CH2M HILL, Inc., Virginia Beach, Virginia Date: April 1, 2009

Laboratory: Microbac Laboratories, Inc., Marietta, Ohio Reviewer: Nancy Weaver

EDS ID	Client Sample ID	Laboratory Sample ID	Matrix
1	MR08-IS247-8-10-09A	L09010495-01	Soil
2	MR08-SS247-09A	L09010495-02	Soil
3	MR08-IS319-9-10-09A	L09010495-03	Soil
4	MR08-IS319D-9-10-09A	L09010495-04	Soil
5	MR08-SS319-09A	L09010495-05	Soil
6	MR08-SS319D-09A	L09010495-06	Soil
7	MR08-SS318-09A	L09010495-07	Soil
8	MR08-IS318-4-5-09A	L09010495-08	Soil
9	MR08-SS317-09A	L09010495-09	Soil
10	MR08-IS317-4-5-09A	L09010495-10	Soil
11	MR08-SS153-09A	L09010495-11	Soil
12	MR08-IS153-2-3-09A	L09010495-12	Soil
13	MR08-SS162-09A	L09010495-13	Soil
14	MR08-IS162-4-5-09A	L09010495-14	Soil
15	MR08-SS316-09A	L09010495-15	Soil
16	MR08-IS316-4-5-09A	L09010495-16	Soil
17	MR08-IS315-4-5-09A	L09010495-17	Soil
18	MR08-SS315-09A	L09010495-18	Soil
19	MR08-IS314-4-5-09A	L09010495-19	Soil
20	MR08-EB012109	L09010495-20	Water

The USEPA "Contract Laboratory Program National Functional Guidelines for Inorganic Data Review," October 2004, and professional judgement were used in evaluating the data in this summary report.

Holding Times - All samples were prepared and analyzed within 28 days for mercury and 180 days for all other metals.

Calibration - The ICV and CCV %R values were acceptable.

Method and Calibration Blanks - The method blanks were free of contamination.

Field and Equipment Blank - Field QC results are summarized below.

Blank ID	Compound	Conc. ug/L	Action Level ug/L	Qualifier	Affected Samples
MR08-EB012109	None - ND	-	-	-	-
MR08-FB012609	None - ND	-	-	-	-

ICP Interference Check Sample - All %R values were acceptable.

MS/MSD - The MS/MSD sample exhibited acceptable %R and RPD values except the following.

MS/MSD Sample ID	Compound	MS/MSD %R/RPD	Qualifier	Affected Samples
Reference (WG293593)	Chromium	139%/145%/Ok	J	17-19

LCS - The LCS samples exhibited acceptable %R values.

ICP Serial Dilution - The ICP serial dilution sample exhibited acceptable %D values.

Field Duplicates - Field duplicate results are summarized below.

Compound	MR08-IS319-9-10-09A mg/kg	MR08-IS319D-9-10-09A mg/kg	RPD	Qualifier
Silver	0.847 U	0.234	NC	None
Barium	17.3	16.7	4%	None
Chromium	17.5	17.5	0%	None
Arsenic	1.15	1.12	3%	None
Lead	3.92	4.25	8%	None
Mercury	0.0437	0.0387	12%	None

Compound	MR08-SS319-09A mg/kg	MR08-SS319D-09A mg/kg	RPD	Qualifier
Barium	31.6	13.3	82%	None
Cadmium	0.326 U	0.0439	NC	None
Chromium	19.8	7.48	90%	None
Arsenic	1.04	0.823	23%	None
Lead	35.9	12.5	97%	None
Selenium	0.442	0.351	23%	None

Compound Quantitation - Several samples were analyzed at various dilutions for various analytes due to high concentrations.

Report Number: L09010495

Report Date : **February 19, 2009**

Sample Number: **L09010495-01**
Client ID: **MR08-IS247-8-10-09A**
Matrix: **Soil**
Workgroup Number: **WG293592**
Collect Date: **01/21/2009 10:10**
Sample Tag: **01**

PrePrep Method: **NONE**
Prep Method: **3051**
Analytical Method: **6010B**
Analyst: **KHR**
Dilution: **1**
Units: **mg/kg**

Instrument: **IRIS-ICP**
Prep Date: **01/27/2009 08:23**
Cal Date: **01/29/2009 09:55**
Run Date: **01/29/2009 11:15**
File ID: **IR.012909.111500**
Percent Solid: **75.0**

Analyte	CAS. Number	Result	Qual	RL	MDL
Silver, Total	7440-22-4		U	1.00	0.250
Barium, Total	7440-39-3	1.23		0.500	0.100
Cadmium, Total	7440-43-9		U	0.200	0.0500
Chromium, Total	7440-47-3	1.38		1.00	0.120

U Undetected; the analyte was analyzed for, but not detected.

Microbac

13 LW 4/1/09

Report Number: L09010495
Report Date : February 19, 2009

Sample Number: L09010495-01
Client ID: MR08-IS247-8-10-09A
Matrix: Soil
Workgroup Number: WG294462
Collect Date: 01/21/2009 10:10
Sample Tag: DL01

PrePrep Method: NONE
Prep Method: 3051
Analytical Method: 6020
Analyst: JYH
Dilution: 2
Units: mg/kg

Instrument: ELAN-ICP
Prep Date: 01/27/2009 06:42
Cal Date: 02/09/2009 10:40
Run Date: 02/09/2009 13:55
File ID: EL.020909.135510
Percent Solid: 75.0

Analyte	CAS. Number	Result	Qual	RL	MDL
Arsenic, Total	7440-38-2	0.463	J	0.771	0.193
Lead, Total	7439-92-1	1.02	J	1.03	0.257
Selenium, Total	7782-49-2		U	1.03	0.257

U Undetected; the analyte was analyzed for, but not detected.
J Estimated ; the analyte concentration was less than the low standard (LOQ)

Microbac

559 lw 4/1/09

Report Number: L09010495
Report Date : February 19, 2009

Sample Number: L09010495-01
Client ID: MR08-IS247-8-10-09A
Matrix: Soil
Workgroup Number: WG293714
Collect Date: 01/21/2009 10:10
Sample Tag: 01

PrePrep Method: NONE
Prep Method: 7471A
Analytical Method: 7471A
Analyst: ADC
Dilution: 1
Units: mg/kg

Instrument: HYDRA
Prep Date: 01/26/2009 13:15
Cal Date: 01/29/2009 13:25
Run Date: 01/29/2009 14:16
File ID: HY.012909.141620
Percent Solid: 75.0

Analyte	CAS. Number	Result	Qual	RL	MDL
Mercury, Total	7439-97-6		U	0.125	0.0249

U Undetected; the analyte was analyzed for, but not detected.

Microbac

1666 LW 4/1/09

2

Sample Number: L09010495-02
Client ID: MR08-SS247-09A
Matrix: Soil
Workgroup Number: WG293592
Collect Date: 01/21/2009 10:20
Sample Tag: 01

PrePrep Method: NONE
Prep Method: 3051
Analytical Method: 6010B
Analyst: KHR
Dilution: 1
Units: mg/kg

Instrument: IRIS-ICP
Prep Date: 01/27/2009 08:23
Cal Date: 01/29/2009 13:52
Run Date: 01/29/2009 14:48
File ID: IR.012909.144800
Percent Solid: 94.2

Analyte	CAS. Number	Result	Qual	RL	MDL
Silver, Total	7440-22-4	0.256	J	0.766	0.191
Barium, Total	7440-39-3	7.38		0.383	0.0766
Cadmium, Total	7440-43-9	0.132	J	0.153	0.0383
Chromium, Total	7440-47-3	2.70		0.766	0.0919

J Estimated ; the analyte concentration was less than the low standard (LOQ)

Microbac

14 lw 4/1/09

2

Sample Number: L09010495-02
Client ID: MR08-SS247-09A
Matrix: Soil
Workgroup Number: WG294462
Collect Date: 01/21/2009 10:20
Sample Tag: DL01

PrePrep Method: NONE
Prep Method: 3051
Analytical Method: 6020
Analyst: JYH
Dilution: 2
Units: mg/kg

Instrument: ELAN-ICP
Prep Date: 01/27/2009 06:42
Cal Date: 02/09/2009 10:40
Run Date: 02/09/2009 14:19
File ID: EL.020909.141917
Percent Solid: 94.2

Analyte	CAS. Number	Result	Qual	RL	MDL
Arsenic, Total	7440-38-2	0.467	J	0.614	0.153
Lead, Total	7439-92-1	5.33		0.818	0.205
Selenium, Total	7782-49-2	0.281	J	0.818	0.205

J Estimated ; the analyte concentration was less than the low standard (LOQ)

Microbac

560 fw 4/1/09

2

Sample Number: L09010495-02
Client ID: MR08-SS247-09A
Matrix: Soil
Workgroup Number: WG293714
Collect Date: 01/21/2009 10:20
Sample Tag: 01

PrePrep Method: NONE
Prep Method: 7471A
Analytical Method: 7471A
Analyst: ADC
Dilution: 1
Units: mg/kg

Instrument: HYDRA
Prep Date: 01/26/2009 13:15
Cal Date: 01/29/2009 13:25
Run Date: 01/29/2009 14:20
File ID: HY.012909.142048
Percent Solid: 94.2

Analyte	CAS. Number	Result	Qual	RL	MDL
Mercury, Total	7439-97-6		U	0.104	0.0208

U Undetected; the analyte was analyzed for, but not detected.

Microbac

1667 lw 4/1/09

3

Sample Number: L09010495-03
Client ID: MR08-IS319-9-10-09A
Matrix: Soil
Workgroup Number: WG293592
Collect Date: 01/21/2009 11:00
Sample Tag: 01

PrePrep Method: NONE
Prep Method: 3051
Analytical Method: 6010B
Analyst: KHR
Dilution: 1
Units: mg/kg

Instrument: IRIS-ICP
Prep Date: 01/27/2009 08:23
Cal Date: 01/29/2009 13:52
Run Date: 01/29/2009 14:54
File ID: IR.012909.145400
Percent Solid: 83.4

Analyte	CAS. Number	Result	Qual	RL	MDL
Silver, Total	7440-22-4		U	0.847	0.212
Barium, Total	7440-39-3	17.3		0.423	0.0847
Cadmium, Total	7440-43-9		U	0.169	0.0423
Chromium, Total	7440-47-3	17.5		0.847	0.102

U Undetected; the analyte was analyzed for, but not detected.

Microbac

15 MW
4/1/09

3

Sample Number: L09010495-03
Client ID: MR08-IS319-9-10-09A
Matrix: Soil
Workgroup Number: WG294462
Collect Date: 01/21/2009 11:00
Sample Tag: DL01

PrePrep Method: NONE
Prep Method: 3051
Analytical Method: 6020
Analyst: JYH
Dilution: 2
Units: mg/kg

Instrument: ELAN-ICP
Prep Date: 01/27/2009 06:42
Cal Date: 02/09/2009 10:40
Run Date: 02/09/2009 14:25
File ID: EL.020909.142520
Percent Solid: 83.4

Analyte	CAS. Number	Result	Qual	RL	MDL
Arsenic, Total	7440-38-2	1.15		0.702	0.176
Lead, Total	7439-92-1	3.92		0.936	0.234
Selenium, Total	7782-49-2		U	0.936	0.234

U Undetected; the analyte was analyzed for, but not detected.

Microbac

561 MW 4/1/09

3

Sample Number: L09010495-03
Client ID: MR08-IS319-9-10-09A
Matrix: Soil
Workgroup Number: WG293714
Collect Date: 01/21/2009 11:00
Sample Tag: 01

PrePrep Method: NONE
Prep Method: 7471A
Analytical Method: 7471A
Analyst: ADC
Dilution: 1
Units: mg/kg

Instrument: HYDRA
Prep Date: 01/26/2009 13:16
Cal Date: 01/29/2009 13:25
Run Date: 01/29/2009 14:22
File ID: HY.012909.142251
Percent Solid: 83.4

Analyte	CAS. Number	Result	Qual	RL	MDL
Mercury, Total	7439-97-6	0.0437	J	0.119	0.0238

J Estimated ; the analyte concentration was less than the low standard (LOQ)

Microbac

1668 MW 4/1/09

4

Sample Number: L09010495-04
Client ID: MR08-IS319D-9-10-09A
Matrix: Soil
Workgroup Number: WG293592
Collect Date: 01/21/2009 11:00
Sample Tag: 01

PrePrep Method: NONE
Prep Method: 3051
Analytical Method: 6010B
Analyst: KHR
Dilution: 1
Units: mg/kg

Instrument: IRIS-ICP
Prep Date: 01/27/2009 08:23
Cal Date: 01/29/2009 13:52
Run Date: 01/29/2009 15:00
File ID: IR.012909.150000
Percent Solid: 82.2

Analyte	CAS. Number	Result	Qual	RL	MDL
Silver, Total	7440-22-4	0.234	J	0.910	0.228
Barium, Total	7440-39-3	16.7		0.455	0.0910
Cadmium, Total	7440-43-9		U	0.182	0.0455
Chromium, Total	7440-47-3	17.5		0.910	0.109

U Undetected; the analyte was analyzed for, but not detected.
J Estimated ; the analyte concentration was less than the low standard (LOQ)

Microbac

16 lew
41109

4

Sample Number: L09010495-04
Client ID: MR08-IS319D-9-10-09A
Matrix: Soil
Workgroup Number: WG294462
Collect Date: 01/21/2009 11:00
Sample Tag: DL01

PrePrep Method: NONE
Prep Method: 3051
Analytical Method: 6020
Analyst: JYH
Dilution: 2
Units: mg/kg

Instrument: ELAN-ICP
Prep Date: 01/27/2009 06:42
Cal Date: 02/09/2009 10:40
Run Date: 02/09/2009 14:13
File ID: EL.020909.141315
Percent Solid: 82.2

Analyte	CAS. Number	Result	Qual	RL	MDL
Arsenic, Total	7440-38-2	1.12		0.715	0.179
Lead, Total	7439-92-1	4.25		0.954	0.238
Selenium, Total	7782-49-2		U	0.954	0.238

U Undetected; the analyte was analyzed for, but not detected.

Microbac

 lew 4/1/09

4

Sample Number: L09010495-04
Client ID: MR08-IS319D-9-10-09A
Matrix: Soil
Workgroup Number: WG293714
Collect Date: 01/21/2009 11:00
Sample Tag: 01

PrePrep Method: NONE
Prep Method: 7471A
Analytical Method: 7471A
Analyst: ADC
Dilution: 1
Units: mg/kg

Instrument: HYDRA
Prep Date: 01/26/2009 13:16
Cal Date: 01/29/2009 13:25
Run Date: 01/29/2009 14:24
File ID: HY.012909.142437
Percent Solid: 82.2

Analyte	CAS. Number	Result	Qual	RL	MDL
Mercury, Total	7439-97-6	0.0387	J	0.121	0.0242

J Estimated ; the analyte concentration was less than the low standard (LOQ)

Microbac

1669 MW 4/1/09

5

Sample Number: L09010495-05
Client ID: MR08-SS319-09A
Matrix: Soil
Workgroup Number: WG293592
Collect Date: 01/21/2009 11:20
Sample Tag: 01

PrePrep Method: NONE
Prep Method: 3051
Analytical Method: 6010B
Analyst: KHR
Dilution: 1
Units: mg/kg

Instrument: IRIS-ICP
Prep Date: 01/27/2009 08:23
Cal Date: 01/29/2009 13:52
Run Date: 01/29/2009 15:06
File ID: IR.012909.150600
Percent Solid: 44.5

Analyte	CAS. Number	Result	Qual	RL	MDL
Silver, Total	7440-22-4		U	1.63	0.407
Barium, Total	7440-39-3	31.6		0.815	0.163
Cadmium, Total	7440-43-9		U	0.326	0.0815
Chromium, Total	7440-47-3	19.8		1.63	0.196

U Undetected; the analyte was analyzed for, but not detected.

Microbac

17 lew
4/1/09

5

Sample Number: L09010495-05
Client ID: MR08-SS319-09A
Matrix: Soil
Workgroup Number: WG294462
Collect Date: 01/21/2009 11:20
Sample Tag: DL01

PrePrep Method: NONE
Prep Method: 3051
Analytical Method: 6020
Analyst: JYH
Dilution: 2
Units: mg/kg

Instrument: ELAN-ICP
Prep Date: 01/27/2009 06:42
Cal Date: 02/09/2009 10:40
Run Date: 02/09/2009 14:56
File ID: EL.020909.145632
Percent Solid: 44.5

Analyte	CAS. Number	Result	Qual	RL	MDL
Arsenic, Total	7440-38-2	1.04	J	1.31	0.328
Lead, Total	7439-92-1	35.9		1.75	0.437
Selenium, Total	7782-49-2	0.442	J	1.75	0.437

J Estimated ; the analyte concentration was less than the low standard (LOQ)

Microbac

563 lw 4/1/09

5

Sample Number: L09010495-05
Client ID: MR08-SS319-09A
Matrix: Soil
Workgroup Number: WG293714
Collect Date: 01/21/2009 11:20
Sample Tag: 01

PrePrep Method: NONE
Prep Method: 7471A
Analytical Method: 7471A
Analyst: ADC
Dilution: 1
Units: mg/kg

Instrument: HYDRA
Prep Date: 01/26/2009 13:17
Cal Date: 01/29/2009 13:25
Run Date: 01/29/2009 14:26
File ID: HY.012909.142635
Percent Solid: 44.5

Analyte	CAS. Number	Result	Qual	RL	MDL
Mercury, Total	7439-97-6		U	0.224	0.0449

U Undetected; the analyte was analyzed for, but not detected.

Microbac

1670 [illegible]
4/1/09

6

Sample Number: L09010495-06
Client ID: MR08-SS319D-09A
Matrix: Soil
Workgroup Number: WG293592
Collect Date: 01/21/2009 11:20
Sample Tag: 01

PrePrep Method: NONE
Prep Method: 3051
Analytical Method: 6010B
Analyst: KHR
Dilution: 1
Units: mg/kg

Instrument: IRIS-ICP
Prep Date: 01/27/2009 08:23
Cal Date: 01/29/2009 13:52
Run Date: 01/29/2009 15:12
File ID: IR.012909.151200
Percent Solid: 83.7

Analyte	CAS. Number	Result	Qual	RL	MDL
Silver, Total	7440-22-4		U	0.870	0.217
Barium, Total	7440-39-3	13.3		0.435	0.0870
Cadmium, Total	7440-43-9	0.0439	J	0.174	0.0435
Chromium, Total	7440-47-3	7.48		0.870	0.104

U Undetected; the analyte was analyzed for, but not detected.
J Estimated ; the analyte concentration was less than the low standard (LOQ)

Microbac

18 lcw
4/11/09

6

Sample Number: L09010495-06
Client ID: MR08-SS319D-09A
Matrix: Soil
Workgroup Number: WG294462
Collect Date: 01/21/2009 11:20
Sample Tag: DL01

PrePrep Method: NONE
Prep Method: 3051
Analytical Method: 6020
Analyst: JYH
Dilution: 2
Units: mg/kg

Instrument: ELAN-ICP
Prep Date: 01/27/2009 06:42
Cal Date: 02/09/2009 10:40
Run Date: 02/09/2009 15:02
File ID: EL.020909.150236
Percent Solid: 83.7

Analyte	CAS. Number	Result	Qual	RL	MDL
Arsenic, Total	7440-38-2	0.823		0.669	0.167
Lead, Total	7439-92-1	12.5		0.892	0.223
Selenium, Total	7782-49-2	0.351	J	0.892	0.223

J Estimated ; the analyte concentration was less than the low standard (LOQ)

Microbac

 lw 4/1/09

6

Sample Number: L09010495-06
Client ID: MR08-SS319D-09A
Matrix: Soil
Workgroup Number: WG293714
Collect Date: 01/21/2009 11:20
Sample Tag: 01

PrePrep Method: NONE
Prep Method: 7471A
Analytical Method: 7471A
Analyst: ADC
Dilution: 1
Units: mg/kg

Instrument: HYDRA
Prep Date: 01/26/2009 13:17
Cal Date: 01/29/2009 13:25
Run Date: 01/29/2009 14:34
File ID: HY.012909.143458
Percent Solid: 83.7

Analyte	CAS. Number	Result	Qual	RL	MDL
Mercury, Total	7439-97-6		U	0.114	0.0228

U Undetected; the analyte was analyzed for, but not detected.

Microbac

KW
4/1/09

7

Sample Number: L09010495-07
Client ID: MR08-SS318-09A
Matrix: Soil
Workgroup Number: WG293592
Collect Date: 01/21/2009 12:50
Sample Tag: 01

PrePrep Method: NONE
Prep Method: 3051
Analytical Method: 6010B
Analyst: KHR
Dilution: 1
Units: mg/kg

Instrument: IRIS-ICP
Prep Date: 01/27/2009 08:23
Cal Date: 01/29/2009 13:52
Run Date: 01/29/2009 15:18
File ID: IR.012909.151800
Percent Solid: 84.5

Analyte	CAS. Number	Result	Qual	RL	MDL
Silver, Total	7440-22-4		U	0.790	0.197
Barium, Total	7440-39-3	9.09		0.395	0.0790
Cadmium, Total	7440-43-9	0.0517	J	0.158	0.0395
Chromium, Total	7440-47-3	5.17		0.790	0.0948

U Undetected; the analyte was analyzed for, but not detected.
J Estimated ; the analyte concentration was less than the low standard (LOQ)

Microbac

19 fw
4/1/09

7

Sample Number: L09010495-07
Client ID: MR08-SS318-09A
Matrix: Soil
Workgroup Number: WG294462
Collect Date: 01/21/2009 12:50
Sample Tag: DL01

PrePrep Method: NONE
Prep Method: 3051
Analytical Method: 6020
Analyst: JYH
Dilution: 2
Units: mg/kg

Instrument: ELAN-ICP
Prep Date: 01/27/2009 06:42
Cal Date: 02/09/2009 10:40
Run Date: 02/09/2009 15:08
File ID: EL.020909.150839
Percent Solid: 84.5

Analyte	CAS. Number	Result	Qual	RL	MDL
Arsenic, Total	7440-38-2	0.751		0.692	0.173
Lead, Total	7439-92-1	4.05		0.923	0.231
Selenium, Total	7782-49-2	0.464	J	0.923	0.231

J Estimated ; the analyte concentration was less than the low standard (LOQ)

Microbac

JLW
4/1/09

7

Sample Number: L09010495-07
Client ID: MR08-SS318-09A
Matrix: Soil
Workgroup Number: WG293714
Collect Date: 01/21/2009 12:50
Sample Tag: 01

PrePrep Method: NONE
Prep Method: 7471A
Analytical Method: 7471A
Analyst: ADC
Dilution: 1
Units: mg/kg

Instrument: HYDRA
Prep Date: 01/26/2009 13:18
Cal Date: 01/29/2009 13:25
Run Date: 01/29/2009 14:37
File ID: HY.012909.143726
Percent Solid: 84.5

Analyte	CAS. Number	Result	Qual	RL	MDL
Mercury, Total	7439-97-6		U	0.110	0.0220

U Undetected; the analyte was analyzed for, but not detected.

Microbac

1672 MW
41,109

8

Sample Number: L09010495-08
Client ID: MR08-IS318-4-5-09A
Matrix: Soil
Workgroup Number: WG293592
Collect Date: 01/21/2009 12:55
Sample Tag: 01

PrePrep Method: NONE
Prep Method: 3051
Analytical Method: 6010B
Analyst: KHR
Dilution: 1
Units: mg/kg

Instrument: IRIS-ICP
Prep Date: 01/27/2009 08:23
Cal Date: 01/29/2009 13:52
Run Date: 01/29/2009 15:24
File ID: IR.012909.152400
Percent Solid: 96.7

Analyte	CAS. Number	Result	Qual	RL	MDL
Silver, Total	7440-22-4		U	0.721	0.180
Barium, Total	7440-39-3	1.73		0.360	0.0721
Cadmium, Total	7440-43-9		U	0.144	0.0360
Chromium, Total	7440-47-3	1.08		0.721	0.0865

U Undetected; the analyte was analyzed for, but not detected.

Microbac

20 lew
4/1/09

8

Sample Number: L09010495-08
Client ID: MR08-IS318-4-5-09A
Matrix: Soil
Workgroup Number: WG294462
Collect Date: 01/21/2009 12:55
Sample Tag: DL01

PrePrep Method: NONE
Prep Method: 3051
Analytical Method: 6020
Analyst: JYH
Dilution: 2
Units: mg/kg

Instrument: ELAN-ICP
Prep Date: 01/27/2009 06:42
Cal Date: 02/09/2009 10:40
Run Date: 02/09/2009 15:14
File ID: EL.020909.151440
Percent Solid: 96.7

Analyte	CAS. Number	Result	Qual	RL	MDL
Arsenic, Total	7440-38-2		U	0.604	0.151
Lead, Total	7439-92-1	0.725	J	0.806	0.201
Selenium, Total	7782-49-2		U	0.806	0.201

U Undetected; the analyte was analyzed for, but not detected.
J Estimated ; the analyte concentration was less than the low standard (LOQ)

Microbac

 lew 011.9

8

Sample Number: L09010495-08
Client ID: MR08-IS318-4-5-09A
Matrix: Soil
Workgroup Number: WG293714
Collect Date: 01/21/2009 12:55
Sample Tag: 01

PrePrep Method: NONE
Prep Method: 7471A
Analytical Method: 7471A
Analyst: ADC
Dilution: 1
Units: mg/kg

Instrument: HYDRA
Prep Date: 01/26/2009 13:19
Cal Date: 01/29/2009 13:25
Run Date: 01/29/2009 14:39
File ID: HY.012909.143924
Percent Solid: 96.7

Analyte	CAS. Number	Result	Qual	RL	MDL
Mercury, Total	7439-97-6		U	0.100	0.0200

U Undetected; the analyte was analyzed for, but not detected.

Microbac

1673 LW 4/1/09

9

Sample Number: L09010495-09
Client ID: MR08-SS317-09A
Matrix: Soil
Workgroup Number: WG293592
Collect Date: 01/21/2009 13:15
Sample Tag: 01

PrePrep Method: NONE
Prep Method: 3051
Analytical Method: 6010B
Analyst: KHR
Dilution: 1
Units: mg/kg

Instrument: IRIS-ICP
Prep Date: 01/27/2009 08:23
Cal Date: 01/29/2009 13:52
Run Date: 01/29/2009 15:30
File ID: IR.012909.153000
Percent Solid: 75.8

Analyte	CAS. Number	Result	Qual	RL	MDL
Silver, Total	7440-22-4		U	0.981	0.245
Barium, Total	7440-39-3	12.4		0.491	0.0981
Cadmium, Total	7440-43-9	0.282		0.196	0.0491
Chromium, Total	7440-47-3	6.67		0.981	0.118

U Undetected; the analyte was analyzed for, but not detected.

Microbac

21 JEW 4/1/09

9

Sample Number: L09010495-09
Client ID: MR08-SS317-09A
Matrix: Soil
Workgroup Number: WG294462
Collect Date: 01/21/2009 13:15
Sample Tag: DL01

PrePrep Method: NONE
Prep Method: 3051
Analytical Method: 6020
Analyst: JYH
Dilution: 2
Units: mg/kg

Instrument: ELAN-ICP
Prep Date: 01/27/2009 06:42
Cal Date: 02/09/2009 10:40
Run Date: 02/09/2009 15:20
File ID: EL.020909.152041
Percent Solid: 75.8

Analyte	CAS. Number	Result	Qual	RL	MDL
Arsenic, Total	7440-38-2	0.847		0.786	0.197
Lead, Total	7439-92-1	46.7		1.05	0.262
Selenium, Total	7782-49-2	0.285	J	1.05	0.262

J Estimated ; the analyte concentration was less than the low standard (LOQ)

Microbac

567 lw 4/1/09

9

Sample Number:	L09010495-09	PrePrep Method:	NONE	Instrument:	HYDRA
Client ID:	MR08-SS317-09A	Prep Method:	7471A	Prep Date:	01/26/2009 13:19
Matrix:	Soil	Analytical Method:	7471A	Cal Date:	01/29/2009 13:25
Workgroup Number:	WG293714	Analyst:	ADC	Run Date:	01/29/2009 14:41
Collect Date:	01/21/2009 13:15	Dilution:	1	File ID:	HY.012909.144113
Sample Tag:	01	Units:	mg/kg	Percent Solid:	75.8

Analyte	CAS. Number	Result	Qual	RL	MDL
Mercury, Total	7439-97-6	0.0282	J	0.128	0.0256

J Estimated ; the analyte concentration was less than the low standard (LOQ)

Microbac

1674 fw 4/1/09

10

Sample Number: L09010495-10
Client ID: MR08-IS317-4-5-09A
Matrix: Soil
Workgroup Number: WG293592
Collect Date: 01/21/2009 13:20
Sample Tag: 01

PrePrep Method: NONE
Prep Method: 3051
Analytical Method: 6010B
Analyst: KHR
Dilution: 1
Units: mg/kg

Instrument: IRIS-ICP
Prep Date: 01/27/2009 08:23
Cal Date: 01/29/2009 13:52
Run Date: 01/29/2009 15:48
File ID: IR.012909.154800
Percent Solid: 87.6

Analyte	CAS. Number	Result	Qual	RL	MDL
Silver, Total	7440-22-4		U	0.810	0.202
Barium, Total	7440-39-3	6.24		0.405	0.0810
Cadmium, Total	7440-43-9		U	0.162	0.0405
Chromium, Total	7440-47-3	5.40		0.810	0.0971

U Undetected; the analyte was analyzed for, but not detected.

Microbac

22 lw 4/1/09

10

Sample Number: L09010495-10
Client ID: MR08-IS317-4-5-09A
Matrix: Soil
Workgroup Number: WG294462
Collect Date: 01/21/2009 13:20
Sample Tag: DL01

PrePrep Method: NONE
Prep Method: 3051
Analytical Method: 6020
Analyst: JYH
Dilution: 2
Units: mg/kg

Instrument: ELAN-ICP
Prep Date: 01/27/2009 06:42
Cal Date: 02/09/2009 10:40
Run Date: 02/09/2009 15:27
File ID: EL.020909.152746
Percent Solid: 87.6

Analyte	CAS. Number	Result	Qual	RL	MDL
Arsenic, Total	7440-38-2	0.912		0.685	0.171
Lead, Total	7439-92-1	1.70		0.913	0.228
Selenium, Total	7782-49-2		U	0.913	0.228

U Undetected; the analyte was analyzed for, but not detected.

Microbac

568 lew 4/1/09

10

Sample Number: L09010495-10
Client ID: MR08-IS317-4-5-09A
Matrix: Soil
Workgroup Number: WG293714
Collect Date: 01/21/2009 13:20
Sample Tag: 01

PrePrep Method: NONE
Prep Method: 7471A
Analytical Method: 7471A
Analyst: ADC
Dilution: 1
Units: mg/kg

Instrument: HYDRA
Prep Date: 01/26/2009 13:19
Cal Date: 01/29/2009 13:25
Run Date: 01/29/2009 14:43
File ID: HY.012909.144319
Percent Solid: 87.6

Analyte	CAS. Number	Result	Qual	RL	MDL
Mercury, Total	7439-97-6		U	0.113	0.0226

U Undetected; the analyte was analyzed for, but not detected.

Microbac

1675 LW 4/1/09

11

Sample Number: L09010495-11
Client ID: MR08-SS153-09A
Matrix: Soil
Workgroup Number: WG293592
Collect Date: 01/21/2009 13:50
Sample Tag: 01

PrePrep Method: NONE
Prep Method: 3051
Analytical Method: 6010B
Analyst: KHR
Dilution: 1
Units: mg/kg

Instrument: IRIS-ICP
Prep Date: 01/27/2009 08:23
Cal Date: 01/29/2009 13:52
Run Date: 01/29/2009 15:54
File ID: IR.012909.155400
Percent Solid: 63.3

Analyte	CAS. Number	Result	Qual	RL	MDL
Silver, Total	7440-22-4	0.352	J	1.10	0.276
Barium, Total	7440-39-3	7.40		0.551	0.110
Cadmium, Total	7440-43-9	0.241		0.221	0.0551
Chromium, Total	7440-47-3	8.32		1.10	0.132

J Estimated ; the analyte concentration was less than the low standard (LOQ)

Microbac

23 lw 4/1/09

11

Sample Number: L09010495-11
Client ID: MR08-SS153-09A
Matrix: Soil
Workgroup Number: WG294462
Collect Date: 01/21/2009 13:50
Sample Tag: DL01

PrePrep Method: NONE
Prep Method: 3051
Analytical Method: 6020
Analyst: JYH
Dilution: 2
Units: mg/kg

Instrument: ELAN-ICP
Prep Date: 01/27/2009 06:42
Cal Date: 02/09/2009 10:40
Run Date: 02/09/2009 15:40
File ID: EL.020909.154031
Percent Solid: 63.3

Analyte	CAS. Number	Result	Qual	RL	MDL
Arsenic, Total	7440-38-2	1.82		0.919	0.230
Lead, Total	7439-92-1	3.12		1.23	0.306
Selenium, Total	7782-49-2	1.32		1.23	0.306

Microbac

 lw 4/1/09

11

Sample Number: L09010495-11
Client ID: MR08-SS153-09A
Matrix: Soil
Workgroup Number: WG293714
Collect Date: 01/21/2009 13:50
Sample Tag: 01

PrePrep Method: NONE
Prep Method: 7471A
Analytical Method: 7471A
Analyst: ADC
Dilution: 1
Units: mg/kg

Instrument: HYDRA
Prep Date: 01/26/2009 13:20
Cal Date: 01/29/2009 13:25
Run Date: 01/29/2009 14:45
File ID: HY.012909.144522
Percent Solid: 63.3

Analyte	CAS. Number	Result	Qual	RL	MDL
Mercury, Total	7439-97-6		U	0.156	0.0312

U Undetected; the analyte was analyzed for, but not detected.

Microbac

1676 lw 4/1/09

12

Sample Number: L09010495-12
Client ID: MR08-IS153-2-3-09A
Matrix: Soil
Workgroup Number: WG293592
Collect Date: 01/21/2009 13:55
Sample Tag: 01

PrePrep Method: NONE
Prep Method: 3051
Analytical Method: 6010B
Analyst: KHR
Dilution: 1
Units: mg/kg

Instrument: IRIS-ICP
Prep Date: 01/27/2009 08:23
Cal Date: 01/29/2009 13:52
Run Date: 01/29/2009 16:00
File ID: IR.012909.160000
Percent Solid: 81.5

Analyte	CAS. Number	Result	Qual	RL	MDL
Silver, Total	7440-22-4		U	0.929	0.232
Barium, Total	7440-39-3	7.72		0.464	0.0929
Cadmium, Total	7440-43-9		U	0.186	0.0464
Chromium, Total	7440-47-3	4.99		0.929	0.111

U Undetected; the analyte was analyzed for, but not detected.

Microbac

24 fcw
4/1/09

12

Sample Number: L09010495-12
Client ID: MR08-IS153-2-3-09A
Matrix: Soil
Workgroup Number: WG294462
Collect Date: 01/21/2009 13:55
Sample Tag: DL01

PrePrep Method: NONE
Prep Method: 3051
Analytical Method: 6020
Analyst: JYH
Dilution: 2
Units: mg/kg

Instrument: ELAN-ICP
Prep Date: 01/27/2009 06:42
Cal Date: 02/09/2009 10:40
Run Date: 02/09/2009 15:46
File ID: EL.020909.154633
Percent Solid: 81.5

Analyte	CAS. Number	Result	Qual	RL	MDL
Arsenic, Total	7440-38-2	0.348	J	0.729	0.182
Lead, Total	7439-92-1	2.31		0.972	0.243
Selenium, Total	7782-49-2		U	0.972	0.243

U Undetected; the analyte was analyzed for, but not detected.
J Estimated ; the analyte concentration was less than the low standard (LOQ)

Microbac

570 lus 4/1/09

12

Sample Number: L09010495-12
Client ID: MR08-IS153-2-3-09A
Matrix: Soil
Workgroup Number: WG293714
Collect Date: 01/21/2009 13:55
Sample Tag: 01

PrePrep Method: NONE
Prep Method: 7471A
Analytical Method: 7471A
Analyst: ADC
Dilution: 1
Units: mg/kg

Instrument: HYDRA
Prep Date: 01/26/2009 13:20
Cal Date: 01/29/2009 13:25
Run Date: 01/29/2009 14:47
File ID: HY.012909.144745
Percent Solid: 81.5

Analyte	CAS. Number	Result	Qual	RL	MDL
Mercury, Total	7439-97-6		U	0.117	0.0235

U Undetected; the analyte was analyzed for, but not detected.

Microbac

1677 MW
4/1/09

13

Sample Number: L09010495-13
Client ID: MR08-SS162-09A
Matrix: Soil
Workgroup Number: WG293592
Collect Date: 01/21/2009 14:25
Sample Tag: 01

PrePrep Method: NONE
Prep Method: 3051
Analytical Method: 6010B
Analyst: KHR
Dilution: 1
Units: mg/kg

Instrument: IRIS-ICP
Prep Date: 01/27/2009 08:23
Cal Date: 01/29/2009 13:52
Run Date: 01/29/2009 16:06
File ID: IR.012909.160600
Percent Solid: 89.5

Analyte	CAS. Number	Result	Qual	RL	MDL
Silver, Total	7440-22-4		U	0.793	0.198
Barium, Total	7440-39-3	6.99		0.396	0.0793
Cadmium, Total	7440-43-9		U	0.159	0.0396
Chromium, Total	7440-47-3	5.00		0.793	0.0952

U Undetected; the analyte was analyzed for, but not detected.

Microbac

25 lew 4/1/09

13

Sample Number: L09010495-13
Client ID: MR08-SS162-09A
Matrix: Soil
Workgroup Number: WG294462
Collect Date: 01/21/2009 14:25
Sample Tag: DL01

PrePrep Method: NONE
Prep Method: 3051
Analytical Method: 6020
Analyst: JYH
Dilution: 2
Units: mg/kg

Instrument: ELAN-ICP
Prep Date: 01/27/2009 06:42
Cal Date: 02/09/2009 10:40
Run Date: 02/09/2009 15:52
File ID: EL.020909.155236
Percent Solid: 89.5

Analyte	CAS. Number	Result	Qual	RL	MDL
Arsenic, Total	7440-38-2	0.783		0.653	0.163
Lead, Total	7439-92-1	4.32		0.871	0.218
Selenium, Total	7782-49-2	0.327	J	0.871	0.218

J Estimated ; the analyte concentration was less than the low standard (LOQ)

Microbac

571 lw 4/1/09

13

Sample Number:	L09010495-13	PrePrep Method:	NONE	Instrument:	HYDRA
Client ID:	MR08-SS162-09A	Prep Method:	7471A	Prep Date:	01/26/2009 13:21
Matrix:	Soil	Analytical Method:	7471A	Cal Date:	01/29/2009 13:25
Workgroup Number:	WG293714	Analyst:	ADC	Run Date:	01/29/2009 14:49
Collect Date:	01/21/2009 14:25	Dilution:	1	File ID:	HY.012909.144927
Sample Tag:	01	Units:	mg/kg	Percent Solid:	89.5

Analyte	CAS. Number	Result	Qual	RL	MDL
Mercury, Total	7439-97-6		U	0.110	0.0221

U Undetected; the analyte was analyzed for, but not detected.

Microbac

1678 fcw 4/1/09

14

Sample Number: L09010495-14
Client ID: MR08-IS162-4-5-09A
Matrix: Soil
Workgroup Number: WG293592
Collect Date: 01/21/2009 14:30
Sample Tag: 01

PrePrep Method: NONE
Prep Method: 3051
Analytical Method: 6010B
Analyst: KHR
Dilution: 1
Units: mg/kg

Instrument: IRIS-ICP
Prep Date: 01/27/2009 08:23
Cal Date: 01/29/2009 13:52
Run Date: 01/29/2009 16:12
File ID: IR.012909.161200
Percent Solid: 91.7

Analyte	CAS. Number	Result	Qual	RL	MDL
Silver, Total	7440-22-4		U	0.812	0.203
Barium, Total	7440-39-3	7.07		0.406	0.0812
Cadmium, Total	7440-43-9		U	0.162	0.0406
Chromium, Total	7440-47-3	3.81		0.812	0.0974

U Undetected; the analyte was analyzed for, but not detected.

Microbac

 lew 4/1/09

14

Sample Number: L09010495-14
Client ID: MR08-IS162-4-5-09A
Matrix: Soil
Workgroup Number: WG294462
Collect Date: 01/21/2009 14:30
Sample Tag: DL01

PrePrep Method: NONE
Prep Method: 3051
Analytical Method: 6020
Analyst: JYH
Dilution: 2
Units: mg/kg

Instrument: ELAN-ICP
Prep Date: 01/27/2009 06:42
Cal Date: 02/09/2009 10:40
Run Date: 02/09/2009 15:58
File ID: EL.020909.155839
Percent Solid: 91.7

Analyte	CAS. Number	Result	Qual	RL	MDL
Arsenic, Total	7440-38-2	0.333	J	0.645	0.161
Lead, Total	7439-92-1	2.59		0.861	0.215
Selenium, Total	7782-49-2	0.255	J	0.861	0.215

J Estimated ; the analyte concentration was less than the low standard (LOQ)

Microbac

572 lew 4/1/09

14

Sample Number:	L09010495-14	PrePrep Method:	NONE	Instrument:	HYDRA
Client ID:	MR08-IS162-4-5-09A	Prep Method:	7471A	Prep Date:	01/26/2009 13:21
Matrix:	Soil	Analytical Method:	7471A	Cal Date:	01/29/2009 13:25
Workgroup Number:	WG293714	Analyst:	ADC	Run Date:	01/29/2009 14:56
Collect Date:	01/21/2009 14:30	Dilution:	1	File ID:	HY.012909.145605
Sample Tag:	01	Units:	mg/kg	Percent Solid:	91.7

Analyte	CAS. Number	Result	Qual	RL	MDL
Mercury, Total	7439-97-6	0.0277	J	0.109	0.0217

J Estimated ; the analyte concentration was less than the low standard (LOQ)

Microbac

1679 lw 4/1/09

15

Sample Number: L09010495-15
Client ID: MR08-SS316-09A
Matrix: Soil
Workgroup Number: WG293592
Collect Date: 01/21/2009 15:15
Sample Tag: 01

PrePrep Method: NONE
Prep Method: 3051
Analytical Method: 6010B
Analyst: KHR
Dilution: 1
Units: mg/kg

Instrument: IRIS-ICP
Prep Date: 01/27/2009 08:23
Cal Date: 01/29/2009 13:52
Run Date: 01/29/2009 16:18
File ID: IR.012909.161800
Percent Solid: 86.6

Analyte	CAS. Number	Result	Qual	RL	MDL
Silver, Total	7440-22-4		U	0.831	0.208
Barium, Total	7440-39-3	8.28		0.415	0.0831
Cadmium, Total	7440-43-9		U	0.166	0.0415
Chromium, Total	7440-47-3	2.73		0.831	0.0997

U Undetected; the analyte was analyzed for, but not detected.

Microbac

27 lcw
4/1/09

15

Sample Number: L09010495-15
Client ID: MR08-SS316-09A
Matrix: Soil
Workgroup Number: WG294462
Collect Date: 01/21/2009 15:15
Sample Tag: DL01

PrePrep Method: NONE
Prep Method: 3051
Analytical Method: 6020
Analyst: JYH
Dilution: 2
Units: mg/kg

Instrument: ELAN-ICP
Prep Date: 01/27/2009 06:42
Cal Date: 02/09/2009 10:40
Run Date: 02/09/2009 16:17
File ID: EL.020909.161745
Percent Solid: 86.6

Analyte	CAS. Number	Result	Qual	RL	MDL
Arsenic, Total	7440-38-2	0.407	J	0.687	0.172
Lead, Total	7439-92-1	27.4		0.916	0.229
Selenium, Total	7782-49-2		U	0.916	0.229

U Undetected; the analyte was analyzed for, but not detected.
J Estimated ; the analyte concentration was less than the low standard (LOQ)

Microbac

573 lew
4/1/09

15

Sample Number: L09010495-15
Client ID: MR08-SS316-09A
Matrix: Soil
Workgroup Number: WG293714
Collect Date: 01/21/2009 15:15
Sample Tag: 01

PrePrep Method: NONE
Prep Method: 7471A
Analytical Method: 7471A
Analyst: ADC
Dilution: 1
Units: mg/kg

Instrument: HYDRA
Prep Date: 01/26/2009 13:22
Cal Date: 01/29/2009 13:25
Run Date: 01/29/2009 14:58
File ID: HY.012909.145839
Percent Solid: 86.6

Analyte	CAS. Number	Result	Qual	RL	MDL
Mercury, Total	7439-97-6	0.0271	J	0.114	0.0227

J Estimated ; the analyte concentration was less than the low standard (LOQ)

Microbac

1680 Lw
4/1/09

16

Sample Number: L09010495-16
Client ID: MR08-IS316-4-5-09A
Matrix: Soil
Workgroup Number: WG293592
Collect Date: 01/21/2009 15:20
Sample Tag: 01

PrePrep Method: NONE
Prep Method: 3051
Analytical Method: 6010B
Analyst: KHR
Dilution: 1
Units: mg/kg

Instrument: IRIS-ICP
Prep Date: 01/27/2009 08:23
Cal Date: 01/29/2009 13:52
Run Date: 01/29/2009 16:24
File ID: IR.012909.162400
Percent Solid: 88.6

Analyte	CAS. Number	Result	Qual	RL	MDL
Silver, Total	7440-22-4		U	0.771	0.193
Barium, Total	7440-39-3	17.0		0.386	0.0771
Cadmium, Total	7440-43-9		U	0.154	0.0386
Chromium, Total	7440-47-3	9.07		0.771	0.0926

U Undetected; the analyte was analyzed for, but not detected.

Microbac

28 Mw 4/1/09

16

Sample Number: L09010495-16
Client ID: MR08-IS316-4-5-09A
Matrix: Soil
Workgroup Number: WG294462
Collect Date: 01/21/2009 15:20
Sample Tag: DL01

PrePrep Method: NONE
Prep Method: 3051
Analytical Method: 6020
Analyst: JYH
Dilution: 2
Units: mg/kg

Instrument: ELAN-ICP
Prep Date: 01/27/2009 06:42
Cal Date: 02/09/2009 10:40
Run Date: 02/09/2009 16:23
File ID: EL.020909.162349
Percent Solid: 88.6

Analyte	CAS. Number	Result	Qual	RL	MDL
Arsenic, Total	7440-38-2	0.442	J	0.674	0.169
Lead, Total	7439-92-1	2.48		0.899	0.225
Selenium, Total	7782-49-2		U	0.899	0.225

U Undetected; the analyte was analyzed for, but not detected.
J Estimated ; the analyte concentration was less than the low standard (LOQ)

Microbac

574 lw 4/1/09

16

Sample Number: L09010495-16
Client ID: MR08-IS316-4-5-09A
Matrix: Soil
Workgroup Number: WG293714
Collect Date: 01/21/2009 15:20
Sample Tag: 01

PrePrep Method: NONE
Prep Method: 7471A
Analytical Method: 7471A
Analyst: ADC
Dilution: 1
Units: mg/kg

Instrument: HYDRA
Prep Date: 01/26/2009 13:22
Cal Date: 01/29/2009 13:25
Run Date: 01/29/2009 15:01
File ID: HY.012909.150127
Percent Solid: 88.6

Analyte	CAS. Number	Result	Qual	RL	MDL
Mercury, Total	7439-97-6		U	0.105	0.0210

U Undetected; the analyte was analyzed for, but not detected.

Microbac

1681 fuw
4/1/09

17

Sample Number: L09010495-17
Client ID: MR08-IS315-4-5-09A
Matrix: Soil
Workgroup Number: WG293593
Collect Date: 01/21/2009 15:30
Sample Tag: 01

PrePrep Method: NONE
Prep Method: 3051
Analytical Method: 6010B
Analyst: KHR
Dilution: 1
Units: mg/kg

Instrument: IRIS-ICP
Prep Date: 01/27/2009 12:36
Cal Date: 01/29/2009 13:52
Run Date: 01/29/2009 17:07
File ID: IR.012909.170700
Percent Solid: 81.8

Analyte	CAS. Number	Result	Qual	RL	MDL
Silver, Total	7440-22-4		U	0.815	0.204
Barium, Total	7440-39-3	13.4		0.408	0.0815
Cadmium, Total	7440-43-9	0.304		0.163	0.0408
Chromium, Total	7440-47-3	4.36 J		0.815	0.0978

MSH

U Undetected; the analyte was analyzed for, but not detected.

Microbac

29 lw 4/1/09

17

Sample Number: L09010495-17
Client ID: MR08-IS315-4-5-09A
Matrix: Soil
Workgroup Number: WG294462
Collect Date: 01/21/2009 15:30
Sample Tag: DL01

PrePrep Method: NONE
Prep Method: 3051
Analytical Method: 6020
Analyst: JYH
Dilution: 2
Units: mg/kg

Instrument: ELAN-ICP
Prep Date: 01/27/2009 06:42
Cal Date: 02/09/2009 10:40
Run Date: 02/09/2009 16:29
File ID: EL.020909.162953
Percent Solid: 81.8

Analyte	CAS. Number	Result	Qual	RL	MDL
Arsenic, Total	7440-38-2	0.707	J	0.713	0.178
Lead, Total	7439-92-1	87.4		0.951	0.238
Selenium, Total	7782-49-2	0.297	J	0.951	0.238

J Estimated ; the analyte concentration was less than the low standard (LOQ)

Microbac

575 LW
4/1/09

17

Sample Number:	L09010495-17	PrePrep Method:	NONE	Instrument:	HYDRA
Client ID:	MR08-IS315-4-5-09A	Prep Method:	7471A	Prep Date:	01/26/2009 13:23
Matrix:	Soil	Analytical Method:	7471A	Cal Date:	01/29/2009 13:25
Workgroup Number:	WG293714	Analyst:	ADC	Run Date:	01/29/2009 15:03
Collect Date:	01/21/2009 15:30	Dilution:	1	File ID:	HY.012909.150335
Sample Tag:	01	Units:	mg/kg	Percent Solid:	81.8

Analyte	CAS. Number	Result	Qual	RL	MDL
Mercury, Total	7439-97-6	0.0456	J	0.116	0.0232

J Estimated ; the analyte concentration was less than the low standard (LOQ)

Microbac

1682 Lew 4/1/09

18

Sample Number: L09010495-18
Client ID: MR08-SS315-09A
Matrix: Soil
Workgroup Number: WG293593
Collect Date: 01/21/2009 15:40
Sample Tag: 01

PrePrep Method: NONE
Prep Method: 3051
Analytical Method: 6010B
Analyst: KHR
Dilution: 1
Units: mg/kg

Instrument: IRIS-ICP
Prep Date: 01/27/2009 12:36
Cal Date: 01/29/2009 13:52
Run Date: 01/29/2009 17:31
File ID: IR.012909.173100
Percent Solid: 90.2

Analyte	CAS. Number	Result	Qual	RL	MDL
Silver, Total	7440-22-4		U	0.805	0.201
Barium, Total	7440-39-3	10.4		0.403	0.0805
Cadmium, Total	7440-43-9		U	0.161	0.0403
Chromium, Total	7440-47-3	5.65 J		0.805	0.0966

MSH

U Undetected; the analyte was analyzed for, but not detected.

Microbac

30 MW 4/1/09

18

Sample Number: L09010495-18
Client ID: MR08-SS315-09A
Matrix: Soil
Workgroup Number: WG294462
Collect Date: 01/21/2009 15:40
Sample Tag: DL01

PrePrep Method: NONE
Prep Method: 3051
Analytical Method: 6020
Analyst: JYH
Dilution: 2
Units: mg/kg

Instrument: ELAN-ICP
Prep Date: 01/27/2009 06:42
Cal Date: 02/09/2009 10:40
Run Date: 02/09/2009 16:35
File ID: EL.020909.163557
Percent Solid: 90.2

Analyte	CAS. Number	Result	Qual	RL	MDL
Arsenic, Total	7440-38-2	0.174	J	0.611	0.153
Lead, Total	7439-92-1	2.01		0.815	0.204
Selenium, Total	7782-49-2		U	0.815	0.204

U Undetected; the analyte was analyzed for, but not detected.
J Estimated ; the analyte concentration was less than the low standard (LOQ)

Microbac

 lw 4/1/09

18

Sample Number: L09010495-18
Client ID: MR08-SS315-09A
Matrix: Soil
Workgroup Number: WG293714
Collect Date: 01/21/2009 15:40
Sample Tag: 01

PrePrep Method: NONE
Prep Method: 7471A
Analytical Method: 7471A
Analyst: ADC
Dilution: 1
Units: mg/kg

Instrument: HYDRA
Prep Date: 01/26/2009 13:23
Cal Date: 01/29/2009 13:25
Run Date: 01/29/2009 15:05
File ID: HY.012909.150521
Percent Solid: 90.2

Analyte	CAS. Number	Result	Qual	RL	MDL
Mercury, Total	7439-97-6		U	0.108	0.0215

U Undetected; the analyte was analyzed for, but not detected.

Microbac

1683 lw 4/1/09

19

Sample Number: L09010495-19
Client ID: MR08-IS314-4-5-09A
Matrix: Soil
Workgroup Number: WG293593
Collect Date: 01/21/2009 16:00
Sample Tag: 01

PrePrep Method: NONE
Prep Method: 3051
Analytical Method: 6010B
Analyst: KHR
Dilution: 1
Units: mg/kg

Instrument: IRIS-ICP
Prep Date: 01/27/2009 12:36
Cal Date: 01/29/2009 13:52
Run Date: 01/29/2009 17:37
File ID: IR.012909.173700
Percent Solid: 88.3

Analyte	CAS. Number	Result	Qual	RL	MDL
Silver, Total	7440-22-4		U	0.840	0.210
Barium, Total	7440-39-3	9.43		0.420	0.0840
Cadmium, Total	7440-43-9		U	0.168	0.0420
Chromium, Total	7440-47-3	12.1 J		0.840	0.101

MSH

U Undetected; the analyte was analyzed for, but not detected.

Microbac

31 flw 4/1/09

19

Sample Number: L09010495-19
Client ID: MR08-IS314-4-5-09A
Matrix: Soil
Workgroup Number: WG294462
Collect Date: 01/21/2009 16:00
Sample Tag: DL01

PrePrep Method: NONE
Prep Method: 3051
Analytical Method: 6020
Analyst: JYH
Dilution: 2
Units: mg/kg

Instrument: ELAN-ICP
Prep Date: 01/27/2009 06:42
Cal Date: 02/09/2009 10:40
Run Date: 02/09/2009 16:42
File ID: EL.020909.164200
Percent Solid: 88.3

Analyte	CAS. Number	Result	Qual	RL	MDL
Arsenic, Total	7440-38-2	10.3		0.674	0.168
Lead, Total	7439-92-1	2.98		0.898	0.225
Selenium, Total	7782-49-2		U	0.898	0.225

U Undetected; the analyte was analyzed for, but not detected.

Microbac

577 lew
4/1/09

19

Sample Number:	L09010495-19	PrePrep Method:	NONE	Instrument:	HYDRA
Client ID:	MR08-IS314-4-5-09A	Prep Method:	7471A	Prep Date:	01/26/2009 13:23
Matrix:	Soil	Analytical Method:	7471A	Cal Date:	01/29/2009 13:25
Workgroup Number:	WG293714	Analyst:	ADC	Run Date:	01/29/2009 15:07
Collect Date:	01/21/2009 16:00	Dilution:	1	File ID:	HY.012909.150738
Sample Tag:	01	Units:	mg/kg	Percent Solid:	88.3

Analyte	CAS. Number	Result	Qual	RL	MDL
Mercury, Total	7439-97-6		U	0.113	0.0226

U Undetected; the analyte was analyzed for, but not detected.

Microbac

1684 lew
41,109

20

Sample Number: L09010495-20
Client ID: MR08-EB012109
Matrix: Water
Workgroup Number: WG293610
Collect Date: 01/21/2009 07:00
Sample Tag: 01

PrePrep Method: NONE
Prep Method: 3005A
Analytical Method: 6010B
Analyst: ADC
Dilution: 1
Units: ug/L

Instrument: PE-ICP2
Prep Date: 01/28/2009 06:40
Cal Date: 01/29/2009 15:47
Run Date: 01/29/2009 23:50
File ID: P2.012909.235041

Analyte	CAS. Number	Result	Qual	RL	MDL
Barium, Total	7440-39-3		U	10.0	2.50
Cadmium, Total	7440-43-9		U	1.00	0.250
Chromium, Total	7440-47-3		U	10.0	2.50
Silver, Total	7440-22-4		U	6.00	2.00

U Undetected; the analyte was analyzed for, but not detected.

Microbac

32 lew 4/1/09

20

Sample Number: L09010495-20
Client ID: MR08-EB012109
Matrix: Water
Workgroup Number: WG294000
Collect Date: 01/21/2009 07:00
Sample Tag: 01

PrePrep Method: NONE
Prep Method: 3015
Analytical Method: 6020
Analyst: JYH
Dilution: 1
Units: ug/L

Instrument: ELAN-ICP
Prep Date: 01/26/2009 13:23
Cal Date: 02/05/2009 10:09
Run Date: 02/05/2009 22:17
File ID: EL.020509.221724

Analyte	CAS. Number	Result	Qual	RL	MDL
Arsenic, Total	7440-38-2		U	1.00	0.250
Lead, Total	7439-92-1		U	1.00	0.250
Selenium, Total	7782-49-2		U	2.00	0.500

U Undetected; the analyte was analyzed for, but not detected.

Microbac

 lw 4/1/09

20

Sample Number: L09010495-20
Client ID: MR08-EB012109
Matrix: Water
Workgroup Number: WG293567
Collect Date: 01/21/2009 07:00
Sample Tag: 01

PrePrep Method: NONE
Prep Method: 7470A
Analytical Method: 7470A
Analyst: ADC
Dilution: 1
Units: ug/L

Instrument: HYDRA
Prep Date: 01/27/2009 08:23
Cal Date: 01/29/2009 09:46
Run Date: 01/29/2009 10:57
File ID: HY.012909.105726

Analyte	CAS. Number	Result	Qual	RL	MDL
Mercury	7439-97-6		U	0.484	0.100

U Undetected; the analyte was analyzed for, but not detected.

Microbac

1685 lw
4/1/09

ENVIRONMENTAL
Data Services, Inc.

METALS

USEPA Region IV - Level IV Review

Site: MCB Camp Lejeune, TO-09 SDG #: L09010496

Client: CH2M HILL, Inc., Virginia Beach, Virginia Date: April 1, 2009

Laboratory: Microbac Laboratories, Inc., Marietta, Ohio Reviewer: Nancy Weaver

EDS ID	Client Sample ID	Laboratory Sample ID	Matrix
1	MR08-EB012209	L09010496-01	Water
2	MR08-IS337-4.5-5.5-09A	L09010496-02	Soil
3	MR08-SS337-09A	L09010496-03	Soil
4	MR08-SS366-09A	L09010496-04	Soil
5	MR08-IS336-4-5-09A	L09010496-05	Soil
6	MR08-IS335-4-5-09A	L09010496-06	Soil
7	MR08-SS335-09A	L09010496-07	Soil
8	MR08-SS334-09A	L09010496-08	Soil
9	MR08-IS334-4-5-09A	L09010496-09	Soil
10	MR08-SS333-09A	L09010496-10	Soil
11	MR08-IS333-4-5-09A	L09010496-11	Soil
12	MR08-IS332-4-5-09A	L09010496-12	Soil
13	MR08-SS332-09A	L09010496-13	Soil
14	MR08-SS343-09A	L09010496-14	Soil
15	MR08-IS343-4-5-09A	L09010496-15	Soil
16	MR08-SS342-09A	L09010496-16	Soil
17	MR08-IS342-4-5-09A	L09010496-17	Soil
18	MR08-IS341-4-5-09A	L09010496-18	Soil
19	MR08-SS341-09A	L09010496-19	Soil
20	MR08-SS340-09A	L09010496-20	Soil

The USEPA "Contract Laboratory Program National Functional Guidelines for Inorganic Data Review," October 2004, and professional judgement were used in evaluating the data in this summary report.

Holding Times - All samples were prepared and analyzed within 28 days for mercury and 180 days for all other metals.

Calibration - The ICV and CCV %R values were acceptable.

Method and Calibration Blanks - The method blanks were free contamination.

Field and Equipment Blank - Field QC results are summarized below.

Blank ID	Compound	Conc. ug/L	Action Level mg/kg	Qualifier	Affected Samples
MR08-EB012209	Chromium	4.39	0.73	None	All >5X
MR08-FB012609	None - ND	-	-	-	-

ICP Interference Check Sample - All %R values were acceptable.

MS/MSD - The MS/MSD sample exhibited acceptable %R and RPD values except the following.

MS/MSD Sample ID	Compound	MS/MSD %R/RPD	Qualifier	Affected Samples
Reference (WG293593)	Barium	126%/130%/Ok	J	2-15
	Chromium	139%/145%/Ok	J	2-15

LCS - The LCS samples exhibited acceptable %R values.

ICP Serial Dilution - The ICP serial dilution sample exhibited acceptable %D values.

Field Duplicates - Field duplicate samples were not included in this data package.

Compound Quantitation - Several samples were analyzed at various dilutions for various analytes due to high concentrations.

Report Number: L09010496

Report Date : February 19, 2009

Sample Number: L09010496-01
Client ID: MR08-EB012209
Matrix: Water
Workgroup Number: WG293610
Collect Date: 01/22/2009 07:50
Sample Tag: 01

PrePrep Method: NONE
Prep Method: 3005A
Analytical Method: 6010B
Analyst: ADC
Dilution: 1
Units: ug/L

Instrument: PE-ICP2
Prep Date: 01/28/2009 06:40
Cal Date: 01/29/2009 15:47
Run Date: 01/30/2009 00:09
File ID: P2.013009.000942

Analyte	CAS. Number	Result	Qual	RL	MDL
Barium, Total	7440-39-3		U	10.0	2.50
Cadmium, Total	7440-43-9		U	1.00	0.250
Chromium, Total	7440-47-3	4.39	J	10.0	2.50
Silver, Total	7440-22-4		U	6.00	2.00

U Undetected; the analyte was analyzed for, but not detected.
J Estimated ; the analyte concentration was less than the low standard (LOQ)

Microbac

13 RW 4/1/09

Report Number: L09010496

Report Date : **February 19, 2009**

Sample Number: **L09010496-01**
Client ID: **MR08-EB012209**
Matrix: **Water**
Workgroup Number: **WG294000**
Collect Date: **01/22/2009 07:50**
Sample Tag: **01**

PrePrep Method: **NONE**
Prep Method: **3015**
Analytical Method: **6020**
Analyst: **JYH**
Dilution: **1**
Units: **ug/L**

Instrument: **ELAN-ICP**
Prep Date: **01/26/2009 13:23**
Cal Date: **02/05/2009 10:09**
Run Date: **02/05/2009 22:23**
File ID: **EL.020509.222328**

Analyte	CAS. Number	Result	Qual	RL	MDL
Arsenic, Total	**7440-38-2**		**U**	**1.00**	**0.250**
Lead, Total	**7439-92-1**		**U**	**1.00**	**0.250**
Selenium, Total	**7782-49-2**		**U**	**2.00**	**0.500**

U Undetected; the analyte was analyzed for, but not detected.

Microbac

478 lw
4/1/09

Report Number: L09010496

Report Date : February 19, 2009

Sample Number: L09010496-01
Client ID: MR08-EB012209
Matrix: Water
Workgroup Number: WG293567
Collect Date: 01/22/2009 07:50
Sample Tag: 01

PrePrep Method: NONE
Prep Method: 7470A
Analytical Method: 7470A
Analyst: ADC
Dilution: 1
Units: ug/L

Instrument: HYDRA
Prep Date: 01/27/2009 08:23
Cal Date: 01/29/2009 09:46
Run Date: 01/29/2009 11:00
File ID: HY.012909.110003

Analyte	CAS. Number	Result	Qual	RL	MDL
Mercury	7439-97-6		U	0.400	0.100

U Undetected; the analyte was analyzed for, but not detected.

Microbac®

2087 lew 4/1/09

2

Sample Number: L09010496-02
Client ID: MR08-IS337-4.5-5.5-09A
Matrix: Soil
Workgroup Number: WG293593
Collect Date: 01/22/2009 08:45
Sample Tag: 01

PrePrep Method: NONE
Prep Method: 3051
Analytical Method: 6010B
Analyst: KHR
Dilution: 1
Units: mg/kg

Instrument: IRIS-ICP
Prep Date: 01/27/2009 12:36
Cal Date: 01/29/2009 13:52
Run Date: 01/29/2009 17:43
File ID: IR.012909.174300
Percent Solid: 92.1

Analyte	CAS. Number	Result	Qual	RL	MDL	
Silver, Total	7440-22-4		U	0.793	0.198	
Barium, Total	7440-39-3	6.30 J		0.396	0.0793	MSH
Cadmium, Total	7440-43-9		U	0.159	0.0396	
Chromium, Total	7440-47-3	4.10 J		0.793	0.0951	MSH

U Undetected; the analyte was analyzed for, but not detected.

Microbac

14 MW
4/1/09

2

Sample Number: L09010496-02
Client ID: MR08-IS337-4.5-5.5-09A
Matrix: Soil
Workgroup Number: WG294483
Collect Date: 01/22/2009 08:45
Sample Tag: DL01

PrePrep Method: NONE
Prep Method: 3051
Analytical Method: 6020
Analyst: JYH
Dilution: 2
Units: mg/kg

Instrument: ELAN-ICP
Prep Date: 01/27/2009 07:12
Cal Date: 02/09/2009 10:40
Run Date: 02/09/2009 17:00
File ID: EL.020909.170005
Percent Solid: 92.1

Analyte	CAS. Number	Result	Qual	RL	MDL
Arsenic, Total	7440-38-2	0.164	J	0.640	0.160
Lead, Total	7439-92-1	3.20		0.853	0.213
Selenium, Total	7782-49-2		U	0.853	0.213

U Undetected; the analyte was analyzed for, but not detected.
J Estimated ; the analyte concentration was less than the low standard (LOQ)

Microbac

479 RW 4/1/09

2

Sample Number: L09010496-02
Client ID: MR08-IS337-4.5-5.5-09A
Matrix: Soil
Workgroup Number: WG294228
Collect Date: 01/22/2009 08:45
Sample Tag: 01

PrePrep Method: NONE
Prep Method: 7471A
Analytical Method: 7471A
Analyst: ADC
Dilution: 1
Units: mg/kg

Instrument: HYDRA
Prep Date: 01/27/2009 06:32
Cal Date: 02/05/2009 10:37
Run Date: 02/05/2009 11:03
File ID: HY.020509.110334
Percent Solid: 92.1

Analyte	CAS. Number	Result	Qual	RL	MDL
Mercury, Total	7439-97-6		U	0.108	0.0216

U Undetected; the analyte was analyzed for, but not detected.

Microbac

2088 MW 4/1/09

3

Sample Number: L09010496-03
Client ID: MR08-SS337-09A
Matrix: Soil
Workgroup Number: WG293593
Collect Date: 01/22/2009 08:50
Sample Tag: 01

PrePrep Method: NONE
Prep Method: 3051
Analytical Method: 6010B
Analyst: KHR
Dilution: 1
Units: mg/kg

Instrument: IRIS-ICP
Prep Date: 01/27/2009 12:36
Cal Date: 01/29/2009 13:52
Run Date: 01/29/2009 17:49
File ID: IR.012909.174900
Percent Solid: 78.0

Analyte	CAS. Number	Result	Qual	RL	MDL	
Silver, Total	7440-22-4		U	0.980	0.245	
Barium, Total	7440-39-3	18.8 J		0.490	0.0980	MSH
Cadmium, Total	7440-43-9	0.144	J	0.196	0.0490	
Chromium, Total	7440-47-3	7.11 J		0.980	0.118	MSH

U Undetected; the analyte was analyzed for, but not detected.
J Estimated ; the analyte concentration was less than the low standard (LOQ)

Microbac

15 lew
4/1/09

3

Sample Number: L09010496-03
Client ID: MR08-SS337-09A
Matrix: Soil
Workgroup Number: WG294483
Collect Date: 01/22/2009 08:50
Sample Tag: DL01

PrePrep Method: NONE
Prep Method: 3051
Analytical Method: 6020
Analyst: JYH
Dilution: 2
Units: mg/kg

Instrument: ELAN-ICP
Prep Date: 01/27/2009 07:12
Cal Date: 02/09/2009 10:40
Run Date: 02/09/2009 17:31
File ID: EL.020909.173116
Percent Solid: 78.0

Analyte	CAS. Number	Result	Qual	RL	MDL
Arsenic, Total	7440-38-2	0.696	J	0.727	0.182
Lead, Total	7439-92-1	57.0		0.969	0.242
Selenium, Total	7782-49-2	0.493	J	0.969	0.242

J Estimated ; the analyte concentration was less than the low standard (LOQ)

Microbac

 JW 4/1/09

3

Sample Number:	L09010496-03	PrePrep Method:	NONE	Instrument:	HYDRA
Client ID:	MR08-SS337-09A	Prep Method:	7471A	Prep Date:	01/27/2009 06:32
Matrix:	Soil	Analytical Method:	7471A	Cal Date:	02/05/2009 10:37
Workgroup Number:	WG294228	Analyst:	ADC	Run Date:	02/05/2009 11:12
Collect Date:	01/22/2009 08:50	Dilution:	1	File ID:	HY.020509.111216
Sample Tag:	01	Units:	mg/kg	Percent Solid:	78.0

Analyte	CAS. Number	Result	Qual	RL	MDL
Mercury, Total	7439-97-6		U	0.126	0.0253

U Undetected; the analyte was analyzed for, but not detected.

Microbac

2089 JW 4/1/09

4

Sample Number: L09010496-04
Client ID: MR08-SS336-09A
Matrix: Soil
Workgroup Number: WG293593
Collect Date: 01/22/2009 09:05
Sample Tag: 01

PrePrep Method: NONE
Prep Method: 3051
Analytical Method: 6010B
Analyst: KHR
Dilution: 1
Units: mg/kg

Instrument: IRIS-ICP
Prep Date: 01/27/2009 12:36
Cal Date: 01/29/2009 13:52
Run Date: 01/29/2009 17:55
File ID: IR.012909.175500
Percent Solid: 89.1

Analyte	CAS. Number	Result	Qual	RL	MDL	
Silver, Total	7440-22-4		U	0.832	0.208	
Barium, Total	7440-39-3	9.86 J		0.416	0.0832	MSH
Cadmium, Total	7440-43-9		U	0.166	0.0416	
Chromium, Total	7440-47-3	4.79 J		0.832	0.0999	MSH

U Undetected; the analyte was analyzed for, but not detected.

Microbac

16 MW
02/19/09

4

Sample Number: L09010496-04
Client ID: MR08-SS336-09A
Matrix: Soil
Workgroup Number: WG294483
Collect Date: 01/22/2009 09:05
Sample Tag: DL01

PrePrep Method: NONE
Prep Method: 3051
Analytical Method: 6020
Analyst: JYH
Dilution: 2
Units: mg/kg

Instrument: ELAN-ICP
Prep Date: 01/27/2009 07:12
Cal Date: 02/09/2009 10:40
Run Date: 02/09/2009 17:37
File ID: EL.020909.173719
Percent Solid: 89.1

Analyte	CAS. Number	Result	Qual	RL	MDL
Arsenic, Total	7440-38-2	1.06		0.673	0.168
Lead, Total	7439-92-1	11.0		0.898	0.224
Selenium, Total	7782-49-2		U	0.898	0.224

U Undetected; the analyte was analyzed for, but not detected.

Microbac

481 MW 4/1/09

4

Sample Number:	L09010496-04	PrePrep Method:	NONE	Instrument:	HYDRA
Client ID:	MR08-SS336-09A	Prep Method:	7471A	Prep Date:	01/27/2009 06:32
Matrix:	Soil	Analytical Method:	7471A	Cal Date:	02/05/2009 10:37
Workgroup Number:	WG294228	Analyst:	ADC	Run Date:	02/05/2009 11:14
Collect Date:	01/22/2009 09:05	Dilution:	1	File ID:	HY.020509.111419
Sample Tag:	01	Units:	mg/kg	Percent Solid:	89.1

Analyte	CAS. Number	Result	Qual	RL	MDL
Mercury, Total	7439-97-6		U	0.110	0.0220

U Undetected; the analyte was analyzed for, but not detected.

Microbac

2090 lew 4/1/09

5

Sample Number: L09010496-05
Client ID: MR08-IS336-4-5-09A
Matrix: Soil
Workgroup Number: WG293593
Collect Date: 01/22/2009 09:15
Sample Tag: 01

PrePrep Method: NONE
Prep Method: 3051
Analytical Method: 6010B
Analyst: KHR
Dilution: 1
Units: mg/kg

Instrument: IRIS-ICP
Prep Date: 01/27/2009 12:36
Cal Date: 01/29/2009 13:52
Run Date: 01/29/2009 18:14
File ID: IR.012909.181400
Percent Solid: 49.8

Analyte	CAS. Number	Result	Qual	RL	MDL
Silver, Total	7440-22-4		U	1.36	0.341
Barium, Total	7440-39-3	17.9 J		0.682	0.136
Cadmium, Total	7440-43-9		U	0.273	0.0682
Chromium, Total	7440-47-3	17.3 J		1.36	0.164

MSH
MSH

U Undetected; the analyte was analyzed for, but not detected.

Microbac

17 MW
4/11/09

5

Sample Number: L09010496-05
Client ID: MR08-IS336-4-5-09A
Matrix: Soil
Workgroup Number: WG294483
Collect Date: 01/22/2009 09:15
Sample Tag: DL01

PrePrep Method: NONE
Prep Method: 3051
Analytical Method: 6020
Analyst: JYH
Dilution: 2
Units: mg/kg

Instrument: ELAN-ICP
Prep Date: 01/27/2009 07:12
Cal Date: 02/09/2009 10:40
Run Date: 02/09/2009 17:55
File ID: EL.020909.175531
Percent Solid: 49.8

Analyte	CAS. Number	Result	Qual	RL	MDL
Arsenic, Total	7440-38-2	2.11		1.17	0.292
Lead, Total	7439-92-1	7.28		1.56	0.390
Selenium, Total	7782-49-2		U	1.56	0.390

U Undetected; the analyte was analyzed for, but not detected.

Microbac

482 MW 4/1/09

5

Sample Number: L09010496-05
Client ID: MR08-IS336-4-5-09A
Matrix: Soil
Workgroup Number: WG294228
Collect Date: 01/22/2009 09:15
Sample Tag: 01

PrePrep Method: NONE
Prep Method: 7471A
Analytical Method: 7471A
Analyst: ADC
Dilution: 1
Units: mg/kg

Instrument: HYDRA
Prep Date: 01/27/2009 06:32
Cal Date: 02/05/2009 10:37
Run Date: 02/05/2009 11:17
File ID: HY.020509.111705
Percent Solid: 49.8

Analyte	CAS. Number	Result	Qual	RL	MDL
Mercury, Total	7439-97-6		U	0.199	0.0397

U Undetected; the analyte was analyzed for, but not detected.

Microbac

2091 flw 4/1/09

6

Sample Number: L09010496-06
Client ID: MR08-IS335-4-5-09A
Matrix: Soil
Workgroup Number: WG293593
Collect Date: 01/22/2009 09:35
Sample Tag: 01

PrePrep Method: NONE
Prep Method: 3051
Analytical Method: 6010B
Analyst: KHR
Dilution: 1
Units: mg/kg

Instrument: IRIS-ICP
Prep Date: 01/27/2009 12:36
Cal Date: 01/29/2009 13:52
Run Date: 01/29/2009 18:20
File ID: IR.012909.182000
Percent Solid: 58.3

Analyte	CAS. Number	Result	Qual	RL	MDL	
Silver, Total	7440-22-4		U	1.15	0.287	
Barium, Total	7440-39-3	2.92 J		0.575	0.115	MSH
Cadmium, Total	7440-43-9		U	0.230	0.0575	
Chromium, Total	7440-47-3	2.76 J		1.15	0.138	MSH

U Undetected; the analyte was analyzed for, but not detected.

Microbac

18 lw
4/1/09

6

Sample Number: L09010496-06
Client ID: MR08-IS335-4-5-09A
Matrix: Soil
Workgroup Number: WG294483
Collect Date: 01/22/2009 09:35
Sample Tag: DL01

PrePrep Method: NONE
Prep Method: 3051
Analytical Method: 6020
Analyst: JYH
Dilution: 2
Units: mg/kg

Instrument: ELAN-ICP
Prep Date: 01/27/2009 07:12
Cal Date: 02/09/2009 10:40
Run Date: 02/09/2009 18:01
File ID: EL.020909.180136
Percent Solid: 58.3

Analyte	CAS. Number	Result	Qual	RL	MDL
Arsenic, Total	7440-38-2		U	1.00	0.250
Lead, Total	7439-92-1	2.57		1.33	0.333
Selenium, Total	7782-49-2		U	1.33	0.333

U Undetected; the analyte was analyzed for, but not detected.

Microbac

 fw 4/1/09

6

Sample Number: L09010496-06
Client ID: MR08-IS335-4-5-09A
Matrix: Soil
Workgroup Number: WG294228
Collect Date: 01/22/2009 09:35
Sample Tag: 01

PrePrep Method: NONE
Prep Method: 7471A
Analytical Method: 7471A
Analyst: ADC
Dilution: 1
Units: mg/kg

Instrument: HYDRA
Prep Date: 01/27/2009 06:32
Cal Date: 02/05/2009 10:37
Run Date: 02/05/2009 11:19
File ID: HY.020509.111900
Percent Solid: 58.3

Analyte	CAS. Number	Result	Qual	RL	MDL
Mercury, Total	7439-97-6		U	0.163	0.0326

U Undetected; the analyte was analyzed for, but not detected.

Microbac

2092 MW 4/1/09

7

Sample Number: L09010496-07
Client ID: MR08-SS335-09A
Matrix: Soil
Workgroup Number: WG293593
Collect Date: 01/22/2009 09:50
Sample Tag: 01

PrePrep Method: NONE
Prep Method: 3051
Analytical Method: 6010B
Analyst: KHR
Dilution: 1
Units: mg/kg

Instrument: IRIS-ICP
Prep Date: 01/27/2009 12:36
Cal Date: 01/29/2009 13:52
Run Date: 01/29/2009 18:26
File ID: IR.012909.182600
Percent Solid: 42.5

Analyte	CAS. Number	Result	Qual	RL	MDL	
Silver, Total	7440-22-4		U	1.78	0.445	
Barium, Total	7440-39-3	17.4 J		0.891	0.178	MSH
Cadmium, Total	7440-43-9	0.294	J	0.356	0.0891	
Chromium, Total	7440-47-3	6.47 J		1.78	0.214	MSH

U Undetected; the analyte was analyzed for, but not detected.
J Estimated ; the analyte concentration was less than the low standard (LOQ)

Microbac

19 MW
4/1/09

7

Sample Number: L09010496-07
Client ID: MR08-SS335-09A
Matrix: Soil
Workgroup Number: WG294483
Collect Date: 01/22/2009 09:50
Sample Tag: DL02

PrePrep Method: NONE
Prep Method: 3051
Analytical Method: 6020
Analyst: JYH
Dilution: 10
Units: mg/kg

Instrument: ELAN-ICP
Prep Date: 01/27/2009 07:12
Cal Date: 02/10/2009 10:53
Run Date: 02/10/2009 16:21
File ID: EL.021009.162126
Percent Solid: 42.5

Analyte	CAS. Number	Result	Qual	RL	MDL
Lead, Total	7439-92-1	262		9.19	2.30

Microbac

484 LEW 4/1/09

7

Sample Number: L09010496-07
Client ID: MR08-SS335-09A
Matrix: Soil
Workgroup Number: WG294483
Collect Date: 01/22/2009 09:50
Sample Tag: DL01

PrePrep Method: NONE
Prep Method: 3051
Analytical Method: 6020
Analyst: JYH
Dilution: 2
Units: mg/kg

Instrument: ELAN-ICP
Prep Date: 01/27/2009 07:12
Cal Date: 02/09/2009 10:40
Run Date: 02/09/2009 18:07
File ID: EL.020909.180739
Percent Solid: 42.5

Analyte	CAS. Number	Result	Qual	RL	MDL
Arsenic, Total	7440-38-2	1.11	J	1.38	0.345
Selenium, Total	7782-49-2	0.559	J	1.84	0.460

J Estimated ; the analyte concentration was less than the low standard (LOQ)

Microbac

485 lew
4/1/09

7

Sample Number: L09010496-07
Client ID: MR08-SS335-09A
Matrix: Soil
Workgroup Number: WG294228
Collect Date: 01/22/2009 09:50
Sample Tag: 01

PrePrep Method: NONE
Prep Method: 7471A
Analytical Method: 7471A
Analyst: ADC
Dilution: 1
Units: mg/kg

Instrument: HYDRA
Prep Date: 01/27/2009 06:32
Cal Date: 02/05/2009 10:37
Run Date: 02/05/2009 11:24
File ID: HY.020509.112456
Percent Solid: 42.5

Analyte	CAS. Number	Result	Qual	RL	MDL
Mercury, Total	7439-97-6		U	0.224	0.0448

U Undetected; the analyte was analyzed for, but not detected.

Microbac

2093 fw 4/1/09

8

Sample Number: L09010496-08
Client ID: MR08-SS334-09A
Matrix: Soil
Workgroup Number: WG293593
Collect Date: 01/22/2009 10:15
Sample Tag: 01

PrePrep Method: NONE
Prep Method: 3051
Analytical Method: 6010B
Analyst: KHR
Dilution: 1
Units: mg/kg

Instrument: IRIS-ICP
Prep Date: 01/27/2009 12:36
Cal Date: 01/29/2009 13:52
Run Date: 01/29/2009 18:32
File ID: IR.012909.183200
Percent Solid: 79.5

Analyte	CAS. Number	Result	Qual	RL	MDL	
Silver, Total	7440-22-4		U	0.926	0.231	
Barium, Total	7440-39-3	17.3 J		0.463	0.0926	MSH
Cadmium, Total	7440-43-9	0.181	J	0.185	0.0463	
Chromium, Total	7440-47-3	5.33 J		0.926	0.111	MSH

U Undetected; the analyte was analyzed for, but not detected.
J Estimated ; the analyte concentration was less than the low standard (LOQ)

Microbac

20 Mes
4/1/09

8

Sample Number: L09010496-08
Client ID: MR08-SS334-09A
Matrix: Soil
Workgroup Number: WG294483
Collect Date: 01/22/2009 10:15
Sample Tag: DL01

PrePrep Method: NONE
Prep Method: 3051
Analytical Method: 6020
Analyst: JYH
Dilution: 2
Units: mg/kg

Instrument: ELAN-ICP
Prep Date: 01/27/2009 07:12
Cal Date: 02/09/2009 10:40
Run Date: 02/09/2009 18:13
File ID: EL.020909.181341
Percent Solid: 79.5

Analyte	CAS. Number	Result	Qual	RL	MDL
Arsenic, Total	7440-38-2	0.669	J	0.700	0.175
Lead, Total	7439-92-1	47.6		0.934	0.233
Selenium, Total	7782-49-2	0.258	J	0.934	0.233

J Estimated ; the analyte concentration was less than the low standard (LOQ)

Microbac

486 lew 4/1/09

8

Sample Number: L09010496-08
Client ID: MR08-SS334-09A
Matrix: Soil
Workgroup Number: WG294228
Collect Date: 01/22/2009 10:15
Sample Tag: 01

PrePrep Method: NONE
Prep Method: 7471A
Analytical Method: 7471A
Analyst: ADC
Dilution: 1
Units: mg/kg

Instrument: HYDRA
Prep Date: 01/27/2009 06:32
Cal Date: 02/05/2009 10:37
Run Date: 02/05/2009 11:27
File ID: HY.020509.112712
Percent Solid: 79.5

Analyte	CAS. Number	Result	Qual	RL	MDL
Mercury, Total	7439-97-6		U	0.121	0.0241

U Undetected; the analyte was analyzed for, but not detected.

Microbac

2094 lew 4/1/09

9

Sample Number: L09010496-09
Client ID: MR08-IS334-4-5-09A
Matrix: Soil
Workgroup Number: WG293593
Collect Date: 01/22/2009 10:25
Sample Tag: 01

PrePrep Method: NONE
Prep Method: 3051
Analytical Method: 6010B
Analyst: KHR
Dilution: 1
Units: mg/kg

Instrument: IRIS-ICP
Prep Date: 01/27/2009 12:36
Cal Date: 01/29/2009 13:52
Run Date: 01/29/2009 18:38
File ID: IR.012909.183800
Percent Solid: 66.1

Analyte	CAS. Number	Result	Qual	RL	MDL	
Silver, Total	7440-22-4		U	1.13	0.281	
Barium, Total	7440-39-3	6.27 J		0.563	0.113	MSH
Cadmium, Total	7440-43-9		U	0.225	0.0563	
Chromium, Total	7440-47-3	4.65 J		1.13	0.135	MSH

U Undetected; the analyte was analyzed for, but not detected.

Microbac

21 lew
4/1/09

9

Sample Number: L09010496-09
Client ID: MR08-IS334-4-5-09A
Matrix: Soil
Workgroup Number: WG294483
Collect Date: 01/22/2009 10:25
Sample Tag: DL01

PrePrep Method: NONE
Prep Method: 3051
Analytical Method: 6020
Analyst: JYH
Dilution: 2
Units: mg/kg

Instrument: ELAN-ICP
Prep Date: 01/27/2009 07:12
Cal Date: 02/09/2009 10:40
Run Date: 02/09/2009 18:19
File ID: EL.020909.181943
Percent Solid: 66.1

Analyte	CAS. Number	Result	Qual	RL	MDL
Arsenic, Total	7440-38-2	0.317	J	0.856	0.214
Lead, Total	7439-92-1	3.38		1.14	0.285
Selenium, Total	7782-49-2		U	1.14	0.285

U Undetected; the analyte was analyzed for, but not detected.
J Estimated ; the analyte concentration was less than the low standard (LOQ)

Microbac

487 lw
4/1/09

9

Sample Number: L09010496-09
Client ID: MR08-IS334-4-5-09A
Matrix: Soil
Workgroup Number: WG294228
Collect Date: 01/22/2009 10:25
Sample Tag: 01

PrePrep Method: NONE
Prep Method: 7471A
Analytical Method: 7471A
Analyst: ADC
Dilution: 1
Units: mg/kg

Instrument: HYDRA
Prep Date: 01/27/2009 06:32
Cal Date: 02/05/2009 10:37
Run Date: 02/05/2009 11:28
File ID: HY.020509.112857
Percent Solid: 66.1

Analyte	CAS. Number	Result	Qual	RL	MDL
Mercury, Total	7439-97-6		U	0.147	0.0293

U Undetected; the analyte was analyzed for, but not detected.

Microbac

2095

fcw
4/1/09

10

Sample Number: L09010496-10
Client ID: MR08-SS333-09A
Matrix: Soil
Workgroup Number: WG293593
Collect Date: 01/22/2009 10:45
Sample Tag: 01

PrePrep Method: NONE
Prep Method: 3051
Analytical Method: 6010B
Analyst: KHR
Dilution: 1
Units: mg/kg

Instrument: IRIS-ICP
Prep Date: 01/27/2009 12:36
Cal Date: 01/29/2009 13:52
Run Date: 01/29/2009 18:44
File ID: IR.012909.184400
Percent Solid: 84.0

Analyte	CAS. Number	Result	Qual	RL	MDL	
Silver, Total	7440-22-4	0.345	J	0.849	0.212	
Barium, Total	7440-39-3	16.1 J		0.424	0.0849	MSM
Cadmium, Total	7440-43-9	0.257		0.170	0.0424	
Chromium, Total	7440-47-3	6.62 J		0.849	0.102	MSM

J Estimated ; the analyte concentration was less than the low standard (LOQ)

Microbac

22 LW
4/1/09

10

Sample Number: L09010496-10
Client ID: MR08-SS333-09A
Matrix: Soil
Workgroup Number: WG294483
Collect Date: 01/22/2009 10:45
Sample Tag: DL01

PrePrep Method: NONE
Prep Method: 3051
Analytical Method: 6020
Analyst: JYH
Dilution: 2
Units: mg/kg

Instrument: ELAN-ICP
Prep Date: 01/27/2009 07:12
Cal Date: 02/09/2009 10:40
Run Date: 02/09/2009 18:25
File ID: EL.020909.182545
Percent Solid: 84.0

Analyte	CAS. Number	Result	Qual	RL	MDL
Arsenic, Total	7440-38-2	0.536	J	0.715	0.179
Lead, Total	7439-92-1	63.7		0.953	0.238
Selenium, Total	7782-49-2	0.270	J	0.953	0.238

J Estimated ; the analyte concentration was less than the low standard (LOQ)

Microbac

488 MW
4/1/09

10

Sample Number: L09010496-10
Client ID: MR08-SS333-09A
Matrix: Soil
Workgroup Number: WG294228
Collect Date: 01/22/2009 10:45
Sample Tag: 01

PrePrep Method: NONE
Prep Method: 7471A
Analytical Method: 7471A
Analyst: ADC
Dilution: 1
Units: mg/kg

Instrument: HYDRA
Prep Date: 01/27/2009 06:32
Cal Date: 02/05/2009 10:37
Run Date: 02/05/2009 11:31
File ID: HY.020509.113119
Percent Solid: 84.0

Analyte	CAS. Number	Result	Qual	RL	MDL
Mercury, Total	7439-97-6	0.0565	J	0.117	0.0233

J Estimated ; the analyte concentration was less than the low standard (LOQ)

Microbac

2096 MW 4/1/09

11

Sample Number: L09010496-11
Client ID: MR08-IS333-4-5-09A
Matrix: Soil
Workgroup Number: WG293593
Collect Date: 01/22/2009 10:30
Sample Tag: 01

PrePrep Method: NONE
Prep Method: 3051
Analytical Method: 6010B
Analyst: KHR
Dilution: 1
Units: mg/kg

Instrument: IRIS-ICP
Prep Date: 01/27/2009 12:36
Cal Date: 01/29/2009 13:52
Run Date: 01/29/2009 18:50
File ID: IR.012909.185000
Percent Solid: 87.8

Analyte	CAS. Number	Result	Qual	RL	MDL	
Silver, Total	7440-22-4		U	0.860	0.215	
Barium, Total	7440-39-3	8.05 J		0.430	0.0860	MSH
Cadmium, Total	7440-43-9		U	0.172	0.0430	
Chromium, Total	7440-47-3	7.05 J		0.860	0.103	MSH

U Undetected; the analyte was analyzed for, but not detected.

Microbac

23 MW
4/1/09

Sample Number: L09010496-11
Client ID: MR08-IS333-4-5-09A
Matrix: Soil
Workgroup Number: WG294483
Collect Date: 01/22/2009 10:30
Sample Tag: DL01

PrePrep Method: NONE
Prep Method: 3051
Analytical Method: 6020
Analyst: JYH
Dilution: 2
Units: mg/kg

Instrument: ELAN-ICP
Prep Date: 01/27/2009 07:12
Cal Date: 02/09/2009 10:40
Run Date: 02/09/2009 18:44
File ID: EL.020909.184451
Percent Solid: 87.8

Analyte	CAS. Number	Result	Qual	RL	MDL
Arsenic, Total	7440-38-2	0.356	J	0.684	0.171
Lead, Total	7439-92-1	4.06		0.911	0.228
Selenium, Total	7782-49-2	0.240	J	0.911	0.228

J Estimated ; the analyte concentration was less than the low standard (LOQ)

Microbac

489 MW 4/1/09

11

Sample Number: L09010496-11
Client ID: MR08-IS333-4-5-09A
Matrix: Soil
Workgroup Number: WG294228
Collect Date: 01/22/2009 10:30
Sample Tag: 01

PrePrep Method: NONE
Prep Method: 7471A
Analytical Method: 7471A
Analyst: ADC
Dilution: 1
Units: mg/kg

Instrument: HYDRA
Prep Date: 01/27/2009 06:32
Cal Date: 02/05/2009 10:37
Run Date: 02/05/2009 11:33
File ID: HY.020509.113304
Percent Solid: 87.8

Analyte	CAS. Number	Result	Qual	RL	MDL
Mercury, Total	7439-97-6		U	0.109	0.0217

U Undetected; the analyte was analyzed for, but not detected.

Microbac

2097 lew 4/1/09

12

Sample Number: L09010496-12
Client ID: MR08-IS332-4-5-09A
Matrix: Soil
Workgroup Number: WG293593
Collect Date: 01/22/2009 11:00
Sample Tag: 01

PrePrep Method: NONE
Prep Method: 3051
Analytical Method: 6010B
Analyst: KHR
Dilution: 1
Units: mg/kg

Instrument: IRIS-ICP
Prep Date: 01/27/2009 12:36
Cal Date: 01/29/2009 13:52
Run Date: 01/29/2009 18:56
File ID: IR.012909.185600
Percent Solid: 93.1

Analyte	CAS. Number	Result	Qual	RL	MDL	
Silver, Total	7440-22-4		U	0.813	0.203	
Barium, Total	7440-39-3	4.01 J		0.406	0.0813	MSH
Cadmium, Total	7440-43-9		U	0.163	0.0406	
Chromium, Total	7440-47-3	3.52 J		0.813	0.0975	MSH

U Undetected; the analyte was analyzed for, but not detected.

Microbac

24 lw
4/1/09

12

Sample Number: L09010496-12
Client ID: MR08-IS332-4-5-09A
Matrix: Soil
Workgroup Number: WG294483
Collect Date: 01/22/2009 11:00
Sample Tag: DL01

PrePrep Method: NONE
Prep Method: 3051
Analytical Method: 6020
Analyst: JYH
Dilution: 2
Units: mg/kg

Instrument: ELAN-ICP
Prep Date: 01/27/2009 07:12
Cal Date: 02/09/2009 10:40
Run Date: 02/09/2009 18:50
File ID: EL.020909.185054
Percent Solid: 93.1

Analyte	CAS. Number	Result	Qual	RL	MDL
Arsenic, Total	7440-38-2	0.715		0.620	0.155
Lead, Total	7439-92-1	2.28		0.826	0.207
Selenium, Total	7782-49-2		U	0.826	0.207

U Undetected; the analyte was analyzed for, but not detected.

Microbac

490 lw 4/1/09

12

Sample Number: L09010496-12
Client ID: MR08-IS332-4-5-09A
Matrix: Soil
Workgroup Number: WG294228
Collect Date: 01/22/2009 11:00
Sample Tag: 01

PrePrep Method: NONE
Prep Method: 7471A
Analytical Method: 7471A
Analyst: ADC
Dilution: 1
Units: mg/kg

Instrument: HYDRA
Prep Date: 01/27/2009 06:32
Cal Date: 02/05/2009 10:37
Run Date: 02/05/2009 11:36
File ID: HY.020509.113600
Percent Solid: 93.1

Analyte	CAS. Number	Result	Qual	RL	MDL
Mercury, Total	7439-97-6		U	0.103	0.0207

U Undetected; the analyte was analyzed for, but not detected.

Microbac

2098 JLW 4/1/09

Report Number: L09010496
Report Date : February 19, 2009

13

Sample Number: L09010496-13
Client ID: MR08-SS332-09A
Matrix: Soil
Workgroup Number: WG293593
Collect Date: 01/22/2009 11:00
Sample Tag: 01

PrePrep Method: NONE
Prep Method: 3051
Analytical Method: 6010B
Analyst: KHR
Dilution: 1
Units: mg/kg

Instrument: IRIS-ICP
Prep Date: 01/27/2009 12:36
Cal Date: 01/29/2009 13:52
Run Date: 01/29/2009 19:02
File ID: IR.012909.190200
Percent Solid: 82.7

Analyte	CAS. Number	Result	Qual	RL	MDL
Silver, Total	7440-22-4	0.437	J	0.910	0.228
Barium, Total	7440-39-3	47.7 J		0.455	0.0910
Cadmium, Total	7440-43-9	0.644		0.182	0.0455
Chromium, Total	7440-47-3	10.6 J		0.910	0.109

MSH
MSH

J Estimated ; the analyte concentration was less than the low standard (LOQ)

Microbac

25 MW
4/1/09

13

Sample Number:	L09010496-13	PrePrep Method:	NONE	Instrument:	ELAN-ICP
Client ID:	MR08-SS332-09A	Prep Method:	3051	Prep Date:	01/27/2009 07:12
Matrix:	Soil	Analytical Method:	6020	Cal Date:	02/09/2009 10:40
Workgroup Number:	WG294483	Analyst:	JYH	Run Date:	02/09/2009 18:56
Collect Date:	01/22/2009 11:00	Dilution:	2	File ID:	EL.020909.185657
Sample Tag:	DL01	Units:	mg/kg	Percent Solid:	82.7

Analyte	CAS. Number	Result	Qual	RL	MDL
Arsenic, Total	7440-38-2	1.26		0.724	0.181
Selenium, Total	7782-49-2	0.342	J	0.965	0.241

J Estimated ; the analyte concentration was less than the low standard (LOQ)

Microbac

491 LW 4/1/09

13

Sample Number: L09010496-13
Client ID: MR08-SS332-09A
Matrix: Soil
Workgroup Number: WG294483
Collect Date: 01/22/2009 11:00
Sample Tag: DL02

PrePrep Method: NONE
Prep Method: 3051
Analytical Method: 6020
Analyst: JYH
Dilution: 10
Units: mg/kg

Instrument: ELAN-ICP
Prep Date: 01/27/2009 07:12
Cal Date: 02/10/2009 10:53
Run Date: 02/10/2009 16:27
File ID: EL.021009.162729
Percent Solid: 82.7

Analyte	CAS. Number	Result	Qual	RL	MDL
Lead, Total	7439-92-1	224		4.83	1.21

Microbac

lw
4/1/09

13

Sample Number:	L09010496-13	PrePrep Method:	NONE	Instrument:	HYDRA
Client ID:	MR08-SS332-09A	Prep Method:	7471A	Prep Date:	01/27/2009 06:32
Matrix:	Soil	Analytical Method:	7471A	Cal Date:	02/05/2009 10:37
Workgroup Number:	WG294228	Analyst:	ADC	Run Date:	02/05/2009 11:37
Collect Date:	01/22/2009 11:00	Dilution:	1	File ID:	HY.020509.113757
Sample Tag:	01	Units:	mg/kg	Percent Solid:	82.7

Analyte	CAS. Number	Result	Qual	RL	MDL
Mercury, Total	7439-97-6	0.0546	J	0.118	0.0237

J Estimated ; the analyte concentration was less than the low standard (LOQ)

Microbac

2099 MW 4/1/09

14

Sample Number: L09010496-14
Client ID: MR08-SS343-09A
Matrix: Soil
Workgroup Number: WG293593
Collect Date: 01/22/2009 12:40
Sample Tag: 01

PrePrep Method: NONE
Prep Method: 3051
Analytical Method: 6010B
Analyst: KHR
Dilution: 1
Units: mg/kg

Instrument: IRIS-ICP
Prep Date: 01/27/2009 12:36
Cal Date: 01/29/2009 13:52
Run Date: 01/29/2009 19:08
File ID: IR.012909.190800
Percent Solid: 92.9

Analyte	CAS. Number	Result	Qual	RL	MDL	
Silver, Total	7440-22-4	0.470	J	0.804	0.201	
Barium, Total	7440-39-3	6.44 J		0.402	0.0804	MSH
Cadmium, Total	7440-43-9	0.194		0.161	0.0402	
Chromium, Total	7440-47-3	6.39 J		0.804	0.0965	MSH

J Estimated ; the analyte concentration was less than the low standard (LOQ)

Microbac

26 lw 4/1/09

14

Sample Number: L09010496-14
Client ID: MR08-SS343-09A
Matrix: Soil
Workgroup Number: WG294483
Collect Date: 01/22/2009 12:40
Sample Tag: DL01

PrePrep Method: NONE
Prep Method: 3051
Analytical Method: 6020
Analyst: JYH
Dilution: 2
Units: mg/kg

Instrument: ELAN-ICP
Prep Date: 01/27/2009 07:12
Cal Date: 02/09/2009 10:40
Run Date: 02/09/2009 19:03
File ID: EL.020909.190301
Percent Solid: 92.9

Analyte	CAS. Number	Result	Qual	RL	MDL
Arsenic, Total	7440-38-2	0.817		0.594	0.148
Lead, Total	7439-92-1	8.92		0.792	0.198
Selenium, Total	7782-49-2	0.361	J	0.792	0.198

J Estimated ; the analyte concentration was less than the low standard (LOQ)

Microbac

gw
4/1/09

14

Sample Number:	L09010496-14	PrePrep Method:	NONE	Instrument:	HYDRA
Client ID:	MR08-SS343-09A	Prep Method:	7471A	Prep Date:	01/27/2009 06:32
Matrix:	Soil	Analytical Method:	7471A	Cal Date:	02/05/2009 10:37
Workgroup Number:	WG294228	Analyst:	ADC	Run Date:	02/05/2009 11:39
Collect Date:	01/22/2009 12:40	Dilution:	1	File ID:	HY.020509.113951
Sample Tag:	01	Units:	mg/kg	Percent Solid:	92.9

Analyte	CAS. Number	Result	Qual	RL	MDL
Mercury, Total	7439-97-6		U	0.106	0.0213

U Undetected; the analyte was analyzed for, but not detected.

Microbac

2100 kw
4/1/09

15

Sample Number: L09010496-15
Client ID: MR08-IS343-4-5-09A
Matrix: Soil
Workgroup Number: WG293593
Collect Date: 01/22/2009 12:45
Sample Tag: 01

PrePrep Method: NONE
Prep Method: 3051
Analytical Method: 6010B
Analyst: KHR
Dilution: 1
Units: mg/kg

Instrument: IRIS-ICP
Prep Date: 01/27/2009 12:36
Cal Date: 01/29/2009 13:52
Run Date: 01/29/2009 19:26
File ID: IR.012909.192600
Percent Solid: 91.7

Analyte	CAS. Number	Result	Qual	RL	MDL
Silver, Total	7440-22-4		U	0.822	0.205
Barium, Total	7440-39-3	4.71 J		0.411	0.0822
Cadmium, Total	7440-43-9		U	0.164	0.0411
Chromium, Total	7440-47-3	5.70 J		0.822	0.0986

MSH
MSH

U Undetected; the analyte was analyzed for, but not detected.

Microbac

27 fee
4/1/09

15

Sample Number: L09010496-15
Client ID: MR08-IS343-4-5-09A
Matrix: Soil
Workgroup Number: WG294483
Collect Date: 01/22/2009 12:45
Sample Tag: DL01

PrePrep Method: NONE
Prep Method: 3051
Analytical Method: 6020
Analyst: JYH
Dilution: 2
Units: mg/kg

Instrument: ELAN-ICP
Prep Date: 01/27/2009 07:12
Cal Date: 02/09/2009 10:40
Run Date: 02/09/2009 19:09
File ID: EL.020909.190905
Percent Solid: 91.7

Analyte	CAS. Number	Result	Qual	RL	MDL
Arsenic, Total	7440-38-2	0.634		0.632	0.158
Lead, Total	7439-92-1	3.43		0.842	0.211
Selenium, Total	7782-49-2		U	0.842	0.211

U Undetected; the analyte was analyzed for, but not detected.

Microbac

494 MW 4/1/09

15

Sample Number: L09010496-15
Client ID: MR08-IS343-4-5-09A
Matrix: Soil
Workgroup Number: WG294228
Collect Date: 01/22/2009 12:45
Sample Tag: 01

PrePrep Method: NONE
Prep Method: 7471A
Analytical Method: 7471A
Analyst: ADC
Dilution: 1
Units: mg/kg

Instrument: HYDRA
Prep Date: 01/27/2009 06:32
Cal Date: 02/05/2009 10:37
Run Date: 02/05/2009 11:41
File ID: HY.020509.114133
Percent Solid: 91.7

Analyte	CAS. Number	Result	Qual	RL	MDL
Mercury, Total	7439-97-6		U	0.104	0.0208

U Undetected; the analyte was analyzed for, but not detected.

Microbac®

2101 [illegible] 4/1/09

16

Sample Number: L09010496-16
Client ID: MR08-SS342-09A
Matrix: Soil
Workgroup Number: WG293594
Collect Date: 01/22/2009 13:05
Sample Tag: 01

PrePrep Method: NONE
Prep Method: 3051
Analytical Method: 6010B
Analyst: KHR
Dilution: 1
Units: mg/kg

Instrument: IRIS-ICP
Prep Date: 01/27/2009 13:02
Cal Date: 01/29/2009 13:52
Run Date: 01/29/2009 20:15
File ID: IR.012909.201500
Percent Solid: 77.7

Analyte	CAS. Number	Result	Qual	RL	MDL
Silver, Total	7440-22-4		U	0.980	0.245
Barium, Total	7440-39-3	8.86		0.490	0.0980
Cadmium, Total	7440-43-9		U	0.196	0.0490
Chromium, Total	7440-47-3	4.11		0.980	0.118

U Undetected; the analyte was analyzed for, but not detected.

Microbac

28 MW 4/1/09

16

Sample Number: L09010496-16
Client ID: MR08-SS342-09A
Matrix: Soil
Workgroup Number: WG294483
Collect Date: 01/22/2009 13:05
Sample Tag: DL01

PrePrep Method: NONE
Prep Method: 3051
Analytical Method: 6020
Analyst: JYH
Dilution: 2
Units: mg/kg

Instrument: ELAN-ICP
Prep Date: 01/27/2009 07:12
Cal Date: 02/09/2009 10:40
Run Date: 02/09/2009 19:15
File ID: EL.020909.191509
Percent Solid: 77.7

Analyte	CAS. Number	Result	Qual	RL	MDL
Arsenic, Total	7440-38-2	0.783		0.757	0.189
Lead, Total	7439-92-1	26.6		1.01	0.252
Selenium, Total	7782-49-2	0.406	J	1.01	0.252

J Estimated ; the analyte concentration was less than the low standard (LOQ)

Microbac

 lew 4/1/09

16

Sample Number: L09010496-16
Client ID: MR08-SS342-09A
Matrix: Soil
Workgroup Number: WG294228
Collect Date: 01/22/2009 13:05
Sample Tag: 01

PrePrep Method: NONE
Prep Method: 7471A
Analytical Method: 7471A
Analyst: ADC
Dilution: 1
Units: mg/kg

Instrument: HYDRA
Prep Date: 01/27/2009 06:32
Cal Date: 02/05/2009 10:37
Run Date: 02/05/2009 11:43
File ID: HY.020509.114357
Percent Solid: 77.7

Analyte	CAS. Number	Result	Qual	RL	MDL
Mercury, Total	7439-97-6		U	0.120	0.0240

U Undetected; the analyte was analyzed for, but not detected.

Microbac

2102 MW 4/1/09

17

Sample Number: L09010496-17
Client ID: MR08-IS342-4-5-09A
Matrix: Soil
Workgroup Number: WG293594
Collect Date: 01/22/2009 13:10
Sample Tag: 01

PrePrep Method: NONE
Prep Method: 3051
Analytical Method: 6010B
Analyst: KHR
Dilution: 1
Units: mg/kg

Instrument: IRIS-ICP
Prep Date: 01/27/2009 13:02
Cal Date: 01/29/2009 13:52
Run Date: 01/29/2009 20:52
File ID: IR.012909.205200
Percent Solid: 88.5

Analyte	CAS. Number	Result	Qual	RL	MDL
Silver, Total	7440-22-4		U	0.865	0.216
Barium, Total	7440-39-3	7.38		0.432	0.0865
Cadmium, Total	7440-43-9		U	0.173	0.0432
Chromium, Total	7440-47-3	5.15		0.865	0.104

U Undetected; the analyte was analyzed for, but not detected.

Microbac

29 MW 4/1/09

17

Sample Number: L09010496-17
Client ID: MR08-IS342-4-5-09A
Matrix: Soil
Workgroup Number: WG294483
Collect Date: 01/22/2009 13:10
Sample Tag: DL01

PrePrep Method: NONE
Prep Method: 3051
Analytical Method: 6020
Analyst: JYH
Dilution: 2
Units: mg/kg

Instrument: ELAN-ICP
Prep Date: 01/27/2009 07:12
Cal Date: 02/09/2009 10:40
Run Date: 02/09/2009 19:21
File ID: EL.020909.192114
Percent Solid: 88.5

Analyte	CAS. Number	Result	Qual	RL	MDL
Arsenic, Total	7440-38-2	0.461	J	0.647	0.162
Lead, Total	7439-92-1	4.22		0.863	0.216
Selenium, Total	7782-49-2	0.346	J	0.863	0.216

J Estimated ; the analyte concentration was less than the low standard (LOQ)

Microbac

496 JW 4/1/09

17

Sample Number: L09010496-17
Client ID: MR08-IS342-4-5-09A
Matrix: Soil
Workgroup Number: WG294228
Collect Date: 01/22/2009 13:10
Sample Tag: 01

PrePrep Method: NONE
Prep Method: 7471A
Analytical Method: 7471A
Analyst: ADC
Dilution: 1
Units: mg/kg

Instrument: HYDRA
Prep Date: 01/27/2009 06:32
Cal Date: 02/13/2009 09:28
Run Date: 02/13/2009 09:41
File ID: HY.021309.094135
Percent Solid: 88.5

Analyte	CAS. Number	Result	Qual	RL	MDL
Mercury, Total	7439-97-6	0.0335	J	0.113	0.0226

J Estimated ; the analyte concentration was less than the low standard (LOQ)

Microbac

2103 JCW 4/1/09

18

Sample Number: L09010496-18
Client ID: MR08-IS341-4-5-09A
Matrix: Soil
Workgroup Number: WG293594
Collect Date: 01/22/2009 13:30
Sample Tag: 01

PrePrep Method: NONE
Prep Method: 3051
Analytical Method: 6010B
Analyst: KHR
Dilution: 1
Units: mg/kg

Instrument: IRIS-ICP
Prep Date: 01/27/2009 13:02
Cal Date: 01/29/2009 13:52
Run Date: 01/29/2009 20:58
File ID: IR.012909.205800
Percent Solid: 92.1

Analyte	CAS. Number	Result	Qual	RL	MDL
Silver, Total	7440-22-4		U	0.788	0.197
Barium, Total	7440-39-3	6.62		0.394	0.0788
Cadmium, Total	7440-43-9		U	0.158	0.0394
Chromium, Total	7440-47-3	3.03		0.788	0.0946

U Undetected; the analyte was analyzed for, but not detected.

Microbac

30 lw
4/1/09

18

Sample Number: L09010496-18
Client ID: MR08-IS341-4-5-09A
Matrix: Soil
Workgroup Number: WG294483
Collect Date: 01/22/2009 13:30
Sample Tag: DL01

PrePrep Method: NONE
Prep Method: 3051
Analytical Method: 6020
Analyst: JYH
Dilution: 2
Units: mg/kg

Instrument: ELAN-ICP
Prep Date: 01/27/2009 07:12
Cal Date: 02/09/2009 10:40
Run Date: 02/09/2009 19:27
File ID: EL.020909.192719
Percent Solid: 92.1

Analyte	CAS. Number	Result	Qual	RL	MDL
Arsenic, Total	7440-38-2	0.444	J	0.600	0.150
Lead, Total	7439-92-1	3.33		0.800	0.200
Selenium, Total	7782-49-2	0.232	J	0.800	0.200

J Estimated ; the analyte concentration was less than the low standard (LOQ)

Microbac

JW
4/1/09

18

Sample Number: L09010496-18
Client ID: MR08-IS341-4-5-09A
Matrix: Soil
Workgroup Number: WG294228
Collect Date: 01/22/2009 13:30
Sample Tag: 01

PrePrep Method: NONE
Prep Method: 7471A
Analytical Method: 7471A
Analyst: ADC
Dilution: 1
Units: mg/kg

Instrument: HYDRA
Prep Date: 01/27/2009 06:32
Cal Date: 02/13/2009 09:28
Run Date: 02/13/2009 09:43
File ID: HY.021309.094332
Percent Solid: 92.1

Analyte	CAS. Number	Result	Qual	RL	MDL
Mercury, Total	7439-97-6		U	0.106	0.0212

U Undetected; the analyte was analyzed for, but not detected.

Microbac

2104 fw 4/1/09

19

Sample Number: L09010496-19
Client ID: MR08-SS341-09A
Matrix: Soil
Workgroup Number: WG293594
Collect Date: 01/22/2009 13:35
Sample Tag: 01

PrePrep Method: NONE
Prep Method: 3051
Analytical Method: 6010B
Analyst: KHR
Dilution: 1
Units: mg/kg

Instrument: IRIS-ICP
Prep Date: 01/27/2009 13:02
Cal Date: 01/29/2009 13:52
Run Date: 01/29/2009 21:04
File ID: IR.012909.210400
Percent Solid: 80.3

Analyte	CAS. Number	Result	Qual	RL	MDL
Silver, Total	7440-22-4		U	0.848	0.212
Barium, Total	7440-39-3	8.26		0.424	0.0848
Cadmium, Total	7440-43-9	0.0564	J	0.170	0.0424
Chromium, Total	7440-47-3	3.32		0.848	0.102

U Undetected; the analyte was analyzed for, but not detected.
J Estimated ; the analyte concentration was less than the low standard (LOQ)

Microbac

31 kw
4/1/09

19

Sample Number: L09010496-19
Client ID: MR08-SS341-09A
Matrix: Soil
Workgroup Number: WG294483
Collect Date: 01/22/2009 13:35
Sample Tag: DL01

PrePrep Method: NONE
Prep Method: 3051
Analytical Method: 6020
Analyst: JYH
Dilution: 2
Units: mg/kg

Instrument: ELAN-ICP
Prep Date: 01/27/2009 07:12
Cal Date: 02/09/2009 10:40
Run Date: 02/09/2009 19:33
File ID: EL.020909.193323
Percent Solid: 80.3

Analyte	CAS. Number	Result	Qual	RL	MDL
Arsenic, Total	7440-38-2	0.639	J	0.734	0.183
Lead, Total	7439-92-1	27.9		0.978	0.245
Selenium, Total	7782-49-2	0.249	J	0.978	0.245

J Estimated ; the analyte concentration was less than the low standard (LOQ)

Microbac

498 lew
4/1/09

19

Sample Number:	L09010496-19	PrePrep Method:	NONE	Instrument:	HYDRA
Client ID:	MR08-SS341-09A	Prep Method:	7471A	Prep Date:	01/27/2009 06:32
Matrix:	Soil	Analytical Method:	7471A	Cal Date:	02/13/2009 09:30
Workgroup Number:	WG294228	Analyst:	ADC	Run Date:	02/13/2009 09:45
Collect Date:	01/22/2009 13:35	Dilution:	1	File ID:	HY.021309.094539
Sample Tag:	01	Units:	mg/kg	Percent Solid:	80.3

Analyte	CAS. Number	Result	Qual	RL	MDL
Mercury, Total	7439-97-6	0.0303	J	0.122	0.0244

J Estimated ; the analyte concentration was less than the low standard (LOQ)

Microbac

2105 Leo 4/1/09

20

Sample Number: L09010496-20
Client ID: MR08-SS340-09A
Matrix: Soil
Workgroup Number: WG293594
Collect Date: 01/22/2009 14:15
Sample Tag: 01

PrePrep Method: NONE
Prep Method: 3051
Analytical Method: 6010B
Analyst: KHR
Dilution: 1
Units: mg/kg

Instrument: IRIS-ICP
Prep Date: 01/27/2009 13:02
Cal Date: 01/29/2009 13:52
Run Date: 01/29/2009 21:10
File ID: IR.012909.211000
Percent Solid: 64.5

Analyte	CAS. Number	Result	Qual	RL	MDL
Silver, Total	7440-22-4		U	1.17	0.293
Barium, Total	7440-39-3	10.9		0.585	0.117
Cadmium, Total	7440-43-9	0.0802	J	0.234	0.0585
Chromium, Total	7440-47-3	3.18		1.17	0.141

U Undetected; the analyte was analyzed for, but not detected.
J Estimated ; the analyte concentration was less than the low standard (LOQ)

Microbac

32 fw
4/1/09

20

Sample Number: L09010496-20
Client ID: MR08-SS340-09A
Matrix: Soil
Workgroup Number: WG294483
Collect Date: 01/22/2009 14:15
Sample Tag: DL01

PrePrep Method: NONE
Prep Method: 3051
Analytical Method: 6020
Analyst: JYH
Dilution: 2
Units: mg/kg

Instrument: ELAN-ICP
Prep Date: 01/27/2009 07:12
Cal Date: 02/09/2009 10:40
Run Date: 02/09/2009 19:39
File ID: EL.020909.193925
Percent Solid: 64.5

Analyte	CAS. Number	Result	Qual	RL	MDL
Arsenic, Total	7440-38-2	0.675	J	0.884	0.221
Lead, Total	7439-92-1	19.5		1.18	0.295
Selenium, Total	7782-49-2	0.362	J	1.18	0.295

J Estimated ; the analyte concentration was less than the low standard (LOQ)

Microbac

499 kw 4/1/09

20

Sample Number: L09010496-20
Client ID: MR08-SS340-09A
Matrix: Soil
Workgroup Number: WG294228
Collect Date: 01/22/2009 14:15
Sample Tag: 01

PrePrep Method: NONE
Prep Method: 7471A
Analytical Method: 7471A
Analyst: ADC
Dilution: 1
Units: mg/kg

Instrument: HYDRA
Prep Date: 01/27/2009 06:32
Cal Date: 02/13/2009 09:25
Run Date: 02/13/2009 09:47
File ID: HY.021309.094733
Percent Solid: 64.5

Analyte	CAS. Number	Result	Qual	RL	MDL
Mercury, Total	7439-97-6		U	0.145	0.0289

U Undetected; the analyte was analyzed for, but not detected.

Microbac

 fw 4/1/09

ENVIRONMENTAL
Data Services, Inc.

METALS

USEPA Region IV - Level IV Review

Site: MCB Camp Lejeune, TO-09 SDG #: L09010497

Client: CH2M HILL, Inc., Virginia Beach, Virginia Date: April 1, 2009

Laboratory: Microbac Laboratories, Inc., Marietta, Ohio Reviewer: Nancy Weaver

EDS ID	Client Sample ID	Laboratory Sample ID	Matrix
1	MR08-IS340-4-5-09A	L09010497-01	Soil
2	MR08-SS339-09A	L09010497-02	Soil
3	MR08-IS339-4-5-09A	L09010497-03	Soil
4	MR08-SS338-09A	L09010497-04	Soil
5	MR08-SS338D-09A	L09010497-05	Soil
6	MR08-IS338-4-5-09A	L09010497-06	Soil
7	MR08-IS338D-4-5-09A	L09010497-07	Soil
8	MR08-SS314-09A	L09010497-08	Soil
9	MR08-EB012309	L09010497-09	Water
10	MR08-IS362-4-5-09A	L09010497-10	Soil
11	MR08-SS362-09A	L09010497-11	Soil
12	MR08-IS363-4-5-09A	L09010497-12	Soil
13	MR08-SS363-09A	L09010497-13	Soil
14	MR08-IS364-4-5-09A	L09010497-14	Soil
15	MR08-SS364-09A	L09010497-15	Soil
16	MR08-IS365-4-5-09A	L09010497-16	Soil
17	MR08-SS365-09A	L09010497-17	Soil
18	MR08-SS366-09A	L09010497-18	Soil
19	MR08-IS366-4-5-09A	L09010497-19	Soil

The USEPA "Contract Laboratory Program National Functional Guidelines for Inorganic Data Review," October 2004, and professional judgement were used in evaluating the data in this summary report.

Holding Times - All samples were prepared and analyzed within 28 days for mercury and 180 days for all other metals.

Calibration - The ICV and CCV %R values were acceptable.

Method and Calibration Blanks - The method blanks were free of contamination.

Field and Equipment Blank - Field QC results are summarized below.

Blank ID	Compound	Conc. ug/L	Action Level mg/kg	Qualifier	Affected Samples
MR08-EB012309	None - ND	-	-	-	-
MR08-FB012609	None - ND	-	-	-	-
MR08-EB012209	Chromium	4.39	0.73	None	All associated >5X

ICP Interference Check Sample - All %R values were acceptable.

MS/MSD - The MS/MSD sample exhibited acceptable %R and RPD values except the following.

MS/MSD Sample ID	Compound	MS/MSD %R/RPD	Qualifier	Affected Samples
Reference (WG293654)	Barium	149%/141%%/Ok	J	1-8, 17, 18, 19
	Cadmium	Ok/73.6%/Ok	J/UJ	1-8, 17, 18, 19
	Chromium	161%/150%/Ok	J	1-8, 17, 18, 19

LCS - The LCS samples exhibited acceptable %R values.

ICP Serial Dilution - The ICP serial dilution sample exhibited acceptable %D values.

Field Duplicates - Field duplicate results are summarized below.

Compound	MR08-SS338-09A mg/kg	MR08-SS338D-09A mg/kg	RPD	Qualifier
Silver	0.255	0.801 U	NC	None
Barium	3.22	3.80	17%	None
Cadmium	0.163	0.0989	49%	None
Chromium	3.27	3.19	2%	None
Copper	0.624	0.625	0%	None
Antimony	3.62	3.14	14%	None
Selenium	0.200	0.302	41%	None

Compound	MR08-IS338-4-5-09A mg/kg	MR08-IS338D-4-5-09A mg/kg	RPD	Qualifier
Barium	6.15	9.98	47%	None
Chromium	5.30	5.26	1%	None
Arsenic	0.401	0.447	11%	None
Lead	4.38	5.50	23%	None

Compound Quantitation - Several samples were analyzed at various dilutions for various analytes due to high concentrations.

Report Number: L09010497

Report Date : February 19, 2009

1

Sample Number:	L09010497-01	PrePrep Method:	NONE	Instrument:	IRIS-ICP
Client ID:	MR08-IS340-4-5-09A	Prep Method:	3051	Prep Date:	01/27/2009 13:02
Matrix:	Soil	Analytical Method:	6010B	Cal Date:	01/29/2009 13:52
Workgroup Number:	WG293594	Analyst:	KHR	Run Date:	01/29/2009 21:16
Collect Date:	01/22/2009 14:20	Dilution:	1	File ID:	IR.012909.211600
Sample Tag:	01	Units:	mg/kg	Percent Solid:	85.5

Analyte	CAS. Number	Result	Qual	RL	MDL	
Silver, Total	7440-22-4		U	0.839	0.210	
Barium, Total	7440-39-3	10.2 J		0.420	0.0839	MSH
Cadmium, Total	7440-43-9	0.0990 J		0.168	0.0420	MSL
Chromium, Total	7440-47-3	4.86 J		0.839	0.101	MSH

U Undetected; the analyte was analyzed for, but not detected.
J Estimated ; the analyte concentration was less than the low standard (LOQ)

Microbac

13 DW 4/1/09

Report Number: L09010497
Report Date : February 19, 2009

Sample Number: L09010497-01
Client ID: MR08-IS340-4-5-09A
Matrix: Soil
Workgroup Number: WG293699
Collect Date: 01/22/2009 14:20
Sample Tag: DL01

PrePrep Method: NONE
Prep Method: 3051
Analytical Method: 6020
Analyst: JYH
Dilution: 2
Units: mg/kg

Instrument: ELAN-ICP
Prep Date: 01/28/2009 07:34
Cal Date: 01/30/2009 11:12
Run Date: 01/30/2009 12:41
File ID: EL.013009.124136
Percent Solid: 85.5

Analyte	CAS. Number	Result	Qual	RL	MDL
Arsenic, Total	7440-38-2	0.555	J	0.681	0.170
Lead, Total	7439-92-1	76.1		0.908	0.227
Selenium, Total	7782-49-2	0.269	J	0.908	0.227

J Estimated ; the analyte concentration was less than the low standard (LOQ)

Microbac

475 lw 4/1/09

Report Number: L09010497

Report Date : **February 19, 2009**

Sample Number: **L09010497-01**
Client ID: **MR08-IS340-4-5-09A**
Matrix: **Soil**
Workgroup Number: **WG294245**
Collect Date: **01/22/2009 14:20**
Sample Tag: **01**

PrePrep Method: **NONE**
Prep Method: **7471A**
Analytical Method: **7471A**
Analyst: **ADC**
Dilution: **1**
Units: **mg/kg**

Instrument: **HYDRA**
Prep Date: **01/27/2009 09:14**
Cal Date: **02/05/2009 10:37**
Run Date: **02/05/2009 12:14**
File ID: **HY.020509.121457**
Percent Solid: **85.5**

Analyte	CAS. Number	Result	Qual	RL	MDL
Mercury, Total	7439-97-6	0.0599	J	0.116	0.0232

J Estimated ; the analyte concentration was less than the low standard (LOQ)

Microbac

2496 lw 4/1/09

2

Sample Number: L09010497-02
Client ID: MR08-SS339-09A
Matrix: Soil
Workgroup Number: WG293594
Collect Date: 01/22/2009 14:35
Sample Tag: 01

PrePrep Method: NONE
Prep Method: 3051
Analytical Method: 6010B
Analyst: KHR
Dilution: 1
Units: mg/kg

Instrument: IRIS-ICP
Prep Date: 01/27/2009 13:02
Cal Date: 01/29/2009 13:52
Run Date: 01/29/2009 21:22
File ID: IR.012909.212200
Percent Solid: 82.0

Analyte	CAS. Number	Result	Qual	RL	MDL	
Silver, Total	7440-22-4		U	0.901	0.225	
Barium, Total	7440-39-3	9.59 J		0.450	0.0901	MSH
Cadmium, Total	7440-43-9	0.0788	J	0.180	0.0450	MSL
Chromium, Total	7440-47-3	3.70		0.901	0.108	MSH

U Undetected; the analyte was analyzed for, but not detected.
J Estimated ; the analyte concentration was less than the low standard (LOQ)

Microbac

14 lw
4/1/09

2

Sample Number:	L09010497-02	PrePrep Method:	NONE	Instrument:	ELAN-ICP
Client ID:	MR08-SS339-09A	Prep Method:	3051	Prep Date:	01/28/2009 07:34
Matrix:	Soil	Analytical Method:	6020	Cal Date:	01/30/2009 11:12
Workgroup Number:	WG293699	Analyst:	JYH	Run Date:	01/30/2009 12:47
Collect Date:	01/22/2009 14:35	Dilution:	2	File ID:	EL.013009.124738
Sample Tag:	DL01	Units:	mg/kg	Percent Solid:	82.0

Analyte	CAS. Number	Result	Qual	RL	MDL
Arsenic, Total	7440-38-2	0.544	J	0.716	0.179
Lead, Total	7439-92-1	29.9		0.954	0.239
Selenium, Total	7782-49-2	0.250	J	0.954	0.239

J Estimated ; the analyte concentration was less than the low standard (LOQ)

Microbac

476 LW 4/1/09

2

Sample Number:	L09010497-02	PrePrep Method:	NONE	Instrument:	HYDRA
Client ID:	MR08-SS339-09A	Prep Method:	7471A	Prep Date:	01/27/2009 09:14
Matrix:	Soil	Analytical Method:	7471A	Cal Date:	02/05/2009 10:37
Workgroup Number:	WG294245	Analyst:	ADC	Run Date:	02/05/2009 12:18
Collect Date:	01/22/2009 14:35	Dilution:	1	File ID:	HY.020509.121839
Sample Tag:	01	Units:	mg/kg	Percent Solid:	82.0

Analyte	CAS. Number	Result	Qual	RL	MDL
Mercury, Total	7439-97-6	0.0370	J	0.119	0.0238

J Estimated ; the analyte concentration was less than the low standard (LOQ)

Microbac

2497 lw 4/1/09

3

Sample Number: L09010497-03
Client ID: MR08-IS339-4-5-09A
Matrix: Soil
Workgroup Number: WG293594
Collect Date: 01/22/2009 14:30
Sample Tag: 01

PrePrep Method: NONE
Prep Method: 3051
Analytical Method: 6010B
Analyst: KHR
Dilution: 1
Units: mg/kg

Instrument: IRIS-ICP
Prep Date: 01/27/2009 13:02
Cal Date: 01/29/2009 13:52
Run Date: 01/29/2009 21:28
File ID: IR.012909.212800
Percent Solid: 90.3

Analyte	CAS. Number	Result	Qual	RL	MDL	
Silver, Total	7440-22-4		U	0.797	0.199	
Barium, Total	7440-39-3	3.65 J		0.398	0.0797	MSH
Cadmium, Total	7440-43-9	UJ	~~U~~	0.159	0.0398	MSL
Chromium, Total	7440-47-3	2.93 J		0.797	0.0956	MSH

U Undetected; the analyte was analyzed for, but not detected.

Microbac

15 lw 4/1/09

3

Sample Number: L09010497-03
Client ID: MR08-IS339-4-5-09A
Matrix: Soil
Workgroup Number: WG293699
Collect Date: 01/22/2009 14:30
Sample Tag: 01

PrePrep Method: NONE
Prep Method: 3051
Analytical Method: 6020
Analyst: JYH
Dilution: 1
Units: mg/kg

Instrument: ELAN-ICP
Prep Date: 01/28/2009 07:34
Cal Date: 01/30/2009 11:12
Run Date: 01/30/2009 12:53
File ID: EL.013009.125340
Percent Solid: 90.3

Analyte	CAS. Number	Result	Qual	RL	MDL
Arsenic, Total	7440-38-2	0.385		0.319	0.0797
Lead, Total	7439-92-1	3.73		0.425	0.106
Selenium, Total	7782-49-2		U	0.425	0.106

U Undetected; the analyte was analyzed for, but not detected.

Microbac

477 MW 4/1/09

3

Sample Number: L09010497-03
Client ID: MR08-IS339-4-5-09A
Matrix: Soil
Workgroup Number: WG294245
Collect Date: 01/22/2009 14:30
Sample Tag: 01

PrePrep Method: NONE
Prep Method: 7471A
Analytical Method: 7471A
Analyst: ADC
Dilution: 1
Units: mg/kg

Instrument: HYDRA
Prep Date: 01/27/2009 09:14
Cal Date: 02/05/2009 10:37
Run Date: 02/05/2009 12:20
File ID: HY.020509.122033
Percent Solid: 90.3

Analyte	CAS. Number	Result	Qual	RL	MDL
Mercury, Total	7439-97-6		U	0.110	0.0221

U Undetected; the analyte was analyzed for, but not detected.

Microbac

 MW 4/1/09

4

Sample Number: L09010497-04
Client ID: MR08-SS338-09A
Matrix: Soil
Workgroup Number: WG293594
Collect Date: 01/22/2009 16:00
Sample Tag: 01

PrePrep Method: NONE
Prep Method: 3051
Analytical Method: 6010B
Analyst: KHR
Dilution: 1
Units: mg/kg

Instrument: IRIS-ICP
Prep Date: 01/27/2009 13:02
Cal Date: 01/29/2009 13:52
Run Date: 01/29/2009 21:34
File ID: IR.012909.213400
Percent Solid: 85.6

Analyte	CAS. Number	Result	Qual	RL	MDL	
Silver, Total	7440-22-4	0.255	J	0.801	0.200	
Barium, Total	7440-39-3	3.22 J		0.400	0.0801	MSH
Cadmium, Total	7440-43-9	0.163		0.160	0.0400	MSL
Chromium, Total	7440-47-3	3.27		0.801	0.0961	MSH

J Estimated ; the analyte concentration was less than the low standard (LOQ)

Microbac

16 JW 4/1/09

4

Sample Number: L09010497-04
Client ID: MR08-SS338-09A
Matrix: Soil
Workgroup Number: WG293699
Collect Date: 01/22/2009 16:00
Sample Tag: 01

PrePrep Method: NONE
Prep Method: 3051
Analytical Method: 6020
Analyst: JYH
Dilution: 1
Units: mg/kg

Instrument: ELAN-ICP
Prep Date: 01/28/2009 07:34
Cal Date: 01/30/2009 11:12
Run Date: 01/30/2009 12:59
File ID: EL.013009.125943
Percent Solid: 85.6

Analyte	CAS. Number	Result	Qual	RL	MDL
Arsenic, Total	7440-38-2	0.624		0.331	0.0828
Lead, Total	7439-92-1	3.62		0.442	0.110
Selenium, Total	7782-49-2	0.200	J	0.442	0.110

J Estimated ; the analyte concentration was less than the low standard (LOQ)

Microbac

478 LW 4/1/09

4

Sample Number:	L09010497-04	PrePrep Method:	NONE	Instrument:	HYDRA
Client ID:	MR08-SS338-09A	Prep Method:	7471A	Prep Date:	01/27/2009 09:14
Matrix:	Soil	Analytical Method:	7471A	Cal Date:	02/05/2009 10:37
Workgroup Number:	WG294245	Analyst:	ADC	Run Date:	02/05/2009 12:22
Collect Date:	01/22/2009 16:00	Dilution:	1	File ID:	HY.020509.122221
Sample Tag:	01	Units:	mg/kg	Percent Solid:	85.6

Analyte	CAS. Number	Result	Qual	RL	MDL
Mercury, Total	7439-97-6		U	0.108	0.0216

U Undetected; the analyte was analyzed for, but not detected.

Microbac

2499 MW 4/1/09

5

Sample Number: L09010497-05
Client ID: MR08-SS338D-09A
Matrix: Soil
Workgroup Number: WG293594
Collect Date: 01/22/2009 16:00
Sample Tag: 01

PrePrep Method: NONE
Prep Method: 3051
Analytical Method: 6010B
Analyst: KHR
Dilution: 1
Units: mg/kg

Instrument: IRIS-ICP
Prep Date: 01/27/2009 13:02
Cal Date: 01/29/2009 13:52
Run Date: 01/29/2009 21:52
File ID: IR.012909.215200
Percent Solid: 92.4

Analyte	CAS. Number	Result	Qual	RL	MDL
Silver, Total	7440-22-4		U	0.801	0.200
Barium, Total	7440-39-3	3.80	J	0.400	0.0801
Cadmium, Total	7440-43-9	0.0989	J	0.160	0.0400
Chromium, Total	7440-47-3	3.19		0.801	0.0961

MSH
MSL
MSH

U Undetected; the analyte was analyzed for, but not detected.
J Estimated ; the analyte concentration was less than the low standard (LOQ)

Microbac

17 JW
4/1/09

5

Sample Number: L09010497-05
Client ID: MR08-SS338D-09A
Matrix: Soil
Workgroup Number: WG293699
Collect Date: 01/22/2009 16:00
Sample Tag: 01

PrePrep Method: NONE
Prep Method: 3051
Analytical Method: 6020
Analyst: JYH
Dilution: 1
Units: mg/kg

Instrument: ELAN-ICP
Prep Date: 01/28/2009 07:34
Cal Date: 01/30/2009 11:12
Run Date: 01/30/2009 13:05
File ID: EL.013009.130546
Percent Solid: 92.4

Analyte	CAS. Number	Result	Qual	RL	MDL
Arsenic, Total	7440-38-2	0.625		0.300	0.0751
Lead, Total	7439-92-1	3.14		0.401	0.100
Selenium, Total	7782-49-2	0.302	J	0.401	0.100

J Estimated ; the analyte concentration was less than the low standard (LOQ)

Microbac

479 DW 4/1/09

5

Sample Number: L09010497-05
Client ID: MR08-SS338D-09A
Matrix: Soil
Workgroup Number: WG294245
Collect Date: 01/22/2009 16:00
Sample Tag: 01

PrePrep Method: NONE
Prep Method: 7471A
Analytical Method: 7471A
Analyst: ADC
Dilution: 1
Units: mg/kg

Instrument: HYDRA
Prep Date: 01/27/2009 09:14
Cal Date: 02/05/2009 10:37
Run Date: 02/05/2009 12:24
File ID: HY.020509.122416
Percent Solid: 92.4

Analyte	CAS. Number	Result	Qual	RL	MDL
Mercury, Total	7439-97-6		U	0.108	0.0216

U Undetected; the analyte was analyzed for, but not detected.

Microbac

2500 MW 4/1/09

6

Sample Number: L09010497-06
Client ID: MR08-IS338-4-5-09A
Matrix: Soil
Workgroup Number: WG293594
Collect Date: 01/22/2009 16:10
Sample Tag: 01

PrePrep Method: NONE
Prep Method: 3051
Analytical Method: 6010B
Analyst: KHR
Dilution: 1
Units: mg/kg

Instrument: IRIS-ICP
Prep Date: 01/27/2009 13:02
Cal Date: 01/29/2009 13:52
Run Date: 01/29/2009 21:59
File ID: IR.012909.215900
Percent Solid: 76.8

Analyte	CAS. Number	Result	Qual	RL	MDL	
Silver, Total	7440-22-4		U	0.912	0.228	
Barium, Total	7440-39-3	6.15 J		0.456	0.0912	MSH
Cadmium, Total	7440-43-9	UJ	~~J~~	0.182	0.0456	MSV
Chromium, Total	7440-47-3	5.30 J		0.912	0.109	MSH

U Undetected; the analyte was analyzed for, but not detected.

Microbac

18 JLW 4/1/09

6

Sample Number: L09010497-06
Client ID: MR08-IS338-4-5-09A
Matrix: Soil
Workgroup Number: WG293699
Collect Date: 01/22/2009 16:10
Sample Tag: 01

PrePrep Method: NONE
Prep Method: 3051
Analytical Method: 6020
Analyst: JYH
Dilution: 1
Units: mg/kg

Instrument: ELAN-ICP
Prep Date: 01/28/2009 07:34
Cal Date: 01/30/2009 11:12
Run Date: 01/30/2009 13:24
File ID: EL.013009.132454
Percent Solid: 76.8

Analyte	CAS. Number	Result	Qual	RL	MDL
Arsenic, Total	7440-38-2	0.401		0.380	0.0950
Lead, Total	7439-92-1	4.38		0.507	0.127
Selenium, Total	7782-49-2		U	0.507	0.127

U Undetected; the analyte was analyzed for, but not detected.

Microbac

480 MW 4/1/09

6

Sample Number: L09010497-06
Client ID: MR08-IS338-4-5-09A
Matrix: Soil
Workgroup Number: WG294245
Collect Date: 01/22/2009 16:10
Sample Tag: 01

PrePrep Method: NONE
Prep Method: 7471A
Analytical Method: 7471A
Analyst: ADC
Dilution: 1
Units: mg/kg

Instrument: HYDRA
Prep Date: 01/27/2009 09:14
Cal Date: 02/05/2009 10:37
Run Date: 02/05/2009 12:26
File ID: HY.020509.122603
Percent Solid: 76.8

Analyte	CAS. Number	Result	Qual	RL	MDL
Mercury, Total	7439-97-6		U	0.121	0.0242

U Undetected; the analyte was analyzed for, but not detected.

Microbac

2501 lcw 4/1/09

7

Sample Number: L09010497-07
Client ID: MR08-IS338D-4-5-09A
Matrix: Soil
Workgroup Number: WG293594
Collect Date: 01/22/2009 16:10
Sample Tag: 01

PrePrep Method: NONE
Prep Method: 3051
Analytical Method: 6010B
Analyst: KHR
Dilution: 1
Units: mg/kg

Instrument: IRIS-ICP
Prep Date: 01/27/2009 13:02
Cal Date: 01/29/2009 13:52
Run Date: 01/29/2009 22:05
File ID: IR.012909.220500
Percent Solid: 67.3

Analyte	CAS. Number	Result	Qual	RL	MDL	
Silver, Total	7440-22-4		U	1.07	0.267	
Barium, Total	7440-39-3	9.98 J		0.534	0.107	MSH
Cadmium, Total	7440-43-9	UJ	~~U~~	0.214	0.0534	MSL
Chromium, Total	7440-47-3	5.26 J		1.07	0.128	MSH

U Undetected; the analyte was analyzed for, but not detected.

Microbac

19 LW 4/1/09

7

Sample Number: L09010497-07
Client ID: MR08-IS338D-4-5-09A
Matrix: Soil
Workgroup Number: WG293699
Collect Date: 01/22/2009 16:10
Sample Tag: 01

PrePrep Method: NONE
Prep Method: 3051
Analytical Method: 6020
Analyst: JYH
Dilution: 1
Units: mg/kg

Instrument: ELAN-ICP
Prep Date: 01/28/2009 07:34
Cal Date: 01/30/2009 11:12
Run Date: 01/30/2009 13:30
File ID: EL.013009.133058
Percent Solid: 67.3

Analyte	CAS. Number	Result	Qual	RL	MDL
Arsenic, Total	7440-38-2	0.447		0.408	0.102
Lead, Total	7439-92-1	5.50		0.544	0.136
Selenium, Total	7782-49-2		U	0.544	0.136

U Undetected; the analyte was analyzed for, but not detected.

Microbac

kw
4/1/09

7

Sample Number: L09010497-07
Client ID: MR08-IS338D-4-5-09A
Matrix: Soil
Workgroup Number: WG294245
Collect Date: 01/22/2009 16:10
Sample Tag: 01

PrePrep Method: NONE
Prep Method: 7471A
Analytical Method: 7471A
Analyst: ADC
Dilution: 1
Units: mg/kg

Instrument: HYDRA
Prep Date: 01/27/2009 09:14
Cal Date: 02/05/2009 10:37
Run Date: 02/05/2009 12:28
File ID: HY.020509.122800
Percent Solid: 67.3

Analyte	CAS. Number	Result	Qual	RL	MDL
Mercury, Total	7439-97-6		U	0.138	0.0276

U Undetected; the analyte was analyzed for, but not detected.

Microbac

2502 MW 4/1/09

8

Sample Number: L09010497-08
Client ID: MR08-SS314-09A
Matrix: Soil
Workgroup Number: WG293594
Collect Date: 01/22/2009 08:15
Sample Tag: 01

PrePrep Method: NONE
Prep Method: 3051
Analytical Method: 6010B
Analyst: KHR
Dilution: 1
Units: mg/kg

Instrument: IRIS-ICP
Prep Date: 01/27/2009 13:02
Cal Date: 01/29/2009 13:52
Run Date: 01/29/2009 22:11
File ID: IR.012909.221100
Percent Solid: 78.1

Analyte	CAS. Number	Result	Qual	RL	MDL	
Silver, Total	7440-22-4		U	0.896	0.224	
Barium, Total	7440-39-3	10.5 J		0.448	0.0896	MSH
Cadmium, Total	7440-43-9	0.0538		0.179	0.0448	MSL
Chromium, Total	7440-47-3	3.42		0.896	0.108	MSH

U Undetected; the analyte was analyzed for, but not detected.
J Estimated ; the analyte concentration was less than the low standard (LOQ)

Microbac

20 lw 4/1/09

8

Sample Number: L09010497-08
Client ID: MR08-SS314-09A
Matrix: Soil
Workgroup Number: WG293699
Collect Date: 01/22/2009 08:15
Sample Tag: DL01

PrePrep Method: NONE
Prep Method: 3051
Analytical Method: 6020
Analyst: JYH
Dilution: 2
Units: mg/kg

Instrument: ELAN-ICP
Prep Date: 01/28/2009 07:34
Cal Date: 01/30/2009 11:12
Run Date: 01/30/2009 13:37
File ID: EL.013009.133701
Percent Solid: 78.1

Analyte	CAS. Number	Result	Qual	RL	MDL
Arsenic, Total	7440-38-2	0.873		0.765	0.191
Lead, Total	7439-92-1	36.5		1.02	0.255
Selenium, Total	7782-49-2	0.390	J	1.02	0.255

J Estimated ; the analyte concentration was less than the low standard (LOQ)

Microbac

 JLW 4/1/09

8

Sample Number: L09010497-08
Client ID: MR08-SS314-09A
Matrix: Soil
Workgroup Number: WG294245
Collect Date: 01/22/2009 08:15
Sample Tag: 01

PrePrep Method: NONE
Prep Method: 7471A
Analytical Method: 7471A
Analyst: ADC
Dilution: 1
Units: mg/kg

Instrument: HYDRA
Prep Date: 01/27/2009 09:14
Cal Date: 02/05/2009 10:37
Run Date: 02/05/2009 12:33
File ID: HY.020509.123324
Percent Solid: 78.1

Analyte	CAS. Number	Result	Qual	RL	MDL
Mercury, Total	7439-97-6		U	0.124	0.0247

U Undetected; the analyte was analyzed for, but not detected.

Microbac

2503 lw 4/1/09

C

Sample Number: L09010497-09
Client ID: MR08-EB012309
Matrix: Water
Workgroup Number: WG293610
Collect Date: 01/23/2009 07:30
Sample Tag: 01

PrePrep Method: NONE
Prep Method: 3005A
Analytical Method: 6010B
Analyst: ADC
Dilution: 1
Units: ug/L

Instrument: PE-ICP2
Prep Date: 01/28/2009 06:40
Cal Date: 01/29/2009 15:47
Run Date: 01/30/2009 00:15
File ID: P2.013009.001557

Analyte	CAS. Number	Result	Qual	RL	MDL
Barium, Total	7440-39-3		U	10.0	2.50
Cadmium, Total	7440-43-9		U	1.00	0.250
Chromium, Total	7440-47-3		U	10.0	2.50
Silver, Total	7440-22-4		U	6.00	2.00

U Undetected; the analyte was analyzed for, but not detected.

Microbac

21 lw 4/1/09

9

Sample Number: L09010497-09
Client ID: MR08-EB012309
Matrix: Water
Workgroup Number: WG294000
Collect Date: 01/23/2009 07:30
Sample Tag: 01

PrePrep Method: NONE
Prep Method: 3015
Analytical Method: 6020
Analyst: JYH
Dilution: 1
Units: ug/L

Instrument: ELAN-ICP
Prep Date: 01/26/2009 13:23
Cal Date: 02/05/2009 10:09
Run Date: 02/05/2009 22:29
File ID: EL.020509.222931

Analyte	CAS. Number	Result	Qual	RL	MDL
Arsenic, Total	7440-38-2		U	1.00	0.250
Lead, Total	7439-92-1		U	1.00	0.250
Selenium, Total	7782-49-2		U	2.00	0.500

U Undetected; the analyte was analyzed for, but not detected.

Microbac

483 lw 4/1/09

9

Sample Number: L09010497-09
Client ID: MR08-EB012309
Matrix: Water
Workgroup Number: WG293567
Collect Date: 01/23/2009 07:30
Sample Tag: 01

PrePrep Method: NONE
Prep Method: 7470A
Analytical Method: 7470A
Analyst: ADC
Dilution: 1
Units: ug/L

Instrument: HYDRA
Prep Date: 01/27/2009 08:23
Cal Date: 01/29/2009 09:46
Run Date: 01/29/2009 11:01
File ID: HY.012909.110157

Analyte	CAS. Number	Result	Qual	RL	MDL
Mercury	7439-97-6		U	0.400	0.100

U Undetected; the analyte was analyzed for, but not detected.

Microbac

CW
4/1/09

10

Sample Number: L09010497-10
Client ID: MR08-IS362-4-5-09A
Matrix: Soil
Workgroup Number: WG293594
Collect Date: 01/23/2009 08:25
Sample Tag: 01

PrePrep Method: NONE
Prep Method: 3051
Analytical Method: 6010B
Analyst: KHR
Dilution: 1
Units: mg/kg

Instrument: IRIS-ICP
Prep Date: 01/27/2009 13:02
Cal Date: 01/29/2009 13:52
Run Date: 01/29/2009 22:17
File ID: IR.012909.221700
Percent Solid: 87.3

Analyte	CAS. Number	Result	Qual	RL	MDL
Silver, Total	7440-22-4		U	0.881	0.220
Barium, Total	7440-39-3	2.17		0.440	0.0881
Cadmium, Total	7440-43-9		U	0.176	0.0440
Chromium, Total	7440-47-3	2.30		0.881	0.106

U Undetected; the analyte was analyzed for, but not detected.

Microbac

Jew 4/1/09

10

Sample Number: L09010497-10
Client ID: MR08-IS362-4-5-09A
Matrix: Soil
Workgroup Number: WG293699
Collect Date: 01/23/2009 08:25
Sample Tag: 01

PrePrep Method: NONE
Prep Method: 3051
Analytical Method: 6020
Analyst: JYH
Dilution: 1
Units: mg/kg

Instrument: ELAN-ICP
Prep Date: 01/28/2009 07:34
Cal Date: 01/30/2009 11:12
Run Date: 01/30/2009 13:43
File ID: EL.013009.134302
Percent Solid: 87.3

Analyte	CAS. Number	Result	Qual	RL	MDL
Arsenic, Total	7440-38-2	0.566		0.320	0.0799
Lead, Total	7439-92-1	3.74		0.426	0.107
Selenium, Total	7782-49-2		U	0.426	0.107

U Undetected; the analyte was analyzed for, but not detected.

Microbac

484 RW
4/1/09

10

Sample Number: L09010497-10
Client ID: MR08-IS362-4-5-09A
Matrix: Soil
Workgroup Number: WG294245
Collect Date: 01/23/2009 08:25
Sample Tag: 01

PrePrep Method: NONE
Prep Method: 7471A
Analytical Method: 7471A
Analyst: ADC
Dilution: 1
Units: mg/kg

Instrument: HYDRA
Prep Date: 01/27/2009 09:14
Cal Date: 02/05/2009 10:37
Run Date: 02/05/2009 12:35
File ID: HY.020509.123550
Percent Solid: 87.3

Analyte	CAS. Number	Result	Qual	RL	MDL
Mercury, Total	7439-97-6		U	0.107	0.0215

U Undetected; the analyte was analyzed for, but not detected.

Microbac

2505 lw 4/1/09

11

Sample Number: L09010497-11
Client ID: MR08-SS362-09A
Matrix: Soil
Workgroup Number: WG293594
Collect Date: 01/23/2009 08:30
Sample Tag: 01

PrePrep Method: NONE
Prep Method: 3051
Analytical Method: 6010B
Analyst: KHR
Dilution: 1
Units: mg/kg

Instrument: IRIS-ICP
Prep Date: 01/27/2009 13:02
Cal Date: 01/29/2009 13:52
Run Date: 01/29/2009 22:23
File ID: IR.012909.222300
Percent Solid: 72.3

Analyte	CAS. Number	Result	Qual	RL	MDL
Silver, Total	7440-22-4		U	1.05	0.262
Barium, Total	7440-39-3	11.1		0.524	0.105
Cadmium, Total	7440-43-9	0.0980	J	0.210	0.0524
Chromium, Total	7440-47-3	3.77		1.05	0.126

U Undetected; the analyte was analyzed for, but not detected.
J Estimated ; the analyte concentration was less than the low standard (LOQ)

Microbac

23 KW 4/1/09

11

Sample Number: L09010497-11
Client ID: MR08-SS362-09A
Matrix: Soil
Workgroup Number: WG293699
Collect Date: 01/23/2009 08:30
Sample Tag: DL01

PrePrep Method: NONE
Prep Method: 3051
Analytical Method: 6020
Analyst: JYH
Dilution: 2
Units: mg/kg

Instrument: ELAN-ICP
Prep Date: 01/28/2009 07:34
Cal Date: 01/30/2009 11:12
Run Date: 01/30/2009 13:49
File ID: EL.013009.134903
Percent Solid: 72.3

Analyte	CAS. Number	Result	Qual	RL	MDL
Arsenic, Total	7440-38-2	0.768	J	0.815	0.204
Lead, Total	7439-92-1	43.6		1.09	0.272
Selenium, Total	7782-49-2	0.304	J	1.09	0.272

J Estimated ; the analyte concentration was less than the low standard (LOQ)

Microbac

485 lew 4/1/09

11

Sample Number: L09010497-11
Client ID: MR08-SS362-09A
Matrix: Soil
Workgroup Number: WG294245
Collect Date: 01/23/2009 08:30
Sample Tag: 01

PrePrep Method: NONE
Prep Method: 7471A
Analytical Method: 7471A
Analyst: ADC
Dilution: 1
Units: mg/kg

Instrument: HYDRA
Prep Date: 01/27/2009 09:14
Cal Date: 02/05/2009 10:37
Run Date: 02/05/2009 12:37
File ID: HY.020509.123739
Percent Solid: 72.3

Analyte	CAS. Number	Result	Qual	RL	MDL
Mercury, Total	7439-97-6		U	0.129	0.0257

U Undetected; the analyte was analyzed for, but not detected.

Microbac

2506 RW 4/1/09

12

Sample Number: L09010497-12
Client ID: MR08-IS363-4-5-09A
Matrix: Soil
Workgroup Number: WG293594
Collect Date: 01/23/2009 08:45
Sample Tag: 01

PrePrep Method: NONE
Prep Method: 3051
Analytical Method: 6010B
Analyst: KHR
Dilution: 1
Units: mg/kg

Instrument: IRIS-ICP
Prep Date: 01/27/2009 13:02
Cal Date: 01/29/2009 13:52
Run Date: 01/29/2009 22:29
File ID: IR.012909.222900
Percent Solid: 81.9

Analyte	CAS. Number	Result	Qual	RL	MDL
Silver, Total	7440-22-4		U	0.890	0.222
Barium, Total	7440-39-3	3.99		0.445	0.0890
Cadmium, Total	7440-43-9		U	0.178	0.0445
Chromium, Total	7440-47-3	6.68		0.890	0.107

U Undetected; the analyte was analyzed for, but not detected.

Microbac

24 MW 4/1/09

12

Sample Number: L09010497-12
Client ID: MR08-IS363-4-5-09A
Matrix: Soil
Workgroup Number: WG293699
Collect Date: 01/23/2009 08:45
Sample Tag: 01

PrePrep Method: NONE
Prep Method: 3051
Analytical Method: 6020
Analyst: JYH
Dilution: 1
Units: mg/kg

Instrument: ELAN-ICP
Prep Date: 01/28/2009 07:34
Cal Date: 01/30/2009 11:12
Run Date: 01/30/2009 13:55
File ID: EL.013009.135505
Percent Solid: 81.9

Analyte	CAS. Number	Result	Qual	RL	MDL
Arsenic, Total	7440-38-2	0.209	J	0.350	0.0876
Lead, Total	7439-92-1	7.24		0.467	0.117
Selenium, Total	7782-49-2	0.217	J	0.467	0.117

J Estimated ; the analyte concentration was less than the low standard (LOQ)

Microbac

JW 4/1/09

12

Sample Number: L09010497-12
Client ID: MR08-IS363-4-5-09A
Matrix: Soil
Workgroup Number: WG294245
Collect Date: 01/23/2009 08:45
Sample Tag: 01

PrePrep Method: NONE
Prep Method: 7471A
Analytical Method: 7471A
Analyst: ADC
Dilution: 1
Units: mg/kg

Instrument: HYDRA
Prep Date: 01/27/2009 09:14
Cal Date: 02/05/2009 10:37
Run Date: 02/05/2009 12:41
File ID: HY.020509.124103
Percent Solid: 81.9

Analyte	CAS. Number	Result	Qual	RL	MDL
Mercury, Total	7439-97-6		U	0.122	0.0243

U Undetected; the analyte was analyzed for, but not detected.

Microbac

2507 Mus 4/1/09

13

Sample Number: L09010497-13
Client ID: MR08-SS363-09A
Matrix: Soil
Workgroup Number: WG293594
Collect Date: 01/23/2009 08:50
Sample Tag: 01

PrePrep Method: NONE
Prep Method: 3051
Analytical Method: 6010B
Analyst: KHR
Dilution: 1
Units: mg/kg

Instrument: IRIS-ICP
Prep Date: 01/27/2009 13:02
Cal Date: 01/29/2009 13:52
Run Date: 01/29/2009 22:35
File ID: IR.012909.223500
Percent Solid: 69.6

Analyte	CAS. Number	Result	Qual	RL	MDL
Silver, Total	7440-22-4		U	1.10	0.275
Barium, Total	7440-39-3	5.44		0.551	0.110
Cadmium, Total	7440-43-9		U	0.220	0.0551
Chromium, Total	7440-47-3	3.45		1.10	0.132

U Undetected; the analyte was analyzed for, but not detected.

Microbac

 lw 4/1/09

13

Sample Number: L09010497-13
Client ID: MR08-SS363-09A
Matrix: Soil
Workgroup Number: WG293699
Collect Date: 01/23/2009 08:50
Sample Tag: DL01

PrePrep Method: NONE
Prep Method: 3051
Analytical Method: 6020
Analyst: JYH
Dilution: 2
Units: mg/kg

Instrument: ELAN-ICP
Prep Date: 01/28/2009 07:34
Cal Date: 01/30/2009 11:12
Run Date: 01/30/2009 14:01
File ID: EL.013009.140107
Percent Solid: 69.6

Analyte	CAS. Number	Result	Qual	RL	MDL
Arsenic, Total	7440-38-2	0.402	J	0.783	0.196
Lead, Total	7439-92-1	12.4		1.04	0.261
Selenium, Total	7782-49-2	0.349	J	1.04	0.261

J Estimated ; the analyte concentration was less than the low standard (LOQ)

Microbac

 lew 4/1/09

13

Sample Number: L09010497-13
Client ID: MR08-SS363-09A
Matrix: Soil
Workgroup Number: WG294245
Collect Date: 01/23/2009 08:50
Sample Tag: 01

PrePrep Method: NONE
Prep Method: 7471A
Analytical Method: 7471A
Analyst: ADC
Dilution: 1
Units: mg/kg

Instrument: HYDRA
Prep Date: 01/27/2009 09:14
Cal Date: 02/05/2009 10:37
Run Date: 02/05/2009 12:44
File ID: HY.020509.124430
Percent Solid: 69.6

Analyte	CAS. Number	Result	Qual	RL	MDL
Mercury, Total	7439-97-6		U	0.134	0.0267

U Undetected; the analyte was analyzed for, but not detected.

Microbac

2508 MW 4/1/09

14

Sample Number: L09010497-14
Client ID: MR08-IS364-4-5-09A
Matrix: Soil
Workgroup Number: WG293594
Collect Date: 01/23/2009 09:10
Sample Tag: 01

PrePrep Method: NONE
Prep Method: 3051
Analytical Method: 6010B
Analyst: KHR
Dilution: 1
Units: mg/kg

Instrument: IRIS-ICP
Prep Date: 01/27/2009 13:02
Cal Date: 01/29/2009 13:52
Run Date: 01/29/2009 22:41
File ID: IR.012909.224100
Percent Solid: 77.6

Analyte	CAS. Number	Result	Qual	RL	MDL
Silver, Total	7440-22-4		U	0.990	0.248
Barium, Total	7440-39-3	6.30		0.495	0.0990
Cadmium, Total	7440-43-9		U	0.198	0.0495
Chromium, Total	7440-47-3	3.65		0.990	0.119

U Undetected; the analyte was analyzed for, but not detected.

Microbac

26 lw 4/1/09

14

Sample Number: L09010497-14
Client ID: MR08-IS364-4-5-09A
Matrix: Soil
Workgroup Number: WG293699
Collect Date: 01/23/2009 09:10
Sample Tag: DL01

PrePrep Method: NONE
Prep Method: 3051
Analytical Method: 6020
Analyst: JYH
Dilution: 2
Units: mg/kg

Instrument: ELAN-ICP
Prep Date: 01/28/2009 07:34
Cal Date: 01/30/2009 11:12
Run Date: 01/30/2009 14:07
File ID: EL.013009.140709
Percent Solid: 77.6

Analyte	CAS. Number	Result	Qual	RL	MDL
Arsenic, Total	7440-38-2	0.616	J	0.705	0.176
Lead, Total	7439-92-1	13.3		0.940	0.235
Selenium, Total	7782-49-2	0.295	J	0.940	0.235

J Estimated ; the analyte concentration was less than the low standard (LOQ)

Microbac

488 lw 4/1/09

14

Sample Number: L09010497-14
Client ID: MR08-IS364-4-5-09A
Matrix: Soil
Workgroup Number: WG294245
Collect Date: 01/23/2009 09:10
Sample Tag: 01

PrePrep Method: NONE
Prep Method: 7471A
Analytical Method: 7471A
Analyst: ADC
Dilution: 1
Units: mg/kg

Instrument: HYDRA
Prep Date: 01/27/2009 09:14
Cal Date: 02/05/2009 10:37
Run Date: 02/05/2009 12:47
File ID: HY.020509.124706
Percent Solid: 77.6

Analyte	CAS. Number	Result	Qual	RL	MDL
Mercury, Total	7439-97-6		U	0.120	0.0239

U Undetected; the analyte was analyzed for, but not detected.

Microbac

2509 lw 4/1/09

15

Sample Number: L09010497-15
Client ID: MR08-SS364-09A
Matrix: Soil
Workgroup Number: WG293594
Collect Date: 01/23/2009 09:15
Sample Tag: 01

PrePrep Method: NONE
Prep Method: 3051
Analytical Method: 6010B
Analyst: KHR
Dilution: 1
Units: mg/kg

Instrument: IRIS-ICP
Prep Date: 01/27/2009 13:02
Cal Date: 01/29/2009 13:52
Run Date: 01/29/2009 22:47
File ID: IR.012909.224700
Percent Solid: 75.7

Analyte	CAS. Number	Result	Qual	RL	MDL
Silver, Total	7440-22-4		U	1.00	0.251
Barium, Total	7440-39-3	4.47		0.502	0.100
Cadmium, Total	7440-43-9		U	0.201	0.0502
Chromium, Total	7440-47-3	2.95		1.00	0.120

U Undetected; the analyte was analyzed for, but not detected.

Microbac

27 lw
4/1/09

15

Sample Number: L09010497-15
Client ID: MR08-SS364-09A
Matrix: Soil
Workgroup Number: WG294455
Collect Date: 01/23/2009 09:15
Sample Tag: DL01

PrePrep Method: NONE
Prep Method: 3051
Analytical Method: 6020
Analyst: JYH
Dilution: 2
Units: mg/kg

Instrument: ELAN-ICP
Prep Date: 01/29/2009 06:41
Cal Date: 02/09/2009 10:40
Run Date: 02/09/2009 20:28
File ID: EL.020909.202848
Percent Solid: 75.7

Analyte	CAS. Number	Result	Qual	RL	MDL
Arsenic, Total	7440-38-2	0.332	J	0.751	0.188
Lead, Total	7439-92-1	6.51		1.00	0.250
Selenium, Total	7782-49-2	0.251	J	1.00	0.250

J Estimated ; the analyte concentration was less than the low standard (LOQ)

Microbac

 lew 4/1/09

15

Sample Number: L09010497-15
Client ID: MR08-SS364-09A
Matrix: Soil
Workgroup Number: WG294245
Collect Date: 01/23/2009 09:15
Sample Tag: 01

PrePrep Method: NONE
Prep Method: 7471A
Analytical Method: 7471A
Analyst: ADC
Dilution: 1
Units: mg/kg

Instrument: HYDRA
Prep Date: 01/27/2009 09:14
Cal Date: 02/05/2009 10:37
Run Date: 02/05/2009 12:49
File ID: HY.020509.124955
Percent Solid: 75.7

Analyte	CAS. Number	Result	Qual	RL	MDL
Mercury, Total	7439-97-6		U	0.124	0.0248

U Undetected; the analyte was analyzed for, but not detected.

Microbac

2510 lw 4/1/09

16

Sample Number: L09010497-16
Client ID: MR08-IS365-4-5-09A
Matrix: Soil
Workgroup Number: WG293594
Collect Date: 01/23/2009 09:40
Sample Tag: 01

PrePrep Method: NONE
Prep Method: 3051
Analytical Method: 6010B
Analyst: KHR
Dilution: 1
Units: mg/kg

Instrument: IRIS-ICP
Prep Date: 01/27/2009 13:02
Cal Date: 01/29/2009 13:52
Run Date: 01/29/2009 23:05
File ID: IR.012909.230500
Percent Solid: 94.3

Analyte	CAS. Number	Result	Qual	RL	MDL
Silver, Total	7440-22-4		U	0.795	0.199
Barium, Total	7440-39-3	0.566		0.398	0.0795
Cadmium, Total	7440-43-9		U	0.159	0.0398
Chromium, Total	7440-47-3	0.622	J	0.795	0.0954

U Undetected; the analyte was analyzed for, but not detected.
J Estimated ; the analyte concentration was less than the low standard (LOQ)

Microbac

4/1/09

16

Sample Number: L09010497-16
Client ID: MR08-IS365-4-5-09A
Matrix: Soil
Workgroup Number: WG294455
Collect Date: 01/23/2009 09:40
Sample Tag: DL01

PrePrep Method: NONE
Prep Method: 3051
Analytical Method: 6020
Analyst: JYH
Dilution: 2
Units: mg/kg

Instrument: ELAN-ICP
Prep Date: 01/29/2009 06:41
Cal Date: 02/09/2009 10:40
Run Date: 02/09/2009 20:34
File ID: EL.020909.203453
Percent Solid: 94.3

Analyte	CAS. Number	Result	Qual	RL	MDL
Arsenic, Total	7440-38-2		U	0.630	0.158
Lead, Total	7439-92-1	1.21		0.840	0.210
Selenium, Total	7782-49-2		U	0.840	0.210

U Undetected; the analyte was analyzed for, but not detected.

Microbac

lw 4/1/09

16

Sample Number: L09010497-16
Client ID: MR08-IS365-4-5-09A
Matrix: Soil
Workgroup Number: WG294245
Collect Date: 01/23/2009 09:40
Sample Tag: 01

PrePrep Method: NONE
Prep Method: 7471A
Analytical Method: 7471A
Analyst: ADC
Dilution: 1
Units: mg/kg

Instrument: HYDRA
Prep Date: 01/27/2009 09:14
Cal Date: 02/05/2009 10:37
Run Date: 02/05/2009 12:51
File ID: HY.020509.125139
Percent Solid: 94.3

Analyte	CAS. Number	Result	Qual	RL	MDL
Mercury, Total	7439-97-6		U	0.0984	0.0197

U Undetected; the analyte was analyzed for, but not detected.

Microbac

2511 fw 4/1/09

17

Sample Number: L09010497-17
Client ID: MR08-SS365-09A
Matrix: Soil
Workgroup Number: WG293654
Collect Date: 01/23/2009 09:45
Sample Tag: 01

PrePrep Method: NONE
Prep Method: 3051
Analytical Method: 6010B
Analyst: KHR
Dilution: 1
Units: mg/kg

Instrument: IRIS-ICP
Prep Date: 01/28/2009 11:50
Cal Date: 01/29/2009 13:52
Run Date: 01/29/2009 23:36
File ID: IR.012909.233600
Percent Solid: 86.7

Analyte	CAS. Number	Result	Qual	RL	MDL	
Silver, Total	7440-22-4	0.217	J	0.817	0.204	
Barium, Total	7440-39-3	9.43 J		0.409	0.0817	MSH
Cadmium, Total	7440-43-9	0.170		0.163	0.0409	MSL
Chromium, Total	7440-47-3	5.83		0.817	0.0980	MSH

J Estimated ; the analyte concentration was less than the low standard (LOQ)

Microbac

 JW 4/1/09

17

Sample Number: L09010497-17
Client ID: MR08-SS365-09A
Matrix: Soil
Workgroup Number: WG294455
Collect Date: 01/23/2009 09:45
Sample Tag: DL01

PrePrep Method: NONE
Prep Method: 3051
Analytical Method: 6020
Analyst: JYH
Dilution: 2
Units: mg/kg

Instrument: ELAN-ICP
Prep Date: 01/29/2009 06:41
Cal Date: 02/09/2009 10:40
Run Date: 02/09/2009 20:53
File ID: EL.020909.205309
Percent Solid: 86.7

Analyte	CAS. Number	Result	Qual	RL	MDL
Arsenic, Total	7440-38-2	0.686		0.675	0.169
Lead, Total	7439-92-1	26.6		0.900	0.225
Selenium, Total	7782-49-2	0.270	J	0.900	0.225

J Estimated ; the analyte concentration was less than the low standard (LOQ)

Microbac

 lw 4/1/09

17

Sample Number: L09010497-17
Client ID: MR08-SS365-09A
Matrix: Soil
Workgroup Number: WG294245
Collect Date: 01/23/2009 09:45
Sample Tag: 01

PrePrep Method: NONE
Prep Method: 7471A
Analytical Method: 7471A
Analyst: ADC
Dilution: 1
Units: mg/kg

Instrument: HYDRA
Prep Date: 01/27/2009 09:14
Cal Date: 02/05/2009 10:37
Run Date: 02/05/2009 12:54
File ID: HY.020509.125403
Percent Solid: 86.7

Analyte	CAS. Number	Result	Qual	RL	MDL
Mercury, Total	7439-97-6		U	0.113	0.0226

U Undetected; the analyte was analyzed for, but not detected.

Microbac

2512 JW 4/1/09

18

Sample Number: L09010497-18
Client ID: MR08-SS366-09A
Matrix: Soil
Workgroup Number: WG293654
Collect Date: 01/23/2009 10:15
Sample Tag: 01

PrePrep Method: NONE
Prep Method: 3051
Analytical Method: 6010B
Analyst: KHR
Dilution: 1
Units: mg/kg

Instrument: IRIS-ICP
Prep Date: 01/28/2009 11:50
Cal Date: 01/29/2009 13:52
Run Date: 01/30/2009 00:01
File ID: IR.013009.000000
Percent Solid: 92.6

Analyte	CAS. Number	Result	Qual	RL	MDL	
Silver, Total	7440-22-4		U	0.788	0.197	
Barium, Total	7440-39-3	9.29 J		0.394	0.0788	MSH
Cadmium, Total	7440-43-9	UJ		0.158	0.0394	MSL
Chromium, Total	7440-47-3	5.50 J		0.788	0.0946	MSH

U Undetected; the analyte was analyzed for, but not detected.

Microbac

30 LW
4/1/09

18

Sample Number: L09010497-18
Client ID: MR08-SS366-09A
Matrix: Soil
Workgroup Number: WG294455
Collect Date: 01/23/2009 10:15
Sample Tag: DL01

PrePrep Method: NONE
Prep Method: 3051
Analytical Method: 6020
Analyst: JYH
Dilution: 2
Units: mg/kg

Instrument: ELAN-ICP
Prep Date: 01/29/2009 06:41
Cal Date: 02/09/2009 10:40
Run Date: 02/09/2009 21:12
File ID: EL.020909.211215
Percent Solid: 92.6

Analyte	CAS. Number	Result	Qual	RL	MDL
Arsenic, Total	7440-38-2	0.462	J	0.628	0.157
Lead, Total	7439-92-1	3.19		0.837	0.209
Selenium, Total	7782-49-2		U	0.837	0.209

U Undetected; the analyte was analyzed for, but not detected.
J Estimated ; the analyte concentration was less than the low standard (LOQ)

Microbac

lw
4/1/09

18

Sample Number: L09010497-18
Client ID: MR08-SS366-09A
Matrix: Soil
Workgroup Number: WG294245
Collect Date: 01/23/2009 10:15
Sample Tag: 01

PrePrep Method: NONE
Prep Method: 7471A
Analytical Method: 7471A
Analyst: ADC
Dilution: 1
Units: mg/kg

Instrument: HYDRA
Prep Date: 01/27/2009 09:14
Cal Date: 02/05/2009 10:37
Run Date: 02/05/2009 12:56
File ID: HY.020509.125650
Percent Solid: 92.6

Analyte	CAS. Number	Result	Qual	RL	MDL
Mercury, Total	7439-97-6		U	0.106	0.0213

U Undetected; the analyte was analyzed for, but not detected.

Microbac

2513 JW 4/1/09

19

Sample Number: L09010497-19
Client ID: MR08-IS366-4-5-09A
Matrix: Soil
Workgroup Number: WG293654
Collect Date: 01/23/2009 10:20
Sample Tag: 01

PrePrep Method: NONE
Prep Method: 3051
Analytical Method: 6010B
Analyst: KHR
Dilution: 1
Units: mg/kg

Instrument: IRIS-ICP
Prep Date: 01/28/2009 11:50
Cal Date: 01/29/2009 13:52
Run Date: 01/30/2009 00:19
File ID: IR.013009.001900
Percent Solid: 90.2

Analyte	CAS. Number	Result	Qual	RL	MDL	
Silver, Total	7440-22-4		U	0.815	0.204	
Barium, Total	7440-39-3	6.52 J		0.407	0.0815	MSH
Cadmium, Total	7440-43-9	UJ	~~J~~	0.163	0.0407	MSL
Chromium, Total	7440-47-3	7.18 J		0.815	0.0978	MSH

U Undetected; the analyte was analyzed for, but not detected.

Microbac

RCW
4/1/09

19

Sample Number: L09010497-19
Client ID: MR08-IS366-4-5-09A
Matrix: Soil
Workgroup Number: WG294455
Collect Date: 01/23/2009 10:20
Sample Tag: DL01

PrePrep Method: NONE
Prep Method: 3051
Analytical Method: 6020
Analyst: JYH
Dilution: 2
Units: mg/kg

Instrument: ELAN-ICP
Prep Date: 01/29/2009 06:41
Cal Date: 02/09/2009 10:40
Run Date: 02/09/2009 21:18
File ID: EL.020909.211818
Percent Solid: 90.2

Analyte	CAS. Number	Result	Qual	RL	MDL
Arsenic, Total	7440-38-2		U	0.614	0.153
Lead, Total	7439-92-1	3.27		0.818	0.205
Selenium, Total	7782-49-2		U	0.818	0.205

U Undetected; the analyte was analyzed for, but not detected.

Microbac

kw
4/1/09

19

Sample Number: L09010497-19
Client ID: MR08-IS366-4-5-09A
Matrix: Soil
Workgroup Number: WG294245
Collect Date: 01/23/2009 10:20
Sample Tag: 01

PrePrep Method: NONE
Prep Method: 7471A
Analytical Method: 7471A
Analyst: ADC
Dilution: 1
Units: mg/kg

Instrument: HYDRA
Prep Date: 01/27/2009 09:14
Cal Date: 02/13/2009 09:32
Run Date: 02/13/2009 09:52
File ID: HY.021309.095243
Percent Solid: 90.2

Analyte	CAS. Number	Result	Qual	RL	MDL
Mercury, Total	7439-97-6		U	0.105	0.0211

U Undetected; the analyte was analyzed for, but not detected.

Microbac

2514 JLW 4/1/09

ENVIRONMENTAL
Data Services, Inc.

METALS

USEPA Region IV - Level IV Review

Site: MCB Camp Lejeune, TO-09 SDG #: L09010534

Client: CH2M HILL, Inc., Virginia Beach, Virginia Date: April 1, 2009

Laboratory: Microbac Laboratories, Inc., Marietta, Ohio Reviewer: Nancy Weaver

EDS ID	Client Sample ID	Laboratory Sample ID	Matrix
1	MR08-SS367-09A	L09010534-01	Soil
2	MR08-IS367-4-5-09A	L09010534-02	Soil
3	MR08-SS356-09A	L09010534-03	Soil
4	MR08-IS356-4-5-09A	L09010534-04	Soil
5	MR08-SS357-09A	L09010534-05	Soil
6	MR08-IS357-4-5-09A	L09010534-06	Soil
7	MR08-SS358-09A	L09010534-07	Soil
8	MR08-IS358-4-5-09A	L09010534-08	Soil
9	MR08-IS359-4-5-09A	L09010534-09	Soil
10	MR08-SS359-09A	L09010534-10	Soil
11	MR08-IS360-4-5-09A	L09010534-11	Soil
12	MR08-IS360D-4-5-09A	L09010534-12	Soil
13	MR08-SS360-09A	L09010534-13	Soil
14	MR08-SS360D-09A	L09010534-14	Soil
15	MR08-SS361-09A	L09010534-15	Soil
16	MR08-IS361-4-5-09A	L09010534-16	Soil
17	MR08-SS368-09A	L09010534-17	Soil
18	MR08-IS368-4-5-09A	L09010534-18	Soil
19	MR08-SS355-09A	L09010534-19	Soil
20	MR08-IS355-4-5-09A	L09010534-20	Soil

The USEPA "Contract Laboratory Program National Functional Guidelines for Inorganic Data Review," October 2004, and professional judgement were used in evaluating the data in this summary report.

Holding Times - All samples were prepared and analyzed within 28 days for mercury and 180 days for all other metals.

Calibration - The ICV and CCV %R values were acceptable.

Method and Calibration Blanks - The method blanks were free of contamination.

Field and Equipment Blank - Field QC results are summarized below.

Blank ID	Compound	Conc. ug/L	Action Level ug/L	Qualifier	Affected Samples
MR08-FB012609	None-ND	-	-	-	-
MR08-EB012309	None-ND	-	-	-	-

ICP Interference Check Sample - All %R values were acceptable.

MS/MSD - The MS/MSD sample exhibited acceptable %R and RPD values except the following.

MS/MSD Sample ID	Compound	MS/MSD %R/RPD	Qualifier	Affected Samples
Reference (WG293654)	Barium	149%/141%/Ok	J	1-17
	Cadmium	Ok/73.6%/Ok	J/UJ	1-17
	Chromium	161%/150%/Ok	J	1-17
Reference (WG294510)	Lead	345%/310%/Ok	J	16-20

LCS - The LCS samples exhibited acceptable %R values.

ICP Serial Dilution - The ICP serial dilution sample exhibited acceptable %D values.

Field Duplicates - Field duplicate results are summarized below.

Compound	MR08-IS360-4-5-09A mg/kg	MR08-IS360D-4-5-09A mg/kg	RPD	Qualifier
Barium	9.97	11.0	10%	None
Chromium	8.75	8.88	1%	None
Arsenic	0.439	0.317	32%	None
Lead	4.59	3.63	23%	None

Compound	MR08-SS360-09A mg/kg	MR08-SS360D-09A mg/kg	RPD	Qualifier
Barium	9.95	7.53	28%	None
Chromium	6.29	4.35	36%	None
Arsenic	0.664	0.626	6%	None
Lead	11.2	12.1	8%	None
Selenium	0.289	0.257	12%	None

Compound Quantitation - Several samples were analyzed at various dilutions for various analytes due to high concentrations.

Report Number: L09010534

Report Date : February 23, 2009

Sample Number:	L09010534-01	PrePrep Method:	NONE	Instrument:	IRIS-ICP
Client ID:	MR08-SS367-09A	Prep Method:	3051	Prep Date:	01/28/2009 11:50
Matrix:	Soil	Analytical Method:	6010B	Cal Date:	01/29/2009 13:52
Workgroup Number:	WG293654	Analyst:	KHR	Run Date:	01/30/2009 00:25
Collect Date:	01/23/2009 10:40	Dilution:	1	File ID:	IR.013009.002500
Sample Tag:	01	Units:	mg/kg	Percent Solid:	83.3

Analyte	CAS. Number	Result	Qual	RL	MDL	
Silver, Total	7440-22-4		U	0.838	0.209	
Barium, Total	7440-39-3	6.22 J		0.419	0.0838	MSH
Cadmium, Total	7440-43-9	UJ	~~U~~	0.168	0.0419	MSL
Chromium, Total	7440-47-3	4.26 J		0.838	0.101	MSH

U Undetected; the analyte was analyzed for, but not detected.

Microbac

12 lew 11.109

Report Number: L09010534

Report Date : February 23, 2009

Sample Number:	L09010534-01	PrePrep Method:	NONE	Instrument:	ELAN-ICP
Client ID:	MR08-SS367-09A	Prep Method:	3051	Prep Date:	01/29/2009 06:41
Matrix:	Soil	Analytical Method:	6020	Cal Date:	02/09/2009 10:40
Workgroup Number:	WG294455	Analyst:	JYH	Run Date:	02/09/2009 21:24
Collect Date:	01/23/2009 10:40	Dilution:	2	File ID:	EL.020909.212421
Sample Tag:	DL01	Units:	mg/kg	Percent Solid:	83.3

Analyte	CAS. Number	Result	Qual	RL	MDL
Arsenic, Total	7440-38-2	0.443	J	0.701	0.175
Lead, Total	7439-92-1	2.28		0.934	0.234
Selenium, Total	7782-49-2		U	0.934	0.234

U Undetected; the analyte was analyzed for, but not detected.
J Estimated ; the analyte concentration was less than the low standard (LOQ)

Microbac

691 lw 4/1/09

Report Number: L09010534

Report Date : **February 23, 2009**

Sample Number:	L09010534-01	PrePrep Method:	NONE	Instrument:	HYDRA
Client ID:	MR08-SS367-09A	Prep Method:	7471A	Prep Date:	01/28/2009 09:11
Matrix:	Soil	Analytical Method:	7471A	Cal Date:	02/02/2009 13:15
Workgroup Number:	WG293920	Analyst:	ADC	Run Date:	02/02/2009 13:47
Collect Date:	01/23/2009 10:40	Dilution:	1	File ID:	HY.020209.134734
Sample Tag:	01	Units:	mg/kg	Percent Solid:	83.3

Analyte	CAS. Number	Result	Qual	RL	MDL
Mercury, Total	7439-97-6		U	0.113	0.0227

U Undetected; the analyte was analyzed for, but not detected.

Microbac

1753 lcw
4/1/09

2

Sample Number: L09010534-02
Client ID: MR08-IS367-4-5-09A
Matrix: Soil
Workgroup Number: WG293654
Collect Date: 01/23/2009 10:45
Sample Tag: 01

PrePrep Method: NONE
Prep Method: 3051
Analytical Method: 6010B
Analyst: KHR
Dilution: 1
Units: mg/kg

Instrument: IRIS-ICP
Prep Date: 01/28/2009 11:50
Cal Date: 01/29/2009 13:52
Run Date: 01/30/2009 00:31
File ID: IR.013009.003100
Percent Solid: 77.8

Analyte	CAS. Number	Result	Qual	RL	MDL	
Silver, Total	7440-22-4		U	0.944	0.236	
Barium, Total	7440-39-3	3.21 J		0.472	0.0944	MSH
Cadmium, Total	7440-43-9	UJ	~~U~~	0.189	0.0472	MSL
Chromium, Total	7440-47-3	3.46 J		0.944	0.113	MSH

U Undetected; the analyte was analyzed for, but not detected.

Microbac

13 [illegible]
4/1/09

2

Sample Number: L09010534-02
Client ID: MR08-IS367-4-5-09A
Matrix: Soil
Workgroup Number: WG294455
Collect Date: 01/23/2009 10:45
Sample Tag: DL01

PrePrep Method: NONE
Prep Method: 3051
Analytical Method: 6020
Analyst: JYH
Dilution: 2
Units: mg/kg

Instrument: ELAN-ICP
Prep Date: 01/29/2009 06:41
Cal Date: 02/09/2009 10:40
Run Date: 02/09/2009 21:30
File ID: EL.020909.213024
Percent Solid: 77.8

Analyte	CAS. Number	Result	Qual	RL	MDL
Arsenic, Total	7440-38-2	0.242	J	0.721	0.180
Lead, Total	7439-92-1	2.05		0.961	0.240
Selenium, Total	7782-49-2		U	0.961	0.240

U Undetected; the analyte was analyzed for, but not detected.
J Estimated ; the analyte concentration was less than the low standard (LOQ)

Microbac

692 KW
4/1/09

2

Sample Number: L09010534-02
Client ID: MR08-IS367-4-5-09A
Matrix: Soil
Workgroup Number: WG293920
Collect Date: 01/23/2009 10:45
Sample Tag: 01

PrePrep Method: NONE
Prep Method: 7471A
Analytical Method: 7471A
Analyst: ADC
Dilution: 1
Units: mg/kg

Instrument: HYDRA
Prep Date: 01/28/2009 09:11
Cal Date: 02/02/2009 13:15
Run Date: 02/02/2009 13:52
File ID: HY.020209.135230
Percent Solid: 77.8

Analyte	CAS. Number	Result	Qual	RL	MDL
Mercury, Total	7439-97-6		U	0.125	0.0250

U Undetected; the analyte was analyzed for, but not detected.

Microbac

1754 [illegible]
4/1/09

3

Sample Number: L09010534-03
Client ID: MR08-SS356-09A
Matrix: Soil
Workgroup Number: WG293654
Collect Date: 01/23/2009 11:30
Sample Tag: 01

PrePrep Method: NONE
Prep Method: 3051
Analytical Method: 6010B
Analyst: KHR
Dilution: 1
Units: mg/kg

Instrument: IRIS-ICP
Prep Date: 01/28/2009 11:50
Cal Date: 01/29/2009 13:52
Run Date: 01/30/2009 00:37
File ID: IR.013009.003700
Percent Solid: 80.4

Analyte	CAS. Number	Result	Qual	RL	MDL	
Silver, Total	7440-22-4	0.232	J	0.883	0.221	
Barium, Total	7440-39-3	9.96		0.441	0.0883	MSH
Cadmium, Total	7440-43-9	0.0596	J	0.177	0.0441	MSL
Chromium, Total	7440-47-3	6.73		0.883	0.106	MSH

J Estimated ; the analyte concentration was less than the low standard (LOQ)

Microbac

14 JW 4/1/09

3

Sample Number: L09010534-03
Client ID: MR08-SS356-09A
Matrix: Soil
Workgroup Number: WG294455
Collect Date: 01/23/2009 11:30
Sample Tag: DL01

PrePrep Method: NONE
Prep Method: 3051
Analytical Method: 6020
Analyst: JYH
Dilution: 2
Units: mg/kg

Instrument: ELAN-ICP
Prep Date: 01/29/2009 06:41
Cal Date: 02/09/2009 10:40
Run Date: 02/09/2009 21:36
File ID: EL.020909.213628
Percent Solid: 80.4

Analyte	CAS. Number	Result	Qual	RL	MDL
Arsenic, Total	7440-38-2	1.06		0.708	0.177
Lead, Total	7439-92-1	27.6		0.944	0.236
Selenium, Total	7782-49-2	0.756	J	0.944	0.236

J Estimated ; the analyte concentration was less than the low standard (LOQ)

Microbac

693 lw
4/1/09

3

Sample Number: L09010534-03
Client ID: MR08-SS356-09A
Matrix: Soil
Workgroup Number: WG293920
Collect Date: 01/23/2009 11:30
Sample Tag: 01

PrePrep Method: NONE
Prep Method: 7471A
Analytical Method: 7471A
Analyst: ADC
Dilution: 1
Units: mg/kg

Instrument: HYDRA
Prep Date: 01/28/2009 09:11
Cal Date: 02/02/2009 13:15
Run Date: 02/02/2009 13:59
File ID: HY.020209.135915
Percent Solid: 80.4

Analyte	CAS. Number	Result	Qual	RL	MDL
Mercury, Total	7439-97-6		U	0.123	0.0245

U Undetected; the analyte was analyzed for, but not detected.

Microbac

1755 MW 4/1/09

4

Sample Number: L09010534-04
Client ID: MR08-IS356-4-5-09A
Matrix: Soil
Workgroup Number: WG293654
Collect Date: 01/23/2009 11:35
Sample Tag: 01

PrePrep Method: NONE
Prep Method: 3051
Analytical Method: 6010B
Analyst: KHR
Dilution: 1
Units: mg/kg

Instrument: IRIS-ICP
Prep Date: 01/28/2009 11:50
Cal Date: 01/29/2009 13:52
Run Date: 01/30/2009 00:43
File ID: IR.013009.004300
Percent Solid: 90.8

Analyte	CAS. Number	Result	Qual	RL	MDL	
Silver, Total	7440-22-4		U	0.831	0.208	
Barium, Total	7440-39-3	8.72 J		0.415	0.0831	MSH
Cadmium, Total	7440-43-9	UJ	~~J~~	0.166	0.0415	MSL
Chromium, Total	7440-47-3	7.32 J		0.831	0.0997	MSH

U Undetected; the analyte was analyzed for, but not detected.

Microbac

15 MW 4/1/09

4

Sample Number: L09010534-04
Client ID: MR08-IS356-4-5-09A
Matrix: Soil
Workgroup Number: WG294455
Collect Date: 01/23/2009 11:35
Sample Tag: DL01

PrePrep Method: NONE
Prep Method: 3051
Analytical Method: 6020
Analyst: JYH
Dilution: 2
Units: mg/kg

Instrument: ELAN-ICP
Prep Date: 01/29/2009 06:41
Cal Date: 02/09/2009 10:40
Run Date: 02/09/2009 21:42
File ID: EL.020909.214233
Percent Solid: 90.8

Analyte	CAS. Number	Result	Qual	RL	MDL
Arsenic, Total	7440-38-2	0.270	J	0.660	0.165
Lead, Total	7439-92-1	2.74		0.881	0.220
Selenium, Total	7782-49-2		U	0.881	0.220

U Undetected; the analyte was analyzed for, but not detected.
J Estimated ; the analyte concentration was less than the low standard (LOQ)

Microbac

694 DW 4/1/09

4

Sample Number: L09010534-04
Client ID: MR08-IS356-4-5-09A
Matrix: Soil
Workgroup Number: WG293920
Collect Date: 01/23/2009 11:35
Sample Tag: 01

PrePrep Method: NONE
Prep Method: 7471A
Analytical Method: 7471A
Analyst: ADC
Dilution: 1
Units: mg/kg

Instrument: HYDRA
Prep Date: 01/28/2009 09:11
Cal Date: 02/02/2009 13:15
Run Date: 02/02/2009 14:01
File ID: HY.020209.140109
Percent Solid: 90.8

Analyte	CAS. Number	Result	Qual	RL	MDL
Mercury, Total	7439-97-6		U	0.102	0.0204

U Undetected; the analyte was analyzed for, but not detected.

Microbac®

1756 MW
4/1/09

5

Sample Number: L09010534-05
Client ID: MR08-SS357-09A
Matrix: Soil
Workgroup Number: WG293654
Collect Date: 01/23/2009 13:05
Sample Tag: 01

PrePrep Method: NONE
Prep Method: 3051
Analytical Method: 6010B
Analyst: KHR
Dilution: 1
Units: mg/kg

Instrument: IRIS-ICP
Prep Date: 01/28/2009 11:50
Cal Date: 01/29/2009 13:52
Run Date: 01/30/2009 00:49
File ID: IR.013009.004900
Percent Solid: 83.3

Analyte	CAS. Number	Result	Qual	RL	MDL	
Silver, Total	7440-22-4	0.259	J	0.869	0.217	
Barium, Total	7440-39-3	7.92 J		0.435	0.0869	MSH
Cadmium, Total	7440-43-9	UJ	~~U~~	0.174	0.0435	MSL
Chromium, Total	7440-47-3	5.40 J		0.869	0.104	MSH

U Undetected; the analyte was analyzed for, but not detected.
J Estimated ; the analyte concentration was less than the low standard (LOQ)

Microbac

16 WO 4/1/09

5

Sample Number: L09010534-05
Client ID: MR08-SS357-09A
Matrix: Soil
Workgroup Number: WG294455
Collect Date: 01/23/2009 13:05
Sample Tag: DL01

PrePrep Method: NONE
Prep Method: 3051
Analytical Method: 6020
Analyst: JYH
Dilution: 2
Units: mg/kg

Instrument: ELAN-ICP
Prep Date: 01/29/2009 06:41
Cal Date: 02/09/2009 10:40
Run Date: 02/09/2009 21:48
File ID: EL.020909.214837
Percent Solid: 83.3

Analyte	CAS. Number	Result	Qual	RL	MDL
Arsenic, Total	7440-38-2	0.380	J	0.678	0.170
Lead, Total	7439-92-1	2.04		0.904	0.226
Selenium, Total	7782-49-2		U	0.904	0.226

U Undetected; the analyte was analyzed for, but not detected.
J Estimated ; the analyte concentration was less than the low standard (LOQ)

Microbac

695 MW
4/1/09

5

Sample Number: L09010534-05
Client ID: MR08-SS357-09A
Matrix: Soil
Workgroup Number: WG293920
Collect Date: 01/23/2009 13:05
Sample Tag: 01

PrePrep Method: NONE
Prep Method: 7471A
Analytical Method: 7471A
Analyst: ADC
Dilution: 1
Units: mg/kg

Instrument: HYDRA
Prep Date: 01/28/2009 09:11
Cal Date: 02/02/2009 13:15
Run Date: 02/02/2009 14:03
File ID: HY.020209.140302
Percent Solid: 83.3

Analyte	CAS. Number	Result	Qual	RL	MDL
Mercury, Total	7439-97-6		U	0.115	0.0231

U Undetected; the analyte was analyzed for, but not detected.

Microbac

1757 fw
4/1/09

6

Sample Number: L09010534-06
Client ID: MR08-IS357-4-5-09A
Matrix: Soil
Workgroup Number: WG293654
Collect Date: 01/23/2009 13:10
Sample Tag: 01

PrePrep Method: NONE
Prep Method: 3051
Analytical Method: 6010B
Analyst: KHR
Dilution: 1
Units: mg/kg

Instrument: IRIS-ICP
Prep Date: 01/28/2009 11:50
Cal Date: 01/29/2009 13:52
Run Date: 01/30/2009 00:55
File ID: IR.013009.005500
Percent Solid: 78.5

Analyte	CAS. Number	Result	Qual	RL	MDL	
Silver, Total	7440-22-4		U	0.977	0.244	
Barium, Total	7440-39-3	8.44 J		0.489	0.0977	MSH
Cadmium, Total	7440-43-9	UJ	~~U~~	0.195	0.0489	MSL
Chromium, Total	7440-47-3	8.43 J		0.977	0.117	MSH

U Undetected; the analyte was analyzed for, but not detected.

Microbac

17 QW
11/1/09

6

Sample Number: L09010534-06
Client ID: MR08-IS357-4-5-09A
Matrix: Soil
Workgroup Number: WG294455
Collect Date: 01/23/2009 13:10
Sample Tag: DL01

PrePrep Method: NONE
Prep Method: 3051
Analytical Method: 6020
Analyst: JYH
Dilution: 2
Units: mg/kg

Instrument: ELAN-ICP
Prep Date: 01/29/2009 06:41
Cal Date: 02/09/2009 10:40
Run Date: 02/09/2009 21:54
File ID: EL.020909.215442
Percent Solid: 78.5

Analyte	CAS. Number	Result	Qual	RL	MDL
Arsenic, Total	7440-38-2	1.28		0.757	0.189
Lead, Total	7439-92-1	2.25		1.01	0.252
Selenium, Total	7782-49-2		U	1.01	0.252

U Undetected; the analyte was analyzed for, but not detected.

Microbac

696 MW 4/1/09

6

Sample Number: L09010534-06
Client ID: MR08-IS357-4-5-09A
Matrix: Soil
Workgroup Number: WG293920
Collect Date: 01/23/2009 13:10
Sample Tag: 01

PrePrep Method: NONE
Prep Method: 7471A
Analytical Method: 7471A
Analyst: ADC
Dilution: 1
Units: mg/kg

Instrument: HYDRA
Prep Date: 01/28/2009 09:11
Cal Date: 02/02/2009 13:15
Run Date: 02/02/2009 14:04
File ID: HY.020209.140444
Percent Solid: 78.5

Analyte	CAS. Number	Result	Qual	RL	MDL
Mercury, Total	7439-97-6		U	0.123	0.0245

U Undetected; the analyte was analyzed for, but not detected.

Microbac

1758 RW 4/1/09

7

Sample Number: L09010534-07
Client ID: MR08-SS358-09A
Matrix: Soil
Workgroup Number: WG293654
Collect Date: 01/23/2009 13:40
Sample Tag: 01

PrePrep Method: NONE
Prep Method: 3051
Analytical Method: 6010B
Analyst: KHR
Dilution: 1
Units: mg/kg

Instrument: IRIS-ICP
Prep Date: 01/28/2009 11:50
Cal Date: 01/29/2009 13:52
Run Date: 01/30/2009 01:01
File ID: IR.013009.010100
Percent Solid: 82.7

Analyte	CAS. Number	Result	Qual	RL	MDL	
Silver, Total	7440-22-4	0.260	J	0.845	0.211	
Barium, Total	7440-39-3	5.41 J		0.423	0.0845	MSH
Cadmium, Total	7440-43-9	UJ	~~J~~	0.169	0.0423	MSL
Chromium, Total	7440-47-3	3.45 J		0.845	0.101	MSH

U Undetected; the analyte was analyzed for, but not detected.
J Estimated ; the analyte concentration was less than the low standard (LOQ)

Microbac

7

Sample Number: L09010534-07
Client ID: MR08-SS358-09A
Matrix: Soil
Workgroup Number: WG294455
Collect Date: 01/23/2009 13:40
Sample Tag: DL01

PrePrep Method: NONE
Prep Method: 3051
Analytical Method: 6020
Analyst: JYH
Dilution: 2
Units: mg/kg

Instrument: ELAN-ICP
Prep Date: 01/29/2009 06:41
Cal Date: 02/09/2009 10:40
Run Date: 02/09/2009 22:00
File ID: EL.020909.220048
Percent Solid: 82.7

Analyte	CAS. Number	Result	Qual	RL	MDL
Arsenic, Total	7440-38-2	0.672	J	0.724	0.181
Lead, Total	7439-92-1	52.4		0.965	0.241
Selenium, Total	7782-49-2	0.451	J	0.965	0.241

J Estimated ; the analyte concentration was less than the low standard (LOQ)

Microbac

697 QCW 4/1/09

7

Sample Number: L09010534-07
Client ID: MR08-SS358-09A
Matrix: Soil
Workgroup Number: WG293920
Collect Date: 01/23/2009 13:40
Sample Tag: 01

PrePrep Method: NONE
Prep Method: 7471A
Analytical Method: 7471A
Analyst: ADC
Dilution: 1
Units: mg/kg

Instrument: HYDRA
Prep Date: 01/28/2009 09:11
Cal Date: 02/02/2009 13:15
Run Date: 02/02/2009 14:14
File ID: HY.020209.141427
Percent Solid: 82.7

Analyte	CAS. Number	Result	Qual	RL	MDL
Mercury, Total	7439-97-6		U	0.117	0.0235

U Undetected; the analyte was analyzed for, but not detected.

Microbac

1759 MW 4/1/09

8

Sample Number: L09010534-08
Client ID: MR08-IS358-4-5-09A
Matrix: Soil
Workgroup Number: WG293654
Collect Date: 01/23/2009 13:45
Sample Tag: 01

PrePrep Method: NONE
Prep Method: 3051
Analytical Method: 6010B
Analyst: KHR
Dilution: 1
Units: mg/kg

Instrument: IRIS-ICP
Prep Date: 01/28/2009 11:50
Cal Date: 01/29/2009 13:52
Run Date: 01/30/2009 01:07
File ID: IR.013009.010700
Percent Solid: 93.4

Analyte	CAS. Number	Result	Qual	RL	MDL	
Silver, Total	7440-22-4		U	0.801	0.200	
Barium, Total	7440-39-3	1.20 J		0.400	0.0801	MSH
Cadmium, Total	7440-43-9	UJ	~~U~~	0.160	0.0400	MSL
Chromium, Total	7440-47-3	1.22 J		0.801	0.0961	MSH

U Undetected; the analyte was analyzed for, but not detected.

Microbac

19 lw 10/1/09

8

Sample Number: L09010534-08
Client ID: MR08-IS358-4-5-09A
Matrix: Soil
Workgroup Number: WG294455
Collect Date: 01/23/2009 13:45
Sample Tag: DL01

PrePrep Method: NONE
Prep Method: 3051
Analytical Method: 6020
Analyst: JYH
Dilution: 2
Units: mg/kg

Instrument: ELAN-ICP
Prep Date: 01/29/2009 06:41
Cal Date: 02/09/2009 10:40
Run Date: 02/09/2009 22:06
File ID: EL.020909.220653
Percent Solid: 93.4

Analyte	CAS. Number	Result	Qual	RL	MDL
Arsenic, Total	7440-38-2		U	0.627	0.157
Lead, Total	7439-92-1	1.21		0.836	0.209
Selenium, Total	7782-49-2		U	0.836	0.209

U Undetected; the analyte was analyzed for, but not detected.

Microbac

698 fw
11.1.19

8

Sample Number: L09010534-08
Client ID: MR08-IS358-4-5-09A
Matrix: Soil
Workgroup Number: WG293920
Collect Date: 01/23/2009 13:45
Sample Tag: 01

PrePrep Method: NONE
Prep Method: 7471A
Analytical Method: 7471A
Analyst: ADC
Dilution: 1
Units: mg/kg

Instrument: HYDRA
Prep Date: 01/28/2009 09:11
Cal Date: 02/02/2009 13:15
Run Date: 02/02/2009 14:16
File ID: HY.020209.141634
Percent Solid: 93.4

Analyte	CAS. Number	Result	Qual	RL	MDL
Mercury, Total	7439-97-6		U	0.104	0.0208

U Undetected; the analyte was analyzed for, but not detected.

Microbac

1760 Lew 4/1/09

9

Sample Number: L09010534-09
Client ID: MR08-IS359-4-5-09A
Matrix: Soil
Workgroup Number: WG293654
Collect Date: 01/23/2009 14:05
Sample Tag: 01

PrePrep Method: NONE
Prep Method: 3051
Analytical Method: 6010B
Analyst: KHR
Dilution: 1
Units: mg/kg

Instrument: IRIS-ICP
Prep Date: 01/28/2009 11:50
Cal Date: 01/29/2009 13:52
Run Date: 01/30/2009 01:14
File ID: IR.013009.011400
Percent Solid: 78.0

Analyte	CAS. Number	Result	Qual	RL	MDL	
Silver, Total	7440-22-4		U	0.881	0.220	
Barium, Total	7440-39-3	6.01 J		0.441	0.0881	MSH
Cadmium, Total	7440-43-9	UJ	~~J~~	0.176	0.0441	MSL
Chromium, Total	7440-47-3	6.95 J		0.881	0.106	MSH

U Undetected; the analyte was analyzed for, but not detected.

Microbac

20 JW 4/1/09

9

Sample Number: L09010534-09
Client ID: MR08-IS359-4-5-09A
Matrix: Soil
Workgroup Number: WG294455
Collect Date: 01/23/2009 14:05
Sample Tag: DL01

PrePrep Method: NONE
Prep Method: 3051
Analytical Method: 6020
Analyst: JYH
Dilution: 2
Units: mg/kg

Instrument: ELAN-ICP
Prep Date: 01/29/2009 06:41
Cal Date: 02/09/2009 10:40
Run Date: 02/09/2009 22:26
File ID: EL.020909.222602
Percent Solid: 78.0

Analyte	CAS. Number	Result	Qual	RL	MDL
Arsenic, Total	7440-38-2		U	0.750	0.187
Lead, Total	7439-92-1	1.63		0.999	0.250
Selenium, Total	7782-49-2		U	0.999	0.250

U Undetected; the analyte was analyzed for, but not detected.

Microbac

699 LW 4/1/09

9

Sample Number: L09010534-09
Client ID: MR08-IS359-4-5-09A
Matrix: Soil
Workgroup Number: WG293920
Collect Date: 01/23/2009 14:05
Sample Tag: 01

PrePrep Method: NONE
Prep Method: 7471A
Analytical Method: 7471A
Analyst: ADC
Dilution: 1
Units: mg/kg

Instrument: HYDRA
Prep Date: 01/28/2009 09:11
Cal Date: 02/02/2009 13:15
Run Date: 02/02/2009 14:18
File ID: HY.020209.141817
Percent Solid: 78.0

Analyte	CAS. Number	Result	Qual	RL	MDL
Mercury, Total	7439-97-6		U	0.120	0.0240

U Undetected; the analyte was analyzed for, but not detected.

Microbac

1761 MW 4/1/09

10

Sample Number: L09010534-10
Client ID: MR08-SS359-09A
Matrix: Soil
Workgroup Number: WG293654
Collect Date: 01/23/2009 14:10
Sample Tag: 01

PrePrep Method: NONE
Prep Method: 3051
Analytical Method: 6010B
Analyst: KHR
Dilution: 1
Units: mg/kg

Instrument: IRIS-ICP
Prep Date: 01/28/2009 11:50
Cal Date: 01/29/2009 13:52
Run Date: 01/30/2009 01:32
File ID: IR.013009.013200
Percent Solid: 91.7

Analyte	CAS. Number	Result	Qual	RL	MDL	
Silver, Total	7440-22-4	0.214	J	0.813	0.203	
Barium, Total	7440-39-3	7.26 J		0.406	0.0813	MSH
Cadmium, Total	7440-43-9	UJ	~~J~~	0.163	0.0406	MSL
Chromium, Total	7440-47-3	6.69 J		0.813	0.0975	MSH

U Undetected; the analyte was analyzed for, but not detected.
J Estimated ; the analyte concentration was less than the low standard (LOQ)

Microbac

21 [illegible]
4/1/09

10

Sample Number: L09010534-10
Client ID: MR08-SS359-09A
Matrix: Soil
Workgroup Number: WG294455
Collect Date: 01/23/2009 14:10
Sample Tag: DL01

PrePrep Method: NONE
Prep Method: 3051
Analytical Method: 6020
Analyst: JYH
Dilution: 2
Units: mg/kg

Instrument: ELAN-ICP
Prep Date: 01/29/2009 06:41
Cal Date: 02/09/2009 10:40
Run Date: 02/09/2009 22:32
File ID: EL.020909.223209
Percent Solid: 91.7

Analyte	CAS. Number	Result	Qual	RL	MDL
Arsenic, Total	7440-38-2	0.678		0.654	0.164
Lead, Total	7439-92-1	2.48		0.873	0.218
Selenium, Total	7782-49-2	0.335	J	0.873	0.218

J Estimated ; the analyte concentration was less than the low standard (LOQ)

Microbac

700 lw 4/1/09

10

Sample Number: L09010534-10
Client ID: MR08-SS359-09A
Matrix: Soil
Workgroup Number: WG293920
Collect Date: 01/23/2009 14:10
Sample Tag: 01

PrePrep Method: NONE
Prep Method: 7471A
Analytical Method: 7471A
Analyst: ADC
Dilution: 1
Units: mg/kg

Instrument: HYDRA
Prep Date: 01/28/2009 09:11
Cal Date: 02/02/2009 13:15
Run Date: 02/02/2009 14:20
File ID: HY.020209.142032
Percent Solid: 91.7

Analyte	CAS. Number	Result	Qual	RL	MDL
Mercury, Total	7439-97-6		U	0.108	0.0215

U Undetected; the analyte was analyzed for, but not detected.

Microbac

1762

lcw 4/1/09

11

Sample Number: L09010534-11
Client ID: MR08-IS360-4-5-09A
Matrix: Soil
Workgroup Number: WG293654
Collect Date: 01/23/2009 14:40
Sample Tag: 01

PrePrep Method: NONE
Prep Method: 3051
Analytical Method: 6010B
Analyst: KHR
Dilution: 1
Units: mg/kg

Instrument: IRIS-ICP
Prep Date: 01/28/2009 11:50
Cal Date: 01/29/2009 13:52
Run Date: 01/30/2009 01:38
File ID: IR.013009.013800
Percent Solid: 88.5

Analyte	CAS. Number	Result	Qual	RL	MDL	
Silver, Total	7440-22-4		U	0.818	0.205	
Barium, Total	7440-39-3	9.97 J		0.409	0.0818	MSH
Cadmium, Total	7440-43-9	UJ	~~U~~	0.164	0.0409	MSL
Chromium, Total	7440-47-3	8.75 J		0.818	0.0982	MSH

U Undetected; the analyte was analyzed for, but not detected.

Microbac

22 MW
tol 1.a

11

Sample Number: L09010534-11
Client ID: MR08-IS360-4-5-09A
Matrix: Soil
Workgroup Number: WG294455
Collect Date: 01/23/2009 14:40
Sample Tag: DL01

PrePrep Method: NONE
Prep Method: 3051
Analytical Method: 6020
Analyst: JYH
Dilution: 2
Units: mg/kg

Instrument: ELAN-ICP
Prep Date: 01/29/2009 06:41
Cal Date: 02/09/2009 10:40
Run Date: 02/09/2009 22:38
File ID: EL.020909.223813
Percent Solid: 88.5

Analyte	CAS. Number	Result	Qual	RL	MDL
Arsenic, Total	7440-38-2	0.439	J	0.659	0.165
Lead, Total	7439-92-1	4.59		0.879	0.220
Selenium, Total	7782-49-2		U	0.879	0.220

U Undetected; the analyte was analyzed for, but not detected.
J Estimated ; the analyte concentration was less than the low standard (LOQ)

Microbac

701 LMO
4/1/09

11

Sample Number: L09010534-11
Client ID: MR08-IS360-4-5-09A
Matrix: Soil
Workgroup Number: WG293920
Collect Date: 01/23/2009 14:40
Sample Tag: 01

PrePrep Method: NONE
Prep Method: 7471A
Analytical Method: 7471A
Analyst: ADC
Dilution: 1
Units: mg/kg

Instrument: HYDRA
Prep Date: 01/28/2009 09:11
Cal Date: 02/02/2009 13:15
Run Date: 02/02/2009 14:25
File ID: HY.020209.142550
Percent Solid: 88.5

Analyte	CAS. Number	Result	Qual	RL	MDL
Mercury, Total	7439-97-6		U	0.105	0.0211

U Undetected; the analyte was analyzed for, but not detected.

Microbac

1763 MW 4/1/09

12

Sample Number: L09010534-12
Client ID: MR08-IS360D-4-5-09A
Matrix: Soil
Workgroup Number: WG293654
Collect Date: 01/23/2009 14:40
Sample Tag: 01

PrePrep Method: NONE
Prep Method: 3051
Analytical Method: 6010B
Analyst: KHR
Dilution: 1
Units: mg/kg

Instrument: IRIS-ICP
Prep Date: 01/28/2009 11:50
Cal Date: 01/29/2009 13:52
Run Date: 01/30/2009 01:44
File ID: IR.013009.014400
Percent Solid: 88.7

Analyte	CAS. Number	Result	Qual	RL	MDL	
Silver, Total	7440-22-4		U	0.856	0.214	
Barium, Total	7440-39-3	11.0 J		0.428	0.0856	MSH
Cadmium, Total	7440-43-9	UJ	~~U~~	0.171	0.0428	MSL
Chromium, Total	7440-47-3	8.88 J		0.856	0.103	MSH

U Undetected; the analyte was analyzed for, but not detected.

Microbac

23 [illegible] 11.1.09

12

Sample Number: L09010534-12
Client ID: MR08-IS360D-4-5-09A
Matrix: Soil
Workgroup Number: WG294455
Collect Date: 01/23/2009 14:40
Sample Tag: DL01

PrePrep Method: NONE
Prep Method: 3051
Analytical Method: 6020
Analyst: JYH
Dilution: 2
Units: mg/kg

Instrument: ELAN-ICP
Prep Date: 01/29/2009 06:41
Cal Date: 02/09/2009 10:40
Run Date: 02/09/2009 22:44
File ID: EL.020909.224417
Percent Solid: 88.7

Analyte	CAS. Number	Result	Qual	RL	MDL
Arsenic, Total	7440-38-2	0.317	J	0.659	0.165
Lead, Total	7439-92-1	3.63		0.879	0.220
Selenium, Total	7782-49-2		U	0.879	0.220

U Undetected; the analyte was analyzed for, but not detected.
J Estimated ; the analyte concentration was less than the low standard (LOQ)

Microbac

702 JW 4/1/09

12

Sample Number: L09010534-12
Client ID: MR08-IS360D-4-5-09A
Matrix: Soil
Workgroup Number: WG293920
Collect Date: 01/23/2009 14:40
Sample Tag: 01

PrePrep Method: NONE
Prep Method: 7471A
Analytical Method: 7471A
Analyst: ADC
Dilution: 1
Units: mg/kg

Instrument: HYDRA
Prep Date: 01/28/2009 09:11
Cal Date: 02/02/2009 13:15
Run Date: 02/02/2009 14:27
File ID: HY.020209.142749
Percent Solid: 88.7

Analyte	CAS. Number	Result	Qual	RL	MDL
Mercury, Total	7439-97-6		U	0.109	0.0218

U Undetected; the analyte was analyzed for, but not detected.

Microbac

1764 lew 4/1/09

13

Sample Number: L09010534-13
Client ID: MR08-SS360-09A
Matrix: Soil
Workgroup Number: WG293654
Collect Date: 01/23/2009 14:50
Sample Tag: 01

PrePrep Method: NONE
Prep Method: 3051
Analytical Method: 6010B
Analyst: KHR
Dilution: 1
Units: mg/kg

Instrument: IRIS-ICP
Prep Date: 01/28/2009 11:50
Cal Date: 01/29/2009 13:52
Run Date: 01/30/2009 01:50
File ID: IR.013009.015000
Percent Solid: 88.5

Analyte	CAS. Number	Result	Qual	RL	MDL	
Silver, Total	7440-22-4		U	0.838	0.210	
Barium, Total	7440-39-3	9.95 J		0.419	0.0838	MSH
Cadmium, Total	7440-43-9	UJ	~~J~~	0.168	0.0419	MSL
Chromium, Total	7440-47-3	6.29 J		0.838	0.101	MSH

U Undetected; the analyte was analyzed for, but not detected.

Microbac

24 lw
4.1.09

13

Sample Number: L09010534-13
Client ID: MR08-SS360-09A
Matrix: Soil
Workgroup Number: WG294455
Collect Date: 01/23/2009 14:50
Sample Tag: DL01

PrePrep Method: NONE
Prep Method: 3051
Analytical Method: 6020
Analyst: JYH
Dilution: 2
Units: mg/kg

Instrument: ELAN-ICP
Prep Date: 01/29/2009 06:41
Cal Date: 02/09/2009 10:40
Run Date: 02/09/2009 22:50
File ID: EL.020909.225020
Percent Solid: 88.5

Analyte	CAS. Number	Result	Qual	RL	MDL
Arsenic, Total	7440-38-2	0.664		0.664	0.166
Lead, Total	7439-92-1	11.2		0.885	0.221
Selenium, Total	7782-49-2	0.289	J	0.885	0.221

J Estimated ; the analyte concentration was less than the low standard (LOQ)

Microbac

703 RW
4/1/09

13

Sample Number: L09010534-13
Client ID: MR08-SS360-09A
Matrix: Soil
Workgroup Number: WG293920
Collect Date: 01/23/2009 14:50
Sample Tag: 01

PrePrep Method: NONE
Prep Method: 7471A
Analytical Method: 7471A
Analyst: ADC
Dilution: 1
Units: mg/kg

Instrument: HYDRA
Prep Date: 01/28/2009 09:11
Cal Date: 02/02/2009 13:15
Run Date: 02/02/2009 14:30
File ID: HY.020209.143054
Percent Solid: 88.5

Analyte	CAS. Number	Result	Qual	RL	MDL
Mercury, Total	7439-97-6		U	0.112	0.0225

U Undetected; the analyte was analyzed for, but not detected.

Microbac

1765 LW 4/1/09

14

Sample Number: L09010534-14
Client ID: MR08-SS360D-09A
Matrix: Soil
Workgroup Number: WG293654
Collect Date: 01/23/2009 14:50
Sample Tag: 01

PrePrep Method: NONE
Prep Method: 3051
Analytical Method: 6010B
Analyst: KHR
Dilution: 1
Units: mg/kg

Instrument: IRIS-ICP
Prep Date: 01/28/2009 11:50
Cal Date: 01/29/2009 13:52
Run Date: 01/30/2009 01:56
File ID: IR.013009.015600
Percent Solid: 76.6

Analyte	CAS. Number	Result	Qual	RL	MDL	
Silver, Total	7440-22-4		U	0.956	0.239	
Barium, Total	7440-39-3	7.53 J		0.478	0.0956	MSH
Cadmium, Total	7440-43-9	UJ	U	0.191	0.0478	MSL
Chromium, Total	7440-47-3	4.35 J		0.956	0.115	MSH

U Undetected; the analyte was analyzed for, but not detected.

Microbac

25 LW 4/1/09

14

Sample Number: L09010534-14
Client ID: MR08-SS360D-09A
Matrix: Soil
Workgroup Number: WG294455
Collect Date: 01/23/2009 14:50
Sample Tag: DL01

PrePrep Method: NONE
Prep Method: 3051
Analytical Method: 6020
Analyst: JYH
Dilution: 2
Units: mg/kg

Instrument: ELAN-ICP
Prep Date: 01/29/2009 06:41
Cal Date: 02/09/2009 10:40
Run Date: 02/09/2009 22:56
File ID: EL.020909.225624
Percent Solid: 76.6

Analyte	CAS. Number	Result	Qual	RL	MDL
Arsenic, Total	7440-38-2	0.626	J	0.746	0.187
Lead, Total	7439-92-1	12.1		0.995	0.249
Selenium, Total	7782-49-2	0.257	J	0.995	0.249

J Estimated ; the analyte concentration was less than the low standard (LOQ)

Microbac

704 MW 4/1/09

14

Sample Number: L09010534-14
Client ID: MR08-SS360D-09A
Matrix: Soil
Workgroup Number: WG293920
Collect Date: 01/23/2009 14:50
Sample Tag: 01

PrePrep Method: NONE
Prep Method: 7471A
Analytical Method: 7471A
Analyst: ADC
Dilution: 1
Units: mg/kg

Instrument: HYDRA
Prep Date: 01/28/2009 09:11
Cal Date: 02/02/2009 13:15
Run Date: 02/02/2009 14:33
File ID: HY.020209.143308
Percent Solid: 76.6

Analyte	CAS. Number	Result	Qual	RL	MDL
Mercury, Total	7439-97-6		U	0.126	0.0252

U Undetected; the analyte was analyzed for, but not detected.

Microbac

1766 MW 4/1/09

15

Sample Number: L09010534-15
Client ID: MR08-SS361-09A
Matrix: Soil
Workgroup Number: WG293654
Collect Date: 01/23/2009 15:15
Sample Tag: 01

PrePrep Method: NONE
Prep Method: 3051
Analytical Method: 6010B
Analyst: KHR
Dilution: 1
Units: mg/kg

Instrument: IRIS-ICP
Prep Date: 01/28/2009 11:50
Cal Date: 01/29/2009 13:52
Run Date: 01/30/2009 02:02
File ID: IR.013009.020200
Percent Solid: 89.9

Analyte	CAS. Number	Result	Qual	RL	MDL	
Silver, Total	7440-22-4	0.278	J	0.832	0.208	
Barium, Total	7440-39-3	9.29 J		0.416	0.0832	MSH
Cadmium, Total	7440-43-9	UJ	~~J~~	0.166	0.0416	MSL
Chromium, Total	7440-47-3	5.00 J		0.832	0.0998	MSH

U Undetected; the analyte was analyzed for, but not detected.
J Estimated ; the analyte concentration was less than the low standard (LOQ)

Microbac

 lw

15

Sample Number: L09010534-15
Client ID: MR08-SS361-09A
Matrix: Soil
Workgroup Number: WG294455
Collect Date: 01/23/2009 15:15
Sample Tag: DL01

PrePrep Method: NONE
Prep Method: 3051
Analytical Method: 6020
Analyst: JYH
Dilution: 2
Units: mg/kg

Instrument: ELAN-ICP
Prep Date: 01/29/2009 06:41
Cal Date: 02/09/2009 10:40
Run Date: 02/09/2009 20:10
File ID: EL.020909.201036
Percent Solid: 89.9

Analyte	CAS. Number	Result	Qual	RL	MDL
Arsenic, Total	7440-38-2	0.515	J	0.654	0.164
Lead, Total	7439-92-1	3.29		0.872	0.218
Selenium, Total	7782-49-2	0.330	J	0.872	0.218

J Estimated ; the analyte concentration was less than the low standard (LOQ)

Microbac

705 MW 4/1/09

15

Sample Number: L09010534-15
Client ID: MR08-SS361-09A
Matrix: Soil
Workgroup Number: WG293920
Collect Date: 01/23/2009 15:15
Sample Tag: 01

PrePrep Method: NONE
Prep Method: 7471A
Analytical Method: 7471A
Analyst: ADC
Dilution: 1
Units: mg/kg

Instrument: HYDRA
Prep Date: 01/28/2009 09:11
Cal Date: 02/02/2009 13:15
Run Date: 02/02/2009 14:35
File ID: HY.020209.143530
Percent Solid: 89.9

Analyte	CAS. Number	Result	Qual	RL	MDL
Mercury, Total	7439-97-6		U	0.108	0.0216

U Undetected; the analyte was analyzed for, but not detected.

Microbac

1767 fuw 4/1/09

16

Sample Number: L09010534-16
Client ID: MR08-IS361-4-5-09A
Matrix: Soil
Workgroup Number: WG293654
Collect Date: 01/23/2009 15:20
Sample Tag: 01

PrePrep Method: NONE
Prep Method: 3051
Analytical Method: 6010B
Analyst: KHR
Dilution: 1
Units: mg/kg

Instrument: IRIS-ICP
Prep Date: 01/28/2009 11:50
Cal Date: 01/29/2009 13:52
Run Date: 01/30/2009 02:09
File ID: IR.013009.020900
Percent Solid: 88.0

Analyte	CAS. Number	Result	Qual	RL	MDL	
Silver, Total	7440-22-4		U	0.855	0.214	
Barium, Total	7440-39-3	11.7 J		0.427	0.0855	MSH
Cadmium, Total	7440-43-9	UJ	U	0.171	0.0427	MSL
Chromium, Total	7440-47-3	8.59 J		0.855	0.103	MSH

U Undetected; the analyte was analyzed for, but not detected.

Microbac

27 MW

16

Sample Number: L09010534-16
Client ID: MR08-IS361-4-5-09A
Matrix: Soil
Workgroup Number: WG294510
Collect Date: 01/23/2009 15:20
Sample Tag: DL01

PrePrep Method: NONE
Prep Method: 3051
Analytical Method: 6020
Analyst: JYH
Dilution: 2
Units: mg/kg

Instrument: ELAN-ICP
Prep Date: 01/29/2009 07:20
Cal Date: 02/09/2009 10:40
Run Date: 02/10/2009 00:04
File ID: EL.021009.000416
Percent Solid: 88.0

Analyte	CAS. Number	Result	Qual	RL	MDL
Arsenic, Total	7440-38-2		U	0.638	0.160
Lead, Total	7439-92-1	3.64 J		0.851	0.213
Selenium, Total	7782-49-2		U	0.851	0.213

MSH

U Undetected; the analyte was analyzed for, but not detected.

Microbac

lew
4/1/09

16

Sample Number: L09010534-16
Client ID: MR08-IS361-4-5-09A
Matrix: Soil
Workgroup Number: WG293920
Collect Date: 01/23/2009 15:20
Sample Tag: 01

PrePrep Method: NONE
Prep Method: 7471A
Analytical Method: 7471A
Analyst: ADC
Dilution: 1
Units: mg/kg

Instrument: HYDRA
Prep Date: 01/28/2009 09:11
Cal Date: 02/02/2009 13:15
Run Date: 02/02/2009 14:37
File ID: HY.020209.143737
Percent Solid: 88.0

Analyte	CAS. Number	Result	Qual	RL	MDL
Mercury, Total	7439-97-6		U	0.108	0.0216

U Undetected; the analyte was analyzed for, but not detected.

Microbac®

1768 lee 4/1/09

17

Sample Number: L09010534-17
Client ID: MR08-SS368-09A
Matrix: Soil
Workgroup Number: WG293654
Collect Date: 01/23/2009 15:40
Sample Tag: 01

PrePrep Method: NONE
Prep Method: 3051
Analytical Method: 6010B
Analyst: KHR
Dilution: 1
Units: mg/kg

Instrument: IRIS-ICP
Prep Date: 01/28/2009 11:50
Cal Date: 01/29/2009 13:52
Run Date: 01/30/2009 02:27
File ID: IR.013009.022700
Percent Solid: 62.9

Analyte	CAS. Number	Result	Qual	RL	MDL	
Silver, Total	7440-22-4	0.566	J	1.16	0.289	
Barium, Total	7440-39-3	28.6 J		0.579	0.116	MSH
Cadmium, Total	7440-43-9	1.06		0.231	0.0579	MSL
Chromium, Total	7440-47-3	19.1		1.16	0.139	MSH

J Estimated ; the analyte concentration was less than the low standard (LOQ)

Microbac

fw
11.1.9

17

Sample Number: L09010534-17
Client ID: MR08-SS368-09A
Matrix: Soil
Workgroup Number: WG294510
Collect Date: 01/23/2009 15:40
Sample Tag: DL01

PrePrep Method: NONE
Prep Method: 3051
Analytical Method: 6020
Analyst: JYH
Dilution: 2
Units: mg/kg

Instrument: ELAN-ICP
Prep Date: 01/29/2009 07:20
Cal Date: 02/09/2009 10:40
Run Date: 02/10/2009 00:10
File ID: EL.021009.001020
Percent Solid: 62.9

Analyte	CAS. Number	Result	Qual	RL	MDL
Arsenic, Total	7440-38-2	1.14		0.918	0.229
Selenium, Total	7782-49-2	0.353	J	1.22	0.306

J Estimated ; the analyte concentration was less than the low standard (LOQ)

Microbac

707 MW
4.1.09

17

Sample Number: L09010534-17
Client ID: MR08-SS368-09A
Matrix: Soil
Workgroup Number: WG294510
Collect Date: 01/23/2009 15:40
Sample Tag: DL02

PrePrep Method: NONE
Prep Method: 3051
Analytical Method: 6020
Analyst: JYH
Dilution: 10
Units: mg/kg

Instrument: ELAN-ICP
Prep Date: 01/29/2009 07:20
Cal Date: 02/10/2009 10:53
Run Date: 02/10/2009 16:46
File ID: EL.021009.164635
Percent Solid: 62.9

Analyte	CAS. Number	Result	Qual	RL	MDL	
Lead, Total	7439-92-1	334 J		6.12	1.53	MSH

Microbac

708 LW

17

Sample Number: L09010534-17
Client ID: MR08-SS368-09A
Matrix: Soil
Workgroup Number: WG293920
Collect Date: 01/23/2009 15:40
Sample Tag: 01

PrePrep Method: NONE
Prep Method: 7471A
Analytical Method: 7471A
Analyst: ADC
Dilution: 1
Units: mg/kg

Instrument: HYDRA
Prep Date: 01/28/2009 09:11
Cal Date: 02/02/2009 13:15
Run Date: 02/02/2009 14:39
File ID: HY.020209.143920
Percent Solid: 62.9

Analyte	CAS. Number	Result	Qual	RL	MDL
Mercury, Total	7439-97-6	0.0557	J	0.152	0.0304

J Estimated ; the analyte concentration was less than the low standard (LOQ)

Microbac

1769 MW
4/1/09

18

Sample Number: L09010534-18
Client ID: MR08-IS368-4-5-09A
Matrix: Soil
Workgroup Number: WG293798
Collect Date: 01/23/2009 15:50
Sample Tag: 01

PrePrep Method: NONE
Prep Method: 3051
Analytical Method: 6010B
Analyst: EDA
Dilution: 1
Units: mg/kg

Instrument: ICP-THERMO1
Prep Date: 01/29/2009 06:25
Cal Date: 01/30/2009 10:22
Run Date: 01/30/2009 23:10
File ID: T1.013009.231036
Percent Solid: 88.8

Analyte	CAS. Number	Result	Qual	RL	MDL
Silver, Total	7440-22-4	0.333	J	0.766	0.191
Barium, Total	7440-39-3	8.61		0.383	0.0766
Cadmium, Total	7440-43-9		U	0.153	0.0383
Chromium, Total	7440-47-3	8.08		0.766	0.0919

U Undetected; the analyte was analyzed for, but not detected.
J Estimated ; the analyte concentration was less than the low standard (LOQ)

Microbac

lw
11.1.09

18

Sample Number: L09010534-18
Client ID: MR08-IS368-4-5-09A
Matrix: Soil
Workgroup Number: WG294510
Collect Date: 01/23/2009 15:50
Sample Tag: DL01

PrePrep Method: NONE
Prep Method: 3051
Analytical Method: 6020
Analyst: JYH
Dilution: 2
Units: mg/kg

Instrument: ELAN-ICP
Prep Date: 01/29/2009 07:20
Cal Date: 02/09/2009 10:40
Run Date: 02/10/2009 00:16
File ID: EL.021009.001624
Percent Solid: 88.8

Analyte	CAS. Number	Result	Qual	RL	MDL
Arsenic, Total	7440-38-2		U	0.672	0.168
Lead, Total	7439-92-1	1.48 J		0.896	0.224
Selenium, Total	7782-49-2		U	0.896	0.224

MSH

U Undetected; the analyte was analyzed for, but not detected.

Microbac

709 JW 4/1/09

18

Sample Number: L09010534-18
Client ID: MR08-IS368-4-5-09A
Matrix: Soil
Workgroup Number: WG293922
Collect Date: 01/23/2009 15:50
Sample Tag: 01

PrePrep Method: NONE
Prep Method: 7471A
Analytical Method: 7471A
Analyst: ADC
Dilution: 1
Units: mg/kg

Instrument: HYDRA
Prep Date: 01/28/2009 12:37
Cal Date: 02/03/2009 09:45
Run Date: 02/03/2009 10:00
File ID: HY.020309.100037
Percent Solid: 88.8

Analyte	CAS. Number	Result	Qual	RL	MDL
Mercury, Total	7439-97-6		U	0.111	0.0221

U Undetected; the analyte was analyzed for, but not detected.

Microbac

1770 lw 4/1/09

19

Sample Number: L09010534-19
Client ID: MR08-SS355-09A
Matrix: Soil
Workgroup Number: WG293798
Collect Date: 01/23/2009 16:00
Sample Tag: 01

PrePrep Method: NONE
Prep Method: 3051
Analytical Method: 6010B
Analyst: EDA
Dilution: 1
Units: mg/kg

Instrument: ICP-THERMO1
Prep Date: 01/29/2009 06:25
Cal Date: 01/30/2009 10:22
Run Date: 01/30/2009 23:16
File ID: T1.013009.231642
Percent Solid: 86.7

Analyte	CAS. Number	Result	Qual	RL	MDL
Silver, Total	7440-22-4	0.504	J	0.826	0.207
Barium, Total	7440-39-3	40.3		0.413	0.0826
Cadmium, Total	7440-43-9	0.440		0.165	0.0413
Chromium, Total	7440-47-3	10.5		0.826	0.0991

J Estimated ; the analyte concentration was less than the low standard (LOQ)

Microbac

30 fus
4/1/09

1C

Sample Number:	L09010534-19	PrePrep Method:	NONE	Instrument:	ELAN-ICP
Client ID:	MR08-SS355-09A	Prep Method:	3051	Prep Date:	01/29/2009 07:20
Matrix:	Soil	Analytical Method:	6020	Cal Date:	02/09/2009 10:40
Workgroup Number:	WG294510	Analyst:	JYH	Run Date:	02/10/2009 00:22
Collect Date:	01/23/2009 16:00	Dilution:	2	File ID:	EL.021009.002228
Sample Tag:	DL01	Units:	mg/kg	Percent Solid:	86.7

Analyte	CAS. Number	Result	Qual	RL	MDL
Arsenic, Total	7440-38-2	0.876		0.659	0.165
Selenium, Total	7782-49-2	0.416	J	0.879	0.220

J Estimated ; the analyte concentration was less than the low standard (LOQ)

Microbac

LW
4/1/09

19

Sample Number: L09010534-19
Client ID: MR08-SS355-09A
Matrix: Soil
Workgroup Number: WG294510
Collect Date: 01/23/2009 16:00
Sample Tag: DL02

PrePrep Method: NONE
Prep Method: 3051
Analytical Method: 6020
Analyst: JYH
Dilution: 10
Units: mg/kg

Instrument: ELAN-ICP
Prep Date: 01/29/2009 07:20
Cal Date: 02/10/2009 10:53
Run Date: 02/10/2009 16:52
File ID: EL.021009.165239
Percent Solid: 86.7

Analyte	CAS. Number	Result	Qual	RL	MDL
Lead, Total	7439-92-1	201 J		4.39	1.10

MSH

Microbac

711 [illegible]
[illegible]

19

Sample Number: L09010534-19
Client ID: MR08-SS355-09A
Matrix: Soil
Workgroup Number: WG293922
Collect Date: 01/23/2009 16:00
Sample Tag: 01

PrePrep Method: NONE
Prep Method: 7471A
Analytical Method: 7471A
Analyst: ADC
Dilution: 1
Units: mg/kg

Instrument: HYDRA
Prep Date: 01/28/2009 12:37
Cal Date: 02/03/2009 09:45
Run Date: 02/03/2009 10:04
File ID: HY.020309.100437
Percent Solid: 86.7

Analyte	CAS. Number	Result	Qual	RL	MDL
Mercury, Total	7439-97-6	0.0824	J	0.113	0.0227

J Estimated ; the analyte concentration was less than the low standard (LOQ)

Microbac

1771 fee
4/1/09

20

Sample Number: L09010534-20
Client ID: MR08-IS355-4-5-09A
Matrix: Soil
Workgroup Number: WG293798
Collect Date: 01/23/2009 16:10
Sample Tag: 01

PrePrep Method: NONE
Prep Method: 3051
Analytical Method: 6010B
Analyst: EDA
Dilution: 1
Units: mg/kg

Instrument: ICP-THERMO1
Prep Date: 01/29/2009 06:25
Cal Date: 01/30/2009 10:22
Run Date: 01/30/2009 23:40
File ID: T1.013009.234058
Percent Solid: 89.3

Analyte	CAS. Number	Result	Qual	RL	MDL
Silver, Total	7440-22-4		U	0.824	0.206
Barium, Total	7440-39-3	3.97		0.412	0.0824
Cadmium, Total	7440-43-9		U	0.165	0.0412
Chromium, Total	7440-47-3	4.64		0.824	0.0989

U Undetected; the analyte was analyzed for, but not detected.

Microbac

31 [illegible]
[illegible]

20

Sample Number: L09010534-20
Client ID: MR08-IS355-4-5-09A
Matrix: Soil
Workgroup Number: WG294510
Collect Date: 01/23/2009 16:10
Sample Tag: DL01

PrePrep Method: NONE
Prep Method: 3051
Analytical Method: 6020
Analyst: JYH
Dilution: 2
Units: mg/kg

Instrument: ELAN-ICP
Prep Date: 01/29/2009 07:20
Cal Date: 02/09/2009 10:40
Run Date: 02/10/2009 00:28
File ID: EL.021009.002832
Percent Solid: 89.3

Analyte	CAS. Number	Result	Qual	RL	MDL
Arsenic, Total	7440-38-2	0.241	J	0.663	0.166
Lead, Total	7439-92-1	1.98 J		0.884	0.221
Selenium, Total	7782-49-2		U	0.884	0.221

MSH

U Undetected; the analyte was analyzed for, but not detected.
J Estimated ; the analyte concentration was less than the low standard (LOQ)

Microbac

712 fcw 4/1/09

20.

Sample Number: L09010534-20
Client ID: MR08-IS355-4-5-09A
Matrix: Soil
Workgroup Number: WG293922
Collect Date: 01/23/2009 16:10
Sample Tag: 01

PrePrep Method: NONE
Prep Method: 7471A
Analytical Method: 7471A
Analyst: ADC
Dilution: 1
Units: mg/kg

Instrument: HYDRA
Prep Date: 01/28/2009 12:37
Cal Date: 02/03/2009 09:45
Run Date: 02/03/2009 10:07
File ID: HY.020309.100750
Percent Solid: 89.3

Analyte	CAS. Number	Result	Qual	RL	MDL
Mercury, Total	7439-97-6		U	0.104	0.0208

U Undetected; the analyte was analyzed for, but not detected.

Microbac

RW
4/1/09

ENVIRONMENTAL
Data Services, Inc.

METALS

USEPA Region IV - Level IV Review

Site: MCB Camp Lejeune, TO-09 SDG #: L09010535

Client: CH2M HILL, Inc., Virginia Beach, Virginia Date: April 1, 2009

Laboratory: Microbac Laboratories, Inc., Marietta, Ohio Reviewer: Nancy Weaver

EDS ID	Client Sample ID	Laboratory Sample ID	Matrix
1	MR08-EB012409	L09010535-01	Water
2	MR08-IS344-2-3-09A	L09010535-02	Soil
3	MR08-SS344-09A	L09010535-03	Soil
4	MR08-SS331-09A	L09010535-04	Soil
5	MR08-IS331-4-5-09A	L09010535-05	Soil
6	MR08-SS330-09A	L09010535-06	Soil
7	MR08-IS330-0-1-09A	L09010535-07	Soil
8	MR08-IS329-1-2-09A	L09010535-08	Soil
9MS	MR08-IS329-1-2-09AMS	L09010535-09MS	Soil
10MSD	MR08-IS329-1-2-09AMSD	L09010535-10MSD	Soil
11	MR08-SS329-09A-09A	L09010535-11	Soil
12MS	MR08-SS329-09AMS	L09010535-12MS	Soil
13MSD	MR08-SS329-09AMSD	L09010535-13MSD	Soil
14	MR08-SS345-09A	L09010535-14	Soil
15	MR08-SS345D-09A	L09010535-15	Soil
16	MR08-IS345-1-2-09A	L09010535-16	Soil
17	MR08-IS345D-1-2-09A	L09010535-17	Soil
18	MR08-SS346-09A	L09010535-18	Soil
19	MR08-IS346-1-2-09A	L09010535-19	Soil
20	MR08-SS354-09A	L09010535-20	Soil
21	MR08-IS354-1-2-09A	L09010535-21	Soil
22	MR08-SS369-09A	L09010535-22	Soil
23	MR08-IS369-1-2-09A	L09010535-23	Soil
24	MR08-SS369D-09A	L09010535-24	Soil

The USEPA "Contract Laboratory Program National Functional Guidelines for Inorganic Data Review," October 2004, and professional judgement were used in evaluating the data in this summary report.

Holding Times - All samples were prepared and analyzed within 28 days for mercury and 180 days for all other metals.

Calibration - The ICV and CCV %R values were acceptable.

Method and Calibration Blanks - The method blanks were free of contamination.

Field and Equipment Blank - Field QC results are summarized below.

Blank ID	Compound	Conc. ug/L	Action Level mg/kg	Qualifier	Affected Samples
MR08-EB012409	Selenium	0.598	0.0997	None	All ND or >5X
MR08-FB012609	None-ND	-	-	-	-

ICP Interference Check Sample - All %R values were acceptable.

MS/MSD - The MS/MSD sample exhibited acceptable %R and RPD values except the following.

MS/MSD Sample ID	Compound	MS/MSD %R/RPD	Qualifier	Affected Samples
11 (WG293816)	Chromium	131%/Ok/Ok	J	11, 24
11 (WG294510)	Lead	345%/310%/Ok	J	2-11, 14-18
11 (WG294564)	Mercury	Ok/39.5%/76.6	J/UJ	2-11, 14-23

LCS - The LCS samples exhibited acceptable %R values.

ICP Serial Dilution - The ICP serial dilution sample exhibited acceptable %D values.

Field Duplicates - Field duplicate results are summarized below.

Compound	MR08-SS345-09A mg/kg	MR08-SS345D-09A mg/kg	RPD	Qualifier
Barium	9.83	7.63	25%	None
Cadmium	0.216	0.378	55%	None
Chromium	6.37	4.91	26%	None
Arsenic	1.16	0.627	60%	None
Lead	9.82	5.50	56%	None
Selenium	0.431	0.434	1%	None

Compound	MR08-IS345-1-2-09A mg/kg	MR08-IS345D-1-2-09A mg/kg	RPD	Qualifier
Silver	0.793 U	0.299	NC	None
Barium	4.90	5.91	19%	None
Chromium	5.21	5.66	8%	None
Arsenic	0.404	0.565	33%	None
Lead	1.92	2.59	30%	None
Selenium	0.474	0.694	38%	None
Mercury	0.0320	0.0523	48%	None

Compound	MR08-SS369-09A mg/kg	MR08-SS369D-09A mg/kg	RPD	Qualifier
Barium	8.51	6.20	31%	None
Cadmium	0.482	0.116	122%	None
Chromium	9.73	4.64	71%	None
Arsenic	1.43	0.959	39%	None
Lead	16.4	4.55	113%	None
Selenium	0.461	0.342	30%	None

Compound	MR08-IS369-1-2-09A mg/kg	MR08-IS369D-1-2-09A (SDG L09010536) mg/kg	RPD	Qualifier
Silver	0.337	0.799 U	NC	None
Barium	11.2	5.57	67%	None
Chromium	6.21	2.90	73%	None
Arsenic	0.370	0.352	5%	None
Lead	2.14	2.16	1%	None
Selenium	0.216	0.881 U	NC	None

Compound Quantitation - Several samples were analyzed at various dilutions for various analytes due to high concentrations.

Report Number: L09010535

Report Date : February 24, 2009

Sample Number: L09010535-01
Client ID: MR08-EB012409
Matrix: Water
Workgroup Number: WG293610
Collect Date: 01/24/2009 07:45
Sample Tag: 01

PrePrep Method: NONE
Prep Method: 3005A
Analytical Method: 6010B
Analyst: ADC
Dilution: 1
Units: ug/L

Instrument: PE-ICP2
Prep Date: 01/28/2009 06:40
Cal Date: 01/29/2009 15:47
Run Date: 01/30/2009 01:04
File ID: P2.013009.010400

Analyte	CAS. Number	Result	Qual	RL	MDL
Barium, Total	7440-39-3		U	10.0	2.50
Cadmium, Total	7440-43-9		U	1.00	0.250
Chromium, Total	7440-47-3		U	10.0	2.50
Silver, Total	7440-22-4		U	6.00	2.00

U Undetected; the analyte was analyzed for, but not detected.

Microbac

13 fw
4/1/09

Sample Number: L09010535-01
Client ID: MR08-EB012409
Matrix: Water
Workgroup Number: WG293698
Collect Date: 01/24/2009 07:45
Sample Tag: 01

PrePrep Method: NONE
Prep Method: 3015
Analytical Method: 6020
Analyst: JYH
Dilution: 1
Units: ug/L

Instrument: ELAN-ICP
Prep Date: 01/28/2009 07:14
Cal Date: 01/30/2009 11:12
Run Date: 01/30/2009 20:37
File ID: EL.013009.203710

Analyte	CAS. Number	Result	Qual	RL	MDL
Arsenic, Total	7440-38-2		U	1.00	0.250
Lead, Total	7439-92-1		U	1.00	0.250
Selenium, Total	7782-49-2	0.598	J	2.00	0.500

U Undetected; the analyte was analyzed for, but not detected.
J Estimated ; the analyte concentration was less than the low standard (LOQ)

Microbac

1125 RW 4/1/09

Report Number: L09010535

Report Date : **February 24, 2009**

Sample Number:	L09010535-01	PrePrep Method:	NONE	Instrument:	HYDRA
Client ID:	MR08-EB012409	Prep Method:	7470A	Prep Date:	01/29/2009 06:49
Matrix:	Water	Analytical Method:	7470A	Cal Date:	02/20/2009 11:03
Workgroup Number:	WG293786	Analyst:	SLP	Run Date:	02/20/2009 11:40
Collect Date:	01/24/2009 07:45	Dilution:	1	File ID:	HY.022009.114049
Sample Tag:	01	Units:	ug/L		

Analyte	CAS. Number	Result	Qual	RL	MDL
Mercury	7439-97-6		U	0.400	0.100

U Undetected; the analyte was analyzed for, but not detected.

Microbac®

2701 lew 4/1/09

2

Sample Number: L09010535-02
Client ID: MR08-IS344-2-3-09A
Matrix: Soil
Workgroup Number: WG293798
Collect Date: 01/24/2009 09:00
Sample Tag: 01

PrePrep Method: NONE
Prep Method: 3051
Analytical Method: 6010B
Analyst: EDA
Dilution: 1
Units: mg/kg

Instrument: ICP-THERMO1
Prep Date: 01/29/2009 06:25
Cal Date: 01/30/2009 10:22
Run Date: 01/30/2009 23:47
File ID: T1.013009.234705
Percent Solid: 87.1

Analyte	CAS. Number	Result	Qual	RL	MDL
Silver, Total	7440-22-4		U	0.839	0.210
Barium, Total	7440-39-3	12.7		0.419	0.0839
Cadmium, Total	7440-43-9		U	0.168	0.0419
Chromium, Total	7440-47-3	10.8		0.839	0.101

U Undetected; the analyte was analyzed for, but not detected.

Microbac

14 RW
4/1/09

Report Number: L09010535

Report Date : February 24, 2009

2

Sample Number: L09010535-02
Client ID: MR08-IS344-2-3-09A
Matrix: Soil
Workgroup Number: WG294510
Collect Date: 01/24/2009 09:00
Sample Tag: DL01

PrePrep Method: NONE
Prep Method: 3051
Analytical Method: 6020
Analyst: JYH
Dilution: 2
Units: mg/kg

Instrument: ELAN-ICP
Prep Date: 01/29/2009 07:20
Cal Date: 02/09/2009 10:40
Run Date: 02/10/2009 00:34
File ID: EL.021009.003437
Percent Solid: 87.1

Analyte	CAS. Number	Result	Qual	RL	MDL
Arsenic, Total	7440-38-2		U	0.689	0.172
Lead, Total	7439-92-1	3.83 J		0.918	0.230
Selenium, Total	7782-49-2		U	0.918	0.230

MSH

U Undetected; the analyte was analyzed for, but not detected.

Microbac

1126 lw 4/1/09

2

Sample Number: L09010535-02
Client ID: MR08-IS344-2-3-09A
Matrix: Soil
Workgroup Number: WG294564
Collect Date: 01/24/2009 09:00
Sample Tag: 01

PrePrep Method: NONE
Prep Method: 7471A
Analytical Method: 7471A
Analyst: ADC
Dilution: 1
Units: mg/kg

Instrument: HYDRA
Prep Date: 01/29/2009 07:11
Cal Date: 02/10/2009 10:21
Run Date: 02/10/2009 10:46
File ID: HY.021009.104604
Percent Solid: 87.1

Analyte	CAS. Number	Result	Qual	RL	MDL
Mercury, Total	7439-97-6		UJ	0.113	0.0225

MSL

U Undetected; the analyte was analyzed for, but not detected.

Microbac

2702 GW 4/1/09

3

Sample Number: L09010535-03
Client ID: MR08-SS344-09A
Matrix: Soil
Workgroup Number: WG293798
Collect Date: 01/24/2009 09:05
Sample Tag: 01

PrePrep Method: NONE
Prep Method: 3051
Analytical Method: 6010B
Analyst: EDA
Dilution: 1
Units: mg/kg

Instrument: ICP-THERMO1
Prep Date: 01/29/2009 06:25
Cal Date: 01/30/2009 10:22
Run Date: 01/30/2009 23:53
File ID: T1.013009.235312
Percent Solid: 75.7

Analyte	CAS. Number	Result	Qual	RL	MDL
Silver, Total	7440-22-4		U	0.980	0.245
Barium, Total	7440-39-3	24.7		0.490	0.0980
Cadmium, Total	7440-43-9	0.797		0.196	0.0490
Chromium, Total	7440-47-3	10.3		0.980	0.118

U Undetected; the analyte was analyzed for, but not detected.

Microbac

15 lw 4/1/09

3

Sample Number: L09010535-03
Client ID: MR08-SS344-09A
Matrix: Soil
Workgroup Number: WG294510
Collect Date: 01/24/2009 09:05
Sample Tag: DL01

PrePrep Method: NONE
Prep Method: 3051
Analytical Method: 6020
Analyst: JYH
Dilution: 2
Units: mg/kg

Instrument: ELAN-ICP
Prep Date: 01/29/2009 07:20
Cal Date: 02/09/2009 10:40
Run Date: 02/10/2009 01:05
File ID: EL.021009.010557
Percent Solid: 75.7

Analyte	CAS. Number	Result	Qual	RL	MDL
Arsenic, Total	7440-38-2	0.886		0.781	0.195
Selenium, Total	7782-49-2	0.381	J	1.04	0.260

J Estimated ; the analyte concentration was less than the low standard (LOQ)

Microbac

1127 MS 4/1/09

3

Sample Number: L09010535-03
Client ID: MR08-SS344-09A
Matrix: Soil
Workgroup Number: WG294510
Collect Date: 01/24/2009 09:05
Sample Tag: DL02

PrePrep Method: NONE
Prep Method: 3051
Analytical Method: 6020
Analyst: JYH
Dilution: 10
Units: mg/kg

Instrument: ELAN-ICP
Prep Date: 01/29/2009 07:20
Cal Date: 02/10/2009 10:53
Run Date: 02/10/2009 16:58
File ID: EL.021009.165842
Percent Solid: 75.7

Analyte	CAS. Number	Result	Qual	RL	MDL
Lead, Total	7439-92-1	185 J		5.21	1.30

MSH

Microbac

1128 kw 4/1/09

3

Sample Number: L09010535-03
Client ID: MR08-SS344-09A
Matrix: Soil
Workgroup Number: WG294564
Collect Date: 01/24/2009 09:05
Sample Tag: 01

PrePrep Method: NONE
Prep Method: 7471A
Analytical Method: 7471A
Analyst: ADC
Dilution: 1
Units: mg/kg

Instrument: HYDRA
Prep Date: 01/29/2009 07:11
Cal Date: 02/10/2009 10:21
Run Date: 02/10/2009 10:47
File ID: HY.021009.104746
Percent Solid: 75.7

Analyte	CAS. Number	Result	Qual	RL	MDL
Mercury, Total	7439-97-6	0.0351 J	J	0.127	0.0253

MSL

J Estimated ; the analyte concentration was less than the low standard (LOQ)

Microbac

2703 MW 4/1/09

4

Sample Number: L09010535-04
Client ID: MR08-SS331-09A
Matrix: Soil
Workgroup Number: WG293798
Collect Date: 01/24/2009 09:20
Sample Tag: 01

PrePrep Method: NONE
Prep Method: 3051
Analytical Method: 6010B
Analyst: EDA
Dilution: 1
Units: mg/kg

Instrument: ICP-THERMO1
Prep Date: 01/29/2009 06:25
Cal Date: 01/30/2009 10:22
Run Date: 01/31/2009 00:11
File ID: T1.013109.001130
Percent Solid: 87.6

Analyte	CAS. Number	Result	Qual	RL	MDL
Silver, Total	7440-22-4	0.289	J	0.812	0.203
Barium, Total	7440-39-3	22.3		0.406	0.0812
Cadmium, Total	7440-43-9	0.287		0.162	0.0406
Chromium, Total	7440-47-3	11.9		0.812	0.0974

J Estimated ; the analyte concentration was less than the low standard (LOQ)

Microbac

16 JW
4/1/09

4

Sample Number: L09010535-04
Client ID: MR08-SS331-09A
Matrix: Soil
Workgroup Number: WG294510
Collect Date: 01/24/2009 09:20
Sample Tag: DL01

PrePrep Method: NONE
Prep Method: 3051
Analytical Method: 6020
Analyst: JYH
Dilution: 2
Units: mg/kg

Instrument: ELAN-ICP
Prep Date: 01/29/2009 07:20
Cal Date: 02/09/2009 10:40
Run Date: 02/10/2009 01:12
File ID: EL.021009.011203
Percent Solid: 87.6

Analyte	CAS. Number	Result	Qual	RL	MDL
Arsenic, Total	7440-38-2	0.674	J	0.681	0.170
Lead, Total	7439-92-1	58.0 J		0.908	0.227
Selenium, Total	7782-49-2	0.326	J	0.908	0.227

MSH

J Estimated ; the analyte concentration was less than the low standard (LOQ)

Microbac

1129 RW 4/1/09

4

Sample Number: L09010535-04
Client ID: MR08-SS331-09A
Matrix: Soil
Workgroup Number: WG294564
Collect Date: 01/24/2009 09:20
Sample Tag: 01

PrePrep Method: NONE
Prep Method: 7471A
Analytical Method: 7471A
Analyst: ADC
Dilution: 1
Units: mg/kg

Instrument: HYDRA
Prep Date: 01/29/2009 07:11
Cal Date: 02/10/2009 10:21
Run Date: 02/10/2009 10:49
File ID: HY.021009.104930
Percent Solid: 87.6

Analyte	CAS. Number	Result	Qual	RL	MDL
Mercury, Total	7439-97-6	0.0460 J	J	0.112	0.0224

MSL

J Estimated ; the analyte concentration was less than the low standard (LOQ)

Microbac

2704 LEW 4/1/09

5

Sample Number: L09010535-05
Client ID: MR08-IS331-4-5-09A
Matrix: Soil
Workgroup Number: WG293798
Collect Date: 01/24/2009 09:25
Sample Tag: 01

PrePrep Method: NONE
Prep Method: 3051
Analytical Method: 6010B
Analyst: EDA
Dilution: 1
Units: mg/kg

Instrument: ICP-THERMO1
Prep Date: 01/29/2009 06:25
Cal Date: 02/02/2009 10:52
Run Date: 02/02/2009 11:35
File ID: T1.020209.113509
Percent Solid: 88.2

Analyte	CAS. Number	Result	Qual	RL	MDL
Silver, Total	7440-22-4		U	0.854	0.214
Barium, Total	7440-39-3	7.56		0.427	0.0854
Cadmium, Total	7440-43-9		U	0.171	0.0427
Chromium, Total	7440-47-3	9.41		0.854	0.102

U Undetected; the analyte was analyzed for, but not detected.

Microbac

17 MW
4/1/09

5

Sample Number: L09010535-05
Client ID: MR08-IS331-4-5-09A
Matrix: Soil
Workgroup Number: WG294510
Collect Date: 01/24/2009 09:25
Sample Tag: DL01

PrePrep Method: NONE
Prep Method: 3051
Analytical Method: 6020
Analyst: JYH
Dilution: 2
Units: mg/kg

Instrument: ELAN-ICP
Prep Date: 01/29/2009 07:20
Cal Date: 02/09/2009 10:40
Run Date: 02/10/2009 01:18
File ID: EL.021009.011810
Percent Solid: 88.2

Analyte	CAS. Number	Result	Qual	RL	MDL
Arsenic, Total	7440-38-2	0.199	J	0.678	0.169
Lead, Total	7439-92-1	1.88 J		0.904	0.226
Selenium, Total	7782-49-2		U	0.904	0.226

MSH

U Undetected; the analyte was analyzed for, but not detected.
J Estimated ; the analyte concentration was less than the low standard (LOQ)

Microbac

1130 4/1/09

5

Sample Number: L09010535-05
Client ID: MR08-IS331-4-5-09A
Matrix: Soil
Workgroup Number: WG294564
Collect Date: 01/24/2009 09:25
Sample Tag: 01

PrePrep Method: NONE
Prep Method: 7471A
Analytical Method: 7471A
Analyst: ADC
Dilution: 1
Units: mg/kg

Instrument: HYDRA
Prep Date: 01/29/2009 07:11
Cal Date: 02/10/2009 10:21
Run Date: 02/10/2009 10:55
File ID: HY.021009.105521
Percent Solid: 88.2

Analyte	CAS. Number	Result	Qual	RL	MDL
Mercury, Total	7439-97-6	UJ	~~U~~	0.112	0.0223

MSL

U Undetected; the analyte was analyzed for, but not detected.

Microbac

2705

QW 4/1/09

6

Sample Number: L09010535-06
Client ID: MR08-SS330-09A
Matrix: Soil
Workgroup Number: WG293798
Collect Date: 01/24/2009 09:40
Sample Tag: 01

PrePrep Method: NONE
Prep Method: 3051
Analytical Method: 6010B
Analyst: EDA
Dilution: 1
Units: mg/kg

Instrument: ICP-THERMO1
Prep Date: 01/29/2009 06:25
Cal Date: 01/30/2009 10:22
Run Date: 01/31/2009 00:23
File ID: T1.013109.002347
Percent Solid: 71.8

Analyte	CAS. Number	Result	Qual	RL	MDL
Silver, Total	7440-22-4		U	1.01	0.252
Barium, Total	7440-39-3	24.0		0.505	0.101
Cadmium, Total	7440-43-9	1.24		0.202	0.0505
Chromium, Total	7440-47-3	19.4		1.01	0.121

U Undetected; the analyte was analyzed for, but not detected.

Microbac

18 MW
4/1/09

6

Sample Number: L09010535-06
Client ID: MR08-SS330-09A
Matrix: Soil
Workgroup Number: WG294510
Collect Date: 01/24/2009 09:40
Sample Tag: DL01

PrePrep Method: NONE
Prep Method: 3051
Analytical Method: 6020
Analyst: JYH
Dilution: 2
Units: mg/kg

Instrument: ELAN-ICP
Prep Date: 01/29/2009 07:20
Cal Date: 02/09/2009 10:40
Run Date: 02/10/2009 01:24
File ID: EL.021009.012417
Percent Solid: 71.8

Analyte	CAS. Number	Result	Qual	RL	MDL
Arsenic, Total	7440-38-2	0.978		0.826	0.206
Selenium, Total	7782-49-2		U	1.10	0.275

U Undetected; the analyte was analyzed for, but not detected.

Microbac

1131 4/1/09

6

Sample Number: L09010535-06
Client ID: MR08-SS330-09A
Matrix: Soil
Workgroup Number: WG294510
Collect Date: 01/24/2009 09:40
Sample Tag: DL02

PrePrep Method: NONE
Prep Method: 3051
Analytical Method: 6020
Analyst: JYH
Dilution: 10
Units: mg/kg

Instrument: ELAN-ICP
Prep Date: 01/29/2009 07:20
Cal Date: 02/10/2009 10:53
Run Date: 02/10/2009 17:04
File ID: EL.021009.170442
Percent Solid: 71.8

Analyte	CAS. Number	Result	Qual	RL	MDL
Lead, Total	7439-92-1	431 J		5.50	1.38

MSH

Microbac

1132 MW 4/1/09

6

Sample Number: L09010535-06
Client ID: MR08-SS330-09A
Matrix: Soil
Workgroup Number: WG294564
Collect Date: 01/24/2009 09:40
Sample Tag: 01

PrePrep Method: NONE
Prep Method: 7471A
Analytical Method: 7471A
Analyst: ADC
Dilution: 1
Units: mg/kg

Instrument: HYDRA
Prep Date: 01/29/2009 07:11
Cal Date: 02/10/2009 10:21
Run Date: 02/10/2009 10:57
File ID: HY.021009.105705
Percent Solid: 71.8

Analyte	CAS. Number	Result	Qual	RL	MDL
Mercury, Total	7439-97-6	0.0527 J	J	0.131	0.0262

MSL

J Estimated ; the analyte concentration was less than the low standard (LOQ)

Microbac

2706 lew 4/1/09

7

Sample Number: L09010535-07
Client ID: MR08-IS330-0-1-09A
Matrix: Soil
Workgroup Number: WG293798
Collect Date: 01/24/2009 09:50
Sample Tag: 01

PrePrep Method: NONE
Prep Method: 3051
Analytical Method: 6010B
Analyst: EDA
Dilution: 1
Units: mg/kg

Instrument: ICP-THERMO1
Prep Date: 01/29/2009 06:25
Cal Date: 01/30/2009 10:22
Run Date: 01/31/2009 00:29
File ID: T1.013109.002950
Percent Solid: 89.1

Analyte	CAS. Number	Result	Qual	RL	MDL
Silver, Total	7440-22-4		U	0.807	0.202
Barium, Total	7440-39-3	13.6		0.403	0.0807
Cadmium, Total	7440-43-9	0.370		0.161	0.0403
Chromium, Total	7440-47-3	7.79		0.807	0.0968

U Undetected; the analyte was analyzed for, but not detected.

Microbac

19 LW
4/1/09

7

Sample Number: L09010535-07
Client ID: MR08-IS330-0-1-09A
Matrix: Soil
Workgroup Number: WG294510
Collect Date: 01/24/2009 09:50
Sample Tag: DL01

PrePrep Method: NONE
Prep Method: 3051
Analytical Method: 6020
Analyst: JYH
Dilution: 2
Units: mg/kg

Instrument: ELAN-ICP
Prep Date: 01/29/2009 07:20
Cal Date: 02/09/2009 10:40
Run Date: 02/10/2009 01:30
File ID: EL.021009.013022
Percent Solid: 89.1

Analyte	CAS. Number	Result	Qual	RL	MDL
Arsenic, Total	7440-38-2	0.628	J	0.639	0.160
Lead, Total	7439-92-1	48.3 J		0.851	0.213
Selenium, Total	7782-49-2	0.440	J	0.851	0.213

MSH

J Estimated ; the analyte concentration was less than the low standard (LOQ)

Microbac

1133 [illegible] 4/1/09

7

Sample Number: L09010535-07
Client ID: MR08-IS330-0-1-09A
Matrix: Soil
Workgroup Number: WG294564
Collect Date: 01/24/2009 09:50
Sample Tag: 01

PrePrep Method: NONE
Prep Method: 7471A
Analytical Method: 7471A
Analyst: ADC
Dilution: 1
Units: mg/kg

Instrument: HYDRA
Prep Date: 01/29/2009 07:11
Cal Date: 02/10/2009 10:21
Run Date: 02/10/2009 10:58
File ID: HY.021009.105851
Percent Solid: 89.1

Analyte	CAS. Number	Result	Qual	RL	MDL
Mercury, Total	7439-97-6	ND	U	0.110	0.0220

MSL

U Undetected; the analyte was analyzed for, but not detected.

Microbac

2707 MW 4/1/09

8

Sample Number: L09010535-08
Client ID: MR08-IS329-1-2-09A
Matrix: Soil
Workgroup Number: WG293798
Collect Date: 01/24/2009 10:15
Sample Tag: 01

PrePrep Method: NONE
Prep Method: 3051
Analytical Method: 6010B
Analyst: EDA
Dilution: 1
Units: mg/kg

Instrument: ICP-THERMO1
Prep Date: 01/29/2009 06:25
Cal Date: 01/30/2009 10:22
Run Date: 01/31/2009 00:35
File ID: T1.013109.003554
Percent Solid: 92.1

Analyte	CAS. Number	Result	Qual	RL	MDL
Silver, Total	7440-22-4	0.334	J	0.786	0.196
Barium, Total	7440-39-3	2.96		0.393	0.0786
Cadmium, Total	7440-43-9		U	0.157	0.0393
Chromium, Total	7440-47-3	0.401	J	0.786	0.0943

U Undetected; the analyte was analyzed for, but not detected.
J Estimated ; the analyte concentration was less than the low standard (LOQ)

Microbac

20 MW 01.109

8

Sample Number: L09010535-08
Client ID: MR08-IS329-1-2-09A
Matrix: Soil
Workgroup Number: WG294510
Collect Date: 01/24/2009 10:15
Sample Tag: DL01

PrePrep Method: NONE
Prep Method: 3051
Analytical Method: 6020
Analyst: JYH
Dilution: 2
Units: mg/kg

Instrument: ELAN-ICP
Prep Date: 01/29/2009 07:20
Cal Date: 02/09/2009 10:40
Run Date: 02/09/2009 23:14
File ID: EL.020909.231438
Percent Solid: 92.1

Analyte	CAS. Number	Result	Qual	RL	MDL
Arsenic, Total	7440-38-2		U	0.651	0.163
Lead, Total	7439-92-1	0.445 J	~~J~~	0.869	0.217
Selenium, Total	7782-49-2		U	0.869	0.217

MSH

U Undetected; the analyte was analyzed for, but not detected.
J Estimated ; the analyte concentration was less than the low standard (LOQ)

Microbac

1134 JW 4/1/09

8

Sample Number: L09010535-08
Client ID: MR08-IS329-1-2-09A
Matrix: Soil
Workgroup Number: WG294564
Collect Date: 01/24/2009 10:15
Sample Tag: 01

PrePrep Method: NONE
Prep Method: 7471A
Analytical Method: 7471A
Analyst: ADC
Dilution: 1
Units: mg/kg

Instrument: HYDRA
Prep Date: 01/29/2009 07:11
Cal Date: 02/10/2009 10:21
Run Date: 02/10/2009 11:00
File ID: HY.021009.110036
Percent Solid: 92.1

Analyte	CAS. Number	Result	Qual	RL	MDL
Mercury, Total	7439-97-6	UJ	U	0.104	0.0208

MSL

U Undetected; the analyte was analyzed for, but not detected.

Microbac

2708 MW 4/1/09

11

Sample Number: L09010535-11
Client ID: MR08-SS329-09A
Matrix: Soil
Workgroup Number: WG293816
Collect Date: 01/24/2009 10:10
Sample Tag: 01

PrePrep Method: NONE
Prep Method: 3051
Analytical Method: 6010B
Analyst: EDA
Dilution: 1
Units: mg/kg

Instrument: ICP-THERMO2
Prep Date: 01/29/2009 07:30
Cal Date: 01/30/2009 10:29
Run Date: 01/31/2009 02:06
File ID: T2.013109.020639
Percent Solid: 85.0

Analyte	CAS. Number	Result	Qual	RL	MDL
Silver, Total	7440-22-4		U	0.879	0.220
Barium, Total	7440-39-3	10.0		0.439	0.0879
Cadmium, Total	7440-43-9	0.179		0.176	0.0439
Chromium, Total	7440-47-3	4.96 J		0.879	0.105

MSH

U Undetected; the analyte was analyzed for, but not detected.

Microbac

23 fw 01/109

11

Sample Number: L09010535-11
Client ID: MR08-SS329-09A
Matrix: Soil
Workgroup Number: WG294510
Collect Date: 01/24/2009 10:10
Sample Tag: DL01

PrePrep Method: NONE
Prep Method: 3051
Analytical Method: 6020
Analyst: JYH
Dilution: 2
Units: mg/kg

Instrument: ELAN-ICP
Prep Date: 01/29/2009 07:20
Cal Date: 02/09/2009 10:40
Run Date: 02/09/2009 23:45
File ID: EL.020909.234558
Percent Solid: 85.0

Analyte	CAS. Number	Result	Qual	RL	MDL
Arsenic, Total	7440-38-2	0.944		0.690	0.173
Lead, Total	7439-92-1	24.1 J		0.921	0.230
Selenium, Total	7782-49-2		U	0.921	0.230

MSH

U Undetected; the analyte was analyzed for, but not detected.

Microbac

1137 lew 4/1/09

11

Sample Number: L09010535-11
Client ID: MR08-SS329-09A
Matrix: Soil
Workgroup Number: WG294564
Collect Date: 01/24/2009 10:10
Sample Tag: 01

PrePrep Method: NONE
Prep Method: 7471A
Analytical Method: 7471A
Analyst: ADC
Dilution: 1
Units: mg/kg

Instrument: HYDRA
Prep Date: 01/29/2009 07:11
Cal Date: 02/10/2009 10:21
Run Date: 02/10/2009 11:11
File ID: HY.021009.111146
Percent Solid: 85.0

Analyte	CAS. Number	Result	Qual	RL	MDL
Mercury, Total	7439-97-6	U J	~~U~~	0.118	0.0235

MSL

U Undetected; the analyte was analyzed for, but not detected.

Microbac

2711 fw 4/1/09

14

Sample Number: L09010535-14
Client ID: MR08-SS345-09A
Matrix: Soil
Workgroup Number: WG293798
Collect Date: 01/24/2009 11:00
Sample Tag: 01

PrePrep Method: NONE
Prep Method: 3051
Analytical Method: 6010B
Analyst: EDA
Dilution: 1
Units: mg/kg

Instrument: ICP-THERMO1
Prep Date: 01/29/2009 06:25
Cal Date: 01/30/2009 10:22
Run Date: 01/31/2009 00:54
File ID: T1.013109.005403
Percent Solid: 89.8

Analyte	CAS. Number	Result	Qual	RL	MDL
Silver, Total	7440-22-4		U	0.800	0.200
Barium, Total	7440-39-3	9.83		0.400	0.0800
Cadmium, Total	7440-43-9	0.216		0.160	0.0400
Chromium, Total	7440-47-3	6.37		0.800	0.0960

U Undetected; the analyte was analyzed for, but not detected.

Microbac

26 lw 4/1/09

14

Sample Number: L09010535-14
Client ID: MR08-SS345-09A
Matrix: Soil
Workgroup Number: WG294510
Collect Date: 01/24/2009 11:00
Sample Tag: DL01

PrePrep Method: NONE
Prep Method: 3051
Analytical Method: 6020
Analyst: JYH
Dilution: 2
Units: mg/kg

Instrument: ELAN-ICP
Prep Date: 01/29/2009 07:20
Cal Date: 02/09/2009 10:40
Run Date: 02/10/2009 01:36
File ID: EL.021009.013626
Percent Solid: 89.8

Analyte	CAS. Number	Result	Qual	RL	MDL
Arsenic, Total	7440-38-2	1.16		0.628	0.157
Lead, Total	7439-92-1	9.82 J		0.837	0.209
Selenium, Total	7782-49-2	0.431	J	0.837	0.209

MS-1

J Estimated ; the analyte concentration was less than the low standard (LOQ)

Microbac

1140 JW
4/1/09

14

Sample Number: L09010535-14
Client ID: MR08-SS345-09A
Matrix: Soil
Workgroup Number: WG294564
Collect Date: 01/24/2009 11:00
Sample Tag: 01

PrePrep Method: NONE
Prep Method: 7471A
Analytical Method: 7471A
Analyst: ADC
Dilution: 1
Units: mg/kg

Instrument: HYDRA
Prep Date: 01/29/2009 07:11
Cal Date: 02/10/2009 10:21
Run Date: 02/10/2009 11:18
File ID: HY.021009.111801
Percent Solid: 89.8

Analyte	CAS. Number	Result	Qual	RL	MDL
Mercury, Total	7439-97-6	UJ	~~U~~	0.106	0.0211

MSL

U Undetected; the analyte was analyzed for, but not detected.

Microbac

2714 AW 4/1/09

15

Sample Number: L09010535-15
Client ID: MR08-SS345D-09A
Matrix: Soil
Workgroup Number: WG293798
Collect Date: 01/24/2009 11:00
Sample Tag: 01

PrePrep Method: NONE
Prep Method: 3051
Analytical Method: 6010B
Analyst: EDA
Dilution: 1
Units: mg/kg

Instrument: ICP-THERMO1
Prep Date: 01/29/2009 06:25
Cal Date: 01/30/2009 10:22
Run Date: 01/31/2009 01:00
File ID: T1.013109.010016
Percent Solid: 90.4

Analyte	CAS. Number	Result	Qual	RL	MDL
Silver, Total	7440-22-4		U	0.808	0.202
Barium, Total	7440-39-3	7.63		0.404	0.0808
Cadmium, Total	7440-43-9	0.378		0.162	0.0404
Chromium, Total	7440-47-3	4.91		0.808	0.0969

U Undetected; the analyte was analyzed for, but not detected.

Microbac

27 MW 01.09

15

Sample Number: L09010535-15
Client ID: MR08-SS345D-09A
Matrix: Soil
Workgroup Number: WG294510
Collect Date: 01/24/2009 11:00
Sample Tag: DL01

PrePrep Method: NONE
Prep Method: 3051
Analytical Method: 6020
Analyst: JYH
Dilution: 2
Units: mg/kg

Instrument: ELAN-ICP
Prep Date: 01/29/2009 07:20
Cal Date: 02/09/2009 10:40
Run Date: 02/10/2009 01:42
File ID: EL.021009.014230
Percent Solid: 90.4

Analyte	CAS. Number	Result	Qual	RL	MDL
Arsenic, Total	7440-38-2	0.627	J	0.659	0.165
Lead, Total	7439-92-1	5.50 J		0.878	0.220
Selenium, Total	7782-49-2	0.434	J	0.878	0.220

MSH

J Estimated ; the analyte concentration was less than the low standard (LOQ)

Microbac

1141 lew
4/1/09

15

Sample Number: L09010535-15
Client ID: MR08-SS345D-09A
Matrix: Soil
Workgroup Number: WG294564
Collect Date: 01/24/2009 11:00
Sample Tag: 01

PrePrep Method: NONE
Prep Method: 7471A
Analytical Method: 7471A
Analyst: ADC
Dilution: 1
Units: mg/kg

Instrument: HYDRA
Prep Date: 01/29/2009 07:11
Cal Date: 02/10/2009 10:21
Run Date: 02/10/2009 11:19
File ID: HY.021009.111944
Percent Solid: 90.4

Analyte	CAS. Number	Result	Qual	RL	MDL
Mercury, Total	7439-97-6	UJ	~~U~~	0.109	0.0218

MSL

U Undetected; the analyte was analyzed for, but not detected.

Microbac

2715 lew 4/1/09

16

Sample Number: L09010535-16
Client ID: MR08-IS345-1-2-09A
Matrix: Soil
Workgroup Number: WG293798
Collect Date: 01/24/2009 11:05
Sample Tag: 01

PrePrep Method: NONE
Prep Method: 3051
Analytical Method: 6010B
Analyst: EDA
Dilution: 1
Units: mg/kg

Instrument: ICP-THERMO1
Prep Date: 01/29/2009 06:25
Cal Date: 01/30/2009 10:22
Run Date: 01/31/2009 01:18
File ID: T1.013109.011843
Percent Solid: 88.7

Analyte	CAS. Number	Result	Qual	RL	MDL
Silver, Total	7440-22-4		U	0.793	0.198
Barium, Total	7440-39-3	4.90		0.396	0.0793
Cadmium, Total	7440-43-9		U	0.159	0.0396
Chromium, Total	7440-47-3	5.21		0.793	0.0951

U Undetected; the analyte was analyzed for, but not detected.

Microbac

28 MW 4/1/09

16

Sample Number: L09010535-16
Client ID: MR08-IS345-1-2-09A
Matrix: Soil
Workgroup Number: WG294510
Collect Date: 01/24/2009 11:05
Sample Tag: DL01

PrePrep Method: NONE
Prep Method: 3051
Analytical Method: 6020
Analyst: JYH
Dilution: 2
Units: mg/kg

Instrument: ELAN-ICP
Prep Date: 01/29/2009 07:20
Cal Date: 02/09/2009 10:40
Run Date: 02/10/2009 01:48
File ID: EL.021009.014835
Percent Solid: 88.7

Analyte	CAS. Number	Result	Qual	RL	MDL
Arsenic, Total	7440-38-2	0.404	J	0.654	0.164
Lead, Total	7439-92-1	1.92 J		0.872	0.218
Selenium, Total	7782-49-2	0.474	J	0.872	0.218

MSH

J Estimated ; the analyte concentration was less than the low standard (LOQ)

Microbac

 2/11/09

16

Sample Number: L09010535-16
Client ID: MR08-IS345-1-2-09A
Matrix: Soil
Workgroup Number: WG294564
Collect Date: 01/24/2009 11:05
Sample Tag: 01

PrePrep Method: NONE
Prep Method: 7471A
Analytical Method: 7471A
Analyst: ADC
Dilution: 1
Units: mg/kg

Instrument: HYDRA
Prep Date: 01/29/2009 07:11
Cal Date: 02/10/2009 10:21
Run Date: 02/10/2009 11:21
File ID: HY.021009.112129
Percent Solid: 88.7

Analyte	CAS. Number	Result	Qual	RL	MDL	
Mercury, Total	7439-97-6	0.0320	J ~~B~~	0.112	0.0225	MSL

J Estimated ; the analyte concentration was less than the low standard (LOQ)

Microbac

2716 MW 4/1/09

17

Sample Number: L09010535-17
Client ID: MR08-IS345D-1-2-09A
Matrix: Soil
Workgroup Number: WG293798
Collect Date: 01/24/2009 11:05
Sample Tag: 01

PrePrep Method: NONE
Prep Method: 3051
Analytical Method: 6010B
Analyst: EDA
Dilution: 1
Units: mg/kg

Instrument: ICP-THERMO1
Prep Date: 01/29/2009 06:25
Cal Date: 01/30/2009 10:22
Run Date: 01/31/2009 01:24
File ID: T1.013109.012449
Percent Solid: 89.0

Analyte	CAS. Number	Result	Qual	RL	MDL
Silver, Total	7440-22-4	0.299	J	0.801	0.200
Barium, Total	7440-39-3	5.91		0.401	0.0801
Cadmium, Total	7440-43-9		U	0.160	0.0401
Chromium, Total	7440-47-3	5.66		0.801	0.0961

U Undetected; the analyte was analyzed for, but not detected.
J Estimated ; the analyte concentration was less than the low standard (LOQ)

Microbac

29 MW 4/1/09

17

Sample Number: L09010535-17
Client ID: MR08-IS345D-1-2-09A
Matrix: Soil
Workgroup Number: WG294510
Collect Date: 01/24/2009 11:05
Sample Tag: DL01

PrePrep Method: NONE
Prep Method: 3051
Analytical Method: 6020
Analyst: JYH
Dilution: 2
Units: mg/kg

Instrument: ELAN-ICP
Prep Date: 01/29/2009 07:20
Cal Date: 02/09/2009 10:40
Run Date: 02/10/2009 02:07
File ID: EL.021009.020743
Percent Solid: 89.0

Analyte	CAS. Number	Result	Qual	RL	MDL
Arsenic, Total	7440-38-2	0.565	J	0.641	0.160
Lead, Total	7439-92-1	2.59		0.854	0.214
Selenium, Total	7782-49-2	0.694	J	0.854	0.214

MSH

J Estimated ; the analyte concentration was less than the low standard (LOQ)

Microbac

1143 [illegible]

17

Sample Number: L09010535-17
Client ID: MR08-IS345D-1-2-09A
Matrix: Soil
Workgroup Number: WG294564
Collect Date: 01/24/2009 11:05
Sample Tag: 01

PrePrep Method: NONE
Prep Method: 7471A
Analytical Method: 7471A
Analyst: ADC
Dilution: 1
Units: mg/kg

Instrument: HYDRA
Prep Date: 01/29/2009 07:11
Cal Date: 02/10/2009 10:21
Run Date: 02/10/2009 11:23
File ID: HY.021009.112316
Percent Solid: 89.0

Analyte	CAS. Number	Result	Qual	RL	MDL
Mercury, Total	7439-97-6	0.0523 J	J	0.111	0.0222

MSL

J Estimated ; the analyte concentration was less than the low standard (LOQ)

Microbac

2717 MW 4/1/09

18

Sample Number: L09010535-18
Client ID: MR08-SS346-09A
Matrix: Soil
Workgroup Number: WG293798
Collect Date: 01/24/2009 11:30
Sample Tag: 01

PrePrep Method: NONE
Prep Method: 3051
Analytical Method: 6010B
Analyst: EDA
Dilution: 1
Units: mg/kg

Instrument: ICP-THERMO1
Prep Date: 01/29/2009 06:25
Cal Date: 01/30/2009 10:22
Run Date: 01/31/2009 01:30
File ID: T1.013109.013056
Percent Solid: 93.5

Analyte	CAS. Number	Result	Qual	RL	MDL
Silver, Total	7440-22-4		U	0.748	0.187
Barium, Total	7440-39-3	6.69		0.374	0.0748
Cadmium, Total	7440-43-9	0.203		0.150	0.0374
Chromium, Total	7440-47-3	7.31		0.748	0.0898

U Undetected; the analyte was analyzed for, but not detected.

Microbac

30 lw
1/1/09

18

Sample Number: L09010535-18
Client ID: MR08-SS346-09A
Matrix: Soil
Workgroup Number: WG294510
Collect Date: 01/24/2009 11:30
Sample Tag: DL01

PrePrep Method: NONE
Prep Method: 3051
Analytical Method: 6020
Analyst: JYH
Dilution: 2
Units: mg/kg

Instrument: ELAN-ICP
Prep Date: 01/29/2009 07:20
Cal Date: 02/09/2009 10:40
Run Date: 02/10/2009 02:13
File ID: EL.021009.021348
Percent Solid: 93.5

Analyte	CAS. Number	Result	Qual	RL	MDL
Arsenic, Total	7440-38-2	0.713		0.639	0.160
Lead, Total	7439-92-1	1.97 J		0.852	0.213
Selenium, Total	7782-49-2	0.374	J	0.852	0.213

MSH

J Estimated ; the analyte concentration was less than the low standard (LOQ)

Microbac

1144 JLW
Vol. 1.9

18

Sample Number: L09010535-18
Client ID: MR08-SS346-09A
Matrix: Soil
Workgroup Number: WG294564
Collect Date: 01/24/2009 11:30
Sample Tag: 01

PrePrep Method: NONE
Prep Method: 7471A
Analytical Method: 7471A
Analyst: ADC
Dilution: 1
Units: mg/kg

Instrument: HYDRA
Prep Date: 01/29/2009 07:11
Cal Date: 02/10/2009 10:21
Run Date: 02/10/2009 11:24
File ID: HY.021009.112459
Percent Solid: 93.5

Analyte	CAS. Number	Result	Qual	RL	MDL	
Mercury, Total	7439-97-6	U	~~B~~	0.103	0.0206	MSL

U Undetected; the analyte was analyzed for, but not detected.

Microbac

2718 MW 4/1/09

19

Sample Number: L09010535-19
Client ID: MR08-IS346-1-2-09A
Matrix: Soil
Workgroup Number: WG293798
Collect Date: 01/24/2009 11:40
Sample Tag: 01

PrePrep Method: NONE
Prep Method: 3051
Analytical Method: 6010B
Analyst: EDA
Dilution: 1
Units: mg/kg

Instrument: ICP-THERMO1
Prep Date: 01/29/2009 06:25
Cal Date: 01/30/2009 10:22
Run Date: 01/31/2009 01:37
File ID: T1.013109.013708
Percent Solid: 86.5

Analyte	CAS. Number	Result	Qual	RL	MDL
Silver, Total	7440-22-4	0.299	J	0.876	0.219
Barium, Total	7440-39-3	7.85		0.438	0.0876
Cadmium, Total	7440-43-9		U	0.175	0.0438
Chromium, Total	7440-47-3	6.43		0.876	0.105

U Undetected; the analyte was analyzed for, but not detected.
J Estimated ; the analyte concentration was less than the low standard (LOQ)

Microbac

31 fw 4/1/09

19

Sample Number: L09010535-19
Client ID: MR08-IS346-1-2-09A
Matrix: Soil
Workgroup Number: WG294588
Collect Date: 01/24/2009 11:40
Sample Tag: DL01

PrePrep Method: NONE
Prep Method: 3051
Analytical Method: 6020
Analyst: JYH
Dilution: 2
Units: mg/kg

Instrument: ELAN-ICP
Prep Date: 01/29/2009 08:12
Cal Date: 02/10/2009 10:53
Run Date: 02/10/2009 17:40
File ID: EL.021009.174057
Percent Solid: 86.5

Analyte	CAS. Number	Result	Qual	RL	MDL
Arsenic, Total	7440-38-2	0.520	J	0.690	0.172
Lead, Total	7439-92-1	2.22		0.920	0.230
Selenium, Total	7782-49-2	1.06		0.920	0.230

J Estimated ; the analyte concentration was less than the low standard (LOQ)

Microbac

1145 fee 6/1/09

19

Sample Number: L09010535-19
Client ID: MR08-IS346-1-2-09A
Matrix: Soil
Workgroup Number: WG294564
Collect Date: 01/24/2009 11:40
Sample Tag: 01

PrePrep Method: NONE
Prep Method: 7471A
Analytical Method: 7471A
Analyst: ADC
Dilution: 1
Units: mg/kg

Instrument: HYDRA
Prep Date: 01/29/2009 07:11
Cal Date: 02/10/2009 10:21
Run Date: 02/10/2009 11:31
File ID: HY.021009.113115
Percent Solid: 86.5

Analyte	CAS. Number	Result	Qual	RL	MDL
Mercury, Total	7439-97-6		U J	0.110	0.0221

MSL

U Undetected; the analyte was analyzed for, but not detected.

Microbac

2719 LW 4/1/09

20

Sample Number: L09010535-20
Client ID: MR08-SS354-09A
Matrix: Soil
Workgroup Number: WG293798
Collect Date: 01/24/2009 13:10
Sample Tag: 01

PrePrep Method: NONE
Prep Method: 3051
Analytical Method: 6010B
Analyst: EDA
Dilution: 1
Units: mg/kg

Instrument: ICP-THERMO1
Prep Date: 01/29/2009 06:25
Cal Date: 01/30/2009 10:22
Run Date: 01/31/2009 01:43
File ID: T1.013109.014314
Percent Solid: 88.3

Analyte	CAS. Number	Result	Qual	RL	MDL
Silver, Total	7440-22-4	0.231	J	0.760	0.190
Barium, Total	7440-39-3	9.05		0.380	0.0760
Cadmium, Total	7440-43-9	0.0958	J	0.152	0.0380
Chromium, Total	7440-47-3	5.88		0.760	0.0913

J Estimated ; the analyte concentration was less than the low standard (LOQ)

Microbac

32 lew 4/1/09

20

Sample Number: L09010535-20
Client ID: MR08-SS354-09A
Matrix: Soil
Workgroup Number: WG294588
Collect Date: 01/24/2009 13:10
Sample Tag: DL01

PrePrep Method: NONE
Prep Method: 3051
Analytical Method: 6020
Analyst: JYH
Dilution: 2
Units: mg/kg

Instrument: ELAN-ICP
Prep Date: 01/29/2009 08:12
Cal Date: 02/10/2009 10:53
Run Date: 02/10/2009 18:00
File ID: EL.021009.180004
Percent Solid: 88.3

Analyte	CAS. Number	Result	Qual	RL	MDL
Arsenic, Total	7440-38-2	0.665	J	0.669	0.167
Lead, Total	7439-92-1	1.48		0.892	0.223
Selenium, Total	7782-49-2		U	0.892	0.223

U Undetected; the analyte was analyzed for, but not detected.
J Estimated ; the analyte concentration was less than the low standard (LOQ)

Microbac

1146 MW 1/11/09

20

Sample Number:	L09010535-20	PrePrep Method:	NONE	Instrument:	HYDRA
Client ID:	MR08-SS354-09A	Prep Method:	7471A	Prep Date:	01/29/2009 07:11
Matrix:	Soil	Analytical Method:	7471A	Cal Date:	02/10/2009 10:21
Workgroup Number:	WG294564	Analyst:	ADC	Run Date:	02/10/2009 11:33
Collect Date:	01/24/2009 13:10	Dilution:	1	File ID:	HY.021009.113308
Sample Tag:	01	Units:	mg/kg	Percent Solid:	88.3

Analyte	CAS. Number	Result	Qual	RL	MDL	
Mercury, Total	7439-97-6	UJ	~~J~~	0.111	0.0223	MSL

U Undetected; the analyte was analyzed for, but not detected.

Microbac

2720 QW 4/1/09

21

Sample Number: L09010535-21
Client ID: MR08-IS354-1-2-09A
Matrix: Soil
Workgroup Number: WG293798
Collect Date: 01/24/2009 13:15
Sample Tag: 01

PrePrep Method: NONE
Prep Method: 3051
Analytical Method: 6010B
Analyst: EDA
Dilution: 1
Units: mg/kg

Instrument: ICP-THERMO1
Prep Date: 01/29/2009 06:25
Cal Date: 01/30/2009 10:22
Run Date: 01/31/2009 01:49
File ID: T1.013109.014929
Percent Solid: 86.7

Analyte	CAS. Number	Result	Qual	RL	MDL
Silver, Total	7440-22-4	0.438	J	0.860	0.215
Barium, Total	7440-39-3	7.59		0.430	0.0860
Cadmium, Total	7440-43-9		U	0.172	0.0430
Chromium, Total	7440-47-3	5.36		0.860	0.103

U Undetected; the analyte was analyzed for, but not detected.
J Estimated ; the analyte concentration was less than the low standard (LOQ)

Microbac

33 JEW 6/1/09

21

Sample Number: L09010535-21
Client ID: MR08-IS354-1-2-09A
Matrix: Soil
Workgroup Number: WG294588
Collect Date: 01/24/2009 13:15
Sample Tag: DL01

PrePrep Method: NONE
Prep Method: 3051
Analytical Method: 6020
Analyst: JYH
Dilution: 2
Units: mg/kg

Instrument: ELAN-ICP
Prep Date: 01/29/2009 08:12
Cal Date: 02/10/2009 10:53
Run Date: 02/10/2009 18:06
File ID: EL.021009.180608
Percent Solid: 86.7

Analyte	CAS. Number	Result	Qual	RL	MDL
Arsenic, Total	7440-38-2	0.257	J	0.692	0.173
Lead, Total	7439-92-1	2.34		0.923	0.231
Selenium, Total	7782-49-2		U	0.923	0.231

U Undetected; the analyte was analyzed for, but not detected.
J Estimated ; the analyte concentration was less than the low standard (LOQ)

Microbac

1147 MW 101.109

21

Sample Number: L09010535-21
Client ID: MR08-IS354-1-2-09A
Matrix: Soil
Workgroup Number: WG294564
Collect Date: 01/24/2009 13:15
Sample Tag: 01

PrePrep Method: NONE
Prep Method: 7471A
Analytical Method: 7471A
Analyst: ADC
Dilution: 1
Units: mg/kg

Instrument: HYDRA
Prep Date: 01/29/2009 07:11
Cal Date: 02/10/2009 10:21
Run Date: 02/10/2009 11:34
File ID: HY.021009.113454
Percent Solid: 86.7

Analyte	CAS. Number	Result	Qual	RL	MDL
Mercury, Total	7439-97-6	0.0429	J	0.112	0.0225

MSL

J Estimated ; the analyte concentration was less than the low standard (LOQ)

Microbac

2721 MW 4/1/09

22

Sample Number: L09010535-22
Client ID: MR08-SS369-09A
Matrix: Soil
Workgroup Number: WG293798
Collect Date: 01/24/2009 13:30
Sample Tag: 01

PrePrep Method: NONE
Prep Method: 3051
Analytical Method: 6010B
Analyst: EDA
Dilution: 1
Units: mg/kg

Instrument: ICP-THERMO1
Prep Date: 01/29/2009 06:25
Cal Date: 01/30/2009 10:22
Run Date: 01/31/2009 01:55
File ID: T1.013109.015535
Percent Solid: 91.5

Analyte	CAS. Number	Result	Qual	RL	MDL
Silver, Total	7440-22-4		U	0.768	0.192
Barium, Total	7440-39-3	8.51		0.384	0.0768
Cadmium, Total	7440-43-9	0.482		0.154	0.0384
Chromium, Total	7440-47-3	9.73		0.768	0.0921

U Undetected; the analyte was analyzed for, but not detected.

Microbac

34 MW
4/1/09

22

Sample Number: L09010535-22
Client ID: MR08-SS369-09A
Matrix: Soil
Workgroup Number: WG294588
Collect Date: 01/24/2009 13:30
Sample Tag: DL01

PrePrep Method: NONE
Prep Method: 3051
Analytical Method: 6020
Analyst: JYH
Dilution: 2
Units: mg/kg

Instrument: ELAN-ICP
Prep Date: 01/29/2009 08:12
Cal Date: 02/10/2009 10:53
Run Date: 02/10/2009 18:24
File ID: EL.021009.182420
Percent Solid: 91.5

Analyte	CAS. Number	Result	Qual	RL	MDL
Arsenic, Total	7440-38-2	1.43		0.640	0.160
Lead, Total	7439-92-1	16.4		0.854	0.213
Selenium, Total	7782-49-2	0.461	J	0.854	0.213

J Estimated ; the analyte concentration was less than the low standard (LOQ)

Microbac

22

Sample Number: L09010535-22
Client ID: MR08-SS369-09A
Matrix: Soil
Workgroup Number: WG294564
Collect Date: 01/24/2009 13:30
Sample Tag: 01

PrePrep Method: NONE
Prep Method: 7471A
Analytical Method: 7471A
Analyst: ADC
Dilution: 1
Units: mg/kg

Instrument: HYDRA
Prep Date: 01/29/2009 07:11
Cal Date: 02/10/2009 10:21
Run Date: 02/10/2009 11:37
File ID: HY.021009.113708
Percent Solid: 91.5

Analyte	CAS. Number	Result	Qual	RL	MDL
Mercury, Total	7439-97-6		U J	0.103	0.0206

MSL

U Undetected; the analyte was analyzed for, but not detected.

Microbac

2722 MW 4/1/09

23

Sample Number: L09010535-23
Client ID: MR08-IS369-1-2-09A
Matrix: Soil
Workgroup Number: WG293798
Collect Date: 01/24/2009 13:45
Sample Tag: 01

PrePrep Method: NONE
Prep Method: 3051
Analytical Method: 6010B
Analyst: EDA
Dilution: 1
Units: mg/kg

Instrument: ICP-THERMO1
Prep Date: 01/29/2009 06:25
Cal Date: 01/30/2009 10:22
Run Date: 01/31/2009 02:01
File ID: T1.013109.020156
Percent Solid: 90.5

Analyte	CAS. Number	Result	Qual	RL	MDL
Silver, Total	7440-22-4	0.337	J	0.824	0.206
Barium, Total	7440-39-3	11.2		0.412	0.0824
Cadmium, Total	7440-43-9		U	0.165	0.0412
Chromium, Total	7440-47-3	6.21		0.824	0.0989

U Undetected; the analyte was analyzed for, but not detected.
J Estimated ; the analyte concentration was less than the low standard (LOQ)

Microbac

35 lew 4/1/09

23

Sample Number: L09010535-23
Client ID: MR08-IS369-1-2-09A
Matrix: Soil
Workgroup Number: WG294588
Collect Date: 01/24/2009 13:45
Sample Tag: DL01

PrePrep Method: NONE
Prep Method: 3051
Analytical Method: 6020
Analyst: JYH
Dilution: 2
Units: mg/kg

Instrument: ELAN-ICP
Prep Date: 01/29/2009 08:12
Cal Date: 02/10/2009 10:53
Run Date: 02/10/2009 18:30
File ID: EL.021009.183022
Percent Solid: 90.5

Analyte	CAS. Number	Result	Qual	RL	MDL
Arsenic, Total	7440-38-2	0.370	J	0.635	0.159
Lead, Total	7439-92-1	2.14		0.846	0.212
Selenium, Total	7782-49-2	0.216	J	0.846	0.212

J Estimated ; the analyte concentration was less than the low standard (LOQ)

Microbac

23

Sample Number: L09010535-23
Client ID: MR08-IS369-1-2-09A
Matrix: Soil
Workgroup Number: WG294564
Collect Date: 01/24/2009 13:45
Sample Tag: 01

PrePrep Method: NONE
Prep Method: 7471A
Analytical Method: 7471A
Analyst: ADC
Dilution: 1
Units: mg/kg

Instrument: HYDRA
Prep Date: 01/29/2009 07:11
Cal Date: 02/10/2009 10:21
Run Date: 02/10/2009 11:38
File ID: HY.021009.113854
Percent Solid: 90.5

Analyte	CAS. Number	Result	Qual	RL	MDL
Mercury, Total	7439-97-6	UJ	~~U~~	0.104	0.0207

MSL

U Undetected; the analyte was analyzed for, but not detected.

Microbac

2723 RW 4/1/09

24

Sample Number: L09010535-24
Client ID: MR08-SS369D-09A
Matrix: Soil
Workgroup Number: WG293816
Collect Date: 01/24/2009 13:30
Sample Tag: 01

PrePrep Method: NONE
Prep Method: 3051
Analytical Method: 6010B
Analyst: EDA
Dilution: 1
Units: mg/kg

Instrument: ICP-THERMO2
Prep Date: 01/29/2009 07:30
Cal Date: 01/30/2009 10:29
Run Date: 01/31/2009 02:24
File ID: T2.013109.022433
Percent Solid: 90.7

Analyte	CAS. Number	Result	Qual	RL	MDL
Silver, Total	7440-22-4		U	0.837	0.209
Barium, Total	7440-39-3	6.20		0.419	0.0837
Cadmium, Total	7440-43-9	0.116	J	0.167	0.0419
Chromium, Total	7440-47-3	4.64 J		0.837	0.100

MSH

U Undetected; the analyte was analyzed for, but not detected.
J Estimated ; the analyte concentration was less than the low standard (LOQ)

Microbac

36 lw
02/11/09

24

Sample Number: L09010535-24
Client ID: MR08-SS369D-09A
Matrix: Soil
Workgroup Number: WG294588
Collect Date: 01/24/2009 13:30
Sample Tag: DL01

PrePrep Method: NONE
Prep Method: 3051
Analytical Method: 6020
Analyst: JYH
Dilution: 2
Units: mg/kg

Instrument: ELAN-ICP
Prep Date: 01/29/2009 08:12
Cal Date: 02/10/2009 10:53
Run Date: 02/10/2009 18:36
File ID: EL.021009.183624
Percent Solid: 90.7

Analyte	CAS. Number	Result	Qual	RL	MDL
Arsenic, Total	7440-38-2	0.959		0.662	0.165
Lead, Total	7439-92-1	4.55		0.882	0.221
Selenium, Total	7782-49-2	0.342	J	0.882	0.221

J Estimated ; the analyte concentration was less than the low standard (LOQ)

Microbac

1150

24

Sample Number: L09010535-24
Client ID: MR08-SS369D-09A
Matrix: Soil
Workgroup Number: WG294451
Collect Date: 01/24/2009 13:30
Sample Tag: 01

PrePrep Method: NONE
Prep Method: 7471A
Analytical Method: 7471A
Analyst: ADC
Dilution: 1
Units: mg/kg

Instrument: HYDRA
Prep Date: 01/29/2009 08:17
Cal Date: 02/09/2009 09:56
Run Date: 02/09/2009 10:14
File ID: HY.020909.101454
Percent Solid: 90.7

Analyte	CAS. Number	Result	Qual	RL	MDL
Mercury, Total	7439-97-6		U	0.105	0.0209

U Undetected; the analyte was analyzed for, but not detected.

Microbac

2724 Alex 4/1/09

ENVIRONMENTAL
Data Services, Inc.

METALS

USEPA Region IV - Level IV Review

Site: MCB Camp Lejeune, TO-09 SDG #: L09010536

Client: CH2M HILL, Inc., Virginia Beach, Virginia Date: April 2, 2009

Laboratory: Microbac Laboratories, Inc., Marietta, Ohio Reviewer: Nancy Weaver

EDS ID	Client Sample ID	Laboratory Sample ID	Matrix
1	MR08-IS369D-1-2-09A	L09010536-01	Soil
2	MR08-SS370-09A	L09010536-02	Soil
3	MR08-IS370-1-2-09A	L09010536-03	Soil
4	MR08-SS353-09A	L09010536-04	Soil
5	MR08-IS353-1-2-09A	L09010536-05	Soil
6	MR08-SS328-09A	L09010536-06	Soil
7	MR08-IS328-4-5-09A	L09010536-07	Soil
8	MR08-SS347-09A	L09010536-08	Soil
9	MR08-IS347-3-4-09A	L09010536-09	Soil
10	MR08-EB012509	L09010536-10	Soil
11	MR08-SS279-09A	L09010536-11	Soil
12	MR08-SS279D-09A	L09010536-12	Soil
13	MR08-IS279-1-2-09A	L09010536-13	Soil
14	MR08-IS279D-1-2-09A	L09010536-14	Soil
15	MR08-IS352-1-2-09A	L09010536-15	Soil
16	MR08-SS352-09A	L09010536-16	Soil
17	MR08-SS371-09A	L09010536-17	Soil
18	MR08-IS371-1-2-09A	L09010536-18	Soil
19	MR08-SS372-09A	L09010536-19	Soil
20MS	MR08-SS372-09AMS	L09010536-20MS	Soil
21MSD	MR08-SS372-09AMSD	L09010536-21MSD	Soil
22	MR08-IS372-1-2-09A	L09010536-22	Soil
23MS	MR08-IS372-1-2-09AMS	L09010536-23MS	Soil
24MSD	MR08-IS372-1-2-09AMSD	L09010536-24MSD	Soil

The USEPA "Contract Laboratory Program National Functional Guidelines for Inorganic Data Review," October 2004, and professional judgement were used in evaluating the data in this summary report.

Holding Times - All samples were prepared and analyzed within 28 days for mercury and 180 days for all other metals.

Calibration - The ICV and CCV %R values were acceptable.

Method and Calibration Blanks - The method blanks were free of contamination.

Field and Equipment Blank - Field QC results are summarized below.

Blank ID	Compound	Conc. ug/L	Action Level mg/kg	Qualifier	Affected Samples
MR08-EB012509	None-ND	-	-	-	-
MR08-FB012609	None-ND	-	-	-	-
MR08-EB012409	Selenium	0.598	0.997	None	All ND or >5X

ICP Interference Check Sample - All %R values were acceptable.

MS/MSD - The MS/MSD sample exhibited acceptable %R and RPD values except the following.

MS/MSD Sample ID	Compound	MS/MSD %R/RPD	Qualifier	Affected Samples
Reference (WG293816)	Chromium	131%/Ok/Ok	J	1-9, 11-18
19 (WG293890)	Barium	Ok/149%/26.7%	J	19
	Chromium	136%/Ok/Ok	J	19
22 (WG294609)	Lead	Ok/126%/Ok	J	15-19, 22

LCS - The LCS samples exhibited acceptable %R values.

ICP Serial Dilution - The ICP serial dilution sample exhibited acceptable %D values.

Field Duplicates - Field duplicate results are summarized below.

Compound	MR08-SS279-09A mg/kg	MR08-SS279D-09A mg/kg	RPD	Qualifier
Barium	7.27	7.62	5%	None
Cadmium	0.0927	0.184	66%	None
Chromium	9.68	9.86	2%	None
Arsenic	0.597	0.607	2%	None
Lead	19.9	5.26	116%	None
Selenium	0.321	0.376	16%	None

Compound	MR08-IS279-1-2-09A mg/kg	MR08-IS279D-1-2-09A mg/kg	RPD	Qualifier
Barium	9.33	8.83	6%	None
Chromium	2.26	1.06	72%	None
Arsenic	0.175	0.192	9%	None
Lead	3.34	3.74	11%	None
Selenium	0.304	0.333	9%	None

Compound Quantitation - Several samples were analyzed at various dilutions due to high concentrations of target compounds.

Report Number: L09010536

Report Date : February 24, 2009

Sample Number: L09010536-01
Client ID: MR08-IS369D-1-2-09A
Matrix: Soil
Workgroup Number: WG293816
Collect Date: 01/24/2009 13:45
Sample Tag: 01

PrePrep Method: NONE
Prep Method: 3051
Analytical Method: 6010B
Analyst: EDA
Dilution: 1
Units: mg/kg

Instrument: ICP-THERMO2
Prep Date: 01/29/2009 07:30
Cal Date: 01/30/2009 10:29
Run Date: 01/31/2009 02:49
File ID: T2.013109.024908
Percent Solid: 90.8

Analyte	CAS. Number	Result	Qual	RL	MDL
Silver, Total	7440-22-4		U	0.799	0.200
Barium, Total	7440-39-3	5.57		0.399	0.0799
Cadmium, Total	7440-43-9		U	0.160	0.0399
Chromium, Total	7440-47-3	2.90 J		0.799	0.0958

MSH

U Undetected; the analyte was analyzed for, but not detected.

Microbac

13 RW 4/2/09

Report Number: L09010536

Report Date : February 24, 2009

1

Sample Number:	L09010536-01	PrePrep Method:	NONE	Instrument:	ELAN-ICP
Client ID:	MR08-IS369D-1-2-09A	Prep Method:	3051	Prep Date:	01/29/2009 08:12
Matrix:	Soil	Analytical Method:	6020	Cal Date:	02/10/2009 10:53
Workgroup Number:	WG294588	Analyst:	JYH	Run Date:	02/10/2009 18:42
Collect Date:	01/24/2009 13:45	Dilution:	2	File ID:	EL.021009.184226
Sample Tag:	DL01	Units:	mg/kg	Percent Solid:	90.8

Analyte	CAS. Number	Result	Qual	RL	MDL
Arsenic, Total	7440-38-2	0.352	J	0.661	0.165
Lead, Total	7439-92-1	2.16		0.881	0.220
Selenium, Total	7782-49-2		U	0.881	0.220

U Undetected; the analyte was analyzed for, but not detected.
J Estimated ; the analyte concentration was less than the low standard (LOQ)

Microbac

775 LW 4/2/09

Report Number: L09010536

Report Date : February 24, 2009

Sample Number:	L09010536-01	PrePrep Method:	NONE	Instrument:	HYDRA
Client ID:	MR08-IS369D-1-2-09A	Prep Method:	7471A	Prep Date:	01/28/2009 12:37
Matrix:	Soil	Analytical Method:	7471A	Cal Date:	02/03/2009 09:45
Workgroup Number:	WG293922	Analyst:	ADC	Run Date:	02/03/2009 10:09
Collect Date:	01/24/2009 13:45	Dilution:	1	File ID:	HY.020309.100942
Sample Tag:	01	Units:	mg/kg	Percent Solid:	90.8

Analyte	CAS. Number	Result	Qual	RL	MDL
Mercury, Total	7439-97-6		U	0.110	0.0220

U Undetected; the analyte was analyzed for, but not detected.

Microbac

2156 lw 4/2/09

Sample Number:	L09010536-02	PrePrep Method:	NONE	Instrument:	ICP-THERMO2
Client ID:	MR08-SS370-09A	Prep Method:	3051	Prep Date:	01/29/2009 07:30
Matrix:	Soil	Analytical Method:	6010B	Cal Date:	01/30/2009 10:29
Workgroup Number:	WG293816	Analyst:	EDA	Run Date:	01/31/2009 03:07
Collect Date:	01/24/2009 14:00	Dilution:	1	File ID:	T2.013109.030723
Sample Tag:	01	Units:	mg/kg	Percent Solid:	83.6

Analyte	CAS. Number	Result	Qual	RL	MDL
Silver, Total	7440-22-4		U	0.919	0.230
Barium, Total	7440-39-3	12.8		0.459	0.0919
Cadmium, Total	7440-43-9	0.293		0.184	0.0459
Chromium, Total	7440-47-3	5.88 J		0.919	0.110

MSH

U Undetected; the analyte was analyzed for, but not detected.

Microbac

14 fcw 4/2/09

2

Sample Number:	L09010536-02	PrePrep Method:	NONE	Instrument:	ELAN-ICP
Client ID:	MR08-SS370-09A	Prep Method:	3051	Prep Date:	01/29/2009 08:12
Matrix:	Soil	Analytical Method:	6020	Cal Date:	02/10/2009 10:53
Workgroup Number:	WG294588	Analyst:	JYH	Run Date:	02/10/2009 18:48
Collect Date:	01/24/2009 14:00	Dilution:	2	File ID:	EL.021009.184829
Sample Tag:	DL01	Units:	mg/kg	Percent Solid:	83.6

Analyte	CAS. Number	Result	Qual	RL	MDL
Arsenic, Total	7440-38-2	0.654	J	0.715	0.179
Selenium, Total	7782-49-2	0.380	J	0.953	0.238

J Estimated ; the analyte concentration was less than the low standard (LOQ)

Microbac

776 fw 4/2/09

2

Sample Number: L09010536-02
Client ID: MR08-SS370-09A
Matrix: Soil
Workgroup Number: WG294588
Collect Date: 01/24/2009 14:00
Sample Tag: DL02

PrePrep Method: NONE
Prep Method: 3051
Analytical Method: 6020
Analyst: JYH
Dilution: 25
Units: mg/kg

Instrument: ELAN-ICP
Prep Date: 01/29/2009 08:12
Cal Date: 02/12/2009 12:32
Run Date: 02/12/2009 15:03
File ID: EL.021209.150323
Percent Solid: 83.6

Analyte	CAS. Number	Result	Qual	RL	MDL
Lead, Total	7439-92-1	104		11.9	2.98

Microbac

777 JW
4/2/09

2

Sample Number:	L09010536-02	PrePrep Method:	NONE	Instrument:	HYDRA
Client ID:	MR08-SS370-09A	Prep Method:	7471A	Prep Date:	01/28/2009 12:37
Matrix:	Soil	Analytical Method:	7471A	Cal Date:	02/03/2009 09:45
Workgroup Number:	WG293922	Analyst:	ADC	Run Date:	02/03/2009 10:13
Collect Date:	01/24/2009 14:00	Dilution:	1	File ID:	HY.020309.101350
Sample Tag:	01	Units:	mg/kg	Percent Solid:	83.6

Analyte	CAS. Number	Result	Qual	RL	MDL
Mercury, Total	7439-97-6	0.0313	J	0.117	0.0234

J Estimated ; the analyte concentration was less than the low standard (LOQ)

Microbac

2157 lw 4/2/09

3.

Sample Number: L09010536-03
Client ID: MR08-IS370-1-2-09A
Matrix: Soil
Workgroup Number: WG293816
Collect Date: 01/24/2009 14:10
Sample Tag: 01

PrePrep Method: NONE
Prep Method: 3051
Analytical Method: 6010B
Analyst: EDA
Dilution: 1
Units: mg/kg

Instrument: ICP-THERMO2
Prep Date: 01/29/2009 07:30
Cal Date: 01/30/2009 10:29
Run Date: 01/31/2009 03:13
File ID: T2.013109.031326
Percent Solid: 89.8

Analyte	CAS. Number	Result	Qual	RL	MDL
Silver, Total	7440-22-4		U	0.797	0.199
Barium, Total	7440-39-3	9.18		0.398	0.0797
Cadmium, Total	7440-43-9		U	0.159	0.0398
Chromium, Total	7440-47-3	3.20 J		0.797	0.0956

MSH

U Undetected; the analyte was analyzed for, but not detected.

Microbac

15 lew 4/2/09

3

Sample Number: L09010536-03
Client ID: MR08-IS370-1-2-09A
Matrix: Soil
Workgroup Number: WG294588
Collect Date: 01/24/2009 14:10
Sample Tag: DL01

PrePrep Method: NONE
Prep Method: 3051
Analytical Method: 6020
Analyst: JYH
Dilution: 2
Units: mg/kg

Instrument: ELAN-ICP
Prep Date: 01/29/2009 08:12
Cal Date: 02/10/2009 10:53
Run Date: 02/10/2009 18:54
File ID: EL.021009.185432
Percent Solid: 89.8

Analyte	CAS. Number	Result	Qual	RL	MDL
Arsenic, Total	7440-38-2	0.366	J	0.662	0.165
Lead, Total	7439-92-1	4.74		0.882	0.221
Selenium, Total	7782-49-2	0.383	J	0.882	0.221

J Estimated ; the analyte concentration was less than the low standard (LOQ)

Microbac

778 lw
4/2/09

3

Sample Number:	L09010536-03	PrePrep Method:	NONE	Instrument:	HYDRA
Client ID:	MR08-IS370-1-2-09A	Prep Method:	7471A	Prep Date:	01/28/2009 12:37
Matrix:	Soil	Analytical Method:	7471A	Cal Date:	02/03/2009 09:45
Workgroup Number:	WG293922	Analyst:	ADC	Run Date:	02/03/2009 10:15
Collect Date:	01/24/2009 14:10	Dilution:	1	File ID:	HY.020309.101543
Sample Tag:	01	Units:	mg/kg	Percent Solid:	89.8

Analyte	CAS. Number	Result	Qual	RL	MDL
Mercury, Total	7439-97-6		U	0.110	0.0220

U Undetected; the analyte was analyzed for, but not detected.

Microbac

2158 lew 4/2/09

4

Sample Number: L09010536-04
Client ID: MR08-SS353-09A
Matrix: Soil
Workgroup Number: WG293816
Collect Date: 01/24/2009 14:25
Sample Tag: 01

PrePrep Method: NONE
Prep Method: 3051
Analytical Method: 6010B
Analyst: EDA
Dilution: 1
Units: mg/kg

Instrument: ICP-THERMO2
Prep Date: 01/29/2009 07:30
Cal Date: 01/30/2009 10:29
Run Date: 01/31/2009 03:19
File ID: T2.013109.031932
Percent Solid: 93.7

Analyte	CAS. Number	Result	Qual	RL	MDL
Silver, Total	7440-22-4		U	0.715	0.179
Barium, Total	7440-39-3	4.62		0.357	0.0715
Cadmium, Total	7440-43-9	0.289		0.143	0.0357
Chromium, Total	7440-47-3	6.11 J		0.715	0.0858

MSH

U Undetected; the analyte was analyzed for, but not detected.

Microbac

16 JCW 4/2/09

4

Sample Number: L09010536-04
Client ID: MR08-SS353-09A
Matrix: Soil
Workgroup Number: WG294588
Collect Date: 01/24/2009 14:25
Sample Tag: DL01

PrePrep Method: NONE
Prep Method: 3051
Analytical Method: 6020
Analyst: JYH
Dilution: 2
Units: mg/kg

Instrument: ELAN-ICP
Prep Date: 01/29/2009 08:12
Cal Date: 02/10/2009 10:53
Run Date: 02/10/2009 19:13
File ID: EL.021009.191338
Percent Solid: 93.7

Analyte	CAS. Number	Result	Qual	RL	MDL
Arsenic, Total	7440-38-2	0.995		0.634	0.158
Lead, Total	7439-92-1	3.99		0.845	0.211
Selenium, Total	7782-49-2		U	0.845	0.211

U Undetected; the analyte was analyzed for, but not detected.

Microbac

779 MW
4/2/09

4

Sample Number:	L09010536-04	PrePrep Method:	NONE	Instrument:	HYDRA
Client ID:	MR08-SS353-09A	Prep Method:	7471A	Prep Date:	01/28/2009 12:37
Matrix:	Soil	Analytical Method:	7471A	Cal Date:	02/03/2009 09:45
Workgroup Number:	WG293922	Analyst:	ADC	Run Date:	02/03/2009 10:21
Collect Date:	01/24/2009 14:25	Dilution:	1	File ID:	HY.020309.102141
Sample Tag:	01	Units:	mg/kg	Percent Solid:	93.7

Analyte	CAS. Number	Result	Qual	RL	MDL
Mercury, Total	7439-97-6		U	0.103	0.0205

U Undetected; the analyte was analyzed for, but not detected.

Microbac

2159 lw 4/2/09

5

Sample Number: L09010536-05
Client ID: MR08-IS353-1-2-09A
Matrix: Soil
Workgroup Number: WG293816
Collect Date: 01/24/2009 14:30
Sample Tag: 01

PrePrep Method: NONE
Prep Method: 3051
Analytical Method: 6010B
Analyst: EDA
Dilution: 1
Units: mg/kg

Instrument: ICP-THERMO2
Prep Date: 01/29/2009 07:30
Cal Date: 01/30/2009 10:29
Run Date: 01/31/2009 03:25
File ID: T2.013109.032553
Percent Solid: 80.9

Analyte	CAS. Number	Result	Qual	RL	MDL
Silver, Total	7440-22-4		U	0.846	0.211
Barium, Total	7440-39-3	10.3		0.423	0.0846
Cadmium, Total	7440-43-9		U	0.169	0.0423
Chromium, Total	7440-47-3	3.32 J		0.846	0.101

MSH

U Undetected; the analyte was analyzed for, but not detected.

Microbac

17 lew 4/2/09

5

Sample Number: L09010536-05
Client ID: MR08-IS353-1-2-09A
Matrix: Soil
Workgroup Number: WG294588
Collect Date: 01/24/2009 14:30
Sample Tag: DL01

PrePrep Method: NONE
Prep Method: 3051
Analytical Method: 6020
Analyst: JYH
Dilution: 2
Units: mg/kg

Instrument: ELAN-ICP
Prep Date: 01/29/2009 08:12
Cal Date: 02/10/2009 10:53
Run Date: 02/10/2009 19:19
File ID: EL.021009.191941
Percent Solid: 80.9

Analyte	CAS. Number	Result	Qual	RL	MDL
Arsenic, Total	7440-38-2	0.504	J	0.734	0.184
Lead, Total	7439-92-1	3.07		0.979	0.245
Selenium, Total	7782-49-2	1.15		0.979	0.245

J Estimated ; the analyte concentration was less than the low standard (LOQ)

Microbac

780 JW 4/2/09

5

Sample Number: L09010536-05
Client ID: MR08-IS353-1-2-09A
Matrix: Soil
Workgroup Number: WG293922
Collect Date: 01/24/2009 14:30
Sample Tag: 01

PrePrep Method: NONE
Prep Method: 7471A
Analytical Method: 7471A
Analyst: ADC
Dilution: 1
Units: mg/kg

Instrument: HYDRA
Prep Date: 01/28/2009 12:37
Cal Date: 02/03/2009 09:45
Run Date: 02/03/2009 10:23
File ID: HY.020309.102347
Percent Solid: 80.9

Analyte	CAS. Number	Result	Qual	RL	MDL
Mercury, Total	7439-97-6		U	0.117	0.0235

U Undetected; the analyte was analyzed for, but not detected.

Microbac

2160 lw 4/2/09

6

Sample Number: L09010536-06
Client ID: MR08-SS328-09A
Matrix: Soil
Workgroup Number: WG293816
Collect Date: 01/24/2009 15:00
Sample Tag: 01

PrePrep Method: NONE
Prep Method: 3051
Analytical Method: 6010B
Analyst: EDA
Dilution: 1
Units: mg/kg

Instrument: ICP-THERMO2
Prep Date: 01/29/2009 07:30
Cal Date: 01/30/2009 10:29
Run Date: 01/31/2009 03:31
File ID: T2.013109.033159
Percent Solid: 87.4

Analyte	CAS. Number	Result	Qual	RL	MDL
Silver, Total	7440-22-4		U	0.856	0.214
Barium, Total	7440-39-3	21.9		0.428	0.0856
Cadmium, Total	7440-43-9	0.643		0.171	0.0428
Chromium, Total	7440-47-3	11.9 J		0.856	0.103

MSH

U Undetected; the analyte was analyzed for, but not detected.

Microbac

18 lw 4/2/09

6

Sample Number: L09010536-06
Client ID: MR08-SS328-09A
Matrix: Soil
Workgroup Number: WG294588
Collect Date: 01/24/2009 15:00
Sample Tag: DL02

PrePrep Method: NONE
Prep Method: 3051
Analytical Method: 6020
Analyst: JYH
Dilution: 25
Units: mg/kg

Instrument: ELAN-ICP
Prep Date: 01/29/2009 08:12
Cal Date: 02/12/2009 12:32
Run Date: 02/12/2009 15:09
File ID: EL.021209.150926
Percent Solid: 87.4

Analyte	CAS. Number	Result	Qual	RL	MDL
Lead, Total	7439-92-1	417		11.1	2.79

Microbac

781 LW 4/2/09

6

Sample Number: L09010536-06
Client ID: MR08-SS328-09A
Matrix: Soil
Workgroup Number: WG294588
Collect Date: 01/24/2009 15:00
Sample Tag: DL01

PrePrep Method: NONE
Prep Method: 3051
Analytical Method: 6020
Analyst: JYH
Dilution: 2
Units: mg/kg

Instrument: ELAN-ICP
Prep Date: 01/29/2009 08:12
Cal Date: 02/10/2009 10:53
Run Date: 02/10/2009 19:25
File ID: EL.021009.192545
Percent Solid: 87.4

Analyte	CAS. Number	Result	Qual	RL	MDL
Arsenic, Total	7440-38-2	0.878		0.669	0.167
Selenium, Total	7782-49-2	0.601	J	0.892	0.223

J Estimated ; the analyte concentration was less than the low standard (LOQ)

Microbac

782 lew 4/2/09

6

Sample Number:	L09010536-06	PrePrep Method:	NONE	Instrument:	HYDRA
Client ID:	MR08-SS328-09A	Prep Method:	7471A	Prep Date:	01/28/2009 12:37
Matrix:	Soil	Analytical Method:	7471A	Cal Date:	02/03/2009 09:45
Workgroup Number:	WG293922	Analyst:	ADC	Run Date:	02/03/2009 10:26
Collect Date:	01/24/2009 15:00	Dilution:	1	File ID:	HY.020309.102611
Sample Tag:	01	Units:	mg/kg	Percent Solid:	87.4

Analyte	CAS. Number	Result	Qual	RL	MDL
Mercury, Total	7439-97-6	0.0302	J	0.111	0.0222

J Estimated ; the analyte concentration was less than the low standard (LOQ)

Microbac

2161 lkw 4/2/09

7

Sample Number: L09010536-07
Client ID: MR08-IS328-4-5-09A
Matrix: Soil
Workgroup Number: WG293816
Collect Date: 01/24/2009 15:10
Sample Tag: 01

PrePrep Method: NONE
Prep Method: 3051
Analytical Method: 6010B
Analyst: EDA
Dilution: 1
Units: mg/kg

Instrument: ICP-THERMO2
Prep Date: 01/29/2009 07:30
Cal Date: 01/30/2009 10:29
Run Date: 01/31/2009 03:38
File ID: T2.013109.033800
Percent Solid: 91.8

Analyte	CAS. Number	Result	Qual	RL	MDL
Silver, Total	7440-22-4		U	0.753	0.188
Barium, Total	7440-39-3	1.73		0.376	0.0753
Cadmium, Total	7440-43-9		U	0.151	0.0376
Chromium, Total	7440-47-3	1.66 J		0.753	0.0903

MSH

U Undetected; the analyte was analyzed for, but not detected.

Microbac

19 fuw
4/2/09

7

Sample Number: L09010536-07
Client ID: MR08-IS328-4-5-09A
Matrix: Soil
Workgroup Number: WG294588
Collect Date: 01/24/2009 15:10
Sample Tag: DL01

PrePrep Method: NONE
Prep Method: 3051
Analytical Method: 6020
Analyst: JYH
Dilution: 2
Units: mg/kg

Instrument: ELAN-ICP
Prep Date: 01/29/2009 08:12
Cal Date: 02/10/2009 10:53
Run Date: 02/10/2009 19:31
File ID: EL.021009.193150
Percent Solid: 91.8

Analyte	CAS. Number	Result	Qual	RL	MDL
Arsenic, Total	7440-38-2	0.167	J	0.643	0.161
Lead, Total	7439-92-1	1.43		0.858	0.214
Selenium, Total	7782-49-2		U	0.858	0.214

U Undetected; the analyte was analyzed for, but not detected.
J Estimated ; the analyte concentration was less than the low standard (LOQ)

Microbac

783 MW 4/2009

7

Sample Number: L09010536-07
Client ID: MR08-IS328-4-5-09A
Matrix: Soil
Workgroup Number: WG293922
Collect Date: 01/24/2009 15:10
Sample Tag: 01

PrePrep Method: NONE
Prep Method: 7471A
Analytical Method: 7471A
Analyst: ADC
Dilution: 1
Units: mg/kg

Instrument: HYDRA
Prep Date: 01/28/2009 12:37
Cal Date: 02/03/2009 09:45
Run Date: 02/03/2009 10:28
File ID: HY.020309.102832
Percent Solid: 91.8

Analyte	CAS. Number	Result	Qual	RL	MDL
Mercury, Total	7439-97-6		U	0.104	0.0209

U Undetected; the analyte was analyzed for, but not detected.

Microbac

2162 JLW 4/2/09

8

Sample Number: L09010536-08
Client ID: MR08-SS347-09A
Matrix: Soil
Workgroup Number: WG293816
Collect Date: 01/24/2009 15:40
Sample Tag: 01

PrePrep Method: NONE
Prep Method: 3051
Analytical Method: 6010B
Analyst: EDA
Dilution: 1
Units: mg/kg

Instrument: ICP-THERMO2
Prep Date: 01/29/2009 07:30
Cal Date: 01/30/2009 10:29
Run Date: 01/31/2009 03:44
File ID: T2.013109.034408
Percent Solid: 92.7

Analyte	CAS. Number	Result	Qual	RL	MDL
Silver, Total	7440-22-4		U	0.800	0.200
Barium, Total	7440-39-3	8.21		0.400	0.0800
Cadmium, Total	7440-43-9	0.183		0.160	0.0400
Chromium, Total	7440-47-3	4.31 J		0.800	0.0960

MSH

U Undetected; the analyte was analyzed for, but not detected.

Microbac

20 lw 4/2/09

8

Sample Number: L09010536-08
Client ID: MR08-SS347-09A
Matrix: Soil
Workgroup Number: WG294588
Collect Date: 01/24/2009 15:40
Sample Tag: DL01

PrePrep Method: NONE
Prep Method: 3051
Analytical Method: 6020
Analyst: JYH
Dilution: 2
Units: mg/kg

Instrument: ELAN-ICP
Prep Date: 01/29/2009 08:12
Cal Date: 02/10/2009 10:53
Run Date: 02/10/2009 19:37
File ID: EL.021009.193755
Percent Solid: 92.7

Analyte	CAS. Number	Result	Qual	RL	MDL
Arsenic, Total	7440-38-2	0.694		0.618	0.154
Lead, Total	7439-92-1	29.2		0.823	0.206
Selenium, Total	7782-49-2	0.381	J	0.823	0.206

J Estimated ; the analyte concentration was less than the low standard (LOQ)

Microbac

784 lw 4/2/09

8

Sample Number:	L09010536-08	PrePrep Method:	NONE	Instrument:	HYDRA
Client ID:	MR08-SS347-09A	Prep Method:	7471A	Prep Date:	01/28/2009 12:37
Matrix:	Soil	Analytical Method:	7471A	Cal Date:	02/03/2009 09:45
Workgroup Number:	WG293922	Analyst:	ADC	Run Date:	02/03/2009 10:30
Collect Date:	01/24/2009 15:40	Dilution:	1	File ID:	HY.020309.103016
Sample Tag:	01	Units:	mg/kg	Percent Solid:	92.7

Analyte	CAS. Number	Result	Qual	RL	MDL
Mercury, Total	7439-97-6	0.0427	J	0.104	0.0208

J Estimated ; the analyte concentration was less than the low standard (LOQ)

Microbac

2163 lew 4/2/09

9

Sample Number: L09010536-09
Client ID: MR08-IS347-3-4-09A
Matrix: Soil
Workgroup Number: WG293816
Collect Date: 01/24/2009 15:50
Sample Tag: 01

PrePrep Method: NONE
Prep Method: 3051
Analytical Method: 6010B
Analyst: EDA
Dilution: 1
Units: mg/kg

Instrument: ICP-THERMO2
Prep Date: 01/29/2009 07:30
Cal Date: 01/30/2009 10:29
Run Date: 01/31/2009 03:50
File ID: T2.013109.035018
Percent Solid: 88.6

Analyte	CAS. Number	Result	Qual	RL	MDL
Silver, Total	7440-22-4		U	0.843	0.211
Barium, Total	7440-39-3	6.42		0.422	0.0843
Cadmium, Total	7440-43-9		U	0.169	0.0422
Chromium, Total	7440-47-3	4.82 J		0.843	0.101

MSH

U Undetected; the analyte was analyzed for, but not detected.

Microbac

21 lew
4/2/09

9

Sample Number: L09010536-09
Client ID: MR08-IS347-3-4-09A
Matrix: Soil
Workgroup Number: WG294588
Collect Date: 01/24/2009 15:50
Sample Tag: DL01

PrePrep Method: NONE
Prep Method: 3051
Analytical Method: 6020
Analyst: JYH
Dilution: 2
Units: mg/kg

Instrument: ELAN-ICP
Prep Date: 01/29/2009 08:12
Cal Date: 02/10/2009 10:53
Run Date: 02/10/2009 19:44
File ID: EL.021009.194400
Percent Solid: 88.6

Analyte	CAS. Number	Result	Qual	RL	MDL
Arsenic, Total	7440-38-2	0.518	J	0.677	0.169
Lead, Total	7439-92-1	3.17		0.903	0.226
Selenium, Total	7782-49-2		U	0.903	0.226

U Undetected; the analyte was analyzed for, but not detected.
J Estimated ; the analyte concentration was less than the low standard (LOQ)

Microbac

785 MW 4/2/09

9

Sample Number: L09010536-09
Client ID: MR08-IS347-3-4-09A
Matrix: Soil
Workgroup Number: WG293922
Collect Date: 01/24/2009 15:50
Sample Tag: 01

PrePrep Method: NONE
Prep Method: 7471A
Analytical Method: 7471A
Analyst: ADC
Dilution: 1
Units: mg/kg

Instrument: HYDRA
Prep Date: 01/28/2009 12:37
Cal Date: 02/03/2009 09:45
Run Date: 02/03/2009 10:32
File ID: HY.020309.103212
Percent Solid: 88.6

Analyte	CAS. Number	Result	Qual	RL	MDL
Mercury, Total	7439-97-6		U	0.112	0.0224

U Undetected; the analyte was analyzed for, but not detected.

Microbac

2164 LW 4/2/09

10

Sample Number: L09010536-10
Client ID: MR08-EB012509
Matrix: Water
Workgroup Number: WG293610
Collect Date: 01/25/2009 07:45
Sample Tag: 01

PrePrep Method: NONE
Prep Method: 3005A
Analytical Method: 6010B
Analyst: ADC
Dilution: 1
Units: ug/L

Instrument: PE-ICP2
Prep Date: 01/28/2009 06:40
Cal Date: 01/29/2009 15:47
Run Date: 01/30/2009 01:10
File ID: P2.013009.011016

Analyte	CAS. Number	Result	Qual	RL	MDL
Barium, Total	7440-39-3		U	10.0	2.50
Cadmium, Total	7440-43-9		U	1.00	0.250
Chromium, Total	7440-47-3		U	10.0	2.50
Silver, Total	7440-22-4		U	6.00	2.00

U Undetected; the analyte was analyzed for, but not detected.

Microbac

22 JLW 4/2/09

10

Sample Number: L09010536-10
Client ID: MR08-EB012509
Matrix: Water
Workgroup Number: WG293698
Collect Date: 01/25/2009 07:45
Sample Tag: 01

PrePrep Method: NONE
Prep Method: 3015
Analytical Method: 6020
Analyst: JYH
Dilution: 1
Units: ug/L

Instrument: ELAN-ICP
Prep Date: 01/28/2009 07:14
Cal Date: 01/30/2009 11:12
Run Date: 01/30/2009 20:43
File ID: EL.013009.204314

Analyte	CAS. Number	Result	Qual	RL	MDL
Arsenic, Total	7440-38-2		U	1.00	0.250
Lead, Total	7439-92-1		U	1.00	0.250
Selenium, Total	7782-49-2		U	2.00	0.500

U Undetected; the analyte was analyzed for, but not detected.

Microbac

786 JW 4/2/09

10

Sample Number: L09010536-10
Client ID: MR08-EB012509
Matrix: Water
Workgroup Number: WG293786
Collect Date: 01/25/2009 07:45
Sample Tag: 01

PrePrep Method: NONE
Prep Method: 7470A
Analytical Method: 7470A
Analyst: SLP
Dilution: 1
Units: ug/L

Instrument: HYDRA
Prep Date: 01/29/2009 06:49
Cal Date: 02/20/2009 11:03
Run Date: 02/20/2009 11:43
File ID: HY.022009.114314

Analyte	CAS. Number	Result	Qual	RL	MDL
Mercury	7439-97-6		U	0.400	0.100

U Undetected; the analyte was analyzed for, but not detected.

Microbac

2165 lw 4/2/09

11

Sample Number: L09010536-11
Client ID: MR08-SS279-09A
Matrix: Soil
Workgroup Number: WG293816
Collect Date: 01/25/2009 08:40
Sample Tag: 01

PrePrep Method: NONE
Prep Method: 3051
Analytical Method: 6010B
Analyst: EDA
Dilution: 1
Units: mg/kg

Instrument: ICP-THERMO2
Prep Date: 01/29/2009 07:30
Cal Date: 01/30/2009 10:29
Run Date: 01/31/2009 03:56
File ID: T2.013109.035625
Percent Solid: 91.9

Analyte	CAS. Number	Result	Qual	RL	MDL
Silver, Total	7440-22-4		U	0.759	0.190
Barium, Total	7440-39-3	7.27		0.380	0.0759
Cadmium, Total	7440-43-9	0.0927	J	0.152	0.0380
Chromium, Total	7440-47-3	9.68 J		0.759	0.0911

MSH

U Undetected; the analyte was analyzed for, but not detected.
J Estimated ; the analyte concentration was less than the low standard (LOQ)

Microbac

23 lew 4/2/09

11

Sample Number: L09010536-11
Client ID: MR08-SS279-09A
Matrix: Soil
Workgroup Number: WG294588
Collect Date: 01/25/2009 08:40
Sample Tag: DL01

PrePrep Method: NONE
Prep Method: 3051
Analytical Method: 6020
Analyst: JYH
Dilution: 2
Units: mg/kg

Instrument: ELAN-ICP
Prep Date: 01/29/2009 08:12
Cal Date: 02/10/2009 10:53
Run Date: 02/10/2009 19:50
File ID: EL.021009.195005
Percent Solid: 91.9

Analyte	CAS. Number	Result	Qual	RL	MDL
Arsenic, Total	7440-38-2	0.597	J	0.647	0.162
Lead, Total	7439-92-1	19.9		0.862	0.216
Selenium, Total	7782-49-2	0.321	J	0.862	0.216

J Estimated ; the analyte concentration was less than the low standard (LOQ)

Microbac

787 lew 4/2009

11

Sample Number:	L09010536-11	PrePrep Method:	NONE	Instrument:	HYDRA
Client ID:	MR08-SS279-09A	Prep Method:	7471A	Prep Date:	01/28/2009 12:37
Matrix:	Soil	Analytical Method:	7471A	Cal Date:	02/03/2009 09:45
Workgroup Number:	WG293922	Analyst:	ADC	Run Date:	02/03/2009 10:33
Collect Date:	01/25/2009 08:40	Dilution:	1	File ID:	HY.020309.103354
Sample Tag:	01	Units:	mg/kg	Percent Solid:	91.9

Analyte	CAS. Number	Result	Qual	RL	MDL
Mercury, Total	7439-97-6		U	0.103	0.0206

U Undetected; the analyte was analyzed for, but not detected.

Microbac

2166

lew
4/2/09

12

Sample Number: L09010536-12
Client ID: MR08-SS279D-09A
Matrix: Soil
Workgroup Number: WG293816
Collect Date: 01/25/2009 08:40
Sample Tag: 01

PrePrep Method: NONE
Prep Method: 3051
Analytical Method: 6010B
Analyst: EDA
Dilution: 1
Units: mg/kg

Instrument: ICP-THERMO2
Prep Date: 01/29/2009 07:30
Cal Date: 01/30/2009 10:29
Run Date: 01/31/2009 04:02
File ID: T2.013109.040237
Percent Solid: 90.8

Analyte	CAS. Number	Result	Qual	RL	MDL
Silver, Total	7440-22-4		U	0.823	0.206
Barium, Total	7440-39-3	7.62		0.411	0.0823
Cadmium, Total	7440-43-9	0.184		0.165	0.0411
Chromium, Total	7440-47-3	9.86 J		0.823	0.0987

MSH

U Undetected; the analyte was analyzed for, but not detected.

Microbac

24 fcw 4/2/09

12

Sample Number: L09010536-12
Client ID: MR08-SS279D-09A
Matrix: Soil
Workgroup Number: WG294588
Collect Date: 01/25/2009 08:40
Sample Tag: DL01

PrePrep Method: NONE
Prep Method: 3051
Analytical Method: 6020
Analyst: JYH
Dilution: 2
Units: mg/kg

Instrument: ELAN-ICP
Prep Date: 01/29/2009 08:12
Cal Date: 02/10/2009 10:53
Run Date: 02/10/2009 19:56
File ID: EL.021009.195608
Percent Solid: 90.8

Analyte	CAS. Number	Result	Qual	RL	MDL
Arsenic, Total	7440-38-2	0.607	J	0.619	0.155
Lead, Total	7439-92-1	5.26		0.825	0.206
Selenium, Total	7782-49-2	0.376	J	0.825	0.206

J Estimated ; the analyte concentration was less than the low standard (LOQ)

Microbac

788 JW 4/2/09

12

Sample Number: L09010536-12
Client ID: MR08-SS279D-09A
Matrix: Soil
Workgroup Number: WG293922
Collect Date: 01/25/2009 08:40
Sample Tag: 01

PrePrep Method: NONE
Prep Method: 7471A
Analytical Method: 7471A
Analyst: ADC
Dilution: 1
Units: mg/kg

Instrument: HYDRA
Prep Date: 01/28/2009 12:37
Cal Date: 02/03/2009 09:45
Run Date: 02/03/2009 10:36
File ID: HY.020309.103600
Percent Solid: 90.8

Analyte	CAS. Number	Result	Qual	RL	MDL
Mercury, Total	7439-97-6		U	0.103	0.0206

U Undetected; the analyte was analyzed for, but not detected.

Microbac

lw
4/2/09

13

Sample Number: L09010536-13
Client ID: MR08-IS279-1-2-09A
Matrix: Soil
Workgroup Number: WG293816
Collect Date: 01/25/2009 08:50
Sample Tag: 01

PrePrep Method: NONE
Prep Method: 3051
Analytical Method: 6010B
Analyst: EDA
Dilution: 1
Units: mg/kg

Instrument: ICP-THERMO2
Prep Date: 01/29/2009 07:30
Cal Date: 01/30/2009 10:29
Run Date: 01/31/2009 04:20
File ID: T2.013109.042055
Percent Solid: 85.8

Analyte	CAS. Number	Result	Qual	RL	MDL
Silver, Total	7440-22-4		U	0.837	0.209
Barium, Total	7440-39-3	9.33		0.419	0.0837
Cadmium, Total	7440-43-9		U	0.167	0.0419
Chromium, Total	7440-47-3	2.26 J		0.837	0.100

MSH

U Undetected; the analyte was analyzed for, but not detected.

Microbac

25 lw 4/2/09

13

Sample Number: L09010536-13
Client ID: MR08-IS279-1-2-09A
Matrix: Soil
Workgroup Number: WG294588
Collect Date: 01/25/2009 08:50
Sample Tag: DL01

PrePrep Method: NONE
Prep Method: 3051
Analytical Method: 6020
Analyst: JYH
Dilution: 2
Units: mg/kg

Instrument: ELAN-ICP
Prep Date: 01/29/2009 08:12
Cal Date: 02/10/2009 10:53
Run Date: 02/10/2009 20:02
File ID: EL.021009.200211
Percent Solid: 85.8

Analyte	CAS. Number	Result	Qual	RL	MDL
Arsenic, Total	7440-38-2	0.175	J	0.695	0.174
Lead, Total	7439-92-1	3.34		0.927	0.232
Selenium, Total	7782-49-2	0.304	J	0.927	0.232

J Estimated ; the analyte concentration was less than the low standard (LOQ)

Microbac

789 RW 4/2/09

13

Sample Number: L09010536-13
Client ID: MR08-IS279-1-2-09A
Matrix: Soil
Workgroup Number: WG293922
Collect Date: 01/25/2009 08:50
Sample Tag: 01

PrePrep Method: NONE
Prep Method: 7471A
Analytical Method: 7471A
Analyst: ADC
Dilution: 1
Units: mg/kg

Instrument: HYDRA
Prep Date: 01/28/2009 12:37
Cal Date: 02/03/2009 09:45
Run Date: 02/03/2009 10:38
File ID: HY.020309.103827
Percent Solid: 85.8

Analyte	CAS. Number	Result	Qual	RL	MDL
Mercury, Total	7439-97-6		U	0.112	0.0225

U Undetected; the analyte was analyzed for, but not detected.

Microbac

flw 4/2/09

14

Sample Number: L09010536-14
Client ID: MR08-IS279D-1-2-09A
Matrix: Soil
Workgroup Number: WG293816
Collect Date: 01/25/2009 08:50
Sample Tag: 01

PrePrep Method: NONE
Prep Method: 3051
Analytical Method: 6010B
Analyst: EDA
Dilution: 1
Units: mg/kg

Instrument: ICP-THERMO2
Prep Date: 01/29/2009 07:30
Cal Date: 01/30/2009 10:29
Run Date: 01/31/2009 04:27
File ID: T2.013109.042701
Percent Solid: 85.9

Analyte	CAS. Number	Result	Qual	RL	MDL
Silver, Total	7440-22-4		U	0.856	0.214
Barium, Total	7440-39-3	8.83		0.428	0.0856
Cadmium, Total	7440-43-9		U	0.171	0.0428
Chromium, Total	7440-47-3	1.06 J		0.856	0.103

MSH

U Undetected; the analyte was analyzed for, but not detected.

Microbac

26 MW 4/2/09

14

Sample Number: L09010536-14
Client ID: MR08-IS279D-1-2-09A
Matrix: Soil
Workgroup Number: WG294588
Collect Date: 01/25/2009 08:50
Sample Tag: DL01

PrePrep Method: NONE
Prep Method: 3051
Analytical Method: 6020
Analyst: JYH
Dilution: 2
Units: mg/kg

Instrument: ELAN-ICP
Prep Date: 01/29/2009 08:12
Cal Date: 02/10/2009 10:53
Run Date: 02/10/2009 17:22
File ID: EL.021009.172248
Percent Solid: 85.9

Analyte	CAS. Number	Result	Qual	RL	MDL
Arsenic, Total	7440-38-2	0.192	J	0.688	0.172
Lead, Total	7439-92-1	3.74		0.917	0.229
Selenium, Total	7782-49-2	0.333	J	0.917	0.229

J Estimated ; the analyte concentration was less than the low standard (LOQ)

Microbac

790 MW
4/2/09

14

Sample Number: L09010536-14
Client ID: MR08-IS279D-1-2-09A
Matrix: Soil
Workgroup Number: WG293922
Collect Date: 01/25/2009 08:50
Sample Tag: 01

PrePrep Method: NONE
Prep Method: 7471A
Analytical Method: 7471A
Analyst: ADC
Dilution: 1
Units: mg/kg

Instrument: HYDRA
Prep Date: 01/28/2009 12:37
Cal Date: 02/03/2009 09:45
Run Date: 02/03/2009 10:40
File ID: HY.020309.104020
Percent Solid: 85.9

Analyte	CAS. Number	Result	Qual	RL	MDL
Mercury, Total	7439-97-6		U	0.113	0.0226

U Undetected; the analyte was analyzed for, but not detected.

Microbac

2169 MW 4/2/09

15

Sample Number: L09010536-15
Client ID: MR08-IS352-1-2-09A
Matrix: Soil
Workgroup Number: WG293816
Collect Date: 01/25/2009 09:30
Sample Tag: 01

PrePrep Method: NONE
Prep Method: 3051
Analytical Method: 6010B
Analyst: EDA
Dilution: 1
Units: mg/kg

Instrument: ICP-THERMO2
Prep Date: 01/29/2009 07:30
Cal Date: 01/30/2009 10:29
Run Date: 01/31/2009 04:33
File ID: T2.013109.043307
Percent Solid: 90.9

Analyte	CAS. Number	Result	Qual	RL	MDL
Silver, Total	7440-22-4		U	0.796	0.199
Barium, Total	7440-39-3	4.49		0.398	0.0796
Cadmium, Total	7440-43-9		U	0.159	0.0398
Chromium, Total	7440-47-3	2.58 J		0.796	0.0955

MSH

U Undetected; the analyte was analyzed for, but not detected.

Microbac

27 Rev 4/2/09

15

Sample Number: L09010536-15
Client ID: MR08-IS352-1-2-09A
Matrix: Soil
Workgroup Number: WG294609
Collect Date: 01/25/2009 09:30
Sample Tag: DL01

PrePrep Method: NONE
Prep Method: 3051
Analytical Method: 6020
Analyst: JYH
Dilution: 2
Units: mg/kg

Instrument: ELAN-ICP
Prep Date: 01/30/2009 08:38
Cal Date: 02/10/2009 10:53
Run Date: 02/10/2009 21:09
File ID: EL.021009.210957
Percent Solid: 90.9

Analyte	CAS. Number	Result	Qual	RL	MDL
Arsenic, Total	7440-38-2	0.544	J	0.660	0.165
Lead, Total	7439-92-1	3.43 J		0.881	0.220
Selenium, Total	7782-49-2	0.333	J	0.881	0.220

MSH

J Estimated ; the analyte concentration was less than the low standard (LOQ)

Microbac

791 [illegible] 4/2/09

15

Sample Number:	L09010536-15	PrePrep Method:	NONE	Instrument:	HYDRA
Client ID:	MR08-IS352-1-2-09A	Prep Method:	7471A	Prep Date:	01/28/2009 12:37
Matrix:	Soil	Analytical Method:	7471A	Cal Date:	02/03/2009 09:45
Workgroup Number:	WG293922	Analyst:	ADC	Run Date:	02/03/2009 10:46
Collect Date:	01/25/2009 09:30	Dilution:	1	File ID:	HY.020309.104616
Sample Tag:	01	Units:	mg/kg	Percent Solid:	90.9

Analyte	CAS. Number	Result	Qual	RL	MDL
Mercury, Total	7439-97-6		U	0.110	0.0219

U Undetected; the analyte was analyzed for, but not detected.

Microbac

2170 MW 4/2/09

16

Sample Number: L09010536-16
Client ID: MR08-SS352-09A
Matrix: Soil
Workgroup Number: WG293816
Collect Date: 01/25/2009 09:25
Sample Tag: 01

PrePrep Method: NONE
Prep Method: 3051
Analytical Method: 6010B
Analyst: EDA
Dilution: 1
Units: mg/kg

Instrument: ICP-THERMO2
Prep Date: 01/29/2009 07:30
Cal Date: 01/30/2009 10:29
Run Date: 01/31/2009 04:39
File ID: T2.013109.043914
Percent Solid: 85.0

Analyte	CAS. Number	Result	Qual	RL	MDL
Silver, Total	7440-22-4		U	0.886	0.222
Barium, Total	7440-39-3	10.5		0.443	0.0886
Cadmium, Total	7440-43-9	0.0802	J	0.177	0.0443
Chromium, Total	7440-47-3	5.21 J		0.886	0.106

MSH

U Undetected; the analyte was analyzed for, but not detected.
J Estimated ; the analyte concentration was less than the low standard (LOQ)

Microbac

 JCW 4/2/09

16

Sample Number: L09010536-16
Client ID: MR08-SS352-09A
Matrix: Soil
Workgroup Number: WG294609
Collect Date: 01/25/2009 09:25
Sample Tag: DL01

PrePrep Method: NONE
Prep Method: 3051
Analytical Method: 6020
Analyst: JYH
Dilution: 2
Units: mg/kg

Instrument: ELAN-ICP
Prep Date: 01/30/2009 08:38
Cal Date: 02/10/2009 10:53
Run Date: 02/10/2009 21:41
File ID: EL.021009.214111
Percent Solid: 85.0

Analyte	CAS. Number	Result	Qual	RL	MDL
Arsenic, Total	7440-38-2	0.731		0.676	0.169
Lead, Total	7439-92-1	23.3 J		0.902	0.225
Selenium, Total	7782-49-2	0.393	J	0.902	0.225

MSH

J Estimated ; the analyte concentration was less than the low standard (LOQ)

Microbac

792 lw 4/2/09

16

Sample Number:	L09010536-16	PrePrep Method:	NONE	Instrument:	HYDRA
Client ID:	MR08-SS352-09A	Prep Method:	7471A	Prep Date:	01/28/2009 12:37
Matrix:	Soil	Analytical Method:	7471A	Cal Date:	02/03/2009 09:45
Workgroup Number:	WG293922	Analyst:	ADC	Run Date:	02/03/2009 10:49
Collect Date:	01/25/2009 09:25	Dilution:	1	File ID:	HY.020309.104956
Sample Tag:	01	Units:	mg/kg	Percent Solid:	85.0

Analyte	CAS. Number	Result	Qual	RL	MDL
Mercury, Total	7439-97-6		U	0.112	0.0224

U Undetected; the analyte was analyzed for, but not detected.

Microbac

2171 lw 4/2/09

17

Sample Number: L09010536-17
Client ID: MR08-SS371-09A
Matrix: Soil
Workgroup Number: WG293816
Collect Date: 01/25/2009 09:45
Sample Tag: 01

PrePrep Method: NONE
Prep Method: 3051
Analytical Method: 6010B
Analyst: EDA
Dilution: 1
Units: mg/kg

Instrument: ICP-THERMO2
Prep Date: 01/29/2009 07:30
Cal Date: 01/30/2009 10:29
Run Date: 01/31/2009 04:45
File ID: T2.013109.044520
Percent Solid: 82.6

Analyte	CAS. Number	Result	Qual	RL	MDL
Silver, Total	7440-22-4		U	0.881	0.220
Barium, Total	7440-39-3	9.11		0.440	0.0881
Cadmium, Total	7440-43-9	0.0925	J	0.176	0.0440
Chromium, Total	7440-47-3	5.20 J		0.881	0.106

MSH

U Undetected; the analyte was analyzed for, but not detected.
J Estimated ; the analyte concentration was less than the low standard (LOQ)

Microbac

RW
10/2/09

17

Sample Number: L09010536-17
Client ID: MR08-SS371-09A
Matrix: Soil
Workgroup Number: WG294609
Collect Date: 01/25/2009 09:45
Sample Tag: DL01

PrePrep Method: NONE
Prep Method: 3051
Analytical Method: 6020
Analyst: JYH
Dilution: 2
Units: mg/kg

Instrument: ELAN-ICP
Prep Date: 01/30/2009 08:38
Cal Date: 02/10/2009 10:53
Run Date: 02/10/2009 21:47
File ID: EL.021009.214715
Percent Solid: 82.6

Analyte	CAS. Number	Result	Qual	RL	MDL
Arsenic, Total	7440-38-2	0.691		0.690	0.173
Lead, Total	7439-92-1	32.0 J		0.920	0.230
Selenium, Total	7782-49-2	0.421	J	0.920	0.230

MSH

J Estimated ; the analyte concentration was less than the low standard (LOQ)

Microbac

793 MW 4/2/09

17

Sample Number: L09010536-17
Client ID: MR08-SS371-09A
Matrix: Soil
Workgroup Number: WG293922
Collect Date: 01/25/2009 09:45
Sample Tag: 01

PrePrep Method: NONE
Prep Method: 7471A
Analytical Method: 7471A
Analyst: ADC
Dilution: 1
Units: mg/kg

Instrument: HYDRA
Prep Date: 01/28/2009 12:37
Cal Date: 02/03/2009 09:45
Run Date: 02/03/2009 10:51
File ID: HY.020309.105144
Percent Solid: 82.6

Analyte	CAS. Number	Result	Qual	RL	MDL
Mercury, Total	7439-97-6	0.0240	J	0.115	0.0230

J Estimated ; the analyte concentration was less than the low standard (LOQ)

Microbac

2172 lw 4/2/09

18

Sample Number: L09010536-18
Client ID: MR08-IS371-1-2-09A
Matrix: Soil
Workgroup Number: WG293816
Collect Date: 01/25/2009 09:50
Sample Tag: 01

PrePrep Method: NONE
Prep Method: 3051
Analytical Method: 6010B
Analyst: EDA
Dilution: 1
Units: mg/kg

Instrument: ICP-THERMO2
Prep Date: 01/29/2009 07:30
Cal Date: 01/30/2009 10:29
Run Date: 01/31/2009 04:51
File ID: T2.013109.045123
Percent Solid: 88.1

Analyte	CAS. Number	Result	Qual	RL	MDL
Silver, Total	7440-22-4		U	0.862	0.216
Barium, Total	7440-39-3	6.89		0.431	0.0862
Cadmium, Total	7440-43-9		U	0.172	0.0431
Chromium, Total	7440-47-3	4.99 J		0.862	0.103

MSM

U Undetected; the analyte was analyzed for, but not detected.

Microbac

30

lew 4/2 09

18

Sample Number: L09010536-18
Client ID: MR08-IS371-1-2-09A
Matrix: Soil
Workgroup Number: WG294609
Collect Date: 01/25/2009 09:50
Sample Tag: DL01

PrePrep Method: NONE
Prep Method: 3051
Analytical Method: 6020
Analyst: JYH
Dilution: 2
Units: mg/kg

Instrument: ELAN-ICP
Prep Date: 01/30/2009 08:38
Cal Date: 02/10/2009 10:53
Run Date: 02/10/2009 21:53
File ID: EL.021009.215319
Percent Solid: 88.1

Analyte	CAS. Number	Result	Qual	RL	MDL
Arsenic, Total	7440-38-2	0.714		0.672	0.168
Lead, Total	7439-92-1	6.27 J		0.896	0.224
Selenium, Total	7782-49-2	0.674	J	0.896	0.224

MSH

J Estimated ; the analyte concentration was less than the low standard (LOQ)

Microbac

794 MW 4/2/09

18

Sample Number: L09010536-18
Client ID: MR08-IS371-1-2-09A
Matrix: Soil
Workgroup Number: WG294451
Collect Date: 01/25/2009 09:50
Sample Tag: 01

PrePrep Method: NONE
Prep Method: 7471A
Analytical Method: 7471A
Analyst: ADC
Dilution: 1
Units: mg/kg

Instrument: HYDRA
Prep Date: 01/29/2009 08:17
Cal Date: 02/09/2009 09:56
Run Date: 02/09/2009 10:18
File ID: HY.020909.101837
Percent Solid: 88.1

Analyte	CAS. Number	Result	Qual	RL	MDL
Mercury, Total	7439-97-6	0.0346	J	0.111	0.0222

J Estimated ; the analyte concentration was less than the low standard (LOQ)

Microbac

lw
2173 4/2/09

19

Sample Number: L09010536-19
Client ID: MR08-SS372-09A
Matrix: Soil
Workgroup Number: WG293890
Collect Date: 01/25/2009 10:00
Sample Tag: 01

PrePrep Method: NONE
Prep Method: 3051
Analytical Method: 6010B
Analyst: KHR
Dilution: 1
Units: mg/kg

Instrument: IRIS-ICP
Prep Date: 01/29/2009 08:15
Cal Date: 02/02/2009 16:07
Run Date: 02/02/2009 17:13
File ID: IR.020209.171300
Percent Solid: 86.5

Analyte	CAS. Number	Result	Qual	RL	MDL	
Silver, Total	7440-22-4		U	0.868	0.217	
Barium, Total	7440-39-3	17.3 J		0.434	0.0868	MSH
Cadmium, Total	7440-43-9	0.496		0.174	0.0434	
Chromium, Total	7440-47-3	7.68 J		0.868	0.104	MSH

U Undetected; the analyte was analyzed for, but not detected.

Microbac

31 Mew 4/2/09

19

Sample Number: L09010536-19
Client ID: MR08-SS372-09A
Matrix: Soil
Workgroup Number: WG294609
Collect Date: 01/25/2009 10:00
Sample Tag: DL01

PrePrep Method: NONE
Prep Method: 3051
Analytical Method: 6020
Analyst: JYH
Dilution: 2
Units: mg/kg

Instrument: ELAN-ICP
Prep Date: 01/30/2009 08:38
Cal Date: 02/10/2009 10:53
Run Date: 02/10/2009 20:33
File ID: EL.021009.203326
Percent Solid: 86.5

Analyte	CAS. Number	Result	Qual	RL	MDL
Arsenic, Total	7440-38-2	0.977		0.677	0.169
Selenium, Total	7782-49-2	0.413	J	0.903	0.226

J Estimated ; the analyte concentration was less than the low standard (LOQ)

Microbac

795 MW 4/2/09

19

Sample Number: L09010536-19
Client ID: MR08-SS372-09A
Matrix: Soil
Workgroup Number: WG294609
Collect Date: 01/25/2009 10:00
Sample Tag: DL02

PrePrep Method: NONE
Prep Method: 3051
Analytical Method: 6020
Analyst: JYH
Dilution: 25
Units: mg/kg

Instrument: ELAN-ICP
Prep Date: 01/30/2009 08:38
Cal Date: 02/12/2009 12:32
Run Date: 02/12/2009 15:15
File ID: EL.021209.151530
Percent Solid: 86.5

Analyte	CAS. Number	Result	Qual	RL	MDL
Lead, Total	7439-92-1	62.3 J		11.3	2.82

MSH

Microbac

796 [illegible]
4/2/09

19

Sample Number:	L09010536-19	PrePrep Method:	NONE	Instrument:	HYDRA
Client ID:	MR08-SS372-09A	Prep Method:	7471A	Prep Date:	01/28/2009 12:37
Matrix:	Soil	Analytical Method:	7471A	Cal Date:	02/03/2009 09:45
Workgroup Number:	WG293922	Analyst:	ADC	Run Date:	02/03/2009 10:54
Collect Date:	01/25/2009 10:00	Dilution:	1	File ID:	HY.020309.105421
Sample Tag:	01	Units:	mg/kg	Percent Solid:	86.5

Analyte	CAS. Number	Result	Qual	RL	MDL
Mercury, Total	7439-97-6	0.0446	J	0.113	0.0226

J Estimated ; the analyte concentration was less than the low standard (LOQ)

Microbac

2174

DW
4/2/09

22

Sample Number: L09010536-22
Client ID: MR08-IS372-1-2-09A
Matrix: Soil
Workgroup Number: WG293891
Collect Date: 01/25/2009 10:10
Sample Tag: 01

PrePrep Method: NONE
Prep Method: 3051
Analytical Method: 6010B
Analyst: KHR
Dilution: 1
Units: mg/kg

Instrument: IRIS-ICP
Prep Date: 01/29/2009 08:35
Cal Date: 02/02/2009 16:07
Run Date: 02/02/2009 20:21
File ID: IR.020209.202100
Percent Solid: 89.2

Analyte	CAS. Number	Result	Qual	RL	MDL
Silver, Total	7440-22-4		U	0.755	0.189
Barium, Total	7440-39-3	6.09		0.378	0.0755
Cadmium, Total	7440-43-9		U	0.151	0.0378
Chromium, Total	7440-47-3	2.24		0.755	0.0906

U Undetected; the analyte was analyzed for, but not detected.

Microbac

34 Jew 4/2/09

22

Sample Number: L09010536-22
Client ID: MR08-IS372-1-2-09A
Matrix: Soil
Workgroup Number: WG294609
Collect Date: 01/25/2009 10:10
Sample Tag: DL01

PrePrep Method: NONE
Prep Method: 3051
Analytical Method: 6020
Analyst: JYH
Dilution: 2
Units: mg/kg

Instrument: ELAN-ICP
Prep Date: 01/30/2009 08:38
Cal Date: 02/10/2009 10:53
Run Date: 02/10/2009 20:51
File ID: EL.021009.205141
Percent Solid: 89.2

Analyte	CAS. Number	Result	Qual	RL	MDL
Arsenic, Total	7440-38-2	0.543	J	0.658	0.165
Lead, Total	7439-92-1	3.42 J		0.878	0.219
Selenium, Total	7782-49-2		U	0.878	0.219

MSH

U Undetected; the analyte was analyzed for, but not detected.
J Estimated ; the analyte concentration was less than the low standard (LOQ)

Microbac

801 LW
4/2/09

22

Sample Number:	L09010536-22	PrePrep Method:	NONE	Instrument:	HYDRA
Client ID:	MR08-IS372-1-2-09A	Prep Method:	7471A	Prep Date:	01/29/2009 08:17
Matrix:	Soil	Analytical Method:	7471A	Cal Date:	02/09/2009 09:56
Workgroup Number:	WG294451	Analyst:	ADC	Run Date:	02/09/2009 10:20
Collect Date:	01/25/2009 10:10	Dilution:	1	File ID:	HY.020909.102020
Sample Tag:	01	Units:	mg/kg	Percent Solid:	89.2

Analyte	CAS. Number	Result	Qual	RL	MDL
Mercury, Total	7439-97-6		U	0.112	0.0224

U Undetected; the analyte was analyzed for, but not detected.

Microbac

2177 LW 4/2/09

ENVIRONMENTAL
Data Services, Inc.

METALS

USEPA Region IV - Level IV Review

Site: MCB Camp Lejeune, TO-09 SDG #: L09010537

Client: CH2M HILL, Inc., Virginia Beach, Virginia Date: April 2, 2009

Laboratory: Microbac Laboratories, Inc., Marietta, Ohio Reviewer: Nancy Weaver

EDS ID	Client Sample ID	Laboratory Sample ID	Matrix
1	MR08-SS321-09A	L09010537-01	Soil
2	MR08-IS321-2-3-09A	L09010537-02	Soil
3	MR08-SS322-09A	L09010537-03	Soil
4	MR08-IS322-2-3-09A	L09010537-04	Soil
5	MR08-SS320-09A	L09010537-05	Soil
6	MR08-IS320-2-3-09A	L09010537-06	Soil
7	MR08-SS351-09A	L09010537-07	Soil
8MS	MR08-SS351-09AMS	L09010537-08MS	Soil
9MSD	MR08-SS351-09AMSD	L09010537-09MSD	Soil
10	MR08-IS351-2-3-09A	L09010537-10	Soil
11MS	MR08-IS351-2-3-09AMS	L09010537-11MS	Soil
12MSD	MR08-IS351-2-3-09AMSD	L09010537-12MSD	Soil
13	MR08-SS348-09A	L09010537-13	Soil
14	MR08-IS348-2-3-09A	L09010537-14	Soil

The USEPA "Contract Laboratory Program National Functional Guidelines for Inorganic Data Review," October 2004, and professional judgement were used in evaluating the data in this summary report.

Holding Times - All samples were prepared and analyzed within 28 days for mercury and 180 days for all other metals.

Calibration - The ICV and CCV %R values were acceptable.

Method and Calibration Blanks - The method blanks were free of contamination.

Field and Equipment Blank - Field QC results are summarized below.

Blank ID	Compound	Conc. ug/L	Action Level ug/L	Qualifier	Affected Samples
MR08-FB012609	None-ND	-	-	-	-
MR08-EB012609	None-ND	-	-	-	-

ICP Interference Check Sample - All %R values were acceptable.

MS/MSD - The MS/MSD sample exhibited acceptable %R and RPD values except the following.

MS/MSD Sample ID	Compound	MS/MSD %R/RPD	Qualifier	Affected Samples
Reference (WG293816)	Chromium	131%/Ok/Ok	J	1
Reference (WG294611)	Arsenic	105%/222%/Ok	J	1, 3-7, 10, 13, 14
	Lead	202%/267%/23.1	J	1-7, 10, 13, 14
	Selenium	162%/166%/Ok	J	3, 4, 5, 7, 13

LCS - The LCS samples exhibited acceptable %R values.

ICP Serial Dilution - The ICP serial dilution sample exhibited acceptable %D values.

Field Duplicates - Field duplicate samples were not included in this data package.

Compound Quantitation - Several samples were analyzed at various dilutions for various analytes due to high concentrations.

Sample Number: L09010537-01
Client ID: MR08-SS321-09A
Matrix: Soil
Workgroup Number: WG293816
Collect Date: 01/26/2009 08:30
Sample Tag: 01

PrePrep Method: NONE
Prep Method: 3051
Analytical Method: 6010B
Analyst: EDA
Dilution: 1
Units: mg/kg

Instrument: ICP-THERMO2
Prep Date: 01/29/2009 07:30
Cal Date: 01/30/2009 10:29
Run Date: 01/31/2009 04:57
File ID: T2.013109.045729
Percent Solid: 89.6

Analyte	CAS. Number	Result	Qual	RL	MDL
Silver, Total	7440-22-4		U	0.805	0.201
Barium, Total	7440-39-3	8.90		0.402	0.0805
Cadmium, Total	7440-43-9		U	0.161	0.0402
Chromium, Total	7440-47-3	6.71 J		0.805	0.0966

MSH

U Undetected; the analyte was analyzed for, but not detected.

Microbac

LW
4/2/09

Report Number: L09010537

Report Date : February 20, 2009

Sample Number:	L09010537-01	PrePrep Method:	NONE	Instrument:	ELAN-ICP
Client ID:	MR08-SS321-09A	Prep Method:	3051	Prep Date:	01/30/2009 09:46
Matrix:	Soil	Analytical Method:	6020	Cal Date:	02/10/2009 10:53
Workgroup Number:	WG294611	Analyst:	JYH	Run Date:	02/11/2009 00:27
Collect Date:	01/26/2009 08:30	Dilution:	2	File ID:	EL.021109.002710
Sample Tag:	DL01	Units:	mg/kg	Percent Solid:	89.6

Analyte	CAS. Number	Result	Qual	RL	MDL	
Arsenic, Total	7440-38-2	0.471 J	~~U~~	0.645	0.161	MSH
Lead, Total	7439-92-1	3.76 J		0.860	0.215	MSH
Selenium, Total	7782-49-2		U	0.860	0.215	

U Undetected; the analyte was analyzed for, but not detected.
J Estimated ; the analyte concentration was less than the low standard (LOQ)

Microbac

647 AW 4/2/09

Report Number: L09010537

Report Date : **February 20, 2009**

Sample Number:	L09010537-01	PrePrep Method:	NONE	Instrument:	HYDRA
Client ID:	MR08-SS321-09A	Prep Method:	7471A	Prep Date:	01/29/2009 08:17
Matrix:	Soil	Analytical Method:	7471A	Cal Date:	02/09/2009 09:56
Workgroup Number:	WG294451	Analyst:	ADC	Run Date:	02/09/2009 10:32
Collect Date:	01/26/2009 08:30	Dilution:	1	File ID:	HY.020909.103224
Sample Tag:	01	Units:	mg/kg	Percent Solid:	89.6

Analyte	CAS. Number	Result	Qual	RL	MDL
Mercury, Total	7439-97-6		U	0.107	0.0215

U Undetected; the analyte was analyzed for, but not detected.

Microbac

1184 fcw 4/2/09

2

Sample Number: L09010537-02
Client ID: MR08-IS321-2-3-09A
Matrix: Soil
Workgroup Number: WG293890
Collect Date: 01/26/2009 08:35
Sample Tag: 01

PrePrep Method: NONE
Prep Method: 3051
Analytical Method: 6010B
Analyst: KHR
Dilution: 1
Units: mg/kg

Instrument: IRIS-ICP
Prep Date: 01/29/2009 08:15
Cal Date: 02/02/2009 16:07
Run Date: 02/02/2009 17:31
File ID: IR.020209.173100
Percent Solid: 88.4

Analyte	CAS. Number	Result	Qual	RL	MDL
Silver, Total	7440-22-4		U	0.859	0.215
Barium, Total	7440-39-3	10.9		0.430	0.0859
Cadmium, Total	7440-43-9		U	0.172	0.0430
Chromium, Total	7440-47-3	8.85		0.859	0.103

U Undetected; the analyte was analyzed for, but not detected.

Microbac

2

Sample Number: L09010537-02
Client ID: MR08-IS321-2-3-09A
Matrix: Soil
Workgroup Number: WG294611
Collect Date: 01/26/2009 08:35
Sample Tag: DL01

PrePrep Method: NONE
Prep Method: 3051
Analytical Method: 6020
Analyst: JYH
Dilution: 2
Units: mg/kg

Instrument: ELAN-ICP
Prep Date: 01/30/2009 09:46
Cal Date: 02/10/2009 10:53
Run Date: 02/11/2009 00:45
File ID: EL.021109.004524
Percent Solid: 88.4

Analyte	CAS. Number	Result	Qual	RL	MDL
Arsenic, Total	7440-38-2		U	0.679	0.170
Lead, Total	7439-92-1	2.47 J		0.905	0.226
Selenium, Total	7782-49-2		U	0.905	0.226

MSH

U Undetected; the analyte was analyzed for, but not detected.

Microbac

QW
4/2/09

2

Sample Number: L09010537-02
Client ID: MR08-IS321-2-3-09A
Matrix: Soil
Workgroup Number: WG294451
Collect Date: 01/26/2009 08:35
Sample Tag: 01

PrePrep Method: NONE
Prep Method: 7471A
Analytical Method: 7471A
Analyst: ADC
Dilution: 1
Units: mg/kg

Instrument: HYDRA
Prep Date: 01/29/2009 08:17
Cal Date: 02/09/2009 09:56
Run Date: 02/09/2009 10:34
File ID: HY.020909.103408
Percent Solid: 88.4

Analyte	CAS. Number	Result	Qual	RL	MDL
Mercury, Total	7439-97-6		U	0.113	0.0226

U Undetected; the analyte was analyzed for, but not detected.

Microbac

1185 MW 4/2/09

3

Sample Number: L09010537-03
Client ID: MR08-SS322-09A
Matrix: Soil
Workgroup Number: WG293890
Collect Date: 01/26/2009 08:45
Sample Tag: 01

PrePrep Method: NONE
Prep Method: 3051
Analytical Method: 6010B
Analyst: KHR
Dilution: 1
Units: mg/kg

Instrument: IRIS-ICP
Prep Date: 01/29/2009 08:15
Cal Date: 02/02/2009 16:07
Run Date: 02/02/2009 17:37
File ID: IR.020209.173700
Percent Solid: 91.6

Analyte	CAS. Number	Result	Qual	RL	MDL
Silver, Total	7440-22-4	0.226	J	0.781	0.195
Barium, Total	7440-39-3	6.22		0.390	0.0781
Cadmium, Total	7440-43-9	0.179		0.156	0.0390
Chromium, Total	7440-47-3	2.67		0.781	0.0937

J Estimated ; the analyte concentration was less than the low standard (LOQ)

Microbac

3

Sample Number: L09010537-03
Client ID: MR08-SS322-09A
Matrix: Soil
Workgroup Number: WG294611
Collect Date: 01/26/2009 08:45
Sample Tag: DL01

PrePrep Method: NONE
Prep Method: 3051
Analytical Method: 6020
Analyst: JYH
Dilution: 2
Units: mg/kg

Instrument: ELAN-ICP
Prep Date: 01/30/2009 09:46
Cal Date: 02/10/2009 10:53
Run Date: 02/11/2009 00:51
File ID: EL.021109.005131
Percent Solid: 91.6

Analyte	CAS. Number	Result	Qual	RL	MDL
Arsenic, Total	7440-38-2	0.516 J	J	0.641	0.160
Lead, Total	7439-92-1	2.36		0.855	0.214
Selenium, Total	7782-49-2	0.299	J	0.855	0.214

MSH

J Estimated ; the analyte concentration was less than the low standard (LOQ)

Microbac

DW 4/2/09

3

Sample Number: L09010537-03
Client ID: MR08-SS322-09A
Matrix: Soil
Workgroup Number: WG294451
Collect Date: 01/26/2009 08:45
Sample Tag: 01

PrePrep Method: NONE
Prep Method: 7471A
Analytical Method: 7471A
Analyst: ADC
Dilution: 1
Units: mg/kg

Instrument: HYDRA
Prep Date: 01/29/2009 08:17
Cal Date: 02/09/2009 09:56
Run Date: 02/09/2009 10:35
File ID: HY.020909.103552
Percent Solid: 91.6

Analyte	CAS. Number	Result	Qual	RL	MDL
Mercury, Total	7439-97-6		U	0.104	0.0208

U Undetected; the analyte was analyzed for, but not detected.

Microbac

1186 llw 4/2/09

4

Sample Number: L09010537-04
Client ID: MR08-IS322-2-3-09A
Matrix: Soil
Workgroup Number: WG293890
Collect Date: 01/26/2009 08:55
Sample Tag: 01

PrePrep Method: NONE
Prep Method: 3051
Analytical Method: 6010B
Analyst: KHR
Dilution: 1
Units: mg/kg

Instrument: IRIS-ICP
Prep Date: 01/29/2009 08:15
Cal Date: 02/02/2009 16:07
Run Date: 02/02/2009 18:13
File ID: IR.020209.181300
Percent Solid: 88.0

Analyte	CAS. Number	Result	Qual	RL	MDL
Silver, Total	7440-22-4		U	0.856	0.214
Barium, Total	7440-39-3	12.8		0.428	0.0856
Cadmium, Total	7440-43-9		U	0.171	0.0428
Chromium, Total	7440-47-3	10.2		0.856	0.103

U Undetected; the analyte was analyzed for, but not detected.

Microbac

4

Sample Number: L09010537-04
Client ID: MR08-IS322-2-3-09A
Matrix: Soil
Workgroup Number: WG294611
Collect Date: 01/26/2009 08:55
Sample Tag: DL01

PrePrep Method: NONE
Prep Method: 3051
Analytical Method: 6020
Analyst: JYH
Dilution: 2
Units: mg/kg

Instrument: ELAN-ICP
Prep Date: 01/30/2009 09:46
Cal Date: 02/10/2009 10:53
Run Date: 02/11/2009 00:57
File ID: EL.021109.005737
Percent Solid: 88.0

Analyte	CAS. Number	Result	Qual	RL	MDL
Arsenic, Total	7440-38-2	1.21 J		0.680	0.170
Lead, Total	7439-92-1	3.43		0.907	0.227
Selenium, Total	7782-49-2	0.386	~~J~~	0.907	0.227

MSH

J Estimated ; the analyte concentration was less than the low standard (LOQ)

Microbac

650 AW 4/2/09

4

Sample Number: L09010537-04
Client ID: MR08-IS322-2-3-09A
Matrix: Soil
Workgroup Number: WG294451
Collect Date: 01/26/2009 08:55
Sample Tag: 01

PrePrep Method: NONE
Prep Method: 7471A
Analytical Method: 7471A
Analyst: ADC
Dilution: 1
Units: mg/kg

Instrument: HYDRA
Prep Date: 01/29/2009 08:17
Cal Date: 02/09/2009 09:56
Run Date: 02/09/2009 10:37
File ID: HY.020909.103745
Percent Solid: 88.0

Analyte	CAS. Number	Result	Qual	RL	MDL
Mercury, Total	7439-97-6	0.0314	J	0.114	0.0227

J Estimated ; the analyte concentration was less than the low standard (LOQ)

Microbac

1187 NW 4/2/09

5

Sample Number: L09010537-05
Client ID: MR08-SS320-09A
Matrix: Soil
Workgroup Number: WG293890
Collect Date: 01/26/2009 09:15
Sample Tag: 01

PrePrep Method: NONE
Prep Method: 3051
Analytical Method: 6010B
Analyst: KHR
Dilution: 1
Units: mg/kg

Instrument: IRIS-ICP
Prep Date: 01/29/2009 08:15
Cal Date: 02/02/2009 16:07
Run Date: 02/02/2009 18:19
File ID: IR.020209.181900
Percent Solid: 78.5

Analyte	CAS. Number	Result	Qual	RL	MDL
Silver, Total	7440-22-4		U	0.970	0.242
Barium, Total	7440-39-3	13.9		0.485	0.0970
Cadmium, Total	7440-43-9	0.688		0.194	0.0485
Chromium, Total	7440-47-3	10.3		0.970	0.116

U Undetected; the analyte was analyzed for, but not detected.

5

Sample Number: L09010537-05
Client ID: MR08-SS320-09A
Matrix: Soil
Workgroup Number: WG294611
Collect Date: 01/26/2009 09:15
Sample Tag: DL01

PrePrep Method: NONE
Prep Method: 3051
Analytical Method: 6020
Analyst: JYH
Dilution: 2
Units: mg/kg

Instrument: ELAN-ICP
Prep Date: 01/30/2009 09:46
Cal Date: 02/10/2009 10:53
Run Date: 02/11/2009 01:03
File ID: EL.021109.010344
Percent Solid: 78.5

Analyte	CAS. Number	Result	Qual	RL	MDL
Arsenic, Total	7440-38-2	0.932 J		0.753	0.188
Lead, Total	7439-92-1	80.2		1.00	0.251
Selenium, Total	7782-49-2	0.331		1.00	0.251

MSH

J Estimated ; the analyte concentration was less than the low standard (LOQ)

Microbac

651 MW 4/2/09

5

Sample Number: L09010537-05
Client ID: MR08-SS320-09A
Matrix: Soil
Workgroup Number: WG294451
Collect Date: 01/26/2009 09:15
Sample Tag: 01

PrePrep Method: NONE
Prep Method: 7471A
Analytical Method: 7471A
Analyst: ADC
Dilution: 1
Units: mg/kg

Instrument: HYDRA
Prep Date: 01/29/2009 08:17
Cal Date: 02/09/2009 09:56
Run Date: 02/09/2009 10:39
File ID: HY.020909.103931
Percent Solid: 78.5

Analyte	CAS. Number	Result	Qual	RL	MDL
Mercury, Total	7439-97-6	0.0277	J	0.127	0.0255

J Estimated ; the analyte concentration was less than the low standard (LOQ)

Microbac

1188 MW 4/2/09

6

Sample Number: L09010537-06
Client ID: MR08-IS320-2-3-09A
Matrix: Soil
Workgroup Number: WG293890
Collect Date: 01/26/2009 09:20
Sample Tag: 01

PrePrep Method: NONE
Prep Method: 3051
Analytical Method: 6010B
Analyst: KHR
Dilution: 1
Units: mg/kg

Instrument: IRIS-ICP
Prep Date: 01/29/2009 08:15
Cal Date: 02/02/2009 16:07
Run Date: 02/02/2009 18:26
File ID: IR.020209.182600
Percent Solid: 88.7

Analyte	CAS. Number	Result	Qual	RL	MDL
Silver, Total	7440-22-4		U	0.831	0.208
Barium, Total	7440-39-3	15.9		0.415	0.0831
Cadmium, Total	7440-43-9		U	0.166	0.0415
Chromium, Total	7440-47-3	8.85		0.831	0.0997

U Undetected; the analyte was analyzed for, but not detected.

Microbac

6

Sample Number:	L09010537-06	PrePrep Method:	NONE	Instrument:	ELAN-ICP
Client ID:	MR08-IS320-2-3-09A	Prep Method:	3051	Prep Date:	01/30/2009 09:46
Matrix:	Soil	Analytical Method:	6020	Cal Date:	02/10/2009 10:53
Workgroup Number:	WG294611	Analyst:	JYH	Run Date:	02/11/2009 01:22
Collect Date:	01/26/2009 09:20	Dilution:	2	File ID:	EL.021109.012253
Sample Tag:	DL01	Units:	mg/kg	Percent Solid:	88.7

Analyte	CAS. Number	Result	Qual	RL	MDL	
Arsenic, Total	7440-38-2	0.525 J	~~J~~	0.663	0.166	MSH
Lead, Total	7439-92-1	3.22 J		0.884	0.221	MSH
Selenium, Total	7782-49-2		U	0.884	0.221	

U Undetected; the analyte was analyzed for, but not detected.
J Estimated ; the analyte concentration was less than the low standard (LOQ)

Microbac

652 RLW 4/2/09

6

Sample Number:	L09010537-06	PrePrep Method:	NONE	Instrument:	HYDRA
Client ID:	MR08-IS320-2-3-09A	Prep Method:	7471A	Prep Date:	01/29/2009 08:17
Matrix:	Soil	Analytical Method:	7471A	Cal Date:	02/09/2009 09:56
Workgroup Number:	WG294451	Analyst:	ADC	Run Date:	02/09/2009 10:41
Collect Date:	01/26/2009 09:20	Dilution:	1	File ID:	HY.020909.104136
Sample Tag:	01	Units:	mg/kg	Percent Solid:	88.7

Analyte	CAS. Number	Result	Qual	RL	MDL
Mercury, Total	7439-97-6	0.0265	J	0.113	0.0225

J Estimated ; the analyte concentration was less than the low standard (LOQ)

Microbac

1189 MW 4/2/09

7

Sample Number: L09010537-07
Client ID: MR08-SS351-09A
Matrix: Soil
Workgroup Number: WG293890
Collect Date: 01/26/2009 09:40
Sample Tag: 01

PrePrep Method: NONE
Prep Method: 3051
Analytical Method: 6010B
Analyst: KHR
Dilution: 1
Units: mg/kg

Instrument: IRIS-ICP
Prep Date: 01/29/2009 08:15
Cal Date: 02/02/2009 16:07
Run Date: 02/02/2009 18:32
File ID: IR.020209.183200
Percent Solid: 89.0

Analyte	CAS. Number	Result	Qual	RL	MDL
Silver, Total	7440-22-4	0.300	J	0.855	0.214
Barium, Total	7440-39-3	9.51		0.428	0.0855
Cadmium, Total	7440-43-9	0.187		0.171	0.0428
Chromium, Total	7440-47-3	5.16		0.855	0.103

J Estimated ; the analyte concentration was less than the low standard (LOQ)

Microbac

7

Sample Number: L09010537-07
Client ID: MR08-SS351-09A
Matrix: Soil
Workgroup Number: WG294611
Collect Date: 01/26/2009 09:40
Sample Tag: DL01

PrePrep Method: NONE
Prep Method: 3051
Analytical Method: 6020
Analyst: JYH
Dilution: 2
Units: mg/kg

Instrument: ELAN-ICP
Prep Date: 01/30/2009 09:46
Cal Date: 02/10/2009 10:53
Run Date: 02/10/2009 23:37
File ID: EL.021009.233735
Percent Solid: 89.0

Analyte	CAS. Number	Result	Qual	RL	MDL
Arsenic, Total	7440-38-2	0.537 J	J	0.674	0.169
Lead, Total	7439-92-1	2.53		0.899	0.225
Selenium, Total	7782-49-2	0.358	J	0.899	0.225

MSH

J Estimated ; the analyte concentration was less than the low standard (LOQ)

Microbac

653 fw 4/2/09

7

Sample Number:	L09010537-07	PrePrep Method:	NONE	Instrument:	HYDRA
Client ID:	MR08-SS351-09A	Prep Method:	7471A	Prep Date:	01/29/2009 08:17
Matrix:	Soil	Analytical Method:	7471A	Cal Date:	02/09/2009 09:56
Workgroup Number:	WG294451	Analyst:	ADC	Run Date:	02/09/2009 10:43
Collect Date:	01/26/2009 09:40	Dilution:	1	File ID:	HY.020909.104339
Sample Tag:	01	Units:	mg/kg	Percent Solid:	89.0

Analyte	CAS. Number	Result	Qual	RL	MDL
Mercury, Total	7439-97-6		U	0.112	0.0225

U Undetected; the analyte was analyzed for, but not detected.

Microbac

 fw 4/2/09

10

Sample Number: L09010537-10
Client ID: MR08-IS351-2-3-09A
Matrix: Soil
Workgroup Number: WG293891
Collect Date: 01/26/2009 09:45
Sample Tag: 01

PrePrep Method: NONE
Prep Method: 3051
Analytical Method: 6010B
Analyst: KHR
Dilution: 1
Units: mg/kg

Instrument: IRIS-ICP
Prep Date: 01/29/2009 08:35
Cal Date: 02/02/2009 16:07
Run Date: 02/02/2009 20:52
File ID: IR.020209.205200
Percent Solid: 86.8

Analyte	CAS. Number	Result	Qual	RL	MDL
Silver, Total	7440-22-4		U	0.811	0.203
Barium, Total	7440-39-3	5.54		0.405	0.0811
Cadmium, Total	7440-43-9		U	0.162	0.0405
Chromium, Total	7440-47-3	3.77		0.811	0.0973

U Undetected; the analyte was analyzed for, but not detected.

Microbac

10

Sample Number: L09010537-10
Client ID: MR08-IS351-2-3-09A
Matrix: Soil
Workgroup Number: WG294611
Collect Date: 01/26/2009 09:45
Sample Tag: DL01

PrePrep Method: NONE
Prep Method: 3051
Analytical Method: 6020
Analyst: JYH
Dilution: 2
Units: mg/kg

Instrument: ELAN-ICP
Prep Date: 01/30/2009 09:46
Cal Date: 02/10/2009 10:53
Run Date: 02/11/2009 00:08
File ID: EL.021109.000858
Percent Solid: 86.8

Analyte	CAS. Number	Result	Qual	RL	MDL
Arsenic, Total	7440-38-2	0.200 J	J	0.688	0.172
Lead, Total	7439-92-1	3.70 J		0.918	0.229
Selenium, Total	7782-49-2		U	0.918	0.229

MSH
MSH

U Undetected; the analyte was analyzed for, but not detected.
J Estimated ; the analyte concentration was less than the low standard (LOQ)

Microbac

656 LW 4/2/09

10

Sample Number: L09010537-10
Client ID: MR08-IS351-2-3-09A
Matrix: Soil
Workgroup Number: WG294453
Collect Date: 01/26/2009 09:45
Sample Tag: 01

PrePrep Method: NONE
Prep Method: 7471A
Analytical Method: 7471A
Analyst: ADC
Dilution: 1
Units: mg/kg

Instrument: HYDRA
Prep Date: 01/29/2009 09:49
Cal Date: 02/09/2009 09:56
Run Date: 02/09/2009 11:18
File ID: HY.020909.111827
Percent Solid: 86.8

Analyte	CAS. Number	Result	Qual	RL	MDL
Mercury, Total	7439-97-6		U	0.114	0.0228

U Undetected; the analyte was analyzed for, but not detected.

Microbac

fw
4/2/09

13

Sample Number: L09010537-13
Client ID: MR08-SS348-09A
Matrix: Soil
Workgroup Number: WG293890
Collect Date: 01/26/2009 10:20
Sample Tag: 01

PrePrep Method: NONE
Prep Method: 3051
Analytical Method: 6010B
Analyst: KHR
Dilution: 1
Units: mg/kg

Instrument: IRIS-ICP
Prep Date: 01/29/2009 08:15
Cal Date: 02/02/2009 16:07
Run Date: 02/02/2009 18:50
File ID: IR.020209.185000
Percent Solid: 94.1

Analyte	CAS. Number	Result	Qual	RL	MDL
Silver, Total	7440-22-4	0.193	J	0.737	0.184
Barium, Total	7440-39-3	3.69		0.368	0.0737
Cadmium, Total	7440-43-9	0.0803	J	0.147	0.0368
Chromium, Total	7440-47-3	4.01		0.737	0.0884

J Estimated ; the analyte concentration was less than the low standard (LOQ)

Microbac

13

Sample Number: L09010537-13
Client ID: MR08-SS348-09A
Matrix: Soil
Workgroup Number: WG294611
Collect Date: 01/26/2009 10:20
Sample Tag: DL01

PrePrep Method: NONE
Prep Method: 3051
Analytical Method: 6020
Analyst: JYH
Dilution: 2
Units: mg/kg

Instrument: ELAN-ICP
Prep Date: 01/30/2009 09:46
Cal Date: 02/10/2009 10:53
Run Date: 02/11/2009 01:28
File ID: EL.021109.012857
Percent Solid: 94.1

Analyte	CAS. Number	Result	Qual	RL	MDL
Arsenic, Total	7440-38-2	0.625 J		0.624	0.156
Lead, Total	7439-92-1	1.54		0.832	0.208
Selenium, Total	7782-49-2	0.404		0.832	0.208

MSH

J Estimated ; the analyte concentration was less than the low standard (LOQ)

Microbac

659 MW 4/2/09

13

Sample Number: L09010537-13
Client ID: MR08-SS348-09A
Matrix: Soil
Workgroup Number: WG294451
Collect Date: 01/26/2009 10:20
Sample Tag: 01

PrePrep Method: NONE
Prep Method: 7471A
Analytical Method: 7471A
Analyst: ADC
Dilution: 1
Units: mg/kg

Instrument: HYDRA
Prep Date: 01/29/2009 08:17
Cal Date: 02/09/2009 09:56
Run Date: 02/09/2009 10:54
File ID: HY.020909.105446
Percent Solid: 94.1

Analyte	CAS. Number	Result	Qual	RL	MDL
Mercury, Total	7439-97-6		U	0.104	0.0209

U Undetected; the analyte was analyzed for, but not detected.

Microbac

JW
4/2/09

14

Sample Number: L09010537-14
Client ID: MR08-IS348-2-3-09A
Matrix: Soil
Workgroup Number: WG293890
Collect Date: 01/26/2009 10:25
Sample Tag: 01

PrePrep Method: NONE
Prep Method: 3051
Analytical Method: 6010B
Analyst: KHR
Dilution: 1
Units: mg/kg

Instrument: IRIS-ICP
Prep Date: 01/29/2009 08:15
Cal Date: 02/02/2009 16:07
Run Date: 02/02/2009 18:56
File ID: IR.020209.185600
Percent Solid: 87.7

Analyte	CAS. Number	Result	Qual	RL	MDL
Silver, Total	7440-22-4		U	0.859	0.215
Barium, Total	7440-39-3	7.86		0.430	0.0859
Cadmium, Total	7440-43-9		U	0.172	0.0430
Chromium, Total	7440-47-3	8.60		0.859	0.103

U Undetected; the analyte was analyzed for, but not detected.

Microbac

14

Sample Number: L09010537-14
Client ID: MR08-IS348-2-3-09A
Matrix: Soil
Workgroup Number: WG294611
Collect Date: 01/26/2009 10:25
Sample Tag: DL01

PrePrep Method: NONE
Prep Method: 3051
Analytical Method: 6020
Analyst: JYH
Dilution: 2
Units: mg/kg

Instrument: ELAN-ICP
Prep Date: 01/30/2009 09:46
Cal Date: 02/10/2009 10:53
Run Date: 02/11/2009 01:35
File ID: EL.021109.013501
Percent Solid: 87.7

Analyte	CAS. Number	Result	Qual	RL	MDL	
Arsenic, Total	7440-38-2	0.289 J	~~J~~	0.680	0.170	MSH
Lead, Total	7439-92-1	2.33 J		0.907	0.227	MSH
Selenium, Total	7782-49-2		U	0.907	0.227	

U Undetected; the analyte was analyzed for, but not detected.
J Estimated ; the analyte concentration was less than the low standard (LOQ)

Microbac

660 fles 4/2/09

14

Sample Number: L09010537-14
Client ID: MR08-IS348-2-3-09A
Matrix: Soil
Workgroup Number: WG294451
Collect Date: 01/26/2009 10:25
Sample Tag: 01

PrePrep Method: NONE
Prep Method: 7471A
Analytical Method: 7471A
Analyst: ADC
Dilution: 1
Units: mg/kg

Instrument: HYDRA
Prep Date: 01/29/2009 08:17
Cal Date: 02/09/2009 09:56
Run Date: 02/09/2009 10:56
File ID: HY.020909.105659
Percent Solid: 87.7

Analyte	CAS. Number	Result	Qual	RL	MDL
Mercury, Total	7439-97-6		U	0.112	0.0223

U Undetected; the analyte was analyzed for, but not detected.

Microbac

1197 KW
4/2/09

ENVIRONMENTAL
Data Services, Inc.

METALS

USEPA Region IV - Level IV Review

Site: MCB Camp Lejeune, TO-09 SDG #: L09010538

Client: CH2M HILL, Inc., Virginia Beach, Virginia Date: April 2, 2009

Laboratory: Microbac Laboratories, Inc., Marietta, Ohio Reviewer: Nancy Weaver

EDS ID	Client Sample ID	Laboratory Sample ID	Matrix
1	MR08-SS373-09A	L09010538-01	Soil
2	MR08-SS373D-09A	L09010538-02	Soil
3	MR08-IS373-2-3-09A	L09010538-03	Soil
4	MR08-IS373D-2-3-09A	L09010538-04	Soil
5	MR08-IS350-3-4-09A	L09010538-05	Soil
6	MR08-SS350-09A	L09010538-06	Soil
7	MR08-SS349-09A	L09010538-07	Soil
8	MR08-IS349-3-4-09A	L09010538-08	Soil
9	MR08-SS326-09A	L09010538-09	Soil
10	MR08-IS326-4-5-09A	L09010538-10	Soil
11	MR08-SS327-09A	L09010538-11	Soil
12	MR08-IS327-2-3-09A	L09010538-12	Soil
13	MR08-SS324-09A	L09010538-13	Soil
14	MR08-IS324-3-4-09A	L09010538-14	Soil
15	MR08-SS325-09A	L09010538-15	Soil
16	MR08-IS325-3-4-09A	L09010538-16	Soil
17	MR08-SS323-09A	L09010538-17	Soil
18	MR08-IS323-2-3-09A	L09010538-18	Soil
19	MR08-EB012609	L09010538-19	Soil
20	MR08-FB012609	L09010538-20	Soil
21	MR08-SS349D-09A	L09010538-21	Soil

The USEPA "Contract Laboratory Program National Functional Guidelines for Inorganic Data Review," October 2004, and professional judgement were used in evaluating the data in this summary report.

Holding Times - All samples were prepared and analyzed within 28 days for mercury and 180 days for all other metals.

Calibration - The ICV and CCV %R values were acceptable.

Method and Calibration Blanks - The method blanks were free of contamination.

Field and Equipment Blank - Field QC results are summarized below.

Blank ID	Compound	Conc. ug/L	Action Level ug/L	Qualifier	Affected Samples
MR08-EB012509	None - ND	-	-	-	-
MR08-FB012609	None - ND	-	-	-	-
MR08-EB012609	None - ND	-	-	-	-

ICP Interference Check Sample - All %R values were acceptable.

MS/MSD - The MS/MSD sample exhibited acceptable %R and RPD values except the following.

MS/MSD Sample ID	Compound	MS/MSD %R/RPD	Qualifier	Affected Samples
Reference (WG293890)	Barium	Ok/149%/26.7	J	1-9
	Chromium	136%/Ok/Ok	J	1-9
Reference (WG294609)	Lead	Ok/126%/Ok	J	1-12
Reference (WG294611)	Arsenic	205%/222%/Ok	J	13-18, 21
	Lead	202%/267%/23.1	J	13-18, 21
	Selenium	182%/195%/Ok	J	13-17, 21

LCS - The LCS samples exhibited acceptable %R values.

ICP Serial Dilution - The ICP serial dilution sample exhibited acceptable %D values.

Field Duplicates - Field duplicate results are summarized below.

Compound	MR08-SS373-09A mg/kg	MR08-SS373D-09A mg/kg	RPD	Qualifier
Barium	9.74	9.09	7%	None
Cadmium	0.457	0.490	7%	None
Chromium	10.4	10.3	1%	None
Arsenic	1.00	0.875	13%	None
Lead	63.2	70.3	11%	None
Selenium	0.677	0.571	17%	None
Mercury	0.122 U	0.0248	NC	None

Compound	MR08-IS373-2-3-09A mg/kg	MR08-IS373D-2-3-09A mg/kg	RPD	Qualifier
Barium	11.5	8.71	28%	None
Chromium	5.16	2.89	56%	None
Arsenic	0.399	0.326	20%	None
Lead	3.81	2.89	27%	None
Selenium	0.484	0.875 U	NC	None

Compound	MR08-IS349-3-4-09A mg/kg	MR08-IS349D-3-4-09A mg/kg	RPD	Qualifier
Barium	7.35	8.76	18%	None
Chromium	10.1	11.1	9%	None
Arsenic	0.395	0.239	49%	None
Lead	4.62	3.78	20%	None
Selenium	0.313	ND	NC	None

Compound Quantitation - Several samples were analyzed at various dilutions for various analytes due to high concentrations.

Report Number: L09010538

Report Date : February 24, 2009

1

Sample Number:	L09010538-01	PrePrep Method:	NONE	Instrument:	IRIS-ICP
Client ID:	MR08-SS373-09A	Prep Method:	3051	Prep Date:	01/29/2009 08:15
Matrix:	Soil	Analytical Method:	6010B	Cal Date:	02/02/2009 16:07
Workgroup Number:	WG293890	Analyst:	KHR	Run Date:	02/02/2009 19:02
Collect Date:	01/25/2009 10:45	Dilution:	1	File ID:	IR.020209.190200
Sample Tag:	01	Units:	mg/kg	Percent Solid:	81.9

Analyte	CAS. Number	Result	Qual	RL	MDL	
Silver, Total	7440-22-4		U	0.871	0.218	
Barium, Total	7440-39-3	9.74 J		0.435	0.0871	MSH
Cadmium, Total	7440-43-9	0.457		0.174	0.0435	
Chromium, Total	7440-47-3	10.4 J		0.871	0.104	MSH

U Undetected; the analyte was analyzed for, but not detected.

Microbac

13 RW 4/2/09

Report Number: L09010538

Report Date : February 24, 2009

1

Sample Number: L09010538-01
Client ID: MR08-SS373-09A
Matrix: Soil
Workgroup Number: WG294609
Collect Date: 01/25/2009 10:45
Sample Tag: DL01

PrePrep Method: NONE
Prep Method: 3051
Analytical Method: 6020
Analyst: JYH
Dilution: 2
Units: mg/kg

Instrument: ELAN-ICP
Prep Date: 01/30/2009 08:38
Cal Date: 02/10/2009 10:53
Run Date: 02/10/2009 21:59
File ID: EL.021009.215923
Percent Solid: 81.9

Analyte	CAS. Number	Result	Qual	RL	MDL
Arsenic, Total	7440-38-2	1.00		0.718	0.180
Lead, Total	7439-92-1	63.2 J		0.958	0.239
Selenium, Total	7782-49-2	0.677	J	0.958	0.239

MS4

J Estimated ; the analyte concentration was less than the low standard (LOQ)

Microbac

357 4/2/09

Report Number: L09010538

Report Date : February 24, 2009

Sample Number:	L09010538-01	PrePrep Method:	NONE	Instrument:	HYDRA
Client ID:	MR08-SS373-09A	Prep Method:	7471A	Prep Date:	01/29/2009 08:17
Matrix:	Soil	Analytical Method:	7471A	Cal Date:	02/09/2009 09:56
Workgroup Number:	WG294451	Analyst:	ADC	Run Date:	02/09/2009 10:59
Collect Date:	01/25/2009 10:45	Dilution:	1	File ID:	HY.020909.105906
Sample Tag:	01	Units:	mg/kg	Percent Solid:	81.9

Analyte	CAS. Number	Result	Qual	RL	MDL
Mercury, Total	7439-97-6		U	0.122	0.0243

U Undetected; the analyte was analyzed for, but not detected.

Microbac

1656 lew 4/2/09

2

Sample Number: L09010538-02
Client ID: MR08-SS373D-09A
Matrix: Soil
Workgroup Number: WG293890
Collect Date: 01/25/2009 10:45
Sample Tag: 01

PrePrep Method: NONE
Prep Method: 3051
Analytical Method: 6010B
Analyst: KHR
Dilution: 1
Units: mg/kg

Instrument: IRIS-ICP
Prep Date: 01/29/2009 08:15
Cal Date: 02/02/2009 16:07
Run Date: 02/02/2009 19:08
File ID: IR.020209.190800
Percent Solid: 82.6

Analyte	CAS. Number	Result	Qual	RL	MDL	
Silver, Total	7440-22-4		U	0.815	0.204	
Barium, Total	7440-39-3	9.09 J		0.407	0.0815	MSH
Cadmium, Total	7440-43-9	0.490		0.163	0.0407	
Chromium, Total	7440-47-3	10.3 J		0.815	0.0978	MSH

U Undetected; the analyte was analyzed for, but not detected.

Microbac

14 fcw 4/2/09

2

Sample Number:	L09010538-02	PrePrep Method:	NONE	Instrument:	ELAN-ICP
Client ID:	MR08-SS373D-09A	Prep Method:	3051	Prep Date:	01/30/2009 08:38
Matrix:	Soil	Analytical Method:	6020	Cal Date:	02/10/2009 10:53
Workgroup Number:	WG294609	Analyst:	JYH	Run Date:	02/10/2009 22:05
Collect Date:	01/25/2009 10:45	Dilution:	2	File ID:	EL.021009.220528
Sample Tag:	DL01	Units:	mg/kg	Percent Solid:	82.6

Analyte	CAS. Number	Result	Qual	RL	MDL
Arsenic, Total	7440-38-2	0.875		0.669	0.167
Lead, Total	7439-92-1	70.3 J		0.892	0.223
Selenium, Total	7782-49-2	0.571	J	0.892	0.223

MSII

J Estimated ; the analyte concentration was less than the low standard (LOQ)

Microbac

358

lew 4/2/09

2

Sample Number:	L09010538-02	PrePrep Method:	NONE	Instrument:	HYDRA
Client ID:	MR08-SS373D-09A	Prep Method:	7471A	Prep Date:	01/29/2009 08:17
Matrix:	Soil	Analytical Method:	7471A	Cal Date:	02/09/2009 09:56
Workgroup Number:	WG294451	Analyst:	ADC	Run Date:	02/09/2009 11:02
Collect Date:	01/25/2009 10:45	Dilution:	1	File ID:	HY.020909.110241
Sample Tag:	01	Units:	mg/kg	Percent Solid:	82.6

Analyte	CAS. Number	Result	Qual	RL	MDL
Mercury, Total	7439-97-6	0.0248	J	0.116	0.0233

J Estimated ; the analyte concentration was less than the low standard (LOQ)

Microbac

1657 RW 4/2/09

3

Sample Number: L09010538-03
Client ID: MR08-IS373-2-3-09A
Matrix: Soil
Workgroup Number: WG293890
Collect Date: 01/25/2009 10:50
Sample Tag: 01

PrePrep Method: NONE
Prep Method: 3051
Analytical Method: 6010B
Analyst: KHR
Dilution: 1
Units: mg/kg

Instrument: IRIS-ICP
Prep Date: 01/29/2009 08:15
Cal Date: 02/02/2009 16:07
Run Date: 02/02/2009 19:26
File ID: IR.020209.192600
Percent Solid: 87.8

Analyte	CAS. Number	Result	Qual	RL	MDL	
Silver, Total	7440-22-4		U	0.834	0.208	
Barium, Total	7440-39-3	11.5 J		0.417	0.0834	MSH
Cadmium, Total	7440-43-9		U	0.167	0.0417	
Chromium, Total	7440-47-3	5.16 J		0.834	0.100	MSH

U Undetected; the analyte was analyzed for, but not detected.

Microbac

15 fcw 4/2/09

3

Sample Number: L09010538-03
Client ID: MR08-IS373-2-3-09A
Matrix: Soil
Workgroup Number: WG294609
Collect Date: 01/25/2009 10:50
Sample Tag: DL01

PrePrep Method: NONE
Prep Method: 3051
Analytical Method: 6020
Analyst: JYH
Dilution: 2
Units: mg/kg

Instrument: ELAN-ICP
Prep Date: 01/30/2009 08:38
Cal Date: 02/10/2009 10:53
Run Date: 02/10/2009 22:11
File ID: EL.021009.221134
Percent Solid: 87.8

Analyte	CAS. Number	Result	Qual	RL	MDL
Arsenic, Total	7440-38-2	0.399	J	0.678	0.170
Lead, Total	7439-92-1	3.81 J		0.904	0.226
Selenium, Total	7782-49-2	0.484	J	0.904	0.226

NSY

J Estimated ; the analyte concentration was less than the low standard (LOQ)

Microbac

lew 4/2/09

3

Sample Number:	L09010538-03	PrePrep Method:	NONE	Instrument:	HYDRA
Client ID:	MR08-IS373-2-3-09A	Prep Method:	7471A	Prep Date:	01/29/2009 08:17
Matrix:	Soil	Analytical Method:	7471A	Cal Date:	02/09/2009 09:56
Workgroup Number:	WG294451	Analyst:	ADC	Run Date:	02/09/2009 11:03
Collect Date:	01/25/2009 10:50	Dilution:	1	File ID:	HY.020909.110334
Sample Tag:	01	Units:	mg/kg	Percent Solid:	87.8

Analyte	CAS. Number	Result	Qual	RL	MDL
Mercury, Total	7439-97-6		U	0.111	0.0223

U Undetected; the analyte was analyzed for, but not detected.

Microbac

fw
4/2/09

4

Sample Number: L09010538-04
Client ID: MR08-IS373D-2-3-09A
Matrix: Soil
Workgroup Number: WG293890
Collect Date: 01/25/2009 10:50
Sample Tag: 01

PrePrep Method: NONE
Prep Method: 3051
Analytical Method: 6010B
Analyst: KHR
Dilution: 1
Units: mg/kg

Instrument: IRIS-ICP
Prep Date: 01/29/2009 08:15
Cal Date: 02/02/2009 16:07
Run Date: 02/02/2009 19:32
File ID: IR.020209.193200
Percent Solid: 87.4

Analyte	CAS. Number	Result	Qual	RL	MDL
Silver, Total	7440-22-4		U	0.835	0.209
Barium, Total	7440-39-3	8.71 J		0.418	0.0835
Cadmium, Total	7440-43-9		U	0.167	0.0418
Chromium, Total	7440-47-3	2.89 J		0.835	0.100

MS4
MSH

U Undetected; the analyte was analyzed for, but not detected.

Microbac

16 4/6/09

4

Sample Number: L09010538-04
Client ID: MR08-IS373D-2-3-09A
Matrix: Soil
Workgroup Number: WG294609
Collect Date: 01/25/2009 10:50
Sample Tag: DL01

PrePrep Method: NONE
Prep Method: 3051
Analytical Method: 6020
Analyst: JYH
Dilution: 2
Units: mg/kg

Instrument: ELAN-ICP
Prep Date: 01/30/2009 08:38
Cal Date: 02/10/2009 10:53
Run Date: 02/10/2009 22:17
File ID: EL.021009.221739
Percent Solid: 87.4

Analyte	CAS. Number	Result	Qual	RL	MDL
Arsenic, Total	7440-38-2	0.326	J	0.656	0.164
Lead, Total	7439-92-1	2.89 J		0.875	0.219
Selenium, Total	7782-49-2		U	0.875	0.219

M34

U Undetected; the analyte was analyzed for, but not detected.
J Estimated ; the analyte concentration was less than the low standard (LOQ)

Microbac

360 lew 4/2/09

4

Sample Number: L09010538-04
Client ID: MR08-IS373D-2-3-09A
Matrix: Soil
Workgroup Number: WG294451
Collect Date: 01/25/2009 10:50
Sample Tag: 01

PrePrep Method: NONE
Prep Method: 7471A
Analytical Method: 7471A
Analyst: ADC
Dilution: 1
Units: mg/kg

Instrument: HYDRA
Prep Date: 01/29/2009 08:17
Cal Date: 02/09/2009 09:56
Run Date: 02/09/2009 11:05
File ID: HY.020909.110542
Percent Solid: 87.4

Analyte	CAS. Number	Result	Qual	RL	MDL
Mercury, Total	7439-97-6		U	0.113	0.0227

U Undetected; the analyte was analyzed for, but not detected.

Microbac

1659 lew 4/2/09

5

Sample Number: L09010538-05
Client ID: MR08-IS350-3-4-09A
Matrix: Soil
Workgroup Number: WG293890
Collect Date: 01/25/2009 11:15
Sample Tag: 01

PrePrep Method: NONE
Prep Method: 3051
Analytical Method: 6010B
Analyst: KHR
Dilution: 1
Units: mg/kg

Instrument: IRIS-ICP
Prep Date: 01/29/2009 08:15
Cal Date: 02/02/2009 16:07
Run Date: 02/02/2009 19:39
File ID: IR.020209.193900
Percent Solid: 81.0

Analyte	CAS. Number	Result	Qual	RL	MDL	
Silver, Total	7440-22-4		U	0.912	0.228	
Barium, Total	7440-39-3	13.6 J		0.456	0.0912	MSU
Cadmium, Total	7440-43-9		U	0.182	0.0456	
Chromium, Total	7440-47-3	10.2 J		0.912	0.109	MSU

U Undetected; the analyte was analyzed for, but not detected.

Microbac

17 fcw 4/2/09

5

Sample Number: L09010538-05
Client ID: MR08-IS350-3-4-09A
Matrix: Soil
Workgroup Number: WG294609
Collect Date: 01/25/2009 11:15
Sample Tag: DL01

PrePrep Method: NONE
Prep Method: 3051
Analytical Method: 6020
Analyst: JYH
Dilution: 2
Units: mg/kg

Instrument: ELAN-ICP
Prep Date: 01/30/2009 08:38
Cal Date: 02/10/2009 10:53
Run Date: 02/10/2009 22:23
File ID: EL.021009.222345
Percent Solid: 81.0

Analyte	CAS. Number	Result	Qual	RL	MDL
Arsenic, Total	7440-38-2	1.33		0.735	0.184
Lead, Total	7439-92-1	14.9 J		0.980	0.245
Selenium, Total	7782-49-2	0.464	J	0.980	0.245

MSL

J Estimated ; the analyte concentration was less than the low standard (LOQ)

Microbac

361 lew 4/2/09

5

Sample Number: L09010538-05
Client ID: MR08-IS350-3-4-09A
Matrix: Soil
Workgroup Number: WG294451
Collect Date: 01/25/2009 11:15
Sample Tag: 01

PrePrep Method: NONE
Prep Method: 7471A
Analytical Method: 7471A
Analyst: ADC
Dilution: 1
Units: mg/kg

Instrument: HYDRA
Prep Date: 01/29/2009 08:17
Cal Date: 02/09/2009 09:56
Run Date: 02/09/2009 11:07
File ID: HY.020909.110724
Percent Solid: 81.0

Analyte	CAS. Number	Result	Qual	RL	MDL
Mercury, Total	7439-97-6	0.0491	J	0.123	0.0247

J Estimated ; the analyte concentration was less than the low standard (LOQ)

Microbac

1660 lew 4/2/09

6

Sample Number: L09010538-06
Client ID: MR08-SS350-09A
Matrix: Soil
Workgroup Number: WG293890
Collect Date: 01/25/2009 11:20
Sample Tag: 01

PrePrep Method: NONE
Prep Method: 3051
Analytical Method: 6010B
Analyst: KHR
Dilution: 1
Units: mg/kg

Instrument: IRIS-ICP
Prep Date: 01/29/2009 08:15
Cal Date: 02/02/2009 16:07
Run Date: 02/02/2009 19:45
File ID: IR.020209.194500
Percent Solid: 81.1

Analyte	CAS. Number	Result	Qual	RL	MDL
Silver, Total	7440-22-4		U	0.912	0.228
Barium, Total	7440-39-3	14.2 J		0.456	0.0912
Cadmium, Total	7440-43-9	0.254		0.182	0.0456
Chromium, Total	7440-47-3	7.09 J		0.912	0.109

MS4
MS4

U Undetected; the analyte was analyzed for, but not detected.

Microbac

18 JCW 4/2/09

6

Sample Number: L09010538-06
Client ID: MR08-SS350-09A
Matrix: Soil
Workgroup Number: WG294609
Collect Date: 01/25/2009 11:20
Sample Tag: DL01

PrePrep Method: NONE
Prep Method: 3051
Analytical Method: 6020
Analyst: JYH
Dilution: 2
Units: mg/kg

Instrument: ELAN-ICP
Prep Date: 01/30/2009 08:38
Cal Date: 02/10/2009 10:53
Run Date: 02/10/2009 22:29
File ID: EL.021009.222952
Percent Solid: 81.1

Analyte	CAS. Number	Result	Qual	RL	MDL
Arsenic, Total	7440-38-2	1.26		0.738	0.185
Lead, Total	7439-92-1	45.8 J		0.984	0.246
Selenium, Total	7782-49-2	0.436	J	0.984	0.246

MSH

J Estimated ; the analyte concentration was less than the low standard (LOQ)

Microbac

362 LW 4/2/09

4

Sample Number:	L09010538-06	PrePrep Method:	NONE	Instrument:	HYDRA
Client ID:	MR08-SS350-09A	Prep Method:	7471A	Prep Date:	01/29/2009 08:17
Matrix:	Soil	Analytical Method:	7471A	Cal Date:	02/09/2009 09:56
Workgroup Number:	WG294451	Analyst:	ADC	Run Date:	02/09/2009 11:09
Collect Date:	01/25/2009 11:20	Dilution:	1	File ID:	HY.020909.110928
Sample Tag:	01	Units:	mg/kg	Percent Solid:	81.1

Analyte	CAS. Number	Result	Qual	RL	MDL
Mercury, Total	7439-97-6	0.0309	J	0.121	0.0243

J Estimated ; the analyte concentration was less than the low standard (LOQ)

Microbac

1661 .llw 4/2/09

7

Sample Number: L09010538-07
Client ID: MR08-SS349-09A
Matrix: Soil
Workgroup Number: WG293890
Collect Date: 01/25/2009 13:15
Sample Tag: 01

PrePrep Method: NONE
Prep Method: 3051
Analytical Method: 6010B
Analyst: KHR
Dilution: 1
Units: mg/kg

Instrument: IRIS-ICP
Prep Date: 01/29/2009 08:15
Cal Date: 02/02/2009 16:07
Run Date: 02/02/2009 19:51
File ID: IR.020209.195100
Percent Solid: 83.2

Analyte	CAS. Number	Result	Qual	RL	MDL
Silver, Total	7440-22-4	1.68		0.834	0.209
Barium, Total	7440-39-3	32.1 J		0.417	0.0834
Cadmium, Total	7440-43-9	0.304		0.167	0.0417
Chromium, Total	7440-47-3	6.93 J		0.834	0.100

MSY
MSY

Microbac

19

lw
4/2/09

7

Sample Number: L09010538-07
Client ID: MR08-SS349-09A
Matrix: Soil
Workgroup Number: WG294609
Collect Date: 01/25/2009 13:15
Sample Tag: DL01

PrePrep Method: NONE
Prep Method: 3051
Analytical Method: 6020
Analyst: JYH
Dilution: 2
Units: mg/kg

Instrument: ELAN-ICP
Prep Date: 01/30/2009 08:38
Cal Date: 02/10/2009 10:53
Run Date: 02/10/2009 22:35
File ID: EL.021009.223557
Percent Solid: 83.2

Analyte	CAS. Number	Result	Qual	RL	MDL
Arsenic, Total	7440-38-2	0.893		0.715	0.179
Lead, Total	7439-92-1	35.3 J		0.953	0.238
Selenium, Total	7782-49-2	0.455	J	0.953	0.238

MSH

J Estimated ; the analyte concentration was less than the low standard (LOQ)

Microbac

 4/2009

7

Sample Number: L09010538-07
Client ID: MR08-SS349-09A
Matrix: Soil
Workgroup Number: WG294453
Collect Date: 01/25/2009 13:15
Sample Tag: 01

PrePrep Method: NONE
Prep Method: 7471A
Analytical Method: 7471A
Analyst: ADC
Dilution: 1
Units: mg/kg

Instrument: HYDRA
Prep Date: 01/29/2009 09:49
Cal Date: 02/09/2009 09:56
Run Date: 02/09/2009 11:27
File ID: HY.020909.112703
Percent Solid: 83.2

Analyte	CAS. Number	Result	Qual	RL	MDL
Mercury, Total	7439-97-6	0.183		0.120	0.0239

Microbac

1662

Dlw 4/2/09

8

Sample Number: L09010538-08
Client ID: MR08-IS349-3-4-09A
Matrix: Soil
Workgroup Number: WG293890
Collect Date: 01/25/2009 13:20
Sample Tag: 01

PrePrep Method: NONE
Prep Method: 3051
Analytical Method: 6010B
Analyst: KHR
Dilution: 1
Units: mg/kg

Instrument: IRIS-ICP
Prep Date: 01/29/2009 08:15
Cal Date: 02/02/2009 16:07
Run Date: 02/02/2009 19:57
File ID: IR.020209.195700
Percent Solid: 84.9

Analyte	CAS. Number	Result	Qual	RL	MDL
Silver, Total	7440-22-4		U	0.860	0.215
Barium, Total	7440-39-3	7.35 J		0.430	0.0860
Cadmium, Total	7440-43-9		U	0.172	0.0430
Chromium, Total	7440-47-3	10.1 J		0.860	0.103

MSH
USH

U Undetected; the analyte was analyzed for, but not detected.

Microbac

20 lw 4/2/09

8

Sample Number: L09010538-08
Client ID: MR08-IS349-3-4-09A
Matrix: Soil
Workgroup Number: WG294609
Collect Date: 01/25/2009 13:20
Sample Tag: DL01

PrePrep Method: NONE
Prep Method: 3051
Analytical Method: 6020
Analyst: JYH
Dilution: 2
Units: mg/kg

Instrument: ELAN-ICP
Prep Date: 01/30/2009 08:38
Cal Date: 02/10/2009 10:53
Run Date: 02/10/2009 22:55
File ID: EL.021009.225503
Percent Solid: 84.9

Analyte	CAS. Number	Result	Qual	RL	MDL
Arsenic, Total	7440-38-2	0.395	J	0.690	0.172
Lead, Total	7439-92-1	4.62 J		0.920	0.230
Selenium, Total	7782-49-2	0.313	J	0.920	0.230

MS4

J Estimated ; the analyte concentration was less than the low standard (LOQ)

Microbac

364 lew 4/2/09

8

Sample Number:	L09010538-08	PrePrep Method:	NONE	Instrument:	HYDRA
Client ID:	MR08-IS349-3-4-09A	Prep Method:	7471A	Prep Date:	01/29/2009 09:49
Matrix:	Soil	Analytical Method:	7471A	Cal Date:	02/09/2009 09:56
Workgroup Number:	WG294453	Analyst:	ADC	Run Date:	02/09/2009 11:30
Collect Date:	01/25/2009 13:20	Dilution:	1	File ID:	HY.020909.113044
Sample Tag:	01	Units:	mg/kg	Percent Solid:	84.9

Analyte	CAS. Number	Result	Qual	RL	MDL
Mercury, Total	7439-97-6		U	0.113	0.0225

U Undetected; the analyte was analyzed for, but not detected.

Microbac

1663

4/2/09

9

Sample Number: L09010538-09
Client ID: MR08-SS326-09A
Matrix: Soil
Workgroup Number: WG293890
Collect Date: 01/25/2009 13:30
Sample Tag: 01

PrePrep Method: NONE
Prep Method: 3051
Analytical Method: 6010B
Analyst: KHR
Dilution: 1
Units: mg/kg

Instrument: IRIS-ICP
Prep Date: 01/29/2009 08:15
Cal Date: 02/02/2009 16:07
Run Date: 02/02/2009 20:03
File ID: IR.020209.200300
Percent Solid: 90.0

Analyte	CAS. Number	Result	Qual	RL	MDL	
Silver, Total	7440-22-4		U	0.769	0.192	
Barium, Total	7440-39-3	17.0 J		0.385	0.0769	MSY
Cadmium, Total	7440-43-9	0.303		0.154	0.0385	
Chromium, Total	7440-47-3	7.72 J		0.769	0.0923	MSY

U Undetected; the analyte was analyzed for, but not detected.

Microbac

21 dew 4/2009

9

Sample Number: L09010538-09
Client ID: MR08-SS326-09A
Matrix: Soil
Workgroup Number: WG294609
Collect Date: 01/25/2009 13:30
Sample Tag: DL02

PrePrep Method: NONE
Prep Method: 3051
Analytical Method: 6020
Analyst: JYH
Dilution: 25
Units: mg/kg

Instrument: ELAN-ICP
Prep Date: 01/30/2009 08:38
Cal Date: 02/12/2009 12:32
Run Date: 02/12/2009 15:33
File ID: EL.021209.153343
Percent Solid: 90.0

Analyte	CAS. Number	Result	Qual	RL	MDL
Lead, Total	7439-92-1	123 J		11.0	2.75

MSD

Microbac

365 MW 4/2/09

9

Sample Number:	L09010538-09	PrePrep Method:	NONE	Instrument:	ELAN-ICP
Client ID:	MR08-SS326-09A	Prep Method:	3051	Prep Date:	01/30/2009 08:38
Matrix:	Soil	Analytical Method:	6020	Cal Date:	02/10/2009 10:53
Workgroup Number:	WG294609	Analyst:	JYH	Run Date:	02/10/2009 23:01
Collect Date:	01/25/2009 13:30	Dilution:	2	File ID:	EL.021009.230107
Sample Tag:	DL01	Units:	mg/kg	Percent Solid:	90.0

Analyte	CAS. Number	Result	Qual	RL	MDL
Arsenic, Total	7440-38-2	1.39		0.661	0.165
Selenium, Total	7782-49-2	0.375	J	0.881	0.220

J Estimated ; the analyte concentration was less than the low standard (LOQ)

Microbac

 fcw 4/2/09

9

Sample Number:	L09010538-09	PrePrep Method:	NONE	Instrument:	HYDRA
Client ID:	MR08-SS326-09A	Prep Method:	7471A	Prep Date:	01/29/2009 09:49
Matrix:	Soil	Analytical Method:	7471A	Cal Date:	02/09/2009 09:56
Workgroup Number:	WG294453	Analyst:	ADC	Run Date:	02/09/2009 11:32
Collect Date:	01/25/2009 13:30	Dilution:	1	File ID:	HY.020909.113232
Sample Tag:	01	Units:	mg/kg	Percent Solid:	90.0

Analyte	CAS. Number	Result	Qual	RL	MDL
Mercury, Total	7439-97-6	0.0328	J	0.105	0.0211

J Estimated ; the analyte concentration was less than the low standard (LOQ)

Microbac

1664 Mw 4/2/09

10

Sample Number: L09010538-10
Client ID: MR08-IS326-4-5-09A
Matrix: Soil
Workgroup Number: WG293891
Collect Date: 01/25/2009 13:45
Sample Tag: 01

PrePrep Method: NONE
Prep Method: 3051
Analytical Method: 6010B
Analyst: KHR
Dilution: 1
Units: mg/kg

Instrument: IRIS-ICP
Prep Date: 01/29/2009 08:35
Cal Date: 02/02/2009 16:07
Run Date: 02/02/2009 21:10
File ID: IR.020209.211000
Percent Solid: 91.1

Analyte	CAS. Number	Result	Qual	RL	MDL
Silver, Total	7440-22-4		U	0.750	0.188
Barium, Total	7440-39-3	3.01		0.375	0.0750
Cadmium, Total	7440-43-9		U	0.150	0.0375
Chromium, Total	7440-47-3	2.19		0.750	0.0900

U Undetected; the analyte was analyzed for, but not detected.

Microbac

22 flw 4/2/09

10

Sample Number: L09010538-10
Client ID: MR08-IS326-4-5-09A
Matrix: Soil
Workgroup Number: WG294609
Collect Date: 01/25/2009 13:45
Sample Tag: DL01

PrePrep Method: NONE
Prep Method: 3051
Analytical Method: 6020
Analyst: JYH
Dilution: 2
Units: mg/kg

Instrument: ELAN-ICP
Prep Date: 01/30/2009 08:38
Cal Date: 02/10/2009 10:53
Run Date: 02/10/2009 23:07
File ID: EL.021009.230711
Percent Solid: 91.1

Analyte	CAS. Number	Result	Qual	RL	MDL
Arsenic, Total	7440-38-2	0.267	J	0.648	0.162
Lead, Total	7439-92-1	3.65 J		0.864	0.216
Selenium, Total	7782-49-2		U	0.864	0.216

MS4

U Undetected; the analyte was analyzed for, but not detected.
J Estimated ; the analyte concentration was less than the low standard (LOQ)

Microbac

few 4/2/09

10

Sample Number:	L09010538-10	PrePrep Method:	NONE	Instrument:	HYDRA
Client ID:	MR08-IS326-4-5-09A	Prep Method:	7471A	Prep Date:	01/29/2009 09:49
Matrix:	Soil	Analytical Method:	7471A	Cal Date:	02/09/2009 09:56
Workgroup Number:	WG294453	Analyst:	ADC	Run Date:	02/09/2009 11:38
Collect Date:	01/25/2009 13:45	Dilution:	1	File ID:	HY.020909.113837
Sample Tag:	01	Units:	mg/kg	Percent Solid:	91.1

Analyte	CAS. Number	Result	Qual	RL	MDL
Mercury, Total	7439-97-6		U	0.101	0.0203

U Undetected; the analyte was analyzed for, but not detected.

Microbac

1665 Mew 4/2/09

11

Sample Number: L09010538-11
Client ID: MR08-SS327-09A
Matrix: Soil
Workgroup Number: WG293891
Collect Date: 01/25/2009 13:55
Sample Tag: 01

PrePrep Method: NONE
Prep Method: 3051
Analytical Method: 6010B
Analyst: KHR
Dilution: 1
Units: mg/kg

Instrument: IRIS-ICP
Prep Date: 01/29/2009 08:35
Cal Date: 02/02/2009 16:07
Run Date: 02/02/2009 21:16
File ID: IR.020209.211600
Percent Solid: 71.1

Analyte	CAS. Number	Result	Qual	RL	MDL
Silver, Total	7440-22-4		U	1.08	0.269
Barium, Total	7440-39-3	11.9		0.539	0.108
Cadmium, Total	7440-43-9	0.396		0.215	0.0539
Chromium, Total	7440-47-3	5.65		1.08	0.129

U Undetected; the analyte was analyzed for, but not detected.

Microbac

23 lw 4/2/09

11

Sample Number: L09010538-11
Client ID: MR08-SS327-09A
Matrix: Soil
Workgroup Number: WG294609
Collect Date: 01/25/2009 13:55
Sample Tag: DL01

PrePrep Method: NONE
Prep Method: 3051
Analytical Method: 6020
Analyst: JYH
Dilution: 2
Units: mg/kg

Instrument: ELAN-ICP
Prep Date: 01/30/2009 08:38
Cal Date: 02/10/2009 10:53
Run Date: 02/10/2009 23:13
File ID: EL.021009.231315
Percent Solid: 71.1

Analyte	CAS. Number	Result	Qual	RL	MDL
Arsenic, Total	7440-38-2	2.12		0.825	0.206
Lead, Total	7439-92-1	102 J		1.10	0.275
Selenium, Total	7782-49-2	0.433	J	1.10	0.275

MSH

J Estimated ; the analyte concentration was less than the low standard (LOQ)

Microbac

368 Lew 4/2/09

11

Sample Number:	L09010538-11	PrePrep Method:	NONE	Instrument:	HYDRA
Client ID:	MR08-SS327-09A	Prep Method:	7471A	Prep Date:	01/29/2009 09:49
Matrix:	Soil	Analytical Method:	7471A	Cal Date:	02/09/2009 09:56
Workgroup Number:	WG294453	Analyst:	ADC	Run Date:	02/09/2009 11:40
Collect Date:	01/25/2009 13:55	Dilution:	1	File ID:	HY.020909.114044
Sample Tag:	01	Units:	mg/kg	Percent Solid:	71.1

Analyte	CAS. Number	Result	Qual	RL	MDL
Mercury, Total	7439-97-6	0.0372	J	0.136	0.0272

J Estimated ; the analyte concentration was less than the low standard (LOQ)

Microbac

1666 lew 4/2/09

12

Sample Number: L09010538-12
Client ID: MR08-IS327-2-3-09A
Matrix: Soil
Workgroup Number: WG293891
Collect Date: 01/25/2009 14:10
Sample Tag: 01

PrePrep Method: NONE
Prep Method: 3051
Analytical Method: 6010B
Analyst: KHR
Dilution: 1
Units: mg/kg

Instrument: IRIS-ICP
Prep Date: 01/29/2009 08:35
Cal Date: 02/02/2009 16:07
Run Date: 02/02/2009 21:52
File ID: IR.020209.215200
Percent Solid: 89.8

Analyte	CAS. Number	Result	Qual	RL	MDL
Silver, Total	7440-22-4		U	0.807	0.202
Barium, Total	7440-39-3	4.12		0.403	0.0807
Cadmium, Total	7440-43-9		U	0.161	0.0403
Chromium, Total	7440-47-3	3.15		0.807	0.0968

U Undetected; the analyte was analyzed for, but not detected.

Microbac

24 LW 4/2/09

12

Sample Number: L09010538-12
Client ID: MR08-IS327-2-3-09A
Matrix: Soil
Workgroup Number: WG294609
Collect Date: 01/25/2009 14:10
Sample Tag: DL01

PrePrep Method: NONE
Prep Method: 3051
Analytical Method: 6020
Analyst: JYH
Dilution: 2
Units: mg/kg

Instrument: ELAN-ICP
Prep Date: 01/30/2009 08:38
Cal Date: 02/10/2009 10:53
Run Date: 02/10/2009 23:19
File ID: EL.021009.231919
Percent Solid: 89.8

Analyte	CAS. Number	Result	Qual	RL	MDL
Arsenic, Total	7440-38-2	0.570	J	0.668	0.167
Lead, Total	7439-92-1	4.02 J		0.891	0.223
Selenium, Total	7782-49-2		U	0.891	0.223

MSI

U Undetected; the analyte was analyzed for, but not detected.
J Estimated ; the analyte concentration was less than the low standard (LOQ)

Microbac

MW 4/2/09

12

Sample Number: L09010538-12
Client ID: MR08-IS327-2-3-09A
Matrix: Soil
Workgroup Number: WG294453
Collect Date: 01/25/2009 14:10
Sample Tag: 01

PrePrep Method: NONE
Prep Method: 7471A
Analytical Method: 7471A
Analyst: ADC
Dilution: 1
Units: mg/kg

Instrument: HYDRA
Prep Date: 01/29/2009 09:49
Cal Date: 02/09/2009 09:56
Run Date: 02/09/2009 11:42
File ID: HY.020909.114230
Percent Solid: 89.8

Analyte	CAS. Number	Result	Qual	RL	MDL
Mercury, Total	7439-97-6		U	0.110	0.0221

U Undetected; the analyte was analyzed for, but not detected.

Microbac

 fw 4/2/09

13

Sample Number: L09010538-13
Client ID: MR08-SS324-09A
Matrix: Soil
Workgroup Number: WG293891
Collect Date: 01/25/2009 14:25
Sample Tag: 01

PrePrep Method: NONE
Prep Method: 3051
Analytical Method: 6010B
Analyst: KHR
Dilution: 1
Units: mg/kg

Instrument: IRIS-ICP
Prep Date: 01/29/2009 08:35
Cal Date: 02/02/2009 16:07
Run Date: 02/02/2009 21:59
File ID: IR.020209.215900
Percent Solid: 89.2

Analyte	CAS. Number	Result	Qual	RL	MDL
Silver, Total	7440-22-4		U	0.797	0.199
Barium, Total	7440-39-3	4.24		0.399	0.0797
Cadmium, Total	7440-43-9		U	0.159	0.0399
Chromium, Total	7440-47-3	3.25		0.797	0.0957

U Undetected; the analyte was analyzed for, but not detected.

Microbac

LW 4/2/09

13

Sample Number: L09010538-13
Client ID: MR08-SS324-09A
Matrix: Soil
Workgroup Number: WG294611
Collect Date: 01/25/2009 14:25
Sample Tag: DL01

PrePrep Method: NONE
Prep Method: 3051
Analytical Method: 6020
Analyst: JYH
Dilution: 2
Units: mg/kg

Instrument: ELAN-ICP
Prep Date: 01/30/2009 09:46
Cal Date: 02/10/2009 10:53
Run Date: 02/11/2009 01:41
File ID: EL.021109.014106
Percent Solid: 89.2

Analyte	CAS. Number	Result	Qual	RL	MDL
Arsenic, Total	7440-38-2	0.496 J	~~J~~	0.673	0.168
Lead, Total	7439-92-1	5.32		0.897	0.224
Selenium, Total	7782-49-2	0.233	~~J~~	0.897	0.224

MSH

J Estimated ; the analyte concentration was less than the low standard (LOQ)

Microbac

370 lew 4/2/09

13

Sample Number:	L09010538-13	PrePrep Method:	NONE	Instrument:	HYDRA
Client ID:	MR08-SS324-09A	Prep Method:	7471A	Prep Date:	01/29/2009 09:49
Matrix:	Soil	Analytical Method:	7471A	Cal Date:	02/09/2009 09:56
Workgroup Number:	WG294453	Analyst:	ADC	Run Date:	02/09/2009 11:44
Collect Date:	01/25/2009 14:25	Dilution:	1	File ID:	HY.020909.114435
Sample Tag:	01	Units:	mg/kg	Percent Solid:	89.2

Analyte	CAS. Number	Result	Qual	RL	MDL
Mercury, Total	7439-97-6		U	0.110	0.0220

U Undetected; the analyte was analyzed for, but not detected.

Microbac

1668 MW 9/2/09

14

Sample Number: L09010538-14
Client ID: MR08-IS324-3-4-09A
Matrix: Soil
Workgroup Number: WG293891
Collect Date: 01/25/2009 14:30
Sample Tag: 01

PrePrep Method: NONE
Prep Method: 3051
Analytical Method: 6010B
Analyst: KHR
Dilution: 1
Units: mg/kg

Instrument: IRIS-ICP
Prep Date: 01/29/2009 08:35
Cal Date: 02/02/2009 16:07
Run Date: 02/02/2009 22:05
File ID: IR.020209.220500
Percent Solid: 88.4

Analyte	CAS. Number	Result	Qual	RL	MDL
Silver, Total	7440-22-4		U	0.846	0.212
Barium, Total	7440-39-3	4.18		0.423	0.0846
Cadmium, Total	7440-43-9		U	0.169	0.0423
Chromium, Total	7440-47-3	2.09		0.846	0.102

U Undetected; the analyte was analyzed for, but not detected.

Microbac

LW
4/2/09

14

Sample Number: L09010538-14
Client ID: MR08-IS324-3-4-09A
Matrix: Soil
Workgroup Number: WG294611
Collect Date: 01/25/2009 14:30
Sample Tag: DL01

PrePrep Method: NONE
Prep Method: 3051
Analytical Method: 6020
Analyst: JYH
Dilution: 2
Units: mg/kg

Instrument: ELAN-ICP
Prep Date: 01/30/2009 09:46
Cal Date: 02/10/2009 10:53
Run Date: 02/11/2009 01:47
File ID: EL.021109.014710
Percent Solid: 88.4

Analyte	CAS. Number	Result	Qual	RL	MDL
Arsenic, Total	7440-38-2	0.251 J	J	0.672	0.168
Lead, Total	7439-92-1	2.41		0.896	0.224
Selenium, Total	7782-49-2	0.363	J	0.896	0.224

MSH

J Estimated ; the analyte concentration was less than the low standard (LOQ)

Microbac

371 lw 4/2/09

14

Sample Number: L09010538-14
Client ID: MR08-IS324-3-4-09A
Matrix: Soil
Workgroup Number: WG294453
Collect Date: 01/25/2009 14:30
Sample Tag: 01

PrePrep Method: NONE
Prep Method: 7471A
Analytical Method: 7471A
Analyst: ADC
Dilution: 1
Units: mg/kg

Instrument: HYDRA
Prep Date: 01/29/2009 09:49
Cal Date: 02/09/2009 09:56
Run Date: 02/09/2009 11:46
File ID: HY.020909.114628
Percent Solid: 88.4

Analyte	CAS. Number	Result	Qual	RL	MDL
Mercury, Total	7439-97-6		U	0.110	0.0220

U Undetected; the analyte was analyzed for, but not detected.

Microbac

1669 Mes 4/2/09

15

Sample Number: L09010538-15
Client ID: MR08-SS325-09A
Matrix: Soil
Workgroup Number: WG293891
Collect Date: 01/25/2009 14:45
Sample Tag: 01

PrePrep Method: NONE
Prep Method: 3051
Analytical Method: 6010B
Analyst: KHR
Dilution: 1
Units: mg/kg

Instrument: IRIS-ICP
Prep Date: 01/29/2009 08:35
Cal Date: 02/02/2009 16:07
Run Date: 02/02/2009 22:11
File ID: IR.020209.221100
Percent Solid: 84.8

Analyte	CAS. Number	Result	Qual	RL	MDL
Silver, Total	7440-22-4		U	0.866	0.216
Barium, Total	7440-39-3	12.1		0.433	0.0866
Cadmium, Total	7440-43-9	2.22		0.173	0.0433
Chromium, Total	7440-47-3	15.0		0.866	0.104

U Undetected; the analyte was analyzed for, but not detected.

Microbac

27 lw 4/2/09

15

Sample Number: L09010538-15
Client ID: MR08-SS325-09A
Matrix: Soil
Workgroup Number: WG294611
Collect Date: 01/25/2009 14:45
Sample Tag: DL01

PrePrep Method: NONE
Prep Method: 3051
Analytical Method: 6020
Analyst: JYH
Dilution: 2
Units: mg/kg

Instrument: ELAN-ICP
Prep Date: 01/30/2009 09:46
Cal Date: 02/10/2009 10:53
Run Date: 02/11/2009 01:53
File ID: EL.021109.015316
Percent Solid: 84.8

Analyte	CAS. Number	Result	Qual	RL	MDL
Arsenic, Total	7440-38-2	1.30 J		0.706	0.177
Selenium, Total	7782-49-2	0.366 J	J	0.941	0.235

MSH

J Estimated ; the analyte concentration was less than the low standard (LOQ)

Microbac

lew 4/2/09

15

Sample Number: L09010538-15
Client ID: MR08-SS325-09A
Matrix: Soil
Workgroup Number: WG294611
Collect Date: 01/25/2009 14:45
Sample Tag: DL02

PrePrep Method: NONE
Prep Method: 3051
Analytical Method: 6020
Analyst: JYH
Dilution: 25
Units: mg/kg

Instrument: ELAN-ICP
Prep Date: 01/30/2009 09:46
Cal Date: 02/12/2009 12:32
Run Date: 02/12/2009 15:39
File ID: EL.021209.153946
Percent Solid: 84.8

Analyte	CAS. Number	Result	Qual	RL	MDL
Lead, Total	7439-92-1	413 J		11.8	2.94

MSH

Microbac

LW 4/2/09

15

Sample Number:	L09010538-15	PrePrep Method:	NONE	Instrument:	HYDRA
Client ID:	MR08-SS325-09A	Prep Method:	7471A	Prep Date:	01/29/2009 09:49
Matrix:	Soil	Analytical Method:	7471A	Cal Date:	02/09/2009 09:56
Workgroup Number:	WG294453	Analyst:	ADC	Run Date:	02/09/2009 11:48
Collect Date:	01/25/2009 14:45	Dilution:	1	File ID:	HY.020909.114822
Sample Tag:	01	Units:	mg/kg	Percent Solid:	84.8

Analyte	CAS. Number	Result	Qual	RL	MDL
Mercury, Total	7439-97-6	0.0495	J	0.111	0.0223

J Estimated ; the analyte concentration was less than the low standard (LOQ)

Microbac

1670 fw 4/2/09

16

Sample Number: L09010538-16
Client ID: MR08-IS325-3-4-09A
Matrix: Soil
Workgroup Number: WG293891
Collect Date: 01/25/2009 14:50
Sample Tag: 01

PrePrep Method: NONE
Prep Method: 3051
Analytical Method: 6010B
Analyst: KHR
Dilution: 1
Units: mg/kg

Instrument: IRIS-ICP
Prep Date: 01/29/2009 08:35
Cal Date: 02/02/2009 16:07
Run Date: 02/02/2009 22:17
File ID: IR.020209.221700
Percent Solid: 87.4

Analyte	CAS. Number	Result	Qual	RL	MDL
Silver, Total	7440-22-4		U	0.774	0.194
Barium, Total	7440-39-3	4.48		0.387	0.0774
Cadmium, Total	7440-43-9		U	0.155	0.0387
Chromium, Total	7440-47-3	3.36		0.774	0.0929

U Undetected; the analyte was analyzed for, but not detected.

Microbac

28 lew 4/2/09

16

Sample Number: L09010538-16
Client ID: MR08-IS325-3-4-09A
Matrix: Soil
Workgroup Number: WG294611
Collect Date: 01/25/2009 14:50
Sample Tag: DL01

PrePrep Method: NONE
Prep Method: 3051
Analytical Method: 6020
Analyst: JYH
Dilution: 2
Units: mg/kg

Instrument: ELAN-ICP
Prep Date: 01/30/2009 09:46
Cal Date: 02/10/2009 10:53
Run Date: 02/11/2009 01:59
File ID: EL.021109.015921
Percent Solid: 87.4

Analyte	CAS. Number	Result	Qual	RL	MDL
Arsenic, Total	7440-38-2	0.366 J	~~J~~	0.687	0.172
Lead, Total	7439-92-1	3.05 J		0.916	0.229
Selenium, Total	7782-49-2		U	0.916	0.229

MSI
11

U Undetected; the analyte was analyzed for, but not detected.
J Estimated ; the analyte concentration was less than the low standard (LOQ)

Microbac

PW 4/2/09

16

Sample Number: L09010538-16
Client ID: MR08-IS325-3-4-09A
Matrix: Soil
Workgroup Number: WG294453
Collect Date: 01/25/2009 14:50
Sample Tag: 01

PrePrep Method: NONE
Prep Method: 7471A
Analytical Method: 7471A
Analyst: ADC
Dilution: 1
Units: mg/kg

Instrument: HYDRA
Prep Date: 01/29/2009 09:49
Cal Date: 02/09/2009 09:56
Run Date: 02/09/2009 11:50
File ID: HY.020909.115009
Percent Solid: 87.4

Analyte	CAS. Number	Result	Qual	RL	MDL
Mercury, Total	7439-97-6		U	0.111	0.0223

U Undetected; the analyte was analyzed for, but not detected.

Microbac

 Mew 4/2009

17

Sample Number: L09010538-17
Client ID: MR08-SS323-09A
Matrix: Soil
Workgroup Number: WG293891
Collect Date: 01/25/2009 15:30
Sample Tag: 01

PrePrep Method: NONE
Prep Method: 3051
Analytical Method: 6010B
Analyst: KHR
Dilution: 1
Units: mg/kg

Instrument: IRIS-ICP
Prep Date: 01/29/2009 08:35
Cal Date: 02/02/2009 16:07
Run Date: 02/02/2009 22:23
File ID: IR.020209.222300
Percent Solid: 87.5

Analyte	CAS. Number	Result	Qual	RL	MDL
Silver, Total	7440-22-4	0.294	J	0.770	0.193
Barium, Total	7440-39-3	13.1		0.385	0.0770
Cadmium, Total	7440-43-9	1.03		0.154	0.0385
Chromium, Total	7440-47-3	7.12		0.770	0.0924

J Estimated ; the analyte concentration was less than the low standard (LOQ)

Microbac

29 MW 4/2/09

17

Sample Number: L09010538-17
Client ID: MR08-SS323-09A
Matrix: Soil
Workgroup Number: WG294611
Collect Date: 01/25/2009 15:30
Sample Tag: DL01

PrePrep Method: NONE
Prep Method: 3051
Analytical Method: 6020
Analyst: JYH
Dilution: 2
Units: mg/kg

Instrument: ELAN-ICP
Prep Date: 01/30/2009 09:46
Cal Date: 02/10/2009 10:53
Run Date: 02/11/2009 02:05
File ID: EL.021109.020527
Percent Solid: 87.5

Analyte	CAS. Number	Result	Qual	RL	MDL
Arsenic, Total	7440-38-2	0.773 J		0.653	0.163
Lead, Total	7439-92-1	57.7		0.871	0.218
Selenium, Total	7782-49-2	0.339	J	0.871	0.218

MSH

J Estimated ; the analyte concentration was less than the low standard (LOQ)

Microbac

LW 4/2/09

17

Sample Number: L09010538-17
Client ID: MR08-SS323-09A
Matrix: Soil
Workgroup Number: WG294453
Collect Date: 01/25/2009 15:30
Sample Tag: 01

PrePrep Method: NONE
Prep Method: 7471A
Analytical Method: 7471A
Analyst: ADC
Dilution: 1
Units: mg/kg

Instrument: HYDRA
Prep Date: 01/29/2009 09:49
Cal Date: 02/09/2009 09:56
Run Date: 02/09/2009 11:52
File ID: HY.020909.115245
Percent Solid: 87.5

Analyte	CAS. Number	Result	Qual	RL	MDL
Mercury, Total	7439-97-6		U	0.113	0.0225

U Undetected; the analyte was analyzed for, but not detected.

Microbac

1672 lew 4/2/09

18

Sample Number: L09010538-18
Client ID: MR08-IS323-2-3-09A
Matrix: Soil
Workgroup Number: WG293891
Collect Date: 01/25/2009 15:40
Sample Tag: 01

PrePrep Method: NONE
Prep Method: 3051
Analytical Method: 6010B
Analyst: KHR
Dilution: 1
Units: mg/kg

Instrument: IRIS-ICP
Prep Date: 01/29/2009 08:35
Cal Date: 02/02/2009 16:07
Run Date: 02/02/2009 22:29
File ID: IR.020209.222900
Percent Solid: 88.2

Analyte	CAS. Number	Result	Qual	RL	MDL
Silver, Total	7440-22-4		U	0.812	0.203
Barium, Total	7440-39-3	7.88		0.406	0.0812
Cadmium, Total	7440-43-9	0.236		0.162	0.0406
Chromium, Total	7440-47-3	2.25		0.812	0.0975

U Undetected; the analyte was analyzed for, but not detected.

Microbac

30 lew 4/2/09

18

Sample Number: L09010538-18
Client ID: MR08-IS323-2-3-09A
Matrix: Soil
Workgroup Number: WG294611
Collect Date: 01/25/2009 15:40
Sample Tag: DL01

PrePrep Method: NONE
Prep Method: 3051
Analytical Method: 6020
Analyst: JYH
Dilution: 2
Units: mg/kg

Instrument: ELAN-ICP
Prep Date: 01/30/2009 09:46
Cal Date: 02/10/2009 10:53
Run Date: 02/11/2009 02:11
File ID: EL.021109.021133
Percent Solid: 88.2

Analyte	CAS. Number	Result	Qual	RL	MDL
Arsenic, Total	7440-38-2	0.292 J	~~J~~	0.642	0.160
Lead, Total	7439-92-1	12.8 J		0.856	0.214
Selenium, Total	7782-49-2		U	0.856	0.214

MSH

U Undetected; the analyte was analyzed for, but not detected.
J Estimated ; the analyte concentration was less than the low standard (LOQ)

Microbac

4/2/09

18

Sample Number: L09010538-18
Client ID: MR08-IS323-2-3-09A
Matrix: Soil
Workgroup Number: WG294453
Collect Date: 01/25/2009 15:40
Sample Tag: 01

PrePrep Method: NONE
Prep Method: 7471A
Analytical Method: 7471A
Analyst: ADC
Dilution: 1
Units: mg/kg

Instrument: HYDRA
Prep Date: 01/29/2009 09:49
Cal Date: 02/09/2009 09:56
Run Date: 02/09/2009 11:54
File ID: HY.020909.115432
Percent Solid: 88.2

Analyte	CAS. Number	Result	Qual	RL	MDL
Mercury, Total	7439-97-6		U	0.111	0.0222

U Undetected; the analyte was analyzed for, but not detected.

Microbac

 JLW 41209

19

Sample Number: L09010538-19
Client ID: MR08-EB012609
Matrix: Water
Workgroup Number: WG293610
Collect Date: 01/26/2009 07:45
Sample Tag: 01

PrePrep Method: NONE
Prep Method: 3005A
Analytical Method: 6010B
Analyst: ADC
Dilution: 1
Units: ug/L

Instrument: PE-ICP2
Prep Date: 01/28/2009 06:40
Cal Date: 01/29/2009 15:47
Run Date: 01/30/2009 01:16
File ID: P2.013009.011637

Analyte	CAS. Number	Result	Qual	RL	MDL
Barium, Total	7440-39-3		U	10.0	2.50
Cadmium, Total	7440-43-9		U	1.00	0.250
Chromium, Total	7440-47-3		U	10.0	2.50
Silver, Total	7440-22-4		U	6.00	2.00

U Undetected; the analyte was analyzed for, but not detected.

Microbac

31 [illegible] 4/2/09

19

Sample Number: L09010538-19
Client ID: MR08-EB012609
Matrix: Water
Workgroup Number: WG293698
Collect Date: 01/26/2009 07:45
Sample Tag: 01

PrePrep Method: NONE
Prep Method: 3015
Analytical Method: 6020
Analyst: JYH
Dilution: 1
Units: ug/L

Instrument: ELAN-ICP
Prep Date: 01/28/2009 07:14
Cal Date: 01/29/2009 11:23
Run Date: 01/29/2009 15:43
File ID: EL.012909.154352

Analyte	CAS. Number	Result	Qual	RL	MDL
Arsenic, Total	7440-38-2		U	1.00	0.250
Lead, Total	7439-92-1		U	1.00	0.250
Selenium, Total	7782-49-2		U	2.00	0.500

U Undetected; the analyte was analyzed for, but not detected.

Microbac

377 lew 4/2/09

19

Sample Number: L09010538-19
Client ID: MR08-EB012609
Matrix: Water
Workgroup Number: WG293786
Collect Date: 01/26/2009 07:45
Sample Tag: 01

PrePrep Method: NONE
Prep Method: 7470A
Analytical Method: 7470A
Analyst: SLP
Dilution: 1
Units: ug/L

Instrument: HYDRA
Prep Date: 01/29/2009 06:49
Cal Date: 02/20/2009 11:03
Run Date: 02/20/2009 11:45
File ID: HY.022009.114518

Analyte	CAS. Number	Result	Qual	RL	MDL
Mercury	7439-97-6		U	0.400	0.100

U Undetected; the analyte was analyzed for, but not detected.

Microbac

flw 4/2/09

20

Sample Number: L09010538-20
Client ID: MR08-FB012609
Matrix: Water
Workgroup Number: WG293610
Collect Date: 01/26/2009 08:10
Sample Tag: 01

PrePrep Method: NONE
Prep Method: 3005A
Analytical Method: 6010B
Analyst: ADC
Dilution: 1
Units: ug/L

Instrument: PE-ICP2
Prep Date: 01/28/2009 06:40
Cal Date: 01/29/2009 15:47
Run Date: 01/30/2009 01:22
File ID: P2.013009.012255

Analyte	CAS. Number	Result	Qual	RL	MDL
Barium, Total	7440-39-3		U	10.0	2.50
Cadmium, Total	7440-43-9		U	1.00	0.250
Chromium, Total	7440-47-3		U	10.0	2.50
Silver, Total	7440-22-4		U	6.00	2.00

U Undetected; the analyte was analyzed for, but not detected.

Microbac

MW 4/2/09

20

Sample Number: L09010538-20
Client ID: MR08-FB012609
Matrix: Water
Workgroup Number: WG293698
Collect Date: 01/26/2009 08:10
Sample Tag: 01

PrePrep Method: NONE
Prep Method: 3015
Analytical Method: 6020
Analyst: JYH
Dilution: 1
Units: ug/L

Instrument: ELAN-ICP
Prep Date: 01/28/2009 07:14
Cal Date: 01/29/2009 11:23
Run Date: 01/29/2009 15:49
File ID: EL.012909.154956

Analyte	CAS. Number	Result	Qual	RL	MDL
Arsenic, Total	7440-38-2		U	1.00	0.250
Lead, Total	7439-92-1		U	1.00	0.250
Selenium, Total	7782-49-2		U	2.00	0.500

U Undetected; the analyte was analyzed for, but not detected.

Microbac

MW
4/2/09

20

Sample Number: L09010538-20
Client ID: MR08-FB012609
Matrix: Water
Workgroup Number: WG293786
Collect Date: 01/26/2009 08:10
Sample Tag: 01

PrePrep Method: NONE
Prep Method: 7470A
Analytical Method: 7470A
Analyst: SLP
Dilution: 1
Units: ug/L

Instrument: HYDRA
Prep Date: 01/29/2009 06:49
Cal Date: 02/20/2009 11:03
Run Date: 02/20/2009 11:47
File ID: HY.022009.114713

Analyte	CAS. Number	Result	Qual	RL	MDL
Mercury	7439-97-6		U	0.400	0.100

U Undetected; the analyte was analyzed for, but not detected.

Microbac

1675 JLW 4/2/09

21

Sample Number: L09010538-21
Client ID: MR08-SS349D-09A
Matrix: Soil
Workgroup Number: WG293891
Collect Date: 01/25/2009 13:15
Sample Tag: 01

PrePrep Method: NONE
Prep Method: 3051
Analytical Method: 6010B
Analyst: KHR
Dilution: 1
Units: mg/kg

Instrument: IRIS-ICP
Prep Date: 01/29/2009 08:35
Cal Date: 02/02/2009 16:07
Run Date: 02/02/2009 22:35
File ID: IR.020209.223500
Percent Solid: 86.2

Analyte	CAS. Number	Result	Qual	RL	MDL
Silver, Total	7440-22-4	1.54		0.780	0.195
Barium, Total	7440-39-3	28.1		0.390	0.0780
Cadmium, Total	7440-43-9	0.267		0.156	0.0390
Chromium, Total	7440-47-3	4.85		0.780	0.0936

Microbac

33 llw
4/7/09

21

Sample Number: L09010538-21
Client ID: MR08-SS349D-09A
Matrix: Soil
Workgroup Number: WG294611
Collect Date: 01/25/2009 13:15
Sample Tag: DL01

PrePrep Method: NONE
Prep Method: 3051
Analytical Method: 6020
Analyst: JYH
Dilution: 2
Units: mg/kg

Instrument: ELAN-ICP
Prep Date: 01/30/2009 09:46
Cal Date: 02/10/2009 10:53
Run Date: 02/11/2009 02:17
File ID: EL.021109.021740
Percent Solid: 86.2

Analyte	CAS. Number	Result	Qual	RL	MDL
Arsenic, Total	7440-38-2	0.802 J		0.692	0.173
Lead, Total	7439-92-1	38.0		0.923	0.231
Selenium, Total	7782-49-2	0.242		0.923	0.231

MSH

J Estimated ; the analyte concentration was less than the low standard (LOQ)

Microbac

379 MW 4/2/09

21

Sample Number: L09010538-21
Client ID: MR08-SS349D-09A
Matrix: Soil
Workgroup Number: WG294453
Collect Date: 01/25/2009 13:15
Sample Tag: 01

PrePrep Method: NONE
Prep Method: 7471A
Analytical Method: 7471A
Analyst: ADC
Dilution: 1
Units: mg/kg

Instrument: HYDRA
Prep Date: 01/29/2009 09:49
Cal Date: 02/09/2009 09:56
Run Date: 02/09/2009 11:56
File ID: HY.020909.115650
Percent Solid: 86.2

Analyte	CAS. Number	Result	Qual	RL	MDL
Mercury, Total	7439-97-6	0.154		0.111	0.0222

Microbac

 lw 4/2/09

ENVIRONMENTAL
Data Services, Inc.

METALS

USEPA Region IV - Level IV Review

Site: MCB Camp Lejeune, TO-09 SDG #: L09010574

Client: CH2M HILL, Inc., Virginia Beach, Virginia Date: April 2, 20009

Laboratory: Microbac Laboratories, Inc., Marietta, Ohio Reviewer: Nancy Weaver

EDS ID	Client Sample ID	Laboratory Sample ID	Matrix
1	MR08-IS349D-3-4-09A	L09010574-01	Soil

The USEPA "Contract Laboratory Program National Functional Guidelines for Inorganic Data Review," October 2004, and professional judgement were used in evaluating the data in this summary report.

Holding Times - All samples were prepared and analyzed within 28 days for mercury and 180 days for all other metals.

Calibration - The ICV and CCV %R values were acceptable.

Method and Calibration Blanks - The method blanks were free of contamination.

Field and Equipment Blank - Field QC results are summarized below.

Blank ID	Compound	Conc. ug/L	Action Level ug/L	Qualifier	Affected Samples
MR08-EB012509	None - ND	-	-	-	-
MR08-FB012609	None - ND	-	-	-	-

ICP Interference Check Sample - All %R values were acceptable.

MS/MSD - The MS/MSD sample exhibited acceptable %R and RPD values except the following.

MS/MSD Sample ID	Compound	MS/MSD %R/RPD	Qualifier	Affected Samples
Reference (WG293886)	Barium	Ok/174%/Ok	J	1
	Chromium	Ok/145%/Ok	J	1
Reference	Arsenic	205%/222%/Ok	J	1
	Lead	202%/267%/23.1	J	1
	Selenium	182%/195%/Ok	None	All ND

LCS - The LCS samples exhibited acceptable %R values.

ICP Serial Dilution - The ICP serial dilution sample exhibited acceptable %D values.

Field Duplicates - Refer to L09010538 for the field duplicate summary. .

Compound Quantitation - This sample was analyzed at a dilution for various analytes due to high concentrations.

Report Number: L09010574
Report Date : February 23, 2009

Sample Number: L09010574-01
Client ID: MR08-IS349D-3-4-09A
Matrix: Soil
Workgroup Number: WG293886
Collect Date: 01/25/2009 13:20
Sample Tag: 01

PrePrep Method: NONE
Prep Method: 3051
Analytical Method: 6010B
Analyst: KHR
Dilution: 1
Units: mg/kg

Instrument: IRIS-ICP
Prep Date: 01/30/2009 11:51
Cal Date: 02/02/2009 12:24
Run Date: 02/02/2009 13:44
File ID: IR.020209.134400
Percent Solid: 85.9

Analyte	CAS. Number	Result	Qual	RL	MDL	
Silver, Total	7440-22-4		U	0.870	0.217	
Barium, Total	7440-39-3	8.76 J		0.435	0.0870	MSH
Cadmium, Total	7440-43-9		U	0.174	0.0435	
Chromium, Total	7440-47-3	11.1 J		0.870	0.104	MSH

U Undetected; the analyte was analyzed for, but not detected.

Microbac

12 MW 4/2/09

Report Number: L09010574

Report Date : February 23, 2009

Sample Number: L09010574-01
Client ID: MR08-IS349D-3-4-09A
Matrix: Soil
Workgroup Number: WG294611
Collect Date: 01/25/2009 13:20
Sample Tag: DL01

PrePrep Method: NONE
Prep Method: 3051
Analytical Method: 6020
Analyst: JYH
Dilution: 2
Units: mg/kg

Instrument: ELAN-ICP
Prep Date: 01/30/2009 10:31
Cal Date: 02/10/2009 10:53
Run Date: 02/11/2009 02:36
File ID: EL.021109.023650
Percent Solid: 85.9

Analyte	CAS. Number	Result	Qual	RL	MDL
Arsenic, Total	7440-38-2	0.239 J	J	0.699	0.175
Lead, Total	7439-92-1	3.28 J	J	0.932	0.233
Selenium, Total	7782-49-2		U	0.932	0.233

MSH
MSH

U Undetected; the analyte was analyzed for, but not detected.
J Estimated ; the analyte concentration was less than the low standard (LOQ)

Microbac

123 LW 4/2/09

Report Number: L09010574

Report Date : February 23, 2009

Sample Number: L09010574-01
Client ID: MR08-IS349D-3-4-09A
Matrix: Soil
Workgroup Number: WG294015
Collect Date: 01/25/2009 13:20
Sample Tag: 01

PrePrep Method: NONE
Prep Method: 7471A
Analytical Method: 7471A
Analyst: ADC
Dilution: 1
Units: mg/kg

Instrument: HYDRA
Prep Date: 02/03/2009 09:04
Cal Date: 02/03/2009 13:03
Run Date: 02/03/2009 13:30
File ID: HY.020309.133046
Percent Solid: 85.9

Analyte	CAS. Number	Result	Qual	RL	MDL
Mercury, Total	7439-97-6		U	0.110	0.0220

U Undetected; the analyte was analyzed for, but not detected.

Microbac

648 LW 4/2/09

ENVIRONMENTAL
Data Services, Inc.

VOLATILE ORGANIC COMPOUNDS
USEPA Region IV - Level IV Review

Site: MCB Camp Lejeune, TO-09 SDG #: LEJEUNE039

Client: CH2M HILL, Inc., Virginia Beach, Virginia Date: April 1, 2009

Laboratory: Empirical Laboratories, Nashville, Tennessee Reviewer: Nancy Weaver

EDS ID	Client Sample ID	Laboratory Sample ID	Matrix
1	MR08-SS149-09A	0901026-01	Soil
2	MR08-IS149-3-4-09A	0901026-02	Soil
3	MR08-SS142-09A	0901026-03	Soil
4	MR08-IS142-2-3-09A	0901026-04	Soil
5	MR08-SS149D-09A	0901026-05	Soil
6	MR08-IS149D-3-4-09A	0901026-06	Soil
7	MR08-SS143-09A	0901026-07	Soil
8	MR08-IS143-2-3-09A	0901026-08	Soil
9	MR08-SS144-09A	0901026-09	Soil
10	MR08-IS144-3-4-09A	0901026-10	Soil
11	MR08-SS145-09A	0901026-11	Soil
12	MR08-IS145-3-4-09A	0901026-12	Soil
13	MR08-SS146-09A	0901026-13	Soil
14	MR08-IS146-2-3-09A	0901026-14	Soil
15	MR08-SS147-09A	0901026-15	Soil
16	MR08-IS147-2-3-09A	0901026-16	Soil
16RE	MR08-IS147-2-3-09ARE	0901026-16RE	Soil
17	MR08-SS148-09A	0901026-17	Soil
18	MR08-IS148-2-3-09A	0901026-18	Soil
18RE	MR08-IS148-2-3-09ARE	0901026-18RE	Soil
19	MR08-EB01010509-SS	0901026-19	Water
20	MR08-EB01010509-IS	0901026-20	Water
21	MR08-TB01010509	0901026-21	Water

The USEPA "Contract Laboratory Program National Functional Guidelines for Organic Data Review," October 1999, and professional judgement were used in evaluating the data in this summary report.

Holding Times - All samples were analyzed within 14 days for preserved water and soil samples.

GC/MS Tuning - All of the BFB tunes in the initial and continuing calibrations met the percent relative abundance criteria.

Initial Calibration - The initial calibrations exhibited acceptable %RSD and mean RRF values.

Continuing Calibration - The continuing calibrations exhibited acceptable %D and RRF values except the following.

CCAL Date	Compound	%D/RRF	Qualifier	Affected Samples
1/8/09	Acetone	43.8%	J/UJ	19-21
1/13/09 (0938)	Acetone	26.4%	J/UJ	1-14
1/13/09 (2231)	Chloromethane	26.7%	J/UJ	15-18
	Methyl acetate	28.1%	J/UJ	15-18
	Methylene chloride	35.0%	J/UJ	15-18

Surrogates - All samples exhibited acceptable surrogate recoveries except the following.

Sample ID	Surrogate	%R	Qualifier
16	S4-Bromofluorobenzene	76%	J/UJ
18	S3-Toluene-d8	132%	J/UJ
	S4-Bromofluorobenzene	64%	J/UJ
16RE	S2-1, 2-Dichloroethane-d4	71%	None - Already qualified due to ISL
	S3-Toluene-d8	128%	None - Already qualified due to ISL
	S4-Bromofluorobenzene	77%	None - Already qualified due to ISL

MS/MSD - A MS/MSD sample was not analyzed from this data package.

Laboratory Control Sample - The LCS samples exhibited acceptable %R values except the following.

LCS ID	Compound	%R	Qualifier	Affected Samples
V3BLK0108	2-Butanone	164%	None	All ND
V1BLK0113E	Chloromethane	142%	None	All ND

Internal Standard (IS) Area Performance - All internal standards met response and retention time (RT) criteria except the following.

Sample ID	Internal Standard	Area Count	Qualifier
16	IS3-1,4-Dichlorobenzene-d4	Low	J/UJ
16RE	IS1-Fluorobenzene	Severely Low	J/R
	IS2-Chlorobenzene-d5	Severely Low	J/R
	IS3-1,4-Dichlorobenzene-d4	Severely Low	J/R
18	IS3-1,4-Dichlorobenzene-d4	Low	J/UJ
18RE	IS2-Chlorobenzene-d5	Low	J/UJ
	IS3-1,4-Dichlorobenzene-d4	Low	J/UJ

Method Blank - The method blanks exhibited the following contamination.

Blank ID	Compound	Conc.	Action Level	Qualifier	Affected Samples
V3BLK0108	Methylene chloride	0.23 ug/L	2.3 ug/L	U	19, 20
	1,2,4-Trichlorobenzene	0.23 ug/L	1.15 ug/L	None	All ND
V1BLK0113	Methylene chloride	15 ug/kg	150 ug/kg	U	1-14
	1,2,4-Trichlorobenzene	0.27 ug/kg	1.35 ug/kg	None	All ND
	Trichlorofluoromethane	2.2 ug/kg	11.0 ug/kg	None	All ND
V1BLK0113E	Methylene chloride	16 ug/kg	160 ug/kg	U	15-18
	Trichlorofluoromethane	2.3 ug/kg	11.5 ug/kg	None	All ND
V1BLK0114	Methylene chloride	1.9 ug/kg	19 ug/kg	U	16RE, 18RE
	Trichlorofluoromethane	2.4 ug/kg	12 ug/kg	None	All ND

Trip, Field, Equipment Blank - Field QC results are summarized below.

Blank ID	Compound	Conc. ug/L	Action Level ug/kg	Qualifier	Affected Samples
MR08-EB01010509-SS	Acetone	7.8	78	U	1, 3, 5, 7, 9, 11, 13, 15
	Chloroform	2.4	12	None	All ND
	Toluene	0.11	0.55	None	See FB
MR08-EB01010509-IS	Acetone	7.7	77		2, 4, 6, 8, 10, 12, 14, 16, 16RE, 18
	Chloroform	2.5	12.5	None	All ND
	Toluene	0.12	0.60	None	See FB
MR08-TB01010509	Methylene chloride	3.2	32	None	Already Qualified
MR08-FB01011009	Toluene	20	100	U	1, 2, 5, 7, 9, 13-15, 16RE, 17, 18

Field Duplicates - Field duplicate results are summarized below.

Compound	MR08-SS149-09A ug/kg	MR08-SS149D-09A ug/kg	RPD	Qualifier
Benzene	0.86	1.8	71%	None
2-Butanone	2.4	4.0	50%	None
Cyclohexane	9.7 U	1.0	NC	None
Ethylbenzene	2.2	2.7	20%	None
Methyl cyclohexane	0.60	1.4	80%	None

Tentatively Identified Compounds (TICs) - TICs were not reported.

Compound Quantitation - Several samples exhibited internal standard and/or surrogate deficiencies. These samples were reanalyzed at various dilutions. Refer to Form Is for which were used for reporting purposes.

FORM 1
VOLATILE ORGANICS ANALYSIS DATA SHEET

CLIENT SAMPLE NO. 1

MR08-SS149-09A

Lab Name: EMPIRICAL LABS Contract: CH2MHILL

Lab Code: NA Case No.: NA SAS No.: NA SDG No.: LEJEUNE039

Matrix: (soil/water) SOIL Lab Sample ID: 0901026-01

Sample wt/vol: 5.8 (g/mL) G Lab File ID: 0102601A

Level: (low/med) LOW Date Sampled: 01/05/09 11:10

% Moisture: not dec. 11 Date Analyzed: 01/13/09 12:15

GC Column: RTX-VRX ID: 0.25 (mm) Dilution Factor: 1.0

Soil Extract Volume:_____(uL) Soil Aliquot Volume: _____(uL)

CONCENTRATION UNITS: (ug/L or ug/Kg) UG/KG

CAS NO.	COMPOUND	MDL	RL	CONC	Q
67-64-1	Acetone	1.9	9.7	23	UJ CCH BL
71-43-2	Benzene	0.46	9.7	0.86	J
75-27-4	Bromodichloromethane	0.29	9.7		U
75-25-2	Bromoform	0.97	9.7		U
74-83-9	Bromomethane	0.70	9.7		U
78-93-3	2-Butanone	1.4	9.7	2.4	J
75-15-0	Carbon disulfide	1.2	9.7		U
56-23-5	Carbon tetrachloride	0.85	9.7		U
108-90-7	Chlorobenzene	0.33	9.7		U
75-00-3	Chloroethane	1.1	9.7		U
67-66-3	Chloroform	0.53	9.7		U
74-87-3	Chloromethane	0.50	9.7		U
110-82-7	Cyclohexane	0.52	9.7		U
124-48-1	Dibromochloromethane	0.33	9.7		U
96-12-8	1,2-Dibromo-3-chloropropane	1.2	4.8		U
106-93-4	1,2-Dibromoethane	0.42	9.7		U
95-50-1	1,2-Dichlorobenzene	0.36	9.7		U
541-73-1	1,3-Dichlorobenzene	0.81	9.7		U
106-46-7	1,4-Dichlorobenzene	0.53	9.7		U
75-71-8	Dichlorodifluoromethane	1.1	9.7		U
75-34-3	1,1-Dichloroethane	0.52	9.7		U
107-06-2	1,2-Dichloroethane	0.44	9.7		U
75-35-4	1,1-Dichloroethene	1.2	9.7		U
156-59-2	cis-1,2-Dichloroethene	1.2	9.7		U
156-60-5	trans-1,2-Dichloroethene	1.1	9.7		U
78-87-5	1,2-Dichloropropane	0.44	9.7		U
10061-01-5	cis-1,3-Dichloropropene	0.48	9.7		U
10061-02-6	trans-1,3-Dichloropropene	0.31	9.7		U
100-41-4	Ethylbenzene	0.73	9.7	2.2	J
591-78-6	2-Hexanone	2.2	9.7		U
98-82-8	Isopropylbenzene	0.85	9.7		U
79-20-9	Methyl acetate	1.5	9.7		U
75-09-2	Methylene chloride	0.60	9.7	9.74 ~~1.5~~ ~~JB~~	BL
108-87-2	Methyl cyclohexane	0.29	9.7	0.60	J
1634-04-4	Methyl tert-butyl ether	0.31	9.7		U
108-10-1	4-Methyl-2-pentanone	0.56	9.7		U
100-42-5	Styrene	0.34	9.7		U
79-34-5	1,1,2,2-Tetrachloroethane	0.42	9.7		U
127-18-4	Tetrachloroethene	0.94	9.7		U

lw 4/1/09

FORM 1
VOLATILE ORGANICS ANALYSIS DATA SHEET

CLIENT SAMPLE NO.

MR08-SS149-09A

Lab Name: EMPIRICAL LABS Contract: CH2MHILL

Lab Code: NA Case No.: NA SAS No.: NA SDG No.: LEJEUNE039

Matrix: (soil/water) SOIL Lab Sample ID: 0901026-01

Sample wt/vol: 5.8 (g/mL) G Lab File ID: 0102601A

Level: (low/med) LOW Date Sampled: 01/05/09 11:10

% Moisture: not dec. 11 Date Analyzed: 01/13/09 12:15

GC Column: RTX-VRX ID: 0.25 (mm) Dilution Factor: 1.0

Soil Extract Volume:_____(uL) Soil Aliquot Volume: _____(uL)

CONCENTRATION UNITS: (ug/L or ug/Kg) UG/KG

CAS NO.	COMPOUND	MDL	RL	CONC	Q
108-88-3	Toluene	0.83	9.7	9.1u ~~1.5~~	~~J~~ B
120-82-1	1,2,4-Trichlorobenzene	0.17	9.7		U
71-55-6	1,1,1-Trichloroethane	0.87	9.7		U
79-00-5	1,1,2-Trichloroethane	0.34	9.7		U
79-01-6	Trichloroethene	0.82	9.7		U
76-13-1	Trichlorotrifluoroethane	0.53	9.7		U
75-69-4	Trichlorofluoromethane	0.92	9.7		U
75-01-4	Vinyl chloride	1.1	9.7		U
1330-20-7	Xylene(total)	0.68	9.7		U

lw 4/1/09

FORM 1
VOLATILE ORGANICS ANALYSIS DATA SHEET

CLIENT SAMPLE NO. 2

MR08-IS14
9-3-4-09A

Lab Name: EMPIRICAL LABS Contract: CH2MHILL

Lab Code: NA Case No.: NA SAS No.: NA SDG No.: LEJEUNE039

Matrix: (soil/water) SOIL Lab Sample ID: 0901026-02

Sample wt/vol: 5.1 (g/mL) G Lab File ID: 0102602A

Level: (low/med) LOW Date Sampled: 01/05/09 11:30

% Moisture: not dec. 11 Date Analyzed: 01/13/09 12:54

GC Column: RTX-VRX ID: 0.25 (mm) Dilution Factor: 1.0

Soil Extract Volume:_____(uL) Soil Aliquot Volume: _____(uL)

CONCENTRATION UNITS: (ug/L or ug/Kg) UG/KG

CAS NO.	COMPOUND	MDL	RL	CONC	Q
67-64-1	Acetone	2.2	11	11uJ ~~8.0 J~~ CCH	B
71-43-2	Benzene	0.52	11	0.92	J
75-27-4	Bromodichloromethane	0.33	11		U
75-25-2	Bromoform	1.1	11		U
74-83-9	Bromomethane	0.80	11		U
78-93-3	2-Butanone	1.6	11		U
75-15-0	Carbon disulfide	1.4	11	1.9	J
56-23-5	Carbon tetrachloride	0.97	11		U
108-90-7	Chlorobenzene	0.38	11		U
75-00-3	Chloroethane	1.2	11		U
67-66-3	Chloroform	0.61	11		U
74-87-3	Chloromethane	0.58	11		U
110-82-7	Cyclohexane	0.60	11		U
124-48-1	Dibromochloromethane	0.38	11		U
96-12-8	1,2-Dibromo-3-chloropropane	1.3	5.5		U
106-93-4	1,2-Dibromoethane	0.48	11		U
95-50-1	1,2-Dichlorobenzene	0.41	11		U
541-73-1	1,3-Dichlorobenzene	0.93	11		U
106-46-7	1,4-Dichlorobenzene	0.61	11		U
75-71-8	Dichlorodifluoromethane	1.2	11		U
75-34-3	1,1-Dichloroethane	0.60	11		U
107-06-2	1,2-Dichloroethane	0.51	11		U
75-35-4	1,1-Dichloroethene	1.3	11		U
156-59-2	cis-1,2-Dichloroethene	1.3	11		U
156-60-5	trans-1,2-Dichloroethene	1.2	11		U
78-87-5	1,2-Dichloropropane	0.51	11		U
10061-01-5	cis-1,3-Dichloropropene	0.55	11		U
10061-02-6	trans-1,3-Dichloropropene	0.35	11		U
100-41-4	Ethylbenzene	0.83	11	1.4	J
591-78-6	2-Hexanone	2.5	11		U
98-82-8	Isopropylbenzene	0.97	11		U
79-20-9	Methyl acetate	1.8	11		U
75-09-2	Methylene chloride	0.69	11	11u ~~1.5 JB~~	B
108-87-2	Methyl cyclohexane	0.33	11	0.60	J
1634-04-4	Methyl tert-butyl ether	0.35	11		U
108-10-1	4-Methyl-2-pentanone	0.64	11		U
100-42-5	Styrene	0.39	11		U
79-34-5	1,1,2,2-Tetrachloroethane	0.48	11		U
127-18-4	Tetrachloroethene	1.1	11		U

kw
4/1/09

FORM 1
VOLATILE ORGANICS ANALYSIS DATA SHEET

CLIENT SAMPLE NO. 2

MR08-IS14
9-3-4-09A

Lab Name: EMPIRICAL LABS Contract: CH2MHILL

Lab Code: NA Case No.: NA SAS No.: NA SDG No.: LEJEUNE039

Matrix: (soil/water) SOIL Lab Sample ID: 0901026-02

Sample wt/vol: 5.1 (g/mL) G Lab File ID: 0102602A

Level: (low/med) LOW Date Sampled: 01/05/09 11:30

% Moisture: not dec. 11 Date Analyzed: 01/13/09 12:54

GC Column: RTX-VRX ID: 0.25 (mm) Dilution Factor: 1.0

Soil Extract Volume:_____(uL) Soil Aliquot Volume: _____(uL)

CONCENTRATION UNITS: (ug/L or ug/Kg) UG/KG

CAS NO.	COMPOUND	MDL	RL	CONC	Q
108-88-3	Toluene	0.95	11	11u ~~1.2~~	~~J~~ U BL
120-82-1	1,2,4-Trichlorobenzene	0.20	11		U
71-55-6	1,1,1-Trichloroethane	1.00	11		U
79-00-5	1,1,2-Trichloroethane	0.39	11		U
79-01-6	Trichloroethene	0.94	11		U
76-13-1	Trichlorotrifluoroethane	0.61	11		U
75-69-4	Trichlorofluoromethane	1.0	11		U
75-01-4	Vinyl chloride	1.2	11		U
1330-20-7	Xylene(total)	0.78	11		U

lus 4/1/09

FORM 1
VOLATILE ORGANICS ANALYSIS DATA SHEET

CLIENT SAMPLE NO. 3

MR08-SS142-09A

Lab Name: EMPIRICAL LABS Contract: CH2MHILL

Lab Code: NA Case No.: NA SAS No.: NA SDG No.: LEJEUNE039

Matrix: (soil/water) SOIL Lab Sample ID: 0901026-03

Sample wt/vol: 4.6 (g/mL) G Lab File ID: 0102603A

Level: (low/med) LOW Date Sampled: 01/05/09 11:45

% Moisture: not dec. 5 Date Analyzed: 01/13/09 13:33

GC Column: RTX-VRX ID: 0.25 (mm) Dilution Factor: 1.0

Soil Extract Volume:_____(uL) Soil Aliquot Volume: _____(uL)

CONCENTRATION UNITS: (ug/L or ug/Kg) UG/KG

CAS NO.	COMPOUND	MDL	RL	CONC	Q
67-64-1	Acetone	2.3	11	23	UJ CU BL
71-43-2	Benzene	0.54	11		U
75-27-4	Bromodichloromethane	0.34	11		U
75-25-2	Bromoform	1.1	11		U
74-83-9	Bromomethane	0.82	11		U
78-93-3	2-Butanone	1.6	11		U
75-15-0	Carbon disulfide	1.5	11		U
56-23-5	Carbon tetrachloride	1.0	11		U
108-90-7	Chlorobenzene	0.39	11		U
75-00-3	Chloroethane	1.2	11		U
67-66-3	Chloroform	0.63	11		U
74-87-3	Chloromethane	0.59	11		U
110-82-7	Cyclohexane	0.62	11		U
124-48-1	Dibromochloromethane	0.39	11		U
96-12-8	1,2-Dibromo-3-chloropropane	1.4	5.7		U
106-93-4	1,2-Dibromoethane	0.49	11		U
95-50-1	1,2-Dichlorobenzene	0.42	11		U
541-73-1	1,3-Dichlorobenzene	0.96	11		U
106-46-7	1,4-Dichlorobenzene	0.63	11		U
75-71-8	Dichlorodifluoromethane	1.2	11		U
75-34-3	1,1-Dichloroethane	0.62	11		U
107-06-2	1,2-Dichloroethane	0.52	11		U
75-35-4	1,1-Dichloroethene	1.4	11		U
156-59-2	cis-1,2-Dichloroethene	1.4	11		U
156-60-5	trans-1,2-Dichloroethene	1.2	11		U
78-87-5	1,2-Dichloropropane	0.52	11		U
10061-01-5	cis-1,3-Dichloropropene	0.57	11		U
10061-02-6	trans-1,3-Dichloropropene	0.36	11		U
100-41-4	Ethylbenzene	0.86	11		U
591-78-6	2-Hexanone	2.6	11		U
98-82-8	Isopropylbenzene	1.0	11		U
79-20-9	Methyl acetate	1.8	11		U
75-09-2	Methylene chloride	0.71	11	17	~~B~~ U BL
108-87-2	Methyl cyclohexane	0.34	11		U
1634-04-4	Methyl tert-butyl ether	0.36	11		U
108-10-1	4-Methyl-2-pentanone	0.66	11		U
100-42-5	Styrene	0.40	11		U
79-34-5	1,1,2,2-Tetrachloroethane	0.49	11		U
127-18-4	Tetrachloroethene	1.1	11		U

lew

FORM 1
VOLATILE ORGANICS ANALYSIS DATA SHEET

CLIENT SAMPLE NO. 3

MR08-SS142-09A

Lab Name: EMPIRICAL LABS Contract: CH2MHILL

Lab Code: NA Case No.: NA SAS No.: NA SDG No.: LEJEUNE039

Matrix: (soil/water) SOIL Lab Sample ID: 0901026-03

Sample wt/vol: 4.6 (g/mL) G Lab File ID: 0102603A

Level: (low/med) LOW Date Sampled: 01/05/09 11:45

% Moisture: not dec. 5 Date Analyzed: 01/13/09 13:33

GC Column: RTX-VRX ID: 0.25 (mm) Dilution Factor: 1.0

Soil Extract Volume:_____(uL) Soil Aliquot Volume: _____(uL)

CONCENTRATION UNITS: (ug/L or ug/Kg) UG/KG

CAS NO.	COMPOUND	MDL	RL	CONC	Q
108-88-3	Toluene	0.98	11		U
120-82-1	1,2,4-Trichlorobenzene	0.20	11		U
71-55-6	1,1,1-Trichloroethane	1.0	11		U
79-00-5	1,1,2-Trichloroethane	0.40	11		U
79-01-6	Trichloroethene	0.97	11		U
76-13-1	Trichlorotrifluoroethane	0.63	11		U
75-69-4	Trichlorofluoromethane	1.1	11		U
75-01-4	Vinyl chloride	1.2	11		U
1330-20-7	Xylene(total)	0.80	11		U

LW
01/09

FORM 1
VOLATILE ORGANICS ANALYSIS DATA SHEET

CLIENT SAMPLE NO. 4

MR08-IS14
2-2-3-09A

Lab Name: EMPIRICAL LABS Contract: CH2MHILL

Lab Code: NA Case No.: NA SAS No.: NA SDG No.: LEJEUNE039

Matrix: (soil/water) SOIL Lab Sample ID: 0901026-04

Sample wt/vol: 5.1 (g/mL) G Lab File ID: 0102604A

Level: (low/med) LOW Date Sampled: 01/05/09 12:00

% Moisture: not dec. 13 Date Analyzed: 01/13/09 14:12

GC Column: RTX-VRX ID: 0.25 (mm) Dilution Factor: 1.0

Soil Extract Volume:_____(uL) Soil Aliquot Volume: _____(uL)

CONCENTRATION UNITS: (ug/L or ug/Kg) UG/KG

CAS NO.	COMPOUND	MDL	RL	CONC	Q
67-64-1	Acetone	2.2	11	14	UJ CCH BK
71-43-2	Benzene	0.53	11		U
75-27-4	Bromodichloromethane	0.34	11		U
75-25-2	Bromoform	1.1	11		U
74-83-9	Bromomethane	0.81	11		U
78-93-3	2-Butanone	1.6	11		U
75-15-0	Carbon disulfide	1.5	11		U
56-23-5	Carbon tetrachloride	0.99	11		U
108-90-7	Chlorobenzene	0.38	11		U
75-00-3	Chloroethane	1.2	11		U
67-66-3	Chloroform	0.62	11		U
74-87-3	Chloromethane	0.59	11		U
110-82-7	Cyclohexane	0.61	11		U
124-48-1	Dibromochloromethane	0.38	11		U
96-12-8	1,2-Dibromo-3-chloropropane	1.4	5.6		U
106-93-4	1,2-Dibromoethane	0.48	11		U
95-50-1	1,2-Dichlorobenzene	0.42	11		U
541-73-1	1,3-Dichlorobenzene	0.95	11		U
106-46-7	1,4-Dichlorobenzene	0.62	11		U
75-71-8	Dichlorodifluoromethane	1.2	11		U
75-34-3	1,1-Dichloroethane	0.61	11		U
107-06-2	1,2-Dichloroethane	0.52	11		U
75-35-4	1,1-Dichloroethene	1.4	11		U
156-59-2	cis-1,2-Dichloroethene	1.4	11		U
156-60-5	trans-1,2-Dichloroethene	1.2	11		U
78-87-5	1,2-Dichloropropane	0.52	11		U
10061-01-5	cis-1,3-Dichloropropene	0.56	11		U
10061-02-6	trans-1,3-Dichloropropene	0.36	11		U
100-41-4	Ethylbenzene	0.84	11		U
591-78-6	2-Hexanone	2.6	11		U
98-82-8	Isopropylbenzene	0.99	11		U
79-20-9	Methyl acetate	1.8	11		U
75-09-2	Methylene chloride	0.70	11	11u	1.9 ~~JB~~ B
108-87-2	Methyl cyclohexane	0.34	11		U
1634-04-4	Methyl tert-butyl ether	0.36	11		U
108-10-1	4-Methyl-2-pentanone	0.65	11		U
100-42-5	Styrene	0.39	11		U
79-34-5	1,1,2,2-Tetrachloroethane	0.48	11		U
127-18-4	Tetrachloroethene	1.1	11		U

MW
01/29

FORM 1
VOLATILE ORGANICS ANALYSIS DATA SHEET

CLIENT SAMPLE NO. 4

MR08-IS14
2-2-3-09A

Lab Name: EMPIRICAL LABS Contract: CH2MHILL

Lab Code: NA Case No.: NA SAS No.: NA SDG No.: LEJEUNE039

Matrix: (soil/water) SOIL Lab Sample ID: 0901026-04

Sample wt/vol: 5.1 (g/mL) G Lab File ID: 0102604A

Level: (low/med) LOW Date Sampled: 01/05/09 12:00

% Moisture: not dec. 13 Date Analyzed: 01/13/09 14:12

GC Column: RTX-VRX ID: 0.25 (mm) Dilution Factor: 1.0

Soil Extract Volume:_____(uL) Soil Aliquot Volume: _____(uL)

CONCENTRATION UNITS: (ug/L or ug/Kg) UG/KG

CAS NO.	COMPOUND	MDL	RL	CONC	Q
108-88-3	Toluene	0.97	11		U
120-82-1	1,2,4-Trichlorobenzene	0.20	11		U
71-55-6	1,1,1-Trichloroethane	1.0	11		U
79-00-5	1,1,2-Trichloroethane	0.39	11		U
79-01-6	Trichloroethene	0.96	11		U
76-13-1	Trichlorotrifluoroethane	0.62	11		U
75-69-4	Trichlorofluoromethane	1.1	11		U
75-01-4	Vinyl chloride	1.2	11		U
1330-20-7	Xylene(total)	0.79	11		U

lew
4/1/09

FORM 1
VOLATILE ORGANICS ANALYSIS DATA SHEET

CLIENT SAMPLE NO. 5

MR08-SS149D-09A

Lab Name: EMPIRICAL LABS Contract: CH2MHILL

Lab Code: NA Case No.: NA SAS No.: NA SDG No.: LEJEUNE039

Matrix: (soil/water) SOIL Lab Sample ID: 0901026-05

Sample wt/vol: 5.5 (g/mL) G Lab File ID: 0102605A

Level: (low/med) LOW Date Sampled: 01/05/09 12:30

% Moisture: not dec. 7 Date Analyzed: 01/13/09 14:52

GC Column: RTX-VRX ID: 0.25 (mm) Dilution Factor: 1.0

Soil Extract Volume:_____(uL) Soil Aliquot Volume: _____(uL)

CONCENTRATION UNITS: (ug/L or ug/Kg) UG/KG

CAS NO.	COMPOUND	MDL	RL	CONC	Q
67-64-1	Acetone	1.9	9.7	17	UJ CCH B
71-43-2	Benzene	0.46	9.7	1.8	J
75-27-4	Bromodichloromethane	0.29	9.7		U
75-25-2	Bromoform	0.97	9.7		U
74-83-9	Bromomethane	0.70	9.7		U
78-93-3	2-Butanone	1.4	9.7	4.0	J
75-15-0	Carbon disulfide	1.3	9.7		U
56-23-5	Carbon tetrachloride	0.86	9.7		U
108-90-7	Chlorobenzene	0.33	9.7		U
75-00-3	Chloroethane	1.1	9.7		U
67-66-3	Chloroform	0.54	9.7		U
74-87-3	Chloromethane	0.50	9.7		U
110-82-7	Cyclohexane	0.52	9.7	1.0	J
124-48-1	Dibromochloromethane	0.33	9.7		U
96-12-8	1,2-Dibromo-3-chloropropane	1.2	4.9		U
106-93-4	1,2-Dibromoethane	0.42	9.7		U
95-50-1	1,2-Dichlorobenzene	0.36	9.7		U
541-73-1	1,3-Dichlorobenzene	0.82	9.7		U
106-46-7	1,4-Dichlorobenzene	0.54	9.7		U
75-71-8	Dichlorodifluoromethane	1.1	9.7		U
75-34-3	1,1-Dichloroethane	0.52	9.7		U
107-06-2	1,2-Dichloroethane	0.45	9.7		U
75-35-4	1,1-Dichloroethene	1.2	9.7		U
156-59-2	cis-1,2-Dichloroethene	1.2	9.7		U
156-60-5	trans-1,2-Dichloroethene	1.1	9.7		U
78-87-5	1,2-Dichloropropane	0.45	9.7		U
10061-01-5	cis-1,3-Dichloropropene	0.49	9.7		U
10061-02-6	trans-1,3-Dichloropropene	0.31	9.7		U
100-41-4	Ethylbenzene	0.73	9.7	2.7	J
591-78-6	2-Hexanone	2.2	9.7		U
98-82-8	Isopropylbenzene	0.86	9.7		U
79-20-9	Methyl acetate	1.6	9.7		U
75-09-2	Methylene chloride	0.60	9.7	9.7u ~~1.7~~ ~~JB~~	B
108-87-2	Methyl cyclohexane	0.29	9.7	1.4	J
1634-04-4	Methyl tert-butyl ether	0.31	9.7		U
108-10-1	4-Methyl-2-pentanone	0.56	9.7		U
100-42-5	Styrene	0.34	9.7		U
79-34-5	1,1,2,2-Tetrachloroethane	0.42	9.7		U
127-18-4	Tetrachloroethene	0.94	9.7		U

FORM I VOA

lw
4/1/09

FORM 1
VOLATILE ORGANICS ANALYSIS DATA SHEET

CLIENT SAMPLE NO. 5

MR08-SS149D-09A

Lab Name: EMPIRICAL LABS Contract: CH2MHILL

Lab Code: NA Case No.: NA SAS No.: NA SDG No.: LEJEUNE039

Matrix: (soil/water) SOIL Lab Sample ID: 0901026-05

Sample wt/vol: 5.5 (g/mL) G Lab File ID: 0102605A

Level: (low/med) LOW Date Sampled: 01/05/09 12:30

% Moisture: not dec. 7 Date Analyzed: 01/13/09 14:52

GC Column: RTX-VRX ID: 0.25 (mm) Dilution Factor: 1.0

Soil Extract Volume:_____(uL) Soil Aliquot Volume: _____(uL)

CONCENTRATION UNITS: (ug/L or ug/Kg) UG/KG

CAS NO.	COMPOUND	MDL	RL	CONC	Q
108-88-3	Toluene	0.84	9.7	9.1U ~~2.3~~	~~J~~ U BL
120-82-1	1,2,4-Trichlorobenzene	0.18	9.7		U
71-55-6	1,1,1-Trichloroethane	0.88	9.7		U
79-00-5	1,1,2-Trichloroethane	0.34	9.7		U
79-01-6	Trichloroethene	0.83	9.7		U
76-13-1	Trichlorotrifluoroethane	0.54	9.7		U
75-69-4	Trichlorofluoromethane	0.92	9.7		U
75-01-4	Vinyl chloride	1.1	9.7		U
1330-20-7	Xylene(total)	0.68	9.7		U

lw
4/1/09

FORM 1
VOLATILE ORGANICS ANALYSIS DATA SHEET

CLIENT SAMPLE NO. 6

MR08-IS14
9D-3-4-09A

Lab Name: EMPIRICAL LABS Contract: CH2MHILL

Lab Code: NA Case No.: NA SAS No.: NA SDG No.: LEJEUNE039

Matrix: (soil/water) SOIL Lab Sample ID: 0901026-06

Sample wt/vol: 4.2 (g/mL) G Lab File ID: 0102606A

Level: (low/med) LOW Date Sampled: 01/05/09 12:40

% Moisture: not dec. 12 Date Analyzed: 01/13/09 15:31

GC Column: RTX-VRX ID: 0.25 (mm) Dilution Factor: 1.0

Soil Extract Volume:_____(uL) Soil Aliquot Volume: _____(uL)

CONCENTRATION UNITS: (ug/L or ug/Kg) UG/KG

CAS NO.	COMPOUND	MDL	RL	CONC	Q
67-64-1	Acetone	2.7	13	13U ~~7.7~~	~~J~~ CCH BL
71-43-2	Benzene	0.63	13		U
75-27-4	Bromodichloromethane	0.40	13		U
75-25-2	Bromoform	1.3	13		U
74-83-9	Bromomethane	0.97	13		U
78-93-3	2-Butanone	1.9	13		U
75-15-0	Carbon disulfide	1.7	13		U
56-23-5	Carbon tetrachloride	1.2	13		U
108-90-7	Chlorobenzene	0.46	13		U
75-00-3	Chloroethane	1.5	13		U
67-66-3	Chloroform	0.74	13		U
74-87-3	Chloromethane	0.70	13		U
110-82-7	Cyclohexane	0.73	13		U
124-48-1	Dibromochloromethane	0.46	13		U
96-12-8	1,2-Dibromo-3-chloropropane	1.6	6.7		U
106-93-4	1,2-Dibromoethane	0.58	13		U
95-50-1	1,2-Dichlorobenzene	0.50	13		U
541-73-1	1,3-Dichlorobenzene	1.1	13		U
106-46-7	1,4-Dichlorobenzene	0.74	13		U
75-71-8	Dichlorodifluoromethane	1.5	13		U
75-34-3	1,1-Dichloroethane	0.73	13		U
107-06-2	1,2-Dichloroethane	0.62	13		U
75-35-4	1,1-Dichloroethene	1.6	13		U
156-59-2	cis-1,2-Dichloroethene	1.6	13		U
156-60-5	trans-1,2-Dichloroethene	1.5	13		U
78-87-5	1,2-Dichloropropane	0.62	13		U
10061-01-5	cis-1,3-Dichloropropene	0.67	13		U
10061-02-6	trans-1,3-Dichloropropene	0.43	13		U
100-41-4	Ethylbenzene	1.0	13		U
591-78-6	2-Hexanone	3.1	13		U
98-82-8	Isopropylbenzene	1.2	13		U
79-20-9	Methyl acetate	2.2	13		U
75-09-2	Methylene chloride	0.83	13	13U ~~5.4~~	~~JB~~ BL
108-87-2	Methyl cyclohexane	0.40	13		U
1634-04-4	Methyl tert-butyl ether	0.43	13		U
108-10-1	4-Methyl-2-pentanone	0.78	13		U
100-42-5	Styrene	0.47	13		U
79-34-5	1,1,2,2-Tetrachloroethane	0.58	13		U
127-18-4	Tetrachloroethene	1.3	13		U

lw
01/09

FORM 1
VOLATILE ORGANICS ANALYSIS DATA SHEET

CLIENT SAMPLE NO. 6

MR08-IS14
9D-3-4-09A

Lab Name: EMPIRICAL LABS Contract: CH2MHILL

Lab Code: NA Case No.: NA SAS No.: NA SDG No.: LEJEUNE039

Matrix: (soil/water) SOIL Lab Sample ID: 0901026-06

Sample wt/vol: 4.2 (g/mL) G Lab File ID: 0102606A

Level: (low/med) LOW Date Sampled: 01/05/09 12:40

% Moisture: not dec. 12 Date Analyzed: 01/13/09 15:31

GC Column: RTX-VRX ID: 0.25 (mm) Dilution Factor: 1.0

Soil Extract Volume:_____(uL) Soil Aliquot Volume: _____(uL)

CONCENTRATION UNITS: (ug/L or ug/Kg) UG/KG

CAS NO.	COMPOUND	MDL	RL	CONC	Q
108-88-3	Toluene	1.2	13		U
120-82-1	1,2,4-Trichlorobenzene	0.24	13		U
71-55-6	1,1,1-Trichloroethane	1.2	13		U
79-00-5	1,1,2-Trichloroethane	0.47	13		U
79-01-6	Trichloroethene	1.1	13		U
76-13-1	Trichlorotrifluoroethane	0.74	13		U
75-69-4	Trichlorofluoromethane	1.3	13		U
75-01-4	Vinyl chloride	1.5	13		U
1330-20-7	Xylene(total)	0.94	13		U

pw
4/1/09

FORM 1
VOLATILE ORGANICS ANALYSIS DATA SHEET

CLIENT SAMPLE NO. 7

MR08-SS143-09A

Lab Name: EMPIRICAL LABS Contract: CH2MHILL

Lab Code: NA Case No.: NA SAS No.: NA SDG No.: LEJEUNE039

Matrix: (soil/water) SOIL Lab Sample ID: 0901026-07

Sample wt/vol: 4.5 (g/mL) G Lab File ID: 0102607A

Level: (low/med) LOW Date Sampled: 01/05/09 13:20

% Moisture: not dec. 7 Date Analyzed: 01/13/09 16:10

GC Column: RTX-VRX ID: 0.25 (mm) Dilution Factor: 1.0

Soil Extract Volume:_____(uL) Soil Aliquot Volume: _____(uL)

CONCENTRATION UNITS: (ug/L or ug/Kg) UG/KG

CAS NO.	COMPOUND	MDL	RL	CONC	Q	
67-64-1	Acetone	2.4	12	16	UJ CCH	B
71-43-2	Benzene	0.56	12	1.5	J	
75-27-4	Bromodichloromethane	0.36	12		U	
75-25-2	Bromoform	1.2	12		U	
74-83-9	Bromomethane	0.86	12		U	
78-93-3	2-Butanone	1.7	12		U	
75-15-0	Carbon disulfide	1.6	12		U	
56-23-5	Carbon tetrachloride	1.0	12		U	
108-90-7	Chlorobenzene	0.41	12		U	
75-00-3	Chloroethane	1.3	12		U	
67-66-3	Chloroform	0.66	12		U	
74-87-3	Chloromethane	0.62	12		U	
110-82-7	Cyclohexane	0.65	12	1.00	J	
124-48-1	Dibromochloromethane	0.41	12		U	
96-12-8	1,2-Dibromo-3-chloropropane	1.4	6.0		U	
106-93-4	1,2-Dibromoethane	0.51	12		U	
95-50-1	1,2-Dichlorobenzene	0.44	12		U	
541-73-1	1,3-Dichlorobenzene	1.0	12		U	
106-46-7	1,4-Dichlorobenzene	0.66	12		U	
75-71-8	Dichlorodifluoromethane	1.3	12		U	
75-34-3	1,1-Dichloroethane	0.65	12		U	
107-06-2	1,2-Dichloroethane	0.55	12		U	
75-35-4	1,1-Dichloroethene	1.4	12		U	
156-59-2	cis-1,2-Dichloroethene	1.4	12		U	
156-60-5	trans-1,2-Dichloroethene	1.3	12		U	
78-87-5	1,2-Dichloropropane	0.55	12		U	
10061-01-5	cis-1,3-Dichloropropene	0.60	12		U	
10061-02-6	trans-1,3-Dichloropropene	0.38	12		U	
100-41-4	Ethylbenzene	0.90	12	4.0	J	
591-78-6	2-Hexanone	2.8	12		U	
98-82-8	Isopropylbenzene	1.0	12		U	
79-20-9	Methyl acetate	1.9	12		U	
75-09-2	Methylene chloride	0.74	12	12u	~~2.4 UB~~	B
108-87-2	Methyl cyclohexane	0.36	12	1.2	J	
1634-04-4	Methyl tert-butyl ether	0.38	12		U	
108-10-1	4-Methyl-2-pentanone	0.69	12		U	
100-42-5	Styrene	0.42	12		U	
79-34-5	1,1,2,2-Tetrachloroethane	0.51	12		U	
127-18-4	Tetrachloroethene	1.2	12		U	

FORM I VOA

lw
4/1/09

FORM 1
VOLATILE ORGANICS ANALYSIS DATA SHEET

CLIENT SAMPLE NO. 7

MR08-SS143-09A

Lab Name: EMPIRICAL LABS Contract: CH2MHILL

Lab Code: NA Case No.: NA SAS No.: NA SDG No.: LEJEUNE039

Matrix: (soil/water) SOIL Lab Sample ID: 0901026-07

Sample wt/vol: 4.5 (g/mL) G Lab File ID: 0102607A

Level: (low/med) LOW Date Sampled: 01/05/09 13:20

% Moisture: not dec. 7 Date Analyzed: 01/13/09 16:10

GC Column: RTX-VRX ID: 0.25 (mm) Dilution Factor: 1.0

Soil Extract Volume:_____(uL) Soil Aliquot Volume: _____(uL)

CONCENTRATION UNITS: (ug/L or ug/Kg) UG/KG

CAS NO.	COMPOUND	MDL	RL	CONC	Q
108-88-3	Toluene	1.0	12	12U ~~2.2~~	~~J~~ U
120-82-1	1,2,4-Trichlorobenzene	0.22	12		U
71-55-6	1,1,1-Trichloroethane	1.1	12		U
79-00-5	1,1,2-Trichloroethane	0.42	12		U
79-01-6	Trichloroethene	1.0	12		U
76-13-1	Trichlorotrifluoroethane	0.66	12		U
75-69-4	Trichlorofluoromethane	1.1	12		U
75-01-4	Vinyl chloride	1.3	12		U
1330-20-7	Xylene(total)	0.84	12		U

Bi

FORM I VOA

lw
4/1/09

FORM 1
VOLATILE ORGANICS ANALYSIS DATA SHEET

CLIENT SAMPLE NO. 8

MR08-IS14
3-2-3-09A

Lab Name: EMPIRICAL LABS Contract: CH2MHILL

Lab Code: NA Case No.: NA SAS No.: NA SDG No.: LEJEUNE039

Matrix: (soil/water) SOIL Lab Sample ID: 0901026-08

Sample wt/vol: 5.6 (g/mL) G Lab File ID: 0102608A

Level: (low/med) LOW Date Sampled: 01/05/09 13:35

% Moisture: not dec. 16 Date Analyzed: 01/13/09 16:49

GC Column: RTX-VRX ID: 0.25 (mm) Dilution Factor: 1.0

Soil Extract Volume:_____(uL) Soil Aliquot Volume: _____(uL)

CONCENTRATION UNITS: (ug/L or ug/Kg) UG/KG

CAS NO.	COMPOUND	MDL	RL	CONC	Q	
67-64-1	Acetone	2.1	10	10UJ ~~7.5~~ ~~J~~	CCH	BI
71-43-2	Benzene	0.50	10		U	
75-27-4	Bromodichloromethane	0.32	10		U	
75-25-2	Bromoform	1.0	10		U	
74-83-9	Bromomethane	0.76	10		U	
78-93-3	2-Butanone	1.5	10		U	
75-15-0	Carbon disulfide	1.4	10		U	
56-23-5	Carbon tetrachloride	0.93	10		U	
108-90-7	Chlorobenzene	0.36	10		U	
75-00-3	Chloroethane	1.2	10		U	
67-66-3	Chloroform	0.58	10		U	
74-87-3	Chloromethane	0.55	10		U	
110-82-7	Cyclohexane	0.57	10		U	
124-48-1	Dibromochloromethane	0.36	10		U	
96-12-8	1,2-Dibromo-3-chloropropane	1.3	5.3		U	
106-93-4	1,2-Dibromoethane	0.45	10		U	
95-50-1	1,2-Dichlorobenzene	0.39	10		U	
541-73-1	1,3-Dichlorobenzene	0.88	10		U	
106-46-7	1,4-Dichlorobenzene	0.58	10		U	
75-71-8	Dichlorodifluoromethane	1.2	10		U	
75-34-3	1,1-Dichloroethane	0.57	10		U	
107-06-2	1,2-Dichloroethane	0.48	10		U	
75-35-4	1,1-Dichloroethene	1.3	10		U	
156-59-2	cis-1,2-Dichloroethene	1.3	10		U	
156-60-5	trans-1,2-Dichloroethene	1.2	10		U	
78-87-5	1,2-Dichloropropane	0.48	10		U	
10061-01-5	cis-1,3-Dichloropropene	0.53	10		U	
10061-02-6	trans-1,3-Dichloropropene	0.34	10		U	
100-41-4	Ethylbenzene	0.79	10		U	
591-78-6	2-Hexanone	2.4	10		U	
98-82-8	Isopropylbenzene	0.93	10		U	
79-20-9	Methyl acetate	1.7	10		U	
75-09-2	Methylene chloride	0.65	10	10U ~~1.9~~ ~~JB~~		BI
108-87-2	Methyl cyclohexane	0.32	10		U	
1634-04-4	Methyl tert-butyl ether	0.34	10		U	
108-10-1	4-Methyl-2-pentanone	0.61	10		U	
100-42-5	Styrene	0.37	10		U	
79-34-5	1,1,2,2-Tetrachloroethane	0.45	10		U	
127-18-4	Tetrachloroethene	1.0	10		U	

FORM I VOA

lw
01/09

FORM 1
VOLATILE ORGANICS ANALYSIS DATA SHEET

CLIENT SAMPLE NO. 8

MR08-IS14
3-2-3-09A

Lab Name: EMPIRICAL LABS Contract: CH2MHILL

Lab Code: NA Case No.: NA SAS No.: NA SDG No.: LEJEUNE039

Matrix: (soil/water) SOIL Lab Sample ID: 0901026-08

Sample wt/vol: 5.6 (g/mL) G Lab File ID: 0102608A

Level: (low/med) LOW Date Sampled: 01/05/09 13:35

% Moisture: not dec. 16 Date Analyzed: 01/13/09 16:49

GC Column: RTX-VRX ID: 0.25 (mm) Dilution Factor: 1.0

Soil Extract Volume:_____(uL) Soil Aliquot Volume: _____(uL)

CONCENTRATION UNITS: (ug/L or ug/Kg) UG/KG

CAS NO.	COMPOUND	MDL	RL	CONC	Q
108-88-3	Toluene	0.91	10		U
120-82-1	1,2,4-Trichlorobenzene	0.19	10		U
71-55-6	1,1,1-Trichloroethane	0.95	10		U
79-00-5	1,1,2-Trichloroethane	0.37	10		U
79-01-6	Trichloroethene	0.90	10		U
76-13-1	Trichlorotrifluoroethane	0.58	10		U
75-69-4	Trichlorofluoromethane	1.0	10		U
75-01-4	Vinyl chloride	1.2	10		U
1330-20-7	Xylene(total)	0.74	10		U

kw
4/1/09

FORM 1
VOLATILE ORGANICS ANALYSIS DATA SHEET

CLIENT SAMPLE NO. 9

MR08-SS144-09A

Lab Name: EMPIRICAL LABS Contract: CH2MHILL

Lab Code: NA Case No.: NA SAS No.: NA SDG No.: LEJEUNE039

Matrix: (soil/water) SOIL Lab Sample ID: 0901026-09

Sample wt/vol: 5.5 (g/mL) G Lab File ID: 0102609A

Level: (low/med) LOW Date Sampled: 01/05/09 13:55

% Moisture: not dec. 6 Date Analyzed: 01/13/09 17:28

GC Column: RTX-VRX ID: 0.25 (mm) Dilution Factor: 1.0

Soil Extract Volume:_____(uL) Soil Aliquot Volume: _____(uL)

CONCENTRATION UNITS: (ug/L or ug/Kg) UG/KG

CAS NO.	COMPOUND	MDL	RL	CONC	Q
67-64-1	Acetone	1.9	9.7	9.7U ~~6.7~~	U CCH B
71-43-2	Benzene	0.46	9.7	1.2	J
75-27-4	Bromodichloromethane	0.29	9.7		U
75-25-2	Bromoform	0.97	9.7		U
74-83-9	Bromomethane	0.70	9.7		U
78-93-3	2-Butanone	1.4	9.7		U
75-15-0	Carbon disulfide	1.3	9.7		U
56-23-5	Carbon tetrachloride	0.86	9.7		U
108-90-7	Chlorobenzene	0.33	9.7		U
75-00-3	Chloroethane	1.1	9.7		U
67-66-3	Chloroform	0.54	9.7		U
74-87-3	Chloromethane	0.50	9.7		U
110-82-7	Cyclohexane	0.52	9.7	0.64	J
124-48-1	Dibromochloromethane	0.33	9.7		U
96-12-8	1,2-Dibromo-3-chloropropane	1.2	4.9		U
106-93-4	1,2-Dibromoethane	0.42	9.7		U
95-50-1	1,2-Dichlorobenzene	0.36	9.7		U
541-73-1	1,3-Dichlorobenzene	0.82	9.7		U
106-46-7	1,4-Dichlorobenzene	0.54	9.7		U
75-71-8	Dichlorodifluoromethane	1.1	9.7		U
75-34-3	1,1-Dichloroethane	0.52	9.7		U
107-06-2	1,2-Dichloroethane	0.45	9.7		U
75-35-4	1,1-Dichloroethene	1.2	9.7		U
156-59-2	cis-1,2-Dichloroethene	1.2	9.7		U
156-60-5	trans-1,2-Dichloroethene	1.1	9.7		U
78-87-5	1,2-Dichloropropane	0.45	9.7		U
10061-01-5	cis-1,3-Dichloropropene	0.49	9.7		U
10061-02-6	trans-1,3-Dichloropropene	0.31	9.7		U
100-41-4	Ethylbenzene	0.73	9.7	4.9	J
591-78-6	2-Hexanone	2.2	9.7		U
98-82-8	Isopropylbenzene	0.86	9.7		U
79-20-9	Methyl acetate	1.6	9.7		U
75-09-2	Methylene chloride	0.60	9.7	9.7U ~~1.8~~	~~JB~~ B
108-87-2	Methyl cyclohexane	0.29	9.7	0.90	J
1634-04-4	Methyl tert-butyl ether	0.31	9.7		U
108-10-1	4-Methyl-2-pentanone	0.56	9.7		U
100-42-5	Styrene	0.34	9.7		U
79-34-5	1,1,2,2-Tetrachloroethane	0.42	9.7		U
127-18-4	Tetrachloroethene	0.94	9.7		U

MW
4/1/09

FORM 1
VOLATILE ORGANICS ANALYSIS DATA SHEET

CLIENT SAMPLE NO. 9

MR08-SS144-09A

Lab Name: EMPIRICAL LABS Contract: CH2MHILL

Lab Code: NA Case No.: NA SAS No.: NA SDG No.: LEJEUNE039

Matrix: (soil/water) SOIL Lab Sample ID: 0901026-09

Sample wt/vol: 5.5 (g/mL) G Lab File ID: 0102609A

Level: (low/med) LOW Date Sampled: 01/05/09 13:55

% Moisture: not dec. 6 Date Analyzed: 01/13/09 17:28

GC Column: RTX-VRX ID: 0.25 (mm) Dilution Factor: 1.0

Soil Extract Volume:_____(uL) Soil Aliquot Volume: _____(uL)

CONCENTRATION UNITS: (ug/L or ug/Kg) UG/KG

CAS NO.	COMPOUND	MDL	RL	CONC	Q
108-88-3	Toluene	0.84	9.7	9.1u ~~2.3~~	~~J~~ U
120-82-1	1,2,4-Trichlorobenzene	0.18	9.7		U
71-55-6	1,1,1-Trichloroethane	0.88	9.7		U
79-00-5	1,1,2-Trichloroethane	0.34	9.7		U
79-01-6	Trichloroethene	0.83	9.7		U
76-13-1	Trichlorotrifluoroethane	0.54	9.7		U
75-69-4	Trichlorofluoromethane	0.92	9.7		U
75-01-4	Vinyl chloride	1.1	9.7		U
1330-20-7	Xylene(total)	0.68	9.7		U

B1

FORM I VOA

lw
4/1/09

FORM 1
VOLATILE ORGANICS ANALYSIS DATA SHEET

CLIENT SAMPLE NO.

MR08-IS14
4-3-4-09A

10

Lab Name: EMPIRICAL LABS Contract: CH2MHILL

Lab Code: NA Case No.: NA SAS No.: NA SDG No.: LEJEUNE039

Matrix: (soil/water) SOIL Lab Sample ID: 0901026-10

Sample wt/vol: 5.0 (g/mL) G Lab File ID: 0102610A

Level: (low/med) LOW Date Sampled: 01/05/09 14:10

% Moisture: not dec. 11 Date Analyzed: 01/13/09 18:07

GC Column: RTX-VRX ID: 0.25 (mm) Dilution Factor: 1.0

Soil Extract Volume:_____(uL) Soil Aliquot Volume: _____(uL)

CONCENTRATION UNITS: (ug/L or ug/Kg) UG/KG

CAS NO.	COMPOUND	MDL	RL	CONC	Q	
67-64-1	Acetone	2.2	11	11UJ ~~7.4~~	~~J~~ CCH	BL
71-43-2	Benzene	0.52	11		U	
75-27-4	Bromodichloromethane	0.33	11		U	
75-25-2	Bromoform	1.1	11		U	
74-83-9	Bromomethane	0.80	11		U	
78-93-3	2-Butanone	1.6	11		U	
75-15-0	Carbon disulfide	1.4	11		U	
56-23-5	Carbon tetrachloride	0.98	11		U	
108-90-7	Chlorobenzene	0.38	11		U	
75-00-3	Chloroethane	1.2	11		U	
67-66-3	Chloroform	0.61	11		U	
74-87-3	Chloromethane	0.58	11		U	
110-82-7	Cyclohexane	0.60	11		U	
124-48-1	Dibromochloromethane	0.38	11		U	
96-12-8	1,2-Dibromo-3-chloropropane	1.3	5.5		U	
106-93-4	1,2-Dibromoethane	0.48	11		U	
95-50-1	1,2-Dichlorobenzene	0.41	11		U	
541-73-1	1,3-Dichlorobenzene	0.93	11		U	
106-46-7	1,4-Dichlorobenzene	0.61	11		U	
75-71-8	Dichlorodifluoromethane	1.2	11		U	
75-34-3	1,1-Dichloroethane	0.60	11		U	
107-06-2	1,2-Dichloroethane	0.51	11		U	
75-35-4	1,1-Dichloroethene	1.3	11		U	
156-59-2	cis-1,2-Dichloroethene	1.3	11		U	
156-60-5	trans-1,2-Dichloroethene	1.2	11		U	
78-87-5	1,2-Dichloropropane	0.51	11		U	
10061-01-5	cis-1,3-Dichloropropene	0.55	11		U	
10061-02-6	trans-1,3-Dichloropropene	0.36	11		U	
100-41-4	Ethylbenzene	0.83	11		U	
591-78-6	2-Hexanone	2.6	11		U	
98-82-8	Isopropylbenzene	0.98	11		U	
79-20-9	Methyl acetate	1.8	11		U	
75-09-2	Methylene chloride	0.69	11	11U ~~2.2~~	~~JB~~	BL
108-87-2	Methyl cyclohexane	0.33	11		U	
1634-04-4	Methyl tert-butyl ether	0.36	11		U	
108-10-1	4-Methyl-2-pentanone	0.64	11		U	
100-42-5	Styrene	0.39	11		U	
79-34-5	1,1,2,2-Tetrachloroethane	0.48	11		U	
127-18-4	Tetrachloroethene	1.1	11		U	

FORM I VOA

lw
01/13/09

FORM 1
VOLATILE ORGANICS ANALYSIS DATA SHEET

CLIENT SAMPLE NO.

10

MR08-IS14
4-3-4-09A

Lab Name: EMPIRICAL LABS Contract: CH2MHILL

Lab Code: NA Case No.: NA SAS No.: NA SDG No.: LEJEUNE039

Matrix: (soil/water) SOIL Lab Sample ID: 0901026-10

Sample wt/vol: 5.0 (g/mL) G Lab File ID: 0102610A

Level: (low/med) LOW Date Sampled: 01/05/09 14:10

% Moisture: not dec. 11 Date Analyzed: 01/13/09 18:07

GC Column: RTX-VRX ID: 0.25 (mm) Dilution Factor: 1.0

Soil Extract Volume:_____(uL) Soil Aliquot Volume: _____(uL)

CONCENTRATION UNITS: (ug/L or ug/Kg) UG/KG

CAS NO.	COMPOUND	MDL	RL	CONC	Q
108-88-3	Toluene	0.95	11		U
120-82-1	1,2,4-Trichlorobenzene	0.20	11		U
71-55-6	1,1,1-Trichloroethane	1.00	11		U
79-00-5	1,1,2-Trichloroethane	0.39	11		U
79-01-6	Trichloroethene	0.94	11		U
76-13-1	Trichlorotrifluoroethane	0.61	11		U
75-69-4	Trichlorofluoromethane	1.0	11		U
75-01-4	Vinyl chloride	1.2	11		U
1330-20-7	Xylene(total)	0.78	11		U

JW
4/1/09

FORM 1
VOLATILE ORGANICS ANALYSIS DATA SHEET

CLIENT SAMPLE NO. 11

MR08-SS145-09A

Lab Name: EMPIRICAL LABS Contract: CH2MHILL

Lab Code: NA Case No.: NA SAS No.: NA SDG No.: LEJEUNE039

Matrix: (soil/water) SOIL Lab Sample ID: 0901026-11

Sample wt/vol: 3.1 (g/mL) G Lab File ID: 0102611A

Level: (low/med) LOW Date Sampled: 01/05/09 14:25

% Moisture: not dec. 6 Date Analyzed: 01/13/09 18:47

GC Column: RTX-VRX ID: 0.25 (mm) Dilution Factor: 1.0

Soil Extract Volume:_____(uL) Soil Aliquot Volume: _____(uL)

CONCENTRATION UNITS: (ug/L or ug/Kg) UG/KG

CAS NO.	COMPOUND	MDL	RL	CONC	Q
67-64-1	Acetone	3.5	17	23	UJ CCH B1
71-43-2	Benzene	0.81	17		U
75-27-4	Bromodichloromethane	0.52	17		U
75-25-2	Bromoform	1.7	17		U
74-83-9	Bromomethane	1.2	17		U
78-93-3	2-Butanone	2.4	17	3.4	J
75-15-0	Carbon disulfide	2.2	17		U
56-23-5	Carbon tetrachloride	1.5	17		U
108-90-7	Chlorobenzene	0.59	17		U
75-00-3	Chloroethane	1.9	17		U
67-66-3	Chloroform	0.95	17		U
74-87-3	Chloromethane	0.90	17		U
110-82-7	Cyclohexane	0.93	17		U
124-48-1	Dibromochloromethane	0.59	17		U
96-12-8	1,2-Dibromo-3-chloropropane	2.1	8.6		U
106-93-4	1,2-Dibromoethane	0.74	17		U
95-50-1	1,2-Dichlorobenzene	0.64	17		U
541-73-1	1,3-Dichlorobenzene	1.4	17		U
106-46-7	1,4-Dichlorobenzene	0.95	17		U
75-71-8	Dichlorodifluoromethane	1.9	17		U
75-34-3	1,1-Dichloroethane	0.93	17		U
107-06-2	1,2-Dichloroethane	0.80	17		U
75-35-4	1,1-Dichloroethene	2.1	17		U
156-59-2	cis-1,2-Dichloroethene	2.1	17		U
156-60-5	trans-1,2-Dichloroethene	1.9	17		U
78-87-5	1,2-Dichloropropane	0.80	17		U
10061-01-5	cis-1,3-Dichloropropene	0.86	17		U
10061-02-6	trans-1,3-Dichloropropene	0.55	17		U
100-41-4	Ethylbenzene	1.3	17		U
591-78-6	2-Hexanone	4.0	17		U
98-82-8	Isopropylbenzene	1.5	17		U
79-20-9	Methyl acetate	2.8	17		U
75-09-2	Methylene chloride	1.1	17	23	~~B~~ U B1
108-87-2	Methyl cyclohexane	0.52	17		U
1634-04-4	Methyl tert-butyl ether	0.55	17		U
108-10-1	4-Methyl-2-pentanone	1.0	17		U
100-42-5	Styrene	0.60	17		U
79-34-5	1,1,2,2-Tetrachloroethane	0.74	17		U
127-18-4	Tetrachloroethene	1.7	17		U

FORM I VOA

lew
4/1/09

FORM 1
VOLATILE ORGANICS ANALYSIS DATA SHEET

CLIENT SAMPLE NO. 11

MR08-SS145-09A

Lab Name: EMPIRICAL LABS Contract: CH2MHILL

Lab Code: NA Case No.: NA SAS No.: NA SDG No.: LEJEUNE039

Matrix: (soil/water) SOIL Lab Sample ID: 0901026-11

Sample wt/vol: 3.1 (g/mL) G Lab File ID: 0102611A

Level: (low/med) LOW Date Sampled: 01/05/09 14:25

% Moisture: not dec. 6 Date Analyzed: 01/13/09 18:47

GC Column: RTX-VRX ID: 0.25 (mm) Dilution Factor: 1.0

Soil Extract Volume:_____(uL) Soil Aliquot Volume: _____(uL)

CONCENTRATION UNITS: (ug/L or ug/Kg) UG/KG

CAS NO.	COMPOUND	MDL	RL	CONC	Q
108-88-3	Toluene	1.5	17		U
120-82-1	1,2,4-Trichlorobenzene	0.31	17		U
71-55-6	1,1,1-Trichloroethane	1.6	17		U
79-00-5	1,1,2-Trichloroethane	0.60	17		U
79-01-6	Trichloroethene	1.5	17		U
76-13-1	Trichlorotrifluoroethane	0.95	17		U
75-69-4	Trichlorofluoromethane	1.6	17		U
75-01-4	Vinyl chloride	1.9	17		U
1330-20-7	Xylene(total)	1.2	17		U

lcw
4/1/09

FORM 1
VOLATILE ORGANICS ANALYSIS DATA SHEET

CLIENT SAMPLE NO. 12

MR08-IS14
5-3-4-09A

Lab Name: EMPIRICAL LABS Contract: CH2MHILL

Lab Code: NA Case No.: NA SAS No.: NA SDG No.: LEJEUNE039

Matrix: (soil/water) SOIL Lab Sample ID: 0901026-12

Sample wt/vol: 4.3 (g/mL) G Lab File ID: 0102612A

Level: (low/med) LOW Date Sampled: 01/05/09 14:40

% Moisture: not dec. 12 Date Analyzed: 01/13/09 19:26

GC Column: RTX-VRX ID: 0.25 (mm) Dilution Factor: 1.0

Soil Extract Volume:_____(uL) Soil Aliquot Volume: _____(uL)

CONCENTRATION UNITS: (ug/L or ug/Kg) UG/KG

CAS NO.	COMPOUND	MDL	RL	CONC	Q
67-64-1	Acetone	2.6	13	13U ~~12~~	~~J~~ CCH B
71-43-2	Benzene	0.61	13		U
75-27-4	Bromodichloromethane	0.39	13		U
75-25-2	Bromoform	1.3	13		U
74-83-9	Bromomethane	0.94	13		U
78-93-3	2-Butanone	1.8	13		U
75-15-0	Carbon disulfide	1.7	13		U
56-23-5	Carbon tetrachloride	1.1	13		U
108-90-7	Chlorobenzene	0.44	13		U
75-00-3	Chloroethane	1.4	13		U
67-66-3	Chloroform	0.72	13		U
74-87-3	Chloromethane	0.68	13		U
110-82-7	Cyclohexane	0.70	13		U
124-48-1	Dibromochloromethane	0.44	13		U
96-12-8	1,2-Dibromo-3-chloropropane	1.6	6.5		U
106-93-4	1,2-Dibromoethane	0.56	13		U
95-50-1	1,2-Dichlorobenzene	0.48	13		U
541-73-1	1,3-Dichlorobenzene	1.1	13		U
106-46-7	1,4-Dichlorobenzene	0.72	13		U
75-71-8	Dichlorodifluoromethane	1.4	13		U
75-34-3	1,1-Dichloroethane	0.70	13		U
107-06-2	1,2-Dichloroethane	0.60	13		U
75-35-4	1,1-Dichloroethene	1.6	13		U
156-59-2	cis-1,2-Dichloroethene	1.6	13		U
156-60-5	trans-1,2-Dichloroethene	1.4	13		U
78-87-5	1,2-Dichloropropane	0.60	13		U
10061-01-5	cis-1,3-Dichloropropene	0.65	13		U
10061-02-6	trans-1,3-Dichloropropene	0.42	13		U
100-41-4	Ethylbenzene	0.98	13		U
591-78-6	2-Hexanone	3.0	13		U
98-82-8	Isopropylbenzene	1.1	13		U
79-20-9	Methyl acetate	2.1	13		U
75-09-2	Methylene chloride	0.81	13	13U	~~3.4 JB~~ B
108-87-2	Methyl cyclohexane	0.39	13		U
1634-04-4	Methyl tert-butyl ether	0.42	13		U
108-10-1	4-Methyl-2-pentanone	0.76	13		U
100-42-5	Styrene	0.46	13		U
79-34-5	1,1,2,2-Tetrachloroethane	0.56	13		U
127-18-4	Tetrachloroethene	1.3	13		U

LW
4/1/09

FORM 1
VOLATILE ORGANICS ANALYSIS DATA SHEET

CLIENT SAMPLE NO. 12

MR08-IS14
5-3-4-09A

Lab Name: EMPIRICAL LABS Contract: CH2MHILL

Lab Code: NA Case No.: NA SAS No.: NA SDG No.: LEJEUNE039

Matrix: (soil/water) SOIL Lab Sample ID: 0901026-12

Sample wt/vol: 4.3 (g/mL) G Lab File ID: 0102612A

Level: (low/med) LOW Date Sampled: 01/05/09 14:40

% Moisture: not dec. 12 Date Analyzed: 01/13/09 19:26

GC Column: RTX-VRX ID: 0.25 (mm) Dilution Factor: 1.0

Soil Extract Volume:_____(uL) Soil Aliquot Volume: _____(uL)

CONCENTRATION UNITS: (ug/L or ug/Kg) UG/KG

CAS NO.	COMPOUND	MDL	RL	CONC	Q
108-88-3	Toluene	1.1	13		U
120-82-1	1,2,4-Trichlorobenzene	0.23	13		U
71-55-6	1,1,1-Trichloroethane	1.2	13		U
79-00-5	1,1,2-Trichloroethane	0.46	13		U
79-01-6	Trichloroethene	1.1	13		U
76-13-1	Trichlorotrifluoroethane	0.72	13		U
75-69-4	Trichlorofluoromethane	1.2	13		U
75-01-4	Vinyl chloride	1.4	13		U
1330-20-7	Xylene(total)	0.91	13		U

Qw
4/1/09

FORM 1
VOLATILE ORGANICS ANALYSIS DATA SHEET

CLIENT SAMPLE NO.

MR08-SS146-09A

13

Lab Name: EMPIRICAL LABS Contract: CH2MHILL

Lab Code: NA Case No.: NA SAS No.: NA SDG No.: LEJEUNE039

Matrix: (soil/water) SOIL Lab Sample ID: 0901026-13

Sample wt/vol: 4.5 (g/mL) G Lab File ID: 0102613A

Level: (low/med) LOW Date Sampled: 01/05/09 15:10

% Moisture: not dec. 5 Date Analyzed: 01/13/09 20:05

GC Column: RTX-VRX ID: 0.25 (mm) Dilution Factor: 1.0

Soil Extract Volume:_____(uL) Soil Aliquot Volume: _____(uL)

CONCENTRATION UNITS: (ug/L or ug/Kg) UG/KG

CAS NO.	COMPOUND	MDL	RL	CONC	Q	
67-64-1	Acetone	2.4	12	12UJ ~~11~~ ~~J~~	CCH	B
71-43-2	Benzene	0.55	12	1.6	J	
75-27-4	Bromodichloromethane	0.35	12		U	
75-25-2	Bromoform	1.2	12		U	
74-83-9	Bromomethane	0.85	12		U	
78-93-3	2-Butanone	1.6	12		U	
75-15-0	Carbon disulfide	1.5	12		U	
56-23-5	Carbon tetrachloride	1.0	12		U	
108-90-7	Chlorobenzene	0.40	12		U	
75-00-3	Chloroethane	1.3	12		U	
67-66-3	Chloroform	0.65	12		U	
74-87-3	Chloromethane	0.61	12		U	
110-82-7	Cyclohexane	0.64	12	0.81	J	
124-48-1	Dibromochloromethane	0.40	12		U	
96-12-8	1,2-Dibromo-3-chloropropane	1.4	5.9		U	
106-93-4	1,2-Dibromoethane	0.51	12		U	
95-50-1	1,2-Dichlorobenzene	0.44	12		U	
541-73-1	1,3-Dichlorobenzene	0.99	12		U	
106-46-7	1,4-Dichlorobenzene	0.65	12		U	
75-71-8	Dichlorodifluoromethane	1.3	12		U	
75-34-3	1,1-Dichloroethane	0.64	12		U	
107-06-2	1,2-Dichloroethane	0.54	12		U	
75-35-4	1,1-Dichloroethene	1.4	12		U	
156-59-2	cis-1,2-Dichloroethene	1.4	12		U	
156-60-5	trans-1,2-Dichloroethene	1.3	12		U	
78-87-5	1,2-Dichloropropane	0.54	12		U	
10061-01-5	cis-1,3-Dichloropropene	0.59	12		U	
10061-02-6	trans-1,3-Dichloropropene	0.38	12		U	
100-41-4	Ethylbenzene	0.88	12	5.6	J	
591-78-6	2-Hexanone	2.7	12		U	
98-82-8	Isopropylbenzene	1.0	12		U	
79-20-9	Methyl acetate	1.9	12		U	
75-09-2	Methylene chloride	0.73	12	12U ~~2.0~~ ~~JB~~		B
108-87-2	Methyl cyclohexane	0.35	12	1.1	J	
1634-04-4	Methyl tert-butyl ether	0.38	12		U	
108-10-1	4-Methyl-2-pentanone	0.68	12		U	
100-42-5	Styrene	0.41	12		U	
79-34-5	1,1,2,2-Tetrachloroethane	0.51	12		U	
127-18-4	Tetrachloroethene	1.1	12		U	

FORM I VOA

lw
4/1/09

FORM 1
VOLATILE ORGANICS ANALYSIS DATA SHEET

CLIENT SAMPLE NO. 13

MR08-SS146-09A

Lab Name: EMPIRICAL LABS Contract: CH2MHILL

Lab Code: NA Case No.: NA SAS No.: NA SDG No.: LEJEUNE039

Matrix: (soil/water) SOIL Lab Sample ID: 0901026-13

Sample wt/vol: 4.5 (g/mL) G Lab File ID: 0102613A

Level: (low/med) LOW Date Sampled: 01/05/09 15:10

% Moisture: not dec. 5 Date Analyzed: 01/13/09 20:05

GC Column: RTX-VRX ID: 0.25 (mm) Dilution Factor: 1.0

Soil Extract Volume:_____(uL) Soil Aliquot Volume: _____(uL)

CONCENTRATION UNITS: (ug/L or ug/Kg) UG/KG

CAS NO.	COMPOUND	MDL	RL	CONC	Q
108-88-3	Toluene	1.0	12	12U ~~2.9~~	~~J~~ U
120-82-1	1,2,4-Trichlorobenzene	0.21	12		U
71-55-6	1,1,1-Trichloroethane	1.0	12		U
79-00-5	1,1,2-Trichloroethane	0.41	12		U
79-01-6	Trichloroethene	1.0	12		U
76-13-1	Trichlorotrifluoroethane	0.65	12		U
75-69-4	Trichlorofluoromethane	1.1	12		U
75-01-4	Vinyl chloride	1.3	12		U
1330-20-7	Xylene(total)	0.82	12		U

BL

FORM I VOA

kw
4/1/09

FORM 1
VOLATILE ORGANICS ANALYSIS DATA SHEET

CLIENT SAMPLE NO.

14

MR08-IS14
6-2-3-09A

Lab Name: EMPIRICAL LABS Contract: CH2MHILL

Lab Code: NA Case No.: NA SAS No.: NA SDG No.: LEJEUNE039

Matrix: (soil/water) SOIL Lab Sample ID: 0901026-14

Sample wt/vol: 5.3 (g/mL) G Lab File ID: 0102614A

Level: (low/med) LOW Date Sampled: 01/05/09 15:25

% Moisture: not dec. 14 Date Analyzed: 01/13/09 20:44

GC Column: RTX-VRX ID: 0.25 (mm) Dilution Factor: 1.0

Soil Extract Volume:_____(uL) Soil Aliquot Volume: _____(uL)

CONCENTRATION UNITS: (ug/L or ug/Kg) UG/KG

CAS NO.	COMPOUND	MDL	RL	CONC	Q	
67-64-1	Acetone	2.2	11	11U ~~8.8~~ ~~J~~ CCH		BK
71-43-2	Benzene	0.51	11	1.0	J	
75-27-4	Bromodichloromethane	0.33	11		U	
75-25-2	Bromoform	1.1	11		U	
74-83-9	Bromomethane	0.79	11		U	
78-93-3	2-Butanone	1.5	11		U	
75-15-0	Carbon disulfide	1.4	11	4.0	J	
56-23-5	Carbon tetrachloride	0.96	11		U	
108-90-7	Chlorobenzene	0.37	11		U	
75-00-3	Chloroethane	1.2	11		U	
67-66-3	Chloroform	0.60	11		U	
74-87-3	Chloromethane	0.57	11		U	
110-82-7	Cyclohexane	0.59	11		U	
124-48-1	Dibromochloromethane	0.37	11		U	
96-12-8	1,2-Dibromo-3-chloropropane	1.3	5.5		U	
106-93-4	1,2-Dibromoethane	0.47	11		U	
95-50-1	1,2-Dichlorobenzene	0.40	11		U	
541-73-1	1,3-Dichlorobenzene	0.92	11		U	
106-46-7	1,4-Dichlorobenzene	0.60	11		U	
75-71-8	Dichlorodifluoromethane	1.2	11		U	
75-34-3	1,1-Dichloroethane	0.59	11		U	
107-06-2	1,2-Dichloroethane	0.50	11		U	
75-35-4	1,1-Dichloroethene	1.3	11		U	
156-59-2	cis-1,2-Dichloroethene	1.3	11		U	
156-60-5	trans-1,2-Dichloroethene	1.2	11		U	
78-87-5	1,2-Dichloropropane	0.50	11		U	
10061-01-5	cis-1,3-Dichloropropene	0.55	11		U	
10061-02-6	trans-1,3-Dichloropropene	0.35	11		U	
100-41-4	Ethylbenzene	0.82	11	1.7	J	
591-78-6	2-Hexanone	2.5	11		U	
98-82-8	Isopropylbenzene	0.96	11		U	
79-20-9	Methyl acetate	1.8	11		U	
75-09-2	Methylene chloride	0.68	11	11U ~~1.9~~ ~~JB~~		BL
108-87-2	Methyl cyclohexane	0.33	11	0.68	J	
1634-04-4	Methyl tert-butyl ether	0.35	11		U	
108-10-1	4-Methyl-2-pentanone	0.63	11		U	
100-42-5	Styrene	0.38	11		U	
79-34-5	1,1,2,2-Tetrachloroethane	0.47	11		U	
127-18-4	Tetrachloroethene	1.1	11		U	

FORM I VOA

lw

FORM 1
VOLATILE ORGANICS ANALYSIS DATA SHEET

CLIENT SAMPLE NO. 14

MR08-IS14
6-2-3-09A

Lab Name: EMPIRICAL LABS Contract: CH2MHILL

Lab Code: NA Case No.: NA SAS No.: NA SDG No.: LEJEUNE039

Matrix: (soil/water) SOIL Lab Sample ID: 0901026-14

Sample wt/vol: 5.3 (g/mL) G Lab File ID: 0102614A

Level: (low/med) LOW Date Sampled: 01/05/09 15:25

% Moisture: not dec. 14 Date Analyzed: 01/13/09 20:44

GC Column: RTX-VRX ID: 0.25 (mm) Dilution Factor: 1.0

Soil Extract Volume:_____(uL) Soil Aliquot Volume: _____(uL)

CONCENTRATION UNITS: (ug/L or ug/Kg) UG/KG

CAS NO.	COMPOUND	MDL	RL	CONC	Q
108-88-3	Toluene	0.94	11	11U ~~1.4~~	~~J~~ U
120-82-1	1,2,4-Trichlorobenzene	0.20	11		U
71-55-6	1,1,1-Trichloroethane	0.98	11		U
79-00-5	1,1,2-Trichloroethane	0.38	11		U
79-01-6	Trichloroethene	0.93	11		U
76-13-1	Trichlorotrifluoroethane	0.60	11		U
75-69-4	Trichlorofluoromethane	1.0	11		U
75-01-4	Vinyl chloride	1.2	11		U
1330-20-7	Xylene(total)	0.76	11		U

BL

FORM I VOA

lw
4/1/09

FORM 1
VOLATILE ORGANICS ANALYSIS DATA SHEET

CLIENT SAMPLE NO. 15

MR08-SS147-09A

Lab Name: EMPIRICAL LABS Contract: CH2MHILL

Lab Code: NA Case No.: NA SAS No.: NA SDG No.: LEJEUNE039

Matrix: (soil/water) SOIL Lab Sample ID: 0901026-15

Sample wt/vol: 5.8 (g/mL) G Lab File ID: 0102615A

Level: (low/med) LOW Date Sampled: 01/05/09 15:50

% Moisture: not dec. 11 Date Analyzed: 01/14/09 02:27

GC Column: RTX-VRX ID: 0.25 (mm) Dilution Factor: 1.0

Soil Extract Volume:_____(uL) Soil Aliquot Volume: _____(uL)

CONCENTRATION UNITS: (ug/L or ug/Kg) UG/KG

CAS NO.	COMPOUND	MDL	RL	CONC	Q
67-64-1	Acetone	1.9	9.7	15	u B
71-43-2	Benzene	0.46	9.7	1.7	J
75-27-4	Bromodichloromethane	0.29	9.7		U
75-25-2	Bromoform	0.97	9.7		U
74-83-9	Bromomethane	0.70	9.7		U
78-93-3	2-Butanone	1.4	9.7		U
75-15-0	Carbon disulfide	1.3	9.7		U
56-23-5	Carbon tetrachloride	0.85	9.7		U
108-90-7	Chlorobenzene	0.33	9.7		U
75-00-3	Chloroethane	1.1	9.7		U
67-66-3	Chloroform	0.53	9.7		U
74-87-3	Chloromethane	0.50	9.7		~~U~~ UJ CCH
110-82-7	Cyclohexane	0.52	9.7	0.78	J
124-48-1	Dibromochloromethane	0.33	9.7		U
96-12-8	1,2-Dibromo-3-chloropropane	1.2	4.8		U
106-93-4	1,2-Dibromoethane	0.42	9.7		U
95-50-1	1,2-Dichlorobenzene	0.36	9.7		U
541-73-1	1,3-Dichlorobenzene	0.81	9.7		U
106-46-7	1,4-Dichlorobenzene	0.53	9.7		U
75-71-8	Dichlorodifluoromethane	1.1	9.7		U
75-34-3	1,1-Dichloroethane	0.52	9.7		U
107-06-2	1,2-Dichloroethane	0.45	9.7		U
75-35-4	1,1-Dichloroethene	1.2	9.7		U
156-59-2	cis-1,2-Dichloroethene	1.2	9.7		U
156-60-5	trans-1,2-Dichloroethene	1.1	9.7		U
78-87-5	1,2-Dichloropropane	0.45	9.7		U
10061-01-5	cis-1,3-Dichloropropene	0.48	9.7		U
10061-02-6	trans-1,3-Dichloropropene	0.31	9.7		U
100-41-4	Ethylbenzene	0.73	9.7	1.7	J
591-78-6	2-Hexanone	2.2	9.7		U
98-82-8	Isopropylbenzene	0.85	9.7		U
79-20-9	Methyl acetate	1.6	9.7		~~U~~ UJ CCH
75-09-2	Methylene chloride	0.60	9.7	9.1 UJ	~~1.6~~ ~~JB~~ CCH B
108-87-2	Methyl cyclohexane	0.29	9.7	1.3	J
1634-04-4	Methyl tert-butyl ether	0.31	9.7		U
108-10-1	4-Methyl-2-pentanone	0.56	9.7		U
100-42-5	Styrene	0.34	9.7		U
79-34-5	1,1,2,2-Tetrachloroethane	0.42	9.7		U
127-18-4	Tetrachloroethene	0.94	9.7		U

FORM I VOA

MW 4/1/09

FORM 1
VOLATILE ORGANICS ANALYSIS DATA SHEET

CLIENT SAMPLE NO. 15

MR08-SS147-09A

Lab Name: EMPIRICAL LABS Contract: CH2MHILL

Lab Code: NA Case No.: NA SAS No.: NA SDG No.: LEJEUNE039

Matrix: (soil/water) SOIL Lab Sample ID: 0901026-15

Sample wt/vol: 5.8 (g/mL) G Lab File ID: 0102615A

Level: (low/med) LOW Date Sampled: 01/05/09 15:50

% Moisture: not dec. 11 Date Analyzed: 01/14/09 02:27

GC Column: RTX-VRX ID: 0.25 (mm) Dilution Factor: 1.0

Soil Extract Volume:_____(uL) Soil Aliquot Volume: _____(uL)

CONCENTRATION UNITS: (ug/L or ug/Kg) UG/KG

CAS NO.	COMPOUND	MDL	RL	CONC	Q
108-88-3	Toluene	0.83	9.7	9.7u ~~1.9~~ ~~J~~	B
120-82-1	1,2,4-Trichlorobenzene	0.17	9.7		U
71-55-6	1,1,1-Trichloroethane	0.87	9.7		U
79-00-5	1,1,2-Trichloroethane	0.34	9.7		U
79-01-6	Trichloroethene	0.82	9.7		U
76-13-1	Trichlorotrifluoroethane	0.53	9.7		U
75-69-4	Trichlorofluoromethane	0.92	9.7		U
75-01-4	Vinyl chloride	1.1	9.7		U
1330-20-7	Xylene(total)	0.68	9.7		U

lw
4/1/09

FORM 1
VOLATILE ORGANICS ANALYSIS DATA SHEET

CLIENT SAMPLE NO. 16

MR08-IS14
7-2-3-09A

Lab Name: EMPIRICAL LABS Contract: CH2MHILL

Lab Code: NA Case No.: NA SAS No.: NA SDG No.: LEJEUNE039

Matrix: (soil/water) SOIL Lab Sample ID: 0901026-16

Sample wt/vol: 4.8 (g/mL) G Lab File ID: 0102616A

Level: (low/med) LOW Date Sampled: 01/05/09 16:05 use reanalysis

% Moisture: not dec. 11 Date Analyzed: 01/14/09 03:06

GC Column: RTX-VRX ID: 0.25 (mm) Dilution Factor: 1.0

Soil Extract Volume:_____(uL) Soil Aliquot Volume:_____(uL)

CONCENTRATION UNITS: (ug/L or ug/Kg) UG/KG

CAS NO.	COMPOUND	MDL	RL	CONC	Q
67-64-1	Acetone	2.3	12	23	UJ SSL B
71-43-2	Benzene	0.55	12	1.9	UJ SSL
75-27-4	Bromodichloromethane	0.35	12		U UJ
75-25-2	Bromoform	1.2	12		U
74-83-9	Bromomethane	0.84	12		U
78-93-3	2-Butanone	1.6	12		U
75-15-0	Carbon disulfide	1.5	12		U
56-23-5	Carbon tetrachloride	1.0	12		U
108-90-7	Chlorobenzene	0.40	12		U
75-00-3	Chloroethane	1.3	12		U
67-66-3	Chloroform	0.64	12		U
74-87-3	Chloromethane	0.60	12		U UJ CCI
110-82-7	Cyclohexane	0.63	12		U SS
124-48-1	Dibromochloromethane	0.40	12		U SS
96-12-8	1,2-Dibromo-3-chloropropane	1.4	5.8		U UJ IS
106-93-4	1,2-Dibromoethane	0.50	12		U SS
95-50-1	1,2-Dichlorobenzene	0.43	12		U UJ IS
541-73-1	1,3-Dichlorobenzene	0.98	12		U
106-46-7	1,4-Dichlorobenzene	0.64	12		U
75-71-8	Dichlorodifluoromethane	1.3	12		U SS
75-34-3	1,1-Dichloroethane	0.63	12		U
107-06-2	1,2-Dichloroethane	0.53	12		U
75-35-4	1,1-Dichloroethene	1.4	12		U
156-59-2	cis-1,2-Dichloroethene	1.4	12		U
156-60-5	trans-1,2-Dichloroethene	1.3	12		U
78-87-5	1,2-Dichloropropane	0.53	12		U
10061-01-5	cis-1,3-Dichloropropene	0.58	12		U
10061-02-6	trans-1,3-Dichloropropene	0.37	12		U
100-41-4	Ethylbenzene	0.87	12		U
591-78-6	2-Hexanone	2.7	12		U
98-82-8	Isopropylbenzene	1.0	12		U
79-20-9	Methyl acetate	1.8	12		U UJ CCH
75-09-2	Methylene chloride	0.72	12	12UJ ~~2.2~~	~~JB CCH~~ B
108-87-2	Methyl cyclohexane	0.35	12		U UJ IS
1634-04-4	Methyl tert-butyl ether	0.37	12		U
108-10-1	4-Methyl-2-pentanone	0.67	12		U
100-42-5	Styrene	0.41	12		U
79-34-5	1,1,2,2-Tetrachloroethane	0.50	12		U UJ IS
127-18-4	Tetrachloroethene	1.1	12		U SS

FORM I VOA

lw 4/1/09

FORM 1
VOLATILE ORGANICS ANALYSIS DATA SHEET

CLIENT SAMPLE NO. 16

MR08-IS14
7-2-3-09A

Lab Name: EMPIRICAL LABS Contract: CH2MHILL

Lab Code: NA Case No.: NA SAS No.: NA SDG No.: LEJEUNE039

Matrix: (soil/water) SOIL Lab Sample ID: 0901026-16

Sample wt/vol: 4.8 (g/mL) G Lab File ID: 0102616A

Level: (low/med) LOW Date Sampled: 01/05/09 16:05 use

% Moisture: not dec. 11 Date Analyzed: 01/14/09 03:06 reanalysis

GC Column: RTX-VRX ID: 0.25 (mm) Dilution Factor: 1.0

Soil Extract Volume:_____(uL) Soil Aliquot Volume:_____(uL)

CONCENTRATION UNITS: (ug/L or ug/Kg) UG/KG

CAS NO.	COMPOUND	MDL	RL	CONC	Q
108-88-3	Toluene	1.00	12		~~U~~ UJ SSL
120-82-1	1,2,4-Trichlorobenzene	0.21	12		~~U~~ UJ SSL
71-55-6	1,1,1-Trichloroethane	1.0	12		U SSL
79-00-5	1,1,2-Trichloroethane	0.41	12		U
79-01-6	Trichloroethene	0.99	12		U
76-13-1	Trichlorotrifluoroethane	0.64	12		U
75-69-4	Trichlorofluoromethane	1.1	12		U
75-01-4	Vinyl chloride	1.3	12		U
1330-20-7	Xylene(total)	0.81	12		U

R RE

FORM I VOA

lw
4/1/09

FORM 1
VOLATILE ORGANICS ANALYSIS DATA SHEET

CLIENT SAMPLE NO.

16RE

MR08-IS14
7-2-3-09ARE

Lab Name: EMPIRICAL LABS Contract: CH2MHILL

Lab Code: NA Case No.: NA SAS No.: NA SDG No.: LEJEUNE039

Matrix: (soil/water) SOIL Lab Sample ID: 0901026-16RE

Sample wt/vol: 5.0 (g/mL) G Lab File ID: 0102616B

Level: (low/med) LOW Date Sampled: 01/05/09 16:05

% Moisture: not dec. 11 Date Analyzed: 01/14/09 18:17

GC Column: RTX-VRX ID: 0.25 (mm) Dilution Factor: 1.0

Soil Extract Volume:_____(uL) Soil Aliquot Volume: _____(uL)

CONCENTRATION UNITS: (ug/L or ug/Kg) UG/KG

CAS NO.	COMPOUND	MDL	RL	CONC	Q		
67-64-1	Acetone	2.2	11	11UJ ~~3.6~~	~~J~~	ISL	BI
71-43-2	Benzene	0.53	11	0.82	J	J	ISI
75-27-4	Bromodichloromethane	0.34	11		U	UJ	
75-25-2	Bromoform	1.1	11		U		
74-83-9	Bromomethane	0.81	11		U		
78-93-3	2-Butanone	1.6	11		U		
75-15-0	Carbon disulfide	1.5	11		U		
56-23-5	Carbon tetrachloride	0.99	11		U		
108-90-7	Chlorobenzene	0.38	11		U		
75-00-3	Chloroethane	1.2	11		U		
67-66-3	Chloroform	0.62	11		U		
74-87-3	Chloromethane	0.59	11		U		
110-82-7	Cyclohexane	0.61	11	0.85	J	J	
124-48-1	Dibromochloromethane	0.38	11		U	UJ	
96-12-8	1,2-Dibromo-3-chloropropane	1.4	5.6		~~U~~	R	ISI
106-93-4	1,2-Dibromoethane	0.48	11		~~U~~	UJ	
95-50-1	1,2-Dichlorobenzene	0.42	11		U	R	ISI
541-73-1	1,3-Dichlorobenzene	0.95	11		U		
106-46-7	1,4-Dichlorobenzene	0.62	11		U		
75-71-8	Dichlorodifluoromethane	1.2	11		U	UJ	
75-34-3	1,1-Dichloroethane	0.61	11		U		
107-06-2	1,2-Dichloroethane	0.52	11		U		
75-35-4	1,1-Dichloroethene	1.4	11		U		
156-59-2	cis-1,2-Dichloroethene	1.4	11		U		
156-60-5	trans-1,2-Dichloroethene	1.2	11		U		
78-87-5	1,2-Dichloropropane	0.52	11		U		
10061-01-5	cis-1,3-Dichloropropene	0.56	11		U		
10061-02-6	trans-1,3-Dichloropropene	0.36	11		U		
100-41-4	Ethylbenzene	0.85	11	1.5	J	J	
591-78-6	2-Hexanone	2.6	11		U	UJ	
98-82-8	Isopropylbenzene	0.99	11		U		
79-20-9	Methyl acetate	1.8	11		U		
75-09-2	Methylene chloride	0.70	11	11UJ ~~2.0~~	JB	ISL	BI
108-87-2	Methyl cyclohexane	0.34	11	1.1	~~J~~	J	I
1634-04-4	Methyl tert-butyl ether	0.36	11		U	UJ	
108-10-1	4-Methyl-2-pentanone	0.65	11		U		
100-42-5	Styrene	0.40	11		U		
79-34-5	1,1,2,2-Tetrachloroethane	0.48	11		~~U~~	R	ISI
127-18-4	Tetrachloroethene	1.1	11		~~U~~	UJ	

lw
4/1/09

FORM 1
VOLATILE ORGANICS ANALYSIS DATA SHEET

CLIENT SAMPLE NO. 16RE

MR08-IS14
7-2-3-09AR

Lab Name: EMPIRICAL LABS Contract: CH2MHILL

Lab Code: NA Case No.: NA SAS No.: NA SDG No.: LEJEUNE039

Matrix: (soil/water) SOIL Lab Sample ID: 0901026-16R

Sample wt/vol: 5.0 (g/mL) G Lab File ID: 0102616B

Level: (low/med) LOW Date Sampled: 01/05/09 16:05

% Moisture: not dec. 11 Date Analyzed: 01/14/09 18:17

GC Column: RTX-VRX ID: 0.25 (mm) Dilution Factor: 1.0

Soil Extract Volume:_____(uL) Soil Aliquot Volume: _____(uL)

CONCENTRATION UNITS: (ug/L or ug/Kg) UG/KG

CAS NO.	COMPOUND	MDL	RL	CONC	Q
108-88-3	Toluene	0.97	11	11UJ ~~1.2~~	~~J~~ JSL BX
120-82-1	1,2,4-Trichlorobenzene	0.20	11		~~U~~ R JSI
71-55-6	1,1,1-Trichloroethane	1.0	11		~~U~~ UJ
79-00-5	1,1,2-Trichloroethane	0.40	11		~~U~~
79-01-6	Trichloroethene	0.96	11		~~U~~
76-13-1	Trichlorotrifluoroethane	0.62	11		~~U~~
75-69-4	Trichlorofluoromethane	1.1	11		~~U~~
75-01-4	Vinyl chloride	1.2	11		~~U~~
1330-20-7	Xylene(total)	0.79	11		~~U~~

FORM I VOA

MW 4/1/09

FORM 1
VOLATILE ORGANICS ANALYSIS DATA SHEET

CLIENT SAMPLE NO. 17

MR08-SS148-09A

Lab Name: EMPIRICAL LABS Contract: CH2MHILL

Lab Code: NA Case No.: NA SAS No.: NA SDG No.: LEJEUNE039

Matrix: (soil/water) SOIL Lab Sample ID: 0901026-17

Sample wt/vol: 5.8 (g/mL) G Lab File ID: 0102617A

Level: (low/med) LOW Date Sampled: 01/05/09 16:20

% Moisture: not dec. 22 Date Analyzed: 01/14/09 03:45

GC Column: RTX-VRX ID: 0.25 (mm) Dilution Factor: 1.0

Soil Extract Volume:_____(uL) Soil Aliquot Volume: _____(uL)

CONCENTRATION UNITS: (ug/L or ug/Kg) UG/KG

CAS NO.	COMPOUND	MDL	RL	CONC	Q
67-64-1	Acetone	2.2	11	98	
71-43-2	Benzene	0.52	11	1.7	J
75-27-4	Bromodichloromethane	0.33	11		U
75-25-2	Bromoform	1.1	11		U
74-83-9	Bromomethane	0.80	11		U
78-93-3	2-Butanone	1.5	11	5.7	J
75-15-0	Carbon disulfide	1.4	11		U
56-23-5	Carbon tetrachloride	0.97	11		U
108-90-7	Chlorobenzene	0.38	11		U
75-00-3	Chloroethane	1.2	11		U
67-66-3	Chloroform	0.61	11		U
74-87-3	Chloromethane	0.58	11		~~U~~ UJ CU
110-82-7	Cyclohexane	0.60	11	0.86	J
124-48-1	Dibromochloromethane	0.38	11		U
96-12-8	1,2-Dibromo-3-chloropropane	1.3	5.5		U
106-93-4	1,2-Dibromoethane	0.48	11		U
95-50-1	1,2-Dichlorobenzene	0.41	11		U
541-73-1	1,3-Dichlorobenzene	0.93	11		U
106-46-7	1,4-Dichlorobenzene	0.61	11		U
75-71-8	Dichlorodifluoromethane	1.2	11		U
75-34-3	1,1-Dichloroethane	0.60	11		U
107-06-2	1,2-Dichloroethane	0.51	11		U
75-35-4	1,1-Dichloroethene	1.3	11		U
156-59-2	cis-1,2-Dichloroethene	1.3	11		U
156-60-5	trans-1,2-Dichloroethene	1.2	11		U
78-87-5	1,2-Dichloropropane	0.51	11		U
10061-01-5	cis-1,3-Dichloropropene	0.55	11		U
10061-02-6	trans-1,3-Dichloropropene	0.35	11		U
100-41-4	Ethylbenzene	0.83	11	1.7	J
591-78-6	2-Hexanone	2.5	11		U
98-82-8	Isopropylbenzene	0.97	11		U
79-20-9	Methyl acetate	1.8	11		~~U~~ UJ CU
75-09-2	Methylene chloride	0.69	11	11UJ ~~1.9~~	JBCU B
108-87-2	Methyl cyclohexane	0.33	11	1.4	J
1634-04-4	Methyl tert-butyl ether	0.35	11		U
108-10-1	4-Methyl-2-pentanone	0.64	11	1.1	J
100-42-5	Styrene	0.39	11		U
79-34-5	1,1,2,2-Tetrachloroethane	0.48	11		U
127-18-4	Tetrachloroethene	1.1	11		U

FORM I VOA

lw 4/1/09

FORM 1
VOLATILE ORGANICS ANALYSIS DATA SHEET

CLIENT SAMPLE NO. 17

MR08-SS148-09A

Lab Name: EMPIRICAL LABS Contract: CH2MHILL

Lab Code: NA Case No.: NA SAS No.: NA SDG No.: LEJEUNE039

Matrix: (soil/water) SOIL Lab Sample ID: 0901026-17

Sample wt/vol: 5.8 (g/mL) G Lab File ID: 0102617A

Level: (low/med) LOW Date Sampled: 01/05/09 16:20

% Moisture: not dec. 22 Date Analyzed: 01/14/09 03:45

GC Column: RTX-VRX ID: 0.25 (mm) Dilution Factor: 1.0

Soil Extract Volume:_____(uL) Soil Aliquot Volume: _____(uL)

CONCENTRATION UNITS: (ug/L or ug/Kg) UG/KG

CAS NO.	COMPOUND	MDL	RL	CONC	Q
108-88-3	Toluene	0.95	11	11U ~~1.8~~	~~J~~
120-82-1	1,2,4-Trichlorobenzene	0.20	11		U
71-55-6	1,1,1-Trichloroethane	1.00	11		U
79-00-5	1,1,2-Trichloroethane	0.39	11		U
79-01-6	Trichloroethene	0.94	11		U
76-13-1	Trichlorotrifluoroethane	0.61	11		U
75-69-4	Trichlorofluoromethane	1.0	11		U
75-01-4	Vinyl chloride	1.2	11		U
1330-20-7	Xylene(total)	0.77	11		U

BL

FORM I VOA

4/1/09

FORM 1
VOLATILE ORGANICS ANALYSIS DATA SHEET

CLIENT SAMPLE NO. 18

MR08-IS14
8-2-3-09A

Lab Name: EMPIRICAL LABS Contract: CH2MHILL

Lab Code: NA Case No.: NA SAS No.: NA SDG No.: LEJEUNE039

Matrix: (soil/water) SOIL Lab Sample ID: 0901026-18

Sample wt/vol: 4.7 (g/mL) G Lab File ID: 0102618A

Level: (low/med) LOW Date Sampled: 01/05/09 16:40 USE

% Moisture: not dec. 12 Date Analyzed: 01/14/09 04:24 reanalysis

GC Column: RTX-VRX ID: 0.25 (mm) Dilution Factor: 1.0

Soil Extract Volume:_____(uL) Soil Aliquot Volume: _____(uL)

CONCENTRATION UNITS: (ug/L or ug/Kg) UG/KG

CAS NO.	COMPOUND	MDL	RL	CONC	Q
67-64-1	Acetone	2.4	12	18	UJ SSL BL
71-43-2	Benzene	0.56	12	1.8	~~U~~ J
75-27-4	Bromodichloromethane	0.36	12		U UJ
75-25-2	Bromoform	1.2	12		U
74-83-9	Bromomethane	0.87	12		U
78-93-3	2-Butanone	1.7	12		U
75-15-0	Carbon disulfide	1.6	12		U
56-23-5	Carbon tetrachloride	1.0	12		U
108-90-7	Chlorobenzene	0.41	12		U
75-00-3	Chloroethane	1.3	12		U
67-66-3	Chloroform	0.66	12		U
74-87-3	Chloromethane	0.63	12		~~U~~ UJ CCH
110-82-7	Cyclohexane	0.65	12		U SSL
124-48-1	Dibromochloromethane	0.41	12		U
96-12-8	1,2-Dibromo-3-chloropropane	1.4	6.0		~~U~~ UJ ISL
106-93-4	1,2-Dibromoethane	0.52	12		U SSL
95-50-1	1,2-Dichlorobenzene	0.44	12		U UJ ISL
541-73-1	1,3-Dichlorobenzene	1.0	12		U
106-46-7	1,4-Dichlorobenzene	0.66	12		U
75-71-8	Dichlorodifluoromethane	1.3	12		U SSL
75-34-3	1,1-Dichloroethane	0.65	12		U
107-06-2	1,2-Dichloroethane	0.55	12		U
75-35-4	1,1-Dichloroethene	1.4	12		U
156-59-2	cis-1,2-Dichloroethene	1.4	12		U
156-60-5	trans-1,2-Dichloroethene	1.3	12		U
78-87-5	1,2-Dichloropropane	0.55	12		U
10061-01-5	cis-1,3-Dichloropropene	0.60	12		U
10061-02-6	trans-1,3-Dichloropropene	0.38	12		U
100-41-4	Ethylbenzene	0.90	12		U
591-78-6	2-Hexanone	2.8	12		U
98-82-8	Isopropylbenzene	1.0	12		U
79-20-9	Methyl acetate	1.9	12		~~U~~ UJ CCH
75-09-2	Methylene chloride	0.75	12	12UJ	~~3.1 JB~~ CCH BL
108-87-2	Methyl cyclohexane	0.36	12		U UJ SSL
1634-04-4	Methyl tert-butyl ether	0.38	12		U
108-10-1	4-Methyl-2-pentanone	0.70	12		U
100-42-5	Styrene	0.42	12		U
79-34-5	1,1,2,2-Tetrachloroethane	0.52	12		~~U~~ UJ ISL
127-18-4	Tetrachloroethene	1.2	12		~~U~~ SSL

FORM I VOA

lw
4/1/09

FORM 1
VOLATILE ORGANICS ANALYSIS DATA SHEET

CLIENT SAMPLE NO. 18

MR08-IS14
8-2-3-09A

Lab Name: EMPIRICAL LABS Contract: CH2MHILL

Lab Code: NA Case No.: NA SAS No.: NA SDG No.: LEJEUNE039

Matrix: (soil/water) SOIL Lab Sample ID: 0901026-18

Sample wt/vol: 4.7 (g/mL) G Lab File ID: 0102618A

Level: (low/med) LOW Date Sampled: 01/05/09 16:40

% Moisture: not dec. 12 Date Analyzed: 01/14/09 04:24

GC Column: RTX-VRX ID: 0.25 (mm) Dilution Factor: 1.0

Soil Extract Volume:_____(uL) Soil Aliquot Volume: _____(uL)

CONCENTRATION UNITS: (ug/L or ug/Kg) UG/KG

CAS NO.	COMPOUND	MDL	RL	CONC	Q
108-88-3------	Toluene	1.0	12	12UJ ~~1.6~~	~~J~~ SSL B
120-82-1------	1,2,4-Trichlorobenzene	0.22	12		~~U~~UJ ISL
71-55-6-------	1,1,1-Trichloroethane	1.1	12		U SSL
79-00-5-------	1,1,2-Trichloroethane	0.42	12		U
79-01-6-------	Trichloroethene	1.0	12		U
76-13-1-------	Trichlorotrifluoroethane	0.66	12		U
75-69-4-------	Trichlorofluoromethane	1.1	12		U
75-01-4-------	Vinyl chloride	1.3	12		U
1330-20-7-----	Xylene(total)	0.84	12	1.6	J J SSL

Use Reanalysis

R RE

FORM I VOA

lw
4/1/09

FORM 1
VOLATILE ORGANICS ANALYSIS DATA SHEET

CLIENT SAMPLE NO.

MR08-IS14
8-2-3-09AR2

18R2

Lab Name: EMPIRICAL LABS Contract: CH2MHILL

Lab Code: NA Case No.: NA SAS No.: NA SDG No.: LEJEUNE039

Matrix: (soil/water) SOIL Lab Sample ID: 0901026-18R2

Sample wt/vol: 4.1 (g/mL) G Lab File ID: 0102618B

Level: (low/med) LOW Date Sampled: 01/05/09 16:40

% Moisture: not dec. 12 Date Analyzed: 01/14/09 18:56

GC Column: RTX-VRX ID: 0.25 (mm) Dilution Factor: 1.0

Soil Extract Volume:_____(uL) Soil Aliquot Volume: _____(uL)

CONCENTRATION UNITS: (ug/L or ug/Kg) UG/KG

CAS NO.	COMPOUND	MDL	RL	CONC	Q	
67-64-1	Acetone	2.8	14	26	U	B
71-43-2	Benzene	0.66	14	0.79	J	
75-27-4	Bromodichloromethane	0.42	14		~~U~~ UJ	IS
75-25-2	Bromoform	1.4	14		~~U~~ UJ	IS
74-83-9	Bromomethane	1.0	14		U	
78-93-3	2-Butanone	2.0	14		U	
75-15-0	Carbon disulfide	1.8	14		U	
56-23-5	Carbon tetrachloride	1.2	14		U	
108-90-7	Chlorobenzene	0.48	14		U	
75-00-3	Chloroethane	1.5	14		U	
67-66-3	Chloroform	0.77	14		U	
74-87-3	Chloromethane	0.73	14		U	
110-82-7	Cyclohexane	0.76	14		U	
124-48-1	Dibromochloromethane	0.48	14		~~U~~ UJ	IS
96-12-8	1,2-Dibromo-3-chloropropane	1.7	7.0		~~U~~ UJ	IS
106-93-4	1,2-Dibromoethane	0.60	14		~~U~~ UJ	↓
95-50-1	1,2-Dichlorobenzene	0.52	14		~~U~~ UJ	IS
541-73-1	1,3-Dichlorobenzene	1.2	14		U ↓	
106-46-7	1,4-Dichlorobenzene	0.77	14		~~U~~ ↓	↓
75-71-8	Dichlorodifluoromethane	1.5	14		U	
75-34-3	1,1-Dichloroethane	0.76	14		U	
107-06-2	1,2-Dichloroethane	0.64	14		U	
75-35-4	1,1-Dichloroethene	1.7	14		U	
156-59-2	cis-1,2-Dichloroethene	1.7	14		U	
156-60-5	trans-1,2-Dichloroethene	1.5	14		U	
78-87-5	1,2-Dichloropropane	0.64	14		U	
10061-01-5	cis-1,3-Dichloropropene	0.70	14		U	
10061-02-6	trans-1,3-Dichloropropene	0.45	14		~~U~~ UJ	IS
100-41-4	Ethylbenzene	1.0	14		~~U~~ UJ	IS
591-78-6	2-Hexanone	3.2	14		~~U~~ UJ	IS
98-82-8	Isopropylbenzene	1.2	14		U	
79-20-9	Methyl acetate	2.2	14		U	
75-09-2	Methylene chloride	0.87	14	14U ~~4.2~~	~~JB~~	B
108-87-2	Methyl cyclohexane	0.42	14		U	
1634-04-4	Methyl tert-butyl ether	0.45	14		U	
108-10-1	4-Methyl-2-pentanone	0.81	14		U	
100-42-5	Styrene	0.49	14		~~U~~ UJ	IS
79-34-5	1,1,2,2-Tetrachloroethane	0.60	14		~~U~~ UJ	IS
127-18-4	Tetrachloroethene	1.4	14		~~U~~ UJ	I

FORM I VOA

LMJ
4/1/09

FORM 1
VOLATILE ORGANICS ANALYSIS DATA SHEET

CLIENT SAMPLE NO. 18RE

MR08-IS14
8-2-3-09AR

Lab Name: EMPIRICAL LABS Contract: CH2MHILL

Lab Code: NA Case No.: NA SAS No.: NA SDG No.: LEJEUNE039

Matrix: (soil/water) SOIL Lab Sample ID: 0901026-18R

Sample wt/vol: 4.1 (g/mL) G Lab File ID: 0102618B

Level: (low/med) LOW Date Sampled: 01/05/09 16:40

% Moisture: not dec. 12 Date Analyzed: 01/14/09 18:56

GC Column: RTX-VRX ID: 0.25 (mm) Dilution Factor: 1.0

Soil Extract Volume:_____(uL) Soil Aliquot Volume: _____(uL)

CONCENTRATION UNITS: (ug/L or ug/Kg) UG/KG

CAS NO.	COMPOUND	MDL	RL	CONC	Q
108-88-3------	Toluene	1.2	14		~~U~~ UJ ISL
120-82-1------	1,2,4-Trichlorobenzene	0.25	14		~~U~~ UJ ISL
71-55-6-------	1,1,1-Trichloroethane	1.2	14		U
79-00-5-------	1,1,2-Trichloroethane	0.49	14		~~U~~ UJ ISL
79-01-6-------	Trichloroethene	1.2	14		U
76-13-1-------	Trichlorotrifluoroethane	0.77	14		U
75-69-4-------	Trichlorofluoromethane	1.3	14		U
75-01-4-------	Vinyl chloride	1.5	14		U
1330-20-7-----	Xylene(total)	0.98	14		~~U~~ UJ ISL

4/1/09

FORM 1
VOLATILE ORGANICS ANALYSIS DATA SHEET

CLIENT SAMPLE NO. 19

MR08-EB01
010509-SS

Lab Name: EMPIRICAL LABS Contract: CH2MHILL

Lab Code: NA Case No.: NA SAS No.: NA SDG No.: LEJEUNE039

Matrix: (soil/water) WATER Lab Sample ID: 0901026-19

Sample wt/vol: 5.000 (g/mL) ML Lab File ID: 0102619

Level: (low/med) LOW Date Sampled: _____

% Moisture: not dec. _____ Date Analyzed: 01/08/09 16:07

GC Column: RTX-VRX ID: 0.25 (mm) Dilution Factor: 1.0

Soil Extract Volume:_____(uL) Soil Aliquot Volume: _____(uL)

CONCENTRATION UNITS: (ug/L or ug/Kg) UG/L

CAS NO.	COMPOUND	MDL	RL	CONC	Q	
67-64-1	Acetone	0.84	2.5	7.8	J	CCA
71-43-2	Benzene	0.11	1.0		U	
75-27-4	Bromodichloromethane	0.10	1.0		U	
75-25-2	Bromoform	0.10	1.0		U	
74-83-9	Bromomethane	0.32	1.0		U	
78-93-3	2-Butanone	1.0	3.0		U	
75-15-0	Carbon disulfide	0.13	1.0		U	
56-23-5	Carbon tetrachloride	0.15	1.0		U	
108-90-7	Chlorobenzene	0.10	1.0		U	
75-00-3	Chloroethane	0.18	1.0		U	
67-66-3	Chloroform	0.11	1.0	2.4		
74-87-3	Chloromethane	0.29	1.0		U	
110-82-7	Cyclohexane	0.20	1.0		U	
124-48-1	Dibromochloromethane	0.10	1.0		U	
96-12-8	1,2-Dibromo-3-chloropropane	0.11	1.0		U	
106-93-4	1,2-Dibromoethane	0.10	1.0		U	
95-50-1	1,2-Dichlorobenzene	0.10	1.0		U	
541-73-1	1,3-Dichlorobenzene	0.13	1.0		U	
106-46-7	1,4-Dichlorobenzene	0.10	1.0		U	
75-71-8	Dichlorodifluoromethane	0.22	1.0		U	
75-34-3	1,1-Dichloroethane	0.12	1.0		U	
107-06-2	1,2-Dichloroethane	0.10	1.0		U	
75-35-4	1,1-Dichloroethene	0.15	1.0		U	
156-59-2	cis-1,2-Dichloroethene	0.13	1.0		U	
156-60-5	trans-1,2-Dichloroethene	0.13	1.0		U	
78-87-5	1,2-Dichloropropane	0.10	1.0		U	
10061-01-5	cis-1,3-Dichloropropene	0.11	1.0		U	
10061-02-6	trans-1,3-Dichloropropene	0.10	1.0		U	
100-41-4	Ethylbenzene	0.13	1.0		U	
591-78-6	2-Hexanone	0.30	1.0		U	
98-82-8	Isopropylbenzene	0.15	1.0		U	
79-20-9	Methyl acetate	0.30	1.0		U	
75-09-2	Methylene chloride	0.14	1.0	1.5	~~B~~ U	B
108-87-2	Methyl cyclohexane	0.17	1.0		U	
1634-04-4	Methyl tert-butyl ether	0.10	1.0		U	
108-10-1	4-Methyl-2-pentanone	0.29	1.0		U	
100-42-5	Styrene	0.10	1.0		U	
79-34-5	1,1,2,2-Tetrachloroethane	0.10	1.0		U	
127-18-4	Tetrachloroethene	0.15	1.0		U	

FORM I VOA

LW
4/1/09

FORM 1
VOLATILE ORGANICS ANALYSIS DATA SHEET

CLIENT SAMPLE NO.

MR08-EB01
010509-SS

19

Lab Name: EMPIRICAL LABS Contract: CH2MHILL

Lab Code: NA Case No.: NA SAS No.: NA SDG No.: LEJEUNE039

Matrix: (soil/water) WATER Lab Sample ID: 0901026-19

Sample wt/vol: 5.000 (g/mL) ML Lab File ID: 0102619

Level: (low/med) LOW Date Sampled: _____

% Moisture: not dec. _____ Date Analyzed: 01/08/09 16:07

GC Column: RTX-VRX ID: 0.25 (mm) Dilution Factor: 1.0

Soil Extract Volume:_____(uL) Soil Aliquot Volume: _____(uL)

CONCENTRATION UNITS: (ug/L or ug/Kg) UG/L

CAS NO.	COMPOUND	MDL	RL	CONC	Q
108-88-3	Toluene	0.10	1.0	0.11	J
120-82-1	1,2,4-Trichlorobenzene	0.10	1.0		U
71-55-6	1,1,1-Trichloroethane	0.17	1.0		U
79-00-5	1,1,2-Trichloroethane	0.10	1.0		U
79-01-6	Trichloroethene	0.13	1.0		U
76-13-1	Trichlorotrifluoroethane	0.18	1.0		U
75-69-4	Trichlorofluoromethane	0.17	1.0		U
75-01-4	Vinyl chloride	0.18	1.0		U
1330-20-7	Xylene(total)	0.22	1.0		U

RW 4/1/09

FORM 1
VOLATILE ORGANICS ANALYSIS DATA SHEET

CLIENT SAMPLE NO. 20

MR08-EB01
010509-IS

Lab Name: EMPIRICAL LABS Contract: CH2MHILL

Lab Code: NA Case No.: NA SAS No.: NA SDG No.: LEJEUNE039

Matrix: (soil/water) WATER Lab Sample ID: 0901026-20

Sample wt/vol: 5.000 (g/mL) ML Lab File ID: 0102620

Level: (low/med) LOW Date Sampled: _____

% Moisture: not dec. _____ Date Analyzed: 01/08/09 16:37

GC Column: RTX-VRX ID: 0.25 (mm) Dilution Factor: 1.0

Soil Extract Volume:_____(uL) Soil Aliquot Volume: _____(uL)

CONCENTRATION UNITS: (ug/L or ug/Kg) UG/L

CAS NO.	COMPOUND	MDL	RL	CONC	Q	
67-64-1	Acetone	0.84	2.5	7.7	J	CU
71-43-2	Benzene	0.11	1.0		U	
75-27-4	Bromodichloromethane	0.10	1.0		U	
75-25-2	Bromoform	0.10	1.0		U	
74-83-9	Bromomethane	0.32	1.0		U	
78-93-3	2-Butanone	1.0	3.0		U	
75-15-0	Carbon disulfide	0.13	1.0		U	
56-23-5	Carbon tetrachloride	0.15	1.0		U	
108-90-7	Chlorobenzene	0.10	1.0		U	
75-00-3	Chloroethane	0.18	1.0		U	
67-66-3	Chloroform	0.11	1.0	2.5		
74-87-3	Chloromethane	0.29	1.0		U	
110-82-7	Cyclohexane	0.20	1.0		U	
124-48-1	Dibromochloromethane	0.10	1.0		U	
96-12-8	1,2-Dibromo-3-chloropropane	0.11	1.0		U	
106-93-4	1,2-Dibromoethane	0.10	1.0		U	
95-50-1	1,2-Dichlorobenzene	0.10	1.0		U	
541-73-1	1,3-Dichlorobenzene	0.13	1.0		U	
106-46-7	1,4-Dichlorobenzene	0.10	1.0		U	
75-71-8	Dichlorodifluoromethane	0.22	1.0		U	
75-34-3	1,1-Dichloroethane	0.12	1.0		U	
107-06-2	1,2-Dichloroethane	0.10	1.0		U	
75-35-4	1,1-Dichloroethene	0.15	1.0		U	
156-59-2	cis-1,2-Dichloroethene	0.13	1.0		U	
156-60-5	trans-1,2-Dichloroethene	0.13	1.0		U	
78-87-5	1,2-Dichloropropane	0.10	1.0		U	
10061-01-5	cis-1,3-Dichloropropene	0.11	1.0		U	
10061-02-6	trans-1,3-Dichloropropene	0.10	1.0		U	
100-41-4	Ethylbenzene	0.13	1.0		U	
591-78-6	2-Hexanone	0.30	1.0		U	
98-82-8	Isopropylbenzene	0.15	1.0		U	
79-20-9	Methyl acetate	0.30	1.0		U	
75-09-2	Methylene chloride	0.14	1.0	1.6	~~B~~ U	B
108-87-2	Methyl cyclohexane	0.17	1.0		U	
1634-04-4	Methyl tert-butyl ether	0.10	1.0		U	
108-10-1	4-Methyl-2-pentanone	0.29	1.0		U	
100-42-5	Styrene	0.10	1.0		U	
79-34-5	1,1,2,2-Tetrachloroethane	0.10	1.0		U	
127-18-4	Tetrachloroethene	0.15	1.0		U	

lw
4/1/09

FORM 1
VOLATILE ORGANICS ANALYSIS DATA SHEET

CLIENT SAMPLE NO. 20

MR08-EB01
010509-IS

Lab Name: EMPIRICAL LABS Contract: CH2MHILL

Lab Code: NA Case No.: NA SAS No.: NA SDG No.: LEJEUNE039

Matrix: (soil/water) WATER Lab Sample ID: 0901026-20

Sample wt/vol: 5.000 (g/mL) ML Lab File ID: 0102620

Level: (low/med) LOW Date Sampled: _____

% Moisture: not dec. _____ Date Analyzed: 01/08/09 16:37

GC Column: RTX-VRX ID: 0.25 (mm) Dilution Factor: 1.0

Soil Extract Volume:_____(uL) Soil Aliquot Volume: _____(uL)

CONCENTRATION UNITS: (ug/L or ug/Kg) UG/L

CAS NO.	COMPOUND	MDL	RL	CONC	Q
108-88-3	Toluene	0.10	1.0	0.12	J
120-82-1	1,2,4-Trichlorobenzene	0.10	1.0		U
71-55-6	1,1,1-Trichloroethane	0.17	1.0		U
79-00-5	1,1,2-Trichloroethane	0.10	1.0		U
79-01-6	Trichloroethene	0.13	1.0		U
76-13-1	Trichlorotrifluoroethane	0.18	1.0		U
75-69-4	Trichlorofluoromethane	0.17	1.0		U
75-01-4	Vinyl chloride	0.18	1.0		U
1330-20-7	Xylene(total)	0.22	1.0		U

lw
4/1/09

FORM 1
VOLATILE ORGANICS ANALYSIS DATA SHEET

CLIENT SAMPLE NO.

MR08-TB01010509

21

Lab Name: EMPIRICAL LABS Contract: CH2MHILL

Lab Code: NA Case No.: NA SAS No.: NA SDG No.: LEJEUNE039

Matrix: (soil/water) WATER Lab Sample ID: 0901026-21

Sample wt/vol: 5.000 (g/mL) ML Lab File ID: 0102621

Level: (low/med) LOW Date Sampled: _____

% Moisture: not dec. _____ Date Analyzed: 01/08/09 15:37

GC Column: RTX-VRX ID: 0.25 (mm) Dilution Factor: 1.0

Soil Extract Volume: _____ (uL) Soil Aliquot Volume: _____ (uL)

CONCENTRATION UNITS: (ug/L or ug/Kg) UG/L

CAS NO.	COMPOUND	MDL	RL	CONC	Q
67-64-1	Acetone	0.84	2.5		~~U~~ UJ CC
71-43-2	Benzene	0.11	1.0		U
75-27-4	Bromodichloromethane	0.10	1.0		U
75-25-2	Bromoform	0.10	1.0		U
74-83-9	Bromomethane	0.32	1.0		U
78-93-3	2-Butanone	1.0	3.0		U
75-15-0	Carbon disulfide	0.13	1.0		U
56-23-5	Carbon tetrachloride	0.15	1.0		U
108-90-7	Chlorobenzene	0.10	1.0		U
75-00-3	Chloroethane	0.18	1.0		U
67-66-3	Chloroform	0.11	1.0		U
74-87-3	Chloromethane	0.29	1.0		U
110-82-7	Cyclohexane	0.20	1.0		U
124-48-1	Dibromochloromethane	0.10	1.0		U
96-12-8	1,2-Dibromo-3-chloropropane	0.11	1.0		U
106-93-4	1,2-Dibromoethane	0.10	1.0		U
95-50-1	1,2-Dichlorobenzene	0.10	1.0		U
541-73-1	1,3-Dichlorobenzene	0.13	1.0		U
106-46-7	1,4-Dichlorobenzene	0.10	1.0		U
75-71-8	Dichlorodifluoromethane	0.22	1.0		U
75-34-3	1,1-Dichloroethane	0.12	1.0		U
107-06-2	1,2-Dichloroethane	0.10	1.0		U
75-35-4	1,1-Dichloroethene	0.15	1.0		U
156-59-2	cis-1,2-Dichloroethene	0.13	1.0		U
156-60-5	trans-1,2-Dichloroethene	0.13	1.0		U
78-87-5	1,2-Dichloropropane	0.10	1.0		U
10061-01-5	cis-1,3-Dichloropropene	0.11	1.0		U
10061-02-6	trans-1,3-Dichloropropene	0.10	1.0		U
100-41-4	Ethylbenzene	0.13	1.0		U
591-78-6	2-Hexanone	0.30	1.0		U
98-82-8	Isopropylbenzene	0.15	1.0		U
79-20-9	Methyl acetate	0.30	1.0		U
75-09-2	Methylene chloride	0.14	1.0	3.2	~~B~~
108-87-2	Methyl cyclohexane	0.17	1.0		U
1634-04-4	Methyl tert-butyl ether	0.10	1.0		U
108-10-1	4-Methyl-2-pentanone	0.29	1.0		U
100-42-5	Styrene	0.10	1.0		U
79-34-5	1,1,2,2-Tetrachloroethane	0.10	1.0		U
127-18-4	Tetrachloroethene	0.15	1.0		U

FORM I VOA

lw
4/1/09

FORM 1
VOLATILE ORGANICS ANALYSIS DATA SHEET

CLIENT SAMPLE NO.

MR08-TB01010509

21

Lab Name: EMPIRICAL LABS Contract: CH2MHILL

Lab Code: NA Case No.: NA SAS No.: NA SDG No.: LEJEUNE039

Matrix: (soil/water) WATER Lab Sample ID: 0901026-21

Sample wt/vol: 5.000 (g/mL) ML Lab File ID: 0102621

Level: (low/med) LOW Date Sampled: _____

% Moisture: not dec. _____ Date Analyzed: 01/08/09 15:37

GC Column: RTX-VRX ID: 0.25 (mm) Dilution Factor: 1.0

Soil Extract Volume:_____(uL) Soil Aliquot Volume: _____(uL)

CONCENTRATION UNITS: (ug/L or ug/Kg) UG/L

CAS NO.	COMPOUND	MDL	RL	CONC	Q
108-88-3	Toluene	0.10	1.0		U
120-82-1	1,2,4-Trichlorobenzene	0.10	1.0		U
71-55-6	1,1,1-Trichloroethane	0.17	1.0		U
79-00-5	1,1,2-Trichloroethane	0.10	1.0		U
79-01-6	Trichloroethene	0.13	1.0		U
76-13-1	Trichlorotrifluoroethane	0.18	1.0		U
75-69-4	Trichlorofluoromethane	0.17	1.0		U
75-01-4	Vinyl chloride	0.18	1.0		U
1330-20-7	Xylene(total)	0.22	1.0		U

lws
4/1/09

ENVIRONMENTAL
Data Services, Inc.

VOLATILE ORGANIC COMPOUNDS
USEPA Region IV - Level IV Review

Site: MCB Camp Lejeune, TO-09 SDG #: LEJEUNE042

Client: CH2M HILL, Inc., Virginia Beach, Virginia Date: April 1, 2009

Laboratory: Empirical Laboratories, Nashville, Tennessee Reviewer: Nancy Weaver

EDS ID	Client Sample ID	Laboratory Sample ID	Matrix
1	MR08-SS195-09A	0901041-01	Soil
1RE	MR08-SS195-09ARE	0901041-01RE	Soil
2	MR08-IS195-6-7-09A	0901041-02	Soil
3	MR08-SS192-09A	0901041-03	Soil
4	MR08-IS192-5-6-09A	0901041-04	Soil
5	MR08-SS171-09A	0901041-05	Soil
6	MR08-IS171-8-9-09A	0901041-06	Soil
7	MR08-SS168-09A	0901041-07	Soil
7RE	MR08-SS168-09ARE	0901041-07RE	Soil
8	MR08-IS168-2-3-09A	0901041-08	Soil
9	MR08-SS151-09A	0901041-09	Soil
10	MR08-IS151-4-5-09A	0901041-10	Soil
11	MR08-SS150-09A	0901041-11	Soil
12	MR08-IS150-2-3-09A	0901041-12	Soil
12RE	MR08-IS150-2-3-09ARE	0901041-12RE	Soil
13	MR08-SS141-09A	0901041-13	Soil
13MS	MR08-SS141-09AMS	0901041-13MS	Soil
13MSD	MR08-SS141-09AMSD	0901041-13MSD	Soil
14	MR08-IS141-2-3-09A	0901041-14	Soil
14MS	MR08-IS141-2-3-09AMS	0901041-14MS	Soil
14MSD	MR08-IS141-2-3-09AMSD	0901041-14MSD	Soil
15	MR08-SS140-09A	0901041-15	Soil
18	MR08-IS209-2-3-09A	0901041-18	Soil
18RE	MR08-IS209-2-3-09ARE	0901041-18RE	Soil
19	MR08-IS209D-2-3-09A	0901041-19	Soil
20	MR08-SS210-09A	0901041-20	Soil
21	MR08-IS210-2-3-09A	0901041-21	Soil
22	MR08-EB01010609-SS	0901041-22	Water
23	MR08-TB01010609	0901041-23	Water
24	MR08-IS140-2-3-09A	0901041-24	Soil
24RE	MR08-IS140-2-3-09ARE	0901041-24RE	Soil

The USEPA "Contract Laboratory Program National Functional Guidelines for Organic Data Review," October 1999, and professional judgement were used in evaluating the data in this summary report.

Holding Times - All samples were analyzed within 14 days for preserved water and soil samples.

GC/MS Tuning - All of the BFB tunes in the initial and continuing calibrations met the percent relative abundance criteria.

Initial Calibration - The initial calibrations exhibited acceptable %RSD and mean RRF values.

Continuing Calibration - The continuing calibrations exhibited acceptable %D and RRF values except the following.

CCAL Date	Compound	%D/RRF	Qualifier	Affected Samples
1/13/09	Chloromethane	26.7%	J/UJ	1-6
	Methyl acetate	28.1%	J/UJ	1-6
	Methylene chloride	35.0%	J/UJ	1-6
1/14/09	Acetone	25.9%	J/UJ	10-12, 15, 18-21, 24
	Chloromethane	27.8%	J/UJ	10-12, 15, 18-21, 24
1/15/09	Acetone	31.4%	J/UJ	7RE, 12RE, 18RE, 24RE

Surrogates - All samples exhibited acceptable surrogate recoveries except the following.

Sample ID	Surrogate	%R	Qualifier
1	Toluene-d8	124%	J/UJ
	Bromofluorobenzene	75%	
1RE	Toluene-d8	122%	J/UJ
	Bromofluorobenzene	73%	
7RE	Bromofluorobenzene	78%	J/UJ
12	Toluene-d8	155%	J/UJ
	Bromofluorobenzene	60%	
12RE	Toluene-d8	156%	J/UJ
	Bromofluorobenzene	61%	
24	1, 2-Dichloroethane-d4	65%	J/UJ

MS/MSD - The MS/MSD sample exhibited acceptable %R and RPD values except the following.

MS/MSD Sample ID	Compound	MS/MSD %R/RPD	Qualifier
13	Chlorobenzene	73%/71%/Ok	J/UJ
	1, 2-Dichlorobenzene	70%/70%/Ok	J/UJ
	1, 3-Dichlorobenzene	Ok/65%/Ok	J/UJ
	1, 4-Dichlorobenzene	65%/62%/Ok	J/UJ
	1, 2, 4-Trichlorobenzene	50%/50%/Ok	J/UJ
	Trichloroethene	73%/Ok/Ok	J/UJ

MS/MSD Sample ID	Compound	MS/MSD %R/RPD	Qualifier
14	Acetone	Ok/Ok/32%	None for RPD alone
	Bromoform	Ok/Ok/36%	None for RPD alone
	2-Butanone	Ok/Ok/38%	None for RPD alone
	Chlorobenzene	61%/71%/47%	J/UJ
	Chloromethane	Ok/Ok/38%	None for RPD alone
	Cyclohexane	Ok/Ok/32%	None for RPD alone
	Dibromochloromethane	Ok/Ok/32%	None for RPD alone
	1, 2-Dibromo-3-chloropropane	Ok/Ok/48%	None for RPD alone
	1, 2-Dibromoethane	62%/Ok/48%	J/UJ
	1, 2-Dichlorobenzene	62%/71%/46%	J/UJ
	1, 3-Dichlorobenzene	60%/Ok/48%	J/UJ
	1, 4-Dichlorobenzene	59%/Ok/56%	J/UJ
	cis-1, 2-Dichloroethene	Ok/Ok/31%	None for RPD alone
	1, 2-Dichloropropane	Ok/Ok/34%	None for RPD alone
	trans-1, 3-Dichloropropene	Ok/Ok/39%	None for RPD alone
	Ethylbenzene	Ok/Ok/33%	None for RPD alone
	2-Hexanone	Ok/Ok/74%	None for RPD alone
	Isopropylbenzene	Ok/Ok/34%	J/UJ
	Methyl acetate	16%/Ok/126%	None for RPD alone
	Methyl cyclohexane	Ok/Ok/31%	None for RPD alone
	4-Methyl-2-pentanone	Ok/Ok/57%	None for RPD alone
	Styrene	60%/Ok/55%	J/UJ
	1, 2, 2, 2-Tetrachloroethane	Ok/Ok/53%	None for RPD alone
	Tetrachloroethene	62%/Ok/41%	J/UJ
	Toluene	69%/Ok/41%	J/UJ
	1, 2, 4-Trichloroethane	42%/58%/62%	J/UJ
	1, 1, 2-Trichloroethane	Ok/Ok/45%	None for RPD alone
	Trichloroethene	Ok/72%/Ok	J/UJ
	Xylene	Ok/Ok/31%	None for RPD alone

Laboratory Control Sample - The LCS samples exhibited acceptable %R values except the following.

LCS ID	Compound	%R	Qualifier	Affected Samples
V1BLK0113E	Chloromethane	142%	None	All ND
V1BLK0114E	Chloromethane	131%	None	All ND
V1BLK0115	Chloromethane	132%	None	All ND

Internal Standard (IS) Area Performance - All internal standards met response and retention time (RT) criteria except the following.

Sample ID	Internal Standard	Area Count	Qualifier
1	IS3-1,4-Dichlorobenzene-d4	Low	J/UJ
1RE	IS3-1,4-Dichlorobenzene-d4	Low	J/UJ
7	IS3-1,4-Dichlorobenzene-d4	Low	J/UJ
7RE	IS3-1,4-Dichlorobenzene-d4	Low	J/UJ
12	IS2-Chlorobenzene-d5	Low	J/UJ
	IS3-1,4-Dichlorobenzene-d4	Severely Low	J/R

Sample ID	Internal Standard	Area Count	Qualifier
12RE	IS2-Chlorobenzene-d5	Low	J/UJ
	IS3-1,4-Dichlorobenzene-d4	Severely Low	J/R
18	IS1-Fluorobenzene	Low	J/UJ
	IS2-Chlorobenzene-d5	Low	J/UJ
	IS3-1,4-Dichlorobenzene-d4	Low	J/UJ
24	IS2-Chlorobenzene-d5	Low	J/UJ
	IS3-1,4-Dichlorobenzene-d4	Low	J/UJ

Method Blank - The method blanks exhibited the following contamination.

Blank ID	Compound	Conc	Action Level	Qualifier	Affected Samples
V3BLK0112E	Methylene chloride	0.41 ug/L	4.1 ug/L	U	22, 23
V1BLK0113E	Methylene chloride	16 ug/kg	160 ug/kg	U	1-6
	Trichlorofluoromethane	2.3 ug/kg	11.5 ug/kg	None	All ND
V1BLK0114	Methylene chloride	1.9 ug/kg	19 ug/kg	U	1RE, 7-9, 13, 14
	Trichlorofluoromethane	2.4 ug/kg	12.0 ug/kg	U	13
V1BLK0114E	Methylene chloride	5.6 ug/kg	56 ug/kg	U	10-12, 15, 18-21, 24
	1, 2, 4-Trichlorobenzene	0.27 ug/kg	1.35 ug/kg	None	All ND
	Trichlorofluoromethane	2.9 ug/kg	14.5 ug/kg	None	All ND
V1BLK0115	Methylene chloride	2.0 ug/kg	20 ug/kg	U	7RE, 12RE, 18RE, 24RE

Trip, Field, Equipment Blank - Field QC results are summarized below.

Blank ID	Compound	Conc. ug/L	Action Level ug/kg	Qualifier	Affected Samples
MR08-EB01010609-SS	None - ND	-	-	-	-
MR08-TB01010609	Trichlorofluoromethane	0.62	3.1	U	7RE
MR08-FB011011009	Toluene	20	100	U	3, 4, 7RE, 9, 11, 15

Field Duplicates - Field duplicate results are summarized below.

Compound	MR08-IS209-2-3-09RE ug/kg	MR08-IS209D-2-3-09 ug/kg	RPD	Qualifier
Acetone	10	6.7	40%	None

Tentatively Identified Compounds (TICs) - TICs were not reported.

Compound Quantitation - Several samples exhibited internal standard and/or surrogate deficiencies. These samples were reanalyzed at various dilutions. Refer to Form Is for which were used for reporting purposes.

FORM 1
VOLATILE ORGANICS ANALYSIS DATA SHEET

CLIENT SAMPLE NO.

MR08-SS195-09A

Lab Name: EMPIRICAL LABS Contract: CH2MHIL

Lab Code: NA Case No.: NA SAS No.: NA SDG No.: LEJEUNE042

Matrix: (soil/water) SOIL Lab Sample ID: 0901041-01

Sample wt/vol: 5.0 (g/mL) G Lab File ID: 0104101A

Level: (low/med) LOW Date Sampled: 01/06/09 08:25

% Moisture: not dec. 16 Date Analyzed: 01/14/09 05:04

GC Column: RTX-VRX ID: 0.25 (mm) Dilution Factor: 1.0

Soil Extract Volume:_____(uL) Soil Aliquot Volume: _____(uL)

CONCENTRATION UNITS: (ug/L or ug/Kg) UG/KG

CAS NO.	COMPOUND	MDL	RL	CONC	Q	
67-64-1	Acetone	2.4	12	310	J	SSL
71-43-2	Benzene	0.56	12		U UJ	
75-27-4	Bromodichloromethane	0.35	12		U	
75-25-2	Bromoform	1.2	12		U	
74-83-9	Bromomethane	0.85	12		U	
78-93-3	2-Butanone	1.6	12	5.0	J J	
75-15-0	Carbon disulfide	1.5	12		U UJ	
56-23-5	Carbon tetrachloride	1.0	12		U	
108-90-7	Chlorobenzene	0.40	12		U	
75-00-3	Chloroethane	1.3	12		U	
67-66-3	Chloroform	0.65	12		U	
74-87-3	Chloromethane	0.61	12		~~U~~ UJ	CCH
110-82-7	Cyclohexane	0.64	12		U UJ	SSL
124-48-1	Dibromochloromethane	0.40	12		U UJ	SSL
96-12-8	1,2-Dibromo-3-chloropropane	1.4	5.9		~~U~~ UJ	JSL
106-93-4	1,2-Dibromoethane	0.51	12		~~U~~ UJ	SSL
95-50-1	1,2-Dichlorobenzene	0.44	12		~~U~~ UJ	JSL
541-73-1	1,3-Dichlorobenzene	0.99	12		~~U~~	
106-46-7	1,4-Dichlorobenzene	0.65	12		~~U~~	
75-71-8	Dichlorodifluoromethane	1.3	12		~~U~~ UJ	SSL
75-34-3	1,1-Dichloroethane	0.64	12		U	
107-06-2	1,2-Dichloroethane	0.54	12		U	
75-35-4	1,1-Dichloroethene	1.4	12		U	
156-59-2	cis-1,2-Dichloroethene	1.4	12		U	
156-60-5	trans-1,2-Dichloroethene	1.3	12		U	
78-87-5	1,2-Dichloropropane	0.54	12		U	
10061-01-5	cis-1,3-Dichloropropene	0.59	12		U	
10061-02-6	trans-1,3-Dichloropropene	0.38	12		U	
100-41-4	Ethylbenzene	0.88	12		U	
591-78-6	2-Hexanone	2.7	12		U	
98-82-8	Isopropylbenzene	1.0	12		U	
79-20-9	Methyl acetate	1.9	12		~~U~~ UJ	CCH
75-09-2	Methylene chloride	0.73	12	12UJ 3.3	~~U~~ JB	CCH ~~B~~
108-87-2	Methyl cyclohexane	0.35	12		U UJ	SSL
1634-04-4	Methyl tert-butyl ether	0.38	12		U	
108-10-1	4-Methyl-2-pentanone	0.68	12		U	
100-42-5	Styrene	0.41	12		U	
79-34-5	1,1,2,2-Tetrachloroethane	0.51	12		~~U~~ UJ	JSL
127-18-4	Tetrachloroethene	1.1	12		~~U~~ UJ	SSL

FORM I VOA

lws 01/09

FORM 1
VOLATILE ORGANICS ANALYSIS DATA SHEET

CLIENT SAMPLE NO.

MR08-SS195-09A

Lab Name: EMPIRICAL LABS Contract: CH2MHIL

Lab Code: NA Case No.: NA SAS No.: NA SDG No.: LEJEUNE042

Matrix: (soil/water) SOIL Lab Sample ID: 0901041-01

Sample wt/vol: 5.0 (g/mL) G Lab File ID: 0104101A

Level: (low/med) LOW Date Sampled: 01/06/09 08:25

% Moisture: not dec. 16 Date Analyzed: 01/14/09 05:04

GC Column: RTX-VRX ID: 0.25 (mm) Dilution Factor: 1.0

Soil Extract Volume:_____(uL) Soil Aliquot Volume: _____(uL)

CONCENTRATION UNITS: (ug/L or ug/Kg) UG/KG

CAS NO.	COMPOUND	MDL	RL	CONC	Q	
108-88-3	Toluene	1.0	12		~~U~~ UJ	SSL
120-82-1	1,2,4-Trichlorobenzene	0.21	12		~~U~~ UJ	ISL
71-55-6	1,1,1-Trichloroethane	1.1	12		U	SSL
79-00-5	1,1,2-Trichloroethane	0.41	12		U	
79-01-6	Trichloroethene	1.0	12		U	
76-13-1	Trichlorotrifluoroethane	0.65	12		U	
75-69-4	Trichlorofluoromethane	1.1	12		U	
75-01-4	Vinyl chloride	1.3	12		U	
1330-20-7	Xylene(total)	0.83	12		U	

lw 4/1/09

FORM 1
VOLATILE ORGANICS ANALYSIS DATA SHEET

CLIENT SAMPLE NO. 1RE

MR08-SS195-09AR

Lab Name: EMPIRICAL LABS Contract: CH2MHIL

Lab Code: NA Case No.: NA SAS No.: NA SDG No.: LEJEUNE042

Matrix: (soil/water) SOIL Lab Sample ID: 0901041-01R

Sample wt/vol: 3.9 (g/mL) G Lab File ID: 0104101B

Level: (low/med) LOW Date Sampled: 01/06/09 08:25

% Moisture: not dec. 16 Date Analyzed: 01/14/09 17:38 use original

GC Column: RTX-VRX ID: 0.25 (mm) Dilution Factor: 1.0

Soil Extract Volume:_____(uL) Soil Aliquot Volume: _____(uL)

CONCENTRATION UNITS: (ug/L or ug/Kg) UG/KG

CAS NO.	COMPOUND	MDL	RL	CONC	Q	
67-64-1	Acetone	3.0	15	200	J	SSL
71-43-2	Benzene	0.71	15		U UJ	
75-27-4	Bromodichloromethane	0.46	15		U	
75-25-2	Bromoform	1.5	15		U	
74-83-9	Bromomethane	1.1	15		U	
78-93-3	2-Butanone	2.1	15	4.0	J J	
75-15-0	Carbon disulfide	2.0	15		U UJ	
56-23-5	Carbon tetrachloride	1.3	15		U	
108-90-7	Chlorobenzene	0.52	15		U	
75-00-3	Chloroethane	1.7	15		U	
67-66-3	Chloroform	0.83	15		U	
74-87-3	Chloromethane	0.79	15		U UJ	CC
110-82-7	Cyclohexane	0.82	15		U	SS
124-48-1	Dibromochloromethane	0.52	15		U	SSL
96-12-8	1,2-Dibromo-3-chloropropane	1.8	7.6		U UJ	IS
106-93-4	1,2-Dibromoethane	0.65	15		U	SSI
95-50-1	1,2-Dichlorobenzene	0.56	15		U UJ	ISI
541-73-1	1,3-Dichlorobenzene	1.3	15		U	
106-46-7	1,4-Dichlorobenzene	0.83	15		U	
75-71-8	Dichlorodifluoromethane	1.7	15		U	SS
75-34-3	1,1-Dichloroethane	0.82	15		U	
107-06-2	1,2-Dichloroethane	0.70	15		U	
75-35-4	1,1-Dichloroethene	1.8	15		U	
156-59-2	cis-1,2-Dichloroethene	1.8	15		U	
156-60-5	trans-1,2-Dichloroethene	1.7	15		U	
78-87-5	1,2-Dichloropropane	0.70	15		U	
10061-01-5	cis-1,3-Dichloropropene	0.76	15		U	
10061-02-6	trans-1,3-Dichloropropene	0.48	15		U	
100-41-4	Ethylbenzene	1.1	15		U	
591-78-6	2-Hexanone	3.5	15		U	
98-82-8	Isopropylbenzene	1.3	15		U	
79-20-9	Methyl acetate	2.4	15		U UJ	CC
75-09-2	Methylene chloride	0.94	15	15 UJ ~~4.1~~	~~JB~~ SSL	BL
108-87-2	Methyl cyclohexane	0.46	15		U UJ	SSI
1634-04-4	Methyl tert-butyl ether	0.48	15		U	
108-10-1	4-Methyl-2-pentanone	0.88	15		U	
100-42-5	Styrene	0.53	15		U	
79-34-5	1,1,2,2-Tetrachloroethane	0.65	15		U UJ	IS
127-18-4	Tetrachloroethene	1.5	15		U	SSI

FORM I VOA

fw 4/1/09

FORM 1
VOLATILE ORGANICS ANALYSIS DATA SHEET

CLIENT SAMPLE NO. 1RE

MR08-SS195-09AR

Lab Name: EMPIRICAL LABS Contract: CH2MHIL

Lab Code: NA Case No.: NA SAS No.: NA SDG No.: LEJEUNE042

Matrix: (soil/water) SOIL Lab Sample ID: 0901041-01R

Sample wt/vol: 3.9 (g/mL) G Lab File ID: 0104101B

Level: (low/med) LOW Date Sampled: 01/06/09 08:25 Use

% Moisture: not dec. 16 Date Analyzed: 01/14/09 17:38 Original

GC Column: RTX-VRX ID: 0.25 (mm) Dilution Factor: 1.0

Soil Extract Volume:_____(uL) Soil Aliquot Volume: _____(uL)

CONCENTRATION UNITS: (ug/L or ug/Kg) UG/KG

CAS NO.	COMPOUND	MDL	RL	CONC	Q	
108-88-3	Toluene	1.3	15		~~U~~ UJ	SSI
120-82-1	1,2,4-Trichlorobenzene	0.27	15		~~U~~ UJ	ISI
71-55-6	1,1,1-Trichloroethane	1.4	15		U	SSI
79-00-5	1,1,2-Trichloroethane	0.53	15		U	
79-01-6	Trichloroethene	1.3	15		U	
76-13-1	Trichlorotrifluoroethane	0.83	15		U	
75-69-4	Trichlorofluoromethane	1.4	15		U	
75-01-4	Vinyl chloride	1.7	15		U	
1330-20-7	Xylene(total)	1.1	15		U	

R RE

FORM I VOA

fw 4/1/09

FORM 1
VOLATILE ORGANICS ANALYSIS DATA SHEET

CLIENT SAMPLE NO. 2

MR08-IS19
5-6-7-09A

Lab Name: EMPIRICAL LABS Contract: CH2MHIL

Lab Code: NA Case No.: NA SAS No.: NA SDG No.: LEJEUNE042

Matrix: (soil/water) SOIL Lab Sample ID: 0901041-02

Sample wt/vol: 5.6 (g/mL) G Lab File ID: 0104102A

Level: (low/med) LOW Date Sampled: 01/06/09 08:45

% Moisture: not dec. 9 Date Analyzed: 01/14/09 05:43

GC Column: RTX-VRX ID: 0.25 (mm) Dilution Factor: 1.0

Soil Extract Volume:_____(uL) Soil Aliquot Volume: _____(uL)

CONCENTRATION UNITS: (ug/L or ug/Kg) UG/KG

CAS NO.	COMPOUND	MDL	RL	CONC	Q
67-64-1	Acetone	2.0	9.9	4.9	J
71-43-2	Benzene	0.46	9.9		U
75-27-4	Bromodichloromethane	0.30	9.9		U
75-25-2	Bromoform	0.99	9.9		U
74-83-9	Bromomethane	0.71	9.9		U
78-93-3	2-Butanone	1.4	9.9		U
75-15-0	Carbon disulfide	1.3	9.9		U
56-23-5	Carbon tetrachloride	0.87	9.9		U
108-90-7	Chlorobenzene	0.34	9.9		U
75-00-3	Chloroethane	1.1	9.9		U
67-66-3	Chloroform	0.54	9.9		U
74-87-3	Chloromethane	0.52	9.9		~~U~~ UJ CCH
110-82-7	Cyclohexane	0.53	9.9		U
124-48-1	Dibromochloromethane	0.34	9.9		U
96-12-8	1,2-Dibromo-3-chloropropane	1.2	5.0		U
106-93-4	1,2-Dibromoethane	0.42	9.9		U
95-50-1	1,2-Dichlorobenzene	0.37	9.9		U
541-73-1	1,3-Dichlorobenzene	0.83	9.9		U
106-46-7	1,4-Dichlorobenzene	0.54	9.9		U
75-71-8	Dichlorodifluoromethane	1.1	9.9		U
75-34-3	1,1-Dichloroethane	0.53	9.9		U
107-06-2	1,2-Dichloroethane	0.46	9.9		U
75-35-4	1,1-Dichloroethene	1.2	9.9		U
156-59-2	cis-1,2-Dichloroethene	1.2	9.9		U
156-60-5	trans-1,2-Dichloroethene	1.1	9.9		U
78-87-5	1,2-Dichloropropane	0.46	9.9		U
10061-01-5	cis-1,3-Dichloropropene	0.50	9.9		U
10061-02-6	trans-1,3-Dichloropropene	0.32	9.9		U
100-41-4	Ethylbenzene	0.74	9.9		U
591-78-6	2-Hexanone	2.3	9.9		U
98-82-8	Isopropylbenzene	0.87	9.9		U
79-20-9	Methyl acetate	1.6	9.9		~~U~~ UJ CCH
75-09-2	Methylene chloride	0.61	9.9	9.9 ~~3.1~~	~~JB~~ CCH BL
108-87-2	Methyl cyclohexane	0.30	9.9		U
1634-04-4	Methyl tert-butyl ether	0.32	9.9		U
108-10-1	4-Methyl-2-pentanone	0.57	9.9		U
100-42-5	Styrene	0.35	9.9		U
79-34-5	1,1,2,2-Tetrachloroethane	0.42	9.9		U
127-18-4	Tetrachloroethene	0.96	9.9		U

FORM I VOA

LW 4/1/09

FORM 1
VOLATILE ORGANICS ANALYSIS DATA SHEET

CLIENT SAMPLE NO. 2

MR08-IS19
5-6-7-09A

Lab Name: EMPIRICAL LABS Contract: CH2MHIL

Lab Code: NA Case No.: NA SAS No.: NA SDG No.: LEJEUNE042

Matrix: (soil/water) SOIL Lab Sample ID: 0901041-02

Sample wt/vol: 5.6 (g/mL) G Lab File ID: 0104102A

Level: (low/med) LOW Date Sampled: 01/06/09 08:45

% Moisture: not dec. 9 Date Analyzed: 01/14/09 05:43

GC Column: RTX-VRX ID: 0.25 (mm) Dilution Factor: 1.0

Soil Extract Volume:_____(uL) Soil Aliquot Volume: _____(uL)

CONCENTRATION UNITS: (ug/L or ug/Kg) UG/KG

CAS NO.	COMPOUND	MDL	RL	CONC	Q
108-88-3	Toluene	0.85	9.9		U
120-82-1	1,2,4-Trichlorobenzene	0.18	9.9		U
71-55-6	1,1,1-Trichloroethane	0.89	9.9		U
79-00-5	1,1,2-Trichloroethane	0.35	9.9		U
79-01-6	Trichloroethene	0.84	9.9		U
76-13-1	Trichlorotrifluoroethane	0.54	9.9		U
75-69-4	Trichlorofluoromethane	0.94	9.9		U
75-01-4	Vinyl chloride	1.1	9.9		U
1330-20-7	Xylene(total)	0.69	9.9		U

4/1/09

FORM 1
VOLATILE ORGANICS ANALYSIS DATA SHEET

CLIENT SAMPLE NO. 3

MR08-SS192-09A

Lab Name: EMPIRICAL LABS Contract: CH2MHIL

Lab Code: NA Case No.: NA SAS No.: NA SDG No.: LEJEUNE042

Matrix: (soil/water) SOIL Lab Sample ID: 0901041-03

Sample wt/vol: 5.1 (g/mL) G Lab File ID: 0104103A

Level: (low/med) LOW Date Sampled: 01/06/09 09:00

% Moisture: not dec. 26 Date Analyzed: 01/14/09 06:22

GC Column: RTX-VRX ID: 0.25 (mm) Dilution Factor: 1.0

Soil Extract Volume:_____(uL) Soil Aliquot Volume: _____(uL)

CONCENTRATION UNITS: (ug/L or ug/Kg) UG/KG

CAS NO.	COMPOUND	MDL	RL	CONC	Q
67-64-1	Acetone	2.7	13	190	
71-43-2	Benzene	0.62	13	0.97	J
75-27-4	Bromodichloromethane	0.40	13		U
75-25-2	Bromoform	1.3	13		U
74-83-9	Bromomethane	0.96	13		U
78-93-3	2-Butanone	1.9	13		U
75-15-0	Carbon disulfide	1.7	13		U
56-23-5	Carbon tetrachloride	1.2	13		U
108-90-7	Chlorobenzene	0.45	13		U
75-00-3	Chloroethane	1.5	13		U
67-66-3	Chloroform	0.73	13		U
74-87-3	Chloromethane	0.69	13		~~U~~ UJ CC
110-82-7	Cyclohexane	0.72	13		U
124-48-1	Dibromochloromethane	0.45	13		U
96-12-8	1,2-Dibromo-3-chloropropane	1.6	6.6		U
106-93-4	1,2-Dibromoethane	0.57	13		U
95-50-1	1,2-Dichlorobenzene	0.49	13		U
541-73-1	1,3-Dichlorobenzene	1.1	13		U
106-46-7	1,4-Dichlorobenzene	0.73	13		U
75-71-8	Dichlorodifluoromethane	1.5	13		U
75-34-3	1,1-Dichloroethane	0.72	13		U
107-06-2	1,2-Dichloroethane	0.61	13		U
75-35-4	1,1-Dichloroethene	1.6	13		U
156-59-2	cis-1,2-Dichloroethene	1.6	13		U
156-60-5	trans-1,2-Dichloroethene	1.5	13		U
78-87-5	1,2-Dichloropropane	0.61	13		U
10061-01-5	cis-1,3-Dichloropropene	0.66	13		U
10061-02-6	trans-1,3-Dichloropropene	0.42	13		U
100-41-4	Ethylbenzene	1.00	13	1.1	J
591-78-6	2-Hexanone	3.1	13		U
98-82-8	Isopropylbenzene	1.2	13		U
79-20-9	Methyl acetate	2.1	13		~~U~~ UJ CC
75-09-2	Methylene chloride	0.82	13	13 UJ ~~3.6 JB~~ CCH	~~Bc~~
108-87-2	Methyl cyclohexane	0.40	13	0.43	J
1634-04-4	Methyl tert-butyl ether	0.42	13		U
108-10-1	4-Methyl-2-pentanone	0.77	13		U
100-42-5	Styrene	0.46	13		U
79-34-5	1,1,2,2-Tetrachloroethane	0.57	13		U
127-18-4	Tetrachloroethene	1.3	13		U

FORM I VOA

QW
4/1/09

FORM 1
VOLATILE ORGANICS ANALYSIS DATA SHEET

CLIENT SAMPLE NO. 3

MR08-SS192-09A

Lab Name: EMPIRICAL LABS Contract: CH2MHIL

Lab Code: NA Case No.: NA SAS No.: NA SDG No.: LEJEUNE042

Matrix: (soil/water) SOIL Lab Sample ID: 0901041-03

Sample wt/vol: 5.1 (g/mL) G Lab File ID: 0104103A

Level: (low/med) LOW Date Sampled: 01/06/09 09:00

% Moisture: not dec. 26 Date Analyzed: 01/14/09 06:22

GC Column: RTX-VRX ID: 0.25 (mm) Dilution Factor: 1.0

Soil Extract Volume:_____(uL) Soil Aliquot Volume: _____(uL)

CONCENTRATION UNITS: (ug/L or ug/Kg) UG/KG

CAS NO.	COMPOUND	MDL	RL	CONC	Q
108-88-3	Toluene	1.1	13	13U ~~4.1~~ ~~J~~	BL
120-82-1	1,2,4-Trichlorobenzene	0.24	13		U
71-55-6	1,1,1-Trichloroethane	1.2	13		U
79-00-5	1,1,2-Trichloroethane	0.46	13		U
79-01-6	Trichloroethene	1.1	13		U
76-13-1	Trichlorotrifluoroethane	0.73	13		U
75-69-4	Trichlorofluoromethane	1.3	13		U
75-01-4	Vinyl chloride	1.5	13		U
1330-20-7	Xylene(total)	0.93	13		U

fw
4/1/09

FORM 1
VOLATILE ORGANICS ANALYSIS DATA SHEET

CLIENT SAMPLE NO. 4

MR08-IS19
2-5-6-09A

Lab Name: EMPIRICAL LABS Contract: CH2MHIL

Lab Code: NA Case No.: NA SAS No.: NA SDG No.: LEJEUNE042

Matrix: (soil/water) SOIL Lab Sample ID: 0901041-04

Sample wt/vol: 4.5 (g/mL) G Lab File ID: 0104104A

Level: (low/med) LOW Date Sampled: 01/06/09 09:15

% Moisture: not dec. 14 Date Analyzed: 01/14/09 07:01

GC Column: RTX-VRX ID: 0.25 (mm) Dilution Factor: 1.0

Soil Extract Volume:_____(uL) Soil Aliquot Volume: _____(uL)

CONCENTRATION UNITS: (ug/L or ug/Kg) UG/KG

CAS NO.	COMPOUND	MDL	RL	CONC	Q
67-64-1	Acetone	2.6	13	52	
71-43-2	Benzene	0.61	13		U
75-27-4	Bromodichloromethane	0.39	13		U
75-25-2	Bromoform	1.3	13		U
74-83-9	Bromomethane	0.94	13		U
78-93-3	2-Butanone	1.8	13		U
75-15-0	Carbon disulfide	1.7	13		U
56-23-5	Carbon tetrachloride	1.1	13		U
108-90-7	Chlorobenzene	0.44	13		U
75-00-3	Chloroethane	1.4	13		U
67-66-3	Chloroform	0.72	13		U
74-87-3	Chloromethane	0.68	13		~~U~~ UJ CU
110-82-7	Cyclohexane	0.70	13		U
124-48-1	Dibromochloromethane	0.44	13		U
96-12-8	1,2-Dibromo-3-chloropropane	1.6	6.5		U
106-93-4	1,2-Dibromoethane	0.56	13		U
95-50-1	1,2-Dichlorobenzene	0.48	13		U
541-73-1	1,3-Dichlorobenzene	1.1	13		U
106-46-7	1,4-Dichlorobenzene	0.72	13		U
75-71-8	Dichlorodifluoromethane	1.4	13		U
75-34-3	1,1-Dichloroethane	0.70	13		U
107-06-2	1,2-Dichloroethane	0.60	13		U
75-35-4	1,1-Dichloroethene	1.6	13		U
156-59-2	cis-1,2-Dichloroethene	1.6	13		U
156-60-5	trans-1,2-Dichloroethene	1.4	13		U
78-87-5	1,2-Dichloropropane	0.60	13		U
10061-01-5	cis-1,3-Dichloropropene	0.65	13		U
10061-02-6	trans-1,3-Dichloropropene	0.42	13		U
100-41-4	Ethylbenzene	0.98	13		U
591-78-6	2-Hexanone	3.0	13		U
98-82-8	Isopropylbenzene	1.1	13		U
79-20-9	Methyl acetate	2.1	13		~~U~~ UJ CU
75-09-2	Methylene chloride	0.81	13	13UJ ~~4.2~~	~~JB~~ CCH ~~B~~
108-87-2	Methyl cyclohexane	0.39	13		U
1634-04-4	Methyl tert-butyl ether	0.42	13		U
108-10-1	4-Methyl-2-pentanone	0.75	13		U
100-42-5	Styrene	0.46	13		U
79-34-5	1,1,2,2-Tetrachloroethane	0.56	13		U
127-18-4	Tetrachloroethene	1.3	13		U

FORM I VOA

lw
4/1/09

FORM 1
VOLATILE ORGANICS ANALYSIS DATA SHEET

CLIENT SAMPLE NO. 4

MR08-IS19
2-5-6-09A

Lab Name: EMPIRICAL LABS Contract: CH2MHIL

Lab Code: NA Case No.: NA SAS No.: NA SDG No.: LEJEUNE042

Matrix: (soil/water) SOIL Lab Sample ID: 0901041-04

Sample wt/vol: 4.5 (g/mL) G Lab File ID: 0104104A

Level: (low/med) LOW Date Sampled: 01/06/09 09:15

% Moisture: not dec. 14 Date Analyzed: 01/14/09 07:01

GC Column: RTX-VRX ID: 0.25 (mm) Dilution Factor: 1.0

Soil Extract Volume:_____(uL) Soil Aliquot Volume: _____(uL)

CONCENTRATION UNITS: (ug/L or ug/Kg) UG/KG

CAS NO.	COMPOUND	MDL	RL	CONC	Q
108-88-3	Toluene	1.1	13	13U ~~1.3~~	~~J~~
120-82-1	1,2,4-Trichlorobenzene	0.23	13		U
71-55-6	1,1,1-Trichloroethane	1.2	13		U
79-00-5	1,1,2-Trichloroethane	0.46	13		U
79-01-6	Trichloroethene	1.1	13		U
76-13-1	Trichlorotrifluoroethane	0.72	13		U
75-69-4	Trichlorofluoromethane	1.2	13		U
75-01-4	Vinyl chloride	1.4	13		U
1330-20-7	Xylene(total)	0.91	13		U

BL

FORM I VOA

lw
4/1/09

FORM 1
VOLATILE ORGANICS ANALYSIS DATA SHEET

CLIENT SAMPLE NO. 5

MR08-SS171-09A

Lab Name: EMPIRICAL LABS Contract: CH2MHIL

Lab Code: NA Case No.: NA SAS No.: NA SDG No.: LEJEUNE042

Matrix: (soil/water) SOIL Lab Sample ID: 0901041-05

Sample wt/vol: 5.1 (g/mL) G Lab File ID: 0104105A

Level: (low/med) LOW Date Sampled: 01/06/09 09:30

% Moisture: not dec. 13 Date Analyzed: 01/14/09 07:41

GC Column: RTX-VRX ID: 0.25 (mm) Dilution Factor: 1.0

Soil Extract Volume:_____(uL) Soil Aliquot Volume: _____(uL)

CONCENTRATION UNITS: (ug/L or ug/Kg) UG/KG

CAS NO.	COMPOUND	MDL	RL	CONC	Q
67-64-1	Acetone	2.3	11	120	
71-43-2	Benzene	0.54	11		U
75-27-4	Bromodichloromethane	0.34	11		U
75-25-2	Bromoform	1.1	11		U
74-83-9	Bromomethane	0.82	11		U
78-93-3	2-Butanone	1.6	11	3.4	J
75-15-0	Carbon disulfide	1.5	11		U
56-23-5	Carbon tetrachloride	1.0	11		U
108-90-7	Chlorobenzene	0.39	11		U
75-00-3	Chloroethane	1.2	11		U
67-66-3	Chloroform	0.63	11		U
74-87-3	Chloromethane	0.59	11		~~U~~ UJ CCH
110-82-7	Cyclohexane	0.61	11		U
124-48-1	Dibromochloromethane	0.39	11		U
96-12-8	1,2-Dibromo-3-chloropropane	1.4	5.7		U
106-93-4	1,2-Dibromoethane	0.49	11		U
95-50-1	1,2-Dichlorobenzene	0.42	11		U
541-73-1	1,3-Dichlorobenzene	0.96	11		U
106-46-7	1,4-Dichlorobenzene	0.63	11		U
75-71-8	Dichlorodifluoromethane	1.2	11		U
75-34-3	1,1-Dichloroethane	0.61	11		U
107-06-2	1,2-Dichloroethane	0.52	11		U
75-35-4	1,1-Dichloroethene	1.4	11		U
156-59-2	cis-1,2-Dichloroethene	1.4	11		U
156-60-5	trans-1,2-Dichloroethene	1.2	11		U
78-87-5	1,2-Dichloropropane	0.52	11		U
10061-01-5	cis-1,3-Dichloropropene	0.57	11		U
10061-02-6	trans-1,3-Dichloropropene	0.36	11		U
100-41-4	Ethylbenzene	0.85	11		U
591-78-6	2-Hexanone	2.6	11		U
98-82-8	Isopropylbenzene	1.0	11		U
79-20-9	Methyl acetate	1.8	11		~~U~~ UJ CCH
75-09-2	Methylene chloride	0.70	11	11 UJ ~~3.8 JB~~	CCH B
108-87-2	Methyl cyclohexane	0.34	11		U
1634-04-4	Methyl tert-butyl ether	0.36	11		U
108-10-1	4-Methyl-2-pentanone	0.66	11		U
100-42-5	Styrene	0.40	11		U
79-34-5	1,1,2,2-Tetrachloroethane	0.49	11		U
127-18-4	Tetrachloroethene	1.1	11		U

LW 9/1/09

FORM 1
VOLATILE ORGANICS ANALYSIS DATA SHEET

CLIENT SAMPLE NO. 5

MR08-SS171-09A

Lab Name: EMPIRICAL LABS Contract: CH2MHIL

Lab Code: NA Case No.: NA SAS No.: NA SDG No.: LEJEUNE042

Matrix: (soil/water) SOIL Lab Sample ID: 0901041-05

Sample wt/vol: 5.1 (g/mL) G Lab File ID: 0104105A

Level: (low/med) LOW Date Sampled: 01/06/09 09:30

% Moisture: not dec. 13 Date Analyzed: 01/14/09 07:41

GC Column: RTX-VRX ID: 0.25 (mm) Dilution Factor: 1.0

Soil Extract Volume:_____(uL) Soil Aliquot Volume: _____(uL)

CONCENTRATION UNITS: (ug/L or ug/Kg) UG/KG

CAS NO.	COMPOUND	MDL	RL	CONC	Q
108-88-3	Toluene	0.98	11		U
120-82-1	1,2,4-Trichlorobenzene	0.20	11		U
71-55-6	1,1,1-Trichloroethane	1.0	11		U
79-00-5	1,1,2-Trichloroethane	0.40	11		U
79-01-6	Trichloroethene	0.97	11		U
76-13-1	Trichlorotrifluoroethane	0.63	11		U
75-69-4	Trichlorofluoromethane	1.1	11		U
75-01-4	Vinyl chloride	1.2	11		U
1330-20-7	Xylene(total)	0.80	11		U

lw 4/1/09

FORM 1
VOLATILE ORGANICS ANALYSIS DATA SHEET

CLIENT SAMPLE NO. 6

MR08-IS17
1-8-9-09A

Lab Name: EMPIRICAL LABS Contract: CH2MHIL

Lab Code: NA Case No.: NA SAS No.: NA SDG No.: LEJEUNE042

Matrix: (soil/water) SOIL Lab Sample ID: 0901041-06

Sample wt/vol: 5.5 (g/mL) G Lab File ID: 0104106A

Level: (low/med) LOW Date Sampled: 01/06/09 09:45

% Moisture: not dec. 18 Date Analyzed: 01/14/09 08:20

GC Column: RTX-VRX ID: 0.25 (mm) Dilution Factor: 1.0

Soil Extract Volume:_____(uL) Soil Aliquot Volume: _____(uL)

CONCENTRATION UNITS: (ug/L or ug/Kg) UG/KG

CAS NO.	COMPOUND	MDL	RL	CONC	Q
67-64-1	Acetone	2.2	11	4.3	J
71-43-2	Benzene	0.52	11		U
75-27-4	Bromodichloromethane	0.33	11		U
75-25-2	Bromoform	1.1	11		U
74-83-9	Bromomethane	0.80	11		U
78-93-3	2-Butanone	1.6	11		U
75-15-0	Carbon disulfide	1.4	11		U
56-23-5	Carbon tetrachloride	0.98	11		U
108-90-7	Chlorobenzene	0.38	11		U
75-00-3	Chloroethane	1.2	11		U
67-66-3	Chloroform	0.61	11		U
74-87-3	Chloromethane	0.58	11		~~U~~ UJ CH
110-82-7	Cyclohexane	0.60	11		U
124-48-1	Dibromochloromethane	0.38	11		U
96-12-8	1,2-Dibromo-3-chloropropane	1.3	5.5		U
106-93-4	1,2-Dibromoethane	0.48	11		U
95-50-1	1,2-Dichlorobenzene	0.41	11		U
541-73-1	1,3-Dichlorobenzene	0.93	11		U
106-46-7	1,4-Dichlorobenzene	0.61	11		U
75-71-8	Dichlorodifluoromethane	1.2	11		U
75-34-3	1,1-Dichloroethane	0.60	11		U
107-06-2	1,2-Dichloroethane	0.51	11		U
75-35-4	1,1-Dichloroethene	1.3	11		U
156-59-2	cis-1,2-Dichloroethene	1.3	11		U
156-60-5	trans-1,2-Dichloroethene	1.2	11		U
78-87-5	1,2-Dichloropropane	0.51	11		U
10061-01-5	cis-1,3-Dichloropropene	0.55	11		U
10061-02-6	trans-1,3-Dichloropropene	0.35	11		U
100-41-4	Ethylbenzene	0.83	11		U
591-78-6	2-Hexanone	2.6	11		U
98-82-8	Isopropylbenzene	0.98	11		U
79-20-9	Methyl acetate	1.8	11		~~U~~ UJ CH
75-09-2	Methylene chloride	0.69	11	11 UJ ~~3.6 JB~~ CH	~~B~~
108-87-2	Methyl cyclohexane	0.33	11		U
1634-04-4	Methyl tert-butyl ether	0.35	11		U
108-10-1	4-Methyl-2-pentanone	0.64	11		U
100-42-5	Styrene	0.39	11		U
79-34-5	1,1,2,2-Tetrachloroethane	0.48	11		U
127-18-4	Tetrachloroethene	1.1	11		U

FORM I VOA

QW 4/1/09

FORM 1
VOLATILE ORGANICS ANALYSIS DATA SHEET

CLIENT SAMPLE NO. 4

MR08-IS17
1-8-9-09A

Lab Name: EMPIRICAL LABS Contract: CH2MHIL

Lab Code: NA Case No.: NA SAS No.: NA SDG No.: LEJEUNE042

Matrix: (soil/water) SOIL Lab Sample ID: 0901041-06

Sample wt/vol: 5.5 (g/mL) G Lab File ID: 0104106A

Level: (low/med) LOW Date Sampled: 01/06/09 09:45

% Moisture: not dec. 18 Date Analyzed: 01/14/09 08:20

GC Column: RTX-VRX ID: 0.25 (mm) Dilution Factor: 1.0

Soil Extract Volume:_____(uL) Soil Aliquot Volume: _____(uL)

CONCENTRATION UNITS: (ug/L or ug/Kg) UG/KG

CAS NO.	COMPOUND	MDL	RL	CONC	Q
108-88-3	Toluene	0.95	11		U
120-82-1	1,2,4-Trichlorobenzene	0.20	11		U
71-55-6	1,1,1-Trichloroethane	1.00	11		U
79-00-5	1,1,2-Trichloroethane	0.39	11		U
79-01-6	Trichloroethene	0.94	11		U
76-13-1	Trichlorotrifluoroethane	0.61	11		U
75-69-4	Trichlorofluoromethane	1.0	11		U
75-01-4	Vinyl chloride	1.2	11		U
1330-20-7	Xylene(total)	0.78	11		U

lew
4/1/09

FORM 1
VOLATILE ORGANICS ANALYSIS DATA SHEET

CLIENT SAMPLE NO. 7

MR08-SS168-09A

Lab Name: EMPIRICAL LABS Contract: CH2MHIL

Lab Code: NA Case No.: NA SAS No.: NA SDG No.: LEJEUNE042

Matrix: (soil/water) SOIL Lab Sample ID: 0901041-07

Sample wt/vol: 3.7 (g/mL) G Lab File ID: 0104107A

Level: (low/med) LOW Date Sampled: 01/06/09 10:15

% Moisture: not dec. 14 Date Analyzed: 01/14/09 15:40

GC Column: RTX-VRX ID: 0.25 (mm) Dilution Factor: 1.0

Soil Extract Volume:_____(uL) Soil Aliquot Volume: _____(uL)

CONCENTRATION UNITS: (ug/L or ug/Kg) UG/KG

CAS NO.	COMPOUND	MDL	RL	CONC	Q	
67-64-1	Acetone	3.2	16	130		
71-43-2	Benzene	0.74	16		U	
75-27-4	Bromodichloromethane	0.47	16		U	
75-25-2	Bromoform	1.6	16		U	
74-83-9	Bromomethane	1.1	16		U	
78-93-3	2-Butanone	2.2	16	2.8	J	
75-15-0	Carbon disulfide	2.0	16		U	
56-23-5	Carbon tetrachloride	1.4	16		U	
108-90-7	Chlorobenzene	0.54	16		U	
75-00-3	Chloroethane	1.7	16		U	
67-66-3	Chloroform	0.87	16		U	
74-87-3	Chloromethane	0.82	16		U	
110-82-7	Cyclohexane	0.85	16		U	
124-48-1	Dibromochloromethane	0.54	16		U	
96-12-8	1,2-Dibromo-3-chloropropane	1.9	7.9		~~U~~ UJ	ISI
106-93-4	1,2-Dibromoethane	0.68	16		U	
95-50-1	1,2-Dichlorobenzene	0.58	16		U UJ	ISI
541-73-1	1,3-Dichlorobenzene	1.3	16		U ↓	↓
106-46-7	1,4-Dichlorobenzene	0.87	16		~~U~~ ↓	
75-71-8	Dichlorodifluoromethane	1.7	16		U	
75-34-3	1,1-Dichloroethane	0.85	16		U	
107-06-2	1,2-Dichloroethane	0.72	16		U	
75-35-4	1,1-Dichloroethene	1.9	16		U	
156-59-2	cis-1,2-Dichloroethene	1.9	16		U	
156-60-5	trans-1,2-Dichloroethene	1.7	16		U	
78-87-5	1,2-Dichloropropane	0.72	16		U	
10061-01-5	cis-1,3-Dichloropropene	0.79	16		U	
10061-02-6	trans-1,3-Dichloropropene	0.50	16		U	
100-41-4	Ethylbenzene	1.2	16		U	
591-78-6	2-Hexanone	3.6	16		U	
98-82-8	Isopropylbenzene	1.4	16		U	
79-20-9	Methyl acetate	2.5	16		U	
75-09-2	Methylene chloride	0.98	16	16u	~~3.8 JB~~	BI
108-87-2	Methyl cyclohexane	0.47	16		U	
1634-04-4	Methyl tert-butyl ether	0.50	16		U	
108-10-1	4-Methyl-2-pentanone	0.91	16		U	
100-42-5	Styrene	0.55	16		U	
79-34-5	1,1,2,2-Tetrachloroethane	0.68	16		~~U~~ UJ	ISI
127-18-4	Tetrachloroethene	1.5	16		U	

fw
4/1/09

FORM 1
VOLATILE ORGANICS ANALYSIS DATA SHEET

CLIENT SAMPLE NO.

MR08-SS168-09A

7

Lab Name: EMPIRICAL LABS Contract: CH2MHIL

Lab Code: NA Case No.: NA SAS No.: NA SDG No.: LEJEUNE042

Matrix: (soil/water) SOIL Lab Sample ID: 0901041-07

Sample wt/vol: 3.7 (g/mL) G Lab File ID: 0104107A

Level: (low/med) LOW Date Sampled: 01/06/09 10:15

% Moisture: not dec. 14 Date Analyzed: 01/14/09 15:40

GC Column: RTX-VRX ID: 0.25 (mm) Dilution Factor: 1.0

Soil Extract Volume:_____(uL) Soil Aliquot Volume: _____(uL)

CONCENTRATION UNITS: (ug/L or ug/Kg) UG/KG

CAS NO.	COMPOUND	MDL	RL	CONC	Q
108-88-3	Toluene	1.4	16		U
120-82-1	1,2,4-Trichlorobenzene	0.28	16		~~U~~ UJ ISL
71-55-6	1,1,1-Trichloroethane	1.4	16		U
79-00-5	1,1,2-Trichloroethane	0.55	16		U
79-01-6	Trichloroethene	1.3	16		U
76-13-1	Trichlorotrifluoroethane	0.87	16		U
75-69-4	Trichlorofluoromethane	1.5	16		U
75-01-4	Vinyl chloride	1.7	16		U
1330-20-7	Xylene(total)	1.1	16		U

FORM I VOA

MW
4/1/09

FORM 1
VOLATILE ORGANICS ANALYSIS DATA SHEET

CLIENT SAMPLE NO. FRE

MR08-SS168-09ARE

Lab Name: EMPIRICAL LABS Contract: CH2MHIL

Lab Code: NA Case No.: NA SAS No.: NA SDG No.: LEJEUNE042

Matrix: (soil/water) SOIL Lab Sample ID: 0901041-07RE

Sample wt/vol: 4.1 (g/mL) G Lab File ID: 0104107B

Level: (low/med) LOW Date Sampled: 01/06/09 10:15

% Moisture: not dec. 14 Date Analyzed: 01/15/09 15:55 Use original

GC Column: RTX-VRX ID: 0.25 (mm) Dilution Factor: 1.0

Soil Extract Volume:_____(uL) Soil Aliquot Volume: _____(uL)

CONCENTRATION UNITS: (ug/L or ug/Kg) UG/KG

CAS NO.	COMPOUND	MDL	RL	CONC	Q	
67-64-1	Acetone	2.8	14	170	J	ECI
71-43-2	Benzene	0.66	14		U UJ	SS
75-27-4	Bromodichloromethane	0.42	14		U	
75-25-2	Bromoform	1.4	14		U	
74-83-9	Bromomethane	1.0	14		U	
78-93-3	2-Butanone	2.0	14		U	
75-15-0	Carbon disulfide	1.8	14		U	
56-23-5	Carbon tetrachloride	1.2	14		U	
108-90-7	Chlorobenzene	0.47	14		U	
75-00-3	Chloroethane	1.5	14		U	
67-66-3	Chloroform	0.77	14		U	
74-87-3	Chloromethane	0.73	14		U	
110-82-7	Cyclohexane	0.75	14		U	
124-48-1	Dibromochloromethane	0.47	14		U	
96-12-8	1,2-Dibromo-3-chloropropane	1.7	7.0		U UJ	ISI
106-93-4	1,2-Dibromoethane	0.60	14		U UJ	SS
95-50-1	1,2-Dichlorobenzene	0.52	14		U UJ	IS
541-73-1	1,3-Dichlorobenzene	1.2	14		U	
106-46-7	1,4-Dichlorobenzene	0.77	14		U	
75-71-8	Dichlorodifluoromethane	1.5	14		U	SS
75-34-3	1,1-Dichloroethane	0.75	14		U	
107-06-2	1,2-Dichloroethane	0.64	14		U	
75-35-4	1,1-Dichloroethene	1.7	14		U	
156-59-2	cis-1,2-Dichloroethene	1.7	14		U	
156-60-5	trans-1,2-Dichloroethene	1.5	14		U	
78-87-5	1,2-Dichloropropane	0.64	14		U	
10061-01-5	cis-1,3-Dichloropropene	0.70	14		U	
10061-02-6	trans-1,3-Dichloropropene	0.45	14		U	
100-41-4	Ethylbenzene	1.0	14		U	
591-78-6	2-Hexanone	3.2	14		U	
98-82-8	Isopropylbenzene	1.2	14		U	
79-20-9	Methyl acetate	2.2	14		U	
75-09-2	Methylene chloride	0.86	14	14 UJ ~~8.1~~	JB SSL	B
108-87-2	Methyl cyclohexane	0.42	14		U UJ	SS
1634-04-4	Methyl tert-butyl ether	0.45	14		U	
108-10-1	4-Methyl-2-pentanone	0.81	14		U	
100-42-5	Styrene	0.49	14		U	
79-34-5	1,1,2,2-Tetrachloroethane	0.60	14		U UJ	ISI
127-18-4	Tetrachloroethene	1.4	14		U	SS

FORM I VOA

RE

LW 4/1/09

FORM 1
VOLATILE ORGANICS ANALYSIS DATA SHEET

CLIENT SAMPLE NO. 7RE

MR08-SS168-09AR

Lab Name: EMPIRICAL LABS Contract: CH2MHIL

Lab Code: NA Case No.: NA SAS No.: NA SDG No.: LEJEUNE042

Matrix: (soil/water) SOIL Lab Sample ID: 0901041-07R

Sample wt/vol: 4.1 (g/mL) G Lab File ID: 0104107B

Level: (low/med) LOW Date Sampled: 01/06/09 10:15

% Moisture: not dec. 14 Date Analyzed: 01/15/09 15:55 UR. ORIGIN

GC Column: RTX-VRX ID: 0.25 (mm) Dilution Factor: 1.0

Soil Extract Volume:_____(uL) Soil Aliquot Volume: _____(uL)

CONCENTRATION UNITS: (ug/L or ug/Kg) UG/KG

CAS NO.	COMPOUND	MDL	RL	CONC	Q	
108-88-3	Toluene	1.2	14	14UJ ~~1.3~~ J	SSL	BC
120-82-1	1,2,4-Trichlorobenzene	0.25	14		UUJ	ISI
71-55-6	1,1,1-Trichloroethane	1.2	14		UUJ	SSL
79-00-5	1,1,2-Trichloroethane	0.49	14		U	
79-01-6	Trichloroethene	1.2	14		U	
76-13-1	Trichlorotrifluoroethane	0.77	14		U	
75-69-4	Trichlorofluoromethane	1.3	14	14UJ ~~5.1~~ J	SSL	BC
75-01-4	Vinyl chloride	1.5	14		UUJ	SSL
1330-20-7	Xylene(total)	0.98	14		U	

R RE

FORM I VOA

lw 41/09

FORM 1
VOLATILE ORGANICS ANALYSIS DATA SHEET

CLIENT SAMPLE NO. 8

MR08-IS16
8-2-3-09A

Lab Name: EMPIRICAL LABS Contract: CH2MHIL

Lab Code: NA Case No.: NA SAS No.: NA SDG No.: LEJEUNE042

Matrix: (soil/water) SOIL Lab Sample ID: 0901041-08

Sample wt/vol: 4.6 (g/mL) G Lab File ID: 0104108A

Level: (low/med) LOW Date Sampled: 01/06/09 10:30

% Moisture: not dec. 16 Date Analyzed: 01/14/09 16:19

GC Column: RTX-VRX ID: 0.25 (mm) Dilution Factor: 1.0

Soil Extract Volume:_____(uL) Soil Aliquot Volume: _____(uL)

CONCENTRATION UNITS: (ug/L or ug/Kg) UG/KG

CAS NO.	COMPOUND	MDL	RL	CONC	Q
67-64-1	Acetone	2.6	13	20	
71-43-2	Benzene	0.61	13		U
75-27-4	Bromodichloromethane	0.39	13		U
75-25-2	Bromoform	1.3	13		U
74-83-9	Bromomethane	0.94	13		U
78-93-3	2-Butanone	1.8	13		U
75-15-0	Carbon disulfide	1.7	13		U
56-23-5	Carbon tetrachloride	1.1	13		U
108-90-7	Chlorobenzene	0.44	13		U
75-00-3	Chloroethane	1.4	13		U
67-66-3	Chloroform	0.72	13		U
74-87-3	Chloromethane	0.68	13		U
110-82-7	Cyclohexane	0.70	13		U
124-48-1	Dibromochloromethane	0.44	13		U
96-12-8	1,2-Dibromo-3-chloropropane	1.6	6.5		U
106-93-4	1,2-Dibromoethane	0.56	13		U
95-50-1	1,2-Dichlorobenzene	0.48	13		U
541-73-1	1,3-Dichlorobenzene	1.1	13		U
106-46-7	1,4-Dichlorobenzene	0.72	13		U
75-71-8	Dichlorodifluoromethane	1.4	13		U
75-34-3	1,1-Dichloroethane	0.70	13		U
107-06-2	1,2-Dichloroethane	0.60	13		U
75-35-4	1,1-Dichloroethene	1.6	13		U
156-59-2	cis-1,2-Dichloroethene	1.6	13		U
156-60-5	trans-1,2-Dichloroethene	1.4	13		U
78-87-5	1,2-Dichloropropane	0.60	13		U
10061-01-5	cis-1,3-Dichloropropene	0.65	13		U
10061-02-6	trans-1,3-Dichloropropene	0.42	13		U
100-41-4	Ethylbenzene	0.98	13		U
591-78-6	2-Hexanone	3.0	13		U
98-82-8	Isopropylbenzene	1.1	13		U
79-20-9	Methyl acetate	2.1	13		U
75-09-2	Methylene chloride	0.81	13	13u ~~3.5~~	~~JB~~ B1
108-87-2	Methyl cyclohexane	0.39	13		U
1634-04-4	Methyl tert-butyl ether	0.42	13		U
108-10-1	4-Methyl-2-pentanone	0.75	13		U
100-42-5	Styrene	0.46	13		U
79-34-5	1,1,2,2-Tetrachloroethane	0.56	13		U
127-18-4	Tetrachloroethene	1.3	13		U

FORM I VOA

lw
41.109

FORM 1
VOLATILE ORGANICS ANALYSIS DATA SHEET

CLIENT SAMPLE NO. 8

MR08-IS16
8-2-3-09A

Lab Name: EMPIRICAL LABS Contract: CH2MHIL

Lab Code: NA Case No.: NA SAS No.: NA SDG No.: LEJEUNE042

Matrix: (soil/water) SOIL Lab Sample ID: 0901041-08

Sample wt/vol: 4.6 (g/mL) G Lab File ID: 0104108A

Level: (low/med) LOW Date Sampled: 01/06/09 10:30

% Moisture: not dec. 16 Date Analyzed: 01/14/09 16:19

GC Column: RTX-VRX ID: 0.25 (mm) Dilution Factor: 1.0

Soil Extract Volume:_____(uL) Soil Aliquot Volume: _____(uL)

CONCENTRATION UNITS: (ug/L or ug/Kg) UG/KG

CAS NO.	COMPOUND	MDL	RL	CONC	Q
108-88-3	Toluene	1.1	13		U
120-82-1	1,2,4-Trichlorobenzene	0.23	13		U
71-55-6	1,1,1-Trichloroethane	1.2	13		U
79-00-5	1,1,2-Trichloroethane	0.46	13		U
79-01-6	Trichloroethene	1.1	13		U
76-13-1	Trichlorotrifluoroethane	0.72	13		U
75-69-4	Trichlorofluoromethane	1.2	13		U
75-01-4	Vinyl chloride	1.4	13		U
1330-20-7	Xylene(total)	0.91	13		U

DLW
4/6/9

FORM 1
VOLATILE ORGANICS ANALYSIS DATA SHEET

CLIENT SAMPLE NO. 9

MR08-SS151-09A

Lab Name: EMPIRICAL LABS Contract: CH2MHIL

Lab Code: NA Case No.: NA SAS No.: NA SDG No.: LEJEUNE042

Matrix: (soil/water) SOIL Lab Sample ID: 0901041-09

Sample wt/vol: 4.8 (g/mL) G Lab File ID: 0104109A

Level: (low/med) LOW Date Sampled: 01/06/09 11:15

% Moisture: not dec. 15 Date Analyzed: 01/14/09 16:58

GC Column: RTX-VRX ID: 0.25 (mm) Dilution Factor: 1.0

Soil Extract Volume:_____(uL) Soil Aliquot Volume: _____(uL)

CONCENTRATION UNITS: (ug/L or ug/Kg) UG/KG

CAS NO.	COMPOUND	MDL	RL	CONC	Q	
67-64-1	Acetone	2.4	12	33		
71-43-2	Benzene	0.58	12	1.2	J	
75-27-4	Bromodichloromethane	0.37	12		U	
75-25-2	Bromoform	1.2	12		U	
74-83-9	Bromomethane	0.88	12		U	
78-93-3	2-Butanone	1.7	12		U	
75-15-0	Carbon disulfide	1.6	12		U	
56-23-5	Carbon tetrachloride	1.1	12		U	
108-90-7	Chlorobenzene	0.42	12		U	
75-00-3	Chloroethane	1.3	12		U	
67-66-3	Chloroform	0.67	12		U	
74-87-3	Chloromethane	0.64	12		U	
110-82-7	Cyclohexane	0.66	12		U	
124-48-1	Dibromochloromethane	0.42	12		U	
96-12-8	1,2-Dibromo-3-chloropropane	1.5	6.1		U	
106-93-4	1,2-Dibromoethane	0.53	12		U	
95-50-1	1,2-Dichlorobenzene	0.45	12		U	
541-73-1	1,3-Dichlorobenzene	1.0	12		U	
106-46-7	1,4-Dichlorobenzene	0.67	12		U	
75-71-8	Dichlorodifluoromethane	1.3	12		U	
75-34-3	1,1-Dichloroethane	0.66	12		U	
107-06-2	1,2-Dichloroethane	0.56	12		U	
75-35-4	1,1-Dichloroethene	1.5	12		U	
156-59-2	cis-1,2-Dichloroethene	1.5	12		U	
156-60-5	trans-1,2-Dichloroethene	1.3	12		U	
78-87-5	1,2-Dichloropropane	0.56	12		U	
10061-01-5	cis-1,3-Dichloropropene	0.61	12		U	
10061-02-6	trans-1,3-Dichloropropene	0.39	12		U	
100-41-4	Ethylbenzene	0.92	12	3.9	J	
591-78-6	2-Hexanone	2.8	12		U	
98-82-8	Isopropylbenzene	1.1	12		U	
79-20-9	Methyl acetate	2.0	12		U	
75-09-2	Methylene chloride	0.76	12	12u ~~2.4~~	~~JB~~	BL
108-87-2	Methyl cyclohexane	0.37	12	0.76	J	
1634-04-4	Methyl tert-butyl ether	0.39	12		U	
108-10-1	4-Methyl-2-pentanone	0.71	12		U	
100-42-5	Styrene	0.43	12		U	
79-34-5	1,1,2,2-Tetrachloroethane	0.53	12		U	
127-18-4	Tetrachloroethene	1.2	12		U	

FORM I VOA

DW
4/1/09

FORM 1
VOLATILE ORGANICS ANALYSIS DATA SHEET

CLIENT SAMPLE NO. 9

MR08-SS151-09A

Lab Name: EMPIRICAL LABS Contract: CH2MHIL

Lab Code: NA Case No.: NA SAS No.: NA SDG No.: LEJEUNE042

Matrix: (soil/water) SOIL Lab Sample ID: 0901041-09

Sample wt/vol: 4.8 (g/mL) G Lab File ID: 0104109A

Level: (low/med) LOW Date Sampled: 01/06/09 11:15

% Moisture: not dec. 15 Date Analyzed: 01/14/09 16:58

GC Column: RTX-VRX ID: 0.25 (mm) Dilution Factor: 1.0

Soil Extract Volume:_____(uL) Soil Aliquot Volume: _____(uL)

CONCENTRATION UNITS: (ug/L or ug/Kg) UG/KG

CAS NO.	COMPOUND	MDL	RL	CONC	Q
108-88-3	Toluene	1.0	12	12U ~~2.2~~	~~J~~ U BL
120-82-1	1,2,4-Trichlorobenzene	0.22	12		U
71-55-6	1,1,1-Trichloroethane	1.1	12		U
79-00-5	1,1,2-Trichloroethane	0.43	12		U
79-01-6	Trichloroethene	1.0	12		U
76-13-1	Trichlorotrifluoroethane	0.67	12		U
75-69-4	Trichlorofluoromethane	1.2	12		U
75-01-4	Vinyl chloride	1.3	12		U
1330-20-7	Xylene(total)	0.86	12		U

lw
4/1/09

FORM 1
VOLATILE ORGANICS ANALYSIS DATA SHEET

CLIENT SAMPLE NO. 10

MR08-IS15
1-4-5-09A

Lab Name: EMPIRICAL LABS Contract: CH2MHIL

Lab Code: NA Case No.: NA SAS No.: NA SDG No.: LEJEUNE042

Matrix: (soil/water) SOIL Lab Sample ID: 0901041-10

Sample wt/vol: 6.9 (g/mL) G Lab File ID: 0104110A

Level: (low/med) LOW Date Sampled: 01/06/09 11:35

% Moisture: not dec. 18 Date Analyzed: 01/15/09 02:35

GC Column: RTX-VRX ID: 0.25 (mm) Dilution Factor: 1.0

Soil Extract Volume:_____(uL) Soil Aliquot Volume: _____(uL)

CONCENTRATION UNITS: (ug/L or ug/Kg) UG/KG

CAS NO.	COMPOUND	MDL	RL	CONC	Q	
67-64-1	Acetone	1.8	8.8	2.2	~~U~~ J	CC
71-43-2	Benzene	0.42	8.8		U	
75-27-4	Bromodichloromethane	0.26	8.8		U	
75-25-2	Bromoform	0.88	8.8		U	
74-83-9	Bromomethane	0.64	8.8		U	
78-93-3	2-Butanone	1.2	8.8		U	
75-15-0	Carbon disulfide	1.2	8.8		U	
56-23-5	Carbon tetrachloride	0.78	8.8		U	
108-90-7	Chlorobenzene	0.30	8.8		U	
75-00-3	Chloroethane	0.97	8.8		U	
67-66-3	Chloroform	0.49	8.8		U	
74-87-3	Chloromethane	0.46	8.8		~~U~~ UJ	CC
110-82-7	Cyclohexane	0.48	8.8		U	
124-48-1	Dibromochloromethane	0.30	8.8		U	
96-12-8	1,2-Dibromo-3-chloropropane	1.1	4.4		U	
106-93-4	1,2-Dibromoethane	0.38	8.8		U	
95-50-1	1,2-Dichlorobenzene	0.33	8.8		U	
541-73-1	1,3-Dichlorobenzene	0.74	8.8		U	
106-46-7	1,4-Dichlorobenzene	0.49	8.8		U	
75-71-8	Dichlorodifluoromethane	0.97	8.8		U	
75-34-3	1,1-Dichloroethane	0.48	8.8		U	
107-06-2	1,2-Dichloroethane	0.41	8.8		U	
75-35-4	1,1-Dichloroethene	1.1	8.8		U	
156-59-2	cis-1,2-Dichloroethene	1.1	8.8		U	
156-60-5	trans-1,2-Dichloroethene	0.97	8.8		U	
78-87-5	1,2-Dichloropropane	0.41	8.8		U	
10061-01-5	cis-1,3-Dichloropropene	0.44	8.8		U	
10061-02-6	trans-1,3-Dichloropropene	0.28	8.8		U	
100-41-4	Ethylbenzene	0.66	8.8		U	
591-78-6	2-Hexanone	2.0	8.8		U	
98-82-8	Isopropylbenzene	0.78	8.8		U	
79-20-9	Methyl acetate	1.4	8.8		U	
75-09-2	Methylene chloride	0.55	8.8	8.8U ~~1.8~~ ~~JB~~		BI
108-87-2	Methyl cyclohexane	0.26	8.8		U	
1634-04-4	Methyl tert-butyl ether	0.28	8.8		U	
108-10-1	4-Methyl-2-pentanone	0.51	8.8		U	
100-42-5	Styrene	0.31	8.8		U	
79-34-5	1,1,2,2-Tetrachloroethane	0.38	8.8		U	
127-18-4	Tetrachloroethene	0.86	8.8		U	

FORM I VOA

kw 4/1/09

FORM 1
VOLATILE ORGANICS ANALYSIS DATA SHEET

CLIENT SAMPLE NO. 10

MR08-IS15
1-4-5-09A

Lab Name: EMPIRICAL LABS Contract: CH2MHIL

Lab Code: NA Case No.: NA SAS No.: NA SDG No.: LEJEUNE042

Matrix: (soil/water) SOIL Lab Sample ID: 0901041-10

Sample wt/vol: 6.9 (g/mL) G Lab File ID: 0104110A

Level: (low/med) LOW Date Sampled: 01/06/09 11:35

% Moisture: not dec. 18 Date Analyzed: 01/15/09 02:35

GC Column: RTX-VRX ID: 0.25 (mm) Dilution Factor: 1.0

Soil Extract Volume:_____(uL) Soil Aliquot Volume: _____(uL)

CONCENTRATION UNITS: (ug/L or ug/Kg) UG/KG

CAS NO.	COMPOUND	MDL	RL	CONC	Q
108-88-3	Toluene	0.76	8.8		U
120-82-1	1,2,4-Trichlorobenzene	0.16	8.8		U
71-55-6	1,1,1-Trichloroethane	0.80	8.8		U
79-00-5	1,1,2-Trichloroethane	0.31	8.8		U
79-01-6	Trichloroethene	0.75	8.8		U
76-13-1	Trichlorotrifluoroethane	0.49	8.8		U
75-69-4	Trichlorofluoromethane	0.84	8.8		U
75-01-4	Vinyl chloride	0.97	8.8		U
1330-20-7	Xylene(total)	0.62	8.8		U

QW
4/1/09

FORM 1
VOLATILE ORGANICS ANALYSIS DATA SHEET

CLIENT SAMPLE NO.

MR08-SS150-09A

Lab Name: EMPIRICAL LABS Contract: CH2MHIL

Lab Code: NA Case No.: NA SAS No.: NA SDG No.: LEJEUNE042

Matrix: (soil/water) SOIL Lab Sample ID: 0901041-11

Sample wt/vol: 5.8 (g/mL) G Lab File ID: 0104111A

Level: (low/med) LOW Date Sampled: 01/06/09 12:50

% Moisture: not dec. 14 Date Analyzed: 01/15/09 03:14

GC Column: RTX-VRX ID: 0.25 (mm) Dilution Factor: 1.0

Soil Extract Volume:_____(uL) Soil Aliquot Volume: _____(uL)

CONCENTRATION UNITS: (ug/L or ug/Kg) UG/KG

CAS NO.	COMPOUND	MDL	RL	CONC	Q	
67-64-1	Acetone	2.0	10	56	~~J~~	CU
71-43-2	Benzene	0.47	10	1.1	J	
75-27-4	Bromodichloromethane	0.30	10		U	
75-25-2	Bromoform	1.0	10		U	
74-83-9	Bromomethane	0.72	10		U	
78-93-3	2-Butanone	1.4	10		U	
75-15-0	Carbon disulfide	1.3	10		U	
56-23-5	Carbon tetrachloride	0.88	10		U	
108-90-7	Chlorobenzene	0.34	10		U	
75-00-3	Chloroethane	1.1	10		U	
67-66-3	Chloroform	0.55	10		U	
74-87-3	Chloromethane	0.52	10		~~U~~ UJ	CU
110-82-7	Cyclohexane	0.54	10		U	
124-48-1	Dibromochloromethane	0.34	10		U	
96-12-8	1,2-Dibromo-3-chloropropane	1.2	5.0		U	
106-93-4	1,2-Dibromoethane	0.43	10		U	
95-50-1	1,2-Dichlorobenzene	0.37	10		U	
541-73-1	1,3-Dichlorobenzene	0.84	10		U	
106-46-7	1,4-Dichlorobenzene	0.55	10		U	
75-71-8	Dichlorodifluoromethane	1.1	10		U	
75-34-3	1,1-Dichloroethane	0.54	10		U	
107-06-2	1,2-Dichloroethane	0.46	10		U	
75-35-4	1,1-Dichloroethene	1.2	10		U	
156-59-2	cis-1,2-Dichloroethene	1.2	10		U	
156-60-5	trans-1,2-Dichloroethene	1.1	10		U	
78-87-5	1,2-Dichloropropane	0.46	10		U	
10061-01-5	cis-1,3-Dichloropropene	0.50	10		U	
10061-02-6	trans-1,3-Dichloropropene	0.32	10		U	
100-41-4	Ethylbenzene	0.75	10	4.8	J	
591-78-6	2-Hexanone	2.3	10	16		
98-82-8	Isopropylbenzene	0.88	10		U	
79-20-9	Methyl acetate	1.6	10		U	
75-09-2	Methylene chloride	0.62	10	10U ~~1.2~~	~~JB~~	BU
108-87-2	Methyl cyclohexane	0.30	10	0.69	J	
1634-04-4	Methyl tert-butyl ether	0.32	10		U	
108-10-1	4-Methyl-2-pentanone	0.58	10		U	
100-42-5	Styrene	0.35	10		U	
79-34-5	1,1,2,2-Tetrachloroethane	0.43	10		U	
127-18-4	Tetrachloroethene	0.97	10		U	

FORM I VOA

AW 4/1/09

FORM 1
VOLATILE ORGANICS ANALYSIS DATA SHEET

CLIENT SAMPLE NO.

MR08-SS150-09A

Lab Name: EMPIRICAL LABS Contract: CH2MHIL

Lab Code: NA Case No.: NA SAS No.: NA SDG No.: LEJEUNE042

Matrix: (soil/water) SOIL Lab Sample ID: 0901041-11

Sample wt/vol: 5.8 (g/mL) G Lab File ID: 0104111A

Level: (low/med) LOW Date Sampled: 01/06/09 12:50

% Moisture: not dec. 14 Date Analyzed: 01/15/09 03:14

GC Column: RTX-VRX ID: 0.25 (mm) Dilution Factor: 1.0

Soil Extract Volume:_____(uL) Soil Aliquot Volume: _____(uL)

CONCENTRATION UNITS: (ug/L or ug/Kg) UG/KG

CAS NO.	COMPOUND	MDL	RL	CONC	Q
108-88-3	Toluene	0.86	10	10U ~~2.5~~	~~J~~
120-82-1	1,2,4-Trichlorobenzene	0.18	10		U
71-55-6	1,1,1-Trichloroethane	0.90	10		U
79-00-5	1,1,2-Trichloroethane	0.35	10		U
79-01-6	Trichloroethene	0.85	10		U
76-13-1	Trichlorotrifluoroethane	0.55	10		U
75-69-4	Trichlorofluoromethane	0.95	10		U
75-01-4	Vinyl chloride	1.1	10		U
1330-20-7	Xylene(total)	0.70	10		U

BL

FORM I VOA

MW 4/1/09

FORM 1
VOLATILE ORGANICS ANALYSIS DATA SHEET

CLIENT SAMPLE NO. 12

MR08-IS15
0-2-3-09A

Lab Name: EMPIRICAL LABS Contract: CH2MHIL

Lab Code: NA Case No.: NA SAS No.: NA SDG No.: LEJEUNE042

Matrix: (soil/water) SOIL Lab Sample ID: 0901041-12

Sample wt/vol: 4.7 (g/mL) G Lab File ID: 0104112A

Level: (low/med) LOW Date Sampled: 01/06/09 13:10

% Moisture: not dec. 9 Date Analyzed: 01/15/09 03:53

GC Column: RTX-VRX ID: 0.25 (mm) Dilution Factor: 1.0

Soil Extract Volume:_____(uL) Soil Aliquot Volume: _____(uL)

CONCENTRATION UNITS: (ug/L or ug/Kg) UG/KG

CAS NO.	COMPOUND	MDL	RL	CONC	Q	
67-64-1	Acetone	2.3	12	62	~~U~~ J	CC
71-43-2	Benzene	0.54	12	0.61	~~U~~ J	SSL
75-27-4	Bromodichloromethane	0.35	12		~~U~~ UJ	ISL
75-25-2	Bromoform	1.2	12		~~U~~ UJ	ISL
74-83-9	Bromomethane	0.84	12		~~U~~ UJ	SSL
78-93-3	2-Butanone	1.6	12	4.0	~~U~~ J	
75-15-0	Carbon disulfide	1.5	12		~~U~~ UJ	
56-23-5	Carbon tetrachloride	1.0	12		~~U~~ UJ	
108-90-7	Chlorobenzene	0.39	12		~~U~~ UJ	ISL
75-00-3	Chloroethane	1.3	12		~~U~~	SSL
67-66-3	Chloroform	0.64	12		~~U~~	
74-87-3	Chloromethane	0.60	12		~~U~~ UJ	CC
110-82-7	Cyclohexane	0.63	12		~~U~~	SSL
124-48-1	Dibromochloromethane	0.39	12		~~U~~ UJ	ISL
96-12-8	1,2-Dibromo-3-chloropropane	1.4	5.8		~~U~~ R	IS
106-93-4	1,2-Dibromoethane	0.50	12		~~U~~ UJ	ISL
95-50-1	1,2-Dichlorobenzene	0.43	12		~~U~~ R	ISL
541-73-1	1,3-Dichlorobenzene	0.98	12		~~U~~	
106-46-7	1,4-Dichlorobenzene	0.64	12		~~U~~	
75-71-8	Dichlorodifluoromethane	1.3	12		~~U~~ UJ	SSL
75-34-3	1,1-Dichloroethane	0.63	12		~~U~~	
107-06-2	1,2-Dichloroethane	0.53	12		~~U~~	
75-35-4	1,1-Dichloroethene	1.4	12		~~U~~	
156-59-2	cis-1,2-Dichloroethene	1.4	12		~~U~~	
156-60-5	trans-1,2-Dichloroethene	1.3	12		~~U~~	
78-87-5	1,2-Dichloropropane	0.53	12		~~U~~	
10061-01-5	cis-1,3-Dichloropropene	0.58	12		~~U~~	
10061-02-6	trans-1,3-Dichloropropene	0.37	12		~~U~~ UJ	IS
100-41-4	Ethylbenzene	0.87	12		~~U~~ UJ	ISL
591-78-6	2-Hexanone	2.7	12		~~U~~ UJ	ISL
98-82-8	Isopropylbenzene	1.0	12		U	SS
79-20-9	Methyl acetate	1.8	12		U	
75-09-2	Methylene chloride	0.72	12	12UJ ~~2.0 JB~~	SSL	B
108-87-2	Methyl cyclohexane	0.35	12		U UJ	SS
1634-04-4	Methyl tert-butyl ether	0.37	12		U	
108-10-1	4-Methyl-2-pentanone	0.67	12		U	
100-42-5	Styrene	0.41	12		U	
79-34-5	1,1,2,2-Tetrachloroethane	0.50	12		~~U~~ R	IS
127-18-4	Tetrachloroethene	1.1	12		~~U~~ UJ	IS

FORM I VOA

MW 4/1/09

FORM 1
VOLATILE ORGANICS ANALYSIS DATA SHEET

CLIENT SAMPLE NO.

12

MR08-IS15
0-2-3-09A

Lab Name: EMPIRICAL LABS Contract: CH2MHIL

Lab Code: NA Case No.: NA SAS No.: NA SDG No.: LEJEUNE042

Matrix: (soil/water) SOIL Lab Sample ID: 0901041-12

Sample wt/vol: 4.7 (g/mL) G Lab File ID: 0104112A

Level: (low/med) LOW Date Sampled: 01/06/09 13:10

% Moisture: not dec. 9 Date Analyzed: 01/15/09 03:53

GC Column: RTX-VRX ID: 0.25 (mm) Dilution Factor: 1.0

Soil Extract Volume:_____(uL) Soil Aliquot Volume: _____(uL)

CONCENTRATION UNITS: (ug/L or ug/Kg) UG/KG

CAS NO.	COMPOUND	MDL	RL	CONC	Q	
108-88-3	Toluene	1.00	12		~~U~~ UJ	ISL
120-82-1	1,2,4-Trichlorobenzene	0.21	12		~~U~~ R	ISL
71-55-6	1,1,1-Trichloroethane	1.0	12		~~U~~ UJ	SSL
79-00-5	1,1,2-Trichloroethane	0.41	12		~~U~~ UJ	ISL
79-01-6	Trichloroethene	0.99	12		U	SSL
76-13-1	Trichlorotrifluoroethane	0.64	12		U	
75-69-4	Trichlorofluoromethane	1.1	12		U	
75-01-4	Vinyl chloride	1.3	12		U	
1330-20-7	Xylene(total)	0.81	12		~~U~~ UJ	ISL

FORM I VOA

RW
4/1/09

FORM 1
VOLATILE ORGANICS ANALYSIS DATA SHEET

CLIENT SAMPLE NO. 12RE

MR08-IS15
0-2-3-09ARE

Lab Name: EMPIRICAL LABS Contract: CH2MHIL

Lab Code: NA Case No.: NA SAS No.: NA SDG No.: LEJEUNE042

Matrix: (soil/water) SOIL Lab Sample ID: 0901041-12RE

Sample wt/vol: 5.2 (g/mL) G Lab File ID: 0104112B

Level: (low/med) LOW Date Sampled: 01/06/09 13:10

% Moisture: not dec. 9 Date Analyzed: 01/15/09 16:34 use original

GC Column: RTX-VRX ID: 0.25 (mm) Dilution Factor: 1.0

Soil Extract Volume:_____(uL) Soil Aliquot Volume: _____(uL)

CONCENTRATION UNITS: (ug/L or ug/Kg) UG/KG

CAS NO.	COMPOUND	MDL	RL	CONC	Q	
67-64-1	Acetone	2.1	11	56	J	CCH
71-43-2	Benzene	0.50	11	0.66	J	SSL
75-27-4	Bromodichloromethane	0.32	11		UJ	ISL
75-25-2	Bromoform	1.1	11		UJ	ISL
74-83-9	Bromomethane	0.77	11		U	SSL
78-93-3	2-Butanone	1.5	11	4.1	J	
75-15-0	Carbon disulfide	1.4	11		UJ	
56-23-5	Carbon tetrachloride	0.94	11		U	
108-90-7	Chlorobenzene	0.36	11		UJ	ISL
75-00-3	Chloroethane	1.2	11		U	SSL
67-66-3	Chloroform	0.59	11		U	
74-87-3	Chloromethane	0.55	11		U	
110-82-7	Cyclohexane	0.58	11		U	
124-48-1	Dibromochloromethane	0.36	11		UJ	ISL
96-12-8	1,2-Dibromo-3-chloropropane	1.3	5.3		R	ISL
106-93-4	1,2-Dibromoethane	0.46	11		UJ	ISL
95-50-1	1,2-Dichlorobenzene	0.39	11		R	ISL
541-73-1	1,3-Dichlorobenzene	0.90	11		U	
106-46-7	1,4-Dichlorobenzene	0.59	11		U	
75-71-8	Dichlorodifluoromethane	1.2	11		UJ	SSL
75-34-3	1,1-Dichloroethane	0.58	11		U	
107-06-2	1,2-Dichloroethane	0.49	11		U	
75-35-4	1,1-Dichloroethene	1.3	11		U	
156-59-2	cis-1,2-Dichloroethene	1.3	11		U	
156-60-5	trans-1,2-Dichloroethene	1.2	11		U	
78-87-5	1,2-Dichloropropane	0.49	11		U	
10061-01-5	cis-1,3-Dichloropropene	0.53	11		U	
10061-02-6	trans-1,3-Dichloropropene	0.34	11		UJ	ISL
100-41-4	Ethylbenzene	0.80	11		UJ	ISL
591-78-6	2-Hexanone	2.4	11		UJ	ISL
98-82-8	Isopropylbenzene	0.94	11		U	SSL
79-20-9	Methyl acetate	1.7	11		U	
75-09-2	Methylene chloride	0.66	11	11 UJ ~~2.1~~	JB	SSL BL
108-87-2	Methyl cyclohexane	0.32	11		UJ	SSL
1634-04-4	Methyl tert-butyl ether	0.34	11		U	
108-10-1	4-Methyl-2-pentanone	0.62	11		U	
100-42-5	Styrene	0.37	11		U	
79-34-5	1,1,2,2-Tetrachloroethane	0.46	11		R	ISL
127-18-4	Tetrachloroethene	1.0	11		UJ	ISL

RE

FORM I VOA

4/1/09

FORM 1
VOLATILE ORGANICS ANALYSIS DATA SHEET

CLIENT SAMPLE NO. 12RE

MR08-IS15
0-2-3-09AR

Lab Name: EMPIRICAL LABS Contract: CH2MHIL

Lab Code: NA Case No.: NA SAS No.: NA SDG No.: LEJEUNE042

Matrix: (soil/water) SOIL Lab Sample ID: 0901041-12R

Sample wt/vol: 5.2 (g/mL) G Lab File ID: 0104112B

Level: (low/med) LOW Date Sampled: 01/06/09 13:10 use only NA

% Moisture: not dec. 9 Date Analyzed: 01/15/09 16:34

GC Column: RTX-VRX ID: 0.25 (mm) Dilution Factor: 1.0

Soil Extract Volume:_____(uL) Soil Aliquot Volume: _____(uL)

CONCENTRATION UNITS: (ug/L or ug/Kg) UG/KG

CAS NO.	COMPOUND	MDL	RL	CONC	Q	
108-88-3	Toluene	0.92	11		~~U~~ UJ	ISL
120-82-1	1,2,4-Trichlorobenzene	0.19	11		~~U~~ R	IS
71-55-6	1,1,1-Trichloroethane	0.96	11		~~U~~ UJ	SSL
79-00-5	1,1,2-Trichloroethane	0.37	11		~~U~~ UJ	ISL
79-01-6	Trichloroethene	0.91	11		U	SSL
76-13-1	Trichlorotrifluoroethane	0.59	11		U	
75-69-4	Trichlorofluoromethane	1.0	11		U	
75-01-4	Vinyl chloride	1.2	11		U	
1330-20-7	Xylene(total)	0.75	11		~~U~~ UJ	ISL

R RE

FORM I VOA

RW
4/1/09

FORM 1
VOLATILE ORGANICS ANALYSIS DATA SHEET

CLIENT SAMPLE NO. 13

MR08-SS141-09A

Lab Name: EMPIRICAL LABS Contract: CH2MHIL

Lab Code: NA Case No.: NA SAS No.: NA SDG No.: LEJEUNE042

Matrix: (soil/water) SOIL Lab Sample ID: 0901041-13

Sample wt/vol: 4.7 (g/mL) G Lab File ID: 0104113A

Level: (low/med) LOW Date Sampled: 01/06/09 13:35

% Moisture: not dec. 7 Date Analyzed: 01/14/09 19:35

GC Column: RTX-VRX ID: 0.25 (mm) Dilution Factor: 1.0

Soil Extract Volume:_____(uL) Soil Aliquot Volume: _____(uL)

CONCENTRATION UNITS: (ug/L or ug/Kg) UG/KG

CAS NO.	COMPOUND	MDL	RL	CONC	Q	
67-64-1	Acetone	2.3	12	15		
71-43-2	Benzene	0.54	12		U	
75-27-4	Bromodichloromethane	0.35	12		U	
75-25-2	Bromoform	1.2	12		U	
74-83-9	Bromomethane	0.83	12		U	
78-93-3	2-Butanone	1.6	12	2.1	J	
75-15-0	Carbon disulfide	1.5	12		U	
56-23-5	Carbon tetrachloride	1.0	12		U	
108-90-7	Chlorobenzene	0.39	12		~~U~~ UJ	MS
75-00-3	Chloroethane	1.3	12		U	
67-66-3	Chloroform	0.64	12		U	
74-87-3	Chloromethane	0.60	12		U	
110-82-7	Cyclohexane	0.62	12		U	
124-48-1	Dibromochloromethane	0.39	12		U	
96-12-8	1,2-Dibromo-3-chloropropane	1.4	5.8		U	
106-93-4	1,2-Dibromoethane	0.50	12		U	
95-50-1	1,2-Dichlorobenzene	0.43	12		~~U~~ UJ	MS
541-73-1	1,3-Dichlorobenzene	0.97	12		~~U~~ UJ	MS
106-46-7	1,4-Dichlorobenzene	0.64	12		~~U~~ UJ	MS
75-71-8	Dichlorodifluoromethane	1.3	12		U	
75-34-3	1,1-Dichloroethane	0.62	12		U	
107-06-2	1,2-Dichloroethane	0.53	12		U	
75-35-4	1,1-Dichloroethene	1.4	12		U	
156-59-2	cis-1,2-Dichloroethene	1.4	12		U	
156-60-5	trans-1,2-Dichloroethene	1.3	12		U	
78-87-5	1,2-Dichloropropane	0.53	12		U	
10061-01-5	cis-1,3-Dichloropropene	0.58	12		U	
10061-02-6	trans-1,3-Dichloropropene	0.37	12		U	
100-41-4	Ethylbenzene	0.87	12	1.2	J	
591-78-6	2-Hexanone	2.6	12	2.9	J	
98-82-8	Isopropylbenzene	1.0	12		U	
79-20-9	Methyl acetate	1.8	12		U	
75-09-2	Methylene chloride	0.72	12	12U ~~11~~ ~~JB~~		B
108-87-2	Methyl cyclohexane	0.35	12		U	
1634-04-4	Methyl tert-butyl ether	0.37	12		U	
108-10-1	4-Methyl-2-pentanone	0.67	12		U	
100-42-5	Styrene	0.40	12		U	
79-34-5	1,1,2,2-Tetrachloroethane	0.50	12		U	
127-18-4	Tetrachloroethene	1.1	12		U	

FORM I VOA

MW 4/1/09

FORM 1
VOLATILE ORGANICS ANALYSIS DATA SHEET

CLIENT SAMPLE NO. 13

MR08-SS141-09A

Lab Name: EMPIRICAL LABS Contract: CH2MHIL

Lab Code: NA Case No.: NA SAS No.: NA SDG No.: LEJEUNE042

Matrix: (soil/water) SOIL Lab Sample ID: 0901041-13

Sample wt/vol: 4.7 (g/mL) G Lab File ID: 0104113A

Level: (low/med) LOW Date Sampled: 01/06/09 13:35

% Moisture: not dec. 7 Date Analyzed: 01/14/09 19:35

GC Column: RTX-VRX ID: 0.25 (mm) Dilution Factor: 1.0

Soil Extract Volume:_____(uL) Soil Aliquot Volume: _____(uL)

CONCENTRATION UNITS: (ug/L or ug/Kg) UG/KG

CAS NO.	COMPOUND	MDL	RL	CONC	Q	
108-88-3	Toluene	0.99	12		U	
120-82-1	1,2,4-Trichlorobenzene	0.21	12		~~U~~ UJ	MS
71-55-6	1,1,1-Trichloroethane	1.0	12		U	
79-00-5	1,1,2-Trichloroethane	0.40	12		U	
79-01-6	Trichloroethene	0.98	12		~~U~~ UJ	MS
76-13-1	Trichlorotrifluoroethane	0.64	12		U	
75-69-4	Trichlorofluoromethane	1.1	12	12U ~~2.8~~ ~~JB~~		BL
75-01-4	Vinyl chloride	1.3	12		U	
1330-20-7	Xylene(total)	0.81	12		U	

FORM I VOA

MW
4/1/09

FORM 1
VOLATILE ORGANICS ANALYSIS DATA SHEET

CLIENT SAMPLE NO. 14

MR08-IS1
41-2-3-09A

Lab Name: EMPIRICAL LABS Contract: CH2MHIL

Lab Code: NA Case No.: NA SAS No.: NA SDG No.: LEJEUNE042

Matrix: (soil/water) SOIL Lab Sample ID: 0901041-14

Sample wt/vol: 7.7 (g/mL) G Lab File ID: 0104114A

Level: (low/med) LOW Date Sampled: 01/06/09 13:55

% Moisture: not dec. 15 Date Analyzed: 01/14/09 20:14

GC Column: RTX-VRX ID: 0.25 (mm) Dilution Factor: 1.0

Soil Extract Volume:_____(uL) Soil Aliquot Volume: _____(uL)

CONCENTRATION UNITS: (ug/L or ug/Kg) UG/KG

CAS NO.	COMPOUND	MDL	RL	CONC	Q	
67-64-1	Acetone	1.5	7.6	4.9	J	
71-43-2	Benzene	0.36	7.6		U	
75-27-4	Bromodichloromethane	0.23	7.6		U	
75-25-2	Bromoform	0.76	7.6		U	
74-83-9	Bromomethane	0.55	7.6		U	
78-93-3	2-Butanone	1.1	7.6		U	
75-15-0	Carbon disulfide	0.99	7.6		U	
56-23-5	Carbon tetrachloride	0.67	7.6		U	
108-90-7	Chlorobenzene	0.26	7.6		~~U~~ UJ	MSL
75-00-3	Chloroethane	0.84	7.6		U	
67-66-3	Chloroform	0.42	7.6		U	
74-87-3	Chloromethane	0.39	7.6		U	
110-82-7	Cyclohexane	0.41	7.6		U	
124-48-1	Dibromochloromethane	0.26	7.6		U	
96-12-8	1,2-Dibromo-3-chloropropane	0.91	3.8		U	
106-93-4	1,2-Dibromoethane	0.33	7.6		~~U~~ UJ	MS
95-50-1	1,2-Dichlorobenzene	0.28	7.6		U	↓
541-73-1	1,3-Dichlorobenzene	0.64	7.6		U	↓
106-46-7	1,4-Dichlorobenzene	0.42	7.6		U	↓
75-71-8	Dichlorodifluoromethane	0.84	7.6		U	
75-34-3	1,1-Dichloroethane	0.41	7.6		U	
107-06-2	1,2-Dichloroethane	0.35	7.6		U	
75-35-4	1,1-Dichloroethene	0.91	7.6		U	
156-59-2	cis-1,2-Dichloroethene	0.91	7.6		U	
156-60-5	trans-1,2-Dichloroethene	0.84	7.6		U	
78-87-5	1,2-Dichloropropane	0.35	7.6		U	
10061-01-5	cis-1,3-Dichloropropene	0.38	7.6		U	
10061-02-6	trans-1,3-Dichloropropene	0.24	7.6		U	
100-41-4	Ethylbenzene	0.57	7.6		U	
591-78-6	2-Hexanone	1.7	7.6		U	
98-82-8	Isopropylbenzene	0.67	7.6		U	
79-20-9	Methyl acetate	1.2	7.6		~~U~~ UJ	MS
75-09-2	Methylene chloride	0.47	7.6	7.6u ~~1.1~~	~~JB~~	BI
108-87-2	Methyl cyclohexane	0.23	7.6		U	
1634-04-4	Methyl tert-butyl ether	0.24	7.6		U	
108-10-1	4-Methyl-2-pentanone	0.44	7.6		U	
100-42-5	Styrene	0.26	7.6		~~U~~ UJ	MS
79-34-5	1,1,2,2-Tetrachloroethane	0.33	7.6		U	
127-18-4	Tetrachloroethene	0.74	7.6		~~U~~ UJ	MS

FORM I VOA

lw
4/1/09

FORM 1
VOLATILE ORGANICS ANALYSIS DATA SHEET

CLIENT SAMPLE NO. 14

MR08-IS1
41-2-3-09A

Lab Name: EMPIRICAL LABS Contract: CH2MHIL

Lab Code: NA Case No.: NA SAS No.: NA SDG No.: LEJEUNE042

Matrix: (soil/water) SOIL Lab Sample ID: 0901041-14

Sample wt/vol: 7.7 (g/mL) G Lab File ID: 0104114A

Level: (low/med) LOW Date Sampled: 01/06/09 13:55

% Moisture: not dec. 15 Date Analyzed: 01/14/09 20:14

GC Column: RTX-VRX ID: 0.25 (mm) Dilution Factor: 1.0

Soil Extract Volume:_____(uL) Soil Aliquot Volume: _____(uL)

CONCENTRATION UNITS: (ug/L or ug/Kg) UG/KG

CAS NO.	COMPOUND	MDL	RL	CONC	Q	
108-88-3	Toluene	0.65	7.6		~~U~~ UJ	MSI
120-82-1	1,2,4-Trichlorobenzene	0.14	7.6		~~U~~ UJ	MSI
71-55-6	1,1,1-Trichloroethane	0.68	7.6		U	
79-00-5	1,1,2-Trichloroethane	0.26	7.6		U	
79-01-6	Trichloroethene	0.64	7.6		~~U~~ UJ	MSI
76-13-1	Trichlorotrifluoroethane	0.42	7.6		U	
75-69-4	Trichlorofluoromethane	0.72	7.6		U	
75-01-4	Vinyl chloride	0.84	7.6		U	
1330-20-7	Xylene(total)	0.53	7.6		U	

MW
4/1/09

FORM 1
VOLATILE ORGANICS ANALYSIS DATA SHEET

CLIENT SAMPLE NO. 15

MR08-SS140-09A

Lab Name: EMPIRICAL LABS Contract: CH2MHIL

Lab Code: NA Case No.: NA SAS No.: NA SDG No.: LEJEUNE042

Matrix: (soil/water) SOIL Lab Sample ID: 0901041-15

Sample wt/vol: 5.4 (g/mL) G Lab File ID: 0104115A

Level: (low/med) LOW Date Sampled: 01/06/09 14:25

% Moisture: not dec. 7 Date Analyzed: 01/15/09 04:32

GC Column: RTX-VRX ID: 0.25 (mm) Dilution Factor: 1.0

Soil Extract Volume:_____(uL) Soil Aliquot Volume: _____(uL)

CONCENTRATION UNITS: (ug/L or ug/Kg) UG/KG

CAS NO.	COMPOUND	MDL	RL	CONC	Q	
67-64-1	Acetone	2.0	9.9	8.8	~~J~~ J	CCI
71-43-2	Benzene	0.46	9.9	0.90	J	
75-27-4	Bromodichloromethane	0.30	9.9		U	
75-25-2	Bromoform	0.99	9.9		U	
74-83-9	Bromomethane	0.71	9.9		U	
78-93-3	2-Butanone	1.4	9.9		U	
75-15-0	Carbon disulfide	1.3	9.9		U	
56-23-5	Carbon tetrachloride	0.87	9.9		U	
108-90-7	Chlorobenzene	0.34	9.9		U	
75-00-3	Chloroethane	1.1	9.9		U	
67-66-3	Chloroform	0.54	9.9		U	
74-87-3	Chloromethane	0.51	9.9		~~J~~ UJ	CU
110-82-7	Cyclohexane	0.53	9.9		U	
124-48-1	Dibromochloromethane	0.34	9.9		U	
96-12-8	1,2-Dibromo-3-chloropropane	1.2	4.9		U	
106-93-4	1,2-Dibromoethane	0.42	9.9		U	
95-50-1	1,2-Dichlorobenzene	0.36	9.9		U	
541-73-1	1,3-Dichlorobenzene	0.83	9.9		U	
106-46-7	1,4-Dichlorobenzene	0.54	9.9		U	
75-71-8	Dichlorodifluoromethane	1.1	9.9		U	
75-34-3	1,1-Dichloroethane	0.53	9.9		U	
107-06-2	1,2-Dichloroethane	0.45	9.9		U	
75-35-4	1,1-Dichloroethene	1.2	9.9		U	
156-59-2	cis-1,2-Dichloroethene	1.2	9.9		U	
156-60-5	trans-1,2-Dichloroethene	1.1	9.9		U	
78-87-5	1,2-Dichloropropane	0.45	9.9		U	
10061-01-5	cis-1,3-Dichloropropene	0.49	9.9		U	
10061-02-6	trans-1,3-Dichloropropene	0.32	9.9		U	
100-41-4	Ethylbenzene	0.74	9.9	5.2	J	
591-78-6	2-Hexanone	2.3	9.9		U	
98-82-8	Isopropylbenzene	0.87	9.9		U	
79-20-9	Methyl acetate	1.6	9.9		U	
75-09-2	Methylene chloride	0.61	9.9	9.9u ~~1.3~~	~~JB~~	BI
108-87-2	Methyl cyclohexane	0.30	9.9	0.72	J	
1634-04-4	Methyl tert-butyl ether	0.32	9.9		U	
108-10-1	4-Methyl-2-pentanone	0.57	9.9		U	
100-42-5	Styrene	0.34	9.9		U	
79-34-5	1,1,2,2-Tetrachloroethane	0.42	9.9		U	
127-18-4	Tetrachloroethene	0.96	9.9		U	

LWS
4/1/09

FORM 1
VOLATILE ORGANICS ANALYSIS DATA SHEET

CLIENT SAMPLE NO. 15

MR08-SS140-09A

Lab Name: EMPIRICAL LABS Contract: CH2MHIL

Lab Code: NA Case No.: NA SAS No.: NA SDG No.: LEJEUNE042

Matrix: (soil/water) SOIL Lab Sample ID: 0901041-15

Sample wt/vol: 5.4 (g/mL) G Lab File ID: 0104115A

Level: (low/med) LOW Date Sampled: 01/06/09 14:25

% Moisture: not dec. 7 Date Analyzed: 01/15/09 04:32

GC Column: RTX-VRX ID: 0.25 (mm) Dilution Factor: 1.0

Soil Extract Volume:_____(uL) Soil Aliquot Volume: _____(uL)

CONCENTRATION UNITS: (ug/L or ug/Kg) UG/KG

CAS NO.	COMPOUND	MDL	RL	CONC	Q
108-88-3	Toluene	0.85	9.9	9.9u ~~2.3~~	~~J~~ BL
120-82-1	1,2,4-Trichlorobenzene	0.18	9.9		U
71-55-6	1,1,1-Trichloroethane	0.89	9.9		U
79-00-5	1,1,2-Trichloroethane	0.34	9.9		U
79-01-6	Trichloroethene	0.84	9.9		U
76-13-1	Trichlorotrifluoroethane	0.54	9.9		U
75-69-4	Trichlorofluoromethane	0.94	9.9		U
75-01-4	Vinyl chloride	1.1	9.9		U
1330-20-7	Xylene(total)	0.69	9.9		U

JW
9/1/09

FORM 1
VOLATILE ORGANICS ANALYSIS DATA SHEET

CLIENT SAMPLE NO. 18

MR08-IS20
9-2-3-09A

Lab Name: EMPIRICAL LABS Contract: CH2MHIL

Lab Code: NA Case No.: NA SAS No.: NA SDG No.: LEJEUNE042

Matrix: (soil/water) SOIL Lab Sample ID: 0901041-18

Sample wt/vol: 2.1 (g/mL) G Lab File ID: 0104118A

Level: (low/med) LOW Date Sampled: 01/06/09 15:35 use reanalysis

% Moisture: not dec. 8 Date Analyzed: 01/15/09 05:11

GC Column: RTX-VRX ID: 0.25 (mm) Dilution Factor: 1.0

Soil Extract Volume:_____(uL) Soil Aliquot Volume: _____(uL)

CONCENTRATION UNITS: (ug/L or ug/Kg) UG/KG

CAS NO.	COMPOUND	MDL	RL	CONC	Q	
67-64-1	Acetone	5.0	25		~~U~~ UJ	CCI
71-43-2	Benzene	1.2	25		U UJ	ISL
75-27-4	Bromodichloromethane	0.76	25		U	
75-25-2	Bromoform	2.5	25		U	
74-83-9	Bromomethane	1.8	25		U	
78-93-3	2-Butanone	3.5	25		U	
75-15-0	Carbon disulfide	3.3	25		U	
56-23-5	Carbon tetrachloride	2.2	25		U	
108-90-7	Chlorobenzene	0.86	25		U	
75-00-3	Chloroethane	2.8	25		U	
67-66-3	Chloroform	1.4	25		U	
74-87-3	Chloromethane	1.3	25		~~U~~ UJ	CCI
110-82-7	Cyclohexane	1.4	25		U	ISL
124-48-1	Dibromochloromethane	0.86	25		U	
96-12-8	1,2-Dibromo-3-chloropropane	3.0	13		U	
106-93-4	1,2-Dibromoethane	1.1	25		U	
95-50-1	1,2-Dichlorobenzene	0.93	25		U	
541-73-1	1,3-Dichlorobenzene	2.1	25		U	
106-46-7	1,4-Dichlorobenzene	1.4	25		U	
75-71-8	Dichlorodifluoromethane	2.8	25		U	
75-34-3	1,1-Dichloroethane	1.4	25		U	
107-06-2	1,2-Dichloroethane	1.2	25		U	
75-35-4	1,1-Dichloroethene	3.0	25		U	
156-59-2	cis-1,2-Dichloroethene	3.0	25		U	
156-60-5	trans-1,2-Dichloroethene	2.8	25		U	
78-87-5	1,2-Dichloropropane	1.2	25		U	
10061-01-5	cis-1,3-Dichloropropene	1.3	25		U	
10061-02-6	trans-1,3-Dichloropropene	0.81	25		U	
100-41-4	Ethylbenzene	1.9	25		U	
591-78-6	2-Hexanone	5.8	25		U	
98-82-8	Isopropylbenzene	2.2	25		U	
79-20-9	Methyl acetate	4.0	25		U	
75-09-2	Methylene chloride	1.6	25	25 UJ	~~19 JB~~ ISL	BK
108-87-2	Methyl cyclohexane	0.76	25		U UJ	ISL
1634-04-4	Methyl tert-butyl ether	0.81	25		U	
108-10-1	4-Methyl-2-pentanone	1.5	25		U	
100-42-5	Styrene	0.88	25		U	
79-34-5	1,1,2,2-Tetrachloroethane	1.1	25		U	
127-18-4	Tetrachloroethene	2.4	25		U	

FORM I VOA

LW
4/1/09

FORM 1
VOLATILE ORGANICS ANALYSIS DATA SHEET

CLIENT SAMPLE NO.

MR08-IS20
9-2-3-09A

18

Lab Name: EMPIRICAL LABS Contract: CH2MHIL

Lab Code: NA Case No.: NA SAS No.: NA SDG No.: LEJEUNE042

Matrix: (soil/water) SOIL Lab Sample ID: 0901041-18

Sample wt/vol: 2.1 (g/mL) G Lab File ID: 0104118A

Level: (low/med) LOW Date Sampled: 01/06/09 15:35

% Moisture: not dec. 8 Date Analyzed: 01/15/09 05:11

GC Column: RTX-VRX ID: 0.25 (mm) Dilution Factor: 1.0

Soil Extract Volume:_____(uL) Soil Aliquot Volume:_____(uL)

use reanalysis

CONCENTRATION UNITS: (ug/L or ug/Kg) UG/KG

CAS NO.	COMPOUND	MDL	RL	CONC	Q
108-88-3	Toluene	2.2	25		U UJ
120-82-1	1,2,4-Trichlorobenzene	0.45	25		U
71-55-6	1,1,1-Trichloroethane	2.3	25		U
79-00-5	1,1,2-Trichloroethane	0.88	25		U
79-01-6	Trichloroethene	2.1	25		U
76-13-1	Trichlorotrifluoroethane	1.4	25		U
75-69-4	Trichlorofluoromethane	2.4	25		U
75-01-4	Vinyl chloride	2.8	25		U
1330-20-7	Xylene(total)	1.8	25		U

JSI

R RE

FORM I VOA

lw 4/1/09

FORM 1
VOLATILE ORGANICS ANALYSIS DATA SHEET

CLIENT SAMPLE NO.

MR08-IS20
9-2-3-09AR

18RE

Lab Name: EMPIRICAL LABS Contract: CH2MHIL

Lab Code: NA Case No.: NA SAS No.: NA SDG No.: LEJEUNE042

Matrix: (soil/water) SOIL Lab Sample ID: 0901041-18R

Sample wt/vol: 2.3 (g/mL) G Lab File ID: 0104118B

Level: (low/med) LOW Date Sampled: 01/06/09 15:35

% Moisture: not dec. 8 Date Analyzed: 01/15/09 17:13

GC Column: RTX-VRX ID: 0.25 (mm) Dilution Factor: 1.0

Soil Extract Volume:_____(uL) Soil Aliquot Volume: _____(uL)

CONCENTRATION UNITS: (ug/L or ug/Kg) UG/KG

CAS NO.	COMPOUND	MDL	RL	CONC	Q
67-64-1	Acetone	4.8	24	10	~~J~~ J
71-43-2	Benzene	1.1	24		U
75-27-4	Bromodichloromethane	0.72	24		U
75-25-2	Bromoform	2.4	24		U
74-83-9	Bromomethane	1.7	24		U
78-93-3	2-Butanone	3.3	24		U
75-15-0	Carbon disulfide	3.1	24		U
56-23-5	Carbon tetrachloride	2.1	24		U
108-90-7	Chlorobenzene	0.81	24		U
75-00-3	Chloroethane	2.6	24		U
67-66-3	Chloroform	1.3	24		U
74-87-3	Chloromethane	1.2	24		U
110-82-7	Cyclohexane	1.3	24		U
124-48-1	Dibromochloromethane	0.81	24		U
96-12-8	1,2-Dibromo-3-chloropropane	2.9	12		U
106-93-4	1,2-Dibromoethane	1.0	24		U
95-50-1	1,2-Dichlorobenzene	0.88	24		U
541-73-1	1,3-Dichlorobenzene	2.0	24		U
106-46-7	1,4-Dichlorobenzene	1.3	24		U
75-71-8	Dichlorodifluoromethane	2.6	24		U
75-34-3	1,1-Dichloroethane	1.3	24		U
107-06-2	1,2-Dichloroethane	1.1	24		U
75-35-4	1,1-Dichloroethene	2.9	24		U
156-59-2	cis-1,2-Dichloroethene	2.9	24		U
156-60-5	trans-1,2-Dichloroethene	2.6	24		U
78-87-5	1,2-Dichloropropane	1.1	24		U
10061-01-5	cis-1,3-Dichloropropene	1.2	24		U
10061-02-6	trans-1,3-Dichloropropene	0.76	24		U
100-41-4	Ethylbenzene	1.8	24		U
591-78-6	2-Hexanone	5.5	24		U
98-82-8	Isopropylbenzene	2.1	24		U
79-20-9	Methyl acetate	3.8	24		U
75-09-2	Methylene chloride	1.5	24	24u	~~7.8 JB~~ B
108-87-2	Methyl cyclohexane	0.72	24		U
1634-04-4	Methyl tert-butyl ether	0.76	24		U
108-10-1	4-Methyl-2-pentanone	1.4	24		U
100-42-5	Styrene	0.84	24		U
79-34-5	1,1,2,2-Tetrachloroethane	1.0	24		U
127-18-4	Tetrachloroethene	2.3	24		U

CC

FORM I VOA

MW
4/1/09

FORM 1
VOLATILE ORGANICS ANALYSIS DATA SHEET

CLIENT SAMPLE NO.

MR08-IS20
9-2-3-09AR

18RE

Lab Name: EMPIRICAL LABS Contract: CH2MHIL

Lab Code: NA Case No.: NA SAS No.: NA SDG No.: LEJEUNE042

Matrix: (soil/water) SOIL Lab Sample ID: 0901041-18R

Sample wt/vol: 2.3 (g/mL) G Lab File ID: 0104118B

Level: (low/med) LOW Date Sampled: 01/06/09 15:35

% Moisture: not dec. 8 Date Analyzed: 01/15/09 17:13

GC Column: RTX-VRX ID: 0.25 (mm) Dilution Factor: 1.0

Soil Extract Volume:_____(uL) Soil Aliquot Volume: _____(uL)

CONCENTRATION UNITS: (ug/L or ug/Kg) UG/KG

CAS NO.	COMPOUND	MDL	RL	CONC	Q
108-88-3	Toluene	2.0	24		U
120-82-1	1,2,4-Trichlorobenzene	0.43	24		U
71-55-6	1,1,1-Trichloroethane	2.2	24		U
79-00-5	1,1,2-Trichloroethane	0.84	24		U
79-01-6	Trichloroethene	2.0	24		U
76-13-1	Trichlorotrifluoroethane	1.3	24		U
75-69-4	Trichlorofluoromethane	2.3	24		U
75-01-4	Vinyl chloride	2.6	24		U
1330-20-7	Xylene(total)	1.7	24		U

lw 4/1/09

FORM 1
VOLATILE ORGANICS ANALYSIS DATA SHEET

CLIENT SAMPLE NO. 19

MR08-IS20
9D-2-3-09A

Lab Name: EMPIRICAL LABS Contract: CH2MHIL

Lab Code: NA Case No.: NA SAS No.: NA SDG No.: LEJEUNE042

Matrix: (soil/water) SOIL Lab Sample ID: 0901041-19

Sample wt/vol: 4.0 (g/mL) G Lab File ID: 0104119A

Level: (low/med) LOW Date Sampled: 01/06/09 15:45

% Moisture: not dec. 13 Date Analyzed: 01/15/09 05:50

GC Column: RTX-VRX ID: 0.25 (mm) Dilution Factor: 1.0

Soil Extract Volume:_____(uL) Soil Aliquot Volume: _____(uL)

CONCENTRATION UNITS: (ug/L or ug/Kg) UG/KG

CAS NO.	COMPOUND	MDL	RL	CONC	Q	
67-64-1	Acetone	2.9	14	6.7	~~JB~~ J	CU
71-43-2	Benzene	0.67	14		U	
75-27-4	Bromodichloromethane	0.43	14		U	
75-25-2	Bromoform	1.4	14		U	
74-83-9	Bromomethane	1.0	14		U	
78-93-3	2-Butanone	2.0	14		U	
75-15-0	Carbon disulfide	1.9	14		U	
56-23-5	Carbon tetrachloride	1.2	14		U	
108-90-7	Chlorobenzene	0.49	14		U	
75-00-3	Chloroethane	1.6	14		U	
67-66-3	Chloroform	0.79	14		U	
74-87-3	Chloromethane	0.74	14		~~J~~ UJ	CU
110-82-7	Cyclohexane	0.77	14		U	
124-48-1	Dibromochloromethane	0.49	14		U	
96-12-8	1,2-Dibromo-3-chloropropane	1.7	7.2		U	
106-93-4	1,2-Dibromoethane	0.62	14		U	
95-50-1	1,2-Dichlorobenzene	0.53	14		U	
541-73-1	1,3-Dichlorobenzene	1.2	14		U	
106-46-7	1,4-Dichlorobenzene	0.79	14		U	
75-71-8	Dichlorodifluoromethane	1.6	14		U	
75-34-3	1,1-Dichloroethane	0.77	14		U	
107-06-2	1,2-Dichloroethane	0.66	14		U	
75-35-4	1,1-Dichloroethene	1.7	14		U	
156-59-2	cis-1,2-Dichloroethene	1.7	14		U	
156-60-5	trans-1,2-Dichloroethene	1.6	14		U	
78-87-5	1,2-Dichloropropane	0.66	14		U	
10061-01-5	cis-1,3-Dichloropropene	0.72	14		U	
10061-02-6	trans-1,3-Dichloropropene	0.46	14		U	
100-41-4	Ethylbenzene	1.1	14		U	
591-78-6	2-Hexanone	3.3	14		U	
98-82-8	Isopropylbenzene	1.2	14		U	
79-20-9	Methyl acetate	2.3	14		U	
75-09-2	Methylene chloride	0.89	14	14U	~~3.4 JB~~	BU
108-87-2	Methyl cyclohexane	0.43	14		U	
1634-04-4	Methyl tert-butyl ether	0.46	14		U	
108-10-1	4-Methyl-2-pentanone	0.83	14		U	
100-42-5	Styrene	0.50	14		U	
79-34-5	1,1,2,2-Tetrachloroethane	0.62	14		U	
127-18-4	Tetrachloroethene	1.4	14		U	

FORM I VOA

lw
4/1/09

FORM 1
VOLATILE ORGANICS ANALYSIS DATA SHEET

CLIENT SAMPLE NO.

19

MR08-IS20
9D-2-3-09A

Lab Name: EMPIRICAL LABS Contract: CH2MHIL

Lab Code: NA Case No.: NA SAS No.: NA SDG No.: LEJEUNE042

Matrix: (soil/water) SOIL Lab Sample ID: 0901041-19

Sample wt/vol: 4.0 (g/mL) G Lab File ID: 0104119A

Level: (low/med) LOW Date Sampled: 01/06/09 15:45

% Moisture: not dec. 13 Date Analyzed: 01/15/09 05:50

GC Column: RTX-VRX ID: 0.25 (mm) Dilution Factor: 1.0

Soil Extract Volume:_____(uL) Soil Aliquot Volume: _____(uL)

CONCENTRATION UNITS: (ug/L or ug/Kg) UG/KG

CAS NO.	COMPOUND	MDL	RL	CONC	Q
108-88-3	Toluene	1.2	14		U
120-82-1	1,2,4-Trichlorobenzene	0.26	14		U
71-55-6	1,1,1-Trichloroethane	1.3	14		U
79-00-5	1,1,2-Trichloroethane	0.50	14		U
79-01-6	Trichloroethene	1.2	14		U
76-13-1	Trichlorotrifluoroethane	0.79	14		U
75-69-4	Trichlorofluoromethane	1.4	14		U
75-01-4	Vinyl chloride	1.6	14		U
1330-20-7	Xylene(total)	1.0	14		U

lew
4/1/09

FORM 1
VOLATILE ORGANICS ANALYSIS DATA SHEET

CLIENT SAMPLE NO. 20

MR08-SS210-09A

Lab Name: EMPIRICAL LABS Contract: CH2MHIL

Lab Code: NA Case No.: NA SAS No.: NA SDG No.: LEJEUNE042

Matrix: (soil/water) SOIL Lab Sample ID: 0901041-20

Sample wt/vol: 3.7 (g/mL) G Lab File ID: 0104120A

Level: (low/med) LOW Date Sampled: 01/06/09 16:00

% Moisture: not dec. 11 Date Analyzed: 01/15/09 06:29

GC Column: RTX-VRX ID: 0.25 (mm) Dilution Factor: 1.0

Soil Extract Volume:_____(uL) Soil Aliquot Volume: _____(uL)

CONCENTRATION UNITS: (ug/L or ug/Kg) UG/KG

CAS NO.	COMPOUND	MDL	RL	CONC	Q	
67-64-1	Acetone	3.0	15	86	~~X~~ J	CU
71-43-2	Benzene	0.70	15		U	
75-27-4	Bromodichloromethane	0.45	15		U	
75-25-2	Bromoform	1.5	15		U	
74-83-9	Bromomethane	1.1	15		U	
78-93-3	2-Butanone	2.1	15	5.6	J	
75-15-0	Carbon disulfide	1.9	15	3.4	J	
56-23-5	Carbon tetrachloride	1.3	15		U	
108-90-7	Chlorobenzene	0.51	15		U	
75-00-3	Chloroethane	1.6	15		U	
67-66-3	Chloroform	0.82	15		U	
74-87-3	Chloromethane	0.78	15		~~U~~ UJ	CU
110-82-7	Cyclohexane	0.81	15		U	
124-48-1	Dibromochloromethane	0.51	15		U	
96-12-8	1,2-Dibromo-3-chloropropane	1.8	7.5		U	
106-93-4	1,2-Dibromoethane	0.64	15		U	
95-50-1	1,2-Dichlorobenzene	0.55	15		U	
541-73-1	1,3-Dichlorobenzene	1.2	15		U	
106-46-7	1,4-Dichlorobenzene	0.82	15		U	
75-71-8	Dichlorodifluoromethane	1.6	15		U	
75-34-3	1,1-Dichloroethane	0.81	15		U	
107-06-2	1,2-Dichloroethane	0.69	15		U	
75-35-4	1,1-Dichloroethene	1.8	15		U	
156-59-2	cis-1,2-Dichloroethene	1.8	15		U	
156-60-5	trans-1,2-Dichloroethene	1.6	15		U	
78-87-5	1,2-Dichloropropane	0.69	15		U	
10061-01-5	cis-1,3-Dichloropropene	0.75	15		U	
10061-02-6	trans-1,3-Dichloropropene	0.48	15		U	
100-41-4	Ethylbenzene	1.1	15		U	
591-78-6	2-Hexanone	3.4	15		U	
98-82-8	Isopropylbenzene	1.3	15		U	
79-20-9	Methyl acetate	2.4	15		U	
75-09-2	Methylene chloride	0.93	15	15u	~~3.2 JB~~	BU
108-87-2	Methyl cyclohexane	0.45	15		U	
1634-04-4	Methyl tert-butyl ether	0.48	15		U	
108-10-1	4-Methyl-2-pentanone	0.87	15		U	
100-42-5	Styrene	0.52	15		U	
79-34-5	1,1,2,2-Tetrachloroethane	0.64	15		U	
127-18-4	Tetrachloroethene	1.4	15		U	

lw 4/1/09

FORM 1
VOLATILE ORGANICS ANALYSIS DATA SHEET

CLIENT SAMPLE NO. 20

MR08-SS210-09A

Lab Name: EMPIRICAL LABS Contract: CH2MHIL

Lab Code: NA Case No.: NA SAS No.: NA SDG No.: LEJEUNE042

Matrix: (soil/water) SOIL Lab Sample ID: 0901041-20

Sample wt/vol: 3.7 (g/mL) G Lab File ID: 0104120A

Level: (low/med) LOW Date Sampled: 01/06/09 16:00

% Moisture: not dec. 11 Date Analyzed: 01/15/09 06:29

GC Column: RTX-VRX ID: 0.25 (mm) Dilution Factor: 1.0

Soil Extract Volume:_____(uL) Soil Aliquot Volume: _____(uL)

CONCENTRATION UNITS: (ug/L or ug/Kg) UG/KG

CAS NO.	COMPOUND	MDL	RL	CONC	Q
108-88-3	Toluene	1.3	15		U
120-82-1	1,2,4-Trichlorobenzene	0.27	15		U
71-55-6	1,1,1-Trichloroethane	1.3	15		U
79-00-5	1,1,2-Trichloroethane	0.52	15		U
79-01-6	Trichloroethene	1.3	15		U
76-13-1	Trichlorotrifluoroethane	0.82	15		U
75-69-4	Trichlorofluoromethane	1.4	15		U
75-01-4	Vinyl chloride	1.6	15		U
1330-20-7	Xylene(total)	1.0	15		U

MW
4/1/09

FORM 1
VOLATILE ORGANICS ANALYSIS DATA SHEET

CLIENT SAMPLE NO. 21

MR08-IS21
0-2-3-09A

Lab Name: EMPIRICAL LABS Contract: CH2MHIL

Lab Code: NA Case No.: NA SAS No.: NA SDG No.: LEJEUNE042

Matrix: (soil/water) SOIL Lab Sample ID: 0901041-21

Sample wt/vol: 5.2 (g/mL) G Lab File ID: 0104121A

Level: (low/med) LOW Date Sampled: 01/06/09 16:15

% Moisture: not dec. 12 Date Analyzed: 01/15/09 07:08

GC Column: RTX-VRX ID: 0.25 (mm) Dilution Factor: 1.0

Soil Extract Volume:_____(uL) Soil Aliquot Volume: _____(uL)

CONCENTRATION UNITS: (ug/L or ug/Kg) UG/KG

CAS NO.	COMPOUND	MDL	RL	CONC	Q	
67-64-1	Acetone	2.2	11	36	~~X~~ J	CU
71-43-2	Benzene	0.51	11		U	
75-27-4	Bromodichloromethane	0.33	11		U	
75-25-2	Bromoform	1.1	11		U	
74-83-9	Bromomethane	0.78	11		U	
78-93-3	2-Butanone	1.5	11	2.1	J	
75-15-0	Carbon disulfide	1.4	11		U	
56-23-5	Carbon tetrachloride	0.96	11		U	
108-90-7	Chlorobenzene	0.37	11		U	
75-00-3	Chloroethane	1.2	11		U	
67-66-3	Chloroform	0.60	11		U	
74-87-3	Chloromethane	0.57	11		~~U~~ UJ	CU
110-82-7	Cyclohexane	0.59	11		U	
124-48-1	Dibromochloromethane	0.37	11		U	
96-12-8	1,2-Dibromo-3-chloropropane	1.3	5.4		U	
106-93-4	1,2-Dibromoethane	0.47	11		U	
95-50-1	1,2-Dichlorobenzene	0.40	11		U	
541-73-1	1,3-Dichlorobenzene	0.91	11		U	
106-46-7	1,4-Dichlorobenzene	0.60	11		U	
75-71-8	Dichlorodifluoromethane	1.2	11		U	
75-34-3	1,1-Dichloroethane	0.59	11		U	
107-06-2	1,2-Dichloroethane	0.50	11		U	
75-35-4	1,1-Dichloroethene	1.3	11		U	
156-59-2	cis-1,2-Dichloroethene	1.3	11		U	
156-60-5	trans-1,2-Dichloroethene	1.2	11		U	
78-87-5	1,2-Dichloropropane	0.50	11		U	
10061-01-5	cis-1,3-Dichloropropene	0.54	11		U	
10061-02-6	trans-1,3-Dichloropropene	0.35	11		U	
100-41-4	Ethylbenzene	0.82	11		U	
591-78-6	2-Hexanone	2.5	11		U	
98-82-8	Isopropylbenzene	0.96	11		U	
79-20-9	Methyl acetate	1.7	11		U	
75-09-2	Methylene chloride	0.68	11	11u	~~2.5 JB~~	BU
108-87-2	Methyl cyclohexane	0.33	11		U	
1634-04-4	Methyl tert-butyl ether	0.35	11		U	
108-10-1	4-Methyl-2-pentanone	0.63	11		U	
100-42-5	Styrene	0.38	11		U	
79-34-5	1,1,2,2-Tetrachloroethane	0.47	11		U	
127-18-4	Tetrachloroethene	1.0	11		U	

FORM I VOA

lw
4/1/09

FORM 1
VOLATILE ORGANICS ANALYSIS DATA SHEET

CLIENT SAMPLE NO. 21

MR08-IS21
0-2-3-09A

Lab Name: EMPIRICAL LABS Contract: CH2MHIL

Lab Code: NA Case No.: NA SAS No.: NA SDG No.: LEJEUNE042

Matrix: (soil/water) SOIL Lab Sample ID: 0901041-21

Sample wt/vol: 5.2 (g/mL) G Lab File ID: 0104121A

Level: (low/med) LOW Date Sampled: 01/06/09 16:15

% Moisture: not dec. 12 Date Analyzed: 01/15/09 07:08

GC Column: RTX-VRX ID: 0.25 (mm) Dilution Factor: 1.0

Soil Extract Volume:_____(uL) Soil Aliquot Volume: _____(uL)

CONCENTRATION UNITS: (ug/L or ug/Kg) UG/KG

CAS NO.	COMPOUND	MDL	RL	CONC	Q
108-88-3	Toluene	0.94	11		U
120-82-1	1,2,4-Trichlorobenzene	0.20	11		U
71-55-6	1,1,1-Trichloroethane	0.98	11		U
79-00-5	1,1,2-Trichloroethane	0.38	11		U
79-01-6	Trichloroethene	0.92	11		U
76-13-1	Trichlorotrifluoroethane	0.60	11		U
75-69-4	Trichlorofluoromethane	1.0	11		U
75-01-4	Vinyl chloride	1.2	11		U
1330-20-7	Xylene(total)	0.76	11		U

JCW
4/1/09

FORM 1
VOLATILE ORGANICS ANALYSIS DATA SHEET

CLIENT SAMPLE NO. 22

MR08-EB01
010609-SS

Lab Name: EMPIRICAL LABS Contract: CH2MHIL

Lab Code: NA Case No.: NA SAS No.: NA SDG No.: LEJEUNE042

Matrix: (soil/water) WATER Lab Sample ID: 0901041-22

Sample wt/vol: 5.000 (g/mL) ML Lab File ID: 0104122

Level: (low/med) LOW Date Sampled: 01/06/09 14:00

% Moisture: not dec. _____ Date Analyzed: 01/13/09 01:37

GC Column: RTX-VRX ID: 0.25 (mm) Dilution Factor: 1.0

Soil Extract Volume:_____(uL) Soil Aliquot Volume: _____(uL)

CONCENTRATION UNITS: (ug/L or ug/Kg) UG/L

CAS NO.	COMPOUND	MDL	RL	CONC	Q
67-64-1	Acetone	0.84	2.5		U
71-43-2	Benzene	0.11	1.0		U
75-27-4	Bromodichloromethane	0.10	1.0		U
75-25-2	Bromoform	0.10	1.0		U
74-83-9	Bromomethane	0.32	1.0		U
78-93-3	2-Butanone	1.0	3.0		U
75-15-0	Carbon disulfide	0.13	1.0		U
56-23-5	Carbon tetrachloride	0.15	1.0		U
108-90-7	Chlorobenzene	0.10	1.0		U
75-00-3	Chloroethane	0.18	1.0		U
67-66-3	Chloroform	0.11	1.0		U
74-87-3	Chloromethane	0.29	1.0		U
110-82-7	Cyclohexane	0.20	1.0		U
124-48-1	Dibromochloromethane	0.10	1.0		U
96-12-8	1,2-Dibromo-3-chloropropane	0.11	1.0		U
106-93-4	1,2-Dibromoethane	0.10	1.0		U
95-50-1	1,2-Dichlorobenzene	0.10	1.0		U
541-73-1	1,3-Dichlorobenzene	0.13	1.0		U
106-46-7	1,4-Dichlorobenzene	0.10	1.0		U
75-71-8	Dichlorodifluoromethane	0.22	1.0		U
75-34-3	1,1-Dichloroethane	0.12	1.0		U
107-06-2	1,2-Dichloroethane	0.10	1.0		U
75-35-4	1,1-Dichloroethene	0.15	1.0		U
156-59-2	cis-1,2-Dichloroethene	0.13	1.0		U
156-60-5	trans-1,2-Dichloroethene	0.13	1.0		U
78-87-5	1,2-Dichloropropane	0.10	1.0		U
10061-01-5	cis-1,3-Dichloropropene	0.11	1.0		U
10061-02-6	trans-1,3-Dichloropropene	0.10	1.0		U
100-41-4	Ethylbenzene	0.13	1.0		U
591-78-6	2-Hexanone	0.30	1.0		U
98-82-8	Isopropylbenzene	0.15	1.0		U
79-20-9	Methyl acetate	0.30	1.0		U
75-09-2	Methylene chloride	0.14	1.0	1.0U ~~0.98~~	~~JB~~ B
108-87-2	Methyl cyclohexane	0.17	1.0		U
1634-04-4	Methyl tert-butyl ether	0.10	1.0		U
108-10-1	4-Methyl-2-pentanone	0.29	1.0		U
100-42-5	Styrene	0.10	1.0		U
79-34-5	1,1,2,2-Tetrachloroethane	0.10	1.0		U
127-18-4	Tetrachloroethene	0.15	1.0		U

FORM I VOA

lew
01/1/09

FORM 1
VOLATILE ORGANICS ANALYSIS DATA SHEET

CLIENT SAMPLE NO.

MR08-EB01
010609-SS

22

Lab Name: EMPIRICAL LABS Contract: CH2MHIL

Lab Code: NA Case No.: NA SAS No.: NA SDG No.: LEJEUNE042

Matrix: (soil/water) WATER Lab Sample ID: 0901041-22

Sample wt/vol: 5.000 (g/mL) ML Lab File ID: 0104122

Level: (low/med) LOW Date Sampled: 01/06/09 14:00

% Moisture: not dec. _____ Date Analyzed: 01/13/09 01:37

GC Column: RTX-VRX ID: 0.25 (mm) Dilution Factor: 1.0

Soil Extract Volume:_____(uL) Soil Aliquot Volume: _____(uL)

CONCENTRATION UNITS: (ug/L or ug/Kg) UG/L

CAS NO.	COMPOUND	MDL	RL	CONC	Q
108-88-3	Toluene	0.10	1.0		U
120-82-1	1,2,4-Trichlorobenzene	0.10	1.0		U
71-55-6	1,1,1-Trichloroethane	0.17	1.0		U
79-00-5	1,1,2-Trichloroethane	0.10	1.0		U
79-01-6	Trichloroethene	0.13	1.0		U
76-13-1	Trichlorotrifluoroethane	0.18	1.0		U
75-69-4	Trichlorofluoromethane	0.17	1.0		U
75-01-4	Vinyl chloride	0.18	1.0		U
1330-20-7	Xylene(total)	0.22	1.0		U

lw
4/1/09

FORM 1
VOLATILE ORGANICS ANALYSIS DATA SHEET

CLIENT SAMPLE NO. 23

MR08-TB01010609

Lab Name: EMPIRICAL LABS Contract: CH2MHIL

Lab Code: NA Case No.: NA SAS No.: NA SDG No.: LEJEUNE042

Matrix: (soil/water) WATER Lab Sample ID: 0901041-23

Sample wt/vol: 5.000 (g/mL) ML Lab File ID: 0104123

Level: (low/med) LOW Date Sampled: 01/06/09 14:20

% Moisture: not dec. _____ Date Analyzed: 01/13/09 00:37

GC Column: RTX-VRX ID: 0.25 (mm) Dilution Factor: 1.0

Soil Extract Volume:_____(uL) Soil Aliquot Volume: _____(uL)

CONCENTRATION UNITS: (ug/L or ug/Kg) UG/L

CAS NO.	COMPOUND	MDL	RL	CONC	Q
67-64-1	Acetone	0.84	2.5		U
71-43-2	Benzene	0.11	1.0		U
75-27-4	Bromodichloromethane	0.10	1.0		U
75-25-2	Bromoform	0.10	1.0		U
74-83-9	Bromomethane	0.32	1.0		U
78-93-3	2-Butanone	1.0	3.0		U
75-15-0	Carbon disulfide	0.13	1.0		U
56-23-5	Carbon tetrachloride	0.15	1.0		U
108-90-7	Chlorobenzene	0.10	1.0		U
75-00-3	Chloroethane	0.18	1.0		U
67-66-3	Chloroform	0.11	1.0		U
74-87-3	Chloromethane	0.29	1.0		U
110-82-7	Cyclohexane	0.20	1.0		U
124-48-1	Dibromochloromethane	0.10	1.0		U
96-12-8	1,2-Dibromo-3-chloropropane	0.11	1.0		U
106-93-4	1,2-Dibromoethane	0.10	1.0		U
95-50-1	1,2-Dichlorobenzene	0.10	1.0		U
541-73-1	1,3-Dichlorobenzene	0.13	1.0		U
106-46-7	1,4-Dichlorobenzene	0.10	1.0		U
75-71-8	Dichlorodifluoromethane	0.22	1.0		U
75-34-3	1,1-Dichloroethane	0.12	1.0		U
107-06-2	1,2-Dichloroethane	0.10	1.0		U
75-35-4	1,1-Dichloroethene	0.15	1.0		U
156-59-2	cis-1,2-Dichloroethene	0.13	1.0		U
156-60-5	trans-1,2-Dichloroethene	0.13	1.0		U
78-87-5	1,2-Dichloropropane	0.10	1.0		U
10061-01-5	cis-1,3-Dichloropropene	0.11	1.0		U
10061-02-6	trans-1,3-Dichloropropene	0.10	1.0		U
100-41-4	Ethylbenzene	0.13	1.0		U
591-78-6	2-Hexanone	0.30	1.0		U
98-82-8	Isopropylbenzene	0.15	1.0		U
79-20-9	Methyl acetate	0.30	1.0		U
75-09-2	Methylene chloride	0.14	1.0	2.7	~~B~~ U B1
108-87-2	Methyl cyclohexane	0.17	1.0		U
1634-04-4	Methyl tert-butyl ether	0.10	1.0		U
108-10-1	4-Methyl-2-pentanone	0.29	1.0		U
100-42-5	Styrene	0.10	1.0		U
79-34-5	1,1,2,2-Tetrachloroethane	0.10	1.0		U
127-18-4	Tetrachloroethene	0.15	1.0		U

FORM I VOA

lw 4/1/09

FORM 1
VOLATILE ORGANICS ANALYSIS DATA SHEET

CLIENT SAMPLE NO.

23

MR08-TB01010609

Lab Name: EMPIRICAL LABS Contract: CH2MHIL

Lab Code: NA Case No.: NA SAS No.: NA SDG No.: LEJEUNE042

Matrix: (soil/water) WATER Lab Sample ID: 0901041-23

Sample wt/vol: 5.000 (g/mL) ML Lab File ID: 0104123

Level: (low/med) LOW Date Sampled: 01/06/09 14:20

% Moisture: not dec. _____ Date Analyzed: 01/13/09 00:37

GC Column: RTX-VRX ID: 0.25 (mm) Dilution Factor: 1.0

Soil Extract Volume:_____(uL) Soil Aliquot Volume: _____(uL)

CONCENTRATION UNITS: (ug/L or ug/Kg) UG/L

CAS NO.	COMPOUND	MDL	RL	CONC	Q
108-88-3	Toluene	0.10	1.0		U
120-82-1	1,2,4-Trichlorobenzene	0.10	1.0		U
71-55-6	1,1,1-Trichloroethane	0.17	1.0		U
79-00-5	1,1,2-Trichloroethane	0.10	1.0		U
79-01-6	Trichloroethene	0.13	1.0		U
76-13-1	Trichlorotrifluoroethane	0.18	1.0		U
75-69-4	Trichlorofluoromethane	0.17	1.0	0.62	J
75-01-4	Vinyl chloride	0.18	1.0		U
1330-20-7	Xylene(total)	0.22	1.0		U

FORM I VOA

RLS
4/1/09

FORM 1
VOLATILE ORGANICS ANALYSIS DATA SHEET

CLIENT SAMPLE NO.

24

MR08-IS14
0-2-3-09A

Lab Name: EMPIRICAL LABS Contract: CH2MHIL

Lab Code: NA Case No.: NA SAS No.: NA SDG No.: LEJEUNE042

Matrix: (soil/water) SOIL Lab Sample ID: 0901041-24

Sample wt/vol: 5.7 (g/mL) G Lab File ID: 0104124A

Level: (low/med) LOW Date Sampled: 01/06/09 14:45 Use reanalysis

% Moisture: not dec. 11 Date Analyzed: 01/15/09 07:47

GC Column: RTX-VRX ID: 0.25 (mm) Dilution Factor: 1.0

Soil Extract Volume:_____(uL) Soil Aliquot Volume:_____(uL)

CONCENTRATION UNITS: (ug/L or ug/Kg) UG/KG

CAS NO.	COMPOUND	MDL	RL	CONC	Q	
67-64-1	Acetone	2.0	9.8	3.2	~~J~~ J	CG
71-43-2	Benzene	0.46	9.8		U UJ	IS
75-27-4	Bromodichloromethane	0.29	9.8		U UJ	IS
75-25-2	Bromoform	0.98	9.8		U UJ	SSL
74-83-9	Bromomethane	0.71	9.8		U	
78-93-3	2-Butanone	1.4	9.8		U	
75-15-0	Carbon disulfide	1.3	9.8		U	
56-23-5	Carbon tetrachloride	0.86	9.8		U	
108-90-7	Chlorobenzene	0.33	9.8		U UJ	IS
75-00-3	Chloroethane	1.1	9.8		U	SS
67-66-3	Chloroform	0.54	9.8		U	SS
74-87-3	Chloromethane	0.51	9.8		U UJ	CG
110-82-7	Cyclohexane	0.53	9.8		U	SS
124-48-1	Dibromochloromethane	0.33	9.8		U UJ	IS
96-12-8	1,2-Dibromo-3-chloropropane	1.2	4.9		U UJ	IS
106-93-4	1,2-Dibromoethane	0.42	9.8		U UJ	IS
95-50-1	1,2-Dichlorobenzene	0.36	9.8		U UJ	IS
541-73-1	1,3-Dichlorobenzene	0.82	9.8		U	
106-46-7	1,4-Dichlorobenzene	0.54	9.8		U	
75-71-8	Dichlorodifluoromethane	1.1	9.8		U	SS
75-34-3	1,1-Dichloroethane	0.53	9.8		U	
107-06-2	1,2-Dichloroethane	0.45	9.8		U	
75-35-4	1,1-Dichloroethene	1.2	9.8		U	
156-59-2	cis-1,2-Dichloroethene	1.2	9.8		U	
156-60-5	trans-1,2-Dichloroethene	1.1	9.8		U	
78-87-5	1,2-Dichloropropane	0.45	9.8		U	
10061-01-5	cis-1,3-Dichloropropene	0.49	9.8		U	
10061-02-6	trans-1,3-Dichloropropene	0.31	9.8		U UJ	IS
100-41-4	Ethylbenzene	0.74	9.8		U UJ	IS
591-78-6	2-Hexanone	2.2	9.8		U UJ	IS
98-82-8	Isopropylbenzene	0.86	9.8		U	SS
79-20-9	Methyl acetate	1.6	9.8		U	
75-09-2	Methylene chloride	0.61	9.8	9.8 UJ ~~1.1~~ ~~JB~~	SSL	B
108-87-2	Methyl cyclohexane	0.29	9.8		U UJ	SS
1634-04-4	Methyl tert-butyl ether	0.31	9.8		U	
108-10-1	4-Methyl-2-pentanone	0.57	9.8		U	
100-42-5	Styrene	0.34	9.8		U	
79-34-5	1,1,2,2-Tetrachloroethane	0.42	9.8		U UJ	IS
127-18-4	Tetrachloroethene	0.95	9.8		U UJ	IS

FORM I VOA

MW 4/1/09

FORM 1
VOLATILE ORGANICS ANALYSIS DATA SHEET

CLIENT SAMPLE NO.

MR08-IS14
0-2-3-09A

24

Lab Name: EMPIRICAL LABS Contract: CH2MHIL

Lab Code: NA Case No.: NA SAS No.: NA SDG No.: LEJEUNE042

Matrix: (soil/water) SOIL Lab Sample ID: 0901041-24

Sample wt/vol: 5.7 (g/mL) G Lab File ID: 0104124A

Level: (low/med) LOW Date Sampled: 01/06/09 14:45

% Moisture: not dec. 11 Date Analyzed: 01/15/09 07:47 use reanalysis

GC Column: RTX-VRX ID: 0.25 (mm) Dilution Factor: 1.0

Soil Extract Volume:_____(uL) Soil Aliquot Volume:_____(uL)

CONCENTRATION UNITS: (ug/L or ug/Kg) UG/KG

CAS NO.	COMPOUND	MDL	RL	CONC	Q	
108-88-3	Toluene	0.84	9.8		~~U~~ UJ	ISL
120-82-1	1,2,4-Trichlorobenzene	0.18	9.8		~~U~~ UJ	ISL
71-55-6	1,1,1-Trichloroethane	0.88	9.8		~~U~~ UJ	SSL
79-00-5	1,1,2-Trichloroethane	0.34	9.8		~~U~~ UJ	ISL
79-01-6	Trichloroethene	0.83	9.8		U	SSL
76-13-1	Trichlorotrifluoroethane	0.54	9.8		U	
75-69-4	Trichlorofluoromethane	0.93	9.8		U	
75-01-4	Vinyl chloride	1.1	9.8		U	
1330-20-7	Xylene(total)	0.69	9.8		~~U~~ UJ	ISL

RR

FORM I VOA

JW 4/1/09

FORM 1
VOLATILE ORGANICS ANALYSIS DATA SHEET

CLIENT SAMPLE NO.

MR08-IS14
0-2-3-09ARE

24RE

Lab Name: EMPIRICAL LABS Contract: CH2MHIL

Lab Code: NA Case No.: NA SAS No.: NA SDG No.: LEJEUNE042

Matrix: (soil/water) SOIL Lab Sample ID: 0901041-24RE

Sample wt/vol: 5.9 (g/mL) G Lab File ID: 0104124B

Level: (low/med) LOW Date Sampled: 01/06/09 14:45

% Moisture: not dec. 11 Date Analyzed: 01/15/09 17:53

GC Column: RTX-VRX ID: 0.25 (mm) Dilution Factor: 1.0

Soil Extract Volume:_____(uL) Soil Aliquot Volume: _____(uL)

CONCENTRATION UNITS: (ug/L or ug/Kg) UG/KG

CAS NO.	COMPOUND	MDL	RL	CONC	Q
67-64-1	Acetone	1.9	9.6	4.6	~~J~~ J CU
71-43-2	Benzene	0.45	9.6		U
75-27-4	Bromodichloromethane	0.29	9.6		U
75-25-2	Bromoform	0.96	9.6		U
74-83-9	Bromomethane	0.69	9.6		U
78-93-3	2-Butanone	1.3	9.6		U
75-15-0	Carbon disulfide	1.2	9.6		U
56-23-5	Carbon tetrachloride	0.84	9.6		U
108-90-7	Chlorobenzene	0.32	9.6		U
75-00-3	Chloroethane	1.0	9.6		U
67-66-3	Chloroform	0.52	9.6		U
74-87-3	Chloromethane	0.50	9.6		U
110-82-7	Cyclohexane	0.52	9.6		U
124-48-1	Dibromochloromethane	0.32	9.6		U
96-12-8	1,2-Dibromo-3-chloropropane	1.1	4.8		U
106-93-4	1,2-Dibromoethane	0.41	9.6		U
95-50-1	1,2-Dichlorobenzene	0.35	9.6		U
541-73-1	1,3-Dichlorobenzene	0.80	9.6		U
106-46-7	1,4-Dichlorobenzene	0.52	9.6		U
75-71-8	Dichlorodifluoromethane	1.0	9.6		U
75-34-3	1,1-Dichloroethane	0.52	9.6		U
107-06-2	1,2-Dichloroethane	0.44	9.6		U
75-35-4	1,1-Dichloroethene	1.1	9.6		U
156-59-2	cis-1,2-Dichloroethene	1.1	9.6		U
156-60-5	trans-1,2-Dichloroethene	1.0	9.6		U
78-87-5	1,2-Dichloropropane	0.44	9.6		U
10061-01-5	cis-1,3-Dichloropropene	0.48	9.6		U
10061-02-6	trans-1,3-Dichloropropene	0.30	9.6		U
100-41-4	Ethylbenzene	0.72	9.6		U
591-78-6	2-Hexanone	2.2	9.6		U
98-82-8	Isopropylbenzene	0.84	9.6		U
79-20-9	Methyl acetate	1.5	9.6		U
75-09-2	Methylene chloride	0.59	9.6	9.6u ~~1.4~~ ~~JB~~	B
108-87-2	Methyl cyclohexane	0.29	9.6		U
1634-04-4	Methyl tert-butyl ether	0.30	9.6		U
108-10-1	4-Methyl-2-pentanone	0.55	9.6		U
100-42-5	Styrene	0.33	9.6		U
79-34-5	1,1,2,2-Tetrachloroethane	0.41	9.6		U
127-18-4	Tetrachloroethene	0.93	9.6		U

FORM I VOA

LW
4/1/09

FORM 1
VOLATILE ORGANICS ANALYSIS DATA SHEET

CLIENT SAMPLE NO.

MR08-IS14
0-2-3-09AR

24RE

Lab Name: EMPIRICAL LABS Contract: CH2MHIL

Lab Code: NA Case No.: NA SAS No.: NA SDG No.: LEJEUNE042

Matrix: (soil/water) SOIL Lab Sample ID: 0901041-24R

Sample wt/vol: 5.9 (g/mL) G Lab File ID: 0104124B

Level: (low/med) LOW Date Sampled: 01/06/09 14:45

% Moisture: not dec. 11 Date Analyzed: 01/15/09 17:53

GC Column: RTX-VRX ID: 0.25 (mm) Dilution Factor: 1.0

Soil Extract Volume:_____(uL) Soil Aliquot Volume: _____(uL)

CONCENTRATION UNITS: (ug/L or ug/Kg) UG/KG

CAS NO.	COMPOUND	MDL	RL	CONC	Q
108-88-3	Toluene	0.82	9.6		U
120-82-1	1,2,4-Trichlorobenzene	0.17	9.6		U
71-55-6	1,1,1-Trichloroethane	0.86	9.6		U
79-00-5	1,1,2-Trichloroethane	0.33	9.6		U
79-01-6	Trichloroethene	0.81	9.6		U
76-13-1	Trichlorotrifluoroethane	0.52	9.6		U
75-69-4	Trichlorofluoromethane	0.91	9.6		U
75-01-4	Vinyl chloride	1.0	9.6		U
1330-20-7	Xylene(total)	0.67	9.6		U

lw
4/1/09

ENVIRONMENTAL
Data Services, Inc.

VOLATILE ORGANIC COMPOUNDS
USEPA Region IV - Level IV Review

Site: MCB Camp Lejeune, TO-09 SDG #: LEJEUNE043

Client: CH2M HILL, Inc., Virginia Beach, Virginia Date: April 1, 2009

Laboratory: Empirical Laboratories, Nashville, Tennessee Reviewer: Nancy Weaver

EDS ID	Client Sample ID	Laboratory Sample ID	Matrix
1	MR08-SS248-09A	0901058-01	Soil
2	MR08-IS248-5-6-09A	0901058-02	Soil
3	MR08-SS250-09A	0901058-03	Soil
4	MR08-IS250-5-6-09A	0901058-04	Soil
5	MR08-SS257-09A	0901058-05	Soil
6	MR08-IS257-9-10-09A	0901058-06	Soil
7	MR08-SS258-09A	0901058-07	Soil
8	MR08-IS258-9-10-09A	0901058-08	Soil
9	MR08-SS273-09A	0901058-09	Soil
10	MR08-IS273-8-9-09A	0901058-10	Soil
11	MR08-SS274-09A	0901058-11	Soil
12	MR08-IS274-9-10-09A	0901058-12	Soil
13	MR08-SS225-09A	0901058-13	Soil
13MS	MR08-SS225-09AMS	0901058-13MS	Soil
13MSD	MR08-SS225-09AMSD	0901058-13MSD	Soil
13RE	MR08-SS225-09ARE	0901058-13RE	Soil
13REMS	MR08-SS225-09AREMS	0901058-13REMS	Soil
13REMSD	MR08-SS225-09AREMSD	0901058-13REMSD	Soil
14	MR08-IS225-2-3-09A	0901058-14	Soil
14MS	MR08-IS225-2-3-09AMS	0901058-14MS	Soil
14MSD	MR08-IS225-2-3-09AMSD	0901058-14MSD	Soil
15	MR08-SS226-09A	0901058-15	Soil
16	MR08-IS226-2-3-09A	0901058-16	Soil
17	MR08-SS233-09A	0901058-17	Soil
18	MR08-IS233-5-6-09A	0901058-18	Soil
19	MR08-SS234-09A	0901058-19	Soil
20	MR08-IS234-5-6-09	0901058-20	Soil
20RE	MR08-IS234-5-6-09RE	0901058-20RE	Soil
21	MR08-SS249-09A	0901058-21	Soil
22	MR08-SS249D-09A	0901058-22	Soil
22RE	MR08-SS249D-09ARE	0901058-22RE	Soil
23	MR08-IS249-5-6-09A	0901058-23	Soil
24	MR08-IS249D-5-6-09A	0901058-24	Soil
25	MR08-EB010709-SS	0901058-25	Water
26	MR08-TB01010709	0901058-26	Water

The USEPA "Contract Laboratory Program National Functional Guidelines for Organic Data Review," October 1999, and professional judgement were used in evaluating the data in this summary report.

Holding Times - All samples were analyzed within 14 days for preserved water and soil samples.

GC/MS Tuning - All of the BFB tunes in the initial and continuing calibrations met the percent relative abundance criteria.

Initial Calibration - The initial calibrations exhibited acceptable %RSD and mean RRF values.

Continuing Calibration - The continuing calibrations exhibited acceptable %D and RRF values except the following.

CCAL Date	Compound	%D/RRF	Qualifier	Affected Samples
01/14/09	Acetone	25.9%	J/UJ	1-5
	Chloromethane	27.8%	J/UJ	1-5
01/16/09 (0808)	Acetone	49.6%	J/UJ	6, 7, 10, 13
	Chloromethane	28.6%	J/UJ	6, 7, 10, 13
	Dichlorodifluoromethane	26.6%	J/UJ	6, 7, 10, 13
	2-Hexanone	25.2%	J/UJ	6, 7, 10, 13
01/16/09 (1955)	Bromodichloromethane	27.3%	J/UJ	8, 9, 12, 15-20, 22-24
	Carbon tetrachloride	41.7%	J/UJ	8, 9, 12, 15-20, 22-24
	Dichlorodifluoromethane	41.0%	J/UJ	8, 9, 12, 15-20, 22-24
	1,2-Dichloroethane	41.6%	J/UJ	8, 9, 12, 15-20, 22-24
	Methyl tert-butyl ether	26.8%	J/UJ	8, 9, 12, 15-20, 22-24
	1,1,1-Trichloroethane	36.2%	J/UJ	8, 9, 12, 15-20, 22-24
	Trichlorofluoromethane	63.7%	J/UJ	8, 9, 12, 15-20, 22-24
01/17/09	Carbon tetrachloride	42.3%	J/UJ	11, 13RE, 14, 20RE, 21
	Dichorodifluoromethane	35.5%	J/UJ	11, 13RE, 14, 20RE, 21
	1,2-Dichloroethane	27.1%	J/UJ	11, 13RE, 14, 20RE, 21
	1,1,1-Trichloroethane	39.7%	J/UJ	11, 13RE, 14, 20RE, 21
	Trichlorofluoromethane	60.2%	J/UJ	11, 13RE, 14, 20RE, 21
01/20/09	Bromodichloromethane	31.2%	J/UJ	22RE
	Bromomethane	29.8%	J/UJ	22RE
	Carbon tetrachloride	65.6%	J/UJ	22RE
	Chloroethane	26.4%	J/UJ	22RE
	Chloroform	26.2%	J/UJ	22RE
	Chloromethane	37.9%	J/UJ	22RE
	Dichlorodifluoromethane	74.9%	J/UJ	22RE
	1,2-Dichloroethane	39.2%	J/UJ	22RE
	Vinyl chloride	46.4%	J/UJ	22RE
	Methylene chloride	56.2%	J/UJ	22RE
	Methyl tert-butyl ether	28.3%	J/UJ	22RE
	1,1,1-Trichloroethane	57.8%	J/UJ	22RE

CCAL Date	Compound	%D/RRF	Qualifier	Affected Samples
01/20/09	Trichlorotrifluoroethene	42.4%	J/UJ	22RE
	Trichorofluoromethane	96.5%	J/UJ	22RE

Surrogates - All samples exhibited acceptable surrogate recoveries except the following.

Sample ID	Surrogate	%R	Qualifier
22	S1-Dibromofluoromethane	127%	J/UJ - All results
	S4-Bromofluorobenzene	79%	
22RE	S1-Dibromofluoromethane	129%	J - Positive results

MS/MSD - The MS/MSD sample exhibited acceptable %R and RPD values except the following.

MS/MSD Sample ID	Compound	MS/MSD %R/RPD	Qualifier
13	Benzene	62%/55%/Ok	J/UJ
	Bromodichloromethane	Ok/68%/Ok	J/UJ
	Chlorobenzene	40%/27%/43	J/UJ
	Cyclohexane	56%/58%/Ok	J/UJ
	Dibromochloromethane	61%/54%/Ok	J/UJ
	1,2-Dibromo-3-chloropropene	Ok/35%/52%	None - Already qualified due to IS
	1,2-Dibromoethane	49%/44%/Ok	J/UJ
	1,2-Dichlorobenzene	38%/20%/68	None - Already qualified due to IS
	1,3-Dichlorobenzene	33%/20%/55	None - Already qualified due to IS
	1,4-Dichlorobenzene	35%/20%/62	None - Already qualified due to IS
	cis-1,2-Dichloroethene	62%/58%/Ok	J/UJ
	trans-1,2-Dichloroethene	Ok/61%/Ok	J/UJ
	1,2-Dichloropropane	61%/54%/Ok	J/UJ
	cis-1,3-Dichloropropene	53%/46%/Ok	J/UJ
	trans-1,3-Dichloropropene	53%/51%/Ok	J/UJ
	Ethylbenzene	52%/38%/34	J/UJ
	Isopropylbenzene	49%/38%/32	J/UJ
	Methyl acetate	Ok/Ok/54	None for RPD alone
	Methyl cyclohexane	40%/45%/Ok	J/UJ
	4-Methyl-2-pentanone	Ok/Ok/36	None for RPD alone
	Styrene	34%/11%/105	J/UJ
	Tetrachloroethene	44%/40%/Ok	J/UJ
	Toluene	54%/46%/Ok	J/UJ
	1,2,4-Trichlorobenzene	17%/8%/80	J/R
	1,1,2-Trichloroethane	58%/52%/Ok	J/UJ
	Trichloroethene	61%/49%/Ok	J/UJ
	Xylene (total)	52%/35%/44	J/UJ
13RE	Benzene	61%/62%/Ok	J/UJ
	Chlorobenzene	30%/31%/Ok	J/UJ
	Cyclohexane	Ok/64%/Ok	J/UJ
	Dibromochloromethane	59%/60%/Ok	J/UJ
	1,2-Dibromoethane	47%/48%/Ok	J/UJ
	1,2-Dichlorobenzene	24%/27%/Ok	None - Already qualified due to IS
	1,3-Dichlorobenzene	22%//27%/Ok	None - Already qualified due to IS

MS/MSD Sample ID	Compound	MS/MSD %R/RPD	Qualifier
13RE	1,4-Dichlorobenzene	22%//23%/Ok	None - Already qualified due to IS
	Dichlorodifluoromethane	136%/148%/Ok	None - All ND
	cis-1,2-Dichloroethene	60%/61%/Ok	J/UJ
	1,2-Dichloropropane	61%/60%/Ok	J/UJ
	cis-1,3-Dichloropropene	56%/57%/Ok	J/UJ
	trans-1,3-Dichloropropene	62%/60%/Ok	J/UJ
	Ethylbenzene	44%/46%/Ok	J/UJ
	Isopropylbenzene	43%/42%/Ok	J/UJ
	Methyl cyclohexane	47%/48%/Ok	J/UJ
	Styrene	14%/17%/Ok	J/UJ
	Tetrachloroethene	40%/41%/Ok	J/UJ
	Toluene	49%/50%/Ok	J/UJ
	1,2,4-Trichlorobenzene	10%/10%/Ok	None - Already qualified due to IS
	1,1,2-Trichloroethane	56%/57%/Ok	J/UJ
	Trichloroethene	57%/60%/Ok	J/UJ
	Xylene (total)	40%/42%/Ok	J/UJ
14	Benzene	63%/66%/Ok	J/UJ
	Chlorobenzene	38%/36%/34	J/UJ
	Cyclohexane	60%/Ok/Ok	J/UJ
	Dibromochloromethane	64%/Ok/Ok	J/UJ
	1,2-Dibromoethane	56%/56%/Ok	J/UJ
	1,2-Dichlorobenzene	29%/28%/33	J/UJ
	1,3-Dichlorobenzene	24%/25%/Ok	J/UJ
	1,4-Dichlorobenzene	29%/29%/Ok	J/UJ
	Dichlorodifluoromethane	Ok/140%/Ok	None - All ND
	cis-1,2-Dichloroethene	63%/Ok/Ok	J/UJ
	1,2-Dichloropropane	61%/66%/Ok	J/UJ
	cis-1,3-Dichloropropene	60%/61%/Ok	J/UJ
	trans-1,3-Dichloropropene	61%/Ok/Ok	J/UJ
	Ethylbenzene	47%/50%/Ok	J/UJ
	Isopropylbenzene	47%/48%/Ok	J/UJ
	Methyl acetate	11%//Ok/103	J/UJ
	Methyl cyclohexane	51%/54%/Ok	J/UJ
	Styrene	26%/18%/63	J/UJ
	Tetrachloroethene	43%/49%/Ok	J/UJ
	Toluene	49%/56%/Ok	J/UJ
	1,2,4-Trichlorobenzene	14%/11%/54	J/UJ
	1,1,2-Trichloroethane	58%/Ok/Ok	J/UJ
	Trichloroethene	58%/64%/Ok	J/UJ
	Xylene (total)	46%/45%/Ok	J/UJ

Laboratory Control Sample - The LCS samples exhibited acceptable %R values except the following.

LCS ID	Compound	%R	Qualifier	Affected Samples
V1BLK0114E	Chloromethane	131%	None	All ND
V1BLK0116E	Carbon tetrachloride	136%	None	All ND
V1BLK0116E	Dichlorodifluoromethane	144%	None	All ND
	1,2-Dichloroethane	128%	None	All ND
V1BLK0117	Carbon tetrachloride	146%	None	All ND

LCS ID	Compound	%R	Qualifier	Affected Samples
V1BLK0117	Dichlorodifluoromethane	151%	None	All ND
	1,2-Dichloroethane	129%	None	All ND
	1,1,1-Trichloroethane	138%	None	All ND
V1BLK0120	Carbon tetrachloride	153%	None	All ND
	Chloromethane	153%	None	All ND
	Dichlorodifluoromethane	195%	None	All ND
	1,2-Dichloroethane	130%	None	All ND
	Methylene chloride	142%	None	All ND
	1,1,1-Trichloroethane	146%	None	All ND
	Trichlorotrifluoromethane	144%	None	All ND
	Trichlorofluoromethane	197%	None	All ND
	Vinyl chloride	138%	None	All ND

Internal Standard (IS) Area Performance - All internal standards met response and retention time (RT) criteria except the following.

Sample ID	Internal Standard	Area Count	Qualifier
13	IS3-1,4-Dichlorobenzene-d4	Low	J/UJ - Associated compounds
13RE	IS3-1,4-Dichlorobenzene-d4	Low	J/UJ - Associated compounds
22	IS3-1,4-Dichlorobenzene-d4	Low	None - Already qualified due to surrogates
22RE	IS3-1,4-Dichlorobenzene-d4	Low	J/UJ - Associated compounds

Method Blank - The method blanks exhibited the following contamination.

Blank ID	Compound	Conc.	Action Level	Qualifier	Affected Samples
V3BLK0112E	Methylene chloride	0.41 ug/L	4.1 ug/L	U	25, 26
V1BLK0114E	Methylene chloride	5.6 ug/kg	56 ug/kg	U	1-5
	1,2,4-Trichlorobenzene	0.27 ug/kg	1.35 ug/kg	None	All ND
	Trichlorofluoromethane	2.9 ug/kg	14.5 ug/kg	None	All ND
V1BLK0116	Methylene chloride	2.4 ug/kg	24 ug/kg	U	6, 7, 10, 13
V1BLK0116E	Methylene chloride	2.8 ug/kg	28 ug/kg	U	8, 9, 12, 15-20, 22-24
V1BLK0117	Methylene chloride	3.4 ug/kg	34 ug/kg	U	11, 13RE, 14, 20RE, 21
V1BLK0120	Acetone	3.8 ug/kg	38 ug/kg	None	All ND
	Methylene chloride	6.5 ug/kg	65 ug/kg	U	22RE

Trip, Field, Equipment Blank - Field QC results are summarized below.

Blank ID	Compound	Conc. ug/L	Action Level ug/kg	Qualifier	Affected Samples
MR08-EB01-010709-SS	None - ND	-	-	-	-
MR08-TB01010709	None - ND	-	-	-	-
MR08-FB01011009	Toluene	20	100	U	1, 3-5, 7, 9, 15

Field Duplicates - Field duplicate results are summarized below.

Compound	MR08-SS249-09A ug/kg	MR08-SS249D-09A ug/kg	RPD	Qualifier
Acetone	72	88	20%	None
Benzene	0.79	0.70	12%	None
2-Butanone	12 U	4.1	NC	None
Carbon disulfide	5.3	3.7	36%	None

Compound	MR08-IS249-5-6-09A ug/kg	MR08-IS249D-5-6-09A ug/kg	RPD	Qualifier
None	ND	ND	-	-

Tentatively Identified Compounds (TICs) - TICs were not reported.

Compound Quantitation - Several samples exhibited internal standard and/or surrogate deficiencies. These samples were reanalyzed at various dilutions. Refer to Form Is for which were used for reporting purposes.

FORM 1
VOLATILE ORGANICS ANALYSIS DATA SHEET

CLIENT SAMPLE NO.

MR08-SS248-09A

Lab Name: EMPIRICAL LABS Contract: CH2MHILL

Lab Code: NA Case No.: NA SAS No.: NA SDG No.: LEJEUNE043

Matrix: (soil/water) SOIL Lab Sample ID: 0901058-01

Sample wt/vol: 4.5 (g/mL) G Lab File ID: 0105801A

Level: (low/med) LOW Date Sampled: 01/07/09 11:00

% Moisture: not dec. 11 Date Analyzed: 01/15/09 08:26

GC Column: RTX-VRX ID: 0.25 (mm) Dilution Factor: 1.0

Soil Extract Volume:_____(uL) Soil Aliquot Volume: _____(uL)

CONCENTRATION UNITS: (ug/L or ug/Kg) UG/KG

CAS NO.	COMPOUND	MDL	RL	CONC	Q	
67-64-1	Acetone	2.5	12	180	~~Y~~ J	CCi
71-43-2	Benzene	0.59	12	1.5	J	
75-27-4	Bromodichloromethane	0.37	12		U	
75-25-2	Bromoform	1.2	12		U	
74-83-9	Bromomethane	0.90	12		U	
78-93-3	2-Butanone	1.7	12	11	J	
75-15-0	Carbon disulfide	1.6	12	3.1	J	
56-23-5	Carbon tetrachloride	1.1	12		U	
108-90-7	Chlorobenzene	0.42	12		U	
75-00-3	Chloroethane	1.4	12		U	
67-66-3	Chloroform	0.69	12	1.5	J	
74-87-3	Chloromethane	0.65	12		~~J~~ UJ	CCi
110-82-7	Cyclohexane	0.67	12	0.91	J	
124-48-1	Dibromochloromethane	0.42	12		U	
96-12-8	1,2-Dibromo-3-chloropropane	1.5	6.2		U	
106-93-4	1,2-Dibromoethane	0.54	12		U	
95-50-1	1,2-Dichlorobenzene	0.46	12		U	
541-73-1	1,3-Dichlorobenzene	1.0	12		U	
106-46-7	1,4-Dichlorobenzene	0.69	12		U	
75-71-8	Dichlorodifluoromethane	1.4	12		U	
75-34-3	1,1-Dichloroethane	0.67	12		U	
107-06-2	1,2-Dichloroethane	0.57	12		U	
75-35-4	1,1-Dichloroethene	1.5	12		U	
156-59-2	cis-1,2-Dichloroethene	1.5	12		U	
156-60-5	trans-1,2-Dichloroethene	1.4	12		U	
78-87-5	1,2-Dichloropropane	0.57	12		U	
10061-01-5	cis-1,3-Dichloropropene	0.62	12		U	
10061-02-6	trans-1,3-Dichloropropene	0.40	12		U	
100-41-4	Ethylbenzene	0.94	12		U	
591-78-6	2-Hexanone	2.9	12		U	
98-82-8	Isopropylbenzene	1.1	12		U	
79-20-9	Methyl acetate	2.0	12		U	
75-09-2	Methylene chloride	0.77	12	12U	~~3.8 JB~~	Bi
108-87-2	Methyl cyclohexane	0.37	12	0.58	J	
1634-04-4	Methyl tert-butyl ether	0.40	12		U	
108-10-1	4-Methyl-2-pentanone	0.72	12	1.7	J	
100-42-5	Styrene	0.44	12		U	
79-34-5	1,1,2,2-Tetrachloroethane	0.54	12		U	
127-18-4	Tetrachloroethene	1.2	12		U	

FORM I VOA

lw
4/1/09

FORM 1
VOLATILE ORGANICS ANALYSIS DATA SHEET

CLIENT SAMPLE NO.

MR08-SS248-09A

Lab Name: EMPIRICAL LABS Contract: CH2MHILL

Lab Code: NA Case No.: NA SAS No.: NA SDG No.: LEJEUNE043

Matrix: (soil/water) SOIL Lab Sample ID: 0901058-01

Sample wt/vol: 4.5 (g/mL) G Lab File ID: 0105801A

Level: (low/med) LOW Date Sampled: 01/07/09 11:00

% Moisture: not dec. 11 Date Analyzed: 01/15/09 08:26

GC Column: RTX-VRX ID: 0.25 (mm) Dilution Factor: 1.0

Soil Extract Volume:_____(uL) Soil Aliquot Volume: _____(uL)

CONCENTRATION UNITS: (ug/L or ug/Kg) UG/KG

CAS NO.	COMPOUND	MDL	RL	CONC	Q
108-88-3	Toluene	1.1	12	12U ~~3.1~~ ~~J~~	U
120-82-1	1,2,4-Trichlorobenzene	0.22	12		U
71-55-6	1,1,1-Trichloroethane	1.1	12		U
79-00-5	1,1,2-Trichloroethane	0.44	12		U
79-01-6	Trichloroethene	1.1	12		U
76-13-1	Trichlorotrifluoroethane	0.69	12		U
75-69-4	Trichlorofluoromethane	1.2	12		U
75-01-4	Vinyl chloride	1.4	12		U
1330-20-7	Xylene(total)	0.87	12		U

BL

FORM I VOA

fw
4/1/09

FORM 1
VOLATILE ORGANICS ANALYSIS DATA SHEET

CLIENT SAMPLE NO. 2

MR08-IS24
8-5-6-09A

Lab Name: EMPIRICAL LABS Contract: CH2MHILL

Lab Code: NA Case No.: NA SAS No.: NA SDG No.: LEJEUNE043

Matrix: (soil/water) SOIL Lab Sample ID: 0901058-02

Sample wt/vol: 3.8 (g/mL) G Lab File ID: 0105802A

Level: (low/med) LOW Date Sampled: 01/07/09 11:15

% Moisture: not dec. 12 Date Analyzed: 01/15/09 09:05

GC Column: RTX-VRX ID: 0.25 (mm) Dilution Factor: 1.0

Soil Extract Volume:_____(uL) Soil Aliquot Volume: _____(uL)

CONCENTRATION UNITS: (ug/L or ug/Kg) UG/KG

CAS NO.	COMPOUND	MDL	RL	CONC	Q	
67-64-1	Acetone	3.0	15	7.1	~~JX~~ J	CU
71-43-2	Benzene	0.71	15		U	
75-27-4	Bromodichloromethane	0.45	15		U	
75-25-2	Bromoform	1.5	15		U	
74-83-9	Bromomethane	1.1	15		U	
78-93-3	2-Butanone	2.1	15		U	
75-15-0	Carbon disulfide	2.0	15		U	
56-23-5	Carbon tetrachloride	1.3	15		U	
108-90-7	Chlorobenzene	0.51	15		U	
75-00-3	Chloroethane	1.7	15		U	
67-66-3	Chloroform	0.83	15		U	
74-87-3	Chloromethane	0.79	15		~~U~~ UJ	CU
110-82-7	Cyclohexane	0.82	15		U	
124-48-1	Dibromochloromethane	0.51	15		U	
96-12-8	1,2-Dibromo-3-chloropropane	1.8	7.6		U	
106-93-4	1,2-Dibromoethane	0.65	15		U	
95-50-1	1,2-Dichlorobenzene	0.56	15		U	
541-73-1	1,3-Dichlorobenzene	1.3	15		U	
106-46-7	1,4-Dichlorobenzene	0.83	15		U	
75-71-8	Dichlorodifluoromethane	1.7	15		U	
75-34-3	1,1-Dichloroethane	0.82	15		U	
107-06-2	1,2-Dichloroethane	0.70	15		U	
75-35-4	1,1-Dichloroethene	1.8	15		U	
156-59-2	cis-1,2-Dichloroethene	1.8	15		U	
156-60-5	trans-1,2-Dichloroethene	1.7	15		U	
78-87-5	1,2-Dichloropropane	0.70	15		U	
10061-01-5	cis-1,3-Dichloropropene	0.76	15		U	
10061-02-6	trans-1,3-Dichloropropene	0.48	15		U	
100-41-4	Ethylbenzene	1.1	15		U	
591-78-6	2-Hexanone	3.5	15		U	
98-82-8	Isopropylbenzene	1.3	15		U	
79-20-9	Methyl acetate	2.4	15		U	
75-09-2	Methylene chloride	0.94	15	15U	~~3.6 JB~~	B
108-87-2	Methyl cyclohexane	0.45	15		U	
1634-04-4	Methyl tert-butyl ether	0.48	15		U	
108-10-1	4-Methyl-2-pentanone	0.88	15		U	
100-42-5	Styrene	0.53	15		U	
79-34-5	1,1,2,2-Tetrachloroethane	0.65	15		U	
127-18-4	Tetrachloroethene	1.5	15		U	

lw
4/1/09

FORM 1
VOLATILE ORGANICS ANALYSIS DATA SHEET

CLIENT SAMPLE NO. 2

MR08-IS24
8-5-6-09A

Lab Name: EMPIRICAL LABS Contract: CH2MHILL

Lab Code: NA Case No.: NA SAS No.: NA SDG No.: LEJEUNE043

Matrix: (soil/water) SOIL Lab Sample ID: 0901058-02

Sample wt/vol: 3.8 (g/mL) G Lab File ID: 0105802A

Level: (low/med) LOW Date Sampled: 01/07/09 11:15

% Moisture: not dec. 12 Date Analyzed: 01/15/09 09:05

GC Column: RTX-VRX ID: 0.25 (mm) Dilution Factor: 1.0

Soil Extract Volume:_____(uL) Soil Aliquot Volume: _____(uL)

CONCENTRATION UNITS: (ug/L or ug/Kg) UG/KG

CAS NO.	COMPOUND	MDL	RL	CONC	Q
108-88-3	Toluene	1.3	15		U
120-82-1	1,2,4-Trichlorobenzene	0.27	15		U
71-55-6	1,1,1-Trichloroethane	1.4	15		U
79-00-5	1,1,2-Trichloroethane	0.53	15		U
79-01-6	Trichloroethene	1.3	15		U
76-13-1	Trichlorotrifluoroethane	0.83	15		U
75-69-4	Trichlorofluoromethane	1.4	15		U
75-01-4	Vinyl chloride	1.7	15		U
1330-20-7	Xylene(total)	1.0	15		U

MW
4/1/09

FORM 1
VOLATILE ORGANICS ANALYSIS DATA SHEET

CLIENT SAMPLE NO. 3

MR08-SS250-09A

Lab Name: EMPIRICAL LABS Contract: CH2MHILL

Lab Code: NA Case No.: NA SAS No.: NA SDG No.: LEJEUNE043

Matrix: (soil/water) SOIL Lab Sample ID: 0901058-03

Sample wt/vol: 2.7 (g/mL) G Lab File ID: 0105803A

Level: (low/med) LOW Date Sampled: 01/07/09 12:55

% Moisture: not dec. 9 Date Analyzed: 01/15/09 09:44

GC Column: RTX-VRX ID: 0.25 (mm) Dilution Factor: 1.0

Soil Extract Volume:_____(uL) Soil Aliquot Volume: _____(uL)

CONCENTRATION UNITS: (ug/L or ug/Kg) UG/KG

CAS NO.	COMPOUND	MDL	RL	CONC	Q	
67-64-1	Acetone	4.0	20	64	~~U~~ J	CU
71-43-2	Benzene	0.95	20	1.2	J	
75-27-4	Bromodichloromethane	0.60	20		U	
75-25-2	Bromoform	2.0	20		U	
74-83-9	Bromomethane	1.4	20		U	
78-93-3	2-Butanone	2.8	20		U	
75-15-0	Carbon disulfide	2.6	20	4.8	J	
56-23-5	Carbon tetrachloride	1.8	20		U	
108-90-7	Chlorobenzene	0.69	20		U	
75-00-3	Chloroethane	2.2	20		U	
67-66-3	Chloroform	1.1	20		U	
74-87-3	Chloromethane	1.0	20		~~U~~ UJ	CU
110-82-7	Cyclohexane	1.1	20	1.7	J	
124-48-1	Dibromochloromethane	0.69	20		U	
96-12-8	1,2-Dibromo-3-chloropropane	2.4	10		U	
106-93-4	1,2-Dibromoethane	0.87	20		U	
95-50-1	1,2-Dichlorobenzene	0.75	20		U	
541-73-1	1,3-Dichlorobenzene	1.7	20		U	
106-46-7	1,4-Dichlorobenzene	1.1	20		U	
75-71-8	Dichlorodifluoromethane	2.2	20		U	
75-34-3	1,1-Dichloroethane	1.1	20		U	
107-06-2	1,2-Dichloroethane	0.93	20		U	
75-35-4	1,1-Dichloroethene	2.4	20		U	
156-59-2	cis-1,2-Dichloroethene	2.4	20		U	
156-60-5	trans-1,2-Dichloroethene	2.2	20		U	
78-87-5	1,2-Dichloropropane	0.93	20		U	
10061-01-5	cis-1,3-Dichloropropene	1.0	20		U	
10061-02-6	trans-1,3-Dichloropropene	0.64	20		U	
100-41-4	Ethylbenzene	1.5	20		U	
591-78-6	2-Hexanone	4.6	20		U	
98-82-8	Isopropylbenzene	1.8	20		U	
79-20-9	Methyl acetate	3.2	20		U	
75-09-2	Methylene chloride	1.2	20	204	~~5.6 JB~~	BU
108-87-2	Methyl cyclohexane	0.60	20	0.90	J	
1634-04-4	Methyl tert-butyl ether	0.64	20		U	
108-10-1	4-Methyl-2-pentanone	1.2	20		U	
100-42-5	Styrene	0.71	20		U	
79-34-5	1,1,2,2-Tetrachloroethane	0.87	20		U	
127-18-4	Tetrachloroethene	2.0	20		U	

FORM I VOA

RW
4/1/09

FORM 1
VOLATILE ORGANICS ANALYSIS DATA SHEET

CLIENT SAMPLE NO. 3

MR08-SS250-09A

Lab Name: EMPIRICAL LABS Contract: CH2MHILL

Lab Code: NA Case No.: NA SAS No.: NA SDG No.: LEJEUNE043

Matrix: (soil/water) SOIL Lab Sample ID: 0901058-03

Sample wt/vol: 2.7 (g/mL) G Lab File ID: 0105803A

Level: (low/med) LOW Date Sampled: 01/07/09 12:55

% Moisture: not dec. 9 Date Analyzed: 01/15/09 09:44

GC Column: RTX-VRX ID: 0.25 (mm) Dilution Factor: 1.0

Soil Extract Volume:_____(uL) Soil Aliquot Volume: _____(uL)

CONCENTRATION UNITS: (ug/L or ug/Kg) UG/KG

CAS NO.	COMPOUND	MDL	RL	CONC	Q
108-88-3	Toluene	1.7	20	20u ~~2.1~~	~~J~~ U BL
120-82-1	1,2,4-Trichlorobenzene	0.36	20		U
71-55-6	1,1,1-Trichloroethane	1.8	20		U
79-00-5	1,1,2-Trichloroethane	0.71	20		U
79-01-6	Trichloroethene	1.7	20		U
76-13-1	Trichlorotrifluoroethane	1.1	20		U
75-69-4	Trichlorofluoromethane	1.9	20		U
75-01-4	Vinyl chloride	2.2	20		U
1330-20-7	Xylene(total)	1.4	20		U

FORM I VOA

4/1/09

FORM 1
VOLATILE ORGANICS ANALYSIS DATA SHEET

CLIENT SAMPLE NO.

4

MR08-IS25
0-5-6-09A

Lab Name: EMPIRICAL LABS Contract: CH2MHILL

Lab Code: NA Case No.: NA SAS No.: NA SDG No.: LEJEUNE043

Matrix: (soil/water) SOIL Lab Sample ID: 0901058-04

Sample wt/vol: 4.5 (g/mL) G Lab File ID: 0105804A

Level: (low/med) LOW Date Sampled: 01/07/09 13:15

% Moisture: not dec. 9 Date Analyzed: 01/15/09 10:23

GC Column: RTX-VRX ID: 0.25 (mm) Dilution Factor: 1.0

Soil Extract Volume:_____(uL) Soil Aliquot Volume: _____(uL)

CONCENTRATION UNITS: (ug/L or ug/Kg) UG/KG

CAS NO.	COMPOUND	MDL	RL	CONC	Q	
67-64-1	Acetone	2.4	12	9.7	~~JY~~ J	CU
71-43-2	Benzene	0.58	12	1.9	J	
75-27-4	Bromodichloromethane	0.37	12		U	
75-25-2	Bromoform	1.2	12		U	
74-83-9	Bromomethane	0.88	12		U	
78-93-3	2-Butanone	1.7	12		U	
75-15-0	Carbon disulfide	1.6	12		U	
56-23-5	Carbon tetrachloride	1.1	12		U	
108-90-7	Chlorobenzene	0.42	12		U	
75-00-3	Chloroethane	1.3	12		U	
67-66-3	Chloroform	0.67	12		U	
74-87-3	Chloromethane	0.64	12		~~J~~ UJ	CU
110-82-7	Cyclohexane	0.66	12		U	
124-48-1	Dibromochloromethane	0.42	12		U	
96-12-8	1,2-Dibromo-3-chloropropane	1.5	6.1		U	
106-93-4	1,2-Dibromoethane	0.53	12		U	
95-50-1	1,2-Dichlorobenzene	0.45	12		U	
541-73-1	1,3-Dichlorobenzene	1.0	12		U	
106-46-7	1,4-Dichlorobenzene	0.67	12		U	
75-71-8	Dichlorodifluoromethane	1.3	12		U	
75-34-3	1,1-Dichloroethane	0.66	12		U	
107-06-2	1,2-Dichloroethane	0.56	12		U	
75-35-4	1,1-Dichloroethene	1.5	12		U	
156-59-2	cis-1,2-Dichloroethene	1.5	12		U	
156-60-5	trans-1,2-Dichloroethene	1.3	12		U	
78-87-5	1,2-Dichloropropane	0.56	12		U	
10061-01-5	cis-1,3-Dichloropropene	0.61	12		U	
10061-02-6	trans-1,3-Dichloropropene	0.39	12		U	
100-41-4	Ethylbenzene	0.92	12		U	
591-78-6	2-Hexanone	2.8	12		U	
98-82-8	Isopropylbenzene	1.1	12		U	
79-20-9	Methyl acetate	2.0	12		U	
75-09-2	Methylene chloride	0.76	12	12U ~~3.2~~	JB	BI
108-87-2	Methyl cyclohexane	0.37	12	0.40	J	
1634-04-4	Methyl tert-butyl ether	0.39	12		U	
108-10-1	4-Methyl-2-pentanone	0.71	12		U	
100-42-5	Styrene	0.43	12		U	
79-34-5	1,1,2,2-Tetrachloroethane	0.53	12		U	
127-18-4	Tetrachloroethene	1.2	12		U	

FORM I VOA

MW 4/1/09

FORM 1
VOLATILE ORGANICS ANALYSIS DATA SHEET

CLIENT SAMPLE NO.

MR08-IS25
0-5-6-09A

4

Lab Name: EMPIRICAL LABS Contract: CH2MHILL

Lab Code: NA Case No.: NA SAS No.: NA SDG No.: LEJEUNE043

Matrix: (soil/water) SOIL Lab Sample ID: 0901058-04

Sample wt/vol: 4.5 (g/mL) G Lab File ID: 0105804A

Level: (low/med) LOW Date Sampled: 01/07/09 13:15

% Moisture: not dec. 9 Date Analyzed: 01/15/09 10:23

GC Column: RTX-VRX ID: 0.25 (mm) Dilution Factor: 1.0

Soil Extract Volume:_____(uL) Soil Aliquot Volume: _____(uL)

CONCENTRATION UNITS: (ug/L or ug/Kg) UG/KG

CAS NO.	COMPOUND	MDL	RL	CONC	Q
108-88-3	Toluene	1.0	12	12U ~~2.9~~	~~J~~
120-82-1	1,2,4-Trichlorobenzene	0.22	12		U
71-55-6	1,1,1-Trichloroethane	1.1	12		U
79-00-5	1,1,2-Trichloroethane	0.43	12		U
79-01-6	Trichloroethene	1.0	12		U
76-13-1	Trichlorotrifluoroethane	0.67	12		U
75-69-4	Trichlorofluoromethane	1.2	12		U
75-01-4	Vinyl chloride	1.3	12		U
1330-20-7	Xylene(total)	0.86	12	1.0	J

B

FORM I VOA

lus
4/1/09

FORM 1
VOLATILE ORGANICS ANALYSIS DATA SHEET

CLIENT SAMPLE NO. 5

MR08-SS257-09A

Lab Name: EMPIRICAL LABS Contract: CH2MHILL

Lab Code: NA Case No.: NA SAS No.: NA SDG No.: LEJEUNE043

Matrix: (soil/water) SOIL Lab Sample ID: 0901058-05

Sample wt/vol: 4.6 (g/mL) G Lab File ID: 0105805A

Level: (low/med) LOW Date Sampled: 01/07/09 13:30

% Moisture: not dec. 5 Date Analyzed: 01/15/09 11:02

GC Column: RTX-VRX ID: 0.25 (mm) Dilution Factor: 1.0

Soil Extract Volume:_____(uL) Soil Aliquot Volume: _____(uL)

CONCENTRATION UNITS: (ug/L or ug/Kg) UG/KG

CAS NO.	COMPOUND	MDL	RL	CONC	Q	
67-64-1	Acetone	2.3	11	17	~~X~~ J	CU
71-43-2	Benzene	0.54	11	3.0	J	
75-27-4	Bromodichloromethane	0.34	11		U	
75-25-2	Bromoform	1.1	11		U	
74-83-9	Bromomethane	0.82	11		U	
78-93-3	2-Butanone	1.6	11		U	
75-15-0	Carbon disulfide	1.5	11		U	
56-23-5	Carbon tetrachloride	1.0	11		U	
108-90-7	Chlorobenzene	0.39	11		U	
75-00-3	Chloroethane	1.2	11		U	
67-66-3	Chloroform	0.63	11		U	
74-87-3	Chloromethane	0.59	11		~~U~~ UJ	CU
110-82-7	Cyclohexane	0.62	11		U	
124-48-1	Dibromochloromethane	0.39	11		U	
96-12-8	1,2-Dibromo-3-chloropropane	1.4	5.7		U	
106-93-4	1,2-Dibromoethane	0.49	11		U	
95-50-1	1,2-Dichlorobenzene	0.42	11		U	
541-73-1	1,3-Dichlorobenzene	0.96	11		U	
106-46-7	1,4-Dichlorobenzene	0.63	11		U	
75-71-8	Dichlorodifluoromethane	1.2	11		U	
75-34-3	1,1-Dichloroethane	0.62	11		U	
107-06-2	1,2-Dichloroethane	0.52	11		U	
75-35-4	1,1-Dichloroethene	1.4	11		U	
156-59-2	cis-1,2-Dichloroethene	1.4	11		U	
156-60-5	trans-1,2-Dichloroethene	1.2	11		U	
78-87-5	1,2-Dichloropropane	0.52	11		U	
10061-01-5	cis-1,3-Dichloropropene	0.57	11		U	
10061-02-6	trans-1,3-Dichloropropene	0.36	11		U	
100-41-4	Ethylbenzene	0.85	11	3.4	J	
591-78-6	2-Hexanone	2.6	11		U	
98-82-8	Isopropylbenzene	1.0	11		U	
79-20-9	Methyl acetate	1.8	11		U	
75-09-2	Methylene chloride	0.71	11	11u	~~2.8~~ ~~JB~~	B1
108-87-2	Methyl cyclohexane	0.34	11	0.47	J	
1634-04-4	Methyl tert-butyl ether	0.36	11		U	
108-10-1	4-Methyl-2-pentanone	0.66	11		U	
100-42-5	Styrene	0.40	11		U	
79-34-5	1,1,2,2-Tetrachloroethane	0.49	11		U	
127-18-4	Tetrachloroethene	1.1	11		U	

FORM I VOA

kw
9/1/09

FORM 1
VOLATILE ORGANICS ANALYSIS DATA SHEET

CLIENT SAMPLE NO. 5

MR08-SS257-09A

Lab Name: EMPIRICAL LABS Contract: CH2MHILL

Lab Code: NA Case No.: NA SAS No.: NA SDG No.: LEJEUNE043

Matrix: (soil/water) SOIL Lab Sample ID: 0901058-05

Sample wt/vol: 4.6 (g/mL) G Lab File ID: 0105805A

Level: (low/med) LOW Date Sampled: 01/07/09 13:30

% Moisture: not dec. 5 Date Analyzed: 01/15/09 11:02

GC Column: RTX-VRX ID: 0.25 (mm) Dilution Factor: 1.0

Soil Extract Volume:_____(uL) Soil Aliquot Volume: _____(uL)

CONCENTRATION UNITS: (ug/L or ug/Kg) UG/KG

CAS NO.	COMPOUND	MDL	RL	CONC	Q
108-88-3	Toluene	0.98	11	11u ~~3.6~~	~~J~~ U BL
120-82-1	1,2,4-Trichlorobenzene	0.20	11		U
71-55-6	1,1,1-Trichloroethane	1.0	11		U
79-00-5	1,1,2-Trichloroethane	0.40	11		U
79-01-6	Trichloroethene	0.97	11		U
76-13-1	Trichlorotrifluoroethane	0.63	11		U
75-69-4	Trichlorofluoromethane	1.1	11		U
75-01-4	Vinyl chloride	1.2	11		U
1330-20-7	Xylene(total)	0.80	11		U

lw
4/1/09

FORM 1
VOLATILE ORGANICS ANALYSIS DATA SHEET

CLIENT SAMPLE NO.

MR08-IS25
7-9-10-09A

6

Lab Name: EMPIRICAL LABS Contract: CH2MHILL

Lab Code: NA Case No.: NA SAS No.: NA SDG No.: LEJEUNE043

Matrix: (soil/water) SOIL Lab Sample ID: 0901058-06

Sample wt/vol: 3.9 (g/mL) G Lab File ID: 0105806B

Level: (low/med) LOW Date Sampled: 01/07/09 13:50

% Moisture: not dec. 8 Date Analyzed: 01/16/09 11:00

GC Column: RTX-VRX ID: 0.25 (mm) Dilution Factor: 1.0

Soil Extract Volume:_____(uL) Soil Aliquot Volume: _____(uL)

CONCENTRATION UNITS: (ug/L or ug/Kg) UG/KG

CAS NO.	COMPOUND	MDL	RL	CONC	Q	
67-64-1-------	Acetone	2.8	14		~~U~~ UJ	CG
71-43-2-------	Benzene	0.66	14		U	
75-27-4-------	Bromodichloromethane	0.42	14		U	
75-25-2-------	Bromoform	1.4	14		U	
74-83-9-------	Bromomethane	1.0	14		U	
78-93-3-------	2-Butanone	2.0	14		U	
75-15-0-------	Carbon disulfide	1.8	14		U	
56-23-5-------	Carbon tetrachloride	1.2	14		U	
108-90-7------	Chlorobenzene	0.48	14		U	
75-00-3-------	Chloroethane	1.6	14		U	
67-66-3-------	Chloroform	0.78	14		U	
74-87-3-------	Chloromethane	0.73	14		~~U~~ UJ	CG
110-82-7------	Cyclohexane	0.76	14		U	
124-48-1------	Dibromochloromethane	0.48	14		U	
96-12-8-------	1,2-Dibromo-3-chloropropane	1.7	7.0		U	
106-93-4------	1,2-Dibromoethane	0.61	14		U	
95-50-1-------	1,2-Dichlorobenzene	0.52	14		U	
541-73-1------	1,3-Dichlorobenzene	1.2	14		U	
106-46-7------	1,4-Dichlorobenzene	0.78	14		U	
75-71-8-------	Dichlorodifluoromethane	1.6	14		~~U~~ UJ	CG
75-34-3-------	1,1-Dichloroethane	0.76	14		U	
107-06-2------	1,2-Dichloroethane	0.65	14		U	
75-35-4-------	1,1-Dichloroethene	1.7	14		U	
156-59-2------	cis-1,2-Dichloroethene	1.7	14		U	
156-60-5------	trans-1,2-Dichloroethene	1.6	14		U	
78-87-5-------	1,2-Dichloropropane	0.65	14		U	
10061-01-5----	cis-1,3-Dichloropropene	0.70	14		U	
10061-02-6----	trans-1,3-Dichloropropene	0.45	14		U	
100-41-4------	Ethylbenzene	1.0	14		U	
591-78-6------	2-Hexanone	3.2	14		~~U~~ UJ	CG
98-82-8-------	Isopropylbenzene	1.2	14		U	
79-20-9-------	Methyl acetate	2.2	14		U	
75-09-2-------	Methylene chloride	0.87	14	14u	~~4.0 JB~~	B
108-87-2------	Methyl cyclohexane	0.42	14		U	
1634-04-4-----	Methyl tert-butyl ether	0.45	14		U	
108-10-1------	4-Methyl-2-pentanone	0.82	14		U	
100-42-5------	Styrene	0.49	14		U	
79-34-5-------	1,1,2,2-Tetrachloroethane	0.61	14		U	
127-18-4------	Tetrachloroethene	1.4	14		U	

FORM I VOA

lw
4/1/09

FORM 1
VOLATILE ORGANICS ANALYSIS DATA SHEET

CLIENT SAMPLE NO.

6

MR08-IS25
7-9-10-09A

Lab Name: EMPIRICAL LABS Contract: CH2MHILL

Lab Code: NA Case No.: NA SAS No.: NA SDG No.: LEJEUNE043

Matrix: (soil/water) SOIL Lab Sample ID: 0901058-06

Sample wt/vol: 3.9 (g/mL) G Lab File ID: 0105806B

Level: (low/med) LOW Date Sampled: 01/07/09 13:50

% Moisture: not dec. 8 Date Analyzed: 01/16/09 11:00

GC Column: RTX-VRX ID: 0.25 (mm) Dilution Factor: 1.0

Soil Extract Volume:_____(uL) Soil Aliquot Volume: _____(uL)

CONCENTRATION UNITS: (ug/L or ug/Kg) UG/KG

CAS NO.	COMPOUND	MDL	RL	CONC	Q
108-88-3	Toluene	1.2	14		U
120-82-1	1,2,4-Trichlorobenzene	0.25	14		U
71-55-6	1,1,1-Trichloroethane	1.3	14		U
79-00-5	1,1,2-Trichloroethane	0.49	14		U
79-01-6	Trichloroethene	1.2	14		U
76-13-1	Trichlorotrifluoroethane	0.78	14		U
75-69-4	Trichlorofluoromethane	1.3	14		U
75-01-4	Vinyl chloride	1.6	14		U
1330-20-7	Xylene(total)	0.99	14		U

lew
4/1/09

FORM 1
VOLATILE ORGANICS ANALYSIS DATA SHEET

CLIENT SAMPLE NO. 7

MR08-SS258-09A

Lab Name: EMPIRICAL LABS Contract: CH2MHILL

Lab Code: NA Case No.: NA SAS No.: NA SDG No.: LEJEUNE043

Matrix: (soil/water) SOIL Lab Sample ID: 0901058-07

Sample wt/vol: 4.6 (g/mL) G Lab File ID: 0105807B

Level: (low/med) LOW Date Sampled: 01/07/09 14:05

% Moisture: not dec. 5 Date Analyzed: 01/16/09 11:39

GC Column: RTX-VRX ID: 0.25 (mm) Dilution Factor: 1.0

Soil Extract Volume:_____(uL) Soil Aliquot Volume: _____(uL)

CONCENTRATION UNITS: (ug/L or ug/Kg) UG/KG

CAS NO.	COMPOUND	MDL	RL	CONC	Q	
67-64-1	Acetone	2.3	12	14	J	CU
71-43-2	Benzene	0.54	12		U	
75-27-4	Bromodichloromethane	0.34	12		U	
75-25-2	Bromoform	1.2	12		U	
74-83-9	Bromomethane	0.83	12		U	
78-93-3	2-Butanone	1.6	12	2.4	J	
75-15-0	Carbon disulfide	1.5	12		U	
56-23-5	Carbon tetrachloride	1.0	12		U	
108-90-7	Chlorobenzene	0.39	12		U	
75-00-3	Chloroethane	1.3	12		U	
67-66-3	Chloroform	0.63	12		U	
74-87-3	Chloromethane	0.60	12		~~U~~ UJ	CC
110-82-7	Cyclohexane	0.62	12		U	
124-48-1	Dibromochloromethane	0.39	12		U	
96-12-8	1,2-Dibromo-3-chloropropane	1.4	5.8		U	
106-93-4	1,2-Dibromoethane	0.50	12		U	
95-50-1	1,2-Dichlorobenzene	0.43	12		U	
541-73-1	1,3-Dichlorobenzene	0.97	12		U	
106-46-7	1,4-Dichlorobenzene	0.63	12		U	
75-71-8	Dichlorodifluoromethane	1.3	12		~~U~~ UJ	CC
75-34-3	1,1-Dichloroethane	0.62	12		U	
107-06-2	1,2-Dichloroethane	0.53	12		U	
75-35-4	1,1-Dichloroethene	1.4	12		U	
156-59-2	cis-1,2-Dichloroethene	1.4	12		U	
156-60-5	trans-1,2-Dichloroethene	1.3	12		U	
78-87-5	1,2-Dichloropropane	0.53	12		U	
10061-01-5	cis-1,3-Dichloropropene	0.58	12		U	
10061-02-6	trans-1,3-Dichloropropene	0.37	12		U	
100-41-4	Ethylbenzene	0.86	12	2.4	J	
591-78-6	2-Hexanone	2.6	12		~~U~~ UJ	CC
98-82-8	Isopropylbenzene	1.0	12		U	
79-20-9	Methyl acetate	1.8	12		U	
75-09-2	Methylene chloride	0.71	12	12U ~~5.8 JB~~		B
108-87-2	Methyl cyclohexane	0.34	12		U	
1634-04-4	Methyl tert-butyl ether	0.37	12		U	
108-10-1	4-Methyl-2-pentanone	0.67	12		U	
100-42-5	Styrene	0.40	12		U	
79-34-5	1,1,2,2-Tetrachloroethane	0.50	12		U	
127-18-4	Tetrachloroethene	1.1	12		U	

FORM I VOA

RW
4/1/09

FORM 1
VOLATILE ORGANICS ANALYSIS DATA SHEET

CLIENT SAMPLE NO.

7

MR08-SS258-09A

Lab Name: EMPIRICAL LABS Contract: CH2MHILL

Lab Code: NA Case No.: NA SAS No.: NA SDG No.: LEJEUNE043

Matrix: (soil/water) SOIL Lab Sample ID: 0901058-07

Sample wt/vol: 4.6 (g/mL) G Lab File ID: 0105807B

Level: (low/med) LOW Date Sampled: 01/07/09 14:05

% Moisture: not dec. 5 Date Analyzed: 01/16/09 11:39

GC Column: RTX-VRX ID: 0.25 (mm) Dilution Factor: 1.0

Soil Extract Volume:_____(uL) Soil Aliquot Volume: _____(uL)

CONCENTRATION UNITS: (ug/L or ug/Kg) UG/KG

CAS NO.	COMPOUND	MDL	RL	CONC	Q
108-88-3	Toluene	0.99	12	12U ~~1.1~~	~~J~~ U BL
120-82-1	1,2,4-Trichlorobenzene	0.21	12		U
71-55-6	1,1,1-Trichloroethane	1.0	12		U
79-00-5	1,1,2-Trichloroethane	0.40	12		U
79-01-6	Trichloroethene	0.98	12		U
76-13-1	Trichlorotrifluoroethane	0.63	12		U
75-69-4	Trichlorofluoromethane	1.1	12	2.7	J
75-01-4	Vinyl chloride	1.3	12		U
1330-20-7	Xylene(total)	0.81	12		U

JWS
4/1/09

FORM 1
VOLATILE ORGANICS ANALYSIS DATA SHEET

CLIENT SAMPLE NO.

8

MR08-IS25
8-9-10-09A

Lab Name: EMPIRICAL LABS Contract: CH2MHILL

Lab Code: NA Case No.: NA SAS No.: NA SDG No.: LEJEUNE043

Matrix: (soil/water) SOIL Lab Sample ID: 0901058-08

Sample wt/vol: 5.6 (g/mL) G Lab File ID: 0105808A

Level: (low/med) LOW Date Sampled: 01/07/09 14:25

% Moisture: not dec. 10 Date Analyzed: 01/17/09 05:42

GC Column: RTX-VRX ID: 0.25 (mm) Dilution Factor: 1.0

Soil Extract Volume:_____(uL) Soil Aliquot Volume: _____(uL)

CONCENTRATION UNITS: (ug/L or ug/Kg) UG/KG

CAS NO.	COMPOUND	MDL	RL	CONC	Q	
67-64-1	Acetone	2.0	9.9	8.7	J	
71-43-2	Benzene	0.46	9.9		U	
75-27-4	Bromodichloromethane	0.30	9.9		~~U~~ UJ	CC
75-25-2	Bromoform	0.99	9.9		U	
74-83-9	Bromomethane	0.71	9.9		U	
78-93-3	2-Butanone	1.4	9.9		U	
75-15-0	Carbon disulfide	1.3	9.9		U	
56-23-5	Carbon tetrachloride	0.87	9.9		~~U~~ UJ	CC
108-90-7	Chlorobenzene	0.34	9.9		U	
75-00-3	Chloroethane	1.1	9.9		U	
67-66-3	Chloroform	0.54	9.9		U	
74-87-3	Chloromethane	0.51	9.9		U	
110-82-7	Cyclohexane	0.53	9.9		U	
124-48-1	Dibromochloromethane	0.34	9.9		U	
96-12-8	1,2-Dibromo-3-chloropropane	1.2	4.9		U	
106-93-4	1,2-Dibromoethane	0.42	9.9		U	
95-50-1	1,2-Dichlorobenzene	0.37	9.9		U	
541-73-1	1,3-Dichlorobenzene	0.83	9.9		U	
106-46-7	1,4-Dichlorobenzene	0.54	9.9		U	
75-71-8	Dichlorodifluoromethane	1.1	9.9		~~U~~ UJ	CC
75-34-3	1,1-Dichloroethane	0.53	9.9		U	
107-06-2	1,2-Dichloroethane	0.46	9.9		~~U~~ UJ	CC
75-35-4	1,1-Dichloroethene	1.2	9.9		U	
156-59-2	cis-1,2-Dichloroethene	1.2	9.9		U	
156-60-5	trans-1,2-Dichloroethene	1.1	9.9		U	
78-87-5	1,2-Dichloropropane	0.46	9.9		U	
10061-01-5	cis-1,3-Dichloropropene	0.49	9.9		U	
10061-02-6	trans-1,3-Dichloropropene	0.32	9.9		U	
100-41-4	Ethylbenzene	0.74	9.9		U	
591-78-6	2-Hexanone	2.3	9.9		U	
98-82-8	Isopropylbenzene	0.87	9.9		U	
79-20-9	Methyl acetate	1.6	9.9		U	
75-09-2	Methylene chloride	0.61	9.9	9.9U ~~2.7 JB~~		B
108-87-2	Methyl cyclohexane	0.30	9.9		U	
1634-04-4	Methyl tert-butyl ether	0.32	9.9		~~U~~ UJ	CC
108-10-1	4-Methyl-2-pentanone	0.57	9.9		U	
100-42-5	Styrene	0.35	9.9		U	
79-34-5	1,1,2,2-Tetrachloroethane	0.42	9.9		U	
127-18-4	Tetrachloroethene	0.96	9.9		U	

FORM I VOA

lw
4/1/09

FORM 1
VOLATILE ORGANICS ANALYSIS DATA SHEET

CLIENT SAMPLE NO.

MR08-IS25
8-9-10-09A

8

Lab Name: EMPIRICAL LABS Contract: CH2MHILL

Lab Code: NA Case No.: NA SAS No.: NA SDG No.: LEJEUNE043

Matrix: (soil/water) SOIL Lab Sample ID: 0901058-08

Sample wt/vol: 5.6 (g/mL) G Lab File ID: 0105808A

Level: (low/med) LOW Date Sampled: 01/07/09 14:25

% Moisture: not dec. 10 Date Analyzed: 01/17/09 05:42

GC Column: RTX-VRX ID: 0.25 (mm) Dilution Factor: 1.0

Soil Extract Volume:_____(uL) Soil Aliquot Volume: _____(uL)

CONCENTRATION UNITS: (ug/L or ug/Kg) UG/KG

CAS NO.	COMPOUND	MDL	RL	CONC	Q
108-88-3	Toluene	0.85	9.9		U
120-82-1	1,2,4-Trichlorobenzene	0.18	9.9		U
71-55-6	1,1,1-Trichloroethane	0.89	9.9		~~U~~ UJ CCH
79-00-5	1,1,2-Trichloroethane	0.35	9.9		U
79-01-6	Trichloroethene	0.84	9.9		U
76-13-1	Trichlorotrifluoroethane	0.54	9.9		U
75-69-4	Trichlorofluoromethane	0.94	9.9		~~U~~ UJ CCH
75-01-4	Vinyl chloride	1.1	9.9		U
1330-20-7	Xylene(total)	0.69	9.9		U

FORM I VOA

JW
4/1/09

FORM 1
VOLATILE ORGANICS ANALYSIS DATA SHEET

CLIENT SAMPLE NO.

9

MR08-SS273-09A

Lab Name: EMPIRICAL LABS Contract: CH2MHILL

Lab Code: NA Case No.: NA SAS No.: NA SDG No.: LEJEUNE043

Matrix: (soil/water) SOIL Lab Sample ID: 0901058-09

Sample wt/vol: 3.9 (g/mL) G Lab File ID: 0105809A

Level: (low/med) LOW Date Sampled: 01/07/09 14:45

% Moisture: not dec. 5 Date Analyzed: 01/17/09 06:21

GC Column: RTX-VRX ID: 0.25 (mm) Dilution Factor: 1.0

Soil Extract Volume:_____(uL) Soil Aliquot Volume: _____(uL)

CONCENTRATION UNITS: (ug/L or ug/Kg) UG/KG

CAS NO.	COMPOUND	MDL	RL	CONC	Q	
67-64-1	Acetone	2.7	13		U	
71-43-2	Benzene	0.63	13	1.1	J	
75-27-4	Bromodichloromethane	0.40	13		~~U~~ UJ	CC
75-25-2	Bromoform	1.3	13		U	
74-83-9	Bromomethane	0.97	13		U	
78-93-3	2-Butanone	1.9	13		U	
75-15-0	Carbon disulfide	1.7	13		U	
56-23-5	Carbon tetrachloride	1.2	13		~~U~~ UJ	CC
108-90-7	Chlorobenzene	0.46	13		U	
75-00-3	Chloroethane	1.5	13		U	
67-66-3	Chloroform	0.74	13		U	
74-87-3	Chloromethane	0.70	13		U	
110-82-7	Cyclohexane	0.72	13		U	
124-48-1	Dibromochloromethane	0.46	13		U	
96-12-8	1,2-Dibromo-3-chloropropane	1.6	6.7		U	
106-93-4	1,2-Dibromoethane	0.58	13		U	
95-50-1	1,2-Dichlorobenzene	0.50	13		U	
541-73-1	1,3-Dichlorobenzene	1.1	13		U	
106-46-7	1,4-Dichlorobenzene	0.74	13		U	
75-71-8	Dichlorodifluoromethane	1.5	13		~~U~~ UJ	CC
75-34-3	1,1-Dichloroethane	0.72	13		U	
107-06-2	1,2-Dichloroethane	0.62	13		~~U~~ UJ	CC
75-35-4	1,1-Dichloroethene	1.6	13		U	
156-59-2	cis-1,2-Dichloroethene	1.6	13		U	
156-60-5	trans-1,2-Dichloroethene	1.5	13		U	
78-87-5	1,2-Dichloropropane	0.62	13		U	
10061-01-5	cis-1,3-Dichloropropene	0.67	13		U	
10061-02-6	trans-1,3-Dichloropropene	0.43	13		U	
100-41-4	Ethylbenzene	1.0	13	3.6	J	
591-78-6	2-Hexanone	3.1	13		U	
98-82-8	Isopropylbenzene	1.2	13		U	
79-20-9	Methyl acetate	2.1	13		U	
75-09-2	Methylene chloride	0.83	13	13u ~~3.3~~	~~JB~~	B
108-87-2	Methyl cyclohexane	0.40	13	0.63	J	
1634-04-4	Methyl tert-butyl ether	0.43	13		~~U~~ UJ	C
108-10-1	4-Methyl-2-pentanone	0.78	13		U	
100-42-5	Styrene	0.47	13		U	
79-34-5	1,1,2,2-Tetrachloroethane	0.58	13		U	
127-18-4	Tetrachloroethene	1.3	13		U	

FORM I VOA

MS 4/1/09

FORM 1
VOLATILE ORGANICS ANALYSIS DATA SHEET

CLIENT SAMPLE NO.

MR08-SS273-09A

9

Lab Name: EMPIRICAL LABS Contract: CH2MHILL

Lab Code: NA Case No.: NA SAS No.: NA SDG No.: LEJEUNE043

Matrix: (soil/water) SOIL Lab Sample ID: 0901058-09

Sample wt/vol: 3.9 (g/mL) G Lab File ID: 0105809A

Level: (low/med) LOW Date Sampled: 01/07/09 14:45

% Moisture: not dec. 5 Date Analyzed: 01/17/09 06:21

GC Column: RTX-VRX ID: 0.25 (mm) Dilution Factor: 1.0

Soil Extract Volume:_____(uL) Soil Aliquot Volume: _____(uL)

CONCENTRATION UNITS: (ug/L or ug/Kg) UG/KG

CAS NO.	COMPOUND	MDL	RL	CONC	Q	
108-88-3------	Toluene	1.2	13	13u ~~2.0~~	~~J~~	B1
120-82-1------	1,2,4-Trichlorobenzene	0.24	13		U	
71-55-6-------	1,1,1-Trichloroethane	1.2	13		~~J~~ UJ	CG
79-00-5-------	1,1,2-Trichloroethane	0.47	13		U	
79-01-6-------	Trichloroethene	1.1	13		U	
76-13-1-------	Trichlorotrifluoroethane	0.74	13		U	
75-69-4-------	Trichlorofluoromethane	1.3	13		~~J~~ UJ	CG
75-01-4-------	Vinyl chloride	1.5	13		U	
1330-20-7-----	Xylene(total)	0.94	13		U	

FORM I VOA

RW
4/1/09

FORM 1
VOLATILE ORGANICS ANALYSIS DATA SHEET

CLIENT SAMPLE NO.

MR08-IS27
3-8-9-09A

10

Lab Name: EMPIRICAL LABS Contract: CH2MHILL

Lab Code: NA Case No.: NA SAS No.: NA SDG No.: LEJEUNE043

Matrix: (soil/water) SOIL Lab Sample ID: 0901058-10

Sample wt/vol: 4.2 (g/mL) G Lab File ID: 0105810A

Level: (low/med) LOW Date Sampled: 01/07/09 15:05

% Moisture: not dec. 9 Date Analyzed: 01/16/09 13:36

GC Column: RTX-VRX ID: 0.25 (mm) Dilution Factor: 1.0

Soil Extract Volume:_____(uL) Soil Aliquot Volume: _____(uL)

CONCENTRATION UNITS: (ug/L or ug/Kg) UG/KG

CAS NO.	COMPOUND	MDL	RL	CONC	Q	
67-64-1	Acetone	2.6	13	8.8	~~J~~ J	CU
71-43-2	Benzene	0.61	13		U	
75-27-4	Bromodichloromethane	0.39	13		U	
75-25-2	Bromoform	1.3	13		U	
74-83-9	Bromomethane	0.93	13		U	
78-93-3	2-Butanone	1.8	13		U	
75-15-0	Carbon disulfide	1.7	13		U	
56-23-5	Carbon tetrachloride	1.1	13		U	
108-90-7	Chlorobenzene	0.44	13		U	
75-00-3	Chloroethane	1.4	13		U	
67-66-3	Chloroform	0.71	13		U	
74-87-3	Chloromethane	0.67	13		~~U~~ UJ	CU
110-82-7	Cyclohexane	0.70	13		U	
124-48-1	Dibromochloromethane	0.44	13		U	
96-12-8	1,2-Dibromo-3-chloropropane	1.6	6.5		U	
106-93-4	1,2-Dibromoethane	0.56	13		U	
95-50-1	1,2-Dichlorobenzene	0.48	13		U	
541-73-1	1,3-Dichlorobenzene	1.1	13		U	
106-46-7	1,4-Dichlorobenzene	0.71	13		U	
75-71-8	Dichlorodifluoromethane	1.4	13		~~U~~ UJ	CU
75-34-3	1,1-Dichloroethane	0.70	13		U	
107-06-2	1,2-Dichloroethane	0.60	13		U	
75-35-4	1,1-Dichloroethene	1.6	13		U	
156-59-2	cis-1,2-Dichloroethene	1.6	13		U	
156-60-5	trans-1,2-Dichloroethene	1.4	13		U	
78-87-5	1,2-Dichloropropane	0.60	13		U	
10061-01-5	cis-1,3-Dichloropropene	0.65	13		U	
10061-02-6	trans-1,3-Dichloropropene	0.42	13		U	
100-41-4	Ethylbenzene	0.97	13		U	
591-78-6	2-Hexanone	3.0	13		~~U~~ UJ	CU
98-82-8	Isopropylbenzene	1.1	13		U	
79-20-9	Methyl acetate	2.1	13		U	
75-09-2	Methylene chloride	0.80	13	13U	~~7.4 JB~~	BU
108-87-2	Methyl cyclohexane	0.39	13		U	
1634-04-4	Methyl tert-butyl ether	0.42	13		U	
108-10-1	4-Methyl-2-pentanone	0.75	13		U	
100-42-5	Styrene	0.45	13		U	
79-34-5	1,1,2,2-Tetrachloroethane	0.56	13		U	
127-18-4	Tetrachloroethene	1.2	13		U	

FORM I VOA

4/1/09

FORM 1
VOLATILE ORGANICS ANALYSIS DATA SHEET

CLIENT SAMPLE NO. 10

MR08-IS27
3-8-9-09A

Lab Name: EMPIRICAL LABS Contract: CH2MHILL

Lab Code: NA Case No.: NA SAS No.: NA SDG No.: LEJEUNE043

Matrix: (soil/water) SOIL Lab Sample ID: 0901058-10

Sample wt/vol: 4.2 (g/mL) G Lab File ID: 0105810A

Level: (low/med) LOW Date Sampled: 01/07/09 15:05

% Moisture: not dec. 9 Date Analyzed: 01/16/09 13:36

GC Column: RTX-VRX ID: 0.25 (mm) Dilution Factor: 1.0

Soil Extract Volume:_____(uL) Soil Aliquot Volume: _____(uL)

CONCENTRATION UNITS: (ug/L or ug/Kg) UG/KG

CAS NO.	COMPOUND	MDL	RL	CONC	Q
108-88-3	Toluene	1.1	13		U
120-82-1	1,2,4-Trichlorobenzene	0.23	13		U
71-55-6	1,1,1-Trichloroethane	1.2	13		U
79-00-5	1,1,2-Trichloroethane	0.45	13		U
79-01-6	Trichloroethene	1.1	13		U
76-13-1	Trichlorotrifluoroethane	0.71	13		U
75-69-4	Trichlorofluoromethane	1.2	13	2.4	J
75-01-4	Vinyl chloride	1.4	13		U
1330-20-7	Xylene(total)	0.91	13		U

lw
4/1/09

FORM 1
VOLATILE ORGANICS ANALYSIS DATA SHEET

CLIENT SAMPLE NO.

11

MR08-SS274-09A

Lab Name: EMPIRICAL LABS Contract: CH2MHILL

Lab Code: NA Case No.: NA SAS No.: NA SDG No.: LEJEUNE043

Matrix: (soil/water) SOIL Lab Sample ID: 0901058-11

Sample wt/vol: 3.9 (g/mL) G Lab File ID: 0105811B

Level: (low/med) LOW Date Sampled: 01/07/09 15:45

% Moisture: not dec. 5 Date Analyzed: 01/17/09 16:52

GC Column: RTX-VRX ID: 0.25 (mm) Dilution Factor: 1.0

Soil Extract Volume:_____(uL) Soil Aliquot Volume: _____(uL)

CONCENTRATION UNITS: (ug/L or ug/Kg) UG/KG

CAS NO.	COMPOUND	MDL	RL	CONC	Q	
67-64-1	Acetone	2.7	13	13	J	
71-43-2	Benzene	0.63	13		U	
75-27-4	Bromodichloromethane	0.40	13		U	
75-25-2	Bromoform	1.3	13		U	
74-83-9	Bromomethane	0.97	13		U	
78-93-3	2-Butanone	1.9	13		U	
75-15-0	Carbon disulfide	1.7	13		U	
56-23-5	Carbon tetrachloride	1.2	13		~~U~~ UJ	CC
108-90-7	Chlorobenzene	0.46	13		U	
75-00-3	Chloroethane	1.5	13		U	
67-66-3	Chloroform	0.74	13		U	
74-87-3	Chloromethane	0.70	13		U	
110-82-7	Cyclohexane	0.72	13		U	
124-48-1	Dibromochloromethane	0.46	13		U	
96-12-8	1,2-Dibromo-3-chloropropane	1.6	6.7		U	
106-93-4	1,2-Dibromoethane	0.58	13		U	
95-50-1	1,2-Dichlorobenzene	0.50	13		U	
541-73-1	1,3-Dichlorobenzene	1.1	13		U	
106-46-7	1,4-Dichlorobenzene	0.74	13		U	
75-71-8	Dichlorodifluoromethane	1.5	13		~~U~~ UJ	CC
75-34-3	1,1-Dichloroethane	0.72	13		U	
107-06-2	1,2-Dichloroethane	0.62	13		~~U~~ UJ	CC
75-35-4	1,1-Dichloroethene	1.6	13		U	
156-59-2	cis-1,2-Dichloroethene	1.6	13		U	
156-60-5	trans-1,2-Dichloroethene	1.5	13		U	
78-87-5	1,2-Dichloropropane	0.62	13		U	
10061-01-5	cis-1,3-Dichloropropene	0.67	13		U	
10061-02-6	trans-1,3-Dichloropropene	0.43	13		U	
100-41-4	Ethylbenzene	1.0	13		U	
591-78-6	2-Hexanone	3.1	13		U	
98-82-8	Isopropylbenzene	1.2	13		U	
79-20-9	Methyl acetate	2.2	13		U	
75-09-2	Methylene chloride	0.83	13	13u ~~3.5~~	~~JB~~	B
108-87-2	Methyl cyclohexane	0.40	13		U	
1634-04-4	Methyl tert-butyl ether	0.43	13		U	
108-10-1	4-Methyl-2-pentanone	0.78	13		U	
100-42-5	Styrene	0.47	13		U	
79-34-5	1,1,2,2-Tetrachloroethane	0.58	13		U	
127-18-4	Tetrachloroethene	1.3	13		U	

RW 4/1/09

FORM 1
VOLATILE ORGANICS ANALYSIS DATA SHEET

CLIENT SAMPLE NO. 11

MR08-SS274-09A

Lab Name: EMPIRICAL LABS Contract: CH2MHILL

Lab Code: NA Case No.: NA SAS No.: NA SDG No.: LEJEUNE043

Matrix: (soil/water) SOIL Lab Sample ID: 0901058-11

Sample wt/vol: 3.9 (g/mL) G Lab File ID: 0105811B

Level: (low/med) LOW Date Sampled: 01/07/09 15:45

% Moisture: not dec. 5 Date Analyzed: 01/17/09 16:52

GC Column: RTX-VRX ID: 0.25 (mm) Dilution Factor: 1.0

Soil Extract Volume:_____(uL) Soil Aliquot Volume: _____(uL)

CONCENTRATION UNITS: (ug/L or ug/Kg) UG/KG

CAS NO.	COMPOUND	MDL	RL	CONC	Q
108-88-3	Toluene	1.2	13		U
120-82-1	1,2,4-Trichlorobenzene	0.24	13		U
71-55-6	1,1,1-Trichloroethane	1.2	13		~~U~~ UJ CCH
79-00-5	1,1,2-Trichloroethane	0.47	13		U
79-01-6	Trichloroethene	1.1	13		U
76-13-1	Trichlorotrifluoroethane	0.74	13		U
75-69-4	Trichlorofluoromethane	1.3	13		~~U~~ UJ CCH
75-01-4	Vinyl chloride	1.5	13		U
1330-20-7	Xylene(total)	0.94	13		U

lw
4/1/09

FORM 1
VOLATILE ORGANICS ANALYSIS DATA SHEET

CLIENT SAMPLE NO.

12

MR08-IS27
4-9-10-09A

Lab Name: EMPIRICAL LABS Contract: CH2MHILL

Lab Code: NA Case No.: NA SAS No.: NA SDG No.: LEJEUNE043

Matrix: (soil/water) SOIL Lab Sample ID: 0901058-12

Sample wt/vol: 3.4 (g/mL) G Lab File ID: 0105812A

Level: (low/med) LOW Date Sampled: 01/07/09 16:25

% Moisture: not dec. 7 Date Analyzed: 01/16/09 22:32

GC Column: RTX-VRX ID: 0.25 (mm) Dilution Factor: 1.0

Soil Extract Volume:_____(uL) Soil Aliquot Volume: _____(uL)

CONCENTRATION UNITS: (ug/L or ug/Kg) UG/KG

CAS NO.	COMPOUND	MDL	RL	CONC	Q	
67-64-1	Acetone	3.2	16	8.4	J	
71-43-2	Benzene	0.75	16		U	
75-27-4	Bromodichloromethane	0.48	16		~~U~~ UJ	CCA
75-25-2	Bromoform	1.6	16		U	
74-83-9	Bromomethane	1.2	16		U	
78-93-3	2-Butanone	2.2	16		U	
75-15-0	Carbon disulfide	2.1	16		U	
56-23-5	Carbon tetrachloride	1.4	16		~~U~~ UJ	CCA
108-90-7	Chlorobenzene	0.54	16		U	
75-00-3	Chloroethane	1.8	16		U	
67-66-3	Chloroform	0.88	16		U	
74-87-3	Chloromethane	0.83	16		U	
110-82-7	Cyclohexane	0.86	16		U	
124-48-1	Dibromochloromethane	0.54	16		U	
96-12-8	1,2-Dibromo-3-chloropropane	1.9	8.0		U	
106-93-4	1,2-Dibromoethane	0.69	16		U	
95-50-1	1,2-Dichlorobenzene	0.59	16		U	
541-73-1	1,3-Dichlorobenzene	1.3	16		U	
106-46-7	1,4-Dichlorobenzene	0.88	16		U	
75-71-8	Dichlorodifluoromethane	1.8	16		~~U~~ UJ	CCA
75-34-3	1,1-Dichloroethane	0.86	16		U	
107-06-2	1,2-Dichloroethane	0.74	16		~~U~~ UJ	CCA
75-35-4	1,1-Dichloroethene	1.9	16		U	
156-59-2	cis-1,2-Dichloroethene	1.9	16		U	
156-60-5	trans-1,2-Dichloroethene	1.8	16		U	
78-87-5	1,2-Dichloropropane	0.74	16		U	
10061-01-5	cis-1,3-Dichloropropene	0.80	16		U	
10061-02-6	trans-1,3-Dichloropropene	0.51	16		U	
100-41-4	Ethylbenzene	1.2	16		U	
591-78-6	2-Hexanone	3.7	16		U	
98-82-8	Isopropylbenzene	1.4	16		U	
79-20-9	Methyl acetate	2.6	16		U	
75-09-2	Methylene chloride	0.99	16	16U	~~3.7 JB~~	BI
108-87-2	Methyl cyclohexane	0.48	16		U	
1634-04-4	Methyl tert-butyl ether	0.51	16		~~U~~ UJ	CCA
108-10-1	4-Methyl-2-pentanone	0.93	16		U	
100-42-5	Styrene	0.56	16		U	
79-34-5	1,1,2,2-Tetrachloroethane	0.69	16		U	
127-18-4	Tetrachloroethene	1.6	16		U	

FORM I VOA

RW
4/1/09

FORM 1
VOLATILE ORGANICS ANALYSIS DATA SHEET

CLIENT SAMPLE NO.

12

MR08-IS27
4-9-10-09A

Lab Name: EMPIRICAL LABS Contract: CH2MHILL

Lab Code: NA Case No.: NA SAS No.: NA SDG No.: LEJEUNE043

Matrix: (soil/water) SOIL Lab Sample ID: 0901058-12

Sample wt/vol: 3.4 (g/mL) G Lab File ID: 0105812A

Level: (low/med) LOW Date Sampled: 01/07/09 16:25

% Moisture: not dec. 7 Date Analyzed: 01/16/09 22:32

GC Column: RTX-VRX ID: 0.25 (mm) Dilution Factor: 1.0

Soil Extract Volume:_____(uL) Soil Aliquot Volume: _____(uL)

CONCENTRATION UNITS: (ug/L or ug/Kg) UG/KG

CAS NO.	COMPOUND	MDL	RL	CONC	Q	
108-88-3	Toluene	1.4	16		U	
120-82-1	1,2,4-Trichlorobenzene	0.29	16		U	
71-55-6	1,1,1-Trichloroethane	1.4	16		~~U~~ UJ	CC
79-00-5	1,1,2-Trichloroethane	0.56	16		U	
79-01-6	Trichloroethene	1.4	16		U	
76-13-1	Trichlorotrifluoroethane	0.88	16		U	
75-69-4	Trichlorofluoromethane	1.5	16		~~U~~ UJ	CCH
75-01-4	Vinyl chloride	1.8	16		U	
1330-20-7	Xylene(total)	1.1	16		U	

FORM I VOA

lew
4/1/09

FORM 1
VOLATILE ORGANICS ANALYSIS DATA SHEET

CLIENT SAMPLE NO.

13

MR08-SS225-09A

Lab Name: EMPIRICAL LABS Contract: CH2MHILL

Lab Code: NA Case No.: NA SAS No.: NA SDG No.: LEJEUNE043

Matrix: (soil/water) SOIL Lab Sample ID: 0901058-13

Sample wt/vol: 4.6 (g/mL) G Lab File ID: 0105813A

Level: (low/med) LOW Date Sampled: 01/07/09 08:00

% Moisture: not dec. 8 Date Analyzed: 01/16/09 14:54

GC Column: RTX-VRX ID: 0.25 (mm) Dilution Factor: 1.0

Soil Extract Volume:_____(uL) Soil Aliquot Volume: _____(uL)

CONCENTRATION UNITS: (ug/L or ug/Kg) UG/KG

CAS NO.	COMPOUND	MDL	RL	CONC	Q	
67-64-1	Acetone	2.4	12	33	J	CC
71-43-2	Benzene	0.56	12	0.74	~~J~~ J	MS
75-27-4	Bromodichloromethane	0.36	12		~~U~~ UJ	MS
75-25-2	Bromoform	1.2	12		U	
74-83-9	Bromomethane	0.85	12		U	
78-93-3	2-Butanone	1.6	12	3.2	J	
75-15-0	Carbon disulfide	1.5	12		U	
56-23-5	Carbon tetrachloride	1.0	12		U	
108-90-7	Chlorobenzene	0.40	12		~~U~~ UJ	MS
75-00-3	Chloroethane	1.3	12		U	
67-66-3	Chloroform	0.65	12		U	
74-87-3	Chloromethane	0.62	12		~~U~~ UJ	CC
110-82-7	Cyclohexane	0.64	12		~~U~~ UJ	MS
124-48-1	Dibromochloromethane	0.40	12		~~U~~ UJ	MS
96-12-8	1,2-Dibromo-3-chloropropane	1.4	5.9		~~U~~ UJ	IS
106-93-4	1,2-Dibromoethane	0.51	12		~~U~~ UJ	MS
95-50-1	1,2-Dichlorobenzene	0.44	12		U UJ	IS
541-73-1	1,3-Dichlorobenzene	0.99	12		U ↓	↓
106-46-7	1,4-Dichlorobenzene	0.65	12		U ↓	↓
75-71-8	Dichlorodifluoromethane	1.3	12		~~U~~ UJ	CC
75-34-3	1,1-Dichloroethane	0.64	12		U	
107-06-2	1,2-Dichloroethane	0.54	12		U	
75-35-4	1,1-Dichloroethene	1.4	12		U	
156-59-2	cis-1,2-Dichloroethene	1.4	12		~~U~~ UJ	MS
156-60-5	trans-1,2-Dichloroethene	1.3	12		~~U~~ UJ	MS
78-87-5	1,2-Dichloropropane	0.54	12		U UJ	MS
10061-01-5	cis-1,3-Dichloropropene	0.59	12		U ↓	↓
10061-02-6	trans-1,3-Dichloropropene	0.38	12		U ↓	↓
100-41-4	Ethylbenzene	0.89	12	1.4	~~J~~ J	MS
591-78-6	2-Hexanone	2.7	12		~~U~~ UJ	CC
98-82-8	Isopropylbenzene	1.0	12		~~U~~ UJ	MS
79-20-9	Methyl acetate	1.9	12		U	
75-09-2	Methylene chloride	0.73	12	12U ~~3.1~~	~~JB~~	B
108-87-2	Methyl cyclohexane	0.36	12		~~U~~ UJ	MS
1634-04-4	Methyl tert-butyl ether	0.38	12		U	
108-10-1	4-Methyl-2-pentanone	0.69	12		U	
100-42-5	Styrene	0.41	12		~~U~~ UJ	MS
79-34-5	1,1,2,2-Tetrachloroethane	0.51	12		~~U~~ UJ	IS
127-18-4	Tetrachloroethene	1.1	12		~~U~~ UJ	MS

LW
4/6/09

FORM 1
VOLATILE ORGANICS ANALYSIS DATA SHEET

CLIENT SAMPLE NO.

13

MR08-SS225-09A

Lab Name: EMPIRICAL LABS Contract: CH2MHILL

Lab Code: NA Case No.: NA SAS No.: NA SDG No.: LEJEUNE043

Matrix: (soil/water) SOIL Lab Sample ID: 0901058-13

Sample wt/vol: 4.6 (g/mL) G Lab File ID: 0105813A

Level: (low/med) LOW Date Sampled: 01/07/09 08:00

% Moisture: not dec. 8 Date Analyzed: 01/16/09 14:54

GC Column: RTX-VRX ID: 0.25 (mm) Dilution Factor: 1.0

Soil Extract Volume:_____(uL) Soil Aliquot Volume: _____(uL)

CONCENTRATION UNITS: (ug/L or ug/Kg) UG/KG

CAS NO.	COMPOUND	MDL	RL	CONC	Q	
108-88-3	Toluene	1.0	12		~~U~~ UJ	MS
120-82-1	1,2,4-Trichlorobenzene	0.21	12		~~U~~ R	MS
71-55-6	1,1,1-Trichloroethane	1.1	12		U	
79-00-5	1,1,2-Trichloroethane	0.41	12		~~U~~ UJ	MS
79-01-6	Trichloroethene	1.0	12		~~U~~ UJ	MS
76-13-1	Trichlorotrifluoroethane	0.65	12		U	
75-69-4	Trichlorofluoromethane	1.1	12		U	
75-01-4	Vinyl chloride	1.3	12		U	
1330-20-7	Xylene(total)	0.83	12		~~U~~ UJ	MS

FORM I VOA

lw
4/1/09

FORM 1
VOLATILE ORGANICS ANALYSIS DATA SHEET

CLIENT SAMPLE NO.

MR08-SS225-09AR E

Lab Name: EMPIRICAL LABS Contract: CH2MHILL

Lab Code: NA Case No.: NA SAS No.: NA SDG No.: LEJEUNE043

Matrix: (soil/water) SOIL Lab Sample ID: 0901058-13R E

Sample wt/vol: 5.6 (g/mL) G Lab File ID: 0105813B

Level: (low/med) LOW Date Sampled: 01/07/09 08:00 use original

% Moisture: not dec. 8 Date Analyzed: 01/17/09 17:31

GC Column: RTX-VRX ID: 0.25 (mm) Dilution Factor: 1.0

Soil Extract Volume:_____(uL) Soil Aliquot Volume: _____(uL)

CONCENTRATION UNITS: (ug/L or ug/Kg) UG/KG

CAS NO.	COMPOUND	MDL	RL	CONC	Q	
67-64-1	Acetone	1.9	9.7	24		
71-43-2	Benzene	0.46	9.7	0.83	~~J~~ J	MS
75-27-4	Bromodichloromethane	0.29	9.7		U	
75-25-2	Bromoform	0.97	9.7		U	
74-83-9	Bromomethane	0.70	9.7		U	
78-93-3	2-Butanone	1.4	9.7	2.0	J	
75-15-0	Carbon disulfide	1.3	9.7		U	
56-23-5	Carbon tetrachloride	0.86	9.7		~~U~~ UJ	CC
108-90-7	Chlorobenzene	0.33	9.7		~~U~~ UJ	MS
75-00-3	Chloroethane	1.1	9.7		U	
67-66-3	Chloroform	0.54	9.7		U	
74-87-3	Chloromethane	0.51	9.7		U	
110-82-7	Cyclohexane	0.53	9.7		~~U~~ UJ	MS
124-48-1	Dibromochloromethane	0.33	9.7		~~U~~ UJ	MS
96-12-8	1,2-Dibromo-3-chloropropane	1.2	4.9		~~U~~ UJ	IS
106-93-4	1,2-Dibromoethane	0.42	9.7		~~U~~ UJ	MS
95-50-1	1,2-Dichlorobenzene	0.36	9.7		U UJ	IS
541-73-1	1,3-Dichlorobenzene	0.82	9.7		U ↓	↓
106-46-7	1,4-Dichlorobenzene	0.54	9.7		U	
75-71-8	Dichlorodifluoromethane	1.1	9.7		~~U~~ UJ	CC
75-34-3	1,1-Dichloroethane	0.53	9.7		U	
107-06-2	1,2-Dichloroethane	0.45	9.7		~~U~~ UJ	CC
75-35-4	1,1-Dichloroethene	1.2	9.7		U	
156-59-2	cis-1,2-Dichloroethene	1.2	9.7		~~U~~ UJ	MS
156-60-5	trans-1,2-Dichloroethene	1.1	9.7		U	
78-87-5	1,2-Dichloropropane	0.45	9.7		U UJ	M
10061-01-5	cis-1,3-Dichloropropene	0.49	9.7		U ↓	↓
10061-02-6	trans-1,3-Dichloropropene	0.31	9.7		U	
100-41-4	Ethylbenzene	0.73	9.7		~~U~~ UJ	M
591-78-6	2-Hexanone	2.2	9.7		U	
98-82-8	Isopropylbenzene	0.86	9.7		~~U~~ UJ	M
79-20-9	Methyl acetate	1.6	9.7		U	
75-09-2	Methylene chloride	0.60	9.7	9.7U ~~1.9~~	~~JB~~	B
108-87-2	Methyl cyclohexane	0.29	9.7	0.37	~~J~~ J	M
1634-04-4	Methyl tert-butyl ether	0.31	9.7		U	
108-10-1	4-Methyl-2-pentanone	0.56	9.7		U	
100-42-5	Styrene	0.34	9.7		~~U~~ UJ	M
79-34-5	1,1,2,2-Tetrachloroethane	0.42	9.7		~~U~~ UJ	IS
127-18-4	Tetrachloroethene	0.94	9.7		~~U~~ UJ	M

lcw 4/1/09

FORM 1
VOLATILE ORGANICS ANALYSIS DATA SHEET

CLIENT SAMPLE NO. 13RE

MR08-SS225-09AR

Lab Name: EMPIRICAL LABS Contract: CH2MHILL

Lab Code: NA Case No.: NA SAS No.: NA SDG No.: LEJEUNE043

Matrix: (soil/water) SOIL Lab Sample ID: 0901058-13R

Sample wt/vol: 5.6 (g/mL) G Lab File ID: 0105813B

Level: (low/med) LOW Date Sampled: 01/07/09 08:00 Vol. original

% Moisture: not dec. 8 Date Analyzed: 01/17/09 17:31

GC Column: RTX-VRX ID: 0.25 (mm) Dilution Factor: 1.0

Soil Extract Volume:_____(uL) Soil Aliquot Volume: _____(uL)

CONCENTRATION UNITS: (ug/L or ug/Kg) UG/KG

CAS NO.	COMPOUND	MDL	RL	CONC	Q	
108-88-3	Toluene	0.84	9.7		~~U~~ UJ	MSL
120-82-1	1,2,4-Trichlorobenzene	0.18	9.7		~~U~~ UJ	ISL
71-55-6	1,1,1-Trichloroethane	0.88	9.7		~~U~~ UJ	CCA
79-00-5	1,1,2-Trichloroethane	0.34	9.7		U	MSL
79-01-6	Trichloroethene	0.83	9.7		U	MS
76-13-1	Trichlorotrifluoroethane	0.54	9.7		U	
75-69-4	Trichlorofluoromethane	0.92	9.7		~~U~~ UJ	CCA
75-01-4	Vinyl chloride	1.1	9.7		U	
1330-20-7	Xylene(total)	0.68	9.7	1.5	~~J~~ J	MS

FORM I VOA

JWS
4/1/09

FORM 1
VOLATILE ORGANICS ANALYSIS DATA SHEET

CLIENT SAMPLE NO. 14

MR08-IS2
25-2-3-09A

Lab Name: EMPIRICAL LABS Contract: CH2MHILL

Lab Code: NA Case No.: NA SAS No.: NA SDG No.: LEJEUNE043

Matrix: (soil/water) SOIL Lab Sample ID: 0901058-14

Sample wt/vol: 4.7 (g/mL) G Lab File ID: 0105814B

Level: (low/med) LOW Date Sampled: 01/07/09 08:20

% Moisture: not dec. 12 Date Analyzed: 01/17/09 18:11

GC Column: RTX-VRX ID: 0.25 (mm) Dilution Factor: 1.0

Soil Extract Volume:_____(uL) Soil Aliquot Volume: _____(uL)

CONCENTRATION UNITS: (ug/L or ug/Kg) UG/KG

CAS NO.	COMPOUND	MDL	RL	CONC	Q	
67-64-1	Acetone	2.4	12	8.6	J	
71-43-2	Benzene	0.57	12		~~U~~ UJ	MS
75-27-4	Bromodichloromethane	0.36	12		U	
75-25-2	Bromoform	1.2	12		U	
74-83-9	Bromomethane	0.87	12		U	
78-93-3	2-Butanone	1.7	12		U	
75-15-0	Carbon disulfide	1.6	12		U	
56-23-5	Carbon tetrachloride	1.1	12		~~U~~ UJ	CC
108-90-7	Chlorobenzene	0.41	12		~~U~~ UJ	MS
75-00-3	Chloroethane	1.3	12		U	
67-66-3	Chloroform	0.66	12		U	
74-87-3	Chloromethane	0.63	12		U	
110-82-7	Cyclohexane	0.65	12		U UJ	MS
124-48-1	Dibromochloromethane	0.41	12		U UJ	MS
96-12-8	1,2-Dibromo-3-chloropropane	1.4	6.0		U	
106-93-4	1,2-Dibromoethane	0.52	12		U UJ	M
95-50-1	1,2-Dichlorobenzene	0.45	12		U	
541-73-1	1,3-Dichlorobenzene	1.0	12		U	
106-46-7	1,4-Dichlorobenzene	0.66	12		U	
75-71-8	Dichlorodifluoromethane	1.3	12		~~U~~ UJ	C
75-34-3	1,1-Dichloroethane	0.65	12		U	
107-06-2	1,2-Dichloroethane	0.56	12		~~U~~ UJ	C
75-35-4	1,1-Dichloroethene	1.4	12		U	
156-59-2	cis-1,2-Dichloroethene	1.4	12		~~U~~ UJ	M
156-60-5	trans-1,2-Dichloroethene	1.3	12		U	
78-87-5	1,2-Dichloropropane	0.56	12		U UJ	M
10061-01-5	cis-1,3-Dichloropropene	0.60	12		U	
10061-02-6	trans-1,3-Dichloropropene	0.39	12		U	
100-41-4	Ethylbenzene	0.90	12		~~U~~ UJ	M
591-78-6	2-Hexanone	2.8	12		U	
98-82-8	Isopropylbenzene	1.1	12		~~U~~ UJ	M
79-20-9	Methyl acetate	1.9	12		~~U~~ UJ	M
75-09-2	Methylene chloride	0.75	12	12u.	~~2.9 JE~~	B
108-87-2	Methyl cyclohexane	0.36	12		~~U~~ UJ	M
1634-04-4	Methyl tert-butyl ether	0.39	12		U	
108-10-1	4-Methyl-2-pentanone	0.70	12		U	
100-42-5	Styrene	0.42	12		~~U~~ UJ	M
79-34-5	1,1,2,2-Tetrachloroethane	0.52	12		U	
127-18-4	Tetrachloroethene	1.2	12		~~U~~ UJ	M

FORM I VOA

fus
01/09

FORM 1
VOLATILE ORGANICS ANALYSIS DATA SHEET

CLIENT SAMPLE NO. 14

MR08-IS2
25-2-3-09A

Lab Name: EMPIRICAL LABS Contract: CH2MHILL

Lab Code: NA Case No.: NA SAS No.: NA SDG No.: LEJEUNE043

Matrix: (soil/water) SOIL Lab Sample ID: 0901058-14

Sample wt/vol: 4.7 (g/mL) G Lab File ID: 0105814B

Level: (low/med) LOW Date Sampled: 01/07/09 08:20

% Moisture: not dec. 12 Date Analyzed: 01/17/09 18:11

GC Column: RTX-VRX ID: 0.25 (mm) Dilution Factor: 1.0

Soil Extract Volume:_____(uL) Soil Aliquot Volume: _____(uL)

CONCENTRATION UNITS: (ug/L or ug/Kg) UG/KG

CAS NO.	COMPOUND	MDL	RL	CONC	Q	
108-88-3	Toluene	1.0	12		U UJ	MSI
120-82-1	1,2,4-Trichlorobenzene	0.22	12		U UJ	↓
71-55-6	1,1,1-Trichloroethane	1.1	12		U UJ	CCA
79-00-5	1,1,2-Trichloroethane	0.42	12		U ↓	MS
79-01-6	Trichloroethene	1.0	12		U	MSI
76-13-1	Trichlorotrifluoroethane	0.66	12		U	
75-69-4	Trichlorofluoromethane	1.1	12		U UJ	CCA
75-01-4	Vinyl chloride	1.3	12		U	
1330-20-7	Xylene(total)	0.84	12		U UJ	MS

FORM I VOA

MW 4/1/09

FORM 1
VOLATILE ORGANICS ANALYSIS DATA SHEET

CLIENT SAMPLE NO. 15

MR08-SS226-09A

Lab Name: EMPIRICAL LABS Contract: CH2MHILL

Lab Code: NA Case No.: NA SAS No.: NA SDG No.: LEJEUNE043

Matrix: (soil/water) SOIL Lab Sample ID: 0901058-15

Sample wt/vol: 4.7 (g/mL) G Lab File ID: 0105815A

Level: (low/med) LOW Date Sampled: 01/07/09 08:45

% Moisture: not dec. 10 Date Analyzed: 01/16/09 23:11

GC Column: RTX-VRX ID: 0.25 (mm) Dilution Factor: 1.0

Soil Extract Volume:_____(uL) Soil Aliquot Volume: _____(uL)

CONCENTRATION UNITS: (ug/L or ug/Kg) UG/KG

CAS NO.	COMPOUND	MDL	RL	CONC	Q	
67-64-1	Acetone	2.3	12	77		
71-43-2	Benzene	0.55	12	2.3	J	
75-27-4	Bromodichloromethane	0.35	12		~~U~~ UJ	CC
75-25-2	Bromoform	1.2	12		U	
74-83-9	Bromomethane	0.84	12		U	
78-93-3	2-Butanone	1.6	12		U	
75-15-0	Carbon disulfide	1.5	12	1.8	J	
56-23-5	Carbon tetrachloride	1.0	12		~~U~~ UJ	CC
108-90-7	Chlorobenzene	0.40	12		U	
75-00-3	Chloroethane	1.3	12		U	
67-66-3	Chloroform	0.64	12		U	
74-87-3	Chloromethane	0.61	12		U	
110-82-7	Cyclohexane	0.63	12		U	
124-48-1	Dibromochloromethane	0.40	12		U	
96-12-8	1,2-Dibromo-3-chloropropane	1.4	5.8		U	
106-93-4	1,2-Dibromoethane	0.50	12		U	
95-50-1	1,2-Dichlorobenzene	0.43	12		U	
541-73-1	1,3-Dichlorobenzene	0.98	12		U	
106-46-7	1,4-Dichlorobenzene	0.64	12		U	
75-71-8	Dichlorodifluoromethane	1.3	12		~~U~~ UJ	CC
75-34-3	1,1-Dichloroethane	0.63	12		U	
107-06-2	1,2-Dichloroethane	0.54	12		~~U~~ UJ	CC
75-35-4	1,1-Dichloroethene	1.4	12		U	
156-59-2	cis-1,2-Dichloroethene	1.4	12		U	
156-60-5	trans-1,2-Dichloroethene	1.3	12		U	
78-87-5	1,2-Dichloropropane	0.54	12		U	
10061-01-5	cis-1,3-Dichloropropene	0.58	12		U	
10061-02-6	trans-1,3-Dichloropropene	0.37	12		U	
100-41-4	Ethylbenzene	0.88	12	2.4	J	
591-78-6	2-Hexanone	2.7	12		U	
98-82-8	Isopropylbenzene	1.0	12		U	
79-20-9	Methyl acetate	1.9	12		U	
75-09-2	Methylene chloride	0.73	12	12U ~~2.9~~	~~JB~~	BL
108-87-2	Methyl cyclohexane	0.35	12	0.79	J	
1634-04-4	Methyl tert-butyl ether	0.37	12		~~U~~ UJ	CC
108-10-1	4-Methyl-2-pentanone	0.68	12		U	
100-42-5	Styrene	0.41	12		U	
79-34-5	1,1,2,2-Tetrachloroethane	0.50	12		U	
127-18-4	Tetrachloroethene	1.1	12		U	

FORM I VOA

KEO 4/1/09

FORM 1
VOLATILE ORGANICS ANALYSIS DATA SHEET

CLIENT SAMPLE NO.

15

MR08-SS226-09A

Lab Name: EMPIRICAL LABS Contract: CH2MHILL

Lab Code: NA Case No.: NA SAS No.: NA SDG No.: LEJEUNE043

Matrix: (soil/water) SOIL Lab Sample ID: 0901058-15

Sample wt/vol: 4.7 (g/mL) G Lab File ID: 0105815A

Level: (low/med) LOW Date Sampled: 01/07/09 08:45

% Moisture: not dec. 10 Date Analyzed: 01/16/09 23:11

GC Column: RTX-VRX ID: 0.25 (mm) Dilution Factor: 1.0

Soil Extract Volume:_____(uL) Soil Aliquot Volume: _____(uL)

CONCENTRATION UNITS: (ug/L or ug/Kg) UG/KG

CAS NO.	COMPOUND	MDL	RL	CONC	Q	
108-88-3	Toluene	1.0	12	12U ~~2.6~~	~~J~~	BL
120-82-1	1,2,4-Trichlorobenzene	0.21	12		U	
71-55-6	1,1,1-Trichloroethane	1.0	12		~~J~~ UJ	CC
79-00-5	1,1,2-Trichloroethane	0.41	12		U	
79-01-6	Trichloroethene	1.00	12		U	
76-13-1	Trichlorotrifluoroethane	0.64	12		U	
75-69-4	Trichlorofluoromethane	1.1	12		~~J~~ UJ	CC
75-01-4	Vinyl chloride	1.3	12		U	
1330-20-7	Xylene(total)	0.82	12		U	

FORM I VOA

CCW
4/1/09

FORM 1
VOLATILE ORGANICS ANALYSIS DATA SHEET

CLIENT SAMPLE NO. 16

MR08-IS22
6-2-3-09A

Lab Name: EMPIRICAL LABS Contract: CH2MHILL

Lab Code: NA Case No.: NA SAS No.: NA SDG No.: LEJEUNE043

Matrix: (soil/water) SOIL Lab Sample ID: 0901058-16

Sample wt/vol: 4.8 (g/mL) G Lab File ID: 0105816A

Level: (low/med) LOW Date Sampled: 01/07/09 09:00

% Moisture: not dec. 10 Date Analyzed: 01/16/09 23:50

GC Column: RTX-VRX ID: 0.25 (mm) Dilution Factor: 1.0

Soil Extract Volume:_____(uL) Soil Aliquot Volume: _____(uL)

CONCENTRATION UNITS: (ug/L or ug/Kg) UG/KG

CAS NO.	COMPOUND	MDL	RL	CONC	Q
67-64-1	Acetone	2.3	11	15	
71-43-2	Benzene	0.54	11		U
75-27-4	Bromodichloromethane	0.34	11		~~U~~ UJ CCH
75-25-2	Bromoform	1.1	11		U
74-83-9	Bromomethane	0.82	11		U
78-93-3	2-Butanone	1.6	11		U
75-15-0	Carbon disulfide	1.5	11		U
56-23-5	Carbon tetrachloride	1.0	11		~~U~~ UJ CC
108-90-7	Chlorobenzene	0.39	11		U
75-00-3	Chloroethane	1.2	11		U
67-66-3	Chloroform	0.63	11		U
74-87-3	Chloromethane	0.59	11		U
110-82-7	Cyclohexane	0.62	11		U
124-48-1	Dibromochloromethane	0.39	11		U
96-12-8	1,2-Dibromo-3-chloropropane	1.4	5.7		U
106-93-4	1,2-Dibromoethane	0.49	11		U
95-50-1	1,2-Dichlorobenzene	0.42	11		U
541-73-1	1,3-Dichlorobenzene	0.96	11		U
106-46-7	1,4-Dichlorobenzene	0.63	11		U
75-71-8	Dichlorodifluoromethane	1.2	11		~~U~~ UJ CC
75-34-3	1,1-Dichloroethane	0.62	11		U
107-06-2	1,2-Dichloroethane	0.53	11		~~U~~ UJ CC
75-35-4	1,1-Dichloroethene	1.4	11		U
156-59-2	cis-1,2-Dichloroethene	1.4	11		U
156-60-5	trans-1,2-Dichloroethene	1.2	11		U
78-87-5	1,2-Dichloropropane	0.53	11		U
10061-01-5	cis-1,3-Dichloropropene	0.57	11		U
10061-02-6	trans-1,3-Dichloropropene	0.37	11		U
100-41-4	Ethylbenzene	0.86	11		U
591-78-6	2-Hexanone	2.6	11		U
98-82-8	Isopropylbenzene	1.0	11		U
79-20-9	Methyl acetate	1.8	11		U
75-09-2	Methylene chloride	0.71	11	11u	~~3.8~~ ~~UB~~ B
108-87-2	Methyl cyclohexane	0.34	11		U
1634-04-4	Methyl tert-butyl ether	0.37	11		~~U~~ UJ CC
108-10-1	4-Methyl-2-pentanone	0.66	11		U
100-42-5	Styrene	0.40	11		U
79-34-5	1,1,2,2-Tetrachloroethane	0.49	11		U
127-18-4	Tetrachloroethene	1.1	11		U

FORM I VOA

Qw
4/1/09

FORM 1
VOLATILE ORGANICS ANALYSIS DATA SHEET

CLIENT SAMPLE NO. 16

MR08-IS22
6-2-3-09A

Lab Name: EMPIRICAL LABS Contract: CH2MHILL

Lab Code: NA Case No.: NA SAS No.: NA SDG No.: LEJEUNE043

Matrix: (soil/water) SOIL Lab Sample ID: 0901058-16

Sample wt/vol: 4.8 (g/mL) G Lab File ID: 0105816A

Level: (low/med) LOW Date Sampled: 01/07/09 09:00

% Moisture: not dec. 10 Date Analyzed: 01/16/09 23:50

GC Column: RTX-VRX ID: 0.25 (mm) Dilution Factor: 1.0

Soil Extract Volume:_____(uL) Soil Aliquot Volume: _____(uL)

CONCENTRATION UNITS: (ug/L or ug/Kg) UG/KG

CAS NO.	COMPOUND	MDL	RL	CONC	Q	
108-88-3	Toluene	0.98	11		U	
120-82-1	1,2,4-Trichlorobenzene	0.20	11		U	
71-55-6	1,1,1-Trichloroethane	1.0	11		~~U~~ UJ	CCH
79-00-5	1,1,2-Trichloroethane	0.40	11		U	
79-01-6	Trichloroethene	0.97	11		U	
76-13-1	Trichlorotrifluoroethane	0.63	11		U	
75-69-4	Trichlorofluoromethane	1.1	11		~~U~~ UJ	CCH
75-01-4	Vinyl chloride	1.2	11		U	
1330-20-7	Xylene(total)	0.80	11		U	

FORM I VOA

lw
4/1/09

FORM 1
VOLATILE ORGANICS ANALYSIS DATA SHEET

CLIENT SAMPLE NO. 17

MR08-SS233-09A

Lab Name: EMPIRICAL LABS Contract: CH2MHILL

Lab Code: NA Case No.: NA SAS No.: NA SDG No.: LEJEUNE043

Matrix: (soil/water) SOIL Lab Sample ID: 0901058-17

Sample wt/vol: 4.0 (g/mL) G Lab File ID: 0105817A

Level: (low/med) LOW Date Sampled: 01/07/09 09:15

% Moisture: not dec. 11 Date Analyzed: 01/17/09 00:29

GC Column: RTX-VRX ID: 0.25 (mm) Dilution Factor: 1.0

Soil Extract Volume:_____(uL) Soil Aliquot Volume: _____(uL)

CONCENTRATION UNITS: (ug/L or ug/Kg) UG/KG

CAS NO.	COMPOUND	MDL	RL	CONC	Q	
67-64-1	Acetone	2.8	14	21		
71-43-2	Benzene	0.66	14		U	
75-27-4	Bromodichloromethane	0.42	14		~~U~~ UJ	CC
75-25-2	Bromoform	1.4	14		U	
74-83-9	Bromomethane	1.0	14		U	
78-93-3	2-Butanone	2.0	14		U	
75-15-0	Carbon disulfide	1.8	14		U	
56-23-5	Carbon tetrachloride	1.2	14		~~U~~ UJ	CC
108-90-7	Chlorobenzene	0.47	14		U	
75-00-3	Chloroethane	1.5	14		U	
67-66-3	Chloroform	0.77	14		U	
74-87-3	Chloromethane	0.72	14		U	
110-82-7	Cyclohexane	0.75	14		U	
124-48-1	Dibromochloromethane	0.47	14		U	
96-12-8	1,2-Dibromo-3-chloropropane	1.7	7.0		U	
106-93-4	1,2-Dibromoethane	0.60	14		U	
95-50-1	1,2-Dichlorobenzene	0.52	14		U	
541-73-1	1,3-Dichlorobenzene	1.2	14		U	
106-46-7	1,4-Dichlorobenzene	0.77	14		U	
75-71-8	Dichlorodifluoromethane	1.5	14		~~U~~ UJ	CC
75-34-3	1,1-Dichloroethane	0.75	14		U	
107-06-2	1,2-Dichloroethane	0.64	14		~~U~~ UJ	CC
75-35-4	1,1-Dichloroethene	1.7	14		U	
156-59-2	cis-1,2-Dichloroethene	1.7	14		U	
156-60-5	trans-1,2-Dichloroethene	1.5	14		U	
78-87-5	1,2-Dichloropropane	0.64	14		U	
10061-01-5	cis-1,3-Dichloropropene	0.70	14		U	
10061-02-6	trans-1,3-Dichloropropene	0.45	14		U	
100-41-4	Ethylbenzene	1.0	14		U	
591-78-6	2-Hexanone	3.2	14		U	
98-82-8	Isopropylbenzene	1.2	14		U	
79-20-9	Methyl acetate	2.2	14		U	
75-09-2	Methylene chloride	0.86	14	14U	~~4.6~~ ~~JB~~	B1
108-87-2	Methyl cyclohexane	0.42	14		U	
1634-04-4	Methyl tert-butyl ether	0.45	14		~~U~~ UJ	CC
108-10-1	4-Methyl-2-pentanone	0.81	14		U	
100-42-5	Styrene	0.49	14		U	
79-34-5	1,1,2,2-Tetrachloroethane	0.60	14		U	
127-18-4	Tetrachloroethene	1.4	14		U	

FORM I VOA

Rev 4/1/09

FORM 1
VOLATILE ORGANICS ANALYSIS DATA SHEET

CLIENT SAMPLE NO. 17

MR08-SS233-09A

Lab Name: EMPIRICAL LABS Contract: CH2MHILL

Lab Code: NA Case No.: NA SAS No.: NA SDG No.: LEJEUNE043

Matrix: (soil/water) SOIL Lab Sample ID: 0901058-17

Sample wt/vol: 4.0 (g/mL) G Lab File ID: 0105817A

Level: (low/med) LOW Date Sampled: 01/07/09 09:15

% Moisture: not dec. 11 Date Analyzed: 01/17/09 00:29

GC Column: RTX-VRX ID: 0.25 (mm) Dilution Factor: 1.0

Soil Extract Volume:_____(uL) Soil Aliquot Volume: _____(uL)

CONCENTRATION UNITS: (ug/L or ug/Kg) UG/KG

CAS NO.	COMPOUND	MDL	RL	CONC	Q	
108-88-3	Toluene	1.2	14		U	
120-82-1	1,2,4-Trichlorobenzene	0.25	14		U	
71-55-6	1,1,1-Trichloroethane	1.2	14		~~U~~ UJ	CC
79-00-5	1,1,2-Trichloroethane	0.49	14		U	
79-01-6	Trichloroethene	1.2	14		U	
76-13-1	Trichlorotrifluoroethane	0.77	14		U	
75-69-4	Trichlorofluoromethane	1.3	14		~~U~~ UJ	CC
75-01-4	Vinyl chloride	1.5	14		U	
1330-20-7	Xylene(total)	0.98	14		U	

MW
4/1/09

FORM 1
VOLATILE ORGANICS ANALYSIS DATA SHEET

CLIENT SAMPLE NO. 18

MR08-IS23
3-5-6-09A

Lab Name: EMPIRICAL LABS Contract: CH2MHILL

Lab Code: NA Case No.: NA SAS No.: NA SDG No.: LEJEUNE043

Matrix: (soil/water) SOIL Lab Sample ID: 0901058-18

Sample wt/vol: 5.3 (g/mL) G Lab File ID: 0105818A

Level: (low/med) LOW Date Sampled: 01/07/09 09:30

% Moisture: not dec. 6 Date Analyzed: 01/17/09 01:08

GC Column: RTX-VRX ID: 0.25 (mm) Dilution Factor: 1.0

Soil Extract Volume:_____(uL) Soil Aliquot Volume: _____(uL)

CONCENTRATION UNITS: (ug/L or ug/Kg) UG/KG

CAS NO.	COMPOUND	MDL	RL	CONC	Q	
67-64-1	Acetone	2.0	10		U	
71-43-2	Benzene	0.47	10		U	
75-27-4	Bromodichloromethane	0.30	10		~~U~~ UJ	CU
75-25-2	Bromoform	1.0	10		U	
74-83-9	Bromomethane	0.72	10		U	
78-93-3	2-Butanone	1.4	10		U	
75-15-0	Carbon disulfide	1.3	10		U	
56-23-5	Carbon tetrachloride	0.89	10		~~U~~ UJ	CU
108-90-7	Chlorobenzene	0.34	10		U	
75-00-3	Chloroethane	1.1	10		U	
67-66-3	Chloroform	0.55	10		U	
74-87-3	Chloromethane	0.52	10		U	
110-82-7	Cyclohexane	0.54	10		U	
124-48-1	Dibromochloromethane	0.34	10		U	
96-12-8	1,2-Dibromo-3-chloropropane	1.2	5.0		U	
106-93-4	1,2-Dibromoethane	0.43	10		U	
95-50-1	1,2-Dichlorobenzene	0.37	10		U	
541-73-1	1,3-Dichlorobenzene	0.84	10		U	
106-46-7	1,4-Dichlorobenzene	0.55	10		U	
75-71-8	Dichlorodifluoromethane	1.1	10		~~U~~ UJ	CU
75-34-3	1,1-Dichloroethane	0.54	10		U	
107-06-2	1,2-Dichloroethane	0.46	10		~~U~~ UJ	CU
75-35-4	1,1-Dichloroethene	1.2	10		U	
156-59-2	cis-1,2-Dichloroethene	1.2	10		U	
156-60-5	trans-1,2-Dichloroethene	1.1	10		U	
78-87-5	1,2-Dichloropropane	0.46	10		U	
10061-01-5	cis-1,3-Dichloropropene	0.50	10		U	
10061-02-6	trans-1,3-Dichloropropene	0.32	10		U	
100-41-4	Ethylbenzene	0.76	10		U	
591-78-6	2-Hexanone	2.3	10		U	
98-82-8	Isopropylbenzene	0.89	10		U	
79-20-9	Methyl acetate	1.6	10		U	
75-09-2	Methylene chloride	0.62	10	10U	~~3.0 JB~~	BU
108-87-2	Methyl cyclohexane	0.30	10		U	
1634-04-4	Methyl tert-butyl ether	0.32	10		~~U~~ UJ	CU
108-10-1	4-Methyl-2-pentanone	0.58	10		U	
100-42-5	Styrene	0.35	10		U	
79-34-5	1,1,2,2-Tetrachloroethane	0.43	10		U	
127-18-4	Tetrachloroethene	0.98	10		U	

FORM I VOA

KW
4/1/09

FORM 1
VOLATILE ORGANICS ANALYSIS DATA SHEET

CLIENT SAMPLE NO. 18

MR08-IS23
3-5-6-09A

Lab Name: EMPIRICAL LABS Contract: CH2MHILL

Lab Code: NA Case No.: NA SAS No.: NA SDG No.: LEJEUNE043

Matrix: (soil/water) SOIL Lab Sample ID: 0901058-18

Sample wt/vol: 5.3 (g/mL) G Lab File ID: 0105818A

Level: (low/med) LOW Date Sampled: 01/07/09 09:30

% Moisture: not dec. 6 Date Analyzed: 01/17/09 01:08

GC Column: RTX-VRX ID: 0.25 (mm) Dilution Factor: 1.0

Soil Extract Volume:_____(uL) Soil Aliquot Volume: _____(uL)

CONCENTRATION UNITS: (ug/L or ug/Kg) UG/KG

CAS NO.	COMPOUND	MDL	RL	CONC	Q
108-88-3	Toluene	0.86	10		U
120-82-1	1,2,4-Trichlorobenzene	0.18	10		U
71-55-6	1,1,1-Trichloroethane	0.91	10		~~U~~ UJ CA
79-00-5	1,1,2-Trichloroethane	0.35	10		U
79-01-6	Trichloroethene	0.86	10		U
76-13-1	Trichlorotrifluoroethane	0.55	10		U
75-69-4	Trichlorofluoromethane	0.96	10		~~U~~ UJ CA
75-01-4	Vinyl chloride	1.1	10		U
1330-20-7	Xylene(total)	0.70	10		U

FORM I VOA

MW
4/1/09

FORM 1
VOLATILE ORGANICS ANALYSIS DATA SHEET

CLIENT SAMPLE NO. 19

MR08-SS234-09A

Lab Name: EMPIRICAL LABS Contract: CH2MHILL

Lab Code: NA Case No.: NA SAS No.: NA SDG No.: LEJEUNE043

Matrix: (soil/water) SOIL Lab Sample ID: 0901058-19

Sample wt/vol: 4.7 (g/mL) G Lab File ID: 0105819A

Level: (low/med) LOW Date Sampled: 01/07/09 09:45

% Moisture: not dec. 12 Date Analyzed: 01/17/09 01:47

GC Column: RTX-VRX ID: 0.25 (mm) Dilution Factor: 1.0

Soil Extract Volume:_____(uL) Soil Aliquot Volume: _____(uL)

CONCENTRATION UNITS: (ug/L or ug/Kg) UG/KG

CAS NO.	COMPOUND	MDL	RL	CONC	Q	
67-64-1	Acetone	2.4	12	20		
71-43-2	Benzene	0.56	12		U	
75-27-4	Bromodichloromethane	0.36	12		~~U~~ UJ	CC
75-25-2	Bromoform	1.2	12		U	
74-83-9	Bromomethane	0.87	12		U	
78-93-3	2-Butanone	1.7	12		U	
75-15-0	Carbon disulfide	1.6	12		U	
56-23-5	Carbon tetrachloride	1.0	12		~~U~~ UJ	CC
108-90-7	Chlorobenzene	0.41	12		U	
75-00-3	Chloroethane	1.3	12		U	
67-66-3	Chloroform	0.66	12		U	
74-87-3	Chloromethane	0.62	12		U	
110-82-7	Cyclohexane	0.65	12		U	
124-48-1	Dibromochloromethane	0.41	12		U	
96-12-8	1,2-Dibromo-3-chloropropane	1.4	6.0		U	
106-93-4	1,2-Dibromoethane	0.52	12		U	
95-50-1	1,2-Dichlorobenzene	0.44	12		U	
541-73-1	1,3-Dichlorobenzene	1.0	12		U	
106-46-7	1,4-Dichlorobenzene	0.66	12		U	
75-71-8	Dichlorodifluoromethane	1.3	12		~~U~~ UJ	CC
75-34-3	1,1-Dichloroethane	0.65	12		U	
107-06-2	1,2-Dichloroethane	0.55	12		~~U~~ UJ	CC
75-35-4	1,1-Dichloroethene	1.4	12		U	
156-59-2	cis-1,2-Dichloroethene	1.4	12		U	
156-60-5	trans-1,2-Dichloroethene	1.3	12		U	
78-87-5	1,2-Dichloropropane	0.55	12		U	
10061-01-5	cis-1,3-Dichloropropene	0.60	12		U	
10061-02-6	trans-1,3-Dichloropropene	0.38	12		U	
100-41-4	Ethylbenzene	0.90	12		U	
591-78-6	2-Hexanone	2.8	12		U	
98-82-8	Isopropylbenzene	1.0	12		U	
79-20-9	Methyl acetate	1.9	12		U	
75-09-2	Methylene chloride	0.74	12	12U	~~3.6 JB~~	BI
108-87-2	Methyl cyclohexane	0.36	12		U	
1634-04-4	Methyl tert-butyl ether	0.38	12		~~U~~ UJ	CC
108-10-1	4-Methyl-2-pentanone	0.70	12		U	
100-42-5	Styrene	0.42	12		U	
79-34-5	1,1,2,2-Tetrachloroethane	0.52	12		U	
127-18-4	Tetrachloroethene	1.2	12		U	

FORM I VOA

kw
4/1/09

FORM 1
VOLATILE ORGANICS ANALYSIS DATA SHEET

CLIENT SAMPLE NO. 19

MR08-SS234-09A

Lab Name: EMPIRICAL LABS Contract: CH2MHILL

Lab Code: NA Case No.: NA SAS No.: NA SDG No.: LEJEUNE043

Matrix: (soil/water) SOIL Lab Sample ID: 0901058-19

Sample wt/vol: 4.7 (g/mL) G Lab File ID: 0105819A

Level: (low/med) LOW Date Sampled: 01/07/09 09:45

% Moisture: not dec. 12 Date Analyzed: 01/17/09 01:47

GC Column: RTX-VRX ID: 0.25 (mm) Dilution Factor: 1.0

Soil Extract Volume:_____(uL) Soil Aliquot Volume: _____(uL)

CONCENTRATION UNITS: (ug/L or ug/Kg) UG/KG

CAS NO.	COMPOUND	MDL	RL	CONC	Q	
108-88-3	Toluene	1.0	12		U	
120-82-1	1,2,4-Trichlorobenzene	0.22	12		U	
71-55-6	1,1,1-Trichloroethane	1.1	12		~~U~~ UJ	CC
79-00-5	1,1,2-Trichloroethane	0.42	12		U	
79-01-6	Trichloroethene	1.0	12		U	
76-13-1	Trichlorotrifluoroethane	0.66	12		U	
75-69-4	Trichlorofluoromethane	1.1	12		~~U~~ UJ	CC
75-01-4	Vinyl chloride	1.3	12		U	
1330-20-7	Xylene(total)	0.84	12		U	

FORM I VOA

JCW
2/1/09

FORM 1
VOLATILE ORGANICS ANALYSIS DATA SHEET

CLIENT SAMPLE NO. 20

MR08-IS23
4-5-6-09A

Lab Name: EMPIRICAL LABS Contract: CH2MHILL

Lab Code: NA Case No.: NA SAS No.: NA SDG No.: LEJEUNE043

Matrix: (soil/water) SOIL Lab Sample ID: 0901058-20

Sample wt/vol: 4.8 (g/mL) G Lab File ID: 0105820A

Level: (low/med) LOW Date Sampled: 01/07/09 10:00

% Moisture: not dec. 7 Date Analyzed: 01/17/09 02:27 Use reanalysis

GC Column: RTX-VRX ID: 0.25 (mm) Dilution Factor: 1.0

Soil Extract Volume:_____(uL) Soil Aliquot Volume: _____(uL)

CONCENTRATION UNITS: (ug/L or ug/Kg) UG/KG

CAS NO.	COMPOUND	MDL	RL	CONC	Q	
67-64-1	Acetone	2.2	11	7.1	J	
71-43-2	Benzene	0.52	11		U	
75-27-4	Bromodichloromethane	0.33	11		~~U~~ UJ	CC
75-25-2	Bromoform	1.1	11		U	
74-83-9	Bromomethane	0.80	11		U	
78-93-3	2-Butanone	1.6	11		U	
75-15-0	Carbon disulfide	1.4	11		U	
56-23-5	Carbon tetrachloride	0.98	11		~~U~~ UJ	CC
108-90-7	Chlorobenzene	0.38	11		U	
75-00-3	Chloroethane	1.2	11		U	
67-66-3	Chloroform	0.61	11		U	
74-87-3	Chloromethane	0.58	11		U	
110-82-7	Cyclohexane	0.60	11		U	
124-48-1	Dibromochloromethane	0.38	11		U	
96-12-8	1,2-Dibromo-3-chloropropane	1.3	5.6		U	
106-93-4	1,2-Dibromoethane	0.48	11		U	
95-50-1	1,2-Dichlorobenzene	0.41	11		U	
541-73-1	1,3-Dichlorobenzene	0.94	11		U	
106-46-7	1,4-Dichlorobenzene	0.61	11		U	
75-71-8	Dichlorodifluoromethane	1.2	11		~~U~~ UJ	CC
75-34-3	1,1-Dichloroethane	0.60	11		U	
107-06-2	1,2-Dichloroethane	0.51	11		~~U~~ UJ	CC
75-35-4	1,1-Dichloroethene	1.3	11		U	
156-59-2	cis-1,2-Dichloroethene	1.3	11		U	
156-60-5	trans-1,2-Dichloroethene	1.2	11		U	
78-87-5	1,2-Dichloropropane	0.51	11		U	
10061-01-5	cis-1,3-Dichloropropene	0.56	11		U	
10061-02-6	trans-1,3-Dichloropropene	0.36	11		U	
100-41-4	Ethylbenzene	0.84	11		U	
591-78-6	2-Hexanone	2.6	11		U	
98-82-8	Isopropylbenzene	0.98	11		U	
79-20-9	Methyl acetate	1.8	11		U	
75-09-2	Methylene chloride	0.69	11	11u	~~3.3 JB~~	B
108-87-2	Methyl cyclohexane	0.33	11		U	
1634-04-4	Methyl tert-butyl ether	0.36	11		~~U~~ UJ	CC
108-10-1	4-Methyl-2-pentanone	0.65	11		U	
100-42-5	Styrene	0.39	11		U	
79-34-5	1,1,2,2-Tetrachloroethane	0.48	11		U	
127-18-4	Tetrachloroethene	1.1	11		U	

4/1/09

FORM 1
VOLATILE ORGANICS ANALYSIS DATA SHEET

CLIENT SAMPLE NO.

MR08-IS23
4-5-6-09A

20

Lab Name: EMPIRICAL LABS Contract: CH2MHILL

Lab Code: NA Case No.: NA SAS No.: NA SDG No.: LEJEUNE043

Matrix: (soil/water) SOIL Lab Sample ID: 0901058-20

Sample wt/vol: 4.8 (g/mL) G Lab File ID: 0105820A

Level: (low/med) LOW Date Sampled: 01/07/09 10:00

% Moisture: not dec. 7 Date Analyzed: 01/17/09 02:27 use reanalysis

GC Column: RTX-VRX ID: 0.25 (mm) Dilution Factor: 1.0

Soil Extract Volume:_____(uL) Soil Aliquot Volume: _____(uL)

CONCENTRATION UNITS: (ug/L or ug/Kg) UG/KG

CAS NO.	COMPOUND	MDL	RL	CONC	Q	
108-88-3	Toluene	0.96	11		U	
120-82-1	1,2,4-Trichlorobenzene	0.20	11		U	
71-55-6	1,1,1-Trichloroethane	1.0	11		~~U~~ UJ	ca
79-00-5	1,1,2-Trichloroethane	0.39	11		U	
79-01-6	Trichloroethene	0.95	11		U	
76-13-1	Trichlorotrifluoroethane	0.61	11		U	
75-69-4	Trichlorofluoromethane	1.1	11		~~U~~ UJ	ca
75-01-4	Vinyl chloride	1.2	11		U	
1330-20-7	Xylene(total)	0.78	11		U	

RRL

FORM I VOA

lew
4/1/09

FORM 1
VOLATILE ORGANICS ANALYSIS DATA SHEET

CLIENT SAMPLE NO. 20RE

MR08-IS23
4-5-6-09AR~~E~~

Lab Name: EMPIRICAL LABS Contract: CH2MHILL

Lab Code: NA Case No.: NA SAS No.: NA SDG No.: LEJEUNE043

Matrix: (soil/water) SOIL Lab Sample ID: 0901058-20R~~E~~

Sample wt/vol: 4.3 (g/mL) G Lab File ID: 0105820B

Level: (low/med) LOW Date Sampled: 01/07/09 10:00

% Moisture: not dec. 7 Date Analyzed: 01/17/09 18:50

GC Column: RTX-VRX ID: 0.25 (mm) Dilution Factor: 1.0

Soil Extract Volume:_____(uL) Soil Aliquot Volume: _____(uL)

CONCENTRATION UNITS: (ug/L or ug/Kg) UG/KG

CAS NO.	COMPOUND	MDL	RL	CONC	Q	
67-64-1	Acetone	2.5	13	7.6	J	
71-43-2	Benzene	0.60	13		U	
75-27-4	Bromodichloromethane	0.38	13		U	
75-25-2	Bromoform	1.3	13		U	
74-83-9	Bromomethane	0.91	13		U	
78-93-3	2-Butanone	1.8	13		U	
75-15-0	Carbon disulfide	1.6	13		U	
56-23-5	Carbon tetrachloride	1.1	13		~~U~~ UJ	CC
108-90-7	Chlorobenzene	0.43	13		U	
75-00-3	Chloroethane	1.4	13		U	
67-66-3	Chloroform	0.70	13		U	
74-87-3	Chloromethane	0.66	13		U	
110-82-7	Cyclohexane	0.68	13		U	
124-48-1	Dibromochloromethane	0.43	13		U	
96-12-8	1,2-Dibromo-3-chloropropane	1.5	6.3		U	
106-93-4	1,2-Dibromoethane	0.54	13		U	
95-50-1	1,2-Dichlorobenzene	0.47	13		U	
541-73-1	1,3-Dichlorobenzene	1.1	13		U	
106-46-7	1,4-Dichlorobenzene	0.70	13		U	
75-71-8	Dichlorodifluoromethane	1.4	13		~~U~~ UJ	CC
75-34-3	1,1-Dichloroethane	0.68	13		U	
107-06-2	1,2-Dichloroethane	0.58	13		~~U~~ UJ	CC
75-35-4	1,1-Dichloroethene	1.5	13		U	
156-59-2	cis-1,2-Dichloroethene	1.5	13		U	
156-60-5	trans-1,2-Dichloroethene	1.4	13		U	
78-87-5	1,2-Dichloropropane	0.58	13		U	
10061-01-5	cis-1,3-Dichloropropene	0.63	13		U	
10061-02-6	trans-1,3-Dichloropropene	0.40	13		U	
100-41-4	Ethylbenzene	0.95	13		U	
591-78-6	2-Hexanone	2.9	13		U	
98-82-8	Isopropylbenzene	1.1	13		U	
79-20-9	Methyl acetate	2.0	13		U	
75-09-2	Methylene chloride	0.78	13	13U ~~3.8~~	~~JB~~	B
108-87-2	Methyl cyclohexane	0.38	13		U	
1634-04-4	Methyl tert-butyl ether	0.40	13		U	
108-10-1	4-Methyl-2-pentanone	0.73	13		U	
100-42-5	Styrene	0.44	13		U	
79-34-5	1,1,2,2-Tetrachloroethane	0.54	13		U	
127-18-4	Tetrachloroethene	1.2	13		U	

FORM I VOA

MW 01/09

FORM 1
VOLATILE ORGANICS ANALYSIS DATA SHEET

CLIENT SAMPLE NO. 20RE

MR08-IS23
4-5-6-09AR2

Lab Name: EMPIRICAL LABS Contract: CH2MHILL

Lab Code: NA Case No.: NA SAS No.: NA SDG No.: LEJEUNE043

Matrix: (soil/water) SOIL Lab Sample ID: 0901058-20R2

Sample wt/vol: 4.3 (g/mL) G Lab File ID: 0105820B

Level: (low/med) LOW Date Sampled: 01/07/09 10:00

% Moisture: not dec. 7 Date Analyzed: 01/17/09 18:50

GC Column: RTX-VRX ID: 0.25 (mm) Dilution Factor: 1.0

Soil Extract Volume:_____(uL) Soil Aliquot Volume: _____(uL)

CONCENTRATION UNITS: (ug/L or ug/Kg) UG/KG

CAS NO.	COMPOUND	MDL	RL	CONC	Q
108-88-3	Toluene	1.1	13		U
120-82-1	1,2,4-Trichlorobenzene	0.23	13		U
71-55-6	1,1,1-Trichloroethane	1.1	13		~~U~~ UJ
79-00-5	1,1,2-Trichloroethane	0.44	13		U
79-01-6	Trichloroethene	1.1	13		U
76-13-1	Trichlorotrifluoroethane	0.70	13		U
75-69-4	Trichlorofluoromethane	1.2	13		~~U~~ UJ
75-01-4	Vinyl chloride	1.4	13		U
1330-20-7	Xylene(total)	0.89	13		U

FORM I VOA

CWO
4/1/09

FORM 1
VOLATILE ORGANICS ANALYSIS DATA SHEET

CLIENT SAMPLE NO. 21

MR08-SS249-09A

Lab Name: EMPIRICAL LABS Contract: CH2MHILL

Lab Code: NA Case No.: NA SAS No.: NA SDG No.: LEJEUNE043

Matrix: (soil/water) SOIL Lab Sample ID: 0901058-21

Sample wt/vol: 4.3 (g/mL) G Lab File ID: 0105821B

Level: (low/med) LOW Date Sampled: 01/07/09 10:15

% Moisture: not dec. 5 Date Analyzed: 01/17/09 19:29

GC Column: RTX-VRX ID: 0.25 (mm) Dilution Factor: 1.0

Soil Extract Volume:_____(uL) Soil Aliquot Volume: _____(uL)

CONCENTRATION UNITS: (ug/L or ug/Kg) UG/KG

CAS NO.	COMPOUND	MDL	RL	CONC	Q	
67-64-1	Acetone	2.5	12	72		
71-43-2	Benzene	0.58	12	0.79	J	
75-27-4	Bromodichloromethane	0.37	12		U	
75-25-2	Bromoform	1.2	12		U	
74-83-9	Bromomethane	0.89	12		U	
78-93-3	2-Butanone	1.7	12		U	
75-15-0	Carbon disulfide	1.6	12	5.3	J	
56-23-5	Carbon tetrachloride	1.1	12		~~U~~ UJ	CC
108-90-7	Chlorobenzene	0.42	12		U	
75-00-3	Chloroethane	1.4	12		U	
67-66-3	Chloroform	0.68	12		U	
74-87-3	Chloromethane	0.64	12		U	
110-82-7	Cyclohexane	0.66	12		U	
124-48-1	Dibromochloromethane	0.42	12		U	
96-12-8	1,2-Dibromo-3-chloropropane	1.5	6.2		U	
106-93-4	1,2-Dibromoethane	0.53	12		U	
95-50-1	1,2-Dichlorobenzene	0.46	12		U	
541-73-1	1,3-Dichlorobenzene	1.0	12		U	
106-46-7	1,4-Dichlorobenzene	0.68	12		U	
75-71-8	Dichlorodifluoromethane	1.4	12		~~U~~ UJ	CC
75-34-3	1,1-Dichloroethane	0.66	12		U	
107-06-2	1,2-Dichloroethane	0.57	12		~~U~~ UJ	CC
75-35-4	1,1-Dichloroethene	1.5	12		U	
156-59-2	cis-1,2-Dichloroethene	1.5	12		U	
156-60-5	trans-1,2-Dichloroethene	1.4	12		U	
78-87-5	1,2-Dichloropropane	0.57	12		U	
10061-01-5	cis-1,3-Dichloropropene	0.62	12		U	
10061-02-6	trans-1,3-Dichloropropene	0.39	12		U	
100-41-4	Ethylbenzene	0.92	12		U	
591-78-6	2-Hexanone	2.8	12		U	
98-82-8	Isopropylbenzene	1.1	12		U	
79-20-9	Methyl acetate	2.0	12		U	
75-09-2	Methylene chloride	0.76	12	12U ~~3.3~~ ~~JB~~		BL
108-87-2	Methyl cyclohexane	0.37	12		U	
1634-04-4	Methyl tert-butyl ether	0.39	12		U	
108-10-1	4-Methyl-2-pentanone	0.71	12		U	
100-42-5	Styrene	0.43	12		U	
79-34-5	1,1,2,2-Tetrachloroethane	0.53	12		U	
127-18-4	Tetrachloroethene	1.2	12		U	

kcw
4/1/09

FORM 1
VOLATILE ORGANICS ANALYSIS DATA SHEET

CLIENT SAMPLE NO. 21

MR08-SS249-09A

Lab Name: EMPIRICAL LABS Contract: CH2MHILL

Lab Code: NA Case No.: NA SAS No.: NA SDG No.: LEJEUNE043

Matrix: (soil/water) SOIL Lab Sample ID: 0901058-21

Sample wt/vol: 4.3 (g/mL) G Lab File ID: 0105821B

Level: (low/med) LOW Date Sampled: 01/07/09 10:15

% Moisture: not dec. 5 Date Analyzed: 01/17/09 19:29

GC Column: RTX-VRX ID: 0.25 (mm) Dilution Factor: 1.0

Soil Extract Volume:_____(uL) Soil Aliquot Volume: _____(uL)

CONCENTRATION UNITS: (ug/L or ug/Kg) UG/KG

CAS NO.	COMPOUND	MDL	RL	CONC	Q
108-88-3	Toluene	1.1	12		U
120-82-1	1,2,4-Trichlorobenzene	0.22	12		U
71-55-6	1,1,1-Trichloroethane	1.1	12		~~U~~ UJ CCA
79-00-5	1,1,2-Trichloroethane	0.43	12		U
79-01-6	Trichloroethene	1.0	12		U
76-13-1	Trichlorotrifluoroethane	0.68	12		U
75-69-4	Trichlorofluoromethane	1.2	12		~~U~~ UJ CCA
75-01-4	Vinyl chloride	1.4	12		U
1330-20-7	Xylene(total)	0.86	12		U

FORM I VOA

fw
4/1/09

FORM 1
VOLATILE ORGANICS ANALYSIS DATA SHEET

CLIENT SAMPLE NO. 22

MR08-SS249D-09A

Lab Name: EMPIRICAL LABS Contract: CH2MHILL

Lab Code: NA Case No.: NA SAS No.: NA SDG No.: LEJEUNE043

Matrix: (soil/water) SOIL Lab Sample ID: 0901058-22

Sample wt/vol: 4.6 (g/mL) G Lab File ID: 0105822A

Level: (low/med) LOW Date Sampled: 01/07/09 10:20

% Moisture: not dec. 11 Date Analyzed: 01/17/09 03:45

GC Column: RTX-VRX ID: 0.25 (mm) Dilution Factor: 1.0

Soil Extract Volume:_____(uL) Soil Aliquot Volume: _____(uL)

CONCENTRATION UNITS: (ug/L or ug/Kg) UG/KG

CAS NO.	COMPOUND	MDL	RL	CONC	Q	
67-64-1	Acetone	2.4	12	88	J	SS
71-43-2	Benzene	0.57	12	0.70	~~J~~ J	SS
75-27-4	Bromodichloromethane	0.36	12		~~U~~ UJ	CC
75-25-2	Bromoform	1.2	12		~~U~~ UJ	SS
74-83-9	Bromomethane	0.87	12		~~U~~ UJ	
78-93-3	2-Butanone	1.7	12	4.1	~~J~~ J	
75-15-0	Carbon disulfide	1.6	12	3.7	~~J~~ J	
56-23-5	Carbon tetrachloride	1.1	12		~~U~~ UJ	CC
108-90-7	Chlorobenzene	0.41	12		~~U~~ UJ	SS
75-00-3	Chloroethane	1.3	12		~~U~~	
67-66-3	Chloroform	0.67	12		~~U~~	
74-87-3	Chloromethane	0.63	12		~~U~~	
110-82-7	Cyclohexane	0.66	12		~~U~~	
124-48-1	Dibromochloromethane	0.41	12		~~U~~	
96-12-8	1,2-Dibromo-3-chloropropane	1.4	6.1		~~U~~	
106-93-4	1,2-Dibromoethane	0.52	12		~~U~~	
95-50-1	1,2-Dichlorobenzene	0.45	12		~~U~~	
541-73-1	1,3-Dichlorobenzene	1.0	12		~~U~~	
106-46-7	1,4-Dichlorobenzene	0.67	12		~~U~~	
75-71-8	Dichlorodifluoromethane	1.3	12		~~U~~ UJ	CC
75-34-3	1,1-Dichloroethane	0.66	12		~~U~~ UJ	SS
107-06-2	1,2-Dichloroethane	0.56	12		~~U~~ UJ	CC
75-35-4	1,1-Dichloroethene	1.4	12		~~U~~ UJ	SS
156-59-2	cis-1,2-Dichloroethene	1.4	12		~~U~~	
156-60-5	trans-1,2-Dichloroethene	1.3	12		~~U~~	
78-87-5	1,2-Dichloropropane	0.56	12		~~U~~	
10061-01-5	cis-1,3-Dichloropropene	0.61	12		~~U~~	
10061-02-6	trans-1,3-Dichloropropene	0.39	12		~~U~~	
100-41-4	Ethylbenzene	0.91	12		~~U~~	
591-78-6	2-Hexanone	2.8	12		~~U~~	
98-82-8	Isopropylbenzene	1.1	12		~~U~~	
79-20-9	Methyl acetate	1.9	12		~~U~~	
75-09-2	Methylene chloride	0.75	12	12UJ	~~3.6~~ ~~JB~~ SSL	BC
108-87-2	Methyl cyclohexane	0.36	12		~~U~~ UJ	SS
1634-04-4	Methyl tert-butyl ether	0.39	12		~~U~~ UJ	CC
108-10-1	4-Methyl-2-pentanone	0.70	12		~~U~~ UJ	SS
100-42-5	Styrene	0.42	12		~~U~~	
79-34-5	1,1,2,2-Tetrachloroethane	0.52	12		~~U~~	
127-18-4	Tetrachloroethene	1.2	12		~~U~~	

FORM I VOA

JW 4/1/09

FORM 1
VOLATILE ORGANICS ANALYSIS DATA SHEET

CLIENT SAMPLE NO. 22

MR08-SS249D-09A

Lab Name: EMPIRICAL LABS Contract: CH2MHILL

Lab Code: NA Case No.: NA SAS No.: NA SDG No.: LEJEUNE043

Matrix: (soil/water) SOIL Lab Sample ID: 0901058-22

Sample wt/vol: 4.6 (g/mL) G Lab File ID: 0105822A

Level: (low/med) LOW Date Sampled: 01/07/09 10:20

% Moisture: not dec. 11 Date Analyzed: 01/17/09 03:45

GC Column: RTX-VRX ID: 0.25 (mm) Dilution Factor: 1.0

Soil Extract Volume:_____(uL) Soil Aliquot Volume: _____(uL)

CONCENTRATION UNITS: (ug/L or ug/Kg) UG/KG

CAS NO.	COMPOUND	MDL	RL	CONC	Q	
108-88-3------	Toluene	1.0	12		U UJ	SSL
120-82-1------	1,2,4-Trichlorobenzene	0.22	12		U UJ	SS
71-55-6-------	1,1,1-Trichloroethane	1.1	12		U UJ	CCL
79-00-5-------	1,1,2-Trichloroethane	0.42	12		U UJ	SSL
79-01-6-------	Trichloroethene	1.0	12		U	
76-13-1-------	Trichlorotrifluoroethane	0.67	12		U	
75-69-4-------	Trichlorofluoromethane	1.2	12		U UJ	CCL
75-01-4-------	Vinyl chloride	1.3	12		U UJ	SSL
1330-20-7-----	Xylene(total)	0.85	12		U UJ	

FORM I VOA

JW 4/1/09

FORM 1
VOLATILE ORGANICS ANALYSIS DATA SHEET

CLIENT SAMPLE NO. 22RE

MR08-SS2
49D-09ARE

Lab Name: EMPIRICAL LABS Contract: CH2MHILL

Lab Code: NA Case No.: NA SAS No.: NA SDG No.: LEJEUNE043

Matrix: (soil/water) SOIL Lab Sample ID: 0901058-22RE

Sample wt/vol: 4.9 (g/mL) G Lab File ID: 0105822B

Level: (low/med) LOW Date Sampled: 01/07/09 10:20 Use ORIGINAL

% Moisture: not dec. 11 Date Analyzed: 01/20/09 18:43

GC Column: RTX-VRX ID: 0.25 (mm) Dilution Factor: 1.0

Soil Extract Volume:_____(uL) Soil Aliquot Volume: _____(uL)

CONCENTRATION UNITS: (ug/L or ug/Kg) UG/KG

CAS NO.	COMPOUND	MDL	RL	CONC	Q	
67-64-1	Acetone	2.3	11	65	~~B~~ J	SS
71-43-2	Benzene	0.54	11	0.64	J J	SS
75-27-4	Bromodichloromethane	0.34	11		~~U~~ UJ	CC
75-25-2	Bromoform	1.1	11		U	
74-83-9	Bromomethane	0.83	11		~~U~~ UJ	CC
78-93-3	2-Butanone	1.6	11	3.1	J J	SS
75-15-0	Carbon disulfide	1.5	11	3.1	J J	SS
56-23-5	Carbon tetrachloride	1.0	11		~~U~~ UJ	CC
108-90-7	Chlorobenzene	0.39	11		U	
75-00-3	Chloroethane	1.3	11		~~U~~ UJ	CC
67-66-3	Chloroform	0.63	11		~~U~~ UJ	CC
74-87-3	Chloromethane	0.60	11		~~U~~ UJ	CC
110-82-7	Cyclohexane	0.62	11		U	
124-48-1	Dibromochloromethane	0.39	11		U	
96-12-8	1,2-Dibromo-3-chloropropane	1.4	5.7		~~U~~ UJ	IS
106-93-4	1,2-Dibromoethane	0.49	11		U	
95-50-1	1,2-Dichlorobenzene	0.42	11		~~U~~ UJ	IS
541-73-1	1,3-Dichlorobenzene	0.96	11		U	
106-46-7	1,4-Dichlorobenzene	0.63	11		U	
75-71-8	Dichlorodifluoromethane	1.3	11		~~U~~ UJ	CC
75-34-3	1,1-Dichloroethane	0.62	11		U	
107-06-2	1,2-Dichloroethane	0.53	11		~~U~~ UJ	CC
75-35-4	1,1-Dichloroethene	1.4	11		U	
156-59-2	cis-1,2-Dichloroethene	1.4	11		U	
156-60-5	trans-1,2-Dichloroethene	1.3	11		U	
78-87-5	1,2-Dichloropropane	0.53	11		U	
10061-01-5	cis-1,3-Dichloropropene	0.57	11		U	
10061-02-6	trans-1,3-Dichloropropene	0.37	11		U	
100-41-4	Ethylbenzene	0.86	11		U	
591-78-6	2-Hexanone	2.6	11		U	
98-82-8	Isopropylbenzene	1.0	11		U	
79-20-9	Methyl acetate	1.8	11		U	
75-09-2	Methylene chloride	0.71	11	11	UJ ~~3.3~~ ~~JB~~ CCH	B
108-87-2	Methyl cyclohexane	0.34	11		U	
1634-04-4	Methyl tert-butyl ether	0.37	11		~~U~~ UJ	CC
108-10-1	4-Methyl-2-pentanone	0.67	11		U	
100-42-5	Styrene	0.40	11		U	
79-34-5	1,1,2,2-Tetrachloroethane	0.49	11		~~U~~ UJ	IS
127-18-4	Tetrachloroethene	1.1	11		U	

FORM I VOA

LW 4/1/09

FORM 1
VOLATILE ORGANICS ANALYSIS DATA SHEET

CLIENT SAMPLE NO. 22RE

MR08-SS2
49D-09AR

Lab Name: EMPIRICAL LABS Contract: CH2MHILL

Lab Code: NA Case No.: NA SAS No.: NA SDG No.: LEJEUNE043

Matrix: (soil/water) SOIL Lab Sample ID: 0901058-22R

Sample wt/vol: 4.9 (g/mL) G Lab File ID: 0105822B

Level: (low/med) LOW Date Sampled: 01/07/09 10:20 use original

% Moisture: not dec. 11 Date Analyzed: 01/20/09 18:43

GC Column: RTX-VRX ID: 0.25 (mm) Dilution Factor: 1.0

Soil Extract Volume:_____(uL) Soil Aliquot Volume: _____(uL)

CONCENTRATION UNITS: (ug/L or ug/Kg) UG/KG

CAS NO.	COMPOUND	MDL	RL	CONC	Q	
108-88-3	Toluene	0.99	11		U	
120-82-1	1,2,4-Trichlorobenzene	0.21	11		~~U~~ UJ	IS
71-55-6	1,1,1-Trichloroethane	1.0	11		~~U~~ UJ	CC
79-00-5	1,1,2-Trichloroethane	0.40	11		U	
79-01-6	Trichloroethene	0.98	11		U	
76-13-1	Trichlorotrifluoroethane	0.63	11		~~U~~ UJ	CC
75-69-4	Trichlorofluoromethane	1.1	11		~~U~~ UJ	di
75-01-4	Vinyl chloride	1.3	11		~~U~~ UJ	CC
1330-20-7	Xylene(total)	0.80	11		U	

FORM I VOA

MW
4/1/09

FORM 1
VOLATILE ORGANICS ANALYSIS DATA SHEET

CLIENT SAMPLE NO. 23

MR08-IS24
9-5-6-09A

Lab Name: EMPIRICAL LABS Contract: CH2MHILL

Lab Code: NA Case No.: NA SAS No.: NA SDG No.: LEJEUNE043

Matrix: (soil/water) SOIL Lab Sample ID: 0901058-23

Sample wt/vol: 4.0 (g/mL) G Lab File ID: 0105823A

Level: (low/med) LOW Date Sampled: 01/07/09 10:35

% Moisture: not dec. 12 Date Analyzed: 01/17/09 04:24

GC Column: RTX-VRX ID: 0.25 (mm) Dilution Factor: 1.0

Soil Extract Volume:_____(uL) Soil Aliquot Volume: _____(uL)

CONCENTRATION UNITS: (ug/L or ug/Kg) UG/KG

CAS NO.	COMPOUND	MDL	RL	CONC	Q	
67-64-1	Acetone	2.8	14		U	
71-43-2	Benzene	0.66	14		U	
75-27-4	Bromodichloromethane	0.42	14		~~U~~ UJ	CC
75-25-2	Bromoform	1.4	14		U	
74-83-9	Bromomethane	1.0	14		U	
78-93-3	2-Butanone	2.0	14		U	
75-15-0	Carbon disulfide	1.8	14		U	
56-23-5	Carbon tetrachloride	1.2	14		~~U~~ UJ	CC
108-90-7	Chlorobenzene	0.48	14		U	
75-00-3	Chloroethane	1.6	14		U	
67-66-3	Chloroform	0.78	14		U	
74-87-3	Chloromethane	0.73	14		U	
110-82-7	Cyclohexane	0.76	14		U	
124-48-1	Dibromochloromethane	0.48	14		U	
96-12-8	1,2-Dibromo-3-chloropropane	1.7	7.0		U	
106-93-4	1,2-Dibromoethane	0.61	14		U	
95-50-1	1,2-Dichlorobenzene	0.52	14		U	
541-73-1	1,3-Dichlorobenzene	1.2	14		U	
106-46-7	1,4-Dichlorobenzene	0.78	14		U	
75-71-8	Dichlorodifluoromethane	1.6	14		~~U~~ UJ	CC
75-34-3	1,1-Dichloroethane	0.76	14		U	
107-06-2	1,2-Dichloroethane	0.65	14		~~U~~ UJ	CC
75-35-4	1,1-Dichloroethene	1.7	14		U	
156-59-2	cis-1,2-Dichloroethene	1.7	14		U	
156-60-5	trans-1,2-Dichloroethene	1.6	14		U	
78-87-5	1,2-Dichloropropane	0.65	14		U	
10061-01-5	cis-1,3-Dichloropropene	0.70	14		U	
10061-02-6	trans-1,3-Dichloropropene	0.45	14		U	
100-41-4	Ethylbenzene	1.0	14		U	
591-78-6	2-Hexanone	3.2	14		U	
98-82-8	Isopropylbenzene	1.2	14		U	
79-20-9	Methyl acetate	2.2	14		U	
75-09-2	Methylene chloride	0.87	14	14u	~~4.9 JB~~	B
108-87-2	Methyl cyclohexane	0.42	14		U	
1634-04-4	Methyl tert-butyl ether	0.45	14		~~U~~ UJ	CC
108-10-1	4-Methyl-2-pentanone	0.82	14		U	
100-42-5	Styrene	0.49	14		U	
79-34-5	1,1,2,2-Tetrachloroethane	0.61	14		U	
127-18-4	Tetrachloroethene	1.4	14		U	

FORM I VOA

Jew
4/1/09

FORM 1
VOLATILE ORGANICS ANALYSIS DATA SHEET

CLIENT SAMPLE NO. 23

MR08-IS24
9-5-6-09A

Lab Name: EMPIRICAL LABS Contract: CH2MHILL

Lab Code: NA Case No.: NA SAS No.: NA SDG No.: LEJEUNE043

Matrix: (soil/water) SOIL Lab Sample ID: 0901058-23

Sample wt/vol: 4.0 (g/mL) G Lab File ID: 0105823A

Level: (low/med) LOW Date Sampled: 01/07/09 10:35

% Moisture: not dec. 12 Date Analyzed: 01/17/09 04:24

GC Column: RTX-VRX ID: 0.25 (mm) Dilution Factor: 1.0

Soil Extract Volume:_____(uL) Soil Aliquot Volume: _____(uL)

CONCENTRATION UNITS: (ug/L or ug/Kg) UG/KG

CAS NO.	COMPOUND	MDL	RL	CONC	Q
108-88-3	Toluene	1.2	14		U
120-82-1	1,2,4-Trichlorobenzene	0.25	14		U
71-55-6	1,1,1-Trichloroethane	1.3	14		~~U~~ UJ CC
79-00-5	1,1,2-Trichloroethane	0.49	14		U
79-01-6	Trichloroethene	1.2	14		U
76-13-1	Trichlorotrifluoroethane	0.78	14		U
75-69-4	Trichlorofluoromethane	1.3	14		~~U~~ UJ CC
75-01-4	Vinyl chloride	1.6	14		U
1330-20-7	Xylene(total)	0.99	14		U

JLW 4/1/09

FORM 1
VOLATILE ORGANICS ANALYSIS DATA SHEET

CLIENT SAMPLE NO. 24

MR08-IS24
9D-5-6-09A

Lab Name: EMPIRICAL LABS Contract: CH2MHILL

Lab Code: NA Case No.: NA SAS No.: NA SDG No.: LEJEUNE043

Matrix: (soil/water) SOIL Lab Sample ID: 0901058-24

Sample wt/vol: 4.9 (g/mL) G Lab File ID: 0105824A

Level: (low/med) LOW Date Sampled: 01/07/09 10:45

% Moisture: not dec. 7 Date Analyzed: 01/17/09 05:03

GC Column: RTX-VRX ID: 0.25 (mm) Dilution Factor: 1.0

Soil Extract Volume:_____(uL) Soil Aliquot Volume: _____(uL)

CONCENTRATION UNITS: (ug/L or ug/Kg) UG/KG

CAS NO.	COMPOUND	MDL	RL	CONC	Q	
67-64-1	Acetone	2.2	11		U	
71-43-2	Benzene	0.51	11		U	
75-27-4	Bromodichloromethane	0.33	11		~~U~~ UJ	CC
75-25-2	Bromoform	1.1	11		U	
74-83-9	Bromomethane	0.79	11		U	
78-93-3	2-Butanone	1.5	11		U	
75-15-0	Carbon disulfide	1.4	11		U	
56-23-5	Carbon tetrachloride	0.96	11		~~U~~ UJ	CC
108-90-7	Chlorobenzene	0.37	11		U	
75-00-3	Chloroethane	1.2	11		U	
67-66-3	Chloroform	0.60	11		U	
74-87-3	Chloromethane	0.57	11		U	
110-82-7	Cyclohexane	0.59	11		U	
124-48-1	Dibromochloromethane	0.37	11		U	
96-12-8	1,2-Dibromo-3-chloropropane	1.3	5.5		U	
106-93-4	1,2-Dibromoethane	0.47	11		U	
95-50-1	1,2-Dichlorobenzene	0.40	11		U	
541-73-1	1,3-Dichlorobenzene	0.92	11		U	
106-46-7	1,4-Dichlorobenzene	0.60	11		U	
75-71-8	Dichlorodifluoromethane	1.2	11		~~U~~ UJ	CC
75-34-3	1,1-Dichloroethane	0.59	11		U	
107-06-2	1,2-Dichloroethane	0.50	11		~~U~~ UJ	CC
75-35-4	1,1-Dichloroethene	1.3	11		U	
156-59-2	cis-1,2-Dichloroethene	1.3	11		U	
156-60-5	trans-1,2-Dichloroethene	1.2	11		U	
78-87-5	1,2-Dichloropropane	0.50	11		U	
10061-01-5	cis-1,3-Dichloropropene	0.55	11		U	
10061-02-6	trans-1,3-Dichloropropene	0.35	11		U	
100-41-4	Ethylbenzene	0.82	11		U	
591-78-6	2-Hexanone	2.5	11		U	
98-82-8	Isopropylbenzene	0.96	11		U	
79-20-9	Methyl acetate	1.8	11		U	
75-09-2	Methylene chloride	0.68	11	11U	~~2.8 JB~~	B
108-87-2	Methyl cyclohexane	0.33	11		U	
1634-04-4	Methyl tert-butyl ether	0.35	11		~~U~~ UJ	CC
108-10-1	4-Methyl-2-pentanone	0.64	11		U	
100-42-5	Styrene	0.38	11		U	
79-34-5	1,1,2,2-Tetrachloroethane	0.47	11		U	
127-18-4	Tetrachloroethene	1.1	11		U	

FORM I VOA

JW
4/1/09

FORM 1
VOLATILE ORGANICS ANALYSIS DATA SHEET

CLIENT SAMPLE NO.

24

MR08-IS24
9D-5-6-09A

Lab Name: EMPIRICAL LABS Contract: CH2MHILL

Lab Code: NA Case No.: NA SAS No.: NA SDG No.: LEJEUNE043

Matrix: (soil/water) SOIL Lab Sample ID: 0901058-24

Sample wt/vol: 4.9 (g/mL) G Lab File ID: 0105824A

Level: (low/med) LOW Date Sampled: 01/07/09 10:45

% Moisture: not dec. 7 Date Analyzed: 01/17/09 05:03

GC Column: RTX-VRX ID: 0.25 (mm) Dilution Factor: 1.0

Soil Extract Volume:_____(uL) Soil Aliquot Volume: _____(uL)

CONCENTRATION UNITS: (ug/L or ug/Kg) UG/KG

CAS NO.	COMPOUND	MDL	RL	CONC	Q	
108-88-3	Toluene	0.94	11		U	
120-82-1	1,2,4-Trichlorobenzene	0.20	11		U	
71-55-6	1,1,1-Trichloroethane	0.98	11		~~U~~ UJ	CC
79-00-5	1,1,2-Trichloroethane	0.38	11		U	
79-01-6	Trichloroethene	0.93	11		U	
76-13-1	Trichlorotrifluoroethane	0.60	11		U	
75-69-4	Trichlorofluoromethane	1.0	11		~~U~~ UJ	CC
75-01-4	Vinyl chloride	1.2	11		U	
1330-20-7	Xylene(total)	0.77	11		U	

FORM I VOA

JW 4/1/09

FORM 1
VOLATILE ORGANICS ANALYSIS DATA SHEET

CLIENT SAMPLE NO.

25

MR08-EB01
010709-SS

Lab Name: EMPIRICAL LABS Contract: CH2MHILL

Lab Code: NA Case No.: NA SAS No.: NA SDG No.: LEJEUNE043

Matrix: (soil/water) WATER Lab Sample ID: 0901058-25

Sample wt/vol: 5.000 (g/mL) ML Lab File ID: 0105825

Level: (low/med) LOW Date Sampled: 01/07/09 11:00

% Moisture: not dec. _____ Date Analyzed: 01/13/09 02:07

GC Column: RTX-VRX ID: 0.25 (mm) Dilution Factor: 1.0

Soil Extract Volume:_____(uL) Soil Aliquot Volume: _____(uL)

CONCENTRATION UNITS: (ug/L or ug/Kg) UG/L

CAS NO.	COMPOUND	MDL	RL	CONC	Q
67-64-1	Acetone	0.84	2.5		U
71-43-2	Benzene	0.11	1.0		U
75-27-4	Bromodichloromethane	0.10	1.0		U
75-25-2	Bromoform	0.10	1.0		U
74-83-9	Bromomethane	0.32	1.0		U
78-93-3	2-Butanone	1.0	3.0		U
75-15-0	Carbon disulfide	0.13	1.0		U
56-23-5	Carbon tetrachloride	0.15	1.0		U
108-90-7	Chlorobenzene	0.10	1.0		U
75-00-3	Chloroethane	0.18	1.0		U
67-66-3	Chloroform	0.11	1.0		U
74-87-3	Chloromethane	0.29	1.0		U
110-82-7	Cyclohexane	0.20	1.0		U
124-48-1	Dibromochloromethane	0.10	1.0		U
96-12-8	1,2-Dibromo-3-chloropropane	0.11	1.0		U
106-93-4	1,2-Dibromoethane	0.10	1.0		U
95-50-1	1,2-Dichlorobenzene	0.10	1.0		U
541-73-1	1,3-Dichlorobenzene	0.13	1.0		U
106-46-7	1,4-Dichlorobenzene	0.10	1.0		U
75-71-8	Dichlorodifluoromethane	0.22	1.0		U
75-34-3	1,1-Dichloroethane	0.12	1.0		U
107-06-2	1,2-Dichloroethane	0.10	1.0		U
75-35-4	1,1-Dichloroethene	0.15	1.0		U
156-59-2	cis-1,2-Dichloroethene	0.13	1.0		U
156-60-5	trans-1,2-Dichloroethene	0.13	1.0		U
78-87-5	1,2-Dichloropropane	0.10	1.0		U
10061-01-5	cis-1,3-Dichloropropene	0.11	1.0		U
10061-02-6	trans-1,3-Dichloropropene	0.10	1.0		U
100-41-4	Ethylbenzene	0.13	1.0		U
591-78-6	2-Hexanone	0.30	1.0		U
98-82-8	Isopropylbenzene	0.15	1.0		U
79-20-9	Methyl acetate	0.30	1.0		U
75-09-2	Methylene chloride	0.14	1.0	1.0 U ~~0.90 JB~~	B
108-87-2	Methyl cyclohexane	0.17	1.0		U
1634-04-4	Methyl tert-butyl ether	0.10	1.0		U
108-10-1	4-Methyl-2-pentanone	0.29	1.0		U
100-42-5	Styrene	0.10	1.0		U
79-34-5	1,1,2,2-Tetrachloroethane	0.10	1.0		U
127-18-4	Tetrachloroethene	0.15	1.0		U

LWO
1/1/09

FORM 1
VOLATILE ORGANICS ANALYSIS DATA SHEET

CLIENT SAMPLE NO.

MR08-EB01
010709-SS

25

Lab Name: EMPIRICAL LABS Contract: CH2MHILL

Lab Code: NA Case No.: NA SAS No.: NA SDG No.: LEJEUNE043

Matrix: (soil/water) WATER Lab Sample ID: 0901058-25

Sample wt/vol: 5.000 (g/mL) ML Lab File ID: 0105825

Level: (low/med) LOW Date Sampled: 01/07/09 11:00

% Moisture: not dec. _____ Date Analyzed: 01/13/09 02:07

GC Column: RTX-VRX ID: 0.25 (mm) Dilution Factor: 1.0

Soil Extract Volume:_____(uL) Soil Aliquot Volume: _____(uL)

CONCENTRATION UNITS: (ug/L or ug/Kg) UG/L

CAS NO.	COMPOUND	MDL	RL	CONC	Q
108-88-3	Toluene	0.10	1.0		U
120-82-1	1,2,4-Trichlorobenzene	0.10	1.0		U
71-55-6	1,1,1-Trichloroethane	0.17	1.0		U
79-00-5	1,1,2-Trichloroethane	0.10	1.0		U
79-01-6	Trichloroethene	0.13	1.0		U
76-13-1	Trichlorotrifluoroethane	0.18	1.0		U
75-69-4	Trichlorofluoromethane	0.17	1.0		U
75-01-4	Vinyl chloride	0.18	1.0		U
1330-20-7	Xylene(total)	0.22	1.0		U

fcw
4/1/09

FORM 1
VOLATILE ORGANICS ANALYSIS DATA SHEET

CLIENT SAMPLE NO.

26

MR08-TB01010709

Lab Name: EMPIRICAL LABS Contract: CH2MHILL

Lab Code: NA Case No.: NA SAS No.: NA SDG No.: LEJEUNE043

Matrix: (soil/water) WATER Lab Sample ID: 0901058-26

Sample wt/vol: 5.000 (g/mL) ML Lab File ID: 0105826

Level: (low/med) LOW Date Sampled: 01/07/09 11:30

% Moisture: not dec. _____ Date Analyzed: 01/13/09 01:07

GC Column: RTX-VRX ID: 0.25 (mm) Dilution Factor: 1.0

Soil Extract Volume:_____(uL) Soil Aliquot Volume: _____(uL)

CONCENTRATION UNITS: (ug/L or ug/Kg) UG/L

CAS NO.	COMPOUND	MDL	RL	CONC	Q
67-64-1	Acetone	0.84	2.5		U
71-43-2	Benzene	0.11	1.0		U
75-27-4	Bromodichloromethane	0.10	1.0		U
75-25-2	Bromoform	0.10	1.0		U
74-83-9	Bromomethane	0.32	1.0		U
78-93-3	2-Butanone	1.0	3.0		U
75-15-0	Carbon disulfide	0.13	1.0		U
56-23-5	Carbon tetrachloride	0.15	1.0		U
108-90-7	Chlorobenzene	0.10	1.0		U
75-00-3	Chloroethane	0.18	1.0		U
67-66-3	Chloroform	0.11	1.0		U
74-87-3	Chloromethane	0.29	1.0		U
110-82-7	Cyclohexane	0.20	1.0		U
124-48-1	Dibromochloromethane	0.10	1.0		U
96-12-8	1,2-Dibromo-3-chloropropane	0.11	1.0		U
106-93-4	1,2-Dibromoethane	0.10	1.0		U
95-50-1	1,2-Dichlorobenzene	0.10	1.0		U
541-73-1	1,3-Dichlorobenzene	0.13	1.0		U
106-46-7	1,4-Dichlorobenzene	0.10	1.0		U
75-71-8	Dichlorodifluoromethane	0.22	1.0		U
75-34-3	1,1-Dichloroethane	0.12	1.0		U
107-06-2	1,2-Dichloroethane	0.10	1.0		U
75-35-4	1,1-Dichloroethene	0.15	1.0		U
156-59-2	cis-1,2-Dichloroethene	0.13	1.0		U
156-60-5	trans-1,2-Dichloroethene	0.13	1.0		U
78-87-5	1,2-Dichloropropane	0.10	1.0		U
10061-01-5	cis-1,3-Dichloropropene	0.11	1.0		U
10061-02-6	trans-1,3-Dichloropropene	0.10	1.0		U
100-41-4	Ethylbenzene	0.13	1.0		U
591-78-6	2-Hexanone	0.30	1.0		U
98-82-8	Isopropylbenzene	0.15	1.0		U
79-20-9	Methyl acetate	0.30	1.0		U
75-09-2	Methylene chloride	0.14	1.0	1.0u ~~0.64 JB~~	B
108-87-2	Methyl cyclohexane	0.17	1.0		U
1634-04-4	Methyl tert-butyl ether	0.10	1.0		U
108-10-1	4-Methyl-2-pentanone	0.29	1.0		U
100-42-5	Styrene	0.10	1.0		U
79-34-5	1,1,2,2-Tetrachloroethane	0.10	1.0		U
127-18-4	Tetrachloroethene	0.15	1.0		U

kw
4/1/09

FORM 1
VOLATILE ORGANICS ANALYSIS DATA SHEET

CLIENT SAMPLE NO. 26

MR08-TB01010709

Lab Name: EMPIRICAL LABS Contract: CH2MHILL

Lab Code: NA Case No.: NA SAS No.: NA SDG No.: LEJEUNE043

Matrix: (soil/water) WATER Lab Sample ID: 0901058-26

Sample wt/vol: 5.000 (g/mL) ML Lab File ID: 0105826

Level: (low/med) LOW Date Sampled: 01/07/09 11:30

% Moisture: not dec. _____ Date Analyzed: 01/13/09 01:07

GC Column: RTX-VRX ID: 0.25 (mm) Dilution Factor: 1.0

Soil Extract Volume:_____(uL) Soil Aliquot Volume: _____(uL)

CONCENTRATION UNITS: (ug/L or ug/Kg) UG/L

CAS NO.	COMPOUND	MDL	RL	CONC	Q
108-88-3	Toluene	0.10	1.0		U
120-82-1	1,2,4-Trichlorobenzene	0.10	1.0		U
71-55-6	1,1,1-Trichloroethane	0.17	1.0		U
79-00-5	1,1,2-Trichloroethane	0.10	1.0		U
79-01-6	Trichloroethene	0.13	1.0		U
76-13-1	Trichlorotrifluoroethane	0.18	1.0		U
75-69-4	Trichlorofluoromethane	0.17	1.0		U
75-01-4	Vinyl chloride	0.18	1.0		U
1330-20-7	Xylene(total)	0.22	1.0		U

lw
4/1/09

ENVIRONMENTAL
Data Services, Inc.

VOLATILE ORGANIC COMPOUNDS
USEPA Region IV - Level IV Review

Site: MCB Camp Lejeune, TO-09 SDG #: LEJEUNE044

Client: CH2M HILL, Inc., Virginia Beach, Virginia Date: April 2, 2009

Laboratory: Empirical Laboratories, Nashville, Tennessee Reviewer: Nancy Weaver

EDS ID	Client Sample ID	Laboratory Sample ID	Matrix
1	MR08-SS281-09A	0901064-01	Soil
2	MR08-IS281-9-10-09A	0901064-02	Soil
3	MR08-SS282-09A	0901064-03	Soil
4	MR08-IS282-9-10-09A	0901064-04	Soil
5	MR08-SS297-09A	0901064-05	Soil
6	MR08-IS297-6-7-09A	0901064-06	Soil
7	MR08-SS298-09A	0901064-07	Soil
8	MR08-IS298-6-7-09A	0901064-08	Soil
9	MR08-SS305-09A	0901064-09	Soil
10	MR08-IS305-6-7-09A	0901064-10	Soil
11	MR08-SS306-09A	0901064-11	Soil
12	MR08-IS306-5-6-09A	0901064-12	Soil
13	MR08-SS206-09A-09A	0901064-13	Soil
14	MR08-IS206-6-7-09A	0901064-14	Soil
15	MR08-SS207-09A	0901064-15	Soil
16	MR08-IS207-6-7-09A	0901064-16	Soil
17	MR08-SS208-09A	0901064-17	Soil
18	MR08-IS208-6-7-09A	0901064-18	Soil
19	MR08-SS228-09A	0901064-19	Soil
20	MR08-IS228-7-8-09A	0901064-20	Soil
21	MR08-SS229-09A	0901064-21	Soil
22	MR08-SS229D-09A	0901064-22	Soil
23	MR08-IS229-6-7-09A	0901064-23	Soil
24	MR08-IS229D-6-7-09A	0901064-24	Soil
25	MR08-SS227-09A	0901064-25	Soil
26	MR08-IS227-6-7-09A	0901064-26	Soil
27	MR08-SS209-09A	0901064-27	Soil
28	MR08-SS209D-09A	0901064-28	Soil
29	MR08-EB01010809-SS	0901064-29	Water
30	MR08-TB01010809	0901064-30	Water

The USEPA "Contract Laboratory Program National Functional Guidelines for Organic Data Review," October 1999, and professional judgement were used in evaluating the data in this summary report.

Holding Times - All samples were analyzed within 14 days for preserved water and soil samples.

GC/MS Tuning - All of the BFB tunes in the initial and continuing calibrations met the percent relative abundance criteria.

Initial Calibration - The initial calibrations exhibited acceptable %RSD and mean RRF values.

Continuing Calibration - The continuing calibrations exhibited acceptable %D and RRF values except the following.

CCAL Date	Compound	%D/RRF	Qualifier	Affected Samples
01/16/09 (0808)	Acetone	49.6%	J/UJ	1, 3
	Chloromethane	28.6%	J/UJ	1, 3
	Dichlorodifluoromethane	26.6%	J/UJ	1, 3
	2-Hexanone	25.2%	J/UJ	1, 3
01/16/09 (1955)	Bromodichloromethane	27.3%	J/UJ	2
	Carbon tetrachloride	41.7%	J/UJ	2
	Dichlorodifluoromethane	41.0%	J/UJ	2
	1,2-Dichloroethane	41.6%	J/UJ	2
	Methyl tert-butyl ether	26.8%	J/UJ	2
	1,1,1-Trichloroethane	36.2%	J/UJ	2
	Trichlorofluoromethane	63.7%	J/UJ	2
01/17/09	Carbon tetrachloride	42.3%	J/UJ	1DL, 4-7
	Dichlorodifluoromethane	35.5%	J/UJ	1DL, 4-7
	1,2-Dichloroethane	27.1%	J/UJ	1DL, 4-7
	1,1,1-Trichloroethane	39.7%	J/UJ	1DL, 4-7
	Trichlorofluoromethane	60.2%	J/UJ	1DL, 4-7
01/18/09	Vinyl chloride	30.1%	J/UJ	9-18, 20-22
	Bromodichloromethane	26.0%	J/UJ	9-18, 20-22
	Carbon tetrachloride	43.7%	J/UJ	9-18, 20-22
	Chloromethane	25.8%	J/UJ	9-18, 20-22
	Dichlorodifluoromethane	49.6%	J/UJ	9-18, 20-22
	1,2-Dichloroethane	38.4%	J/UJ	9-18, 20-22
	1,1,1-Trichloroethane	42.4%	J/UJ	9-18, 20-22
	Trichlorofluoromethane	69.5%	J/UJ	9-18, 20-22
01/19/09	Vinyl chloride	49.1%	J/UJ	8
	Bromodichloromethane	34.8%	J/UJ	8
	Carbon tetrachloride	69.1%	J/UJ	8
	Chloroform	30.3%	J/UJ	8
	Chloromethane	37.7%	J/UJ	8
	Dichlorodifluoromethane	79.4%	J/UJ	8
	1,2-Dichloroethane	46.3%	J/UJ	8
	Methylene chloride	27.4%	J/UJ	8
	Methyl tert-butyl ether	29.0%	J/UJ	8
	1,1,1-Trichloroethane	59.2%	J/UJ	8
	Trichlorofluoromethane	100.1%	J/UJ	8

CCAL Date	Compound	%D/RRF	Qualifier	Affected Samples
01/19/09	Bromomethane	40.0%	J/UJ	8
	Trichlorotrifluoroethane	35.3%	J/UJ	8
01/20/09	Bromodichloromethane	31.2%	J/UJ	19, 23, 24
	Bromomethane	29.8%	J/UJ	19, 23, 24
	Carbon tetrachloride	65.6%	J/UJ	19, 23, 24
	Chloroethene	26.4%	J/UJ	19, 23, 24
	Chloroform	26.2%	J/UJ	19, 23, 24
	Chloromethane	37.9%	J/UJ	19, 23, 24
	Dichlorodifluoromethane	74.9%	J/UJ	19, 23, 24
	1,2-Dichloroethane	39.2%	J/UJ	19, 23, 24
	Methylene chloride	56.2%	J/UJ	19, 23, 24
	Methyl tert-butyl ether	28.3%	J/UJ	19, 23, 24
	1,1,1-Trichloroethane	57.8%	J/UJ	19, 23, 24
	Trichlorotrifluoroethane	42.4%	J/UJ	19, 23, 24
	Trichlorofluoromethane	96.5%	J/UJ	19, 23, 24
	Vinyl chloride	46.4%	J/UJ	19, 23, 24
01/21/09 (0302)	Bromodichloromethane	51.6%	J/UJ	27, 28
	Bromomethane	39.1%	J/UJ	27, 28
	Carbon disulfide	27.2%	J/UJ	27, 28
	Carbon tetrachloride	85.2%	J/UJ	27, 28
	Chlorobenzene	29.5%	J/UJ	27, 28
	Chloroethane	34.2%	J/UJ	27, 28
	Chloroform	46.0%	J/UJ	27, 28
	Chloromethane	49.1%	J/UJ	27, 28
	Dichlorodifluoromethane	93.0%	J/UJ	27, 28
	1,1-Dichloroethane	35.2%	J/UJ	27, 28
	1,2-Dichloroethane	78.2%	J/UJ	27, 28
	Methyl acetate	29.9%	J/UJ	27, 28
	Methylene chloride	56.4%	J/UJ	27, 28
	Methyl tert-butyl ether	62.2%	J/UJ	27, 28
	Tetrachloroethene	35.2%	J/UJ	27, 28
	Toluene	30.0%	J/UJ	27, 28
	1,1,1-Trichloroethane	80.3%	J/UJ	27, 28
	Trichlorotrifluoroethane	50.3%	J/UJ	27, 28
	Trichlorofluoromethane	130.4%	J/UJ	27, 28
01/21/09 (1958)	2-Butanone	39.5%	J/UJ	25, 26
	Methylene chloride	25.6%	J/UJ	25, 26
	Vinyl chloride	27.7%	J/UJ	25, 26

Surrogates - All samples exhibited acceptable surrogate recoveries except the following.

Sample ID	Surrogate	%R	Qualifier
23	Dibromofluoromethane	127%	None - All ND
24	Dibromofluoromethane	126%	None - All ND
27	Dibromofluoromethane	129%	J - positive results
28	Dibromofluoromethane	133%	J - positive results

MS/MSD - A MS/MSD sample was not analyzed from this data package.

Laboratory Control Sample - The LCS samples exhibited acceptable %R values except the following.

LCS ID	Compound	%R	Qualifier	Affected Samples
V1BLK0116E	Carbon tetrachloride	136%	None	All ND
	Dichlorodifluoromethane	144%	None	All ND
	1,2-Dichloroethane	128%	None	All ND
V1BLK0117	Carbon tetrachloride	146%	None	All ND
	Dichlorodifluoromethane	151%	None	All ND
	1,2-Dichloroethane	129%	None	All ND
	1,1,1-Trichloroethane	138%	None	All ND
V1BLK0117E	Bromodichloromethane	132%	None	All ND
	Carbon tetrachloride	151%	None	All ND
	Chloroform	127%	None	All ND
	Chloromethane	138%	None	All ND
	Dichlorodifluoromethane	161%	None	All ND
	1,2-Dichloroethane	140%	None	All ND
	1,1,1-Trichloroethane	148%	None	All ND
	Trichlorotrifluoroethane	141%	None	All ND
V1BLK0119	Carbon tetrachloride	147%	None	All ND
	Dichlorodifluoromethane	144%	None	All ND
	1,2-Dichloroethane	133%	None	All ND
	1,1,1-Trichloroethane	141%	None	All ND
V1BLK0120	Carbon tetrachloride	153%	None	All ND
	Chloromethane	153%	None	All ND
	Dichlorodifluoromethane	195%	None	All ND
	1,2-Dichloroethane	130%	None	All ND
	Methylene chloride	142%	None	All ND
	1,1,1-Trichloroethane	146%	None	All ND
	Trichlorotrifluoroethane	144%	None	All ND
	Trichlorofluoromethane	197%	None	All ND
	Vinyl chloride	138%	None	All ND
V1BLK0120E	Bromodichloromethane	142%	None	All ND
	Carbon tetrachloride	170%	None	All ND
	Chloroform	137%	None	All ND
	Chloromethane	173%	None	All ND
	Dichlorodifluoromethane	222%	None	All ND
	1,2-Dichloroethane	162%	None	All ND
	1,1,1-Trichloroethane	166%	None	All ND
	Trichlorotrifluoroethane	157%	None	All ND
	Trichlorofluoromethane	228%	None	All ND
	Vinyl chloride	153%	None	All ND

Internal Standard (IS) Area Performance - All internal standards met response and retention time (RT) criteria except the following.

Sample ID	Internal Standard	Area Count	Qualifier
1	IS3-1,4-Dichlorobenzene-d4	Low	J/UJ

Sample ID	Internal Standard	Area Count	Qualifier
13	IS3-1,4-Dichlorobenzene-d4	Low	J/UJ

Method Blank - The method blanks exhibited the following contamination.

Blank ID	Compound	Conc.	Action Level ug/kg	Qualifier	Affected Samples
V3BLK0114E	Methylene chloride	0.65ug/L	6.5	U	29, 30
	Trichlorofluoromethane	0.25 ug/L	1.25	None	All ND
V1BLK0116	Methylene chloride	2.4 ug/kg	24	U	1, 3
V1BLK0116E	Methylene chloride	2.8 ug/kg	28	U	2
V1BLK0117	Methylene chloride	3.4 ug/kg	34	U	4-7
V1MBLK0117	Methylene chloride	120 ug/kg	1200	U	1DL
V1BLK0117E	Methylene chloride	2.5 ug/kg	25	U	9-18, 20-22
	1,2,4-Trichorobenzene	0.36 ug/kg	1.8	None	All ND
V1BLK0119	Methylene chloride	1.8 ug/kg	18	U	8
V1BLK0120	Acetone	3.8 ug/kg	38	U	19, 23, 24
	Methylene chloride	6.5 ug/kg	65	U	19, 23, 24
V1BLK0120E	Methylene chloride	7.6 ug/kg	76	U	27, 28
V5BLK0121E	Acetone	3.5 ug/kg	35	U	26
	Methylene chloride	3.2 ug/kg	32	U	25, 26
	1,2,4-Trichorobenzene	0.18 ug/kg	0.90	None	All ND

Trip, Field, Equipment Blank - Field QC results are summarized below.

Blank ID	Compound	Conc. ug/L	Action Level ug/kg	Qualifier	Affected Samples
MR08-EB01-010809-SS	Chlorobenzene	0.23	1.5	None	All ND
MR08-TB01010809	None - ND	-	-	-	-
MR08-FB01011009	Toluene	20	100	U	7, 9, 11, 13, 19, 21, 25, 27, 28

Field Duplicates - Field duplicate results are summarized below.

Compound	MR08-SS229-09A ug/kg	MR08-SS229D-09A ug/kg	RPD	Qualifier
Acetone	17	22	26%	None
Benzene	0.59	0.95	47%	None
Carbon disulfide	1.5	1.9	24%	None
Ethylbenzene	2.1	1.4	40%	None
Methylcyclohexane	0.46	0.46	0%	None

Compound	MR08-IS229-6-7-09A ug/kg	MR08-IS229D-6-7-09A ug/kg	RPD	Qualifier
None	ND	ND	-	-

Compound	MR08-SS209-09A ug/kg	MR08-SS209D-09A ug/kg	RPD	Qualifier
Acetone	69	130	61%	None
2-Butanone	9.0U	3.0	NC	None
Carbon disulfide	1.3	13 U	NC	None
Ethylbenzene	9.0 U	1.3	NC	None
4-Methyl-2-pentanone	0.72	13 U	NC	None
Xylene (total)	2.3	9.5	122%	None

Tentatively Identified Compounds (TICs) - TICs were not reported.

Compound Quantitation - EDS sample ID #1 was analyzed as a low level VOC. The laboratory reanalyzed this sample at a medium level dilution which should be used for reporting purposes.

FORM 1
VOLATILE ORGANICS ANALYSIS DATA SHEET

CLIENT SAMPLE NO. 1

MR08-SS281-09A

Lab Name: EMPIRICAL LABS Contract: CH2MHILL

Lab Code: NA Case No.: NA SAS No.: NA SDG No.: LEJEUNE044

Matrix: (soil/water) SOIL Lab Sample ID: 0901064-01

Sample wt/vol: 4.5 (g/mL) G Lab File ID: 0106401B

Level: (low/med) LOW Date Sampled: 01/08/09 08:10

% Moisture: not dec. 4 Date Analyzed: 01/16/09 12:18

GC Column: RTX-VRX ID: 0.25 (mm) Dilution Factor: 1.0

Soil Extract Volume:_____(uL) Soil Aliquot Volume: _____(uL)

CONCENTRATION UNITS: (ug/L or ug/Kg) UG/KG

CAS NO.	COMPOUND	MDL	RL	CONC	Q
67-64-1	Acetone	2.3	12	19	J CQ
71-43-2	Benzene	0.55	12	0.63	J
75-27-4	Bromodichloromethane	0.35	12		U
75-25-2	Bromoform	1.2	12		U
74-83-9	Bromomethane	0.84	12		U
78-93-3	2-Butanone	1.6	12		U
75-15-0	Carbon disulfide	1.5	12	1.9	J
56-23-5	Carbon tetrachloride	1.0	12		U
108-90-7	Chlorobenzene	0.40	12		U
75-00-3	Chloroethane	1.3	12		U
67-66-3	Chloroform	0.64	12		U
74-87-3	Chloromethane	0.60	12		~~U~~ UJ CCL
110-82-7	Cyclohexane	0.63	12		U
124-48-1	Dibromochloromethane	0.40	12		U
96-12-8	1,2-Dibromo-3-chloropropane	1.4	5.8		~~U~~ UJ IS
106-93-4	1,2-Dibromoethane	0.50	12		U
95-50-1	1,2-Dichlorobenzene	0.43	12		U UJ ISL
541-73-1	1,3-Dichlorobenzene	0.98	12		U
106-46-7	1,4-Dichlorobenzene	0.64	12		U
75-71-8	Dichlorodifluoromethane	1.3	12		~~U~~ UJ CCH
75-34-3	1,1-Dichloroethane	0.63	12		U
107-06-2	1,2-Dichloroethane	0.54	12		U
75-35-4	1,1-Dichloroethene	1.4	12		U
156-59-2	cis-1,2-Dichloroethene	1.4	12		U
156-60-5	trans-1,2-Dichloroethene	1.3	12		U
78-87-5	1,2-Dichloropropane	0.54	12		U
10061-01-5	cis-1,3-Dichloropropene	0.58	12		U
10061-02-6	trans-1,3-Dichloropropene	0.37	12		U
100-41-4	Ethylbenzene	0.87	12	1.3	J
591-78-6	2-Hexanone	2.7	12		~~U~~ UJ CCL
98-82-8	Isopropylbenzene	1.0	12		U
79-20-9	Methyl acetate	1.9	12		U
75-09-2	Methylene chloride	0.72	12	12U ~~2.7 JB~~	BL
108-87-2	Methyl cyclohexane	0.35	12	0.40	J
1634-04-4	Methyl tert-butyl ether	0.37	12		U
108-10-1	4-Methyl-2-pentanone	0.68	12		U
100-42-5	Styrene	0.41	12		U
79-34-5	1,1,2,2-Tetrachloroethane	0.50	12		~~U~~ UJ IS
127-18-4	Tetrachloroethene	1.1	12		U

FORM I VOA

lew
4/2/09

FORM 1
VOLATILE ORGANICS ANALYSIS DATA SHEET

CLIENT SAMPLE NO. 1

MR08-SS281-09A

Lab Name: EMPIRICAL LABS Contract: CH2MHILL

Lab Code: NA Case No.: NA SAS No.: NA SDG No.: LEJEUNE044

Matrix: (soil/water) SOIL Lab Sample ID: 0901064-01

Sample wt/vol: 4.5 (g/mL) G Lab File ID: 0106401B

Level: (low/med) LOW Date Sampled: 01/08/09 08:10

% Moisture: not dec. 4 Date Analyzed: 01/16/09 12:18

GC Column: RTX-VRX ID: 0.25 (mm) Dilution Factor: 1.0

Soil Extract Volume:_____(uL) Soil Aliquot Volume: _____(uL)

CONCENTRATION UNITS: (ug/L or ug/Kg) UG/KG

CAS NO.	COMPOUND	MDL	RL	CONC	Q
108-88-3	Toluene	1.0	12		U
120-82-1	1,2,4-Trichlorobenzene	0.21	12		~~U~~ UJ ISL
71-55-6	1,1,1-Trichloroethane	1.0	12		U
79-00-5	1,1,2-Trichloroethane	0.41	12		U
79-01-6	Trichloroethene	0.99	12		U
76-13-1	Trichlorotrifluoroethane	0.64	12		U
75-69-4	Trichlorofluoromethane	1.1	12		U
75-01-4	Vinyl chloride	1.3	12		U
1330-20-7	Xylene(total)	0.81	12		U

JEW
4/2/09

FORM 1
VOLATILE ORGANICS ANALYSIS DATA SHEET

CLIENT SAMPLE NO. 1DL

MR08-SS2
81-09ADL

Lab Name: EMPIRICAL LABS Contract: CH2MHILL

Lab Code: NA Case No.: NA SAS No.: NA SDG No.: LEJEUNE044

Matrix: (soil/water) SOIL Lab Sample ID: 0901064-01DL

Sample wt/vol: 4.0 (g/mL) G Lab File ID: 0106401D

Level: (low/med) MED Date Sampled: 01/08/09 08:10

% Moisture: not dec. 4 Date Analyzed: 01/17/09 23:25 use

GC Column: RTX-VRX ID: 0.25 (mm) Dilution Factor: 1.0 low level

Soil Extract Volume: 5000(uL) Soil Aliquot Volume: 100(uL)

CONCENTRATION UNITS: (ug/L or ug/Kg) UG/KG

CAS NO.	COMPOUND	MDL	RL	CONC	Q
67-64-1	Acetone	130	660	290	JD
71-43-2	Benzene	31	660		UD
75-27-4	Bromodichloromethane	20	660		UD
75-25-2	Bromoform	66	660		UD
74-83-9	Bromomethane	47	660		UD
78-93-3	2-Butanone	92	660		UD
75-15-0	Carbon disulfide	85	660		UD
56-23-5	Carbon tetrachloride	58	660		~~UD~~ UJ CA
108-90-7	Chlorobenzene	22	660		UD
75-00-3	Chloroethane	72	660		UD
67-66-3	Chloroform	36	660		UD
74-87-3	Chloromethane	34	660		UD
110-82-7	Cyclohexane	35	660		UD
124-48-1	Dibromochloromethane	22	660		UD
96-12-8	1,2-Dibromo-3-chloropropane	79	330		UD
106-93-4	1,2-Dibromoethane	28	660		UD
95-50-1	1,2-Dichlorobenzene	24	660		UD
541-73-1	1,3-Dichlorobenzene	55	660		UD
106-46-7	1,4-Dichlorobenzene	36	660		UD
75-71-8	Dichlorodifluoromethane	72	660		~~UD~~ UJ CA
75-34-3	1,1-Dichloroethane	35	660		UD
107-06-2	1,2-Dichloroethane	30	660		~~UD~~ UJ CA
75-35-4	1,1-Dichloroethene	79	660		UD
156-59-2	cis-1,2-Dichloroethene	79	660		UD
156-60-5	trans-1,2-Dichloroethene	72	660		UD
78-87-5	1,2-Dichloropropane	30	660		UD
10061-01-5	cis-1,3-Dichloropropene	33	660		UD
10061-02-6	trans-1,3-Dichloropropene	21	660		UD
100-41-4	Ethylbenzene	49	660		UD
591-78-6	2-Hexanone	150	660		UD
98-82-8	Isopropylbenzene	58	660		UD
79-20-9	Methyl acetate	100	660		UD
75-09-2	Methylene chloride	41	660	660 U	~~250 JBD~~ BL
108-87-2	Methyl cyclohexane	20	660		UD
1634-04-4	Methyl tert-butyl ether	21	660		UD
108-10-1	4-Methyl-2-pentanone	38	660		UD
100-42-5	Styrene	23	660		UD
79-34-5	1,1,2,2-Tetrachloroethane	28	660		UD
127-18-4	Tetrachloroethene	64	660		UD

FORM I VOA

LEW
4/2/09

FORM 1
VOLATILE ORGANICS ANALYSIS DATA SHEET

CLIENT SAMPLE NO. 1DL

MR08-SS2
81-09ADL

Lab Name: EMPIRICAL LABS Contract: CH2MHILL

Lab Code: NA Case No.: NA SAS No.: NA SDG No.: LEJEUNE044

Matrix: (soil/water) SOIL Lab Sample ID: 0901064-01DL

Sample wt/vol: 4.0 (g/mL) G Lab File ID: 0106401D

Level: (low/med) MED Date Sampled: 01/08/09 08:10

% Moisture: not dec. 4 Date Analyzed: 01/17/09 23:25

GC Column: RTX-VRX ID: 0.25 (mm) Dilution Factor: 1.0

Soil Extract Volume: 5000(uL) Soil Aliquot Volume: 100(uL)

use low level

CONCENTRATION UNITS: (ug/L or ug/Kg) UG/KG

CAS NO.	COMPOUND	MDL	RL	CONC	Q
108-88-3	Toluene	56	660		UD
120-82-1	1,2,4-Trichlorobenzene	12	660		UD
71-55-6	1,1,1-Trichloroethane	59	660		UD UJ CH
79-00-5	1,1,2-Trichloroethane	23	660		UD
79-01-6	Trichloroethene	56	660		UD
76-13-1	Trichlorotrifluoroethane	36	660		UD
75-69-4	Trichlorofluoromethane	62	660		UD UJ CH
75-01-4	Vinyl chloride	72	660		UD
1330-20-7	Xylene(total)	46	660		UD

R DL

FORM I VOA

lew
4/2/09

FORM 1
VOLATILE ORGANICS ANALYSIS DATA SHEET

CLIENT SAMPLE NO. 2

MR08-IS28
1-9-10-09A

Lab Name: EMPIRICAL LABS Contract: CH2MHILL

Lab Code: NA Case No.: NA SAS No.: NA SDG No.: LEJEUNE044

Matrix: (soil/water) SOIL Lab Sample ID: 0901064-02

Sample wt/vol: 4.5 (g/mL) G Lab File ID: 0106402A

Level: (low/med) LOW Date Sampled: 01/08/09 08:35

% Moisture: not dec. 9 Date Analyzed: 01/17/09 07:00

GC Column: RTX-VRX ID: 0.25 (mm) Dilution Factor: 1.0

Soil Extract Volume:_____(uL) Soil Aliquot Volume: _____(uL)

CONCENTRATION UNITS: (ug/L or ug/Kg) UG/KG

CAS NO.	COMPOUND	MDL	RL	CONC	Q
67-64-1	Acetone	2.4	12		U
71-43-2	Benzene	0.57	12		U
75-27-4	Bromodichloromethane	0.36	12		~~U~~ UJ CCH
75-25-2	Bromoform	1.2	12		U
74-83-9	Bromomethane	0.87	12		U
78-93-3	2-Butanone	1.7	12		U
75-15-0	Carbon disulfide	1.6	12		U
56-23-5	Carbon tetrachloride	1.1	12		~~U~~ UJ CCH
108-90-7	Chlorobenzene	0.41	12		U
75-00-3	Chloroethane	1.3	12		U
67-66-3	Chloroform	0.67	12		U
74-87-3	Chloromethane	0.63	12		U
110-82-7	Cyclohexane	0.65	12		U
124-48-1	Dibromochloromethane	0.41	12		U
96-12-8	1,2-Dibromo-3-chloropropane	1.4	6.0		U
106-93-4	1,2-Dibromoethane	0.52	12		U
95-50-1	1,2-Dichlorobenzene	0.45	12		U
541-73-1	1,3-Dichlorobenzene	1.0	12		U
106-46-7	1,4-Dichlorobenzene	0.67	12		U
75-71-8	Dichlorodifluoromethane	1.3	12		~~U~~ UJ CCH
75-34-3	1,1-Dichloroethane	0.65	12		U
107-06-2	1,2-Dichloroethane	0.56	12		~~U~~ UJ CCH
75-35-4	1,1-Dichloroethene	1.4	12		U
156-59-2	cis-1,2-Dichloroethene	1.4	12		U
156-60-5	trans-1,2-Dichloroethene	1.3	12		U
78-87-5	1,2-Dichloropropane	0.56	12		U
10061-01-5	cis-1,3-Dichloropropene	0.60	12		U
10061-02-6	trans-1,3-Dichloropropene	0.39	12		U
100-41-4	Ethylbenzene	0.91	12		U
591-78-6	2-Hexanone	2.8	12		U
98-82-8	Isopropylbenzene	1.1	12		U
79-20-9	Methyl acetate	1.9	12		U
75-09-2	Methylene chloride	0.75	12	124	~~10 JB~~ BL
108-87-2	Methyl cyclohexane	0.36	12		U
1634-04-4	Methyl tert-butyl ether	0.39	12		~~U~~ UJ CCH
108-10-1	4-Methyl-2-pentanone	0.70	12		U
100-42-5	Styrene	0.42	12		U
79-34-5	1,1,2,2-Tetrachloroethane	0.52	12		U
127-18-4	Tetrachloroethene	1.2	12		U

fcw
4/2/09

FORM 1
VOLATILE ORGANICS ANALYSIS DATA SHEET

CLIENT SAMPLE NO. 2

MR08-IS28
1-9-10-09A

Lab Name: EMPIRICAL LABS Contract: CH2MHILL

Lab Code: NA Case No.: NA SAS No.: NA SDG No.: LEJEUNE044

Matrix: (soil/water) SOIL Lab Sample ID: 0901064-02

Sample wt/vol: 4.5 (g/mL) G Lab File ID: 0106402A

Level: (low/med) LOW Date Sampled: 01/08/09 08:35

% Moisture: not dec. 9 Date Analyzed: 01/17/09 07:00

GC Column: RTX-VRX ID: 0.25 (mm) Dilution Factor: 1.0

Soil Extract Volume:_____(uL) Soil Aliquot Volume: _____(uL)

CONCENTRATION UNITS: (ug/L or ug/Kg) UG/KG

CAS NO.	COMPOUND	MDL	RL	CONC	Q
108-88-3------	Toluene	1.0	12		U
120-82-1------	1,2,4-Trichlorobenzene	0.22	12		U
71-55-6-------	1,1,1-Trichloroethane	1.1	12		~~U~~ UJ CH
79-00-5-------	1,1,2-Trichloroethane	0.42	12		U
79-01-6-------	Trichloroethene	1.0	12		U
76-13-1-------	Trichlorotrifluoroethane	0.67	12		U
75-69-4-------	Trichlorofluoromethane	1.2	12	1.4	~~J~~ J CH
75-01-4-------	Vinyl chloride	1.3	12		U
1330-20-7-----	Xylene(total)	0.85	12		U

FORM I VOA

MW
4/12/09

FORM 1
VOLATILE ORGANICS ANALYSIS DATA SHEET

CLIENT SAMPLE NO. 3

MR08-SS282-09A

Lab Name: EMPIRICAL LABS Contract: CH2MHILL

Lab Code: NA Case No.: NA SAS No.: NA SDG No.: LEJEUNE044

Matrix: (soil/water) SOIL Lab Sample ID: 0901064-03

Sample wt/vol: 4.5 (g/mL) G Lab File ID: 0106403B

Level: (low/med) LOW Date Sampled: 01/08/09 08:50

% Moisture: not dec. 4 Date Analyzed: 01/16/09 12:57

GC Column: RTX-VRX ID: 0.25 (mm) Dilution Factor: 1.0

Soil Extract Volume:_____(uL) Soil Aliquot Volume: _____(uL)

CONCENTRATION UNITS: (ug/L or ug/Kg) UG/KG

CAS NO.	COMPOUND	MDL	RL	CONC	Q
67-64-1	Acetone	2.3	12	6.4	~~J~~ J CCH
71-43-2	Benzene	0.55	12		U
75-27-4	Bromodichloromethane	0.35	12		U
75-25-2	Bromoform	1.2	12		U
74-83-9	Bromomethane	0.84	12		U
78-93-3	2-Butanone	1.6	12		U
75-15-0	Carbon disulfide	1.5	12		U
56-23-5	Carbon tetrachloride	1.0	12		U
108-90-7	Chlorobenzene	0.40	12		U
75-00-3	Chloroethane	1.3	12		U
67-66-3	Chloroform	0.64	12		U
74-87-3	Chloromethane	0.61	12		~~J~~ UJ CCH
110-82-7	Cyclohexane	0.63	12		U
124-48-1	Dibromochloromethane	0.40	12		U
96-12-8	1,2-Dibromo-3-chloropropane	1.4	5.8		U
106-93-4	1,2-Dibromoethane	0.50	12		U
95-50-1	1,2-Dichlorobenzene	0.43	12		U
541-73-1	1,3-Dichlorobenzene	0.98	12		U
106-46-7	1,4-Dichlorobenzene	0.64	12		U
75-71-8	Dichlorodifluoromethane	1.3	12		~~J~~ UJ CCH
75-34-3	1,1-Dichloroethane	0.63	12		U
107-06-2	1,2-Dichloroethane	0.54	12		U
75-35-4	1,1-Dichloroethene	1.4	12		U
156-59-2	cis-1,2-Dichloroethene	1.4	12		U
156-60-5	trans-1,2-Dichloroethene	1.3	12		U
78-87-5	1,2-Dichloropropane	0.54	12		U
10061-01-5	cis-1,3-Dichloropropene	0.58	12		U
10061-02-6	trans-1,3-Dichloropropene	0.37	12		U
100-41-4	Ethylbenzene	0.88	12		U
591-78-6	2-Hexanone	2.7	12		~~J~~ UJ CCH
98-82-8	Isopropylbenzene	1.0	12		U
79-20-9	Methyl acetate	1.9	12		U
75-09-2	Methylene chloride	0.72	12	12U ~~3.7~~	~~JB~~ BU
108-87-2	Methyl cyclohexane	0.35	12		U
1634-04-4	Methyl tert-butyl ether	0.37	12		U
108-10-1	4-Methyl-2-pentanone	0.68	12		U
100-42-5	Styrene	0.41	12		U
79-34-5	1,1,2,2-Tetrachloroethane	0.50	12		U
127-18-4	Tetrachloroethene	1.1	12		U

FORM I VOA

MW 4/2/09

FORM 1
VOLATILE ORGANICS ANALYSIS DATA SHEET

CLIENT SAMPLE NO. 3

MR08-SS282-09A

Lab Name: EMPIRICAL LABS Contract: CH2MHILL

Lab Code: NA Case No.: NA SAS No.: NA SDG No.: LEJEUNE044

Matrix: (soil/water) SOIL Lab Sample ID: 0901064-03

Sample wt/vol: 4.5 (g/mL) G Lab File ID: 0106403B

Level: (low/med) LOW Date Sampled: 01/08/09 08:50

% Moisture: not dec. 4 Date Analyzed: 01/16/09 12:57

GC Column: RTX-VRX ID: 0.25 (mm) Dilution Factor: 1.0

Soil Extract Volume:_____(uL) Soil Aliquot Volume: _____(uL)

CONCENTRATION UNITS: (ug/L or ug/Kg) UG/KG

CAS NO.	COMPOUND	MDL	RL	CONC	Q
108-88-3	Toluene	1.0	12		U
120-82-1	1,2,4-Trichlorobenzene	0.21	12		U
71-55-6	1,1,1-Trichloroethane	1.0	12		U
79-00-5	1,1,2-Trichloroethane	0.41	12		U
79-01-6	Trichloroethene	0.99	12		U
76-13-1	Trichlorotrifluoroethane	0.64	12		U
75-69-4	Trichlorofluoromethane	1.1	12		U
75-01-4	Vinyl chloride	1.3	12		U
1330-20-7	Xylene(total)	0.82	12		U

JW 4/2/09

FORM 1
VOLATILE ORGANICS ANALYSIS DATA SHEET

CLIENT SAMPLE NO. 4

MR08-IS28
2-9-10-09A

Lab Name: EMPIRICAL LABS Contract: CH2MHILL

Lab Code: NA Case No.: NA SAS No.: NA SDG No.: LEJEUNE044

Matrix: (soil/water) SOIL Lab Sample ID: 0901064-04

Sample wt/vol: 4.8 (g/mL) G Lab File ID: 0106404A

Level: (low/med) LOW Date Sampled: 01/08/09 09:05

% Moisture: not dec. 17 Date Analyzed: 01/17/09 20:08

GC Column: RTX-VRX ID: 0.25 (mm) Dilution Factor: 1.0

Soil Extract Volume:_____(uL) Soil Aliquot Volume: _____(uL)

CONCENTRATION UNITS: (ug/L or ug/Kg) UG/KG

CAS NO.	COMPOUND	MDL	RL	CONC	Q
67-64-1	Acetone	2.5	12		U
71-43-2	Benzene	0.59	12		U
75-27-4	Bromodichloromethane	0.38	12		U
75-25-2	Bromoform	1.2	12		U
74-83-9	Bromomethane	0.90	12		U
78-93-3	2-Butanone	1.8	12		U
75-15-0	Carbon disulfide	1.6	12		U
56-23-5	Carbon tetrachloride	1.1	12		~~U~~ UJ CCH
108-90-7	Chlorobenzene	0.42	12		U
75-00-3	Chloroethane	1.4	12		U
67-66-3	Chloroform	0.69	12		U
74-87-3	Chloromethane	0.65	12		U
110-82-7	Cyclohexane	0.68	12		U
124-48-1	Dibromochloromethane	0.42	12		U
96-12-8	1,2-Dibromo-3-chloropropane	1.5	6.2		U
106-93-4	1,2-Dibromoethane	0.54	12		U
95-50-1	1,2-Dichlorobenzene	0.46	12		U
541-73-1	1,3-Dichlorobenzene	1.0	12		U
106-46-7	1,4-Dichlorobenzene	0.69	12		U
75-71-8	Dichlorodifluoromethane	1.4	12		~~U~~ UJ CCH
75-34-3	1,1-Dichloroethane	0.68	12		U
107-06-2	1,2-Dichloroethane	0.58	12		~~U~~ UJ CCH
75-35-4	1,1-Dichloroethene	1.5	12		U
156-59-2	cis-1,2-Dichloroethene	1.5	12		U
156-60-5	trans-1,2-Dichloroethene	1.4	12		U
78-87-5	1,2-Dichloropropane	0.58	12		U
10061-01-5	cis-1,3-Dichloropropene	0.62	12		U
10061-02-6	trans-1,3-Dichloropropene	0.40	12		U
100-41-4	Ethylbenzene	0.94	12		U
591-78-6	2-Hexanone	2.9	12		U
98-82-8	Isopropylbenzene	1.1	12		U
79-20-9	Methyl acetate	2.0	12		U
75-09-2	Methylene chloride	0.78	12	12u	~~3.8 JB~~ BL
108-87-2	Methyl cyclohexane	0.38	12		U
1634-04-4	Methyl tert-butyl ether	0.40	12		U
108-10-1	4-Methyl-2-pentanone	0.72	12		U
100-42-5	Styrene	0.44	12		U
79-34-5	1,1,2,2-Tetrachloroethane	0.54	12		U
127-18-4	Tetrachloroethene	1.2	12		U

FORM I VOA

JW
4/2/09

FORM 1
VOLATILE ORGANICS ANALYSIS DATA SHEET

CLIENT SAMPLE NO. 4

MR08-IS28
2-9-10-09A

Lab Name: EMPIRICAL LABS Contract: CH2MHILL

Lab Code: NA Case No.: NA SAS No.: NA SDG No.: LEJEUNE044

Matrix: (soil/water) SOIL Lab Sample ID: 0901064-04

Sample wt/vol: 4.8 (g/mL) G Lab File ID: 0106404A

Level: (low/med) LOW Date Sampled: 01/08/09 09:05

% Moisture: not dec. 17 Date Analyzed: 01/17/09 20:08

GC Column: RTX-VRX ID: 0.25 (mm) Dilution Factor: 1.0

Soil Extract Volume:_____(uL) Soil Aliquot Volume: _____(uL)

CONCENTRATION UNITS: (ug/L or ug/Kg) UG/KG

CAS NO.	COMPOUND	MDL	RL	CONC	Q
108-88-3	Toluene	1.1	12		U
120-82-1	1,2,4-Trichlorobenzene	0.22	12		U
71-55-6	1,1,1-Trichloroethane	1.1	12		~~U~~ UJ CCH
79-00-5	1,1,2-Trichloroethane	0.44	12		U
79-01-6	Trichloroethene	1.1	12		U
76-13-1	Trichlorotrifluoroethane	0.69	12		U
75-69-4	Trichlorofluoromethane	1.2	12		~~U~~ UJ CCH
75-01-4	Vinyl chloride	1.4	12		U
1330-20-7	Xylene(total)	0.88	12		U

kw
4/2/09

FORM 1
VOLATILE ORGANICS ANALYSIS DATA SHEET

CLIENT SAMPLE NO. 5

MR08-SS297-09A

Lab Name: EMPIRICAL LABS Contract: CH2MHILL

Lab Code: NA Case No.: NA SAS No.: NA SDG No.: LEJEUNE044

Matrix: (soil/water) SOIL Lab Sample ID: 0901064-05

Sample wt/vol: 4.7 (g/mL) G Lab File ID: 0106405A

Level: (low/med) LOW Date Sampled: 01/08/09 09:25

% Moisture: not dec. 10 Date Analyzed: 01/17/09 20:48

GC Column: RTX-VRX ID: 0.25 (mm) Dilution Factor: 1.0

Soil Extract Volume:_____(uL) Soil Aliquot Volume: _____(uL)

CONCENTRATION UNITS: (ug/L or ug/Kg) UG/KG

CAS NO.	COMPOUND	MDL	RL	CONC	Q
67-64-1	Acetone	2.4	12	20	
71-43-2	Benzene	0.55	12		U
75-27-4	Bromodichloromethane	0.35	12		U
75-25-2	Bromoform	1.2	12		U
74-83-9	Bromomethane	0.85	12		U
78-93-3	2-Butanone	1.6	12		U
75-15-0	Carbon disulfide	1.5	12		U
56-23-5	Carbon tetrachloride	1.0	12		~~U~~ UJ CCH
108-90-7	Chlorobenzene	0.40	12		U
75-00-3	Chloroethane	1.3	12		U
67-66-3	Chloroform	0.65	12		U
74-87-3	Chloromethane	0.61	12		U
110-82-7	Cyclohexane	0.64	12		U
124-48-1	Dibromochloromethane	0.40	12		U
96-12-8	1,2-Dibromo-3-chloropropane	1.4	5.9		U
106-93-4	1,2-Dibromoethane	0.51	12		U
95-50-1	1,2-Dichlorobenzene	0.44	12		U
541-73-1	1,3-Dichlorobenzene	0.99	12		U
106-46-7	1,4-Dichlorobenzene	0.65	12		U
75-71-8	Dichlorodifluoromethane	1.3	12		~~U~~ UJ CCH
75-34-3	1,1-Dichloroethane	0.64	12		U
107-06-2	1,2-Dichloroethane	0.54	12		~~U~~ UJ CCH
75-35-4	1,1-Dichloroethene	1.4	12		U
156-59-2	cis-1,2-Dichloroethene	1.4	12		U
156-60-5	trans-1,2-Dichloroethene	1.3	12		U
78-87-5	1,2-Dichloropropane	0.54	12		U
10061-01-5	cis-1,3-Dichloropropene	0.59	12		U
10061-02-6	trans-1,3-Dichloropropene	0.38	12		U
100-41-4	Ethylbenzene	0.88	12		U
591-78-6	2-Hexanone	2.7	12		U
98-82-8	Isopropylbenzene	1.0	12		U
79-20-9	Methyl acetate	1.9	12		U
75-09-2	Methylene chloride	0.73	12	12U	~~5.8~~ ~~JB~~ B
108-87-2	Methyl cyclohexane	0.35	12		U
1634-04-4	Methyl tert-butyl ether	0.38	12		U
108-10-1	4-Methyl-2-pentanone	0.68	12		U
100-42-5	Styrene	0.41	12		U
79-34-5	1,1,2,2-Tetrachloroethane	0.51	12		U
127-18-4	Tetrachloroethene	1.1	12		U

DW 4/21/09

FORM 1
VOLATILE ORGANICS ANALYSIS DATA SHEET

CLIENT SAMPLE NO. 5

MR08-SS297-09A

Lab Name: EMPIRICAL LABS Contract: CH2MHILL

Lab Code: NA Case No.: NA SAS No.: NA SDG No.: LEJEUNE044

Matrix: (soil/water) SOIL Lab Sample ID: 0901064-05

Sample wt/vol: 4.7 (g/mL) G Lab File ID: 0106405A

Level: (low/med) LOW Date Sampled: 01/08/09 09:25

% Moisture: not dec. 10 Date Analyzed: 01/17/09 20:48

GC Column: RTX-VRX ID: 0.25 (mm) Dilution Factor: 1.0

Soil Extract Volume:_____(uL) Soil Aliquot Volume: _____(uL)

CONCENTRATION UNITS: (ug/L or ug/Kg) UG/KG

CAS NO.	COMPOUND	MDL	RL	CONC	Q
108-88-3	Toluene	1.0	12		U
120-82-1	1,2,4-Trichlorobenzene	0.21	12		U
71-55-6	1,1,1-Trichloroethane	1.1	12		~~U~~ UJ CH
79-00-5	1,1,2-Trichloroethane	0.41	12		U
79-01-6	Trichloroethene	1.0	12		U
76-13-1	Trichlorotrifluoroethane	0.65	12		U
75-69-4	Trichlorofluoromethane	1.1	12		~~U~~ UJ CH
75-01-4	Vinyl chloride	1.3	12		U
1330-20-7	Xylene(total)	0.82	12		U

AW
4/2/09

FORM 1
VOLATILE ORGANICS ANALYSIS DATA SHEET

CLIENT SAMPLE NO. 6

MR08-IS29
7-6-7-09A

Lab Name: EMPIRICAL LABS Contract: CH2MHILL

Lab Code: NA Case No.: NA SAS No.: NA SDG No.: LEJEUNE044

Matrix: (soil/water) SOIL Lab Sample ID: 0901064-06

Sample wt/vol: 5.5 (g/mL) G Lab File ID: 0106406A

Level: (low/med) LOW Date Sampled: 01/08/09 09:40

% Moisture: not dec. 8 Date Analyzed: 01/17/09 21:27

GC Column: RTX-VRX ID: 0.25 (mm) Dilution Factor: 1.0

Soil Extract Volume:_____(uL) Soil Aliquot Volume: _____(uL)

CONCENTRATION UNITS: (ug/L or ug/Kg) UG/KG

CAS NO.	COMPOUND	MDL	RL	CONC	Q
67-64-1	Acetone	2.0	9.9	11	
71-43-2	Benzene	0.46	9.9		U
75-27-4	Bromodichloromethane	0.30	9.9		U
75-25-2	Bromoform	0.99	9.9		U
74-83-9	Bromomethane	0.71	9.9		U
78-93-3	2-Butanone	1.4	9.9		U
75-15-0	Carbon disulfide	1.3	9.9		U
56-23-5	Carbon tetrachloride	0.87	9.9		~~U~~ UJ CU
108-90-7	Chlorobenzene	0.34	9.9		U
75-00-3	Chloroethane	1.1	9.9		U
67-66-3	Chloroform	0.54	9.9		U
74-87-3	Chloromethane	0.52	9.9		U
110-82-7	Cyclohexane	0.53	9.9		U
124-48-1	Dibromochloromethane	0.34	9.9		U
96-12-8	1,2-Dibromo-3-chloropropane	1.2	5.0		U
106-93-4	1,2-Dibromoethane	0.42	9.9		U
95-50-1	1,2-Dichlorobenzene	0.37	9.9		U
541-73-1	1,3-Dichlorobenzene	0.83	9.9		U
106-46-7	1,4-Dichlorobenzene	0.54	9.9		U
75-71-8	Dichlorodifluoromethane	1.1	9.9		~~U~~ UJ CU
75-34-3	1,1-Dichloroethane	0.53	9.9		U
107-06-2	1,2-Dichloroethane	0.46	9.9		~~U~~ UJ CU
75-35-4	1,1-Dichloroethene	1.2	9.9		U
156-59-2	cis-1,2-Dichloroethene	1.2	9.9		U
156-60-5	trans-1,2-Dichloroethene	1.1	9.9		U
78-87-5	1,2-Dichloropropane	0.46	9.9		U
10061-01-5	cis-1,3-Dichloropropene	0.50	9.9		U
10061-02-6	trans-1,3-Dichloropropene	0.32	9.9		U
100-41-4	Ethylbenzene	0.74	9.9		U
591-78-6	2-Hexanone	2.3	9.9		U
98-82-8	Isopropylbenzene	0.87	9.9		U
79-20-9	Methyl acetate	1.6	9.9		U
75-09-2	Methylene chloride	0.61	9.9	9.94 ~~5.6 JB~~	B1
108-87-2	Methyl cyclohexane	0.30	9.9		U
1634-04-4	Methyl tert-butyl ether	0.32	9.9		U
108-10-1	4-Methyl-2-pentanone	0.57	9.9		U
100-42-5	Styrene	0.35	9.9		U
79-34-5	1,1,2,2-Tetrachloroethane	0.42	9.9		U
127-18-4	Tetrachloroethene	0.96	9.9		U

LW
4/2/09

FORM 1
VOLATILE ORGANICS ANALYSIS DATA SHEET

CLIENT SAMPLE NO. 6

MR08-IS29
7-6-7-09A

Lab Name: EMPIRICAL LABS Contract: CH2MHILL

Lab Code: NA Case No.: NA SAS No.: NA SDG No.: LEJEUNE044

Matrix: (soil/water) SOIL Lab Sample ID: 0901064-06

Sample wt/vol: 5.5 (g/mL) G Lab File ID: 0106406A

Level: (low/med) LOW Date Sampled: 01/08/09 09:40

% Moisture: not dec. 8 Date Analyzed: 01/17/09 21:27

GC Column: RTX-VRX ID: 0.25 (mm) Dilution Factor: 1.0

Soil Extract Volume:_____(uL) Soil Aliquot Volume: _____(uL)

CONCENTRATION UNITS: (ug/L or ug/Kg) UG/KG

CAS NO.	COMPOUND	MDL	RL	CONC	Q
108-88-3------	Toluene	0.85	9.9		U
120-82-1------	1,2,4-Trichlorobenzene	0.18	9.9		U
71-55-6-------	1,1,1-Trichloroethane	0.89	9.9		~~U~~ UJ CH
79-00-5-------	1,1,2-Trichloroethane	0.35	9.9		U
79-01-6-------	Trichloroethene	0.84	9.9		U
76-13-1-------	Trichlorotrifluoroethane	0.54	9.9		U
75-69-4-------	Trichlorofluoromethane	0.94	9.9		~~U~~ UJ CH
75-01-4-------	Vinyl chloride	1.1	9.9		U
1330-20-7-----	Xylene(total)	0.69	9.9		U

FORM I VOA

lcw
4/2/09

FORM 1
VOLATILE ORGANICS ANALYSIS DATA SHEET

CLIENT SAMPLE NO. 7

MR08-SS298-09A

Lab Name: EMPIRICAL LABS Contract: CH2MHILL

Lab Code: NA Case No.: NA SAS No.: NA SDG No.: LEJEUNE044

Matrix: (soil/water) SOIL Lab Sample ID: 0901064-07

Sample wt/vol: 4.9 (g/mL) G Lab File ID: 0106407A

Level: (low/med) LOW Date Sampled: 01/08/09 09:55

% Moisture: not dec. 9 Date Analyzed: 01/17/09 22:06

GC Column: RTX-VRX ID: 0.25 (mm) Dilution Factor: 1.0

Soil Extract Volume:_____(uL) Soil Aliquot Volume: _____(uL)

CONCENTRATION UNITS: (ug/L or ug/Kg) UG/KG

CAS NO.	COMPOUND	MDL	RL	CONC	Q
67-64-1	Acetone	2.2	11	14	
71-43-2	Benzene	0.53	11		U
75-27-4	Bromodichloromethane	0.34	11		U
75-25-2	Bromoform	1.1	11		U
74-83-9	Bromomethane	0.81	11		U
78-93-3	2-Butanone	1.6	11		U
75-15-0	Carbon disulfide	1.5	11		U
56-23-5	Carbon tetrachloride	0.99	11		~~U~~ UJ CCV
108-90-7	Chlorobenzene	0.38	11		U
75-00-3	Chloroethane	1.2	11		U
67-66-3	Chloroform	0.62	11		U
74-87-3	Chloromethane	0.59	11		U
110-82-7	Cyclohexane	0.61	11		U
124-48-1	Dibromochloromethane	0.38	11		U
96-12-8	1,2-Dibromo-3-chloropropane	1.4	5.6		U
106-93-4	1,2-Dibromoethane	0.48	11		U
95-50-1	1,2-Dichlorobenzene	0.42	11		U
541-73-1	1,3-Dichlorobenzene	0.95	11		U
106-46-7	1,4-Dichlorobenzene	0.62	11		U
75-71-8	Dichlorodifluoromethane	1.2	11		~~U~~ UJ CCV
75-34-3	1,1-Dichloroethane	0.61	11		U
107-06-2	1,2-Dichloroethane	0.52	11		~~U~~ UJ CCV
75-35-4	1,1-Dichloroethene	1.4	11		U
156-59-2	cis-1,2-Dichloroethene	1.4	11		U
156-60-5	trans-1,2-Dichloroethene	1.2	11		U
78-87-5	1,2-Dichloropropane	0.52	11		U
10061-01-5	cis-1,3-Dichloropropene	0.56	11		U
10061-02-6	trans-1,3-Dichloropropene	0.36	11		U
100-41-4	Ethylbenzene	0.85	11	2.6	J
591-78-6	2-Hexanone	2.6	11		U
98-82-8	Isopropylbenzene	0.99	11		U
79-20-9	Methyl acetate	1.8	11		U
75-09-2	Methylene chloride	0.70	11	11u ~~7.2~~ ~~JB~~	U
108-87-2	Methyl cyclohexane	0.34	11		U
1634-04-4	Methyl tert-butyl ether	0.36	11		U
108-10-1	4-Methyl-2-pentanone	0.66	11		U
100-42-5	Styrene	0.40	11		U
79-34-5	1,1,2,2-Tetrachloroethane	0.48	11		U
127-18-4	Tetrachloroethene	1.1	11		U

FORM I VOA

AW
4/2/09

FORM 1
VOLATILE ORGANICS ANALYSIS DATA SHEET

CLIENT SAMPLE NO. 7

MR08-SS298-09A

Lab Name: EMPIRICAL LABS Contract: CH2MHILL

Lab Code: NA Case No.: NA SAS No.: NA SDG No.: LEJEUNE044

Matrix: (soil/water) SOIL Lab Sample ID: 0901064-07

Sample wt/vol: 4.9 (g/mL) G Lab File ID: 0106407A

Level: (low/med) LOW Date Sampled: 01/08/09 09:55

% Moisture: not dec. 9 Date Analyzed: 01/17/09 22:06

GC Column: RTX-VRX ID: 0.25 (mm) Dilution Factor: 1.0

Soil Extract Volume:_____(uL) Soil Aliquot Volume: _____(uL)

CONCENTRATION UNITS: (ug/L or ug/Kg) UG/KG

CAS NO.	COMPOUND	MDL	RL	CONC	Q
108-88-3	Toluene	0.97	11	11u ~~1.0~~	~~J~~ U
120-82-1	1,2,4-Trichlorobenzene	0.20	11		U
71-55-6	1,1,1-Trichloroethane	1.0	11		~~U~~ UJ
79-00-5	1,1,2-Trichloroethane	0.40	11		U
79-01-6	Trichloroethene	0.96	11		U
76-13-1	Trichlorotrifluoroethane	0.62	11		U
75-69-4	Trichlorofluoromethane	1.1	11		~~U~~ UJ
75-01-4	Vinyl chloride	1.2	11		U
1330-20-7	Xylene(total)	0.79	11		U

FORM I VOA

LW 4/2/09

FORM 1
VOLATILE ORGANICS ANALYSIS DATA SHEET

CLIENT SAMPLE NO. 8

MR08-IS29
8-6-7-09A

Lab Name: EMPIRICAL LABS Contract: CH2MHILL

Lab Code: NA Case No.: NA SAS No.: NA SDG No.: LEJEUNE044

Matrix: (soil/water) SOIL Lab Sample ID: 0901064-08

Sample wt/vol: 3.9 (g/mL) G Lab File ID: 0106408B

Level: (low/med) LOW Date Sampled: 01/08/09 10:10

% Moisture: not dec. 8 Date Analyzed: 01/19/09 15:14

GC Column: RTX-VRX ID: 0.25 (mm) Dilution Factor: 1.0

Soil Extract Volume:_____(uL) Soil Aliquot Volume: _____(uL)

CONCENTRATION UNITS: (ug/L or ug/Kg) UG/KG

CAS NO.	COMPOUND	MDL	RL	CONC	Q
67-64-1	Acetone	2.8	14	9.2	J
71-43-2	Benzene	0.66	14		U
75-27-4	Bromodichloromethane	0.42	14		~~U~~ UJ CH
75-25-2	Bromoform	1.4	14		U
74-83-9	Bromomethane	1.0	14		~~U~~ UJ CH
78-93-3	2-Butanone	2.0	14		U
75-15-0	Carbon disulfide	1.8	14		U
56-23-5	Carbon tetrachloride	1.2	14		~~U~~ UJ CH
108-90-7	Chlorobenzene	0.48	14		U
75-00-3	Chloroethane	1.5	14		U
67-66-3	Chloroform	0.77	14		~~U~~ UJ CH
74-87-3	Chloromethane	0.73	14		~~U~~ UJ CH
110-82-7	Cyclohexane	0.76	14		U
124-48-1	Dibromochloromethane	0.48	14		U
96-12-8	1,2-Dibromo-3-chloropropane	1.7	7.0		U
106-93-4	1,2-Dibromoethane	0.60	14		U
95-50-1	1,2-Dichlorobenzene	0.52	14		U
541-73-1	1,3-Dichlorobenzene	1.2	14		U
106-46-7	1,4-Dichlorobenzene	0.77	14		U
75-71-8	Dichlorodifluoromethane	1.5	14		~~U~~ UJ CH
75-34-3	1,1-Dichloroethane	0.76	14		U
107-06-2	1,2-Dichloroethane	0.65	14		~~U~~ UJ CH
75-35-4	1,1-Dichloroethene	1.7	14		U
156-59-2	cis-1,2-Dichloroethene	1.7	14		U
156-60-5	trans-1,2-Dichloroethene	1.5	14		U
78-87-5	1,2-Dichloropropane	0.65	14		U
10061-01-5	cis-1,3-Dichloropropene	0.70	14		U
10061-02-6	trans-1,3-Dichloropropene	0.45	14		U
100-41-4	Ethylbenzene	1.0	14		U
591-78-6	2-Hexanone	3.2	14		U
98-82-8	Isopropylbenzene	1.2	14		U
79-20-9	Methyl acetate	2.2	14		U
75-09-2	Methylene chloride	0.87	14	14UJ	~~9.8 JB~~ CH BC
108-87-2	Methyl cyclohexane	0.42	14		U
1634-04-4	Methyl tert-butyl ether	0.45	14		~~U~~ UJ CH
108-10-1	4-Methyl-2-pentanone	0.82	14		U
100-42-5	Styrene	0.49	14		U
79-34-5	1,1,2,2-Tetrachloroethane	0.60	14		U
127-18-4	Tetrachloroethene	1.4	14		U

FORM I VOA

DW
4/2/09

FORM 1
VOLATILE ORGANICS ANALYSIS DATA SHEET

CLIENT SAMPLE NO. 8

MR08-IS29
8-6-7-09A

Lab Name: EMPIRICAL LABS Contract: CH2MHILL

Lab Code: NA Case No.: NA SAS No.: NA SDG No.: LEJEUNE044

Matrix: (soil/water) SOIL Lab Sample ID: 0901064-08

Sample wt/vol: 3.9 (g/mL) G Lab File ID: 0106408B

Level: (low/med) LOW Date Sampled: 01/08/09 10:10

% Moisture: not dec. 8 Date Analyzed: 01/19/09 15:14

GC Column: RTX-VRX ID: 0.25 (mm) Dilution Factor: 1.0

Soil Extract Volume:_____(uL) Soil Aliquot Volume: _____(uL)

CONCENTRATION UNITS: (ug/L or ug/Kg) UG/KG

CAS NO.	COMPOUND	MDL	RL	CONC	Q
108-88-3	Toluene	1.2	14		U
120-82-1	1,2,4-Trichlorobenzene	0.25	14		U
71-55-6	1,1,1-Trichloroethane	1.3	14		~~U~~ UJ CH
79-00-5	1,1,2-Trichloroethane	0.49	14		U
79-01-6	Trichloroethene	1.2	14		U
76-13-1	Trichlorotrifluoroethane	0.77	14		~~U~~ UJ CH
75-69-4	Trichlorofluoromethane	1.3	14		~~U~~ UJ CH
75-01-4	Vinyl chloride	1.5	14		~~U~~ UJ CH
1330-20-7	Xylene(total)	0.98	14		U

fw
4/2/09

FORM 1
VOLATILE ORGANICS ANALYSIS DATA SHEET

CLIENT SAMPLE NO. 9

MR08-SS305-09A

Lab Name: EMPIRICAL LABS Contract: CH2MHILL

Lab Code: NA Case No.: NA SAS No.: NA SDG No.: LEJEUNE044

Matrix: (soil/water) SOIL Lab Sample ID: 0901064-09

Sample wt/vol: 4.8 (g/mL) G Lab File ID: 0106409A

Level: (low/med) LOW Date Sampled: 01/08/09 10:45

% Moisture: not dec. 6 Date Analyzed: 01/18/09 05:46

GC Column: RTX-VRX ID: 0.25 (mm) Dilution Factor: 1.0

Soil Extract Volume:_____(uL) Soil Aliquot Volume: _____(uL)

CONCENTRATION UNITS: (ug/L or ug/Kg) UG/KG

CAS NO.	COMPOUND	MDL	RL	CONC	Q	
67-64-1	Acetone	2.2	11	14		
71-43-2	Benzene	0.52	11	0.83	J	
75-27-4	Bromodichloromethane	0.33	11		~~U~~ UJ	CCH
75-25-2	Bromoform	1.1	11		U	
74-83-9	Bromomethane	0.79	11		U	
78-93-3	2-Butanone	1.5	11		U	
75-15-0	Carbon disulfide	1.4	11		U	
56-23-5	Carbon tetrachloride	0.97	11		~~U~~ UJ	CCH
108-90-7	Chlorobenzene	0.38	11		UY	
75-00-3	Chloroethane	1.2	11		U	
67-66-3	Chloroform	0.61	11		U	
74-87-3	Chloromethane	0.57	11		~~U~~ UJ	CCH
110-82-7	Cyclohexane	0.60	11	0.66	J	
124-48-1	Dibromochloromethane	0.38	11		U	
96-12-8	1,2-Dibromo-3-chloropropane	1.3	5.5		U	
106-93-4	1,2-Dibromoethane	0.47	11		U	
95-50-1	1,2-Dichlorobenzene	0.41	11		U	
541-73-1	1,3-Dichlorobenzene	0.93	11		U	
106-46-7	1,4-Dichlorobenzene	0.61	11		U	
75-71-8	Dichlorodifluoromethane	1.2	11		~~U~~ UJ	CCH
75-34-3	1,1-Dichloroethane	0.60	11		U	
107-06-2	1,2-Dichloroethane	0.51	11		~~U~~ UJ	CCH
75-35-4	1,1-Dichloroethene	1.3	11		U	
156-59-2	cis-1,2-Dichloroethene	1.3	11		U	
156-60-5	trans-1,2-Dichloroethene	1.2	11		U	
78-87-5	1,2-Dichloropropane	0.51	11		U	
10061-01-5	cis-1,3-Dichloropropene	0.55	11		U	
10061-02-6	trans-1,3-Dichloropropene	0.35	11		U	
100-41-4	Ethylbenzene	0.83	11	2.5	J	
591-78-6	2-Hexanone	2.5	11		U	
98-82-8	Isopropylbenzene	0.97	11		U	
79-20-9	Methyl acetate	1.8	11		U	
75-09-2	Methylene chloride	0.68	11	11U	~~2.8 JB~~	BL
108-87-2	Methyl cyclohexane	0.33	11		U	
1634-04-4	Methyl tert-butyl ether	0.35	11		U	
108-10-1	4-Methyl-2-pentanone	0.64	11		U	
100-42-5	Styrene	0.39	11		U	
79-34-5	1,1,2,2-Tetrachloroethane	0.47	11		U	
127-18-4	Tetrachloroethene	1.1	11		U	

FORM I VOA

MW
4/2/09

9

FORM 1
VOLATILE ORGANICS ANALYSIS DATA SHEET

CLIENT SAMPLE NO.

MR08-SS305-09A

Lab Name: EMPIRICAL LABS Contract: CH2MHILL

Lab Code: NA Case No.: NA SAS No.: NA SDG No.: LEJEUNE044

Matrix: (soil/water) SOIL Lab Sample ID: 0901064-09

Sample wt/vol: 4.8 (g/mL) G Lab File ID: 0106409A

Level: (low/med) LOW Date Sampled: 01/08/09 10:45

% Moisture: not dec. 6 Date Analyzed: 01/18/09 05:46

GC Column: RTX-VRX ID: 0.25 (mm) Dilution Factor: 1.0

Soil Extract Volume:_____(uL) Soil Aliquot Volume: _____(uL)

CONCENTRATION UNITS: (ug/L or ug/Kg) UG/KG

CAS NO.	COMPOUND	MDL	RL	CONC	Q	
108-88-3	Toluene	0.95	11	11U ~~1.2~~	~~J~~	BL
120-82-1	1,2,4-Trichlorobenzene	0.20	11		U	
71-55-6	1,1,1-Trichloroethane	0.99	11		~~U~~ UJ	CCH
79-00-5	1,1,2-Trichloroethane	0.39	11		U	
79-01-6	Trichloroethene	0.94	11		U	
76-13-1	Trichlorotrifluoroethane	0.61	11		U	
75-69-4	Trichlorofluoromethane	1.0	11		~~U~~ UJ	CCH
75-01-4	Vinyl chloride	1.2	11		~~U~~ UJ	CCH
1330-20-7	Xylene(total)	0.77	11		U	

FORM I VOA

MW 4/2/09

FORM 1
VOLATILE ORGANICS ANALYSIS DATA SHEET

CLIENT SAMPLE NO. 10

MR08-IS30
5-6-7-09A

Lab Name: EMPIRICAL LABS Contract: CH2MHILL

Lab Code: NA Case No.: NA SAS No.: NA SDG No.: LEJEUNE044

Matrix: (soil/water) SOIL Lab Sample ID: 0901064-10

Sample wt/vol: 4.1 (g/mL) G Lab File ID: 0106410A

Level: (low/med) LOW Date Sampled: 01/08/09 11:00

% Moisture: not dec. 8 Date Analyzed: 01/18/09 06:25

GC Column: RTX-VRX ID: 0.25 (mm) Dilution Factor: 1.0

Soil Extract Volume:_____(uL) Soil Aliquot Volume: _____(uL)

CONCENTRATION UNITS: (ug/L or ug/Kg) UG/KG

CAS NO.	COMPOUND	MDL	RL	CONC	Q
67-64-1	Acetone	2.6	13	8.2	J
71-43-2	Benzene	0.62	13		U
75-27-4	Bromodichloromethane	0.40	13		~~U~~ UJ CH
75-25-2	Bromoform	1.3	13		U
74-83-9	Bromomethane	0.95	13		U
78-93-3	2-Butanone	1.8	13		U
75-15-0	Carbon disulfide	1.7	13		U
56-23-5	Carbon tetrachloride	1.2	13		~~U~~ UJ CH
108-90-7	Chlorobenzene	0.45	13		U
75-00-3	Chloroethane	1.4	13		U
67-66-3	Chloroform	0.72	13		U
74-87-3	Chloromethane	0.68	13		~~U~~ UJ CH
110-82-7	Cyclohexane	0.71	13		U
124-48-1	Dibromochloromethane	0.45	13		U
96-12-8	1,2-Dibromo-3-chloropropane	1.6	6.6		U
106-93-4	1,2-Dibromoethane	0.57	13		U
95-50-1	1,2-Dichlorobenzene	0.49	13		U
541-73-1	1,3-Dichlorobenzene	1.1	13		U
106-46-7	1,4-Dichlorobenzene	0.72	13		U
75-71-8	Dichlorodifluoromethane	1.4	13		~~U~~ UJ CH
75-34-3	1,1-Dichloroethane	0.71	13		U
107-06-2	1,2-Dichloroethane	0.60	13		~~U~~ UJ CH
75-35-4	1,1-Dichloroethene	1.6	13		U
156-59-2	cis-1,2-Dichloroethene	1.6	13		U
156-60-5	trans-1,2-Dichloroethene	1.4	13		U
78-87-5	1,2-Dichloropropane	0.60	13		U
10061-01-5	cis-1,3-Dichloropropene	0.66	13		U
10061-02-6	trans-1,3-Dichloropropene	0.42	13		U
100-41-4	Ethylbenzene	0.99	13		U
591-78-6	2-Hexanone	3.0	13		U
98-82-8	Isopropylbenzene	1.2	13		U
79-20-9	Methyl acetate	2.1	13		U
75-09-2	Methylene chloride	0.82	13	13u	~~4.6 JB~~ BL
108-87-2	Methyl cyclohexane	0.40	13		U
1634-04-4	Methyl tert-butyl ether	0.42	13		U
108-10-1	4-Methyl-2-pentanone	0.76	13		U
100-42-5	Styrene	0.46	13		U
79-34-5	1,1,2,2-Tetrachloroethane	0.57	13		U
127-18-4	Tetrachloroethene	1.3	13		~~U~~ J

FORM I VOA Revised MMW 2/5/09

fw
4/21/09

FORM 1
VOLATILE ORGANICS ANALYSIS DATA SHEET

CLIENT SAMPLE NO. 10

MR08-IS30
5-6-7-09A

Lab Name: EMPIRICAL LABS Contract: CH2MHILL

Lab Code: NA Case No.: NA SAS No.: NA SDG No.: LEJEUNE044

Matrix: (soil/water) SOIL Lab Sample ID: 0901064-10

Sample wt/vol: 4.1 (g/mL) G Lab File ID: 0106410A

Level: (low/med) LOW Date Sampled: 01/08/09 11:00

% Moisture: not dec. 8 Date Analyzed: 01/18/09 06:25

GC Column: RTX-VRX ID: 0.25 (mm) Dilution Factor: 1.0

Soil Extract Volume:_____(uL) Soil Aliquot Volume: _____(uL)

CONCENTRATION UNITS: (ug/L or ug/Kg) UG/KG

CAS NO.	COMPOUND	MDL	RL	CONC	Q
108-88-3	Toluene	1.1	13		U
120-82-1	1,2,4-Trichlorobenzene	0.24	13		U
71-55-6	1,1,1-Trichloroethane	1.2	13		~~U~~ UJ CH
79-00-5	1,1,2-Trichloroethane	0.46	13		U
79-01-6	Trichloroethene	1.1	13		U
76-13-1	Trichlorotrifluoroethane	0.72	13		U
75-69-4	Trichlorofluoromethane	1.2	13		~~U~~ UJ CH
75-01-4	Vinyl chloride	1.4	13		~~U~~ UJ CH
1330-20-7	Xylene(total)	0.92	13		U

FORM I VOA

MW
4/2/09

FORM 1
VOLATILE ORGANICS ANALYSIS DATA SHEET

CLIENT SAMPLE NO. 11

MR08-SS306-09A

Lab Name: EMPIRICAL LABS Contract: CH2MHILL

Lab Code: NA Case No.: NA SAS No.: NA SDG No.: LEJEUNE044

Matrix: (soil/water) SOIL Lab Sample ID: 0901064-11

Sample wt/vol: 2.5 (g/mL) G Lab File ID: 0106411A

Level: (low/med) LOW Date Sampled: 01/08/09 11:10

% Moisture: not dec. 6 Date Analyzed: 01/18/09 07:04

GC Column: RTX-VRX ID: 0.25 (mm) Dilution Factor: 1.0

Soil Extract Volume:_____(uL) Soil Aliquot Volume: _____(uL)

CONCENTRATION UNITS: (ug/L or ug/Kg) UG/KG

CAS NO.	COMPOUND	MDL	RL	CONC	Q	
67-64-1	Acetone	4.2	21	26		
71-43-2	Benzene	0.98	21	1.7	J	
75-27-4	Bromodichloromethane	0.63	21		~~U~~ UJ	CCA
75-25-2	Bromoform	2.1	21		U	
74-83-9	Bromomethane	1.5	21		U	
78-93-3	2-Butanone	2.9	21	3.9	J	
75-15-0	Carbon disulfide	2.7	21	3.0	~~J~~ J	CCA
56-23-5	Carbon tetrachloride	1.8	21		U	
108-90-7	Chlorobenzene	0.71	21		U	
75-00-3	Chloroethane	2.3	21		U	
67-66-3	Chloroform	1.2	21		U	
74-87-3	Chloromethane	1.1	21		~~U~~ UJ	CCA
110-82-7	Cyclohexane	1.1	21		U	
124-48-1	Dibromochloromethane	0.71	21		U	
96-12-8	1,2-Dibromo-3-chloropropane	2.5	10		U	
106-93-4	1,2-Dibromoethane	0.90	21		U	
95-50-1	1,2-Dichlorobenzene	0.78	21		U	
541-73-1	1,3-Dichlorobenzene	1.8	21		U	
106-46-7	1,4-Dichlorobenzene	1.2	21		U	
75-71-8	Dichlorodifluoromethane	2.3	21		~~U~~ UJ	CC
75-34-3	1,1-Dichloroethane	1.1	21		U	
107-06-2	1,2-Dichloroethane	0.96	21		~~U~~ UJ	CC
75-35-4	1,1-Dichloroethene	2.5	21		U	
156-59-2	cis-1,2-Dichloroethene	2.5	21		U	
156-60-5	trans-1,2-Dichloroethene	2.3	21		U	
78-87-5	1,2-Dichloropropane	0.96	21		U	
10061-01-5	cis-1,3-Dichloropropene	1.0	21		U	
10061-02-6	trans-1,3-Dichloropropene	0.67	21		U	
100-41-4	Ethylbenzene	1.6	21	6.0	J	
591-78-6	2-Hexanone	4.8	21		U	
98-82-8	Isopropylbenzene	1.8	21		U	
79-20-9	Methyl acetate	3.4	21		U	
75-09-2	Methylene chloride	1.3	21	21u	~~6.9~~ ~~JB~~	B
108-87-2	Methyl cyclohexane	0.63	21	1.0	J	
1634-04-4	Methyl tert-butyl ether	0.67	21		U	
108-10-1	4-Methyl-2-pentanone	1.2	21		U	
100-42-5	Styrene	0.73	21		U	
79-34-5	1,1,2,2-Tetrachloroethane	0.90	21		U	
127-18-4	Tetrachloroethene	2.0	21		U	

FORM I VOA

MW 4/2/09

FORM 1
VOLATILE ORGANICS ANALYSIS DATA SHEET

CLIENT SAMPLE NO. 11

MR08-SS306-09A

Lab Name: EMPIRICAL LABS Contract: CH2MHILL

Lab Code: NA Case No.: NA SAS No.: NA SDG No.: LEJEUNE044

Matrix: (soil/water) SOIL Lab Sample ID: 0901064-11

Sample wt/vol: 2.5 (g/mL) G Lab File ID: 0106411A

Level: (low/med) LOW Date Sampled: 01/08/09 11:10

% Moisture: not dec. 6 Date Analyzed: 01/18/09 07:04

GC Column: RTX-VRX ID: 0.25 (mm) Dilution Factor: 1.0

Soil Extract Volume:_____(uL) Soil Aliquot Volume: _____(uL)

CONCENTRATION UNITS: (ug/L or ug/Kg) UG/KG

CAS NO.	COMPOUND	MDL	RL	CONC	Q
108-88-3	Toluene	1.8	21	21u ~~3.2~~	~~J~~ U B1
120-82-1	1,2,4-Trichlorobenzene	0.38	21		U
71-55-6	1,1,1-Trichloroethane	1.9	21		~~U~~ UJ CCH
79-00-5	1,1,2-Trichloroethane	0.73	21		U
79-01-6	Trichloroethene	1.8	21		U
76-13-1	Trichlorotrifluoroethane	1.2	21		U
75-69-4	Trichlorofluoromethane	2.0	21		~~U~~ UJ CCH
75-01-4	Vinyl chloride	2.3	21		~~U~~ UJ CCH
1330-20-7	Xylene(total)	1.5	21		U

FORM I VOA

MW 4/2/09

FORM 1
VOLATILE ORGANICS ANALYSIS DATA SHEET

CLIENT SAMPLE NO. 12

MR08-IS30
6-5-6-09A

Lab Name: EMPIRICAL LABS Contract: CH2MHILL

Lab Code: NA Case No.: NA SAS No.: NA SDG No.: LEJEUNE044

Matrix: (soil/water) SOIL Lab Sample ID: 0901064-12

Sample wt/vol: 4.2 (g/mL) G Lab File ID: 0106412A

Level: (low/med) LOW Date Sampled: 01/08/09 11:30

% Moisture: not dec. 10 Date Analyzed: 01/18/09 07:44

GC Column: RTX-VRX ID: 0.25 (mm) Dilution Factor: 1.0

Soil Extract Volume:_____(uL) Soil Aliquot Volume: _____(uL)

CONCENTRATION UNITS: (ug/L or ug/Kg) UG/KG

CAS NO.	COMPOUND	MDL	RL	CONC	Q
67-64-1	Acetone	2.6	13		U
71-43-2	Benzene	0.62	13		U
75-27-4	Bromodichloromethane	0.40	13		~~U~~ UJ CCH
75-25-2	Bromoform	1.3	13		U
74-83-9	Bromomethane	0.95	13		U
78-93-3	2-Butanone	1.8	13		U
75-15-0	Carbon disulfide	1.7	13		U
56-23-5	Carbon tetrachloride	1.2	13		~~U~~ UJ CCH
108-90-7	Chlorobenzene	0.45	13		U
75-00-3	Chloroethane	1.4	13		U
67-66-3	Chloroform	0.73	13		U
74-87-3	Chloromethane	0.69	13		~~U~~ UJ CCH
110-82-7	Cyclohexane	0.71	13		U
124-48-1	Dibromochloromethane	0.45	13		U
96-12-8	1,2-Dibromo-3-chloropropane	1.6	6.6		U
106-93-4	1,2-Dibromoethane	0.57	13		U
95-50-1	1,2-Dichlorobenzene	0.49	13		U
541-73-1	1,3-Dichlorobenzene	1.1	13		U
106-46-7	1,4-Dichlorobenzene	0.73	13		U
75-71-8	Dichlorodifluoromethane	1.4	13		~~U~~ UJ CCH
75-34-3	1,1-Dichloroethane	0.71	13		U
107-06-2	1,2-Dichloroethane	0.61	13		~~U~~ UJ CCH
75-35-4	1,1-Dichloroethene	1.6	13		U
156-59-2	cis-1,2-Dichloroethene	1.6	13		U
156-60-5	trans-1,2-Dichloroethene	1.4	13		U
78-87-5	1,2-Dichloropropane	0.61	13		U
10061-01-5	cis-1,3-Dichloropropene	0.66	13		U
10061-02-6	trans-1,3-Dichloropropene	0.42	13		U
100-41-4	Ethylbenzene	0.99	13		U
591-78-6	2-Hexanone	3.0	13		U
98-82-8	Isopropylbenzene	1.2	13		U
79-20-9	Methyl acetate	2.1	13		U
75-09-2	Methylene chloride	0.82	13	13u	~~4.0 JB~~ B
108-87-2	Methyl cyclohexane	0.40	13		U
1634-04-4	Methyl tert-butyl ether	0.42	13		U
108-10-1	4-Methyl-2-pentanone	0.77	13		U
100-42-5	Styrene	0.46	13		U
79-34-5	1,1,2,2-Tetrachloroethane	0.57	13		U
127-18-4	Tetrachloroethene	1.3	13		U

FORM I VOA

LW 4/12/09

FORM 1
VOLATILE ORGANICS ANALYSIS DATA SHEET

CLIENT SAMPLE NO. 12

MR08-IS30
6-5-6-09A

Lab Name: EMPIRICAL LABS Contract: CH2MHILL

Lab Code: NA Case No.: NA SAS No.: NA SDG No.: LEJEUNE044

Matrix: (soil/water) SOIL Lab Sample ID: 0901064-12

Sample wt/vol: 4.2 (g/mL) G Lab File ID: 0106412A

Level: (low/med) LOW Date Sampled: 01/08/09 11:30

% Moisture: not dec. 10 Date Analyzed: 01/18/09 07:44

GC Column: RTX-VRX ID: 0.25 (mm) Dilution Factor: 1.0

Soil Extract Volume:_____(uL) Soil Aliquot Volume: _____(uL)

CONCENTRATION UNITS: (ug/L or ug/Kg) UG/KG

CAS NO.	COMPOUND	MDL	RL	CONC	Q
108-88-3	Toluene	1.1	13		U
120-82-1	1,2,4-Trichlorobenzene	0.24	13		U
71-55-6	1,1,1-Trichloroethane	1.2	13		~~U~~ UJ CCH
79-00-5	1,1,2-Trichloroethane	0.46	13		U
79-01-6	Trichloroethene	1.1	13		U
76-13-1	Trichlorotrifluoroethane	0.73	13		U
75-69-4	Trichlorofluoromethane	1.2	13		~~U~~ UJ CCH
75-01-4	Vinyl chloride	1.4	13		~~U~~ UJ CCH
1330-20-7	Xylene(total)	0.92	13		U

FORM I VOA

JWS
4/2/09

FORM 1
VOLATILE ORGANICS ANALYSIS DATA SHEET

CLIENT SAMPLE NO. 13

MR08-SS206-09A

Lab Name: EMPIRICAL LABS Contract: CH2MHILL

Lab Code: NA Case No.: NA SAS No.: NA SDG No.: LEJEUNE044

Matrix: (soil/water) SOIL Lab Sample ID: 0901064-13

Sample wt/vol: 5.3 (g/mL) G Lab File ID: 0106413A

Level: (low/med) LOW Date Sampled: 01/08/09 13:00

% Moisture: not dec. 12 Date Analyzed: 01/18/09 08:23

GC Column: RTX-VRX ID: 0.25 (mm) Dilution Factor: 1.0

Soil Extract Volume:_____(uL) Soil Aliquot Volume: _____(uL)

CONCENTRATION UNITS: (ug/L or ug/Kg) UG/KG

CAS NO.	COMPOUND	MDL	RL	CONC	Q
67-64-1	Acetone	2.1	10	230	
71-43-2	Benzene	0.50	10	0.54	J
75-27-4	Bromodichloromethane	0.32	10		~~U~~ UJ CCH
75-25-2	Bromoform	1.0	10		U
74-83-9	Bromomethane	0.76	10		U
78-93-3	2-Butanone	1.5	10	6.9	J
75-15-0	Carbon disulfide	1.4	10	4.4	J
56-23-5	Carbon tetrachloride	0.93	10		~~U~~ UJ CCH
108-90-7	Chlorobenzene	0.36	10		U
75-00-3	Chloroethane	1.2	10		U
67-66-3	Chloroform	0.58	10		U
74-87-3	Chloromethane	0.55	10		~~U~~ UJ CCH
110-82-7	Cyclohexane	0.57	10		U
124-48-1	Dibromochloromethane	0.36	10		U
96-12-8	1,2-Dibromo-3-chloropropane	1.3	5.3		~~U~~ UJ ISI
106-93-4	1,2-Dibromoethane	0.46	10		U
95-50-1	1,2-Dichlorobenzene	0.39	10		~~U~~ UJ ISI
541-73-1	1,3-Dichlorobenzene	0.89	10		~~U~~ ↓ ↓
106-46-7	1,4-Dichlorobenzene	0.58	10		~~U~~ ↓ ↓
75-71-8	Dichlorodifluoromethane	1.2	10		~~U~~ UJ CCH
75-34-3	1,1-Dichloroethane	0.57	10		U
107-06-2	1,2-Dichloroethane	0.49	10		~~U~~ UJ CCH
75-35-4	1,1-Dichloroethene	1.3	10		U
156-59-2	cis-1,2-Dichloroethene	1.3	10		U
156-60-5	trans-1,2-Dichloroethene	1.2	10		U
78-87-5	1,2-Dichloropropane	0.49	10		U
10061-01-5	cis-1,3-Dichloropropene	0.53	10		U
10061-02-6	trans-1,3-Dichloropropene	0.34	10		U
100-41-4	Ethylbenzene	0.79	10		U
591-78-6	2-Hexanone	2.4	10		U
98-82-8	Isopropylbenzene	0.93	10		U
79-20-9	Methyl acetate	1.7	10		U
75-09-2	Methylene chloride	0.66	10	104	~~5.6 JB~~ BL
108-87-2	Methyl cyclohexane	0.32	10		U
1634-04-4	Methyl tert-butyl ether	0.34	10		U
108-10-1	4-Methyl-2-pentanone	0.61	10		U
100-42-5	Styrene	0.37	10		U
79-34-5	1,1,2,2-Tetrachloroethane	0.46	10		~~U~~ UJ ISI
127-18-4	Tetrachloroethene	1.0	10		UJ

FORM I VOA

lcw
4/2/09

FORM 1
VOLATILE ORGANICS ANALYSIS DATA SHEET

CLIENT SAMPLE NO. 13

MR08-SS206-09A

Lab Name: EMPIRICAL LABS Contract: CH2MHILL

Lab Code: NA Case No.: NA SAS No.: NA SDG No.: LEJEUNE044

Matrix: (soil/water) SOIL Lab Sample ID: 0901064-13

Sample wt/vol: 5.3 (g/mL) G Lab File ID: 0106413A

Level: (low/med) LOW Date Sampled: 01/08/09 13:00

% Moisture: not dec. 12 Date Analyzed: 01/18/09 08:23

GC Column: RTX-VRX ID: 0.25 (mm) Dilution Factor: 1.0

Soil Extract Volume:_____(uL) Soil Aliquot Volume: _____(uL)

CONCENTRATION UNITS: (ug/L or ug/Kg) UG/KG

CAS NO.	COMPOUND	MDL	RL	CONC	Q
108-88-3	Toluene	0.91	10	10U ~~1.3~~	~~J~~ BL
120-82-1	1,2,4-Trichlorobenzene	0.19	10		~~U~~ UJ ISI
71-55-6	1,1,1-Trichloroethane	0.95	10		~~U~~ UJ CCY
79-00-5	1,1,2-Trichloroethane	0.37	10		U
79-01-6	Trichloroethene	0.90	10	2.1	J
76-13-1	Trichlorotrifluoroethane	0.58	10		U
75-69-4	Trichlorofluoromethane	1.0	10		~~U~~ UJ CCI
75-01-4	Vinyl chloride	1.2	10		~~U~~ UJ CCI
1330-20-7	Xylene(total)	0.74	10		U

FORM I VOA

JW 4/2/09

FORM 1
VOLATILE ORGANICS ANALYSIS DATA SHEET

CLIENT SAMPLE NO. 14

MR08-IS20
6-6-7-09A

Lab Name: EMPIRICAL LABS Contract: CH2MHILL

Lab Code: NA Case No.: NA SAS No.: NA SDG No.: LEJEUNE044

Matrix: (soil/water) SOIL Lab Sample ID: 0901064-14

Sample wt/vol: 3.8 (g/mL) G Lab File ID: 0106414A

Level: (low/med) LOW Date Sampled: 01/08/09 13:15

% Moisture: not dec. 8 Date Analyzed: 01/18/09 09:02

GC Column: RTX-VRX ID: 0.25 (mm) Dilution Factor: 1.0

Soil Extract Volume:_____(uL) Soil Aliquot Volume: _____(uL)

CONCENTRATION UNITS: (ug/L or ug/Kg) UG/KG

CAS NO.	COMPOUND	MDL	RL	CONC	Q
67-64-1	Acetone	2.8	14	10	J
71-43-2	Benzene	0.66	14		U
75-27-4	Bromodichloromethane	0.42	14		~~U~~ UJ CCH
75-25-2	Bromoform	1.4	14		U
74-83-9	Bromomethane	1.0	14		U
78-93-3	2-Butanone	2.0	14		U
75-15-0	Carbon disulfide	1.8	14		U
56-23-5	Carbon tetrachloride	1.2	14		~~U~~ UJ CCH
108-90-7	Chlorobenzene	0.48	14		U
75-00-3	Chloroethane	1.6	14		U
67-66-3	Chloroform	0.78	14		U
74-87-3	Chloromethane	0.74	14		~~U~~ UJ CCH
110-82-7	Cyclohexane	0.76	14		U
124-48-1	Dibromochloromethane	0.48	14		U
96-12-8	1,2-Dibromo-3-chloropropane	1.7	7.1		U
106-93-4	1,2-Dibromoethane	0.61	14		U
95-50-1	1,2-Dichlorobenzene	0.52	14		U
541-73-1	1,3-Dichlorobenzene	1.2	14		U
106-46-7	1,4-Dichlorobenzene	0.78	14		U
75-71-8	Dichlorodifluoromethane	1.6	14		~~U~~ UJ CCH
75-34-3	1,1-Dichloroethane	0.76	14		U
107-06-2	1,2-Dichloroethane	0.65	14		~~U~~ UJ CCH
75-35-4	1,1-Dichloroethene	1.7	14		U
156-59-2	cis-1,2-Dichloroethene	1.7	14		U
156-60-5	trans-1,2-Dichloroethene	1.6	14		U
78-87-5	1,2-Dichloropropane	0.65	14		U
10061-01-5	cis-1,3-Dichloropropene	0.71	14		U
10061-02-6	trans-1,3-Dichloropropene	0.45	14		U
100-41-4	Ethylbenzene	1.1	14		U
591-78-6	2-Hexanone	3.2	14		U
98-82-8	Isopropylbenzene	1.2	14		U
79-20-9	Methyl acetate	2.3	14		U
75-09-2	Methylene chloride	0.88	14	14u ~~5.1~~ ~~JB~~	B1
108-87-2	Methyl cyclohexane	0.42	14		U
1634-04-4	Methyl tert-butyl ether	0.45	14		U
108-10-1	4-Methyl-2-pentanone	0.82	14		U
100-42-5	Styrene	0.50	14		U
79-34-5	1,1,2,2-Tetrachloroethane	0.61	14		U
127-18-4	Tetrachloroethene	1.4	14		U

FORM I VOA

RW 4/2/09

FORM 1
VOLATILE ORGANICS ANALYSIS DATA SHEET

CLIENT SAMPLE NO. 14

MR08-IS20
6-6-7-09A

Lab Name: EMPIRICAL LABS Contract: CH2MHILL

Lab Code: NA Case No.: NA SAS No.: NA SDG No.: LEJEUNE044

Matrix: (soil/water) SOIL Lab Sample ID: 0901064-14

Sample wt/vol: 3.8 (g/mL) G Lab File ID: 0106414A

Level: (low/med) LOW Date Sampled: 01/08/09 13:15

% Moisture: not dec. 8 Date Analyzed: 01/18/09 09:02

GC Column: RTX-VRX ID: 0.25 (mm) Dilution Factor: 1.0

Soil Extract Volume:_____(uL) Soil Aliquot Volume: _____(uL)

CONCENTRATION UNITS: (ug/L or ug/Kg) UG/KG

CAS NO.	COMPOUND	MDL	RL	CONC	Q
108-88-3	Toluene	1.2	14		U
120-82-1	1,2,4-Trichlorobenzene	0.25	14		U
71-55-6	1,1,1-Trichloroethane	1.3	14		~~U~~ UJ CCH
79-00-5	1,1,2-Trichloroethane	0.50	14		U
79-01-6	Trichloroethene	1.2	14		U
76-13-1	Trichlorotrifluoroethane	0.78	14		U
75-69-4	Trichlorofluoromethane	1.3	14		~~U~~ UJ CCL
75-01-4	Vinyl chloride	1.6	14		~~U~~ UJ CCH
1330-20-7	Xylene(total)	0.99	14		U

FORM I VOA

LW
4/2/09

FORM 1
VOLATILE ORGANICS ANALYSIS DATA SHEET

CLIENT SAMPLE NO. 15

MR08-SS207-09A

Lab Name: EMPIRICAL LABS Contract: CH2MHILL

Lab Code: NA Case No.: NA SAS No.: NA SDG No.: LEJEUNE044

Matrix: (soil/water) SOIL Lab Sample ID: 0901064-15

Sample wt/vol: 2.7 (g/mL) G Lab File ID: 0106415A

Level: (low/med) LOW Date Sampled: 01/08/09 13:25

% Moisture: not dec. 15 Date Analyzed: 01/18/09 09:41

GC Column: RTX-VRX ID: 0.25 (mm) Dilution Factor: 1.0

Soil Extract Volume:_____(uL) Soil Aliquot Volume: _____(uL)

CONCENTRATION UNITS: (ug/L or ug/Kg) UG/KG

CAS NO.	COMPOUND	MDL	RL	CONC	Q
67-64-1	Acetone	4.3	22	150	
71-43-2	Benzene	1.0	22		U
75-27-4	Bromodichloromethane	0.65	22		~~U~~ UJ CCH
75-25-2	Bromoform	2.2	22		U
74-83-9	Bromomethane	1.6	22		U
78-93-3	2-Butanone	3.0	22	8.4	J
75-15-0	Carbon disulfide	2.8	22		U
56-23-5	Carbon tetrachloride	1.9	22		~~U~~ UJ CCH
108-90-7	Chlorobenzene	0.74	22		UJ
75-00-3	Chloroethane	2.4	22		U
67-66-3	Chloroform	1.2	22		U
74-87-3	Chloromethane	1.1	22		~~U~~ UJ CCH
110-82-7	Cyclohexane	1.2	22		U
124-48-1	Dibromochloromethane	0.74	22		U
96-12-8	1,2-Dibromo-3-chloropropane	2.6	11		U
106-93-4	1,2-Dibromoethane	0.93	22		U
95-50-1	1,2-Dichlorobenzene	0.80	22		U
541-73-1	1,3-Dichlorobenzene	1.8	22		U
106-46-7	1,4-Dichlorobenzene	1.2	22		U
75-71-8	Dichlorodifluoromethane	2.4	22		~~U~~ UJ CCH
75-34-3	1,1-Dichloroethane	1.2	22		U
107-06-2	1,2-Dichloroethane	1.00	22		~~U~~ UJ CCH
75-35-4	1,1-Dichloroethene	2.6	22		U
156-59-2	cis-1,2-Dichloroethene	2.6	22		U
156-60-5	trans-1,2-Dichloroethene	2.4	22		U
78-87-5	1,2-Dichloropropane	1.00	22		U
10061-01-5	cis-1,3-Dichloropropene	1.1	22		U
10061-02-6	trans-1,3-Dichloropropene	0.69	22		U
100-41-4	Ethylbenzene	1.6	22		U
591-78-6	2-Hexanone	5.0	22		U
98-82-8	Isopropylbenzene	1.9	22		U
79-20-9	Methyl acetate	3.5	22		U
75-09-2	Methylene chloride	1.3	22	22u ~~6.3~~ ~~JB~~	BL
108-87-2	Methyl cyclohexane	0.65	22		U
1634-04-4	Methyl tert-butyl ether	0.69	22		U
108-10-1	4-Methyl-2-pentanone	1.2	22		U
100-42-5	Styrene	0.76	22		U
79-34-5	1,1,2,2-Tetrachloroethane	0.93	22		U
127-18-4	Tetrachloroethene	2.1	22		UJ

FORM I VOA

QW
4/2/09

FORM 1
VOLATILE ORGANICS ANALYSIS DATA SHEET

CLIENT SAMPLE NO. 15

MR08-SS207-09A

Lab Name: EMPIRICAL LABS Contract: CH2MHILL

Lab Code: NA Case No.: NA SAS No.: NA SDG No.: LEJEUNE044

Matrix: (soil/water) SOIL Lab Sample ID: 0901064-15

Sample wt/vol: 2.7 (g/mL) G Lab File ID: 0106415A

Level: (low/med) LOW Date Sampled: 01/08/09 13:25

% Moisture: not dec. 15 Date Analyzed: 01/18/09 09:41

GC Column: RTX-VRX ID: 0.25 (mm) Dilution Factor: 1.0

Soil Extract Volume:_____(uL) Soil Aliquot Volume: _____(uL)

CONCENTRATION UNITS: (ug/L or ug/Kg) UG/KG

CAS NO.	COMPOUND	MDL	RL	CONC	Q
108-88-3	Toluene	1.9	22		U
120-82-1	1,2,4-Trichlorobenzene	0.39	22		U
71-55-6	1,1,1-Trichloroethane	1.9	22		~~U~~ UJ CC4
79-00-5	1,1,2-Trichloroethane	0.76	22		U
79-01-6	Trichloroethene	1.8	22	6.0	J
76-13-1	Trichlorotrifluoroethane	1.2	22		U
75-69-4	Trichlorofluoromethane	2.0	22		~~U~~ UJ CC4
75-01-4	Vinyl chloride	2.4	22		~~U~~ UJ CC4
1330-20-7	Xylene(total)	1.5	22		U

MW
4/2/09

FORM 1
VOLATILE ORGANICS ANALYSIS DATA SHEET

CLIENT SAMPLE NO. 16

MR08-IS20
7-6-7-09A

Lab Name: EMPIRICAL LABS Contract: CH2MHILL

Lab Code: NA Case No.: NA SAS No.: NA SDG No.: LEJEUNE044

Matrix: (soil/water) SOIL Lab Sample ID: 0901064-16

Sample wt/vol: 3.6 (g/mL) G Lab File ID: 0106416A

Level: (low/med) LOW Date Sampled: 01/08/09 13:50

% Moisture: not dec. 8 Date Analyzed: 01/18/09 10:21

GC Column: RTX-VRX ID: 0.25 (mm) Dilution Factor: 1.0

Soil Extract Volume:_____(uL) Soil Aliquot Volume: _____(uL)

CONCENTRATION UNITS: (ug/L or ug/Kg) UG/KG

CAS NO.	COMPOUND	MDL	RL	CONC	Q
67-64-1	Acetone	3.0	15	20	
71-43-2	Benzene	0.71	15		U
75-27-4	Bromodichloromethane	0.45	15		~~U~~ UJ CCH
75-25-2	Bromoform	1.5	15		U
74-83-9	Bromomethane	1.1	15		U
78-93-3	2-Butanone	2.1	15		U
75-15-0	Carbon disulfide	2.0	15		U
56-23-5	Carbon tetrachloride	1.3	15		~~U~~ UJ CCH
108-90-7	Chlorobenzene	0.51	15		U
75-00-3	Chloroethane	1.7	15		U
67-66-3	Chloroform	0.83	15		U
74-87-3	Chloromethane	0.78	15		~~U~~ UJ CCH
110-82-7	Cyclohexane	0.82	15		U
124-48-1	Dibromochloromethane	0.51	15		U
96-12-8	1,2-Dibromo-3-chloropropane	1.8	7.6		U
106-93-4	1,2-Dibromoethane	0.65	15		U
95-50-1	1,2-Dichlorobenzene	0.56	15		U
541-73-1	1,3-Dichlorobenzene	1.3	15		U
106-46-7	1,4-Dichlorobenzene	0.83	15		U
75-71-8	Dichlorodifluoromethane	1.7	15		~~U~~ UJ CC
75-34-3	1,1-Dichloroethane	0.82	15		U
107-06-2	1,2-Dichloroethane	0.70	15		~~U~~ UJ CC
75-35-4	1,1-Dichloroethene	1.8	15		U
156-59-2	cis-1,2-Dichloroethene	1.8	15		U
156-60-5	trans-1,2-Dichloroethene	1.7	15		U
78-87-5	1,2-Dichloropropane	0.70	15		U
10061-01-5	cis-1,3-Dichloropropene	0.76	15		U
10061-02-6	trans-1,3-Dichloropropene	0.48	15		U
100-41-4	Ethylbenzene	1.1	15		U
591-78-6	2-Hexanone	3.5	15		U
98-82-8	Isopropylbenzene	1.3	15		U
79-20-9	Methyl acetate	2.4	15		U
75-09-2	Methylene chloride	0.94	15	15u	~~5.6 JB~~ B
108-87-2	Methyl cyclohexane	0.45	15		U
1634-04-4	Methyl tert-butyl ether	0.48	15		U
108-10-1	4-Methyl-2-pentanone	0.88	15		U
100-42-5	Styrene	0.53	15		U
79-34-5	1,1,2,2-Tetrachloroethane	0.65	15		U
127-18-4	Tetrachloroethene	1.5	15		U

lew

FORM 1
VOLATILE ORGANICS ANALYSIS DATA SHEET

CLIENT SAMPLE NO. 16

MR08-IS20
7-6-7-09A

Lab Name: EMPIRICAL LABS Contract: CH2MHILL

Lab Code: NA Case No.: NA SAS No.: NA SDG No.: LEJEUNE044

Matrix: (soil/water) SOIL Lab Sample ID: 0901064-16

Sample wt/vol: 3.6 (g/mL) G Lab File ID: 0106416A

Level: (low/med) LOW Date Sampled: 01/08/09 13:50

% Moisture: not dec. 8 Date Analyzed: 01/18/09 10:21

GC Column: RTX-VRX ID: 0.25 (mm) Dilution Factor: 1.0

Soil Extract Volume:_____(uL) Soil Aliquot Volume: _____(uL)

CONCENTRATION UNITS: (ug/L or ug/Kg) UG/KG

CAS NO.	COMPOUND	MDL	RL	CONC	Q
108-88-3	Toluene	1.3	15		U
120-82-1	1,2,4-Trichlorobenzene	0.27	15		U
71-55-6	1,1,1-Trichloroethane	1.4	15		~~U~~ UJ CCH
79-00-5	1,1,2-Trichloroethane	0.53	15		U
79-01-6	Trichloroethene	1.3	15		U
76-13-1	Trichlorotrifluoroethane	0.83	15		U
75-69-4	Trichlorofluoromethane	1.4	15		~~U~~ UJ CCH
75-01-4	Vinyl chloride	1.7	15		~~U~~ UJ CCL
1330-20-7	Xylene(total)	1.0	15		U

FORM I VOA

JLW
4/21/09

FORM 1
VOLATILE ORGANICS ANALYSIS DATA SHEET

CLIENT SAMPLE NO. 17

MR08-SS208-09A

Lab Name: EMPIRICAL LABS Contract: CH2MHILL

Lab Code: NA Case No.: NA SAS No.: NA SDG No.: LEJEUNE044

Matrix: (soil/water) SOIL Lab Sample ID: 0901064-17

Sample wt/vol: 2.7 (g/mL) G Lab File ID: 0106417A

Level: (low/med) LOW Date Sampled: 01/08/09 14:10

% Moisture: not dec. 8 Date Analyzed: 01/18/09 11:00

GC Column: RTX-VRX ID: 0.25 (mm) Dilution Factor: 1.0

Soil Extract Volume:_____(uL) Soil Aliquot Volume: _____(uL)

CONCENTRATION UNITS: (ug/L or ug/Kg) UG/KG

CAS NO.	COMPOUND	MDL	RL	CONC	Q
67-64-1	Acetone	4.0	20	88	
71-43-2	Benzene	0.93	20		U
75-27-4	Bromodichloromethane	0.59	20		~~U~~ UJ CCH
75-25-2	Bromoform	2.0	20		U
74-83-9	Bromomethane	1.4	20		U
78-93-3	2-Butanone	2.8	20		U
75-15-0	Carbon disulfide	2.6	20		U
56-23-5	Carbon tetrachloride	1.7	20		~~U~~ UJ CCH
108-90-7	Chlorobenzene	0.67	20		U
75-00-3	Chloroethane	2.2	20		U
67-66-3	Chloroform	1.1	20		U
74-87-3	Chloromethane	1.0	20		~~U~~ UJ CCH
110-82-7	Cyclohexane	1.1	20		U
124-48-1	Dibromochloromethane	0.67	20		U
96-12-8	1,2-Dibromo-3-chloropropane	2.4	9.9		U
106-93-4	1,2-Dibromoethane	0.85	20		U
95-50-1	1,2-Dichlorobenzene	0.73	20		U
541-73-1	1,3-Dichlorobenzene	1.7	20		U
106-46-7	1,4-Dichlorobenzene	1.1	20		U
75-71-8	Dichlorodifluoromethane	2.2	20		~~U~~ UJ CCH
75-34-3	1,1-Dichloroethane	1.1	20		U
107-06-2	1,2-Dichloroethane	0.91	20		~~U~~ UJ CCH
75-35-4	1,1-Dichloroethene	2.4	20		U
156-59-2	cis-1,2-Dichloroethene	2.4	20		U
156-60-5	trans-1,2-Dichloroethene	2.2	20		U
78-87-5	1,2-Dichloropropane	0.91	20		U
10061-01-5	cis-1,3-Dichloropropene	0.99	20		U
10061-02-6	trans-1,3-Dichloropropene	0.63	20		U
100-41-4	Ethylbenzene	1.5	20		U
591-78-6	2-Hexanone	4.5	20		U
98-82-8	Isopropylbenzene	1.7	20		U
79-20-9	Methyl acetate	3.2	20		U
75-09-2	Methylene chloride	1.2	20	20u	~~6.9~~ ~~JB~~ BL
108-87-2	Methyl cyclohexane	0.59	20		U
1634-04-4	Methyl tert-butyl ether	0.63	20		U
108-10-1	4-Methyl-2-pentanone	1.1	20		U
100-42-5	Styrene	0.69	20		U
79-34-5	1,1,2,2-Tetrachloroethane	0.85	20		U
127-18-4	Tetrachloroethene	1.9	20		~~U~~

fw 4/2/09

FORM 1
VOLATILE ORGANICS ANALYSIS DATA SHEET

CLIENT SAMPLE NO. 17

MR08-SS208-09A

Lab Name: EMPIRICAL LABS Contract: CH2MHILL

Lab Code: NA Case No.: NA SAS No.: NA SDG No.: LEJEUNE044

Matrix: (soil/water) SOIL Lab Sample ID: 0901064-17

Sample wt/vol: 2.7 (g/mL) G Lab File ID: 0106417A

Level: (low/med) LOW Date Sampled: 01/08/09 14:10

% Moisture: not dec. 8 Date Analyzed: 01/18/09 11:00

GC Column: RTX-VRX ID: 0.25 (mm) Dilution Factor: 1.0

Soil Extract Volume:_____(uL) Soil Aliquot Volume: _____(uL)

CONCENTRATION UNITS: (ug/L or ug/Kg) UG/KG

CAS NO.	COMPOUND	MDL	RL	CONC	Q
108-88-3------	Toluene	1.7	20		U
120-82-1------	1,2,4-Trichlorobenzene	0.36	20		U
71-55-6-------	1,1,1-Trichloroethane	1.8	20		~~U~~ UJ CCH
79-00-5-------	1,1,2-Trichloroethane	0.69	20		U
79-01-6-------	Trichloroethene	1.7	20		U
76-13-1-------	Trichlorotrifluoroethane	1.1	20		U
75-69-4-------	Trichlorofluoromethane	1.9	20		~~U~~ UJ CCH
75-01-4-------	Vinyl chloride	2.2	20		~~U~~ UJ CCH
1330-20-7-----	Xylene(total)	1.4	20		U

FORM I VOA

Jes
4/2/09

FORM 1
VOLATILE ORGANICS ANALYSIS DATA SHEET

CLIENT SAMPLE NO. 18

MR08-IS20
8-6-7-09A

Lab Name: EMPIRICAL LABS Contract: CH2MHILL

Lab Code: NA Case No.: NA SAS No.: NA SDG No.: LEJEUNE044

Matrix: (soil/water) SOIL Lab Sample ID: 0901064-18

Sample wt/vol: 4.4 (g/mL) G Lab File ID: 0106418A

Level: (low/med) LOW Date Sampled: 01/08/09 14:20

% Moisture: not dec. 12 Date Analyzed: 01/18/09 11:39

GC Column: RTX-VRX ID: 0.25 (mm) Dilution Factor: 1.0

Soil Extract Volume:_____(uL) Soil Aliquot Volume: _____(uL)

CONCENTRATION UNITS: (ug/L or ug/Kg) UG/KG

CAS NO.	COMPOUND	MDL	RL	CONC	Q
67-64-1	Acetone	2.6	13		U
71-43-2	Benzene	0.60	13		U
75-27-4	Bromodichloromethane	0.38	13		~~U~~ UJ CCH
75-25-2	Bromoform	1.3	13		U
74-83-9	Bromomethane	0.92	13		U
78-93-3	2-Butanone	1.8	13		U
75-15-0	Carbon disulfide	1.7	13		U
56-23-5	Carbon tetrachloride	1.1	13		~~U~~ UJ CCH
108-90-7	Chlorobenzene	0.44	13		U
75-00-3	Chloroethane	1.4	13		U
67-66-3	Chloroform	0.71	13		U
74-87-3	Chloromethane	0.67	13		~~U~~ UJ CCH
110-82-7	Cyclohexane	0.69	13		U
124-48-1	Dibromochloromethane	0.44	13		U
96-12-8	1,2-Dibromo-3-chloropropane	1.5	6.4		U
106-93-4	1,2-Dibromoethane	0.55	13		U
95-50-1	1,2-Dichlorobenzene	0.48	13		U
541-73-1	1,3-Dichlorobenzene	1.1	13		U
106-46-7	1,4-Dichlorobenzene	0.71	13		U
75-71-8	Dichlorodifluoromethane	1.4	13		~~U~~ UJ CCH
75-34-3	1,1-Dichloroethane	0.69	13		U
107-06-2	1,2-Dichloroethane	0.59	13		~~U~~ UJ CCH
75-35-4	1,1-Dichloroethene	1.5	13		U
156-59-2	cis-1,2-Dichloroethene	1.5	13		U
156-60-5	trans-1,2-Dichloroethene	1.4	13		U
78-87-5	1,2-Dichloropropane	0.59	13		U
10061-01-5	cis-1,3-Dichloropropene	0.64	13		U
10061-02-6	trans-1,3-Dichloropropene	0.41	13		U
100-41-4	Ethylbenzene	0.96	13		U
591-78-6	2-Hexanone	3.0	13		U
98-82-8	Isopropylbenzene	1.1	13		U
79-20-9	Methyl acetate	2.0	13		U
75-09-2	Methylene chloride	0.80	13	13U	~~4.6 JB~~ BL
108-87-2	Methyl cyclohexane	0.38	13		U
1634-04-4	Methyl tert-butyl ether	0.41	13		U
108-10-1	4-Methyl-2-pentanone	0.74	13		U
100-42-5	Styrene	0.45	13		U
79-34-5	1,1,2,2-Tetrachloroethane	0.55	13		U
127-18-4	Tetrachloroethene	1.2	13		U

FORM I VOA

JW
4/21/09

FORM 1
VOLATILE ORGANICS ANALYSIS DATA SHEET

CLIENT SAMPLE NO.

18

MR08-IS20
8-6-7-09A

Lab Name: EMPIRICAL LABS Contract: CH2MHILL

Lab Code: NA Case No.: NA SAS No.: NA SDG No.: LEJEUNE044

Matrix: (soil/water) SOIL Lab Sample ID: 0901064-18

Sample wt/vol: 4.4 (g/mL) G Lab File ID: 0106418A

Level: (low/med) LOW Date Sampled: 01/08/09 14:20

% Moisture: not dec. 12 Date Analyzed: 01/18/09 11:39

GC Column: RTX-VRX ID: 0.25 (mm) Dilution Factor: 1.0

Soil Extract Volume:_____(uL) Soil Aliquot Volume: _____(uL)

CONCENTRATION UNITS: (ug/L or ug/Kg) UG/KG

CAS NO.	COMPOUND	MDL	RL	CONC	Q
108-88-3	Toluene	1.1	13		U
120-82-1	1,2,4-Trichlorobenzene	0.23	13		U
71-55-6	1,1,1-Trichloroethane	1.2	13		~~U~~ UJ CCH
79-00-5	1,1,2-Trichloroethane	0.45	13		U
79-01-6	Trichloroethene	1.1	13		U
76-13-1	Trichlorotrifluoroethane	0.71	13		U
75-69-4	Trichlorofluoromethane	1.2	13		~~U~~ UJ CCH
75-01-4	Vinyl chloride	1.4	13		~~U~~ UJ CCH
1330-20-7	Xylene(total)	0.90	13		U

FORM I VOA

Jes
4/2/09

FORM 1
VOLATILE ORGANICS ANALYSIS DATA SHEET

CLIENT SAMPLE NO. 19

MR08-SS228-09A

Lab Name: EMPIRICAL LABS Contract: CH2MHILL

Lab Code: NA Case No.: NA SAS No.: NA SDG No.: LEJEUNE044

Matrix: (soil/water) SOIL Lab Sample ID: 0901064-19

Sample wt/vol: 3.2 (g/mL) G Lab File ID: 0106419B

Level: (low/med) LOW Date Sampled: 01/08/09 14:35

% Moisture: not dec. 8 Date Analyzed: 01/20/09 18:04

GC Column: RTX-VRX ID: 0.25 (mm) Dilution Factor: 1.0

Soil Extract Volume:_____(uL) Soil Aliquot Volume: _____(uL)

CONCENTRATION UNITS: (ug/L or ug/Kg) UG/KG

CAS NO.	COMPOUND	MDL	RL	CONC	Q
67-64-1	Acetone	3.4	17	25	~~B~~ U BL
71-43-2	Benzene	0.80	17	1.1	J
75-27-4	Bromodichloromethane	0.51	17		~~U~~ UJ CCH
75-25-2	Bromoform	1.7	17		U
74-83-9	Bromomethane	1.2	17		~~U~~ UJ CCH
78-93-3	2-Butanone	2.4	17		U
75-15-0	Carbon disulfide	2.2	17		U
56-23-5	Carbon tetrachloride	1.5	17		~~U~~ UJ CCH
108-90-7	Chlorobenzene	0.58	17		U
75-00-3	Chloroethane	1.9	17		~~U~~ UJ CCH
67-66-3	Chloroform	0.94	17		~~U~~ UJ CCH
74-87-3	Chloromethane	0.89	17		~~U~~ UJ CCH
110-82-7	Cyclohexane	0.92	17		U
124-48-1	Dibromochloromethane	0.58	17		U
96-12-8	1,2-Dibromo-3-chloropropane	2.0	8.6		U
106-93-4	1,2-Dibromoethane	0.74	17		U
95-50-1	1,2-Dichlorobenzene	0.63	17		U
541-73-1	1,3-Dichlorobenzene	1.4	17		U
106-46-7	1,4-Dichlorobenzene	0.94	17		U
75-71-8	Dichlorodifluoromethane	1.9	17		~~U~~ UJ CCH
75-34-3	1,1-Dichloroethane	0.92	17		U
107-06-2	1,2-Dichloroethane	0.79	17		~~U~~ UJ CCH
75-35-4	1,1-Dichloroethene	2.0	17		U
156-59-2	cis-1,2-Dichloroethene	2.0	17		U
156-60-5	trans-1,2-Dichloroethene	1.9	17		U
78-87-5	1,2-Dichloropropane	0.79	17		U
10061-01-5	cis-1,3-Dichloropropene	0.86	17		U
10061-02-6	trans-1,3-Dichloropropene	0.55	17		U
100-41-4	Ethylbenzene	1.3	17	2.5	J
591-78-6	2-Hexanone	3.9	17		U
98-82-8	Isopropylbenzene	1.5	17		U
79-20-9	Methyl acetate	2.7	17		U
75-09-2	Methylene chloride	1.1	17	17 UJ	~~3.9~~ ~~JB~~ CCH B
108-87-2	Methyl cyclohexane	0.51	17	0.84	J
1634-04-4	Methyl tert-butyl ether	0.55	17		~~U~~ UJ CCH
108-10-1	4-Methyl-2-pentanone	0.99	17		U
100-42-5	Styrene	0.60	17		U
79-34-5	1,1,2,2-Tetrachloroethane	0.74	17		U
127-18-4	Tetrachloroethene	1.7	17		U

FORM I VOA

Revised MJ 2/5/09

fw 4/2/09

FORM 1
VOLATILE ORGANICS ANALYSIS DATA SHEET

CLIENT SAMPLE NO. 19

MR08-SS228-09A

Lab Name: EMPIRICAL LABS Contract: CH2MHILL

Lab Code: NA Case No.: NA SAS No.: NA SDG No.: LEJEUNE044

Matrix: (soil/water) SOIL Lab Sample ID: 0901064-19

Sample wt/vol: 3.2 (g/mL) G Lab File ID: 0106419B

Level: (low/med) LOW Date Sampled: 01/08/09 14:35

% Moisture: not dec. 8 Date Analyzed: 01/20/09 18:04

GC Column: RTX-VRX ID: 0.25 (mm) Dilution Factor: 1.0

Soil Extract Volume:_____(uL) Soil Aliquot Volume: _____(uL)

CONCENTRATION UNITS: (ug/L or ug/Kg) UG/KG

CAS NO.	COMPOUND	MDL	RL	CONC	Q
108-88-3------	Toluene	1.5	17	17u ~~1.6~~	~~J~~ BL
120-82-1------	1,2,4-Trichlorobenzene	0.31	17		U
71-55-6-------	1,1,1-Trichloroethane	1.5	17		~~U~~ UJ CH
79-00-5-------	1,1,2-Trichloroethane	0.60	17		U
79-01-6-------	Trichloroethene	1.4	17		U
76-13-1-------	Trichlorotrifluoroethane	0.94	17		~~U~~ UJ CH
75-69-4-------	Trichlorofluoromethane	1.6	17		~~U~~
75-01-4-------	Vinyl chloride	1.9	17		~~U~~
1330-20-7-----	Xylene(total)	1.2	17		U

FORM I VOA

JW
4/21/09

FORM 1
VOLATILE ORGANICS ANALYSIS DATA SHEET

CLIENT SAMPLE NO. 20

MR08-IS22
8-7-8-09A

Lab Name: EMPIRICAL LABS Contract: CH2MHILL

Lab Code: NA Case No.: NA SAS No.: NA SDG No.: LEJEUNE044

Matrix: (soil/water) SOIL Lab Sample ID: 0901064-20

Sample wt/vol: 3.3 (g/mL) G Lab File ID: 0106420A

Level: (low/med) LOW Date Sampled: 01/08/09 14:55

% Moisture: not dec. 6 Date Analyzed: 01/18/09 12:57

GC Column: RTX-VRX ID: 0.25 (mm) Dilution Factor: 1.0

Soil Extract Volume:_____(uL) Soil Aliquot Volume: _____(uL)

CONCENTRATION UNITS: (ug/L or ug/Kg) UG/KG

CAS NO.	COMPOUND	MDL	RL	CONC	Q
67-64-1	Acetone	3.2	16	37	
71-43-2	Benzene	0.76	16		U
75-27-4	Bromodichloromethane	0.49	16		~~U~~ UJ CH
75-25-2	Bromoform	1.6	16		U
74-83-9	Bromomethane	1.2	16		U
78-93-3	2-Butanone	2.3	16		U
75-15-0	Carbon disulfide	2.1	16		U
56-23-5	Carbon tetrachloride	1.4	16		~~U~~ UJ CH
108-90-7	Chlorobenzene	0.55	16		U
75-00-3	Chloroethane	1.8	16		U
67-66-3	Chloroform	0.89	16		U
74-87-3	Chloromethane	0.84	16		~~U~~ UJ CH
110-82-7	Cyclohexane	0.88	16		U
124-48-1	Dibromochloromethane	0.55	16		U
96-12-8	1,2-Dibromo-3-chloropropane	2.0	8.1		U
106-93-4	1,2-Dibromoethane	0.70	16		U
95-50-1	1,2-Dichlorobenzene	0.60	16		U
541-73-1	1,3-Dichlorobenzene	1.4	16		U
106-46-7	1,4-Dichlorobenzene	0.89	16		U
75-71-8	Dichlorodifluoromethane	1.8	16		~~U~~ UJ CH
75-34-3	1,1-Dichloroethane	0.88	16		U
107-06-2	1,2-Dichloroethane	0.75	16		~~U~~ UJ CH
75-35-4	1,1-Dichloroethene	2.0	16		U
156-59-2	cis-1,2-Dichloroethene	2.0	16		U
156-60-5	trans-1,2-Dichloroethene	1.8	16		U
78-87-5	1,2-Dichloropropane	0.75	16		U
10061-01-5	cis-1,3-Dichloropropene	0.81	16		U
10061-02-6	trans-1,3-Dichloropropene	0.52	16		U
100-41-4	Ethylbenzene	1.2	16		U
591-78-6	2-Hexanone	3.7	16		U
98-82-8	Isopropylbenzene	1.4	16		U
79-20-9	Methyl acetate	2.6	16		U
75-09-2	Methylene chloride	1.0	16	164	~~4.3 JB~~ B1
108-87-2	Methyl cyclohexane	0.49	16		U
1634-04-4	Methyl tert-butyl ether	0.52	16		U
108-10-1	4-Methyl-2-pentanone	0.94	16		U
100-42-5	Styrene	0.57	16		U
79-34-5	1,1,2,2-Tetrachloroethane	0.70	16		U
127-18-4	Tetrachloroethene	1.6	16		~~U~~

FORM I VOA

MW
4/2/09

FORM 1
VOLATILE ORGANICS ANALYSIS DATA SHEET

CLIENT SAMPLE NO. 20

MR08-IS22
8-7-8-09A

Lab Name: EMPIRICAL LABS Contract: CH2MHILL

Lab Code: NA Case No.: NA SAS No.: NA SDG No.: LEJEUNE044

Matrix: (soil/water) SOIL Lab Sample ID: 0901064-20

Sample wt/vol: 3.3 (g/mL) G Lab File ID: 0106420A

Level: (low/med) LOW Date Sampled: 01/08/09 14:55

% Moisture: not dec. 6 Date Analyzed: 01/18/09 12:57

GC Column: RTX-VRX ID: 0.25 (mm) Dilution Factor: 1.0

Soil Extract Volume:_____(uL) Soil Aliquot Volume: _____(uL)

CONCENTRATION UNITS: (ug/L or ug/Kg) UG/KG

CAS NO.	COMPOUND	MDL	RL	CONC	Q
108-88-3	Toluene	1.4	16		U
120-82-1	1,2,4-Trichlorobenzene	0.29	16		U
71-55-6	1,1,1-Trichloroethane	1.5	16		~~U~~ UJ CH
79-00-5	1,1,2-Trichloroethane	0.57	16		U
79-01-6	Trichloroethene	1.4	16		U
76-13-1	Trichlorotrifluoroethane	0.89	16		U
75-69-4	Trichlorofluoromethane	1.5	16		~~U~~ UJ CH
75-01-4	Vinyl chloride	1.8	16		~~U~~ UJ CH
1330-20-7	Xylene(total)	1.1	16		U

FORM I VOA

lcw
4/2/09

FORM 1
VOLATILE ORGANICS ANALYSIS DATA SHEET

CLIENT SAMPLE NO. 21

MR08-SS229-09A

Lab Name: EMPIRICAL LABS Contract: CH2MHILL

Lab Code: NA Case No.: NA SAS No.: NA SDG No.: LEJEUNE044

Matrix: (soil/water) SOIL Lab Sample ID: 0901064-21

Sample wt/vol: 5.3 (g/mL) G Lab File ID: 0106421A

Level: (low/med) LOW Date Sampled: 01/08/09 15:05

% Moisture: not dec. 8 Date Analyzed: 01/18/09 13:36

GC Column: RTX-VRX ID: 0.25 (mm) Dilution Factor: 1.0

Soil Extract Volume:_____(uL) Soil Aliquot Volume: _____(uL)

CONCENTRATION UNITS: (ug/L or ug/Kg) UG/KG

CAS NO.	COMPOUND	MDL	RL	CONC	Q
67-64-1	Acetone	2.1	10	17	
71-43-2	Benzene	0.48	10	0.59	J
75-27-4	Bromodichloromethane	0.31	10		~~U~~ UJ CCH
75-25-2	Bromoform	1.0	10		U
74-83-9	Bromomethane	0.74	10		U
78-93-3	2-Butanone	1.4	10		U
75-15-0	Carbon disulfide	1.3	10	1.5	J
56-23-5	Carbon tetrachloride	0.91	10		~~U~~ UJ CCH
108-90-7	Chlorobenzene	0.35	10		U
75-00-3	Chloroethane	1.1	10		U
67-66-3	Chloroform	0.57	10		U
74-87-3	Chloromethane	0.54	10		~~U~~ UJ CCH
110-82-7	Cyclohexane	0.56	10		U
124-48-1	Dibromochloromethane	0.35	10		U
96-12-8	1,2-Dibromo-3-chloropropane	1.2	5.2		U
106-93-4	1,2-Dibromoethane	0.44	10		U
95-50-1	1,2-Dichlorobenzene	0.38	10		U
541-73-1	1,3-Dichlorobenzene	0.87	10		U
106-46-7	1,4-Dichlorobenzene	0.57	10		U
75-71-8	Dichlorodifluoromethane	1.1	10		~~U~~ UJ CCH
75-34-3	1,1-Dichloroethane	0.56	10		U
107-06-2	1,2-Dichloroethane	0.48	10		~~U~~ UJ CCH
75-35-4	1,1-Dichloroethene	1.2	10		U
156-59-2	cis-1,2-Dichloroethene	1.2	10		U
156-60-5	trans-1,2-Dichloroethene	1.1	10		U
78-87-5	1,2-Dichloropropane	0.48	10		U
10061-01-5	cis-1,3-Dichloropropene	0.52	10		U
10061-02-6	trans-1,3-Dichloropropene	0.33	10		U
100-41-4	Ethylbenzene	0.77	10	2.1	J
591-78-6	2-Hexanone	2.4	10		U
98-82-8	Isopropylbenzene	0.91	10		U
79-20-9	Methyl acetate	1.6	10		U
75-09-2	Methylene chloride	0.64	10	low ~~2.4~~ ~~JB~~	B
108-87-2	Methyl cyclohexane	0.31	10	0.46	J
1634-04-4	Methyl tert-butyl ether	0.33	10		U
108-10-1	4-Methyl-2-pentanone	0.60	10		U
100-42-5	Styrene	0.36	10		U
79-34-5	1,1,2,2-Tetrachloroethane	0.44	10		U
127-18-4	Tetrachloroethene	1.0	10		~~U~~

Lev
4/2/09

FORM 1
VOLATILE ORGANICS ANALYSIS DATA SHEET

CLIENT SAMPLE NO. 21

MR08-SS229-09A

Lab Name: EMPIRICAL LABS Contract: CH2MHILL

Lab Code: NA Case No.: NA SAS No.: NA SDG No.: LEJEUNE044

Matrix: (soil/water) SOIL Lab Sample ID: 0901064-21

Sample wt/vol: 5.3 (g/mL) G Lab File ID: 0106421A

Level: (low/med) LOW Date Sampled: 01/08/09 15:05

% Moisture: not dec. 8 Date Analyzed: 01/18/09 13:36

GC Column: RTX-VRX ID: 0.25 (mm) Dilution Factor: 1.0

Soil Extract Volume:_____(uL) Soil Aliquot Volume: _____(uL)

CONCENTRATION UNITS: (ug/L or ug/Kg) UG/KG

CAS NO.	COMPOUND	MDL	RL	CONC	Q
108-88-3	Toluene	0.89	10	10u ~~1.3~~	~~J~~ BL
120-82-1	1,2,4-Trichlorobenzene	0.18	10		U
71-55-6	1,1,1-Trichloroethane	0.93	10		~~U~~ UJ CCH
79-00-5	1,1,2-Trichloroethane	0.36	10		U
79-01-6	Trichloroethene	0.88	10		U
76-13-1	Trichlorotrifluoroethane	0.57	10		U
75-69-4	Trichlorofluoromethane	0.98	10		~~U~~ UJ CCH
75-01-4	Vinyl chloride	1.1	10		~~U~~ UJ CCH
1330-20-7	Xylene(total)	0.72	10		U

FORM I VOA

MW
4/21/09

FORM 1
VOLATILE ORGANICS ANALYSIS DATA SHEET

CLIENT SAMPLE NO. 22

MR08-SS229D-09A

Lab Name: EMPIRICAL LABS Contract: CH2MHILL

Lab Code: NA Case No.: NA SAS No.: NA SDG No.: LEJEUNE044

Matrix: (soil/water) SOIL Lab Sample ID: 0901064-22

Sample wt/vol: 4.6 (g/mL) G Lab File ID: 0106422A

Level: (low/med) LOW Date Sampled: 01/08/09 15:15

% Moisture: not dec. 8 Date Analyzed: 01/18/09 14:16

GC Column: RTX-VRX ID: 0.25 (mm) Dilution Factor: 1.0

Soil Extract Volume:_____(uL) Soil Aliquot Volume: _____(uL)

CONCENTRATION UNITS: (ug/L or ug/Kg) UG/KG

CAS NO.	COMPOUND	MDL	RL	CONC	Q
67-64-1	Acetone	2.3	12	22	
71-43-2	Benzene	0.55	12	0.95	J
75-27-4	Bromodichloromethane	0.35	12		~~U~~ UJ CCH
75-25-2	Bromoform	1.2	12		U
74-83-9	Bromomethane	0.84	12		U
78-93-3	2-Butanone	1.6	12		U
75-15-0	Carbon disulfide	1.5	12	1.9	J
56-23-5	Carbon tetrachloride	1.0	12		~~U~~ UJ CCH
108-90-7	Chlorobenzene	0.40	12		U
75-00-3	Chloroethane	1.3	12		U
67-66-3	Chloroform	0.64	12		U
74-87-3	Chloromethane	0.61	12		~~U~~ UJ CCH
110-82-7	Cyclohexane	0.63	12		U
124-48-1	Dibromochloromethane	0.40	12		U
96-12-8	1,2-Dibromo-3-chloropropane	1.4	5.8		U
106-93-4	1,2-Dibromoethane	0.50	12		U
95-50-1	1,2-Dichlorobenzene	0.43	12		U
541-73-1	1,3-Dichlorobenzene	0.98	12		U
106-46-7	1,4-Dichlorobenzene	0.64	12		U
75-71-8	Dichlorodifluoromethane	1.3	12		~~U~~ UJ CCH
75-34-3	1,1-Dichloroethane	0.63	12		U
107-06-2	1,2-Dichloroethane	0.54	12		~~U~~ UJ CCH
75-35-4	1,1-Dichloroethene	1.4	12		U
156-59-2	cis-1,2-Dichloroethene	1.4	12		U
156-60-5	trans-1,2-Dichloroethene	1.3	12		U
78-87-5	1,2-Dichloropropane	0.54	12		U
10061-01-5	cis-1,3-Dichloropropene	0.58	12		U
10061-02-6	trans-1,3-Dichloropropene	0.37	12		U
100-41-4	Ethylbenzene	0.88	12	1.4	J
591-78-6	2-Hexanone	2.7	12		U
98-82-8	Isopropylbenzene	1.0	12		U
79-20-9	Methyl acetate	1.9	12		U
75-09-2	Methylene chloride	0.72	12	12U ~~3.1~~ ~~JB~~	B
108-87-2	Methyl cyclohexane	0.35	12	0.46	J
1634-04-4	Methyl tert-butyl ether	0.37	12		U
108-10-1	4-Methyl-2-pentanone	0.68	12		U
100-42-5	Styrene	0.41	12		U
79-34-5	1,1,2,2-Tetrachloroethane	0.50	12		U
127-18-4	Tetrachloroethene	1.1	12		U~~Y~~

FORM I VOA

KEW
4/2/09

FORM 1
VOLATILE ORGANICS ANALYSIS DATA SHEET

CLIENT SAMPLE NO. 22

MR08-SS229D-09A

Lab Name: EMPIRICAL LABS Contract: CH2MHILL

Lab Code: NA Case No.: NA SAS No.: NA SDG No.: LEJEUNE044

Matrix: (soil/water) SOIL Lab Sample ID: 0901064-22

Sample wt/vol: 4.6 (g/mL) G Lab File ID: 0106422A

Level: (low/med) LOW Date Sampled: 01/08/09 15:15

% Moisture: not dec. 8 Date Analyzed: 01/18/09 14:16

GC Column: RTX-VRX ID: 0.25 (mm) Dilution Factor: 1.0

Soil Extract Volume:_____(uL) Soil Aliquot Volume: _____(uL)

CONCENTRATION UNITS: (ug/L or ug/Kg) UG/KG

CAS NO.	COMPOUND	MDL	RL	CONC	Q
108-88-3	Toluene	1.0	12		U
120-82-1	1,2,4-Trichlorobenzene	0.21	12		U
71-55-6	1,1,1-Trichloroethane	1.0	12		~~U~~ UJ CA
79-00-5	1,1,2-Trichloroethane	0.41	12		U
79-01-6	Trichloroethene	0.99	12		U
76-13-1	Trichlorotrifluoroethane	0.64	12		U
75-69-4	Trichlorofluoromethane	1.1	12		~~U~~ UJ CA
75-01-4	Vinyl chloride	1.3	12		~~U~~ UJ CA
1330-20-7	Xylene(total)	0.82	12		U

FORM I VOA

JWJ
4/2/09

FORM 1
VOLATILE ORGANICS ANALYSIS DATA SHEET

CLIENT SAMPLE NO. 23

MR08-IS22
9-6-7-09A

Lab Name: EMPIRICAL LABS Contract: CH2MHILL

Lab Code: NA Case No.: NA SAS No.: NA SDG No.: LEJEUNE044

Matrix: (soil/water) SOIL Lab Sample ID: 0901064-23

Sample wt/vol: 6.5 (g/mL) G Lab File ID: 0106423A

Level: (low/med) LOW Date Sampled: 01/08/09 15:35

% Moisture: not dec. 12 Date Analyzed: 01/20/09 19:22

GC Column: RTX-VRX ID: 0.25 (mm) Dilution Factor: 1.0

Soil Extract Volume:_____(uL) Soil Aliquot Volume: _____(uL)

CONCENTRATION UNITS: (ug/L or ug/Kg) UG/KG

CAS NO.	COMPOUND	MDL	RL	CONC	Q
67-64-1	Acetone	1.7	8.6	12	~~B~~U BU
71-43-2	Benzene	0.41	8.6		U
75-27-4	Bromodichloromethane	0.26	8.6		~~U~~UJ CCH
75-25-2	Bromoform	0.86	8.6		U
74-83-9	Bromomethane	0.62	8.6		~~U~~UJ CCH
78-93-3	2-Butanone	1.2	8.6		U
75-15-0	Carbon disulfide	1.1	8.6		U
56-23-5	Carbon tetrachloride	0.76	8.6		~~U~~UJ CCH
108-90-7	Chlorobenzene	0.29	8.6		U
75-00-3	Chloroethane	0.95	8.6		~~U~~UJ CCH
67-66-3	Chloroform	0.48	8.6		U
74-87-3	Chloromethane	0.45	8.6		U
110-82-7	Cyclohexane	0.47	8.6		U
124-48-1	Dibromochloromethane	0.29	8.6		U
96-12-8	1,2-Dibromo-3-chloropropane	1.0	4.3		U
106-93-4	1,2-Dibromoethane	0.37	8.6		U
95-50-1	1,2-Dichlorobenzene	0.32	8.6		U
541-73-1	1,3-Dichlorobenzene	0.73	8.6		U
106-46-7	1,4-Dichlorobenzene	0.48	8.6		U
75-71-8	Dichlorodifluoromethane	0.95	8.6		~~U~~UJ CCH
75-34-3	1,1-Dichloroethane	0.47	8.6		U
107-06-2	1,2-Dichloroethane	0.40	8.6		~~U~~UJ CCH
75-35-4	1,1-Dichloroethene	1.0	8.6		U
156-59-2	cis-1,2-Dichloroethene	1.0	8.6		U
156-60-5	trans-1,2-Dichloroethene	0.95	8.6		U
78-87-5	1,2-Dichloropropane	0.40	8.6		U
10061-01-5	cis-1,3-Dichloropropene	0.43	8.6		U
10061-02-6	trans-1,3-Dichloropropene	0.28	8.6		U
100-41-4	Ethylbenzene	0.65	8.6		U
591-78-6	2-Hexanone	2.0	8.6		U
98-82-8	Isopropylbenzene	0.76	8.6		U
79-20-9	Methyl acetate	1.4	8.6		U
75-09-2	Methylene chloride	0.54	8.6	8.6	UJ2 2 ~~JB~~ CCH BL
108-87-2	Methyl cyclohexane	0.26	8.6		U
1634-04-4	Methyl tert-butyl ether	0.28	8.6		~~U~~UJ CCH
108-10-1	4-Methyl-2-pentanone	0.50	8.6		U
100-42-5	Styrene	0.30	8.6		U
79-34-5	1,1,2,2-Tetrachloroethane	0.37	8.6		U
127-18-4	Tetrachloroethene	0.84	8.6		U

MW
4/2/09

FORM 1
VOLATILE ORGANICS ANALYSIS DATA SHEET

CLIENT SAMPLE NO. 23

MR08-IS22
9-6-7-09A

Lab Name: EMPIRICAL LABS Contract: CH2MHILL

Lab Code: NA Case No.: NA SAS No.: NA SDG No.: LEJEUNE044

Matrix: (soil/water) SOIL Lab Sample ID: 0901064-23

Sample wt/vol: 6.5 (g/mL) G Lab File ID: 0106423A

Level: (low/med) LOW Date Sampled: 01/08/09 15:35

% Moisture: not dec. 12 Date Analyzed: 01/20/09 19:22

GC Column: RTX-VRX ID: 0.25 (mm) Dilution Factor: 1.0

Soil Extract Volume:_____(uL) Soil Aliquot Volume: _____(uL)

CONCENTRATION UNITS: (ug/L or ug/Kg) UG/KG

CAS NO.	COMPOUND	MDL	RL	CONC	Q
108-88-3------	Toluene	0.74	8.6		U
120-82-1------	1,2,4-Trichlorobenzene	0.16	8.6		U
71-55-6-------	1,1,1-Trichloroethane	0.78	8.6		~~U~~ UJ CCH
79-00-5-------	1,1,2-Trichloroethane	0.30	8.6		U
79-01-6-------	Trichloroethene	0.74	8.6		U
76-13-1-------	Trichlorotrifluoroethane	0.48	8.6		~~U~~ UJ CCH
75-69-4-------	Trichlorofluoromethane	0.82	8.6		~~U~~
75-01-4-------	Vinyl chloride	0.95	8.6		~~U~~
1330-20-7-----	Xylene(total)	0.60	8.6		U

FORM I VOA

JW
4/21/09

FORM 1
VOLATILE ORGANICS ANALYSIS DATA SHEET

CLIENT SAMPLE NO. 24

MR08-IS22
9D-6-7-09A

Lab Name: EMPIRICAL LABS Contract: CH2MHILL

Lab Code: NA Case No.: NA SAS No.: NA SDG No.: LEJEUNE044

Matrix: (soil/water) SOIL Lab Sample ID: 0901064-24

Sample wt/vol: 4.7 (g/mL) G Lab File ID: 0106424A

Level: (low/med) LOW Date Sampled: 01/08/09 15:45

% Moisture: not dec. 11 Date Analyzed: 01/20/09 20:02

GC Column: RTX-VRX ID: 0.25 (mm) Dilution Factor: 1.0

Soil Extract Volume:_____(uL) Soil Aliquot Volume: _____(uL)

CONCENTRATION UNITS: (ug/L or ug/Kg) UG/KG

CAS NO.	COMPOUND	MDL	RL	CONC	Q
67-64-1	Acetone	2.4	12	24	~~B~~ U B1
71-43-2	Benzene	0.56	12		U
75-27-4	Bromodichloromethane	0.36	12		~~U~~ UJ CC
75-25-2	Bromoform	1.2	12		U
74-83-9	Bromomethane	0.85	12		~~U~~ UJ CC
78-93-3	2-Butanone	1.7	12		U
75-15-0	Carbon disulfide	1.5	12		U
56-23-5	Carbon tetrachloride	1.0	12		~~U~~ UJ CC
108-90-7	Chlorobenzene	0.40	12		U
75-00-3	Chloroethane	1.3	12		~~U~~ UJ CC
67-66-3	Chloroform	0.65	12		U
74-87-3	Chloromethane	0.62	12		U
110-82-7	Cyclohexane	0.64	12		U
124-48-1	Dibromochloromethane	0.40	12		U
96-12-8	1,2-Dibromo-3-chloropropane	1.4	5.9		U
106-93-4	1,2-Dibromoethane	0.51	12		U
95-50-1	1,2-Dichlorobenzene	0.44	12		U
541-73-1	1,3-Dichlorobenzene	1.00	12		U
106-46-7	1,4-Dichlorobenzene	0.65	12		U
75-71-8	Dichlorodifluoromethane	1.3	12		~~U~~ UJ CC
75-34-3	1,1-Dichloroethane	0.64	12		U
107-06-2	1,2-Dichloroethane	0.54	12		~~U~~ UJ CC
75-35-4	1,1-Dichloroethene	1.4	12		U
156-59-2	cis-1,2-Dichloroethene	1.4	12		U
156-60-5	trans-1,2-Dichloroethene	1.3	12		U
78-87-5	1,2-Dichloropropane	0.54	12		U
10061-01-5	cis-1,3-Dichloropropene	0.59	12		U
10061-02-6	trans-1,3-Dichloropropene	0.38	12		U
100-41-4	Ethylbenzene	0.89	12		U
591-78-6	2-Hexanone	2.7	12		U
98-82-8	Isopropylbenzene	1.0	12		U
79-20-9	Methyl acetate	1.9	12		U
75-09-2	Methylene chloride	0.74	12	12 UJ	~~4.1 JB~~ CC B
108-87-2	Methyl cyclohexane	0.36	12		U
1634-04-4	Methyl tert-butyl ether	0.38	12		~~U~~ UJ CC
108-10-1	4-Methyl-2-pentanone	0.69	12		U
100-42-5	Styrene	0.42	12		U
79-34-5	1,1,2,2-Tetrachloroethane	0.51	12		U
127-18-4	Tetrachloroethene	1.2	12		U

FORM I VOA

MW
4/2/09

FORM 1
VOLATILE ORGANICS ANALYSIS DATA SHEET

CLIENT SAMPLE NO. 24

MR08-IS22
9D-6-7-09A

Lab Name: EMPIRICAL LABS Contract: CH2MHILL

Lab Code: NA Case No.: NA SAS No.: NA SDG No.: LEJEUNE044

Matrix: (soil/water) SOIL Lab Sample ID: 0901064-24

Sample wt/vol: 4.7 (g/mL) G Lab File ID: 0106424A

Level: (low/med) LOW Date Sampled: 01/08/09 15:45

% Moisture: not dec. 11 Date Analyzed: 01/20/09 20:02

GC Column: RTX-VRX ID: 0.25 (mm) Dilution Factor: 1.0

Soil Extract Volume:_____(uL) Soil Aliquot Volume: _____(uL)

CONCENTRATION UNITS: (ug/L or ug/Kg) UG/KG

CAS NO.	COMPOUND	MDL	RL	CONC	Q
108-88-3	Toluene	1.0	12		U
120-82-1	1,2,4-Trichlorobenzene	0.21	12		U
71-55-6	1,1,1-Trichloroethane	1.1	12		~~U~~ UJ CCH
79-00-5	1,1,2-Trichloroethane	0.42	12		U
79-01-6	Trichloroethene	1.0	12		U
76-13-1	Trichlorotrifluoroethane	0.65	12		~~U~~ UJ CCH
75-69-4	Trichlorofluoromethane	1.1	12		U
75-01-4	Vinyl chloride	1.3	12		U
1330-20-7	Xylene(total)	0.83	12		U

AW
4/21/09

FORM 1
VOLATILE ORGANICS ANALYSIS DATA SHEET

CLIENT SAMPLE NO. 25

MR08-SS227-09A

Lab Name: EMPIRICAL LABS Contract: CH2MHILL

Lab Code: NA Case No.: NA SAS No.: NA SDG No.: LEJEUNE044

Matrix: (soil/water) SOIL Lab Sample ID: 0901064-25

Sample wt/vol: 3.1 (g/mL) G Lab File ID: 0106425B

Level: (low/med) LOW Date Sampled: 01/08/09 16:10

% Moisture: not dec. 13 Date Analyzed: 01/21/09 23:03

GC Column: RTX-VRX ID: 0.25 (mm) Dilution Factor: 1.0

Soil Extract Volume:_____(uL) Soil Aliquot Volume: _____(uL)

CONCENTRATION UNITS: (ug/L or ug/Kg) UG/KG

CAS NO.	COMPOUND	MDL	RL	CONC	Q
67-64-1	Acetone	3.7	18	210	~~B~~
71-43-2	Benzene	0.87	18	2.0	J
75-27-4	Bromodichloromethane	0.56	18		U
75-25-2	Bromoform	1.8	18		U
74-83-9	Bromomethane	1.3	18		U
78-93-3	2-Butanone	2.6	18	37	~~X~~ J CCH
75-15-0	Carbon disulfide	2.4	18	8.7	J
56-23-5	Carbon tetrachloride	1.6	18		U
108-90-7	Chlorobenzene	0.63	18		U
75-00-3	Chloroethane	2.0	18		U
67-66-3	Chloroform	1.0	18		U
74-87-3	Chloromethane	0.96	18		U
110-82-7	Cyclohexane	1.0	18		U
124-48-1	Dibromochloromethane	0.63	18		U
96-12-8	1,2-Dibromo-3-chloropropane	2.2	9.3		U
106-93-4	1,2-Dibromoethane	0.80	18		U
95-50-1	1,2-Dichlorobenzene	0.68	18		U
541-73-1	1,3-Dichlorobenzene	1.6	18		U
106-46-7	1,4-Dichlorobenzene	1.0	18		U
75-71-8	Dichlorodifluoromethane	2.0	18		U
75-34-3	1,1-Dichloroethane	1.0	18		U
107-06-2	1,2-Dichloroethane	0.85	18		U
75-35-4	1,1-Dichloroethene	2.2	18		U
156-59-2	cis-1,2-Dichloroethene	2.2	18		U
156-60-5	trans-1,2-Dichloroethene	2.0	18		U
78-87-5	1,2-Dichloropropane	0.85	18		U
10061-01-5	cis-1,3-Dichloropropene	0.93	18		U
10061-02-6	trans-1,3-Dichloropropene	0.59	18		U
100-41-4	Ethylbenzene	1.4	18	1.8	J
591-78-6	2-Hexanone	4.3	18		U
98-82-8	Isopropylbenzene	1.6	18		U
79-20-9	Methyl acetate	3.0	18		U
75-09-2	Methylene chloride	1.1	18	18 J	~~4.6~~ ~~JB~~ CCH B
108-87-2	Methyl cyclohexane	0.56	18	1.1	J
1634-04-4	Methyl tert-butyl ether	0.59	18		U
108-10-1	4-Methyl-2-pentanone	1.1	18		U
100-42-5	Styrene	0.65	18		U
79-34-5	1,1,2,2-Tetrachloroethane	0.80	18		U
127-18-4	Tetrachloroethene	1.8	18		U

LEW 4/2/09

FORM 1
VOLATILE ORGANICS ANALYSIS DATA SHEET

CLIENT SAMPLE NO. 25

MR08-SS227-09A

Lab Name: EMPIRICAL LABS Contract: CH2MHILL

Lab Code: NA Case No.: NA SAS No.: NA SDG No.: LEJEUNE044

Matrix: (soil/water) SOIL Lab Sample ID: 0901064-25

Sample wt/vol: 3.1 (g/mL) G Lab File ID: 0106425B

Level: (low/med) LOW Date Sampled: 01/08/09 16:10

% Moisture: not dec. 13 Date Analyzed: 01/21/09 23:03

GC Column: RTX-VRX ID: 0.25 (mm) Dilution Factor: 1.0

Soil Extract Volume:_____(uL) Soil Aliquot Volume: _____(uL)

CONCENTRATION UNITS: (ug/L or ug/Kg) UG/KG

CAS NO.	COMPOUND	MDL	RL	CONC	Q
108-88-3	Toluene	1.6	18	18U ~~2.3~~	~~J~~ BL
120-82-1	1,2,4-Trichlorobenzene	0.33	18		U
71-55-6	1,1,1-Trichloroethane	1.7	18		U
79-00-5	1,1,2-Trichloroethane	0.65	18		U
79-01-6	Trichloroethene	1.6	18		U
76-13-1	Trichlorotrifluoroethane	1.0	18		U
75-69-4	Trichlorofluoromethane	1.8	18		U
75-01-4	Vinyl chloride	2.0	18		~~U~~ UJ CA
1330-20-7	Xylene(total)	1.3	18		U

FORM I VOA

MW
4/21/09

FORM 1
VOLATILE ORGANICS ANALYSIS DATA SHEET

CLIENT SAMPLE NO. 2e

MR08-IS22
7-6-7-09A

Lab Name: EMPIRICAL LABS Contract: CH2MHILL

Lab Code: NA Case No.: NA SAS No.: NA SDG No.: LEJEUNE044

Matrix: (soil/water) SOIL Lab Sample ID: 0901064-26

Sample wt/vol: 3.3 (g/mL) G Lab File ID: 0106426B

Level: (low/med) LOW Date Sampled: 01/08/09 16:30

% Moisture: not dec. 8 Date Analyzed: 01/21/09 23:34

GC Column: RTX-VRX ID: 0.25 (mm) Dilution Factor: 1.0

Soil Extract Volume:_____(uL) Soil Aliquot Volume: _____(uL)

CONCENTRATION UNITS: (ug/L or ug/Kg) UG/KG

CAS NO.	COMPOUND	MDL	RL	CONC	Q
67-64-1	Acetone	3.3	17	17	~~B~~ U B
71-43-2	Benzene	0.78	17		U
75-27-4	Bromodichloromethane	0.50	17		U
75-25-2	Bromoform	1.7	17		U
74-83-9	Bromomethane	1.2	17		U
78-93-3	2-Butanone	2.3	17		~~U~~ UJ CU
75-15-0	Carbon disulfide	2.2	17		U
56-23-5	Carbon tetrachloride	1.5	17		U
108-90-7	Chlorobenzene	0.57	17		U
75-00-3	Chloroethane	1.8	17		U
67-66-3	Chloroform	0.92	17		U
74-87-3	Chloromethane	0.87	17		U
110-82-7	Cyclohexane	0.90	17		U
124-48-1	Dibromochloromethane	0.57	17		U
96-12-8	1,2-Dibromo-3-chloropropane	2.0	8.3		U
106-93-4	1,2-Dibromoethane	0.72	17		U
95-50-1	1,2-Dichlorobenzene	0.62	17		U
541-73-1	1,3-Dichlorobenzene	1.4	17		U
106-46-7	1,4-Dichlorobenzene	0.92	17		U
75-71-8	Dichlorodifluoromethane	1.8	17		U
75-34-3	1,1-Dichloroethane	0.90	17		U
107-06-2	1,2-Dichloroethane	0.77	17		U
75-35-4	1,1-Dichloroethene	2.0	17		U
156-59-2	cis-1,2-Dichloroethene	2.0	17		U
156-60-5	trans-1,2-Dichloroethene	1.8	17		U
78-87-5	1,2-Dichloropropane	0.77	17		U
10061-01-5	cis-1,3-Dichloropropene	0.83	17		U
10061-02-6	trans-1,3-Dichloropropene	0.53	17		U
100-41-4	Ethylbenzene	1.2	17		U
591-78-6	2-Hexanone	3.8	17		U
98-82-8	Isopropylbenzene	1.5	17		U
79-20-9	Methyl acetate	2.7	17		U
75-09-2	Methylene chloride	1.0	17	17UJ ~~4.6~~	JB CU B
108-87-2	Methyl cyclohexane	0.50	17		U
1634-04-4	Methyl tert-butyl ether	0.53	17		U
108-10-1	4-Methyl-2-pentanone	0.97	17		U
100-42-5	Styrene	0.58	17		U
79-34-5	1,1,2,2-Tetrachloroethane	0.72	17		U
127-18-4	Tetrachloroethene	1.6	17		U

FORM I VOA

gw
4/2/09

FORM 1
VOLATILE ORGANICS ANALYSIS DATA SHEET

CLIENT SAMPLE NO. 26

MR08-IS22
7-6-7-09A

Lab Name: EMPIRICAL LABS Contract: CH2MHILL

Lab Code: NA Case No.: NA SAS No.: NA SDG No.: LEJEUNE044

Matrix: (soil/water) SOIL Lab Sample ID: 0901064-26

Sample wt/vol: 3.3 (g/mL) G Lab File ID: 0106426B

Level: (low/med) LOW Date Sampled: 01/08/09 16:30

% Moisture: not dec. 8 Date Analyzed: 01/21/09 23:34

GC Column: RTX-VRX ID: 0.25 (mm) Dilution Factor: 1.0

Soil Extract Volume:_____(uL) Soil Aliquot Volume: _____(uL)

CONCENTRATION UNITS: (ug/L or ug/Kg) UG/KG

CAS NO.	COMPOUND	MDL	RL	CONC	Q
108-88-3	Toluene	1.4	17		U
120-82-1	1,2,4-Trichlorobenzene	0.30	17		U
71-55-6	1,1,1-Trichloroethane	1.5	17		U
79-00-5	1,1,2-Trichloroethane	0.58	17		U
79-01-6	Trichloroethene	1.4	17		U
76-13-1	Trichlorotrifluoroethane	0.92	17		U
75-69-4	Trichlorofluoromethane	1.6	17		U
75-01-4	Vinyl chloride	1.8	17		~~U~~ UJ CH
1330-20-7	Xylene(total)	1.2	17		U

FORM I VOA

gcj
4/2/09

FORM 1
VOLATILE ORGANICS ANALYSIS DATA SHEET

CLIENT SAMPLE NO. 27

MR08-SS209-09A

Lab Name: EMPIRICAL LABS Contract: CH2MHILL

Lab Code: NA Case No.: NA SAS No.: NA SDG No.: LEJEUNE044

Matrix: (soil/water) SOIL Lab Sample ID: 0901064-27

Sample wt/vol: 6.1 (g/mL) G Lab File ID: 0106427A

Level: (low/med) LOW Date Sampled: 01/08/09 16:35

% Moisture: not dec. 9 Date Analyzed: 01/21/09 06:57

GC Column: RTX-VRX ID: 0.25 (mm) Dilution Factor: 1.0

Soil Extract Volume:_____(uL) Soil Aliquot Volume: _____(uL)

CONCENTRATION UNITS: (ug/L or ug/Kg) UG/KG

CAS NO.	COMPOUND	MDL	RL	CONC	Q
67-64-1	Acetone	1.8	9.0	69	~~X~~ J SS
71-43-2	Benzene	0.42	9.0		U
75-27-4	Bromodichloromethane	0.27	9.0		~~U~~ UJ CCH
75-25-2	Bromoform	0.90	9.0		U
74-83-9	Bromomethane	0.65	9.0		~~U~~ UJ CCH
78-93-3	2-Butanone	1.3	9.0		U
75-15-0	Carbon disulfide	1.2	9.0	1.3	~~J~~ J SS
56-23-5	Carbon tetrachloride	0.79	9.0		~~U~~ UJ CCH
108-90-7	Chlorobenzene	0.31	9.0		~~U~~ ↓
75-00-3	Chloroethane	0.99	9.0		~~U~~ ↓
67-66-3	Chloroform	0.50	9.0		~~U~~ UJ CCH
74-87-3	Chloromethane	0.47	9.0		~~U~~ UJ CCH
110-82-7	Cyclohexane	0.49	9.0		U
124-48-1	Dibromochloromethane	0.31	9.0		U
96-12-8	1,2-Dibromo-3-chloropropane	1.1	4.5		U
106-93-4	1,2-Dibromoethane	0.39	9.0		U~~X~~
95-50-1	1,2-Dichlorobenzene	0.33	9.0		U
541-73-1	1,3-Dichlorobenzene	0.76	9.0		U
106-46-7	1,4-Dichlorobenzene	0.50	9.0		U
75-71-8	Dichlorodifluoromethane	0.99	9.0		~~U~~ UJ CCH
75-34-3	1,1-Dichloroethane	0.49	9.0		~~U~~ ↓
107-06-2	1,2-Dichloroethane	0.42	9.0		~~U~~ ↓
75-35-4	1,1-Dichloroethene	1.1	9.0		U
156-59-2	cis-1,2-Dichloroethene	1.1	9.0		U
156-60-5	trans-1,2-Dichloroethene	0.99	9.0		U
78-87-5	1,2-Dichloropropane	0.42	9.0		U
10061-01-5	cis-1,3-Dichloropropene	0.45	9.0		U
10061-02-6	trans-1,3-Dichloropropene	0.29	9.0		U
100-41-4	Ethylbenzene	0.68	9.0		U
591-78-6	2-Hexanone	2.1	9.0		U~~X~~
98-82-8	Isopropylbenzene	0.79	9.0		U
79-20-9	Methyl acetate	1.4	9.0		~~U~~ UJ CCH
75-09-2	Methylene chloride	0.56	9.0	9.6	~~UJ 3.3 JB~~ UJ CCH B
108-87-2	Methyl cyclohexane	0.27	9.0		U
1634-04-4	Methyl tert-butyl ether	0.29	9.0		~~U~~ UJ CCH
108-10-1	4-Methyl-2-pentanone	0.52	9.0	0.72	~~J~~ J SS
100-42-5	Styrene	0.32	9.0		U~~X~~
79-34-5	1,1,2,2-Tetrachloroethane	0.39	9.0		U
127-18-4	Tetrachloroethene	0.88	9.0		~~U~~ UJ CCH

LWJ
4/2/09

FORM 1
VOLATILE ORGANICS ANALYSIS DATA SHEET

CLIENT SAMPLE NO. 27

MR08-SS209-09A

Lab Name: EMPIRICAL LABS Contract: CH2MHILL

Lab Code: NA Case No.: NA SAS No.: NA SDG No.: LEJEUNE044

Matrix: (soil/water) SOIL Lab Sample ID: 0901064-27

Sample wt/vol: 6.1 (g/mL) G Lab File ID: 0106427A

Level: (low/med) LOW Date Sampled: 01/08/09 16:35

% Moisture: not dec. 9 Date Analyzed: 01/21/09 06:57

GC Column: RTX-VRX ID: 0.25 (mm) Dilution Factor: 1.0

Soil Extract Volume:_____(uL) Soil Aliquot Volume: _____(uL)

CONCENTRATION UNITS: (ug/L or ug/Kg) UG/KG

CAS NO.	COMPOUND	MDL	RL	CONC	Q
108-88-3	Toluene	0.78	9.0	9.0 ~~1.5~~	~~J~~ CCH
120-82-1	1,2,4-Trichlorobenzene	0.16	9.0		U
71-55-6	1,1,1-Trichloroethane	0.81	9.0		~~U~~ UJ CCH
79-00-5	1,1,2-Trichloroethane	0.32	9.0		U
79-01-6	Trichloroethene	0.77	9.0		U
76-13-1	Trichlorotrifluoroethane	0.50	9.0		~~U~~ UJ CCH
75-69-4	Trichlorofluoromethane	0.86	9.0		~~U~~ UJ CCH
75-01-4	Vinyl chloride	0.99	9.0		~~U~~ UJ CCH
1330-20-7	Xylene(total)	0.63	9.0	2.3	~~J~~ J SSH

FORM I VOA

MW
4/21/09

FORM 1
VOLATILE ORGANICS ANALYSIS DATA SHEET

CLIENT SAMPLE NO. 28

MR08-SS209D-09A

Lab Name: EMPIRICAL LABS Contract: CH2MHILL

Lab Code: NA Case No.: NA SAS No.: NA SDG No.: LEJEUNE044

Matrix: (soil/water) SOIL Lab Sample ID: 0901064-28

Sample wt/vol: 4.2 (g/mL) G Lab File ID: 0106428A

Level: (low/med) LOW Date Sampled: 01/08/09 16:45

% Moisture: not dec. 9 Date Analyzed: 01/21/09 07:36

GC Column: RTX-VRX ID: 0.25 (mm) Dilution Factor: 1.0

Soil Extract Volume:_____(uL) Soil Aliquot Volume: _____(uL)

CONCENTRATION UNITS: (ug/L or ug/Kg) UG/KG

CAS NO.	COMPOUND	MDL	RL	CONC	Q
67-64-1	Acetone	2.6	13	130	~~X~~ J SS
71-43-2	Benzene	0.62	13		U
75-27-4	Bromodichloromethane	0.40	13		~~U~~ UJ CCH
75-25-2	Bromoform	1.3	13		U
74-83-9	Bromomethane	0.95	13		~~U~~ UJ CCH
78-93-3	2-Butanone	1.8	13	3.0	~~J~~ J SS
75-15-0	Carbon disulfide	1.7	13		U UJ CCH
56-23-5	Carbon tetrachloride	1.2	13		U
108-90-7	Chlorobenzene	0.45	13		UY
75-00-3	Chloroethane	1.4	13		U
67-66-3	Chloroform	0.72	13		U
74-87-3	Chloromethane	0.68	13		U
110-82-7	Cyclohexane	0.71	13		U
124-48-1	Dibromochloromethane	0.45	13		U
96-12-8	1,2-Dibromo-3-chloropropane	1.6	6.6		U
106-93-4	1,2-Dibromoethane	0.57	13		UY
95-50-1	1,2-Dichlorobenzene	0.49	13		U
541-73-1	1,3-Dichlorobenzene	1.1	13		U
106-46-7	1,4-Dichlorobenzene	0.72	13		U
75-71-8	Dichlorodifluoromethane	1.4	13		U UJ CCH
75-34-3	1,1-Dichloroethane	0.71	13		U
107-06-2	1,2-Dichloroethane	0.61	13		U
75-35-4	1,1-Dichloroethene	1.6	13		U
156-59-2	cis-1,2-Dichloroethene	1.6	13		U
156-60-5	trans-1,2-Dichloroethene	1.4	13		U
78-87-5	1,2-Dichloropropane	0.61	13		U
10061-01-5	cis-1,3-Dichloropropene	0.66	13		U
10061-02-6	trans-1,3-Dichloropropene	0.42	13		U
100-41-4	Ethylbenzene	0.99	13	1.3	~~J~~ J SS
591-78-6	2-Hexanone	3.0	13		UY
98-82-8	Isopropylbenzene	1.2	13		U
79-20-9	Methyl acetate	2.1	13		~~U~~ UJ CC
75-09-2	Methylene chloride	0.82	13	13UJ ~~4.6~~	~~JB~~ CCH
108-87-2	Methyl cyclohexane	0.40	13		U
1634-04-4	Methyl tert-butyl ether	0.42	13		~~U~~ UJ CC
108-10-1	4-Methyl-2-pentanone	0.76	13		U
100-42-5	Styrene	0.46	13		UY
79-34-5	1,1,2,2-Tetrachloroethane	0.57	13		U
127-18-4	Tetrachloroethene	1.3	13		~~UY~~ UJ CC

FORM I VOA

Revised 2/15/09

KW
4/2/09

FORM 1
VOLATILE ORGANICS ANALYSIS DATA SHEET

CLIENT SAMPLE NO. 28

MR08-SS209D-09A

Lab Name: EMPIRICAL LABS Contract: CH2MHILL

Lab Code: NA Case No.: NA SAS No.: NA SDG No.: LEJEUNE044

Matrix: (soil/water) SOIL Lab Sample ID: 0901064-28

Sample wt/vol: 4.2 (g/mL) G Lab File ID: 0106428A

Level: (low/med) LOW Date Sampled: 01/08/09 16:45

% Moisture: not dec. 9 Date Analyzed: 01/21/09 07:36

GC Column: RTX-VRX ID: 0.25 (mm) Dilution Factor: 1.0

Soil Extract Volume:_____(uL) Soil Aliquot Volume: _____(uL)

CONCENTRATION UNITS: (ug/L or ug/Kg) UG/KG

CAS NO.	COMPOUND	MDL	RL	CONC	Q
108-88-3	Toluene	1.1	13	13 UJ ~~1.4~~	~~J~~ CCH B
120-82-1	1,2,4-Trichlorobenzene	0.24	13		U
71-55-6	1,1,1-Trichloroethane	1.2	13		~~U~~ UJ CCH
79-00-5	1,1,2-Trichloroethane	0.46	13		U
79-01-6	Trichloroethene	1.1	13		U
76-13-1	Trichlorotrifluoroethane	0.72	13		~~U~~ UJ CCH
75-69-4	Trichlorofluoromethane	1.2	13		U
75-01-4	Vinyl chloride	1.4	13		U
1330-20-7	Xylene(total)	0.92	13	9.5	~~J~~ J SSH

FORM I VOA

MW
4/2/09

FORM 1
VOLATILE ORGANICS ANALYSIS DATA SHEET

CLIENT SAMPLE NO. 29

MR08-EB01
010809-SS

Lab Name: EMPIRICAL LABS Contract: CH2MHILL

Lab Code: NA Case No.: NA SAS No.: NA SDG No.: LEJEUNE044

Matrix: (soil/water) WATER Lab Sample ID: 0901064-29

Sample wt/vol: 5.000 (g/mL) ML Lab File ID: 0106429

Level: (low/med) LOW Date Sampled: 01/08/09 09:30

% Moisture: not dec. _____ Date Analyzed: 01/15/09 04:29

GC Column: RTX-VRX ID: 0.25 (mm) Dilution Factor: 1.0

Soil Extract Volume:_____(uL) Soil Aliquot Volume: _____(uL)

CONCENTRATION UNITS: (ug/L or ug/Kg) UG/L

CAS NO.	COMPOUND	MDL	RL	CONC	Q
67-64-1	Acetone	0.84	2.5		U
71-43-2	Benzene	0.11	1.0		U
75-27-4	Bromodichloromethane	0.10	1.0		U
75-25-2	Bromoform	0.10	1.0		U
74-83-9	Bromomethane	0.32	1.0		U
78-93-3	2-Butanone	1.0	3.0		U
75-15-0	Carbon disulfide	0.13	1.0		U
56-23-5	Carbon tetrachloride	0.15	1.0		U
108-90-7	Chlorobenzene	0.10	1.0	0.23	J
75-00-3	Chloroethane	0.18	1.0		U
67-66-3	Chloroform	0.11	1.0		U
74-87-3	Chloromethane	0.29	1.0		U
110-82-7	Cyclohexane	0.20	1.0		U
124-48-1	Dibromochloromethane	0.10	1.0		U
96-12-8	1,2-Dibromo-3-chloropropane	0.11	1.0		U
106-93-4	1,2-Dibromoethane	0.10	1.0		U
95-50-1	1,2-Dichlorobenzene	0.10	1.0		U
541-73-1	1,3-Dichlorobenzene	0.13	1.0		U
106-46-7	1,4-Dichlorobenzene	0.10	1.0		U
75-71-8	Dichlorodifluoromethane	0.22	1.0		U
75-34-3	1,1-Dichloroethane	0.12	1.0		U
107-06-2	1,2-Dichloroethane	0.10	1.0		U
75-35-4	1,1-Dichloroethene	0.15	1.0		U
156-59-2	cis-1,2-Dichloroethene	0.13	1.0		U
156-60-5	trans-1,2-Dichloroethene	0.13	1.0		U
78-87-5	1,2-Dichloropropane	0.10	1.0		U
10061-01-5	cis-1,3-Dichloropropene	0.11	1.0		U
10061-02-6	trans-1,3-Dichloropropene	0.10	1.0		U
100-41-4	Ethylbenzene	0.13	1.0		U
591-78-6	2-Hexanone	0.30	1.0		U
98-82-8	Isopropylbenzene	0.15	1.0		U
79-20-9	Methyl acetate	0.30	1.0		U
75-09-2	Methylene chloride	0.14	1.0	1.04 0.95	~~JB~~ B
108-87-2	Methyl cyclohexane	0.17	1.0		U
1634-04-4	Methyl tert-butyl ether	0.10	1.0		U
108-10-1	4-Methyl-2-pentanone	0.29	1.0		U
100-42-5	Styrene	0.10	1.0		U
79-34-5	1,1,2,2-Tetrachloroethane	0.10	1.0		U
127-18-4	Tetrachloroethene	0.15	1.0		U

MW
4/2/09

FORM 1
VOLATILE ORGANICS ANALYSIS DATA SHEET

CLIENT SAMPLE NO. 29

MR08-EB01
010809-SS

Lab Name: EMPIRICAL LABS Contract: CH2MHILL

Lab Code: NA Case No.: NA SAS No.: NA SDG No.: LEJEUNE044

Matrix: (soil/water) WATER Lab Sample ID: 0901064-29

Sample wt/vol: 5.000 (g/mL) ML Lab File ID: 0106429

Level: (low/med) LOW Date Sampled: 01/08/09 09:30

% Moisture: not dec. _____ Date Analyzed: 01/15/09 04:29

GC Column: RTX-VRX ID: 0.25 (mm) Dilution Factor: 1.0

Soil Extract Volume:_____(uL) Soil Aliquot Volume: _____(uL)

CONCENTRATION UNITS: (ug/L or ug/Kg) UG/L

CAS NO.	COMPOUND	MDL	RL	CONC	Q
108-88-3	Toluene	0.10	1.0		U
120-82-1	1,2,4-Trichlorobenzene	0.10	1.0		U
71-55-6	1,1,1-Trichloroethane	0.17	1.0		U
79-00-5	1,1,2-Trichloroethane	0.10	1.0		U
79-01-6	Trichloroethene	0.13	1.0		U
76-13-1	Trichlorotrifluoroethane	0.18	1.0		U
75-69-4	Trichlorofluoromethane	0.17	1.0		U
75-01-4	Vinyl chloride	0.18	1.0		U
1330-20-7	Xylene(total)	0.22	1.0		U

JW
4/2/09

FORM 1
VOLATILE ORGANICS ANALYSIS DATA SHEET

CLIENT SAMPLE NO. 30

MR08-TB01010809

Lab Name: EMPIRICAL LABS Contract: CH2MHILL

Lab Code: NA Case No.: NA SAS No.: NA SDG No.: LEJEUNE044

Matrix: (soil/water) WATER Lab Sample ID: 0901064-30

Sample wt/vol: 5.000 (g/mL) ML Lab File ID: 0106430

Level: (low/med) LOW Date Sampled: 01/08/09 10:00

% Moisture: not dec. _____ Date Analyzed: 01/15/09 03:28

GC Column: RTX-VRX ID: 0.25 (mm) Dilution Factor: 1.0

Soil Extract Volume:_____(uL) Soil Aliquot Volume: _____(uL)

CONCENTRATION UNITS: (ug/L or ug/Kg) UG/L

CAS NO.	COMPOUND	MDL	RL	CONC	Q
67-64-1	Acetone	0.84	2.5		U
71-43-2	Benzene	0.11	1.0		U
75-27-4	Bromodichloromethane	0.10	1.0		U
75-25-2	Bromoform	0.10	1.0		U
74-83-9	Bromomethane	0.32	1.0		U
78-93-3	2-Butanone	1.0	3.0		U
75-15-0	Carbon disulfide	0.13	1.0		U
56-23-5	Carbon tetrachloride	0.15	1.0		U
108-90-7	Chlorobenzene	0.10	1.0		U
75-00-3	Chloroethane	0.18	1.0		U
67-66-3	Chloroform	0.11	1.0		U
74-87-3	Chloromethane	0.29	1.0		U
110-82-7	Cyclohexane	0.20	1.0		U
124-48-1	Dibromochloromethane	0.10	1.0		U
96-12-8	1,2-Dibromo-3-chloropropane	0.11	1.0		U
106-93-4	1,2-Dibromoethane	0.10	1.0		U
95-50-1	1,2-Dichlorobenzene	0.10	1.0		U
541-73-1	1,3-Dichlorobenzene	0.13	1.0		U
106-46-7	1,4-Dichlorobenzene	0.10	1.0		U
75-71-8	Dichlorodifluoromethane	0.22	1.0		U
75-34-3	1,1-Dichloroethane	0.12	1.0		U
107-06-2	1,2-Dichloroethane	0.10	1.0		U
75-35-4	1,1-Dichloroethene	0.15	1.0		U
156-59-2	cis-1,2-Dichloroethene	0.13	1.0		U
156-60-5	trans-1,2-Dichloroethene	0.13	1.0		U
78-87-5	1,2-Dichloropropane	0.10	1.0		U
10061-01-5	cis-1,3-Dichloropropene	0.11	1.0		U
10061-02-6	trans-1,3-Dichloropropene	0.10	1.0		U
100-41-4	Ethylbenzene	0.13	1.0		U
591-78-6	2-Hexanone	0.30	1.0		U
98-82-8	Isopropylbenzene	0.15	1.0		U
79-20-9	Methyl acetate	0.30	1.0		U
75-09-2	Methylene chloride	0.14	1.0	1.6	~~B~~ U B
108-87-2	Methyl cyclohexane	0.17	1.0		U
1634-04-4	Methyl tert-butyl ether	0.10	1.0		U
108-10-1	4-Methyl-2-pentanone	0.29	1.0		U
100-42-5	Styrene	0.10	1.0		U
79-34-5	1,1,2,2-Tetrachloroethane	0.10	1.0		U
127-18-4	Tetrachloroethene	0.15	1.0		U

lw
4/2/09

FORM 1
VOLATILE ORGANICS ANALYSIS DATA SHEET

CLIENT SAMPLE NO. 30

MR08-TB01010809

Lab Name: EMPIRICAL LABS Contract: CH2MHILL

Lab Code: NA Case No.: NA SAS No.: NA SDG No.: LEJEUNE044

Matrix: (soil/water) WATER Lab Sample ID: 0901064-30

Sample wt/vol: 5.000 (g/mL) ML Lab File ID: 0106430

Level: (low/med) LOW Date Sampled: 01/08/09 10:00

% Moisture: not dec. _____ Date Analyzed: 01/15/09 03:28

GC Column: RTX-VRX ID: 0.25 (mm) Dilution Factor: 1.0

Soil Extract Volume:_____(uL) Soil Aliquot Volume: _____(uL)

CONCENTRATION UNITS: (ug/L or ug/Kg) UG/L

CAS NO.	COMPOUND	MDL	RL	CONC	Q
108-88-3	Toluene	0.10	1.0		U
120-82-1	1,2,4-Trichlorobenzene	0.10	1.0		U
71-55-6	1,1,1-Trichloroethane	0.17	1.0		U
79-00-5	1,1,2-Trichloroethane	0.10	1.0		U
79-01-6	Trichloroethene	0.13	1.0		U
76-13-1	Trichlorotrifluoroethane	0.18	1.0		U
75-69-4	Trichlorofluoromethane	0.17	1.0		U
75-01-4	Vinyl chloride	0.18	1.0		U
1330-20-7	Xylene(total)	0.22	1.0		U

JWJ
4/7/09

ENVIRONMENTAL
Data Services, Inc.

VOLATILE ORGANIC COMPOUNDS
USEPA Region IV - Level IV Review

Site: MCB Camp Lejeune, TO-09 SDG #: LEJEUNE045

Client: CH2M HILL, Inc., Virginia Beach, Virginia Date: April 2, 2009

Laboratory: Empirical Laboratories, Nashville, Tennessee Reviewer: Nancy Weaver

EDS ID	Client Sample ID	Laboratory Sample ID	Matrix
1	MR08-SS280-09A	0901068-01	Soil
2	MR08-IS280-7-8-09A	0901068-02	Soil
3	MR08-SS275-09A	0901068-03	Soil
4	MR08-IS275-3-4-09A	0901068-04	Soil
5	MR08-SS256-09A	0901068-05	Soil
6	MR08-IS256-3-4-09A	0901068-06	Soil
7	MR08-SS251-09A	0901068-07	Soil
8	MR08-IS251-8-9-09A	0901068-08	Soil
9	MR08-SS232-09A	0901068-09	Soil
10	MR08-IS232-5-6-09A	0901068-10	Soil
11	MR08-SS252-09A	0901068-11	Soil
12	MR08-IS252-6-7-09A	0901068-12	Soil
13	MR08-SS253-09A	0901068-13	Soil
14	MR08-IS253-6-7-09A	0901068-14	Soil
15	MR08-SS231-09A	0901068-15	Soil
16	MR08-IS231-8-9-09A	0901068-16	Soil
17	MR08-SS230-09A-09A	0901068-17	Soil
18	MR08-IS230-8-9-09A	0901068-18	Soil
19	MR08-SS259-09A	0901068-19	Soil
20	MR08-SS259D-09A	0901068-20	Soil
21	MR08-IS259-5-6-09A	0901068-21	Soil
22	MR08-IS259D-5-6-09A	0901068-22	Soil
23	MR08-SS272-09A	0901068-23	Soil
24	MR08-IS272-8-9-09A	0901068-24	Soil
25	MR08-SS283-09A	0901068-25	Soil
26	MR08-IS283-6-7-09A	0901068-26	Soil
27	MR08-EB01011009-SS	0901068-27	Water
28	MR08-FB01011009	0901068-28	Water

The USEPA "Contract Laboratory Program National Functional Guidelines for Organic Data Review," October 1999, and professional judgement were used in evaluating the data in this summary report.

Holding Times - All samples were analyzed within 14 days for preserved water and soil samples.

GC/MS Tuning - All of the BFB tunes in the initial and continuing calibrations met the percent relative abundance criteria.

Initial Calibration - The initial calibrations exhibited acceptable %RSD and mean RRF values.

Continuing Calibration - The continuing calibrations exhibited acceptable %D and RRF values.

Surrogates - All samples exhibited acceptable surrogate recoveries except the following.

Sample ID	Surrogate	%R	Qualifier
4	Dibromofluoromethane	129%	J - positive results
5	Dibromofluoromethane	126%	J - positive results
8	Dibromofluoromethane	127%	None - All ND
14	Dibromofluoromethane	127%	None - All ND
20	Dibromofluoromethane	129%	J - positive results

MS/MSD - A MS/MSD sample was not analyzed from this data package.

Laboratory Control Sample - The LCS samples exhibited acceptable %R values.

Internal Standard (IS) Area Performance - All internal standards met response and retention time (RT) criteria.

Method Blank - The method blanks exhibited the following contamination.

Blank ID	Compound	Conc.	Action Level	Qualifier	Affected Samples
V3BLK0114E	Methylene chloride	0.65 ug/L	6.5 ug/L	U	27, 28
	Trichlorofluoromethane	0.25 ug/L	1.25 ug/L	None	All ND
V5BLK0116	Acetone	4.2 ug/kg	42 ug/kg	U	1, 2, 4-6, 9
	Methylene chloride	2.3 ug/kg	23 ug/kg	U	1-9
V5BLK0116E	Acetone	2.9 ug/kg	29 ug/kg	U	10-12, 14, 15, 18, 21, 22, 24, 26
	Methylene chloride	2.3 ug/kg	23 ug/kg	U	10-26
	1,2,4-Trichlorobenzene	0.20 ug/kg	1.0 ug/kg	None	All ND

Trip, Field, Equipment Blank - Field QC results are summarized below.

Blank ID	Compound	Conc. ug/L	Action Level ug/kg	Qualifier	Affected Samples
MR08-EB0101109-SS	Toluene	21	105	U	3, 13, 17, 19, 20
MR08-FB01011009	Toluene	20	100	None	All ND

Field Duplicates - Field duplicate results are summarized below.

Compound	MR08-SS259-09A ug/kg	MR08-SS259D-09A ug/kg	RPD	Qualifier
Benzene	1.4	1.2	15%	None
2-Butanone	16U	18	NC	None
Carbon disulfide	3.1	4.0	25%	None
Chloroform	0.88	1.2	31%	None
Methylcyclohexane	16 U	0.54	NC	None

Compound	MR08-IS259-5-6-09A ug/kg	MR08-IS259D-5-6-09A ug/kg	RPD	Qualifier
None	ND	ND	-	-

Tentatively Identified Compounds (TICs) - TICs were not reported.

Compound Quantitation - No discrepancies were identified.

FORM 1
VOLATILE ORGANICS ANALYSIS DATA SHEET

CLIENT SAMPLE NO.

MR08-SS280-09A

Lab Name: EMPIRICAL LABS Contract: CH2MHILL

Lab Code: NA Case No.: NA SAS No.: NA SDG No.: LEJEUNE045

Matrix: (soil/water) SOIL Lab Sample ID: 0901068-01

Sample wt/vol: 4.8 (g/mL) G Lab File ID: 0106801A

Level: (low/med) LOW Date Sampled: 01/10/09 08:00

% Moisture: not dec. 7 Date Analyzed: 01/16/09 16:00

GC Column: RTX-VRX ID: 0.25 (mm) Dilution Factor: 1.0

Soil Extract Volume:_____(uL) Soil Aliquot Volume: _____(uL)

CONCENTRATION UNITS: (ug/L or ug/Kg) UG/KG

CAS NO.	COMPOUND	MDL	RL	CONC	Q	
67-64-1	Acetone	2.2	11	16	~~B~~ U	Bl
71-43-2	Benzene	0.53	11		U	
75-27-4	Bromodichloromethane	0.34	11		U	
75-25-2	Bromoform	1.1	11		U	
74-83-9	Bromomethane	0.81	11		U	
78-93-3	2-Butanone	1.6	11		U	
75-15-0	Carbon disulfide	1.4	11		U	
56-23-5	Carbon tetrachloride	0.98	11		U	
108-90-7	Chlorobenzene	0.38	11		U	
75-00-3	Chloroethane	1.2	11		U	
67-66-3	Chloroform	0.62	11		U	
74-87-3	Chloromethane	0.58	11		U	
110-82-7	Cyclohexane	0.60	11		U	
124-48-1	Dibromochloromethane	0.38	11		U	
96-12-8	1,2-Dibromo-3-chloropropane	1.3	5.6		U	
106-93-4	1,2-Dibromoethane	0.48	11		U	
95-50-1	1,2-Dichlorobenzene	0.41	11		U	
541-73-1	1,3-Dichlorobenzene	0.94	11		U	
106-46-7	1,4-Dichlorobenzene	0.62	11		U	
75-71-8	Dichlorodifluoromethane	1.2	11		U	
75-34-3	1,1-Dichloroethane	0.60	11		U	
107-06-2	1,2-Dichloroethane	0.52	11		U	
75-35-4	1,1-Dichloroethene	1.3	11		U	
156-59-2	cis-1,2-Dichloroethene	1.3	11		U	
156-60-5	trans-1,2-Dichloroethene	1.2	11		U	
78-87-5	1,2-Dichloropropane	0.52	11		U	
10061-01-5	cis-1,3-Dichloropropene	0.56	11		U	
10061-02-6	trans-1,3-Dichloropropene	0.36	11		U	
100-41-4	Ethylbenzene	0.84	11		U	
591-78-6	2-Hexanone	2.6	11		U	
98-82-8	Isopropylbenzene	0.98	11		U	
79-20-9	Methyl acetate	1.8	11		U	
75-09-2	Methylene chloride	0.69	11	11	~~2.0 JB~~ U	Bl
108-87-2	Methyl cyclohexane	0.34	11		U	
1634-04-4	Methyl tert-butyl ether	0.36	11		U	
108-10-1	4-Methyl-2-pentanone	0.65	11		U	
100-42-5	Styrene	0.39	11		U	
79-34-5	1,1,2,2-Tetrachloroethane	0.48	11		U	
127-18-4	Tetrachloroethene	1.1	11		U	

lw
4/2/09

FORM 1
VOLATILE ORGANICS ANALYSIS DATA SHEET

CLIENT SAMPLE NO.

MR08-SS280-09A

Lab Name: EMPIRICAL LABS Contract: CH2MHILL

Lab Code: NA Case No.: NA SAS No.: NA SDG No.: LEJEUNE045

Matrix: (soil/water) SOIL Lab Sample ID: 0901068-01

Sample wt/vol: 4.8 (g/mL) G Lab File ID: 0106801A

Level: (low/med) LOW Date Sampled: 01/10/09 08:00

% Moisture: not dec. 7 Date Analyzed: 01/16/09 16:00

GC Column: RTX-VRX ID: 0.25 (mm) Dilution Factor: 1.0

Soil Extract Volume:_____(uL) Soil Aliquot Volume: _____(uL)

CONCENTRATION UNITS: (ug/L or ug/Kg) UG/KG

CAS NO.	COMPOUND	MDL	RL	CONC	Q
108-88-3	Toluene	0.96	11		U
120-82-1	1,2,4-Trichlorobenzene	0.20	11		U
71-55-6	1,1,1-Trichloroethane	1.0	11		U
79-00-5	1,1,2-Trichloroethane	0.39	11		U
79-01-6	Trichloroethene	0.95	11		U
76-13-1	Trichlorotrifluoroethane	0.62	11		U
75-69-4	Trichlorofluoromethane	1.1	11		U
75-01-4	Vinyl chloride	1.2	11		U
1330-20-7	Xylene(total)	0.78	11		U

lew
4/2/09

FORM 1
VOLATILE ORGANICS ANALYSIS DATA SHEET

CLIENT SAMPLE NO. 2

MR08-IS28
0-7-8-09A

Lab Name: EMPIRICAL LABS Contract: CH2MHILL

Lab Code: NA Case No.: NA SAS No.: NA SDG No.: LEJEUNE045

Matrix: (soil/water) SOIL Lab Sample ID: 0901068-02

Sample wt/vol: 4.2 (g/mL) G Lab File ID: 0106802A

Level: (low/med) LOW Date Sampled: 01/10/09 08:25

% Moisture: not dec. 13 Date Analyzed: 01/16/09 16:31

GC Column: RTX-VRX ID: 0.25 (mm) Dilution Factor: 1.0

Soil Extract Volume:_____(uL) Soil Aliquot Volume: _____(uL)

CONCENTRATION UNITS: (ug/L or ug/Kg) UG/KG

CAS NO.	COMPOUND	MDL	RL	CONC	Q
67-64-1	Acetone	2.7	14	14u ~~6.2~~ ~~JB~~	BU
71-43-2	Benzene	0.64	14		U
75-27-4	Bromodichloromethane	0.41	14		U
75-25-2	Bromoform	1.4	14		U
74-83-9	Bromomethane	0.98	14		U
78-93-3	2-Butanone	1.9	14		U
75-15-0	Carbon disulfide	1.8	14		U
56-23-5	Carbon tetrachloride	1.2	14		U
108-90-7	Chlorobenzene	0.46	14		U
75-00-3	Chloroethane	1.5	14		U
67-66-3	Chloroform	0.75	14		U
74-87-3	Chloromethane	0.71	14		U
110-82-7	Cyclohexane	0.74	14		U
124-48-1	Dibromochloromethane	0.46	14		U
96-12-8	1,2-Dibromo-3-chloropropane	1.6	6.8		U
106-93-4	1,2-Dibromoethane	0.58	14		U
95-50-1	1,2-Dichlorobenzene	0.50	14		U
541-73-1	1,3-Dichlorobenzene	1.1	14		U
106-46-7	1,4-Dichlorobenzene	0.75	14		U
75-71-8	Dichlorodifluoromethane	1.5	14		U
75-34-3	1,1-Dichloroethane	0.74	14		U
107-06-2	1,2-Dichloroethane	0.63	14		U
75-35-4	1,1-Dichloroethene	1.6	14		U
156-59-2	cis-1,2-Dichloroethene	1.6	14		U
156-60-5	trans-1,2-Dichloroethene	1.5	14		U
78-87-5	1,2-Dichloropropane	0.63	14		U
10061-01-5	cis-1,3-Dichloropropene	0.68	14		U
10061-02-6	trans-1,3-Dichloropropene	0.44	14		U
100-41-4	Ethylbenzene	1.0	14		U
591-78-6	2-Hexanone	3.1	14		U
98-82-8	Isopropylbenzene	1.2	14		U
79-20-9	Methyl acetate	2.2	14		U
75-09-2	Methylene chloride	0.84	14	14u ~~3.3~~ ~~JB~~	B
108-87-2	Methyl cyclohexane	0.41	14		U
1634-04-4	Methyl tert-butyl ether	0.44	14		U
108-10-1	4-Methyl-2-pentanone	0.79	14		U
100-42-5	Styrene	0.48	14		U
79-34-5	1,1,2,2-Tetrachloroethane	0.58	14		U
127-18-4	Tetrachloroethene	1.3	14		U

fuw
4/12/09

FORM 1
VOLATILE ORGANICS ANALYSIS DATA SHEET

CLIENT SAMPLE NO. 2

MR08-IS28
0-7-8-09A

Lab Name: EMPIRICAL LABS Contract: CH2MHILL

Lab Code: NA Case No.: NA SAS No.: NA SDG No.: LEJEUNE045

Matrix: (soil/water) SOIL Lab Sample ID: 0901068-02

Sample wt/vol: 4.2 (g/mL) G Lab File ID: 0106802A

Level: (low/med) LOW Date Sampled: 01/10/09 08:25

% Moisture: not dec. 13 Date Analyzed: 01/16/09 16:31

GC Column: RTX-VRX ID: 0.25 (mm) Dilution Factor: 1.0

Soil Extract Volume:_____(uL) Soil Aliquot Volume: _____(uL)

CONCENTRATION UNITS: (ug/L or ug/Kg) UG/KG

CAS NO.	COMPOUND	MDL	RL	CONC	Q
108-88-3	Toluene	1.2	14		U
120-82-1	1,2,4-Trichlorobenzene	0.24	14		U
71-55-6	1,1,1-Trichloroethane	1.2	14		U
79-00-5	1,1,2-Trichloroethane	0.48	14		U
79-01-6	Trichloroethene	1.2	14		U
76-13-1	Trichlorotrifluoroethane	0.75	14		U
75-69-4	Trichlorofluoromethane	1.3	14		U
75-01-4	Vinyl chloride	1.5	14		U
1330-20-7	Xylene(total)	0.95	14		U

lew
4/2/09

FORM 1
VOLATILE ORGANICS ANALYSIS DATA SHEET

CLIENT SAMPLE NO. 3

MR08-SS275-09A

Lab Name: EMPIRICAL LABS Contract: CH2MHILL

Lab Code: NA Case No.: NA SAS No.: NA SDG No.: LEJEUNE045

Matrix: (soil/water) SOIL Lab Sample ID: 0901068-03

Sample wt/vol: 4.6 (g/mL) G Lab File ID: 0106803A

Level: (low/med) LOW Date Sampled: 01/10/09 08:40

% Moisture: not dec. 10 Date Analyzed: 01/16/09 17:02

GC Column: RTX-VRX ID: 0.25 (mm) Dilution Factor: 1.0

Soil Extract Volume:_____(uL) Soil Aliquot Volume: _____(uL)

CONCENTRATION UNITS: (ug/L or ug/Kg) UG/KG

CAS NO.	COMPOUND	MDL	RL	CONC	Q
67-64-1	Acetone	2.4	12	43	~~B~~
71-43-2	Benzene	0.56	12	0.70	U
75-27-4	Bromodichloromethane	0.36	12		U
75-25-2	Bromoform	1.2	12		U
74-83-9	Bromomethane	0.86	12		U
78-93-3	2-Butanone	1.7	12	9.4	J
75-15-0	Carbon disulfide	1.6	12	6.4	J
56-23-5	Carbon tetrachloride	1.0	12		U
108-90-7	Chlorobenzene	0.41	12		U
75-00-3	Chloroethane	1.3	12		U
67-66-3	Chloroform	0.66	12		U
74-87-3	Chloromethane	0.62	12		U
110-82-7	Cyclohexane	0.65	12		U
124-48-1	Dibromochloromethane	0.41	12		U
96-12-8	1,2-Dibromo-3-chloropropane	1.4	6.0		U
106-93-4	1,2-Dibromoethane	0.52	12		U
95-50-1	1,2-Dichlorobenzene	0.44	12		U
541-73-1	1,3-Dichlorobenzene	1.0	12		U
106-46-7	1,4-Dichlorobenzene	0.66	12		U
75-71-8	Dichlorodifluoromethane	1.3	12		U
75-34-3	1,1-Dichloroethane	0.65	12		U
107-06-2	1,2-Dichloroethane	0.55	12		U
75-35-4	1,1-Dichloroethene	1.4	12		U
156-59-2	cis-1,2-Dichloroethene	1.4	12		U
156-60-5	trans-1,2-Dichloroethene	1.3	12		U
78-87-5	1,2-Dichloropropane	0.55	12		U
10061-01-5	cis-1,3-Dichloropropene	0.60	12		U
10061-02-6	trans-1,3-Dichloropropene	0.38	12		U
100-41-4	Ethylbenzene	0.90	12		U
591-78-6	2-Hexanone	2.8	12		U
98-82-8	Isopropylbenzene	1.0	12		U
79-20-9	Methyl acetate	1.9	12		U
75-09-2	Methylene chloride	0.74	12	12U ~~2.5~~	~~JB~~ B
108-87-2	Methyl cyclohexane	0.36	12	0.63	J
1634-04-4	Methyl tert-butyl ether	0.38	12		U
108-10-1	4-Methyl-2-pentanone	0.70	12		U
100-42-5	Styrene	0.42	12		U
79-34-5	1,1,2,2-Tetrachloroethane	0.52	12		U
127-18-4	Tetrachloroethene	1.2	12		U

FORM I VOA

lw
4/2/09

FORM 1
VOLATILE ORGANICS ANALYSIS DATA SHEET

CLIENT SAMPLE NO. 3

MR08-SS275-09A

Lab Name: EMPIRICAL LABS Contract: CH2MHILL

Lab Code: NA Case No.: NA SAS No.: NA SDG No.: LEJEUNE045

Matrix: (soil/water) SOIL Lab Sample ID: 0901068-03

Sample wt/vol: 4.6 (g/mL) G Lab File ID: 0106803A

Level: (low/med) LOW Date Sampled: 01/10/09 08:40

% Moisture: not dec. 10 Date Analyzed: 01/16/09 17:02

GC Column: RTX-VRX ID: 0.25 (mm) Dilution Factor: 1.0

Soil Extract Volume:_____(uL) Soil Aliquot Volume: _____(uL)

CONCENTRATION UNITS: (ug/L or ug/Kg) UG/KG

CAS NO.	COMPOUND	MDL	RL	CONC	Q
108-88-3	Toluene	1.0	12	12u ~~1.1~~	~~J~~ BL
120-82-1	1,2,4-Trichlorobenzene	0.22	12	0.62	J
71-55-6	1,1,1-Trichloroethane	1.1	12		U
79-00-5	1,1,2-Trichloroethane	0.42	12		U
79-01-6	Trichloroethene	1.0	12		U
76-13-1	Trichlorotrifluoroethane	0.66	12		U
75-69-4	Trichlorofluoromethane	1.1	12		U
75-01-4	Vinyl chloride	1.3	12		U
1330-20-7	Xylene(total)	0.84	12		U

fcw
4/12/09

FORM 1
VOLATILE ORGANICS ANALYSIS DATA SHEET

CLIENT SAMPLE NO. 4

MR08-IS27
5-3-4-09A

Lab Name: EMPIRICAL LABS Contract: CH2MHILL

Lab Code: NA Case No.: NA SAS No.: NA SDG No.: LEJEUNE045

Matrix: (soil/water) SOIL Lab Sample ID: 0901068-04

Sample wt/vol: 4.5 (g/mL) G Lab File ID: 0106804A

Level: (low/med) LOW Date Sampled: 01/10/09 09:00

% Moisture: not dec. 13 Date Analyzed: 01/16/09 17:33

GC Column: RTX-VRX ID: 0.25 (mm) Dilution Factor: 1.0

Soil Extract Volume:_____(uL) Soil Aliquot Volume: _____(uL)

CONCENTRATION UNITS: (ug/L or ug/Kg) UG/KG

CAS NO.	COMPOUND	MDL	RL	CONC	Q	
67-64-1	Acetone	2.5	13	20	~~B~~ U	B
71-43-2	Benzene	0.60	13		U	
75-27-4	Bromodichloromethane	0.38	13		U	
75-25-2	Bromoform	1.3	13		U	
74-83-9	Bromomethane	0.91	13		U	
78-93-3	2-Butanone	1.8	13		U	
75-15-0	Carbon disulfide	1.6	13		U	
56-23-5	Carbon tetrachloride	1.1	13		U	
108-90-7	Chlorobenzene	0.43	13		U	
75-00-3	Chloroethane	1.4	13		U	
67-66-3	Chloroform	0.70	13		U	
74-87-3	Chloromethane	0.66	13		U	
110-82-7	Cyclohexane	0.68	13		U	
124-48-1	Dibromochloromethane	0.43	13		U	
96-12-8	1,2-Dibromo-3-chloropropane	1.5	6.3		U	
106-93-4	1,2-Dibromoethane	0.55	13		U	
95-50-1	1,2-Dichlorobenzene	0.47	13		U	
541-73-1	1,3-Dichlorobenzene	1.1	13		U	
106-46-7	1,4-Dichlorobenzene	0.70	13		U	
75-71-8	Dichlorodifluoromethane	1.4	13		U	
75-34-3	1,1-Dichloroethane	0.68	13		U	
107-06-2	1,2-Dichloroethane	0.58	13		U	
75-35-4	1,1-Dichloroethene	1.5	13		U	
156-59-2	cis-1,2-Dichloroethene	1.5	13		U	
156-60-5	trans-1,2-Dichloroethene	1.4	13		U	
78-87-5	1,2-Dichloropropane	0.58	13		U	
10061-01-5	cis-1,3-Dichloropropene	0.63	13		U	
10061-02-6	trans-1,3-Dichloropropene	0.41	13		U	
100-41-4	Ethylbenzene	0.95	13		U	
591-78-6	2-Hexanone	2.9	13		U	
98-82-8	Isopropylbenzene	1.1	13		U	
79-20-9	Methyl acetate	2.0	13		U	
75-09-2	Methylene chloride	0.79	13	13u	3.0 ~~JB~~	B
108-87-2	Methyl cyclohexane	0.38	13		U	
1634-04-4	Methyl tert-butyl ether	0.41	13		U	
108-10-1	4-Methyl-2-pentanone	0.74	13		U	
100-42-5	Styrene	0.44	13		U	
79-34-5	1,1,2,2-Tetrachloroethane	0.55	13		U	
127-18-4	Tetrachloroethene	1.2	13		U	

lw
4/2/09

FORM 1
VOLATILE ORGANICS ANALYSIS DATA SHEET

CLIENT SAMPLE NO. 4

MR08-IS27
5-3-4-09A

Lab Name: EMPIRICAL LABS Contract: CH2MHILL

Lab Code: NA Case No.: NA SAS No.: NA SDG No.: LEJEUNE045

Matrix: (soil/water) SOIL Lab Sample ID: 0901068-04

Sample wt/vol: 4.5 (g/mL) G Lab File ID: 0106804A

Level: (low/med) LOW Date Sampled: 01/10/09 09:00

% Moisture: not dec. 13 Date Analyzed: 01/16/09 17:33

GC Column: RTX-VRX ID: 0.25 (mm) Dilution Factor: 1.0

Soil Extract Volume:_____(uL) Soil Aliquot Volume: _____(uL)

CONCENTRATION UNITS: (ug/L or ug/Kg) UG/KG

CAS NO.	COMPOUND	MDL	RL	CONC	Q
108-88-3------	Toluene	1.1	13		U
120-82-1------	1,2,4-Trichlorobenzene	0.23	13	0.63	~~J~~ J SSI
71-55-6-------	1,1,1-Trichloroethane	1.1	13		U
79-00-5-------	1,1,2-Trichloroethane	0.44	13		U
79-01-6-------	Trichloroethene	1.1	13		U
76-13-1-------	Trichlorotrifluoroethane	0.70	13		U
75-69-4-------	Trichlorofluoromethane	1.2	13		U
75-01-4-------	Vinyl chloride	1.4	13		U
1330-20-7-----	Xylene(total)	0.89	13		U

JCW 4/2/09

FORM 1
VOLATILE ORGANICS ANALYSIS DATA SHEET

CLIENT SAMPLE NO. 5

MR08-SS256-09A

Lab Name: EMPIRICAL LABS Contract: CH2MHILL

Lab Code: NA Case No.: NA SAS No.: NA SDG No.: LEJEUNE045

Matrix: (soil/water) SOIL Lab Sample ID: 0901068-05

Sample wt/vol: 4.1 (g/mL) G Lab File ID: 0106805A

Level: (low/med) LOW Date Sampled: 01/10/09 09:15

% Moisture: not dec. 11 Date Analyzed: 01/16/09 18:04

GC Column: RTX-VRX ID: 0.25 (mm) Dilution Factor: 1.0

Soil Extract Volume:_____(uL) Soil Aliquot Volume: _____(uL)

CONCENTRATION UNITS: (ug/L or ug/Kg) UG/KG

CAS NO.	COMPOUND	MDL	RL	CONC	Q	
67-64-1	Acetone	2.7	14	40	~~B~~ U	BL
71-43-2	Benzene	0.64	14		U	
75-27-4	Bromodichloromethane	0.41	14		U	
75-25-2	Bromoform	1.4	14		U	
74-83-9	Bromomethane	0.98	14		U	
78-93-3	2-Butanone	1.9	14	7.9	~~J~~ J	SS
75-15-0	Carbon disulfide	1.8	14	2.4	~~J~~ J	SS
56-23-5	Carbon tetrachloride	1.2	14		U	
108-90-7	Chlorobenzene	0.46	14		U	
75-00-3	Chloroethane	1.5	14		U	
67-66-3	Chloroform	0.75	14		U	
74-87-3	Chloromethane	0.71	14		U	
110-82-7	Cyclohexane	0.73	14		U	
124-48-1	Dibromochloromethane	0.46	14		U	
96-12-8	1,2-Dibromo-3-chloropropane	1.6	6.8		U	
106-93-4	1,2-Dibromoethane	0.58	14		U	
95-50-1	1,2-Dichlorobenzene	0.50	14		U	
541-73-1	1,3-Dichlorobenzene	1.1	14		U	
106-46-7	1,4-Dichlorobenzene	0.75	14		U	
75-71-8	Dichlorodifluoromethane	1.5	14		U	
75-34-3	1,1-Dichloroethane	0.73	14		U	
107-06-2	1,2-Dichloroethane	0.62	14		U	
75-35-4	1,1-Dichloroethene	1.6	14		U	
156-59-2	cis-1,2-Dichloroethene	1.6	14		U	
156-60-5	trans-1,2-Dichloroethene	1.5	14		U	
78-87-5	1,2-Dichloropropane	0.62	14		U	
10061-01-5	cis-1,3-Dichloropropene	0.68	14		U	
10061-02-6	trans-1,3-Dichloropropene	0.43	14		U	
100-41-4	Ethylbenzene	1.0	14		U	
591-78-6	2-Hexanone	3.1	14		U	
98-82-8	Isopropylbenzene	1.2	14		U	
79-20-9	Methyl acetate	2.2	14		U	
75-09-2	Methylene chloride	0.84	14	14U 3.7	~~JB~~	BI
108-87-2	Methyl cyclohexane	0.41	14		U	
1634-04-4	Methyl tert-butyl ether	0.43	14		U	
108-10-1	4-Methyl-2-pentanone	0.79	14		U	
100-42-5	Styrene	0.48	14		U	
79-34-5	1,1,2,2-Tetrachloroethane	0.58	14		U	
127-18-4	Tetrachloroethene	1.3	14		U	

FORM I VOA

RW 4/21/09

FORM 1
VOLATILE ORGANICS ANALYSIS DATA SHEET

CLIENT SAMPLE NO. 5

MR08-SS256-09A

Lab Name: EMPIRICAL LABS Contract: CH2MHILL

Lab Code: NA Case No.: NA SAS No.: NA SDG No.: LEJEUNE045

Matrix: (soil/water) SOIL Lab Sample ID: 0901068-05

Sample wt/vol: 4.1 (g/mL) G Lab File ID: 0106805A

Level: (low/med) LOW Date Sampled: 01/10/09 09:15

% Moisture: not dec. 11 Date Analyzed: 01/16/09 18:04

GC Column: RTX-VRX ID: 0.25 (mm) Dilution Factor: 1.0

Soil Extract Volume:_____(uL) Soil Aliquot Volume: _____(uL)

CONCENTRATION UNITS: (ug/L or ug/Kg) UG/KG

CAS NO.	COMPOUND	MDL	RL	CONC	Q
108-88-3	Toluene	1.2	14		U
120-82-1	1,2,4-Trichlorobenzene	0.24	14	0.36	~~J~~ J SS
71-55-6	1,1,1-Trichloroethane	1.2	14		U
79-00-5	1,1,2-Trichloroethane	0.48	14		U
79-01-6	Trichloroethene	1.2	14		U
76-13-1	Trichlorotrifluoroethane	0.75	14		U
75-69-4	Trichlorofluoromethane	1.3	14		U
75-01-4	Vinyl chloride	1.5	14		U
1330-20-7	Xylene(total)	0.95	14		U

lev
4/2/09

FORM 1
VOLATILE ORGANICS ANALYSIS DATA SHEET

CLIENT SAMPLE NO.

6

MR08-IS25
6-3-4-09A

Lab Name: EMPIRICAL LABS Contract: CH2MHILL

Lab Code: NA Case No.: NA SAS No.: NA SDG No.: LEJEUNE045

Matrix: (soil/water) SOIL Lab Sample ID: 0901068-06

Sample wt/vol: 4.8 (g/mL) G Lab File ID: 0106806A

Level: (low/med) LOW Date Sampled: 01/10/09 09:35

% Moisture: not dec. 13 Date Analyzed: 01/16/09 18:35

GC Column: RTX-VRX ID: 0.25 (mm) Dilution Factor: 1.0

Soil Extract Volume:_____(uL) Soil Aliquot Volume: _____(uL)

CONCENTRATION UNITS: (ug/L or ug/Kg) UG/KG

CAS NO.	COMPOUND	MDL	RL	CONC	Q
67-64-1	Acetone	2.4	12	12u ~~5.5~~	~~JB~~ BL
71-43-2	Benzene	0.56	12		U
75-27-4	Bromodichloromethane	0.36	12		U
75-25-2	Bromoform	1.2	12		U
74-83-9	Bromomethane	0.86	12		U
78-93-3	2-Butanone	1.7	12		U
75-15-0	Carbon disulfide	1.6	12		U
56-23-5	Carbon tetrachloride	1.0	12		U
108-90-7	Chlorobenzene	0.41	12		U
75-00-3	Chloroethane	1.3	12		U
67-66-3	Chloroform	0.66	12		U
74-87-3	Chloromethane	0.62	12		U
110-82-7	Cyclohexane	0.65	12		U
124-48-1	Dibromochloromethane	0.41	12		U
96-12-8	1,2-Dibromo-3-chloropropane	1.4	6.0		U
106-93-4	1,2-Dibromoethane	0.52	12		U
95-50-1	1,2-Dichlorobenzene	0.44	12		U
541-73-1	1,3-Dichlorobenzene	1.0	12		U
106-46-7	1,4-Dichlorobenzene	0.66	12		U
75-71-8	Dichlorodifluoromethane	1.3	12		U
75-34-3	1,1-Dichloroethane	0.65	12		U
107-06-2	1,2-Dichloroethane	0.55	12		U
75-35-4	1,1-Dichloroethene	1.4	12		U
156-59-2	cis-1,2-Dichloroethene	1.4	12		U
156-60-5	trans-1,2-Dichloroethene	1.3	12		U
78-87-5	1,2-Dichloropropane	0.55	12		U
10061-01-5	cis-1,3-Dichloropropene	0.60	12		U
10061-02-6	trans-1,3-Dichloropropene	0.38	12		U
100-41-4	Ethylbenzene	0.90	12		U
591-78-6	2-Hexanone	2.8	12		U
98-82-8	Isopropylbenzene	1.0	12		U
79-20-9	Methyl acetate	1.9	12		U
75-09-2	Methylene chloride	0.74	12	12u ~~2.6~~	~~JB~~ B
108-87-2	Methyl cyclohexane	0.36	12		U
1634-04-4	Methyl tert-butyl ether	0.38	12		U
108-10-1	4-Methyl-2-pentanone	0.70	12		U
100-42-5	Styrene	0.42	12		U
79-34-5	1,1,2,2-Tetrachloroethane	0.52	12		U
127-18-4	Tetrachloroethene	1.2	12		U

FORM I VOA

lw
4/2/09

FORM 1
VOLATILE ORGANICS ANALYSIS DATA SHEET

CLIENT SAMPLE NO.

MR08-IS25
6-3-4-09A

6

Lab Name: EMPIRICAL LABS Contract: CH2MHILL

Lab Code: NA Case No.: NA SAS No.: NA SDG No.: LEJEUNE045

Matrix: (soil/water) SOIL Lab Sample ID: 0901068-06

Sample wt/vol: 4.8 (g/mL) G Lab File ID: 0106806A

Level: (low/med) LOW Date Sampled: 01/10/09 09:35

% Moisture: not dec. 13 Date Analyzed: 01/16/09 18:35

GC Column: RTX-VRX ID: 0.25 (mm) Dilution Factor: 1.0

Soil Extract Volume:_____(uL) Soil Aliquot Volume: _____(uL)

CONCENTRATION UNITS: (ug/L or ug/Kg) UG/KG

CAS NO.	COMPOUND	MDL	RL	CONC	Q
108-88-3	Toluene	1.0	12		U
120-82-1	1,2,4-Trichlorobenzene	0.22	12		U
71-55-6	1,1,1-Trichloroethane	1.1	12		U
79-00-5	1,1,2-Trichloroethane	0.42	12		U
79-01-6	Trichloroethene	1.0	12		U
76-13-1	Trichlorotrifluoroethane	0.66	12		U
75-69-4	Trichlorofluoromethane	1.1	12		U
75-01-4	Vinyl chloride	1.3	12		U
1330-20-7	Xylene(total)	0.84	12		U

RW
4/2/09

FORM 1
VOLATILE ORGANICS ANALYSIS DATA SHEET

CLIENT SAMPLE NO.

7

MR08-SS251-09A

Lab Name: EMPIRICAL LABS Contract: CH2MHILL

Lab Code: NA Case No.: NA SAS No.: NA SDG No.: LEJEUNE045

Matrix: (soil/water) SOIL Lab Sample ID: 0901068-07

Sample wt/vol: 3.6 (g/mL) G Lab File ID: 0106807A

Level: (low/med) LOW Date Sampled: 01/10/09 09:50

% Moisture: not dec. 13 Date Analyzed: 01/16/09 19:06

GC Column: RTX-VRX ID: 0.25 (mm) Dilution Factor: 1.0

Soil Extract Volume:_____(uL) Soil Aliquot Volume: _____(uL)

CONCENTRATION UNITS: (ug/L or ug/Kg) UG/KG

CAS NO.	COMPOUND	MDL	RL	CONC	Q
67-64-1	Acetone	3.2	16	49	~~B~~
71-43-2	Benzene	0.75	16		U
75-27-4	Bromodichloromethane	0.48	16		U
75-25-2	Bromoform	1.6	16		U
74-83-9	Bromomethane	1.2	16		U
78-93-3	2-Butanone	2.2	16	10	J
75-15-0	Carbon disulfide	2.1	16		U
56-23-5	Carbon tetrachloride	1.4	16		U
108-90-7	Chlorobenzene	0.54	16		U
75-00-3	Chloroethane	1.8	16		U
67-66-3	Chloroform	0.88	16		U
74-87-3	Chloromethane	0.83	16		U
110-82-7	Cyclohexane	0.86	16		U
124-48-1	Dibromochloromethane	0.54	16		U
96-12-8	1,2-Dibromo-3-chloropropane	1.9	8.0		U
106-93-4	1,2-Dibromoethane	0.69	16		U
95-50-1	1,2-Dichlorobenzene	0.59	16		U
541-73-1	1,3-Dichlorobenzene	1.3	16		U
106-46-7	1,4-Dichlorobenzene	0.88	16		U
75-71-8	Dichlorodifluoromethane	1.8	16		U
75-34-3	1,1-Dichloroethane	0.86	16		U
107-06-2	1,2-Dichloroethane	0.74	16		U
75-35-4	1,1-Dichloroethene	1.9	16		U
156-59-2	cis-1,2-Dichloroethene	1.9	16		U
156-60-5	trans-1,2-Dichloroethene	1.8	16		U
78-87-5	1,2-Dichloropropane	0.74	16		U
10061-01-5	cis-1,3-Dichloropropene	0.80	16		U
10061-02-6	trans-1,3-Dichloropropene	0.51	16		U
100-41-4	Ethylbenzene	1.2	16		U
591-78-6	2-Hexanone	3.7	16		U
98-82-8	Isopropylbenzene	1.4	16		U
79-20-9	Methyl acetate	2.6	16		U
75-09-2	Methylene chloride	0.99	16	16u	~~3.2 JB~~ B1
108-87-2	Methyl cyclohexane	0.48	16		U
1634-04-4	Methyl tert-butyl ether	0.51	16		U
108-10-1	4-Methyl-2-pentanone	0.93	16		U
100-42-5	Styrene	0.56	16		U
79-34-5	1,1,2,2-Tetrachloroethane	0.69	16		U
127-18-4	Tetrachloroethene	1.6	16		U

FORM I VOA

lw 4/2/09

FORM 1
VOLATILE ORGANICS ANALYSIS DATA SHEET

CLIENT SAMPLE NO. 7

MR08-SS251-09A

Lab Name: EMPIRICAL LABS Contract: CH2MHILL

Lab Code: NA Case No.: NA SAS No.: NA SDG No.: LEJEUNE045

Matrix: (soil/water) SOIL Lab Sample ID: 0901068-07

Sample wt/vol: 3.6 (g/mL) G Lab File ID: 0106807A

Level: (low/med) LOW Date Sampled: 01/10/09 09:50

% Moisture: not dec. 13 Date Analyzed: 01/16/09 19:06

GC Column: RTX-VRX ID: 0.25 (mm) Dilution Factor: 1.0

Soil Extract Volume:_____(uL) Soil Aliquot Volume: _____(uL)

CONCENTRATION UNITS: (ug/L or ug/Kg) UG/KG

CAS NO.	COMPOUND	MDL	RL	CONC	Q
108-88-3	Toluene	1.4	16		U
120-82-1	1,2,4-Trichlorobenzene	0.29	16		U
71-55-6	1,1,1-Trichloroethane	1.4	16		U
79-00-5	1,1,2-Trichloroethane	0.56	16		U
79-01-6	Trichloroethene	1.4	16		U
76-13-1	Trichlorotrifluoroethane	0.88	16		U
75-69-4	Trichlorofluoromethane	1.5	16		U
75-01-4	Vinyl chloride	1.8	16		U
1330-20-7	Xylene(total)	1.1	16		U

lw
4/2/09

FORM 1
VOLATILE ORGANICS ANALYSIS DATA SHEET

CLIENT SAMPLE NO. 8

MR08-IS25
1-8-9-09A

Lab Name: EMPIRICAL LABS Contract: CH2MHILL

Lab Code: NA Case No.: NA SAS No.: NA SDG No.: LEJEUNE045

Matrix: (soil/water) SOIL Lab Sample ID: 0901068-08

Sample wt/vol: 4.0 (g/mL) G Lab File ID: 0106808A

Level: (low/med) LOW Date Sampled: 01/10/09 10:00

% Moisture: not dec. 15 Date Analyzed: 01/16/09 19:36

GC Column: RTX-VRX ID: 0.25 (mm) Dilution Factor: 1.0

Soil Extract Volume:_____(uL) Soil Aliquot Volume: _____(uL)

CONCENTRATION UNITS: (ug/L or ug/Kg) UG/KG

CAS NO.	COMPOUND	MDL	RL	CONC	Q
67-64-1	Acetone	2.9	15		U
71-43-2	Benzene	0.69	15		U
75-27-4	Bromodichloromethane	0.44	15		U
75-25-2	Bromoform	1.5	15		U
74-83-9	Bromomethane	1.0	15		U
78-93-3	2-Butanone	2.0	15		U
75-15-0	Carbon disulfide	1.9	15		U
56-23-5	Carbon tetrachloride	1.3	15		U
108-90-7	Chlorobenzene	0.50	15		U
75-00-3	Chloroethane	1.6	15		U
67-66-3	Chloroform	0.80	15		U
74-87-3	Chloromethane	0.76	15		U
110-82-7	Cyclohexane	0.79	15		U
124-48-1	Dibromochloromethane	0.50	15		U
96-12-8	1,2-Dibromo-3-chloropropane	1.8	7.3		U
106-93-4	1,2-Dibromoethane	0.63	15		U
95-50-1	1,2-Dichlorobenzene	0.54	15		U
541-73-1	1,3-Dichlorobenzene	1.2	15		U
106-46-7	1,4-Dichlorobenzene	0.80	15		U
75-71-8	Dichlorodifluoromethane	1.6	15		U
75-34-3	1,1-Dichloroethane	0.79	15		U
107-06-2	1,2-Dichloroethane	0.67	15		U
75-35-4	1,1-Dichloroethene	1.8	15		U
156-59-2	cis-1,2-Dichloroethene	1.8	15		U
156-60-5	trans-1,2-Dichloroethene	1.6	15		U
78-87-5	1,2-Dichloropropane	0.67	15		U
10061-01-5	cis-1,3-Dichloropropene	0.73	15		U
10061-02-6	trans-1,3-Dichloropropene	0.47	15		U
100-41-4	Ethylbenzene	1.1	15		U
591-78-6	2-Hexanone	3.4	15		U
98-82-8	Isopropylbenzene	1.3	15		U
79-20-9	Methyl acetate	2.3	15		U
75-09-2	Methylene chloride	0.91	15	15u ~~3.3 JB~~	B
108-87-2	Methyl cyclohexane	0.44	15		U
1634-04-4	Methyl tert-butyl ether	0.47	15		U
108-10-1	4-Methyl-2-pentanone	0.85	15		U
100-42-5	Styrene	0.51	15		U
79-34-5	1,1,2,2-Tetrachloroethane	0.63	15		U
127-18-4	Tetrachloroethene	1.4	15		U

lw
4/12/09

FORM 1
VOLATILE ORGANICS ANALYSIS DATA SHEET

CLIENT SAMPLE NO.

8

MR08-IS25
1-8-9-09A

Lab Name: EMPIRICAL LABS Contract: CH2MHILL

Lab Code: NA Case No.: NA SAS No.: NA SDG No.: LEJEUNE045

Matrix: (soil/water) SOIL Lab Sample ID: 0901068-08

Sample wt/vol: 4.0 (g/mL) G Lab File ID: 0106808A

Level: (low/med) LOW Date Sampled: 01/10/09 10:00

% Moisture: not dec. 15 Date Analyzed: 01/16/09 19:36

GC Column: RTX-VRX ID: 0.25 (mm) Dilution Factor: 1.0

Soil Extract Volume:_____(uL) Soil Aliquot Volume: _____(uL)

CONCENTRATION UNITS: (ug/L or ug/Kg) UG/KG

CAS NO.	COMPOUND	MDL	RL	CONC	Q
108-88-3	Toluene	1.3	15		U
120-82-1	1,2,4-Trichlorobenzene	0.26	15		U
71-55-6	1,1,1-Trichloroethane	1.3	15		U
79-00-5	1,1,2-Trichloroethane	0.51	15		U
79-01-6	Trichloroethene	1.2	15		U
76-13-1	Trichlorotrifluoroethane	0.80	15		U
75-69-4	Trichlorofluoromethane	1.4	15		U
75-01-4	Vinyl chloride	1.6	15		U
1330-20-7	Xylene(total)	1.0	15		U

LWS
4/12/09

FORM 1
VOLATILE ORGANICS ANALYSIS DATA SHEET

CLIENT SAMPLE NO. 9

MR08-SS232-09A

Lab Name: EMPIRICAL LABS Contract: CH2MHILL

Lab Code: NA Case No.: NA SAS No.: NA SDG No.: LEJEUNE045

Matrix: (soil/water) SOIL Lab Sample ID: 0901068-09

Sample wt/vol: 3.5 (g/mL) G Lab File ID: 0106809A

Level: (low/med) LOW Date Sampled: 01/10/09 10:20

% Moisture: not dec. 12 Date Analyzed: 01/16/09 20:07

GC Column: RTX-VRX ID: 0.25 (mm) Dilution Factor: 1.0

Soil Extract Volume:_____(uL) Soil Aliquot Volume: _____(uL)

CONCENTRATION UNITS: (ug/L or ug/Kg) UG/KG

CAS NO.	COMPOUND	MDL	RL	CONC	Q
67-64-1	Acetone	3.3	16	34	~~B~~ U B1
71-43-2	Benzene	0.77	16		U
75-27-4	Bromodichloromethane	0.49	16		U
75-25-2	Bromoform	1.6	16		U
74-83-9	Bromomethane	1.2	16		U
78-93-3	2-Butanone	2.3	16	7.6	J
75-15-0	Carbon disulfide	2.1	16		U
56-23-5	Carbon tetrachloride	1.4	16		U
108-90-7	Chlorobenzene	0.56	16		U
75-00-3	Chloroethane	1.8	16		U
67-66-3	Chloroform	0.90	16		U
74-87-3	Chloromethane	0.86	16		U
110-82-7	Cyclohexane	0.89	16		U
124-48-1	Dibromochloromethane	0.56	16		U
96-12-8	1,2-Dibromo-3-chloropropane	2.0	8.2		U
106-93-4	1,2-Dibromoethane	0.71	16		U
95-50-1	1,2-Dichlorobenzene	0.61	16		U
541-73-1	1,3-Dichlorobenzene	1.4	16		U
106-46-7	1,4-Dichlorobenzene	0.90	16		U
75-71-8	Dichlorodifluoromethane	1.8	16		U
75-34-3	1,1-Dichloroethane	0.89	16		U
107-06-2	1,2-Dichloroethane	0.76	16		U
75-35-4	1,1-Dichloroethene	2.0	16		U
156-59-2	cis-1,2-Dichloroethene	2.0	16		U
156-60-5	trans-1,2-Dichloroethene	1.8	16		U
78-87-5	1,2-Dichloropropane	0.76	16		U
10061-01-5	cis-1,3-Dichloropropene	0.82	16		U
10061-02-6	trans-1,3-Dichloropropene	0.53	16		U
100-41-4	Ethylbenzene	1.2	16		U
591-78-6	2-Hexanone	3.8	16		U
98-82-8	Isopropylbenzene	1.4	16		U
79-20-9	Methyl acetate	2.6	16		U
75-09-2	Methylene chloride	1.0	16	16U ~~3.2~~ ~~JB~~	B1
108-87-2	Methyl cyclohexane	0.49	16		U
1634-04-4	Methyl tert-butyl ether	0.53	16		U
108-10-1	4-Methyl-2-pentanone	0.95	16		U
100-42-5	Styrene	0.58	16		U
79-34-5	1,1,2,2-Tetrachloroethane	0.71	16		U
127-18-4	Tetrachloroethene	1.6	16		U

FORM I VOA

lw 4/2/09

FORM 1
VOLATILE ORGANICS ANALYSIS DATA SHEET

CLIENT SAMPLE NO.

9

MR08-SS232-09A

Lab Name: EMPIRICAL LABS Contract: CH2MHILL

Lab Code: NA Case No.: NA SAS No.: NA SDG No.: LEJEUNE045

Matrix: (soil/water) SOIL Lab Sample ID: 0901068-09

Sample wt/vol: 3.5 (g/mL) G Lab File ID: 0106809A

Level: (low/med) LOW Date Sampled: 01/10/09 10:20

% Moisture: not dec. 12 Date Analyzed: 01/16/09 20:07

GC Column: RTX-VRX ID: 0.25 (mm) Dilution Factor: 1.0

Soil Extract Volume:_____(uL) Soil Aliquot Volume: _____(uL)

CONCENTRATION UNITS: (ug/L or ug/Kg) UG/KG

CAS NO.	COMPOUND	MDL	RL	CONC	Q
108-88-3	Toluene	1.4	16		U
120-82-1	1,2,4-Trichlorobenzene	0.30	16		U
71-55-6	1,1,1-Trichloroethane	1.5	16		U
79-00-5	1,1,2-Trichloroethane	0.58	16		U
79-01-6	Trichloroethene	1.4	16		U
76-13-1	Trichlorotrifluoroethane	0.90	16		U
75-69-4	Trichlorofluoromethane	1.6	16		U
75-01-4	Vinyl chloride	1.8	16		U
1330-20-7	Xylene(total)	1.2	16		U

QW
4/2/09

FORM 1
VOLATILE ORGANICS ANALYSIS DATA SHEET

CLIENT SAMPLE NO. 10

MR08-IS23
2-5-6-09A

Lab Name: EMPIRICAL LABS Contract: CH2MHILL

Lab Code: NA Case No.: NA SAS No.: NA SDG No.: LEJEUNE045

Matrix: (soil/water) SOIL Lab Sample ID: 0901068-10

Sample wt/vol: 5.0 (g/mL) G Lab File ID: 0106810A

Level: (low/med) LOW Date Sampled: 01/10/09 10:30

% Moisture: not dec. 12 Date Analyzed: 01/16/09 23:44

GC Column: RTX-VRX ID: 0.25 (mm) Dilution Factor: 1.0

Soil Extract Volume:_____(uL) Soil Aliquot Volume: _____(uL)

CONCENTRATION UNITS: (ug/L or ug/Kg) UG/KG

CAS NO.	COMPOUND	MDL	RL	CONC	Q
67-64-1	Acetone	2.2	11	11u ~~7.2~~ ~~JB~~	B1
71-43-2	Benzene	0.53	11		U
75-27-4	Bromodichloromethane	0.34	11		U
75-25-2	Bromoform	1.1	11		U
74-83-9	Bromomethane	0.81	11		U
78-93-3	2-Butanone	1.6	11		U
75-15-0	Carbon disulfide	1.5	11		U
56-23-5	Carbon tetrachloride	0.99	11		U
108-90-7	Chlorobenzene	0.38	11		U
75-00-3	Chloroethane	1.2	11		U
67-66-3	Chloroform	0.62	11		U
74-87-3	Chloromethane	0.58	11		U
110-82-7	Cyclohexane	0.61	11		U
124-48-1	Dibromochloromethane	0.38	11		U
96-12-8	1,2-Dibromo-3-chloropropane	1.4	5.6		U
106-93-4	1,2-Dibromoethane	0.48	11		U
95-50-1	1,2-Dichlorobenzene	0.42	11		U
541-73-1	1,3-Dichlorobenzene	0.95	11		U
106-46-7	1,4-Dichlorobenzene	0.62	11		U
75-71-8	Dichlorodifluoromethane	1.2	11		U
75-34-3	1,1-Dichloroethane	0.61	11		U
107-06-2	1,2-Dichloroethane	0.52	11		U
75-35-4	1,1-Dichloroethene	1.4	11		U
156-59-2	cis-1,2-Dichloroethene	1.4	11		U
156-60-5	trans-1,2-Dichloroethene	1.2	11		U
78-87-5	1,2-Dichloropropane	0.52	11		U
10061-01-5	cis-1,3-Dichloropropene	0.56	11		U
10061-02-6	trans-1,3-Dichloropropene	0.36	11		U
100-41-4	Ethylbenzene	0.84	11		U
591-78-6	2-Hexanone	2.6	11		U
98-82-8	Isopropylbenzene	0.99	11		U
79-20-9	Methyl acetate	1.8	11		U
75-09-2	Methylene chloride	0.70	11	11u ~~2.7~~ ~~JB~~	B
108-87-2	Methyl cyclohexane	0.34	11		U
1634-04-4	Methyl tert-butyl ether	0.36	11		U
108-10-1	4-Methyl-2-pentanone	0.65	11		U
100-42-5	Styrene	0.39	11		U
79-34-5	1,1,2,2-Tetrachloroethane	0.48	11		U
127-18-4	Tetrachloroethene	1.1	11		U

RW 4/2/09

FORM 1
VOLATILE ORGANICS ANALYSIS DATA SHEET

CLIENT SAMPLE NO. 10

MR08-IS23
2-5-6-09A

Lab Name: EMPIRICAL LABS Contract: CH2MHILL

Lab Code: NA Case No.: NA SAS No.: NA SDG No.: LEJEUNE045

Matrix: (soil/water) SOIL Lab Sample ID: 0901068-10

Sample wt/vol: 5.0 (g/mL) G Lab File ID: 0106810A

Level: (low/med) LOW Date Sampled: 01/10/09 10:30

% Moisture: not dec. 12 Date Analyzed: 01/16/09 23:44

GC Column: RTX-VRX ID: 0.25 (mm) Dilution Factor: 1.0

Soil Extract Volume:_____(uL) Soil Aliquot Volume: _____(uL)

CONCENTRATION UNITS: (ug/L or ug/Kg) UG/KG

CAS NO.	COMPOUND	MDL	RL	CONC	Q
108-88-3	Toluene	0.97	11		U
120-82-1	1,2,4-Trichlorobenzene	0.20	11		U
71-55-6	1,1,1-Trichloroethane	1.0	11		U
79-00-5	1,1,2-Trichloroethane	0.39	11		U
79-01-6	Trichloroethene	0.96	11		U
76-13-1	Trichlorotrifluoroethane	0.62	11		U
75-69-4	Trichlorofluoromethane	1.1	11		U
75-01-4	Vinyl chloride	1.2	11		U
1330-20-7	Xylene(total)	0.79	11		U

MW
4/2/09

FORM 1
VOLATILE ORGANICS ANALYSIS DATA SHEET

CLIENT SAMPLE NO. 11

MR08-SS252-09A

Lab Name: EMPIRICAL LABS Contract: CH2MHILL

Lab Code: NA Case No.: NA SAS No.: NA SDG No.: LEJEUNE045

Matrix: (soil/water) SOIL Lab Sample ID: 0901068-11

Sample wt/vol: 3.4 (g/mL) G Lab File ID: 0106811A

Level: (low/med) LOW Date Sampled: 01/10/09 10:40

% Moisture: not dec. 8 Date Analyzed: 01/17/09 00:14

GC Column: RTX-VRX ID: 0.25 (mm) Dilution Factor: 1.0

Soil Extract Volume:_____(uL) Soil Aliquot Volume: _____(uL)

CONCENTRATION UNITS: (ug/L or ug/Kg) UG/KG

CAS NO.	COMPOUND	MDL	RL	CONC	Q	
67-64-1	Acetone	3.2	16	18	~~B~~ U	BL
71-43-2	Benzene	0.74	16		U	
75-27-4	Bromodichloromethane	0.47	16		U	
75-25-2	Bromoform	1.6	16		U	
74-83-9	Bromomethane	1.1	16		U	
78-93-3	2-Butanone	2.2	16		U	
75-15-0	Carbon disulfide	2.0	16		U	
56-23-5	Carbon tetrachloride	1.4	16		U	
108-90-7	Chlorobenzene	0.54	16		U	
75-00-3	Chloroethane	1.7	16		U	
67-66-3	Chloroform	0.87	16		U	
74-87-3	Chloromethane	0.82	16		U	
110-82-7	Cyclohexane	0.85	16	0.94	J	
124-48-1	Dibromochloromethane	0.54	16		U	
96-12-8	1,2-Dibromo-3-chloropropane	1.9	7.9		U	
106-93-4	1,2-Dibromoethane	0.68	16		U	
95-50-1	1,2-Dichlorobenzene	0.58	16		U	
541-73-1	1,3-Dichlorobenzene	1.3	16		U	
106-46-7	1,4-Dichlorobenzene	0.87	16		U	
75-71-8	Dichlorodifluoromethane	1.7	16		U	
75-34-3	1,1-Dichloroethane	0.85	16		U	
107-06-2	1,2-Dichloroethane	0.73	16		U	
75-35-4	1,1-Dichloroethene	1.9	16		U	
156-59-2	cis-1,2-Dichloroethene	1.9	16		U	
156-60-5	trans-1,2-Dichloroethene	1.7	16		U	
78-87-5	1,2-Dichloropropane	0.73	16		U	
10061-01-5	cis-1,3-Dichloropropene	0.79	16		U	
10061-02-6	trans-1,3-Dichloropropene	0.50	16		U	
100-41-4	Ethylbenzene	1.2	16		U	
591-78-6	2-Hexanone	3.6	16		U	
98-82-8	Isopropylbenzene	1.4	16		U	
79-20-9	Methyl acetate	2.5	16		U	
75-09-2	Methylene chloride	0.98	16	164	~~2.0 JB~~	B
108-87-2	Methyl cyclohexane	0.47	16	1.2	J	
1634-04-4	Methyl tert-butyl ether	0.50	16		U	
108-10-1	4-Methyl-2-pentanone	0.92	16		U	
100-42-5	Styrene	0.55	16		U	
79-34-5	1,1,2,2-Tetrachloroethane	0.68	16		U	
127-18-4	Tetrachloroethene	1.5	16		U	

lw
4/2/09

FORM 1
VOLATILE ORGANICS ANALYSIS DATA SHEET

CLIENT SAMPLE NO. 11

MR08-SS252-09A

Lab Name: EMPIRICAL LABS Contract: CH2MHILL

Lab Code: NA Case No.: NA SAS No.: NA SDG No.: LEJEUNE045

Matrix: (soil/water) SOIL Lab Sample ID: 0901068-11

Sample wt/vol: 3.4 (g/mL) G Lab File ID: 0106811A

Level: (low/med) LOW Date Sampled: 01/10/09 10:40

% Moisture: not dec. 8 Date Analyzed: 01/17/09 00:14

GC Column: RTX-VRX ID: 0.25 (mm) Dilution Factor: 1.0

Soil Extract Volume:_____(uL) Soil Aliquot Volume: _____(uL)

CONCENTRATION UNITS: (ug/L or ug/Kg) UG/KG

CAS NO.	COMPOUND	MDL	RL	CONC	Q
108-88-3	Toluene	1.4	16		U
120-82-1	1,2,4-Trichlorobenzene	0.28	16		U
71-55-6	1,1,1-Trichloroethane	1.4	16		U
79-00-5	1,1,2-Trichloroethane	0.55	16		U
79-01-6	Trichloroethene	1.3	16		U
76-13-1	Trichlorotrifluoroethane	0.87	16		U
75-69-4	Trichlorofluoromethane	1.5	16		U
75-01-4	Vinyl chloride	1.7	16		U
1330-20-7	Xylene(total)	1.1	16		U

MW 4/21/09

FORM 1
VOLATILE ORGANICS ANALYSIS DATA SHEET

CLIENT SAMPLE NO. 12

MR08-IS25
2-6-7-09A

Lab Name: EMPIRICAL LABS Contract: CH2MHILL

Lab Code: NA Case No.: NA SAS No.: NA SDG No.: LEJEUNE045

Matrix: (soil/water) SOIL Lab Sample ID: 0901068-12

Sample wt/vol: 4.3 (g/mL) G Lab File ID: 0106812A

Level: (low/med) LOW Date Sampled: 01/10/09 11:00

% Moisture: not dec. 11 Date Analyzed: 01/17/09 00:45

GC Column: RTX-VRX ID: 0.25 (mm) Dilution Factor: 1.0

Soil Extract Volume:_____(uL) Soil Aliquot Volume: _____(uL)

CONCENTRATION UNITS: (ug/L or ug/Kg) UG/KG

CAS NO.	COMPOUND	MDL	RL	CONC	Q
67-64-1	Acetone	2.6	13	134 ~~6.9~~ ~~JB~~	B1
71-43-2	Benzene	0.61	13		U
75-27-4	Bromodichloromethane	0.39	13		U
75-25-2	Bromoform	1.3	13		U
74-83-9	Bromomethane	0.94	13		U
78-93-3	2-Butanone	1.8	13		U
75-15-0	Carbon disulfide	1.7	13		U
56-23-5	Carbon tetrachloride	1.1	13		U
108-90-7	Chlorobenzene	0.44	13		U
75-00-3	Chloroethane	1.4	13		U
67-66-3	Chloroform	0.72	13		U
74-87-3	Chloromethane	0.68	13		U
110-82-7	Cyclohexane	0.70	13		U
124-48-1	Dibromochloromethane	0.44	13		U
96-12-8	1,2-Dibromo-3-chloropropane	1.6	6.5		U
106-93-4	1,2-Dibromoethane	0.56	13		U
95-50-1	1,2-Dichlorobenzene	0.48	13		U
541-73-1	1,3-Dichlorobenzene	1.1	13		U
106-46-7	1,4-Dichlorobenzene	0.72	13		U
75-71-8	Dichlorodifluoromethane	1.4	13		U
75-34-3	1,1-Dichloroethane	0.70	13		U
107-06-2	1,2-Dichloroethane	0.60	13		U
75-35-4	1,1-Dichloroethene	1.6	13		U
156-59-2	cis-1,2-Dichloroethene	1.6	13		U
156-60-5	trans-1,2-Dichloroethene	1.4	13		U
78-87-5	1,2-Dichloropropane	0.60	13		U
10061-01-5	cis-1,3-Dichloropropene	0.65	13		U
10061-02-6	trans-1,3-Dichloropropene	0.42	13		U
100-41-4	Ethylbenzene	0.98	13		U
591-78-6	2-Hexanone	3.0	13		U
98-82-8	Isopropylbenzene	1.1	13		U
79-20-9	Methyl acetate	2.1	13		U
75-09-2	Methylene chloride	0.81	13	134 ~~2.6~~ ~~JB~~	B1
108-87-2	Methyl cyclohexane	0.39	13		U
1634-04-4	Methyl tert-butyl ether	0.42	13		U
108-10-1	4-Methyl-2-pentanone	0.76	13		U
100-42-5	Styrene	0.46	13		U
79-34-5	1,1,2,2-Tetrachloroethane	0.56	13		U
127-18-4	Tetrachloroethene	1.3	13		U

LW
4/2/09

FORM 1
VOLATILE ORGANICS ANALYSIS DATA SHEET

CLIENT SAMPLE NO.

12

MR08-IS25
2-6-7-09A

Lab Name: EMPIRICAL LABS Contract: CH2MHILL

Lab Code: NA Case No.: NA SAS No.: NA SDG No.: LEJEUNE045

Matrix: (soil/water) SOIL Lab Sample ID: 0901068-12

Sample wt/vol: 4.3 (g/mL) G Lab File ID: 0106812A

Level: (low/med) LOW Date Sampled: 01/10/09 11:00

% Moisture: not dec. 11 Date Analyzed: 01/17/09 00:45

GC Column: RTX-VRX ID: 0.25 (mm) Dilution Factor: 1.0

Soil Extract Volume:_____(uL) Soil Aliquot Volume: _____(uL)

CONCENTRATION UNITS: (ug/L or ug/Kg) UG/KG

CAS NO.	COMPOUND	MDL	RL	CONC	Q
108-88-3	Toluene	1.1	13		U
120-82-1	1,2,4-Trichlorobenzene	0.23	13		U
71-55-6	1,1,1-Trichloroethane	1.2	13		U
79-00-5	1,1,2-Trichloroethane	0.46	13		U
79-01-6	Trichloroethene	1.1	13		U
76-13-1	Trichlorotrifluoroethane	0.72	13		U
75-69-4	Trichlorofluoromethane	1.2	13		U
75-01-4	Vinyl chloride	1.4	13		U
1330-20-7	Xylene(total)	0.91	13		U

PW
4/2/09

FORM 1
VOLATILE ORGANICS ANALYSIS DATA SHEET

CLIENT SAMPLE NO.

13

MR08-SS253-09A

Lab Name: EMPIRICAL LABS Contract: CH2MHILL

Lab Code: NA Case No.: NA SAS No.: NA SDG No.: LEJEUNE045

Matrix: (soil/water) SOIL Lab Sample ID: 0901068-13

Sample wt/vol: 3.9 (g/mL) G Lab File ID: 0106813A

Level: (low/med) LOW Date Sampled: 01/10/09 11:15

% Moisture: not dec. 11 Date Analyzed: 01/17/09 01:16

GC Column: RTX-VRX ID: 0.25 (mm) Dilution Factor: 1.0

Soil Extract Volume:_____(uL) Soil Aliquot Volume: _____(uL)

CONCENTRATION UNITS: (ug/L or ug/Kg) UG/KG

CAS NO.	COMPOUND	MDL	RL	CONC	Q
67-64-1	Acetone	2.8	14	60	~~B~~ ✓
71-43-2	Benzene	0.67	14		U
75-27-4	Bromodichloromethane	0.43	14		U
75-25-2	Bromoform	1.4	14		U
74-83-9	Bromomethane	1.0	14		U
78-93-3	2-Butanone	2.0	14	10	J
75-15-0	Carbon disulfide	1.8	14		U
56-23-5	Carbon tetrachloride	1.2	14		U
108-90-7	Chlorobenzene	0.48	14		U
75-00-3	Chloroethane	1.6	14		U
67-66-3	Chloroform	0.78	14		U
74-87-3	Chloromethane	0.74	14		U
110-82-7	Cyclohexane	0.77	14		U
124-48-1	Dibromochloromethane	0.48	14		U
96-12-8	1,2-Dibromo-3-chloropropane	1.7	7.1		U
106-93-4	1,2-Dibromoethane	0.61	14		U
95-50-1	1,2-Dichlorobenzene	0.53	14		U
541-73-1	1,3-Dichlorobenzene	1.2	14		U
106-46-7	1,4-Dichlorobenzene	0.78	14		U
75-71-8	Dichlorodifluoromethane	1.6	14		U
75-34-3	1,1-Dichloroethane	0.77	14		U
107-06-2	1,2-Dichloroethane	0.66	14		U
75-35-4	1,1-Dichloroethene	1.7	14		U
156-59-2	cis-1,2-Dichloroethene	1.7	14		U
156-60-5	trans-1,2-Dichloroethene	1.6	14		U
78-87-5	1,2-Dichloropropane	0.66	14		U
10061-01-5	cis-1,3-Dichloropropene	0.71	14		U
10061-02-6	trans-1,3-Dichloropropene	0.46	14		U
100-41-4	Ethylbenzene	1.1	14		U
591-78-6	2-Hexanone	3.3	14		U
98-82-8	Isopropylbenzene	1.2	14		U
79-20-9	Methyl acetate	2.3	14		U
75-09-2	Methylene chloride	0.88	14	14u	~~2.4 JB~~ U Bx
108-87-2	Methyl cyclohexane	0.43	14		U
1634-04-4	Methyl tert-butyl ether	0.46	14		U
108-10-1	4-Methyl-2-pentanone	0.83	14		U
100-42-5	Styrene	0.50	14		U
79-34-5	1,1,2,2-Tetrachloroethane	0.61	14		U
127-18-4	Tetrachloroethene	1.4	14		U

FORM I VOA

JW
4/2/09

FORM 1
VOLATILE ORGANICS ANALYSIS DATA SHEET

CLIENT SAMPLE NO.

13

MR08-SS253-09A

Lab Name: EMPIRICAL LABS Contract: CH2MHILL

Lab Code: NA Case No.: NA SAS No.: NA SDG No.: LEJEUNE045

Matrix: (soil/water) SOIL Lab Sample ID: 0901068-13

Sample wt/vol: 3.9 (g/mL) G Lab File ID: 0106813A

Level: (low/med) LOW Date Sampled: 01/10/09 11:15

% Moisture: not dec. 11 Date Analyzed: 01/17/09 01:16

GC Column: RTX-VRX ID: 0.25 (mm) Dilution Factor: 1.0

Soil Extract Volume:_____(uL) Soil Aliquot Volume: _____(uL)

CONCENTRATION UNITS: (ug/L or ug/Kg) UG/KG

CAS NO.	COMPOUND	MDL	RL	CONC	Q
108-88-3	Toluene	1.2	14	14u ~~1.6~~	~~J~~ U BL
120-82-1	1,2,4-Trichlorobenzene	0.26	14		U
71-55-6	1,1,1-Trichloroethane	1.3	14		U
79-00-5	1,1,2-Trichloroethane	0.50	14		U
79-01-6	Trichloroethene	1.2	14		U
76-13-1	Trichlorotrifluoroethane	0.78	14		U
75-69-4	Trichlorofluoromethane	1.4	14		U
75-01-4	Vinyl chloride	1.6	14		U
1330-20-7	Xylene(total)	1.00	14		U

FORM I VOA

lcw
4/2/09

FORM 1
VOLATILE ORGANICS ANALYSIS DATA SHEET

CLIENT SAMPLE NO. 14

MR08-IS25
3-6-7-09A

Lab Name: EMPIRICAL LABS Contract: CH2MHILL

Lab Code: NA Case No.: NA SAS No.: NA SDG No.: LEJEUNE045

Matrix: (soil/water) SOIL Lab Sample ID: 0901068-14

Sample wt/vol: 4.0 (g/mL) G Lab File ID: 0106814A

Level: (low/med) LOW Date Sampled: 01/10/09 11:30

% Moisture: not dec. 12 Date Analyzed: 01/17/09 01:47

GC Column: RTX-VRX ID: 0.25 (mm) Dilution Factor: 1.0

Soil Extract Volume:_____(uL) Soil Aliquot Volume: _____(uL)

CONCENTRATION UNITS: (ug/L or ug/Kg) UG/KG

CAS NO.	COMPOUND	MDL	RL	CONC	Q
67-64-1	Acetone	2.8	14	14u ~~5.8~~ ~~JB~~	B
71-43-2	Benzene	0.67	14		U
75-27-4	Bromodichloromethane	0.43	14		U
75-25-2	Bromoform	1.4	14		U
74-83-9	Bromomethane	1.0	14		U
78-93-3	2-Butanone	2.0	14		U
75-15-0	Carbon disulfide	1.8	14		U
56-23-5	Carbon tetrachloride	1.2	14		U
108-90-7	Chlorobenzene	0.48	14		U
75-00-3	Chloroethane	1.6	14		U
67-66-3	Chloroform	0.78	14		U
74-87-3	Chloromethane	0.74	14		U
110-82-7	Cyclohexane	0.77	14		U
124-48-1	Dibromochloromethane	0.48	14		U
96-12-8	1,2-Dibromo-3-chloropropane	1.7	7.1		U
106-93-4	1,2-Dibromoethane	0.61	14		U
95-50-1	1,2-Dichlorobenzene	0.53	14		U
541-73-1	1,3-Dichlorobenzene	1.2	14		U
106-46-7	1,4-Dichlorobenzene	0.78	14		U
75-71-8	Dichlorodifluoromethane	1.6	14		U
75-34-3	1,1-Dichloroethane	0.77	14		U
107-06-2	1,2-Dichloroethane	0.66	14		U
75-35-4	1,1-Dichloroethene	1.7	14		U
156-59-2	cis-1,2-Dichloroethene	1.7	14		U
156-60-5	trans-1,2-Dichloroethene	1.6	14		U
78-87-5	1,2-Dichloropropane	0.66	14		U
10061-01-5	cis-1,3-Dichloropropene	0.71	14		U
10061-02-6	trans-1,3-Dichloropropene	0.46	14		U
100-41-4	Ethylbenzene	1.1	14		U
591-78-6	2-Hexanone	3.3	14		U
98-82-8	Isopropylbenzene	1.2	14		U
79-20-9	Methyl acetate	2.3	14		U
75-09-2	Methylene chloride	0.88	14	14u 2~~.8~~ ~~JB~~	B
108-87-2	Methyl cyclohexane	0.43	14		U
1634-04-4	Methyl tert-butyl ether	0.46	14		U
108-10-1	4-Methyl-2-pentanone	0.83	14		U
100-42-5	Styrene	0.50	14		U
79-34-5	1,1,2,2-Tetrachloroethane	0.61	14		U
127-18-4	Tetrachloroethene	1.4	14		U

lwl 4/12/09

FORM 1
VOLATILE ORGANICS ANALYSIS DATA SHEET

CLIENT SAMPLE NO.

14

MR08-IS25
3-6-7-09A

Lab Name: EMPIRICAL LABS Contract: CH2MHILL

Lab Code: NA Case No.: NA SAS No.: NA SDG No.: LEJEUNE045

Matrix: (soil/water) SOIL Lab Sample ID: 0901068-14

Sample wt/vol: 4.0 (g/mL) G Lab File ID: 0106814A

Level: (low/med) LOW Date Sampled: 01/10/09 11:30

% Moisture: not dec. 12 Date Analyzed: 01/17/09 01:47

GC Column: RTX-VRX ID: 0.25 (mm) Dilution Factor: 1.0

Soil Extract Volume:_____(uL) Soil Aliquot Volume: _____(uL)

CONCENTRATION UNITS: (ug/L or ug/Kg) UG/KG

CAS NO.	COMPOUND	MDL	RL	CONC	Q
108-88-3	Toluene	1.2	14		U
120-82-1	1,2,4-Trichlorobenzene	0.26	14		U
71-55-6	1,1,1-Trichloroethane	1.3	14		U
79-00-5	1,1,2-Trichloroethane	0.50	14		U
79-01-6	Trichloroethene	1.2	14		U
76-13-1	Trichlorotrifluoroethane	0.78	14		U
75-69-4	Trichlorofluoromethane	1.4	14		U
75-01-4	Vinyl chloride	1.6	14		U
1330-20-7	Xylene(total)	1.00	14		U

lw
4/2/09

FORM 1
VOLATILE ORGANICS ANALYSIS DATA SHEET

CLIENT SAMPLE NO. 15

MR08-SS231-09A

Lab Name: EMPIRICAL LABS Contract: CH2MHILL

Lab Code: NA Case No.: NA SAS No.: NA SDG No.: LEJEUNE045

Matrix: (soil/water) SOIL Lab Sample ID: 0901068-15

Sample wt/vol: 3.7 (g/mL) G Lab File ID: 0106815A

Level: (low/med) LOW Date Sampled: 01/10/09 13:00

% Moisture: not dec. 8 Date Analyzed: 01/17/09 02:18

GC Column: RTX-VRX ID: 0.25 (mm) Dilution Factor: 1.0

Soil Extract Volume:_____(uL) Soil Aliquot Volume: _____(uL)

CONCENTRATION UNITS: (ug/L or ug/Kg) UG/KG

CAS NO.	COMPOUND	MDL	RL	CONC	Q	
67-64-1	Acetone	2.9	15	15u ~~13~~ ~~JB~~		BU
71-43-2	Benzene	0.69	15		U	
75-27-4	Bromodichloromethane	0.44	15		U	
75-25-2	Bromoform	1.5	15		U	
74-83-9	Bromomethane	1.1	15		U	
78-93-3	2-Butanone	2.1	15		U	
75-15-0	Carbon disulfide	1.9	15		U	
56-23-5	Carbon tetrachloride	1.3	15		U	
108-90-7	Chlorobenzene	0.50	15		U	
75-00-3	Chloroethane	1.6	15		U	
67-66-3	Chloroform	0.81	15		U	
74-87-3	Chloromethane	0.76	15		U	
110-82-7	Cyclohexane	0.80	15		U	
124-48-1	Dibromochloromethane	0.50	15		U	
96-12-8	1,2-Dibromo-3-chloropropane	1.8	7.4		U	
106-93-4	1,2-Dibromoethane	0.63	15		U	
95-50-1	1,2-Dichlorobenzene	0.54	15		U	
541-73-1	1,3-Dichlorobenzene	1.2	15		U	
106-46-7	1,4-Dichlorobenzene	0.81	15		U	
75-71-8	Dichlorodifluoromethane	1.6	15		U	
75-34-3	1,1-Dichloroethane	0.80	15		U	
107-06-2	1,2-Dichloroethane	0.68	15		U	
75-35-4	1,1-Dichloroethene	1.8	15		U	
156-59-2	cis-1,2-Dichloroethene	1.8	15		U	
156-60-5	trans-1,2-Dichloroethene	1.6	15		U	
78-87-5	1,2-Dichloropropane	0.68	15		U	
10061-01-5	cis-1,3-Dichloropropene	0.74	15		U	
10061-02-6	trans-1,3-Dichloropropene	0.47	15		U	
100-41-4	Ethylbenzene	1.1	15		U	
591-78-6	2-Hexanone	3.4	15		U	
98-82-8	Isopropylbenzene	1.3	15		U	
79-20-9	Methyl acetate	2.4	15		U	
75-09-2	Methylene chloride	0.91	15	15u ~~2.9~~ ~~JB~~		B
108-87-2	Methyl cyclohexane	0.44	15		U	
1634-04-4	Methyl tert-butyl ether	0.47	15		U	
108-10-1	4-Methyl-2-pentanone	0.85	15		U	
100-42-5	Styrene	0.52	15		U	
79-34-5	1,1,2,2-Tetrachloroethane	0.63	15		U	
127-18-4	Tetrachloroethene	1.4	15		U	

FORM I VOA

MW 01/23/09

FORM 1
VOLATILE ORGANICS ANALYSIS DATA SHEET

CLIENT SAMPLE NO.

15

MR08-SS231-09A

Lab Name: EMPIRICAL LABS Contract: CH2MHILL

Lab Code: NA Case No.: NA SAS No.: NA SDG No.: LEJEUNE045

Matrix: (soil/water) SOIL Lab Sample ID: 0901068-15

Sample wt/vol: 3.7 (g/mL) G Lab File ID: 0106815A

Level: (low/med) LOW Date Sampled: 01/10/09 13:00

% Moisture: not dec. 8 Date Analyzed: 01/17/09 02:18

GC Column: RTX-VRX ID: 0.25 (mm) Dilution Factor: 1.0

Soil Extract Volume:_____(uL) Soil Aliquot Volume: _____(uL)

CONCENTRATION UNITS: (ug/L or ug/Kg) UG/KG

CAS NO.	COMPOUND	MDL	RL	CONC	Q
108-88-3	Toluene	1.3	15		U
120-82-1	1,2,4-Trichlorobenzene	0.26	15		U
71-55-6	1,1,1-Trichloroethane	1.3	15		U
79-00-5	1,1,2-Trichloroethane	0.52	15		U
79-01-6	Trichloroethene	1.2	15		U
76-13-1	Trichlorotrifluoroethane	0.81	15		U
75-69-4	Trichlorofluoromethane	1.4	15		U
75-01-4	Vinyl chloride	1.6	15		U
1330-20-7	Xylene(total)	1.0	15		U

fw
4/2/09

FORM 1
VOLATILE ORGANICS ANALYSIS DATA SHEET

CLIENT SAMPLE NO. 16

MR08-IS23
1-8-9-09A

Lab Name: EMPIRICAL LABS Contract: CH2MHILL

Lab Code: NA Case No.: NA SAS No.: NA SDG No.: LEJEUNE045

Matrix: (soil/water) SOIL Lab Sample ID: 0901068-16

Sample wt/vol: 4.7 (g/mL) G Lab File ID: 0106816A

Level: (low/med) LOW Date Sampled: 01/10/09 13:20

% Moisture: not dec. 6 Date Analyzed: 01/17/09 02:48

GC Column: RTX-VRX ID: 0.25 (mm) Dilution Factor: 1.0

Soil Extract Volume:_____(uL) Soil Aliquot Volume: _____(uL)

CONCENTRATION UNITS: (ug/L or ug/Kg) UG/KG

CAS NO.	COMPOUND	MDL	RL	CONC	Q
67-64-1	Acetone	2.3	11		U
71-43-2	Benzene	0.53	11		U
75-27-4	Bromodichloromethane	0.34	11		U
75-25-2	Bromoform	1.1	11		U
74-83-9	Bromomethane	0.82	11		U
78-93-3	2-Butanone	1.6	11		U
75-15-0	Carbon disulfide	1.5	11		U
56-23-5	Carbon tetrachloride	1.0	11		U
108-90-7	Chlorobenzene	0.39	11		U
75-00-3	Chloroethane	1.2	11		U
67-66-3	Chloroform	0.62	11		U
74-87-3	Chloromethane	0.59	11		U
110-82-7	Cyclohexane	0.61	11		U
124-48-1	Dibromochloromethane	0.39	11		U
96-12-8	1,2-Dibromo-3-chloropropane	1.4	5.7		U
106-93-4	1,2-Dibromoethane	0.49	11		U
95-50-1	1,2-Dichlorobenzene	0.42	11		U
541-73-1	1,3-Dichlorobenzene	0.95	11		U
106-46-7	1,4-Dichlorobenzene	0.62	11		U
75-71-8	Dichlorodifluoromethane	1.2	11		U
75-34-3	1,1-Dichloroethane	0.61	11		U
107-06-2	1,2-Dichloroethane	0.52	11		U
75-35-4	1,1-Dichloroethene	1.4	11		U
156-59-2	cis-1,2-Dichloroethene	1.4	11		U
156-60-5	trans-1,2-Dichloroethene	1.2	11		U
78-87-5	1,2-Dichloropropane	0.52	11		U
10061-01-5	cis-1,3-Dichloropropene	0.57	11		U
10061-02-6	trans-1,3-Dichloropropene	0.36	11		U
100-41-4	Ethylbenzene	0.85	11		U
591-78-6	2-Hexanone	2.6	11		U
98-82-8	Isopropylbenzene	1.0	11		U
79-20-9	Methyl acetate	1.8	11		U
75-09-2	Methylene chloride	0.70	11	114 ~~2.5 JB~~	B1
108-87-2	Methyl cyclohexane	0.34	11		U
1634-04-4	Methyl tert-butyl ether	0.36	11		U
108-10-1	4-Methyl-2-pentanone	0.66	11		U
100-42-5	Styrene	0.40	11		U
79-34-5	1,1,2,2-Tetrachloroethane	0.49	11		U
127-18-4	Tetrachloroethene	1.1	11		U

LW
4/2/09

FORM 1
VOLATILE ORGANICS ANALYSIS DATA SHEET

CLIENT SAMPLE NO. 16

MR08-IS23
1-8-9-09A

Lab Name: EMPIRICAL LABS Contract: CH2MHILL

Lab Code: NA Case No.: NA SAS No.: NA SDG No.: LEJEUNE045

Matrix: (soil/water) SOIL Lab Sample ID: 0901068-16

Sample wt/vol: 4.7 (g/mL) G Lab File ID: 0106816A

Level: (low/med) LOW Date Sampled: 01/10/09 13:20

% Moisture: not dec. 6 Date Analyzed: 01/17/09 02:48

GC Column: RTX-VRX ID: 0.25 (mm) Dilution Factor: 1.0

Soil Extract Volume:_____(uL) Soil Aliquot Volume: _____(uL)

CONCENTRATION UNITS: (ug/L or ug/Kg) UG/KG

CAS NO.	COMPOUND	MDL	RL	CONC	Q
108-88-3	Toluene	0.98	11		U
120-82-1	1,2,4-Trichlorobenzene	0.20	11		U
71-55-6	1,1,1-Trichloroethane	1.0	11		U
79-00-5	1,1,2-Trichloroethane	0.40	11		U
79-01-6	Trichloroethene	0.97	11		U
76-13-1	Trichlorotrifluoroethane	0.62	11		U
75-69-4	Trichlorofluoromethane	1.1	11		U
75-01-4	Vinyl chloride	1.2	11		U
1330-20-7	Xylene(total)	0.80	11		U

JEW
2/2/09

FORM 1
VOLATILE ORGANICS ANALYSIS DATA SHEET

CLIENT SAMPLE NO. 17

MR08-SS230-09A

Lab Name: EMPIRICAL LABS Contract: CH2MHILL

Lab Code: NA Case No.: NA SAS No.: NA SDG No.: LEJEUNE045

Matrix: (soil/water) SOIL Lab Sample ID: 0901068-17

Sample wt/vol: 5.2 (g/mL) G Lab File ID: 0106817A

Level: (low/med) LOW Date Sampled: 01/10/09 13:45

% Moisture: not dec. 10 Date Analyzed: 01/17/09 03:19

GC Column: RTX-VRX ID: 0.25 (mm) Dilution Factor: 1.0

Soil Extract Volume:_____(uL) Soil Aliquot Volume: _____(uL)

CONCENTRATION UNITS: (ug/L or ug/Kg) UG/KG

CAS NO.	COMPOUND	MDL	RL	CONC	Q
67-64-1	Acetone	2.1	11		U
71-43-2	Benzene	0.50	11	0.63	J
75-27-4	Bromodichloromethane	0.32	11		U
75-25-2	Bromoform	1.1	11		U
74-83-9	Bromomethane	0.77	11		U
78-93-3	2-Butanone	1.5	11		U
75-15-0	Carbon disulfide	1.4	11		U
56-23-5	Carbon tetrachloride	0.94	11		U
108-90-7	Chlorobenzene	0.36	11		U
75-00-3	Chloroethane	1.2	11		U
67-66-3	Chloroform	0.59	11		U
74-87-3	Chloromethane	0.56	11		U
110-82-7	Cyclohexane	0.58	11		U
124-48-1	Dibromochloromethane	0.36	11		U
96-12-8	1,2-Dibromo-3-chloropropane	1.3	5.4		U
106-93-4	1,2-Dibromoethane	0.46	11		U
95-50-1	1,2-Dichlorobenzene	0.40	11		U
541-73-1	1,3-Dichlorobenzene	0.90	11		U
106-46-7	1,4-Dichlorobenzene	0.59	11		U
75-71-8	Dichlorodifluoromethane	1.2	11		U
75-34-3	1,1-Dichloroethane	0.58	11		U
107-06-2	1,2-Dichloroethane	0.49	11		U
75-35-4	1,1-Dichloroethene	1.3	11		U
156-59-2	cis-1,2-Dichloroethene	1.3	11		U
156-60-5	trans-1,2-Dichloroethene	1.2	11		U
78-87-5	1,2-Dichloropropane	0.49	11		U
10061-01-5	cis-1,3-Dichloropropene	0.54	11		U
10061-02-6	trans-1,3-Dichloropropene	0.34	11		U
100-41-4	Ethylbenzene	0.80	11	2.9	J
591-78-6	2-Hexanone	2.5	11		U
98-82-8	Isopropylbenzene	0.94	11		U
79-20-9	Methyl acetate	1.7	11		U
75-09-2	Methylene chloride	0.66	11	1(u ~~1.9~~ ~~JB~~	B
108-87-2	Methyl cyclohexane	0.32	11	0.40	J
1634-04-4	Methyl tert-butyl ether	0.34	11		U
108-10-1	4-Methyl-2-pentanone	0.62	11		U
100-42-5	Styrene	0.37	11		U
79-34-5	1,1,2,2-Tetrachloroethane	0.46	11		U
127-18-4	Tetrachloroethene	1.0	11		U

FORM I VOA

kw 4/2/09

FORM 1
VOLATILE ORGANICS ANALYSIS DATA SHEET

CLIENT SAMPLE NO.

MR08-SS230-09A

17

Lab Name: EMPIRICAL LABS Contract: CH2MHILL

Lab Code: NA Case No.: NA SAS No.: NA SDG No.: LEJEUNE045

Matrix: (soil/water) SOIL Lab Sample ID: 0901068-17

Sample wt/vol: 5.2 (g/mL) G Lab File ID: 0106817A

Level: (low/med) LOW Date Sampled: 01/10/09 13:45

% Moisture: not dec. 10 Date Analyzed: 01/17/09 03:19

GC Column: RTX-VRX ID: 0.25 (mm) Dilution Factor: 1.0

Soil Extract Volume:_____(uL) Soil Aliquot Volume: _____(uL)

CONCENTRATION UNITS: (ug/L or ug/Kg) UG/KG

CAS NO.	COMPOUND	MDL	RL	CONC	Q
108-88-3	Toluene	0.92	11	11u ~~1.7~~	~~J~~ U BL
120-82-1	1,2,4-Trichlorobenzene	0.19	11		U
71-55-6	1,1,1-Trichloroethane	0.96	11		U
79-00-5	1,1,2-Trichloroethane	0.37	11		U
79-01-6	Trichloroethene	0.91	11		U
76-13-1	Trichlorotrifluoroethane	0.59	11		U
75-69-4	Trichlorofluoromethane	1.0	11		U
75-01-4	Vinyl chloride	1.2	11		U
1330-20-7	Xylene(total)	0.75	11		U

MW 4/2/09

FORM 1
VOLATILE ORGANICS ANALYSIS DATA SHEET

CLIENT SAMPLE NO.

MR08-IS23
0-8-9-09A

18

Lab Name: EMPIRICAL LABS Contract: CH2MHILL

Lab Code: NA Case No.: NA SAS No.: NA SDG No.: LEJEUNE045

Matrix: (soil/water) SOIL Lab Sample ID: 0901068-18

Sample wt/vol: 3.8 (g/mL) G Lab File ID: 0106818A

Level: (low/med) LOW Date Sampled: 01/10/09 14:05

% Moisture: not dec. 15 Date Analyzed: 01/17/09 03:50

GC Column: RTX-VRX ID: 0.25 (mm) Dilution Factor: 1.0

Soil Extract Volume:_____(uL) Soil Aliquot Volume: _____(uL)

CONCENTRATION UNITS: (ug/L or ug/Kg) UG/KG

CAS NO.	COMPOUND	MDL	RL	CONC	Q	
67-64-1	Acetone	3.1	15	15u	~~12~~ ~~JB~~	BL
71-43-2	Benzene	0.72	15		U	
75-27-4	Bromodichloromethane	0.46	15		U	
75-25-2	Bromoform	1.5	15		U	
74-83-9	Bromomethane	1.1	15		U	
78-93-3	2-Butanone	2.2	15		U	
75-15-0	Carbon disulfide	2.0	15		U	
56-23-5	Carbon tetrachloride	1.4	15		U	
108-90-7	Chlorobenzene	0.52	15		U	
75-00-3	Chloroethane	1.7	15		U	
67-66-3	Chloroform	0.85	15		U	
74-87-3	Chloromethane	0.80	15		U	
110-82-7	Cyclohexane	0.83	15		U	
124-48-1	Dibromochloromethane	0.52	15		U	
96-12-8	1,2-Dibromo-3-chloropropane	1.8	7.7		U	
106-93-4	1,2-Dibromoethane	0.66	15		U	
95-50-1	1,2-Dichlorobenzene	0.57	15		U	
541-73-1	1,3-Dichlorobenzene	1.3	15		U	
106-46-7	1,4-Dichlorobenzene	0.85	15		U	
75-71-8	Dichlorodifluoromethane	1.7	15		U	
75-34-3	1,1-Dichloroethane	0.83	15		U	
107-06-2	1,2-Dichloroethane	0.71	15		U	
75-35-4	1,1-Dichloroethene	1.8	15		U	
156-59-2	cis-1,2-Dichloroethene	1.8	15		U	
156-60-5	trans-1,2-Dichloroethene	1.7	15		U	
78-87-5	1,2-Dichloropropane	0.71	15		U	
10061-01-5	cis-1,3-Dichloropropene	0.77	15		U	
10061-02-6	trans-1,3-Dichloropropene	0.49	15		U	
100-41-4	Ethylbenzene	1.2	15		U	
591-78-6	2-Hexanone	3.5	15		U	
98-82-8	Isopropylbenzene	1.4	15		U	
79-20-9	Methyl acetate	2.5	15		U	
75-09-2	Methylene chloride	0.95	15	15u	~~3.6~~ ~~JB~~	B
108-87-2	Methyl cyclohexane	0.46	15		U	
1634-04-4	Methyl tert-butyl ether	0.49	15		U	
108-10-1	4-Methyl-2-pentanone	0.89	15		U	
100-42-5	Styrene	0.54	15		U	
79-34-5	1,1,2,2-Tetrachloroethane	0.66	15		U	
127-18-4	Tetrachloroethene	1.5	15		U	

LW 4/2/09

FORM 1
VOLATILE ORGANICS ANALYSIS DATA SHEET

CLIENT SAMPLE NO. 18

MR08-IS23
0-8-9-09A

Lab Name: EMPIRICAL LABS Contract: CH2MHILL

Lab Code: NA Case No.: NA SAS No.: NA SDG No.: LEJEUNE045

Matrix: (soil/water) SOIL Lab Sample ID: 0901068-18

Sample wt/vol: 3.8 (g/mL) G Lab File ID: 0106818A

Level: (low/med) LOW Date Sampled: 01/10/09 14:05

% Moisture: not dec. 15 Date Analyzed: 01/17/09 03:50

GC Column: RTX-VRX ID: 0.25 (mm) Dilution Factor: 1.0

Soil Extract Volume:_____(uL) Soil Aliquot Volume: _____(uL)

CONCENTRATION UNITS: (ug/L or ug/Kg) UG/KG

CAS NO.	COMPOUND	MDL	RL	CONC	Q
108-88-3	Toluene	1.3	15		U
120-82-1	1,2,4-Trichlorobenzene	0.28	15		U
71-55-6	1,1,1-Trichloroethane	1.4	15		U
79-00-5	1,1,2-Trichloroethane	0.54	15		U
79-01-6	Trichloroethene	1.3	15		U
76-13-1	Trichlorotrifluoroethane	0.85	15		U
75-69-4	Trichlorofluoromethane	1.5	15		U
75-01-4	Vinyl chloride	1.7	15		U
1330-20-7	Xylene(total)	1.1	15		U

lw
4/2/09

FORM 1
VOLATILE ORGANICS ANALYSIS DATA SHEET

CLIENT SAMPLE NO. 19

MR08-SS259-09A

Lab Name: EMPIRICAL LABS Contract: CH2MHILL

Lab Code: NA Case No.: NA SAS No.: NA SDG No.: LEJEUNE045

Matrix: (soil/water) SOIL Lab Sample ID: 0901068-19

Sample wt/vol: 3.5 (g/mL) G Lab File ID: 0106819A

Level: (low/med) LOW Date Sampled: 01/10/09 14:20

% Moisture: not dec. 7 Date Analyzed: 01/17/09 04:21

GC Column: RTX-VRX ID: 0.25 (mm) Dilution Factor: 1.0

Soil Extract Volume:_____(uL) Soil Aliquot Volume: _____(uL)

CONCENTRATION UNITS: (ug/L or ug/Kg) UG/KG

CAS NO.	COMPOUND	MDL	RL	CONC	Q
67-64-1	Acetone	3.1	16		U
71-43-2	Benzene	0.73	16	1.4	J
75-27-4	Bromodichloromethane	0.47	16		U
75-25-2	Bromoform	1.6	16		U
74-83-9	Bromomethane	1.1	16		U
78-93-3	2-Butanone	2.2	16		U
75-15-0	Carbon disulfide	2.0	16	3.1	J
56-23-5	Carbon tetrachloride	1.4	16		U
108-90-7	Chlorobenzene	0.53	16		U
75-00-3	Chloroethane	1.7	16		U
67-66-3	Chloroform	0.86	16	0.88	J
74-87-3	Chloromethane	0.81	16		U
110-82-7	Cyclohexane	0.84	16		U
124-48-1	Dibromochloromethane	0.53	16		U
96-12-8	1,2-Dibromo-3-chloropropane	1.9	7.8		U
106-93-4	1,2-Dibromoethane	0.67	16		U
95-50-1	1,2-Dichlorobenzene	0.58	16		U
541-73-1	1,3-Dichlorobenzene	1.3	16		U
106-46-7	1,4-Dichlorobenzene	0.86	16		U
75-71-8	Dichlorodifluoromethane	1.7	16		U
75-34-3	1,1-Dichloroethane	0.84	16		U
107-06-2	1,2-Dichloroethane	0.72	16		U
75-35-4	1,1-Dichloroethene	1.9	16		U
156-59-2	cis-1,2-Dichloroethene	1.9	16		U
156-60-5	trans-1,2-Dichloroethene	1.7	16		U
78-87-5	1,2-Dichloropropane	0.72	16		U
10061-01-5	cis-1,3-Dichloropropene	0.78	16		U
10061-02-6	trans-1,3-Dichloropropene	0.50	16		U
100-41-4	Ethylbenzene	1.2	16		U
591-78-6	2-Hexanone	3.6	16		U
98-82-8	Isopropylbenzene	1.4	16		U
79-20-9	Methyl acetate	2.5	16		U
75-09-2	Methylene chloride	0.97	16	164 ~~2.9~~ ~~JB~~	B
108-87-2	Methyl cyclohexane	0.47	16		U
1634-04-4	Methyl tert-butyl ether	0.50	16		U
108-10-1	4-Methyl-2-pentanone	0.90	16		U
100-42-5	Styrene	0.54	16		U
79-34-5	1,1,2,2-Tetrachloroethane	0.67	16		U
127-18-4	Tetrachloroethene	1.5	16		U

lmw
4/2/09

FORM 1
VOLATILE ORGANICS ANALYSIS DATA SHEET

CLIENT SAMPLE NO. 19

MR08-SS259-09A

Lab Name: EMPIRICAL LABS Contract: CH2MHILL

Lab Code: NA Case No.: NA SAS No.: NA SDG No.: LEJEUNE045

Matrix: (soil/water) SOIL Lab Sample ID: 0901068-19

Sample wt/vol: 3.5 (g/mL) G Lab File ID: 0106819A

Level: (low/med) LOW Date Sampled: 01/10/09 14:20

% Moisture: not dec. 7 Date Analyzed: 01/17/09 04:21

GC Column: RTX-VRX ID: 0.25 (mm) Dilution Factor: 1.0

Soil Extract Volume:_____(uL) Soil Aliquot Volume: _____(uL)

CONCENTRATION UNITS: (ug/L or ug/Kg) UG/KG

CAS NO.	COMPOUND	MDL	RL	CONC	Q
108-88-3	Toluene	1.3	16	16u ~~1.5~~	~~J~~ U BL
120-82-1	1,2,4-Trichlorobenzene	0.28	16		U
71-55-6	1,1,1-Trichloroethane	1.4	16		U
79-00-5	1,1,2-Trichloroethane	0.54	16		U
79-01-6	Trichloroethene	1.3	16		U
76-13-1	Trichlorotrifluoroethane	0.86	16		U
75-69-4	Trichlorofluoromethane	1.5	16		U
75-01-4	Vinyl chloride	1.7	16		U
1330-20-7	Xylene(total)	1.1	16		U

MW 4/2/09

FORM 1
VOLATILE ORGANICS ANALYSIS DATA SHEET

CLIENT SAMPLE NO. 20

MR08-SS259D-09A

Lab Name: EMPIRICAL LABS Contract: CH2MHILL

Lab Code: NA Case No.: NA SAS No.: NA SDG No.: LEJEUNE045

Matrix: (soil/water) SOIL Lab Sample ID: 0901068-20

Sample wt/vol: 3.9 (g/mL) G Lab File ID: 0106820A

Level: (low/med) LOW Date Sampled: 01/10/09 14:25

% Moisture: not dec. 9 Date Analyzed: 01/17/09 04:52

GC Column: RTX-VRX ID: 0.25 (mm) Dilution Factor: 1.0

Soil Extract Volume:_____(uL) Soil Aliquot Volume: _____(uL)

CONCENTRATION UNITS: (ug/L or ug/Kg) UG/KG

CAS NO.	COMPOUND	MDL	RL	CONC	Q	
67-64-1	Acetone	2.8	14		U	
71-43-2	Benzene	0.66	14	1.2	~~J~~ J	SS1
75-27-4	Bromodichloromethane	0.42	14		U	
75-25-2	Bromoform	1.4	14		U	
74-83-9	Bromomethane	1.0	14		U	
78-93-3	2-Butanone	2.0	14	18	J	SS
75-15-0	Carbon disulfide	1.8	14	4.0	~~J~~ J	SS
56-23-5	Carbon tetrachloride	1.2	14		U	
108-90-7	Chlorobenzene	0.48	14		U	
75-00-3	Chloroethane	1.5	14		U	
67-66-3	Chloroform	0.77	14	1.2	~~J~~ J	SS
74-87-3	Chloromethane	0.73	14		U	
110-82-7	Cyclohexane	0.76	14		U	
124-48-1	Dibromochloromethane	0.48	14		U	
96-12-8	1,2-Dibromo-3-chloropropane	1.7	7.0		U	
106-93-4	1,2-Dibromoethane	0.60	14		U	
95-50-1	1,2-Dichlorobenzene	0.52	14		U	
541-73-1	1,3-Dichlorobenzene	1.2	14		U	
106-46-7	1,4-Dichlorobenzene	0.77	14		U	
75-71-8	Dichlorodifluoromethane	1.5	14		U	
75-34-3	1,1-Dichloroethane	0.76	14		U	
107-06-2	1,2-Dichloroethane	0.64	14		U	
75-35-4	1,1-Dichloroethene	1.7	14		U	
156-59-2	cis-1,2-Dichloroethene	1.7	14		U	
156-60-5	trans-1,2-Dichloroethene	1.5	14		U	
78-87-5	1,2-Dichloropropane	0.64	14		U	
10061-01-5	cis-1,3-Dichloropropene	0.70	14		U	
10061-02-6	trans-1,3-Dichloropropene	0.45	14		U	
100-41-4	Ethylbenzene	1.0	14		U	
591-78-6	2-Hexanone	3.2	14		U	
98-82-8	Isopropylbenzene	1.2	14		U	
79-20-9	Methyl acetate	2.2	14		U	
75-09-2	Methylene chloride	0.87	14	144	~~2.9 JB~~	B
108-87-2	Methyl cyclohexane	0.42	14	0.54	~~J~~ J	S
1634-04-4	Methyl tert-butyl ether	0.45	14		U	
108-10-1	4-Methyl-2-pentanone	0.81	14		U	
100-42-5	Styrene	0.49	14		U	
79-34-5	1,1,2,2-Tetrachloroethane	0.60	14		U	
127-18-4	Tetrachloroethene	1.4	14		U	

FORM I VOA

fw
4/2/09

FORM 1
VOLATILE ORGANICS ANALYSIS DATA SHEET

CLIENT SAMPLE NO. 20

MR08-SS259D-09A

Lab Name: EMPIRICAL LABS Contract: CH2MHILL

Lab Code: NA Case No.: NA SAS No.: NA SDG No.: LEJEUNE045

Matrix: (soil/water) SOIL Lab Sample ID: 0901068-20

Sample wt/vol: 3.9 (g/mL) G Lab File ID: 0106820A

Level: (low/med) LOW Date Sampled: 01/10/09 14:25

% Moisture: not dec. 9 Date Analyzed: 01/17/09 04:52

GC Column: RTX-VRX ID: 0.25 (mm) Dilution Factor: 1.0

Soil Extract Volume:_____(uL) Soil Aliquot Volume: _____(uL)

CONCENTRATION UNITS: (ug/L or ug/Kg) UG/KG

CAS NO.	COMPOUND	MDL	RL	CONC	Q
108-88-3	Toluene	1.2	14	14u ~~1.3~~	~~J~~ U BL
120-82-1	1,2,4-Trichlorobenzene	0.25	14		U
71-55-6	1,1,1-Trichloroethane	1.3	14		U
79-00-5	1,1,2-Trichloroethane	0.49	14		U
79-01-6	Trichloroethene	1.2	14		U
76-13-1	Trichlorotrifluoroethane	0.77	14		U
75-69-4	Trichlorofluoromethane	1.3	14		U
75-01-4	Vinyl chloride	1.5	14		U
1330-20-7	Xylene(total)	0.98	14		U

fw
4/2/09

FORM 1
VOLATILE ORGANICS ANALYSIS DATA SHEET

CLIENT SAMPLE NO.

21

MR08-IS25
9-5-6-09A

Lab Name: EMPIRICAL LABS Contract: CH2MHILL

Lab Code: NA Case No.: NA SAS No.: NA SDG No.: LEJEUNE045

Matrix: (soil/water) SOIL Lab Sample ID: 0901068-21

Sample wt/vol: 3.0 (g/mL) G Lab File ID: 0106821A

Level: (low/med) LOW Date Sampled: 01/10/09 14:45

% Moisture: not dec. 9 Date Analyzed: 01/17/09 05:23

GC Column: RTX-VRX ID: 0.25 (mm) Dilution Factor: 1.0

Soil Extract Volume:_____(uL) Soil Aliquot Volume: _____(uL)

CONCENTRATION UNITS: (ug/L or ug/Kg) UG/KG

CAS NO.	COMPOUND	MDL	RL	CONC	Q	
67-64-1	Acetone	3.7	18	18u ~~11~~	~~JB~~	BL
71-43-2	Benzene	0.87	18		U	
75-27-4	Bromodichloromethane	0.56	18		U	
75-25-2	Bromoform	1.8	18		U	
74-83-9	Bromomethane	1.3	18		U	
78-93-3	2-Butanone	2.6	18		U	
75-15-0	Carbon disulfide	2.4	18		U	
56-23-5	Carbon tetrachloride	1.6	18		U	
108-90-7	Chlorobenzene	0.63	18		U	
75-00-3	Chloroethane	2.0	18		U	
67-66-3	Chloroform	1.0	18		U	
74-87-3	Chloromethane	0.96	18		U	
110-82-7	Cyclohexane	1.0	18		U	
124-48-1	Dibromochloromethane	0.63	18		U	
96-12-8	1,2-Dibromo-3-chloropropane	2.2	9.3		U	
106-93-4	1,2-Dibromoethane	0.80	18		U	
95-50-1	1,2-Dichlorobenzene	0.69	18		U	
541-73-1	1,3-Dichlorobenzene	1.6	18		U	
106-46-7	1,4-Dichlorobenzene	1.0	18		U	
75-71-8	Dichlorodifluoromethane	2.0	18		U	
75-34-3	1,1-Dichloroethane	1.0	18		U	
107-06-2	1,2-Dichloroethane	0.85	18		U	
75-35-4	1,1-Dichloroethene	2.2	18		U	
156-59-2	cis-1,2-Dichloroethene	2.2	18		U	
156-60-5	trans-1,2-Dichloroethene	2.0	18		U	
78-87-5	1,2-Dichloropropane	0.85	18		U	
10061-01-5	cis-1,3-Dichloropropene	0.93	18		U	
10061-02-6	trans-1,3-Dichloropropene	0.59	18		U	
100-41-4	Ethylbenzene	1.4	18		U	
591-78-6	2-Hexanone	4.3	18		U	
98-82-8	Isopropylbenzene	1.6	18		U	
79-20-9	Methyl acetate	3.0	18		U	
75-09-2	Methylene chloride	1.2	18	18u ~~4.4~~	~~JB~~	BI
108-87-2	Methyl cyclohexane	0.56	18		U	
1634-04-4	Methyl tert-butyl ether	0.59	18		U	
108-10-1	4-Methyl-2-pentanone	1.1	18		U	
100-42-5	Styrene	0.65	18		U	
79-34-5	1,1,2,2-Tetrachloroethane	0.80	18		U	
127-18-4	Tetrachloroethene	1.8	18		U	

4/2/09

FORM 1
VOLATILE ORGANICS ANALYSIS DATA SHEET

CLIENT SAMPLE NO. 21

MR08-IS25
9-5-6-09A

Lab Name: EMPIRICAL LABS Contract: CH2MHILL

Lab Code: NA Case No.: NA SAS No.: NA SDG No.: LEJEUNE045

Matrix: (soil/water) SOIL Lab Sample ID: 0901068-21

Sample wt/vol: 3.0 (g/mL) G Lab File ID: 0106821A

Level: (low/med) LOW Date Sampled: 01/10/09 14:45

% Moisture: not dec. 9 Date Analyzed: 01/17/09 05:23

GC Column: RTX-VRX ID: 0.25 (mm) Dilution Factor: 1.0

Soil Extract Volume:_____(uL) Soil Aliquot Volume: _____(uL)

CONCENTRATION UNITS: (ug/L or ug/Kg) UG/KG

CAS NO.	COMPOUND	MDL	RL	CONC	Q
108-88-3	Toluene	1.6	18		U
120-82-1	1,2,4-Trichlorobenzene	0.33	18		U
71-55-6	1,1,1-Trichloroethane	1.7	18		U
79-00-5	1,1,2-Trichloroethane	0.65	18		U
79-01-6	Trichloroethene	1.6	18		U
76-13-1	Trichlorotrifluoroethane	1.0	18		U
75-69-4	Trichlorofluoromethane	1.8	18		U
75-01-4	Vinyl chloride	2.0	18		U
1330-20-7	Xylene(total)	1.3	18		U

JW 4/2/09

FORM 1
VOLATILE ORGANICS ANALYSIS DATA SHEET

CLIENT SAMPLE NO. 22

MR08-IS25
9D-5-6-09A

Lab Name: EMPIRICAL LABS Contract: CH2MHILL

Lab Code: NA Case No.: NA SAS No.: NA SDG No.: LEJEUNE045

Matrix: (soil/water) SOIL Lab Sample ID: 0901068-22

Sample wt/vol: 5.0 (g/mL) G Lab File ID: 0106822A

Level: (low/med) LOW Date Sampled: 01/10/09 14:55

% Moisture: not dec. 10 Date Analyzed: 01/17/09 05:53

GC Column: RTX-VRX ID: 0.25 (mm) Dilution Factor: 1.0

Soil Extract Volume:_____(uL) Soil Aliquot Volume: _____(uL)

CONCENTRATION UNITS: (ug/L or ug/Kg) UG/KG

CAS NO.	COMPOUND	MDL	RL	CONC	Q
67-64-1	Acetone	2.2	11	11u ~~6.1 JB~~	B
71-43-2	Benzene	0.52	11		U
75-27-4	Bromodichloromethane	0.33	11		U
75-25-2	Bromoform	1.1	11		U
74-83-9	Bromomethane	0.80	11		U
78-93-3	2-Butanone	1.6	11		U
75-15-0	Carbon disulfide	1.4	11		U
56-23-5	Carbon tetrachloride	0.98	11		U
108-90-7	Chlorobenzene	0.38	11		U
75-00-3	Chloroethane	1.2	11		U
67-66-3	Chloroform	0.61	11		U
74-87-3	Chloromethane	0.58	11		U
110-82-7	Cyclohexane	0.60	11		U
124-48-1	Dibromochloromethane	0.38	11		U
96-12-8	1,2-Dibromo-3-chloropropane	1.3	5.5		U
106-93-4	1,2-Dibromoethane	0.48	11		U
95-50-1	1,2-Dichlorobenzene	0.41	11		U
541-73-1	1,3-Dichlorobenzene	0.93	11		U
106-46-7	1,4-Dichlorobenzene	0.61	11		U
75-71-8	Dichlorodifluoromethane	1.2	11		U
75-34-3	1,1-Dichloroethane	0.60	11		U
107-06-2	1,2-Dichloroethane	0.51	11		U
75-35-4	1,1-Dichloroethene	1.3	11		U
156-59-2	cis-1,2-Dichloroethene	1.3	11		U
156-60-5	trans-1,2-Dichloroethene	1.2	11		U
78-87-5	1,2-Dichloropropane	0.51	11		U
10061-01-5	cis-1,3-Dichloropropene	0.55	11		U
10061-02-6	trans-1,3-Dichloropropene	0.36	11		U
100-41-4	Ethylbenzene	0.83	11		U
591-78-6	2-Hexanone	2.6	11		U
98-82-8	Isopropylbenzene	0.98	11		U
79-20-9	Methyl acetate	1.8	11		U
75-09-2	Methylene chloride	0.69	11	11u ~~2.0 JB~~	B
108-87-2	Methyl cyclohexane	0.33	11		U
1634-04-4	Methyl tert-butyl ether	0.36	11		U
108-10-1	4-Methyl-2-pentanone	0.64	11		U
100-42-5	Styrene	0.39	11		U
79-34-5	1,1,2,2-Tetrachloroethane	0.48	11		U
127-18-4	Tetrachloroethene	1.1	11		U

ew
4/2/09

FORM 1
VOLATILE ORGANICS ANALYSIS DATA SHEET

CLIENT SAMPLE NO.

22

MR08-IS25
9D-5-6-09A

Lab Name: EMPIRICAL LABS Contract: CH2MHILL

Lab Code: NA Case No.: NA SAS No.: NA SDG No.: LEJEUNE045

Matrix: (soil/water) SOIL Lab Sample ID: 0901068-22

Sample wt/vol: 5.0 (g/mL) G Lab File ID: 0106822A

Level: (low/med) LOW Date Sampled: 01/10/09 14:55

% Moisture: not dec. 10 Date Analyzed: 01/17/09 05:53

GC Column: RTX-VRX ID: 0.25 (mm) Dilution Factor: 1.0

Soil Extract Volume:_____(uL) Soil Aliquot Volume: _____(uL)

CONCENTRATION UNITS: (ug/L or ug/Kg) UG/KG

CAS NO.	COMPOUND	MDL	RL	CONC	Q
108-88-3	Toluene	0.95	11		U
120-82-1	1,2,4-Trichlorobenzene	0.20	11		U
71-55-6	1,1,1-Trichloroethane	1.00	11		U
79-00-5	1,1,2-Trichloroethane	0.39	11		U
79-01-6	Trichloroethene	0.94	11		U
76-13-1	Trichlorotrifluoroethane	0.61	11		U
75-69-4	Trichlorofluoromethane	1.0	11		U
75-01-4	Vinyl chloride	1.2	11		U
1330-20-7	Xylene(total)	0.78	11		U

lw
4/2/09

FORM 1
VOLATILE ORGANICS ANALYSIS DATA SHEET

CLIENT SAMPLE NO.

23

MR08-SS272-09A

Lab Name: EMPIRICAL LABS Contract: CH2MHILL

Lab Code: NA Case No.: NA SAS No.: NA SDG No.: LEJEUNE045

Matrix: (soil/water) SOIL Lab Sample ID: 0901068-23

Sample wt/vol: 5.5 (g/mL) G Lab File ID: 0106823A

Level: (low/med) LOW Date Sampled: 01/10/09 15:15

% Moisture: not dec. 7 Date Analyzed: 01/17/09 06:24

GC Column: RTX-VRX ID: 0.25 (mm) Dilution Factor: 1.0

Soil Extract Volume:_____(uL) Soil Aliquot Volume: _____(uL)

CONCENTRATION UNITS: (ug/L or ug/Kg) UG/KG

CAS NO.	COMPOUND	MDL	RL	CONC	Q
67-64-1	Acetone	1.9	9.6		U
71-43-2	Benzene	0.45	9.6	0.62	J
75-27-4	Bromodichloromethane	0.29	9.6		U
75-25-2	Bromoform	0.96	9.6		U
74-83-9	Bromomethane	0.69	9.6		U
78-93-3	2-Butanone	1.4	9.6	7.1	J
75-15-0	Carbon disulfide	1.2	9.6	2.4	J
56-23-5	Carbon tetrachloride	0.85	9.6		U
108-90-7	Chlorobenzene	0.33	9.6		U
75-00-3	Chloroethane	1.1	9.6		U
67-66-3	Chloroform	0.53	9.6		U
74-87-3	Chloromethane	0.50	9.6		U
110-82-7	Cyclohexane	0.52	9.6		U
124-48-1	Dibromochloromethane	0.33	9.6		U
96-12-8	1,2-Dibromo-3-chloropropane	1.2	4.8		U
106-93-4	1,2-Dibromoethane	0.41	9.6		U
95-50-1	1,2-Dichlorobenzene	0.36	9.6		U
541-73-1	1,3-Dichlorobenzene	0.81	9.6		U
106-46-7	1,4-Dichlorobenzene	0.53	9.6		U
75-71-8	Dichlorodifluoromethane	1.1	9.6		U
75-34-3	1,1-Dichloroethane	0.52	9.6		U
107-06-2	1,2-Dichloroethane	0.44	9.6		U
75-35-4	1,1-Dichloroethene	1.2	9.6		U
156-59-2	cis-1,2-Dichloroethene	1.2	9.6		U
156-60-5	trans-1,2-Dichloroethene	1.1	9.6		U
78-87-5	1,2-Dichloropropane	0.44	9.6		U
10061-01-5	cis-1,3-Dichloropropene	0.48	9.6		U
10061-02-6	trans-1,3-Dichloropropene	0.31	9.6		U
100-41-4	Ethylbenzene	0.72	9.6		U
591-78-6	2-Hexanone	2.2	9.6		U
98-82-8	Isopropylbenzene	0.85	9.6		U
79-20-9	Methyl acetate	1.5	9.6		U
75-09-2	Methylene chloride	0.60	9.6	9.6 u ~~1.4~~ ~~JB~~	B
108-87-2	Methyl cyclohexane	0.29	9.6	0.30	J
1634-04-4	Methyl tert-butyl ether	0.31	9.6		U
108-10-1	4-Methyl-2-pentanone	0.56	9.6		U
100-42-5	Styrene	0.34	9.6		U
79-34-5	1,1,2,2-Tetrachloroethane	0.41	9.6		U
127-18-4	Tetrachloroethene	0.94	9.6		U

fw
4/2/09

FORM 1
VOLATILE ORGANICS ANALYSIS DATA SHEET

CLIENT SAMPLE NO.

23

MR08-SS272-09A

Lab Name: EMPIRICAL LABS Contract: CH2MHILL

Lab Code: NA Case No.: NA SAS No.: NA SDG No.: LEJEUNE045

Matrix: (soil/water) SOIL Lab Sample ID: 0901068-23

Sample wt/vol: 5.5 (g/mL) G Lab File ID: 0106823A

Level: (low/med) LOW Date Sampled: 01/10/09 15:15

% Moisture: not dec. 7 Date Analyzed: 01/17/09 06:24

GC Column: RTX-VRX ID: 0.25 (mm) Dilution Factor: 1.0

Soil Extract Volume:_____(uL) Soil Aliquot Volume: _____(uL)

CONCENTRATION UNITS: (ug/L or ug/Kg) UG/KG

CAS NO.	COMPOUND	MDL	RL	CONC	Q
108-88-3	Toluene	0.83	9.6		U
120-82-1	1,2,4-Trichlorobenzene	0.17	9.6		U
71-55-6	1,1,1-Trichloroethane	0.87	9.6		U
79-00-5	1,1,2-Trichloroethane	0.34	9.6		U
79-01-6	Trichloroethene	0.82	9.6		U
76-13-1	Trichlorotrifluoroethane	0.53	9.6		U
75-69-4	Trichlorofluoromethane	0.92	9.6		U
75-01-4	Vinyl chloride	1.1	9.6		U
1330-20-7	Xylene(total)	0.68	9.6		U

4/2/09

FORM 1
VOLATILE ORGANICS ANALYSIS DATA SHEET

CLIENT SAMPLE NO.

MR08-IS27
2-8-9-09A

Lab Name: EMPIRICAL LABS Contract: CH2MHILL

Lab Code: NA Case No.: NA SAS No.: NA SDG No.: LEJEUNE045

Matrix: (soil/water) SOIL Lab Sample ID: 0901068-24

Sample wt/vol: 3.3 (g/mL) G Lab File ID: 0106824A

Level: (low/med) LOW Date Sampled: 01/10/09 15:35

% Moisture: not dec. 11 Date Analyzed: 01/17/09 06:55

GC Column: RTX-VRX ID: 0.25 (mm) Dilution Factor: 1.0

Soil Extract Volume:_____(uL) Soil Aliquot Volume: _____(uL)

CONCENTRATION UNITS: (ug/L or ug/Kg) UG/KG

CAS NO.	COMPOUND	MDL	RL	CONC	Q	
67-64-1	Acetone	3.4	17	17u	~~6.9~~ ~~JB~~	B
71-43-2	Benzene	0.81	17		U	
75-27-4	Bromodichloromethane	0.51	17		U	
75-25-2	Bromoform	1.7	17		U	
74-83-9	Bromomethane	1.2	17		U	
78-93-3	2-Butanone	2.4	17		U	
75-15-0	Carbon disulfide	2.2	17		U	
56-23-5	Carbon tetrachloride	1.5	17		U	
108-90-7	Chlorobenzene	0.58	17		U	
75-00-3	Chloroethane	1.9	17		U	
67-66-3	Chloroform	0.94	17		U	
74-87-3	Chloromethane	0.89	17		U	
110-82-7	Cyclohexane	0.93	17		U	
124-48-1	Dibromochloromethane	0.58	17		U	
96-12-8	1,2-Dibromo-3-chloropropane	2.0	8.6		U	
106-93-4	1,2-Dibromoethane	0.74	17		U	
95-50-1	1,2-Dichlorobenzene	0.63	17		U	
541-73-1	1,3-Dichlorobenzene	1.4	17		U	
106-46-7	1,4-Dichlorobenzene	0.94	17		U	
75-71-8	Dichlorodifluoromethane	1.9	17		U	
75-34-3	1,1-Dichloroethane	0.93	17		U	
107-06-2	1,2-Dichloroethane	0.79	17		U	
75-35-4	1,1-Dichloroethene	2.0	17		U	
156-59-2	cis-1,2-Dichloroethene	2.0	17		U	
156-60-5	trans-1,2-Dichloroethene	1.9	17		U	
78-87-5	1,2-Dichloropropane	0.79	17		U	
10061-01-5	cis-1,3-Dichloropropene	0.86	17		U	
10061-02-6	trans-1,3-Dichloropropene	0.55	17		U	
100-41-4	Ethylbenzene	1.3	17		U	
591-78-6	2-Hexanone	3.9	17		U	
98-82-8	Isopropylbenzene	1.5	17		U	
79-20-9	Methyl acetate	2.7	17		U	
75-09-2	Methylene chloride	1.1	17	17u	~~4.0~~ ~~JB~~	BL
108-87-2	Methyl cyclohexane	0.51	17		U	
1634-04-4	Methyl tert-butyl ether	0.55	17		U	
108-10-1	4-Methyl-2-pentanone	1.00	17		U	
100-42-5	Styrene	0.60	17		U	
79-34-5	1,1,2,2-Tetrachloroethane	0.74	17		U	
127-18-4	Tetrachloroethene	1.7	17		U	

FORM 1
VOLATILE ORGANICS ANALYSIS DATA SHEET

CLIENT SAMPLE NO. 24

MR08-IS27
2-8-9-09A

Lab Name: EMPIRICAL LABS Contract: CH2MHILL

Lab Code: NA Case No.: NA SAS No.: NA SDG No.: LEJEUNE045

Matrix: (soil/water) SOIL Lab Sample ID: 0901068-24

Sample wt/vol: 3.3 (g/mL) G Lab File ID: 0106824A

Level: (low/med) LOW Date Sampled: 01/10/09 15:35

% Moisture: not dec. 11 Date Analyzed: 01/17/09 06:55

GC Column: RTX-VRX ID: 0.25 (mm) Dilution Factor: 1.0

Soil Extract Volume:_____(uL) Soil Aliquot Volume: _____(uL)

CONCENTRATION UNITS: (ug/L or ug/Kg) UG/KG

CAS NO.	COMPOUND	MDL	RL	CONC	Q
108-88-3	Toluene	1.5	17		U
120-82-1	1,2,4-Trichlorobenzene	0.31	17		U
71-55-6	1,1,1-Trichloroethane	1.5	17		U
79-00-5	1,1,2-Trichloroethane	0.60	17		U
79-01-6	Trichloroethene	1.4	17		U
76-13-1	Trichlorotrifluoroethane	0.94	17		U
75-69-4	Trichlorofluoromethane	1.6	17		U
75-01-4	Vinyl chloride	1.9	17		U
1330-20-7	Xylene(total)	1.2	17		U

ew
4/2/09

FORM 1
VOLATILE ORGANICS ANALYSIS DATA SHEET

CLIENT SAMPLE NO. 25

MR08-SS283-09A

Lab Name: EMPIRICAL LABS Contract: CH2MHILL

Lab Code: NA Case No.: NA SAS No.: NA SDG No.: LEJEUNE045

Matrix: (soil/water) SOIL Lab Sample ID: 0901068-25

Sample wt/vol: 5.7 (g/mL) G Lab File ID: 0106825A

Level: (low/med) LOW Date Sampled: 01/10/09 15:55

% Moisture: not dec. 10 Date Analyzed: 01/17/09 07:26

GC Column: RTX-VRX ID: 0.25 (mm) Dilution Factor: 1.0

Soil Extract Volume:_____(uL) Soil Aliquot Volume: _____(uL)

CONCENTRATION UNITS: (ug/L or ug/Kg) UG/KG

CAS NO.	COMPOUND	MDL	RL	CONC	Q
67-64-1	Acetone	1.9	9.7	66	~~B~~
71-43-2	Benzene	0.46	9.7		U
75-27-4	Bromodichloromethane	0.29	9.7		U
75-25-2	Bromoform	0.97	9.7		U
74-83-9	Bromomethane	0.70	9.7		U
78-93-3	2-Butanone	1.4	9.7	16	
75-15-0	Carbon disulfide	1.3	9.7	1.9	J
56-23-5	Carbon tetrachloride	0.86	9.7		U
108-90-7	Chlorobenzene	0.33	9.7		U
75-00-3	Chloroethane	1.1	9.7		U
67-66-3	Chloroform	0.54	9.7	0.82	J
74-87-3	Chloromethane	0.51	9.7		U
110-82-7	Cyclohexane	0.52	9.7		U
124-48-1	Dibromochloromethane	0.33	9.7		U
96-12-8	1,2-Dibromo-3-chloropropane	1.2	4.9		U
106-93-4	1,2-Dibromoethane	0.42	9.7		U
95-50-1	1,2-Dichlorobenzene	0.36	9.7		U
541-73-1	1,3-Dichlorobenzene	0.82	9.7		U
106-46-7	1,4-Dichlorobenzene	0.54	9.7		U
75-71-8	Dichlorodifluoromethane	1.1	9.7		U
75-34-3	1,1-Dichloroethane	0.52	9.7		U
107-06-2	1,2-Dichloroethane	0.45	9.7		U
75-35-4	1,1-Dichloroethene	1.2	9.7		U
156-59-2	cis-1,2-Dichloroethene	1.2	9.7		U
156-60-5	trans-1,2-Dichloroethene	1.1	9.7		U
78-87-5	1,2-Dichloropropane	0.45	9.7		U
10061-01-5	cis-1,3-Dichloropropene	0.49	9.7		U
10061-02-6	trans-1,3-Dichloropropene	0.31	9.7		U
100-41-4	Ethylbenzene	0.73	9.7		U
591-78-6	2-Hexanone	2.2	9.7		U
98-82-8	Isopropylbenzene	0.86	9.7		U
79-20-9	Methyl acetate	1.6	9.7		U
75-09-2	Methylene chloride	0.60	9.7	9.7U 2 ~~<0~~ ~~JB~~	B
108-87-2	Methyl cyclohexane	0.29	9.7		U
1634-04-4	Methyl tert-butyl ether	0.31	9.7		U
108-10-1	4-Methyl-2-pentanone	0.56	9.7		U
100-42-5	Styrene	0.34	9.7		U
79-34-5	1,1,2,2-Tetrachloroethane	0.42	9.7		U
127-18-4	Tetrachloroethene	0.94	9.7		U

FORM I VOA

fw 4/7/09

FORM 1
VOLATILE ORGANICS ANALYSIS DATA SHEET

CLIENT SAMPLE NO. 25

MR08-SS283-09A

Lab Name: EMPIRICAL LABS Contract: CH2MHILL

Lab Code: NA Case No.: NA SAS No.: NA SDG No.: LEJEUNE045

Matrix: (soil/water) SOIL Lab Sample ID: 0901068-25

Sample wt/vol: 5.7 (g/mL) G Lab File ID: 0106825A

Level: (low/med) LOW Date Sampled: 01/10/09 15:55

% Moisture: not dec. 10 Date Analyzed: 01/17/09 07:26

GC Column: RTX-VRX ID: 0.25 (mm) Dilution Factor: 1.0

Soil Extract Volume:_____(uL) Soil Aliquot Volume: _____(uL)

CONCENTRATION UNITS: (ug/L or ug/Kg) UG/KG

CAS NO.	COMPOUND	MDL	RL	CONC	Q
108-88-3	Toluene	0.84	9.7		U
120-82-1	1,2,4-Trichlorobenzene	0.18	9.7		U
71-55-6	1,1,1-Trichloroethane	0.88	9.7		U
79-00-5	1,1,2-Trichloroethane	0.34	9.7		U
79-01-6	Trichloroethene	0.83	9.7		U
76-13-1	Trichlorotrifluoroethane	0.54	9.7		U
75-69-4	Trichlorofluoromethane	0.92	9.7		U
75-01-4	Vinyl chloride	1.1	9.7		U
1330-20-7	Xylene(total)	0.68	9.7		U

lw
4/2/09

FORM 1
VOLATILE ORGANICS ANALYSIS DATA SHEET

CLIENT SAMPLE NO. 26

MR08-IS28
3-6-7-09A

Lab Name: EMPIRICAL LABS Contract: CH2MHILL

Lab Code: NA Case No.: NA SAS No.: NA SDG No.: LEJEUNE045

Matrix: (soil/water) SOIL Lab Sample ID: 0901068-26

Sample wt/vol: 3.5 (g/mL) G Lab File ID: 0106826A

Level: (low/med) LOW Date Sampled: 01/10/09 16:25

% Moisture: not dec. 8 Date Analyzed: 01/17/09 07:56

GC Column: RTX-VRX ID: 0.25 (mm) Dilution Factor: 1.0

Soil Extract Volume:_____(uL) Soil Aliquot Volume: _____(uL)

CONCENTRATION UNITS: (ug/L or ug/Kg) UG/KG

CAS NO.	COMPOUND	MDL	RL	CONC	Q
67-64-1	Acetone	3.1	16	16u ~~9.7~~	~~JB~~ B1
71-43-2	Benzene	0.73	16		U
75-27-4	Bromodichloromethane	0.47	16		U
75-25-2	Bromoform	1.6	16		U
74-83-9	Bromomethane	1.1	16		U
78-93-3	2-Butanone	2.2	16		U
75-15-0	Carbon disulfide	2.0	16		U
56-23-5	Carbon tetrachloride	1.4	16		U
108-90-7	Chlorobenzene	0.53	16		U
75-00-3	Chloroethane	1.7	16		U
67-66-3	Chloroform	0.86	16		U
74-87-3	Chloromethane	0.81	16		U
110-82-7	Cyclohexane	0.84	16		U
124-48-1	Dibromochloromethane	0.53	16		U
96-12-8	1,2-Dibromo-3-chloropropane	1.9	7.8		U
106-93-4	1,2-Dibromoethane	0.67	16		U
95-50-1	1,2-Dichlorobenzene	0.58	16		U
541-73-1	1,3-Dichlorobenzene	1.3	16		U
106-46-7	1,4-Dichlorobenzene	0.86	16		U
75-71-8	Dichlorodifluoromethane	1.7	16		U
75-34-3	1,1-Dichloroethane	0.84	16		U
107-06-2	1,2-Dichloroethane	0.72	16		U
75-35-4	1,1-Dichloroethene	1.9	16		U
156-59-2	cis-1,2-Dichloroethene	1.9	16		U
156-60-5	trans-1,2-Dichloroethene	1.7	16		U
78-87-5	1,2-Dichloropropane	0.72	16		U
10061-01-5	cis-1,3-Dichloropropene	0.78	16		U
10061-02-6	trans-1,3-Dichloropropene	0.50	16		U
100-41-4	Ethylbenzene	1.2	16		U
591-78-6	2-Hexanone	3.6	16		U
98-82-8	Isopropylbenzene	1.4	16		U
79-20-9	Methyl acetate	2.5	16		U
75-09-2	Methylene chloride	0.97	16	16u ~~3.5~~	~~JB~~ B
108-87-2	Methyl cyclohexane	0.47	16		U
1634-04-4	Methyl tert-butyl ether	0.50	16		U
108-10-1	4-Methyl-2-pentanone	0.90	16		U
100-42-5	Styrene	0.54	16		U
79-34-5	1,1,2,2-Tetrachloroethane	0.67	16		U
127-18-4	Tetrachloroethene	1.5	16		U

lw 4/2/09

FORM 1
VOLATILE ORGANICS ANALYSIS DATA SHEET

CLIENT SAMPLE NO. 26

MR08-IS28
3-6-7-09A

Lab Name: EMPIRICAL LABS Contract: CH2MHILL

Lab Code: NA Case No.: NA SAS No.: NA SDG No.: LEJEUNE045

Matrix: (soil/water) SOIL Lab Sample ID: 0901068-26

Sample wt/vol: 3.5 (g/mL) G Lab File ID: 0106826A

Level: (low/med) LOW Date Sampled: 01/10/09 16:25

% Moisture: not dec. 8 Date Analyzed: 01/17/09 07:56

GC Column: RTX-VRX ID: 0.25 (mm) Dilution Factor: 1.0

Soil Extract Volume:_____(uL) Soil Aliquot Volume: _____(uL)

CONCENTRATION UNITS: (ug/L or ug/Kg) UG/KG

CAS NO.	COMPOUND	MDL	RL	CONC	Q
108-88-3	Toluene	1.3	16		U
120-82-1	1,2,4-Trichlorobenzene	0.28	16		U
71-55-6	1,1,1-Trichloroethane	1.4	16		U
79-00-5	1,1,2-Trichloroethane	0.54	16		U
79-01-6	Trichloroethene	1.3	16		U
76-13-1	Trichlorotrifluoroethane	0.86	16		U
75-69-4	Trichlorofluoromethane	1.5	16		U
75-01-4	Vinyl chloride	1.7	16		U
1330-20-7	Xylene(total)	1.1	16		U

JW 4/2/09

FORM 1
VOLATILE ORGANICS ANALYSIS DATA SHEET

CLIENT SAMPLE NO. 27

MR08-EB01
011009-SS

Lab Name: EMPIRICAL LABS Contract: CH2MHILL

Lab Code: NA Case No.: NA SAS No.: NA SDG No.: LEJEUNE045

Matrix: (soil/water) WATER Lab Sample ID: 0901068-27

Sample wt/vol: 5.000 (g/mL) ML Lab File ID: 0106827

Level: (low/med) LOW Date Sampled: 01/10/09 08:30

% Moisture: not dec. _____ Date Analyzed: 01/15/09 04:58

GC Column: RTX-VRX ID: 0.25 (mm) Dilution Factor: 1.0

Soil Extract Volume:_____(uL) Soil Aliquot Volume: _____(uL)

CONCENTRATION UNITS: (ug/L or ug/Kg) UG/L

CAS NO.	COMPOUND	MDL	RL	CONC	Q
67-64-1	Acetone	0.84	2.5		U
71-43-2	Benzene	0.11	1.0		U
75-27-4	Bromodichloromethane	0.10	1.0		U
75-25-2	Bromoform	0.10	1.0		U
74-83-9	Bromomethane	0.32	1.0		U
78-93-3	2-Butanone	1.0	3.0		U
75-15-0	Carbon disulfide	0.13	1.0		U
56-23-5	Carbon tetrachloride	0.15	1.0		U
108-90-7	Chlorobenzene	0.10	1.0		U
75-00-3	Chloroethane	0.18	1.0		U
67-66-3	Chloroform	0.11	1.0		U
74-87-3	Chloromethane	0.29	1.0		U
110-82-7	Cyclohexane	0.20	1.0		U
124-48-1	Dibromochloromethane	0.10	1.0		U
96-12-8	1,2-Dibromo-3-chloropropane	0.11	1.0		U
106-93-4	1,2-Dibromoethane	0.10	1.0		U
95-50-1	1,2-Dichlorobenzene	0.10	1.0		U
541-73-1	1,3-Dichlorobenzene	0.13	1.0		U
106-46-7	1,4-Dichlorobenzene	0.10	1.0		U
75-71-8	Dichlorodifluoromethane	0.22	1.0		U
75-34-3	1,1-Dichloroethane	0.12	1.0		U
107-06-2	1,2-Dichloroethane	0.10	1.0		U
75-35-4	1,1-Dichloroethene	0.15	1.0		U
156-59-2	cis-1,2-Dichloroethene	0.13	1.0		U
156-60-5	trans-1,2-Dichloroethene	0.13	1.0		U
78-87-5	1,2-Dichloropropane	0.10	1.0		U
10061-01-5	cis-1,3-Dichloropropene	0.11	1.0		U
10061-02-6	trans-1,3-Dichloropropene	0.10	1.0		U
100-41-4	Ethylbenzene	0.13	1.0		U
591-78-6	2-Hexanone	0.30	1.0		U
98-82-8	Isopropylbenzene	0.15	1.0		U
79-20-9	Methyl acetate	0.30	1.0		U
75-09-2	Methylene chloride	0.14	1.0	1.04 ~~0.88~~ ~~JB~~	B
108-87-2	Methyl cyclohexane	0.17	1.0		U
1634-04-4	Methyl tert-butyl ether	0.10	1.0		U
108-10-1	4-Methyl-2-pentanone	0.29	1.0		U
100-42-5	Styrene	0.10	1.0		U
79-34-5	1,1,2,2-Tetrachloroethane	0.10	1.0		U
127-18-4	Tetrachloroethene	0.15	1.0		U

MW 4/26/09

FORM 1
VOLATILE ORGANICS ANALYSIS DATA SHEET

CLIENT SAMPLE NO. 27

MR08-EB01
011009-SS

Lab Name: EMPIRICAL LABS Contract: CH2MHILL

Lab Code: NA Case No.: NA SAS No.: NA SDG No.: LEJEUNE045

Matrix: (soil/water) WATER Lab Sample ID: 0901068-27

Sample wt/vol: 5.000 (g/mL) ML Lab File ID: 0106827

Level: (low/med) LOW Date Sampled: 01/10/09 08:30

% Moisture: not dec. _____ Date Analyzed: 01/15/09 04:58

GC Column: RTX-VRX ID: 0.25 (mm) Dilution Factor: 1.0

Soil Extract Volume:_____(uL) Soil Aliquot Volume: _____(uL)

CONCENTRATION UNITS: (ug/L or ug/Kg) UG/L

CAS NO.	COMPOUND	MDL	RL	CONC	Q
108-88-3	Toluene	0.10	1.0	21	
120-82-1	1,2,4-Trichlorobenzene	0.10	1.0		U
71-55-6	1,1,1-Trichloroethane	0.17	1.0		U
79-00-5	1,1,2-Trichloroethane	0.10	1.0		U
79-01-6	Trichloroethene	0.13	1.0		U
76-13-1	Trichlorotrifluoroethane	0.18	1.0		U
75-69-4	Trichlorofluoromethane	0.17	1.0		U
75-01-4	Vinyl chloride	0.18	1.0		U
1330-20-7	Xylene(total)	0.22	1.0		U

fw
4/2/09

FORM 1
VOLATILE ORGANICS ANALYSIS DATA SHEET

CLIENT SAMPLE NO. 28

MR08-FB01011009

Lab Name: EMPIRICAL LABS Contract: CH2MHILL

Lab Code: NA Case No.: NA SAS No.: NA SDG No.: LEJEUNE045

Matrix: (soil/water) WATER Lab Sample ID: 0901068-28

Sample wt/vol: 5.000 (g/mL) ML Lab File ID: 0106828

Level: (low/med) LOW Date Sampled: 01/10/09 10:00

% Moisture: not dec. _____ Date Analyzed: 01/15/09 03:59

GC Column: RTX-VRX ID: 0.25 (mm) Dilution Factor: 1.0

Soil Extract Volume:_____(uL) Soil Aliquot Volume: _____(uL)

CONCENTRATION UNITS: (ug/L or ug/Kg) UG/L

CAS NO.	COMPOUND	MDL	RL	CONC	Q
67-64-1	Acetone	0.84	2.5		U
71-43-2	Benzene	0.11	1.0		U
75-27-4	Bromodichloromethane	0.10	1.0		U
75-25-2	Bromoform	0.10	1.0		U
74-83-9	Bromomethane	0.32	1.0		U
78-93-3	2-Butanone	1.0	3.0		U
75-15-0	Carbon disulfide	0.13	1.0		U
56-23-5	Carbon tetrachloride	0.15	1.0		U
108-90-7	Chlorobenzene	0.10	1.0		U
75-00-3	Chloroethane	0.18	1.0		U
67-66-3	Chloroform	0.11	1.0		U
74-87-3	Chloromethane	0.29	1.0		U
110-82-7	Cyclohexane	0.20	1.0		U
124-48-1	Dibromochloromethane	0.10	1.0		U
96-12-8	1,2-Dibromo-3-chloropropane	0.11	1.0		U
106-93-4	1,2-Dibromoethane	0.10	1.0		U
95-50-1	1,2-Dichlorobenzene	0.10	1.0		U
541-73-1	1,3-Dichlorobenzene	0.13	1.0		U
106-46-7	1,4-Dichlorobenzene	0.10	1.0		U
75-71-8	Dichlorodifluoromethane	0.22	1.0		U
75-34-3	1,1-Dichloroethane	0.12	1.0		U
107-06-2	1,2-Dichloroethane	0.10	1.0		U
75-35-4	1,1-Dichloroethene	0.15	1.0		U
156-59-2	cis-1,2-Dichloroethene	0.13	1.0		U
156-60-5	trans-1,2-Dichloroethene	0.13	1.0		U
78-87-5	1,2-Dichloropropane	0.10	1.0		U
10061-01-5	cis-1,3-Dichloropropene	0.11	1.0		U
10061-02-6	trans-1,3-Dichloropropene	0.10	1.0		U
100-41-4	Ethylbenzene	0.13	1.0		U
591-78-6	2-Hexanone	0.30	1.0		U
98-82-8	Isopropylbenzene	0.15	1.0		U
79-20-9	Methyl acetate	0.30	1.0		U
75-09-2	Methylene chloride	0.14	1.0	1.04 ~~0.92~~ ~~JB~~	B
108-87-2	Methyl cyclohexane	0.17	1.0		U
1634-04-4	Methyl tert-butyl ether	0.10	1.0		U
108-10-1	4-Methyl-2-pentanone	0.29	1.0		U
100-42-5	Styrene	0.10	1.0		U
79-34-5	1,1,2,2-Tetrachloroethane	0.10	1.0		U
127-18-4	Tetrachloroethene	0.15	1.0		U

FORM I VOA

fw
4/2/09

FORM 1
VOLATILE ORGANICS ANALYSIS DATA SHEET

CLIENT SAMPLE NO. 28

MR08-FB01011009

Lab Name: EMPIRICAL LABS Contract: CH2MHILL

Lab Code: NA Case No.: NA SAS No.: NA SDG No.: LEJEUNE045

Matrix: (soil/water) WATER Lab Sample ID: 0901068-28

Sample wt/vol: 5.000 (g/mL) ML Lab File ID: 0106828

Level: (low/med) LOW Date Sampled: 01/10/09 10:00

% Moisture: not dec. _____ Date Analyzed: 01/15/09 03:59

GC Column: RTX-VRX ID: 0.25 (mm) Dilution Factor: 1.0

Soil Extract Volume:_____(uL) Soil Aliquot Volume: _____(uL)

CONCENTRATION UNITS: (ug/L or ug/Kg) UG/L

CAS NO.	COMPOUND	MDL	RL	CONC	Q
108-88-3	Toluene	0.10	1.0	20	
120-82-1	1,2,4-Trichlorobenzene	0.10	1.0		U
71-55-6	1,1,1-Trichloroethane	0.17	1.0		U
79-00-5	1,1,2-Trichloroethane	0.10	1.0		U
79-01-6	Trichloroethene	0.13	1.0		U
76-13-1	Trichlorotrifluoroethane	0.18	1.0		U
75-69-4	Trichlorofluoromethane	0.17	1.0		U
75-01-4	Vinyl chloride	0.18	1.0		U
1330-20-7	Xylene(total)	0.22	1.0		U

MW 4/2/09

ENVIRONMENTAL
Data Services, Inc.

VOLATILE ORGANIC COMPOUNDS

USEPA Region IV - Level IV Review

Site: MCB Camp Lejeune, TO-09 SDG #: LEJEUNE046

Client: CH2M HILL, Inc., Virginia Beach, Virginia Date: April 2, 2009

Laboratory: Empirical Laboratories, Nashville, Tennessee Reviewer: Nancy Weaver

EDS ID	Client Sample ID	Laboratory Sample ID	Matrix
1	MR08-SS180-09A	0901069-01	Soil
2	MR08-IS180-6-7-09A	0901069-02	Soil
3	MR08-SS182-09A	0901069-03	Soil
4	MR08-IS182-8-9-09A	0901069-04	Soil
5	MR08-SS183-09A	0901069-05	Soil
5MS	MR08-SS183-09AMS	0901069-05MS	Soil
5MSD	MR08-SS183-09AMSD	0901069-05MSD	Soil
6	MR08-IS183-6-7-09A	0901069-06	Soil
6MS	MR08-IS183-6-7-09AMS	0901069-06MS	Soil
6MSD	MR08-IS183-6-7-09AMSD	0901069-06MSD	Soil
7	MR08-SS205-09A	0901069-07	Soil
8	MR08-IS205-9-10-09A	0901069-08	Soil
9	MR08-SS204-09A	0901069-09	Soil
9MS	MR08-SS204-09AMS	0901069-09MS	Soil
9MSD	MR08-SS204-09AMSD	0901069-09MSD	Soil
10	MR08-IS204-6-7-09A	0901069-10	Soil
10MS	MR08-IS204-6-7-09AMS	0901069-10MS	Soil
10MSD	MR08-IS204-6-7-09AMSD	0901069-10MSD	Soil
11	MR08-SS203-09A	0901069-11	Soil
12	MR08-IS203-6-7-09A	0901069-12	Soil
13	MR08-SS184-09A	0901069-13	Soil
14	MR08-IS184-8-9-09A	0901069-14	Soil
15	MR08-SS255-09A	0901069-15	Soil
16	MR08-IS255-6-7-09A	0901069-16	Soil
17	MR08-SS276-09A	0901069-17	Soil
18	MR08-IS276-6-7-09A	0901069-18	Soil
19	MR08-SS254-09A	0901069-19	Soil
20	MR08-IS254-3-4-09A	0901069-20	Soil
21	MR08-SS277-09A	0901069-21	Soil
22	MR08-IS277-3-4-09A	0901069-22	Soil
23	MR08-SS278-09A	0901069-23	Soil
24	MR08-IS278-6-7-09A	0901069-24	Soil
25	MR08-EB01010909-SS	0901069-25	Water
26	MR08-EB01010909-IS	0901069-26	Water
27	MR08-TB01010909	0901069-27	Water

The USEPA "Contract Laboratory Program National Functional Guidelines for Organic Data Review," October 1999, and professional judgement were used in evaluating the data in this summary report.

Holding Times - All samples were analyzed within 14 days for preserved water and soil samples.

GC/MS Tuning - All of the BFB tunes in the initial and continuing calibrations met the percent relative abundance criteria.

Initial Calibration - The initial calibrations exhibited acceptable %RSD and mean RRF values.

Continuing Calibration - The continuing calibrations exhibited acceptable %D and RRF values except the following.

CCAL Date	Compound	%D/RRF	Qualifier	Affected Samples
1/15/09	Bromomethane	28.8%	J/UJ	25-27
	Dichlorodifluoromethane	36.5%	J/UJ	25-27
1/17/09	2-Butanone	350.6%	J/UJ	1-6, 9, 10
1/18/09	2-Butanone	330.4%	J/UJ	20-24

Surrogates - All samples exhibited acceptable surrogate recoveries except the following.

Sample ID	Surrogate	%R	Qualifier
23	S1-Dibromofluoromethane	126%	J - Positive Results

MS/MSD - The MS/MSD sample exhibited acceptable %R and RPD values except the following.

MS/MSD Sample ID	Compound	MS/MSD %R/RPD	Qualifier
5	Benzene	60%/56%/Ok	J/UJ
	Bromodichloromethane	65%/58%/Ok	J/UJ
	Bromoform	51%/39%/Ok	J/UJ
	Carbon tetrachloride	59%/54%/Ok	J/UJ
	Chlorobenzene	42%/33%/Ok	J/UJ
	Chloroform	69%/64%/Ok	J/UJ
	Cyclohexane	51%/53%/Ok	J/UJ
	Dibromochloromethane	58%/50%/Ok	J/UJ
	1, 2-Dibromo-3-chloropropane	56%/26%/53	J/UJ
	1, 2-Dibromoethane	56%/48%/Ok	J/UJ
	1, 2-Dichlorobenzene	27%/15%/53	J/UJ
	1, 3-Dichlorobenzene	26%/16%/42	J/UJ
	1, 4-Dichlorobenzene	26%/16%/40	J/UJ
	1, 1-Dichloroethane	70%/67%/Ok	J/UJ

MS/MSD Sample ID	Compound	MS/MSD %R/RPD	Qualifier
5	1, 2-Dichloroethane	Ok/63%/Ok	J/UJ
	cis-1, 2-Dichloroethene	Ok/61%/Ok	J/UJ
	trans-1, 2-Dichloroethene	Ok/60%/Ok	J/UJ
	1, 2-Dichloropropane	68%/57%/Ok	J/UJ
	cis-1, 3-Dichloropropene	64%/52%/Ok	J/UJ
	trans-1, 3-Dichloropropene	62%/51%/Ok	J/UJ
	Ethylbenzene	44%/38%/Ok	J/UJ
	Isopropylbenzene	40%/38%/Ok	J/UJ
	Methyl cyclohexane	34%/37%/Ok	J/UJ
	Styrene	42%/25%/48	J/UJ
	1, 1, 2, 2-Tetrachloroethane	54%/42%/Ok	J/UJ
	Tetrachloroethene	36%/36%/Ok	J/UJ
	Toluene	52%/46%/Ok	J/UJ
	1, 2, 4-Trichlorobenzene	12%/6%/66	J/R
	1, 1, 1-Trichloroethane	63%/58%/Ok	J/UJ
	1, 1, 2-Trichloroethane	Ok/56%/Ok	J/UJ
	Trichloroethene	55%/48%/Ok	J/UJ
	Xylene	42%/34%/Ok	J/UJ
6	2-Butanone	380%/117%/Ok	None - All ND
	Chlorobenzene	74%/Ok/Ok	J/UJ
	1, 2-Dibromo-3-chlorobropane	Ok/34%/Ok	J/UJ
	1, 2-Dichlorobenzene	67%/36%/Ok	J/UJ
	1, 3-Dichlorobenzene	64%/31%/Ok	J/UJ
	1, 4-Dichlorobenzene	67%/Ok/Ok	J/UJ
	cis-1, 3-Dichloropropene	Ok/36%/Ok	J/UJ
	trans-1, 3-Dichloropropene	Ok/32%/Ok	J/UJ
	Methyl acetate	12%/Ok/135	J/UJ
	Tetrachloroethene	Ok/Ok/31	None for RPD alone
	Toluene	Ok/Ok/32	None for RPD alone
	1, 2, 4-Trichlorobenzene	51%/Ok/50	J/UJ
	1, 1, 2-Trichloroethane	Ok/Ok/36	None for RPD alone
9	Benzene	66%/66%/Ok	J/UJ
	Carbon tetrachloride	60%/Ok/Ok	J/UJ
	Chlorobenzene	46%/55%/Ok	J/UJ
	Cyclohexane	53%57%/Ok	J/UJ
	Dibromochloromethane	64%/Ok/Ok	J/UJ
	1, 2-Dibromoethane	64%/Ok/Ok	J/UJ
	1, 2-Dichlorobenzene	25%/31%/Ok	J/UJ
	1, 3-Dichlorobenzene	25%/32%/Ok	J/UJ
	1, 4-Dichlorobenzene	27%/32%/Ok	J/UJ
	Ethylbenzene	43%/50%/Ok	J/UJ
	Isopropylbenzene	37%/48%/Ok	J/UJ
	Methyl acetate	Ok/Ok/52	None for RPD alone
	Methyl cyclohexane	38%/41%/Ok	J/UJ
	Styrene	41%/52%/Ok	J/UJ
	Tetrachloroethene	37%/45%/Ok	J/UJ
	Toluene	56%/62%/Ok	J/UJ
	1, 2, 4-Trichlorobenzene	11%/15%/Ok	J/UJ
	1, 1, 1-Trichloroethane	66%/69%/Ok	J/UJ
	Trichloroethene	59%/66%/Ok	J/UJ
	Xylene	41%/50%/Ok	J/UJ

MS/MSD Sample ID	Compound	MS/MSD %R/RPD	Qualifier
10	Benzene	62%/72%/Ok	J/UJ
	Bromodichloromethane	68%/Ok/Ok	J/UJ
	Chlorobenzene	62%/67%/Ok	J/UJ
	Chloroform	68%/Ok/Ok	J/UJ
	1, 2-Dibromoethane	63%/68%/Ok	J/UJ
	1, 2-Dichlorobenzene	59%/69%/Ok	J/UJ
	1, 3-Dichlorobenzene	58%/65%/Ok	J/UJ
	1, 4-Dichlorobenzene	56%/64%/Ok	J/UJ
	1, 1-Dichloroethane	71%/Ok/Ok	J/UJ
	1, 2-Dichloropropane	66%/Ok/Ok	J/UJ
	cis-1, 3-Dichloropropene	67%/Ok/Ok	J/UJ
	Ethylbenzene	60%/68%/Ok	J/UJ
	Isopropylbenzene	67%/Ok/Ok	J/UJ
	Methyl acetate	31%/35%/Ok	J/UJ
	Methyl cyclohexane	63%/Ok/Ok	J/UJ
	Styrene	66%/67%/Ok	J/UJ
	Tetrachloroethene	57%/64%/Ok	J/UJ
	Toluene	59%/Ok/Ok	J/UJ
	1, 2, 4-Trichlorobenzene	47%/56%/Ok	J/UJ
	1, 1, 1-Trichloroethane	66%/Ok/Ok	J/UJ
	Trichloroethene	62%/69%/Ok	J/UJ
	Vinyl chloride	54%/Ok/Ok	J/UJ
	Xylene	64%/Ok/Ok	J/UJ

Laboratory Control Sample - The LCS samples exhibited acceptable %R.

Internal Standard (IS) Area Performance - All internal standards met response and retention time (RT) criteria.

Method Blank - The method blanks exhibited the following contamination.

Blank ID	Compound	Conc.	Action Level	Qualifier	Affected Samples
V3BLK0115	Methylene chloride	0.48 ug/L	4.8 ug/L	U	25, 26
	1, 2, 4-Trichlorobenzene	0.22 ug/L	1.1 ug/L	None	All ND
	Trichlorofluoromethane	0.20 ug/L	1.0 ug/L	None	All ND
V5BLK0117	Methylene chloride	2.3 ug/kg	23 ug/kg	U	1-6, 9, 10
	4-Methyl-2-pentanone	0.94 ug/kg	4.7 ug/kg	U	1
	1, 2, 4-Trichlorobenzene	0.30 ug/kg	1.5 ug/kg	U	1
V5BLK0117E	Acetone	5.1 ug/kg	51 ug/kg	U	12-14, 16, 18
	Methylene chloride	2.4 ug/kg	24 ug/kg	U	11-19
	4-Methyl-2-pentanone	0.96 ug/kg	4.65 ug/kg	None	All ND
	1, 2, 4-Trichlorobenzene	0.22 ug/kg	1.10 ug/kg	None	All ND
V5BLK0117F	Acetone	5.8 ug/kg	58 ug/kg	U	20, 22, 24
	Methylene chloride	1.6 ug/kg	16 ug/kg	U	20-24
	1, 2, 4-Trichlorobenzene	0.23 ug/kg	1.15 ug/kg	None	All ND
V5BLK0117G	Acetone	6.9 ug/kg	69 ug/kg	U	7, 8
	Methylene chloride	1.6 ug/kg	16 ug/kg	U	7, 8

Blank ID	Compound	Conc.	Action Level	Qualifier	Affected Samples
V5BLK0117G	1, 2, 4-Trichlorobenzene	0.19 ug/kg	0.95 ug/kg	None	All ND

Trip, Field, Equipment Blank - Field QC results are summarized below.

Blank ID	Compound	Conc. ug/L	Action Level ug/kg	Qualifier	Affected Samples
MR08-TB01010909	None - ND	-	-	-	-
MR08-EB01010909-SS	Toluene	23	115	U	1, 3, 9, 15, 17
MR08-EB01010909-IS	Toluene	23	115	None	All ND
MR08-FB01011009	Toluene	20	100	-	See EBS

Field Duplicates - Field duplicate samples were not included in this data package.

Tentatively Identified Compounds (TICs) - TICs were not reported.

Compound Quantitation - No discrepancies were found.

FORM 1
VOLATILE ORGANICS ANALYSIS DATA SHEET

CLIENT SAMPLE NO. 1

MR08-SS180-09A

Lab Name: EMPIRICAL LABS Contract: CH2MHILL

Lab Code: NA Case No.: NA SAS No.: NA SDG No.: LEJEUNE046

Matrix: (soil/water) SOIL Lab Sample ID: 0901069-01

Sample wt/vol: 4.4 (g/mL) G Lab File ID: 0106901A

Level: (low/med) LOW Date Sampled: 01/09/09 08:25

% Moisture: not dec. 6 Date Analyzed: 01/17/09 12:27

GC Column: RTX-VRX ID: 0.25 (mm) Dilution Factor: 1.0

Soil Extract Volume:_____(uL) Soil Aliquot Volume: _____(uL)

CONCENTRATION UNITS: (ug/L or ug/Kg) UG/KG

CAS NO.	COMPOUND	MDL	RL	CONC	Q
67-64-1	Acetone	2.4	12		U
71-43-2	Benzene	0.56	12	1.2	J
75-27-4	Bromodichloromethane	0.36	12		U
75-25-2	Bromoform	1.2	12		U
74-83-9	Bromomethane	0.86	12		U
78-93-3	2-Butanone	1.7	12		~~U~~ UJ CCH
75-15-0	Carbon disulfide	1.6	12		U
56-23-5	Carbon tetrachloride	1.0	12		U
108-90-7	Chlorobenzene	0.41	12		U
75-00-3	Chloroethane	1.3	12		U
67-66-3	Chloroform	0.66	12		U
74-87-3	Chloromethane	0.62	12		U
110-82-7	Cyclohexane	0.65	12		U
124-48-1	Dibromochloromethane	0.41	12		U
96-12-8	1,2-Dibromo-3-chloropropane	1.4	6.0		U
106-93-4	1,2-Dibromoethane	0.52	12		U
95-50-1	1,2-Dichlorobenzene	0.44	12		U
541-73-1	1,3-Dichlorobenzene	1.0	12		U
106-46-7	1,4-Dichlorobenzene	0.66	12		U
75-71-8	Dichlorodifluoromethane	1.3	12		U
75-34-3	1,1-Dichloroethane	0.65	12		U
107-06-2	1,2-Dichloroethane	0.55	12		U
75-35-4	1,1-Dichloroethene	1.4	12		U
156-59-2	cis-1,2-Dichloroethene	1.4	12		U
156-60-5	trans-1,2-Dichloroethene	1.3	12		U
78-87-5	1,2-Dichloropropane	0.55	12		U
10061-01-5	cis-1,3-Dichloropropene	0.60	12		U
10061-02-6	trans-1,3-Dichloropropene	0.38	12		U
100-41-4	Ethylbenzene	0.90	12		U
591-78-6	2-Hexanone	2.8	12		U
98-82-8	Isopropylbenzene	1.0	12		U
79-20-9	Methyl acetate	1.9	12		U
75-09-2	Methylene chloride	0.74	12	12u ~~2.4~~	~~JB~~ B
108-87-2	Methyl cyclohexane	0.36	12		U
1634-04-4	Methyl tert-butyl ether	0.38	12		U
108-10-1	4-Methyl-2-pentanone	0.70	12	12u ~~0.82~~	~~JB~~ B
100-42-5	Styrene	0.42	12		U
79-34-5	1,1,2,2-Tetrachloroethane	0.52	12		U
127-18-4	Tetrachloroethene	1.2	12		U

FORM I VOA

lew
4/2/09

FORM 1
VOLATILE ORGANICS ANALYSIS DATA SHEET

CLIENT SAMPLE NO.

MR08-SS180-09A

Lab Name: EMPIRICAL LABS Contract: CH2MHILL

Lab Code: NA Case No.: NA SAS No.: NA SDG No.: LEJEUNE046

Matrix: (soil/water) SOIL Lab Sample ID: 0901069-01

Sample wt/vol: 4.4 (g/mL) G Lab File ID: 0106901A

Level: (low/med) LOW Date Sampled: 01/09/09 08:25

% Moisture: not dec. 6 Date Analyzed: 01/17/09 12:27

GC Column: RTX-VRX ID: 0.25 (mm) Dilution Factor: 1.0

Soil Extract Volume:_____(uL) Soil Aliquot Volume: _____(uL)

CONCENTRATION UNITS: (ug/L or ug/Kg) UG/KG

CAS NO.	COMPOUND	MDL	RL	CONC	Q	
108-88-3	Toluene	1.0	12	12u ~~1.1~~	~~J~~	Bl
120-82-1	1,2,4-Trichlorobenzene	0.22	12	12u ~~0.34~~	~~JB~~	Bl
71-55-6	1,1,1-Trichloroethane	1.1	12		U	
79-00-5	1,1,2-Trichloroethane	0.42	12		U	
79-01-6	Trichloroethene	1.0	12		U	
76-13-1	Trichlorotrifluoroethane	0.66	12		U	
75-69-4	Trichlorofluoromethane	1.1	12		U	
75-01-4	Vinyl chloride	1.3	12		U	
1330-20-7	Xylene(total)	0.84	12		U	

lw
4/21/09

FORM 1
VOLATILE ORGANICS ANALYSIS DATA SHEET

CLIENT SAMPLE NO. 2

MR08-IS18
0-6-7-09A

Lab Name: EMPIRICAL LABS Contract: CH2MHILL

Lab Code: NA Case No.: NA SAS No.: NA SDG No.: LEJEUNE046

Matrix: (soil/water) SOIL Lab Sample ID: 0901069-02

Sample wt/vol: 6.2 (g/mL) G Lab File ID: 0106902A

Level: (low/med) LOW Date Sampled: 01/09/09 08:45

% Moisture: not dec. 11 Date Analyzed: 01/17/09 12:57

GC Column: RTX-VRX ID: 0.25 (mm) Dilution Factor: 1.0

Soil Extract Volume:_____(uL) Soil Aliquot Volume: _____(uL)

CONCENTRATION UNITS: (ug/L or ug/Kg) UG/KG

CAS NO.	COMPOUND	MDL	RL	CONC	Q
67-64-1	Acetone	1.8	9.0	7.5	J
71-43-2	Benzene	0.42	9.0		U
75-27-4	Bromodichloromethane	0.27	9.0		U
75-25-2	Bromoform	0.90	9.0		U
74-83-9	Bromomethane	0.65	9.0		U
78-93-3	2-Butanone	1.2	9.0		~~U~~ UJ CCH
75-15-0	Carbon disulfide	1.2	9.0		U
56-23-5	Carbon tetrachloride	0.79	9.0		U
108-90-7	Chlorobenzene	0.30	9.0		U
75-00-3	Chloroethane	0.99	9.0		U
67-66-3	Chloroform	0.49	9.0		U
74-87-3	Chloromethane	0.47	9.0		U
110-82-7	Cyclohexane	0.48	9.0		U
124-48-1	Dibromochloromethane	0.30	9.0		U
96-12-8	1,2-Dibromo-3-chloropropane	1.1	4.5		U
106-93-4	1,2-Dibromoethane	0.39	9.0		U
95-50-1	1,2-Dichlorobenzene	0.33	9.0		U
541-73-1	1,3-Dichlorobenzene	0.76	9.0		U
106-46-7	1,4-Dichlorobenzene	0.49	9.0		U
75-71-8	Dichlorodifluoromethane	0.99	9.0		U
75-34-3	1,1-Dichloroethane	0.48	9.0		U
107-06-2	1,2-Dichloroethane	0.41	9.0		U
75-35-4	1,1-Dichloroethene	1.1	9.0		U
156-59-2	cis-1,2-Dichloroethene	1.1	9.0		U
156-60-5	trans-1,2-Dichloroethene	0.99	9.0		U
78-87-5	1,2-Dichloropropane	0.41	9.0		U
10061-01-5	cis-1,3-Dichloropropene	0.45	9.0		U
10061-02-6	trans-1,3-Dichloropropene	0.29	9.0		U
100-41-4	Ethylbenzene	0.67	9.0		U
591-78-6	2-Hexanone	2.1	9.0		U
98-82-8	Isopropylbenzene	0.79	9.0		U
79-20-9	Methyl acetate	1.4	9.0		U
75-09-2	Methylene chloride	0.56	9.0	9.0u ~~1.9~~ ~~JB~~	B
108-87-2	Methyl cyclohexane	0.27	9.0		U
1634-04-4	Methyl tert-butyl ether	0.29	9.0		U
108-10-1	4-Methyl-2-pentanone	0.52	9.0		U
100-42-5	Styrene	0.31	9.0		U
79-34-5	1,1,2,2-Tetrachloroethane	0.39	9.0		U
127-18-4	Tetrachloroethene	0.87	9.0		U

FORM I VOA

JCW 4/2/09

FORM 1
VOLATILE ORGANICS ANALYSIS DATA SHEET

CLIENT SAMPLE NO. 2

MR08-IS18
0-6-7-09A

Lab Name: EMPIRICAL LABS Contract: CH2MHILL

Lab Code: NA Case No.: NA SAS No.: NA SDG No.: LEJEUNE046

Matrix: (soil/water) SOIL Lab Sample ID: 0901069-02

Sample wt/vol: 6.2 (g/mL) G Lab File ID: 0106902A

Level: (low/med) LOW Date Sampled: 01/09/09 08:45

% Moisture: not dec. 11 Date Analyzed: 01/17/09 12:57

GC Column: RTX-VRX ID: 0.25 (mm) Dilution Factor: 1.0

Soil Extract Volume:_____(uL) Soil Aliquot Volume: _____(uL)

CONCENTRATION UNITS: (ug/L or ug/Kg) UG/KG

CAS NO.	COMPOUND	MDL	RL	CONC	Q
108-88-3	Toluene	0.77	9.0		U
120-82-1	1,2,4-Trichlorobenzene	0.16	9.0		U
71-55-6	1,1,1-Trichloroethane	0.81	9.0		U
79-00-5	1,1,2-Trichloroethane	0.31	9.0		U
79-01-6	Trichloroethene	0.76	9.0		U
76-13-1	Trichlorotrifluoroethane	0.49	9.0		U
75-69-4	Trichlorofluoromethane	0.85	9.0		U
75-01-4	Vinyl chloride	0.99	9.0		U
1330-20-7	Xylene(total)	0.63	9.0		U

DW
4/2/09

FORM 1
VOLATILE ORGANICS ANALYSIS DATA SHEET

CLIENT SAMPLE NO. 3

MR08-SS182-09A

Lab Name: EMPIRICAL LABS Contract: CH2MHILL

Lab Code: NA Case No.: NA SAS No.: NA SDG No.: LEJEUNE046

Matrix: (soil/water) SOIL Lab Sample ID: 0901069-03

Sample wt/vol: 5.8 (g/mL) G Lab File ID: 0106903A

Level: (low/med) LOW Date Sampled: 01/09/09 09:00

% Moisture: not dec. 6 Date Analyzed: 01/17/09 13:28

GC Column: RTX-VRX ID: 0.25 (mm) Dilution Factor: 1.0

Soil Extract Volume:_____(uL) Soil Aliquot Volume: _____(uL)

CONCENTRATION UNITS: (ug/L or ug/Kg) UG/KG

CAS NO.	COMPOUND	MDL	RL	CONC	Q
67-64-1	Acetone	1.8	9.2		U
71-43-2	Benzene	0.43	9.2	0.52	J
75-27-4	Bromodichloromethane	0.28	9.2		U
75-25-2	Bromoform	0.92	9.2		U
74-83-9	Bromomethane	0.66	9.2		U
78-93-3	2-Butanone	1.3	9.2		~~U~~ UJ CCH
75-15-0	Carbon disulfide	1.2	9.2		U
56-23-5	Carbon tetrachloride	0.81	9.2		U
108-90-7	Chlorobenzene	0.31	9.2		U
75-00-3	Chloroethane	1.0	9.2		U
67-66-3	Chloroform	0.51	9.2		U
74-87-3	Chloromethane	0.48	9.2		U
110-82-7	Cyclohexane	0.50	9.2		U
124-48-1	Dibromochloromethane	0.31	9.2		U
96-12-8	1,2-Dibromo-3-chloropropane	1.1	4.6		U
106-93-4	1,2-Dibromoethane	0.40	9.2		U
95-50-1	1,2-Dichlorobenzene	0.34	9.2		U
541-73-1	1,3-Dichlorobenzene	0.77	9.2		U
106-46-7	1,4-Dichlorobenzene	0.51	9.2		U
75-71-8	Dichlorodifluoromethane	1.0	9.2		U
75-34-3	1,1-Dichloroethane	0.50	9.2		U
107-06-2	1,2-Dichloroethane	0.42	9.2		U
75-35-4	1,1-Dichloroethene	1.1	9.2		U
156-59-2	cis-1,2-Dichloroethene	1.1	9.2		U
156-60-5	trans-1,2-Dichloroethene	1.0	9.2		U
78-87-5	1,2-Dichloropropane	0.42	9.2		U
10061-01-5	cis-1,3-Dichloropropene	0.46	9.2		U
10061-02-6	trans-1,3-Dichloropropene	0.30	9.2		U
100-41-4	Ethylbenzene	0.69	9.2	4.1	J
591-78-6	2-Hexanone	2.1	9.2		U
98-82-8	Isopropylbenzene	0.81	9.2		U
79-20-9	Methyl acetate	1.5	9.2		U
75-09-2	Methylene chloride	0.57	9.2	9.2U ~~1.4~~	~~JB~~ BL
108-87-2	Methyl cyclohexane	0.28	9.2	0.34	J
1634-04-4	Methyl tert-butyl ether	0.30	9.2		U
108-10-1	4-Methyl-2-pentanone	0.54	9.2		U
100-42-5	Styrene	0.32	9.2		U
79-34-5	1,1,2,2-Tetrachloroethane	0.40	9.2		U
127-18-4	Tetrachloroethene	0.89	9.2		U

FORM I VOA

RW 4/12/09

FORM 1
VOLATILE ORGANICS ANALYSIS DATA SHEET

CLIENT SAMPLE NO. 3

MR08-SS182-09A

Lab Name: EMPIRICAL LABS Contract: CH2MHILL

Lab Code: NA Case No.: NA SAS No.: NA SDG No.: LEJEUNE046

Matrix: (soil/water) SOIL Lab Sample ID: 0901069-03

Sample wt/vol: 5.8 (g/mL) G Lab File ID: 0106903A

Level: (low/med) LOW Date Sampled: 01/09/09 09:00

% Moisture: not dec. 6 Date Analyzed: 01/17/09 13:28

GC Column: RTX-VRX ID: 0.25 (mm) Dilution Factor: 1.0

Soil Extract Volume:_____(uL) Soil Aliquot Volume: _____(uL)

CONCENTRATION UNITS: (ug/L or ug/Kg) UG/KG

CAS NO.	COMPOUND	MDL	RL	CONC	Q
108-88-3	Toluene	0.79	9.2	9.2u ~~2.3~~	~~J~~ B
120-82-1	1,2,4-Trichlorobenzene	0.17	9.2		U
71-55-6	1,1,1-Trichloroethane	0.83	9.2		U
79-00-5	1,1,2-Trichloroethane	0.32	9.2		U
79-01-6	Trichloroethene	0.78	9.2		U
76-13-1	Trichlorotrifluoroethane	0.51	9.2		U
75-69-4	Trichlorofluoromethane	0.88	9.2		U
75-01-4	Vinyl chloride	1.0	9.2		U
1330-20-7	Xylene(total)	0.64	9.2		U

gcw 4/2/09

FORM 1
VOLATILE ORGANICS ANALYSIS DATA SHEET

CLIENT SAMPLE NO. 4

MR08-IS18
2-8-9-09A

Lab Name: EMPIRICAL LABS Contract: CH2MHILL

Lab Code: NA Case No.: NA SAS No.: NA SDG No.: LEJEUNE046

Matrix: (soil/water) SOIL Lab Sample ID: 0901069-04

Sample wt/vol: 4.9 (g/mL) G Lab File ID: 0106904A

Level: (low/med) LOW Date Sampled: 01/09/09 09:15

% Moisture: not dec. 13 Date Analyzed: 01/17/09 13:59

GC Column: RTX-VRX ID: 0.25 (mm) Dilution Factor: 1.0

Soil Extract Volume:_____(uL) Soil Aliquot Volume: _____(uL)

CONCENTRATION UNITS: (ug/L or ug/Kg) UG/KG

CAS NO.	COMPOUND	MDL	RL	CONC	Q
67-64-1	Acetone	2.3	12	4.9	J
71-43-2	Benzene	0.54	12		U
75-27-4	Bromodichloromethane	0.35	12		U
75-25-2	Bromoform	1.2	12		U
74-83-9	Bromomethane	0.83	12		U
78-93-3	2-Butanone	1.6	12		~~U~~ UJCCH
75-15-0	Carbon disulfide	1.5	12		U
56-23-5	Carbon tetrachloride	1.0	12		U
108-90-7	Chlorobenzene	0.39	12		U
75-00-3	Chloroethane	1.3	12		U
67-66-3	Chloroform	0.64	12		U
74-87-3	Chloromethane	0.60	12		U
110-82-7	Cyclohexane	0.62	12		U
124-48-1	Dibromochloromethane	0.39	12		U
96-12-8	1,2-Dibromo-3-chloropropane	1.4	5.8		U
106-93-4	1,2-Dibromoethane	0.50	12		U
95-50-1	1,2-Dichlorobenzene	0.43	12		U
541-73-1	1,3-Dichlorobenzene	0.97	12		U
106-46-7	1,4-Dichlorobenzene	0.64	12		U
75-71-8	Dichlorodifluoromethane	1.3	12		U
75-34-3	1,1-Dichloroethane	0.62	12		U
107-06-2	1,2-Dichloroethane	0.53	12		U
75-35-4	1,1-Dichloroethene	1.4	12		U
156-59-2	cis-1,2-Dichloroethene	1.4	12		U
156-60-5	trans-1,2-Dichloroethene	1.3	12		U
78-87-5	1,2-Dichloropropane	0.53	12		U
10061-01-5	cis-1,3-Dichloropropene	0.58	12		U
10061-02-6	trans-1,3-Dichloropropene	0.37	12		U
100-41-4	Ethylbenzene	0.87	12		U
591-78-6	2-Hexanone	2.7	12		U
98-82-8	Isopropylbenzene	1.0	12		U
79-20-9	Methyl acetate	1.8	12		U
75-09-2	Methylene chloride	0.72	12	12U	~~2.1 JB~~
108-87-2	Methyl cyclohexane	0.35	12		U
1634-04-4	Methyl tert-butyl ether	0.37	12		U
108-10-1	4-Methyl-2-pentanone	0.67	12		U
100-42-5	Styrene	0.40	12		U
79-34-5	1,1,2,2-Tetrachloroethane	0.50	12		U
127-18-4	Tetrachloroethene	1.1	12		U

FORM I VOA

lew 4/2/09

FORM 1
VOLATILE ORGANICS ANALYSIS DATA SHEET

CLIENT SAMPLE NO. 4

MR08-IS18
2-8-9-09A

Lab Name: EMPIRICAL LABS Contract: CH2MHILL

Lab Code: NA Case No.: NA SAS No.: NA SDG No.: LEJEUNE046

Matrix: (soil/water) SOIL Lab Sample ID: 0901069-04

Sample wt/vol: 4.9 (g/mL) G Lab File ID: 0106904A

Level: (low/med) LOW Date Sampled: 01/09/09 09:15

% Moisture: not dec. 13 Date Analyzed: 01/17/09 13:59

GC Column: RTX-VRX ID: 0.25 (mm) Dilution Factor: 1.0

Soil Extract Volume:_____(uL) Soil Aliquot Volume: _____(uL)

CONCENTRATION UNITS: (ug/L or ug/Kg) UG/KG

CAS NO.	COMPOUND	MDL	RL	CONC	Q
108-88-3	Toluene	1.00	12		U
120-82-1	1,2,4-Trichlorobenzene	0.21	12		U
71-55-6	1,1,1-Trichloroethane	1.0	12		U
79-00-5	1,1,2-Trichloroethane	0.40	12		U
79-01-6	Trichloroethene	0.98	12		U
76-13-1	Trichlorotrifluoroethane	0.64	12		U
75-69-4	Trichlorofluoromethane	1.1	12		U
75-01-4	Vinyl chloride	1.3	12		U
1330-20-7	Xylene(total)	0.81	12		U

lw
4/2/09

FORM 1
VOLATILE ORGANICS ANALYSIS DATA SHEET

CLIENT SAMPLE NO. 5

MR08-SS183-09A

Lab Name: EMPIRICAL LABS Contract: CH2MHILL

Lab Code: NA Case No.: NA SAS No.: NA SDG No.: LEJEUNE046

Matrix: (soil/water) SOIL Lab Sample ID: 0901069-05

Sample wt/vol: 5.0 (g/mL) G Lab File ID: 0106905A

Level: (low/med) LOW Date Sampled: 01/09/09 09:30

% Moisture: not dec. 9 Date Analyzed: 01/17/09 14:30

GC Column: RTX-VRX ID: 0.25 (mm) Dilution Factor: 1.0

Soil Extract Volume:_____(uL) Soil Aliquot Volume: _____(uL)

CONCENTRATION UNITS: (ug/L or ug/Kg) UG/KG

CAS NO.	COMPOUND	MDL	RL	CONC	Q	
67-64-1	Acetone	2.2	11		U	
71-43-2	Benzene	0.52	11	0.54	~~U~~ J	M
75-27-4	Bromodichloromethane	0.33	11		~~U~~ UJ	
75-25-2	Bromoform	1.1	11		~~U~~ UJ	
74-83-9	Bromomethane	0.79	11		U	
78-93-3	2-Butanone	1.5	11	7.3	~~U~~ J	C
75-15-0	Carbon disulfide	1.4	11		U	
56-23-5	Carbon tetrachloride	0.96	11		~~U~~ UJ	M
108-90-7	Chlorobenzene	0.37	11		~~U~~ UJ	
75-00-3	Chloroethane	1.2	11		U	
67-66-3	Chloroform	0.60	11		~~U~~ UJ	MS
74-87-3	Chloromethane	0.57	11		U	
110-82-7	Cyclohexane	0.59	11		~~U~~ UJ	M
124-48-1	Dibromochloromethane	0.37	11		~~U~~ UJ	M
96-12-8	1,2-Dibromo-3-chloropropane	1.3	5.5		~~U~~ UJ	M
106-93-4	1,2-Dibromoethane	0.47	11		~~U~~ UJ	M
95-50-1	1,2-Dichlorobenzene	0.40	11		~~U~~	
541-73-1	1,3-Dichlorobenzene	0.92	11		~~U~~	
106-46-7	1,4-Dichlorobenzene	0.60	11		~~U~~	
75-71-8	Dichlorodifluoromethane	1.2	11		U	
75-34-3	1,1-Dichloroethane	0.59	11		~~U~~ UJ	M
107-06-2	1,2-Dichloroethane	0.50	11		~~U~~ UJ	MS
75-35-4	1,1-Dichloroethene	1.3	11		U	
156-59-2	cis-1,2-Dichloroethene	1.3	11		~~U~~ UJ	M
156-60-5	trans-1,2-Dichloroethene	1.2	11		~~U~~ UJ	M
78-87-5	1,2-Dichloropropane	0.50	11		~~U~~ UJ	M
10061-01-5	cis-1,3-Dichloropropene	0.55	11		~~U~~	
10061-02-6	trans-1,3-Dichloropropene	0.35	11		~~U~~	
100-41-4	Ethylbenzene	0.82	11		~~U~~ UJ	M
591-78-6	2-Hexanone	2.5	11		U	
98-82-8	Isopropylbenzene	0.96	11		~~U~~ UJ	MS
79-20-9	Methyl acetate	1.8	11		U	
75-09-2	Methylene chloride	0.68	11	11U	~~2.3 JB~~	B
108-87-2	Methyl cyclohexane	0.33	11	0.38	~~U~~ J	MS
1634-04-4	Methyl tert-butyl ether	0.35	11		U	
108-10-1	4-Methyl-2-pentanone	0.64	11		U	
100-42-5	Styrene	0.38	11		~~U~~ UJ	MS
79-34-5	1,1,2,2-Tetrachloroethane	0.47	11		~~U~~	
127-18-4	Tetrachloroethene	1.1	11		~~U~~	

MW
4/7/09

FORM 1
VOLATILE ORGANICS ANALYSIS DATA SHEET

CLIENT SAMPLE NO. 5

MR08-SS183-09A

Lab Name: EMPIRICAL LABS Contract: CH2MHILL

Lab Code: NA Case No.: NA SAS No.: NA SDG No.: LEJEUNE046

Matrix: (soil/water) SOIL Lab Sample ID: 0901069-05

Sample wt/vol: 5.0 (g/mL) G Lab File ID: 0106905A

Level: (low/med) LOW Date Sampled: 01/09/09 09:30

% Moisture: not dec. 9 Date Analyzed: 01/17/09 14:30

GC Column: RTX-VRX ID: 0.25 (mm) Dilution Factor: 1.0

Soil Extract Volume:_____(uL) Soil Aliquot Volume: _____(uL)

CONCENTRATION UNITS: (ug/L or ug/Kg) UG/KG

CAS NO.	COMPOUND	MDL	RL	CONC	Q
108-88-3	Toluene	0.94	11		~~U~~ UJ M
120-82-1	1,2,4-Trichlorobenzene	0.20	11		~~U~~ R
71-55-6	1,1,1-Trichloroethane	0.99	11		~~U~~ UJ
79-00-5	1,1,2-Trichloroethane	0.38	11		~~U~~ UJ
79-01-6	Trichloroethene	0.93	11		~~U~~ UJ MS
76-13-1	Trichlorotrifluoroethane	0.60	11		U
75-69-4	Trichlorofluoromethane	1.0	11		U
75-01-4	Vinyl chloride	1.2	11		U
1330-20-7	Xylene(total)	0.77	11		~~U~~ UJ MS

FORM I VOA

JW 4/2/09

FORM 1
VOLATILE ORGANICS ANALYSIS DATA SHEET

CLIENT SAMPLE NO. 6

MR08-IS1
83-6-7-09A

Lab Name: EMPIRICAL LABS Contract: CH2MHILL

Lab Code: NA Case No.: NA SAS No.: NA SDG No.: LEJEUNE046

Matrix: (soil/water) SOIL Lab Sample ID: 0901069-06

Sample wt/vol: 3.7 (g/mL) G Lab File ID: 0106906A

Level: (low/med) LOW Date Sampled: 01/09/09 10:00

% Moisture: not dec. 4 Date Analyzed: 01/17/09 15:01

GC Column: RTX-VRX ID: 0.25 (mm) Dilution Factor: 1.0

Soil Extract Volume:_____(uL) Soil Aliquot Volume: _____(uL)

CONCENTRATION UNITS: (ug/L or ug/Kg) UG/KG

CAS NO.	COMPOUND	MDL	RL	CONC	Q
67-64-1	Acetone	2.8	14	6.3	J
71-43-2	Benzene	0.66	14		U
75-27-4	Bromodichloromethane	0.42	14		U
75-25-2	Bromoform	1.4	14		U
74-83-9	Bromomethane	1.0	14		U
78-93-3	2-Butanone	2.0	14		~~U~~ UJ CCV
75-15-0	Carbon disulfide	1.8	14		U
56-23-5	Carbon tetrachloride	1.2	14		U
108-90-7	Chlorobenzene	0.48	14		~~U~~ UJ MSL
75-00-3	Chloroethane	1.5	14		U
67-66-3	Chloroform	0.77	14		U
74-87-3	Chloromethane	0.73	14		U
110-82-7	Cyclohexane	0.76	14		U
124-48-1	Dibromochloromethane	0.48	14		U
96-12-8	1,2-Dibromo-3-chloropropane	1.7	7.0		~~U~~ UJ MSL
106-93-4	1,2-Dibromoethane	0.60	14		U
95-50-1	1,2-Dichlorobenzene	0.52	14		~~U~~ UJ MSL
541-73-1	1,3-Dichlorobenzene	1.2	14		~~U~~ ↓ ↓
106-46-7	1,4-Dichlorobenzene	0.77	14		~~U~~
75-71-8	Dichlorodifluoromethane	1.5	14		U
75-34-3	1,1-Dichloroethane	0.76	14		U
107-06-2	1,2-Dichloroethane	0.64	14		U
75-35-4	1,1-Dichloroethene	1.7	14		U
156-59-2	cis-1,2-Dichloroethene	1.7	14		U
156-60-5	trans-1,2-Dichloroethene	1.5	14		U
78-87-5	1,2-Dichloropropane	0.64	14		U
10061-01-5	cis-1,3-Dichloropropene	0.70	14		~~U~~ UJ MSL
10061-02-6	trans-1,3-Dichloropropene	0.45	14		~~U~~ UJ MSL
100-41-4	Ethylbenzene	1.0	14		U
591-78-6	2-Hexanone	3.2	14		U
98-82-8	Isopropylbenzene	1.2	14		U
79-20-9	Methyl acetate	2.2	14		~~U~~ UJ MS
75-09-2	Methylene chloride	0.87	14	14u	~~3.1 JB~~ BC
108-87-2	Methyl cyclohexane	0.42	14		U
1634-04-4	Methyl tert-butyl ether	0.45	14		U
108-10-1	4-Methyl-2-pentanone	0.81	14		U
100-42-5	Styrene	0.49	14		U
79-34-5	1,1,2,2-Tetrachloroethane	0.60	14		U
127-18-4	Tetrachloroethene	1.4	14		U

FORM I VOA

LdW
4/2/09

FORM 1
VOLATILE ORGANICS ANALYSIS DATA SHEET

CLIENT SAMPLE NO. 6

MR08-IS1
83-6-7-09A

Lab Name: EMPIRICAL LABS Contract: CH2MHILL

Lab Code: NA Case No.: NA SAS No.: NA SDG No.: LEJEUNE046

Matrix: (soil/water) SOIL Lab Sample ID: 0901069-06

Sample wt/vol: 3.7 (g/mL) G Lab File ID: 0106906A

Level: (low/med) LOW Date Sampled: 01/09/09 10:00

% Moisture: not dec. 4 Date Analyzed: 01/17/09 15:01

GC Column: RTX-VRX ID: 0.25 (mm) Dilution Factor: 1.0

Soil Extract Volume:_____(uL) Soil Aliquot Volume: _____(uL)

CONCENTRATION UNITS: (ug/L or ug/Kg) UG/KG

CAS NO.	COMPOUND	MDL	RL	CONC	Q
108-88-3	Toluene	1.2	14		U
120-82-1	1,2,4-Trichlorobenzene	0.25	14		~~U~~ UJ M
71-55-6	1,1,1-Trichloroethane	1.3	14		U
79-00-5	1,1,2-Trichloroethane	0.49	14		U
79-01-6	Trichloroethene	1.2	14		U
76-13-1	Trichlorotrifluoroethane	0.77	14		U
75-69-4	Trichlorofluoromethane	1.3	14		U
75-01-4	Vinyl chloride	1.5	14		U
1330-20-7	Xylene(total)	0.98	14		U

QW
4/2/09

FORM 1
VOLATILE ORGANICS ANALYSIS DATA SHEET

CLIENT SAMPLE NO. 7

MR08-SS205-09A

Lab Name: EMPIRICAL LABS Contract: CH2MHILL

Lab Code: NA Case No.: NA SAS No.: NA SDG No.: LEJEUNE046

Matrix: (soil/water) SOIL Lab Sample ID: 0901069-07

Sample wt/vol: 4.6 (g/mL) G Lab File ID: 0106907B

Level: (low/med) LOW Date Sampled: 01/09/09 10:35

% Moisture: not dec. 10 Date Analyzed: 01/19/09 08:34

GC Column: RTX-VRX ID: 0.25 (mm) Dilution Factor: 1.0

Soil Extract Volume:_____(uL) Soil Aliquot Volume: _____(uL)

CONCENTRATION UNITS: (ug/L or ug/Kg) UG/KG

CAS NO.	COMPOUND	MDL	RL	CONC	Q	
67-64-1	Acetone	2.4	12	20	~~B~~ U	B
71-43-2	Benzene	0.56	12		U	
75-27-4	Bromodichloromethane	0.36	12		U	
75-25-2	Bromoform	1.2	12		U	
74-83-9	Bromomethane	0.86	12		U	
78-93-3	2-Butanone	1.7	12		U	
75-15-0	Carbon disulfide	1.6	12		U	
56-23-5	Carbon tetrachloride	1.0	12		U	
108-90-7	Chlorobenzene	0.41	12		U	
75-00-3	Chloroethane	1.3	12		U	
67-66-3	Chloroform	0.66	12		U	
74-87-3	Chloromethane	0.62	12		U	
110-82-7	Cyclohexane	0.65	12		U	
124-48-1	Dibromochloromethane	0.41	12		U	
96-12-8	1,2-Dibromo-3-chloropropane	1.4	6.0		U	
106-93-4	1,2-Dibromoethane	0.52	12		U	
95-50-1	1,2-Dichlorobenzene	0.44	12		U	
541-73-1	1,3-Dichlorobenzene	1.0	12		U	
106-46-7	1,4-Dichlorobenzene	0.66	12		U	
75-71-8	Dichlorodifluoromethane	1.3	12		U	
75-34-3	1,1-Dichloroethane	0.65	12		U	
107-06-2	1,2-Dichloroethane	0.55	12		U	
75-35-4	1,1-Dichloroethene	1.4	12		U	
156-59-2	cis-1,2-Dichloroethene	1.4	12		U	
156-60-5	trans-1,2-Dichloroethene	1.3	12		U	
78-87-5	1,2-Dichloropropane	0.55	12		U	
10061-01-5	cis-1,3-Dichloropropene	0.60	12		U	
10061-02-6	trans-1,3-Dichloropropene	0.38	12		U	
100-41-4	Ethylbenzene	0.90	12		U	
591-78-6	2-Hexanone	2.8	12		U	
98-82-8	Isopropylbenzene	1.0	12		U	
79-20-9	Methyl acetate	1.9	12		U	
75-09-2	Methylene chloride	0.74	12	12u	~~4.8 JB~~	BU
108-87-2	Methyl cyclohexane	0.36	12		U	
1634-04-4	Methyl tert-butyl ether	0.38	12		U	
108-10-1	4-Methyl-2-pentanone	0.70	12		U	
100-42-5	Styrene	0.42	12		U	
79-34-5	1,1,2,2-Tetrachloroethane	0.52	12		U	
127-18-4	Tetrachloroethene	1.2	12		U	

FORM I VOA

lew 4/2/09

FORM 1
VOLATILE ORGANICS ANALYSIS DATA SHEET

CLIENT SAMPLE NO. 7

MR08-SS205-09A

Lab Name: EMPIRICAL LABS Contract: CH2MHILL

Lab Code: NA Case No.: NA SAS No.: NA SDG No.: LEJEUNE046

Matrix: (soil/water) SOIL Lab Sample ID: 0901069-07

Sample wt/vol: 4.6 (g/mL) G Lab File ID: 0106907B

Level: (low/med) LOW Date Sampled: 01/09/09 10:35

% Moisture: not dec. 10 Date Analyzed: 01/19/09 08:34

GC Column: RTX-VRX ID: 0.25 (mm) Dilution Factor: 1.0

Soil Extract Volume:_____(uL) Soil Aliquot Volume: _____(uL)

CONCENTRATION UNITS: (ug/L or ug/Kg) UG/KG

CAS NO.	COMPOUND	MDL	RL	CONC	Q
108-88-3	Toluene	1.0	12		U
120-82-1	1,2,4-Trichlorobenzene	0.22	12		U
71-55-6	1,1,1-Trichloroethane	1.1	12		U
79-00-5	1,1,2-Trichloroethane	0.42	12		U
79-01-6	Trichloroethene	1.0	12		U
76-13-1	Trichlorotrifluoroethane	0.66	12		U
75-69-4	Trichlorofluoromethane	1.1	12		U
75-01-4	Vinyl chloride	1.3	12		U
1330-20-7	Xylene(total)	0.84	12		U

4/12/09

FORM 1
VOLATILE ORGANICS ANALYSIS DATA SHEET

CLIENT SAMPLE NO. 8

MR08-IS20
5-9-10-09A

Lab Name: EMPIRICAL LABS Contract: CH2MHILL

Lab Code: NA Case No.: NA SAS No.: NA SDG No.: LEJEUNE046

Matrix: (soil/water) SOIL Lab Sample ID: 0901069-08

Sample wt/vol: 4.8 (g/mL) G Lab File ID: 0106908B

Level: (low/med) LOW Date Sampled: 01/09/09 10:45

% Moisture: not dec. 13 Date Analyzed: 01/19/09 09:05

GC Column: RTX-VRX ID: 0.25 (mm) Dilution Factor: 1.0

Soil Extract Volume:_____(uL) Soil Aliquot Volume: _____(uL)

CONCENTRATION UNITS: (ug/L or ug/Kg) UG/KG

CAS NO.	COMPOUND	MDL	RL	CONC	Q	
67-64-1	Acetone	2.4	12	12u ~~6.2~~	~~JB~~	B
71-43-2	Benzene	0.56	12		U	
75-27-4	Bromodichloromethane	0.36	12		U	
75-25-2	Bromoform	1.2	12		U	
74-83-9	Bromomethane	0.86	12		U	
78-93-3	2-Butanone	1.7	12		U	
75-15-0	Carbon disulfide	1.6	12		U	
56-23-5	Carbon tetrachloride	1.0	12		U	
108-90-7	Chlorobenzene	0.41	12		U	
75-00-3	Chloroethane	1.3	12		U	
67-66-3	Chloroform	0.66	12		U	
74-87-3	Chloromethane	0.62	12		U	
110-82-7	Cyclohexane	0.65	12		U	
124-48-1	Dibromochloromethane	0.41	12		U	
96-12-8	1,2-Dibromo-3-chloropropane	1.4	6.0		U	
106-93-4	1,2-Dibromoethane	0.52	12		U	
95-50-1	1,2-Dichlorobenzene	0.44	12		U	
541-73-1	1,3-Dichlorobenzene	1.0	12		U	
106-46-7	1,4-Dichlorobenzene	0.66	12		U	
75-71-8	Dichlorodifluoromethane	1.3	12		U	
75-34-3	1,1-Dichloroethane	0.65	12		U	
107-06-2	1,2-Dichloroethane	0.55	12		U	
75-35-4	1,1-Dichloroethene	1.4	12		U	
156-59-2	cis-1,2-Dichloroethene	1.4	12		U	
156-60-5	trans-1,2-Dichloroethene	1.3	12		U	
78-87-5	1,2-Dichloropropane	0.55	12		U	
10061-01-5	cis-1,3-Dichloropropene	0.60	12		U	
10061-02-6	trans-1,3-Dichloropropene	0.38	12		U	
100-41-4	Ethylbenzene	0.90	12		U	
591-78-6	2-Hexanone	2.8	12		U	
98-82-8	Isopropylbenzene	1.0	12		U	
79-20-9	Methyl acetate	1.9	12		U	
75-09-2	Methylene chloride	0.74	12	12u 2~~.2~~	~~JB~~	B
108-87-2	Methyl cyclohexane	0.36	12		U	
1634-04-4	Methyl tert-butyl ether	0.38	12		U	
108-10-1	4-Methyl-2-pentanone	0.69	12		U	
100-42-5	Styrene	0.42	12		U	
79-34-5	1,1,2,2-Tetrachloroethane	0.52	12		U	
127-18-4	Tetrachloroethene	1.2	12		U	

FORM I VOA

MW 9/2/09

FORM 1
VOLATILE ORGANICS ANALYSIS DATA SHEET

CLIENT SAMPLE NO. 8

MR08-IS20
5-9-10-09A

Lab Name: EMPIRICAL LABS Contract: CH2MHILL

Lab Code: NA Case No.: NA SAS No.: NA SDG No.: LEJEUNE046

Matrix: (soil/water) SOIL Lab Sample ID: 0901069-08

Sample wt/vol: 4.8 (g/mL) G Lab File ID: 0106908B

Level: (low/med) LOW Date Sampled: 01/09/09 10:45

% Moisture: not dec. 13 Date Analyzed: 01/19/09 09:05

GC Column: RTX-VRX ID: 0.25 (mm) Dilution Factor: 1.0

Soil Extract Volume:_____(uL) Soil Aliquot Volume: _____(uL)

CONCENTRATION UNITS: (ug/L or ug/Kg) UG/KG

CAS NO.	COMPOUND	MDL	RL	CONC	Q
108-88-3	Toluene	1.0	12		U
120-82-1	1,2,4-Trichlorobenzene	0.22	12		U
71-55-6	1,1,1-Trichloroethane	1.1	12		U
79-00-5	1,1,2-Trichloroethane	0.42	12		U
79-01-6	Trichloroethene	1.0	12		U
76-13-1	Trichlorotrifluoroethane	0.66	12		U
75-69-4	Trichlorofluoromethane	1.1	12		U
75-01-4	Vinyl chloride	1.3	12		U
1330-20-7	Xylene(total)	0.84	12		U

JeW
4/2/09

FORM 1
VOLATILE ORGANICS ANALYSIS DATA SHEET

CLIENT SAMPLE NO. 9

MR08-SS204-09A

Lab Name: EMPIRICAL LABS Contract: CH2MHILL

Lab Code: NA Case No.: NA SAS No.: NA SDG No.: LEJEUNE046

Matrix: (soil/water) SOIL Lab Sample ID: 0901069-09

Sample wt/vol: 4.8 (g/mL) G Lab File ID: 0106909A

Level: (low/med) LOW Date Sampled: 01/09/09 11:05

% Moisture: not dec. 7 Date Analyzed: 01/17/09 16:34

GC Column: RTX-VRX ID: 0.25 (mm) Dilution Factor: 1.0

Soil Extract Volume:_____(uL) Soil Aliquot Volume: _____(uL)

CONCENTRATION UNITS: (ug/L or ug/Kg) UG/KG

CAS NO.	COMPOUND	MDL	RL	CONC	Q
67-64-1	Acetone	2.2	11		U
71-43-2	Benzene	0.52	11	0.96	~~J~~ J M
75-27-4	Bromodichloromethane	0.33	11		U
75-25-2	Bromoform	1.1	11		U
74-83-9	Bromomethane	0.80	11		U
78-93-3	2-Butanone	1.5	11		~~U~~ UJ CCH
75-15-0	Carbon disulfide	1.4	11		U
56-23-5	Carbon tetrachloride	0.97	11		U UJ MS
108-90-7	Chlorobenzene	0.38	11		U UJ MS
75-00-3	Chloroethane	1.2	11		U
67-66-3	Chloroform	0.61	11		U
74-87-3	Chloromethane	0.57	11		U
110-82-7	Cyclohexane	0.60	11		U UJ MSC
124-48-1	Dibromochloromethane	0.38	11		U UJ MSC
96-12-8	1,2-Dibromo-3-chloropropane	1.3	5.5		U
106-93-4	1,2-Dibromoethane	0.48	11		U UJ MSC
95-50-1	1,2-Dichlorobenzene	0.41	11		U
541-73-1	1,3-Dichlorobenzene	0.93	11		U
106-46-7	1,4-Dichlorobenzene	0.61	11		U
75-71-8	Dichlorodifluoromethane	1.2	11		U
75-34-3	1,1-Dichloroethane	0.60	11		U
107-06-2	1,2-Dichloroethane	0.51	11		U
75-35-4	1,1-Dichloroethene	1.3	11		U
156-59-2	cis-1,2-Dichloroethene	1.3	11		U
156-60-5	trans-1,2-Dichloroethene	1.2	11		U
78-87-5	1,2-Dichloropropane	0.51	11		U
10061-01-5	cis-1,3-Dichloropropene	0.55	11		U
10061-02-6	trans-1,3-Dichloropropene	0.35	11		U
100-41-4	Ethylbenzene	0.83	11	6.0	~~J~~ J MSC
591-78-6	2-Hexanone	2.5	11		U
98-82-8	Isopropylbenzene	0.97	11		~~U~~ UJ MSC
79-20-9	Methyl acetate	1.8	11		U
75-09-2	Methylene chloride	0.68	11	11u ~~2.2 JB~~	B
108-87-2	Methyl cyclohexane	0.33	11	0.98	~~J~~ J MSC
1634-04-4	Methyl tert-butyl ether	0.35	11		U
108-10-1	4-Methyl-2-pentanone	0.64	11		U
100-42-5	Styrene	0.39	11		~~U~~ UJ MS
79-34-5	1,1,2,2-Tetrachloroethane	0.48	11		U
127-18-4	Tetrachloroethene	1.1	11		~~U~~ UJ MSC

FORM I VOA

lew
4/2/09

FORM 1
VOLATILE ORGANICS ANALYSIS DATA SHEET

CLIENT SAMPLE NO. 9

MR08-SS204-09A

Lab Name: EMPIRICAL LABS Contract: CH2MHILL

Lab Code: NA Case No.: NA SAS No.: NA SDG No.: LEJEUNE046

Matrix: (soil/water) SOIL Lab Sample ID: 0901069-09

Sample wt/vol: 4.8 (g/mL) G Lab File ID: 0106909A

Level: (low/med) LOW Date Sampled: 01/09/09 11:05

% Moisture: not dec. 7 Date Analyzed: 01/17/09 16:34

GC Column: RTX-VRX ID: 0.25 (mm) Dilution Factor: 1.0

Soil Extract Volume:_____(uL) Soil Aliquot Volume: _____(uL)

CONCENTRATION UNITS: (ug/L or ug/Kg) UG/KG

CAS NO.	COMPOUND	MDL	RL	CONC	Q
108-88-3	Toluene	0.95	11	11UJ ~~4.3~~	~~J~~ MSL B
120-82-1	1,2,4-Trichlorobenzene	0.20	11		~~U~~ UJ MS
71-55-6	1,1,1-Trichloroethane	0.99	11		~~U~~ ↓ ↓
79-00-5	1,1,2-Trichloroethane	0.39	11		U
79-01-6	Trichloroethene	0.94	11		~~U~~ UJ MS
76-13-1	Trichlorotrifluoroethane	0.61	11		U
75-69-4	Trichlorofluoromethane	1.0	11		U
75-01-4	Vinyl chloride	1.2	11		U
1330-20-7	Xylene(total)	0.77	11	22	J MSL

FORM I VOA

lew
4/2/09

FORM 1
VOLATILE ORGANICS ANALYSIS DATA SHEET

CLIENT SAMPLE NO. 10

MR08-IS2
04-6-7-09A

Lab Name: EMPIRICAL LABS Contract: CH2MHILL

Lab Code: NA Case No.: NA SAS No.: NA SDG No.: LEJEUNE046

Matrix: (soil/water) SOIL Lab Sample ID: 0901069-10

Sample wt/vol: 4.2 (g/mL) G Lab File ID: 0106910A

Level: (low/med) LOW Date Sampled: 01/09/09 11:25

% Moisture: not dec. 12 Date Analyzed: 01/17/09 17:05

GC Column: RTX-VRX ID: 0.25 (mm) Dilution Factor: 1.0

Soil Extract Volume:_____(uL) Soil Aliquot Volume: _____(uL)

CONCENTRATION UNITS: (ug/L or ug/Kg) UG/KG

CAS NO.	COMPOUND	MDL	RL	CONC	Q
67-64-1	Acetone	2.7	14	8.7	J
71-43-2	Benzene	0.64	14		~~U~~ UJ MS
75-27-4	Bromodichloromethane	0.41	14		~~U~~ UJ MSC
75-25-2	Bromoform	1.4	14		U
74-83-9	Bromomethane	0.98	14		U
78-93-3	2-Butanone	1.9	14		~~U~~ UJ CCH
75-15-0	Carbon disulfide	1.8	14		U
56-23-5	Carbon tetrachloride	1.2	14		U
108-90-7	Chlorobenzene	0.46	14		~~U~~ UJ MS
75-00-3	Chloroethane	1.5	14		U
67-66-3	Chloroform	0.75	14		~~U~~ UJ MSC
74-87-3	Chloromethane	0.71	14		U
110-82-7	Cyclohexane	0.73	14		U
124-48-1	Dibromochloromethane	0.46	14		U
96-12-8	1,2-Dibromo-3-chloropropane	1.6	6.8		U
106-93-4	1,2-Dibromoethane	0.58	14		U UJ MS
95-50-1	1,2-Dichlorobenzene	0.50	14		U
541-73-1	1,3-Dichlorobenzene	1.1	14		U
106-46-7	1,4-Dichlorobenzene	0.75	14		U
75-71-8	Dichlorodifluoromethane	1.5	14		U
75-34-3	1,1-Dichloroethane	0.73	14		~~U~~ UJ MS
107-06-2	1,2-Dichloroethane	0.62	14		U
75-35-4	1,1-Dichloroethene	1.6	14		U
156-59-2	cis-1,2-Dichloroethene	1.6	14		U
156-60-5	trans-1,2-Dichloroethene	1.5	14		U
78-87-5	1,2-Dichloropropane	0.62	14		U UJ MS
10061-01-5	cis-1,3-Dichloropropene	0.68	14		U UJ MS
10061-02-6	trans-1,3-Dichloropropene	0.44	14		U
100-41-4	Ethylbenzene	1.0	14		~~U~~ UJ MS
591-78-6	2-Hexanone	3.1	14		U
98-82-8	Isopropylbenzene	1.2	14		U UJ MS
79-20-9	Methyl acetate	2.2	14		U MS
75-09-2	Methylene chloride	0.84	14	14u	~~3.2 JB~~ B
108-87-2	Methyl cyclohexane	0.41	14		~~U~~ UJ MS
1634-04-4	Methyl tert-butyl ether	0.44	14		U
108-10-1	4-Methyl-2-pentanone	0.79	14		U
100-42-5	Styrene	0.48	14		~~U~~ UJ MS
79-34-5	1,1,2,2-Tetrachloroethane	0.58	14		U
127-18-4	Tetrachloroethene	1.3	14		~~U~~ UJ MS

FORM I VOA

MW 4/2/09

FORM 1
VOLATILE ORGANICS ANALYSIS DATA SHEET

CLIENT SAMPLE NO. 10

MR08-IS2
04-6-7-09A

Lab Name: EMPIRICAL LABS Contract: CH2MHILL

Lab Code: NA Case No.: NA SAS No.: NA SDG No.: LEJEUNE046

Matrix: (soil/water) SOIL Lab Sample ID: 0901069-10

Sample wt/vol: 4.2 (g/mL) G Lab File ID: 0106910A

Level: (low/med) LOW Date Sampled: 01/09/09 11:25

% Moisture: not dec. 12 Date Analyzed: 01/17/09 17:05

GC Column: RTX-VRX ID: 0.25 (mm) Dilution Factor: 1.0

Soil Extract Volume:_____(uL) Soil Aliquot Volume: _____(uL)

CONCENTRATION UNITS: (ug/L or ug/Kg) UG/KG

CAS NO.	COMPOUND	MDL	RL	CONC	Q
108-88-3	Toluene	1.2	14		U UJ M
120-82-1	1,2,4-Trichlorobenzene	0.24	14		U ↓ ↓
71-55-6	1,1,1-Trichloroethane	1.2	14		U
79-00-5	1,1,2-Trichloroethane	0.48	14		U
79-01-6	Trichloroethene	1.2	14		U UJ MSL
76-13-1	Trichlorotrifluoroethane	0.75	14		U
75-69-4	Trichlorofluoromethane	1.3	14		U
75-01-4	Vinyl chloride	1.5	14		U UJ MSL
1330-20-7	Xylene(total)	0.95	14		U UJ MS

WW
4/2/09

FORM 1
VOLATILE ORGANICS ANALYSIS DATA SHEET

CLIENT SAMPLE NO. 11

MR08-SS203-09A

Lab Name: EMPIRICAL LABS Contract: CH2MHILL

Lab Code: NA Case No.: NA SAS No.: NA SDG No.: LEJEUNE046

Matrix: (soil/water) SOIL Lab Sample ID: 0901069-11

Sample wt/vol: 6.2 (g/mL) G Lab File ID: 0106911A

Level: (low/med) LOW Date Sampled: 01/09/09 13:00

% Moisture: not dec. 10 Date Analyzed: 01/18/09 00:17

GC Column: RTX-VRX ID: 0.25 (mm) Dilution Factor: 1.0

Soil Extract Volume:_____(uL) Soil Aliquot Volume: _____(uL)

CONCENTRATION UNITS: (ug/L or ug/Kg) UG/KG

CAS NO.	COMPOUND	MDL	RL	CONC	Q
67-64-1	Acetone	1.8	9.0	69	~~B~~
71-43-2	Benzene	0.42	9.0		U
75-27-4	Bromodichloromethane	0.27	9.0		U
75-25-2	Bromoform	0.90	9.0		U
74-83-9	Bromomethane	0.64	9.0		U
78-93-3	2-Butanone	1.2	9.0	8.7	J
75-15-0	Carbon disulfide	1.2	9.0		U
56-23-5	Carbon tetrachloride	0.79	9.0		U
108-90-7	Chlorobenzene	0.30	9.0		U
75-00-3	Chloroethane	0.99	9.0		U
67-66-3	Chloroform	0.49	9.0		U
74-87-3	Chloromethane	0.47	9.0		U
110-82-7	Cyclohexane	0.48	9.0		U
124-48-1	Dibromochloromethane	0.30	9.0		U
96-12-8	1,2-Dibromo-3-chloropropane	1.1	4.5		U
106-93-4	1,2-Dibromoethane	0.38	9.0		U
95-50-1	1,2-Dichlorobenzene	0.33	9.0		U
541-73-1	1,3-Dichlorobenzene	0.75	9.0		U
106-46-7	1,4-Dichlorobenzene	0.49	9.0		U
75-71-8	Dichlorodifluoromethane	0.99	9.0		U
75-34-3	1,1-Dichloroethane	0.48	9.0		U
107-06-2	1,2-Dichloroethane	0.41	9.0		U
75-35-4	1,1-Dichloroethene	1.1	9.0		U
156-59-2	cis-1,2-Dichloroethene	1.1	9.0		U
156-60-5	trans-1,2-Dichloroethene	0.99	9.0		U
78-87-5	1,2-Dichloropropane	0.41	9.0		U
10061-01-5	cis-1,3-Dichloropropene	0.45	9.0		U
10061-02-6	trans-1,3-Dichloropropene	0.29	9.0		U
100-41-4	Ethylbenzene	0.67	9.0		U
591-78-6	2-Hexanone	2.1	9.0		U
98-82-8	Isopropylbenzene	0.79	9.0		U
79-20-9	Methyl acetate	1.4	9.0		U
75-09-2	Methylene chloride	0.56	9.0	9.0u ~~2.2~~	~~JB~~
108-87-2	Methyl cyclohexane	0.27	9.0		U
1634-04-4	Methyl tert-butyl ether	0.29	9.0		U
108-10-1	4-Methyl-2-pentanone	0.52	9.0		U
100-42-5	Styrene	0.31	9.0		U
79-34-5	1,1,2,2-Tetrachloroethane	0.38	9.0		U
127-18-4	Tetrachloroethene	0.87	9.0		U

FORM I VOA

lw
4/2/09

FORM 1
VOLATILE ORGANICS ANALYSIS DATA SHEET

CLIENT SAMPLE NO. 11

MR08-SS203-09A

Lab Name: EMPIRICAL LABS Contract: CH2MHILL

Lab Code: NA Case No.: NA SAS No.: NA SDG No.: LEJEUNE046

Matrix: (soil/water) SOIL Lab Sample ID: 0901069-11

Sample wt/vol: 6.2 (g/mL) G Lab File ID: 0106911A

Level: (low/med) LOW Date Sampled: 01/09/09 13:00

% Moisture: not dec. 10 Date Analyzed: 01/18/09 00:17

GC Column: RTX-VRX ID: 0.25 (mm) Dilution Factor: 1.0

Soil Extract Volume:_____(uL) Soil Aliquot Volume: _____(uL)

CONCENTRATION UNITS: (ug/L or ug/Kg) UG/KG

CAS NO.	COMPOUND	MDL	RL	CONC	Q
108-88-3	Toluene	0.77	9.0		U
120-82-1	1,2,4-Trichlorobenzene	0.16	9.0		U
71-55-6	1,1,1-Trichloroethane	0.81	9.0		U
79-00-5	1,1,2-Trichloroethane	0.31	9.0		U
79-01-6	Trichloroethene	0.76	9.0		U
76-13-1	Trichlorotrifluoroethane	0.49	9.0		U
75-69-4	Trichlorofluoromethane	0.85	9.0		U
75-01-4	Vinyl chloride	0.99	9.0		U
1330-20-7	Xylene(total)	0.63	9.0		U

FORM I VOA

MW
9/2/09

FORM 1
VOLATILE ORGANICS ANALYSIS DATA SHEET

CLIENT SAMPLE NO. 12

MR08-IS20
3-6-7-09A

Lab Name: EMPIRICAL LABS Contract: CH2MHILL

Lab Code: NA Case No.: NA SAS No.: NA SDG No.: LEJEUNE046

Matrix: (soil/water) SOIL Lab Sample ID: 0901069-12

Sample wt/vol: 3.4 (g/mL) G Lab File ID: 0106912A

Level: (low/med) LOW Date Sampled: 01/09/09 13:25

% Moisture: not dec. 12 Date Analyzed: 01/18/09 00:48

GC Column: RTX-VRX ID: 0.25 (mm) Dilution Factor: 1.0

Soil Extract Volume:_____(uL) Soil Aliquot Volume: _____(uL)

CONCENTRATION UNITS: (ug/L or ug/Kg) UG/KG

CAS NO.	COMPOUND	MDL	RL	CONC	Q	
67-64-1	Acetone	3.3	16	16	~~JB~~ U	B
71-43-2	Benzene	0.77	16		U	
75-27-4	Bromodichloromethane	0.49	16		U	
75-25-2	Bromoform	1.6	16		U	
74-83-9	Bromomethane	1.2	16		U	
78-93-3	2-Butanone	2.3	16		U	
75-15-0	Carbon disulfide	2.1	16		U	
56-23-5	Carbon tetrachloride	1.4	16		U	
108-90-7	Chlorobenzene	0.56	16		U	
75-00-3	Chloroethane	1.8	16		U	
67-66-3	Chloroform	0.90	16		U	
74-87-3	Chloromethane	0.86	16		U	
110-82-7	Cyclohexane	0.89	16		U	
124-48-1	Dibromochloromethane	0.56	16		U	
96-12-8	1,2-Dibromo-3-chloropropane	2.0	8.2		U	
106-93-4	1,2-Dibromoethane	0.71	16		U	
95-50-1	1,2-Dichlorobenzene	0.61	16		U	
541-73-1	1,3-Dichlorobenzene	1.4	16		U	
106-46-7	1,4-Dichlorobenzene	0.90	16		U	
75-71-8	Dichlorodifluoromethane	1.8	16		U	
75-34-3	1,1-Dichloroethane	0.89	16		U	
107-06-2	1,2-Dichloroethane	0.76	16		U	
75-35-4	1,1-Dichloroethene	2.0	16		U	
156-59-2	cis-1,2-Dichloroethene	2.0	16		U	
156-60-5	trans-1,2-Dichloroethene	1.8	16		U	
78-87-5	1,2-Dichloropropane	0.76	16		U	
10061-01-5	cis-1,3-Dichloropropene	0.82	16		U	
10061-02-6	trans-1,3-Dichloropropene	0.53	16		U	
100-41-4	Ethylbenzene	1.2	16		U	
591-78-6	2-Hexanone	3.8	16		U	
98-82-8	Isopropylbenzene	1.4	16		U	
79-20-9	Methyl acetate	2.6	16		U	
75-09-2	Methylene chloride	1.0	16	16 U	~~3.6~~ ~~JB~~	B
108-87-2	Methyl cyclohexane	0.49	16		U	
1634-04-4	Methyl tert-butyl ether	0.53	16		U	
108-10-1	4-Methyl-2-pentanone	0.95	16		U	
100-42-5	Styrene	0.58	16		U	
79-34-5	1,1,2,2-Tetrachloroethane	0.71	16		U	
127-18-4	Tetrachloroethene	1.6	16		U	

FORM I VOA

fw
4/2/09

FORM 1
VOLATILE ORGANICS ANALYSIS DATA SHEET

CLIENT SAMPLE NO. 12

MR08-IS20
3-6-7-09A

Lab Name: EMPIRICAL LABS Contract: CH2MHILL

Lab Code: NA Case No.: NA SAS No.: NA SDG No.: LEJEUNE046

Matrix: (soil/water) SOIL Lab Sample ID: 0901069-12

Sample wt/vol: 3.4 (g/mL) G Lab File ID: 0106912A

Level: (low/med) LOW Date Sampled: 01/09/09 13:25

% Moisture: not dec. 12 Date Analyzed: 01/18/09 00:48

GC Column: RTX-VRX ID: 0.25 (mm) Dilution Factor: 1.0

Soil Extract Volume:_____(uL) Soil Aliquot Volume: _____(uL)

CONCENTRATION UNITS: (ug/L or ug/Kg) UG/KG

CAS NO.	COMPOUND	MDL	RL	CONC	Q
108-88-3	Toluene	1.4	16		U
120-82-1	1,2,4-Trichlorobenzene	0.30	16		U
71-55-6	1,1,1-Trichloroethane	1.5	16		U
79-00-5	1,1,2-Trichloroethane	0.58	16		U
79-01-6	Trichloroethene	1.4	16		U
76-13-1	Trichlorotrifluoroethane	0.90	16		U
75-69-4	Trichlorofluoromethane	1.6	16		U
75-01-4	Vinyl chloride	1.8	16		U
1330-20-7	Xylene(total)	1.2	16		U

kew
4/26/09

FORM 1
VOLATILE ORGANICS ANALYSIS DATA SHEET

CLIENT SAMPLE NO. 13

MR08-SS184-09A

Lab Name: EMPIRICAL LABS Contract: CH2MHILL

Lab Code: NA Case No.: NA SAS No.: NA SDG No.: LEJEUNE046

Matrix: (soil/water) SOIL Lab Sample ID: 0901069-13

Sample wt/vol: 4.7 (g/mL) G Lab File ID: 0106913A

Level: (low/med) LOW Date Sampled: 01/09/09 13:45

% Moisture: not dec. 13 Date Analyzed: 01/18/09 01:19

GC Column: RTX-VRX ID: 0.25 (mm) Dilution Factor: 1.0

Soil Extract Volume:_____(uL) Soil Aliquot Volume: _____(uL)

CONCENTRATION UNITS: (ug/L or ug/Kg) UG/KG

CAS NO.	COMPOUND	MDL	RL	CONC	Q
67-64-1	Acetone	2.5	12	47	~~B~~ U
71-43-2	Benzene	0.58	12		U
75-27-4	Bromodichloromethane	0.37	12		U
75-25-2	Bromoform	1.2	12		U
74-83-9	Bromomethane	0.89	12		U
78-93-3	2-Butanone	1.7	12		U
75-15-0	Carbon disulfide	1.6	12		U
56-23-5	Carbon tetrachloride	1.1	12		U
108-90-7	Chlorobenzene	0.42	12		U
75-00-3	Chloroethane	1.4	12		U
67-66-3	Chloroform	0.68	12		U
74-87-3	Chloromethane	0.64	12		U
110-82-7	Cyclohexane	0.67	12		U
124-48-1	Dibromochloromethane	0.42	12		U
96-12-8	1,2-Dibromo-3-chloropropane	1.5	6.2		U
106-93-4	1,2-Dibromoethane	0.53	12		U
95-50-1	1,2-Dichlorobenzene	0.46	12		U
541-73-1	1,3-Dichlorobenzene	1.0	12		U
106-46-7	1,4-Dichlorobenzene	0.68	12		U
75-71-8	Dichlorodifluoromethane	1.4	12		U
75-34-3	1,1-Dichloroethane	0.67	12		U
107-06-2	1,2-Dichloroethane	0.57	12		U
75-35-4	1,1-Dichloroethene	1.5	12		U
156-59-2	cis-1,2-Dichloroethene	1.5	12		U
156-60-5	trans-1,2-Dichloroethene	1.4	12		U
78-87-5	1,2-Dichloropropane	0.57	12		U
10061-01-5	cis-1,3-Dichloropropene	0.62	12		U
10061-02-6	trans-1,3-Dichloropropene	0.40	12		U
100-41-4	Ethylbenzene	0.93	12		U
591-78-6	2-Hexanone	2.8	12		U
98-82-8	Isopropylbenzene	1.1	12		U
79-20-9	Methyl acetate	2.0	12		U
75-09-2	Methylene chloride	0.77	12	12U	~~3.2~~ ~~JB~~ B
108-87-2	Methyl cyclohexane	0.37	12		U
1634-04-4	Methyl tert-butyl ether	0.40	12		U
108-10-1	4-Methyl-2-pentanone	0.72	12		U
100-42-5	Styrene	0.43	12		U
79-34-5	1,1,2,2-Tetrachloroethane	0.53	12		U
127-18-4	Tetrachloroethene	1.2	12		U

FORM I VOA

MW 4/2/09

FORM 1
VOLATILE ORGANICS ANALYSIS DATA SHEET

CLIENT SAMPLE NO. 13

MR08-SS184-09A

Lab Name: EMPIRICAL LABS Contract: CH2MHILL

Lab Code: NA Case No.: NA SAS No.: NA SDG No.: LEJEUNE046

Matrix: (soil/water) SOIL Lab Sample ID: 0901069-13

Sample wt/vol: 4.7 (g/mL) G Lab File ID: 0106913A

Level: (low/med) LOW Date Sampled: 01/09/09 13:45

% Moisture: not dec. 13 Date Analyzed: 01/18/09 01:19

GC Column: RTX-VRX ID: 0.25 (mm) Dilution Factor: 1.0

Soil Extract Volume:_____(uL) Soil Aliquot Volume: _____(uL)

CONCENTRATION UNITS: (ug/L or ug/Kg) UG/KG

CAS NO.	COMPOUND	MDL	RL	CONC	Q
108-88-3	Toluene	1.1	12		U
120-82-1	1,2,4-Trichlorobenzene	0.22	12		U
71-55-6	1,1,1-Trichloroethane	1.1	12		U
79-00-5	1,1,2-Trichloroethane	0.43	12		U
79-01-6	Trichloroethene	1.0	12		U
76-13-1	Trichlorotrifluoroethane	0.68	12		U
75-69-4	Trichlorofluoromethane	1.2	12		U
75-01-4	Vinyl chloride	1.4	12		U
1330-20-7	Xylene(total)	0.86	12		U

fw 9/2/09

FORM 1
VOLATILE ORGANICS ANALYSIS DATA SHEET

CLIENT SAMPLE NO.

MR08-IS18
4-8-9-09A

14

Lab Name: EMPIRICAL LABS Contract: CH2MHILL

Lab Code: NA Case No.: NA SAS No.: NA SDG No.: LEJEUNE046

Matrix: (soil/water) SOIL Lab Sample ID: 0901069-14

Sample wt/vol: 4.3 (g/mL) G Lab File ID: 0106914A

Level: (low/med) LOW Date Sampled: 01/09/09 14:10

% Moisture: not dec. 7 Date Analyzed: 01/18/09 06:19

GC Column: RTX-VRX ID: 0.25 (mm) Dilution Factor: 1.0

Soil Extract Volume:_____(uL) Soil Aliquot Volume: _____(uL)

CONCENTRATION UNITS: (ug/L or ug/Kg) UG/KG

CAS NO.	COMPOUND	MDL	RL	CONC	Q	
67-64-1	Acetone	2.5	13	14	~~B~~ u	B
71-43-2	Benzene	0.59	13		U	
75-27-4	Bromodichloromethane	0.38	13		U	
75-25-2	Bromoform	1.3	13		U	
74-83-9	Bromomethane	0.91	13		U	
78-93-3	2-Butanone	1.8	13		U	
75-15-0	Carbon disulfide	1.6	13		U	
56-23-5	Carbon tetrachloride	1.1	13		U	
108-90-7	Chlorobenzene	0.43	13		U	
75-00-3	Chloroethane	1.4	13		U	
67-66-3	Chloroform	0.70	13		U	
74-87-3	Chloromethane	0.66	13		U	
110-82-7	Cyclohexane	0.68	13		U	
124-48-1	Dibromochloromethane	0.43	13		U	
96-12-8	1,2-Dibromo-3-chloropropane	1.5	6.3		U	
106-93-4	1,2-Dibromoethane	0.54	13		U	
95-50-1	1,2-Dichlorobenzene	0.47	13		U	
541-73-1	1,3-Dichlorobenzene	1.1	13		U	
106-46-7	1,4-Dichlorobenzene	0.70	13		U	
75-71-8	Dichlorodifluoromethane	1.4	13		U	
75-34-3	1,1-Dichloroethane	0.68	13		U	
107-06-2	1,2-Dichloroethane	0.58	13		U	
75-35-4	1,1-Dichloroethene	1.5	13		U	
156-59-2	cis-1,2-Dichloroethene	1.5	13		U	
156-60-5	trans-1,2-Dichloroethene	1.4	13		U	
78-87-5	1,2-Dichloropropane	0.58	13		U	
10061-01-5	cis-1,3-Dichloropropene	0.63	13		U	
10061-02-6	trans-1,3-Dichloropropene	0.40	13		U	
100-41-4	Ethylbenzene	0.95	13		U	
591-78-6	2-Hexanone	2.9	13		U	
98-82-8	Isopropylbenzene	1.1	13		U	
79-20-9	Methyl acetate	2.0	13		U	
75-09-2	Methylene chloride	0.78	13	13u	~~3.2~~ ~~JB~~	B
108-87-2	Methyl cyclohexane	0.38	13		U	
1634-04-4	Methyl tert-butyl ether	0.40	13		U	
108-10-1	4-Methyl-2-pentanone	0.73	13		U	
100-42-5	Styrene	0.44	13		U	
79-34-5	1,1,2,2-Tetrachloroethane	0.54	13		U	
127-18-4	Tetrachloroethene	1.2	13		U	

MW
4/2/09

FORM 1
VOLATILE ORGANICS ANALYSIS DATA SHEET

CLIENT SAMPLE NO. 14

MR08-IS18
4-8-9-09A

Lab Name: EMPIRICAL LABS Contract: CH2MHILL

Lab Code: NA Case No.: NA SAS No.: NA SDG No.: LEJEUNE046

Matrix: (soil/water) SOIL Lab Sample ID: 0901069-14

Sample wt/vol: 4.3 (g/mL) G Lab File ID: 0106914A

Level: (low/med) LOW Date Sampled: 01/09/09 14:10

% Moisture: not dec. 7 Date Analyzed: 01/18/09 06:19

GC Column: RTX-VRX ID: 0.25 (mm) Dilution Factor: 1.0

Soil Extract Volume:_____(uL) Soil Aliquot Volume: _____(uL)

CONCENTRATION UNITS: (ug/L or ug/Kg) UG/KG

CAS NO.	COMPOUND	MDL	RL	CONC	Q
108-88-3	Toluene	1.1	13		U
120-82-1	1,2,4-Trichlorobenzene	0.23	13		U
71-55-6	1,1,1-Trichloroethane	1.1	13		U
79-00-5	1,1,2-Trichloroethane	0.44	13		U
79-01-6	Trichloroethene	1.1	13		U
76-13-1	Trichlorotrifluoroethane	0.70	13		U
75-69-4	Trichlorofluoromethane	1.2	13		U
75-01-4	Vinyl chloride	1.4	13		U
1330-20-7	Xylene(total)	0.88	13		U

lew
4/2/09

FORM 1
VOLATILE ORGANICS ANALYSIS DATA SHEET

CLIENT SAMPLE NO. 15

MR08-SS255-09A

Lab Name: EMPIRICAL LABS Contract: CH2MHILL

Lab Code: NA Case No.: NA SAS No.: NA SDG No.: LEJEUNE046

Matrix: (soil/water) SOIL Lab Sample ID: 0901069-15

Sample wt/vol: 2.6 (g/mL) G Lab File ID: 0106915A

Level: (low/med) LOW Date Sampled: 01/09/09 14:30

% Moisture: not dec. 7 Date Analyzed: 01/18/09 06:49

GC Column: RTX-VRX ID: 0.25 (mm) Dilution Factor: 1.0

Soil Extract Volume:_____(uL) Soil Aliquot Volume: _____(uL)

CONCENTRATION UNITS: (ug/L or ug/Kg) UG/KG

CAS NO.	COMPOUND	MDL	RL	CONC	Q
67-64-1	Acetone	4.1	20		U
71-43-2	Benzene	0.96	20	2.6	J
75-27-4	Bromodichloromethane	0.61	20		U
75-25-2	Bromoform	2.0	20		U
74-83-9	Bromomethane	1.5	20		U
78-93-3	2-Butanone	2.8	20		U
75-15-0	Carbon disulfide	2.6	20		U
56-23-5	Carbon tetrachloride	1.8	20		U
108-90-7	Chlorobenzene	0.69	20		U
75-00-3	Chloroethane	2.2	20		U
67-66-3	Chloroform	1.1	20		U
74-87-3	Chloromethane	1.0	20		U
110-82-7	Cyclohexane	1.1	20		U
124-48-1	Dibromochloromethane	0.69	20		U
96-12-8	1,2-Dibromo-3-chloropropane	2.4	10		U
106-93-4	1,2-Dibromoethane	0.87	20		U
95-50-1	1,2-Dichlorobenzene	0.75	20		U
541-73-1	1,3-Dichlorobenzene	1.7	20		U
106-46-7	1,4-Dichlorobenzene	1.1	20		U
75-71-8	Dichlorodifluoromethane	2.2	20		U
75-34-3	1,1-Dichloroethane	1.1	20		U
107-06-2	1,2-Dichloroethane	0.93	20		U
75-35-4	1,1-Dichloroethene	2.4	20		U
156-59-2	cis-1,2-Dichloroethene	2.4	20		U
156-60-5	trans-1,2-Dichloroethene	2.2	20		U
78-87-5	1,2-Dichloropropane	0.93	20		U
10061-01-5	cis-1,3-Dichloropropene	1.0	20		U
10061-02-6	trans-1,3-Dichloropropene	0.65	20		U
100-41-4	Ethylbenzene	1.5	20	6.0	J
591-78-6	2-Hexanone	4.7	20		U
98-82-8	Isopropylbenzene	1.8	20		U
79-20-9	Methyl acetate	3.2	20		U
75-09-2	Methylene chloride	1.2	20	204 ~~4.8~~	~~JB~~ B
108-87-2	Methyl cyclohexane	0.61	20	1.2	J
1634-04-4	Methyl tert-butyl ether	0.65	20		U
108-10-1	4-Methyl-2-pentanone	1.2	20		U
100-42-5	Styrene	0.71	20		U
79-34-5	1,1,2,2-Tetrachloroethane	0.87	20		U
127-18-4	Tetrachloroethene	2.0	20		U

FORM I VOA

lw
41269

FORM 1
VOLATILE ORGANICS ANALYSIS DATA SHEET

CLIENT SAMPLE NO. 15

MR08-SS255-09A

Lab Name: EMPIRICAL LABS Contract: CH2MHILL

Lab Code: NA Case No.: NA SAS No.: NA SDG No.: LEJEUNE046

Matrix: (soil/water) SOIL Lab Sample ID: 0901069-15

Sample wt/vol: 2.6 (g/mL) G Lab File ID: 0106915A

Level: (low/med) LOW Date Sampled: 01/09/09 14:30

% Moisture: not dec. 7 Date Analyzed: 01/18/09 06:49

GC Column: RTX-VRX ID: 0.25 (mm) Dilution Factor: 1.0

Soil Extract Volume:_____(uL) Soil Aliquot Volume: _____(uL)

CONCENTRATION UNITS: (ug/L or ug/Kg) UG/KG

CAS NO.	COMPOUND	MDL	RL	CONC	Q
108-88-3	Toluene	1.7	20	2011 ~~4.1~~	~~J~~ B1
120-82-1	1,2,4-Trichlorobenzene	0.36	20		U
71-55-6	1,1,1-Trichloroethane	1.8	20		U
79-00-5	1,1,2-Trichloroethane	0.71	20		U
79-01-6	Trichloroethene	1.7	20		U
76-13-1	Trichlorotrifluoroethane	1.1	20		U
75-69-4	Trichlorofluoromethane	1.9	20		U
75-01-4	Vinyl chloride	2.2	20		U
1330-20-7	Xylene(total)	1.4	20		U

MW 4/26/09

FORM 1
VOLATILE ORGANICS ANALYSIS DATA SHEET

CLIENT SAMPLE NO.

MR08-IS25
5-6-7-09A

16

Lab Name: EMPIRICAL LABS Contract: CH2MHILL

Lab Code: NA Case No.: NA SAS No.: NA SDG No.: LEJEUNE046

Matrix: (soil/water) SOIL Lab Sample ID: 0901069-16

Sample wt/vol: 4.8 (g/mL) G Lab File ID: 0106916A

Level: (low/med) LOW Date Sampled: 01/09/09 14:50

% Moisture: not dec. 13 Date Analyzed: 01/18/09 07:20

GC Column: RTX-VRX ID: 0.25 (mm) Dilution Factor: 1.0

Soil Extract Volume:_____(uL) Soil Aliquot Volume: _____(uL)

CONCENTRATION UNITS: (ug/L or ug/Kg) UG/KG

CAS NO.	COMPOUND	MDL	RL	CONC	Q
67-64-1	Acetone	2.4	12	12U	~~11 JB~~ B
71-43-2	Benzene	0.57	12		U
75-27-4	Bromodichloromethane	0.36	12		U
75-25-2	Bromoform	1.2	12		U
74-83-9	Bromomethane	0.87	12		U
78-93-3	2-Butanone	1.7	12		U
75-15-0	Carbon disulfide	1.6	12		U
56-23-5	Carbon tetrachloride	1.1	12		U
108-90-7	Chlorobenzene	0.41	12		U
75-00-3	Chloroethane	1.3	12		U
67-66-3	Chloroform	0.66	12		U
74-87-3	Chloromethane	0.63	12		U
110-82-7	Cyclohexane	0.65	12		U
124-48-1	Dibromochloromethane	0.41	12		U
96-12-8	1,2-Dibromo-3-chloropropane	1.4	6.0		U
106-93-4	1,2-Dibromoethane	0.52	12		U
95-50-1	1,2-Dichlorobenzene	0.45	12		U
541-73-1	1,3-Dichlorobenzene	1.0	12		U
106-46-7	1,4-Dichlorobenzene	0.66	12		U
75-71-8	Dichlorodifluoromethane	1.3	12		U
75-34-3	1,1-Dichloroethane	0.65	12		U
107-06-2	1,2-Dichloroethane	0.56	12		U
75-35-4	1,1-Dichloroethene	1.4	12		U
156-59-2	cis-1,2-Dichloroethene	1.4	12		U
156-60-5	trans-1,2-Dichloroethene	1.3	12		U
78-87-5	1,2-Dichloropropane	0.56	12		U
10061-01-5	cis-1,3-Dichloropropene	0.60	12		U
10061-02-6	trans-1,3-Dichloropropene	0.39	12		U
100-41-4	Ethylbenzene	0.91	12		U
591-78-6	2-Hexanone	2.8	12		U
98-82-8	Isopropylbenzene	1.1	12		U
79-20-9	Methyl acetate	1.9	12		U
75-09-2	Methylene chloride	0.75	12	12U	~~2.9 JB~~ B
108-87-2	Methyl cyclohexane	0.36	12		U
1634-04-4	Methyl tert-butyl ether	0.39	12		U
108-10-1	4-Methyl-2-pentanone	0.70	12		U
100-42-5	Styrene	0.42	12		U
79-34-5	1,1,2,2-Tetrachloroethane	0.52	12		U
127-18-4	Tetrachloroethene	1.2	12		U

LW
4/2/09

FORM 1
VOLATILE ORGANICS ANALYSIS DATA SHEET

CLIENT SAMPLE NO.

MR08-IS25
5-6-7-09A

16

Lab Name: EMPIRICAL LABS Contract: CH2MHILL

Lab Code: NA Case No.: NA SAS No.: NA SDG No.: LEJEUNE046

Matrix: (soil/water) SOIL Lab Sample ID: 0901069-16

Sample wt/vol: 4.8 (g/mL) G Lab File ID: 0106916A

Level: (low/med) LOW Date Sampled: 01/09/09 14:50

% Moisture: not dec. 13 Date Analyzed: 01/18/09 07:20

GC Column: RTX-VRX ID: 0.25 (mm) Dilution Factor: 1.0

Soil Extract Volume:_____(uL) Soil Aliquot Volume: _____(uL)

CONCENTRATION UNITS: (ug/L or ug/Kg) UG/KG

CAS NO.	COMPOUND	MDL	RL	CONC	Q
108-88-3	Toluene	1.0	12		U
120-82-1	1,2,4-Trichlorobenzene	0.22	12		U
71-55-6	1,1,1-Trichloroethane	1.1	12		U
79-00-5	1,1,2-Trichloroethane	0.42	12		U
79-01-6	Trichloroethene	1.0	12		U
76-13-1	Trichlorotrifluoroethane	0.66	12		U
75-69-4	Trichlorofluoromethane	1.1	12		U
75-01-4	Vinyl chloride	1.3	12		U
1330-20-7	Xylene(total)	0.85	12		U

fcw
4/2/09

FORM 1
VOLATILE ORGANICS ANALYSIS DATA SHEET

CLIENT SAMPLE NO.

17

MR08-SS276-09A

Lab Name: EMPIRICAL LABS Contract: CH2MHILL

Lab Code: NA Case No.: NA SAS No.: NA SDG No.: LEJEUNE046

Matrix: (soil/water) SOIL Lab Sample ID: 0901069-17

Sample wt/vol: 3.1 (g/mL) G Lab File ID: 0106917A

Level: (low/med) LOW Date Sampled: 01/09/09 15:00

% Moisture: not dec. 10 Date Analyzed: 01/18/09 07:51

GC Column: RTX-VRX ID: 0.25 (mm) Dilution Factor: 1.0

Soil Extract Volume:_____(uL) Soil Aliquot Volume: _____(uL)

CONCENTRATION UNITS: (ug/L or ug/Kg) UG/KG

CAS NO.	COMPOUND	MDL	RL	CONC	Q
67-64-1	Acetone	3.6	18	70	~~B~~
71-43-2	Benzene	0.84	18		U
75-27-4	Bromodichloromethane	0.54	18		U
75-25-2	Bromoform	1.8	18		U
74-83-9	Bromomethane	1.3	18		U
78-93-3	2-Butanone	2.5	18		U
75-15-0	Carbon disulfide	2.3	18		U
56-23-5	Carbon tetrachloride	1.6	18		U
108-90-7	Chlorobenzene	0.61	18		U
75-00-3	Chloroethane	2.0	18		U
67-66-3	Chloroform	0.98	18		U
74-87-3	Chloromethane	0.93	18		U
110-82-7	Cyclohexane	0.97	18		U
124-48-1	Dibromochloromethane	0.61	18		U
96-12-8	1,2-Dibromo-3-chloropropane	2.2	9.0		U
106-93-4	1,2-Dibromoethane	0.77	18		U
95-50-1	1,2-Dichlorobenzene	0.66	18		U
541-73-1	1,3-Dichlorobenzene	1.5	18		U
106-46-7	1,4-Dichlorobenzene	0.98	18		U
75-71-8	Dichlorodifluoromethane	2.0	18		U
75-34-3	1,1-Dichloroethane	0.97	18		U
107-06-2	1,2-Dichloroethane	0.82	18		U
75-35-4	1,1-Dichloroethene	2.2	18		U
156-59-2	cis-1,2-Dichloroethene	2.2	18		U
156-60-5	trans-1,2-Dichloroethene	2.0	18		U
78-87-5	1,2-Dichloropropane	0.82	18		U
10061-01-5	cis-1,3-Dichloropropene	0.90	18		U
10061-02-6	trans-1,3-Dichloropropene	0.57	18		U
100-41-4	Ethylbenzene	1.3	18	1.9	J
591-78-6	2-Hexanone	4.1	18		U
98-82-8	Isopropylbenzene	1.6	18		U
79-20-9	Methyl acetate	2.9	18		U
75-09-2	Methylene chloride	1.1	18	18u ~~3.8~~	~~JB~~ BL
108-87-2	Methyl cyclohexane	0.54	18		U
1634-04-4	Methyl tert-butyl ether	0.57	18		U
108-10-1	4-Methyl-2-pentanone	1.0	18		U
100-42-5	Styrene	0.63	18		U
79-34-5	1,1,2,2-Tetrachloroethane	0.77	18		U
127-18-4	Tetrachloroethene	1.7	18		U

RW 4/2/09

FORM 1
VOLATILE ORGANICS ANALYSIS DATA SHEET

CLIENT SAMPLE NO. 17

MR08-SS276-09A

Lab Name: EMPIRICAL LABS Contract: CH2MHILL

Lab Code: NA Case No.: NA SAS No.: NA SDG No.: LEJEUNE046

Matrix: (soil/water) SOIL Lab Sample ID: 0901069-17

Sample wt/vol: 3.1 (g/mL) G Lab File ID: 0106917A

Level: (low/med) LOW Date Sampled: 01/09/09 15:00

% Moisture: not dec. 10 Date Analyzed: 01/18/09 07:51

GC Column: RTX-VRX ID: 0.25 (mm) Dilution Factor: 1.0

Soil Extract Volume:_____(uL) Soil Aliquot Volume: _____(uL)

CONCENTRATION UNITS: (ug/L or ug/Kg) UG/KG

CAS NO.	COMPOUND	MDL	RL	CONC	Q
108-88-3	Toluene	1.5	18	18U ~~1.8~~	~~J~~ U
120-82-1	1,2,4-Trichlorobenzene	0.32	18		U
71-55-6	1,1,1-Trichloroethane	1.6	18		U
79-00-5	1,1,2-Trichloroethane	0.63	18		U
79-01-6	Trichloroethene	1.5	18		U
76-13-1	Trichlorotrifluoroethane	0.98	18		U
75-69-4	Trichlorofluoromethane	1.7	18		U
75-01-4	Vinyl chloride	2.0	18		U
1330-20-7	Xylene(total)	1.2	18		U

B1

FORM I VOA

LW
4/2/09

FORM 1
VOLATILE ORGANICS ANALYSIS DATA SHEET

CLIENT SAMPLE NO. 18

MR08-IS27
6-6-7-09A

Lab Name: EMPIRICAL LABS Contract: CH2MHILL

Lab Code: NA Case No.: NA SAS No.: NA SDG No.: LEJEUNE046

Matrix: (soil/water) SOIL Lab Sample ID: 0901069-18

Sample wt/vol: 2.9 (g/mL) G Lab File ID: 0106918A

Level: (low/med) LOW Date Sampled: 01/09/09 15:20

% Moisture: not dec. 12 Date Analyzed: 01/18/09 08:22

GC Column: RTX-VRX ID: 0.25 (mm) Dilution Factor: 1.0

Soil Extract Volume:_____(uL) Soil Aliquot Volume: _____(uL)

CONCENTRATION UNITS: (ug/L or ug/Kg) UG/KG

CAS NO.	COMPOUND	MDL	RL	CONC	Q	
67-64-1	Acetone	4.0	20	20U	~~13 JB~~	B
71-43-2	Benzene	0.93	20		U	
75-27-4	Bromodichloromethane	0.59	20		U	
75-25-2	Bromoform	2.0	20		U	
74-83-9	Bromomethane	1.4	20		U	
78-93-3	2-Butanone	2.8	20		U	
75-15-0	Carbon disulfide	2.6	20		U	
56-23-5	Carbon tetrachloride	1.7	20		U	
108-90-7	Chlorobenzene	0.67	20		U	
75-00-3	Chloroethane	2.2	20		U	
67-66-3	Chloroform	1.1	20		U	
74-87-3	Chloromethane	1.0	20		U	
110-82-7	Cyclohexane	1.1	20		U	
124-48-1	Dibromochloromethane	0.67	20		U	
96-12-8	1,2-Dibromo-3-chloropropane	2.4	9.9		U	
106-93-4	1,2-Dibromoethane	0.85	20		U	
95-50-1	1,2-Dichlorobenzene	0.73	20		U	
541-73-1	1,3-Dichlorobenzene	1.6	20		U	
106-46-7	1,4-Dichlorobenzene	1.1	20		U	
75-71-8	Dichlorodifluoromethane	2.2	20		U	
75-34-3	1,1-Dichloroethane	1.1	20		U	
107-06-2	1,2-Dichloroethane	0.91	20		U	
75-35-4	1,1-Dichloroethene	2.4	20		U	
156-59-2	cis-1,2-Dichloroethene	2.4	20		U	
156-60-5	trans-1,2-Dichloroethene	2.2	20		U	
78-87-5	1,2-Dichloropropane	0.91	20		U	
10061-01-5	cis-1,3-Dichloropropene	0.99	20		U	
10061-02-6	trans-1,3-Dichloropropene	0.63	20		U	
100-41-4	Ethylbenzene	1.5	20		U	
591-78-6	2-Hexanone	4.5	20		U	
98-82-8	Isopropylbenzene	1.7	20		U	
79-20-9	Methyl acetate	3.2	20		U	
75-09-2	Methylene chloride	1.2	20	20U	~~5.2 JB~~	B
108-87-2	Methyl cyclohexane	0.59	20		U	
1634-04-4	Methyl tert-butyl ether	0.63	20		U	
108-10-1	4-Methyl-2-pentanone	1.1	20		U	
100-42-5	Styrene	0.69	20		U	
79-34-5	1,1,2,2-Tetrachloroethane	0.85	20		U	
127-18-4	Tetrachloroethene	1.9	20		U	

FORM I VOA

AU
4/2/09

FORM 1
VOLATILE ORGANICS ANALYSIS DATA SHEET

CLIENT SAMPLE NO. 18

MR08-IS27
6-6-7-09A

Lab Name: EMPIRICAL LABS Contract: CH2MHILL

Lab Code: NA Case No.: NA SAS No.: NA SDG No.: LEJEUNE046

Matrix: (soil/water) SOIL Lab Sample ID: 0901069-18

Sample wt/vol: 2.9 (g/mL) G Lab File ID: 0106918A

Level: (low/med) LOW Date Sampled: 01/09/09 15:20

% Moisture: not dec. 12 Date Analyzed: 01/18/09 08:22

GC Column: RTX-VRX ID: 0.25 (mm) Dilution Factor: 1.0

Soil Extract Volume:_____(uL) Soil Aliquot Volume: _____(uL)

CONCENTRATION UNITS: (ug/L or ug/Kg) UG/KG

CAS NO.	COMPOUND	MDL	RL	CONC	Q
108-88-3	Toluene	1.7	20		U
120-82-1	1,2,4-Trichlorobenzene	0.36	20		U
71-55-6	1,1,1-Trichloroethane	1.8	20		U
79-00-5	1,1,2-Trichloroethane	0.69	20		U
79-01-6	Trichloroethene	1.7	20		U
76-13-1	Trichlorotrifluoroethane	1.1	20		U
75-69-4	Trichlorofluoromethane	1.9	20		U
75-01-4	Vinyl chloride	2.2	20		U
1330-20-7	Xylene(total)	1.4	20		U

lw
4/2/09

FORM 1
VOLATILE ORGANICS ANALYSIS DATA SHEET

CLIENT SAMPLE NO. 19

MR08-SS254-09A

Lab Name: EMPIRICAL LABS Contract: CH2MHILL

Lab Code: NA Case No.: NA SAS No.: NA SDG No.: LEJEUNE046

Matrix: (soil/water) SOIL Lab Sample ID: 0901069-19

Sample wt/vol: 3.4 (g/mL) G Lab File ID: 0106919A

Level: (low/med) LOW Date Sampled: 01/09/09 15:35

% Moisture: not dec. 14 Date Analyzed: 01/18/09 08:53

GC Column: RTX-VRX ID: 0.25 (mm) Dilution Factor: 1.0

Soil Extract Volume:_____(uL) Soil Aliquot Volume: _____(uL)

CONCENTRATION UNITS: (ug/L or ug/Kg) UG/KG

CAS NO.	COMPOUND	MDL	RL	CONC	Q
67-64-1	Acetone	3.4	17	62	~~B~~
71-43-2	Benzene	0.81	17		U
75-27-4	Bromodichloromethane	0.51	17		U
75-25-2	Bromoform	1.7	17		U
74-83-9	Bromomethane	1.2	17		U
78-93-3	2-Butanone	2.4	17		U
75-15-0	Carbon disulfide	2.2	17		U
56-23-5	Carbon tetrachloride	1.5	17		U
108-90-7	Chlorobenzene	0.58	17		U
75-00-3	Chloroethane	1.9	17		U
67-66-3	Chloroform	0.94	17		U
74-87-3	Chloromethane	0.89	17		U
110-82-7	Cyclohexane	0.93	17		U
124-48-1	Dibromochloromethane	0.58	17		U
96-12-8	1,2-Dibromo-3-chloropropane	2.0	8.6		U
106-93-4	1,2-Dibromoethane	0.74	17		U
95-50-1	1,2-Dichlorobenzene	0.63	17		U
541-73-1	1,3-Dichlorobenzene	1.4	17		U
106-46-7	1,4-Dichlorobenzene	0.94	17		U
75-71-8	Dichlorodifluoromethane	1.9	17		U
75-34-3	1,1-Dichloroethane	0.93	17		U
107-06-2	1,2-Dichloroethane	0.79	17		U
75-35-4	1,1-Dichloroethene	2.0	17		U
156-59-2	cis-1,2-Dichloroethene	2.0	17		U
156-60-5	trans-1,2-Dichloroethene	1.9	17		U
78-87-5	1,2-Dichloropropane	0.79	17		U
10061-01-5	cis-1,3-Dichloropropene	0.86	17		U
10061-02-6	trans-1,3-Dichloropropene	0.55	17		U
100-41-4	Ethylbenzene	1.3	17		U
591-78-6	2-Hexanone	3.9	17		U
98-82-8	Isopropylbenzene	1.5	17		U
79-20-9	Methyl acetate	2.7	17		U
75-09-2	Methylene chloride	1.1	17	17u ~~3.8~~	~~JB~~
108-87-2	Methyl cyclohexane	0.51	17		U
1634-04-4	Methyl tert-butyl ether	0.55	17		U
108-10-1	4-Methyl-2-pentanone	1.00	17		U
100-42-5	Styrene	0.60	17		U
79-34-5	1,1,2,2-Tetrachloroethane	0.74	17		U
127-18-4	Tetrachloroethene	1.7	17		U

FORM I VOA

lw 4/2/09

FORM 1
VOLATILE ORGANICS ANALYSIS DATA SHEET

CLIENT SAMPLE NO. 19

MR08-SS254-09A

Lab Name: EMPIRICAL LABS Contract: CH2MHILL

Lab Code: NA Case No.: NA SAS No.: NA SDG No.: LEJEUNE046

Matrix: (soil/water) SOIL Lab Sample ID: 0901069-19

Sample wt/vol: 3.4 (g/mL) G Lab File ID: 0106919A

Level: (low/med) LOW Date Sampled: 01/09/09 15:35

% Moisture: not dec. 14 Date Analyzed: 01/18/09 08:53

GC Column: RTX-VRX ID: 0.25 (mm) Dilution Factor: 1.0

Soil Extract Volume:_____(uL) Soil Aliquot Volume: _____(uL)

CONCENTRATION UNITS: (ug/L or ug/Kg) UG/KG

CAS NO.	COMPOUND	MDL	RL	CONC	Q
108-88-3	Toluene	1.5	17		U
120-82-1	1,2,4-Trichlorobenzene	0.31	17		U
71-55-6	1,1,1-Trichloroethane	1.5	17		U
79-00-5	1,1,2-Trichloroethane	0.60	17		U
79-01-6	Trichloroethene	1.4	17		U
76-13-1	Trichlorotrifluoroethane	0.94	17		U
75-69-4	Trichlorofluoromethane	1.6	17		U
75-01-4	Vinyl chloride	1.9	17		U
1330-20-7	Xylene(total)	1.2	17		U

lw
4/2/09

FORM 1
VOLATILE ORGANICS ANALYSIS DATA SHEET

CLIENT SAMPLE NO. 20

MR08-IS25
4-3-4-09A

Lab Name: EMPIRICAL LABS Contract: CH2MHILL

Lab Code: NA Case No.: NA SAS No.: NA SDG No.: LEJEUNE046

Matrix: (soil/water) SOIL Lab Sample ID: 0901069-20

Sample wt/vol: 2.9 (g/mL) G Lab File ID: 0106920A

Level: (low/med) LOW Date Sampled: 01/09/09 15:50

% Moisture: not dec. 11 Date Analyzed: 01/18/09 11:58

GC Column: RTX-VRX ID: 0.25 (mm) Dilution Factor: 1.0

Soil Extract Volume:_____(uL) Soil Aliquot Volume: _____(uL)

CONCENTRATION UNITS: (ug/L or ug/Kg) UG/KG

CAS NO.	COMPOUND	MDL	RL	CONC	Q
67-64-1	Acetone	3.9	20	20u ~~17~~	~~JB~~ B
71-43-2	Benzene	0.92	20		U
75-27-4	Bromodichloromethane	0.59	20		U
75-25-2	Bromoform	2.0	20		U
74-83-9	Bromomethane	1.4	20		U
78-93-3	2-Butanone	2.7	20		~~U~~ UJ CCV
75-15-0	Carbon disulfide	2.6	20		U
56-23-5	Carbon tetrachloride	1.7	20		U
108-90-7	Chlorobenzene	0.67	20		U
75-00-3	Chloroethane	2.2	20		U
67-66-3	Chloroform	1.1	20		U
74-87-3	Chloromethane	1.0	20		U
110-82-7	Cyclohexane	1.1	20		U
124-48-1	Dibromochloromethane	0.67	20		U
96-12-8	1,2-Dibromo-3-chloropropane	2.4	9.8		U
106-93-4	1,2-Dibromoethane	0.84	20		U
95-50-1	1,2-Dichlorobenzene	0.73	20		U
541-73-1	1,3-Dichlorobenzene	1.6	20		U
106-46-7	1,4-Dichlorobenzene	1.1	20		U
75-71-8	Dichlorodifluoromethane	2.2	20		U
75-34-3	1,1-Dichloroethane	1.1	20		U
107-06-2	1,2-Dichloroethane	0.90	20		U
75-35-4	1,1-Dichloroethene	2.4	20		U
156-59-2	cis-1,2-Dichloroethene	2.4	20		U
156-60-5	trans-1,2-Dichloroethene	2.2	20		U
78-87-5	1,2-Dichloropropane	0.90	20		U
10061-01-5	cis-1,3-Dichloropropene	0.98	20		U
10061-02-6	trans-1,3-Dichloropropene	0.63	20		U
100-41-4	Ethylbenzene	1.5	20		U
591-78-6	2-Hexanone	4.5	20		U
98-82-8	Isopropylbenzene	1.7	20		U
79-20-9	Methyl acetate	3.1	20		U
75-09-2	Methylene chloride	1.2	20	20u ~~4.3~~	~~JB~~ B
108-87-2	Methyl cyclohexane	0.59	20		U
1634-04-4	Methyl tert-butyl ether	0.63	20		U
108-10-1	4-Methyl-2-pentanone	1.1	20		U
100-42-5	Styrene	0.69	20		U
79-34-5	1,1,2,2-Tetrachloroethane	0.84	20		U
127-18-4	Tetrachloroethene	1.9	20		U

FORM I VOA

LW
4/2/09

FORM 1
VOLATILE ORGANICS ANALYSIS DATA SHEET

CLIENT SAMPLE NO.

MR08-IS25
4-3-4-09A

20

Lab Name: EMPIRICAL LABS Contract: CH2MHILL

Lab Code: NA Case No.: NA SAS No.: NA SDG No.: LEJEUNE046

Matrix: (soil/water) SOIL Lab Sample ID: 0901069-20

Sample wt/vol: 2.9 (g/mL) G Lab File ID: 0106920A

Level: (low/med) LOW Date Sampled: 01/09/09 15:50

% Moisture: not dec. 11 Date Analyzed: 01/18/09 11:58

GC Column: RTX-VRX ID: 0.25 (mm) Dilution Factor: 1.0

Soil Extract Volume:_____(uL) Soil Aliquot Volume: _____(uL)

CONCENTRATION UNITS: (ug/L or ug/Kg) UG/KG

CAS NO.	COMPOUND	MDL	RL	CONC	Q
108-88-3	Toluene	1.7	20		U
120-82-1	1,2,4-Trichlorobenzene	0.35	20		U
71-55-6	1,1,1-Trichloroethane	1.8	20		U
79-00-5	1,1,2-Trichloroethane	0.69	20		U
79-01-6	Trichloroethene	1.7	20		U
76-13-1	Trichlorotrifluoroethane	1.1	20		U
75-69-4	Trichlorofluoromethane	1.9	20		U
75-01-4	Vinyl chloride	2.2	20		U
1330-20-7	Xylene(total)	1.4	20		U

lew
4/2/09

FORM 1
VOLATILE ORGANICS ANALYSIS DATA SHEET

CLIENT SAMPLE NO. 21

MR08-SS277-09A

Lab Name: EMPIRICAL LABS Contract: CH2MHILL

Lab Code: NA Case No.: NA SAS No.: NA SDG No.: LEJEUNE046

Matrix: (soil/water) SOIL Lab Sample ID: 0901069-21

Sample wt/vol: 3.0 (g/mL) G Lab File ID: 0106921A

Level: (low/med) LOW Date Sampled: 01/09/09 16:05

% Moisture: not dec. 8 Date Analyzed: 01/18/09 12:29

GC Column: RTX-VRX ID: 0.25 (mm) Dilution Factor: 1.0

Soil Extract Volume:_____(uL) Soil Aliquot Volume: _____(uL)

CONCENTRATION UNITS: (ug/L or ug/Kg) UG/KG

CAS NO.	COMPOUND	MDL	RL	CONC	Q
67-64-1	Acetone	3.6	18	120	~~B~~
71-43-2	Benzene	0.84	18		U
75-27-4	Bromodichloromethane	0.54	18		U
75-25-2	Bromoform	1.8	18		U
74-83-9	Bromomethane	1.3	18		U
78-93-3	2-Butanone	2.5	18	28	J CCH
75-15-0	Carbon disulfide	2.3	18		U
56-23-5	Carbon tetrachloride	1.6	18		U
108-90-7	Chlorobenzene	0.61	18		U
75-00-3	Chloroethane	2.0	18		U
67-66-3	Chloroform	0.98	18	1.6	J
74-87-3	Chloromethane	0.93	18		U
110-82-7	Cyclohexane	0.96	18		U
124-48-1	Dibromochloromethane	0.61	18		U
96-12-8	1,2-Dibromo-3-chloropropane	2.1	8.9		U
106-93-4	1,2-Dibromoethane	0.77	18		U
95-50-1	1,2-Dichlorobenzene	0.66	18		U
541-73-1	1,3-Dichlorobenzene	1.5	18		U
106-46-7	1,4-Dichlorobenzene	0.98	18		U
75-71-8	Dichlorodifluoromethane	2.0	18		U
75-34-3	1,1-Dichloroethane	0.96	18		U
107-06-2	1,2-Dichloroethane	0.82	18		U
75-35-4	1,1-Dichloroethene	2.1	18		U
156-59-2	cis-1,2-Dichloroethene	2.1	18		U
156-60-5	trans-1,2-Dichloroethene	2.0	18		U
78-87-5	1,2-Dichloropropane	0.82	18		U
10061-01-5	cis-1,3-Dichloropropene	0.89	18		U
10061-02-6	trans-1,3-Dichloropropene	0.57	18		U
100-41-4	Ethylbenzene	1.3	18		U
591-78-6	2-Hexanone	4.1	18		U
98-82-8	Isopropylbenzene	1.6	18		U
79-20-9	Methyl acetate	2.9	18		U
75-09-2	Methylene chloride	1.1	18	18U ~~2.8~~	~~JB~~ B
108-87-2	Methyl cyclohexane	0.54	18		U
1634-04-4	Methyl tert-butyl ether	0.57	18		U
108-10-1	4-Methyl-2-pentanone	1.0	18		U
100-42-5	Styrene	0.62	18		U
79-34-5	1,1,2,2-Tetrachloroethane	0.77	18		U
127-18-4	Tetrachloroethene	1.7	18		U

FORM I VOA

LW
4/7/09

FORM 1
VOLATILE ORGANICS ANALYSIS DATA SHEET

CLIENT SAMPLE NO. 21

MR08-SS277-09A

Lab Name: EMPIRICAL LABS Contract: CH2MHILL

Lab Code: NA Case No.: NA SAS No.: NA SDG No.: LEJEUNE046

Matrix: (soil/water) SOIL Lab Sample ID: 0901069-21

Sample wt/vol: 3.0 (g/mL) G Lab File ID: 0106921A

Level: (low/med) LOW Date Sampled: 01/09/09 16:05

% Moisture: not dec. 8 Date Analyzed: 01/18/09 12:29

GC Column: RTX-VRX ID: 0.25 (mm) Dilution Factor: 1.0

Soil Extract Volume:_____(uL) Soil Aliquot Volume: _____(uL)

CONCENTRATION UNITS: (ug/L or ug/Kg) UG/KG

CAS NO.	COMPOUND	MDL	RL	CONC	Q
108-88-3	Toluene	1.5	18		U
120-82-1	1,2,4-Trichlorobenzene	0.32	18		U
71-55-6	1,1,1-Trichloroethane	1.6	18		U
79-00-5	1,1,2-Trichloroethane	0.62	18		U
79-01-6	Trichloroethene	1.5	18		U
76-13-1	Trichlorotrifluoroethane	0.98	18		U
75-69-4	Trichlorofluoromethane	1.7	18		U
75-01-4	Vinyl chloride	2.0	18		U
1330-20-7	Xylene(total)	1.2	18		U

LW
4/2009

FORM 1
VOLATILE ORGANICS ANALYSIS DATA SHEET

CLIENT SAMPLE NO. 22

MR08-IS27
7-3-4-09A

Lab Name: EMPIRICAL LABS Contract: CH2MHILL

Lab Code: NA Case No.: NA SAS No.: NA SDG No.: LEJEUNE046

Matrix: (soil/water) SOIL Lab Sample ID: 0901069-22

Sample wt/vol: 3.0 (g/mL) G Lab File ID: 0106922A

Level: (low/med) LOW Date Sampled: 01/09/09 16:20

% Moisture: not dec. 10 Date Analyzed: 01/18/09 13:00

GC Column: RTX-VRX ID: 0.25 (mm) Dilution Factor: 1.0

Soil Extract Volume:_____(uL) Soil Aliquot Volume: _____(uL)

CONCENTRATION UNITS: (ug/L or ug/Kg) UG/KG

CAS NO.	COMPOUND	MDL	RL	CONC	Q
67-64-1	Acetone	3.7	19	19u 16 ~~JB~~	B
71-43-2	Benzene	0.88	19		U
75-27-4	Bromodichloromethane	0.56	19		U
75-25-2	Bromoform	1.9	19		U
74-83-9	Bromomethane	1.3	19		U
78-93-3	2-Butanone	2.6	19		U UJ CCH
75-15-0	Carbon disulfide	2.4	19		U
56-23-5	Carbon tetrachloride	1.6	19		U
108-90-7	Chlorobenzene	0.64	19		U
75-00-3	Chloroethane	2.0	19		U
67-66-3	Chloroform	1.0	19		U
74-87-3	Chloromethane	0.97	19		U
110-82-7	Cyclohexane	1.0	19		U
124-48-1	Dibromochloromethane	0.64	19		U
96-12-8	1,2-Dibromo-3-chloropropane	2.2	9.4		U
106-93-4	1,2-Dibromoethane	0.80	19		U
95-50-1	1,2-Dichlorobenzene	0.69	19		U
541-73-1	1,3-Dichlorobenzene	1.6	19		U
106-46-7	1,4-Dichlorobenzene	1.0	19		U
75-71-8	Dichlorodifluoromethane	2.0	19		U
75-34-3	1,1-Dichloroethane	1.0	19		U
107-06-2	1,2-Dichloroethane	0.86	19		U
75-35-4	1,1-Dichloroethene	2.2	19		U
156-59-2	cis-1,2-Dichloroethene	2.2	19		U
156-60-5	trans-1,2-Dichloroethene	2.0	19		U
78-87-5	1,2-Dichloropropane	0.86	19		U
10061-01-5	cis-1,3-Dichloropropene	0.94	19		U
10061-02-6	trans-1,3-Dichloropropene	0.60	19		U
100-41-4	Ethylbenzene	1.4	19		U
591-78-6	2-Hexanone	4.3	19		U
98-82-8	Isopropylbenzene	1.6	19		U
79-20-9	Methyl acetate	3.0	19		U
75-09-2	Methylene chloride	1.2	19	19u 3 ~~.8~~ ~~JB~~	B
108-87-2	Methyl cyclohexane	0.56	19		U
1634-04-4	Methyl tert-butyl ether	0.60	19		U
108-10-1	4-Methyl-2-pentanone	1.1	19		U
100-42-5	Styrene	0.66	19		U
79-34-5	1,1,2,2-Tetrachloroethane	0.80	19		U
127-18-4	Tetrachloroethene	1.8	19		U

FORM I VOA

LW
4/2/09

FORM 1
VOLATILE ORGANICS ANALYSIS DATA SHEET

CLIENT SAMPLE NO. 22

MR08-IS27
7-3-4-09A

Lab Name: EMPIRICAL LABS Contract: CH2MHILL

Lab Code: NA Case No.: NA SAS No.: NA SDG No.: LEJEUNE046

Matrix: (soil/water) SOIL Lab Sample ID: 0901069-22

Sample wt/vol: 3.0 (g/mL) G Lab File ID: 0106922A

Level: (low/med) LOW Date Sampled: 01/09/09 16:20

% Moisture: not dec. 10 Date Analyzed: 01/18/09 13:00

GC Column: RTX-VRX ID: 0.25 (mm) Dilution Factor: 1.0

Soil Extract Volume:_____(uL) Soil Aliquot Volume: _____(uL)

CONCENTRATION UNITS: (ug/L or ug/Kg) UG/KG

CAS NO.	COMPOUND	MDL	RL	CONC	Q
108-88-3	Toluene	1.6	19		U
120-82-1	1,2,4-Trichlorobenzene	0.34	19		U
71-55-6	1,1,1-Trichloroethane	1.7	19		U
79-00-5	1,1,2-Trichloroethane	0.66	19		U
79-01-6	Trichloroethene	1.6	19		U
76-13-1	Trichlorotrifluoroethane	1.0	19		U
75-69-4	Trichlorofluoromethane	1.8	19		U
75-01-4	Vinyl chloride	2.0	19		U
1330-20-7	Xylene(total)	1.3	19		U

fuw
4/2/09

FORM 1
VOLATILE ORGANICS ANALYSIS DATA SHEET

CLIENT SAMPLE NO. 23

MR08-SS278-09A

Lab Name: EMPIRICAL LABS Contract: CH2MHILL

Lab Code: NA Case No.: NA SAS No.: NA SDG No.: LEJEUNE046

Matrix: (soil/water) SOIL Lab Sample ID: 0901069-23

Sample wt/vol: 2.6 (g/mL) G Lab File ID: 0106923A

Level: (low/med) LOW Date Sampled: 01/09/09 16:35

% Moisture: not dec. 16 Date Analyzed: 01/18/09 13:31

GC Column: RTX-VRX ID: 0.25 (mm) Dilution Factor: 1.0

Soil Extract Volume:_____(uL) Soil Aliquot Volume: _____(uL)

CONCENTRATION UNITS: (ug/L or ug/Kg) UG/KG

CAS NO.	COMPOUND	MDL	RL	CONC	Q
67-64-1	Acetone	4.5	22	130	~~B~~ J SS
71-43-2	Benzene	1.0	22		U
75-27-4	Bromodichloromethane	0.67	22		U
75-25-2	Bromoform	2.2	22		U
74-83-9	Bromomethane	1.6	22		U
78-93-3	2-Butanone	3.1	22		~~B~~ UJ CH
75-15-0	Carbon disulfide	2.9	22		U
56-23-5	Carbon tetrachloride	2.0	22		U
108-90-7	Chlorobenzene	0.76	22		U
75-00-3	Chloroethane	2.5	22		U
67-66-3	Chloroform	1.2	22		U
74-87-3	Chloromethane	1.2	22		U
110-82-7	Cyclohexane	1.2	22		U
124-48-1	Dibromochloromethane	0.76	22		U
96-12-8	1,2-Dibromo-3-chloropropane	2.7	11		U
106-93-4	1,2-Dibromoethane	0.96	22		U
95-50-1	1,2-Dichlorobenzene	0.83	22		U
541-73-1	1,3-Dichlorobenzene	1.9	22		U
106-46-7	1,4-Dichlorobenzene	1.2	22		U
75-71-8	Dichlorodifluoromethane	2.5	22		U
75-34-3	1,1-Dichloroethane	1.2	22		U
107-06-2	1,2-Dichloroethane	1.0	22		U
75-35-4	1,1-Dichloroethene	2.7	22		U
156-59-2	cis-1,2-Dichloroethene	2.7	22		U
156-60-5	trans-1,2-Dichloroethene	2.5	22		U
78-87-5	1,2-Dichloropropane	1.0	22		U
10061-01-5	cis-1,3-Dichloropropene	1.1	22		U
10061-02-6	trans-1,3-Dichloropropene	0.72	22		U
100-41-4	Ethylbenzene	1.7	22		U
591-78-6	2-Hexanone	5.2	22		U
98-82-8	Isopropylbenzene	2.0	22		U
79-20-9	Methyl acetate	3.6	22		U
75-09-2	Methylene chloride	1.4	22	22u	3.~~6~~ ~~JB~~ B
108-87-2	Methyl cyclohexane	0.67	22		U
1634-04-4	Methyl tert-butyl ether	0.72	22		U
108-10-1	4-Methyl-2-pentanone	1.3	22		U
100-42-5	Styrene	0.78	22		U
79-34-5	1,1,2,2-Tetrachloroethane	0.96	22		U
127-18-4	Tetrachloroethene	2.2	22		U

FORM I VOA

MW 4/2/09

FORM 1
VOLATILE ORGANICS ANALYSIS DATA SHEET

CLIENT SAMPLE NO. 23

MR08-SS278-09A

Lab Name: EMPIRICAL LABS Contract: CH2MHILL

Lab Code: NA Case No.: NA SAS No.: NA SDG No.: LEJEUNE046

Matrix: (soil/water) SOIL Lab Sample ID: 0901069-23

Sample wt/vol: 2.6 (g/mL) G Lab File ID: 0106923A

Level: (low/med) LOW Date Sampled: 01/09/09 16:35

% Moisture: not dec. 16 Date Analyzed: 01/18/09 13:31

GC Column: RTX-VRX ID: 0.25 (mm) Dilution Factor: 1.0

Soil Extract Volume:_____(uL) Soil Aliquot Volume: _____(uL)

CONCENTRATION UNITS: (ug/L or ug/Kg) UG/KG

CAS NO.	COMPOUND	MDL	RL	CONC	Q
108-88-3	Toluene	1.9	22		U
120-82-1	1,2,4-Trichlorobenzene	0.40	22		U
71-55-6	1,1,1-Trichloroethane	2.0	22		U
79-00-5	1,1,2-Trichloroethane	0.78	22		U
79-01-6	Trichloroethene	1.9	22		U
76-13-1	Trichlorotrifluoroethane	1.2	22		U
75-69-4	Trichlorofluoromethane	2.1	22		U
75-01-4	Vinyl chloride	2.5	22		U
1330-20-7	Xylene(total)	1.6	22		U

DEW 4/12/09

FORM 1
VOLATILE ORGANICS ANALYSIS DATA SHEET

CLIENT SAMPLE NO.

MR08-IS27
8-6-7-09A

24

Lab Name: EMPIRICAL LABS Contract: CH2MHILL

Lab Code: NA Case No.: NA SAS No.: NA SDG No.: LEJEUNE046

Matrix: (soil/water) SOIL Lab Sample ID: 0901069-24

Sample wt/vol: 4.4 (g/mL) G Lab File ID: 0106924A

Level: (low/med) LOW Date Sampled: 01/09/09 16:55

% Moisture: not dec. 11 Date Analyzed: 01/18/09 14:02

GC Column: RTX-VRX ID: 0.25 (mm) Dilution Factor: 1.0

Soil Extract Volume:_____(uL) Soil Aliquot Volume: _____(uL)

CONCENTRATION UNITS: (ug/L or ug/Kg) UG/KG

CAS NO.	COMPOUND	MDL	RL	CONC	Q
67-64-1	Acetone	2.6	13	13u ~~12~~ ~~JB~~	Bl
71-43-2	Benzene	0.60	13		U
75-27-4	Bromodichloromethane	0.38	13		U
75-25-2	Bromoform	1.3	13		U
74-83-9	Bromomethane	0.92	13		U
78-93-3	2-Butanone	1.8	13		~~U~~ UJ CH
75-15-0	Carbon disulfide	1.7	13		U
56-23-5	Carbon tetrachloride	1.1	13		U
108-90-7	Chlorobenzene	0.44	13		U
75-00-3	Chloroethane	1.4	13		U
67-66-3	Chloroform	0.71	13		U
74-87-3	Chloromethane	0.67	13		U
110-82-7	Cyclohexane	0.69	13		U
124-48-1	Dibromochloromethane	0.44	13		U
96-12-8	1,2-Dibromo-3-chloropropane	1.5	6.4		U
106-93-4	1,2-Dibromoethane	0.55	13		U
95-50-1	1,2-Dichlorobenzene	0.48	13		U
541-73-1	1,3-Dichlorobenzene	1.1	13		U
106-46-7	1,4-Dichlorobenzene	0.71	13		U
75-71-8	Dichlorodifluoromethane	1.4	13		U
75-34-3	1,1-Dichloroethane	0.69	13		U
107-06-2	1,2-Dichloroethane	0.59	13		U
75-35-4	1,1-Dichloroethene	1.5	13		U
156-59-2	cis-1,2-Dichloroethene	1.5	13		U
156-60-5	trans-1,2-Dichloroethene	1.4	13		U
78-87-5	1,2-Dichloropropane	0.59	13		U
10061-01-5	cis-1,3-Dichloropropene	0.64	13		U
10061-02-6	trans-1,3-Dichloropropene	0.41	13		U
100-41-4	Ethylbenzene	0.96	13		U
591-78-6	2-Hexanone	3.0	13		U
98-82-8	Isopropylbenzene	1.1	13		U
79-20-9	Methyl acetate	2.0	13		U
75-09-2	Methylene chloride	0.80	13	13u ~~2.4~~ ~~JB~~	B
108-87-2	Methyl cyclohexane	0.38	13		U
1634-04-4	Methyl tert-butyl ether	0.41	13		U
108-10-1	4-Methyl-2-pentanone	0.74	13		U
100-42-5	Styrene	0.45	13		U
79-34-5	1,1,2,2-Tetrachloroethane	0.55	13		U
127-18-4	Tetrachloroethene	1.2	13		U

FORM I VOA

LW
4/2/09

FORM 1
VOLATILE ORGANICS ANALYSIS DATA SHEET

CLIENT SAMPLE NO. 24

MR08-IS27
8-6-7-09A

Lab Name: EMPIRICAL LABS Contract: CH2MHILL

Lab Code: NA Case No.: NA SAS No.: NA SDG No.: LEJEUNE046

Matrix: (soil/water) SOIL Lab Sample ID: 0901069-24

Sample wt/vol: 4.4 (g/mL) G Lab File ID: 0106924A

Level: (low/med) LOW Date Sampled: 01/09/09 16:55

% Moisture: not dec. 11 Date Analyzed: 01/18/09 14:02

GC Column: RTX-VRX ID: 0.25 (mm) Dilution Factor: 1.0

Soil Extract Volume:_____(uL) Soil Aliquot Volume: _____(uL)

CONCENTRATION UNITS: (ug/L or ug/Kg) UG/KG

CAS NO.	COMPOUND	MDL	RL	CONC	Q
108-88-3	Toluene	1.1	13		U
120-82-1	1,2,4-Trichlorobenzene	0.23	13		U
71-55-6	1,1,1-Trichloroethane	1.2	13		U
79-00-5	1,1,2-Trichloroethane	0.45	13		U
79-01-6	Trichloroethene	1.1	13		U
76-13-1	Trichlorotrifluoroethane	0.71	13		U
75-69-4	Trichlorofluoromethane	1.2	13		U
75-01-4	Vinyl chloride	1.4	13		U
1330-20-7	Xylene(total)	0.90	13		U

MW
4/2/09

FORM 1
VOLATILE ORGANICS ANALYSIS DATA SHEET

CLIENT SAMPLE NO. 25

MR08-EB01
010909-SS

Lab Name: EMPIRICAL LABS Contract: CH2MHILL

Lab Code: NA Case No.: NA SAS No.: NA SDG No.: LEJEUNE046

Matrix: (soil/water) WATER Lab Sample ID: 0901069-25

Sample wt/vol: 5.000 (g/mL) ML Lab File ID: 0106925

Level: (low/med) LOW Date Sampled: 01/09/09 10:00

% Moisture: not dec. _____ Date Analyzed: 01/15/09 18:51

GC Column: RTX-VRX ID: 0.25 (mm) Dilution Factor: 1.0

Soil Extract Volume:_____(uL) Soil Aliquot Volume: _____(uL)

CONCENTRATION UNITS: (ug/L or ug/Kg) UG/L

CAS NO.	COMPOUND	MDL	RL	CONC	Q
67-64-1	Acetone	0.84	2.5		U
71-43-2	Benzene	0.11	1.0		U
75-27-4	Bromodichloromethane	0.10	1.0		U
75-25-2	Bromoform	0.10	1.0		U
74-83-9	Bromomethane	0.32	1.0		~~U~~ UJ cu
78-93-3	2-Butanone	1.0	3.0		U
75-15-0	Carbon disulfide	0.13	1.0		U
56-23-5	Carbon tetrachloride	0.15	1.0		U
108-90-7	Chlorobenzene	0.10	1.0		U
75-00-3	Chloroethane	0.18	1.0		U
67-66-3	Chloroform	0.11	1.0		U
74-87-3	Chloromethane	0.29	1.0		U
110-82-7	Cyclohexane	0.20	1.0		U
124-48-1	Dibromochloromethane	0.10	1.0		U
96-12-8	1,2-Dibromo-3-chloropropane	0.11	1.0		U
106-93-4	1,2-Dibromoethane	0.10	1.0		U
95-50-1	1,2-Dichlorobenzene	0.10	1.0		U
541-73-1	1,3-Dichlorobenzene	0.13	1.0		U
106-46-7	1,4-Dichlorobenzene	0.10	1.0		U
75-71-8	Dichlorodifluoromethane	0.22	1.0		~~U~~ UJ cu
75-34-3	1,1-Dichloroethane	0.12	1.0		U
107-06-2	1,2-Dichloroethane	0.10	1.0		U
75-35-4	1,1-Dichloroethene	0.15	1.0		U
156-59-2	cis-1,2-Dichloroethene	0.13	1.0		U
156-60-5	trans-1,2-Dichloroethene	0.13	1.0		U
78-87-5	1,2-Dichloropropane	0.10	1.0		U
10061-01-5	cis-1,3-Dichloropropene	0.11	1.0		U
10061-02-6	trans-1,3-Dichloropropene	0.10	1.0		U
100-41-4	Ethylbenzene	0.13	1.0		U
591-78-6	2-Hexanone	0.30	1.0		U
98-82-8	Isopropylbenzene	0.15	1.0		U
79-20-9	Methyl acetate	0.30	1.0		U
75-09-2	Methylene chloride	0.14	1.0	1.0 u ~~0.96 JB~~	B
108-87-2	Methyl cyclohexane	0.17	1.0		U
1634-04-4	Methyl tert-butyl ether	0.10	1.0		U
108-10-1	4-Methyl-2-pentanone	0.29	1.0		U
100-42-5	Styrene	0.10	1.0		U
79-34-5	1,1,2,2-Tetrachloroethane	0.10	1.0		U
127-18-4	Tetrachloroethene	0.15	1.0		U

MW
4/2/09

FORM 1
VOLATILE ORGANICS ANALYSIS DATA SHEET

CLIENT SAMPLE NO.

MR08-EB01
010909-SS

Lab Name: EMPIRICAL LABS Contract: CH2MHILL

Lab Code: NA Case No.: NA SAS No.: NA SDG No.: LEJEUNE046

Matrix: (soil/water) WATER Lab Sample ID: 0901069-25

Sample wt/vol: 5.000 (g/mL) ML Lab File ID: 0106925

Level: (low/med) LOW Date Sampled: 01/09/09 10:00

% Moisture: not dec. _____ Date Analyzed: 01/15/09 18:51

GC Column: RTX-VRX ID: 0.25 (mm) Dilution Factor: 1.0

Soil Extract Volume:_____(uL) Soil Aliquot Volume: _____(uL)

CONCENTRATION UNITS: (ug/L or ug/Kg) UG/L

CAS NO.	COMPOUND	MDL	RL	CONC	Q
108-88-3	Toluene	0.10	1.0	23	
120-82-1	1,2,4-Trichlorobenzene	0.10	1.0		U
71-55-6	1,1,1-Trichloroethane	0.17	1.0		U
79-00-5	1,1,2-Trichloroethane	0.10	1.0		U
79-01-6	Trichloroethene	0.13	1.0		U
76-13-1	Trichlorotrifluoroethane	0.18	1.0		U
75-69-4	Trichlorofluoromethane	0.17	1.0		U
75-01-4	Vinyl chloride	0.18	1.0		U
1330-20-7	Xylene(total)	0.22	1.0		U

fw 4/2/09

FORM 1
VOLATILE ORGANICS ANALYSIS DATA SHEET

CLIENT SAMPLE NO.

MR08-EB01
010909-IS

26

Lab Name: EMPIRICAL LABS Contract: CH2MHILL

Lab Code: NA Case No.: NA SAS No.: NA SDG No.: LEJEUNE046

Matrix: (soil/water) WATER Lab Sample ID: 0901069-26

Sample wt/vol: 5.000 (g/mL) ML Lab File ID: 0106926

Level: (low/med) LOW Date Sampled: 01/09/09 10:20

% Moisture: not dec. _____ Date Analyzed: 01/15/09 19:21

GC Column: RTX-VRX ID: 0.25 (mm) Dilution Factor: 1.0

Soil Extract Volume:_____(uL) Soil Aliquot Volume: _____(uL)

CONCENTRATION UNITS: (ug/L or ug/Kg) UG/L

CAS NO.	COMPOUND	MDL	RL	CONC	Q
67-64-1	Acetone	0.84	2.5		U
71-43-2	Benzene	0.11	1.0		U
75-27-4	Bromodichloromethane	0.10	1.0		U
75-25-2	Bromoform	0.10	1.0		U
74-83-9	Bromomethane	0.32	1.0		~~U~~ UJ CCH
78-93-3	2-Butanone	1.0	3.0		U
75-15-0	Carbon disulfide	0.13	1.0		U
56-23-5	Carbon tetrachloride	0.15	1.0		U
108-90-7	Chlorobenzene	0.10	1.0		U
75-00-3	Chloroethane	0.18	1.0		U
67-66-3	Chloroform	0.11	1.0		U
74-87-3	Chloromethane	0.29	1.0		U
110-82-7	Cyclohexane	0.20	1.0		U
124-48-1	Dibromochloromethane	0.10	1.0		U
96-12-8	1,2-Dibromo-3-chloropropane	0.11	1.0		U
106-93-4	1,2-Dibromoethane	0.10	1.0		U
95-50-1	1,2-Dichlorobenzene	0.10	1.0		U
541-73-1	1,3-Dichlorobenzene	0.13	1.0		U
106-46-7	1,4-Dichlorobenzene	0.10	1.0		U
75-71-8	Dichlorodifluoromethane	0.22	1.0		~~U~~ UJ CCH
75-34-3	1,1-Dichloroethane	0.12	1.0		U
107-06-2	1,2-Dichloroethane	0.10	1.0		U
75-35-4	1,1-Dichloroethene	0.15	1.0		U
156-59-2	cis-1,2-Dichloroethene	0.13	1.0		U
156-60-5	trans-1,2-Dichloroethene	0.13	1.0		U
78-87-5	1,2-Dichloropropane	0.10	1.0		U
10061-01-5	cis-1,3-Dichloropropene	0.11	1.0		U
10061-02-6	trans-1,3-Dichloropropene	0.10	1.0		U
100-41-4	Ethylbenzene	0.13	1.0		U
591-78-6	2-Hexanone	0.30	1.0		U
98-82-8	Isopropylbenzene	0.15	1.0		U
79-20-9	Methyl acetate	0.30	1.0		U
75-09-2	Methylene chloride	0.14	1.0	1.0	~~B~~ U
108-87-2	Methyl cyclohexane	0.17	1.0		U
1634-04-4	Methyl tert-butyl ether	0.10	1.0		U
108-10-1	4-Methyl-2-pentanone	0.29	1.0		U
100-42-5	Styrene	0.10	1.0		U
79-34-5	1,1,2,2-Tetrachloroethane	0.10	1.0		U
127-18-4	Tetrachloroethene	0.15	1.0		U

FORM I VOA

lw
4/12/09

FORM 1
VOLATILE ORGANICS ANALYSIS DATA SHEET

CLIENT SAMPLE NO.

MR08-EB01
010909-IS

26

Lab Name: EMPIRICAL LABS Contract: CH2MHILL

Lab Code: NA Case No.: NA SAS No.: NA SDG No.: LEJEUNE046

Matrix: (soil/water) WATER Lab Sample ID: 0901069-26

Sample wt/vol: 5.000 (g/mL) ML Lab File ID: 0106926

Level: (low/med) LOW Date Sampled: 01/09/09 10:20

% Moisture: not dec. _____ Date Analyzed: 01/15/09 19:21

GC Column: RTX-VRX ID: 0.25 (mm) Dilution Factor: 1.0

Soil Extract Volume:_____(uL) Soil Aliquot Volume: _____(uL)

CONCENTRATION UNITS: (ug/L or ug/Kg) UG/L

CAS NO.	COMPOUND	MDL	RL	CONC	Q
108-88-3	Toluene	0.10	1.0	23	
120-82-1	1,2,4-Trichlorobenzene	0.10	1.0		U
71-55-6	1,1,1-Trichloroethane	0.17	1.0		U
79-00-5	1,1,2-Trichloroethane	0.10	1.0		U
79-01-6	Trichloroethene	0.13	1.0		U
76-13-1	Trichlorotrifluoroethane	0.18	1.0		U
75-69-4	Trichlorofluoromethane	0.17	1.0		U
75-01-4	Vinyl chloride	0.18	1.0		U
1330-20-7	Xylene(total)	0.22	1.0		U

lw 4/2/09

FORM 1
VOLATILE ORGANICS ANALYSIS DATA SHEET

CLIENT SAMPLE NO. 27

MR08-TB01010909

Lab Name: EMPIRICAL LABS Contract: CH2MHILL

Lab Code: NA Case No.: NA SAS No.: NA SDG No.: LEJEUNE046

Matrix: (soil/water) WATER Lab Sample ID: 0901069-27

Sample wt/vol: 5.000 (g/mL) ML Lab File ID: 0106927

Level: (low/med) LOW Date Sampled: 01/09/09 10:40

% Moisture: not dec. _____ Date Analyzed: 01/15/09 18:21

GC Column: RTX-VRX ID: 0.25 (mm) Dilution Factor: 1.0

Soil Extract Volume:_____(uL) Soil Aliquot Volume: _____(uL)

CONCENTRATION UNITS: (ug/L or ug/Kg) UG/L

CAS NO.	COMPOUND	MDL	RL	CONC	Q
67-64-1	Acetone	0.84	2.5		U
71-43-2	Benzene	0.11	1.0		U
75-27-4	Bromodichloromethane	0.10	1.0		U
75-25-2	Bromoform	0.10	1.0		U
74-83-9	Bromomethane	0.32	1.0		~~U~~ UJ CCH
78-93-3	2-Butanone	1.0	3.0		U
75-15-0	Carbon disulfide	0.13	1.0		U
56-23-5	Carbon tetrachloride	0.15	1.0		U
108-90-7	Chlorobenzene	0.10	1.0		U
75-00-3	Chloroethane	0.18	1.0		U
67-66-3	Chloroform	0.11	1.0		U
74-87-3	Chloromethane	0.29	1.0		U
110-82-7	Cyclohexane	0.20	1.0		U
124-48-1	Dibromochloromethane	0.10	1.0		U
96-12-8	1,2-Dibromo-3-chloropropane	0.11	1.0		U
106-93-4	1,2-Dibromoethane	0.10	1.0		U
95-50-1	1,2-Dichlorobenzene	0.10	1.0		U
541-73-1	1,3-Dichlorobenzene	0.13	1.0		U
106-46-7	1,4-Dichlorobenzene	0.10	1.0		U
75-71-8	Dichlorodifluoromethane	0.22	1.0		~~U~~ UJ CCH
75-34-3	1,1-Dichloroethane	0.12	1.0		U
107-06-2	1,2-Dichloroethane	0.10	1.0		U
75-35-4	1,1-Dichloroethene	0.15	1.0		U
156-59-2	cis-1,2-Dichloroethene	0.13	1.0		U
156-60-5	trans-1,2-Dichloroethene	0.13	1.0		U
78-87-5	1,2-Dichloropropane	0.10	1.0		U
10061-01-5	cis-1,3-Dichloropropene	0.11	1.0		U
10061-02-6	trans-1,3-Dichloropropene	0.10	1.0		U
100-41-4	Ethylbenzene	0.13	1.0		U
591-78-6	2-Hexanone	0.30	1.0		U
98-82-8	Isopropylbenzene	0.15	1.0		U
79-20-9	Methyl acetate	0.30	1.0		U
75-09-2	Methylene chloride	0.14	1.0		U
108-87-2	Methyl cyclohexane	0.17	1.0		U
1634-04-4	Methyl tert-butyl ether	0.10	1.0		U
108-10-1	4-Methyl-2-pentanone	0.29	1.0		U
100-42-5	Styrene	0.10	1.0		U
79-34-5	1,1,2,2-Tetrachloroethane	0.10	1.0		U
127-18-4	Tetrachloroethene	0.15	1.0		U

kw 4/2/09

FORM 1
VOLATILE ORGANICS ANALYSIS DATA SHEET

CLIENT SAMPLE NO. 27

MR08-TB01010909

Lab Name: EMPIRICAL LABS Contract: CH2MHILL

Lab Code: NA Case No.: NA SAS No.: NA SDG No.: LEJEUNE046

Matrix: (soil/water) WATER Lab Sample ID: 0901069-27

Sample wt/vol: 5.000 (g/mL) ML Lab File ID: 0106927

Level: (low/med) LOW Date Sampled: 01/09/09 10:40

% Moisture: not dec. _____ Date Analyzed: 01/15/09 18:21

GC Column: RTX-VRX ID: 0.25 (mm) Dilution Factor: 1.0

Soil Extract Volume:_____(uL) Soil Aliquot Volume: _____(uL)

CONCENTRATION UNITS: (ug/L or ug/Kg) UG/L

CAS NO.	COMPOUND	MDL	RL	CONC	Q
108-88-3	Toluene	0.10	1.0		U
120-82-1	1,2,4-Trichlorobenzene	0.10	1.0		U
71-55-6	1,1,1-Trichloroethane	0.17	1.0		U
79-00-5	1,1,2-Trichloroethane	0.10	1.0		U
79-01-6	Trichloroethene	0.13	1.0		U
76-13-1	Trichlorotrifluoroethane	0.18	1.0		U
75-69-4	Trichlorofluoromethane	0.17	1.0		U
75-01-4	Vinyl chloride	0.18	1.0		U
1330-20-7	Xylene(total)	0.22	1.0		U

fw 4/2/09

ENVIRONMENTAL
Data Services, Inc.

VOLATILE ORGANIC COMPOUNDS

USEPA Region IV - Level IV Review

Site: MCB Camp Lejeune, TO-09 SDG #: LEJEUNE047

Client: CH2M HILL, Inc., Virginia Beach, Virginia Date: April 3, 2009

Laboratory: Empirical Laboratories, Nashville, Tennessee Reviewer: Nancy Weaver

EDS ID	Client Sample ID	Laboratory Sample ID	Matrix
1	MR08-SS170-09A	0901070-01	Soil
2	MR08-IS170-6-7-09A	0901070-02	Soil
3*	MR08-SS169-09A	0901070-03	Soil
4	MR08-SS169D-09A	0901070-04	Soil
5	MR08-IS169-7-8-09A	0901070-05	Soil
6	MR08-IS169D-7-8-09A	0901070-06	Soil
7	MR08-SS193-09A	0901070-07	Soil
8	MR08-IS193-6-7-09A	0901070-08	Soil
9	MR08-SS194-09A	0901070-09	Soil
10	MR08-IS194-8-9-09A	0901070-10	Soil
11	MR08-SS217-09A	0901070-11	Soil
12	MR08-IS217-8-9-09A	0901070-12	Soil
13	MR08-SS218-09A	0901070-13	Soil
14	MR08-IS218-7-8-09A	0901070-14	Soil
15	MR08-SS241-09A	0901070-15	Soil
16	MR08-IS241-8-9-09A	0901070-16	Soil
17	MR08-SS242-09A	0901070-17	Soil
18	MR08-IS242-6-7-09A	0901070-18	Soil
19	MR08-SS265-09A	0901070-19	Soil
20	MR08-IS265-3-4-09A	0901070-20	Soil
21	MR08-SS266-09A	0901070-21	Soil
22	MR08-IS266-5-6-09A	0901070-22	Soil
23	MR08-SS289-09A	0901070-23	Soil
23RE	MR08-SS289-09ARE	0901070-23RE	Soil
24	MR08-SS289D-09A	0901070-24	Soil
25	MR08-IS289-2-3-09A	0901070-25	Soil
26	MR08-IS289D-2-3-09A	0901070-26	Soil
27	MR08-SS290-09A	0901070-27	Soil
28	MR08-IS290-4-5-09A	0901070-28	Soil
29	MR08-SS313-09A	0901070-29	Soil
30	MR08-IS313-5-6-09A	0901070-30	Soil
31	MR08-EB01011109-SS	0901070-31	Water

* This sample was cancelled on request of the client.

The USEPA "Contract Laboratory Program National Functional Guidelines for Organic Data Review," October 1999, and professional judgement were used in evaluating the data in this summary report.

Holding Times - All samples were analyzed within 14 days for preserved water and soil samples.

GC/MS Tuning - All of the BFB tunes in the initial and continuing calibrations met the percent relative abundance criteria.

Initial Calibration - The initial calibrations exhibited acceptable %RSD and mean RRF values.

Continuing Calibration - The continuing calibrations exhibited acceptable %D and RRF values except the following.

CCAL Date	Compound	%D/RRF	Qualifier	Affected Samples
1/18/09	2-Butanone	330.4%	J/UJ	1, 2, 4-15
1/22/09	2-Butanone	32.3%	None	Qualified due to ISL

Surrogates - All samples exhibited acceptable surrogate recoveries except the following.

Sample ID	Surrogate	%R	Qualifier
12	S1-Dibromofluoromethane	127%	None - All ND
13	S1-Dibromofluoromethane	130%	None - All ND
14	S1-Dibromofluoromethane	130%	None - All ND
15	S1-Dibromofluoromethane	130%	None - All ND
16	S1-Dibromofluoromethane	128%	None - All ND
18	S1-Dibromofluoromethane	126%	None - All ND
20	S1-Dibromofluoromethane	132%	None - All ND
21	S1-Dibromofluoromethane	130%	None - All ND
22	S1-Dibromofluoromethane	130%	None - All ND
23	S1-Dibromofluoromethane	126%	None - Already qualified
29	S1-Dibromofluoromethane	128%	None - All ND

MS/MSD - A MS/MSD sample was not analyzed from this data package.

Laboratory Control Sample - The LCS samples exhibited acceptable %R values.

Internal Standard (IS) Area Performance - All internal standards met response and retention time (RT) criteria except the following.

Sample ID	Internal Standard	Area Count	Qualifier
23	IS1-Fluorobenzene	Low	J/UJ
	IS2-Chlorobenzene-d5	Low	J/UJ
	IS3-1, 4-Dichlorobenzene-d4	Low	J/UJ
23RE	IS1-Fluorobenzene	Severely Low	J/R
	IS2-Chlorobenzene-d5	Severely Low	J/R
	IS3-1, 4-Dichlorobenzene-d4	Severely Low	J/R

Method Blank - The method blanks exhibited the following contamination.

Blank ID	Compound	Conc.	Action Level	Qualifier	Affected Samples
V3BLK0115E	Methylene chloride	0.52 ug/L	5.2 ug/L	U	31
V5BLK0117F	Acetone	5.8 ug/kg	58 ug/kg	U	1, 2, 5, 6, 8, 10-12, 14,
	Methylene chloride	1.6 ug/kg	16 ug/kg	U	1, 2, 4-15
	1, 2, 4-Trichlorobenzene	0.23 ug/kg	1.15 ug/kg	None	All ND
V5BLK0117G	Acetone	6.9 ug/kg	69 ug/kg	U	18-22, 26-30
	Methylene chloride	1.6 ug/kg	16 ug/kg	U	16-30
	1, 2, 4-Trichlorobenzene	0.19 ug/kg	0.95 ug/kg	None	All ND
V5BLK0121F	Methylene chloride	2.2 ug/kg	22 ug/kg	U	23RE

Trip, Field, Equipment Blank - Field QC results are summarized below.

Blank ID	Compound	Conc. ug/L	Action Level ug/kg	Qualifier	Affected Samples
MR08-EB01011109-SS	Toluene	16	80	None	See FB
MR08-FB01011009	Toluene	20	100	U	1, 4, 7, 9, 13, 16, 19

Field Duplicates - Field duplicate results are summarized below.

Compound	MR08-IS169-7-8-09A ug/kg	MR08-IS169D-7-8-09A ug/kg	RPD	Qualifier
None	ND	ND	-	-

Compound	MR08-SS289-09A ug/kg	MR08-SS289D-09A ug/kg	RPD	Qualifier
Acetone	130	140	7%	None
2-Butanone	11 U	22	NC	None
Methyl acetate	8.2	12 U	NC	None

Compound	MR08-IS289-2-3-09A ug/kg	MR08-IS289-2-3-09A ug/kg	RPD	Qualifier
None	16 U	1.2	NC	None

Tentatively Identified Compounds (TICs) - TICs were not reported.

Compound Quantitation - Several samples exhibited internal standard and/or surrogate deficiencies. These samples were reanalyzed at various dilutions. Refer to Form Is for which were used for reporting purposes.

FORM 1
VOLATILE ORGANICS ANALYSIS DATA SHEET

CLIENT SAMPLE NO.

MR08-SS170-09A

Lab Name: EMPIRICAL LABS Contract: CH2MHILL

Lab Code: NA Case No.: NA SAS No.: NA SDG No.: LEJEUNE047

Matrix: (soil/water) SOIL Lab Sample ID: 0901070-01

Sample wt/vol: 5.2 (g/mL) G Lab File ID: 0107001A

Level: (low/med) LOW Date Sampled: 01/11/09 08:20

% Moisture: not dec. 8 Date Analyzed: 01/18/09 14:33

GC Column: RTX-VRX ID: 0.25 (mm) Dilution Factor: 1.0

Soil Extract Volume:_____(uL) Soil Aliquot Volume: _____(uL)

CONCENTRATION UNITS: (ug/L or ug/Kg) UG/KG

CAS NO.	COMPOUND	MDL	RL	CONC	Q
67-64-1	Acetone	2.1	10	52	~~B~~ U
71-43-2	Benzene	0.49	10	0.58	J
75-27-4	Bromodichloromethane	0.31	10		U
75-25-2	Bromoform	1.0	10		U
74-83-9	Bromomethane	0.75	10		U
78-93-3	2-Butanone	1.4	10	10	J
75-15-0	Carbon disulfide	1.4	10	6.4	J
56-23-5	Carbon tetrachloride	0.92	10		U
108-90-7	Chlorobenzene	0.35	10		U
75-00-3	Chloroethane	1.1	10		U
67-66-3	Chloroform	0.57	10		U
74-87-3	Chloromethane	0.54	10		U
110-82-7	Cyclohexane	0.56	10		U
124-48-1	Dibromochloromethane	0.35	10		U
96-12-8	1,2-Dibromo-3-chloropropane	1.2	5.2		U
106-93-4	1,2-Dibromoethane	0.45	10		U
95-50-1	1,2-Dichlorobenzene	0.38	10		U
541-73-1	1,3-Dichlorobenzene	0.87	10		U
106-46-7	1,4-Dichlorobenzene	0.57	10		U
75-71-8	Dichlorodifluoromethane	1.1	10		U
75-34-3	1,1-Dichloroethane	0.56	10		U
107-06-2	1,2-Dichloroethane	0.48	10		U
75-35-4	1,1-Dichloroethene	1.2	10		U
156-59-2	cis-1,2-Dichloroethene	1.2	10		U
156-60-5	trans-1,2-Dichloroethene	1.1	10		U
78-87-5	1,2-Dichloropropane	0.48	10		U
10061-01-5	cis-1,3-Dichloropropene	0.52	10		U
10061-02-6	trans-1,3-Dichloropropene	0.33	10		U
100-41-4	Ethylbenzene	0.78	10		U
591-78-6	2-Hexanone	2.4	10		U
98-82-8	Isopropylbenzene	0.92	10		U
79-20-9	Methyl acetate	1.7	10		U
75-09-2	Methylene chloride	0.64	10	104 ~~1.6~~	~~JB~~ B
108-87-2	Methyl cyclohexane	0.31	10	0.43	J
1634-04-4	Methyl tert-butyl ether	0.33	10		U
108-10-1	4-Methyl-2-pentanone	0.60	10		U
100-42-5	Styrene	0.36	10		U
79-34-5	1,1,2,2-Tetrachloroethane	0.45	10		U
127-18-4	Tetrachloroethene	1.0	10		U

FORM I VOA

LW 4/3/09

FORM 1
VOLATILE ORGANICS ANALYSIS DATA SHEET

CLIENT SAMPLE NO.

MR08-SS170-09A

Lab Name: EMPIRICAL LABS Contract: CH2MHILL

Lab Code: NA Case No.: NA SAS No.: NA SDG No.: LEJEUNE047

Matrix: (soil/water) SOIL Lab Sample ID: 0901070-01

Sample wt/vol: 5.2 (g/mL) G Lab File ID: 0107001A

Level: (low/med) LOW Date Sampled: 01/11/09 08:20

% Moisture: not dec. 8 Date Analyzed: 01/18/09 14:33

GC Column: RTX-VRX ID: 0.25 (mm) Dilution Factor: 1.0

Soil Extract Volume:_____(uL) Soil Aliquot Volume: _____(uL)

CONCENTRATION UNITS: (ug/L or ug/Kg) UG/KG

CAS NO.	COMPOUND	MDL	RL	CONC	Q
108-88-3	Toluene	0.90	10	10U ~~0.93~~	~~J~~
120-82-1	1,2,4-Trichlorobenzene	0.19	10		U
71-55-6	1,1,1-Trichloroethane	0.94	10		U
79-00-5	1,1,2-Trichloroethane	0.36	10		U
79-01-6	Trichloroethene	0.88	10		U
76-13-1	Trichlorotrifluoroethane	0.57	10		U
75-69-4	Trichlorofluoromethane	0.99	10		U
75-01-4	Vinyl chloride	1.1	10		U
1330-20-7	Xylene(total)	0.73	10		U

B

FORM I VOA

lew 4/13/09

FORM 1
VOLATILE ORGANICS ANALYSIS DATA SHEET

CLIENT SAMPLE NO. 2

MR08-IS17
0-6-7-09A

Lab Name: EMPIRICAL LABS Contract: CH2MHILL

Lab Code: NA Case No.: NA SAS No.: NA SDG No.: LEJEUNE047

Matrix: (soil/water) SOIL Lab Sample ID: 0901070-02

Sample wt/vol: 5.0 (g/mL) G Lab File ID: 0107002A

Level: (low/med) LOW Date Sampled: 01/11/09 08:45

% Moisture: not dec. 11 Date Analyzed: 01/18/09 15:04

GC Column: RTX-VRX ID: 0.25 (mm) Dilution Factor: 1.0

Soil Extract Volume:_____(uL) Soil Aliquot Volume: _____(uL)

CONCENTRATION UNITS: (ug/L or ug/Kg) UG/KG

CAS NO.	COMPOUND	MDL	RL	CONC	Q
67-64-1-------	Acetone	2.2	11	28	~~B~~ U a
71-43-2-------	Benzene	0.53	11		U
75-27-4-------	Bromodichloromethane	0.34	11		U
75-25-2-------	Bromoform	1.1	11		U
74-83-9-------	Bromomethane	0.81	11		U
78-93-3-------	2-Butanone	1.6	11	5.4	~~J~~ J CU
75-15-0-------	Carbon disulfide	1.4	11		U
56-23-5-------	Carbon tetrachloride	0.99	11		U
108-90-7------	Chlorobenzene	0.38	11		U
75-00-3-------	Chloroethane	1.2	11		U
67-66-3-------	Chloroform	0.62	11		U
74-87-3-------	Chloromethane	0.58	11		U
110-82-7------	Cyclohexane	0.61	11		U
124-48-1------	Dibromochloromethane	0.38	11		U
96-12-8-------	1,2-Dibromo-3-chloropropane	1.3	5.6		U
106-93-4------	1,2-Dibromoethane	0.48	11		U
95-50-1-------	1,2-Dichlorobenzene	0.42	11		U
541-73-1------	1,3-Dichlorobenzene	0.94	11		U
106-46-7------	1,4-Dichlorobenzene	0.62	11		U
75-71-8-------	Dichlorodifluoromethane	1.2	11		U
75-34-3-------	1,1-Dichloroethane	0.61	11		U
107-06-2------	1,2-Dichloroethane	0.52	11		U
75-35-4-------	1,1-Dichloroethene	1.3	11		U
156-59-2------	cis-1,2-Dichloroethene	1.3	11		U
156-60-5------	trans-1,2-Dichloroethene	1.2	11		U
78-87-5-------	1,2-Dichloropropane	0.52	11		U
10061-01-5----	cis-1,3-Dichloropropene	0.56	11		U
10061-02-6----	trans-1,3-Dichloropropene	0.36	11		U
100-41-4------	Ethylbenzene	0.84	11		U
591-78-6------	2-Hexanone	2.6	11		U
98-82-8-------	Isopropylbenzene	0.99	11		U
79-20-9-------	Methyl acetate	1.8	11		U
75-09-2-------	Methylene chloride	0.70	11	11	U ~~2.8~~ ~~JB~~ B
108-87-2------	Methyl cyclohexane	0.34	11		U
1634-04-4-----	Methyl tert-butyl ether	0.36	11		U
108-10-1------	4-Methyl-2-pentanone	0.65	11		U
100-42-5------	Styrene	0.39	11		U
79-34-5-------	1,1,2,2-Tetrachloroethane	0.48	11		U
127-18-4------	Tetrachloroethene	1.1	11		U

DEW 9/3/09

FORM 1
VOLATILE ORGANICS ANALYSIS DATA SHEET

CLIENT SAMPLE NO.

MR08-IS17
0-6-7-09A

2

Lab Name: EMPIRICAL LABS Contract: CH2MHILL

Lab Code: NA Case No.: NA SAS No.: NA SDG No.: LEJEUNE047

Matrix: (soil/water) SOIL Lab Sample ID: 0901070-02

Sample wt/vol: 5.0 (g/mL) G Lab File ID: 0107002A

Level: (low/med) LOW Date Sampled: 01/11/09 08:45

% Moisture: not dec. 11 Date Analyzed: 01/18/09 15:04

GC Column: RTX-VRX ID: 0.25 (mm) Dilution Factor: 1.0

Soil Extract Volume:_____(uL) Soil Aliquot Volume: _____(uL)

CONCENTRATION UNITS: (ug/L or ug/Kg) UG/KG

CAS NO.	COMPOUND	MDL	RL	CONC	Q
108-88-3	Toluene	0.96	11		U
120-82-1	1,2,4-Trichlorobenzene	0.20	11		U
71-55-6	1,1,1-Trichloroethane	1.0	11		U
79-00-5	1,1,2-Trichloroethane	0.39	11		U
79-01-6	Trichloroethene	0.95	11		U
76-13-1	Trichlorotrifluoroethane	0.62	11		U
75-69-4	Trichlorofluoromethane	1.1	11		U
75-01-4	Vinyl chloride	1.2	11		U
1330-20-7	Xylene(total)	0.78	11		U

fcw
4/13/09

FORM 1
VOLATILE ORGANICS ANALYSIS DATA SHEET

CLIENT SAMPLE NO. 4

MR08-SS169D-09A

Lab Name: EMPIRICAL LABS Contract: CH2MHILL

Lab Code: NA Case No.: NA SAS No.: NA SDG No.: LEJEUNE047

Matrix: (soil/water) SOIL Lab Sample ID: 0901070-04

Sample wt/vol: 4.6 (g/mL) G Lab File ID: 0107004A

Level: (low/med) LOW Date Sampled: 01/11/09 09:10

% Moisture: not dec. 6 Date Analyzed: 01/18/09 15:35

GC Column: RTX-VRX ID: 0.25 (mm) Dilution Factor: 1.0

Soil Extract Volume:_____(uL) Soil Aliquot Volume: _____(uL)

CONCENTRATION UNITS: (ug/L or ug/Kg) UG/KG

CAS NO.	COMPOUND	MDL	RL	CONC	Q
67-64-1	Acetone	2.3	12		U
71-43-2	Benzene	0.54	12	1.6	J
75-27-4	Bromodichloromethane	0.35	12		U
75-25-2	Bromoform	1.2	12		U
74-83-9	Bromomethane	0.83	12		U
78-93-3	2-Butanone	1.6	12		~~U~~ U JCCI
75-15-0	Carbon disulfide	1.5	12		U
56-23-5	Carbon tetrachloride	1.0	12		U
108-90-7	Chlorobenzene	0.39	12		U
75-00-3	Chloroethane	1.3	12		U
67-66-3	Chloroform	0.64	12		U
74-87-3	Chloromethane	0.60	12		U
110-82-7	Cyclohexane	0.62	12	0.64	J
124-48-1	Dibromochloromethane	0.39	12		U
96-12-8	1,2-Dibromo-3-chloropropane	1.4	5.8		U
106-93-4	1,2-Dibromoethane	0.50	12		U
95-50-1	1,2-Dichlorobenzene	0.43	12		U
541-73-1	1,3-Dichlorobenzene	0.97	12		U
106-46-7	1,4-Dichlorobenzene	0.64	12		U
75-71-8	Dichlorodifluoromethane	1.3	12		U
75-34-3	1,1-Dichloroethane	0.62	12		U
107-06-2	1,2-Dichloroethane	0.53	12		U
75-35-4	1,1-Dichloroethene	1.4	12		U
156-59-2	cis-1,2-Dichloroethene	1.4	12		U
156-60-5	trans-1,2-Dichloroethene	1.3	12		U
78-87-5	1,2-Dichloropropane	0.53	12		U
10061-01-5	cis-1,3-Dichloropropene	0.58	12		U
10061-02-6	trans-1,3-Dichloropropene	0.37	12		U
100-41-4	Ethylbenzene	0.87	12	2.9	J
591-78-6	2-Hexanone	2.6	12		U
98-82-8	Isopropylbenzene	1.0	12		U
79-20-9	Methyl acetate	1.8	12		U
75-09-2	Methylene chloride	0.72	12	12U ~~1.8~~ ~~JB~~	B
108-87-2	Methyl cyclohexane	0.35	12	0.93	J
1634-04-4	Methyl tert-butyl ether	0.37	12		U
108-10-1	4-Methyl-2-pentanone	0.67	12		U
100-42-5	Styrene	0.40	12		U
79-34-5	1,1,2,2-Tetrachloroethane	0.50	12		U
127-18-4	Tetrachloroethene	1.1	12		U

FORM I VOA

LW
4/2/09

FORM 1
VOLATILE ORGANICS ANALYSIS DATA SHEET

CLIENT SAMPLE NO. 4

MR08-SS169D-09A

Lab Name: EMPIRICAL LABS Contract: CH2MHILL

Lab Code: NA Case No.: NA SAS No.: NA SDG No.: LEJEUNE047

Matrix: (soil/water) SOIL Lab Sample ID: 0901070-04

Sample wt/vol: 4.6 (g/mL) G Lab File ID: 0107004A

Level: (low/med) LOW Date Sampled: 01/11/09 09:10

% Moisture: not dec. 6 Date Analyzed: 01/18/09 15:35

GC Column: RTX-VRX ID: 0.25 (mm) Dilution Factor: 1.0

Soil Extract Volume:_____(uL) Soil Aliquot Volume: _____(uL)

CONCENTRATION UNITS: (ug/L or ug/Kg) UG/KG

CAS NO.	COMPOUND	MDL	RL	CONC	Q
108-88-3	Toluene	0.99	12	12U ~~2.4~~ ~~J~~	B
120-82-1	1,2,4-Trichlorobenzene	0.21	12		U
71-55-6	1,1,1-Trichloroethane	1.0	12		U
79-00-5	1,1,2-Trichloroethane	0.40	12		U
79-01-6	Trichloroethene	0.98	12		U
76-13-1	Trichlorotrifluoroethane	0.64	12		U
75-69-4	Trichlorofluoromethane	1.1	12		U
75-01-4	Vinyl chloride	1.3	12		U
1330-20-7	Xylene(total)	0.81	12		U

lew
4/3/09

FORM 1
VOLATILE ORGANICS ANALYSIS DATA SHEET

CLIENT SAMPLE NO. 5

MR08-IS16
9-7-8-09A

Lab Name: EMPIRICAL LABS Contract: CH2MHILL

Lab Code: NA Case No.: NA SAS No.: NA SDG No.: LEJEUNE047

Matrix: (soil/water) SOIL Lab Sample ID: 0901070-05

Sample wt/vol: 5.3 (g/mL) G Lab File ID: 0107005A

Level: (low/med) LOW Date Sampled: 01/11/09 09:25

% Moisture: not dec. 16 Date Analyzed: 01/18/09 16:06

GC Column: RTX-VRX ID: 0.25 (mm) Dilution Factor: 1.0

Soil Extract Volume:_____(uL) Soil Aliquot Volume: _____(uL)

CONCENTRATION UNITS: (ug/L or ug/Kg) UG/KG

CAS NO.	COMPOUND	MDL	RL	CONC	Q
67-64-1	Acetone	2.2	11	11U ~~9.0~~	~~JB~~ BL
71-43-2	Benzene	0.53	11		U
75-27-4	Bromodichloromethane	0.34	11		U
75-25-2	Bromoform	1.1	11		U
74-83-9	Bromomethane	0.81	11		U
78-93-3	2-Butanone	1.6	11		~~U~~ UJ CC
75-15-0	Carbon disulfide	1.4	11		U
56-23-5	Carbon tetrachloride	0.98	11		U
108-90-7	Chlorobenzene	0.38	11		U
75-00-3	Chloroethane	1.2	11		U
67-66-3	Chloroform	0.62	11		U
74-87-3	Chloromethane	0.58	11		U
110-82-7	Cyclohexane	0.60	11		U
124-48-1	Dibromochloromethane	0.38	11		U
96-12-8	1,2-Dibromo-3-chloropropane	1.3	5.6		U
106-93-4	1,2-Dibromoethane	0.48	11		U
95-50-1	1,2-Dichlorobenzene	0.41	11		U
541-73-1	1,3-Dichlorobenzene	0.94	11		U
106-46-7	1,4-Dichlorobenzene	0.62	11		U
75-71-8	Dichlorodifluoromethane	1.2	11		U
75-34-3	1,1-Dichloroethane	0.60	11		U
107-06-2	1,2-Dichloroethane	0.52	11		U
75-35-4	1,1-Dichloroethene	1.3	11		U
156-59-2	cis-1,2-Dichloroethene	1.3	11		U
156-60-5	trans-1,2-Dichloroethene	1.2	11		U
78-87-5	1,2-Dichloropropane	0.52	11		U
10061-01-5	cis-1,3-Dichloropropene	0.56	11		U
10061-02-6	trans-1,3-Dichloropropene	0.36	11		U
100-41-4	Ethylbenzene	0.84	11		U
591-78-6	2-Hexanone	2.6	11		U
98-82-8	Isopropylbenzene	0.98	11		U
79-20-9	Methyl acetate	1.8	11		U
75-09-2	Methylene chloride	0.69	11	11U ~~2.0~~	~~JB~~ BL
108-87-2	Methyl cyclohexane	0.34	11		U
1634-04-4	Methyl tert-butyl ether	0.36	11		U
108-10-1	4-Methyl-2-pentanone	0.65	11		U
100-42-5	Styrene	0.39	11		U
79-34-5	1,1,2,2-Tetrachloroethane	0.48	11		U
127-18-4	Tetrachloroethene	1.1	11		U

JEW
4/13/09

FORM 1
VOLATILE ORGANICS ANALYSIS DATA SHEET

CLIENT SAMPLE NO. 5

MR08-IS16
9-7-8-09A

Lab Name: EMPIRICAL LABS Contract: CH2MHILL

Lab Code: NA Case No.: NA SAS No.: NA SDG No.: LEJEUNE047

Matrix: (soil/water) SOIL Lab Sample ID: 0901070-05

Sample wt/vol: 5.3 (g/mL) G Lab File ID: 0107005A

Level: (low/med) LOW Date Sampled: 01/11/09 09:25

% Moisture: not dec. 16 Date Analyzed: 01/18/09 16:06

GC Column: RTX-VRX ID: 0.25 (mm) Dilution Factor: 1.0

Soil Extract Volume:_____(uL) Soil Aliquot Volume: _____(uL)

CONCENTRATION UNITS: (ug/L or ug/Kg) UG/KG

CAS NO.	COMPOUND	MDL	RL	CONC	Q
108-88-3	Toluene	0.96	11		U
120-82-1	1,2,4-Trichlorobenzene	0.20	11		U
71-55-6	1,1,1-Trichloroethane	1.0	11		U
79-00-5	1,1,2-Trichloroethane	0.39	11		U
79-01-6	Trichloroethene	0.95	11		U
76-13-1	Trichlorotrifluoroethane	0.62	11		U
75-69-4	Trichlorofluoromethane	1.1	11		U
75-01-4	Vinyl chloride	1.2	11		U
1330-20-7	Xylene(total)	0.78	11		U

MW
4/3/09

FORM 1
VOLATILE ORGANICS ANALYSIS DATA SHEET

CLIENT SAMPLE NO. 6

MR08-IS16
9D-7-8-09A

Lab Name: EMPIRICAL LABS Contract: CH2MHILL

Lab Code: NA Case No.: NA SAS No.: NA SDG No.: LEJEUNE047

Matrix: (soil/water) SOIL Lab Sample ID: 0901070-06

Sample wt/vol: 6.1 (g/mL) G Lab File ID: 0107006A

Level: (low/med) LOW Date Sampled: 01/11/09 09:35

% Moisture: not dec. 15 Date Analyzed: 01/18/09 16:37

GC Column: RTX-VRX ID: 0.25 (mm) Dilution Factor: 1.0

Soil Extract Volume:_____(uL) Soil Aliquot Volume: _____(uL)

CONCENTRATION UNITS: (ug/L or ug/Kg) UG/KG

CAS NO.	COMPOUND	MDL	RL	CONC	Q	
67-64-1	Acetone	1.9	9.6	9.6u ~~9.5~~	~~JB~~	BL
71-43-2	Benzene	0.45	9.6		U	
75-27-4	Bromodichloromethane	0.29	9.6		U	
75-25-2	Bromoform	0.96	9.6		U	
74-83-9	Bromomethane	0.69	9.6		U	
78-93-3	2-Butanone	1.3	9.6		U	UJ CC
75-15-0	Carbon disulfide	1.2	9.6		U	
56-23-5	Carbon tetrachloride	0.84	9.6		U	
108-90-7	Chlorobenzene	0.32	9.6		U	
75-00-3	Chloroethane	1.0	9.6		U	
67-66-3	Chloroform	0.53	9.6		U	
74-87-3	Chloromethane	0.50	9.6		U	
110-82-7	Cyclohexane	0.52	9.6		U	
124-48-1	Dibromochloromethane	0.32	9.6		U	
96-12-8	1,2-Dibromo-3-chloropropane	1.1	4.8		U	
106-93-4	1,2-Dibromoethane	0.41	9.6		U	
95-50-1	1,2-Dichlorobenzene	0.35	9.6		U	
541-73-1	1,3-Dichlorobenzene	0.80	9.6		U	
106-46-7	1,4-Dichlorobenzene	0.53	9.6		U	
75-71-8	Dichlorodifluoromethane	1.0	9.6		U	
75-34-3	1,1-Dichloroethane	0.52	9.6		U	
107-06-2	1,2-Dichloroethane	0.44	9.6		U	
75-35-4	1,1-Dichloroethene	1.1	9.6		U	
156-59-2	cis-1,2-Dichloroethene	1.1	9.6		U	
156-60-5	trans-1,2-Dichloroethene	1.0	9.6		U	
78-87-5	1,2-Dichloropropane	0.44	9.6		U	
10061-01-5	cis-1,3-Dichloropropene	0.48	9.6		U	
10061-02-6	trans-1,3-Dichloropropene	0.31	9.6		U	
100-41-4	Ethylbenzene	0.72	9.6		U	
591-78-6	2-Hexanone	2.2	9.6		U	
98-82-8	Isopropylbenzene	0.84	9.6		U	
79-20-9	Methyl acetate	1.5	9.6		U	
75-09-2	Methylene chloride	0.59	9.6	9.6u ~~1.6~~	~~JB~~	BL
108-87-2	Methyl cyclohexane	0.29	9.6		U	
1634-04-4	Methyl tert-butyl ether	0.31	9.6		U	
108-10-1	4-Methyl-2-pentanone	0.56	9.6		U	
100-42-5	Styrene	0.34	9.6		U	
79-34-5	1,1,2,2-Tetrachloroethane	0.41	9.6		U	
127-18-4	Tetrachloroethene	0.93	9.6		U	

MW 4/13/09

FORM 1
VOLATILE ORGANICS ANALYSIS DATA SHEET

CLIENT SAMPLE NO. 6

MR08-IS16
9D-7-8-09A

Lab Name: EMPIRICAL LABS Contract: CH2MHILL

Lab Code: NA Case No.: NA SAS No.: NA SDG No.: LEJEUNE047

Matrix: (soil/water) SOIL Lab Sample ID: 0901070-06

Sample wt/vol: 6.1 (g/mL) G Lab File ID: 0107006A

Level: (low/med) LOW Date Sampled: 01/11/09 09:35

% Moisture: not dec. 15 Date Analyzed: 01/18/09 16:37

GC Column: RTX-VRX ID: 0.25 (mm) Dilution Factor: 1.0

Soil Extract Volume:_____(uL) Soil Aliquot Volume: _____(uL)

CONCENTRATION UNITS: (ug/L or ug/Kg) UG/KG

CAS NO.	COMPOUND	MDL	RL	CONC	Q
108-88-3	Toluene	0.82	9.6		U
120-82-1	1,2,4-Trichlorobenzene	0.17	9.6		U
71-55-6	1,1,1-Trichloroethane	0.86	9.6		U
79-00-5	1,1,2-Trichloroethane	0.34	9.6		U
79-01-6	Trichloroethene	0.81	9.6		U
76-13-1	Trichlorotrifluoroethane	0.53	9.6		U
75-69-4	Trichlorofluoromethane	0.91	9.6		U
75-01-4	Vinyl chloride	1.0	9.6		U
1330-20-7	Xylene(total)	0.67	9.6		U

fee
4/13/09

FORM 1
VOLATILE ORGANICS ANALYSIS DATA SHEET

CLIENT SAMPLE NO. 7

MR08-SS193-09A

Lab Name: EMPIRICAL LABS Contract: CH2MHILL

Lab Code: NA Case No.: NA SAS No.: NA SDG No.: LEJEUNE047

Matrix: (soil/water) SOIL Lab Sample ID: 0901070-07

Sample wt/vol: 5.3 (g/mL) G Lab File ID: 0107007A

Level: (low/med) LOW Date Sampled: 01/11/09 09:50

% Moisture: not dec. 8 Date Analyzed: 01/18/09 17:08

GC Column: RTX-VRX ID: 0.25 (mm) Dilution Factor: 1.0

Soil Extract Volume:_____(uL) Soil Aliquot Volume: _____(uL)

CONCENTRATION UNITS: (ug/L or ug/Kg) UG/KG

CAS NO.	COMPOUND	MDL	RL	CONC	Q
67-64-1	Acetone	2.0	10	60	~~B~~
71-43-2	Benzene	0.48	10	0.64	J
75-27-4	Bromodichloromethane	0.30	10		U
75-25-2	Bromoform	1.0	10		U
74-83-9	Bromomethane	0.73	10		U
78-93-3	2-Butanone	1.4	10		~~U~~ UJ CG
75-15-0	Carbon disulfide	1.3	10		U
56-23-5	Carbon tetrachloride	0.90	10		U
108-90-7	Chlorobenzene	0.35	10		U
75-00-3	Chloroethane	1.1	10		U
67-66-3	Chloroform	0.56	10		U
74-87-3	Chloromethane	0.53	10		U
110-82-7	Cyclohexane	0.55	10		U
124-48-1	Dibromochloromethane	0.35	10		U
96-12-8	1,2-Dibromo-3-chloropropane	1.2	5.1		U
106-93-4	1,2-Dibromoethane	0.44	10		U
95-50-1	1,2-Dichlorobenzene	0.38	10		U
541-73-1	1,3-Dichlorobenzene	0.86	10		U
106-46-7	1,4-Dichlorobenzene	0.56	10		U
75-71-8	Dichlorodifluoromethane	1.1	10		U
75-34-3	1,1-Dichloroethane	0.55	10		U
107-06-2	1,2-Dichloroethane	0.47	10		U
75-35-4	1,1-Dichloroethene	1.2	10		U
156-59-2	cis-1,2-Dichloroethene	1.2	10		U
156-60-5	trans-1,2-Dichloroethene	1.1	10		U
78-87-5	1,2-Dichloropropane	0.47	10		U
10061-01-5	cis-1,3-Dichloropropene	0.51	10		U
10061-02-6	trans-1,3-Dichloropropene	0.33	10		U
100-41-4	Ethylbenzene	0.76	10	1.1	J
591-78-6	2-Hexanone	2.3	10		U
98-82-8	Isopropylbenzene	0.90	10		U
79-20-9	Methyl acetate	1.6	10		U
75-09-2	Methylene chloride	0.63	10	10U	~~1.8~~ ~~JB~~ BL
108-87-2	Methyl cyclohexane	0.30	10	0.39	J
1634-04-4	Methyl tert-butyl ether	0.33	10		U
108-10-1	4-Methyl-2-pentanone	0.59	10		U
100-42-5	Styrene	0.36	10		U
79-34-5	1,1,2,2-Tetrachloroethane	0.44	10		U
127-18-4	Tetrachloroethene	0.99	10		U

FORM I VOA

LW
4/3/09

FORM 1
VOLATILE ORGANICS ANALYSIS DATA SHEET

CLIENT SAMPLE NO. 7

MR08-SS193-09A

Lab Name: EMPIRICAL LABS Contract: CH2MHILL

Lab Code: NA Case No.: NA SAS No.: NA SDG No.: LEJEUNE047

Matrix: (soil/water) SOIL Lab Sample ID: 0901070-07

Sample wt/vol: 5.3 (g/mL) G Lab File ID: 0107007A

Level: (low/med) LOW Date Sampled: 01/11/09 09:50

% Moisture: not dec. 8 Date Analyzed: 01/18/09 17:08

GC Column: RTX-VRX ID: 0.25 (mm) Dilution Factor: 1.0

Soil Extract Volume:_____(uL) Soil Aliquot Volume: _____(uL)

CONCENTRATION UNITS: (ug/L or ug/Kg) UG/KG

CAS NO.	COMPOUND	MDL	RL	CONC	Q
108-88-3	Toluene	0.88	10	10U ~~1.0~~	U
120-82-1	1,2,4-Trichlorobenzene	0.18	10		U
71-55-6	1,1,1-Trichloroethane	0.92	10		U
79-00-5	1,1,2-Trichloroethane	0.36	10		U
79-01-6	Trichloroethene	0.87	10		U
76-13-1	Trichlorotrifluoroethane	0.56	10		U
75-69-4	Trichlorofluoromethane	0.97	10		U
75-01-4	Vinyl chloride	1.1	10		U
1330-20-7	Xylene(total)	0.71	10		U

B1

FORM I VOA

JEW
4/13/09

FORM 1
VOLATILE ORGANICS ANALYSIS DATA SHEET

CLIENT SAMPLE NO. 8

MR08-IS19
3-6-7-09A

Lab Name: EMPIRICAL LABS Contract: CH2MHILL

Lab Code: NA Case No.: NA SAS No.: NA SDG No.: LEJEUNE047

Matrix: (soil/water) SOIL Lab Sample ID: 0901070-08

Sample wt/vol: 5.8 (g/mL) G Lab File ID: 0107008A

Level: (low/med) LOW Date Sampled: 01/11/09 10:10

% Moisture: not dec. 17 Date Analyzed: 01/18/09 17:39

GC Column: RTX-VRX ID: 0.25 (mm) Dilution Factor: 1.0

Soil Extract Volume:_____(uL) Soil Aliquot Volume: _____(uL)

CONCENTRATION UNITS: (ug/L or ug/Kg) UG/KG

CAS NO.	COMPOUND	MDL	RL	CONC	Q
67-64-1	Acetone	2.1	10	10U ~~9.6 JB~~	B
71-43-2	Benzene	0.49	10		U
75-27-4	Bromodichloromethane	0.31	10		U
75-25-2	Bromoform	1.0	10		U
74-83-9	Bromomethane	0.75	10		U
78-93-3	2-Butanone	1.5	10		~~U~~ UJ CCV
75-15-0	Carbon disulfide	1.4	10		U
56-23-5	Carbon tetrachloride	0.92	10		U
108-90-7	Chlorobenzene	0.36	10		U
75-00-3	Chloroethane	1.1	10		U
67-66-3	Chloroform	0.57	10		U
74-87-3	Chloromethane	0.54	10		U
110-82-7	Cyclohexane	0.56	10		U
124-48-1	Dibromochloromethane	0.36	10		U
96-12-8	1,2-Dibromo-3-chloropropane	1.2	5.2		U
106-93-4	1,2-Dibromoethane	0.45	10		U
95-50-1	1,2-Dichlorobenzene	0.39	10		U
541-73-1	1,3-Dichlorobenzene	0.88	10		U
106-46-7	1,4-Dichlorobenzene	0.57	10		U
75-71-8	Dichlorodifluoromethane	1.1	10		U
75-34-3	1,1-Dichloroethane	0.56	10		U
107-06-2	1,2-Dichloroethane	0.48	10		U
75-35-4	1,1-Dichloroethene	1.2	10		U
156-59-2	cis-1,2-Dichloroethene	1.2	10		U
156-60-5	trans-1,2-Dichloroethene	1.1	10		U
78-87-5	1,2-Dichloropropane	0.48	10		U
10061-01-5	cis-1,3-Dichloropropene	0.52	10		U
10061-02-6	trans-1,3-Dichloropropene	0.33	10		U
100-41-4	Ethylbenzene	0.78	10		U
591-78-6	2-Hexanone	2.4	10		U
98-82-8	Isopropylbenzene	0.92	10		U
79-20-9	Methyl acetate	1.7	10		U
75-09-2	Methylene chloride	0.65	10	10U ~~2.0 JB~~	B
108-87-2	Methyl cyclohexane	0.31	10		U
1634-04-4	Methyl tert-butyl ether	0.33	10		U
108-10-1	4-Methyl-2-pentanone	0.60	10		U
100-42-5	Styrene	0.36	10		U
79-34-5	1,1,2,2-Tetrachloroethane	0.45	10		U
127-18-4	Tetrachloroethene	1.0	10		U

FORM I VOA

lew 9/3/09

FORM 1
VOLATILE ORGANICS ANALYSIS DATA SHEET

CLIENT SAMPLE NO.

MR08-IS19
3-6-7-09A

8

Lab Name: EMPIRICAL LABS Contract: CH2MHILL

Lab Code: NA Case No.: NA SAS No.: NA SDG No.: LEJEUNE047

Matrix: (soil/water) SOIL Lab Sample ID: 0901070-08

Sample wt/vol: 5.8 (g/mL) G Lab File ID: 0107008A

Level: (low/med) LOW Date Sampled: 01/11/09 10:10

% Moisture: not dec. 17 Date Analyzed: 01/18/09 17:39

GC Column: RTX-VRX ID: 0.25 (mm) Dilution Factor: 1.0

Soil Extract Volume:_____(uL) Soil Aliquot Volume: _____(uL)

CONCENTRATION UNITS: (ug/L or ug/Kg) UG/KG

CAS NO.	COMPOUND	MDL	RL	CONC	Q
108-88-3	Toluene	0.90	10		U
120-82-1	1,2,4-Trichlorobenzene	0.19	10		U
71-55-6	1,1,1-Trichloroethane	0.94	10		U
79-00-5	1,1,2-Trichloroethane	0.36	10		U
79-01-6	Trichloroethene	0.89	10		U
76-13-1	Trichlorotrifluoroethane	0.57	10		U
75-69-4	Trichlorofluoromethane	0.99	10		U
75-01-4	Vinyl chloride	1.1	10		U
1330-20-7	Xylene(total)	0.73	10		U

JEW
4/13/09

FORM 1
VOLATILE ORGANICS ANALYSIS DATA SHEET

CLIENT SAMPLE NO. 9

MR08-SS194-09A

Lab Name: EMPIRICAL LABS Contract: CH2MHILL

Lab Code: NA Case No.: NA SAS No.: NA SDG No.: LEJEUNE047

Matrix: (soil/water) SOIL Lab Sample ID: 0901070-09

Sample wt/vol: 3.4 (g/mL) G Lab File ID: 0107009A

Level: (low/med) LOW Date Sampled: 01/11/09 10:20

% Moisture: not dec. 7 Date Analyzed: 01/18/09 18:10

GC Column: RTX-VRX ID: 0.25 (mm) Dilution Factor: 1.0

Soil Extract Volume:_____(uL) Soil Aliquot Volume: _____(uL)

CONCENTRATION UNITS: (ug/L or ug/Kg) UG/KG

CAS NO.	COMPOUND	MDL	RL	CONC	Q
67-64-1	Acetone	3.2	16		U
71-43-2	Benzene	0.74	16	2.0	J
75-27-4	Bromodichloromethane	0.47	16		U
75-25-2	Bromoform	1.6	16		U
74-83-9	Bromomethane	1.1	16		U
78-93-3	2-Butanone	2.2	16		~~U~~ UJ CU
75-15-0	Carbon disulfide	2.0	16	5.7	J
56-23-5	Carbon tetrachloride	1.4	16		U
108-90-7	Chlorobenzene	0.54	16		U
75-00-3	Chloroethane	1.7	16		U
67-66-3	Chloroform	0.87	16		U
74-87-3	Chloromethane	0.82	16		U
110-82-7	Cyclohexane	0.85	16	0.94	J
124-48-1	Dibromochloromethane	0.54	16		U
96-12-8	1,2-Dibromo-3-chloropropane	1.9	7.9		U
106-93-4	1,2-Dibromoethane	0.68	16		U
95-50-1	1,2-Dichlorobenzene	0.58	16		U
541-73-1	1,3-Dichlorobenzene	1.3	16		U
106-46-7	1,4-Dichlorobenzene	0.87	16		U
75-71-8	Dichlorodifluoromethane	1.7	16		U
75-34-3	1,1-Dichloroethane	0.85	16		U
107-06-2	1,2-Dichloroethane	0.72	16		U
75-35-4	1,1-Dichloroethene	1.9	16		U
156-59-2	cis-1,2-Dichloroethene	1.9	16		U
156-60-5	trans-1,2-Dichloroethene	1.7	16		U
78-87-5	1,2-Dichloropropane	0.72	16		U
10061-01-5	cis-1,3-Dichloropropene	0.79	16		U
10061-02-6	trans-1,3-Dichloropropene	0.50	16		U
100-41-4	Ethylbenzene	1.2	16	2.4	J
591-78-6	2-Hexanone	3.6	16		U
98-82-8	Isopropylbenzene	1.4	16		U
79-20-9	Methyl acetate	2.5	16		U
75-09-2	Methylene chloride	0.98	16	16U ~~2.6~~ ~~JB~~	BL
108-87-2	Methyl cyclohexane	0.47	16	1.4	J
1634-04-4	Methyl tert-butyl ether	0.50	16		U
108-10-1	4-Methyl-2-pentanone	0.91	16		U
100-42-5	Styrene	0.55	16		U
79-34-5	1,1,2,2-Tetrachloroethane	0.68	16		U
127-18-4	Tetrachloroethene	1.5	16		U

FORM I VOA

LW 4/13/09

FORM 1
VOLATILE ORGANICS ANALYSIS DATA SHEET

CLIENT SAMPLE NO.

9

MR08-SS194-09A

Lab Name: EMPIRICAL LABS Contract: CH2MHILL

Lab Code: NA Case No.: NA SAS No.: NA SDG No.: LEJEUNE047

Matrix: (soil/water) SOIL Lab Sample ID: 0901070-09

Sample wt/vol: 3.4 (g/mL) G Lab File ID: 0107009A

Level: (low/med) LOW Date Sampled: 01/11/09 10:20

% Moisture: not dec. 7 Date Analyzed: 01/18/09 18:10

GC Column: RTX-VRX ID: 0.25 (mm) Dilution Factor: 1.0

Soil Extract Volume:_____(uL) Soil Aliquot Volume: _____(uL)

CONCENTRATION UNITS: (ug/L or ug/Kg) UG/KG

CAS NO.	COMPOUND	MDL	RL	CONC	Q
108-88-3	Toluene	1.4	16	164 ~~2.8~~	J
120-82-1	1,2,4-Trichlorobenzene	0.28	16		U
71-55-6	1,1,1-Trichloroethane	1.4	16		U
79-00-5	1,1,2-Trichloroethane	0.55	16		U
79-01-6	Trichloroethene	1.3	16		U
76-13-1	Trichlorotrifluoroethane	0.87	16		U
75-69-4	Trichlorofluoromethane	1.5	16		U
75-01-4	Vinyl chloride	1.7	16		U
1330-20-7	Xylene(total)	1.1	16		U

B

FORM I VOA

ew
4/13/09

FORM 1
VOLATILE ORGANICS ANALYSIS DATA SHEET

CLIENT SAMPLE NO. 10

MR08-IS19
4-8-9-09A

Lab Name: EMPIRICAL LABS Contract: CH2MHILL

Lab Code: NA Case No.: NA SAS No.: NA SDG No.: LEJEUNE047

Matrix: (soil/water) SOIL Lab Sample ID: 0901070-10

Sample wt/vol: 3.8 (g/mL) G Lab File ID: 0107010A

Level: (low/med) LOW Date Sampled: 01/11/09 10:30

% Moisture: not dec. 11 Date Analyzed: 01/18/09 18:41

GC Column: RTX-VRX ID: 0.25 (mm) Dilution Factor: 1.0

Soil Extract Volume:_____(uL) Soil Aliquot Volume: _____(uL)

CONCENTRATION UNITS: (ug/L or ug/Kg) UG/KG

CAS NO.	COMPOUND	MDL	RL	CONC	Q
67-64-1	Acetone	2.9	15	15u ~~7.5~~ ~~JB~~	B
71-43-2	Benzene	0.69	15		U
75-27-4	Bromodichloromethane	0.44	15		U
75-25-2	Bromoform	1.5	15		U
74-83-9	Bromomethane	1.0	15		U
78-93-3	2-Butanone	2.0	15		~~U~~ UJ CC
75-15-0	Carbon disulfide	1.9	15		U
56-23-5	Carbon tetrachloride	1.3	15		U
108-90-7	Chlorobenzene	0.50	15		U
75-00-3	Chloroethane	1.6	15		U
67-66-3	Chloroform	0.80	15		U
74-87-3	Chloromethane	0.76	15		U
110-82-7	Cyclohexane	0.79	15		U
124-48-1	Dibromochloromethane	0.50	15		U
96-12-8	1,2-Dibromo-3-chloropropane	1.8	7.3		U
106-93-4	1,2-Dibromoethane	0.63	15		U
95-50-1	1,2-Dichlorobenzene	0.54	15		U
541-73-1	1,3-Dichlorobenzene	1.2	15		U
106-46-7	1,4-Dichlorobenzene	0.80	15		U
75-71-8	Dichlorodifluoromethane	1.6	15		U
75-34-3	1,1-Dichloroethane	0.79	15		U
107-06-2	1,2-Dichloroethane	0.67	15		U
75-35-4	1,1-Dichloroethene	1.8	15		U
156-59-2	cis-1,2-Dichloroethene	1.8	15		U
156-60-5	trans-1,2-Dichloroethene	1.6	15		U
78-87-5	1,2-Dichloropropane	0.67	15		U
10061-01-5	cis-1,3-Dichloropropene	0.73	15		U
10061-02-6	trans-1,3-Dichloropropene	0.47	15		U
100-41-4	Ethylbenzene	1.1	15		U
591-78-6	2-Hexanone	3.4	15		U
98-82-8	Isopropylbenzene	1.3	15		U
79-20-9	Methyl acetate	2.3	15		U
75-09-2	Methylene chloride	0.91	15	15u ~~2.8~~ ~~JB~~	B
108-87-2	Methyl cyclohexane	0.44	15		U
1634-04-4	Methyl tert-butyl ether	0.47	15		U
108-10-1	4-Methyl-2-pentanone	0.85	15		U
100-42-5	Styrene	0.51	15		U
79-34-5	1,1,2,2-Tetrachloroethane	0.63	15		U
127-18-4	Tetrachloroethene	1.4	15		U

FORM I VOA

LW
4/3/09

FORM 1
VOLATILE ORGANICS ANALYSIS DATA SHEET

CLIENT SAMPLE NO. (10)

MR08-IS19
4-8-9-09A

Lab Name: EMPIRICAL LABS Contract: CH2MHILL

Lab Code: NA Case No.: NA SAS No.: NA SDG No.: LEJEUNE047

Matrix: (soil/water) SOIL Lab Sample ID: 0901070-10

Sample wt/vol: 3.8 (g/mL) G Lab File ID: 0107010A

Level: (low/med) LOW Date Sampled: 01/11/09 10:30

% Moisture: not dec. 11 Date Analyzed: 01/18/09 18:41

GC Column: RTX-VRX ID: 0.25 (mm) Dilution Factor: 1.0

Soil Extract Volume:_____(uL) Soil Aliquot Volume: _____(uL)

CONCENTRATION UNITS: (ug/L or ug/Kg) UG/KG

CAS NO.	COMPOUND	MDL	RL	CONC	Q
108-88-3	Toluene	1.2	15		U
120-82-1	1,2,4-Trichlorobenzene	0.26	15		U
71-55-6	1,1,1-Trichloroethane	1.3	15		U
79-00-5	1,1,2-Trichloroethane	0.51	15		U
79-01-6	Trichloroethene	1.2	15		U
76-13-1	Trichlorotrifluoroethane	0.80	15		U
75-69-4	Trichlorofluoromethane	1.4	15		U
75-01-4	Vinyl chloride	1.6	15		U
1330-20-7	Xylene(total)	1.0	15		U

lee
4/13/09

FORM 1
VOLATILE ORGANICS ANALYSIS DATA SHEET

CLIENT SAMPLE NO. 11

MR08-SS217-09A

Lab Name: EMPIRICAL LABS Contract: CH2MHILL

Lab Code: NA Case No.: NA SAS No.: NA SDG No.: LEJEUNE047

Matrix: (soil/water) SOIL Lab Sample ID: 0901070-11

Sample wt/vol: 3.9 (g/mL) G Lab File ID: 0107011A

Level: (low/med) LOW Date Sampled: 01/11/09 10:50

% Moisture: not dec. 6 Date Analyzed: 01/18/09 19:12

GC Column: RTX-VRX ID: 0.25 (mm) Dilution Factor: 1.0

Soil Extract Volume:_____(uL) Soil Aliquot Volume: _____(uL)

CONCENTRATION UNITS: (ug/L or ug/Kg) UG/KG

CAS NO.	COMPOUND	MDL	RL	CONC	Q
67-64-1	Acetone	2.8	14	32	~~B~~ u B
71-43-2	Benzene	0.65	14		U
75-27-4	Bromodichloromethane	0.41	14		U
75-25-2	Bromoform	1.4	14		U
74-83-9	Bromomethane	0.99	14		U
78-93-3	2-Butanone	1.9	14		~~U~~ UJ C(1)
75-15-0	Carbon disulfide	1.8	14		U
56-23-5	Carbon tetrachloride	1.2	14		U
108-90-7	Chlorobenzene	0.47	14		U
75-00-3	Chloroethane	1.5	14		U
67-66-3	Chloroform	0.76	14		U
74-87-3	Chloromethane	0.72	14		U
110-82-7	Cyclohexane	0.74	14		U
124-48-1	Dibromochloromethane	0.47	14		U
96-12-8	1,2-Dibromo-3-chloropropane	1.6	6.9		U
106-93-4	1,2-Dibromoethane	0.59	14		U
95-50-1	1,2-Dichlorobenzene	0.51	14		U
541-73-1	1,3-Dichlorobenzene	1.2	14		U
106-46-7	1,4-Dichlorobenzene	0.76	14		U
75-71-8	Dichlorodifluoromethane	1.5	14		U
75-34-3	1,1-Dichloroethane	0.74	14		U
107-06-2	1,2-Dichloroethane	0.63	14		U
75-35-4	1,1-Dichloroethene	1.6	14		U
156-59-2	cis-1,2-Dichloroethene	1.6	14		U
156-60-5	trans-1,2-Dichloroethene	1.5	14		U
78-87-5	1,2-Dichloropropane	0.63	14		U
10061-01-5	cis-1,3-Dichloropropene	0.69	14		U
10061-02-6	trans-1,3-Dichloropropene	0.44	14		U
100-41-4	Ethylbenzene	1.0	14		U
591-78-6	2-Hexanone	3.2	14		U
98-82-8	Isopropylbenzene	1.2	14		U
79-20-9	Methyl acetate	2.2	14		U
75-09-2	Methylene chloride	0.85	14		~~3.0 JB~~ U B1
108-87-2	Methyl cyclohexane	0.41	14		U
1634-04-4	Methyl tert-butyl ether	0.44	14		U
108-10-1	4-Methyl-2-pentanone	0.80	14		U
100-42-5	Styrene	0.48	14		U
79-34-5	1,1,2,2-Tetrachloroethane	0.59	14		U
127-18-4	Tetrachloroethene	1.3	14		U

FORM I VOA

MW
4/13/09

FORM 1
VOLATILE ORGANICS ANALYSIS DATA SHEET

CLIENT SAMPLE NO. 11

MR08-SS217-09A

Lab Name: EMPIRICAL LABS Contract: CH2MHILL

Lab Code: NA Case No.: NA SAS No.: NA SDG No.: LEJEUNE047

Matrix: (soil/water) SOIL Lab Sample ID: 0901070-11

Sample wt/vol: 3.9 (g/mL) G Lab File ID: 0107011A

Level: (low/med) LOW Date Sampled: 01/11/09 10:50

% Moisture: not dec. 6 Date Analyzed: 01/18/09 19:12

GC Column: RTX-VRX ID: 0.25 (mm) Dilution Factor: 1.0

Soil Extract Volume:_____(uL) Soil Aliquot Volume: _____(uL)

CONCENTRATION UNITS: (ug/L or ug/Kg) UG/KG

CAS NO.	COMPOUND	MDL	RL	CONC	Q
108-88-3	Toluene	1.2	14		U
120-82-1	1,2,4-Trichlorobenzene	0.25	14		U
71-55-6	1,1,1-Trichloroethane	1.2	14		U
79-00-5	1,1,2-Trichloroethane	0.48	14		U
79-01-6	Trichloroethene	1.2	14		U
76-13-1	Trichlorotrifluoroethane	0.76	14		U
75-69-4	Trichlorofluoromethane	1.3	14		U
75-01-4	Vinyl chloride	1.5	14		U
1330-20-7	Xylene(total)	0.96	14		U

Acs
4/13/09

FORM 1
VOLATILE ORGANICS ANALYSIS DATA SHEET

CLIENT SAMPLE NO. 12

MR08-IS21
7-8-9-09A

Lab Name: EMPIRICAL LABS Contract: CH2MHILL

Lab Code: NA Case No.: NA SAS No.: NA SDG No.: LEJEUNE047

Matrix: (soil/water) SOIL Lab Sample ID: 0901070-12

Sample wt/vol: 3.8 (g/mL) G Lab File ID: 0107012A

Level: (low/med) LOW Date Sampled: 01/11/09 11:00

% Moisture: not dec. 11 Date Analyzed: 01/18/09 19:43

GC Column: RTX-VRX ID: 0.25 (mm) Dilution Factor: 1.0

Soil Extract Volume:_____(uL) Soil Aliquot Volume: _____(uL)

CONCENTRATION UNITS: (ug/L or ug/Kg) UG/KG

CAS NO.	COMPOUND	MDL	RL	CONC	Q
67-64-1	Acetone	3.0	15	15U ~~9.4~~ ~~JB~~	BL
71-43-2	Benzene	0.70	15		U
75-27-4	Bromodichloromethane	0.45	15		U
75-25-2	Bromoform	1.5	15		U
74-83-9	Bromomethane	1.1	15		U
78-93-3	2-Butanone	2.1	15		U UJ CU
75-15-0	Carbon disulfide	1.9	15		U
56-23-5	Carbon tetrachloride	1.3	15		U
108-90-7	Chlorobenzene	0.51	15		U
75-00-3	Chloroethane	1.6	15		U
67-66-3	Chloroform	0.82	15		U
74-87-3	Chloromethane	0.78	15		U
110-82-7	Cyclohexane	0.81	15		U
124-48-1	Dibromochloromethane	0.51	15		U
96-12-8	1,2-Dibromo-3-chloropropane	1.8	7.5		U
106-93-4	1,2-Dibromoethane	0.64	15		U
95-50-1	1,2-Dichlorobenzene	0.55	15		U
541-73-1	1,3-Dichlorobenzene	1.2	15		U
106-46-7	1,4-Dichlorobenzene	0.82	15		U
75-71-8	Dichlorodifluoromethane	1.6	15		U
75-34-3	1,1-Dichloroethane	0.81	15		U
107-06-2	1,2-Dichloroethane	0.69	15		U
75-35-4	1,1-Dichloroethene	1.8	15		U
156-59-2	cis-1,2-Dichloroethene	1.8	15		U
156-60-5	trans-1,2-Dichloroethene	1.6	15		U
78-87-5	1,2-Dichloropropane	0.69	15		U
10061-01-5	cis-1,3-Dichloropropene	0.75	15		U
10061-02-6	trans-1,3-Dichloropropene	0.48	15		U
100-41-4	Ethylbenzene	1.1	15		U
591-78-6	2-Hexanone	3.4	15		U
98-82-8	Isopropylbenzene	1.3	15		U
79-20-9	Methyl acetate	2.4	15		U
75-09-2	Methylene chloride	0.93	15	15U ~~3.2~~ ~~JB~~	BL
108-87-2	Methyl cyclohexane	0.45	15		U
1634-04-4	Methyl tert-butyl ether	0.48	15		U
108-10-1	4-Methyl-2-pentanone	0.87	15		U
100-42-5	Styrene	0.52	15		U
79-34-5	1,1,2,2-Tetrachloroethane	0.64	15		U
127-18-4	Tetrachloroethene	1.4	15		U

NW
4/13/09

FORM 1
VOLATILE ORGANICS ANALYSIS DATA SHEET

CLIENT SAMPLE NO. 12

MR08-IS21
7-8-9-09A

Lab Name: EMPIRICAL LABS Contract: CH2MHILL

Lab Code: NA Case No.: NA SAS No.: NA SDG No.: LEJEUNE047

Matrix: (soil/water) SOIL Lab Sample ID: 0901070-12

Sample wt/vol: 3.8 (g/mL) G Lab File ID: 0107012A

Level: (low/med) LOW Date Sampled: 01/11/09 11:00

% Moisture: not dec. 11 Date Analyzed: 01/18/09 19:43

GC Column: RTX-VRX ID: 0.25 (mm) Dilution Factor: 1.0

Soil Extract Volume:_____(uL) Soil Aliquot Volume: _____(uL)

CONCENTRATION UNITS: (ug/L or ug/Kg) UG/KG

CAS NO.	COMPOUND	MDL	RL	CONC	Q
108-88-3	Toluene	1.3	15		U
120-82-1	1,2,4-Trichlorobenzene	0.27	15		U
71-55-6	1,1,1-Trichloroethane	1.3	15		U
79-00-5	1,1,2-Trichloroethane	0.52	15		U
79-01-6	Trichloroethene	1.3	15		U
76-13-1	Trichlorotrifluoroethane	0.82	15		U
75-69-4	Trichlorofluoromethane	1.4	15		U
75-01-4	Vinyl chloride	1.6	15		U
1330-20-7	Xylene(total)	1.0	15		U

lw
4/3/09

FORM 1
VOLATILE ORGANICS ANALYSIS DATA SHEET

CLIENT SAMPLE NO. 13

MR08-SS218-09A

Lab Name: EMPIRICAL LABS Contract: CH2MHILL

Lab Code: NA Case No.: NA SAS No.: NA SDG No.: LEJEUNE047

Matrix: (soil/water) SOIL Lab Sample ID: 0901070-13

Sample wt/vol: 3.6 (g/mL) G Lab File ID: 0107013A

Level: (low/med) LOW Date Sampled: 01/11/09 11:20

% Moisture: not dec. 7 Date Analyzed: 01/18/09 20:13

GC Column: RTX-VRX ID: 0.25 (mm) Dilution Factor: 1.0

Soil Extract Volume:_____(uL) Soil Aliquot Volume: _____(uL)

CONCENTRATION UNITS: (ug/L or ug/Kg) UG/KG

CAS NO.	COMPOUND	MDL	RL	CONC	Q
67-64-1	Acetone	3.0	15		U
71-43-2	Benzene	0.71	15	1.5	~~J~~ J SS
75-27-4	Bromodichloromethane	0.45	15		U
75-25-2	Bromoform	1.5	15		U
74-83-9	Bromomethane	1.1	15		U
78-93-3	2-Butanone	2.1	15		~~U~~ UJ CN
75-15-0	Carbon disulfide	2.0	15	2.1	~~J~~ J SSH
56-23-5	Carbon tetrachloride	1.3	15		U
108-90-7	Chlorobenzene	0.51	15		U
75-00-3	Chloroethane	1.6	15		U
67-66-3	Chloroform	0.83	15		U
74-87-3	Chloromethane	0.78	15		U
110-82-7	Cyclohexane	0.81	15		U
124-48-1	Dibromochloromethane	0.51	15		U
96-12-8	1,2-Dibromo-3-chloropropane	1.8	7.5		U
106-93-4	1,2-Dibromoethane	0.64	15		U
95-50-1	1,2-Dichlorobenzene	0.56	15		U
541-73-1	1,3-Dichlorobenzene	1.3	15		U
106-46-7	1,4-Dichlorobenzene	0.83	15		U
75-71-8	Dichlorodifluoromethane	1.6	15		U
75-34-3	1,1-Dichloroethane	0.81	15		U
107-06-2	1,2-Dichloroethane	0.69	15		U
75-35-4	1,1-Dichloroethene	1.8	15		U
156-59-2	cis-1,2-Dichloroethene	1.8	15		U
156-60-5	trans-1,2-Dichloroethene	1.6	15		U
78-87-5	1,2-Dichloropropane	0.69	15		U
10061-01-5	cis-1,3-Dichloropropene	0.75	15		U
10061-02-6	trans-1,3-Dichloropropene	0.48	15		U
100-41-4	Ethylbenzene	1.1	15	2.6	~~J~~ J SSH
591-78-6	2-Hexanone	3.4	15		U
98-82-8	Isopropylbenzene	1.3	15		U
79-20-9	Methyl acetate	2.4	15		U
75-09-2	Methylene chloride	0.93	15	15u ~~3.0 JB~~	B
108-87-2	Methyl cyclohexane	0.45	15	0.99	~~J~~ J SSH
1634-04-4	Methyl tert-butyl ether	0.48	15		U
108-10-1	4-Methyl-2-pentanone	0.87	15		U
100-42-5	Styrene	0.52	15		U
79-34-5	1,1,2,2-Tetrachloroethane	0.64	15		U
127-18-4	Tetrachloroethene	1.4	15		U

MW
4/3/09

FORM 1
VOLATILE ORGANICS ANALYSIS DATA SHEET

CLIENT SAMPLE NO. 13

MR08-SS218-09A

Lab Name: EMPIRICAL LABS Contract: CH2MHILL

Lab Code: NA Case No.: NA SAS No.: NA SDG No.: LEJEUNE047

Matrix: (soil/water) SOIL Lab Sample ID: 0901070-13

Sample wt/vol: 3.6 (g/mL) G Lab File ID: 0107013A

Level: (low/med) LOW Date Sampled: 01/11/09 11:20

% Moisture: not dec. 7 Date Analyzed: 01/18/09 20:13

GC Column: RTX-VRX ID: 0.25 (mm) Dilution Factor: 1.0

Soil Extract Volume:_____(uL) Soil Aliquot Volume: _____(uL)

CONCENTRATION UNITS: (ug/L or ug/Kg) UG/KG

CAS NO.	COMPOUND	MDL	RL	CONC	Q
108-88-3------	Toluene	1.3	15	15u ~~2.4~~ ~~J~~	B
120-82-1------	1,2,4-Trichlorobenzene	0.27	15		U
71-55-6-------	1,1,1-Trichloroethane	1.4	15		U
79-00-5-------	1,1,2-Trichloroethane	0.52	15		U
79-01-6-------	Trichloroethene	1.3	15		U
76-13-1-------	Trichlorotrifluoroethane	0.83	15		U
75-69-4-------	Trichlorofluoromethane	1.4	15		U
75-01-4-------	Vinyl chloride	1.6	15		U
1330-20-7-----	Xylene(total)	1.0	15		U

MW
4/13/09

FORM 1
VOLATILE ORGANICS ANALYSIS DATA SHEET

CLIENT SAMPLE NO. 14

MR08-IS21
8-7-8-09A

Lab Name: EMPIRICAL LABS Contract: CH2MHILL

Lab Code: NA Case No.: NA SAS No.: NA SDG No.: LEJEUNE047

Matrix: (soil/water) SOIL Lab Sample ID: 0901070-14

Sample wt/vol: 4.2 (g/mL) G Lab File ID: 0107014A

Level: (low/med) LOW Date Sampled: 01/11/09 11:30

% Moisture: not dec. 7 Date Analyzed: 01/18/09 20:44

GC Column: RTX-VRX ID: 0.25 (mm) Dilution Factor: 1.0

Soil Extract Volume:_____(uL) Soil Aliquot Volume: _____(uL)

CONCENTRATION UNITS: (ug/L or ug/Kg) UG/KG

CAS NO.	COMPOUND	MDL	RL	CONC	Q
67-64-1	Acetone	2.6	13	13u ~~8.1~~ ~~JB~~	BL
71-43-2	Benzene	0.61	13		U
75-27-4	Bromodichloromethane	0.39	13		U
75-25-2	Bromoform	1.3	13		U
74-83-9	Bromomethane	0.93	13		U
78-93-3	2-Butanone	1.8	13		U UJ CCH
75-15-0	Carbon disulfide	1.7	13		U
56-23-5	Carbon tetrachloride	1.1	13		U
108-90-7	Chlorobenzene	0.44	13		U
75-00-3	Chloroethane	1.4	13		U
67-66-3	Chloroform	0.71	13		U
74-87-3	Chloromethane	0.67	13		U
110-82-7	Cyclohexane	0.70	13		U
124-48-1	Dibromochloromethane	0.44	13		U
96-12-8	1,2-Dibromo-3-chloropropane	1.5	6.4		U
106-93-4	1,2-Dibromoethane	0.56	13		U
95-50-1	1,2-Dichlorobenzene	0.48	13		U
541-73-1	1,3-Dichlorobenzene	1.1	13		U
106-46-7	1,4-Dichlorobenzene	0.71	13		U
75-71-8	Dichlorodifluoromethane	1.4	13		U
75-34-3	1,1-Dichloroethane	0.70	13		U
107-06-2	1,2-Dichloroethane	0.59	13		U
75-35-4	1,1-Dichloroethene	1.5	13		U
156-59-2	cis-1,2-Dichloroethene	1.5	13		U
156-60-5	trans-1,2-Dichloroethene	1.4	13		U
78-87-5	1,2-Dichloropropane	0.59	13		U
10061-01-5	cis-1,3-Dichloropropene	0.64	13		U
10061-02-6	trans-1,3-Dichloropropene	0.41	13		U
100-41-4	Ethylbenzene	0.97	13		U
591-78-6	2-Hexanone	3.0	13		U
98-82-8	Isopropylbenzene	1.1	13		U
79-20-9	Methyl acetate	2.1	13		U
75-09-2	Methylene chloride	0.80	13	13u ~~2.9~~ ~~JB~~	BL
108-87-2	Methyl cyclohexane	0.39	13		U
1634-04-4	Methyl tert-butyl ether	0.41	13		U
108-10-1	4-Methyl-2-pentanone	0.75	13		U
100-42-5	Styrene	0.45	13		U
79-34-5	1,1,2,2-Tetrachloroethane	0.56	13		U
127-18-4	Tetrachloroethene	1.2	13		U

MW 4/13/09

FORM 1
VOLATILE ORGANICS ANALYSIS DATA SHEET

CLIENT SAMPLE NO. 14

MR08-IS21
8-7-8-09A

Lab Name: EMPIRICAL LABS Contract: CH2MHILL

Lab Code: NA Case No.: NA SAS No.: NA SDG No.: LEJEUNE047

Matrix: (soil/water) SOIL Lab Sample ID: 0901070-14

Sample wt/vol: 4.2 (g/mL) G Lab File ID: 0107014A

Level: (low/med) LOW Date Sampled: 01/11/09 11:30

% Moisture: not dec. 7 Date Analyzed: 01/18/09 20:44

GC Column: RTX-VRX ID: 0.25 (mm) Dilution Factor: 1.0

Soil Extract Volume:_____(uL) Soil Aliquot Volume: _____(uL)

CONCENTRATION UNITS: (ug/L or ug/Kg) UG/KG

CAS NO.	COMPOUND	MDL	RL	CONC	Q
108-88-3	Toluene	1.1	13		U
120-82-1	1,2,4-Trichlorobenzene	0.23	13		U
71-55-6	1,1,1-Trichloroethane	1.2	13		U
79-00-5	1,1,2-Trichloroethane	0.45	13		U
79-01-6	Trichloroethene	1.1	13		U
76-13-1	Trichlorotrifluoroethane	0.71	13		U
75-69-4	Trichlorofluoromethane	1.2	13		U
75-01-4	Vinyl chloride	1.4	13		U
1330-20-7	Xylene(total)	0.90	13		U

4/13/09

FORM 1
VOLATILE ORGANICS ANALYSIS DATA SHEET

CLIENT SAMPLE NO. 15

MR08-SS241-09A

Lab Name: EMPIRICAL LABS Contract: CH2MHILL

Lab Code: NA Case No.: NA SAS No.: NA SDG No.: LEJEUNE047

Matrix: (soil/water) SOIL Lab Sample ID: 0901070-15

Sample wt/vol: 3.0 (g/mL) G Lab File ID: 0107015A

Level: (low/med) LOW Date Sampled: 01/11/09 12:30

% Moisture: not dec. 14 Date Analyzed: 01/18/09 21:15

GC Column: RTX-VRX ID: 0.25 (mm) Dilution Factor: 1.0

Soil Extract Volume:_____(uL) Soil Aliquot Volume: _____(uL)

CONCENTRATION UNITS: (ug/L or ug/Kg) UG/KG

CAS NO.	COMPOUND	MDL	RL	CONC	Q
67-64-1	Acetone	3.8	19	100	~~B~~ J SSI
71-43-2	Benzene	0.90	19		U
75-27-4	Bromodichloromethane	0.57	19		U
75-25-2	Bromoform	1.9	19		U
74-83-9	Bromomethane	1.4	19		U
78-93-3	2-Butanone	2.7	19		~~U~~ UJ CCI
75-15-0	Carbon disulfide	2.5	19	3.0	~~U~~ J SSH
56-23-5	Carbon tetrachloride	1.7	19		U
108-90-7	Chlorobenzene	0.65	19		U
75-00-3	Chloroethane	2.1	19		U
67-66-3	Chloroform	1.0	19		U
74-87-3	Chloromethane	0.99	19		U
110-82-7	Cyclohexane	1.0	19		U
124-48-1	Dibromochloromethane	0.65	19		U
96-12-8	1,2-Dibromo-3-chloropropane	2.3	9.5		U
106-93-4	1,2-Dibromoethane	0.82	19		U
95-50-1	1,2-Dichlorobenzene	0.71	19		U
541-73-1	1,3-Dichlorobenzene	1.6	19		U
106-46-7	1,4-Dichlorobenzene	1.0	19		U
75-71-8	Dichlorodifluoromethane	2.1	19		U
75-34-3	1,1-Dichloroethane	1.0	19		U
107-06-2	1,2-Dichloroethane	0.88	19		U
75-35-4	1,1-Dichloroethene	2.3	19		U
156-59-2	cis-1,2-Dichloroethene	2.3	19		U
156-60-5	trans-1,2-Dichloroethene	2.1	19		U
78-87-5	1,2-Dichloropropane	0.88	19		U
10061-01-5	cis-1,3-Dichloropropene	0.95	19		U
10061-02-6	trans-1,3-Dichloropropene	0.61	19		U
100-41-4	Ethylbenzene	1.4	19		U
591-78-6	2-Hexanone	4.4	19		U
98-82-8	Isopropylbenzene	1.7	19		U
79-20-9	Methyl acetate	3.0	19		U
75-09-2	Methylene chloride	1.2	19	19u	3~~.5 JB~~ BL
108-87-2	Methyl cyclohexane	0.57	19		U
1634-04-4	Methyl tert-butyl ether	0.61	19		U
108-10-1	4-Methyl-2-pentanone	1.1	19		U
100-42-5	Styrene	0.67	19		U
79-34-5	1,1,2,2-Tetrachloroethane	0.82	19		U
127-18-4	Tetrachloroethene	1.8	19		U

FORM I VOA

MW 4/13/09

FORM 1
VOLATILE ORGANICS ANALYSIS DATA SHEET

CLIENT SAMPLE NO. 15

MR08-SS241-09A

Lab Name: EMPIRICAL LABS Contract: CH2MHILL

Lab Code: NA Case No.: NA SAS No.: NA SDG No.: LEJEUNE047

Matrix: (soil/water) SOIL Lab Sample ID: 0901070-15

Sample wt/vol: 3.0 (g/mL) G Lab File ID: 0107015A

Level: (low/med) LOW Date Sampled: 01/11/09 12:30

% Moisture: not dec. 14 Date Analyzed: 01/18/09 21:15

GC Column: RTX-VRX ID: 0.25 (mm) Dilution Factor: 1.0

Soil Extract Volume:_____(uL) Soil Aliquot Volume: _____(uL)

CONCENTRATION UNITS: (ug/L or ug/Kg) UG/KG

CAS NO.	COMPOUND	MDL	RL	CONC	Q
108-88-3	Toluene	1.6	19		U
120-82-1	1,2,4-Trichlorobenzene	0.34	19		U
71-55-6	1,1,1-Trichloroethane	1.7	19		U
79-00-5	1,1,2-Trichloroethane	0.67	19		U
79-01-6	Trichloroethene	1.6	19		U
76-13-1	Trichlorotrifluoroethane	1.0	19		U
75-69-4	Trichlorofluoromethane	1.8	19		U
75-01-4	Vinyl chloride	2.1	19		U
1330-20-7	Xylene(total)	1.3	19		U

JW
4/3/09

FORM 1
VOLATILE ORGANICS ANALYSIS DATA SHEET

CLIENT SAMPLE NO. 16

MR08-IS24
1-8-9-09A

Lab Name: EMPIRICAL LABS Contract: CH2MHILL

Lab Code: NA Case No.: NA SAS No.: NA SDG No.: LEJEUNE047

Matrix: (soil/water) SOIL Lab Sample ID: 0901070-16

Sample wt/vol: 4.3 (g/mL) G Lab File ID: 0107016A

Level: (low/med) LOW Date Sampled: 01/11/09 12:50

% Moisture: not dec. 7 Date Analyzed: 01/19/09 00:51

GC Column: RTX-VRX ID: 0.25 (mm) Dilution Factor: 1.0

Soil Extract Volume:_____(uL) Soil Aliquot Volume: _____(uL)

CONCENTRATION UNITS: (ug/L or ug/Kg) UG/KG

CAS NO.	COMPOUND	MDL	RL	CONC	Q
67-64-1	Acetone	2.5	12		U
71-43-2	Benzene	0.58	12		U
75-27-4	Bromodichloromethane	0.37	12		U
75-25-2	Bromoform	1.2	12		U
74-83-9	Bromomethane	0.89	12		U
78-93-3	2-Butanone	1.7	12		U
75-15-0	Carbon disulfide	1.6	12		U
56-23-5	Carbon tetrachloride	1.1	12		U
108-90-7	Chlorobenzene	0.42	12		U
75-00-3	Chloroethane	1.4	12		U
67-66-3	Chloroform	0.68	12		U
74-87-3	Chloromethane	0.64	12		U
110-82-7	Cyclohexane	0.66	12		U
124-48-1	Dibromochloromethane	0.42	12		U
96-12-8	1,2-Dibromo-3-chloropropane	1.5	6.2		U
106-93-4	1,2-Dibromoethane	0.53	12		U
95-50-1	1,2-Dichlorobenzene	0.46	12		U
541-73-1	1,3-Dichlorobenzene	1.0	12		U
106-46-7	1,4-Dichlorobenzene	0.68	12		U
75-71-8	Dichlorodifluoromethane	1.4	12		U
75-34-3	1,1-Dichloroethane	0.66	12		U
107-06-2	1,2-Dichloroethane	0.57	12		U
75-35-4	1,1-Dichloroethene	1.5	12		U
156-59-2	cis-1,2-Dichloroethene	1.5	12		U
156-60-5	trans-1,2-Dichloroethene	1.4	12		U
78-87-5	1,2-Dichloropropane	0.57	12		U
10061-01-5	cis-1,3-Dichloropropene	0.62	12		U
10061-02-6	trans-1,3-Dichloropropene	0.39	12		U
100-41-4	Ethylbenzene	0.92	12		U
591-78-6	2-Hexanone	2.8	12		U
98-82-8	Isopropylbenzene	1.1	12		U
79-20-9	Methyl acetate	2.0	12		U
75-09-2	Methylene chloride	0.76	12	12U ~~2.4 JB~~	BL
108-87-2	Methyl cyclohexane	0.37	12		U
1634-04-4	Methyl tert-butyl ether	0.39	12		U
108-10-1	4-Methyl-2-pentanone	0.71	12		U
100-42-5	Styrene	0.43	12		U
79-34-5	1,1,2,2-Tetrachloroethane	0.53	12		U
127-18-4	Tetrachloroethene	1.2	12		U

FORM I VOA

LEW
4/13/09

FORM 1
VOLATILE ORGANICS ANALYSIS DATA SHEET

CLIENT SAMPLE NO. 16

MR08-IS24
1-8-9-09A

Lab Name: EMPIRICAL LABS Contract: CH2MHILL

Lab Code: NA Case No.: NA SAS No.: NA SDG No.: LEJEUNE047

Matrix: (soil/water) SOIL Lab Sample ID: 0901070-16

Sample wt/vol: 4.3 (g/mL) G Lab File ID: 0107016A

Level: (low/med) LOW Date Sampled: 01/11/09 12:50

% Moisture: not dec. 7 Date Analyzed: 01/19/09 00:51

GC Column: RTX-VRX ID: 0.25 (mm) Dilution Factor: 1.0

Soil Extract Volume:_____(uL) Soil Aliquot Volume: _____(uL)

CONCENTRATION UNITS: (ug/L or ug/Kg) UG/KG

CAS NO.	COMPOUND	MDL	RL	CONC	Q
108-88-3	Toluene	1.0	12	12U ~~1.1~~	~~J~~
120-82-1	1,2,4-Trichlorobenzene	0.22	12		U
71-55-6	1,1,1-Trichloroethane	1.1	12		U
79-00-5	1,1,2-Trichloroethane	0.43	12		U
79-01-6	Trichloroethene	1.0	12		U
76-13-1	Trichlorotrifluoroethane	0.68	12		U
75-69-4	Trichlorofluoromethane	1.2	12		U
75-01-4	Vinyl chloride	1.4	12		U
1330-20-7	Xylene(total)	0.86	12		U

B

FORM I VOA

MW
4/13/09

FORM 1
VOLATILE ORGANICS ANALYSIS DATA SHEET

CLIENT SAMPLE NO. 17

MR08-SS242-09A

Lab Name: EMPIRICAL LABS Contract: CH2MHILL

Lab Code: NA Case No.: NA SAS No.: NA SDG No.: LEJEUNE047

Matrix: (soil/water) SOIL Lab Sample ID: 0901070-17

Sample wt/vol: 4.5 (g/mL) G Lab File ID: 0107017A

Level: (low/med) LOW Date Sampled: 01/11/09 13:25

% Moisture: not dec. 11 Date Analyzed: 01/19/09 01:22

GC Column: RTX-VRX ID: 0.25 (mm) Dilution Factor: 1.0

Soil Extract Volume:_____(uL) Soil Aliquot Volume: _____(uL)

CONCENTRATION UNITS: (ug/L or ug/Kg) UG/KG

CAS NO.	COMPOUND	MDL	RL	CONC	Q
67-64-1	Acetone	2.4	12	87	~~B~~
71-43-2	Benzene	0.58	12		U
75-27-4	Bromodichloromethane	0.37	12		U
75-25-2	Bromoform	1.2	12		U
74-83-9	Bromomethane	0.88	12		U
78-93-3	2-Butanone	1.7	12		U
75-15-0	Carbon disulfide	1.6	12		U
56-23-5	Carbon tetrachloride	1.1	12		U
108-90-7	Chlorobenzene	0.42	12		U
75-00-3	Chloroethane	1.4	12		U
67-66-3	Chloroform	0.68	12		U
74-87-3	Chloromethane	0.64	12		U
110-82-7	Cyclohexane	0.66	12		U
124-48-1	Dibromochloromethane	0.42	12		U
96-12-8	1,2-Dibromo-3-chloropropane	1.5	6.1		U
106-93-4	1,2-Dibromoethane	0.53	12		U
95-50-1	1,2-Dichlorobenzene	0.45	12		U
541-73-1	1,3-Dichlorobenzene	1.0	12		U
106-46-7	1,4-Dichlorobenzene	0.68	12		U
75-71-8	Dichlorodifluoromethane	1.4	12		U
75-34-3	1,1-Dichloroethane	0.66	12		U
107-06-2	1,2-Dichloroethane	0.56	12		U
75-35-4	1,1-Dichloroethene	1.5	12		U
156-59-2	cis-1,2-Dichloroethene	1.5	12		U
156-60-5	trans-1,2-Dichloroethene	1.4	12		U
78-87-5	1,2-Dichloropropane	0.56	12		U
10061-01-5	cis-1,3-Dichloropropene	0.61	12		U
10061-02-6	trans-1,3-Dichloropropene	0.39	12		U
100-41-4	Ethylbenzene	0.92	12		U
591-78-6	2-Hexanone	2.8	12		U
98-82-8	Isopropylbenzene	1.1	12		U
79-20-9	Methyl acetate	2.0	12		U
75-09-2	Methylene chloride	0.76	12	12u	~~2.1 JB~~ BL
108-87-2	Methyl cyclohexane	0.37	12		U
1634-04-4	Methyl tert-butyl ether	0.39	12		U
108-10-1	4-Methyl-2-pentanone	0.71	12		U
100-42-5	Styrene	0.43	12		U
79-34-5	1,1,2,2-Tetrachloroethane	0.53	12		U
127-18-4	Tetrachloroethene	1.2	12		U

FORM I VOA

4/3/09

FORM 1
VOLATILE ORGANICS ANALYSIS DATA SHEET

CLIENT SAMPLE NO. 17

MR08-SS242-09A

Lab Name: EMPIRICAL LABS Contract: CH2MHILL

Lab Code: NA Case No.: NA SAS No.: NA SDG No.: LEJEUNE047

Matrix: (soil/water) SOIL Lab Sample ID: 0901070-17

Sample wt/vol: 4.5 (g/mL) G Lab File ID: 0107017A

Level: (low/med) LOW Date Sampled: 01/11/09 13:25

% Moisture: not dec. 11 Date Analyzed: 01/19/09 01:22

GC Column: RTX-VRX ID: 0.25 (mm) Dilution Factor: 1.0

Soil Extract Volume:_____(uL) Soil Aliquot Volume: _____(uL)

CONCENTRATION UNITS: (ug/L or ug/Kg) UG/KG

CAS NO.	COMPOUND	MDL	RL	CONC	Q
108-88-3	Toluene	1.0	12		U
120-82-1	1,2,4-Trichlorobenzene	0.22	12		U
71-55-6	1,1,1-Trichloroethane	1.1	12		U
79-00-5	1,1,2-Trichloroethane	0.43	12		U
79-01-6	Trichloroethene	1.0	12		U
76-13-1	Trichlorotrifluoroethane	0.68	12		U
75-69-4	Trichlorofluoromethane	1.2	12		U
75-01-4	Vinyl chloride	1.4	12		U
1330-20-7	Xylene(total)	0.86	12		U

fcw
4/3/09

FORM 1
VOLATILE ORGANICS ANALYSIS DATA SHEET

CLIENT SAMPLE NO.

MR08-IS24
2-6-7-09A

18

Lab Name: EMPIRICAL LABS Contract: CH2MHILL

Lab Code: NA Case No.: NA SAS No.: NA SDG No.: LEJEUNE047

Matrix: (soil/water) SOIL Lab Sample ID: 0901070-18

Sample wt/vol: 5.0 (g/mL) G Lab File ID: 0107018A

Level: (low/med) LOW Date Sampled: 01/11/09 13:45

% Moisture: not dec. 8 Date Analyzed: 01/19/09 01:53

GC Column: RTX-VRX ID: 0.25 (mm) Dilution Factor: 1.0

Soil Extract Volume:_____(uL) Soil Aliquot Volume: _____(uL)

CONCENTRATION UNITS: (ug/L or ug/Kg) UG/KG

CAS NO.	COMPOUND	MDL	RL	CONC	Q	
67-64-1	Acetone	2.2	11	11u	~~8.5 JB~~	BL
71-43-2	Benzene	0.51	11		U	
75-27-4	Bromodichloromethane	0.32	11		U	
75-25-2	Bromoform	1.1	11		U	
74-83-9	Bromomethane	0.78	11		U	
78-93-3	2-Butanone	1.5	11		U	
75-15-0	Carbon disulfide	1.4	11		U	
56-23-5	Carbon tetrachloride	0.95	11		U	
108-90-7	Chlorobenzene	0.37	11		U	
75-00-3	Chloroethane	1.2	11		U	
67-66-3	Chloroform	0.59	11		U	
74-87-3	Chloromethane	0.56	11		U	
110-82-7	Cyclohexane	0.58	11		U	
124-48-1	Dibromochloromethane	0.37	11		U	
96-12-8	1,2-Dibromo-3-chloropropane	1.3	5.4		U	
106-93-4	1,2-Dibromoethane	0.46	11		U	
95-50-1	1,2-Dichlorobenzene	0.40	11		U	
541-73-1	1,3-Dichlorobenzene	0.90	11		U	
106-46-7	1,4-Dichlorobenzene	0.59	11		U	
75-71-8	Dichlorodifluoromethane	1.2	11		U	
75-34-3	1,1-Dichloroethane	0.58	11		U	
107-06-2	1,2-Dichloroethane	0.50	11		U	
75-35-4	1,1-Dichloroethene	1.3	11		U	
156-59-2	cis-1,2-Dichloroethene	1.3	11		U	
156-60-5	trans-1,2-Dichloroethene	1.2	11		U	
78-87-5	1,2-Dichloropropane	0.50	11		U	
10061-01-5	cis-1,3-Dichloropropene	0.54	11		U	
10061-02-6	trans-1,3-Dichloropropene	0.34	11		U	
100-41-4	Ethylbenzene	0.81	11		U	
591-78-6	2-Hexanone	2.5	11		U	
98-82-8	Isopropylbenzene	0.95	11		U	
79-20-9	Methyl acetate	1.7	11		U	
75-09-2	Methylene chloride	0.67	11	11u	~~1.9 JB~~	BL
108-87-2	Methyl cyclohexane	0.32	11		U	
1634-04-4	Methyl tert-butyl ether	0.34	11		U	
108-10-1	4-Methyl-2-pentanone	0.62	11		U	
100-42-5	Styrene	0.38	11		U	
79-34-5	1,1,2,2-Tetrachloroethane	0.46	11		U	
127-18-4	Tetrachloroethene	1.0	11		U	

kw
4/13/09

FORM 1
VOLATILE ORGANICS ANALYSIS DATA SHEET

CLIENT SAMPLE NO.

18

MR08-IS24
2-6-7-09A

Lab Name: EMPIRICAL LABS Contract: CH2MHILL

Lab Code: NA Case No.: NA SAS No.: NA SDG No.: LEJEUNE047

Matrix: (soil/water) SOIL Lab Sample ID: 0901070-18

Sample wt/vol: 5.0 (g/mL) G Lab File ID: 0107018A

Level: (low/med) LOW Date Sampled: 01/11/09 13:45

% Moisture: not dec. 8 Date Analyzed: 01/19/09 01:53

GC Column: RTX-VRX ID: 0.25 (mm) Dilution Factor: 1.0

Soil Extract Volume:_____(uL) Soil Aliquot Volume: _____(uL)

CONCENTRATION UNITS: (ug/L or ug/Kg) UG/KG

CAS NO.	COMPOUND	MDL	RL	CONC	Q
108-88-3	Toluene	0.93	11		U
120-82-1	1,2,4-Trichlorobenzene	0.19	11		U
71-55-6	1,1,1-Trichloroethane	0.97	11		U
79-00-5	1,1,2-Trichloroethane	0.38	11		U
79-01-6	Trichloroethene	0.92	11		U
76-13-1	Trichlorotrifluoroethane	0.59	11		U
75-69-4	Trichlorofluoromethane	1.0	11		U
75-01-4	Vinyl chloride	1.2	11		U
1330-20-7	Xylene(total)	0.75	11		U

gw
4/13/09

FORM 1
VOLATILE ORGANICS ANALYSIS DATA SHEET

CLIENT SAMPLE NO.

19

MR08-SS265-09A

Lab Name: EMPIRICAL LABS Contract: CH2MHILL

Lab Code: NA Case No.: NA SAS No.: NA SDG No.: LEJEUNE047

Matrix: (soil/water) SOIL Lab Sample ID: 0901070-19

Sample wt/vol: 5.0 (g/mL) G Lab File ID: 0107019A

Level: (low/med) LOW Date Sampled: 01/11/09 14:00

% Moisture: not dec. 9 Date Analyzed: 01/19/09 02:24

GC Column: RTX-VRX ID: 0.25 (mm) Dilution Factor: 1.0

Soil Extract Volume:_____(uL) Soil Aliquot Volume: _____(uL)

CONCENTRATION UNITS: (ug/L or ug/Kg) UG/KG

CAS NO.	COMPOUND	MDL	RL	CONC	Q
67-64-1	Acetone	2.2	11	30	~~B~~ U B
71-43-2	Benzene	0.51	11		U
75-27-4	Bromodichloromethane	0.32	11		U
75-25-2	Bromoform	1.1	11		U
74-83-9	Bromomethane	0.78	11		U
78-93-3	2-Butanone	1.5	11		U
75-15-0	Carbon disulfide	1.4	11		U
56-23-5	Carbon tetrachloride	0.96	11		U
108-90-7	Chlorobenzene	0.37	11		U
75-00-3	Chloroethane	1.2	11		U
67-66-3	Chloroform	0.60	11		U
74-87-3	Chloromethane	0.56	11		U
110-82-7	Cyclohexane	0.59	11		U
124-48-1	Dibromochloromethane	0.37	11		U
96-12-8	1,2-Dibromo-3-chloropropane	1.3	5.4		U
106-93-4	1,2-Dibromoethane	0.47	11		U
95-50-1	1,2-Dichlorobenzene	0.40	11		U
541-73-1	1,3-Dichlorobenzene	0.91	11		U
106-46-7	1,4-Dichlorobenzene	0.60	11		U
75-71-8	Dichlorodifluoromethane	1.2	11		U
75-34-3	1,1-Dichloroethane	0.59	11		U
107-06-2	1,2-Dichloroethane	0.50	11		U
75-35-4	1,1-Dichloroethene	1.3	11		U
156-59-2	cis-1,2-Dichloroethene	1.3	11		U
156-60-5	trans-1,2-Dichloroethene	1.2	11		U
78-87-5	1,2-Dichloropropane	0.50	11		U
10061-01-5	cis-1,3-Dichloropropene	0.54	11		U
10061-02-6	trans-1,3-Dichloropropene	0.35	11		U
100-41-4	Ethylbenzene	0.81	11		U
591-78-6	2-Hexanone	2.5	11		U
98-82-8	Isopropylbenzene	0.96	11		U
79-20-9	Methyl acetate	1.7	11		U
75-09-2	Methylene chloride	0.67	11	11	U ~~2.3 JB~~ B
108-87-2	Methyl cyclohexane	0.32	11		U
1634-04-4	Methyl tert-butyl ether	0.35	11		U
108-10-1	4-Methyl-2-pentanone	0.63	11		U
100-42-5	Styrene	0.38	11		U
79-34-5	1,1,2,2-Tetrachloroethane	0.47	11		U
127-18-4	Tetrachloroethene	1.0	11		U

FORM I VOA

LW
4/13/09

FORM 1
VOLATILE ORGANICS ANALYSIS DATA SHEET

CLIENT SAMPLE NO. 19

MR08-SS265-09A

Lab Name: EMPIRICAL LABS Contract: CH2MHILL

Lab Code: NA Case No.: NA SAS No.: NA SDG No.: LEJEUNE047

Matrix: (soil/water) SOIL Lab Sample ID: 0901070-19

Sample wt/vol: 5.0 (g/mL) G Lab File ID: 0107019A

Level: (low/med) LOW Date Sampled: 01/11/09 14:00

% Moisture: not dec. 9 Date Analyzed: 01/19/09 02:24

GC Column: RTX-VRX ID: 0.25 (mm) Dilution Factor: 1.0

Soil Extract Volume:_____(uL) Soil Aliquot Volume: _____(uL)

CONCENTRATION UNITS: (ug/L or ug/Kg) UG/KG

CAS NO.	COMPOUND	MDL	RL	CONC	Q
108-88-3	Toluene	0.93	11	11u ~~1.0~~	~~J~~ U
120-82-1	1,2,4-Trichlorobenzene	0.20	11		U
71-55-6	1,1,1-Trichloroethane	0.98	11		U
79-00-5	1,1,2-Trichloroethane	0.38	11		U
79-01-6	Trichloroethene	0.92	11		U
76-13-1	Trichlorotrifluoroethane	0.60	11		U
75-69-4	Trichlorofluoromethane	1.0	11		U
75-01-4	Vinyl chloride	1.2	11		U
1330-20-7	Xylene(total)	0.76	11		U

a

MW
4/13/09

FORM 1
VOLATILE ORGANICS ANALYSIS DATA SHEET

CLIENT SAMPLE NO. 20

MR08-IS26
5-3-4-09A

Lab Name: EMPIRICAL LABS Contract: CH2MHILL

Lab Code: NA Case No.: NA SAS No.: NA SDG No.: LEJEUNE047

Matrix: (soil/water) SOIL Lab Sample ID: 0901070-20

Sample wt/vol: 5.0 (g/mL) G Lab File ID: 0107020A

Level: (low/med) LOW Date Sampled: 01/11/09 14:15

% Moisture: not dec. 10 Date Analyzed: 01/19/09 02:55

GC Column: RTX-VRX ID: 0.25 (mm) Dilution Factor: 1.0

Soil Extract Volume:_____(uL) Soil Aliquot Volume: _____(uL)

CONCENTRATION UNITS: (ug/L or ug/Kg) UG/KG

CAS NO.	COMPOUND	MDL	RL	CONC	Q
67-64-1	Acetone	2.2	11	21	~~B~~ u B
71-43-2	Benzene	0.53	11		U
75-27-4	Bromodichloromethane	0.34	11		U
75-25-2	Bromoform	1.1	11		U
74-83-9	Bromomethane	0.81	11		U
78-93-3	2-Butanone	1.6	11		U
75-15-0	Carbon disulfide	1.4	11		U
56-23-5	Carbon tetrachloride	0.98	11		U
108-90-7	Chlorobenzene	0.38	11		U
75-00-3	Chloroethane	1.2	11		U
67-66-3	Chloroform	0.62	11		U
74-87-3	Chloromethane	0.58	11		U
110-82-7	Cyclohexane	0.60	11		U
124-48-1	Dibromochloromethane	0.38	11		U
96-12-8	1,2-Dibromo-3-chloropropane	1.3	5.6		U
106-93-4	1,2-Dibromoethane	0.48	11		U
95-50-1	1,2-Dichlorobenzene	0.41	11		U
541-73-1	1,3-Dichlorobenzene	0.94	11		U
106-46-7	1,4-Dichlorobenzene	0.62	11		U
75-71-8	Dichlorodifluoromethane	1.2	11		U
75-34-3	1,1-Dichloroethane	0.60	11		U
107-06-2	1,2-Dichloroethane	0.52	11		U
75-35-4	1,1-Dichloroethene	1.3	11		U
156-59-2	cis-1,2-Dichloroethene	1.3	11		U
156-60-5	trans-1,2-Dichloroethene	1.2	11		U
78-87-5	1,2-Dichloropropane	0.52	11		U
10061-01-5	cis-1,3-Dichloropropene	0.56	11		U
10061-02-6	trans-1,3-Dichloropropene	0.36	11		U
100-41-4	Ethylbenzene	0.84	11		U
591-78-6	2-Hexanone	2.6	11		U
98-82-8	Isopropylbenzene	0.98	11		U
79-20-9	Methyl acetate	1.8	11		U
75-09-2	Methylene chloride	0.69	11	11u	3 ~~.5 JB~~ B
108-87-2	Methyl cyclohexane	0.34	11		U
1634-04-4	Methyl tert-butyl ether	0.36	11		U
108-10-1	4-Methyl-2-pentanone	0.65	11		U
100-42-5	Styrene	0.39	11		U
79-34-5	1,1,2,2-Tetrachloroethane	0.48	11		U
127-18-4	Tetrachloroethene	1.1	11		U

FORM I VOA

LW
4/3/09

FORM 1
VOLATILE ORGANICS ANALYSIS DATA SHEET

CLIENT SAMPLE NO.

20

MR08-IS26
5-3-4-09A

Lab Name: EMPIRICAL LABS Contract: CH2MHILL

Lab Code: NA Case No.: NA SAS No.: NA SDG No.: LEJEUNE047

Matrix: (soil/water) SOIL Lab Sample ID: 0901070-20

Sample wt/vol: 5.0 (g/mL) G Lab File ID: 0107020A

Level: (low/med) LOW Date Sampled: 01/11/09 14:15

% Moisture: not dec. 10 Date Analyzed: 01/19/09 02:55

GC Column: RTX-VRX ID: 0.25 (mm) Dilution Factor: 1.0

Soil Extract Volume:_____(uL) Soil Aliquot Volume: _____(uL)

CONCENTRATION UNITS: (ug/L or ug/Kg) UG/KG

CAS NO.	COMPOUND	MDL	RL	CONC	Q
108-88-3	Toluene	0.96	11		U
120-82-1	1,2,4-Trichlorobenzene	0.20	11		U
71-55-6	1,1,1-Trichloroethane	1.0	11		U
79-00-5	1,1,2-Trichloroethane	0.39	11		U
79-01-6	Trichloroethene	0.95	11		U
76-13-1	Trichlorotrifluoroethane	0.62	11		U
75-69-4	Trichlorofluoromethane	1.1	11		U
75-01-4	Vinyl chloride	1.2	11		U
1330-20-7	Xylene(total)	0.78	11		U

lw
4/13/09

FORM 1
VOLATILE ORGANICS ANALYSIS DATA SHEET

CLIENT SAMPLE NO. 21

MR08-SS266-09A

Lab Name: EMPIRICAL LABS Contract: CH2MHILL

Lab Code: NA Case No.: NA SAS No.: NA SDG No.: LEJEUNE047

Matrix: (soil/water) SOIL Lab Sample ID: 0901070-21

Sample wt/vol: 4.8 (g/mL) G Lab File ID: 0107021A

Level: (low/med) LOW Date Sampled: 01/11/09 14:30

% Moisture: not dec. 11 Date Analyzed: 01/19/09 03:25

GC Column: RTX-VRX ID: 0.25 (mm) Dilution Factor: 1.0

Soil Extract Volume:_____(uL) Soil Aliquot Volume: _____(uL)

CONCENTRATION UNITS: (ug/L or ug/Kg) UG/KG

CAS NO.	COMPOUND	MDL	RL	CONC	Q
67-64-1	Acetone	2.3	12	56	~~B~~ U BL
71-43-2	Benzene	0.55	12		U
75-27-4	Bromodichloromethane	0.35	12		U
75-25-2	Bromoform	1.2	12		U
74-83-9	Bromomethane	0.84	12		U
78-93-3	2-Butanone	1.6	12		U
75-15-0	Carbon disulfide	1.5	12		U
56-23-5	Carbon tetrachloride	1.0	12		U
108-90-7	Chlorobenzene	0.40	12		U
75-00-3	Chloroethane	1.3	12		U
67-66-3	Chloroform	0.64	12		U
74-87-3	Chloromethane	0.61	12		U
110-82-7	Cyclohexane	0.63	12		U
124-48-1	Dibromochloromethane	0.40	12		U
96-12-8	1,2-Dibromo-3-chloropropane	1.4	5.8		U
106-93-4	1,2-Dibromoethane	0.50	12		U
95-50-1	1,2-Dichlorobenzene	0.43	12		U
541-73-1	1,3-Dichlorobenzene	0.98	12		U
106-46-7	1,4-Dichlorobenzene	0.64	12		U
75-71-8	Dichlorodifluoromethane	1.3	12		U
75-34-3	1,1-Dichloroethane	0.63	12		U
107-06-2	1,2-Dichloroethane	0.54	12		U
75-35-4	1,1-Dichloroethene	1.4	12		U
156-59-2	cis-1,2-Dichloroethene	1.4	12		U
156-60-5	trans-1,2-Dichloroethene	1.3	12		U
78-87-5	1,2-Dichloropropane	0.54	12		U
10061-01-5	cis-1,3-Dichloropropene	0.58	12		U
10061-02-6	trans-1,3-Dichloropropene	0.37	12		U
100-41-4	Ethylbenzene	0.87	12		U
591-78-6	2-Hexanone	2.7	12		U
98-82-8	Isopropylbenzene	1.0	12		U
79-20-9	Methyl acetate	1.9	12		U
75-09-2	Methylene chloride	0.72	12	12U	~~2.5~~ ~~JB~~ BL
108-87-2	Methyl cyclohexane	0.35	12		U
1634-04-4	Methyl tert-butyl ether	0.37	12		U
108-10-1	4-Methyl-2-pentanone	0.68	12		U
100-42-5	Styrene	0.41	12		U
79-34-5	1,1,2,2-Tetrachloroethane	0.50	12		U
127-18-4	Tetrachloroethene	1.1	12		U

FORM I VOA

lw
4/3/09

FORM 1
VOLATILE ORGANICS ANALYSIS DATA SHEET

CLIENT SAMPLE NO. 21

MR08-SS266-09A

Lab Name: EMPIRICAL LABS Contract: CH2MHILL

Lab Code: NA Case No.: NA SAS No.: NA SDG No.: LEJEUNE047

Matrix: (soil/water) SOIL Lab Sample ID: 0901070-21

Sample wt/vol: 4.8 (g/mL) G Lab File ID: 0107021A

Level: (low/med) LOW Date Sampled: 01/11/09 14:30

% Moisture: not dec. 11 Date Analyzed: 01/19/09 03:25

GC Column: RTX-VRX ID: 0.25 (mm) Dilution Factor: 1.0

Soil Extract Volume:_____(uL) Soil Aliquot Volume: _____(uL)

CONCENTRATION UNITS: (ug/L or ug/Kg) UG/KG

CAS NO.	COMPOUND	MDL	RL	CONC	Q
108-88-3	Toluene	1.0	12		U
120-82-1	1,2,4-Trichlorobenzene	0.21	12		U
71-55-6	1,1,1-Trichloroethane	1.0	12		U
79-00-5	1,1,2-Trichloroethane	0.41	12		U
79-01-6	Trichloroethene	0.99	12		U
76-13-1	Trichlorotrifluoroethane	0.64	12		U
75-69-4	Trichlorofluoromethane	1.1	12		U
75-01-4	Vinyl chloride	1.3	12		U
1330-20-7	Xylene(total)	0.82	12		U

lew
4/13/09

FORM 1
VOLATILE ORGANICS ANALYSIS DATA SHEET

CLIENT SAMPLE NO. 22

MR08-IS26
6-5-6-09A

Lab Name: EMPIRICAL LABS Contract: CH2MHILL

Lab Code: NA Case No.: NA SAS No.: NA SDG No.: LEJEUNE047

Matrix: (soil/water) SOIL Lab Sample ID: 0901070-22

Sample wt/vol: 4.3 (g/mL) G Lab File ID: 0107022A

Level: (low/med) LOW Date Sampled: 01/11/09 14:45

% Moisture: not dec. 10 Date Analyzed: 01/19/09 03:56

GC Column: RTX-VRX ID: 0.25 (mm) Dilution Factor: 1.0

Soil Extract Volume:_____(uL) Soil Aliquot Volume: _____(uL)

CONCENTRATION UNITS: (ug/L or ug/Kg) UG/KG

CAS NO.	COMPOUND	MDL	RL	CONC	Q
67-64-1	Acetone	2.6	13	13u ~~12~~	~~JB~~ B
71-43-2	Benzene	0.61	13		U
75-27-4	Bromodichloromethane	0.39	13		U
75-25-2	Bromoform	1.3	13		U
74-83-9	Bromomethane	0.93	13		U
78-93-3	2-Butanone	1.8	13		U
75-15-0	Carbon disulfide	1.7	13		U
56-23-5	Carbon tetrachloride	1.1	13		U
108-90-7	Chlorobenzene	0.44	13		U
75-00-3	Chloroethane	1.4	13		U
67-66-3	Chloroform	0.71	13		U
74-87-3	Chloromethane	0.67	13		U
110-82-7	Cyclohexane	0.70	13		U
124-48-1	Dibromochloromethane	0.44	13		U
96-12-8	1,2-Dibromo-3-chloropropane	1.6	6.5		U
106-93-4	1,2-Dibromoethane	0.56	13		U
95-50-1	1,2-Dichlorobenzene	0.48	13		U
541-73-1	1,3-Dichlorobenzene	1.1	13		U
106-46-7	1,4-Dichlorobenzene	0.71	13		U
75-71-8	Dichlorodifluoromethane	1.4	13		U
75-34-3	1,1-Dichloroethane	0.70	13		U
107-06-2	1,2-Dichloroethane	0.59	13		U
75-35-4	1,1-Dichloroethene	1.6	13		U
156-59-2	cis-1,2-Dichloroethene	1.6	13		U
156-60-5	trans-1,2-Dichloroethene	1.4	13		U
78-87-5	1,2-Dichloropropane	0.59	13		U
10061-01-5	cis-1,3-Dichloropropene	0.65	13		U
10061-02-6	trans-1,3-Dichloropropene	0.41	13		U
100-41-4	Ethylbenzene	0.97	13		U
591-78-6	2-Hexanone	3.0	13		U
98-82-8	Isopropylbenzene	1.1	13		U
79-20-9	Methyl acetate	2.1	13		U
75-09-2	Methylene chloride	0.80	13	13u ~~2.7~~	~~JB~~ BL
108-87-2	Methyl cyclohexane	0.39	13		U
1634-04-4	Methyl tert-butyl ether	0.41	13		U
108-10-1	4-Methyl-2-pentanone	0.75	13		U
100-42-5	Styrene	0.45	13		U
79-34-5	1,1,2,2-Tetrachloroethane	0.56	13		U
127-18-4	Tetrachloroethene	1.2	13		U

FORM I VOA

lw
4/13/09

FORM 1
VOLATILE ORGANICS ANALYSIS DATA SHEET

CLIENT SAMPLE NO.

MR08-IS26
6-5-6-09A

22

Lab Name: EMPIRICAL LABS Contract: CH2MHILL

Lab Code: NA Case No.: NA SAS No.: NA SDG No.: LEJEUNE047

Matrix: (soil/water) SOIL Lab Sample ID: 0901070-22

Sample wt/vol: 4.3 (g/mL) G Lab File ID: 0107022A

Level: (low/med) LOW Date Sampled: 01/11/09 14:45

% Moisture: not dec. 10 Date Analyzed: 01/19/09 03:56

GC Column: RTX-VRX ID: 0.25 (mm) Dilution Factor: 1.0

Soil Extract Volume:_____(uL) Soil Aliquot Volume: _____(uL)

CONCENTRATION UNITS: (ug/L or ug/Kg) UG/KG

CAS NO.	COMPOUND	MDL	RL	CONC	Q
108-88-3	Toluene	1.1	13		U
120-82-1	1,2,4-Trichlorobenzene	0.23	13		U
71-55-6	1,1,1-Trichloroethane	1.2	13		U
79-00-5	1,1,2-Trichloroethane	0.45	13		U
79-01-6	Trichloroethene	1.1	13		U
76-13-1	Trichlorotrifluoroethane	0.71	13		U
75-69-4	Trichlorofluoromethane	1.2	13		U
75-01-4	Vinyl chloride	1.4	13		U
1330-20-7	Xylene(total)	0.90	13		U

MW
4/3/09

FORM 1
VOLATILE ORGANICS ANALYSIS DATA SHEET

CLIENT SAMPLE NO. 23

MR08-SS289-09A

Lab Name: EMPIRICAL LABS Contract: CH2MHILL

Lab Code: NA Case No.: NA SAS No.: NA SDG No.: LEJEUNE047

Matrix: (soil/water) SOIL Lab Sample ID: 0901070-23

Sample wt/vol: 5.1 (g/mL) G Lab File ID: 0107023A

Level: (low/med) LOW Date Sampled: 01/11/09 15:00

% Moisture: not dec. 11 Date Analyzed: 01/19/09 04:27

GC Column: RTX-VRX ID: 0.25 (mm) Dilution Factor: 1.0

Soil Extract Volume:_____(uL) Soil Aliquot Volume: _____(uL)

CONCENTRATION UNITS: (ug/L or ug/Kg) UG/KG

CAS NO.	COMPOUND	MDL	RL	CONC	Q
67-64-1	Acetone	2.2	11	130	~~B~~ J
71-43-2	Benzene	0.51	11		U UJ
75-27-4	Bromodichloromethane	0.33	11		U
75-25-2	Bromoform	1.1	11		U
74-83-9	Bromomethane	0.79	11		U
78-93-3	2-Butanone	1.5	11		U
75-15-0	Carbon disulfide	1.4	11		U
56-23-5	Carbon tetrachloride	0.96	11		U
108-90-7	Chlorobenzene	0.37	11		U
75-00-3	Chloroethane	1.2	11		U
67-66-3	Chloroform	0.60	11		U
74-87-3	Chloromethane	0.57	11		U
110-82-7	Cyclohexane	0.59	11		U
124-48-1	Dibromochloromethane	0.37	11		U
96-12-8	1,2-Dibromo-3-chloropropane	1.3	5.5		U
106-93-4	1,2-Dibromoethane	0.47	11		U
95-50-1	1,2-Dichlorobenzene	0.40	11		U
541-73-1	1,3-Dichlorobenzene	0.92	11		U
106-46-7	1,4-Dichlorobenzene	0.60	11		U
75-71-8	Dichlorodifluoromethane	1.2	11		U
75-34-3	1,1-Dichloroethane	0.59	11		U
107-06-2	1,2-Dichloroethane	0.50	11		U
75-35-4	1,1-Dichloroethene	1.3	11		U
156-59-2	cis-1,2-Dichloroethene	1.3	11		U
156-60-5	trans-1,2-Dichloroethene	1.2	11		U
78-87-5	1,2-Dichloropropane	0.50	11		U
10061-01-5	cis-1,3-Dichloropropene	0.55	11		U
10061-02-6	trans-1,3-Dichloropropene	0.35	11		U
100-41-4	Ethylbenzene	0.82	11		U
591-78-6	2-Hexanone	2.5	11		U
98-82-8	Isopropylbenzene	0.96	11		U
79-20-9	Methyl acetate	1.8	11	8.2	~~J~~ J
75-09-2	Methylene chloride	0.68	11	11UJ	~~2.4 JB JSL~~
108-87-2	Methyl cyclohexane	0.33	11		U UJ
1634-04-4	Methyl tert-butyl ether	0.35	11		U
108-10-1	4-Methyl-2-pentanone	0.64	11		U
100-42-5	Styrene	0.38	11		U
79-34-5	1,1,2,2-Tetrachloroethane	0.47	11		U
127-18-4	Tetrachloroethene	1.1	11		U

FORM I VOA

Rev
4/13/09

FORM 1
VOLATILE ORGANICS ANALYSIS DATA SHEET

CLIENT SAMPLE NO. 23

MR08-SS289-09A

Lab Name: EMPIRICAL LABS Contract: CH2MHILL

Lab Code: NA Case No.: NA SAS No.: NA SDG No.: LEJEUNE047

Matrix: (soil/water) SOIL Lab Sample ID: 0901070-23

Sample wt/vol: 5.1 (g/mL) G Lab File ID: 0107023A

Level: (low/med) LOW Date Sampled: 01/11/09 15:00

% Moisture: not dec. 11 Date Analyzed: 01/19/09 04:27

GC Column: RTX-VRX ID: 0.25 (mm) Dilution Factor: 1.0

Soil Extract Volume:_____(uL) Soil Aliquot Volume: _____(uL)

CONCENTRATION UNITS: (ug/L or ug/Kg) UG/KG

CAS NO.	COMPOUND	MDL	RL	CONC	Q
108-88-3	Toluene	0.94	11		~~U~~ UJ
120-82-1	1,2,4-Trichlorobenzene	0.20	11		~~U~~
71-55-6	1,1,1-Trichloroethane	0.98	11		~~U~~
79-00-5	1,1,2-Trichloroethane	0.38	11		~~U~~
79-01-6	Trichloroethene	0.93	11		~~U~~
76-13-1	Trichlorotrifluoroethane	0.60	11		~~U~~
75-69-4	Trichlorofluoromethane	1.0	11		~~U~~
75-01-4	Vinyl chloride	1.2	11		~~U~~
1330-20-7	Xylene(total)	0.77	11		~~U~~

JS

FORM I VOA

lew 4/3/09

FORM 1
VOLATILE ORGANICS ANALYSIS DATA SHEET

CLIENT SAMPLE NO. 23RE

MR08-SS289-09ARE

Lab Name: EMPIRICAL LABS Contract: CH2MHILL

Lab Code: NA Case No.: NA SAS No.: NA SDG No.: LEJEUNE047

Matrix: (soil/water) SOIL Lab Sample ID: 0901070-23RE

Sample wt/vol: 5.5 (g/mL) G Lab File ID: 0107023B

Level: (low/med) LOW Date Sampled: 01/11/09 15:00

% Moisture: not dec. 11 Date Analyzed: 01/22/09 12:38 use original

GC Column: RTX-VRX ID: 0.25 (mm) Dilution Factor: 1.0

Soil Extract Volume:_____(uL) Soil Aliquot Volume:_____(uL)

CONCENTRATION UNITS: (ug/L or ug/Kg) UG/KG

CAS NO.	COMPOUND	MDL	RL	CONC	Q
67-64-1	Acetone	2.0	10	120	J JSL
71-43-2	Benzene	0.48	10		U R
75-27-4	Bromodichloromethane	0.31	10		U
75-25-2	Bromoform	1.0	10		U
74-83-9	Bromomethane	0.74	10		U
78-93-3	2-Butanone	1.4	10		U
75-15-0	Carbon disulfide	1.3	10		U
56-23-5	Carbon tetrachloride	0.90	10		U
108-90-7	Chlorobenzene	0.35	10		U
75-00-3	Chloroethane	1.1	10		U
67-66-3	Chloroform	0.56	10		U
74-87-3	Chloromethane	0.53	10		U
110-82-7	Cyclohexane	0.55	10		U
124-48-1	Dibromochloromethane	0.35	10		U
96-12-8	1,2-Dibromo-3-chloropropane	1.2	5.1		U
106-93-4	1,2-Dibromoethane	0.44	10		U
95-50-1	1,2-Dichlorobenzene	0.38	10		U
541-73-1	1,3-Dichlorobenzene	0.86	10		U
106-46-7	1,4-Dichlorobenzene	0.56	10		U
75-71-8	Dichlorodifluoromethane	1.1	10		U
75-34-3	1,1-Dichloroethane	0.55	10		U
107-06-2	1,2-Dichloroethane	0.47	10		U
75-35-4	1,1-Dichloroethene	1.2	10		U
156-59-2	cis-1,2-Dichloroethene	1.2	10		U
156-60-5	trans-1,2-Dichloroethene	1.1	10		U
78-87-5	1,2-Dichloropropane	0.47	10		U
10061-01-5	cis-1,3-Dichloropropene	0.51	10		U
10061-02-6	trans-1,3-Dichloropropene	0.33	10		U
100-41-4	Ethylbenzene	0.76	10		U
591-78-6	2-Hexanone	2.3	10		U
98-82-8	Isopropylbenzene	0.90	10		U
79-20-9	Methyl acetate	1.6	10		U
75-09-2	Methylene chloride	0.63	10	~~10 UR 3.5~~	~~JB~~ JSL BL
108-87-2	Methyl cyclohexane	0.31	10		U R JSL
1634-04-4	Methyl tert-butyl ether	0.33	10		U
108-10-1	4-Methyl-2-pentanone	0.59	10	4.3	J
100-42-5	Styrene	0.36	10		U R
79-34-5	1,1,2,2-Tetrachloroethane	0.44	10		U
127-18-4	Tetrachloroethene	0.99	10		U

FORM I VOA

lew 4/2/09

FORM 1
VOLATILE ORGANICS ANALYSIS DATA SHEET

CLIENT SAMPLE NO. 23RE

MR08-SS289-09ARE

Lab Name: EMPIRICAL LABS Contract: CH2MHILL

Lab Code: NA Case No.: NA SAS No.: NA SDG No.: LEJEUNE047

Matrix: (soil/water) SOIL Lab Sample ID: 0901070-23RE

Sample wt/vol: 5.5 (g/mL) G Lab File ID: 0107023B

Level: (low/med) LOW Date Sampled: 01/11/09 15:00

% Moisture: not dec. 11 Date Analyzed: 01/22/09 12:38

GC Column: RTX-VRX ID: 0.25 (mm) Dilution Factor: 1.0

use orig. val

Soil Extract Volume:_____(uL) Soil Aliquot Volume: _____(uL)

CONCENTRATION UNITS: (ug/L or ug/Kg) UG/KG

CAS NO.	COMPOUND	MDL	RL	CONC	Q
108-88-3	Toluene	0.88	10		~~U~~ R J SI
120-82-1	1,2,4-Trichlorobenzene	0.18	10	0.32	~~U~~ J
71-55-6	1,1,1-Trichloroethane	0.92	10		~~U~~ R
79-00-5	1,1,2-Trichloroethane	0.36	10		~~U~~
79-01-6	Trichloroethene	0.87	10		~~U~~
76-13-1	Trichlorotrifluoroethane	0.56	10		~~U~~
75-69-4	Trichlorofluoromethane	0.97	10		~~U~~
75-01-4	Vinyl chloride	1.1	10		~~U~~
1330-20-7	Xylene(total)	0.71	10		~~U~~

RE

FORM I VOA

lcw
4/3/09

FORM 1
VOLATILE ORGANICS ANALYSIS DATA SHEET

CLIENT SAMPLE NO. 24

MR08-SS289D-09A

Lab Name: EMPIRICAL LABS Contract: CH2MHILL

Lab Code: NA Case No.: NA SAS No.: NA SDG No.: LEJEUNE047

Matrix: (soil/water) SOIL Lab Sample ID: 0901070-24

Sample wt/vol: 4.9 (g/mL) G Lab File ID: 0107024A

Level: (low/med) LOW Date Sampled: 01/11/09 15:10

% Moisture: not dec. 12 Date Analyzed: 01/19/09 04:58

GC Column: RTX-VRX ID: 0.25 (mm) Dilution Factor: 1.0

Soil Extract Volume:_____(uL) Soil Aliquot Volume: _____(uL)

CONCENTRATION UNITS: (ug/L or ug/Kg) UG/KG

CAS NO.	COMPOUND	MDL	RL	CONC	Q
67-64-1	Acetone	2.3	12	140	~~B~~
71-43-2	Benzene	0.54	12		U
75-27-4	Bromodichloromethane	0.35	12		U
75-25-2	Bromoform	1.2	12		U
74-83-9	Bromomethane	0.84	12		U
78-93-3	2-Butanone	1.6	12	22	
75-15-0	Carbon disulfide	1.5	12		U
56-23-5	Carbon tetrachloride	1.0	12		U
108-90-7	Chlorobenzene	0.39	12		U
75-00-3	Chloroethane	1.3	12		U
67-66-3	Chloroform	0.64	12		U
74-87-3	Chloromethane	0.60	12		U
110-82-7	Cyclohexane	0.63	12		U
124-48-1	Dibromochloromethane	0.39	12		U
96-12-8	1,2-Dibromo-3-chloropropane	1.4	5.8		U
106-93-4	1,2-Dibromoethane	0.50	12		U
95-50-1	1,2-Dichlorobenzene	0.43	12		U
541-73-1	1,3-Dichlorobenzene	0.97	12		U
106-46-7	1,4-Dichlorobenzene	0.64	12		U
75-71-8	Dichlorodifluoromethane	1.3	12		U
75-34-3	1,1-Dichloroethane	0.63	12		U
107-06-2	1,2-Dichloroethane	0.53	12		U
75-35-4	1,1-Dichloroethene	1.4	12		U
156-59-2	cis-1,2-Dichloroethene	1.4	12		U
156-60-5	trans-1,2-Dichloroethene	1.3	12		U
78-87-5	1,2-Dichloropropane	0.53	12		U
10061-01-5	cis-1,3-Dichloropropene	0.58	12		U
10061-02-6	trans-1,3-Dichloropropene	0.37	12		U
100-41-4	Ethylbenzene	0.87	12		U
591-78-6	2-Hexanone	2.7	12		U
98-82-8	Isopropylbenzene	1.0	12		U
79-20-9	Methyl acetate	1.8	12		U
75-09-2	Methylene chloride	0.72	12	124	~~2.6 JB~~ B
108-87-2	Methyl cyclohexane	0.35	12		U
1634-04-4	Methyl tert-butyl ether	0.37	12		U
108-10-1	4-Methyl-2-pentanone	0.67	12		U
100-42-5	Styrene	0.41	12		U
79-34-5	1,1,2,2-Tetrachloroethane	0.50	12		U
127-18-4	Tetrachloroethene	1.1	12		U

FORM I VOA

fw
4/2/09

FORM 1
VOLATILE ORGANICS ANALYSIS DATA SHEET

CLIENT SAMPLE NO.

24

MR08-SS289D-09A

Lab Name: EMPIRICAL LABS Contract: CH2MHILL

Lab Code: NA Case No.: NA SAS No.: NA SDG No.: LEJEUNE047

Matrix: (soil/water) SOIL Lab Sample ID: 0901070-24

Sample wt/vol: 4.9 (g/mL) G Lab File ID: 0107024A

Level: (low/med) LOW Date Sampled: 01/11/09 15:10

% Moisture: not dec. 12 Date Analyzed: 01/19/09 04:58

GC Column: RTX-VRX ID: 0.25 (mm) Dilution Factor: 1.0

Soil Extract Volume:_____(uL) Soil Aliquot Volume: _____(uL)

CONCENTRATION UNITS: (ug/L or ug/Kg) UG/KG

CAS NO.	COMPOUND	MDL	RL	CONC	Q
108-88-3	Toluene	1.00	12		U
120-82-1	1,2,4-Trichlorobenzene	0.21	12		U
71-55-6	1,1,1-Trichloroethane	1.0	12		U
79-00-5	1,1,2-Trichloroethane	0.41	12		U
79-01-6	Trichloroethene	0.99	12		U
76-13-1	Trichlorotrifluoroethane	0.64	12		U
75-69-4	Trichlorofluoromethane	1.1	12		U
75-01-4	Vinyl chloride	1.3	12		U
1330-20-7	Xylene(total)	0.81	12		U

lew
4/13/09

FORM 1
VOLATILE ORGANICS ANALYSIS DATA SHEET

CLIENT SAMPLE NO.

MR08-IS28
9-2-3-09A

25

Lab Name: EMPIRICAL LABS Contract: CH2MHILL

Lab Code: NA Case No.: NA SAS No.: NA SDG No.: LEJEUNE047

Matrix: (soil/water) SOIL Lab Sample ID: 0901070-25

Sample wt/vol: 3.8 (g/mL) G Lab File ID: 0107025A

Level: (low/med) LOW Date Sampled: 01/11/09 15:30

% Moisture: not dec. 16 Date Analyzed: 01/19/09 05:29

GC Column: RTX-VRX ID: 0.25 (mm) Dilution Factor: 1.0

Soil Extract Volume:_____(uL) Soil Aliquot Volume: _____(uL)

CONCENTRATION UNITS: (ug/L or ug/Kg) UG/KG

CAS NO.	COMPOUND	MDL	RL	CONC	Q
67-64-1	Acetone	3.1	16		U
71-43-2	Benzene	0.73	16		U
75-27-4	Bromodichloromethane	0.47	16		U
75-25-2	Bromoform	1.6	16		U
74-83-9	Bromomethane	1.1	16		U
78-93-3	2-Butanone	2.2	16		U
75-15-0	Carbon disulfide	2.0	16		U
56-23-5	Carbon tetrachloride	1.4	16		U
108-90-7	Chlorobenzene	0.53	16		U
75-00-3	Chloroethane	1.7	16		U
67-66-3	Chloroform	0.86	16		U
74-87-3	Chloromethane	0.81	16		U
110-82-7	Cyclohexane	0.84	16		U
124-48-1	Dibromochloromethane	0.53	16		U
96-12-8	1,2-Dibromo-3-chloropropane	1.9	7.8		U
106-93-4	1,2-Dibromoethane	0.67	16		U
95-50-1	1,2-Dichlorobenzene	0.58	16		U
541-73-1	1,3-Dichlorobenzene	1.3	16		U
106-46-7	1,4-Dichlorobenzene	0.86	16		U
75-71-8	Dichlorodifluoromethane	1.7	16		U
75-34-3	1,1-Dichloroethane	0.84	16		U
107-06-2	1,2-Dichloroethane	0.72	16		U
75-35-4	1,1-Dichloroethene	1.9	16		U
156-59-2	cis-1,2-Dichloroethene	1.9	16		U
156-60-5	trans-1,2-Dichloroethene	1.7	16		U
78-87-5	1,2-Dichloropropane	0.72	16		U
10061-01-5	cis-1,3-Dichloropropene	0.78	16		U
10061-02-6	trans-1,3-Dichloropropene	0.50	16		U
100-41-4	Ethylbenzene	1.2	16		U
591-78-6	2-Hexanone	3.6	16		U
98-82-8	Isopropylbenzene	1.4	16		U
79-20-9	Methyl acetate	2.5	16		U
75-09-2	Methylene chloride	0.97	16	16u	~~2.7~~ ~~JB~~ B1
108-87-2	Methyl cyclohexane	0.47	16		U
1634-04-4	Methyl tert-butyl ether	0.50	16		U
108-10-1	4-Methyl-2-pentanone	0.91	16		U
100-42-5	Styrene	0.55	16		U
79-34-5	1,1,2,2-Tetrachloroethane	0.67	16		U
127-18-4	Tetrachloroethene	1.5	16		U

FORM I VOA

JaW
10/2/09

FORM 1
VOLATILE ORGANICS ANALYSIS DATA SHEET

CLIENT SAMPLE NO.

MR08-IS28
9-2-3-09A

25

Lab Name: EMPIRICAL LABS Contract: CH2MHILL

Lab Code: NA Case No.: NA SAS No.: NA SDG No.: LEJEUNE047

Matrix: (soil/water) SOIL Lab Sample ID: 0901070-25

Sample wt/vol: 3.8 (g/mL) G Lab File ID: 0107025A

Level: (low/med) LOW Date Sampled: 01/11/09 15:30

% Moisture: not dec. 16 Date Analyzed: 01/19/09 05:29

GC Column: RTX-VRX ID: 0.25 (mm) Dilution Factor: 1.0

Soil Extract Volume:_____(uL) Soil Aliquot Volume: _____(uL)

CONCENTRATION UNITS: (ug/L or ug/Kg) UG/KG

CAS NO.	COMPOUND	MDL	RL	CONC	Q
108-88-3	Toluene	1.3	16		U
120-82-1	1,2,4-Trichlorobenzene	0.28	16		U
71-55-6	1,1,1-Trichloroethane	1.4	16		U
79-00-5	1,1,2-Trichloroethane	0.55	16		U
79-01-6	Trichloroethene	1.3	16		U
76-13-1	Trichlorotrifluoroethane	0.86	16		U
75-69-4	Trichlorofluoromethane	1.5	16		U
75-01-4	Vinyl chloride	1.7	16		U
1330-20-7	Xylene(total)	1.1	16		U

lew
4/13/09

FORM 1
VOLATILE ORGANICS ANALYSIS DATA SHEET

CLIENT SAMPLE NO.

MR08-IS28
9D-2-3-09A

26

Lab Name: EMPIRICAL LABS Contract: CH2MHILL

Lab Code: NA Case No.: NA SAS No.: NA SDG No.: LEJEUNE047

Matrix: (soil/water) SOIL Lab Sample ID: 0901070-26

Sample wt/vol: 4.9 (g/mL) G Lab File ID: 0107026A

Level: (low/med) LOW Date Sampled: 01/11/09 15:40

% Moisture: not dec. 7 Date Analyzed: 01/19/09 06:00

GC Column: RTX-VRX ID: 0.25 (mm) Dilution Factor: 1.0

Soil Extract Volume:_____(uL) Soil Aliquot Volume: _____(uL)

CONCENTRATION UNITS: (ug/L or ug/Kg) UG/KG

CAS NO.	COMPOUND	MDL	RL	CONC	Q	
67-64-1	Acetone	2.2	11	32	~~B~~ U	BU
71-43-2	Benzene	0.52	11		U	
75-27-4	Bromodichloromethane	0.33	11		U	
75-25-2	Bromoform	1.1	11		U	
74-83-9	Bromomethane	0.79	11		U	
78-93-3	2-Butanone	1.5	11		U	
75-15-0	Carbon disulfide	1.4	11		U	
56-23-5	Carbon tetrachloride	0.97	11		U	
108-90-7	Chlorobenzene	0.37	11		U	
75-00-3	Chloroethane	1.2	11		U	
67-66-3	Chloroform	0.60	11		U	
74-87-3	Chloromethane	0.57	11		U	
110-82-7	Cyclohexane	0.59	11		U	
124-48-1	Dibromochloromethane	0.37	11		U	
96-12-8	1,2-Dibromo-3-chloropropane	1.3	5.5		U	
106-93-4	1,2-Dibromoethane	0.47	11		U	
95-50-1	1,2-Dichlorobenzene	0.41	11		U	
541-73-1	1,3-Dichlorobenzene	0.92	11		U	
106-46-7	1,4-Dichlorobenzene	0.60	11		U	
75-71-8	Dichlorodifluoromethane	1.2	11		U	
75-34-3	1,1-Dichloroethane	0.59	11		U	
107-06-2	1,2-Dichloroethane	0.51	11		U	
75-35-4	1,1-Dichloroethene	1.3	11		U	
156-59-2	cis-1,2-Dichloroethene	1.3	11		U	
156-60-5	trans-1,2-Dichloroethene	1.2	11		U	
78-87-5	1,2-Dichloropropane	0.51	11		U	
10061-01-5	cis-1,3-Dichloropropene	0.55	11		U	
10061-02-6	trans-1,3-Dichloropropene	0.35	11		U	
100-41-4	Ethylbenzene	0.82	11		U	
591-78-6	2-Hexanone	2.5	11		U	
98-82-8	Isopropylbenzene	0.97	11		U	
79-20-9	Methyl acetate	1.8	11		U	
75-09-2	Methylene chloride	0.68	11	11U	~~3.3~~ ~~JB~~	BU
108-87-2	Methyl cyclohexane	0.33	11		U	
1634-04-4	Methyl tert-butyl ether	0.35	11		U	
108-10-1	4-Methyl-2-pentanone	0.64	11		U	
100-42-5	Styrene	0.38	11		U	
79-34-5	1,1,2,2-Tetrachloroethane	0.47	11		U	
127-18-4	Tetrachloroethene	1.1	11		U	

FORM I VOA

LeW
4/3/09

FORM 1
VOLATILE ORGANICS ANALYSIS DATA SHEET

CLIENT SAMPLE NO.

MR08-IS28
9D-2-3-09A

26

Lab Name: EMPIRICAL LABS Contract: CH2MHILL

Lab Code: NA Case No.: NA SAS No.: NA SDG No.: LEJEUNE047

Matrix: (soil/water) SOIL Lab Sample ID: 0901070-26

Sample wt/vol: 4.9 (g/mL) G Lab File ID: 0107026A

Level: (low/med) LOW Date Sampled: 01/11/09 15:40

% Moisture: not dec. 7 Date Analyzed: 01/19/09 06:00

GC Column: RTX-VRX ID: 0.25 (mm) Dilution Factor: 1.0

Soil Extract Volume:_____(uL) Soil Aliquot Volume: _____(uL)

CONCENTRATION UNITS: (ug/L or ug/Kg) UG/KG

CAS NO.	COMPOUND	MDL	RL	CONC	Q
108-88-3	Toluene	0.95	11		U
120-82-1	1,2,4-Trichlorobenzene	0.20	11		U
71-55-6	1,1,1-Trichloroethane	0.99	11		U
79-00-5	1,1,2-Trichloroethane	0.38	11		U
79-01-6	Trichloroethene	0.94	11		U
76-13-1	Trichlorotrifluoroethane	0.60	11		U
75-69-4	Trichlorofluoromethane	1.0	11	1.2	J
75-01-4	Vinyl chloride	1.2	11		U
1330-20-7	Xylene(total)	0.77	11		U

fcw
4/13/09

FORM 1
VOLATILE ORGANICS ANALYSIS DATA SHEET

CLIENT SAMPLE NO. 27

MR08-SS290-09A

Lab Name: EMPIRICAL LABS Contract: CH2MHILL

Lab Code: NA Case No.: NA SAS No.: NA SDG No.: LEJEUNE047

Matrix: (soil/water) SOIL Lab Sample ID: 0901070-27

Sample wt/vol: 3.8 (g/mL) G Lab File ID: 0107027A

Level: (low/med) LOW Date Sampled: 01/11/09 16:00

% Moisture: not dec. 7 Date Analyzed: 01/19/09 06:31

GC Column: RTX-VRX ID: 0.25 (mm) Dilution Factor: 1.0

Soil Extract Volume:_____(uL) Soil Aliquot Volume: _____(uL)

CONCENTRATION UNITS: (ug/L or ug/Kg) UG/KG

CAS NO.	COMPOUND	MDL	RL	CONC	Q
67-64-1	Acetone	2.8	14	42	~~B~~ U B
71-43-2	Benzene	0.66	14		U
75-27-4	Bromodichloromethane	0.42	14		U
75-25-2	Bromoform	1.4	14		U
74-83-9	Bromomethane	1.0	14		U
78-93-3	2-Butanone	2.0	14		U
75-15-0	Carbon disulfide	1.8	14		U
56-23-5	Carbon tetrachloride	1.2	14		U
108-90-7	Chlorobenzene	0.48	14		U
75-00-3	Chloroethane	1.6	14		U
67-66-3	Chloroform	0.78	14		U
74-87-3	Chloromethane	0.74	14		U
110-82-7	Cyclohexane	0.76	14		U
124-48-1	Dibromochloromethane	0.48	14		U
96-12-8	1,2-Dibromo-3-chloropropane	1.7	7.1		U
106-93-4	1,2-Dibromoethane	0.61	14		U
95-50-1	1,2-Dichlorobenzene	0.52	14		U
541-73-1	1,3-Dichlorobenzene	1.2	14		U
106-46-7	1,4-Dichlorobenzene	0.78	14		U
75-71-8	Dichlorodifluoromethane	1.6	14		U
75-34-3	1,1-Dichloroethane	0.76	14		U
107-06-2	1,2-Dichloroethane	0.65	14		U
75-35-4	1,1-Dichloroethene	1.7	14		U
156-59-2	cis-1,2-Dichloroethene	1.7	14		U
156-60-5	trans-1,2-Dichloroethene	1.6	14		U
78-87-5	1,2-Dichloropropane	0.65	14		U
10061-01-5	cis-1,3-Dichloropropene	0.71	14		U
10061-02-6	trans-1,3-Dichloropropene	0.45	14		U
100-41-4	Ethylbenzene	1.1	14		U
591-78-6	2-Hexanone	3.2	14		U
98-82-8	Isopropylbenzene	1.2	14		U
79-20-9	Methyl acetate	2.3	14		U
75-09-2	Methylene chloride	0.88	14	14u	~~2.7~~ ~~JB~~ B
108-87-2	Methyl cyclohexane	0.42	14		U
1634-04-4	Methyl tert-butyl ether	0.45	14		U
108-10-1	4-Methyl-2-pentanone	0.82	14		U
100-42-5	Styrene	0.49	14		U
79-34-5	1,1,2,2-Tetrachloroethane	0.61	14		U
127-18-4	Tetrachloroethene	1.4	14		U

FORM I VOA

JWO 4/13/09

FORM 1
VOLATILE ORGANICS ANALYSIS DATA SHEET

CLIENT SAMPLE NO. 27

MR08-SS290-09A

Lab Name: EMPIRICAL LABS Contract: CH2MHILL

Lab Code: NA Case No.: NA SAS No.: NA SDG No.: LEJEUNE047

Matrix: (soil/water) SOIL Lab Sample ID: 0901070-27

Sample wt/vol: 3.8 (g/mL) G Lab File ID: 0107027A

Level: (low/med) LOW Date Sampled: 01/11/09 16:00

% Moisture: not dec. 7 Date Analyzed: 01/19/09 06:31

GC Column: RTX-VRX ID: 0.25 (mm) Dilution Factor: 1.0

Soil Extract Volume:_____(uL) Soil Aliquot Volume: _____(uL)

CONCENTRATION UNITS: (ug/L or ug/Kg) UG/KG

CAS NO.	COMPOUND	MDL	RL	CONC	Q
108-88-3	Toluene	1.2	14		U
120-82-1	1,2,4-Trichlorobenzene	0.25	14		U
71-55-6	1,1,1-Trichloroethane	1.3	14		U
79-00-5	1,1,2-Trichloroethane	0.49	14		U
79-01-6	Trichloroethene	1.2	14		U
76-13-1	Trichlorotrifluoroethane	0.78	14		U
75-69-4	Trichlorofluoromethane	1.3	14		U
75-01-4	Vinyl chloride	1.6	14		U
1330-20-7	Xylene(total)	0.99	14		U

lew 4/3/09

FORM 1
VOLATILE ORGANICS ANALYSIS DATA SHEET

CLIENT SAMPLE NO. 28

MR08-IS29
0-4-5-09A

Lab Name: EMPIRICAL LABS Contract: CH2MHILL

Lab Code: NA Case No.: NA SAS No.: NA SDG No.: LEJEUNE047

Matrix: (soil/water) SOIL Lab Sample ID: 0901070-28

Sample wt/vol: 4.6 (g/mL) G Lab File ID: 0107028A

Level: (low/med) LOW Date Sampled: 01/11/09 16:20

% Moisture: not dec. 14 Date Analyzed: 01/19/09 07:01

GC Column: RTX-VRX ID: 0.25 (mm) Dilution Factor: 1.0

Soil Extract Volume:_____(uL) Soil Aliquot Volume: _____(uL)

CONCENTRATION UNITS: (ug/L or ug/Kg) UG/KG

CAS NO.	COMPOUND	MDL	RL	CONC	Q
67-64-1	Acetone	2.5	13	13u ~~8.1~~	~~JB~~
71-43-2	Benzene	0.60	13		U
75-27-4	Bromodichloromethane	0.38	13		U
75-25-2	Bromoform	1.3	13		U
74-83-9	Bromomethane	0.91	13		U
78-93-3	2-Butanone	1.8	13		U
75-15-0	Carbon disulfide	1.6	13		U
56-23-5	Carbon tetrachloride	1.1	13		U
108-90-7	Chlorobenzene	0.43	13		U
75-00-3	Chloroethane	1.4	13		U
67-66-3	Chloroform	0.70	13		U
74-87-3	Chloromethane	0.66	13		U
110-82-7	Cyclohexane	0.68	13		U
124-48-1	Dibromochloromethane	0.43	13		U
96-12-8	1,2-Dibromo-3-chloropropane	1.5	6.3		U
106-93-4	1,2-Dibromoethane	0.54	13		U
95-50-1	1,2-Dichlorobenzene	0.47	13		U
541-73-1	1,3-Dichlorobenzene	1.1	13		U
106-46-7	1,4-Dichlorobenzene	0.70	13		U
75-71-8	Dichlorodifluoromethane	1.4	13		U
75-34-3	1,1-Dichloroethane	0.68	13		U
107-06-2	1,2-Dichloroethane	0.58	13		U
75-35-4	1,1-Dichloroethene	1.5	13		U
156-59-2	cis-1,2-Dichloroethene	1.5	13		U
156-60-5	trans-1,2-Dichloroethene	1.4	13		U
78-87-5	1,2-Dichloropropane	0.58	13		U
10061-01-5	cis-1,3-Dichloropropene	0.63	13		U
10061-02-6	trans-1,3-Dichloropropene	0.40	13		U
100-41-4	Ethylbenzene	0.95	13		U
591-78-6	2-Hexanone	2.9	13		U
98-82-8	Isopropylbenzene	1.1	13		U
79-20-9	Methyl acetate	2.0	13		U
75-09-2	Methylene chloride	0.78	13	13u ~~2.7~~	~~JB~~
108-87-2	Methyl cyclohexane	0.38	13		U
1634-04-4	Methyl tert-butyl ether	0.40	13		U
108-10-1	4-Methyl-2-pentanone	0.73	13		U
100-42-5	Styrene	0.44	13		U
79-34-5	1,1,2,2-Tetrachloroethane	0.54	13		U
127-18-4	Tetrachloroethene	1.2	13		U

FORM I VOA

Rew 4/3/09

FORM 1
VOLATILE ORGANICS ANALYSIS DATA SHEET

CLIENT SAMPLE NO. 28

MR08-IS29
0-4-5-09A

Lab Name: EMPIRICAL LABS Contract: CH2MHILL

Lab Code: NA Case No.: NA SAS No.: NA SDG No.: LEJEUNE047

Matrix: (soil/water) SOIL Lab Sample ID: 0901070-28

Sample wt/vol: 4.6 (g/mL) G Lab File ID: 0107028A

Level: (low/med) LOW Date Sampled: 01/11/09 16:20

% Moisture: not dec. 14 Date Analyzed: 01/19/09 07:01

GC Column: RTX-VRX ID: 0.25 (mm) Dilution Factor: 1.0

Soil Extract Volume:_____(uL) Soil Aliquot Volume: _____(uL)

CONCENTRATION UNITS: (ug/L or ug/Kg) UG/KG

CAS NO.	COMPOUND	MDL	RL	CONC	Q
108-88-3	Toluene	1.1	13		U
120-82-1	1,2,4-Trichlorobenzene	0.23	13		U
71-55-6	1,1,1-Trichloroethane	1.1	13		U
79-00-5	1,1,2-Trichloroethane	0.44	13		U
79-01-6	Trichloroethene	1.1	13		U
76-13-1	Trichlorotrifluoroethane	0.70	13		U
75-69-4	Trichlorofluoromethane	1.2	13		U
75-01-4	Vinyl chloride	1.4	13		U
1330-20-7	Xylene(total)	0.89	13		U

Dew 4/13/09

FORM 1
VOLATILE ORGANICS ANALYSIS DATA SHEET

CLIENT SAMPLE NO. 29

MR08-SS313-09A

Lab Name: EMPIRICAL LABS Contract: CH2MHILL

Lab Code: NA Case No.: NA SAS No.: NA SDG No.: LEJEUNE047

Matrix: (soil/water) SOIL Lab Sample ID: 0901070-29

Sample wt/vol: 3.9 (g/mL) G Lab File ID: 0107029A

Level: (low/med) LOW Date Sampled: 01/11/09 16:40

% Moisture: not dec. 11 Date Analyzed: 01/19/09 07:32

GC Column: RTX-VRX ID: 0.25 (mm) Dilution Factor: 1.0

Soil Extract Volume:_____(uL) Soil Aliquot Volume: _____(uL)

CONCENTRATION UNITS: (ug/L or ug/Kg) UG/KG

CAS NO.	COMPOUND	MDL	RL	CONC	Q
67-64-1	Acetone	2.9	14	40	~~B~~ U
71-43-2	Benzene	0.68	14		U
75-27-4	Bromodichloromethane	0.43	14		U
75-25-2	Bromoform	1.4	14		U
74-83-9	Bromomethane	1.0	14		U
78-93-3	2-Butanone	2.0	14		U
75-15-0	Carbon disulfide	1.9	14		U
56-23-5	Carbon tetrachloride	1.3	14		U
108-90-7	Chlorobenzene	0.49	14		U
75-00-3	Chloroethane	1.6	14		U
67-66-3	Chloroform	0.79	14		U
74-87-3	Chloromethane	0.75	14		U
110-82-7	Cyclohexane	0.78	14		U
124-48-1	Dibromochloromethane	0.49	14		U
96-12-8	1,2-Dibromo-3-chloropropane	1.7	7.2		U
106-93-4	1,2-Dibromoethane	0.62	14		U
95-50-1	1,2-Dichlorobenzene	0.53	14		U
541-73-1	1,3-Dichlorobenzene	1.2	14		U
106-46-7	1,4-Dichlorobenzene	0.79	14		U
75-71-8	Dichlorodifluoromethane	1.6	14		U
75-34-3	1,1-Dichloroethane	0.78	14		U
107-06-2	1,2-Dichloroethane	0.66	14		U
75-35-4	1,1-Dichloroethene	1.7	14		U
156-59-2	cis-1,2-Dichloroethene	1.7	14		U
156-60-5	trans-1,2-Dichloroethene	1.6	14		U
78-87-5	1,2-Dichloropropane	0.66	14		U
10061-01-5	cis-1,3-Dichloropropene	0.72	14		U
10061-02-6	trans-1,3-Dichloropropene	0.46	14		U
100-41-4	Ethylbenzene	1.1	14		U
591-78-6	2-Hexanone	3.3	14		U
98-82-8	Isopropylbenzene	1.3	14		U
79-20-9	Methyl acetate	2.3	14		U
75-09-2	Methylene chloride	0.90	14	14	3 ~~.3 JB~~ B
108-87-2	Methyl cyclohexane	0.43	14		U
1634-04-4	Methyl tert-butyl ether	0.46	14		U
108-10-1	4-Methyl-2-pentanone	0.84	14		U
100-42-5	Styrene	0.50	14		U
79-34-5	1,1,2,2-Tetrachloroethane	0.62	14		U
127-18-4	Tetrachloroethene	1.4	14		U

FORM I VOA

kw 4/3/09

FORM 1
VOLATILE ORGANICS ANALYSIS DATA SHEET

CLIENT SAMPLE NO. 29

MR08-SS313-09A

Lab Name: EMPIRICAL LABS Contract: CH2MHILL

Lab Code: NA Case No.: NA SAS No.: NA SDG No.: LEJEUNE047

Matrix: (soil/water) SOIL Lab Sample ID: 0901070-29

Sample wt/vol: 3.9 (g/mL) G Lab File ID: 0107029A

Level: (low/med) LOW Date Sampled: 01/11/09 16:40

% Moisture: not dec. 11 Date Analyzed: 01/19/09 07:32

GC Column: RTX-VRX ID: 0.25 (mm) Dilution Factor: 1.0

Soil Extract Volume:_____(uL) Soil Aliquot Volume: _____(uL)

CONCENTRATION UNITS: (ug/L or ug/Kg) UG/KG

CAS NO.	COMPOUND	MDL	RL	CONC	Q
108-88-3	Toluene	1.2	14		U
120-82-1	1,2,4-Trichlorobenzene	0.26	14		U
71-55-6	1,1,1-Trichloroethane	1.3	14		U
79-00-5	1,1,2-Trichloroethane	0.50	14		U
79-01-6	Trichloroethene	1.2	14		U
76-13-1	Trichlorotrifluoroethane	0.79	14		U
75-69-4	Trichlorofluoromethane	1.4	14		U
75-01-4	Vinyl chloride	1.6	14		U
1330-20-7	Xylene(total)	1.0	14		U

lus
4/3/09

FORM 1
VOLATILE ORGANICS ANALYSIS DATA SHEET

CLIENT SAMPLE NO. 30

MR08-IS31
3-5-6-09A

Lab Name: EMPIRICAL LABS Contract: CH2MHILL

Lab Code: NA Case No.: NA SAS No.: NA SDG No.: LEJEUNE047

Matrix: (soil/water) SOIL Lab Sample ID: 0901070-30

Sample wt/vol: 4.9 (g/mL) G Lab File ID: 0107030A

Level: (low/med) LOW Date Sampled: 01/11/09 16:55

% Moisture: not dec. 13 Date Analyzed: 01/19/09 08:03

GC Column: RTX-VRX ID: 0.25 (mm) Dilution Factor: 1.0

Soil Extract Volume:_____(uL) Soil Aliquot Volume: _____(uL)

CONCENTRATION UNITS: (ug/L or ug/Kg) UG/KG

CAS NO.	COMPOUND	MDL	RL	CONC	Q	
67-64-1	Acetone	2.3	12	12u ~~8.9~~	~~JB~~	BL
71-43-2	Benzene	0.55	12		U	
75-27-4	Bromodichloromethane	0.35	12		U	
75-25-2	Bromoform	1.2	12		U	
74-83-9	Bromomethane	0.84	12		U	
78-93-3	2-Butanone	1.6	12		U	
75-15-0	Carbon disulfide	1.5	12		U	
56-23-5	Carbon tetrachloride	1.0	12		U	
108-90-7	Chlorobenzene	0.40	12		U	
75-00-3	Chloroethane	1.3	12		U	
67-66-3	Chloroform	0.64	12		U	
74-87-3	Chloromethane	0.61	12		U	
110-82-7	Cyclohexane	0.63	12		U	
124-48-1	Dibromochloromethane	0.40	12		U	
96-12-8	1,2-Dibromo-3-chloropropane	1.4	5.8		U	
106-93-4	1,2-Dibromoethane	0.50	12		U	
95-50-1	1,2-Dichlorobenzene	0.43	12		U	
541-73-1	1,3-Dichlorobenzene	0.98	12		U	
106-46-7	1,4-Dichlorobenzene	0.64	12		U	
75-71-8	Dichlorodifluoromethane	1.3	12		U	
75-34-3	1,1-Dichloroethane	0.63	12		U	
107-06-2	1,2-Dichloroethane	0.54	12		U	
75-35-4	1,1-Dichloroethene	1.4	12		U	
156-59-2	cis-1,2-Dichloroethene	1.4	12		U	
156-60-5	trans-1,2-Dichloroethene	1.3	12		U	
78-87-5	1,2-Dichloropropane	0.54	12		U	
10061-01-5	cis-1,3-Dichloropropene	0.58	12		U	
10061-02-6	trans-1,3-Dichloropropene	0.37	12		U	
100-41-4	Ethylbenzene	0.87	12		U	
591-78-6	2-Hexanone	2.7	12		U	
98-82-8	Isopropylbenzene	1.0	12		U	
79-20-9	Methyl acetate	1.9	12		U	
75-09-2	Methylene chloride	0.72	12	12u ~~2.6~~	~~JB~~	BL
108-87-2	Methyl cyclohexane	0.35	12		U	
1634-04-4	Methyl tert-butyl ether	0.37	12		U	
108-10-1	4-Methyl-2-pentanone	0.68	12		U	
100-42-5	Styrene	0.41	12		U	
79-34-5	1,1,2,2-Tetrachloroethane	0.50	12		U	
127-18-4	Tetrachloroethene	1.1	12		U	

FORM I VOA

lew 4/12/09

FORM 1
VOLATILE ORGANICS ANALYSIS DATA SHEET

CLIENT SAMPLE NO. 30

MR08-IS31
3-5-6-09A

Lab Name: EMPIRICAL LABS Contract: CH2MHILL

Lab Code: NA Case No.: NA SAS No.: NA SDG No.: LEJEUNE047

Matrix: (soil/water) SOIL Lab Sample ID: 0901070-30

Sample wt/vol: 4.9 (g/mL) G Lab File ID: 0107030A

Level: (low/med) LOW Date Sampled: 01/11/09 16:55

% Moisture: not dec. 13 Date Analyzed: 01/19/09 08:03

GC Column: RTX-VRX ID: 0.25 (mm) Dilution Factor: 1.0

Soil Extract Volume:_____(uL) Soil Aliquot Volume: _____(uL)

CONCENTRATION UNITS: (ug/L or ug/Kg) UG/KG

CAS NO.	COMPOUND	MDL	RL	CONC	Q
108-88-3	Toluene	1.0	12		U
120-82-1	1,2,4-Trichlorobenzene	0.21	12		U
71-55-6	1,1,1-Trichloroethane	1.0	12		U
79-00-5	1,1,2-Trichloroethane	0.41	12		U
79-01-6	Trichloroethene	0.99	12		U
76-13-1	Trichlorotrifluoroethane	0.64	12		U
75-69-4	Trichlorofluoromethane	1.1	12		U
75-01-4	Vinyl chloride	1.3	12		U
1330-20-7	Xylene(total)	0.82	12		U

MW 4/3/09

FORM 1
VOLATILE ORGANICS ANALYSIS DATA SHEET

CLIENT SAMPLE NO. 31

MR08-EB01
011109-SS

Lab Name: EMPIRICAL LABS Contract: CH2MHILL

Lab Code: NA Case No.: NA SAS No.: NA SDG No.: LEJEUNE047

Matrix: (soil/water) WATER Lab Sample ID: 0901070-31

Sample wt/vol: 5.000 (g/mL) ML Lab File ID: 0107031

Level: (low/med) LOW Date Sampled: 01/11/09 09:00

% Moisture: not dec. _____ Date Analyzed: 01/16/09 07:47

GC Column: RTX-VRX ID: 0.25 (mm) Dilution Factor: 1.0

Soil Extract Volume:_____(uL) Soil Aliquot Volume: _____(uL)

CONCENTRATION UNITS: (ug/L or ug/Kg) UG/L

CAS NO.	COMPOUND	MDL	RL	CONC	Q
67-64-1	Acetone	0.84	2.5		U
71-43-2	Benzene	0.11	1.0		U
75-27-4	Bromodichloromethane	0.10	1.0		U
75-25-2	Bromoform	0.10	1.0		U
74-83-9	Bromomethane	0.32	1.0		U
78-93-3	2-Butanone	1.0	3.0		U
75-15-0	Carbon disulfide	0.13	1.0		U
56-23-5	Carbon tetrachloride	0.15	1.0		U
108-90-7	Chlorobenzene	0.10	1.0		U
75-00-3	Chloroethane	0.18	1.0		U
67-66-3	Chloroform	0.11	1.0		U
74-87-3	Chloromethane	0.29	1.0		U
110-82-7	Cyclohexane	0.20	1.0		U
124-48-1	Dibromochloromethane	0.10	1.0		U
96-12-8	1,2-Dibromo-3-chloropropane	0.11	1.0		U
106-93-4	1,2-Dibromoethane	0.10	1.0		U
95-50-1	1,2-Dichlorobenzene	0.10	1.0		U
541-73-1	1,3-Dichlorobenzene	0.13	1.0		U
106-46-7	1,4-Dichlorobenzene	0.10	1.0		U
75-71-8	Dichlorodifluoromethane	0.22	1.0		U
75-34-3	1,1-Dichloroethane	0.12	1.0		U
107-06-2	1,2-Dichloroethane	0.10	1.0		U
75-35-4	1,1-Dichloroethene	0.15	1.0		U
156-59-2	cis-1,2-Dichloroethene	0.13	1.0		U
156-60-5	trans-1,2-Dichloroethene	0.13	1.0		U
78-87-5	1,2-Dichloropropane	0.10	1.0		U
10061-01-5	cis-1,3-Dichloropropene	0.11	1.0		U
10061-02-6	trans-1,3-Dichloropropene	0.10	1.0		U
100-41-4	Ethylbenzene	0.13	1.0		U
591-78-6	2-Hexanone	0.30	1.0		U
98-82-8	Isopropylbenzene	0.15	1.0		U
79-20-9	Methyl acetate	0.30	1.0		U
75-09-2	Methylene chloride	0.14	1.0	1.0 ~~0.90~~ ~~JB~~	B
108-87-2	Methyl cyclohexane	0.17	1.0		U
1634-04-4	Methyl tert-butyl ether	0.10	1.0		U
108-10-1	4-Methyl-2-pentanone	0.29	1.0		U
100-42-5	Styrene	0.10	1.0		U
79-34-5	1,1,2,2-Tetrachloroethane	0.10	1.0		U
127-18-4	Tetrachloroethene	0.15	1.0		U

FORM I VOA

lew 4/2/09

FORM 1
VOLATILE ORGANICS ANALYSIS DATA SHEET

CLIENT SAMPLE NO. 31

MR08-EB01
011109-SS

Lab Name: EMPIRICAL LABS Contract: CH2MHILL

Lab Code: NA Case No.: NA SAS No.: NA SDG No.: LEJEUNE047

Matrix: (soil/water) WATER Lab Sample ID: 0901070-31

Sample wt/vol: 5.000 (g/mL) ML Lab File ID: 0107031

Level: (low/med) LOW Date Sampled: 01/11/09 09:00

% Moisture: not dec. _____ Date Analyzed: 01/16/09 07:47

GC Column: RTX-VRX ID: 0.25 (mm) Dilution Factor: 1.0

Soil Extract Volume:_____(uL) Soil Aliquot Volume: _____(uL)

CONCENTRATION UNITS: (ug/L or ug/Kg) UG/L

CAS NO.	COMPOUND	MDL	RL	CONC	Q
108-88-3	Toluene	0.10	1.0	16	
120-82-1	1,2,4-Trichlorobenzene	0.10	1.0		U
71-55-6	1,1,1-Trichloroethane	0.17	1.0		U
79-00-5	1,1,2-Trichloroethane	0.10	1.0		U
79-01-6	Trichloroethene	0.13	1.0		U
76-13-1	Trichlorotrifluoroethane	0.18	1.0		U
75-69-4	Trichlorofluoromethane	0.17	1.0		U
75-01-4	Vinyl chloride	0.18	1.0		U
1330-20-7	Xylene(total)	0.22	1.0		U

MW 4/13/09

ENVIRONMENTAL
Data Services, Inc.

VOLATILE ORGANIC COMPOUNDS
USEPA Region IV - Level IV Review

Site: MCB Camp Lejeune, TO-09 SDG #: LEJEUNE048

Client: CH2M HILL, Inc., Virginia Beach, Virginia Date: April 3, 2009

Laboratory: Empirical Laboratories, Nashville, Tennessee Reviewer: Nancy Weaver

EDS ID	Client Sample ID	Laboratory Sample ID	Matrix
1	MR08-SS291-09A	0901091-01	Soil
1RE	MR08-SS291-09ARE	0901091-01RE	Soil
2	MR08-IS291-8-9-09A	0901091-02	Soil
3	MR08-SS292-09A	090109103	Soil
4	MR08-IS292-5-6-09A	0901091-04	Soil
5	MR08-SS293-09A	0901091-05	Soil
6	MR08-IS293-2-3-09A	0901091-06	Soil
7	MR08-SS294-09A	0901091-07	Soil
8	MR08-IS294-8-9-09A	0901091-08	Soil
9	MR08-SS295-09A	0901091-09	Soil
10	MR08-IS295-2-3-09A	0901091-10	Soil
11	MR08-SS296-09A	0901091-11	Soil
12	MR08-IS296-5-6-09A	0901091-12	Soil
13	MR08-SS300-09A	0901091-13	Soil
14	MR08-IS300-8-9-09A	0901091-14	Soil
15	MR08-SS301-09A	0901091-15	Soil
16	MR08-IS301-7-8-09A	0901091-16	Soil
17	MR08-SS302-09A	0901091-17	Soil
18	MR08-IS302-8-9-09A	0901091-18	Soil
19	MR08-SS303-09A	0901091-19	Soil
20	MR08-IS303-6-7-09A	0901091-20	Soil
21	MR08-EB01011209-SS	0901091-21	Water
22	MR08-TB01011209	0901091-22	Water

The USEPA "Contract Laboratory Program National Functional Guidelines for Organic Data Review," October 1999, and professional judgement were used in evaluating the data in this summary report.

Holding Times - All samples were analyzed within 14 days for preserved water and soil samples.

GC/MS Tuning - All of the BFB tunes in the initial and continuing calibrations met the percent relative abundance criteria.

Initial Calibration - The initial calibrations exhibited acceptable %RSD and mean RRF values.

Continuing Calibration - The continuing calibrations exhibited acceptable %D and RRF values except the following.

CCAL Date	Compound	%D/RRF	Qualifier	Affected Samples
1/16/09	Bromomethane	30.8%	J/UJ	21, 22
1/17/09	1, 2, 4-Trichlorobenzene	30.9%	J/UJ	2-14, 16, 19
1/19/09	Bromodichloromethane	34.8%	J/UJ	1RE, 15, 17, 20
	Bromomethane	40.0%	J/UJ	1RE, 15, 17, 20
	Carbon tetrachloride	69.1%	J/UJ	1RE, 15, 17, 20
	Chloroform	30.3%	J/UJ	1RE, 15, 17, 20
	Chloromethane	37.7%	J/UJ	1RE, 15, 17, 20
	Dichlorodifluoromethane	79.4%	J/UJ	1RE, 15, 17, 20
	1, 2-Dichloroethane	46.3%	J/UJ	1RE, 15, 17, 20
	Methylene chloride	27.4%	J/UJ	1RE, 15, 17, 20
	MTBE	29.0%	J/UJ	1RE, 15, 17, 20
	1, 1, 1,-Trichloroethane	59.2%	J/UJ	1RE, 15, 17, 20
	Trichlorotrifluoroethane	35.3%	J/UJ	1RE, 15, 17, 20
	Trichlorofluoromethane	100.1%	J/UJ	1RE, 15, 17, 20
	Vinyl chloride	49.1%	J/UJ	1RE, 15, 17, 20

Surrogates - All samples exhibited acceptable surrogate recoveries except the following.

Sample ID	Surrogate	%R	Qualifier
1RE	S1-Dibromofluoromethane	127%	J - positive results

MS/MSD - A MS/MSD sample was not analyzed from this data package.

Laboratory Control Sample - The LCS samples exhibited acceptable %R values except the following.

LCS ID	Compound	%R	Qualifier	Affected Samples
V1BLK0119	Carbon tetrachloride	147%	None	All associated ND
	Dichlorodifluoromethane	144%	None	All associated ND
	1, 2-Dichloroethane	133%	None	All associated ND
	1, 1, 1-Trichloroethane	141%	None	All associated ND

Internal Standard (IS) Area Performance - All internal standards met response and retention time (RT) criteria except the following.

Sample ID	Internal Standard	Area Count	Qualifier
1	IS3-1, 4-Dichlorobenzene-d4	Low	J/UJ
1RE	IS3-1, 4-Dichlorobenzene-d4	Low	J/UJ

Method Blank - The method blanks exhibited the following contamination.

Blank ID	Compound	Conc.	Action Level	Qualifier	Affected Samples
V3BLK0116	Methylene chloride	0.23 ug/L	2.3 ug/L	U	21, 22
V4BLK0117	Methylene chloride	2.3 ug/kg	23 ug/kg	U	1-14, 16, 19
	1, 2, 4-Trichlorobenzene	0.36 ug/kg	1.8 ug/kg	U	1-3, 5
V4BLK0117E	Methylene chloride	2.7 ug/kg	27 ug/kg	U	18
	1, 2, 4-Trichlorobenzene	0.33 ug/kg	1.65 ug/kg	U	18
V1BLK0119	Methylene chloride	1.8 ug/kg	18 ug/kg	U	1RE, 15, 17, 20

Trip, Field, Equipment Blank - Field QC results are summarized below.

Blank ID	Compound	Conc. ug/L	Action Level ug/kg	Qualifier	Affected Samples
MR08-EB01011209-SS	Toluene	10	50	None	See FB
MR08-TB01011209	Toluene	10	50	None	See FB
MR08-FB01011009	Toluene	20	100	U	7, 9, 11, 15, 17

Field Duplicates - Field duplicate samples were not included in this data package.

Tentatively Identified Compounds (TICs) - TICs were not reported.

Compound Quantitation - Several samples exhibited internal standard and/or surrogate deficiencies. These samples were reanalyzed at various dilutions. Refer to Form Is for which were used for reporting purposes.

FORM 1
VOLATILE ORGANICS ANALYSIS DATA SHEET

CLIENT SAMPLE NO.

MR08-SS291-09A

Lab Name: EMPIRICAL LABS Contract: CH2MHILL

Lab Code: NA Case No.: NA SAS No.: NA SDG No.: LEJEUNE048

Matrix: (soil/water) SOIL Lab Sample ID: 0901091-01

Sample wt/vol: 5.6 (g/mL) G Lab File ID: 0109101A

Level: (low/med) LOW Date Sampled: 01/12/09 08:05

% Moisture: not dec. 11 Date Analyzed: 01/17/09 15:45

GC Column: RTX-VRX ID: 0.25 (mm) Dilution Factor: 1.0

Soil Extract Volume:_____(uL) Soil Aliquot Volume: _____(uL)

CONCENTRATION UNITS: (ug/L or ug/Kg) UG/KG

CAS NO.	COMPOUND	MDL	RL	CONC	Q
67-64-1	Acetone	2.0	10	42	
71-43-2	Benzene	0.47	10		U
75-27-4	Bromodichloromethane	0.30	10		U
75-25-2	Bromoform	1.00	10		U
74-83-9	Bromomethane	0.72	10		U
78-93-3	2-Butanone	1.4	10	3.8	J
75-15-0	Carbon disulfide	1.3	10		U
56-23-5	Carbon tetrachloride	0.88	10		U
108-90-7	Chlorobenzene	0.34	10		U
75-00-3	Chloroethane	1.1	10		U
67-66-3	Chloroform	0.55	10		U
74-87-3	Chloromethane	0.52	10		U
110-82-7	Cyclohexane	0.54	10		U
124-48-1	Dibromochloromethane	0.34	10		U
96-12-8	1,2-Dibromo-3-chloropropane	1.2	5.0		~~U~~ UJ IS
106-93-4	1,2-Dibromoethane	0.43	10		U
95-50-1	1,2-Dichlorobenzene	0.37	10		~~U~~ UJ IS
541-73-1	1,3-Dichlorobenzene	0.84	10		U
106-46-7	1,4-Dichlorobenzene	0.55	10		U
75-71-8	Dichlorodifluoromethane	1.1	10		U
75-34-3	1,1-Dichloroethane	0.54	10		U
107-06-2	1,2-Dichloroethane	0.46	10		U
75-35-4	1,1-Dichloroethene	1.2	10		U
156-59-2	cis-1,2-Dichloroethene	1.2	10		U
156-60-5	trans-1,2-Dichloroethene	1.1	10		U
78-87-5	1,2-Dichloropropane	0.46	10		U
10061-01-5	cis-1,3-Dichloropropene	0.50	10		U
10061-02-6	trans-1,3-Dichloropropene	0.32	10		U
100-41-4	Ethylbenzene	0.75	10		U
591-78-6	2-Hexanone	2.3	10		U
98-82-8	Isopropylbenzene	0.88	10		U
79-20-9	Methyl acetate	1.6	10		U
75-09-2	Methylene chloride	0.62	10	10U ~~2.0~~	JB B
108-87-2	Methyl cyclohexane	0.30	10		U
1634-04-4	Methyl tert-butyl ether	0.32	10		U
108-10-1	4-Methyl-2-pentanone	0.58	10		U
100-42-5	Styrene	0.35	10		U
79-34-5	1,1,2,2-Tetrachloroethane	0.43	10		~~U~~ UJ IS
127-18-4	Tetrachloroethene	0.96	10		U

FORM I VOA

LeW
4/12/09

FORM 1
VOLATILE ORGANICS ANALYSIS DATA SHEET

CLIENT SAMPLE NO.

MR08-SS291-09A

Lab Name: EMPIRICAL LABS Contract: CH2MHILL

Lab Code: NA Case No.: NA SAS No.: NA SDG No.: LEJEUNE048

Matrix: (soil/water) SOIL Lab Sample ID: 0901091-01

Sample wt/vol: 5.6 (g/mL) G Lab File ID: 0109101A

Level: (low/med) LOW Date Sampled: 01/12/09 08:05

% Moisture: not dec. 11 Date Analyzed: 01/17/09 15:45

GC Column: RTX-VRX ID: 0.25 (mm) Dilution Factor: 1.0

Soil Extract Volume:_____(uL) Soil Aliquot Volume: _____(uL)

CONCENTRATION UNITS: (ug/L or ug/Kg) UG/KG

CAS NO.	COMPOUND	MDL	RL	CONC	Q
108-88-3	Toluene	0.86	10		U
120-82-1	1,2,4-Trichlorobenzene	0.18	10	10UJ ~~0.44 JB~~ ISL BK	
71-55-6	1,1,1-Trichloroethane	0.90	10		U
79-00-5	1,1,2-Trichloroethane	0.35	10		U
79-01-6	Trichloroethene	0.84	10		U
76-13-1	Trichlorotrifluoroethane	0.55	10		U
75-69-4	Trichlorofluoromethane	0.94	10		U
75-01-4	Vinyl chloride	1.1	10		U
1330-20-7	Xylene(total)	0.70	10		U

lw
4/13/09

FORM 1
VOLATILE ORGANICS ANALYSIS DATA SHEET

CLIENT SAMPLE NO.

MR08-SS291-09AR~~2~~ 1 PG

Lab Name: EMPIRICAL LABS Contract: CH2MHILL

Lab Code: NA Case No.: NA SAS No.: NA SDG No.: LEJEUNE048

Matrix: (soil/water) SOIL Lab Sample ID: 0901091-01R~~C~~

Sample wt/vol: 4.6 (g/mL) G Lab File ID: 0109101B

Level: (low/med) LOW Date Sampled: 01/12/09 08:05 Use original

% Moisture: not dec. 11 Date Analyzed: 01/19/09 15:53

GC Column: RTX-VRX ID: 0.25 (mm) Dilution Factor: 1.0

Soil Extract Volume:_____(uL) Soil Aliquot Volume: _____(uL)

CONCENTRATION UNITS: (ug/L or ug/Kg) UG/KG

CAS NO.	COMPOUND	MDL	RL	CONC	Q
67-64-1	Acetone	2.4	12	90	J SSH
71-43-2	Benzene	0.57	12		U
75-27-4	Bromodichloromethane	0.36	12		~~U~~ UJ CCH
75-25-2	Bromoform	1.2	12		U
74-83-9	Bromomethane	0.87	12		~~U~~ UJ CCH
78-93-3	2-Butanone	1.7	12	2.4	~~U~~ J SSH
75-15-0	Carbon disulfide	1.6	12		U
56-23-5	Carbon tetrachloride	1.1	12		~~U~~ UJ CCH
108-90-7	Chlorobenzene	0.41	12		U
75-00-3	Chloroethane	1.3	12		U
67-66-3	Chloroform	0.66	12		~~U~~ UJ CCH
74-87-3	Chloromethane	0.63	12		~~U~~ UJ CCH
110-82-7	Cyclohexane	0.65	12		U
124-48-1	Dibromochloromethane	0.41	12		U
96-12-8	1,2-Dibromo-3-chloropropane	1.4	6.0		~~U~~ UJ ISH
106-93-4	1,2-Dibromoethane	0.52	12		U
95-50-1	1,2-Dichlorobenzene	0.45	12		~~U~~ UJ ISH
541-73-1	1,3-Dichlorobenzene	1.0	12		U ↓
106-46-7	1,4-Dichlorobenzene	0.66	12		U ↓
75-71-8	Dichlorodifluoromethane	1.3	12		~~U~~ UJ CCH
75-34-3	1,1-Dichloroethane	0.65	12		U
107-06-2	1,2-Dichloroethane	0.56	12		~~U~~ UJ CCH
75-35-4	1,1-Dichloroethene	1.4	12		U
156-59-2	cis-1,2-Dichloroethene	1.4	12		U
156-60-5	trans-1,2-Dichloroethene	1.3	12		U
78-87-5	1,2-Dichloropropane	0.56	12		U
10061-01-5	cis-1,3-Dichloropropene	0.60	12		U
10061-02-6	trans-1,3-Dichloropropene	0.39	12		U
100-41-4	Ethylbenzene	0.90	12		U
591-78-6	2-Hexanone	2.8	12		U
98-82-8	Isopropylbenzene	1.1	12		U
79-20-9	Methyl acetate	1.9	12		U
75-09-2	Methylene chloride	0.75	12	12UJ	3~~.5~~ ~~JB~~ CCH B
108-87-2	Methyl cyclohexane	0.36	12		U
1634-04-4	Methyl tert-butyl ether	0.39	12		~~U~~ UJ CCH
108-10-1	4-Methyl-2-pentanone	0.70	12		U
100-42-5	Styrene	0.42	12		U
79-34-5	1,1,2,2-Tetrachloroethane	0.52	12		~~U~~ UJ ISH
127-18-4	Tetrachloroethene	1.2	12		U

FORM I VOA

LW
4/13/09

FORM 1
VOLATILE ORGANICS ANALYSIS DATA SHEET

CLIENT SAMPLE NO.

MR08-SS291-09ARE RE

Lab Name: EMPIRICAL LABS Contract: CH2MHILL

Lab Code: NA Case No.: NA SAS No.: NA SDG No.: LEJEUNE048

Matrix: (soil/water) SOIL Lab Sample ID: 0901091-01RE

Sample wt/vol: 4.6 (g/mL) G Lab File ID: 0109101B

Level: (low/med) LOW Date Sampled: 01/12/09 08:05

% Moisture: not dec. 11 Date Analyzed: 01/19/09 15:53 use original

GC Column: RTX-VRX ID: 0.25 (mm) Dilution Factor: 1.0

Soil Extract Volume:_____(uL) Soil Aliquot Volume: _____(uL)

CONCENTRATION UNITS: (ug/L or ug/Kg) UG/KG

CAS NO.	COMPOUND	MDL	RL	CONC	Q
108-88-3	Toluene	1.0	12		U
120-82-1	1,2,4-Trichlorobenzene	0.22	12		~~U~~ UJ ISC
71-55-6	1,1,1-Trichloroethane	1.1	12		~~U~~ UJ CC
79-00-5	1,1,2-Trichloroethane	0.42	12		U
79-01-6	Trichloroethene	1.0	12		U
76-13-1	Trichlorotrifluoroethane	0.66	12		~~U~~ UJ CC
75-69-4	Trichlorofluoromethane	1.1	12		~~U~~ UJ ↓
75-01-4	Vinyl chloride	1.3	12		~~U~~ UJ ↓
1330-20-7	Xylene(total)	0.84	12		U

FORM I VOA

LW 4/13/09

FORM 1
VOLATILE ORGANICS ANALYSIS DATA SHEET

CLIENT SAMPLE NO. 2

MR08-IS29
1-8-9-09A

Lab Name: EMPIRICAL LABS Contract: CH2MHILL

Lab Code: NA Case No.: NA SAS No.: NA SDG No.: LEJEUNE048

Matrix: (soil/water) SOIL Lab Sample ID: 0901091-02

Sample wt/vol: 4.6 (g/mL) G Lab File ID: 0109102A

Level: (low/med) LOW Date Sampled: 01/12/09 08:25

% Moisture: not dec. 12 Date Analyzed: 01/17/09 16:16

GC Column: RTX-VRX ID: 0.25 (mm) Dilution Factor: 1.0

Soil Extract Volume:_____(uL) Soil Aliquot Volume: _____(uL)

CONCENTRATION UNITS: (ug/L or ug/Kg) UG/KG

CAS NO.	COMPOUND	MDL	RL	CONC	Q
67-64-1	Acetone	2.5	12	5.6	J
71-43-2	Benzene	0.58	12		U
75-27-4	Bromodichloromethane	0.37	12		U
75-25-2	Bromoform	1.2	12		U
74-83-9	Bromomethane	0.89	12		U
78-93-3	2-Butanone	1.7	12		U
75-15-0	Carbon disulfide	1.6	12		U
56-23-5	Carbon tetrachloride	1.1	12		U
108-90-7	Chlorobenzene	0.42	12		U
75-00-3	Chloroethane	1.4	12		U
67-66-3	Chloroform	0.68	12		U
74-87-3	Chloromethane	0.64	12		U
110-82-7	Cyclohexane	0.67	12		U
124-48-1	Dibromochloromethane	0.42	12		U
96-12-8	1,2-Dibromo-3-chloropropane	1.5	6.2		U
106-93-4	1,2-Dibromoethane	0.53	12		U
95-50-1	1,2-Dichlorobenzene	0.46	12		U
541-73-1	1,3-Dichlorobenzene	1.0	12		U
106-46-7	1,4-Dichlorobenzene	0.68	12		U
75-71-8	Dichlorodifluoromethane	1.4	12		U
75-34-3	1,1-Dichloroethane	0.67	12		U
107-06-2	1,2-Dichloroethane	0.57	12		U
75-35-4	1,1-Dichloroethene	1.5	12		U
156-59-2	cis-1,2-Dichloroethene	1.5	12		U
156-60-5	trans-1,2-Dichloroethene	1.4	12		U
78-87-5	1,2-Dichloropropane	0.57	12		U
10061-01-5	cis-1,3-Dichloropropene	0.62	12		U
10061-02-6	trans-1,3-Dichloropropene	0.40	12		U
100-41-4	Ethylbenzene	0.93	12		U
591-78-6	2-Hexanone	2.8	12		U
98-82-8	Isopropylbenzene	1.1	12		U
79-20-9	Methyl acetate	2.0	12		U
75-09-2	Methylene chloride	0.77	12	12U	~~3.3~~ ~~JB~~ BL
108-87-2	Methyl cyclohexane	0.37	12		U
1634-04-4	Methyl tert-butyl ether	0.40	12		U
108-10-1	4-Methyl-2-pentanone	0.72	12		U
100-42-5	Styrene	0.43	12		U
79-34-5	1,1,2,2-Tetrachloroethane	0.53	12		U
127-18-4	Tetrachloroethene	1.2	12		U

FORM I VOA

kW
4/3/09

FORM 1
VOLATILE ORGANICS ANALYSIS DATA SHEET

CLIENT SAMPLE NO.

MR08-IS29
1-8-9-09A

2

Lab Name: EMPIRICAL LABS Contract: CH2MHILL

Lab Code: NA Case No.: NA SAS No.: NA SDG No.: LEJEUNE048

Matrix: (soil/water) SOIL Lab Sample ID: 0901091-02

Sample wt/vol: 4.6 (g/mL) G Lab File ID: 0109102A

Level: (low/med) LOW Date Sampled: 01/12/09 08:25

% Moisture: not dec. 12 Date Analyzed: 01/17/09 16:16

GC Column: RTX-VRX ID: 0.25 (mm) Dilution Factor: 1.0

Soil Extract Volume:_____(uL) Soil Aliquot Volume: _____(uL)

CONCENTRATION UNITS: (ug/L or ug/Kg) UG/KG

CAS NO.	COMPOUND	MDL	RL	CONC	Q
108-88-3	Toluene	1.1	12		U
120-82-1	1,2,4-Trichlorobenzene	0.22	12	12J0.24	~~JB~~ CH B
71-55-6	1,1,1-Trichloroethane	1.1	12		U
79-00-5	1,1,2-Trichloroethane	0.43	12		U
79-01-6	Trichloroethene	1.0	12		U
76-13-1	Trichlorotrifluoroethane	0.68	12		U
75-69-4	Trichlorofluoromethane	1.2	12		U
75-01-4	Vinyl chloride	1.4	12		U
1330-20-7	Xylene(total)	0.86	12		U

LW
4/13/09

FORM 1
VOLATILE ORGANICS ANALYSIS DATA SHEET

CLIENT SAMPLE NO.

MR08-SS292-09A 3

Lab Name: EMPIRICAL LABS Contract: CH2MHILL

Lab Code: NA Case No.: NA SAS No.: NA SDG No.: LEJEUNE048

Matrix: (soil/water) SOIL Lab Sample ID: 0901091-03

Sample wt/vol: 5.1 (g/mL) G Lab File ID: 0109103A

Level: (low/med) LOW Date Sampled: 01/12/09 09:05

% Moisture: not dec. 8 Date Analyzed: 01/17/09 16:46

GC Column: RTX-VRX ID: 0.25 (mm) Dilution Factor: 1.0

Soil Extract Volume:_____(uL) Soil Aliquot Volume: _____(uL)

CONCENTRATION UNITS: (ug/L or ug/Kg) UG/KG

CAS NO.	COMPOUND	MDL	RL	CONC	Q
67-64-1	Acetone	2.1	10	61	
71-43-2	Benzene	0.50	10		U
75-27-4	Bromodichloromethane	0.32	10		U
75-25-2	Bromoform	1.0	10		U
74-83-9	Bromomethane	0.76	10		U
78-93-3	2-Butanone	1.5	10	5.8	J
75-15-0	Carbon disulfide	1.4	10		U
56-23-5	Carbon tetrachloride	0.93	10		U
108-90-7	Chlorobenzene	0.36	10		U
75-00-3	Chloroethane	1.2	10		U
67-66-3	Chloroform	0.58	10		U
74-87-3	Chloromethane	0.55	10		U
110-82-7	Cyclohexane	0.57	10		U
124-48-1	Dibromochloromethane	0.36	10		U
96-12-8	1,2-Dibromo-3-chloropropane	1.3	5.3		U
106-93-4	1,2-Dibromoethane	0.45	10		U
95-50-1	1,2-Dichlorobenzene	0.39	10		U
541-73-1	1,3-Dichlorobenzene	0.88	10		U
106-46-7	1,4-Dichlorobenzene	0.58	10		U
75-71-8	Dichlorodifluoromethane	1.2	10		U
75-34-3	1,1-Dichloroethane	0.57	10		U
107-06-2	1,2-Dichloroethane	0.48	10		U
75-35-4	1,1-Dichloroethene	1.3	10		U
156-59-2	cis-1,2-Dichloroethene	1.3	10		U
156-60-5	trans-1,2-Dichloroethene	1.2	10		U
78-87-5	1,2-Dichloropropane	0.48	10		U
10061-01-5	cis-1,3-Dichloropropene	0.53	10		U
10061-02-6	trans-1,3-Dichloropropene	0.34	10		U
100-41-4	Ethylbenzene	0.79	10		U
591-78-6	2-Hexanone	2.4	10		U
98-82-8	Isopropylbenzene	0.93	10		U
79-20-9	Methyl acetate	1.7	10		U
75-09-2	Methylene chloride	0.65	10	104 ~~2.3~~	~~JB~~ B
108-87-2	Methyl cyclohexane	0.32	10		U
1634-04-4	Methyl tert-butyl ether	0.34	10		U
108-10-1	4-Methyl-2-pentanone	0.61	10		U
100-42-5	Styrene	0.37	10		U
79-34-5	1,1,2,2-Tetrachloroethane	0.45	10		U
127-18-4	Tetrachloroethene	1.0	10		U

FORM I VOA

KW
4/2/09

FORM 1
VOLATILE ORGANICS ANALYSIS DATA SHEET

CLIENT SAMPLE NO. 3

MR08-SS292-09A

Lab Name: EMPIRICAL LABS Contract: CH2MHILL

Lab Code: NA Case No.: NA SAS No.: NA SDG No.: LEJEUNE048

Matrix: (soil/water) SOIL Lab Sample ID: 0901091-03

Sample wt/vol: 5.1 (g/mL) G Lab File ID: 0109103A

Level: (low/med) LOW Date Sampled: 01/12/09 09:05

% Moisture: not dec. 8 Date Analyzed: 01/17/09 16:46

GC Column: RTX-VRX ID: 0.25 (mm) Dilution Factor: 1.0

Soil Extract Volume:_____(uL) Soil Aliquot Volume: _____(uL)

CONCENTRATION UNITS: (ug/L or ug/Kg) UG/KG

CAS NO.	COMPOUND	MDL	RL	CONC	Q
108-88-3------	Toluene	0.91	10		U
120-82-1------	1,2,4-Trichlorobenzene	0.19	10	10UJ ~~0.32 JBCH~~	B
71-55-6-------	1,1,1-Trichloroethane	0.95	10		U
79-00-5-------	1,1,2-Trichloroethane	0.37	10		U
79-01-6-------	Trichloroethene	0.90	10		U
76-13-1-------	Trichlorotrifluoroethane	0.58	10		U
75-69-4-------	Trichlorofluoromethane	1.0	10		U
75-01-4-------	Vinyl chloride	1.2	10		U
1330-20-7-----	Xylene(total)	0.74	10		U

lw
4/13/09

FORM 1
VOLATILE ORGANICS ANALYSIS DATA SHEET

CLIENT SAMPLE NO. 4

MR08-IS29
2-5-6-09A

Lab Name: EMPIRICAL LABS Contract: CH2MHILL

Lab Code: NA Case No.: NA SAS No.: NA SDG No.: LEJEUNE048

Matrix: (soil/water) SOIL Lab Sample ID: 0901091-04

Sample wt/vol: 5.2 (g/mL) G Lab File ID: 0109104A

Level: (low/med) LOW Date Sampled: 01/12/09 09:20

% Moisture: not dec. 12 Date Analyzed: 01/17/09 17:17

GC Column: RTX-VRX ID: 0.25 (mm) Dilution Factor: 1.0

Soil Extract Volume:_____(uL) Soil Aliquot Volume: _____(uL)

CONCENTRATION UNITS: (ug/L or ug/Kg) UG/KG

CAS NO.	COMPOUND	MDL	RL	CONC	Q
67-64-1	Acetone	2.2	11	5.9	J
71-43-2	Benzene	0.51	11		U
75-27-4	Bromodichloromethane	0.32	11		U
75-25-2	Bromoform	1.1	11		U
74-83-9	Bromomethane	0.78	11		U
78-93-3	2-Butanone	1.5	11		U
75-15-0	Carbon disulfide	1.4	11		U
56-23-5	Carbon tetrachloride	0.95	11		U
108-90-7	Chlorobenzene	0.37	11		U
75-00-3	Chloroethane	1.2	11		U
67-66-3	Chloroform	0.60	11		U
74-87-3	Chloromethane	0.56	11		U
110-82-7	Cyclohexane	0.58	11		U
124-48-1	Dibromochloromethane	0.37	11		U
96-12-8	1,2-Dibromo-3-chloropropane	1.3	5.4		U
106-93-4	1,2-Dibromoethane	0.46	11		U
95-50-1	1,2-Dichlorobenzene	0.40	11		U
541-73-1	1,3-Dichlorobenzene	0.91	11		U
106-46-7	1,4-Dichlorobenzene	0.60	11		U
75-71-8	Dichlorodifluoromethane	1.2	11		U
75-34-3	1,1-Dichloroethane	0.58	11		U
107-06-2	1,2-Dichloroethane	0.50	11		U
75-35-4	1,1-Dichloroethene	1.3	11		U
156-59-2	cis-1,2-Dichloroethene	1.3	11		U
156-60-5	trans-1,2-Dichloroethene	1.2	11		U
78-87-5	1,2-Dichloropropane	0.50	11		U
10061-01-5	cis-1,3-Dichloropropene	0.54	11		U
10061-02-6	trans-1,3-Dichloropropene	0.35	11		U
100-41-4	Ethylbenzene	0.81	11		U
591-78-6	2-Hexanone	2.5	11		U
98-82-8	Isopropylbenzene	0.95	11		U
79-20-9	Methyl acetate	1.7	11		U
75-09-2	Methylene chloride	0.67	11	11u	~~2.0 JB~~ BL
108-87-2	Methyl cyclohexane	0.32	11		U
1634-04-4	Methyl tert-butyl ether	0.35	11		U
108-10-1	4-Methyl-2-pentanone	0.63	11		U
100-42-5	Styrene	0.38	11		U
79-34-5	1,1,2,2-Tetrachloroethane	0.46	11		U
127-18-4	Tetrachloroethene	1.0	11		U

FORM I VOA

RW
4/13/09

FORM 1
VOLATILE ORGANICS ANALYSIS DATA SHEET

CLIENT SAMPLE NO. 4

MR08-IS29
2-5-6-09A

Lab Name: EMPIRICAL LABS Contract: CH2MHILL

Lab Code: NA Case No.: NA SAS No.: NA SDG No.: LEJEUNE048

Matrix: (soil/water) SOIL Lab Sample ID: 0901091-04

Sample wt/vol: 5.2 (g/mL) G Lab File ID: 0109104A

Level: (low/med) LOW Date Sampled: 01/12/09 09:20

% Moisture: not dec. 12 Date Analyzed: 01/17/09 17:17

GC Column: RTX-VRX ID: 0.25 (mm) Dilution Factor: 1.0

Soil Extract Volume:_____(uL) Soil Aliquot Volume: _____(uL)

CONCENTRATION UNITS: (ug/L or ug/Kg) UG/KG

CAS NO.	COMPOUND	MDL	RL	CONC	Q
108-88-3	Toluene	0.93	11		U
120-82-1	1,2,4-Trichlorobenzene	0.19	11		~~U~~ UJ CCH
71-55-6	1,1,1-Trichloroethane	0.97	11		U
79-00-5	1,1,2-Trichloroethane	0.38	11		U
79-01-6	Trichloroethene	0.92	11		U
76-13-1	Trichlorotrifluoroethane	0.60	11		U
75-69-4	Trichlorofluoromethane	1.0	11		U
75-01-4	Vinyl chloride	1.2	11		U
1330-20-7	Xylene(total)	0.76	11		U

FORM I VOA

MW
4/13/09

FORM 1
VOLATILE ORGANICS ANALYSIS DATA SHEET

CLIENT SAMPLE NO. 5

MR08-SS293-09A

Lab Name: EMPIRICAL LABS Contract: CH2MHILL

Lab Code: NA Case No.: NA SAS No.: NA SDG No.: LEJEUNE048

Matrix: (soil/water) SOIL Lab Sample ID: 0901091-05

Sample wt/vol: 4.2 (g/mL) G Lab File ID: 0109105A

Level: (low/med) LOW Date Sampled: 01/12/09 09:35

% Moisture: not dec. 15 Date Analyzed: 01/17/09 17:47

GC Column: RTX-VRX ID: 0.25 (mm) Dilution Factor: 1.0

Soil Extract Volume:_____(uL) Soil Aliquot Volume: _____(uL)

CONCENTRATION UNITS: (ug/L or ug/Kg) UG/KG

CAS NO.	COMPOUND	MDL	RL	CONC	Q
67-64-1	Acetone	2.8	14	46	
71-43-2	Benzene	0.66	14		U
75-27-4	Bromodichloromethane	0.42	14		U
75-25-2	Bromoform	1.4	14		U
74-83-9	Bromomethane	1.0	14		U
78-93-3	2-Butanone	2.0	14	7.9	J
75-15-0	Carbon disulfide	1.8	14		U
56-23-5	Carbon tetrachloride	1.2	14		U
108-90-7	Chlorobenzene	0.48	14		U
75-00-3	Chloroethane	1.5	14		U
67-66-3	Chloroform	0.77	14		U
74-87-3	Chloromethane	0.73	14		U
110-82-7	Cyclohexane	0.76	14		U
124-48-1	Dibromochloromethane	0.48	14		U
96-12-8	1,2-Dibromo-3-chloropropane	1.7	7.0		U
106-93-4	1,2-Dibromoethane	0.60	14		U
95-50-1	1,2-Dichlorobenzene	0.52	14		U
541-73-1	1,3-Dichlorobenzene	1.2	14		U
106-46-7	1,4-Dichlorobenzene	0.77	14		U
75-71-8	Dichlorodifluoromethane	1.5	14		U
75-34-3	1,1-Dichloroethane	0.76	14		U
107-06-2	1,2-Dichloroethane	0.65	14		U
75-35-4	1,1-Dichloroethene	1.7	14		U
156-59-2	cis-1,2-Dichloroethene	1.7	14		U
156-60-5	trans-1,2-Dichloroethene	1.5	14		U
78-87-5	1,2-Dichloropropane	0.65	14		U
10061-01-5	cis-1,3-Dichloropropene	0.70	14		U
10061-02-6	trans-1,3-Dichloropropene	0.45	14		U
100-41-4	Ethylbenzene	1.0	14		U
591-78-6	2-Hexanone	3.2	14		U
98-82-8	Isopropylbenzene	1.2	14		U
79-20-9	Methyl acetate	2.2	14	13	J
75-09-2	Methylene chloride	0.87	14	14u ~~3.7~~ ~~JB~~	B
108-87-2	Methyl cyclohexane	0.42	14		U
1634-04-4	Methyl tert-butyl ether	0.45	14		U
108-10-1	4-Methyl-2-pentanone	0.82	14		U
100-42-5	Styrene	0.49	14		U
79-34-5	1,1,2,2-Tetrachloroethane	0.60	14		U
127-18-4	Tetrachloroethene	1.4	14		U

FORM I VOA

lew
4/3/09

FORM 1
VOLATILE ORGANICS ANALYSIS DATA SHEET

CLIENT SAMPLE NO. 5

MR08-SS293-09A

Lab Name: EMPIRICAL LABS Contract: CH2MHILL

Lab Code: NA Case No.: NA SAS No.: NA SDG No.: LEJEUNE048

Matrix: (soil/water) SOIL Lab Sample ID: 0901091-05

Sample wt/vol: 4.2 (g/mL) G Lab File ID: 0109105A

Level: (low/med) LOW Date Sampled: 01/12/09 09:35

% Moisture: not dec. 15 Date Analyzed: 01/17/09 17:47

GC Column: RTX-VRX ID: 0.25 (mm) Dilution Factor: 1.0

Soil Extract Volume:_____(uL) Soil Aliquot Volume: _____(uL)

CONCENTRATION UNITS: (ug/L or ug/Kg) UG/KG

CAS NO.	COMPOUND	MDL	RL	CONC	Q
108-88-3	Toluene	1.2	14		U
120-82-1	1,2,4-Trichlorobenzene	0.25	14	14 ~~JB~~ CH	J
71-55-6	1,1,1-Trichloroethane	1.3	14		U
79-00-5	1,1,2-Trichloroethane	0.49	14		U
79-01-6	Trichloroethene	1.2	14		U
76-13-1	Trichlorotrifluoroethane	0.77	14		U
75-69-4	Trichlorofluoromethane	1.3	14		U
75-01-4	Vinyl chloride	1.5	14		U
1330-20-7	Xylene(total)	0.98	14		U

FORM I VOA

4/13/09

FORM 1
VOLATILE ORGANICS ANALYSIS DATA SHEET

CLIENT SAMPLE NO. 6

MR08-IS29
3-2-3-09A

Lab Name: EMPIRICAL LABS Contract: CH2MHILL

Lab Code: NA Case No.: NA SAS No.: NA SDG No.: LEJEUNE048

Matrix: (soil/water) SOIL Lab Sample ID: 0901091-06

Sample wt/vol: 5.2 (g/mL) G Lab File ID: 0109106A

Level: (low/med) LOW Date Sampled: 01/12/09 09:55

% Moisture: not dec. 9 Date Analyzed: 01/17/09 18:18

GC Column: RTX-VRX ID: 0.25 (mm) Dilution Factor: 1.0

Soil Extract Volume:_____(uL) Soil Aliquot Volume: _____(uL)

CONCENTRATION UNITS: (ug/L or ug/Kg) UG/KG

CAS NO.	COMPOUND	MDL	RL	CONC	Q
67-64-1	Acetone	2.1	11	8.0	J
71-43-2	Benzene	0.50	11		U
75-27-4	Bromodichloromethane	0.32	11		U
75-25-2	Bromoform	1.1	11		U
74-83-9	Bromomethane	0.77	11		U
78-93-3	2-Butanone	1.5	11		U
75-15-0	Carbon disulfide	1.4	11		U
56-23-5	Carbon tetrachloride	0.94	11		U
108-90-7	Chlorobenzene	0.36	11		U
75-00-3	Chloroethane	1.2	11		U
67-66-3	Chloroform	0.59	11		U
74-87-3	Chloromethane	0.56	11		U
110-82-7	Cyclohexane	0.58	11		U
124-48-1	Dibromochloromethane	0.36	11		U
96-12-8	1,2-Dibromo-3-chloropropane	1.3	5.3		U
106-93-4	1,2-Dibromoethane	0.46	11		U
95-50-1	1,2-Dichlorobenzene	0.40	11		U
541-73-1	1,3-Dichlorobenzene	0.90	11		U
106-46-7	1,4-Dichlorobenzene	0.59	11		U
75-71-8	Dichlorodifluoromethane	1.2	11		U
75-34-3	1,1-Dichloroethane	0.58	11		U
107-06-2	1,2-Dichloroethane	0.49	11		U
75-35-4	1,1-Dichloroethene	1.3	11		U
156-59-2	cis-1,2-Dichloroethene	1.3	11		U
156-60-5	trans-1,2-Dichloroethene	1.2	11		U
78-87-5	1,2-Dichloropropane	0.49	11		U
10061-01-5	cis-1,3-Dichloropropene	0.53	11		U
10061-02-6	trans-1,3-Dichloropropene	0.34	11		U
100-41-4	Ethylbenzene	0.80	11		U
591-78-6	2-Hexanone	2.4	11		U
98-82-8	Isopropylbenzene	0.94	11		U
79-20-9	Methyl acetate	1.7	11		U
75-09-2	Methylene chloride	0.66	11	11u ~~2.4~~	~~JB~~ B1
108-87-2	Methyl cyclohexane	0.32	11		U
1634-04-4	Methyl tert-butyl ether	0.34	11		U
108-10-1	4-Methyl-2-pentanone	0.62	11		U
100-42-5	Styrene	0.37	11		U
79-34-5	1,1,2,2-Tetrachloroethane	0.46	11		U
127-18-4	Tetrachloroethene	1.0	11		U

FORM I VOA

lew
4/3/09

FORM 1
VOLATILE ORGANICS ANALYSIS DATA SHEET

CLIENT SAMPLE NO. 6

MR08-IS29
3-2-3-09A

Lab Name: EMPIRICAL LABS Contract: CH2MHILL

Lab Code: NA Case No.: NA SAS No.: NA SDG No.: LEJEUNE048

Matrix: (soil/water) SOIL Lab Sample ID: 0901091-06

Sample wt/vol: 5.2 (g/mL) G Lab File ID: 0109106A

Level: (low/med) LOW Date Sampled: 01/12/09 09:55

% Moisture: not dec. 9 Date Analyzed: 01/17/09 18:18

GC Column: RTX-VRX ID: 0.25 (mm) Dilution Factor: 1.0

Soil Extract Volume:_____(uL) Soil Aliquot Volume: _____(uL)

CONCENTRATION UNITS: (ug/L or ug/Kg) UG/KG

CAS NO.	COMPOUND	MDL	RL	CONC	Q
108-88-3	Toluene	0.92	11		U
120-82-1	1,2,4-Trichlorobenzene	0.19	11		~~U~~ UJ CH
71-55-6	1,1,1-Trichloroethane	0.96	11		U
79-00-5	1,1,2-Trichloroethane	0.37	11		U
79-01-6	Trichloroethene	0.91	11		U
76-13-1	Trichlorotrifluoroethane	0.59	11		U
75-69-4	Trichlorofluoromethane	1.0	11		U
75-01-4	Vinyl chloride	1.2	11		U
1330-20-7	Xylene(total)	0.75	11		U

lew
4/3/09

FORM 1
VOLATILE ORGANICS ANALYSIS DATA SHEET

CLIENT SAMPLE NO. 7

MR08-SS294-09A

Lab Name: EMPIRICAL LABS Contract: CH2MHILL

Lab Code: NA Case No.: NA SAS No.: NA SDG No.: LEJEUNE048

Matrix: (soil/water) SOIL Lab Sample ID: 0901091-07

Sample wt/vol: 4.1 (g/mL) G Lab File ID: 0109107A

Level: (low/med) LOW Date Sampled: 01/12/09 10:10

% Moisture: not dec. 6 Date Analyzed: 01/17/09 18:49

GC Column: RTX-VRX ID: 0.25 (mm) Dilution Factor: 1.0

Soil Extract Volume:_____(uL) Soil Aliquot Volume: _____(uL)

CONCENTRATION UNITS: (ug/L or ug/Kg) UG/KG

CAS NO.	COMPOUND	MDL	RL	CONC	Q
67-64-1	Acetone	2.6	13	15	
71-43-2	Benzene	0.61	13	0.91	J
75-27-4	Bromodichloromethane	0.39	13		U
75-25-2	Bromoform	1.3	13		U
74-83-9	Bromomethane	0.93	13		U
78-93-3	2-Butanone	1.8	13	5.4	J
75-15-0	Carbon disulfide	1.7	13		U
56-23-5	Carbon tetrachloride	1.1	13		U
108-90-7	Chlorobenzene	0.44	13		U
75-00-3	Chloroethane	1.4	13		U
67-66-3	Chloroform	0.71	13		U
74-87-3	Chloromethane	0.67	13		U
110-82-7	Cyclohexane	0.70	13		U
124-48-1	Dibromochloromethane	0.44	13		U
96-12-8	1,2-Dibromo-3-chloropropane	1.6	6.5		U
106-93-4	1,2-Dibromoethane	0.56	13		U
95-50-1	1,2-Dichlorobenzene	0.48	13		U
541-73-1	1,3-Dichlorobenzene	1.1	13		U
106-46-7	1,4-Dichlorobenzene	0.71	13		U
75-71-8	Dichlorodifluoromethane	1.4	13		U
75-34-3	1,1-Dichloroethane	0.70	13		U
107-06-2	1,2-Dichloroethane	0.60	13		U
75-35-4	1,1-Dichloroethene	1.6	13		U
156-59-2	cis-1,2-Dichloroethene	1.6	13		U
156-60-5	trans-1,2-Dichloroethene	1.4	13		U
78-87-5	1,2-Dichloropropane	0.60	13		U
10061-01-5	cis-1,3-Dichloropropene	0.65	13		U
10061-02-6	trans-1,3-Dichloropropene	0.42	13		U
100-41-4	Ethylbenzene	0.97	13	2.0	J
591-78-6	2-Hexanone	3.0	13		U
98-82-8	Isopropylbenzene	1.1	13		U
79-20-9	Methyl acetate	2.1	13		U
75-09-2	Methylene chloride	0.80	13	13U ~~2.4~~ ~~JB~~	B
108-87-2	Methyl cyclohexane	0.39	13	0.61	J
1634-04-4	Methyl tert-butyl ether	0.42	13		U
108-10-1	4-Methyl-2-pentanone	0.75	13		U
100-42-5	Styrene	0.45	13		U
79-34-5	1,1,2,2-Tetrachloroethane	0.56	13		U
127-18-4	Tetrachloroethene	1.2	13		U

FORM I VOA

DW
4/2/09

FORM 1
VOLATILE ORGANICS ANALYSIS DATA SHEET

CLIENT SAMPLE NO. 7

MR08-SS294-09A

Lab Name: EMPIRICAL LABS Contract: CH2MHILL

Lab Code: NA Case No.: NA SAS No.: NA SDG No.: LEJEUNE048

Matrix: (soil/water) SOIL Lab Sample ID: 0901091-07

Sample wt/vol: 4.1 (g/mL) G Lab File ID: 0109107A

Level: (low/med) LOW Date Sampled: 01/12/09 10:10

% Moisture: not dec. 6 Date Analyzed: 01/17/09 18:49

GC Column: RTX-VRX ID: 0.25 (mm) Dilution Factor: 1.0

Soil Extract Volume:_____(uL) Soil Aliquot Volume: _____(uL)

CONCENTRATION UNITS: (ug/L or ug/Kg) UG/KG

CAS NO.	COMPOUND	MDL	RL	CONC	Q
108-88-3	Toluene	1.1	13	13u ~~1.5~~	~~J~~ B
120-82-1	1,2,4-Trichlorobenzene	0.23	13		~~U~~ UJ C4
71-55-6	1,1,1-Trichloroethane	1.2	13		U
79-00-5	1,1,2-Trichloroethane	0.45	13		U
79-01-6	Trichloroethene	1.1	13		U
76-13-1	Trichlorotrifluoroethane	0.71	13		U
75-69-4	Trichlorofluoromethane	1.2	13		U
75-01-4	Vinyl chloride	1.4	13		U
1330-20-7	Xylene(total)	0.91	13		U

LW
4/13/09

FORM 1
VOLATILE ORGANICS ANALYSIS DATA SHEET

CLIENT SAMPLE NO. 8

MR08-IS29
4-8-9-09A

Lab Name: EMPIRICAL LABS Contract: CH2MHILL

Lab Code: NA Case No.: NA SAS No.: NA SDG No.: LEJEUNE048

Matrix: (soil/water) SOIL Lab Sample ID: 0901091-08

Sample wt/vol: 3.8 (g/mL) G Lab File ID: 0109108A

Level: (low/med) LOW Date Sampled: 01/12/09 10:30

% Moisture: not dec. 9 Date Analyzed: 01/17/09 19:19

GC Column: RTX-VRX ID: 0.25 (mm) Dilution Factor: 1.0

Soil Extract Volume:_____(uL) Soil Aliquot Volume: _____(uL)

CONCENTRATION UNITS: (ug/L or ug/Kg) UG/KG

CAS NO.	COMPOUND	MDL	RL	CONC	Q
67-64-1	Acetone	2.9	14		U
71-43-2	Benzene	0.68	14		U
75-27-4	Bromodichloromethane	0.44	14		U
75-25-2	Bromoform	1.4	14		U
74-83-9	Bromomethane	1.0	14		U
78-93-3	2-Butanone	2.0	14		U
75-15-0	Carbon disulfide	1.9	14		U
56-23-5	Carbon tetrachloride	1.3	14		U
108-90-7	Chlorobenzene	0.49	14		U
75-00-3	Chloroethane	1.6	14		U
67-66-3	Chloroform	0.80	14		U
74-87-3	Chloromethane	0.75	14		U
110-82-7	Cyclohexane	0.78	14		U
124-48-1	Dibromochloromethane	0.49	14		U
96-12-8	1,2-Dibromo-3-chloropropane	1.7	7.2		U
106-93-4	1,2-Dibromoethane	0.62	14		U
95-50-1	1,2-Dichlorobenzene	0.54	14		U
541-73-1	1,3-Dichlorobenzene	1.2	14		U
106-46-7	1,4-Dichlorobenzene	0.80	14		U
75-71-8	Dichlorodifluoromethane	1.6	14		U
75-34-3	1,1-Dichloroethane	0.78	14		U
107-06-2	1,2-Dichloroethane	0.67	14		U
75-35-4	1,1-Dichloroethene	1.7	14		U
156-59-2	cis-1,2-Dichloroethene	1.7	14		U
156-60-5	trans-1,2-Dichloroethene	1.6	14		U
78-87-5	1,2-Dichloropropane	0.67	14		U
10061-01-5	cis-1,3-Dichloropropene	0.72	14		U
10061-02-6	trans-1,3-Dichloropropene	0.46	14		U
100-41-4	Ethylbenzene	1.1	14		U
591-78-6	2-Hexanone	3.3	14		U
98-82-8	Isopropylbenzene	1.3	14		U
79-20-9	Methyl acetate	2.3	14		U
75-09-2	Methylene chloride	0.90	14	14u ~~3.3~~	~~JB~~ B
108-87-2	Methyl cyclohexane	0.44	14		U
1634-04-4	Methyl tert-butyl ether	0.46	14		U
108-10-1	4-Methyl-2-pentanone	0.84	14		U
100-42-5	Styrene	0.51	14		U
79-34-5	1,1,2,2-Tetrachloroethane	0.62	14		U
127-18-4	Tetrachloroethene	1.4	14		U

FORM I VOA

bW
10/21/09

FORM 1
VOLATILE ORGANICS ANALYSIS DATA SHEET

CLIENT SAMPLE NO. 8

MR08-IS29
4-8-9-09A

Lab Name: EMPIRICAL LABS Contract: CH2MHILL

Lab Code: NA Case No.: NA SAS No.: NA SDG No.: LEJEUNE048

Matrix: (soil/water) SOIL Lab Sample ID: 0901091-08

Sample wt/vol: 3.8 (g/mL) G Lab File ID: 0109108A

Level: (low/med) LOW Date Sampled: 01/12/09 10:30

% Moisture: not dec. 9 Date Analyzed: 01/17/09 19:19

GC Column: RTX-VRX ID: 0.25 (mm) Dilution Factor: 1.0

Soil Extract Volume:_____(uL) Soil Aliquot Volume: _____(uL)

CONCENTRATION UNITS: (ug/L or ug/Kg) UG/KG

CAS NO.	COMPOUND	MDL	RL	CONC	Q
108-88-3	Toluene	1.2	14		U
120-82-1	1,2,4-Trichlorobenzene	0.26	14		~~U~~ UJ CG
71-55-6	1,1,1-Trichloroethane	1.3	14		U
79-00-5	1,1,2-Trichloroethane	0.51	14		U
79-01-6	Trichloroethene	1.2	14		U
76-13-1	Trichlorotrifluoroethane	0.80	14		U
75-69-4	Trichlorofluoromethane	1.4	14		U
75-01-4	Vinyl chloride	1.6	14		U
1330-20-7	Xylene(total)	1.0	14		U

LEW
4/3/09

FORM 1
VOLATILE ORGANICS ANALYSIS DATA SHEET

CLIENT SAMPLE NO. 9

MR08-SS295-09A

Lab Name: EMPIRICAL LABS Contract: CH2MHILL

Lab Code: NA Case No.: NA SAS No.: NA SDG No.: LEJEUNE048

Matrix: (soil/water) SOIL Lab Sample ID: 0901091-09

Sample wt/vol: 4.4 (g/mL) G Lab File ID: 0109109A

Level: (low/med) LOW Date Sampled: 01/12/09 10:45

% Moisture: not dec. 12 Date Analyzed: 01/17/09 19:50

GC Column: RTX-VRX ID: 0.25 (mm) Dilution Factor: 1.0

Soil Extract Volume:_____(uL) Soil Aliquot Volume: _____(uL)

CONCENTRATION UNITS: (ug/L or ug/Kg) UG/KG

CAS NO.	COMPOUND	MDL	RL	CONC	Q
67-64-1	Acetone	2.6	13	26	
71-43-2	Benzene	0.60	13		U
75-27-4	Bromodichloromethane	0.38	13		U
75-25-2	Bromoform	1.3	13		U
74-83-9	Bromomethane	0.92	13		U
78-93-3	2-Butanone	1.8	13	4.2	J
75-15-0	Carbon disulfide	1.7	13		U
56-23-5	Carbon tetrachloride	1.1	13		U
108-90-7	Chlorobenzene	0.44	13		U
75-00-3	Chloroethane	1.4	13		U
67-66-3	Chloroform	0.70	13		U
74-87-3	Chloromethane	0.67	13		U
110-82-7	Cyclohexane	0.69	13		U
124-48-1	Dibromochloromethane	0.44	13		U
96-12-8	1,2-Dibromo-3-chloropropane	1.5	6.4		U
106-93-4	1,2-Dibromoethane	0.55	13		U
95-50-1	1,2-Dichlorobenzene	0.47	13		U
541-73-1	1,3-Dichlorobenzene	1.1	13		U
106-46-7	1,4-Dichlorobenzene	0.70	13		U
75-71-8	Dichlorodifluoromethane	1.4	13		U
75-34-3	1,1-Dichloroethane	0.69	13		U
107-06-2	1,2-Dichloroethane	0.59	13		U
75-35-4	1,1-Dichloroethene	1.5	13		U
156-59-2	cis-1,2-Dichloroethene	1.5	13		U
156-60-5	trans-1,2-Dichloroethene	1.4	13		U
78-87-5	1,2-Dichloropropane	0.59	13		U
10061-01-5	cis-1,3-Dichloropropene	0.64	13		U
10061-02-6	trans-1,3-Dichloropropene	0.41	13		U
100-41-4	Ethylbenzene	0.96	13		U
591-78-6	2-Hexanone	2.9	13		U
98-82-8	Isopropylbenzene	1.1	13		U
79-20-9	Methyl acetate	2.0	13		U
75-09-2	Methylene chloride	0.80	13	13u ~~2.6~~	~~JB~~ B1
108-87-2	Methyl cyclohexane	0.38	13		U
1634-04-4	Methyl tert-butyl ether	0.41	13		U
108-10-1	4-Methyl-2-pentanone	0.74	13		U
100-42-5	Styrene	0.45	13		U
79-34-5	1,1,2,2-Tetrachloroethane	0.55	13		U
127-18-4	Tetrachloroethene	1.2	13		U

FORM I VOA

lew
4/13/09

FORM 1
VOLATILE ORGANICS ANALYSIS DATA SHEET

CLIENT SAMPLE NO. 9

MR08-SS295-09A

Lab Name: EMPIRICAL LABS Contract: CH2MHILL

Lab Code: NA Case No.: NA SAS No.: NA SDG No.: LEJEUNE048

Matrix: (soil/water) SOIL Lab Sample ID: 0901091-09

Sample wt/vol: 4.4 (g/mL) G Lab File ID: 0109109A

Level: (low/med) LOW Date Sampled: 01/12/09 10:45

% Moisture: not dec. 12 Date Analyzed: 01/17/09 19:50

GC Column: RTX-VRX ID: 0.25 (mm) Dilution Factor: 1.0

Soil Extract Volume:_____(uL) Soil Aliquot Volume: _____(uL)

CONCENTRATION UNITS: (ug/L or ug/Kg) UG/KG

CAS NO.	COMPOUND	MDL	RL	CONC	Q
108-88-3	Toluene	1.1	13	13u ~~1.6~~	~~J~~ U
120-82-1	1,2,4-Trichlorobenzene	0.23	13		U
71-55-6	1,1,1-Trichloroethane	1.2	13		U
79-00-5	1,1,2-Trichloroethane	0.45	13		U
79-01-6	Trichloroethene	1.1	13		U
76-13-1	Trichlorotrifluoroethane	0.70	13		U
75-69-4	Trichlorofluoromethane	1.2	13		U
75-01-4	Vinyl chloride	1.4	13		U
1330-20-7	Xylene(total)	0.90	13		U

lew
4/13/09

FORM 1
VOLATILE ORGANICS ANALYSIS DATA SHEET

CLIENT SAMPLE NO. 10

MR08-IS29
5-2-3-09A

Lab Name: EMPIRICAL LABS Contract: CH2MHILL

Lab Code: NA Case No.: NA SAS No.: NA SDG No.: LEJEUNE048

Matrix: (soil/water) SOIL Lab Sample ID: 0901091-10

Sample wt/vol: 5.0 (g/mL) G Lab File ID: 0109110A

Level: (low/med) LOW Date Sampled: 01/12/09 11:10

% Moisture: not dec. 10 Date Analyzed: 01/17/09 20:20

GC Column: RTX-VRX ID: 0.25 (mm) Dilution Factor: 1.0

Soil Extract Volume:_____(uL) Soil Aliquot Volume: _____(uL)

CONCENTRATION UNITS: (ug/L or ug/Kg) UG/KG

CAS NO.	COMPOUND	MDL	RL	CONC	Q
67-64-1	Acetone	2.2	11	11	
71-43-2	Benzene	0.52	11		U
75-27-4	Bromodichloromethane	0.33	11		U
75-25-2	Bromoform	1.1	11		U
74-83-9	Bromomethane	0.80	11		U
78-93-3	2-Butanone	1.6	11		U
75-15-0	Carbon disulfide	1.4	11		U
56-23-5	Carbon tetrachloride	0.98	11		U
108-90-7	Chlorobenzene	0.38	11		U
75-00-3	Chloroethane	1.2	11		U
67-66-3	Chloroform	0.61	11		U
74-87-3	Chloromethane	0.58	11		U
110-82-7	Cyclohexane	0.60	11		U
124-48-1	Dibromochloromethane	0.38	11		U
96-12-8	1,2-Dibromo-3-chloropropane	1.3	5.6		U
106-93-4	1,2-Dibromoethane	0.48	11		U
95-50-1	1,2-Dichlorobenzene	0.41	11		U
541-73-1	1,3-Dichlorobenzene	0.94	11		U
106-46-7	1,4-Dichlorobenzene	0.61	11		U
75-71-8	Dichlorodifluoromethane	1.2	11		U
75-34-3	1,1-Dichloroethane	0.60	11		U
107-06-2	1,2-Dichloroethane	0.51	11		U
75-35-4	1,1-Dichloroethene	1.3	11		U
156-59-2	cis-1,2-Dichloroethene	1.3	11		U
156-60-5	trans-1,2-Dichloroethene	1.2	11		U
78-87-5	1,2-Dichloropropane	0.51	11		U
10061-01-5	cis-1,3-Dichloropropene	0.56	11		U
10061-02-6	trans-1,3-Dichloropropene	0.36	11		U
100-41-4	Ethylbenzene	0.84	11		U
591-78-6	2-Hexanone	2.6	11		U
98-82-8	Isopropylbenzene	0.98	11		U
79-20-9	Methyl acetate	1.8	11		U
75-09-2	Methylene chloride	0.69	11	11U	~~2.3 JB~~ BL
108-87-2	Methyl cyclohexane	0.33	11		U
1634-04-4	Methyl tert-butyl ether	0.36	11		U
108-10-1	4-Methyl-2-pentanone	0.65	11		U
100-42-5	Styrene	0.39	11		U
79-34-5	1,1,2,2-Tetrachloroethane	0.48	11		U
127-18-4	Tetrachloroethene	1.1	11		U

FORM I VOA

lw 1/12/09

FORM 1
VOLATILE ORGANICS ANALYSIS DATA SHEET

CLIENT SAMPLE NO. 10

MR08-IS29
5-2-3-09A

Lab Name: EMPIRICAL LABS Contract: CH2MHILL

Lab Code: NA Case No.: NA SAS No.: NA SDG No.: LEJEUNE048

Matrix: (soil/water) SOIL Lab Sample ID: 0901091-10

Sample wt/vol: 5.0 (g/mL) G Lab File ID: 0109110A

Level: (low/med) LOW Date Sampled: 01/12/09 11:10

% Moisture: not dec. 10 Date Analyzed: 01/17/09 20:20

GC Column: RTX-VRX ID: 0.25 (mm) Dilution Factor: 1.0

Soil Extract Volume:_____(uL) Soil Aliquot Volume: _____(uL)

CONCENTRATION UNITS: (ug/L or ug/Kg) UG/KG

CAS NO.	COMPOUND	MDL	RL	CONC	Q
108-88-3	Toluene	0.96	11		U
120-82-1	1,2,4-Trichlorobenzene	0.20	11		~~U~~ UJ CCA
71-55-6	1,1,1-Trichloroethane	1.0	11		U
79-00-5	1,1,2-Trichloroethane	0.39	11		U
79-01-6	Trichloroethene	0.95	11		U
76-13-1	Trichlorotrifluoroethane	0.61	11		U
75-69-4	Trichlorofluoromethane	1.1	11		U
75-01-4	Vinyl chloride	1.2	11		U
1330-20-7	Xylene(total)	0.78	11		U

lw
4/3/09

FORM 1
VOLATILE ORGANICS ANALYSIS DATA SHEET

CLIENT SAMPLE NO. 11

MR08-SS296-09A

Lab Name: EMPIRICAL LABS Contract: CH2MHILL

Lab Code: NA Case No.: NA SAS No.: NA SDG No.: LEJEUNE048

Matrix: (soil/water) SOIL Lab Sample ID: 0901091-11

Sample wt/vol: 4.2 (g/mL) G Lab File ID: 0109111A

Level: (low/med) LOW Date Sampled: 01/12/09 12:15

% Moisture: not dec. 8 Date Analyzed: 01/17/09 20:51

GC Column: RTX-VRX ID: 0.25 (mm) Dilution Factor: 1.0

Soil Extract Volume:_____(uL) Soil Aliquot Volume: _____(uL)

CONCENTRATION UNITS: (ug/L or ug/Kg) UG/KG

CAS NO.	COMPOUND	MDL	RL	CONC	Q
67-64-1	Acetone	2.6	13	32	
71-43-2	Benzene	0.61	13	3.1	J
75-27-4	Bromodichloromethane	0.39	13		U
75-25-2	Bromoform	1.3	13		U
74-83-9	Bromomethane	0.94	13		U
78-93-3	2-Butanone	1.8	13	14	
75-15-0	Carbon disulfide	1.7	13	2.2	J
56-23-5	Carbon tetrachloride	1.1	13		U
108-90-7	Chlorobenzene	0.44	13		U
75-00-3	Chloroethane	1.4	13		U
67-66-3	Chloroform	0.72	13		U
74-87-3	Chloromethane	0.68	13		U
110-82-7	Cyclohexane	0.70	13	0.98	J
124-48-1	Dibromochloromethane	0.44	13		U
96-12-8	1,2-Dibromo-3-chloropropane	1.6	6.5		U
106-93-4	1,2-Dibromoethane	0.56	13		U
95-50-1	1,2-Dichlorobenzene	0.48	13		U
541-73-1	1,3-Dichlorobenzene	1.1	13		U
106-46-7	1,4-Dichlorobenzene	0.72	13		U
75-71-8	Dichlorodifluoromethane	1.4	13		U
75-34-3	1,1-Dichloroethane	0.70	13		U
107-06-2	1,2-Dichloroethane	0.60	13		U
75-35-4	1,1-Dichloroethene	1.6	13		U
156-59-2	cis-1,2-Dichloroethene	1.6	13		U
156-60-5	trans-1,2-Dichloroethene	1.4	13		U
78-87-5	1,2-Dichloropropane	0.60	13		U
10061-01-5	cis-1,3-Dichloropropene	0.65	13		U
10061-02-6	trans-1,3-Dichloropropene	0.42	13		U
100-41-4	Ethylbenzene	0.98	13	3.0	J
591-78-6	2-Hexanone	3.0	13		U
98-82-8	Isopropylbenzene	1.1	13		U
79-20-9	Methyl acetate	2.1	13		U
75-09-2	Methylene chloride	0.81	13	13u ~~2.1~~	~~JB~~ B
108-87-2	Methyl cyclohexane	0.39	13	1.1	J
1634-04-4	Methyl tert-butyl ether	0.42	13		U
108-10-1	4-Methyl-2-pentanone	0.76	13	1.3	J
100-42-5	Styrene	0.46	13		U
79-34-5	1,1,2,2-Tetrachloroethane	0.56	13		U
127-18-4	Tetrachloroethene	1.3	13		U

FORM I VOA

lew
4/13/09

FORM 1
VOLATILE ORGANICS ANALYSIS DATA SHEET

CLIENT SAMPLE NO. 11

MR08-SS296-09A

Lab Name: EMPIRICAL LABS Contract: CH2MHILL

Lab Code: NA Case No.: NA SAS No.: NA SDG No.: LEJEUNE048

Matrix: (soil/water) SOIL Lab Sample ID: 0901091-11

Sample wt/vol: 4.2 (g/mL) G Lab File ID: 0109111A

Level: (low/med) LOW Date Sampled: 01/12/09 12:15

% Moisture: not dec. 8 Date Analyzed: 01/17/09 20:51

GC Column: RTX-VRX ID: 0.25 (mm) Dilution Factor: 1.0

Soil Extract Volume:_____(uL) Soil Aliquot Volume: _____(uL)

CONCENTRATION UNITS: (ug/L or ug/Kg) UG/KG

CAS NO.	COMPOUND	MDL	RL	CONC	Q
108-88-3	Toluene	1.1	13	13U ~~3.8~~	~~J~~
120-82-1	1,2,4-Trichlorobenzene	0.24	13		~~U~~ UJ
71-55-6	1,1,1-Trichloroethane	1.2	13		U
79-00-5	1,1,2-Trichloroethane	0.46	13		U
79-01-6	Trichloroethene	1.1	13		U
76-13-1	Trichlorotrifluoroethane	0.72	13		U
75-69-4	Trichlorofluoromethane	1.2	13		U
75-01-4	Vinyl chloride	1.4	13		U
1330-20-7	Xylene(total)	0.91	13		U

B
CU

FORM I VOA

lmw 4/3/09

FORM 1
VOLATILE ORGANICS ANALYSIS DATA SHEET

CLIENT SAMPLE NO. 12

MR08-IS29
6-5-6-09A

Lab Name: EMPIRICAL LABS Contract: CH2MHILL

Lab Code: NA Case No.: NA SAS No.: NA SDG No.: LEJEUNE048

Matrix: (soil/water) SOIL Lab Sample ID: 0901091-12

Sample wt/vol: 5.1 (g/mL) G Lab File ID: 0109112A

Level: (low/med) LOW Date Sampled: 01/12/09 12:30

% Moisture: not dec. 10 Date Analyzed: 01/17/09 21:21

GC Column: RTX-VRX ID: 0.25 (mm) Dilution Factor: 1.0

Soil Extract Volume:_____(uL) Soil Aliquot Volume: _____(uL)

CONCENTRATION UNITS: (ug/L or ug/Kg) UG/KG

CAS NO.	COMPOUND	MDL	RL	CONC	Q
67-64-1	Acetone	2.2	11		U
71-43-2	Benzene	0.51	11		U
75-27-4	Bromodichloromethane	0.32	11		U
75-25-2	Bromoform	1.1	11		U
74-83-9	Bromomethane	0.78	11		U
78-93-3	2-Butanone	1.5	11		U
75-15-0	Carbon disulfide	1.4	11		U
56-23-5	Carbon tetrachloride	0.95	11		U
108-90-7	Chlorobenzene	0.37	11		U
75-00-3	Chloroethane	1.2	11		U
67-66-3	Chloroform	0.59	11		U
74-87-3	Chloromethane	0.56	11		U
110-82-7	Cyclohexane	0.58	11		U
124-48-1	Dibromochloromethane	0.37	11		U
96-12-8	1,2-Dibromo-3-chloropropane	1.3	5.4		U
106-93-4	1,2-Dibromoethane	0.46	11		U
95-50-1	1,2-Dichlorobenzene	0.40	11		U
541-73-1	1,3-Dichlorobenzene	0.91	11		U
106-46-7	1,4-Dichlorobenzene	0.59	11		U
75-71-8	Dichlorodifluoromethane	1.2	11		U
75-34-3	1,1-Dichloroethane	0.58	11		U
107-06-2	1,2-Dichloroethane	0.50	11		U
75-35-4	1,1-Dichloroethene	1.3	11		U
156-59-2	cis-1,2-Dichloroethene	1.3	11		U
156-60-5	trans-1,2-Dichloroethene	1.2	11		U
78-87-5	1,2-Dichloropropane	0.50	11		U
10061-01-5	cis-1,3-Dichloropropene	0.54	11		U
10061-02-6	trans-1,3-Dichloropropene	0.35	11		U
100-41-4	Ethylbenzene	0.81	11		U
591-78-6	2-Hexanone	2.5	11		U
98-82-8	Isopropylbenzene	0.95	11		U
79-20-9	Methyl acetate	1.7	11		U
75-09-2	Methylene chloride	0.67	11	11U	~~2.0 JB~~ B
108-87-2	Methyl cyclohexane	0.32	11		U
1634-04-4	Methyl tert-butyl ether	0.35	11		U
108-10-1	4-Methyl-2-pentanone	0.63	11		U
100-42-5	Styrene	0.38	11		U
79-34-5	1,1,2,2-Tetrachloroethane	0.46	11		U
127-18-4	Tetrachloroethene	1.0	11		U

FORM I VOA

LW
4/13/09

FORM 1
VOLATILE ORGANICS ANALYSIS DATA SHEET

CLIENT SAMPLE NO.

MR08-IS29
6-5-6-09A

12

Lab Name: EMPIRICAL LABS Contract: CH2MHILL

Lab Code: NA Case No.: NA SAS No.: NA SDG No.: LEJEUNE048

Matrix: (soil/water) SOIL Lab Sample ID: 0901091-12

Sample wt/vol: 5.1 (g/mL) G Lab File ID: 0109112A

Level: (low/med) LOW Date Sampled: 01/12/09 12:30

% Moisture: not dec. 10 Date Analyzed: 01/17/09 21:21

GC Column: RTX-VRX ID: 0.25 (mm) Dilution Factor: 1.0

Soil Extract Volume:_____(uL) Soil Aliquot Volume: _____(uL)

CONCENTRATION UNITS: (ug/L or ug/Kg) UG/KG

CAS NO.	COMPOUND	MDL	RL	CONC	Q
108-88-3	Toluene	0.93	11		U
120-82-1	1,2,4-Trichlorobenzene	0.19	11		~~U~~ UJ CCH
71-55-6	1,1,1-Trichloroethane	0.97	11		U
79-00-5	1,1,2-Trichloroethane	0.38	11		U
79-01-6	Trichloroethene	0.92	11		U
76-13-1	Trichlorotrifluoroethane	0.59	11		U
75-69-4	Trichlorofluoromethane	1.0	11		U
75-01-4	Vinyl chloride	1.2	11		U
1330-20-7	Xylene(total)	0.76	11		U

lw
4/21/09

FORM 1
VOLATILE ORGANICS ANALYSIS DATA SHEET

CLIENT SAMPLE NO. 13

MR08-SS300-09A

Lab Name: EMPIRICAL LABS Contract: CH2MHILL

Lab Code: NA Case No.: NA SAS No.: NA SDG No.: LEJEUNE048

Matrix: (soil/water) SOIL Lab Sample ID: 0901091-13

Sample wt/vol: 6.2 (g/mL) G Lab File ID: 0109113A

Level: (low/med) LOW Date Sampled: 01/12/09 13:00

% Moisture: not dec. 13 Date Analyzed: 01/17/09 21:52

GC Column: RTX-VRX ID: 0.25 (mm) Dilution Factor: 1.0

Soil Extract Volume:_____(uL) Soil Aliquot Volume: _____(uL)

CONCENTRATION UNITS: (ug/L or ug/Kg) UG/KG

CAS NO.	COMPOUND	MDL	RL	CONC	Q
67-64-1	Acetone	1.8	9.3	5.2	J
71-43-2	Benzene	0.44	9.3		U
75-27-4	Bromodichloromethane	0.28	9.3		U
75-25-2	Bromoform	0.93	9.3		U
74-83-9	Bromomethane	0.67	9.3		U
78-93-3	2-Butanone	1.3	9.3		U
75-15-0	Carbon disulfide	1.2	9.3		U
56-23-5	Carbon tetrachloride	0.82	9.3		U
108-90-7	Chlorobenzene	0.32	9.3		U
75-00-3	Chloroethane	1.0	9.3		U
67-66-3	Chloroform	0.51	9.3		U
74-87-3	Chloromethane	0.48	9.3		U
110-82-7	Cyclohexane	0.50	9.3		U
124-48-1	Dibromochloromethane	0.32	9.3		U
96-12-8	1,2-Dibromo-3-chloropropane	1.1	4.6		U
106-93-4	1,2-Dibromoethane	0.40	9.3		U
95-50-1	1,2-Dichlorobenzene	0.34	9.3		U
541-73-1	1,3-Dichlorobenzene	0.78	9.3		U
106-46-7	1,4-Dichlorobenzene	0.51	9.3		U
75-71-8	Dichlorodifluoromethane	1.0	9.3		U
75-34-3	1,1-Dichloroethane	0.50	9.3		U
107-06-2	1,2-Dichloroethane	0.43	9.3		U
75-35-4	1,1-Dichloroethene	1.1	9.3		U
156-59-2	cis-1,2-Dichloroethene	1.1	9.3		U
156-60-5	trans-1,2-Dichloroethene	1.0	9.3		U
78-87-5	1,2-Dichloropropane	0.43	9.3		U
10061-01-5	cis-1,3-Dichloropropene	0.46	9.3		U
10061-02-6	trans-1,3-Dichloropropene	0.30	9.3		U
100-41-4	Ethylbenzene	0.70	9.3		U
591-78-6	2-Hexanone	2.1	9.3		U
98-82-8	Isopropylbenzene	0.82	9.3		U
79-20-9	Methyl acetate	1.5	9.3		U
75-09-2	Methylene chloride	0.57	9.3	9.3u ~~1.8~~ ~~JB~~	B1
108-87-2	Methyl cyclohexane	0.28	9.3		U
1634-04-4	Methyl tert-butyl ether	0.30	9.3		U
108-10-1	4-Methyl-2-pentanone	0.54	9.3		U
100-42-5	Styrene	0.32	9.3		U
79-34-5	1,1,2,2-Tetrachloroethane	0.40	9.3		U
127-18-4	Tetrachloroethene	0.90	9.3		U

FORM I VOA

LW 4/3/09

FORM 1
VOLATILE ORGANICS ANALYSIS DATA SHEET

CLIENT SAMPLE NO. 13

MR08-SS300-09A

Lab Name: EMPIRICAL LABS Contract: CH2MHILL

Lab Code: NA Case No.: NA SAS No.: NA SDG No.: LEJEUNE048

Matrix: (soil/water) SOIL Lab Sample ID: 0901091-13

Sample wt/vol: 6.2 (g/mL) G Lab File ID: 0109113A

Level: (low/med) LOW Date Sampled: 01/12/09 13:00

% Moisture: not dec. 13 Date Analyzed: 01/17/09 21:52

GC Column: RTX-VRX ID: 0.25 (mm) Dilution Factor: 1.0

Soil Extract Volume:_____(uL) Soil Aliquot Volume: _____(uL)

CONCENTRATION UNITS: (ug/L or ug/Kg) UG/KG

CAS NO.	COMPOUND	MDL	RL	CONC	Q
108-88-3	Toluene	0.80	9.3		U
120-82-1	1,2,4-Trichlorobenzene	0.17	9.3		~~U~~ UJ CCV
71-55-6	1,1,1-Trichloroethane	0.83	9.3		U
79-00-5	1,1,2-Trichloroethane	0.32	9.3		U
79-01-6	Trichloroethene	0.79	9.3		U
76-13-1	Trichlorotrifluoroethane	0.51	9.3		U
75-69-4	Trichlorofluoromethane	0.88	9.3		U
75-01-4	Vinyl chloride	1.0	9.3		U
1330-20-7	Xylene(total)	0.65	9.3		U

FORM I VOA

MW
4/13/09

FORM 1
VOLATILE ORGANICS ANALYSIS DATA SHEET

CLIENT SAMPLE NO.

MR08-IS30
0-8-9-09A

14

Lab Name: EMPIRICAL LABS Contract: CH2MHILL

Lab Code: NA Case No.: NA SAS No.: NA SDG No.: LEJEUNE048

Matrix: (soil/water) SOIL Lab Sample ID: 0901091-14

Sample wt/vol: 4.8 (g/mL) G Lab File ID: 0109114A

Level: (low/med) LOW Date Sampled: 01/12/09 13:25

% Moisture: not dec. 13 Date Analyzed: 01/17/09 22:23

GC Column: RTX-VRX ID: 0.25 (mm) Dilution Factor: 1.0

Soil Extract Volume:_____(uL) Soil Aliquot Volume: _____(uL)

CONCENTRATION UNITS: (ug/L or ug/Kg) UG/KG

CAS NO.	COMPOUND	MDL	RL	CONC	Q
67-64-1	Acetone	2.4	12		U
71-43-2	Benzene	0.57	12		U
75-27-4	Bromodichloromethane	0.36	12		U
75-25-2	Bromoform	1.2	12		U
74-83-9	Bromomethane	0.87	12		U
78-93-3	2-Butanone	1.7	12		U
75-15-0	Carbon disulfide	1.6	12		U
56-23-5	Carbon tetrachloride	1.1	12		U
108-90-7	Chlorobenzene	0.41	12		U
75-00-3	Chloroethane	1.3	12		U
67-66-3	Chloroform	0.67	12		U
74-87-3	Chloromethane	0.63	12		U
110-82-7	Cyclohexane	0.65	12		U
124-48-1	Dibromochloromethane	0.41	12		U
96-12-8	1,2-Dibromo-3-chloropropane	1.4	6.1		U
106-93-4	1,2-Dibromoethane	0.52	12		U
95-50-1	1,2-Dichlorobenzene	0.45	12		U
541-73-1	1,3-Dichlorobenzene	1.0	12		U
106-46-7	1,4-Dichlorobenzene	0.67	12		U
75-71-8	Dichlorodifluoromethane	1.3	12		U
75-34-3	1,1-Dichloroethane	0.65	12		U
107-06-2	1,2-Dichloroethane	0.56	12		U
75-35-4	1,1-Dichloroethene	1.4	12		U
156-59-2	cis-1,2-Dichloroethene	1.4	12		U
156-60-5	trans-1,2-Dichloroethene	1.3	12		U
78-87-5	1,2-Dichloropropane	0.56	12		U
10061-01-5	cis-1,3-Dichloropropene	0.61	12		U
10061-02-6	trans-1,3-Dichloropropene	0.39	12		U
100-41-4	Ethylbenzene	0.91	12		U
591-78-6	2-Hexanone	2.8	12		U
98-82-8	Isopropylbenzene	1.1	12		U
79-20-9	Methyl acetate	1.9	12		U
75-09-2	Methylene chloride	0.75	12	12U	~~2.5 JB~~ BL
108-87-2	Methyl cyclohexane	0.36	12		U
1634-04-4	Methyl tert-butyl ether	0.39	12		U
108-10-1	4-Methyl-2-pentanone	0.70	12		U
100-42-5	Styrene	0.42	12		U
79-34-5	1,1,2,2-Tetrachloroethane	0.52	12		U
127-18-4	Tetrachloroethene	1.2	12		U

FORM I VOA

fw 4/3/09

FORM 1
VOLATILE ORGANICS ANALYSIS DATA SHEET

CLIENT SAMPLE NO.

MR08-IS30
0-8-9-09A

14

Lab Name: EMPIRICAL LABS Contract: CH2MHILL

Lab Code: NA Case No.: NA SAS No.: NA SDG No.: LEJEUNE048

Matrix: (soil/water) SOIL Lab Sample ID: 0901091-14

Sample wt/vol: 4.8 (g/mL) G Lab File ID: 0109114A

Level: (low/med) LOW Date Sampled: 01/12/09 13:25

% Moisture: not dec. 13 Date Analyzed: 01/17/09 22:23

GC Column: RTX-VRX ID: 0.25 (mm) Dilution Factor: 1.0

Soil Extract Volume:_____(uL) Soil Aliquot Volume: _____(uL)

CONCENTRATION UNITS: (ug/L or ug/Kg) UG/KG

CAS NO.	COMPOUND	MDL	RL	CONC	Q
108-88-3	Toluene	1.0	12		U
120-82-1	1,2,4-Trichlorobenzene	0.22	12		~~U~~ UJ CC
71-55-6	1,1,1-Trichloroethane	1.1	12		U
79-00-5	1,1,2-Trichloroethane	0.42	12		U
79-01-6	Trichloroethene	1.0	12		U
76-13-1	Trichlorotrifluoroethane	0.67	12		U
75-69-4	Trichlorofluoromethane	1.2	12		U
75-01-4	Vinyl chloride	1.3	12		U
1330-20-7	Xylene(total)	0.85	12		U

fw
4/13/09

FORM 1
VOLATILE ORGANICS ANALYSIS DATA SHEET

CLIENT SAMPLE NO.

MR08-SS301-09A

15

Lab Name: EMPIRICAL LABS Contract: CH2MHILL

Lab Code: NA Case No.: NA SAS No.: NA SDG No.: LEJEUNE048

Matrix: (soil/water) SOIL Lab Sample ID: 0901091-15

Sample wt/vol: 5.6 (g/mL) G Lab File ID: 0109115B

Level: (low/med) LOW Date Sampled: 01/12/09 13:40

% Moisture: not dec. 5 Date Analyzed: 01/19/09 16:32

GC Column: RTX-VRX ID: 0.25 (mm) Dilution Factor: 1.0

Soil Extract Volume:_____(uL) Soil Aliquot Volume: _____(uL)

CONCENTRATION UNITS: (ug/L or ug/Kg) UG/KG

CAS NO.	COMPOUND	MDL	RL	CONC	Q
67-64-1	Acetone	1.9	9.4		U
71-43-2	Benzene	0.44	9.4	0.65	J
75-27-4	Bromodichloromethane	0.28	9.4		~~U~~ UJ CCH
75-25-2	Bromoform	0.94	9.4		U
74-83-9	Bromomethane	0.68	9.4		~~U~~ UJ CCH
78-93-3	2-Butanone	1.3	9.4		U
75-15-0	Carbon disulfide	1.2	9.4		U
56-23-5	Carbon tetrachloride	0.83	9.4		~~U~~ UJ CCH
108-90-7	Chlorobenzene	0.32	9.4		U
75-00-3	Chloroethane	1.0	9.4		U
67-66-3	Chloroform	0.52	9.4		~~U~~ UJ CCH
74-87-3	Chloromethane	0.49	9.4		~~U~~ UJ CCH
110-82-7	Cyclohexane	0.51	9.4		U
124-48-1	Dibromochloromethane	0.32	9.4		U
96-12-8	1,2-Dibromo-3-chloropropane	1.1	4.7		U
106-93-4	1,2-Dibromoethane	0.40	9.4		U
95-50-1	1,2-Dichlorobenzene	0.35	9.4		U
541-73-1	1,3-Dichlorobenzene	0.79	9.4		U
106-46-7	1,4-Dichlorobenzene	0.52	9.4		U
75-71-8	Dichlorodifluoromethane	1.0	9.4		~~U~~ UJ CCH
75-34-3	1,1-Dichloroethane	0.51	9.4		U
107-06-2	1,2-Dichloroethane	0.43	9.4		~~U~~ UJ CCH
75-35-4	1,1-Dichloroethene	1.1	9.4		U
156-59-2	cis-1,2-Dichloroethene	1.1	9.4		U
156-60-5	trans-1,2-Dichloroethene	1.0	9.4		U
78-87-5	1,2-Dichloropropane	0.43	9.4		U
10061-01-5	cis-1,3-Dichloropropene	0.47	9.4		U
10061-02-6	trans-1,3-Dichloropropene	0.30	9.4		U
100-41-4	Ethylbenzene	0.71	9.4	5.3	J
591-78-6	2-Hexanone	2.2	9.4		U
98-82-8	Isopropylbenzene	0.83	9.4		U
79-20-9	Methyl acetate	1.5	9.4		U
75-09-2	Methylene chloride	0.58	9.4	9.4 UJ ~~2.1 JB~~ CCH	~~B~~
108-87-2	Methyl cyclohexane	0.28	9.4	0.41	J
1634-04-4	Methyl tert-butyl ether	0.30	9.4		~~U~~ UJ CCH
108-10-1	4-Methyl-2-pentanone	0.55	9.4		U
100-42-5	Styrene	0.33	9.4		U
79-34-5	1,1,2,2-Tetrachloroethane	0.40	9.4		U
127-18-4	Tetrachloroethene	0.91	9.4		U

FORM I VOA

LW
4/3/09

FORM 1
VOLATILE ORGANICS ANALYSIS DATA SHEET

CLIENT SAMPLE NO. 15

MR08-SS301-09A

Lab Name: EMPIRICAL LABS Contract: CH2MHILL

Lab Code: NA Case No.: NA SAS No.: NA SDG No.: LEJEUNE048

Matrix: (soil/water) SOIL Lab Sample ID: 0901091-15

Sample wt/vol: 5.6 (g/mL) G Lab File ID: 0109115B

Level: (low/med) LOW Date Sampled: 01/12/09 13:40

% Moisture: not dec. 5 Date Analyzed: 01/19/09 16:32

GC Column: RTX-VRX ID: 0.25 (mm) Dilution Factor: 1.0

Soil Extract Volume:_____(uL) Soil Aliquot Volume: _____(uL)

CONCENTRATION UNITS: (ug/L or ug/Kg) UG/KG

CAS NO.	COMPOUND	MDL	RL	CONC	Q	
108-88-3	Toluene	0.81	9.4	9.4u ~~2.2~~	~~J~~	B
120-82-1	1,2,4-Trichlorobenzene	0.17	9.4		U	
71-55-6	1,1,1-Trichloroethane	0.85	9.4		~~U~~ UJ	cc
79-00-5	1,1,2-Trichloroethane	0.33	9.4		U	
79-01-6	Trichloroethene	0.80	9.4		U	
76-13-1	Trichlorotrifluoroethane	0.52	9.4		~~U~~ UJ	cc
75-69-4	Trichlorofluoromethane	0.90	9.4		~~U~~ ↓	↓
75-01-4	Vinyl chloride	1.0	9.4		~~U~~	
1330-20-7	Xylene(total)	0.66	9.4		U	

FORM I VOA

LW
4/13/09

FORM 1
VOLATILE ORGANICS ANALYSIS DATA SHEET

CLIENT SAMPLE NO. 16

MR08-IS30
1-7-8-09A

Lab Name: EMPIRICAL LABS Contract: CH2MHILL

Lab Code: NA Case No.: NA SAS No.: NA SDG No.: LEJEUNE048

Matrix: (soil/water) SOIL Lab Sample ID: 0901091-16

Sample wt/vol: 5.7 (g/mL) G Lab File ID: 0109116A

Level: (low/med) LOW Date Sampled: 01/12/09 14:10

% Moisture: not dec. 7 Date Analyzed: 01/17/09 23:24

GC Column: RTX-VRX ID: 0.25 (mm) Dilution Factor: 1.0

Soil Extract Volume:_____(uL) Soil Aliquot Volume: _____(uL)

CONCENTRATION UNITS: (ug/L or ug/Kg) UG/KG

CAS NO.	COMPOUND	MDL	RL	CONC	Q
67-64-1	Acetone	1.9	9.3	3.0	J
71-43-2	Benzene	0.44	9.3		U
75-27-4	Bromodichloromethane	0.28	9.3		U
75-25-2	Bromoform	0.93	9.3		U
74-83-9	Bromomethane	0.67	9.3		U
78-93-3	2-Butanone	1.3	9.3		U
75-15-0	Carbon disulfide	1.2	9.3		U
56-23-5	Carbon tetrachloride	0.82	9.3		U
108-90-7	Chlorobenzene	0.32	9.3		U
75-00-3	Chloroethane	1.0	9.3		U
67-66-3	Chloroform	0.51	9.3		U
74-87-3	Chloromethane	0.48	9.3		U
110-82-7	Cyclohexane	0.50	9.3		U
124-48-1	Dibromochloromethane	0.32	9.3		U
96-12-8	1,2-Dibromo-3-chloropropane	1.1	4.7		U
106-93-4	1,2-Dibromoethane	0.40	9.3		U
95-50-1	1,2-Dichlorobenzene	0.34	9.3		U
541-73-1	1,3-Dichlorobenzene	0.78	9.3		U
106-46-7	1,4-Dichlorobenzene	0.51	9.3		U
75-71-8	Dichlorodifluoromethane	1.0	9.3		U
75-34-3	1,1-Dichloroethane	0.50	9.3		U
107-06-2	1,2-Dichloroethane	0.43	9.3		U
75-35-4	1,1-Dichloroethene	1.1	9.3		U
156-59-2	cis-1,2-Dichloroethene	1.1	9.3		U
156-60-5	trans-1,2-Dichloroethene	1.0	9.3		U
78-87-5	1,2-Dichloropropane	0.43	9.3		U
10061-01-5	cis-1,3-Dichloropropene	0.47	9.3		U
10061-02-6	trans-1,3-Dichloropropene	0.30	9.3		U
100-41-4	Ethylbenzene	0.70	9.3		U
591-78-6	2-Hexanone	2.1	9.3		U
98-82-8	Isopropylbenzene	0.82	9.3		U
79-20-9	Methyl acetate	1.5	9.3		U
75-09-2	Methylene chloride	0.58	9.3	9.3u ~~1.6~~ ~~JB~~	U
108-87-2	Methyl cyclohexane	0.28	9.3		U
1634-04-4	Methyl tert-butyl ether	0.30	9.3		U
108-10-1	4-Methyl-2-pentanone	0.54	9.3		U
100-42-5	Styrene	0.33	9.3		U
79-34-5	1,1,2,2-Tetrachloroethane	0.40	9.3		U
127-18-4	Tetrachloroethene	0.91	9.3		U

FORM I VOA

KW
4/3/09

FORM 1
VOLATILE ORGANICS ANALYSIS DATA SHEET

CLIENT SAMPLE NO.

MR08-IS30
1-7-8-09A

16

Lab Name: EMPIRICAL LABS Contract: CH2MHILL

Lab Code: NA Case No.: NA SAS No.: NA SDG No.: LEJEUNE048

Matrix: (soil/water) SOIL Lab Sample ID: 0901091-16

Sample wt/vol: 5.7 (g/mL) G Lab File ID: 0109116A

Level: (low/med) LOW Date Sampled: 01/12/09 14:10

% Moisture: not dec. 7 Date Analyzed: 01/17/09 23:24

GC Column: RTX-VRX ID: 0.25 (mm) Dilution Factor: 1.0

Soil Extract Volume:_____(uL) Soil Aliquot Volume: _____(uL)

CONCENTRATION UNITS: (ug/L or ug/Kg) UG/KG

CAS NO.	COMPOUND	MDL	RL	CONC	Q
108-88-3	Toluene	0.80	9.3		U
120-82-1	1,2,4-Trichlorobenzene	0.17	9.3		~~U~~ UJ CH
71-55-6	1,1,1-Trichloroethane	0.84	9.3		U
79-00-5	1,1,2-Trichloroethane	0.33	9.3		U
79-01-6	Trichloroethene	0.79	9.3		U
76-13-1	Trichlorotrifluoroethane	0.51	9.3		U
75-69-4	Trichlorofluoromethane	0.89	9.3		U
75-01-4	Vinyl chloride	1.0	9.3		U
1330-20-7	Xylene(total)	0.65	9.3		U

4/3/09

FORM 1
VOLATILE ORGANICS ANALYSIS DATA SHEET

CLIENT SAMPLE NO.

MR08-SS302-09A

17

Lab Name: EMPIRICAL LABS Contract: CH2MHILL

Lab Code: NA Case No.: NA SAS No.: NA SDG No.: LEJEUNE048

Matrix: (soil/water) SOIL Lab Sample ID: 0901091-17

Sample wt/vol: 5.2 (g/mL) G Lab File ID: 0109117B

Level: (low/med) LOW Date Sampled: 01/12/09 14:30

% Moisture: not dec. 6 Date Analyzed: 01/19/09 17:11

GC Column: RTX-VRX ID: 0.25 (mm) Dilution Factor: 1.0

Soil Extract Volume:_____(uL) Soil Aliquot Volume: _____(uL)

CONCENTRATION UNITS: (ug/L or ug/Kg) UG/KG

CAS NO.	COMPOUND	MDL	RL	CONC	Q
67-64-1	Acetone	2.0	10	12	
71-43-2	Benzene	0.48	10	0.88	J
75-27-4	Bromodichloromethane	0.30	10		~~U~~ UJ CCH
75-25-2	Bromoform	1.0	10		U
74-83-9	Bromomethane	0.73	10		~~U~~ UJ CCH
78-93-3	2-Butanone	1.4	10		U
75-15-0	Carbon disulfide	1.3	10		U
56-23-5	Carbon tetrachloride	0.89	10		~~U~~ UJ CCH
108-90-7	Chlorobenzene	0.34	10		U
75-00-3	Chloroethane	1.1	10		U
67-66-3	Chloroform	0.56	10		~~U~~ UJ CCH
74-87-3	Chloromethane	0.53	10		~~U~~ UJ CCH
110-82-7	Cyclohexane	0.55	10		U
124-48-1	Dibromochloromethane	0.34	10		U
96-12-8	1,2-Dibromo-3-chloropropane	1.2	5.1		U
106-93-4	1,2-Dibromoethane	0.44	10		U
95-50-1	1,2-Dichlorobenzene	0.38	10		U
541-73-1	1,3-Dichlorobenzene	0.85	10		U
106-46-7	1,4-Dichlorobenzene	0.56	10		U
75-71-8	Dichlorodifluoromethane	1.1	10		~~U~~ UJ CCH
75-34-3	1,1-Dichloroethane	0.55	10		U
107-06-2	1,2-Dichloroethane	0.47	10		~~U~~ UJ CCH
75-35-4	1,1-Dichloroethene	1.2	10		U
156-59-2	cis-1,2-Dichloroethene	1.2	10		U
156-60-5	trans-1,2-Dichloroethene	1.1	10		U
78-87-5	1,2-Dichloropropane	0.47	10		U
10061-01-5	cis-1,3-Dichloropropene	0.51	10		U
10061-02-6	trans-1,3-Dichloropropene	0.32	10		U
100-41-4	Ethylbenzene	0.76	10	6.2	J
591-78-6	2-Hexanone	2.3	10		U
98-82-8	Isopropylbenzene	0.89	10		U
79-20-9	Methyl acetate	1.6	10		U
75-09-2	Methylene chloride	0.63	10	10UJ ~~2.6~~	~~JB~~ CCH B
108-87-2	Methyl cyclohexane	0.30	10	0.51	J
1634-04-4	Methyl tert-butyl ether	0.32	10		~~U~~ UJ CCH
108-10-1	4-Methyl-2-pentanone	0.59	10		U
100-42-5	Styrene	0.36	10		U
79-34-5	1,1,2,2-Tetrachloroethane	0.44	10		U
127-18-4	Tetrachloroethene	0.99	10		U

FORM I VOA

fcw
4/13/09

FORM 1
VOLATILE ORGANICS ANALYSIS DATA SHEET

CLIENT SAMPLE NO. 17

MR08-SS302-09A

Lab Name: EMPIRICAL LABS Contract: CH2MHILL

Lab Code: NA Case No.: NA SAS No.: NA SDG No.: LEJEUNE048

Matrix: (soil/water) SOIL Lab Sample ID: 0901091-17

Sample wt/vol: 5.2 (g/mL) G Lab File ID: 0109117B

Level: (low/med) LOW Date Sampled: 01/12/09 14:30

% Moisture: not dec. 6 Date Analyzed: 01/19/09 17:11

GC Column: RTX-VRX ID: 0.25 (mm) Dilution Factor: 1.0

Soil Extract Volume:_____(uL) Soil Aliquot Volume: _____(uL)

CONCENTRATION UNITS: (ug/L or ug/Kg) UG/KG

CAS NO.	COMPOUND	MDL	RL	CONC	Q
108-88-3	Toluene	0.87	10	10u ~~2.0~~	~~J~~ B
120-82-1	1,2,4-Trichlorobenzene	0.18	10		U
71-55-6	1,1,1-Trichloroethane	0.92	10		~~U~~ UJ CCV
79-00-5	1,1,2-Trichloroethane	0.36	10		U
79-01-6	Trichloroethene	0.86	10		U
76-13-1	Trichlorotrifluoroethane	0.56	10		~~U~~ UJ CCV
75-69-4	Trichlorofluoromethane	0.96	10		~~U~~ ↓
75-01-4	Vinyl chloride	1.1	10		~~U~~ ↓
1330-20-7	Xylene(total)	0.71	10		U

FORM I VOA

LW
4/3/09

FORM 1
VOLATILE ORGANICS ANALYSIS DATA SHEET

CLIENT SAMPLE NO. 18

MR08-IS30
2-8-9-09A

Lab Name: EMPIRICAL LABS Contract: CH2MHILL

Lab Code: NA Case No.: NA SAS No.: NA SDG No.: LEJEUNE048

Matrix: (soil/water) SOIL Lab Sample ID: 0901091-18

Sample wt/vol: 4.4 (g/mL) G Lab File ID: 0109118A

Level: (low/med) LOW Date Sampled: 01/12/09 15:00

% Moisture: not dec. 8 Date Analyzed: 01/18/09 03:58

GC Column: RTX-VRX ID: 0.25 (mm) Dilution Factor: 1.0

Soil Extract Volume:_____(uL) Soil Aliquot Volume: _____(uL)

CONCENTRATION UNITS: (ug/L or ug/Kg) UG/KG

CAS NO.	COMPOUND	MDL	RL	CONC	Q
67-64-1	Acetone	2.5	12	4.1	J
71-43-2	Benzene	0.58	12		U
75-27-4	Bromodichloromethane	0.37	12		U
75-25-2	Bromoform	1.2	12		U
74-83-9	Bromomethane	0.89	12		U
78-93-3	2-Butanone	1.7	12		U
75-15-0	Carbon disulfide	1.6	12		U
56-23-5	Carbon tetrachloride	1.1	12		U
108-90-7	Chlorobenzene	0.42	12		U
75-00-3	Chloroethane	1.4	12		U
67-66-3	Chloroform	0.68	12		U
74-87-3	Chloromethane	0.64	12		U
110-82-7	Cyclohexane	0.66	12		U
124-48-1	Dibromochloromethane	0.42	12		U
96-12-8	1,2-Dibromo-3-chloropropane	1.5	6.2		U
106-93-4	1,2-Dibromoethane	0.53	12		U
95-50-1	1,2-Dichlorobenzene	0.46	12		U
541-73-1	1,3-Dichlorobenzene	1.0	12		U
106-46-7	1,4-Dichlorobenzene	0.68	12		U
75-71-8	Dichlorodifluoromethane	1.4	12		U
75-34-3	1,1-Dichloroethane	0.66	12		U
107-06-2	1,2-Dichloroethane	0.57	12		U
75-35-4	1,1-Dichloroethene	1.5	12		U
156-59-2	cis-1,2-Dichloroethene	1.5	12		U
156-60-5	trans-1,2-Dichloroethene	1.4	12		U
78-87-5	1,2-Dichloropropane	0.57	12		U
10061-01-5	cis-1,3-Dichloropropene	0.62	12		U
10061-02-6	trans-1,3-Dichloropropene	0.39	12		U
100-41-4	Ethylbenzene	0.92	12		U
591-78-6	2-Hexanone	2.8	12		U
98-82-8	Isopropylbenzene	1.1	12		U
79-20-9	Methyl acetate	2.0	12		U
75-09-2	Methylene chloride	0.76	12	12u ~~3.4~~	~~JB~~ B
108-87-2	Methyl cyclohexane	0.37	12		U
1634-04-4	Methyl tert-butyl ether	0.39	12		U
108-10-1	4-Methyl-2-pentanone	0.71	12		U
100-42-5	Styrene	0.43	12		U
79-34-5	1,1,2,2-Tetrachloroethane	0.53	12		U
127-18-4	Tetrachloroethene	1.2	12		U

FORM I VOA

4/13/09

FORM 1
VOLATILE ORGANICS ANALYSIS DATA SHEET

CLIENT SAMPLE NO. 18

MR08-IS30
2-8-9-09A

Lab Name: EMPIRICAL LABS Contract: CH2MHILL

Lab Code: NA Case No.: NA SAS No.: NA SDG No.: LEJEUNE048

Matrix: (soil/water) SOIL Lab Sample ID: 0901091-18

Sample wt/vol: 4.4 (g/mL) G Lab File ID: 0109118A

Level: (low/med) LOW Date Sampled: 01/12/09 15:00

% Moisture: not dec. 8 Date Analyzed: 01/18/09 03:58

GC Column: RTX-VRX ID: 0.25 (mm) Dilution Factor: 1.0

Soil Extract Volume:_____(uL) Soil Aliquot Volume: _____(uL)

CONCENTRATION UNITS: (ug/L or ug/Kg) UG/KG

CAS NO.	COMPOUND	MDL	RL	CONC	Q
108-88-3	Toluene	1.0	12		U
120-82-1	1,2,4-Trichlorobenzene	0.22	12	12u 0.~~23~~ ~~JB~~	B1
71-55-6	1,1,1-Trichloroethane	1.1	12		U
79-00-5	1,1,2-Trichloroethane	0.43	12		U
79-01-6	Trichloroethene	1.0	12		U
76-13-1	Trichlorotrifluoroethane	0.68	12		U
75-69-4	Trichlorofluoromethane	1.2	12		U
75-01-4	Vinyl chloride	1.4	12		U
1330-20-7	Xylene(total)	0.86	12		U

lw
4/3/09

FORM 1
VOLATILE ORGANICS ANALYSIS DATA SHEET

CLIENT SAMPLE NO. 19

MR08-SS303-09A

Lab Name: EMPIRICAL LABS Contract: CH2MHILL

Lab Code: NA Case No.: NA SAS No.: NA SDG No.: LEJEUNE048

Matrix: (soil/water) SOIL Lab Sample ID: 0901091-19

Sample wt/vol: 6.1 (g/mL) G Lab File ID: 0109119A

Level: (low/med) LOW Date Sampled: 01/12/09 15:30

% Moisture: not dec. 12 Date Analyzed: 01/18/09 00:25

GC Column: RTX-VRX ID: 0.25 (mm) Dilution Factor: 1.0

Soil Extract Volume:_____(uL) Soil Aliquot Volume: _____(uL)

CONCENTRATION UNITS: (ug/L or ug/Kg) UG/KG

CAS NO.	COMPOUND	MDL	RL	CONC	Q
67-64-1	Acetone	1.8	9.3	22	
71-43-2	Benzene	0.44	9.3	0.45	J
75-27-4	Bromodichloromethane	0.28	9.3		U
75-25-2	Bromoform	0.93	9.3		U
74-83-9	Bromomethane	0.67	9.3		U
78-93-3	2-Butanone	1.3	9.3	6.6	J
75-15-0	Carbon disulfide	1.2	9.3		U
56-23-5	Carbon tetrachloride	0.82	9.3		U
108-90-7	Chlorobenzene	0.32	9.3		U
75-00-3	Chloroethane	1.0	9.3		U
67-66-3	Chloroform	0.51	9.3		U
74-87-3	Chloromethane	0.48	9.3		U
110-82-7	Cyclohexane	0.50	9.3		U
124-48-1	Dibromochloromethane	0.32	9.3		U
96-12-8	1,2-Dibromo-3-chloropropane	1.1	4.6		U
106-93-4	1,2-Dibromoethane	0.40	9.3		U
95-50-1	1,2-Dichlorobenzene	0.34	9.3		U
541-73-1	1,3-Dichlorobenzene	0.78	9.3		U
106-46-7	1,4-Dichlorobenzene	0.51	9.3		U
75-71-8	Dichlorodifluoromethane	1.0	9.3		U
75-34-3	1,1-Dichloroethane	0.50	9.3		U
107-06-2	1,2-Dichloroethane	0.43	9.3		U
75-35-4	1,1-Dichloroethene	1.1	9.3		U
156-59-2	cis-1,2-Dichloroethene	1.1	9.3		U
156-60-5	trans-1,2-Dichloroethene	1.0	9.3		U
78-87-5	1,2-Dichloropropane	0.43	9.3		U
10061-01-5	cis-1,3-Dichloropropene	0.46	9.3		U
10061-02-6	trans-1,3-Dichloropropene	0.30	9.3		U
100-41-4	Ethylbenzene	0.70	9.3	1.1	J
591-78-6	2-Hexanone	2.1	9.3		U
98-82-8	Isopropylbenzene	0.82	9.3		U
79-20-9	Methyl acetate	1.5	9.3		U
75-09-2	Methylene chloride	0.58	9.3	9.3u ~~1.6~~	~~JB~~
108-87-2	Methyl cyclohexane	0.28	9.3	0.33	J
1634-04-4	Methyl tert-butyl ether	0.30	9.3		U
108-10-1	4-Methyl-2-pentanone	0.54	9.3		U
100-42-5	Styrene	0.32	9.3		U
79-34-5	1,1,2,2-Tetrachloroethane	0.40	9.3		U
127-18-4	Tetrachloroethene	0.90	9.3		U

FORM I VOA

lw
4/3/09

FORM 1
VOLATILE ORGANICS ANALYSIS DATA SHEET

CLIENT SAMPLE NO. 19

MR08-SS303-09A

Lab Name: EMPIRICAL LABS Contract: CH2MHILL

Lab Code: NA Case No.: NA SAS No.: NA SDG No.: LEJEUNE048

Matrix: (soil/water) SOIL Lab Sample ID: 0901091-19

Sample wt/vol: 6.1 (g/mL) G Lab File ID: 0109119A

Level: (low/med) LOW Date Sampled: 01/12/09 15:30

% Moisture: not dec. 12 Date Analyzed: 01/18/09 00:25

GC Column: RTX-VRX ID: 0.25 (mm) Dilution Factor: 1.0

Soil Extract Volume:_____(uL) Soil Aliquot Volume: _____(uL)

CONCENTRATION UNITS: (ug/L or ug/Kg) UG/KG

CAS NO.	COMPOUND	MDL	RL	CONC	Q
108-88-3	Toluene	0.80	9.3		U
120-82-1	1,2,4-Trichlorobenzene	0.17	9.3		~~U~~ UJ CH
71-55-6	1,1,1-Trichloroethane	0.84	9.3		U
79-00-5	1,1,2-Trichloroethane	0.32	9.3		U
79-01-6	Trichloroethene	0.79	9.3		U
76-13-1	Trichlorotrifluoroethane	0.51	9.3		U
75-69-4	Trichlorofluoromethane	0.88	9.3		U
75-01-4	Vinyl chloride	1.0	9.3		U
1330-20-7	Xylene(total)	0.65	9.3		U

fcw
4/13/09

FORM 1
VOLATILE ORGANICS ANALYSIS DATA SHEET

CLIENT SAMPLE NO. 20

MR08-IS30
3-6-7-09A

Lab Name: EMPIRICAL LABS Contract: CH2MHILL

Lab Code: NA Case No.: NA SAS No.: NA SDG No.: LEJEUNE048

Matrix: (soil/water) SOIL Lab Sample ID: 0901091-20

Sample wt/vol: 5.8 (g/mL) G Lab File ID: 0109120B

Level: (low/med) LOW Date Sampled: 01/12/09 16:10

% Moisture: not dec. 9 Date Analyzed: 01/19/09 17:51

GC Column: RTX-VRX ID: 0.25 (mm) Dilution Factor: 1.0

Soil Extract Volume:_____(uL) Soil Aliquot Volume: _____(uL)

CONCENTRATION UNITS: (ug/L or ug/Kg) UG/KG

CAS NO.	COMPOUND	MDL	RL	CONC	Q
67-64-1	Acetone	1.9	9.4	4.6	J
71-43-2	Benzene	0.44	9.4		U
75-27-4	Bromodichloromethane	0.28	9.4		~~U~~ UJ CCH
75-25-2	Bromoform	0.94	9.4		U
74-83-9	Bromomethane	0.68	9.4		~~U~~ UJ CCH
78-93-3	2-Butanone	1.3	9.4		U
75-15-0	Carbon disulfide	1.2	9.4		U
56-23-5	Carbon tetrachloride	0.83	9.4		~~U~~ UJ CCH
108-90-7	Chlorobenzene	0.32	9.4		U
75-00-3	Chloroethane	1.0	9.4		U
67-66-3	Chloroform	0.52	9.4		~~U~~ UJ CCH
74-87-3	Chloromethane	0.49	9.4		~~U~~ UJ CCH
110-82-7	Cyclohexane	0.51	9.4		U
124-48-1	Dibromochloromethane	0.32	9.4		U
96-12-8	1,2-Dibromo-3-chloropropane	1.1	4.7		U
106-93-4	1,2-Dibromoethane	0.41	9.4		U
95-50-1	1,2-Dichlorobenzene	0.35	9.4		U
541-73-1	1,3-Dichlorobenzene	0.79	9.4		U
106-46-7	1,4-Dichlorobenzene	0.52	9.4		U
75-71-8	Dichlorodifluoromethane	1.0	9.4		~~U~~ UJ CCH
75-34-3	1,1-Dichloroethane	0.51	9.4		U
107-06-2	1,2-Dichloroethane	0.44	9.4		~~U~~ UJ CCH
75-35-4	1,1-Dichloroethene	1.1	9.4		U
156-59-2	cis-1,2-Dichloroethene	1.1	9.4		U
156-60-5	trans-1,2-Dichloroethene	1.0	9.4		U
78-87-5	1,2-Dichloropropane	0.44	9.4		U
10061-01-5	cis-1,3-Dichloropropene	0.47	9.4		U
10061-02-6	trans-1,3-Dichloropropene	0.30	9.4		U
100-41-4	Ethylbenzene	0.71	9.4		U
591-78-6	2-Hexanone	2.2	9.4		U
98-82-8	Isopropylbenzene	0.83	9.4		U
79-20-9	Methyl acetate	1.5	9.4		U
75-09-2	Methylene chloride	0.59	9.4	9.4UJ ~~2.6~~	~~JB~~ CCH B
108-87-2	Methyl cyclohexane	0.28	9.4		U
1634-04-4	Methyl tert-butyl ether	0.30	9.4		~~U~~ UJ CCH
108-10-1	4-Methyl-2-pentanone	0.55	9.4		U
100-42-5	Styrene	0.33	9.4		U
79-34-5	1,1,2,2-Tetrachloroethane	0.41	9.4		U
127-18-4	Tetrachloroethene	0.92	9.4		U

FORM I VOA

JW 4/13/09

FORM 1
VOLATILE ORGANICS ANALYSIS DATA SHEET

CLIENT SAMPLE NO.

MR08-IS30
3-6-7-09A

20

Lab Name: EMPIRICAL LABS Contract: CH2MHILL

Lab Code: NA Case No.: NA SAS No.: NA SDG No.: LEJEUNE048

Matrix: (soil/water) SOIL Lab Sample ID: 0901091-20

Sample wt/vol: 5.8 (g/mL) G Lab File ID: 0109120B

Level: (low/med) LOW Date Sampled: 01/12/09 16:10

% Moisture: not dec. 9 Date Analyzed: 01/19/09 17:51

GC Column: RTX-VRX ID: 0.25 (mm) Dilution Factor: 1.0

Soil Extract Volume:_____(uL) Soil Aliquot Volume: _____(uL)

CONCENTRATION UNITS: (ug/L or ug/Kg) UG/KG

CAS NO.	COMPOUND	MDL	RL	CONC	Q
108-88-3	Toluene	0.81	9.4		U
120-82-1	1,2,4-Trichlorobenzene	0.17	9.4		U
71-55-6	1,1,1-Trichloroethane	0.85	9.4		~~U~~ UJ CCA
79-00-5	1,1,2-Trichloroethane	0.33	9.4		U
79-01-6	Trichloroethene	0.80	9.4		U
76-13-1	Trichlorotrifluoroethane	0.52	9.4		~~U~~ UJ CCA
75-69-4	Trichlorofluoromethane	0.90	9.4		~~U~~ ↓
75-01-4	Vinyl chloride	1.0	9.4		~~U~~ ↓
1330-20-7	Xylene(total)	0.66	9.4		U

FORM I VOA

fuw
4/3/09

FORM 1
VOLATILE ORGANICS ANALYSIS DATA SHEET

CLIENT SAMPLE NO.

MR08-EB01
011209-SS

21

Lab Name: EMPIRICAL LABS Contract: CH2MHILL

Lab Code: NA Case No.: NA SAS No.: NA SDG No.: LEJEUNE048

Matrix: (soil/water) WATER Lab Sample ID: 0901091-21

Sample wt/vol: 5.000 (g/mL) ML Lab File ID: 0109121

Level: (low/med) LOW Date Sampled: 01/12/09 08:00

% Moisture: not dec. _____ Date Analyzed: 01/16/09 22:23

GC Column: RTX-VRX ID: 0.25 (mm) Dilution Factor: 1.0

Soil Extract Volume:_____(uL) Soil Aliquot Volume: _____(uL)

CONCENTRATION UNITS: (ug/L or ug/Kg) UG/L

CAS NO.	COMPOUND	MDL	RL	CONC	Q
67-64-1	Acetone	0.84	2.5		U
71-43-2	Benzene	0.11	1.0		U
75-27-4	Bromodichloromethane	0.10	1.0		U
75-25-2	Bromoform	0.10	1.0		U
74-83-9	Bromomethane	0.32	1.0		~~U~~ UJ CC
78-93-3	2-Butanone	1.0	3.0		U
75-15-0	Carbon disulfide	0.13	1.0		U
56-23-5	Carbon tetrachloride	0.15	1.0		U
108-90-7	Chlorobenzene	0.10	1.0		U
75-00-3	Chloroethane	0.18	1.0		U
67-66-3	Chloroform	0.11	1.0		U
74-87-3	Chloromethane	0.29	1.0		U
110-82-7	Cyclohexane	0.20	1.0		U
124-48-1	Dibromochloromethane	0.10	1.0		U
96-12-8	1,2-Dibromo-3-chloropropane	0.11	1.0		U
106-93-4	1,2-Dibromoethane	0.10	1.0		U
95-50-1	1,2-Dichlorobenzene	0.10	1.0		U
541-73-1	1,3-Dichlorobenzene	0.13	1.0		U
106-46-7	1,4-Dichlorobenzene	0.10	1.0		U
75-71-8	Dichlorodifluoromethane	0.22	1.0		U
75-34-3	1,1-Dichloroethane	0.12	1.0		U
107-06-2	1,2-Dichloroethane	0.10	1.0		U
75-35-4	1,1-Dichloroethene	0.15	1.0		U
156-59-2	cis-1,2-Dichloroethene	0.13	1.0		U
156-60-5	trans-1,2-Dichloroethene	0.13	1.0		U
78-87-5	1,2-Dichloropropane	0.10	1.0		U
10061-01-5	cis-1,3-Dichloropropene	0.11	1.0		U
10061-02-6	trans-1,3-Dichloropropene	0.10	1.0		U
100-41-4	Ethylbenzene	0.13	1.0		U
591-78-6	2-Hexanone	0.30	1.0		U
98-82-8	Isopropylbenzene	0.15	1.0		U
79-20-9	Methyl acetate	0.30	1.0		U
75-09-2	Methylene chloride	0.14	1.0	1.04 ~~0.74~~	~~JB~~
108-87-2	Methyl cyclohexane	0.17	1.0		U
1634-04-4	Methyl tert-butyl ether	0.10	1.0		U
108-10-1	4-Methyl-2-pentanone	0.29	1.0		U
100-42-5	Styrene	0.10	1.0		U
79-34-5	1,1,2,2-Tetrachloroethane	0.10	1.0		U
127-18-4	Tetrachloroethene	0.15	1.0		U

FORM I VOA

lw
4/13/09

FORM 1
VOLATILE ORGANICS ANALYSIS DATA SHEET

CLIENT SAMPLE NO. 21

MR08-EB01
011209-SS

Lab Name: EMPIRICAL LABS Contract: CH2MHILL

Lab Code: NA Case No.: NA SAS No.: NA SDG No.: LEJEUNE048

Matrix: (soil/water) WATER Lab Sample ID: 0901091-21

Sample wt/vol: 5.000 (g/mL) ML Lab File ID: 0109121

Level: (low/med) LOW Date Sampled: 01/12/09 08:00

% Moisture: not dec. _____ Date Analyzed: 01/16/09 22:23

GC Column: RTX-VRX ID: 0.25 (mm) Dilution Factor: 1.0

Soil Extract Volume:_____(uL) Soil Aliquot Volume: _____(uL)

CONCENTRATION UNITS: (ug/L or ug/Kg) UG/L

CAS NO.	COMPOUND	MDL	RL	CONC	Q
108-88-3	Toluene	0.10	1.0	10	
120-82-1	1,2,4-Trichlorobenzene	0.10	1.0		U
71-55-6	1,1,1-Trichloroethane	0.17	1.0		U
79-00-5	1,1,2-Trichloroethane	0.10	1.0		U
79-01-6	Trichloroethene	0.13	1.0		U
76-13-1	Trichlorotrifluoroethane	0.18	1.0		U
75-69-4	Trichlorofluoromethane	0.17	1.0		U
75-01-4	Vinyl chloride	0.18	1.0		U
1330-20-7	Xylene(total)	0.22	1.0		U

MW 4/3/09

FORM 1
VOLATILE ORGANICS ANALYSIS DATA SHEET

CLIENT SAMPLE NO. 22

MR08-TB01011209

Lab Name: EMPIRICAL LABS Contract: CH2MHILL

Lab Code: NA Case No.: NA SAS No.: NA SDG No.: LEJEUNE048

Matrix: (soil/water) WATER Lab Sample ID: 0901091-22

Sample wt/vol: 5.000 (g/mL) ML Lab File ID: 0109122

Level: (low/med) LOW Date Sampled: 01/12/09 08:30

% Moisture: not dec. _____ Date Analyzed: 01/16/09 20:54

GC Column: RTX-VRX ID: 0.25 (mm) Dilution Factor: 1.0

Soil Extract Volume:_____(uL) Soil Aliquot Volume: _____(uL)

CONCENTRATION UNITS: (ug/L or ug/Kg) UG/L

CAS NO.	COMPOUND	MDL	RL	CONC	Q
67-64-1	Acetone	0.84	2.5		U
71-43-2	Benzene	0.11	1.0		U
75-27-4	Bromodichloromethane	0.10	1.0		U
75-25-2	Bromoform	0.10	1.0		U
74-83-9	Bromomethane	0.32	1.0		UWJ CCF
78-93-3	2-Butanone	1.0	3.0		U
75-15-0	Carbon disulfide	0.13	1.0		U
56-23-5	Carbon tetrachloride	0.15	1.0		U
108-90-7	Chlorobenzene	0.10	1.0		U
75-00-3	Chloroethane	0.18	1.0		U
67-66-3	Chloroform	0.11	1.0		U
74-87-3	Chloromethane	0.29	1.0		U
110-82-7	Cyclohexane	0.20	1.0		U
124-48-1	Dibromochloromethane	0.10	1.0		U
96-12-8	1,2-Dibromo-3-chloropropane	0.11	1.0		U
106-93-4	1,2-Dibromoethane	0.10	1.0		U
95-50-1	1,2-Dichlorobenzene	0.10	1.0		U
541-73-1	1,3-Dichlorobenzene	0.13	1.0		U
106-46-7	1,4-Dichlorobenzene	0.10	1.0		U
75-71-8	Dichlorodifluoromethane	0.22	1.0		U
75-34-3	1,1-Dichloroethane	0.12	1.0		U
107-06-2	1,2-Dichloroethane	0.10	1.0		U
75-35-4	1,1-Dichloroethene	0.15	1.0		U
156-59-2	cis-1,2-Dichloroethene	0.13	1.0		U
156-60-5	trans-1,2-Dichloroethene	0.13	1.0		U
78-87-5	1,2-Dichloropropane	0.10	1.0		U
10061-01-5	cis-1,3-Dichloropropene	0.11	1.0		U
10061-02-6	trans-1,3-Dichloropropene	0.10	1.0		U
100-41-4	Ethylbenzene	0.13	1.0		U
591-78-6	2-Hexanone	0.30	1.0		U
98-82-8	Isopropylbenzene	0.15	1.0		U
79-20-9	Methyl acetate	0.30	1.0		U
75-09-2	Methylene chloride	0.14	1.0	1.04 ~~0.59~~ ~~JB~~	B1
108-87-2	Methyl cyclohexane	0.17	1.0		U
1634-04-4	Methyl tert-butyl ether	0.10	1.0		U
108-10-1	4-Methyl-2-pentanone	0.29	1.0		U
100-42-5	Styrene	0.10	1.0		U
79-34-5	1,1,2,2-Tetrachloroethane	0.10	1.0		U
127-18-4	Tetrachloroethene	0.15	1.0		U

FORM I VOA

4/13/09

FORM 1
VOLATILE ORGANICS ANALYSIS DATA SHEET

CLIENT SAMPLE NO. 22

MR08-TB01011209

Lab Name: EMPIRICAL LABS Contract: CH2MHILL

Lab Code: NA Case No.: NA SAS No.: NA SDG No.: LEJEUNE048

Matrix: (soil/water) WATER Lab Sample ID: 0901091-22

Sample wt/vol: 5.000 (g/mL) ML Lab File ID: 0109122

Level: (low/med) LOW Date Sampled: 01/12/09 08:30

% Moisture: not dec. _____ Date Analyzed: 01/16/09 20:54

GC Column: RTX-VRX ID: 0.25 (mm) Dilution Factor: 1.0

Soil Extract Volume:_____(uL) Soil Aliquot Volume: _____(uL)

CONCENTRATION UNITS: (ug/L or ug/Kg) UG/L

CAS NO.	COMPOUND	MDL	RL	CONC	Q
108-88-3	Toluene	0.10	1.0	10	
120-82-1	1,2,4-Trichlorobenzene	0.10	1.0		U
71-55-6	1,1,1-Trichloroethane	0.17	1.0		U
79-00-5	1,1,2-Trichloroethane	0.10	1.0		U
79-01-6	Trichloroethene	0.13	1.0		U
76-13-1	Trichlorotrifluoroethane	0.18	1.0		U
75-69-4	Trichlorofluoromethane	0.17	1.0		U
75-01-4	Vinyl chloride	0.18	1.0		U
1330-20-7	Xylene(total)	0.22	1.0		U

JW 4/3/09

ENVIRONMENTAL
Data Services, Inc.

VOLATILE ORGANIC COMPOUNDS

USEPA Region IV - Level IV Review

Site: MCB Camp Lejeune, TO-09 SDG #: LEJEUNE049

Client: CH2M HILL, Inc., Virginia Beach, Virginia Date: April 4, 2009

Laboratory: Empirical Laboratories, Nashville, Tennessee Reviewer: Nancy Weaver

EDS ID	Client Sample ID	Laboratory Sample ID	Matrix
1	MR08-SS286-09A	0901102-01	Soil
2	MR08-IS286-6-7-09A	0901102-02	Soil
3	MR08-SS287-09A	0901102-03	Soil
4	MR08-IS287-5-6-09A	0901102-04	Soil
5	MR08-SS288-09A	0901102-05	Soil
5MS	MR08-SS288-09AMS	0901102-05MS	Soil
5MSD	MR08-SS288-09AMSD	0901102-05MSD	Soil
6	MR08-IS288-6-7-09A	0901102-06	Soil
6MS	MR08-IS288-6-7-09AMS	0901102-06MS	Soil
6MSD	MR08-IS288-6-7-09AMSD	0901102-06MSD	Soil
7	MR08-SS264-09A	0901102-07	Soil
8	MR08-IS264-10-11-09A	0901102-08	Soil
9	MR08-SS263-09A	0901102-09	Soil
10	MR08-IS263-2-3-09A	0901102-10	Soil
11	MR08-SS262-09A	0901102-11	Soil
12	MR08-IS262-4-5-09A	0901102-12	Soil
13	MR08-SS169-09A-2	0901102-13	Soil
14	MR08-SS261-09A	0901102-14	Soil
15	MR08-IS261-4-5-09A	0901102-15	Soil
16	MR08-SS260-09A	0901102-16	Soil
17	MR08-IS260-6-7-09A	0901102-17	Soil
18	MR08-EB01011409-SS	0901102-18	Water
19	MR08-TB01011409	0901102-19	Water

The USEPA "Contract Laboratory Program National Functional Guidelines for Organic Data Review," October 1999, and professional judgement were used in evaluating the data in this summary report.

Holding Times - All samples were analyzed within 14 days for preserved water and soil samples.

GC/MS Tuning - All of the BFB tunes in the initial and continuing calibrations met the percent relative abundance criteria.

Initial Calibration - The initial calibrations exhibited acceptable %RSD and mean RRF values.

Continuing Calibration - The continuing calibrations exhibited acceptable %D and RRF values except the following.

CCAL Date	Compound	%D/RRF	Qualifier	Affected Samples
01/16/09	Bromomethane	30.8%	J/UJ	18, 19
01/19/09	2-Butanone	30.9%	J/UJ	1-2, 4-13, 15, 17

Surrogates - All samples exhibited acceptable surrogate recoveries except the following.

Sample ID	Surrogate	%R	Qualifier
1	S1-Dibromofluoromethane	127%	J - positive results
3	S1-Dibromofluoromethane	126%	J - positive results
13	S1-Dibromofluoromethane	128%	J - positive results
14	S1-Dibromofluoromethane	127%	None - ND
16	S1-Dibromofluoromethane	129%	J - positive results
17	S1-Dibromofluoromethane	133%	None - ND

MS/MSD - The MS/MSD sample exhibited acceptable %R and RPD values except the following.

MS/MSD Sample ID	Compound	MS/MSD %R/RPD	Qualifier
5	Benzene	58%/62%/Ok	J/UJ
	Bromodichloromethane	66%/66%/Ok	J/UJ
	Bromoform	48%/46%/Ok	J/UJ
	Carbon tetrachloride	53%/57%/Ok	J/UJ
	Chlorobenzene	35%/37%/Ok	J/UJ
	Cyclohexane	50%/52%/Ok	J/UJ
	Dibromochloromethane	58%/62%/Ok	J/UJ
	1,2-Dibromo-3-chloropropane	39%/35%/Ok	J/UJ
	1,2-Dibromoethane	59%/60%/Ok	J/UJ
	1,2-Dichlorobenzene	17%/17%/Ok	J/UJ
	1,3-Dichlorobenzene	19%/19%/Ok	J/UJ
	1,4-Dichorobenzene	21%/18%/Ok	J/UJ
	1,1-Dichoroethane	Ok/74%/Ok	J/UJ
	1,2-Dichloropropane	62%/67%/Ok	J/UJ
	cis-1,3-Dichloropropene	61%/65%/Ok	J/UJ
	trans-1,3-Dichloropropene	64%/Ok/Ok	J/UJ
	Ethylbenzene	38%/41%/Ok	J/UJ
	Isopropylbenzene	34%/38%/Ok	J/UJ
	Methylcyclohexane	33%/35%/Ok	J/UJ
	Stryene	27%/30%/Ok	J/UJ
	1,1,2,2-Tetrachloroethane	51%/46%/Ok	J/UJ
	Tetrachloroethene	36%/37%/Ok	J/UJ

MS/MSD Sample ID	Compound	MS/MSD %R/RPD	Qualifier
5	Toluene	48%/49%/Ok	J/UJ
	1,2,4-Trichlorobenzene	8%/8%/Ok	J/R
	1,1,1-Trichloroethane	60%/62%/Ok	J/UJ
	Trichloroethene	51%/52%/Ok	J/UJ
	Xylene (total)	34%/36%/Ok	J/UJ
6	Benzene	Ok/72%/Ok	J/UJ
	Chlorobenzene	69%/67%/Ok	J/UJ
	1,2-Dibromoethane	Ok/67%/Ok	J/UJ
	1,2-Dichlorobenzene	70%/64%/Ok	J/UJ
	1,3-Dichlorobenzene	67%/63%/Ok	J/UJ
	1,4-Dichlorobenzene	Ok/67%/Ok	J/UJ
	1,1-Dichloroethane	Ok/74%/Ok	J/UJ
	Ethylbenzene	71%/72%/Ok	J/UJ
	Styrene	74%/73%/Ok	J/UJ
	Tetrachloroethene	63%/64%/Ok	J/UJ
	Toluene	Ok/68%/Ok	J/UJ
	1,2,4-Trichlorobenzene	61%/58%/Ok	J/UJ
	Trichloroethene	72%/69%/Ok	J/UJ

Laboratory Control Sample - The LCS samples exhibited acceptable %R values.

Internal Standard (IS) Area Performance - All internal standards met response and retention time (RT) criteria.

Method Blank - The method blanks exhibited the following contamination.

Blank ID	Compound	Conc.	Action Level	Qualifier	Affected Samples
V3BLK0116	Methylene chloride	0.23 ug/L	2.3 ug/L	U	18
V5BLK0119	Acetone	6.2 ug/kg	62 ug/kg	U	2, 4-6, 8-12, 15
	Methylene chloride	1.5 ug/kg	15 ug/kg	U	1, 2, 4-13, 15, 17
V5BLK0121	Acetone	3.9 ug/kg	39 ug/kg	U	14
	2-Hexanone	2.8 ug/kg	14 ug/kg	None	All ND
	Methylene chloride	3.6 ug/kg	36 ug/kg	U	3, 14, 16
	1,2,4-Trichlorobenzene	0.42 ug/kg	2.1 ug/kg	U	3

Trip, Field, Equipment Blank - Field QC results are summarized below.

Blank ID	Compound	Conc. ug/L	Action Level ug/kg	Qualifier	Affected Samples
MR08-EB01011409-SS	Toluene	16	80	None	See FB
MR08-TB01011409	Methylene chloride	2.8	28	None	Already qualified due to MB or ND
MR08-FB01011009	Toluene	20	100	U	13

Field Duplicates - Field duplicate samples were not included in this data package.

Tentatively Identified Compounds (TICs) - TICs were not reported.

Compound Quantitation - No discrepancies were identified.

FORM 1
VOLATILE ORGANICS ANALYSIS DATA SHEET

CLIENT SAMPLE NO.

MR08-SS286-09A

Lab Name: EMPIRICAL LABS Contract: CH2MHILL

Lab Code: NA Case No.: NA SAS No.: NA SDG No.: LEJEUNE049

Matrix: (soil/water) SOIL Lab Sample ID: 0901102-01

Sample wt/vol: 4.8 (g/mL) G Lab File ID: 0110201A

Level: (low/med) LOW Date Sampled: 01/14/09 08:10

% Moisture: not dec. 11 Date Analyzed: 01/19/09 13:23

GC Column: RTX-VRX ID: 0.25 (mm) Dilution Factor: 1.0

Soil Extract Volume:_____(uL) Soil Aliquot Volume: _____(uL)

CONCENTRATION UNITS: (ug/L or ug/Kg) UG/KG

CAS NO.	COMPOUND	MDL	RL	CONC	Q
67-64-1	Acetone	2.3	12	83	~~B~~ J SSH
71-43-2	Benzene	0.55	12		U
75-27-4	Bromodichloromethane	0.35	12		U
75-25-2	Bromoform	1.2	12		U
74-83-9	Bromomethane	0.84	12		U
78-93-3	2-Butanone	1.6	12		~~U~~ UJ CCI
75-15-0	Carbon disulfide	1.5	12		U
56-23-5	Carbon tetrachloride	1.0	12		U
108-90-7	Chlorobenzene	0.40	12		U
75-00-3	Chloroethane	1.3	12		U
67-66-3	Chloroform	0.64	12		U
74-87-3	Chloromethane	0.60	12		U
110-82-7	Cyclohexane	0.63	12		U
124-48-1	Dibromochloromethane	0.40	12		U
96-12-8	1,2-Dibromo-3-chloropropane	1.4	5.8		U
106-93-4	1,2-Dibromoethane	0.50	12		U
95-50-1	1,2-Dichlorobenzene	0.43	12		U
541-73-1	1,3-Dichlorobenzene	0.98	12		U
106-46-7	1,4-Dichlorobenzene	0.64	12		U
75-71-8	Dichlorodifluoromethane	1.3	12		U
75-34-3	1,1-Dichloroethane	0.63	12		U
107-06-2	1,2-Dichloroethane	0.54	12		U
75-35-4	1,1-Dichloroethene	1.4	12		U
156-59-2	cis-1,2-Dichloroethene	1.4	12		U
156-60-5	trans-1,2-Dichloroethene	1.3	12		U
78-87-5	1,2-Dichloropropane	0.54	12		U
10061-01-5	cis-1,3-Dichloropropene	0.58	12		U
10061-02-6	trans-1,3-Dichloropropene	0.37	12		U
100-41-4	Ethylbenzene	0.87	12		U
591-78-6	2-Hexanone	2.7	12		U
98-82-8	Isopropylbenzene	1.0	12		U
79-20-9	Methyl acetate	1.9	12		U
75-09-2	Methylene chloride	0.72	12	12u	~~1.4 JB~~ BL
108-87-2	Methyl cyclohexane	0.35	12		U
1634-04-4	Methyl tert-butyl ether	0.37	12		U
108-10-1	4-Methyl-2-pentanone	0.67	12		U
100-42-5	Styrene	0.41	12		U
79-34-5	1,1,2,2-Tetrachloroethane	0.50	12		U
127-18-4	Tetrachloroethene	1.1	12		U

FORM I VOA

fw
4/14/09

FORM 1
VOLATILE ORGANICS ANALYSIS DATA SHEET

CLIENT SAMPLE NO.

MR08-SS286-09A

Lab Name: EMPIRICAL LABS Contract: CH2MHILL

Lab Code: NA Case No.: NA SAS No.: NA SDG No.: LEJEUNE049

Matrix: (soil/water) SOIL Lab Sample ID: 0901102-01

Sample wt/vol: 4.8 (g/mL) G Lab File ID: 0110201A

Level: (low/med) LOW Date Sampled: 01/14/09 08:10

% Moisture: not dec. 11 Date Analyzed: 01/19/09 13:23

GC Column: RTX-VRX ID: 0.25 (mm) Dilution Factor: 1.0

Soil Extract Volume:_____(uL) Soil Aliquot Volume: _____(uL)

CONCENTRATION UNITS: (ug/L or ug/Kg) UG/KG

CAS NO.	COMPOUND	MDL	RL	CONC	Q
108-88-3	Toluene	1.0	12		U
120-82-1	1,2,4-Trichlorobenzene	0.21	12		U
71-55-6	1,1,1-Trichloroethane	1.0	12		U
79-00-5	1,1,2-Trichloroethane	0.41	12		U
79-01-6	Trichloroethene	0.99	12		U
76-13-1	Trichlorotrifluoroethane	0.64	12		U
75-69-4	Trichlorofluoromethane	1.1	12		U
75-01-4	Vinyl chloride	1.3	12		U
1330-20-7	Xylene(total)	0.81	12		U

LW
4/14/09

FORM 1
VOLATILE ORGANICS ANALYSIS DATA SHEET

CLIENT SAMPLE NO. 2

MR08-IS28
6-6-7-09A

Lab Name: EMPIRICAL LABS Contract: CH2MHILL

Lab Code: NA Case No.: NA SAS No.: NA SDG No.: LEJEUNE049

Matrix: (soil/water) SOIL Lab Sample ID: 0901102-02

Sample wt/vol: 4.8 (g/mL) G Lab File ID: 0110202A

Level: (low/med) LOW Date Sampled: 01/14/09 08:30

% Moisture: not dec. 9 Date Analyzed: 01/19/09 13:54

GC Column: RTX-VRX ID: 0.25 (mm) Dilution Factor: 1.0

Soil Extract Volume:_____(uL) Soil Aliquot Volume: _____(uL)

CONCENTRATION UNITS: (ug/L or ug/Kg) UG/KG

CAS NO.	COMPOUND	MDL	RL	CONC	Q
67-64-1	Acetone	2.3	11	11U	~~9.6 JB~~
71-43-2	Benzene	0.54	11		U
75-27-4	Bromodichloromethane	0.34	11		U
75-25-2	Bromoform	1.1	11		U
74-83-9	Bromomethane	0.82	11		U
78-93-3	2-Butanone	1.6	11		~~U~~ UJ
75-15-0	Carbon disulfide	1.5	11		U
56-23-5	Carbon tetrachloride	1.0	11		U
108-90-7	Chlorobenzene	0.39	11		U
75-00-3	Chloroethane	1.2	11		U
67-66-3	Chloroform	0.63	11		U
74-87-3	Chloromethane	0.59	11		U
110-82-7	Cyclohexane	0.62	11		U
124-48-1	Dibromochloromethane	0.39	11		U
96-12-8	1,2-Dibromo-3-chloropropane	1.4	5.7		U
106-93-4	1,2-Dibromoethane	0.49	11		U
95-50-1	1,2-Dichlorobenzene	0.42	11		U
541-73-1	1,3-Dichlorobenzene	0.96	11		U
106-46-7	1,4-Dichlorobenzene	0.63	11		U
75-71-8	Dichlorodifluoromethane	1.2	11		U
75-34-3	1,1-Dichloroethane	0.62	11		U
107-06-2	1,2-Dichloroethane	0.52	11		U
75-35-4	1,1-Dichloroethene	1.4	11		U
156-59-2	cis-1,2-Dichloroethene	1.4	11		U
156-60-5	trans-1,2-Dichloroethene	1.2	11		U
78-87-5	1,2-Dichloropropane	0.52	11		U
10061-01-5	cis-1,3-Dichloropropene	0.57	11		U
10061-02-6	trans-1,3-Dichloropropene	0.36	11		U
100-41-4	Ethylbenzene	0.85	11		U
591-78-6	2-Hexanone	2.6	11		U
98-82-8	Isopropylbenzene	1.0	11		U
79-20-9	Methyl acetate	1.8	11		U
75-09-2	Methylene chloride	0.71	11	11U	~~3.3 JB~~
108-87-2	Methyl cyclohexane	0.34	11		U
1634-04-4	Methyl tert-butyl ether	0.36	11		U
108-10-1	4-Methyl-2-pentanone	0.66	11		U
100-42-5	Styrene	0.40	11		U
79-34-5	1,1,2,2-Tetrachloroethane	0.49	11		U
127-18-4	Tetrachloroethene	1.1	11		U

FORM I VOA

LW 9/14/09

FORM 1
VOLATILE ORGANICS ANALYSIS DATA SHEET

CLIENT SAMPLE NO. 2

MR08-IS28
6-6-7-09A

Lab Name: EMPIRICAL LABS Contract: CH2MHILL

Lab Code: NA Case No.: NA SAS No.: NA SDG No.: LEJEUNE049

Matrix: (soil/water) SOIL Lab Sample ID: 0901102-02

Sample wt/vol: 4.8 (g/mL) G Lab File ID: 0110202A

Level: (low/med) LOW Date Sampled: 01/14/09 08:30

% Moisture: not dec. 9 Date Analyzed: 01/19/09 13:54

GC Column: RTX-VRX ID: 0.25 (mm) Dilution Factor: 1.0

Soil Extract Volume:_____(uL) Soil Aliquot Volume: _____(uL)

CONCENTRATION UNITS: (ug/L or ug/Kg) UG/KG

CAS NO.	COMPOUND	MDL	RL	CONC	Q
108-88-3	Toluene	0.98	11		U
120-82-1	1,2,4-Trichlorobenzene	0.20	11		U
71-55-6	1,1,1-Trichloroethane	1.0	11		U
79-00-5	1,1,2-Trichloroethane	0.40	11		U
79-01-6	Trichloroethene	0.97	11		U
76-13-1	Trichlorotrifluoroethane	0.63	11		U
75-69-4	Trichlorofluoromethane	1.1	11		U
75-01-4	Vinyl chloride	1.2	11		U
1330-20-7	Xylene(total)	0.80	11		U

lew
4/4/09

FORM 1
VOLATILE ORGANICS ANALYSIS DATA SHEET

CLIENT SAMPLE NO. 3

MR08-SS287-09A

Lab Name: EMPIRICAL LABS Contract: CH2MHILL

Lab Code: NA Case No.: NA SAS No.: NA SDG No.: LEJEUNE049

Matrix: (soil/water) SOIL Lab Sample ID: 0901102-03

Sample wt/vol: 4.3 (g/mL) G Lab File ID: 0110203B

Level: (low/med) LOW Date Sampled: 01/14/09 09:15

% Moisture: not dec. 19 Date Analyzed: 01/21/09 10:42

GC Column: RTX-VRX ID: 0.25 (mm) Dilution Factor: 1.0

Soil Extract Volume:_____(uL) Soil Aliquot Volume: _____(uL)

CONCENTRATION UNITS: (ug/L or ug/Kg) UG/KG

CAS NO.	COMPOUND	MDL	RL	CONC	Q
67-64-1	Acetone	2.9	14	60	~~B~~ J SS
71-43-2	Benzene	0.67	14		U
75-27-4	Bromodichloromethane	0.43	14		U
75-25-2	Bromoform	1.4	14		U
74-83-9	Bromomethane	1.0	14		U
78-93-3	2-Butanone	2.0	14		U
75-15-0	Carbon disulfide	1.9	14		U
56-23-5	Carbon tetrachloride	1.3	14		U
108-90-7	Chlorobenzene	0.49	14		U
75-00-3	Chloroethane	1.6	14		U
67-66-3	Chloroform	0.79	14		U
74-87-3	Chloromethane	0.74	14		U
110-82-7	Cyclohexane	0.77	14		U
124-48-1	Dibromochloromethane	0.49	14		U
96-12-8	1,2-Dibromo-3-chloropropane	1.7	7.2		U
106-93-4	1,2-Dibromoethane	0.62	14		U
95-50-1	1,2-Dichlorobenzene	0.53	14		U
541-73-1	1,3-Dichlorobenzene	1.2	14		U
106-46-7	1,4-Dichlorobenzene	0.79	14		U
75-71-8	Dichlorodifluoromethane	1.6	14		U
75-34-3	1,1-Dichloroethane	0.77	14		U
107-06-2	1,2-Dichloroethane	0.66	14		U
75-35-4	1,1-Dichloroethene	1.7	14		U
156-59-2	cis-1,2-Dichloroethene	1.7	14		U
156-60-5	trans-1,2-Dichloroethene	1.6	14		U
78-87-5	1,2-Dichloropropane	0.66	14		U
10061-01-5	cis-1,3-Dichloropropene	0.72	14		U
10061-02-6	trans-1,3-Dichloropropene	0.46	14		U
100-41-4	Ethylbenzene	1.1	14		U
591-78-6	2-Hexanone	3.3	14		U
98-82-8	Isopropylbenzene	1.3	14		U
79-20-9	Methyl acetate	2.3	14		U
75-09-2	Methylene chloride	0.89	14	14u	~~2.0 JB~~ BL
108-87-2	Methyl cyclohexane	0.43	14		U
1634-04-4	Methyl tert-butyl ether	0.46	14		U
108-10-1	4-Methyl-2-pentanone	0.83	14		U
100-42-5	Styrene	0.50	14		U
79-34-5	1,1,2,2-Tetrachloroethane	0.62	14		U
127-18-4	Tetrachloroethene	1.4	14		U

FORM I VOA

UW
4/21/09

FORM 1
VOLATILE ORGANICS ANALYSIS DATA SHEET

CLIENT SAMPLE NO. 3

MR08-SS287-09A

Lab Name: EMPIRICAL LABS Contract: CH2MHILL

Lab Code: NA Case No.: NA SAS No.: NA SDG No.: LEJEUNE049

Matrix: (soil/water) SOIL Lab Sample ID: 0901102-03

Sample wt/vol: 4.3 (g/mL) G Lab File ID: 0110203B

Level: (low/med) LOW Date Sampled: 01/14/09 09:15

% Moisture: not dec. 19 Date Analyzed: 01/21/09 10:42

GC Column: RTX-VRX ID: 0.25 (mm) Dilution Factor: 1.0

Soil Extract Volume:_____(uL) Soil Aliquot Volume: _____(uL)

CONCENTRATION UNITS: (ug/L or ug/Kg) UG/KG

CAS NO.	COMPOUND	MDL	RL	CONC	Q
108-88-3	Toluene	1.2	14		U
120-82-1	1,2,4-Trichlorobenzene	0.26	14	14U ~~0.31 JB~~	BU
71-55-6	1,1,1-Trichloroethane	1.3	14		U
79-00-5	1,1,2-Trichloroethane	0.50	14		U
79-01-6	Trichloroethene	1.2	14		U
76-13-1	Trichlorotrifluoroethane	0.79	14		U
75-69-4	Trichlorofluoromethane	1.4	14		U
75-01-4	Vinyl chloride	1.6	14		U
1330-20-7	Xylene(total)	1.0	14		U

LW 4/4/09

FORM 1
VOLATILE ORGANICS ANALYSIS DATA SHEET

CLIENT SAMPLE NO. 4

MR08-IS28
7-5-6-09A

Lab Name: EMPIRICAL LABS Contract: CH2MHILL

Lab Code: NA Case No.: NA SAS No.: NA SDG No.: LEJEUNE049

Matrix: (soil/water) SOIL Lab Sample ID: 0901102-04

Sample wt/vol: 4.7 (g/mL) G Lab File ID: 0110204A

Level: (low/med) LOW Date Sampled: 01/14/09 09:30

% Moisture: not dec. 9 Date Analyzed: 01/19/09 15:14

GC Column: RTX-VRX ID: 0.25 (mm) Dilution Factor: 1.0

Soil Extract Volume:_____(uL) Soil Aliquot Volume: _____(uL)

CONCENTRATION UNITS: (ug/L or ug/Kg) UG/KG

CAS NO.	COMPOUND	MDL	RL	CONC	Q
67-64-1	Acetone	2.4	12	12u	~~5.3 JB~~ BL
71-43-2	Benzene	0.55	12		U
75-27-4	Bromodichloromethane	0.35	12		U
75-25-2	Bromoform	1.2	12		U
74-83-9	Bromomethane	0.85	12		U
78-93-3	2-Butanone	1.6	12		~~U~~ UJ CC
75-15-0	Carbon disulfide	1.5	12		U
56-23-5	Carbon tetrachloride	1.0	12		U
108-90-7	Chlorobenzene	0.40	12		U
75-00-3	Chloroethane	1.3	12		U
67-66-3	Chloroform	0.65	12		U
74-87-3	Chloromethane	0.61	12		U
110-82-7	Cyclohexane	0.64	12		U
124-48-1	Dibromochloromethane	0.40	12		U
96-12-8	1,2-Dibromo-3-chloropropane	1.4	5.9		U
106-93-4	1,2-Dibromoethane	0.51	12		U
95-50-1	1,2-Dichlorobenzene	0.44	12		U
541-73-1	1,3-Dichlorobenzene	0.99	12		U
106-46-7	1,4-Dichlorobenzene	0.65	12		U
75-71-8	Dichlorodifluoromethane	1.3	12		U
75-34-3	1,1-Dichloroethane	0.64	12		U
107-06-2	1,2-Dichloroethane	0.54	12		U
75-35-4	1,1-Dichloroethene	1.4	12		U
156-59-2	cis-1,2-Dichloroethene	1.4	12		U
156-60-5	trans-1,2-Dichloroethene	1.3	12		U
78-87-5	1,2-Dichloropropane	0.54	12		U
10061-01-5	cis-1,3-Dichloropropene	0.59	12		U
10061-02-6	trans-1,3-Dichloropropene	0.38	12		U
100-41-4	Ethylbenzene	0.88	12		U
591-78-6	2-Hexanone	2.7	12		U
98-82-8	Isopropylbenzene	1.0	12		U
79-20-9	Methyl acetate	1.9	12		U
75-09-2	Methylene chloride	0.73	12	12u	~~1.5 JB~~ BL
108-87-2	Methyl cyclohexane	0.35	12		U
1634-04-4	Methyl tert-butyl ether	0.38	12		U
108-10-1	4-Methyl-2-pentanone	0.68	12		U
100-42-5	Styrene	0.41	12		U
79-34-5	1,1,2,2-Tetrachloroethane	0.51	12		U
127-18-4	Tetrachloroethene	1.1	12		U

LW
4/14/09

FORM 1
VOLATILE ORGANICS ANALYSIS DATA SHEET

CLIENT SAMPLE NO. 4

MR08-IS28
7-5-6-09A

Lab Name: EMPIRICAL LABS Contract: CH2MHILL

Lab Code: NA Case No.: NA SAS No.: NA SDG No.: LEJEUNE049

Matrix: (soil/water) SOIL Lab Sample ID: 0901102-04

Sample wt/vol: 4.7 (g/mL) G Lab File ID: 0110204A

Level: (low/med) LOW Date Sampled: 01/14/09 09:30

% Moisture: not dec. 9 Date Analyzed: 01/19/09 15:14

GC Column: RTX-VRX ID: 0.25 (mm) Dilution Factor: 1.0

Soil Extract Volume:_____(uL) Soil Aliquot Volume: _____(uL)

CONCENTRATION UNITS: (ug/L or ug/Kg) UG/KG

CAS NO.	COMPOUND	MDL	RL	CONC	Q
108-88-3	Toluene	1.0	12		U
120-82-1	1,2,4-Trichlorobenzene	0.21	12		U
71-55-6	1,1,1-Trichloroethane	1.1	12		U
79-00-5	1,1,2-Trichloroethane	0.41	12		U
79-01-6	Trichloroethene	1.0	12		U
76-13-1	Trichlorotrifluoroethane	0.65	12		U
75-69-4	Trichlorofluoromethane	1.1	12		U
75-01-4	Vinyl chloride	1.3	12		U
1330-20-7	Xylene(total)	0.82	12		U

RW
4/14/09

FORM 1
VOLATILE ORGANICS ANALYSIS DATA SHEET

CLIENT SAMPLE NO. 5

MR08-SS288-09A

Lab Name: EMPIRICAL LABS Contract: CH2MHILL

Lab Code: NA Case No.: NA SAS No.: NA SDG No.: LEJEUNE049

Matrix: (soil/water) SOIL Lab Sample ID: 0901102-05

Sample wt/vol: 4.8 (g/mL) G Lab File ID: 0110205A

Level: (low/med) LOW Date Sampled: 01/14/09 09:50

% Moisture: not dec. 11 Date Analyzed: 01/19/09 15:45

GC Column: RTX-VRX ID: 0.25 (mm) Dilution Factor: 1.0

Soil Extract Volume:_____(uL) Soil Aliquot Volume: _____(uL)

CONCENTRATION UNITS: (ug/L or ug/Kg) UG/KG

CAS NO.	COMPOUND	MDL	RL	CONC	Q
67-64-1	Acetone	2.4	12	37	~~B~~U BL
71-43-2	Benzene	0.56	12		~~U~~UJ MS
75-27-4	Bromodichloromethane	0.35	12		U
75-25-2	Bromoform	1.2	12		U ↓ ↓
74-83-9	Bromomethane	0.85	12		U
78-93-3	2-Butanone	1.6	12		~~U~~UJ CC
75-15-0	Carbon disulfide	1.5	12		U
56-23-5	Carbon tetrachloride	1.0	12		~~U~~UJ MS
108-90-7	Chlorobenzene	0.40	12		~~U~~UJ ↓
75-00-3	Chloroethane	1.3	12		U
67-66-3	Chloroform	0.65	12		U
74-87-3	Chloromethane	0.62	12		U
110-82-7	Cyclohexane	0.64	12		~~U~~UJ MS
124-48-1	Dibromochloromethane	0.40	12		U
96-12-8	1,2-Dibromo-3-chloropropane	1.4	5.9		U
106-93-4	1,2-Dibromoethane	0.51	12		U
95-50-1	1,2-Dichlorobenzene	0.44	12		U
541-73-1	1,3-Dichlorobenzene	0.99	12		U
106-46-7	1,4-Dichlorobenzene	0.65	12		U ↓ ↓
75-71-8	Dichlorodifluoromethane	1.3	12		U
75-34-3	1,1-Dichloroethane	0.64	12		~~U~~UJ MS
107-06-2	1,2-Dichloroethane	0.54	12		U
75-35-4	1,1-Dichloroethene	1.4	12		U
156-59-2	cis-1,2-Dichloroethene	1.4	12		U
156-60-5	trans-1,2-Dichloroethene	1.3	12		U
78-87-5	1,2-Dichloropropane	0.54	12		~~U~~UJ MS
10061-01-5	cis-1,3-Dichloropropene	0.59	12		U
10061-02-6	trans-1,3-Dichloropropene	0.38	12		U ↓ ↓
100-41-4	Ethylbenzene	0.89	12		~~U~~UJ MS
591-78-6	2-Hexanone	2.7	12		U
98-82-8	Isopropylbenzene	1.0	12		~~U~~UJ MS
79-20-9	Methyl acetate	1.9	12		U
75-09-2	Methylene chloride	0.73	12	12U ~~1.4~~	~~JB~~ BL
108-87-2	Methyl cyclohexane	0.35	12		~~U~~UJ MS
1634-04-4	Methyl tert-butyl ether	0.38	12		U
108-10-1	4-Methyl-2-pentanone	0.68	12		U
100-42-5	Styrene	0.41	12		~~U~~UJ MS
79-34-5	1,1,2,2-Tetrachloroethane	0.51	12		~~U~~UJ M
127-18-4	Tetrachloroethene	1.1	12		~~U~~ ↓ ↓

FORM I VOA

lw
4/4/09

FORM 1
VOLATILE ORGANICS ANALYSIS DATA SHEET

CLIENT SAMPLE NO. 5

MR08-SS288-09A

Lab Name: EMPIRICAL LABS Contract: CH2MHILL

Lab Code: NA Case No.: NA SAS No.: NA SDG No.: LEJEUNE049

Matrix: (soil/water) SOIL Lab Sample ID: 0901102-05

Sample wt/vol: 4.8 (g/mL) G Lab File ID: 0110205A

Level: (low/med) LOW Date Sampled: 01/14/09 09:50

% Moisture: not dec. 11 Date Analyzed: 01/19/09 15:45

GC Column: RTX-VRX ID: 0.25 (mm) Dilution Factor: 1.0

Soil Extract Volume:_____(uL) Soil Aliquot Volume: _____(uL)

CONCENTRATION UNITS: (ug/L or ug/Kg) UG/KG

CAS NO.	COMPOUND	MDL	RL	CONC	Q
108-88-3	Toluene	1.0	12		~~U~~ UJ MSL
120-82-1	1,2,4-Trichlorobenzene	0.21	12		~~U~~ R MSL
71-55-6	1,1,1-Trichloroethane	1.1	12		~~U~~ UJ MSL
79-00-5	1,1,2-Trichloroethane	0.41	12		U
79-01-6	Trichloroethene	1.0	12		~~U~~ UJ MS
76-13-1	Trichlorotrifluoroethane	0.65	12		U
75-69-4	Trichlorofluoromethane	1.1	12		U
75-01-4	Vinyl chloride	1.3	12		U
1330-20-7	Xylene(total)	0.83	12		~~U~~ UJ MS

FORM I VOA

RW 4/14/09

FORM 1
VOLATILE ORGANICS ANALYSIS DATA SHEET

CLIENT SAMPLE NO. 6

MR08-IS2
88-6-7-09A

Lab Name: EMPIRICAL LABS Contract: CH2MHILL

Lab Code: NA Case No.: NA SAS No.: NA SDG No.: LEJEUNE049

Matrix: (soil/water) SOIL Lab Sample ID: 0901102-06

Sample wt/vol: 4.9 (g/mL) G Lab File ID: 0110206A

Level: (low/med) LOW Date Sampled: 01/14/09 10:15

% Moisture: not dec. 10 Date Analyzed: 01/19/09 16:16

GC Column: RTX-VRX ID: 0.25 (mm) Dilution Factor: 1.0

Soil Extract Volume:_____(uL) Soil Aliquot Volume: _____(uL)

CONCENTRATION UNITS: (ug/L or ug/Kg) UG/KG

CAS NO.	COMPOUND	MDL	RL	CONC	Q
67-64-1	Acetone	2.2	11	11U	~~4.7 JB~~ BL
71-43-2	Benzene	0.53	11		~~U~~ UJ MSI
75-27-4	Bromodichloromethane	0.34	11		U
75-25-2	Bromoform	1.1	11		U
74-83-9	Bromomethane	0.81	11		U
78-93-3	2-Butanone	1.6	11		~~U~~ UJ CCI
75-15-0	Carbon disulfide	1.5	11		U
56-23-5	Carbon tetrachloride	0.99	11		U
108-90-7	Chlorobenzene	0.38	11		~~U~~ UJ MS
75-00-3	Chloroethane	1.2	11		U
67-66-3	Chloroform	0.62	11		U
74-87-3	Chloromethane	0.59	11		U
110-82-7	Cyclohexane	0.61	11		U
124-48-1	Dibromochloromethane	0.38	11		U
96-12-8	1,2-Dibromo-3-chloropropane	1.4	5.6		U
106-93-4	1,2-Dibromoethane	0.48	11		~~U~~ UJ MS
95-50-1	1,2-Dichlorobenzene	0.42	11		~~U~~ UJ MS
541-73-1	1,3-Dichlorobenzene	0.95	11		~~U~~ UJ MS
106-46-7	1,4-Dichlorobenzene	0.62	11		~~U~~ UJ MS
75-71-8	Dichlorodifluoromethane	1.2	11		U
75-34-3	1,1-Dichloroethane	0.61	11		~~U~~ UJ MS
107-06-2	1,2-Dichloroethane	0.52	11		U
75-35-4	1,1-Dichloroethene	1.4	11		U
156-59-2	cis-1,2-Dichloroethene	1.4	11		U
156-60-5	trans-1,2-Dichloroethene	1.2	11		U
78-87-5	1,2-Dichloropropane	0.52	11		U
10061-01-5	cis-1,3-Dichloropropene	0.56	11		U
10061-02-6	trans-1,3-Dichloropropene	0.36	11		U
100-41-4	Ethylbenzene	0.85	11		~~U~~ UJ MS
591-78-6	2-Hexanone	2.6	11		U
98-82-8	Isopropylbenzene	0.99	11		U
79-20-9	Methyl acetate	1.8	11		U
75-09-2	Methylene chloride	0.70	11	11U	~~1.4 JB~~ BL
108-87-2	Methyl cyclohexane	0.34	11		U
1634-04-4	Methyl tert-butyl ether	0.36	11		U
108-10-1	4-Methyl-2-pentanone	0.65	11		U
100-42-5	Styrene	0.40	11		~~U~~ UJ MS
79-34-5	1,1,2,2-Tetrachloroethane	0.48	11		U
127-18-4	Tetrachloroethene	1.1	11		~~U~~ UJ MSI

FORM I VOA

MW 4/14/09

FORM 1
VOLATILE ORGANICS ANALYSIS DATA SHEET

CLIENT SAMPLE NO. 6

MR08-IS2
88-6-7-09A

Lab Name: EMPIRICAL LABS Contract: CH2MHILL

Lab Code: NA Case No.: NA SAS No.: NA SDG No.: LEJEUNE049

Matrix: (soil/water) SOIL Lab Sample ID: 0901102-06

Sample wt/vol: 4.9 (g/mL) G Lab File ID: 0110206A

Level: (low/med) LOW Date Sampled: 01/14/09 10:15

% Moisture: not dec. 10 Date Analyzed: 01/19/09 16:16

GC Column: RTX-VRX ID: 0.25 (mm) Dilution Factor: 1.0

Soil Extract Volume:_____(uL) Soil Aliquot Volume: _____(uL)

CONCENTRATION UNITS: (ug/L or ug/Kg) UG/KG

CAS NO.	COMPOUND	MDL	RL	CONC	Q
108-88-3	Toluene	0.97	11		~~U~~ UJ MSL
120-82-1	1,2,4-Trichlorobenzene	0.20	11		~~U~~ UJ MSL
71-55-6	1,1,1-Trichloroethane	1.0	11		U
79-00-5	1,1,2-Trichloroethane	0.40	11		U
79-01-6	Trichloroethene	0.96	11		~~U~~ UJ MSL
76-13-1	Trichlorotrifluoroethane	0.62	11		U
75-69-4	Trichlorofluoromethane	1.1	11		U
75-01-4	Vinyl chloride	1.2	11		U
1330-20-7	Xylene(total)	0.79	11		U

lw
4/4/09

FORM 1
VOLATILE ORGANICS ANALYSIS DATA SHEET

CLIENT SAMPLE NO. 7

MR08-SS264-09A

Lab Name: EMPIRICAL LABS Contract: CH2MHILL

Lab Code: NA Case No.: NA SAS No.: NA SDG No.: LEJEUNE049

Matrix: (soil/water) SOIL Lab Sample ID: 0901102-07

Sample wt/vol: 5.9 (g/mL) G Lab File ID: 0110207A

Level: (low/med) LOW Date Sampled: 01/14/09 10:50

% Moisture: not dec. 6 Date Analyzed: 01/19/09 16:47

GC Column: RTX-VRX ID: 0.25 (mm) Dilution Factor: 1.0

Soil Extract Volume:_____(uL) Soil Aliquot Volume: _____(uL)

CONCENTRATION UNITS: (ug/L or ug/Kg) UG/KG

CAS NO.	COMPOUND	MDL	RL	CONC	Q
67-64-1	Acetone	1.8	9.0		U
71-43-2	Benzene	0.42	9.0		U
75-27-4	Bromodichloromethane	0.27	9.0		U
75-25-2	Bromoform	0.90	9.0		U
74-83-9	Bromomethane	0.65	9.0		U
78-93-3	2-Butanone	1.3	9.0		~~U~~ UJ CC
75-15-0	Carbon disulfide	1.2	9.0		U
56-23-5	Carbon tetrachloride	0.79	9.0		U
108-90-7	Chlorobenzene	0.31	9.0		U
75-00-3	Chloroethane	0.99	9.0		U
67-66-3	Chloroform	0.50	9.0		U
74-87-3	Chloromethane	0.47	9.0		U
110-82-7	Cyclohexane	0.49	9.0		U
124-48-1	Dibromochloromethane	0.31	9.0		U
96-12-8	1,2-Dibromo-3-chloropropane	1.1	4.5		U
106-93-4	1,2-Dibromoethane	0.39	9.0		U
95-50-1	1,2-Dichlorobenzene	0.33	9.0		U
541-73-1	1,3-Dichlorobenzene	0.76	9.0		U
106-46-7	1,4-Dichlorobenzene	0.50	9.0		U
75-71-8	Dichlorodifluoromethane	0.99	9.0		U
75-34-3	1,1-Dichloroethane	0.49	9.0		U
107-06-2	1,2-Dichloroethane	0.42	9.0		U
75-35-4	1,1-Dichloroethene	1.1	9.0		U
156-59-2	cis-1,2-Dichloroethene	1.1	9.0		U
156-60-5	trans-1,2-Dichloroethene	0.99	9.0		U
78-87-5	1,2-Dichloropropane	0.42	9.0		U
10061-01-5	cis-1,3-Dichloropropene	0.45	9.0		U
10061-02-6	trans-1,3-Dichloropropene	0.29	9.0		U
100-41-4	Ethylbenzene	0.68	9.0		U
591-78-6	2-Hexanone	2.1	9.0		U
98-82-8	Isopropylbenzene	0.79	9.0		U
79-20-9	Methyl acetate	1.4	9.0		U
75-09-2	Methylene chloride	0.56	9.0	9.04	~~1.0 JB~~ B
108-87-2	Methyl cyclohexane	0.27	9.0		U
1634-04-4	Methyl tert-butyl ether	0.29	9.0		U
108-10-1	4-Methyl-2-pentanone	0.52	9.0		U
100-42-5	Styrene	0.32	9.0		U
79-34-5	1,1,2,2-Tetrachloroethane	0.39	9.0		U
127-18-4	Tetrachloroethene	0.88	9.0		U

FORM I VOA

lw
4/4/09

FORM 1
VOLATILE ORGANICS ANALYSIS DATA SHEET

CLIENT SAMPLE NO. 7

MR08-SS264-09A

Lab Name: EMPIRICAL LABS Contract: CH2MHILL

Lab Code: NA Case No.: NA SAS No.: NA SDG No.: LEJEUNE049

Matrix: (soil/water) SOIL Lab Sample ID: 0901102-07

Sample wt/vol: 5.9 (g/mL) G Lab File ID: 0110207A

Level: (low/med) LOW Date Sampled: 01/14/09 10:50

% Moisture: not dec. 6 Date Analyzed: 01/19/09 16:47

GC Column: RTX-VRX ID: 0.25 (mm) Dilution Factor: 1.0

Soil Extract Volume:_____(uL) Soil Aliquot Volume: _____(uL)

CONCENTRATION UNITS: (ug/L or ug/Kg) UG/KG

CAS NO.	COMPOUND	MDL	RL	CONC	Q
108-88-3	Toluene	0.78	9.0		U
120-82-1	1,2,4-Trichlorobenzene	0.16	9.0		U
71-55-6	1,1,1-Trichloroethane	0.81	9.0		U
79-00-5	1,1,2-Trichloroethane	0.32	9.0		U
79-01-6	Trichloroethene	0.77	9.0		U
76-13-1	Trichlorotrifluoroethane	0.50	9.0		U
75-69-4	Trichlorofluoromethane	0.86	9.0		U
75-01-4	Vinyl chloride	0.99	9.0		U
1330-20-7	Xylene(total)	0.63	9.0		U

lw
4/4/09

FORM 1
VOLATILE ORGANICS ANALYSIS DATA SHEET

CLIENT SAMPLE NO. 8

MR08-IS26
4-10-11-09

Lab Name: EMPIRICAL LABS Contract: CH2MHILL

Lab Code: NA Case No.: NA SAS No.: NA SDG No.: LEJEUNE049

Matrix: (soil/water) SOIL Lab Sample ID: 0901102-08

Sample wt/vol: 4.3 (g/mL) G Lab File ID: 0110208A

Level: (low/med) LOW Date Sampled: 01/14/09 11:05

% Moisture: not dec. 9 Date Analyzed: 01/19/09 17:18

GC Column: RTX-VRX ID: 0.25 (mm) Dilution Factor: 1.0

Soil Extract Volume:_____(uL) Soil Aliquot Volume: _____(uL)

CONCENTRATION UNITS: (ug/L or ug/Kg) UG/KG

CAS NO.	COMPOUND	MDL	RL	CONC	Q
67-64-1	Acetone	2.6	13	13U ~~5.1~~ ~~JB~~	BI
71-43-2	Benzene	0.60	13		U
75-27-4	Bromodichloromethane	0.38	13		U
75-25-2	Bromoform	1.3	13		U
74-83-9	Bromomethane	0.92	13		U
78-93-3	2-Butanone	1.8	13		~~U~~ UJ CCA
75-15-0	Carbon disulfide	1.7	13		U
56-23-5	Carbon tetrachloride	1.1	13		U
108-90-7	Chlorobenzene	0.43	13		U
75-00-3	Chloroethane	1.4	13		U
67-66-3	Chloroform	0.70	13		U
74-87-3	Chloromethane	0.66	13		U
110-82-7	Cyclohexane	0.69	13		U
124-48-1	Dibromochloromethane	0.43	13		U
96-12-8	1,2-Dibromo-3-chloropropane	1.5	6.4		U
106-93-4	1,2-Dibromoethane	0.55	13		U
95-50-1	1,2-Dichlorobenzene	0.47	13		U
541-73-1	1,3-Dichlorobenzene	1.1	13		U
106-46-7	1,4-Dichlorobenzene	0.70	13		U
75-71-8	Dichlorodifluoromethane	1.4	13		U
75-34-3	1,1-Dichloroethane	0.69	13		U
107-06-2	1,2-Dichloroethane	0.59	13		U
75-35-4	1,1-Dichloroethene	1.5	13		U
156-59-2	cis-1,2-Dichloroethene	1.5	13		U
156-60-5	trans-1,2-Dichloroethene	1.4	13		U
78-87-5	1,2-Dichloropropane	0.59	13		U
10061-01-5	cis-1,3-Dichloropropene	0.64	13		U
10061-02-6	trans-1,3-Dichloropropene	0.41	13		U
100-41-4	Ethylbenzene	0.96	13		U
591-78-6	2-Hexanone	2.9	13		U
98-82-8	Isopropylbenzene	1.1	13		U
79-20-9	Methyl acetate	2.0	13		U
75-09-2	Methylene chloride	0.79	13	13U ~~1.8~~ ~~JB~~	BL
108-87-2	Methyl cyclohexane	0.38	13		U
1634-04-4	Methyl tert-butyl ether	0.41	13		U
108-10-1	4-Methyl-2-pentanone	0.74	13		U
100-42-5	Styrene	0.45	13		U
79-34-5	1,1,2,2-Tetrachloroethane	0.55	13		U
127-18-4	Tetrachloroethene	1.2	13		U

FORM I VOA

lw
4/4/09

FORM 1
VOLATILE ORGANICS ANALYSIS DATA SHEET

CLIENT SAMPLE NO. 8

MR08-IS26
4-10-11-09

Lab Name: EMPIRICAL LABS Contract: CH2MHILL

Lab Code: NA Case No.: NA SAS No.: NA SDG No.: LEJEUNE049

Matrix: (soil/water) SOIL Lab Sample ID: 0901102-08

Sample wt/vol: 4.3 (g/mL) G Lab File ID: 0110208A

Level: (low/med) LOW Date Sampled: 01/14/09 11:05

% Moisture: not dec. 9 Date Analyzed: 01/19/09 17:18

GC Column: RTX-VRX ID: 0.25 (mm) Dilution Factor: 1.0

Soil Extract Volume:_____(uL) Soil Aliquot Volume: _____(uL)

CONCENTRATION UNITS: (ug/L or ug/Kg) UG/KG

CAS NO.	COMPOUND	MDL	RL	CONC	Q
108-88-3	Toluene	1.1	13		U
120-82-1	1,2,4-Trichlorobenzene	0.23	13		U
71-55-6	1,1,1-Trichloroethane	1.2	13		U
79-00-5	1,1,2-Trichloroethane	0.45	13		U
79-01-6	Trichloroethene	1.1	13		U
76-13-1	Trichlorotrifluoroethane	0.70	13		U
75-69-4	Trichlorofluoromethane	1.2	13		U
75-01-4	Vinyl chloride	1.4	13		U
1330-20-7	Xylene(total)	0.90	13		U

DW
4/14/09

FORM 1
VOLATILE ORGANICS ANALYSIS DATA SHEET

CLIENT SAMPLE NO. 9

MR08-SS263-09A

Lab Name: EMPIRICAL LABS Contract: CH2MHILL

Lab Code: NA Case No.: NA SAS No.: NA SDG No.: LEJEUNE049

Matrix: (soil/water) SOIL Lab Sample ID: 0901102-09

Sample wt/vol: 5.4 (g/mL) G Lab File ID: 0110209A

Level: (low/med) LOW Date Sampled: 01/14/09 11:15

% Moisture: not dec. 13 Date Analyzed: 01/19/09 17:49

GC Column: RTX-VRX ID: 0.25 (mm) Dilution Factor: 1.0

Soil Extract Volume:_____(uL) Soil Aliquot Volume: _____(uL)

CONCENTRATION UNITS: (ug/L or ug/Kg) UG/KG

CAS NO.	COMPOUND	MDL	RL	CONC	Q
67-64-1	Acetone	2.1	11	23	~~B~~ U BL
71-43-2	Benzene	0.50	11		U
75-27-4	Bromodichloromethane	0.32	11		U
75-25-2	Bromoform	1.1	11		U
74-83-9	Bromomethane	0.76	11		U
78-93-3	2-Butanone	1.5	11		~~U~~ UJ CL
75-15-0	Carbon disulfide	1.4	11		U
56-23-5	Carbon tetrachloride	0.93	11		U
108-90-7	Chlorobenzene	0.36	11		U
75-00-3	Chloroethane	1.2	11		U
67-66-3	Chloroform	0.58	11		U
74-87-3	Chloromethane	0.55	11		U
110-82-7	Cyclohexane	0.57	11		U
124-48-1	Dibromochloromethane	0.36	11		U
96-12-8	1,2-Dibromo-3-chloropropane	1.3	5.3		U
106-93-4	1,2-Dibromoethane	0.46	11		U
95-50-1	1,2-Dichlorobenzene	0.39	11		U
541-73-1	1,3-Dichlorobenzene	0.89	11		U
106-46-7	1,4-Dichlorobenzene	0.58	11		U
75-71-8	Dichlorodifluoromethane	1.2	11		U
75-34-3	1,1-Dichloroethane	0.57	11		U
107-06-2	1,2-Dichloroethane	0.49	11		U
75-35-4	1,1-Dichloroethene	1.3	11		U
156-59-2	cis-1,2-Dichloroethene	1.3	11		U
156-60-5	trans-1,2-Dichloroethene	1.2	11		U
78-87-5	1,2-Dichloropropane	0.49	11		U
10061-01-5	cis-1,3-Dichloropropene	0.53	11		U
10061-02-6	trans-1,3-Dichloropropene	0.34	11		U
100-41-4	Ethylbenzene	0.80	11		U
591-78-6	2-Hexanone	2.4	11		U
98-82-8	Isopropylbenzene	0.93	11		U
79-20-9	Methyl acetate	1.7	11		U
75-09-2	Methylene chloride	0.66	11	11U	1~~.9~~ ~~JB~~ BI
108-87-2	Methyl cyclohexane	0.32	11		U
1634-04-4	Methyl tert-butyl ether	0.34	11		U
108-10-1	4-Methyl-2-pentanone	0.61	11		U
100-42-5	Styrene	0.37	11		U
79-34-5	1,1,2,2-Tetrachloroethane	0.46	11		U
127-18-4	Tetrachloroethene	1.0	11		U

FORM I VOA

lw 4/14/09

FORM 1
VOLATILE ORGANICS ANALYSIS DATA SHEET

CLIENT SAMPLE NO. 9

MR08-SS263-09A

Lab Name: EMPIRICAL LABS Contract: CH2MHILL

Lab Code: NA Case No.: NA SAS No.: NA SDG No.: LEJEUNE049

Matrix: (soil/water) SOIL Lab Sample ID: 0901102-09

Sample wt/vol: 5.4 (g/mL) G Lab File ID: 0110209A

Level: (low/med) LOW Date Sampled: 01/14/09 11:15

% Moisture: not dec. 13 Date Analyzed: 01/19/09 17:49

GC Column: RTX-VRX ID: 0.25 (mm) Dilution Factor: 1.0

Soil Extract Volume:_____(uL) Soil Aliquot Volume: _____(uL)

CONCENTRATION UNITS: (ug/L or ug/Kg) UG/KG

CAS NO.	COMPOUND	MDL	RL	CONC	Q
108-88-3	Toluene	0.91	11		U
120-82-1	1,2,4-Trichlorobenzene	0.19	11		U
71-55-6	1,1,1-Trichloroethane	0.95	11		U
79-00-5	1,1,2-Trichloroethane	0.37	11		U
79-01-6	Trichloroethene	0.90	11		U
76-13-1	Trichlorotrifluoroethane	0.58	11		U
75-69-4	Trichlorofluoromethane	1.0	11		U
75-01-4	Vinyl chloride	1.2	11		U
1330-20-7	Xylene(total)	0.74	11		U

lw 4/14/09

FORM 1
VOLATILE ORGANICS ANALYSIS DATA SHEET

CLIENT SAMPLE NO. 10

MR08-IS26
3-2-3-09A

Lab Name: EMPIRICAL LABS Contract: CH2MHILL

Lab Code: NA Case No.: NA SAS No.: NA SDG No.: LEJEUNE049

Matrix: (soil/water) SOIL Lab Sample ID: 0901102-10

Sample wt/vol: 2.8 (g/mL) G Lab File ID: 0110210A

Level: (low/med) LOW Date Sampled: 01/14/09 11:30

% Moisture: not dec. 12 Date Analyzed: 01/19/09 18:20

GC Column: RTX-VRX ID: 0.25 (mm) Dilution Factor: 1.0

Soil Extract Volume:_____(uL) Soil Aliquot Volume: _____(uL)

CONCENTRATION UNITS: (ug/L or ug/Kg) UG/KG

CAS NO.	COMPOUND	MDL	RL	CONC	Q
67-64-1	Acetone	4.0	20	27	~~B~~ u B
71-43-2	Benzene	0.95	20		U
75-27-4	Bromodichloromethane	0.61	20		U
75-25-2	Bromoform	2.0	20		U
74-83-9	Bromomethane	1.4	20		U
78-93-3	2-Butanone	2.8	20		~~U~~ UJ cc
75-15-0	Carbon disulfide	2.6	20		U
56-23-5	Carbon tetrachloride	1.8	20		U
108-90-7	Chlorobenzene	0.69	20		U
75-00-3	Chloroethane	2.2	20		U
67-66-3	Chloroform	1.1	20		U
74-87-3	Chloromethane	1.0	20		U
110-82-7	Cyclohexane	1.1	20		U
124-48-1	Dibromochloromethane	0.69	20		U
96-12-8	1,2-Dibromo-3-chloropropane	2.4	10		U
106-93-4	1,2-Dibromoethane	0.87	20		U
95-50-1	1,2-Dichlorobenzene	0.75	20		U
541-73-1	1,3-Dichlorobenzene	1.7	20		U
106-46-7	1,4-Dichlorobenzene	1.1	20		U
75-71-8	Dichlorodifluoromethane	2.2	20		U
75-34-3	1,1-Dichloroethane	1.1	20		U
107-06-2	1,2-Dichloroethane	0.93	20		U
75-35-4	1,1-Dichloroethene	2.4	20		U
156-59-2	cis-1,2-Dichloroethene	2.4	20		U
156-60-5	trans-1,2-Dichloroethene	2.2	20		U
78-87-5	1,2-Dichloropropane	0.93	20		U
10061-01-5	cis-1,3-Dichloropropene	1.0	20		U
10061-02-6	trans-1,3-Dichloropropene	0.65	20		U
100-41-4	Ethylbenzene	1.5	20		U
591-78-6	2-Hexanone	4.6	20		U
98-82-8	Isopropylbenzene	1.8	20		U
79-20-9	Methyl acetate	3.2	20		U
75-09-2	Methylene chloride	1.2	20	20u ~~2.3 JB~~	B
108-87-2	Methyl cyclohexane	0.61	20		U
1634-04-4	Methyl tert-butyl ether	0.65	20		U
108-10-1	4-Methyl-2-pentanone	1.2	20		U
100-42-5	Styrene	0.71	20		U
79-34-5	1,1,2,2-Tetrachloroethane	0.87	20		U
127-18-4	Tetrachloroethene	2.0	20		U

4/14/09

FORM 1
VOLATILE ORGANICS ANALYSIS DATA SHEET

CLIENT SAMPLE NO. 10

MR08-IS26
3-2-3-09A

Lab Name: EMPIRICAL LABS Contract: CH2MHILL

Lab Code: NA Case No.: NA SAS No.: NA SDG No.: LEJEUNE049

Matrix: (soil/water) SOIL Lab Sample ID: 0901102-10

Sample wt/vol: 2.8 (g/mL) G Lab File ID: 0110210A

Level: (low/med) LOW Date Sampled: 01/14/09 11:30

% Moisture: not dec. 12 Date Analyzed: 01/19/09 18:20

GC Column: RTX-VRX ID: 0.25 (mm) Dilution Factor: 1.0

Soil Extract Volume:_____(uL) Soil Aliquot Volume: _____(uL)

CONCENTRATION UNITS: (ug/L or ug/Kg) UG/KG

CAS NO.	COMPOUND	MDL	RL	CONC	Q
108-88-3	Toluene	1.7	20		U
120-82-1	1,2,4-Trichlorobenzene	0.36	20		U
71-55-6	1,1,1-Trichloroethane	1.8	20		U
79-00-5	1,1,2-Trichloroethane	0.71	20		U
79-01-6	Trichloroethene	1.7	20		U
76-13-1	Trichlorotrifluoroethane	1.1	20		U
75-69-4	Trichlorofluoromethane	1.9	20		U
75-01-4	Vinyl chloride	2.2	20		U
1330-20-7	Xylene(total)	1.4	20		U

lw
4/4/09

FORM 1
VOLATILE ORGANICS ANALYSIS DATA SHEET

CLIENT SAMPLE NO. 11

MR08-SS262-09A

Lab Name: EMPIRICAL LABS Contract: CH2MHILL

Lab Code: NA Case No.: NA SAS No.: NA SDG No.: LEJEUNE049

Matrix: (soil/water) SOIL Lab Sample ID: 0901102-11

Sample wt/vol: 4.6 (g/mL) G Lab File ID: 0110211A

Level: (low/med) LOW Date Sampled: 01/14/09 12:30

% Moisture: not dec. 10 Date Analyzed: 01/19/09 18:51

GC Column: RTX-VRX ID: 0.25 (mm) Dilution Factor: 1.0

Soil Extract Volume:_____(uL) Soil Aliquot Volume: _____(uL)

CONCENTRATION UNITS: (ug/L or ug/Kg) UG/KG

CAS NO.	COMPOUND	MDL	RL	CONC	Q
67-64-1	Acetone	2.4	12	17	~~B~~U BL
71-43-2	Benzene	0.57	12		U
75-27-4	Bromodichloromethane	0.36	12		U
75-25-2	Bromoform	1.2	12		U
74-83-9	Bromomethane	0.88	12		U
78-93-3	2-Butanone	1.7	12		~~U~~UJ CA
75-15-0	Carbon disulfide	1.6	12		U
56-23-5	Carbon tetrachloride	1.1	12		U
108-90-7	Chlorobenzene	0.41	12		U
75-00-3	Chloroethane	1.3	12		U
67-66-3	Chloroform	0.67	12		U
74-87-3	Chloromethane	0.63	12		U
110-82-7	Cyclohexane	0.66	12		U
124-48-1	Dibromochloromethane	0.41	12		U
96-12-8	1,2-Dibromo-3-chloropropane	1.4	6.1		U
106-93-4	1,2-Dibromoethane	0.52	12		U
95-50-1	1,2-Dichlorobenzene	0.45	12		U
541-73-1	1,3-Dichlorobenzene	1.0	12		U
106-46-7	1,4-Dichlorobenzene	0.67	12		U
75-71-8	Dichlorodifluoromethane	1.3	12		U
75-34-3	1,1-Dichloroethane	0.66	12		U
107-06-2	1,2-Dichloroethane	0.56	12		U
75-35-4	1,1-Dichloroethene	1.4	12		U
156-59-2	cis-1,2-Dichloroethene	1.4	12		U
156-60-5	trans-1,2-Dichloroethene	1.3	12		U
78-87-5	1,2-Dichloropropane	0.56	12		U
10061-01-5	cis-1,3-Dichloropropene	0.61	12		U
10061-02-6	trans-1,3-Dichloropropene	0.39	12		U
100-41-4	Ethylbenzene	0.91	12		U
591-78-6	2-Hexanone	2.8	12		U
98-82-8	Isopropylbenzene	1.1	12		U
79-20-9	Methyl acetate	1.9	12		U
75-09-2	Methylene chloride	0.75	12	12U	1.~~5 JB~~ BL
108-87-2	Methyl cyclohexane	0.36	12		U
1634-04-4	Methyl tert-butyl ether	0.39	12		U
108-10-1	4-Methyl-2-pentanone	0.70	12		U
100-42-5	Styrene	0.42	12		U
79-34-5	1,1,2,2-Tetrachloroethane	0.52	12		U
127-18-4	Tetrachloroethene	1.2	12		U

FORM 1
VOLATILE ORGANICS ANALYSIS DATA SHEET

CLIENT SAMPLE NO. 11

MR08-SS262-09A

Lab Name: EMPIRICAL LABS Contract: CH2MHILL

Lab Code: NA Case No.: NA SAS No.: NA SDG No.: LEJEUNE049

Matrix: (soil/water) SOIL Lab Sample ID: 0901102-11

Sample wt/vol: 4.6 (g/mL) G Lab File ID: 0110211A

Level: (low/med) LOW Date Sampled: 01/14/09 12:30

% Moisture: not dec. 10 Date Analyzed: 01/19/09 18:51

GC Column: RTX-VRX ID: 0.25 (mm) Dilution Factor: 1.0

Soil Extract Volume:_____(uL) Soil Aliquot Volume: _____(uL)

CONCENTRATION UNITS: (ug/L or ug/Kg) UG/KG

CAS NO.	COMPOUND	MDL	RL	CONC	Q
108-88-3	Toluene	1.0	12		U
120-82-1	1,2,4-Trichlorobenzene	0.22	12		U
71-55-6	1,1,1-Trichloroethane	1.1	12		U
79-00-5	1,1,2-Trichloroethane	0.42	12		U
79-01-6	Trichloroethene	1.0	12		U
76-13-1	Trichlorotrifluoroethane	0.67	12		U
75-69-4	Trichlorofluoromethane	1.2	12		U
75-01-4	Vinyl chloride	1.3	12		U
1330-20-7	Xylene(total)	0.85	12		U

lw
4/4/09

FORM 1
VOLATILE ORGANICS ANALYSIS DATA SHEET

CLIENT SAMPLE NO. (2

MR08-IS26
2-4-5-09A

Lab Name: EMPIRICAL LABS Contract: CH2MHILL

Lab Code: NA Case No.: NA SAS No.: NA SDG No.: LEJEUNE049

Matrix: (soil/water) SOIL Lab Sample ID: 0901102-12

Sample wt/vol: 6.7 (g/mL) G Lab File ID: 0110212A

Level: (low/med) LOW Date Sampled: 01/14/09 12:50

% Moisture: not dec. 13 Date Analyzed: 01/19/09 19:22

GC Column: RTX-VRX ID: 0.25 (mm) Dilution Factor: 1.0

Soil Extract Volume:_____(uL) Soil Aliquot Volume: _____(uL)

CONCENTRATION UNITS: (ug/L or ug/Kg) UG/KG

CAS NO.	COMPOUND	MDL	RL	CONC	Q
67-64-1	Acetone	1.7	8.6	8.6u 3.9 ~~JB~~	B
71-43-2	Benzene	0.40	8.6		U
75-27-4	Bromodichloromethane	0.26	8.6		U
75-25-2	Bromoform	0.86	8.6		U
74-83-9	Bromomethane	0.62	8.6		U
78-93-3	2-Butanone	1.2	8.6		~~U~~ UJ CC
75-15-0	Carbon disulfide	1.1	8.6		U
56-23-5	Carbon tetrachloride	0.76	8.6		U
108-90-7	Chlorobenzene	0.29	8.6		U
75-00-3	Chloroethane	0.94	8.6		U
67-66-3	Chloroform	0.47	8.6		U
74-87-3	Chloromethane	0.45	8.6		U
110-82-7	Cyclohexane	0.46	8.6		U
124-48-1	Dibromochloromethane	0.29	8.6		U
96-12-8	1,2-Dibromo-3-chloropropane	1.0	4.3		U
106-93-4	1,2-Dibromoethane	0.37	8.6		U
95-50-1	1,2-Dichlorobenzene	0.32	8.6		U
541-73-1	1,3-Dichlorobenzene	0.72	8.6		U
106-46-7	1,4-Dichlorobenzene	0.47	8.6		U
75-71-8	Dichlorodifluoromethane	0.94	8.6		U
75-34-3	1,1-Dichloroethane	0.46	8.6		U
107-06-2	1,2-Dichloroethane	0.40	8.6		U
75-35-4	1,1-Dichloroethene	1.0	8.6		U
156-59-2	cis-1,2-Dichloroethene	1.0	8.6		U
156-60-5	trans-1,2-Dichloroethene	0.94	8.6		U
78-87-5	1,2-Dichloropropane	0.40	8.6		U
10061-01-5	cis-1,3-Dichloropropene	0.43	8.6		U
10061-02-6	trans-1,3-Dichloropropene	0.27	8.6		U
100-41-4	Ethylbenzene	0.64	8.6		U
591-78-6	2-Hexanone	2.0	8.6		U
98-82-8	Isopropylbenzene	0.76	8.6		U
79-20-9	Methyl acetate	1.4	8.6		U
75-09-2	Methylene chloride	0.53	8.6	8.6u 0.76 ~~JB~~	B1
108-87-2	Methyl cyclohexane	0.26	8.6		U
1634-04-4	Methyl tert-butyl ether	0.27	8.6		U
108-10-1	4-Methyl-2-pentanone	0.50	8.6		U
100-42-5	Styrene	0.30	8.6		U
79-34-5	1,1,2,2-Tetrachloroethane	0.37	8.6		U
127-18-4	Tetrachloroethene	0.83	8.6		U

FORM I VOA

MW
4/4/09

FORM 1
VOLATILE ORGANICS ANALYSIS DATA SHEET

CLIENT SAMPLE NO. 12

MR08-IS26
2-4-5-09A

Lab Name: EMPIRICAL LABS Contract: CH2MHILL

Lab Code: NA Case No.: NA SAS No.: NA SDG No.: LEJEUNE049

Matrix: (soil/water) SOIL Lab Sample ID: 0901102-12

Sample wt/vol: 6.7 (g/mL) G Lab File ID: 0110212A

Level: (low/med) LOW Date Sampled: 01/14/09 12:50

% Moisture: not dec. 13 Date Analyzed: 01/19/09 19:22

GC Column: RTX-VRX ID: 0.25 (mm) Dilution Factor: 1.0

Soil Extract Volume:_____(uL) Soil Aliquot Volume: _____(uL)

CONCENTRATION UNITS: (ug/L or ug/Kg) UG/KG

CAS NO.	COMPOUND	MDL	RL	CONC	Q
108-88-3	Toluene	0.74	8.6		U
120-82-1	1,2,4-Trichlorobenzene	0.15	8.6		U
71-55-6	1,1,1-Trichloroethane	0.77	8.6		U
79-00-5	1,1,2-Trichloroethane	0.30	8.6		U
79-01-6	Trichloroethene	0.73	8.6		U
76-13-1	Trichlorotrifluoroethane	0.47	8.6		U
75-69-4	Trichlorofluoromethane	0.82	8.6		U
75-01-4	Vinyl chloride	0.94	8.6		U
1330-20-7	Xylene(total)	0.60	8.6		U

lew
4/4/09

FORM 1
VOLATILE ORGANICS ANALYSIS DATA SHEET

CLIENT SAMPLE NO. 13

MR08-SS1
69-09A-2

Lab Name: EMPIRICAL LABS Contract: CH2MHILL

Lab Code: NA Case No.: NA SAS No.: NA SDG No.: LEJEUNE049

Matrix: (soil/water) SOIL Lab Sample ID: 0901102-13

Sample wt/vol: 5.0 (g/mL) G Lab File ID: 0110213A

Level: (low/med) LOW Date Sampled: 01/14/09 13:00

% Moisture: not dec. 9 Date Analyzed: 01/19/09 19:52

GC Column: RTX-VRX ID: 0.25 (mm) Dilution Factor: 1.0

Soil Extract Volume:_____(uL) Soil Aliquot Volume: _____(uL)

CONCENTRATION UNITS: (ug/L or ug/Kg) UG/KG

CAS NO.	COMPOUND	MDL	RL	CONC	Q
67-64-1	Acetone	2.2	11		U
71-43-2	Benzene	0.52	11	0.83	~~J~~ J SSH
75-27-4	Bromodichloromethane	0.33	11		U
75-25-2	Bromoform	1.1	11		U
74-83-9	Bromomethane	0.80	11		U
78-93-3	2-Butanone	1.6	11		~~U~~ UJ CC
75-15-0	Carbon disulfide	1.4	11		U
56-23-5	Carbon tetrachloride	0.98	11		U
108-90-7	Chlorobenzene	0.38	11		U
75-00-3	Chloroethane	1.2	11		U
67-66-3	Chloroform	0.61	11		U
74-87-3	Chloromethane	0.58	11		U
110-82-7	Cyclohexane	0.60	11		U
124-48-1	Dibromochloromethane	0.38	11		U
96-12-8	1,2-Dibromo-3-chloropropane	1.3	5.5		U
106-93-4	1,2-Dibromoethane	0.48	11		U
95-50-1	1,2-Dichlorobenzene	0.41	11		U
541-73-1	1,3-Dichlorobenzene	0.93	11		U
106-46-7	1,4-Dichlorobenzene	0.61	11		U
75-71-8	Dichlorodifluoromethane	1.2	11		U
75-34-3	1,1-Dichloroethane	0.60	11		U
107-06-2	1,2-Dichloroethane	0.51	11		U
75-35-4	1,1-Dichloroethene	1.3	11		U
156-59-2	cis-1,2-Dichloroethene	1.3	11		U
156-60-5	trans-1,2-Dichloroethene	1.2	11		U
78-87-5	1,2-Dichloropropane	0.51	11		U
10061-01-5	cis-1,3-Dichloropropene	0.55	11		U
10061-02-6	trans-1,3-Dichloropropene	0.35	11		U
100-41-4	Ethylbenzene	0.83	11		U
591-78-6	2-Hexanone	2.5	11		U
98-82-8	Isopropylbenzene	0.98	11		U
79-20-9	Methyl acetate	1.8	11		U
75-09-2	Methylene chloride	0.69	11	11U	~~2.0 JB~~ B
108-87-2	Methyl cyclohexane	0.33	11	0.40	~~J~~ J SSH
1634-04-4	Methyl tert-butyl ether	0.35	11		U
108-10-1	4-Methyl-2-pentanone	0.64	11		U
100-42-5	Styrene	0.39	11		U
79-34-5	1,1,2,2-Tetrachloroethane	0.48	11		U
127-18-4	Tetrachloroethene	1.1	11		U

FORM I VOA

MW
01/21/09

FORM 1
VOLATILE ORGANICS ANALYSIS DATA SHEET

CLIENT SAMPLE NO.

MR08-SS1
69-09A-2

13

Lab Name: EMPIRICAL LABS Contract: CH2MHILL

Lab Code: NA Case No.: NA SAS No.: NA SDG No.: LEJEUNE049

Matrix: (soil/water) SOIL Lab Sample ID: 0901102-13

Sample wt/vol: 5.0 (g/mL) G Lab File ID: 0110213A

Level: (low/med) LOW Date Sampled: 01/14/09 13:00

% Moisture: not dec. 9 Date Analyzed: 01/19/09 19:52

GC Column: RTX-VRX ID: 0.25 (mm) Dilution Factor: 1.0

Soil Extract Volume:_____(uL) Soil Aliquot Volume: _____(uL)

CONCENTRATION UNITS: (ug/L or ug/Kg) UG/KG

CAS NO.	COMPOUND	MDL	RL	CONC	Q
108-88-3	Toluene	0.95	11	11U ~~1.1~~	~~J~~ U
120-82-1	1,2,4-Trichlorobenzene	0.20	11		U
71-55-6	1,1,1-Trichloroethane	1.00	11		U
79-00-5	1,1,2-Trichloroethane	0.39	11		U
79-01-6	Trichloroethene	0.94	11		U
76-13-1	Trichlorotrifluoroethane	0.61	11		U
75-69-4	Trichlorofluoromethane	1.0	11		U
75-01-4	Vinyl chloride	1.2	11		U
1330-20-7	Xylene(total)	0.78	11		U

B

FORM I VOA

DW
9/4/09

FORM 1
VOLATILE ORGANICS ANALYSIS DATA SHEET

CLIENT SAMPLE NO. 14

MR08-SS261-09A

Lab Name: EMPIRICAL LABS Contract: CH2MHILL

Lab Code: NA Case No.: NA SAS No.: NA SDG No.: LEJEUNE049

Matrix: (soil/water) SOIL Lab Sample ID: 0901102-14

Sample wt/vol: 2.5 (g/mL) G Lab File ID: 0110214B

Level: (low/med) LOW Date Sampled: 01/14/09 13:30

% Moisture: not dec. 20 Date Analyzed: 01/21/09 11:13

GC Column: RTX-VRX ID: 0.25 (mm) Dilution Factor: 1.0

Soil Extract Volume:_____(uL) Soil Aliquot Volume: _____(uL)

CONCENTRATION UNITS: (ug/L or ug/Kg) UG/KG

CAS NO.	COMPOUND	MDL	RL	CONC	Q
67-64-1	Acetone	5.1	26	29	~~B~~ U
71-43-2	Benzene	1.2	26		U
75-27-4	Bromodichloromethane	0.77	26		U
75-25-2	Bromoform	2.6	26		U
74-83-9	Bromomethane	1.8	26		U
78-93-3	2-Butanone	3.6	26		U
75-15-0	Carbon disulfide	3.3	26		U
56-23-5	Carbon tetrachloride	2.2	26		U
108-90-7	Chlorobenzene	0.87	26		U
75-00-3	Chloroethane	2.8	26		U
67-66-3	Chloroform	1.4	26		U
74-87-3	Chloromethane	1.3	26		U
110-82-7	Cyclohexane	1.4	26		U
124-48-1	Dibromochloromethane	0.87	26		U
96-12-8	1,2-Dibromo-3-chloropropane	3.1	13		U
106-93-4	1,2-Dibromoethane	1.1	26		U
95-50-1	1,2-Dichlorobenzene	0.94	26		U
541-73-1	1,3-Dichlorobenzene	2.1	26		U
106-46-7	1,4-Dichlorobenzene	1.4	26		U
75-71-8	Dichlorodifluoromethane	2.8	26		U
75-34-3	1,1-Dichloroethane	1.4	26		U
107-06-2	1,2-Dichloroethane	1.2	26		U
75-35-4	1,1-Dichloroethene	3.1	26		U
156-59-2	cis-1,2-Dichloroethene	3.1	26		U
156-60-5	trans-1,2-Dichloroethene	2.8	26		U
78-87-5	1,2-Dichloropropane	1.2	26		U
10061-01-5	cis-1,3-Dichloropropene	1.3	26		U
10061-02-6	trans-1,3-Dichloropropene	0.82	26		U
100-41-4	Ethylbenzene	1.9	26		U
591-78-6	2-Hexanone	5.9	26		U
98-82-8	Isopropylbenzene	2.2	26		U
79-20-9	Methyl acetate	4.1	26		U
75-09-2	Methylene chloride	1.6	26	26U	~~3.2 JB~~ B1
108-87-2	Methyl cyclohexane	0.77	26		U
1634-04-4	Methyl tert-butyl ether	0.82	26		U
108-10-1	4-Methyl-2-pentanone	1.5	26		U
100-42-5	Styrene	0.89	26		U
79-34-5	1,1,2,2-Tetrachloroethane	1.1	26		U
127-18-4	Tetrachloroethene	2.5	26		U

FORM I VOA

LW 4/4/09

FORM 1
VOLATILE ORGANICS ANALYSIS DATA SHEET

CLIENT SAMPLE NO. 14

MR08-SS261-09A

Lab Name: EMPIRICAL LABS Contract: CH2MHILL

Lab Code: NA Case No.: NA SAS No.: NA SDG No.: LEJEUNE049

Matrix: (soil/water) SOIL Lab Sample ID: 0901102-14

Sample wt/vol: 2.5 (g/mL) G Lab File ID: 0110214B

Level: (low/med) LOW Date Sampled: 01/14/09 13:30

% Moisture: not dec. 20 Date Analyzed: 01/21/09 11:13

GC Column: RTX-VRX ID: 0.25 (mm) Dilution Factor: 1.0

Soil Extract Volume:_____(uL) Soil Aliquot Volume: _____(uL)

CONCENTRATION UNITS: (ug/L or ug/Kg) UG/KG

CAS NO.	COMPOUND	MDL	RL	CONC	Q
108-88-3	Toluene	2.2	26		U
120-82-1	1,2,4-Trichlorobenzene	0.46	26		U
71-55-6	1,1,1-Trichloroethane	2.3	26		U
79-00-5	1,1,2-Trichloroethane	0.89	26		U
79-01-6	Trichloroethene	2.2	26		U
76-13-1	Trichlorotrifluoroethane	1.4	26		U
75-69-4	Trichlorofluoromethane	2.4	26		U
75-01-4	Vinyl chloride	2.8	26		U
1330-20-7	Xylene(total)	1.8	26		U

MW 4/4/09

FORM 1
VOLATILE ORGANICS ANALYSIS DATA SHEET

CLIENT SAMPLE NO.

MR08-IS26
1-4-5-09A

15

Lab Name: EMPIRICAL LABS Contract: CH2MHILL

Lab Code: NA Case No.: NA SAS No.: NA SDG No.: LEJEUNE049

Matrix: (soil/water) SOIL Lab Sample ID: 0901102-15

Sample wt/vol: 5.5 (g/mL) G Lab File ID: 0110215A

Level: (low/med) LOW Date Sampled: 01/14/09 13:45

% Moisture: not dec. 13 Date Analyzed: 01/19/09 20:54

GC Column: RTX-VRX ID: 0.25 (mm) Dilution Factor: 1.0

Soil Extract Volume:_____(uL) Soil Aliquot Volume: _____(uL)

CONCENTRATION UNITS: (ug/L or ug/Kg) UG/KG

CAS NO.	COMPOUND	MDL	RL	CONC	Q
67-64-1	Acetone	2.1	10	10U ~~6.8~~	~~JB~~ B
71-43-2	Benzene	0.49	10		U
75-27-4	Bromodichloromethane	0.31	10		U
75-25-2	Bromoform	1.0	10		U
74-83-9	Bromomethane	0.75	10		U
78-93-3	2-Butanone	1.4	10		~~U~~ UJ CCH
75-15-0	Carbon disulfide	1.4	10		U
56-23-5	Carbon tetrachloride	0.92	10		U
108-90-7	Chlorobenzene	0.35	10		U
75-00-3	Chloroethane	1.1	10		U
67-66-3	Chloroform	0.57	10		U
74-87-3	Chloromethane	0.54	10		U
110-82-7	Cyclohexane	0.56	10		U
124-48-1	Dibromochloromethane	0.35	10		U
96-12-8	1,2-Dibromo-3-chloropropane	1.2	5.2		U
106-93-4	1,2-Dibromoethane	0.45	10		U
95-50-1	1,2-Dichlorobenzene	0.38	10		U
541-73-1	1,3-Dichlorobenzene	0.87	10		U
106-46-7	1,4-Dichlorobenzene	0.57	10		U
75-71-8	Dichlorodifluoromethane	1.1	10		U
75-34-3	1,1-Dichloroethane	0.56	10		U
107-06-2	1,2-Dichloroethane	0.48	10		U
75-35-4	1,1-Dichloroethene	1.2	10		U
156-59-2	cis-1,2-Dichloroethene	1.2	10		U
156-60-5	trans-1,2-Dichloroethene	1.1	10		U
78-87-5	1,2-Dichloropropane	0.48	10		U
10061-01-5	cis-1,3-Dichloropropene	0.52	10		U
10061-02-6	trans-1,3-Dichloropropene	0.33	10		U
100-41-4	Ethylbenzene	0.78	10		U
591-78-6	2-Hexanone	2.4	10		U
98-82-8	Isopropylbenzene	0.92	10		U
79-20-9	Methyl acetate	1.7	10		U
75-09-2	Methylene chloride	0.64	10	10U ~~1.4~~	~~JB~~ BL
108-87-2	Methyl cyclohexane	0.31	10		U
1634-04-4	Methyl tert-butyl ether	0.33	10		U
108-10-1	4-Methyl-2-pentanone	0.60	10		U
100-42-5	Styrene	0.36	10		U
79-34-5	1,1,2,2-Tetrachloroethane	0.45	10		U
127-18-4	Tetrachloroethene	1.0	10		U

FORM I VOA

lw 4/14/09

FORM 1
VOLATILE ORGANICS ANALYSIS DATA SHEET

CLIENT SAMPLE NO.

15

MR08-IS26
1-4-5-09A

Lab Name: EMPIRICAL LABS Contract: CH2MHILL

Lab Code: NA Case No.: NA SAS No.: NA SDG No.: LEJEUNE049

Matrix: (soil/water) SOIL Lab Sample ID: 0901102-15

Sample wt/vol: 5.5 (g/mL) G Lab File ID: 0110215A

Level: (low/med) LOW Date Sampled: 01/14/09 13:45

% Moisture: not dec. 13 Date Analyzed: 01/19/09 20:54

GC Column: RTX-VRX ID: 0.25 (mm) Dilution Factor: 1.0

Soil Extract Volume:_____(uL) Soil Aliquot Volume: _____(uL)

CONCENTRATION UNITS: (ug/L or ug/Kg) UG/KG

CAS NO.	COMPOUND	MDL	RL	CONC	Q
108-88-3	Toluene	0.90	10		U
120-82-1	1,2,4-Trichlorobenzene	0.19	10		U
71-55-6	1,1,1-Trichloroethane	0.94	10		U
79-00-5	1,1,2-Trichloroethane	0.36	10		U
79-01-6	Trichloroethene	0.88	10		U
76-13-1	Trichlorotrifluoroethane	0.57	10		U
75-69-4	Trichlorofluoromethane	0.99	10		U
75-01-4	Vinyl chloride	1.1	10		U
1330-20-7	Xylene(total)	0.73	10		U

fw
4/4/09

FORM 1
VOLATILE ORGANICS ANALYSIS DATA SHEET

CLIENT SAMPLE NO. 16

MR08-SS260-09A

Lab Name: EMPIRICAL LABS Contract: CH2MHILL

Lab Code: NA Case No.: NA SAS No.: NA SDG No.: LEJEUNE049

Matrix: (soil/water) SOIL Lab Sample ID: 0901102-16

Sample wt/vol: 3.1 (g/mL) G Lab File ID: 0110216B

Level: (low/med) LOW Date Sampled: 01/14/09 14:00

% Moisture: not dec. 6 Date Analyzed: 01/21/09 11:44

GC Column: RTX-VRX ID: 0.25 (mm) Dilution Factor: 1.0

Soil Extract Volume:_____(uL) Soil Aliquot Volume: _____(uL)

CONCENTRATION UNITS: (ug/L or ug/Kg) UG/KG

CAS NO.	COMPOUND	MDL	RL	CONC	Q
67-64-1	Acetone	3.4	17		U
71-43-2	Benzene	0.80	17	0.90	~~J~~ J SSL
75-27-4	Bromodichloromethane	0.51	17		U
75-25-2	Bromoform	1.7	17		U
74-83-9	Bromomethane	1.2	17		U
78-93-3	2-Butanone	2.4	17		U
75-15-0	Carbon disulfide	2.2	17		U
56-23-5	Carbon tetrachloride	1.5	17		U
108-90-7	Chlorobenzene	0.58	17		U
75-00-3	Chloroethane	1.9	17		U
67-66-3	Chloroform	0.93	17		U
74-87-3	Chloromethane	0.88	17		U
110-82-7	Cyclohexane	0.92	17		U
124-48-1	Dibromochloromethane	0.58	17		U
96-12-8	1,2-Dibromo-3-chloropropane	2.0	8.5		U
106-93-4	1,2-Dibromoethane	0.73	17		U
95-50-1	1,2-Dichlorobenzene	0.63	17		U
541-73-1	1,3-Dichlorobenzene	1.4	17		U
106-46-7	1,4-Dichlorobenzene	0.93	17		U
75-71-8	Dichlorodifluoromethane	1.9	17		U
75-34-3	1,1-Dichloroethane	0.92	17		U
107-06-2	1,2-Dichloroethane	0.78	17		U
75-35-4	1,1-Dichloroethene	2.0	17		U
156-59-2	cis-1,2-Dichloroethene	2.0	17		U
156-60-5	trans-1,2-Dichloroethene	1.9	17		U
78-87-5	1,2-Dichloropropane	0.78	17		U
10061-01-5	cis-1,3-Dichloropropene	0.85	17		U
10061-02-6	trans-1,3-Dichloropropene	0.54	17		U
100-41-4	Ethylbenzene	1.3	17		U
591-78-6	2-Hexanone	3.9	17		U
98-82-8	Isopropylbenzene	1.5	17		U
79-20-9	Methyl acetate	2.7	17		U
75-09-2	Methylene chloride	1.0	17	17U ~~3.0~~ ~~JB~~	B1
108-87-2	Methyl cyclohexane	0.51	17	0.54	~~J~~ J SSL
1634-04-4	Methyl tert-butyl ether	0.54	17		U
108-10-1	4-Methyl-2-pentanone	0.98	17		U
100-42-5	Styrene	0.59	17		U
79-34-5	1,1,2,2-Tetrachloroethane	0.73	17		U
127-18-4	Tetrachloroethene	1.6	17		U

FORM I VOA

LW 4/4/09

FORM 1
VOLATILE ORGANICS ANALYSIS DATA SHEET

CLIENT SAMPLE NO. 16

MR08-SS260-09A

Lab Name: EMPIRICAL LABS Contract: CH2MHILL

Lab Code: NA Case No.: NA SAS No.: NA SDG No.: LEJEUNE049

Matrix: (soil/water) SOIL Lab Sample ID: 0901102-16

Sample wt/vol: 3.1 (g/mL) G Lab File ID: 0110216B

Level: (low/med) LOW Date Sampled: 01/14/09 14:00

% Moisture: not dec. 6 Date Analyzed: 01/21/09 11:44

GC Column: RTX-VRX ID: 0.25 (mm) Dilution Factor: 1.0

Soil Extract Volume:_____(uL) Soil Aliquot Volume: _____(uL)

CONCENTRATION UNITS: (ug/L or ug/Kg) UG/KG

CAS NO.	COMPOUND	MDL	RL	CONC	Q
108-88-3	Toluene	1.5	17		U
120-82-1	1,2,4-Trichlorobenzene	0.30	17		U
71-55-6	1,1,1-Trichloroethane	1.5	17		U
79-00-5	1,1,2-Trichloroethane	0.59	17		U
79-01-6	Trichloroethene	1.4	17		U
76-13-1	Trichlorotrifluoroethane	0.93	17		U
75-69-4	Trichlorofluoromethane	1.6	17		U
75-01-4	Vinyl chloride	1.9	17		U
1330-20-7	Xylene(total)	1.2	17		U

DW
4/4/09

FORM 1
VOLATILE ORGANICS ANALYSIS DATA SHEET

CLIENT SAMPLE NO. 17

MR08-IS26
0-6-7-09A

Lab Name: EMPIRICAL LABS Contract: CH2MHILL

Lab Code: NA Case No.: NA SAS No.: NA SDG No.: LEJEUNE049

Matrix: (soil/water) SOIL Lab Sample ID: 0901102-17

Sample wt/vol: 4.6 (g/mL) G Lab File ID: 0110217A

Level: (low/med) LOW Date Sampled: 01/14/09 14:20

% Moisture: not dec. 2 Date Analyzed: 01/19/09 21:56

GC Column: RTX-VRX ID: 0.25 (mm) Dilution Factor: 1.0

Soil Extract Volume:_____(uL) Soil Aliquot Volume: _____(uL)

CONCENTRATION UNITS: (ug/L or ug/Kg) UG/KG

CAS NO.	COMPOUND	MDL	RL	CONC	Q
67-64-1	Acetone	2.2	11		U
71-43-2	Benzene	0.52	11		U
75-27-4	Bromodichloromethane	0.33	11		U
75-25-2	Bromoform	1.1	11		U
74-83-9	Bromomethane	0.79	11		U
78-93-3	2-Butanone	1.5	11		~~U~~ UJ CU
75-15-0	Carbon disulfide	1.4	11		U
56-23-5	Carbon tetrachloride	0.97	11		U
108-90-7	Chlorobenzene	0.37	11		U
75-00-3	Chloroethane	1.2	11		U
67-66-3	Chloroform	0.60	11		U
74-87-3	Chloromethane	0.57	11		U
110-82-7	Cyclohexane	0.59	11		U
124-48-1	Dibromochloromethane	0.37	11		U
96-12-8	1,2-Dibromo-3-chloropropane	1.3	5.5		U
106-93-4	1,2-Dibromoethane	0.47	11		U
95-50-1	1,2-Dichlorobenzene	0.41	11		U
541-73-1	1,3-Dichlorobenzene	0.92	11		U
106-46-7	1,4-Dichlorobenzene	0.60	11		U
75-71-8	Dichlorodifluoromethane	1.2	11		U
75-34-3	1,1-Dichloroethane	0.59	11		U
107-06-2	1,2-Dichloroethane	0.51	11		U
75-35-4	1,1-Dichloroethene	1.3	11		U
156-59-2	cis-1,2-Dichloroethene	1.3	11		U
156-60-5	trans-1,2-Dichloroethene	1.2	11		U
78-87-5	1,2-Dichloropropane	0.51	11		U
10061-01-5	cis-1,3-Dichloropropene	0.55	11		U
10061-02-6	trans-1,3-Dichloropropene	0.35	11		U
100-41-4	Ethylbenzene	0.82	11		U
591-78-6	2-Hexanone	2.5	11		U
98-82-8	Isopropylbenzene	0.97	11		U
79-20-9	Methyl acetate	1.8	11		U
75-09-2	Methylene chloride	0.68	11	11U	~~2.4 JB~~ BL
108-87-2	Methyl cyclohexane	0.33	11		U
1634-04-4	Methyl tert-butyl ether	0.35	11		U
108-10-1	4-Methyl-2-pentanone	0.64	11		U
100-42-5	Styrene	0.38	11		U
79-34-5	1,1,2,2-Tetrachloroethane	0.47	11		U
127-18-4	Tetrachloroethene	1.1	11		U

FORM I VOA

LW 4/14/09

FORM 1
VOLATILE ORGANICS ANALYSIS DATA SHEET

CLIENT SAMPLE NO.

MR08-IS26
0-6-7-09A

17

Lab Name: EMPIRICAL LABS Contract: CH2MHILL

Lab Code: NA Case No.: NA SAS No.: NA SDG No.: LEJEUNE049

Matrix: (soil/water) SOIL Lab Sample ID: 0901102-17

Sample wt/vol: 4.6 (g/mL) G Lab File ID: 0110217A

Level: (low/med) LOW Date Sampled: 01/14/09 14:20

% Moisture: not dec. 2 Date Analyzed: 01/19/09 21:56

GC Column: RTX-VRX ID: 0.25 (mm) Dilution Factor: 1.0

Soil Extract Volume:_____(uL) Soil Aliquot Volume: _____(uL)

CONCENTRATION UNITS: (ug/L or ug/Kg) UG/KG

CAS NO.	COMPOUND	MDL	RL	CONC	Q
108-88-3	Toluene	0.95	11		U
120-82-1	1,2,4-Trichlorobenzene	0.20	11		U
71-55-6	1,1,1-Trichloroethane	0.99	11		U
79-00-5	1,1,2-Trichloroethane	0.38	11		U
79-01-6	Trichloroethene	0.94	11		U
76-13-1	Trichlorotrifluoroethane	0.60	11		U
75-69-4	Trichlorofluoromethane	1.0	11		U
75-01-4	Vinyl chloride	1.2	11		U
1330-20-7	Xylene(total)	0.77	11		U

KW
4/4/09

FORM 1
VOLATILE ORGANICS ANALYSIS DATA SHEET

CLIENT SAMPLE NO. 18

MR08-EB01
011409-SS

Lab Name: EMPIRICAL LABS Contract: CH2MHILL

Lab Code: NA Case No.: NA SAS No.: NA SDG No.: LEJEUNE049

Matrix: (soil/water) WATER Lab Sample ID: 0901102-18

Sample wt/vol: 5.000 (g/mL) ML Lab File ID: 0110218

Level: (low/med) LOW Date Sampled: 01/14/09 08:30

% Moisture: not dec. _____ Date Analyzed: 01/16/09 22:52

GC Column: RTX-VRX ID: 0.25 (mm) Dilution Factor: 1.0

Soil Extract Volume:_____(uL) Soil Aliquot Volume: _____(uL)

CONCENTRATION UNITS: (ug/L or ug/Kg) UG/L

CAS NO.	COMPOUND	MDL	RL	CONC	Q
67-64-1	Acetone	0.84	2.5		U
71-43-2	Benzene	0.11	1.0		U
75-27-4	Bromodichloromethane	0.10	1.0		U
75-25-2	Bromoform	0.10	1.0		U
74-83-9	Bromomethane	0.32	1.0		~~U~~ UJ
78-93-3	2-Butanone	1.0	3.0		U
75-15-0	Carbon disulfide	0.13	1.0		U
56-23-5	Carbon tetrachloride	0.15	1.0		U
108-90-7	Chlorobenzene	0.10	1.0		U
75-00-3	Chloroethane	0.18	1.0		U
67-66-3	Chloroform	0.11	1.0		U
74-87-3	Chloromethane	0.29	1.0		U
110-82-7	Cyclohexane	0.20	1.0		U
124-48-1	Dibromochloromethane	0.10	1.0		U
96-12-8	1,2-Dibromo-3-chloropropane	0.11	1.0		U
106-93-4	1,2-Dibromoethane	0.10	1.0		U
95-50-1	1,2-Dichlorobenzene	0.10	1.0		U
541-73-1	1,3-Dichlorobenzene	0.13	1.0		U
106-46-7	1,4-Dichlorobenzene	0.10	1.0		U
75-71-8	Dichlorodifluoromethane	0.22	1.0		U
75-34-3	1,1-Dichloroethane	0.12	1.0		U
107-06-2	1,2-Dichloroethane	0.10	1.0		U
75-35-4	1,1-Dichloroethene	0.15	1.0		U
156-59-2	cis-1,2-Dichloroethene	0.13	1.0		U
156-60-5	trans-1,2-Dichloroethene	0.13	1.0		U
78-87-5	1,2-Dichloropropane	0.10	1.0		U
10061-01-5	cis-1,3-Dichloropropene	0.11	1.0		U
10061-02-6	trans-1,3-Dichloropropene	0.10	1.0		U
100-41-4	Ethylbenzene	0.13	1.0		U
591-78-6	2-Hexanone	0.30	1.0		U
98-82-8	Isopropylbenzene	0.15	1.0		U
79-20-9	Methyl acetate	0.30	1.0		U
75-09-2	Methylene chloride	0.14	1.0	1.0U ~~0.64~~	~~JB~~ BL
108-87-2	Methyl cyclohexane	0.17	1.0		U
1634-04-4	Methyl tert-butyl ether	0.10	1.0		U
108-10-1	4-Methyl-2-pentanone	0.29	1.0		U
100-42-5	Styrene	0.10	1.0		U
79-34-5	1,1,2,2-Tetrachloroethane	0.10	1.0		U
127-18-4	Tetrachloroethene	0.15	1.0		U

FORM I VOA

LW 11409

FORM 1
VOLATILE ORGANICS ANALYSIS DATA SHEET

CLIENT SAMPLE NO. 18

MR08-EB01
011409-SS

Lab Name: EMPIRICAL LABS Contract: CH2MHILL

Lab Code: NA Case No.: NA SAS No.: NA SDG No.: LEJEUNE049

Matrix: (soil/water) WATER Lab Sample ID: 0901102-18

Sample wt/vol: 5.000 (g/mL) ML Lab File ID: 0110218

Level: (low/med) LOW Date Sampled: 01/14/09 08:30

% Moisture: not dec. _____ Date Analyzed: 01/16/09 22:52

GC Column: RTX-VRX ID: 0.25 (mm) Dilution Factor: 1.0

Soil Extract Volume:_____(uL) Soil Aliquot Volume: _____(uL)

CONCENTRATION UNITS: (ug/L or ug/Kg) UG/L

CAS NO.	COMPOUND	MDL	RL	CONC	Q
108-88-3	Toluene	0.10	1.0	16	
120-82-1	1,2,4-Trichlorobenzene	0.10	1.0		U
71-55-6	1,1,1-Trichloroethane	0.17	1.0		U
79-00-5	1,1,2-Trichloroethane	0.10	1.0		U
79-01-6	Trichloroethene	0.13	1.0		U
76-13-1	Trichlorotrifluoroethane	0.18	1.0		U
75-69-4	Trichlorofluoromethane	0.17	1.0		U
75-01-4	Vinyl chloride	0.18	1.0		U
1330-20-7	Xylene(total)	0.22	1.0		U

JW 4/4/09

FORM 1
VOLATILE ORGANICS ANALYSIS DATA SHEET

CLIENT SAMPLE NO. 19

MR08-TB01011409

Lab Name: EMPIRICAL LABS Contract: CH2MHILL

Lab Code: NA Case No.: NA SAS No.: NA SDG No.: LEJEUNE049

Matrix: (soil/water) WATER Lab Sample ID: 0901102-19

Sample wt/vol: 5.000 (g/mL) ML Lab File ID: 0110219

Level: (low/med) LOW Date Sampled: 01/14/09 09:00

% Moisture: not dec. _____ Date Analyzed: 01/16/09 21:24

GC Column: RTX-VRX ID: 0.25 (mm) Dilution Factor: 1.0

Soil Extract Volume:_____(uL) Soil Aliquot Volume: _____(uL)

CONCENTRATION UNITS: (ug/L or ug/Kg) UG/L

CAS NO.	COMPOUND	MDL	RL	CONC	Q
67-64-1	Acetone	0.84	2.5		U
71-43-2	Benzene	0.11	1.0		U
75-27-4	Bromodichloromethane	0.10	1.0		U
75-25-2	Bromoform	0.10	1.0		U
74-83-9	Bromomethane	0.32	1.0		~~U~~ UJ CU
78-93-3	2-Butanone	1.0	3.0		U
75-15-0	Carbon disulfide	0.13	1.0		U
56-23-5	Carbon tetrachloride	0.15	1.0		U
108-90-7	Chlorobenzene	0.10	1.0		U
75-00-3	Chloroethane	0.18	1.0		U
67-66-3	Chloroform	0.11	1.0		U
74-87-3	Chloromethane	0.29	1.0		U
110-82-7	Cyclohexane	0.20	1.0		U
124-48-1	Dibromochloromethane	0.10	1.0		U
96-12-8	1,2-Dibromo-3-chloropropane	0.11	1.0		U
106-93-4	1,2-Dibromoethane	0.10	1.0		U
95-50-1	1,2-Dichlorobenzene	0.10	1.0		U
541-73-1	1,3-Dichlorobenzene	0.13	1.0		U
106-46-7	1,4-Dichlorobenzene	0.10	1.0		U
75-71-8	Dichlorodifluoromethane	0.22	1.0		U
75-34-3	1,1-Dichloroethane	0.12	1.0		U
107-06-2	1,2-Dichloroethane	0.10	1.0		U
75-35-4	1,1-Dichloroethene	0.15	1.0		U
156-59-2	cis-1,2-Dichloroethene	0.13	1.0		U
156-60-5	trans-1,2-Dichloroethene	0.13	1.0		U
78-87-5	1,2-Dichloropropane	0.10	1.0		U
10061-01-5	cis-1,3-Dichloropropene	0.11	1.0		U
10061-02-6	trans-1,3-Dichloropropene	0.10	1.0		U
100-41-4	Ethylbenzene	0.13	1.0		U
591-78-6	2-Hexanone	0.30	1.0		U
98-82-8	Isopropylbenzene	0.15	1.0		U
79-20-9	Methyl acetate	0.30	1.0		U
75-09-2	Methylene chloride	0.14	1.0	2.8	~~B~~
108-87-2	Methyl cyclohexane	0.17	1.0		U
1634-04-4	Methyl tert-butyl ether	0.10	1.0		U
108-10-1	4-Methyl-2-pentanone	0.29	1.0		U
100-42-5	Styrene	0.10	1.0		U
79-34-5	1,1,2,2-Tetrachloroethane	0.10	1.0		U
127-18-4	Tetrachloroethene	0.15	1.0		U

lw 4/1/09

FORM 1
VOLATILE ORGANICS ANALYSIS DATA SHEET

CLIENT SAMPLE NO. 19

MR08-TB01011409

Lab Name: EMPIRICAL LABS Contract: CH2MHILL

Lab Code: NA Case No.: NA SAS No.: NA SDG No.: LEJEUNE049

Matrix: (soil/water) WATER Lab Sample ID: 0901102-19

Sample wt/vol: 5.000 (g/mL) ML Lab File ID: 0110219

Level: (low/med) LOW Date Sampled: 01/14/09 09:00

% Moisture: not dec. _____ Date Analyzed: 01/16/09 21:24

GC Column: RTX-VRX ID: 0.25 (mm) Dilution Factor: 1.0

Soil Extract Volume:_____(uL) Soil Aliquot Volume: _____(uL)

CONCENTRATION UNITS: (ug/L or ug/Kg) UG/L

CAS NO.	COMPOUND	MDL	RL	CONC	Q
108-88-3	Toluene	0.10	1.0		U
120-82-1	1,2,4-Trichlorobenzene	0.10	1.0		U
71-55-6	1,1,1-Trichloroethane	0.17	1.0		U
79-00-5	1,1,2-Trichloroethane	0.10	1.0		U
79-01-6	Trichloroethene	0.13	1.0		U
76-13-1	Trichlorotrifluoroethane	0.18	1.0		U
75-69-4	Trichlorofluoromethane	0.17	1.0		U
75-01-4	Vinyl chloride	0.18	1.0		U
1330-20-7	Xylene(total)	0.22	1.0		U

lew 9/4/09

ENVIRONMENTAL
Data Services, Inc.

VOLATILE ORGANIC COMPOUNDS
USEPA Region IV - Level IV Review

Site: MCB Camp Lejeune, TO-09 SDG #: LEJEUNE050

Client: CH2M HILL, Inc., Virginia Beach, Virginia Date: April 4, 2009

Laboratory: Empirical Laboratories, Nashville, Tennessee Reviewer: Nancy Weaver

EDS ID	Client Sample ID	Laboratory Sample ID	Matrix
1	MR08-SS299-09A	0901103-01	Soil
2	MR08-SS299D-09A	0901103-02	Soil
3	MR08-IS299-6-7-09A	0901103-03	Soil
4	MR08-IS299D-6-7-09A	0901103-04	Soil
5	MR08-SS304-09A	0901103-05	Soil
6	MR08-IS304-6-7-09A	0901103-06	Soil
7	MR08-SS312-09A	0901103-07	Soil
8	MR08-IS312-5-6-09A	0901103-08	Soil
9	MR08-SS311-09A	0901103-09	Soil
10	MR08-IS311-8-9-09A	0901103-10	Soil
11	MR08-SS308-09A	0901103-11	Soil
11MS	MR08-SS308-09AMS	0901103-11MS	Soil
11MSD	MR08-SS308-09AMSD	0901103-11MSD	Soil
12	MR08-IS308-9-10-09A	0901103-12	Soil
12MS	MR08-IS308-9-10-09AMS	0901103-12MS	Soil
12MSD	MR08-IS308-9-10-09AMSD	0901103-12MSD	Soil
13	MR08-SS309-09A	0901103-13	Soil
14	MR08-SS309D-09A	0901103-14	Soil
15	MR08-IS309-6-7-09A	0901103-15	Soil
16	MR08-IS309D-6-7-09A	0901103-16	Soil
17	MR08-SS310-09A	0901103-17	Soil
18	MR08-IS310-9-10-09A	0901103-18	Soil
19	MR08-SS307-09A	0901103-19	Soil
20	MR08-IS307-6-7-09A	0901103-20	Soil
21	MR08-SS284-09A	0901103-21	Soil
22	MR08-IS284-6-7-09A	0901103-22	Soil
23	MR08-SS285-09A	0901103-23	Soil
24	MR08-IS285-8-9-09A	0901103-24	Soil
25	MR08-EB01011309-SS	0901103-25	Water
26	MR08-TB01011309	0901103-26	Water

The USEPA "Contract Laboratory Program National Functional Guidelines for Organic Data Review," October 1999, and professional judgement were used in evaluating the data in this summary report.

Holding Times - All samples were analyzed within 14 days for preserved water and soil samples.

GC/MS Tuning - All of the BFB tunes in the initial and continuing calibrations met the percent relative abundance criteria.

Initial Calibration - The initial calibrations exhibited acceptable %RSD and mean RRF values.

Continuing Calibration - The continuing calibrations exhibited acceptable %D and RRF values except the following.

CCAL Date	Compound	%D/RRF	Qualifier	Affected Samples
1/16/09	Bromomethane	30.8%	J/UJ	25, 26
1/19/09	2-Butanone	30.9%	J/UJ	1, 2
1/20/09	Methylene chloride	36.4%	J/UJ	3-16
1/20/09	Acetone	35.2%	J/UJ	18-22, 24
	Methylene chloride	25.6%	J/UJ	18-22, 24

Surrogates - All samples exhibited acceptable surrogate recoveries except the following.

Sample ID	Surrogate	%R	Qualifier
1	S1-Dibromofluoromethane	135%	J - Positive results
7	S1-Dibromofluoromethane	136%	J - Positive results
10	S1-Dibromofluoromethane	126%	J - Positive results

MS/MSD - The MS/MSD sample exhibited acceptable %R and RPD values except the following.

MS/MSD Sample ID	Compound	MS/MSD %R/RPD	Qualifier
11	Benzene	64%/62%/Ok	J/UJ
	Bromodichloromethane	69%/65%/Ok	J/UJ
	Carbon tetrachloride	63%/60%/Ok	J/UJ
	Chlorobenzene	50%/45%/Ok	J/UJ
	Chloroform	Ok/67%/Ok	J/UJ
	Cyclohexane	Ok/57%/Ok	J/UJ
	Dibromochloromethane	64%/58%/Ok	J/UJ
	1, 2-Dibromo-3-chloropropane	Ok/Ok/33%	None
	1, 2-Dibromoethane	61%/59%/Ok	J/UJ
	1, 2-Dichlorobenzene	41%/32%/37%	J/UJ
	1, 3-Dichlorobenzene	42%/34%/33%	J/UJ
	1, 4-Dichlorobenzene	44%/38%/Ok	J/UJ
	1, 1-Dichloroethane	Ok/70%/Ok	J/UJ
	cis-1, 2-Dichloroethane	Ok/63%/Ok	J/UJ
	1, 2-Dichloropropane	65%/66%/Ok	J/UJ

MS/MSD Sample ID	Compound	MS/MSD %R/RPD	Qualifier
11	cis-1, 2-Dichloropropene	69%/64%/Ok	J/UJ
	Ethylbenzene	52%/48%/Ok	J/UJ
	Isopropylbenzene	56%/46%/33%	J/UJ
	Methyl cyclohexane	56%/50%/Ok	J/UJ
	Styrene	49%/40%/34%	J/UJ
	Tetrachloroethene	47%/41%/Ok	J/UJ
	Toluene	58%/52%/Ok	J/UJ
	1, 2, 4-Trichlorobenzene	29%/21%/45%	J/UJ
	1, 1, 1-Trichloroethane	65%/62%/Ok	J/UJ
	Trichloroethene	59%/56%/Ok	J/UJ
	Vinyl chloride	54%/55%/Ok	J/UJ
	Xylene	52%/46%/Ok	J/UJ
12	1, 2-Dichlorobenzene	Ok/69%/Ok	J/UJ
	1, 2, 4-Trichlorobenzene	Ok/57%/Ok	J/UJ

Laboratory Control Sample - The LCS samples exhibited acceptable %R.

Internal Standard (IS) Area Performance - All internal standards met response and retention time (RT) criteria.

Method Blank - The method blanks exhibited the following contamination.

Blank ID	Compound	Conc.	Action Level	Qualifier	Affected Samples
V3BLK0116	Methylene chloride	0.23 ug/L	2.3 ug/L	U	25, 26
V5BLK0119	Acetone	6.2 ug/kg	62 ug/kg	None	All ND
	Methylene chloride	1.5 ug/kg	15 ug/kg	U	1, 2
V5BLK0119E	Methylene chloride	10 ug/kg	100 ug/kg	U	3-16
	1, 2, 4-Trichlorobenzene	0.18 ug/kg	0.90 ug/kg	None	All ND
V5BLK0119F	Acetone	4.6 ug/kg	46 ug/kg	U	20, 22, 24
	Methylene chloride	8.6 ug/kg	86 ug/kg	U	18-22, 24
V5BLK0121	Acetone	3.9 ug/kg	39 ug/kg	None	All ND
	2-Hexanone	2.8 ug/kg	14 ug/kg	None	All ND
	Methylene chloride	3.6 ug/kg	36 ug/kg	U	17, 23
	1, 2, 4-Trichlorobenzene	0.42 ug/kg	2.1 ug/kg	None	All ND

Trip, Field, Equipment Blank - Field QC results are summarized below.

Blank ID	Compound	Conc. ug/L	Action Level ug/kg	Qualifier	Affected Samples
MR08-EB01-011309-SS	Toluene	16	80	None	See FB
MR08-FB01011009	Toluene	20	100	U	1, 2, 5, 15, 18, 19, 24
MR08-TB01011309	ND	-	-	-	-

Field Duplicates - Field Field duplicate results are summarized below.

Compound	MR08-SS299-09A ug/kg	MR08-SS299D-09A ug/kg	RPD	Qualifier
Benzene	1.6	1.6	0%	None
Cyclohexane	14 U	0.60	NC	None
Ethylbenzene	2.7	1.8	40%	None
Methyl cyclohexane	0.82	0.75	9%	None

Compound	MR08-IS299-6-7-09A ug/kg	MR08-IS299D-6-7-09A ug/kg	RPD	Qualifier
Acetone	6.5	12	59%	None

Compound	MR08-SS309-09A ug/kg	MR08-SS309D-09A ug/kg	RPD	Qualifier
Acetone	51	46	10%	None
Methyl cyclohexane	0.49	0.68	32%	None

Compound	MR08-IS309-6-7-09A ug/kg	MR08-IS309D-6-7-09A ug/kg	RPD	Qualifier
Acetone	9.8 U	5.4	NC	None
Methyl cyclohexane	0.35	9.4 U	NC	None

Tentatively Identified Compounds (TICs) - TICs were not reported.

Compound Quantitation - No discrepancies were identified.

FORM 1
VOLATILE ORGANICS ANALYSIS DATA SHEET

CLIENT SAMPLE NO.

MR08-SS299-09A

Lab Name: EMPIRICAL LABS Contract: CH2MHILL

Lab Code: NA Case No.: NA SAS No.: NA SDG No.: LEJEUNE050

Matrix: (soil/water) SOIL Lab Sample ID: 0901103-01

Sample wt/vol: 3.8 (g/mL) G Lab File ID: 0110301A

Level: (low/med) LOW Date Sampled: 01/13/09 08:50

% Moisture: not dec. 10 Date Analyzed: 01/19/09 22:27

GC Column: RTX-VRX ID: 0.25 (mm) Dilution Factor: 1.0

Soil Extract Volume:_____(uL) Soil Aliquot Volume: _____(uL)

CONCENTRATION UNITS: (ug/L or ug/Kg) UG/KG

CAS NO.	COMPOUND	MDL	RL	CONC	Q
67-64-1	Acetone	2.9	14		U
71-43-2	Benzene	0.68	14	1.6	~~J~~ J SS
75-27-4	Bromodichloromethane	0.43	14		U
75-25-2	Bromoform	1.4	14		U
74-83-9	Bromomethane	1.0	14		U
78-93-3	2-Butanone	2.0	14		~~U~~ UJ CC
75-15-0	Carbon disulfide	1.9	14		U
56-23-5	Carbon tetrachloride	1.3	14		U
108-90-7	Chlorobenzene	0.49	14		U
75-00-3	Chloroethane	1.6	14		U
67-66-3	Chloroform	0.79	14		U
74-87-3	Chloromethane	0.75	14		U
110-82-7	Cyclohexane	0.78	14		U
124-48-1	Dibromochloromethane	0.49	14		U
96-12-8	1,2-Dibromo-3-chloropropane	1.7	7.2		U
106-93-4	1,2-Dibromoethane	0.62	14		U
95-50-1	1,2-Dichlorobenzene	0.53	14		U
541-73-1	1,3-Dichlorobenzene	1.2	14		U
106-46-7	1,4-Dichlorobenzene	0.79	14		U
75-71-8	Dichlorodifluoromethane	1.6	14		U
75-34-3	1,1-Dichloroethane	0.78	14		U
107-06-2	1,2-Dichloroethane	0.66	14		U
75-35-4	1,1-Dichloroethene	1.7	14		U
156-59-2	cis-1,2-Dichloroethene	1.7	14		U
156-60-5	trans-1,2-Dichloroethene	1.6	14		U
78-87-5	1,2-Dichloropropane	0.66	14		U
10061-01-5	cis-1,3-Dichloropropene	0.72	14		U
10061-02-6	trans-1,3-Dichloropropene	0.46	14		U
100-41-4	Ethylbenzene	1.1	14	2.7	~~J~~ J SS
591-78-6	2-Hexanone	3.3	14		U
98-82-8	Isopropylbenzene	1.3	14		U
79-20-9	Methyl acetate	2.3	14		U
75-09-2	Methylene chloride	0.89	14	14U ~~2.6 JB~~	B
108-87-2	Methyl cyclohexane	0.43	14	0.82	~~J~~ J SS
1634-04-4	Methyl tert-butyl ether	0.46	14		U
108-10-1	4-Methyl-2-pentanone	0.83	14		U
100-42-5	Styrene	0.50	14		U
79-34-5	1,1,2,2-Tetrachloroethane	0.62	14		U
127-18-4	Tetrachloroethene	1.4	14		U

FORM I VOA

KW
4/4/09

FORM 1
VOLATILE ORGANICS ANALYSIS DATA SHEET

CLIENT SAMPLE NO.

MR08-SS299-09A

Lab Name: EMPIRICAL LABS Contract: CH2MHILL

Lab Code: NA Case No.: NA SAS No.: NA SDG No.: LEJEUNE050

Matrix: (soil/water) SOIL Lab Sample ID: 0901103-01

Sample wt/vol: 3.8 (g/mL) G Lab File ID: 0110301A

Level: (low/med) LOW Date Sampled: 01/13/09 08:50

% Moisture: not dec. 10 Date Analyzed: 01/19/09 22:27

GC Column: RTX-VRX ID: 0.25 (mm) Dilution Factor: 1.0

Soil Extract Volume:_____(uL) Soil Aliquot Volume: _____(uL)

CONCENTRATION UNITS: (ug/L or ug/Kg) UG/KG

CAS NO.	COMPOUND	MDL	RL	CONC	Q
108-88-3	Toluene	1.2	14	14U ~~2.5~~	~~J~~ U BL
120-82-1	1,2,4-Trichlorobenzene	0.26	14		U
71-55-6	1,1,1-Trichloroethane	1.3	14		U
79-00-5	1,1,2-Trichloroethane	0.50	14		U
79-01-6	Trichloroethene	1.2	14		U
76-13-1	Trichlorotrifluoroethane	0.79	14		U
75-69-4	Trichlorofluoromethane	1.4	14		U
75-01-4	Vinyl chloride	1.6	14		U
1330-20-7	Xylene(total)	1.0	14		U

FORM I VOA

MW
4/4/09

FORM 1
VOLATILE ORGANICS ANALYSIS DATA SHEET

CLIENT SAMPLE NO.

MR08-SS299D-09A 2

Lab Name: EMPIRICAL LABS Contract: CH2MHILL

Lab Code: NA Case No.: NA SAS No.: NA SDG No.: LEJEUNE050

Matrix: (soil/water) SOIL Lab Sample ID: 0901103-02

Sample wt/vol: 4.9 (g/mL) G Lab File ID: 0110302A

Level: (low/med) LOW Date Sampled: 01/13/09 09:00

% Moisture: not dec. 8 Date Analyzed: 01/19/09 22:58

GC Column: RTX-VRX ID: 0.25 (mm) Dilution Factor: 1.0

Soil Extract Volume:_____(uL) Soil Aliquot Volume: _____(uL)

CONCENTRATION UNITS: (ug/L or ug/Kg) UG/KG

CAS NO.	COMPOUND	MDL	RL	CONC	Q
67-64-1	Acetone	2.2	11		U
71-43-2	Benzene	0.52	11	1.6	J
75-27-4	Bromodichloromethane	0.33	11		U
75-25-2	Bromoform	1.1	11		U
74-83-9	Bromomethane	0.80	11		U
78-93-3	2-Butanone	1.5	11		~~U~~ UJ
75-15-0	Carbon disulfide	1.4	11		U
56-23-5	Carbon tetrachloride	0.97	11		U
108-90-7	Chlorobenzene	0.38	11		U
75-00-3	Chloroethane	1.2	11		U
67-66-3	Chloroform	0.61	11		U
74-87-3	Chloromethane	0.57	11		U
110-82-7	Cyclohexane	0.60	11	0.60	J
124-48-1	Dibromochloromethane	0.38	11		U
96-12-8	1,2-Dibromo-3-chloropropane	1.3	5.5		U
106-93-4	1,2-Dibromoethane	0.48	11		U
95-50-1	1,2-Dichlorobenzene	0.41	11		U
541-73-1	1,3-Dichlorobenzene	0.93	11		U
106-46-7	1,4-Dichlorobenzene	0.61	11		U
75-71-8	Dichlorodifluoromethane	1.2	11		U
75-34-3	1,1-Dichloroethane	0.60	11		U
107-06-2	1,2-Dichloroethane	0.51	11		U
75-35-4	1,1-Dichloroethene	1.3	11		U
156-59-2	cis-1,2-Dichloroethene	1.3	11		U
156-60-5	trans-1,2-Dichloroethene	1.2	11		U
78-87-5	1,2-Dichloropropane	0.51	11		U
10061-01-5	cis-1,3-Dichloropropene	0.55	11		U
10061-02-6	trans-1,3-Dichloropropene	0.35	11		U
100-41-4	Ethylbenzene	0.83	11	1.8	J
591-78-6	2-Hexanone	2.5	11		U
98-82-8	Isopropylbenzene	0.97	11		U
79-20-9	Methyl acetate	1.8	11		U
75-09-2	Methylene chloride	0.68	11	11u ~~2.3~~ ~~JB~~	B
108-87-2	Methyl cyclohexane	0.33	11	0.75	J
1634-04-4	Methyl tert-butyl ether	0.35	11		U
108-10-1	4-Methyl-2-pentanone	0.64	11		U
100-42-5	Styrene	0.39	11		U
79-34-5	1,1,2,2-Tetrachloroethane	0.48	11		U
127-18-4	Tetrachloroethene	1.1	11		U

FORM I VOA

HW
4/14/09

FORM 1
VOLATILE ORGANICS ANALYSIS DATA SHEET

CLIENT SAMPLE NO.

MR08-SS299D-09A

2

Lab Name: EMPIRICAL LABS Contract: CH2MHILL

Lab Code: NA Case No.: NA SAS No.: NA SDG No.: LEJEUNE050

Matrix: (soil/water) SOIL Lab Sample ID: 0901103-02

Sample wt/vol: 4.9 (g/mL) G Lab File ID: 0110302A

Level: (low/med) LOW Date Sampled: 01/13/09 09:00

% Moisture: not dec. 8 Date Analyzed: 01/19/09 22:58

GC Column: RTX-VRX ID: 0.25 (mm) Dilution Factor: 1.0

Soil Extract Volume:_____(uL) Soil Aliquot Volume: _____(uL)

CONCENTRATION UNITS: (ug/L or ug/Kg) UG/KG

CAS NO.	COMPOUND	MDL	RL	CONC	Q
108-88-3	Toluene	0.95	11	11U ~~1.9~~	~~J~~ BL
120-82-1	1,2,4-Trichlorobenzene	0.20	11		U
71-55-6	1,1,1-Trichloroethane	1.00	11		U
79-00-5	1,1,2-Trichloroethane	0.39	11		U
79-01-6	Trichloroethene	0.94	11		U
76-13-1	Trichlorotrifluoroethane	0.61	11		U
75-69-4	Trichlorofluoromethane	1.0	11		U
75-01-4	Vinyl chloride	1.2	11		U
1330-20-7	Xylene(total)	0.77	11		U

LW
4/14/09

FORM 1
VOLATILE ORGANICS ANALYSIS DATA SHEET

CLIENT SAMPLE NO.

MR08-IS29
9-6-7-09A

3

Lab Name: EMPIRICAL LABS Contract: CH2MHILL

Lab Code: NA Case No.: NA SAS No.: NA SDG No.: LEJEUNE050

Matrix: (soil/water) SOIL Lab Sample ID: 0901103-03

Sample wt/vol: 5.5 (g/mL) G Lab File ID: 0110303A

Level: (low/med) LOW Date Sampled: 01/13/09 09:20

% Moisture: not dec. 9 Date Analyzed: 01/20/09 05:08

GC Column: RTX-VRX ID: 0.25 (mm) Dilution Factor: 1.0

Soil Extract Volume:_____(uL) Soil Aliquot Volume: _____(uL)

CONCENTRATION UNITS: (ug/L or ug/Kg) UG/KG

CAS NO.	COMPOUND	MDL	RL	CONC	Q
67-64-1	Acetone	2.0	10	6.5	J
71-43-2	Benzene	0.47	10		U
75-27-4	Bromodichloromethane	0.30	10		U
75-25-2	Bromoform	1.0	10		U
74-83-9	Bromomethane	0.72	10		U
78-93-3	2-Butanone	1.4	10		U
75-15-0	Carbon disulfide	1.3	10		U
56-23-5	Carbon tetrachloride	0.88	10		U
108-90-7	Chlorobenzene	0.34	10		U
75-00-3	Chloroethane	1.1	10		U
67-66-3	Chloroform	0.55	10		U
74-87-3	Chloromethane	0.52	10		U
110-82-7	Cyclohexane	0.54	10		U
124-48-1	Dibromochloromethane	0.34	10		U
96-12-8	1,2-Dibromo-3-chloropropane	1.2	5.0		U
106-93-4	1,2-Dibromoethane	0.43	10		U
95-50-1	1,2-Dichlorobenzene	0.37	10		U
541-73-1	1,3-Dichlorobenzene	0.84	10		U
106-46-7	1,4-Dichlorobenzene	0.55	10		U
75-71-8	Dichlorodifluoromethane	1.1	10		U
75-34-3	1,1-Dichloroethane	0.54	10		U
107-06-2	1,2-Dichloroethane	0.46	10		U
75-35-4	1,1-Dichloroethene	1.2	10		U
156-59-2	cis-1,2-Dichloroethene	1.2	10		U
156-60-5	trans-1,2-Dichloroethene	1.1	10		U
78-87-5	1,2-Dichloropropane	0.46	10		U
10061-01-5	cis-1,3-Dichloropropene	0.50	10		U
10061-02-6	trans-1,3-Dichloropropene	0.32	10		U
100-41-4	Ethylbenzene	0.75	10		U
591-78-6	2-Hexanone	2.3	10		U
98-82-8	Isopropylbenzene	0.88	10		U
79-20-9	Methyl acetate	1.6	10		U
75-09-2	Methylene chloride	0.62	10	10 UJ	~~2.6~~ ~~JB~~ ~~CCH~~ B1
108-87-2	Methyl cyclohexane	0.30	10		U
1634-04-4	Methyl tert-butyl ether	0.32	10		U
108-10-1	4-Methyl-2-pentanone	0.58	10		U
100-42-5	Styrene	0.35	10		U
79-34-5	1,1,2,2-Tetrachloroethane	0.43	10		U
127-18-4	Tetrachloroethene	0.97	10		U

FORM I VOA

NW
4/21/09

FORM 1
VOLATILE ORGANICS ANALYSIS DATA SHEET

CLIENT SAMPLE NO.

MR08-IS29
9-6-7-09A

3

Lab Name: EMPIRICAL LABS Contract: CH2MHILL

Lab Code: NA Case No.: NA SAS No.: NA SDG No.: LEJEUNE050

Matrix: (soil/water) SOIL Lab Sample ID: 0901103-03

Sample wt/vol: 5.5 (g/mL) G Lab File ID: 0110303A

Level: (low/med) LOW Date Sampled: 01/13/09 09:20

% Moisture: not dec. 9 Date Analyzed: 01/20/09 05:08

GC Column: RTX-VRX ID: 0.25 (mm) Dilution Factor: 1.0

Soil Extract Volume:_____(uL) Soil Aliquot Volume: _____(uL)

CONCENTRATION UNITS: (ug/L or ug/Kg) UG/KG

CAS NO.	COMPOUND	MDL	RL	CONC	Q
108-88-3	Toluene	0.86	10		U
120-82-1	1,2,4-Trichlorobenzene	0.18	10		U
71-55-6	1,1,1-Trichloroethane	0.90	10		U
79-00-5	1,1,2-Trichloroethane	0.35	10		U
79-01-6	Trichloroethene	0.85	10		U
76-13-1	Trichlorotrifluoroethane	0.55	10		U
75-69-4	Trichlorofluoromethane	0.95	10		U
75-01-4	Vinyl chloride	1.1	10		U
1330-20-7	Xylene(total)	0.70	10		U

fls
9/4/09

FORM 1
VOLATILE ORGANICS ANALYSIS DATA SHEET

CLIENT SAMPLE NO.

MR08-IS29
9D-6-7-09A

4

Lab Name: EMPIRICAL LABS Contract: CH2MHILL

Lab Code: NA Case No.: NA SAS No.: NA SDG No.: LEJEUNE050

Matrix: (soil/water) SOIL Lab Sample ID: 0901103-04

Sample wt/vol: 4.5 (g/mL) G Lab File ID: 0110304A

Level: (low/med) LOW Date Sampled: 01/13/09 09:25

% Moisture: not dec. 12 Date Analyzed: 01/20/09 05:39

GC Column: RTX-VRX ID: 0.25 (mm) Dilution Factor: 1.0

Soil Extract Volume:_____(uL) Soil Aliquot Volume: _____(uL)

CONCENTRATION UNITS: (ug/L or ug/Kg) UG/KG

CAS NO.	COMPOUND	MDL	RL	CONC	Q
67-64-1	Acetone	2.5	12	12	J
71-43-2	Benzene	0.59	12		U
75-27-4	Bromodichloromethane	0.38	12		U
75-25-2	Bromoform	1.2	12		U
74-83-9	Bromomethane	0.91	12		U
78-93-3	2-Butanone	1.8	12		U
75-15-0	Carbon disulfide	1.6	12		U
56-23-5	Carbon tetrachloride	1.1	12		U
108-90-7	Chlorobenzene	0.43	12		U
75-00-3	Chloroethane	1.4	12		U
67-66-3	Chloroform	0.69	12		U
74-87-3	Chloromethane	0.65	12		U
110-82-7	Cyclohexane	0.68	12		U
124-48-1	Dibromochloromethane	0.43	12		U
96-12-8	1,2-Dibromo-3-chloropropane	1.5	6.3		U
106-93-4	1,2-Dibromoethane	0.54	12		U
95-50-1	1,2-Dichlorobenzene	0.46	12		U
541-73-1	1,3-Dichlorobenzene	1.0	12		U
106-46-7	1,4-Dichlorobenzene	0.69	12		U
75-71-8	Dichlorodifluoromethane	1.4	12		U
75-34-3	1,1-Dichloroethane	0.68	12		U
107-06-2	1,2-Dichloroethane	0.58	12		U
75-35-4	1,1-Dichloroethene	1.5	12		U
156-59-2	cis-1,2-Dichloroethene	1.5	12		U
156-60-5	trans-1,2-Dichloroethene	1.4	12		U
78-87-5	1,2-Dichloropropane	0.58	12		U
10061-01-5	cis-1,3-Dichloropropene	0.63	12		U
10061-02-6	trans-1,3-Dichloropropene	0.40	12		U
100-41-4	Ethylbenzene	0.94	12		U
591-78-6	2-Hexanone	2.9	12		U
98-82-8	Isopropylbenzene	1.1	12		U
79-20-9	Methyl acetate	2.0	12		U
75-09-2	Methylene chloride	0.78	12	12UJ	~~2.8 JB CCH~~ B1
108-87-2	Methyl cyclohexane	0.38	12		U
1634-04-4	Methyl tert-butyl ether	0.40	12		U
108-10-1	4-Methyl-2-pentanone	0.73	12		U
100-42-5	Styrene	0.44	12		U
79-34-5	1,1,2,2-Tetrachloroethane	0.54	12		U
127-18-4	Tetrachloroethene	1.2	12		U

FORM I VOA

UW
4/20/09

FORM 1
VOLATILE ORGANICS ANALYSIS DATA SHEET

CLIENT SAMPLE NO.

MR08-IS29
9D-6-7-09A

4

Lab Name: EMPIRICAL LABS Contract: CH2MHILL

Lab Code: NA Case No.: NA SAS No.: NA SDG No.: LEJEUNE050

Matrix: (soil/water) SOIL Lab Sample ID: 0901103-04

Sample wt/vol: 4.5 (g/mL) G Lab File ID: 0110304A

Level: (low/med) LOW Date Sampled: 01/13/09 09:25

% Moisture: not dec. 12 Date Analyzed: 01/20/09 05:39

GC Column: RTX-VRX ID: 0.25 (mm) Dilution Factor: 1.0

Soil Extract Volume:_____(uL) Soil Aliquot Volume: _____(uL)

CONCENTRATION UNITS: (ug/L or ug/Kg) UG/KG

CAS NO.	COMPOUND	MDL	RL	CONC	Q
108-88-3	Toluene	1.1	12		U
120-82-1	1,2,4-Trichlorobenzene	0.23	12		U
71-55-6	1,1,1-Trichloroethane	1.1	12		U
79-00-5	1,1,2-Trichloroethane	0.44	12		U
79-01-6	Trichloroethene	1.1	12		U
76-13-1	Trichlorotrifluoroethane	0.69	12		U
75-69-4	Trichlorofluoromethane	1.2	12		U
75-01-4	Vinyl chloride	1.4	12		U
1330-20-7	Xylene(total)	0.88	12		U

RW
9/24/09

FORM 1
VOLATILE ORGANICS ANALYSIS DATA SHEET

CLIENT SAMPLE NO. 5

MR08-SS304-09A

Lab Name: EMPIRICAL LABS Contract: CH2MHILL

Lab Code: NA Case No.: NA SAS No.: NA SDG No.: LEJEUNE050

Matrix: (soil/water) SOIL Lab Sample ID: 0901103-05

Sample wt/vol: 5.3 (g/mL) G Lab File ID: 0110305A

Level: (low/med) LOW Date Sampled: 01/13/09 09:40

% Moisture: not dec. 7 Date Analyzed: 01/20/09 06:10

GC Column: RTX-VRX ID: 0.25 (mm) Dilution Factor: 1.0

Soil Extract Volume:_____(uL) Soil Aliquot Volume: _____(uL)

CONCENTRATION UNITS: (ug/L or ug/Kg) UG/KG

CAS NO.	COMPOUND	MDL	RL	CONC	Q
67-64-1	Acetone	2.0	10		U
71-43-2	Benzene	0.48	10	0.66	J
75-27-4	Bromodichloromethane	0.31	10		U
75-25-2	Bromoform	1.0	10		U
74-83-9	Bromomethane	0.73	10		U
78-93-3	2-Butanone	1.4	10	9.0	J
75-15-0	Carbon disulfide	1.3	10		U
56-23-5	Carbon tetrachloride	0.90	10		U
108-90-7	Chlorobenzene	0.35	10		U
75-00-3	Chloroethane	1.1	10		U
67-66-3	Chloroform	0.56	10		U
74-87-3	Chloromethane	0.53	10		U
110-82-7	Cyclohexane	0.55	10		U
124-48-1	Dibromochloromethane	0.35	10		U
96-12-8	1,2-Dibromo-3-chloropropane	1.2	5.1		U
106-93-4	1,2-Dibromoethane	0.44	10		U
95-50-1	1,2-Dichlorobenzene	0.38	10		U
541-73-1	1,3-Dichlorobenzene	0.86	10		U
106-46-7	1,4-Dichlorobenzene	0.56	10		U
75-71-8	Dichlorodifluoromethane	1.1	10		U
75-34-3	1,1-Dichloroethane	0.55	10		U
107-06-2	1,2-Dichloroethane	0.47	10		U
75-35-4	1,1-Dichloroethene	1.2	10		U
156-59-2	cis-1,2-Dichloroethene	1.2	10		U
156-60-5	trans-1,2-Dichloroethene	1.1	10		U
78-87-5	1,2-Dichloropropane	0.47	10		U
10061-01-5	cis-1,3-Dichloropropene	0.51	10		U
10061-02-6	trans-1,3-Dichloropropene	0.33	10		U
100-41-4	Ethylbenzene	0.76	10	3.0	J
591-78-6	2-Hexanone	2.3	10	7.7	J
98-82-8	Isopropylbenzene	0.90	10		U
79-20-9	Methyl acetate	1.6	10		U
75-09-2	Methylene chloride	0.63	10	10UJ ~~1.9~~ JBCCH	B
108-87-2	Methyl cyclohexane	0.31	10	0.34	J
1634-04-4	Methyl tert-butyl ether	0.33	10		U
108-10-1	4-Methyl-2-pentanone	0.59	10		U
100-42-5	Styrene	0.36	10		U
79-34-5	1,1,2,2-Tetrachloroethane	0.44	10		U
127-18-4	Tetrachloroethene	0.99	10		U

FORM I VOA

LW
9/14/09

FORM 1
VOLATILE ORGANICS ANALYSIS DATA SHEET

CLIENT SAMPLE NO. 5

MR08-SS304-09A

Lab Name: EMPIRICAL LABS Contract: CH2MHILL

Lab Code: NA Case No.: NA SAS No.: NA SDG No.: LEJEUNE050

Matrix: (soil/water) SOIL Lab Sample ID: 0901103-05

Sample wt/vol: 5.3 (g/mL) G Lab File ID: 0110305A

Level: (low/med) LOW Date Sampled: 01/13/09 09:40

% Moisture: not dec. 7 Date Analyzed: 01/20/09 06:10

GC Column: RTX-VRX ID: 0.25 (mm) Dilution Factor: 1.0

Soil Extract Volume:_____(uL) Soil Aliquot Volume: _____(uL)

CONCENTRATION UNITS: (ug/L or ug/Kg) UG/KG

CAS NO.	COMPOUND	MDL	RL	CONC	Q
108-88-3	Toluene	0.88	10	10U ~~1.6~~	~~J~~ BL
120-82-1	1,2,4-Trichlorobenzene	0.18	10		U
71-55-6	1,1,1-Trichloroethane	0.92	10		U
79-00-5	1,1,2-Trichloroethane	0.36	10		U
79-01-6	Trichloroethene	0.87	10		U
76-13-1	Trichlorotrifluoroethane	0.56	10		U
75-69-4	Trichlorofluoromethane	0.97	10		U
75-01-4	Vinyl chloride	1.1	10		U
1330-20-7	Xylene(total)	0.71	10		U

hw
9/4/09

FORM 1
VOLATILE ORGANICS ANALYSIS DATA SHEET

CLIENT SAMPLE NO.

6

MR08-IS30
4-6-7-09A

Lab Name: EMPIRICAL LABS Contract: CH2MHILL

Lab Code: NA Case No.: NA SAS No.: NA SDG No.: LEJEUNE050

Matrix: (soil/water) SOIL Lab Sample ID: 0901103-06

Sample wt/vol: 5.4 (g/mL) G Lab File ID: 0110306A

Level: (low/med) LOW Date Sampled: 01/13/09 10:00

% Moisture: not dec. 10 Date Analyzed: 01/20/09 06:41

GC Column: RTX-VRX ID: 0.25 (mm) Dilution Factor: 1.0

Soil Extract Volume:_____(uL) Soil Aliquot Volume: _____(uL)

CONCENTRATION UNITS: (ug/L or ug/Kg) UG/KG

CAS NO.	COMPOUND	MDL	RL	CONC	Q
67-64-1	Acetone	2.0	10	5.0	J
71-43-2	Benzene	0.48	10		U
75-27-4	Bromodichloromethane	0.31	10		U
75-25-2	Bromoform	1.0	10		U
74-83-9	Bromomethane	0.74	10		U
78-93-3	2-Butanone	1.4	10		U
75-15-0	Carbon disulfide	1.3	10		U
56-23-5	Carbon tetrachloride	0.90	10		U
108-90-7	Chlorobenzene	0.35	10		U
75-00-3	Chloroethane	1.1	10		U
67-66-3	Chloroform	0.56	10		U
74-87-3	Chloromethane	0.53	10		U
110-82-7	Cyclohexane	0.56	10		U
124-48-1	Dibromochloromethane	0.35	10		U
96-12-8	1,2-Dibromo-3-chloropropane	1.2	5.1		U
106-93-4	1,2-Dibromoethane	0.44	10		U
95-50-1	1,2-Dichlorobenzene	0.38	10		U
541-73-1	1,3-Dichlorobenzene	0.86	10		U
106-46-7	1,4-Dichlorobenzene	0.56	10		U
75-71-8	Dichlorodifluoromethane	1.1	10		U
75-34-3	1,1-Dichloroethane	0.56	10		U
107-06-2	1,2-Dichloroethane	0.47	10		U
75-35-4	1,1-Dichloroethene	1.2	10		U
156-59-2	cis-1,2-Dichloroethene	1.2	10		U
156-60-5	trans-1,2-Dichloroethene	1.1	10		U
78-87-5	1,2-Dichloropropane	0.47	10		U
10061-01-5	cis-1,3-Dichloropropene	0.51	10		U
10061-02-6	trans-1,3-Dichloropropene	0.33	10		U
100-41-4	Ethylbenzene	0.77	10		U
591-78-6	2-Hexanone	2.4	10		U
98-82-8	Isopropylbenzene	0.90	10		U
79-20-9	Methyl acetate	1.6	10		U
75-09-2	Methylene chloride	0.64	10	10 UJ ~~2.5~~	JB CH B
108-87-2	Methyl cyclohexane	0.31	10		U
1634-04-4	Methyl tert-butyl ether	0.33	10		U
108-10-1	4-Methyl-2-pentanone	0.60	10		U
100-42-5	Styrene	0.36	10		U
79-34-5	1,1,2,2-Tetrachloroethane	0.44	10		U
127-18-4	Tetrachloroethene	1.00	10		U

FORM I VOA

LW
9/14/09

FORM 1
VOLATILE ORGANICS ANALYSIS DATA SHEET

CLIENT SAMPLE NO.

MR08-IS30
4-6-7-09A

6

Lab Name: EMPIRICAL LABS Contract: CH2MHILL

Lab Code: NA Case No.: NA SAS No.: NA SDG No.: LEJEUNE050

Matrix: (soil/water) SOIL Lab Sample ID: 0901103-06

Sample wt/vol: 5.4 (g/mL) G Lab File ID: 0110306A

Level: (low/med) LOW Date Sampled: 01/13/09 10:00

% Moisture: not dec. 10 Date Analyzed: 01/20/09 06:41

GC Column: RTX-VRX ID: 0.25 (mm) Dilution Factor: 1.0

Soil Extract Volume:_____(uL) Soil Aliquot Volume: _____(uL)

CONCENTRATION UNITS: (ug/L or ug/Kg) UG/KG

CAS NO.	COMPOUND	MDL	RL	CONC	Q
108-88-3	Toluene	0.88	10		U
120-82-1	1,2,4-Trichlorobenzene	0.18	10		U
71-55-6	1,1,1-Trichloroethane	0.92	10		U
79-00-5	1,1,2-Trichloroethane	0.36	10		U
79-01-6	Trichloroethene	0.87	10		U
76-13-1	Trichlorotrifluoroethane	0.56	10		U
75-69-4	Trichlorofluoromethane	0.98	10		U
75-01-4	Vinyl chloride	1.1	10		U
1330-20-7	Xylene(total)	0.72	10		U

kw
9/4/09

FORM 1
VOLATILE ORGANICS ANALYSIS DATA SHEET

CLIENT SAMPLE NO.

7

MR08-SS312-09A

Lab Name: EMPIRICAL LABS Contract: CH2MHILL

Lab Code: NA Case No.: NA SAS No.: NA SDG No.: LEJEUNE050

Matrix: (soil/water) SOIL Lab Sample ID: 0901103-07

Sample wt/vol: 4.3 (g/mL) G Lab File ID: 0110307A

Level: (low/med) LOW Date Sampled: 01/13/09 10:10

% Moisture: not dec. 12 Date Analyzed: 01/20/09 07:12

GC Column: RTX-VRX ID: 0.25 (mm) Dilution Factor: 1.0

Soil Extract Volume:_____(uL) Soil Aliquot Volume: _____(uL)

CONCENTRATION UNITS: (ug/L or ug/Kg) UG/KG

CAS NO.	COMPOUND	MDL	RL	CONC	Q
67-64-1	Acetone	2.6	13	46	J SSK
71-43-2	Benzene	0.61	13		U
75-27-4	Bromodichloromethane	0.39	13		U
75-25-2	Bromoform	1.3	13		U
74-83-9	Bromomethane	0.94	13		U
78-93-3	2-Butanone	1.8	13		U
75-15-0	Carbon disulfide	1.7	13		U
56-23-5	Carbon tetrachloride	1.1	13		U
108-90-7	Chlorobenzene	0.44	13		U
75-00-3	Chloroethane	1.4	13		U
67-66-3	Chloroform	0.72	13		U
74-87-3	Chloromethane	0.68	13		U
110-82-7	Cyclohexane	0.70	13		U
124-48-1	Dibromochloromethane	0.44	13		U
96-12-8	1,2-Dibromo-3-chloropropane	1.6	6.5		U
106-93-4	1,2-Dibromoethane	0.56	13		U
95-50-1	1,2-Dichlorobenzene	0.48	13		U
541-73-1	1,3-Dichlorobenzene	1.1	13		U
106-46-7	1,4-Dichlorobenzene	0.72	13		U
75-71-8	Dichlorodifluoromethane	1.4	13		U
75-34-3	1,1-Dichloroethane	0.70	13		U
107-06-2	1,2-Dichloroethane	0.60	13		U
75-35-4	1,1-Dichloroethene	1.6	13		U
156-59-2	cis-1,2-Dichloroethene	1.6	13		U
156-60-5	trans-1,2-Dichloroethene	1.4	13		U
78-87-5	1,2-Dichloropropane	0.60	13		U
10061-01-5	cis-1,3-Dichloropropene	0.65	13		U
10061-02-6	trans-1,3-Dichloropropene	0.42	13		U
100-41-4	Ethylbenzene	0.98	13		U
591-78-6	2-Hexanone	3.0	13		U
98-82-8	Isopropylbenzene	1.1	13		U
79-20-9	Methyl acetate	2.1	13		U
75-09-2	Methylene chloride	0.81	13	13UJ	~~3.3~~ ~~JB~~ CCH B
108-87-2	Methyl cyclohexane	0.39	13		U
1634-04-4	Methyl tert-butyl ether	0.42	13		U
108-10-1	4-Methyl-2-pentanone	0.76	13		U
100-42-5	Styrene	0.46	13		U
79-34-5	1,1,2,2-Tetrachloroethane	0.56	13		U
127-18-4	Tetrachloroethene	1.3	13		U

FORM I VOA

LW
4/14/09

FORM 1
VOLATILE ORGANICS ANALYSIS DATA SHEET

CLIENT SAMPLE NO. 7

MR08-SS312-09A

Lab Name: EMPIRICAL LABS Contract: CH2MHILL

Lab Code: NA Case No.: NA SAS No.: NA SDG No.: LEJEUNE050

Matrix: (soil/water) SOIL Lab Sample ID: 0901103-07

Sample wt/vol: 4.3 (g/mL) G Lab File ID: 0110307A

Level: (low/med) LOW Date Sampled: 01/13/09 10:10

% Moisture: not dec. 12 Date Analyzed: 01/20/09 07:12

GC Column: RTX-VRX ID: 0.25 (mm) Dilution Factor: 1.0

Soil Extract Volume:_____(uL) Soil Aliquot Volume: _____(uL)

CONCENTRATION UNITS: (ug/L or ug/Kg) UG/KG

CAS NO.	COMPOUND	MDL	RL	CONC	Q
108-88-3	Toluene	1.1	13		U
120-82-1	1,2,4-Trichlorobenzene	0.23	13		U
71-55-6	1,1,1-Trichloroethane	1.2	13		U
79-00-5	1,1,2-Trichloroethane	0.46	13		U
79-01-6	Trichloroethene	1.1	13		U
76-13-1	Trichlorotrifluoroethane	0.72	13		U
75-69-4	Trichlorofluoromethane	1.2	13		U
75-01-4	Vinyl chloride	1.4	13		U
1330-20-7	Xylene(total)	0.91	13		U

lew
4/4/09

FORM 1
VOLATILE ORGANICS ANALYSIS DATA SHEET

CLIENT SAMPLE NO.

8

MR08-IS31
2-5-6-09A

Lab Name: EMPIRICAL LABS Contract: CH2MHILL

Lab Code: NA Case No.: NA SAS No.: NA SDG No.: LEJEUNE050

Matrix: (soil/water) SOIL Lab Sample ID: 0901103-08

Sample wt/vol: 5.0 (g/mL) G Lab File ID: 0110308A

Level: (low/med) LOW Date Sampled: 01/13/09 10:30

% Moisture: not dec. 5 Date Analyzed: 01/20/09 07:43

GC Column: RTX-VRX ID: 0.25 (mm) Dilution Factor: 1.0

Soil Extract Volume:_____(uL) Soil Aliquot Volume: _____(uL)

CONCENTRATION UNITS: (ug/L or ug/Kg) UG/KG

CAS NO.	COMPOUND	MDL	RL	CONC	Q
67-64-1	Acetone	2.1	11	3.7	J
71-43-2	Benzene	0.50	11		U
75-27-4	Bromodichloromethane	0.32	11		U
75-25-2	Bromoform	1.1	11		U
74-83-9	Bromomethane	0.76	11		U
78-93-3	2-Butanone	1.5	11		U
75-15-0	Carbon disulfide	1.4	11		U
56-23-5	Carbon tetrachloride	0.94	11		U
108-90-7	Chlorobenzene	0.36	11		U
75-00-3	Chloroethane	1.2	11		U
67-66-3	Chloroform	0.58	11		U
74-87-3	Chloromethane	0.55	11		U
110-82-7	Cyclohexane	0.57	11		U
124-48-1	Dibromochloromethane	0.36	11		U
96-12-8	1,2-Dibromo-3-chloropropane	1.3	5.3		U
106-93-4	1,2-Dibromoethane	0.46	11		U
95-50-1	1,2-Dichlorobenzene	0.39	11		U
541-73-1	1,3-Dichlorobenzene	0.89	11		U
106-46-7	1,4-Dichlorobenzene	0.58	11		U
75-71-8	Dichlorodifluoromethane	1.2	11		U
75-34-3	1,1-Dichloroethane	0.57	11		U
107-06-2	1,2-Dichloroethane	0.49	11		U
75-35-4	1,1-Dichloroethene	1.3	11		U
156-59-2	cis-1,2-Dichloroethene	1.3	11		U
156-60-5	trans-1,2-Dichloroethene	1.2	11		U
78-87-5	1,2-Dichloropropane	0.49	11		U
10061-01-5	cis-1,3-Dichloropropene	0.53	11		U
10061-02-6	trans-1,3-Dichloropropene	0.34	11		U
100-41-4	Ethylbenzene	0.80	11		U
591-78-6	2-Hexanone	2.4	11		U
98-82-8	Isopropylbenzene	0.94	11		U
79-20-9	Methyl acetate	1.7	11		U
75-09-2	Methylene chloride	0.66	11	11 UJ	~~3.0 JB~~ CCH B
108-87-2	Methyl cyclohexane	0.32	11		U
1634-04-4	Methyl tert-butyl ether	0.34	11		U
108-10-1	4-Methyl-2-pentanone	0.62	11		U
100-42-5	Styrene	0.37	11		U
79-34-5	1,1,2,2-Tetrachloroethane	0.46	11		U
127-18-4	Tetrachloroethene	1.0	11		U

FORM I VOA

WJ
4/4/09

FORM 1
VOLATILE ORGANICS ANALYSIS DATA SHEET

CLIENT SAMPLE NO.

8

MR08-IS31
2-5-6-09A

Lab Name: EMPIRICAL LABS Contract: CH2MHILL

Lab Code: NA Case No.: NA SAS No.: NA SDG No.: LEJEUNE050

Matrix: (soil/water) SOIL Lab Sample ID: 0901103-08

Sample wt/vol: 5.0 (g/mL) G Lab File ID: 0110308A

Level: (low/med) LOW Date Sampled: 01/13/09 10:30

% Moisture: not dec. 5 Date Analyzed: 01/20/09 07:43

GC Column: RTX-VRX ID: 0.25 (mm) Dilution Factor: 1.0

Soil Extract Volume:_____(uL) Soil Aliquot Volume: _____(uL)

CONCENTRATION UNITS: (ug/L or ug/Kg) UG/KG

CAS NO.	COMPOUND	MDL	RL	CONC	Q
108-88-3	Toluene	0.91	11		U
120-82-1	1,2,4-Trichlorobenzene	0.19	11		U
71-55-6	1,1,1-Trichloroethane	0.96	11		U
79-00-5	1,1,2-Trichloroethane	0.37	11		U
79-01-6	Trichloroethene	0.90	11		U
76-13-1	Trichlorotrifluoroethane	0.58	11		U
75-69-4	Trichlorofluoromethane	1.0	11		U
75-01-4	Vinyl chloride	1.2	11		U
1330-20-7	Xylene(total)	0.74	11		U

nw
4/21/09

FORM 1
VOLATILE ORGANICS ANALYSIS DATA SHEET

CLIENT SAMPLE NO. 9

MR08-SS311-09A

Lab Name: EMPIRICAL LABS Contract: CH2MHILL

Lab Code: NA Case No.: NA SAS No.: NA SDG No.: LEJEUNE050

Matrix: (soil/water) SOIL Lab Sample ID: 0901103-09

Sample wt/vol: 4.6 (g/mL) G Lab File ID: 0110309A

Level: (low/med) LOW Date Sampled: 01/13/09 10:40

% Moisture: not dec. 9 Date Analyzed: 01/20/09 08:14

GC Column: RTX-VRX ID: 0.25 (mm) Dilution Factor: 1.0

Soil Extract Volume:_____(uL) Soil Aliquot Volume: _____(uL)

CONCENTRATION UNITS: (ug/L or ug/Kg) UG/KG

CAS NO.	COMPOUND	MDL	RL	CONC	Q
67-64-1	Acetone	2.4	12	61	
71-43-2	Benzene	0.55	12		U
75-27-4	Bromodichloromethane	0.35	12		U
75-25-2	Bromoform	1.2	12		U
74-83-9	Bromomethane	0.85	12		U
78-93-3	2-Butanone	1.6	12		U
75-15-0	Carbon disulfide	1.5	12		U
56-23-5	Carbon tetrachloride	1.0	12		U
108-90-7	Chlorobenzene	0.40	12		U
75-00-3	Chloroethane	1.3	12		U
67-66-3	Chloroform	0.65	12		U
74-87-3	Chloromethane	0.61	12		U
110-82-7	Cyclohexane	0.64	12		U
124-48-1	Dibromochloromethane	0.40	12		U
96-12-8	1,2-Dibromo-3-chloropropane	1.4	5.9		U
106-93-4	1,2-Dibromoethane	0.51	12		U
95-50-1	1,2-Dichlorobenzene	0.44	12		U
541-73-1	1,3-Dichlorobenzene	0.99	12		U
106-46-7	1,4-Dichlorobenzene	0.65	12		U
75-71-8	Dichlorodifluoromethane	1.3	12		U
75-34-3	1,1-Dichloroethane	0.64	12		U
107-06-2	1,2-Dichloroethane	0.54	12		U
75-35-4	1,1-Dichloroethene	1.4	12		U
156-59-2	cis-1,2-Dichloroethene	1.4	12		U
156-60-5	trans-1,2-Dichloroethene	1.3	12		U
78-87-5	1,2-Dichloropropane	0.54	12		U
10061-01-5	cis-1,3-Dichloropropene	0.59	12		U
10061-02-6	trans-1,3-Dichloropropene	0.38	12		U
100-41-4	Ethylbenzene	0.88	12		U
591-78-6	2-Hexanone	2.7	12		U
98-82-8	Isopropylbenzene	1.0	12		U
79-20-9	Methyl acetate	1.9	12		U
75-09-2	Methylene chloride	0.73	12	12uJ ~~2.9~~	JB ~~U~~ ~~U~~ B
108-87-2	Methyl cyclohexane	0.35	12		U
1634-04-4	Methyl tert-butyl ether	0.38	12		U
108-10-1	4-Methyl-2-pentanone	0.68	12		U
100-42-5	Styrene	0.41	12		U
79-34-5	1,1,2,2-Tetrachloroethane	0.51	12		U
127-18-4	Tetrachloroethene	1.1	12		U

FORM I VOA

UW
4/14/09

FORM 1
VOLATILE ORGANICS ANALYSIS DATA SHEET

CLIENT SAMPLE NO. 9

MR08-SS311-09A

Lab Name: EMPIRICAL LABS Contract: CH2MHILL

Lab Code: NA Case No.: NA SAS No.: NA SDG No.: LEJEUNE050

Matrix: (soil/water) SOIL Lab Sample ID: 0901103-09

Sample wt/vol: 4.6 (g/mL) G Lab File ID: 0110309A

Level: (low/med) LOW Date Sampled: 01/13/09 10:40

% Moisture: not dec. 9 Date Analyzed: 01/20/09 08:14

GC Column: RTX-VRX ID: 0.25 (mm) Dilution Factor: 1.0

Soil Extract Volume:_____(uL) Soil Aliquot Volume: _____(uL)

CONCENTRATION UNITS: (ug/L or ug/Kg) UG/KG

CAS NO.	COMPOUND	MDL	RL	CONC	Q
108-88-3	Toluene	1.0	12		U
120-82-1	1,2,4-Trichlorobenzene	0.21	12		U
71-55-6	1,1,1-Trichloroethane	1.1	12		U
79-00-5	1,1,2-Trichloroethane	0.41	12		U
79-01-6	Trichloroethene	1.0	12		U
76-13-1	Trichlorotrifluoroethane	0.65	12		U
75-69-4	Trichlorofluoromethane	1.1	12		U
75-01-4	Vinyl chloride	1.3	12		U
1330-20-7	Xylene(total)	0.82	12		U

lw
4/14/09

FORM 1
VOLATILE ORGANICS ANALYSIS DATA SHEET

CLIENT SAMPLE NO.

MR08-IS31
1-8-9-09A

10

Lab Name: EMPIRICAL LABS Contract: CH2MHILL

Lab Code: NA Case No.: NA SAS No.: NA SDG No.: LEJEUNE050

Matrix: (soil/water) SOIL Lab Sample ID: 0901103-10

Sample wt/vol: 5.8 (g/mL) G Lab File ID: 0110310A

Level: (low/med) LOW Date Sampled: 01/13/09 10:55

% Moisture: not dec. 15 Date Analyzed: 01/20/09 08:45

GC Column: RTX-VRX ID: 0.25 (mm) Dilution Factor: 1.0

Soil Extract Volume:_____(uL) Soil Aliquot Volume: _____(uL)

CONCENTRATION UNITS: (ug/L or ug/Kg) UG/KG

CAS NO.	COMPOUND	MDL	RL	CONC	Q
67-64-1	Acetone	2.0	10	5.1	~~J~~ J SSH
71-43-2	Benzene	0.48	10		U
75-27-4	Bromodichloromethane	0.31	10		U
75-25-2	Bromoform	1.0	10		U
74-83-9	Bromomethane	0.74	10		U
78-93-3	2-Butanone	1.4	10		U
75-15-0	Carbon disulfide	1.3	10		U
56-23-5	Carbon tetrachloride	0.90	10		U
108-90-7	Chlorobenzene	0.35	10		U
75-00-3	Chloroethane	1.1	10		U
67-66-3	Chloroform	0.56	10		U
74-87-3	Chloromethane	0.53	10		U
110-82-7	Cyclohexane	0.55	10		U
124-48-1	Dibromochloromethane	0.35	10		U
96-12-8	1,2-Dibromo-3-chloropropane	1.2	5.1		U
106-93-4	1,2-Dibromoethane	0.44	10		U
95-50-1	1,2-Dichlorobenzene	0.38	10		U
541-73-1	1,3-Dichlorobenzene	0.86	10		U
106-46-7	1,4-Dichlorobenzene	0.56	10		U
75-71-8	Dichlorodifluoromethane	1.1	10		U
75-34-3	1,1-Dichloroethane	0.55	10		U
107-06-2	1,2-Dichloroethane	0.47	10		U
75-35-4	1,1-Dichloroethene	1.2	10		U
156-59-2	cis-1,2-Dichloroethene	1.2	10		U
156-60-5	trans-1,2-Dichloroethene	1.1	10		U
78-87-5	1,2-Dichloropropane	0.47	10		U
10061-01-5	cis-1,3-Dichloropropene	0.51	10		U
10061-02-6	trans-1,3-Dichloropropene	0.33	10		U
100-41-4	Ethylbenzene	0.77	10		U
591-78-6	2-Hexanone	2.4	10		U
98-82-8	Isopropylbenzene	0.90	10		U
79-20-9	Methyl acetate	1.6	10		U
75-09-2	Methylene chloride	0.63	10	10uJ 2.5	~~JB~~ CHB
108-87-2	Methyl cyclohexane	0.31	10		U
1634-04-4	Methyl tert-butyl ether	0.33	10		U
108-10-1	4-Methyl-2-pentanone	0.59	10		U
100-42-5	Styrene	0.36	10		U
79-34-5	1,1,2,2-Tetrachloroethane	0.44	10		U
127-18-4	Tetrachloroethene	0.99	10		U

FORM I VOA

lw
4/4/09

FORM 1
VOLATILE ORGANICS ANALYSIS DATA SHEET

CLIENT SAMPLE NO.

MR08-IS31
1-8-9-09A

10

Lab Name: EMPIRICAL LABS Contract: CH2MHILL

Lab Code: NA Case No.: NA SAS No.: NA SDG No.: LEJEUNE050

Matrix: (soil/water) SOIL Lab Sample ID: 0901103-10

Sample wt/vol: 5.8 (g/mL) G Lab File ID: 0110310A

Level: (low/med) LOW Date Sampled: 01/13/09 10:55

% Moisture: not dec. 15 Date Analyzed: 01/20/09 08:45

GC Column: RTX-VRX ID: 0.25 (mm) Dilution Factor: 1.0

Soil Extract Volume:_____(uL) Soil Aliquot Volume: _____(uL)

CONCENTRATION UNITS: (ug/L or ug/Kg) UG/KG

CAS NO.	COMPOUND	MDL	RL	CONC	Q
108-88-3	Toluene	0.88	10		U
120-82-1	1,2,4-Trichlorobenzene	0.18	10		U
71-55-6	1,1,1-Trichloroethane	0.92	10		U
79-00-5	1,1,2-Trichloroethane	0.36	10		U
79-01-6	Trichloroethene	0.87	10		U
76-13-1	Trichlorotrifluoroethane	0.56	10		U
75-69-4	Trichlorofluoromethane	0.97	10		U
75-01-4	Vinyl chloride	1.1	10		U
1330-20-7	Xylene(total)	0.72	10		U

lw 4/4/09

FORM 1
VOLATILE ORGANICS ANALYSIS DATA SHEET

CLIENT SAMPLE NO. 11

MR08-SS308-09A

Lab Name: EMPIRICAL LABS Contract: CH2MHILL

Lab Code: NA Case No.: NA SAS No.: NA SDG No.: LEJEUNE050

Matrix: (soil/water) SOIL Lab Sample ID: 0901103-11

Sample wt/vol: 3.7 (g/mL) G Lab File ID: 0110311A

Level: (low/med) LOW Date Sampled: 01/13/09 11:10

% Moisture: not dec. 15 Date Analyzed: 01/20/09 09:16

GC Column: RTX-VRX ID: 0.25 (mm) Dilution Factor: 1.0

Soil Extract Volume:_____(uL) Soil Aliquot Volume: _____(uL)

CONCENTRATION UNITS: (ug/L or ug/Kg) UG/KG

CAS NO.	COMPOUND	MDL	RL	CONC	Q
67-64-1	Acetone	3.2	16	32	
71-43-2	Benzene	0.75	16		~~U~~ UJ MS
75-27-4	Bromodichloromethane	0.48	16		~~U~~ UJ MS
75-25-2	Bromoform	1.6	16		U
74-83-9	Bromomethane	1.1	16		U
78-93-3	2-Butanone	2.2	16		U
75-15-0	Carbon disulfide	2.1	16		U
56-23-5	Carbon tetrachloride	1.4	16		~~U~~ UJ MS
108-90-7	Chlorobenzene	0.54	16		~~U~~ UJ MS
75-00-3	Chloroethane	1.8	16		U
67-66-3	Chloroform	0.88	16		~~U~~ UJ MS
74-87-3	Chloromethane	0.83	16		U
110-82-7	Cyclohexane	0.86	16		~~U~~ UJ MS
124-48-1	Dibromochloromethane	0.54	16		~~U~~ UJ MS
96-12-8	1,2-Dibromo-3-chloropropane	1.9	8.0		U
106-93-4	1,2-Dibromoethane	0.69	16		~~U~~ UJ MS
95-50-1	1,2-Dichlorobenzene	0.59	16		~~U~~
541-73-1	1,3-Dichlorobenzene	1.3	16		~~U~~ ↓
106-46-7	1,4-Dichlorobenzene	0.88	16		~~U~~ ↓
75-71-8	Dichlorodifluoromethane	1.8	16		U
75-34-3	1,1-Dichloroethane	0.86	16		~~U~~ UJ MS
107-06-2	1,2-Dichloroethane	0.73	16		U
75-35-4	1,1-Dichloroethene	1.9	16		U
156-59-2	cis-1,2-Dichloroethene	1.9	16		~~U~~ UJ MS
156-60-5	trans-1,2-Dichloroethene	1.8	16		U
78-87-5	1,2-Dichloropropane	0.73	16		~~U~~ UJ MS
10061-01-5	cis-1,3-Dichloropropene	0.80	16		~~U~~ UJ MS
10061-02-6	trans-1,3-Dichloropropene	0.51	16		U
100-41-4	Ethylbenzene	1.2	16		~~U~~ UJ MS
591-78-6	2-Hexanone	3.7	16		U
98-82-8	Isopropylbenzene	1.4	16		~~U~~ UJ MS
79-20-9	Methyl acetate	2.6	16		U
75-09-2	Methylene chloride	0.99	16	16 UJ	~~2.2 JB~~ CH BC
108-87-2	Methyl cyclohexane	0.48	16		~~U~~ UJ MS
1634-04-4	Methyl tert-butyl ether	0.51	16		U
108-10-1	4-Methyl-2-pentanone	0.92	16		U
100-42-5	Styrene	0.56	16		~~U~~ UJ MS
79-34-5	1,1,2,2-Tetrachloroethane	0.69	16		U
127-18-4	Tetrachloroethene	1.5	16		~~U~~ UJ MS

FORM I VOA

KW
4/4/09

FORM 1
VOLATILE ORGANICS ANALYSIS DATA SHEET

CLIENT SAMPLE NO.

11

MR08-SS308-09A

Lab Name: EMPIRICAL LABS Contract: CH2MHILL

Lab Code: NA Case No.: NA SAS No.: NA SDG No.: LEJEUNE050

Matrix: (soil/water) SOIL Lab Sample ID: 0901103-11

Sample wt/vol: 3.7 (g/mL) G Lab File ID: 0110311A

Level: (low/med) LOW Date Sampled: 01/13/09 11:10

% Moisture: not dec. 15 Date Analyzed: 01/20/09 09:16

GC Column: RTX-VRX ID: 0.25 (mm) Dilution Factor: 1.0

Soil Extract Volume:_____(uL) Soil Aliquot Volume: _____(uL)

CONCENTRATION UNITS: (ug/L or ug/Kg) UG/KG

CAS NO.	COMPOUND	MDL	RL	CONC	Q	
108-88-3	Toluene	1.4	16		~~U~~ UJ	MS
120-82-1	1,2,4-Trichlorobenzene	0.29	16		~~U~~ ↓	↓
71-55-6	1,1,1-Trichloroethane	1.4	16		~~U~~	
79-00-5	1,1,2-Trichloroethane	0.56	16		U	
79-01-6	Trichloroethene	1.4	16		~~U~~ UJ	MSL
76-13-1	Trichlorotrifluoroethane	0.88	16		U	
75-69-4	Trichlorofluoromethane	1.5	16		U	
75-01-4	Vinyl chloride	1.8	16		~~U~~ UJ	MSL
1330-20-7	Xylene(total)	1.1	16		~~U~~ UJ	↓

FORM I VOA

hw
4/4/09

FORM 1
VOLATILE ORGANICS ANALYSIS DATA SHEET

CLIENT SAMPLE NO.

MR08-IS3
08-9-10-09A

12

Lab Name: EMPIRICAL LABS Contract: CH2MHILL

Lab Code: NA Case No.: NA SAS No.: NA SDG No.: LEJEUNE050

Matrix: (soil/water) SOIL Lab Sample ID: 0901103-12

Sample wt/vol: 2.8 (g/mL) G Lab File ID: 0110312A

Level: (low/med) LOW Date Sampled: 01/13/09 11:45

% Moisture: not dec. 5 Date Analyzed: 01/20/09 09:46

GC Column: RTX-VRX ID: 0.25 (mm) Dilution Factor: 1.0

Soil Extract Volume:_____(uL) Soil Aliquot Volume: _____(uL)

CONCENTRATION UNITS: (ug/L or ug/Kg) UG/KG

CAS NO.	COMPOUND	MDL	RL	CONC	Q
67-64-1	Acetone	3.8	19		U
71-43-2	Benzene	0.89	19		U
75-27-4	Bromodichloromethane	0.57	19		U
75-25-2	Bromoform	1.9	19		U
74-83-9	Bromomethane	1.4	19		U
78-93-3	2-Butanone	2.6	19		U
75-15-0	Carbon disulfide	2.5	19		U
56-23-5	Carbon tetrachloride	1.7	19		U
108-90-7	Chlorobenzene	0.64	19		U
75-00-3	Chloroethane	2.1	19		U
67-66-3	Chloroform	1.0	19		U
74-87-3	Chloromethane	0.99	19		U
110-82-7	Cyclohexane	1.0	19		U
124-48-1	Dibromochloromethane	0.64	19		U
96-12-8	1,2-Dibromo-3-chloropropane	2.3	9.5		U
106-93-4	1,2-Dibromoethane	0.82	19		U
95-50-1	1,2-Dichlorobenzene	0.70	19		~~U~~ UJ MS
541-73-1	1,3-Dichlorobenzene	1.6	19		U
106-46-7	1,4-Dichlorobenzene	1.0	19		U
75-71-8	Dichlorodifluoromethane	2.1	19		U
75-34-3	1,1-Dichloroethane	1.0	19		U
107-06-2	1,2-Dichloroethane	0.87	19		U
75-35-4	1,1-Dichloroethene	2.3	19		U
156-59-2	cis-1,2-Dichloroethene	2.3	19		U
156-60-5	trans-1,2-Dichloroethene	2.1	19		U
78-87-5	1,2-Dichloropropane	0.87	19		U
10061-01-5	cis-1,3-Dichloropropene	0.95	19		U
10061-02-6	trans-1,3-Dichloropropene	0.61	19		U
100-41-4	Ethylbenzene	1.4	19		U
591-78-6	2-Hexanone	4.4	19		U
98-82-8	Isopropylbenzene	1.7	19		U
79-20-9	Methyl acetate	3.0	19		U
75-09-2	Methylene chloride	1.2	19	19uJ	~~4.9~~ ~~JB~~ CCHB
108-87-2	Methyl cyclohexane	0.57	19		U
1634-04-4	Methyl tert-butyl ether	0.61	19		U
108-10-1	4-Methyl-2-pentanone	1.1	19		U
100-42-5	Styrene	0.66	19		U
79-34-5	1,1,2,2-Tetrachloroethane	0.82	19		U
127-18-4	Tetrachloroethene	1.8	19		U

FORM I VOA

KW
4/4/09

FORM 1
VOLATILE ORGANICS ANALYSIS DATA SHEET

CLIENT SAMPLE NO.

MR08-IS3
08-9-10-09A

12

Lab Name: EMPIRICAL LABS Contract: CH2MHILL

Lab Code: NA Case No.: NA SAS No.: NA SDG No.: LEJEUNE050

Matrix: (soil/water) SOIL Lab Sample ID: 0901103-12

Sample wt/vol: 2.8 (g/mL) G Lab File ID: 0110312A

Level: (low/med) LOW Date Sampled: 01/13/09 11:45

% Moisture: not dec. 5 Date Analyzed: 01/20/09 09:46

GC Column: RTX-VRX ID: 0.25 (mm) Dilution Factor: 1.0

Soil Extract Volume:_____(uL) Soil Aliquot Volume: _____(uL)

CONCENTRATION UNITS: (ug/L or ug/Kg) UG/KG

CAS NO.	COMPOUND	MDL	RL	CONC	Q
108-88-3	Toluene	1.6	19		U
120-82-1	1,2,4-Trichlorobenzene	0.34	19		~~U~~ UJ MSC
71-55-6	1,1,1-Trichloroethane	1.7	19		U
79-00-5	1,1,2-Trichloroethane	0.66	19		U
79-01-6	Trichloroethene	1.6	19		U
76-13-1	Trichlorotrifluoroethane	1.0	19		U
75-69-4	Trichlorofluoromethane	1.8	19		U
75-01-4	Vinyl chloride	2.1	19		U
1330-20-7	Xylene(total)	1.3	19		U

DW 4/4/09

FORM 1
VOLATILE ORGANICS ANALYSIS DATA SHEET

CLIENT SAMPLE NO.

13

MR08-SS309-09A

Lab Name: EMPIRICAL LABS Contract: CH2MHILL

Lab Code: NA Case No.: NA SAS No.: NA SDG No.: LEJEUNE050

Matrix: (soil/water) SOIL Lab Sample ID: 0901103-13

Sample wt/vol: 4.2 (g/mL) G Lab File ID: 0110313A

Level: (low/med) LOW Date Sampled: 01/13/09 13:30

% Moisture: not dec. 13 Date Analyzed: 01/20/09 10:17

GC Column: RTX-VRX ID: 0.25 (mm) Dilution Factor: 1.0

Soil Extract Volume:_____(uL) Soil Aliquot Volume: _____(uL)

CONCENTRATION UNITS: (ug/L or ug/Kg) UG/KG

CAS NO.	COMPOUND	MDL	RL	CONC	Q
67-64-1	Acetone	2.8	14	51	
71-43-2	Benzene	0.65	14		U
75-27-4	Bromodichloromethane	0.42	14		U
75-25-2	Bromoform	1.4	14		U
74-83-9	Bromomethane	1.00	14		U
78-93-3	2-Butanone	1.9	14		U
75-15-0	Carbon disulfide	1.8	14		U
56-23-5	Carbon tetrachloride	1.2	14		U
108-90-7	Chlorobenzene	0.47	14		U
75-00-3	Chloroethane	1.5	14		U
67-66-3	Chloroform	0.76	14		U
74-87-3	Chloromethane	0.72	14		U
110-82-7	Cyclohexane	0.75	14		U
124-48-1	Dibromochloromethane	0.47	14		U
96-12-8	1,2-Dibromo-3-chloropropane	1.7	6.9		U
106-93-4	1,2-Dibromoethane	0.60	14		U
95-50-1	1,2-Dichlorobenzene	0.51	14		U
541-73-1	1,3-Dichlorobenzene	1.2	14		U
106-46-7	1,4-Dichlorobenzene	0.76	14		U
75-71-8	Dichlorodifluoromethane	1.5	14		U
75-34-3	1,1-Dichloroethane	0.75	14		U
107-06-2	1,2-Dichloroethane	0.64	14		U
75-35-4	1,1-Dichloroethene	1.7	14		U
156-59-2	cis-1,2-Dichloroethene	1.7	14		U
156-60-5	trans-1,2-Dichloroethene	1.5	14		U
78-87-5	1,2-Dichloropropane	0.64	14		U
10061-01-5	cis-1,3-Dichloropropene	0.69	14		U
10061-02-6	trans-1,3-Dichloropropene	0.44	14		U
100-41-4	Ethylbenzene	1.0	14		U
591-78-6	2-Hexanone	3.2	14		U
98-82-8	Isopropylbenzene	1.2	14		U
79-20-9	Methyl acetate	2.2	14		U
75-09-2	Methylene chloride	0.86	14	14uJ ~~4.5~~	JB~~U~~B~~U~~
108-87-2	Methyl cyclohexane	0.42	14	0.49	J
1634-04-4	Methyl tert-butyl ether	0.44	14		U
108-10-1	4-Methyl-2-pentanone	0.80	14		U
100-42-5	Styrene	0.48	14		U
79-34-5	1,1,2,2-Tetrachloroethane	0.60	14		U
127-18-4	Tetrachloroethene	1.3	14		U

FORM I VOA

LW
4/14/09

FORM 1
VOLATILE ORGANICS ANALYSIS DATA SHEET

CLIENT SAMPLE NO. 13

MR08-SS309-09A

Lab Name: EMPIRICAL LABS Contract: CH2MHILL

Lab Code: NA Case No.: NA SAS No.: NA SDG No.: LEJEUNE050

Matrix: (soil/water) SOIL Lab Sample ID: 0901103-13

Sample wt/vol: 4.2 (g/mL) G Lab File ID: 0110313A

Level: (low/med) LOW Date Sampled: 01/13/09 13:30

% Moisture: not dec. 13 Date Analyzed: 01/20/09 10:17

GC Column: RTX-VRX ID: 0.25 (mm) Dilution Factor: 1.0

Soil Extract Volume:_____(uL) Soil Aliquot Volume: _____(uL)

CONCENTRATION UNITS: (ug/L or ug/Kg) UG/KG

CAS NO.	COMPOUND	MDL	RL	CONC	Q
108-88-3	Toluene	1.2	14		U
120-82-1	1,2,4-Trichlorobenzene	0.25	14		U
71-55-6	1,1,1-Trichloroethane	1.2	14		U
79-00-5	1,1,2-Trichloroethane	0.48	14		U
79-01-6	Trichloroethene	1.2	14		U
76-13-1	Trichlorotrifluoroethane	0.76	14		U
75-69-4	Trichlorofluoromethane	1.3	14		U
75-01-4	Vinyl chloride	1.5	14		U
1330-20-7	Xylene(total)	0.97	14		U

lcw
9/4/09

FORM 1
VOLATILE ORGANICS ANALYSIS DATA SHEET

CLIENT SAMPLE NO. 14

MR08-SS309D-09A

Lab Name: EMPIRICAL LABS Contract: CH2MHILL

Lab Code: NA Case No.: NA SAS No.: NA SDG No.: LEJEUNE050

Matrix: (soil/water) SOIL Lab Sample ID: 0901103-14

Sample wt/vol: 4.4 (g/mL) G Lab File ID: 0110314A

Level: (low/med) LOW Date Sampled: 01/13/09 13:40

% Moisture: not dec. 22 Date Analyzed: 01/20/09 10:48

GC Column: RTX-VRX ID: 0.25 (mm) Dilution Factor: 1.0

Soil Extract Volume:_____(uL) Soil Aliquot Volume: _____(uL)

CONCENTRATION UNITS: (ug/L or ug/Kg) UG/KG

CAS NO.	COMPOUND	MDL	RL	CONC	Q
67-64-1	Acetone	2.9	14	46	
71-43-2	Benzene	0.68	14		U
75-27-4	Bromodichloromethane	0.43	14		U
75-25-2	Bromoform	1.4	14		U
74-83-9	Bromomethane	1.0	14		U
78-93-3	2-Butanone	2.0	14		U
75-15-0	Carbon disulfide	1.9	14		U
56-23-5	Carbon tetrachloride	1.3	14		U
108-90-7	Chlorobenzene	0.49	14		U
75-00-3	Chloroethane	1.6	14		U
67-66-3	Chloroform	0.80	14		U
74-87-3	Chloromethane	0.75	14		U
110-82-7	Cyclohexane	0.78	14		U
124-48-1	Dibromochloromethane	0.49	14		U
96-12-8	1,2-Dibromo-3-chloropropane	1.7	7.2		U
106-93-4	1,2-Dibromoethane	0.62	14		U
95-50-1	1,2-Dichlorobenzene	0.54	14		U
541-73-1	1,3-Dichlorobenzene	1.2	14		U
106-46-7	1,4-Dichlorobenzene	0.80	14		U
75-71-8	Dichlorodifluoromethane	1.6	14		U
75-34-3	1,1-Dichloroethane	0.78	14		U
107-06-2	1,2-Dichloroethane	0.67	14		U
75-35-4	1,1-Dichloroethene	1.7	14		U
156-59-2	cis-1,2-Dichloroethene	1.7	14		U
156-60-5	trans-1,2-Dichloroethene	1.6	14		U
78-87-5	1,2-Dichloropropane	0.67	14		U
10061-01-5	cis-1,3-Dichloropropene	0.72	14		U
10061-02-6	trans-1,3-Dichloropropene	0.46	14		U
100-41-4	Ethylbenzene	1.1	14		U
591-78-6	2-Hexanone	3.3	14		U
98-82-8	Isopropylbenzene	1.3	14		U
79-20-9	Methyl acetate	2.3	14		U
75-09-2	Methylene chloride	0.90	14	14uJ ~~5.4~~	~~JB~~ CH BL
108-87-2	Methyl cyclohexane	0.43	14	0.68	J
1634-04-4	Methyl tert-butyl ether	0.46	14		U
108-10-1	4-Methyl-2-pentanone	0.84	14		U
100-42-5	Styrene	0.51	14		U
79-34-5	1,1,2,2-Tetrachloroethane	0.62	14		U
127-18-4	Tetrachloroethene	1.4	14		U

FORM I VOA

lew
4/14/09

FORM 1
VOLATILE ORGANICS ANALYSIS DATA SHEET

CLIENT SAMPLE NO. 14

MR08-SS309D-09A

Lab Name: EMPIRICAL LABS Contract: CH2MHILL

Lab Code: NA Case No.: NA SAS No.: NA SDG No.: LEJEUNE050

Matrix: (soil/water) SOIL Lab Sample ID: 0901103-14

Sample wt/vol: 4.4 (g/mL) G Lab File ID: 0110314A

Level: (low/med) LOW Date Sampled: 01/13/09 13:40

% Moisture: not dec. 22 Date Analyzed: 01/20/09 10:48

GC Column: RTX-VRX ID: 0.25 (mm) Dilution Factor: 1.0

Soil Extract Volume:_____(uL) Soil Aliquot Volume: _____(uL)

CONCENTRATION UNITS: (ug/L or ug/Kg) UG/KG

CAS NO.	COMPOUND	MDL	RL	CONC	Q
108-88-3	Toluene	1.2	14		U
120-82-1	1,2,4-Trichlorobenzene	0.26	14		U
71-55-6	1,1,1-Trichloroethane	1.3	14		U
79-00-5	1,1,2-Trichloroethane	0.51	14		U
79-01-6	Trichloroethene	1.2	14		U
76-13-1	Trichlorotrifluoroethane	0.80	14		U
75-69-4	Trichlorofluoromethane	1.4	14		U
75-01-4	Vinyl chloride	1.6	14		U
1330-20-7	Xylene(total)	1.0	14		U

MW 9/4/09

FORM 1
VOLATILE ORGANICS ANALYSIS DATA SHEET

CLIENT SAMPLE NO. 15

MR08-IS30
9-6-7-09A

Lab Name: EMPIRICAL LABS Contract: CH2MHILL

Lab Code: NA Case No.: NA SAS No.: NA SDG No.: LEJEUNE050

Matrix: (soil/water) SOIL Lab Sample ID: 0901103-15

Sample wt/vol: 5.8 (g/mL) G Lab File ID: 0110315A

Level: (low/med) LOW Date Sampled: 01/13/09 13:55

% Moisture: not dec. 13 Date Analyzed: 01/20/09 11:19

GC Column: RTX-VRX ID: 0.25 (mm) Dilution Factor: 1.0

Soil Extract Volume:_____(uL) Soil Aliquot Volume: _____(uL)

CONCENTRATION UNITS: (ug/L or ug/Kg) UG/KG

CAS NO.	COMPOUND	MDL	RL	CONC	Q
67-64-1	Acetone	2.0	9.8		U
71-43-2	Benzene	0.46	9.8		U
75-27-4	Bromodichloromethane	0.30	9.8		U
75-25-2	Bromoform	0.98	9.8		U
74-83-9	Bromomethane	0.71	9.8		U
78-93-3	2-Butanone	1.4	9.8		U
75-15-0	Carbon disulfide	1.3	9.8		U
56-23-5	Carbon tetrachloride	0.86	9.8		U
108-90-7	Chlorobenzene	0.33	9.8		U
75-00-3	Chloroethane	1.1	9.8		U
67-66-3	Chloroform	0.54	9.8		U
74-87-3	Chloromethane	0.51	9.8		U
110-82-7	Cyclohexane	0.53	9.8		U
124-48-1	Dibromochloromethane	0.33	9.8		U
96-12-8	1,2-Dibromo-3-chloropropane	1.2	4.9		U
106-93-4	1,2-Dibromoethane	0.42	9.8		U
95-50-1	1,2-Dichlorobenzene	0.36	9.8		U
541-73-1	1,3-Dichlorobenzene	0.83	9.8		U
106-46-7	1,4-Dichlorobenzene	0.54	9.8		U
75-71-8	Dichlorodifluoromethane	1.1	9.8		U
75-34-3	1,1-Dichloroethane	0.53	9.8		U
107-06-2	1,2-Dichloroethane	0.45	9.8		U
75-35-4	1,1-Dichloroethene	1.2	9.8		U
156-59-2	cis-1,2-Dichloroethene	1.2	9.8		U
156-60-5	trans-1,2-Dichloroethene	1.1	9.8		U
78-87-5	1,2-Dichloropropane	0.45	9.8		U
10061-01-5	cis-1,3-Dichloropropene	0.49	9.8		U
10061-02-6	trans-1,3-Dichloropropene	0.31	9.8		U
100-41-4	Ethylbenzene	0.74	9.8		U
591-78-6	2-Hexanone	2.3	9.8		U
98-82-8	Isopropylbenzene	0.86	9.8		U
79-20-9	Methyl acetate	1.6	9.8		U
75-09-2	Methylene chloride	0.61	9.8	9.8UJ ~~1.6 JB~~ CCH B	
108-87-2	Methyl cyclohexane	0.30	9.8	0.35	J
1634-04-4	Methyl tert-butyl ether	0.31	9.8		U
108-10-1	4-Methyl-2-pentanone	0.57	9.8		U
100-42-5	Styrene	0.34	9.8		U
79-34-5	1,1,2,2-Tetrachloroethane	0.42	9.8		U
127-18-4	Tetrachloroethene	0.95	9.8		U

FORM I VOA

lw
9/4/09

FORM 1
VOLATILE ORGANICS ANALYSIS DATA SHEET

CLIENT SAMPLE NO.

15

MR08-IS30
9-6-7-09A

Lab Name: EMPIRICAL LABS Contract: CH2MHILL

Lab Code: NA Case No.: NA SAS No.: NA SDG No.: LEJEUNE050

Matrix: (soil/water) SOIL Lab Sample ID: 0901103-15

Sample wt/vol: 5.8 (g/mL) G Lab File ID: 0110315A

Level: (low/med) LOW Date Sampled: 01/13/09 13:55

% Moisture: not dec. 13 Date Analyzed: 01/20/09 11:19

GC Column: RTX-VRX ID: 0.25 (mm) Dilution Factor: 1.0

Soil Extract Volume:_____(uL) Soil Aliquot Volume: _____(uL)

CONCENTRATION UNITS: (ug/L or ug/Kg) UG/KG

CAS NO.	COMPOUND	MDL	RL	CONC	Q
108-88-3	Toluene	0.84	9.8	9.84 ~~0.93~~	~~J~~ BL
120-82-1	1,2,4-Trichlorobenzene	0.18	9.8		U
71-55-6	1,1,1-Trichloroethane	0.88	9.8		U
79-00-5	1,1,2-Trichloroethane	0.34	9.8		U
79-01-6	Trichloroethene	0.84	9.8		U
76-13-1	Trichlorotrifluoroethane	0.54	9.8		U
75-69-4	Trichlorofluoromethane	0.93	9.8		U
75-01-4	Vinyl chloride	1.1	9.8		U
1330-20-7	Xylene(total)	0.69	9.8		U

KW
9/14/09

FORM 1
VOLATILE ORGANICS ANALYSIS DATA SHEET

CLIENT SAMPLE NO.

16

MR08-IS30
9D-6-7-09A

Lab Name: EMPIRICAL LABS Contract: CH2MHILL

Lab Code: NA Case No.: NA SAS No.: NA SDG No.: LEJEUNE050

Matrix: (soil/water) SOIL Lab Sample ID: 0901103-16

Sample wt/vol: 6.1 (g/mL) G Lab File ID: 0110316A

Level: (low/med) LOW Date Sampled: 01/13/09 14:05

% Moisture: not dec. 12 Date Analyzed: 01/20/09 11:50

GC Column: RTX-VRX ID: 0.25 (mm) Dilution Factor: 1.0

Soil Extract Volume:_____(uL) Soil Aliquot Volume: _____(uL)

CONCENTRATION UNITS: (ug/L or ug/Kg) UG/KG

CAS NO.	COMPOUND	MDL	RL	CONC	Q
67-64-1	Acetone	1.9	9.4	5.4	J
71-43-2	Benzene	0.44	9.4		U
75-27-4	Bromodichloromethane	0.28	9.4		U
75-25-2	Bromoform	0.94	9.4		U
74-83-9	Bromomethane	0.67	9.4		U
78-93-3	2-Butanone	1.3	9.4		U
75-15-0	Carbon disulfide	1.2	9.4		U
56-23-5	Carbon tetrachloride	0.82	9.4		U
108-90-7	Chlorobenzene	0.32	9.4		U
75-00-3	Chloroethane	1.0	9.4		U
67-66-3	Chloroform	0.52	9.4		U
74-87-3	Chloromethane	0.49	9.4		U
110-82-7	Cyclohexane	0.50	9.4		U
124-48-1	Dibromochloromethane	0.32	9.4		U
96-12-8	1,2-Dibromo-3-chloropropane	1.1	4.7		U
106-93-4	1,2-Dibromoethane	0.40	9.4		U
95-50-1	1,2-Dichlorobenzene	0.35	9.4		U
541-73-1	1,3-Dichlorobenzene	0.79	9.4		U
106-46-7	1,4-Dichlorobenzene	0.52	9.4		U
75-71-8	Dichlorodifluoromethane	1.0	9.4		U
75-34-3	1,1-Dichloroethane	0.50	9.4		U
107-06-2	1,2-Dichloroethane	0.43	9.4		U
75-35-4	1,1-Dichloroethene	1.1	9.4		U
156-59-2	cis-1,2-Dichloroethene	1.1	9.4		U
156-60-5	trans-1,2-Dichloroethene	1.0	9.4		U
78-87-5	1,2-Dichloropropane	0.43	9.4		U
10061-01-5	cis-1,3-Dichloropropene	0.47	9.4		U
10061-02-6	trans-1,3-Dichloropropene	0.30	9.4		U
100-41-4	Ethylbenzene	0.70	9.4		U
591-78-6	2-Hexanone	2.2	9.4		U
98-82-8	Isopropylbenzene	0.82	9.4		U
79-20-9	Methyl acetate	1.5	9.4		U
75-09-2	Methylene chloride	0.58	9.4	9.4 UJ ~~3.6~~	~~JB~~ CCH B
108-87-2	Methyl cyclohexane	0.28	9.4		U
1634-04-4	Methyl tert-butyl ether	0.30	9.4		U
108-10-1	4-Methyl-2-pentanone	0.54	9.4		U
100-42-5	Styrene	0.33	9.4		U
79-34-5	1,1,2,2-Tetrachloroethane	0.40	9.4		U
127-18-4	Tetrachloroethene	0.91	9.4		U

FORM I VOA

KW 9/4/09

FORM 1
VOLATILE ORGANICS ANALYSIS DATA SHEET

CLIENT SAMPLE NO.

MR08-IS30
9D-6-7-09A

16

Lab Name: EMPIRICAL LABS Contract: CH2MHILL

Lab Code: NA Case No.: NA SAS No.: NA SDG No.: LEJEUNE050

Matrix: (soil/water) SOIL Lab Sample ID: 0901103-16

Sample wt/vol: 6.1 (g/mL) G Lab File ID: 0110316A

Level: (low/med) LOW Date Sampled: 01/13/09 14:05

% Moisture: not dec. 12 Date Analyzed: 01/20/09 11:50

GC Column: RTX-VRX ID: 0.25 (mm) Dilution Factor: 1.0

Soil Extract Volume:_____(uL) Soil Aliquot Volume: _____(uL)

CONCENTRATION UNITS: (ug/L or ug/Kg) UG/KG

CAS NO.	COMPOUND	MDL	RL	CONC	Q
108-88-3	Toluene	0.80	9.4		U
120-82-1	1,2,4-Trichlorobenzene	0.17	9.4		U
71-55-6	1,1,1-Trichloroethane	0.84	9.4		U
79-00-5	1,1,2-Trichloroethane	0.33	9.4		U
79-01-6	Trichloroethene	0.80	9.4		U
76-13-1	Trichlorotrifluoroethane	0.52	9.4		U
75-69-4	Trichlorofluoromethane	0.89	9.4		U
75-01-4	Vinyl chloride	1.0	9.4		U
1330-20-7	Xylene(total)	0.66	9.4		U

JW
4/14/09

FORM 1
VOLATILE ORGANICS ANALYSIS DATA SHEET

CLIENT SAMPLE NO. 17

MR08-SS310-09A

Lab Name: EMPIRICAL LABS Contract: CH2MHILL

Lab Code: NA Case No.: NA SAS No.: NA SDG No.: LEJEUNE050

Matrix: (soil/water) SOIL Lab Sample ID: 0901103-17

Sample wt/vol: 4.4 (g/mL) G Lab File ID: 0110317B

Level: (low/med) LOW Date Sampled: 01/13/09 14:15

% Moisture: not dec. 13 Date Analyzed: 01/21/09 12:14

GC Column: RTX-VRX ID: 0.25 (mm) Dilution Factor: 1.0

Soil Extract Volume:_____(uL) Soil Aliquot Volume: _____(uL)

CONCENTRATION UNITS: (ug/L or ug/Kg) UG/KG

CAS NO.	COMPOUND	MDL	RL	CONC	Q
67-64-1	Acetone	2.6	13	41	~~B~~
71-43-2	Benzene	0.62	13		U
75-27-4	Bromodichloromethane	0.39	13		U
75-25-2	Bromoform	1.3	13		U
74-83-9	Bromomethane	0.94	13		U
78-93-3	2-Butanone	1.8	13		U
75-15-0	Carbon disulfide	1.7	13		U
56-23-5	Carbon tetrachloride	1.2	13		U
108-90-7	Chlorobenzene	0.45	13		U
75-00-3	Chloroethane	1.4	13		U
67-66-3	Chloroform	0.72	13		U
74-87-3	Chloromethane	0.68	13		U
110-82-7	Cyclohexane	0.71	13		U
124-48-1	Dibromochloromethane	0.45	13		U
96-12-8	1,2-Dibromo-3-chloropropane	1.6	6.6		U
106-93-4	1,2-Dibromoethane	0.56	13		U
95-50-1	1,2-Dichlorobenzene	0.48	13		U
541-73-1	1,3-Dichlorobenzene	1.1	13		U
106-46-7	1,4-Dichlorobenzene	0.72	13		U
75-71-8	Dichlorodifluoromethane	1.4	13		U
75-34-3	1,1-Dichloroethane	0.71	13		U
107-06-2	1,2-Dichloroethane	0.60	13		U
75-35-4	1,1-Dichloroethene	1.6	13		U
156-59-2	cis-1,2-Dichloroethene	1.6	13		U
156-60-5	trans-1,2-Dichloroethene	1.4	13		U
78-87-5	1,2-Dichloropropane	0.60	13		U
10061-01-5	cis-1,3-Dichloropropene	0.66	13		U
10061-02-6	trans-1,3-Dichloropropene	0.42	13		U
100-41-4	Ethylbenzene	0.98	13		U
591-78-6	2-Hexanone	3.0	13		U
98-82-8	Isopropylbenzene	1.2	13		U
79-20-9	Methyl acetate	2.1	13		U
75-09-2	Methylene chloride	0.81	13	13u ~~2.8~~	~~JB~~ B
108-87-2	Methyl cyclohexane	0.39	13	0.51	J
1634-04-4	Methyl tert-butyl ether	0.42	13		U
108-10-1	4-Methyl-2-pentanone	0.76	13		U
100-42-5	Styrene	0.46	13		U
79-34-5	1,1,2,2-Tetrachloroethane	0.56	13		U
127-18-4	Tetrachloroethene	1.3	13		U

FORM I VOA

kw 9/4/09

FORM 1
VOLATILE ORGANICS ANALYSIS DATA SHEET

CLIENT SAMPLE NO.

MR08-SS310-09A

17

Lab Name: EMPIRICAL LABS Contract: CH2MHILL

Lab Code: NA Case No.: NA SAS No.: NA SDG No.: LEJEUNE050

Matrix: (soil/water) SOIL Lab Sample ID: 0901103-17

Sample wt/vol: 4.4 (g/mL) G Lab File ID: 0110317B

Level: (low/med) LOW Date Sampled: 01/13/09 14:15

% Moisture: not dec. 13 Date Analyzed: 01/21/09 12:14

GC Column: RTX-VRX ID: 0.25 (mm) Dilution Factor: 1.0

Soil Extract Volume:_____(uL) Soil Aliquot Volume: _____(uL)

CONCENTRATION UNITS: (ug/L or ug/Kg) UG/KG

CAS NO.	COMPOUND	MDL	RL	CONC	Q
108-88-3	Toluene	1.1	13		U
120-82-1	1,2,4-Trichlorobenzene	0.24	13		U
71-55-6	1,1,1-Trichloroethane	1.2	13		U
79-00-5	1,1,2-Trichloroethane	0.46	13		U
79-01-6	Trichloroethene	1.1	13		U
76-13-1	Trichlorotrifluoroethane	0.72	13		U
75-69-4	Trichlorofluoromethane	1.2	13		U
75-01-4	Vinyl chloride	1.4	13		U
1330-20-7	Xylene(total)	0.92	13		U

Qw
9/4/09

FORM 1
VOLATILE ORGANICS ANALYSIS DATA SHEET

CLIENT SAMPLE NO.

MR08-IS31
0-9-10-09A

18

Lab Name: EMPIRICAL LABS Contract: CH2MHILL

Lab Code: NA Case No.: NA SAS No.: NA SDG No.: LEJEUNE050

Matrix: (soil/water) SOIL Lab Sample ID: 0901103-18

Sample wt/vol: 5.6 (g/mL) G Lab File ID: 0110318A

Level: (low/med) LOW Date Sampled: 01/13/09 14:25

% Moisture: not dec. 17 Date Analyzed: 01/20/09 17:29

GC Column: RTX-VRX ID: 0.25 (mm) Dilution Factor: 1.0

Soil Extract Volume:_____(uL) Soil Aliquot Volume: _____(uL)

CONCENTRATION UNITS: (ug/L or ug/Kg) UG/KG

CAS NO.	COMPOUND	MDL	RL	CONC	Q
67-64-1	Acetone	2.1	11		~~U~~ UJ CC
71-43-2	Benzene	0.50	11		U
75-27-4	Bromodichloromethane	0.32	11		U
75-25-2	Bromoform	1.1	11		U
74-83-9	Bromomethane	0.77	11		U
78-93-3	2-Butanone	1.5	11		U
75-15-0	Carbon disulfide	1.4	11		U
56-23-5	Carbon tetrachloride	0.94	11		U
108-90-7	Chlorobenzene	0.36	11		U
75-00-3	Chloroethane	1.2	11		U
67-66-3	Chloroform	0.59	11		U
74-87-3	Chloromethane	0.56	11		U
110-82-7	Cyclohexane	0.58	11		U
124-48-1	Dibromochloromethane	0.36	11		U
96-12-8	1,2-Dibromo-3-chloropropane	1.3	5.4		U
106-93-4	1,2-Dibromoethane	0.46	11		U
95-50-1	1,2-Dichlorobenzene	0.40	11		U
541-73-1	1,3-Dichlorobenzene	0.90	11		U
106-46-7	1,4-Dichlorobenzene	0.59	11		U
75-71-8	Dichlorodifluoromethane	1.2	11		U
75-34-3	1,1-Dichloroethane	0.58	11		U
107-06-2	1,2-Dichloroethane	0.49	11		U
75-35-4	1,1-Dichloroethene	1.3	11		U
156-59-2	cis-1,2-Dichloroethene	1.3	11		U
156-60-5	trans-1,2-Dichloroethene	1.2	11		U
78-87-5	1,2-Dichloropropane	0.49	11		U
10061-01-5	cis-1,3-Dichloropropene	0.54	11		U
10061-02-6	trans-1,3-Dichloropropene	0.34	11		U
100-41-4	Ethylbenzene	0.80	11		U
591-78-6	2-Hexanone	2.5	11		U
98-82-8	Isopropylbenzene	0.94	11		U
79-20-9	Methyl acetate	1.7	11		U
75-09-2	Methylene chloride	0.67	11	11UJ ~~2.9~~	JBCCH B
108-87-2	Methyl cyclohexane	0.32	11	0.53	J
1634-04-4	Methyl tert-butyl ether	0.34	11		U
108-10-1	4-Methyl-2-pentanone	0.62	11		U
100-42-5	Styrene	0.38	11		U
79-34-5	1,1,2,2-Tetrachloroethane	0.46	11		U
127-18-4	Tetrachloroethene	1.0	11		U

FORM I VOA

KW
4/4/09

FORM 1
VOLATILE ORGANICS ANALYSIS DATA SHEET

CLIENT SAMPLE NO.

MR08-IS31
0-9-10-09A

18

Lab Name: EMPIRICAL LABS Contract: CH2MHILL

Lab Code: NA Case No.: NA SAS No.: NA SDG No.: LEJEUNE050

Matrix: (soil/water) SOIL Lab Sample ID: 0901103-18

Sample wt/vol: 5.6 (g/mL) G Lab File ID: 0110318A

Level: (low/med) LOW Date Sampled: 01/13/09 14:25

% Moisture: not dec. 17 Date Analyzed: 01/20/09 17:29

GC Column: RTX-VRX ID: 0.25 (mm) Dilution Factor: 1.0

Soil Extract Volume:_____(uL) Soil Aliquot Volume: _____(uL)

CONCENTRATION UNITS: (ug/L or ug/Kg) UG/KG

CAS NO.	COMPOUND	MDL	RL	CONC	Q
108-88-3	Toluene	0.92	11	11u ~~1.1~~	~~J~~
120-82-1	1,2,4-Trichlorobenzene	0.19	11	0.20	J
71-55-6	1,1,1-Trichloroethane	0.97	11		U
79-00-5	1,1,2-Trichloroethane	0.38	11		U
79-01-6	Trichloroethene	0.91	11		U
76-13-1	Trichlorotrifluoroethane	0.59	11		U
75-69-4	Trichlorofluoromethane	1.0	11		U
75-01-4	Vinyl chloride	1.2	11		U
1330-20-7	Xylene(total)	0.75	11		U

BL

FORM I VOA

MW 9/14/09

FORM 1
VOLATILE ORGANICS ANALYSIS DATA SHEET

CLIENT SAMPLE NO. 19

MR08-SS307-09A

Lab Name: EMPIRICAL LABS Contract: CH2MHILL

Lab Code: NA Case No.: NA SAS No.: NA SDG No.: LEJEUNE050

Matrix: (soil/water) SOIL Lab Sample ID: 0901103-19

Sample wt/vol: 5.0 (g/mL) G Lab File ID: 0110319A

Level: (low/med) LOW Date Sampled: 01/13/09 14:55

% Moisture: not dec. 13 Date Analyzed: 01/20/09 18:00

GC Column: RTX-VRX ID: 0.25 (mm) Dilution Factor: 1.0

Soil Extract Volume:_____(uL) Soil Aliquot Volume: _____(uL)

CONCENTRATION UNITS: (ug/L or ug/Kg) UG/KG

CAS NO.	COMPOUND	MDL	RL	CONC	Q
67-64-1	Acetone	2.3	12	60	~~B~~ J cc
71-43-2	Benzene	0.54	12	0.77	J
75-27-4	Bromodichloromethane	0.35	12		U
75-25-2	Bromoform	1.2	12		U
74-83-9	Bromomethane	0.83	12		U
78-93-3	2-Butanone	1.6	12		U
75-15-0	Carbon disulfide	1.5	12	3.4	J
56-23-5	Carbon tetrachloride	1.0	12		U
108-90-7	Chlorobenzene	0.39	12		U
75-00-3	Chloroethane	1.3	12		U
67-66-3	Chloroform	0.63	12		U
74-87-3	Chloromethane	0.60	12		U
110-82-7	Cyclohexane	0.62	12		U
124-48-1	Dibromochloromethane	0.39	12		U
96-12-8	1,2-Dibromo-3-chloropropane	1.4	5.8		U
106-93-4	1,2-Dibromoethane	0.50	12		U
95-50-1	1,2-Dichlorobenzene	0.43	12		U
541-73-1	1,3-Dichlorobenzene	0.97	12		U
106-46-7	1,4-Dichlorobenzene	0.63	12		U
75-71-8	Dichlorodifluoromethane	1.3	12		U
75-34-3	1,1-Dichloroethane	0.62	12		U
107-06-2	1,2-Dichloroethane	0.53	12		U
75-35-4	1,1-Dichloroethene	1.4	12		U
156-59-2	cis-1,2-Dichloroethene	1.4	12		U
156-60-5	trans-1,2-Dichloroethene	1.3	12		U
78-87-5	1,2-Dichloropropane	0.53	12		U
10061-01-5	cis-1,3-Dichloropropene	0.58	12		U
10061-02-6	trans-1,3-Dichloropropene	0.37	12		U
100-41-4	Ethylbenzene	0.86	12		U
591-78-6	2-Hexanone	2.6	12		U
98-82-8	Isopropylbenzene	1.0	12		U
79-20-9	Methyl acetate	1.8	12		U
75-09-2	Methylene chloride	0.72	12	12	~~2.2~~ ~~JB~~ J B
108-87-2	Methyl cyclohexane	0.35	12		U
1634-04-4	Methyl tert-butyl ether	0.37	12		U
108-10-1	4-Methyl-2-pentanone	0.67	12		U
100-42-5	Styrene	0.40	12		U
79-34-5	1,1,2,2-Tetrachloroethane	0.50	12		U
127-18-4	Tetrachloroethene	1.1	12		U

FORM I VOA

LW 4/4/09

FORM 1
VOLATILE ORGANICS ANALYSIS DATA SHEET

CLIENT SAMPLE NO. 19

MR08-SS307-09A

Lab Name: EMPIRICAL LABS Contract: CH2MHILL

Lab Code: NA Case No.: NA SAS No.: NA SDG No.: LEJEUNE050

Matrix: (soil/water) SOIL Lab Sample ID: 0901103-19

Sample wt/vol: 5.0 (g/mL) G Lab File ID: 0110319A

Level: (low/med) LOW Date Sampled: 01/13/09 14:55

% Moisture: not dec. 13 Date Analyzed: 01/20/09 18:00

GC Column: RTX-VRX ID: 0.25 (mm) Dilution Factor: 1.0

Soil Extract Volume:_____(uL) Soil Aliquot Volume: _____(uL)

CONCENTRATION UNITS: (ug/L or ug/Kg) UG/KG

CAS NO.	COMPOUND	MDL	RL	CONC	Q
108-88-3	Toluene	0.99	12	12U ~~1.0~~	~~J~~
120-82-1	1,2,4-Trichlorobenzene	0.21	12		U
71-55-6	1,1,1-Trichloroethane	1.0	12		U
79-00-5	1,1,2-Trichloroethane	0.40	12		U
79-01-6	Trichloroethene	0.98	12		U
76-13-1	Trichlorotrifluoroethane	0.63	12		U
75-69-4	Trichlorofluoromethane	1.1	12		U
75-01-4	Vinyl chloride	1.3	12		U
1330-20-7	Xylene(total)	0.81	12		U

B

lew
4/4/09

FORM 1
VOLATILE ORGANICS ANALYSIS DATA SHEET

CLIENT SAMPLE NO. 20

MR08-IS30
7-6-7-09A

Lab Name: EMPIRICAL LABS Contract: CH2MHILL

Lab Code: NA Case No.: NA SAS No.: NA SDG No.: LEJEUNE050

Matrix: (soil/water) SOIL Lab Sample ID: 0901103-20

Sample wt/vol: 5.7 (g/mL) G Lab File ID: 0110320A

Level: (low/med) LOW Date Sampled: 01/13/09 15:25

% Moisture: not dec. 13 Date Analyzed: 01/20/09 18:31

GC Column: RTX-VRX ID: 0.25 (mm) Dilution Factor: 1.0

Soil Extract Volume:_____(uL) Soil Aliquot Volume: _____(uL)

CONCENTRATION UNITS: (ug/L or ug/Kg) UG/KG

CAS NO.	COMPOUND	MDL	RL	CONC	Q
67-64-1	Acetone	2.0	10	10UJ ~~5.6~~ ~~JB~~ CCH	BC
71-43-2	Benzene	0.47	10		U
75-27-4	Bromodichloromethane	0.30	10		U
75-25-2	Bromoform	1.0	10		U
74-83-9	Bromomethane	0.72	10		U
78-93-3	2-Butanone	1.4	10		U
75-15-0	Carbon disulfide	1.3	10		U
56-23-5	Carbon tetrachloride	0.88	10		U
108-90-7	Chlorobenzene	0.34	10		U
75-00-3	Chloroethane	1.1	10		U
67-66-3	Chloroform	0.55	10		U
74-87-3	Chloromethane	0.52	10		U
110-82-7	Cyclohexane	0.54	10		U
124-48-1	Dibromochloromethane	0.34	10		U
96-12-8	1,2-Dibromo-3-chloropropane	1.2	5.0		U
106-93-4	1,2-Dibromoethane	0.43	10		U
95-50-1	1,2-Dichlorobenzene	0.37	10		U
541-73-1	1,3-Dichlorobenzene	0.84	10		U
106-46-7	1,4-Dichlorobenzene	0.55	10		U
75-71-8	Dichlorodifluoromethane	1.1	10		U
75-34-3	1,1-Dichloroethane	0.54	10		U
107-06-2	1,2-Dichloroethane	0.46	10		U
75-35-4	1,1-Dichloroethene	1.2	10		U
156-59-2	cis-1,2-Dichloroethene	1.2	10		U
156-60-5	trans-1,2-Dichloroethene	1.1	10		U
78-87-5	1,2-Dichloropropane	0.46	10		U
10061-01-5	cis-1,3-Dichloropropene	0.50	10		U
10061-02-6	trans-1,3-Dichloropropene	0.32	10		U
100-41-4	Ethylbenzene	0.75	10		U
591-78-6	2-Hexanone	2.3	10		U
98-82-8	Isopropylbenzene	0.88	10		U
79-20-9	Methyl acetate	1.6	10		U
75-09-2	Methylene chloride	0.62	10	10UJ ~~1.4~~ ~~JB~~ CCH	B
108-87-2	Methyl cyclohexane	0.30	10		U
1634-04-4	Methyl tert-butyl ether	0.32	10		U
108-10-1	4-Methyl-2-pentanone	0.58	10		U
100-42-5	Styrene	0.35	10		U
79-34-5	1,1,2,2-Tetrachloroethane	0.43	10		U
127-18-4	Tetrachloroethene	0.98	10		U

FORM I VOA

4/4/09

FORM 1
VOLATILE ORGANICS ANALYSIS DATA SHEET

CLIENT SAMPLE NO. 20

MR08-IS30
7-6-7-09A

Lab Name: EMPIRICAL LABS Contract: CH2MHILL

Lab Code: NA Case No.: NA SAS No.: NA SDG No.: LEJEUNE050

Matrix: (soil/water) SOIL Lab Sample ID: 0901103-20

Sample wt/vol: 5.7 (g/mL) G Lab File ID: 0110320A

Level: (low/med) LOW Date Sampled: 01/13/09 15:25

% Moisture: not dec. 13 Date Analyzed: 01/20/09 18:31

GC Column: RTX-VRX ID: 0.25 (mm) Dilution Factor: 1.0

Soil Extract Volume:_____(uL) Soil Aliquot Volume: _____(uL)

CONCENTRATION UNITS: (ug/L or ug/Kg) UG/KG

CAS NO.	COMPOUND	MDL	RL	CONC	Q
108-88-3	Toluene	0.86	10		U
120-82-1	1,2,4-Trichlorobenzene	0.18	10		U
71-55-6	1,1,1-Trichloroethane	0.90	10		U
79-00-5	1,1,2-Trichloroethane	0.35	10		U
79-01-6	Trichloroethene	0.85	10		U
76-13-1	Trichlorotrifluoroethane	0.55	10		U
75-69-4	Trichlorofluoromethane	0.96	10		U
75-01-4	Vinyl chloride	1.1	10		U
1330-20-7	Xylene(total)	0.70	10		U

RW 4/14/09

FORM 1
VOLATILE ORGANICS ANALYSIS DATA SHEET

CLIENT SAMPLE NO. 21

MR08-SS284-09A

Lab Name: EMPIRICAL LABS Contract: CH2MHILL

Lab Code: NA Case No.: NA SAS No.: NA SDG No.: LEJEUNE050

Matrix: (soil/water) SOIL Lab Sample ID: 0901103-21

Sample wt/vol: 5.1 (g/mL) G Lab File ID: 0110321A

Level: (low/med) LOW Date Sampled: 01/13/09 16:00

% Moisture: not dec. 18 Date Analyzed: 01/20/09 19:02

GC Column: RTX-VRX ID: 0.25 (mm) Dilution Factor: 1.0

Soil Extract Volume:_____(uL) Soil Aliquot Volume: _____(uL)

CONCENTRATION UNITS: (ug/L or ug/Kg) UG/KG

CAS NO.	COMPOUND	MDL	RL	CONC	Q
67-64-1	Acetone	2.4	12	65	~~B~~ J CH
71-43-2	Benzene	0.56	12		U
75-27-4	Bromodichloromethane	0.36	12		U
75-25-2	Bromoform	1.2	12		U
74-83-9	Bromomethane	0.85	12		U
78-93-3	2-Butanone	1.7	12		U
75-15-0	Carbon disulfide	1.5	12		U
56-23-5	Carbon tetrachloride	1.0	12		U
108-90-7	Chlorobenzene	0.40	12		U
75-00-3	Chloroethane	1.3	12		U
67-66-3	Chloroform	0.65	12		U
74-87-3	Chloromethane	0.62	12		U
110-82-7	Cyclohexane	0.64	12		U
124-48-1	Dibromochloromethane	0.40	12		U
96-12-8	1,2-Dibromo-3-chloropropane	1.4	5.9		U
106-93-4	1,2-Dibromoethane	0.51	12		U
95-50-1	1,2-Dichlorobenzene	0.44	12		U
541-73-1	1,3-Dichlorobenzene	1.00	12		U
106-46-7	1,4-Dichlorobenzene	0.65	12		U
75-71-8	Dichlorodifluoromethane	1.3	12		U
75-34-3	1,1-Dichloroethane	0.64	12		U
107-06-2	1,2-Dichloroethane	0.54	12		U
75-35-4	1,1-Dichloroethene	1.4	12		U
156-59-2	cis-1,2-Dichloroethene	1.4	12		U
156-60-5	trans-1,2-Dichloroethene	1.3	12		U
78-87-5	1,2-Dichloropropane	0.54	12		U
10061-01-5	cis-1,3-Dichloropropene	0.59	12		U
10061-02-6	trans-1,3-Dichloropropene	0.38	12		U
100-41-4	Ethylbenzene	0.89	12		U
591-78-6	2-Hexanone	2.7	12		U
98-82-8	Isopropylbenzene	1.0	12		U
79-20-9	Methyl acetate	1.9	12		U
75-09-2	Methylene chloride	0.74	12	12 J	~~8.2 JB CH~~ B
108-87-2	Methyl cyclohexane	0.36	12		U
1634-04-4	Methyl tert-butyl ether	0.38	12		U
108-10-1	4-Methyl-2-pentanone	0.69	12		U
100-42-5	Styrene	0.42	12		U
79-34-5	1,1,2,2-Tetrachloroethane	0.51	12		U
127-18-4	Tetrachloroethene	1.2	12		U

FORM I VOA

MW 4/14/09

FORM 1
VOLATILE ORGANICS ANALYSIS DATA SHEET

CLIENT SAMPLE NO. 21

MR08-SS284-09A

Lab Name: EMPIRICAL LABS Contract: CH2MHILL

Lab Code: NA Case No.: NA SAS No.: NA SDG No.: LEJEUNE050

Matrix: (soil/water) SOIL Lab Sample ID: 0901103-21

Sample wt/vol: 5.1 (g/mL) G Lab File ID: 0110321A

Level: (low/med) LOW Date Sampled: 01/13/09 16:00

% Moisture: not dec. 18 Date Analyzed: 01/20/09 19:02

GC Column: RTX-VRX ID: 0.25 (mm) Dilution Factor: 1.0

Soil Extract Volume:_____(uL) Soil Aliquot Volume: _____(uL)

CONCENTRATION UNITS: (ug/L or ug/Kg) UG/KG

CAS NO.	COMPOUND	MDL	RL	CONC	Q
108-88-3	Toluene	1.0	12		U
120-82-1	1,2,4-Trichlorobenzene	0.21	12		U
71-55-6	1,1,1-Trichloroethane	1.1	12		U
79-00-5	1,1,2-Trichloroethane	0.42	12		U
79-01-6	Trichloroethene	1.0	12		U
76-13-1	Trichlorotrifluoroethane	0.65	12		U
75-69-4	Trichlorofluoromethane	1.1	12		U
75-01-4	Vinyl chloride	1.3	12		U
1330-20-7	Xylene(total)	0.83	12		U

JCW 4/4/09

FORM 1
VOLATILE ORGANICS ANALYSIS DATA SHEET

CLIENT SAMPLE NO. 22

MR08-IS28
4-6-7-09A

Lab Name: EMPIRICAL LABS Contract: CH2MHILL

Lab Code: NA Case No.: NA SAS No.: NA SDG No.: LEJEUNE050

Matrix: (soil/water) SOIL Lab Sample ID: 0901103-22

Sample wt/vol: 4.2 (g/mL) G Lab File ID: 0110322A

Level: (low/med) LOW Date Sampled: 01/13/09 16:20

% Moisture: not dec. 10 Date Analyzed: 01/20/09 19:33

GC Column: RTX-VRX ID: 0.25 (mm) Dilution Factor: 1.0

Soil Extract Volume:_____(uL) Soil Aliquot Volume: _____(uL)

CONCENTRATION UNITS: (ug/L or ug/Kg) UG/KG

CAS NO.	COMPOUND	MDL	RL	CONC	Q
67-64-1	Acetone	2.7	13	13UJ ~~8.1~~ ~~JB~~CCH	BC
71-43-2	Benzene	0.63	13		U
75-27-4	Bromodichloromethane	0.40	13		U
75-25-2	Bromoform	1.3	13		U
74-83-9	Bromomethane	0.96	13		U
78-93-3	2-Butanone	1.9	13		U
75-15-0	Carbon disulfide	1.7	13		U
56-23-5	Carbon tetrachloride	1.2	13		U
108-90-7	Chlorobenzene	0.46	13		U
75-00-3	Chloroethane	1.5	13		U
67-66-3	Chloroform	0.74	13		U
74-87-3	Chloromethane	0.70	13		U
110-82-7	Cyclohexane	0.72	13		U
124-48-1	Dibromochloromethane	0.46	13		U
96-12-8	1,2-Dibromo-3-chloropropane	1.6	6.7		U
106-93-4	1,2-Dibromoethane	0.58	13		U
95-50-1	1,2-Dichlorobenzene	0.50	13		U
541-73-1	1,3-Dichlorobenzene	1.1	13		U
106-46-7	1,4-Dichlorobenzene	0.74	13		U
75-71-8	Dichlorodifluoromethane	1.5	13		U
75-34-3	1,1-Dichloroethane	0.72	13		U
107-06-2	1,2-Dichloroethane	0.62	13		U
75-35-4	1,1-Dichloroethene	1.6	13		U
156-59-2	cis-1,2-Dichloroethene	1.6	13		U
156-60-5	trans-1,2-Dichloroethene	1.5	13		U
78-87-5	1,2-Dichloropropane	0.62	13		U
10061-01-5	cis-1,3-Dichloropropene	0.67	13		U
10061-02-6	trans-1,3-Dichloropropene	0.43	13		U
100-41-4	Ethylbenzene	1.0	13		U
591-78-6	2-Hexanone	3.1	13		U
98-82-8	Isopropylbenzene	1.2	13		U
79-20-9	Methyl acetate	2.1	13		U
75-09-2	Methylene chloride	0.83	13	13UJ ~~1.9~~ ~~JB~~ CCH	B
108-87-2	Methyl cyclohexane	0.40	13		U
1634-04-4	Methyl tert-butyl ether	0.43	13		U
108-10-1	4-Methyl-2-pentanone	0.78	13		U
100-42-5	Styrene	0.47	13		U
79-34-5	1,1,2,2-Tetrachloroethane	0.58	13		U
127-18-4	Tetrachloroethene	1.3	13		U

FORM I VOA

kew
4/4/09

FORM 1
VOLATILE ORGANICS ANALYSIS DATA SHEET

CLIENT SAMPLE NO.

MR08-IS28
4-6-7-09A

22

Lab Name: EMPIRICAL LABS Contract: CH2MHILL

Lab Code: NA Case No.: NA SAS No.: NA SDG No.: LEJEUNE050

Matrix: (soil/water) SOIL Lab Sample ID: 0901103-22

Sample wt/vol: 4.2 (g/mL) G Lab File ID: 0110322A

Level: (low/med) LOW Date Sampled: 01/13/09 16:20

% Moisture: not dec. 10 Date Analyzed: 01/20/09 19:33

GC Column: RTX-VRX ID: 0.25 (mm) Dilution Factor: 1.0

Soil Extract Volume:_____(uL) Soil Aliquot Volume: _____(uL)

CONCENTRATION UNITS: (ug/L or ug/Kg) UG/KG

CAS NO.	COMPOUND	MDL	RL	CONC	Q
108-88-3	Toluene	1.2	13		U
120-82-1	1,2,4-Trichlorobenzene	0.24	13		U
71-55-6	1,1,1-Trichloroethane	1.2	13		U
79-00-5	1,1,2-Trichloroethane	0.47	13		U
79-01-6	Trichloroethene	1.1	13		U
76-13-1	Trichlorotrifluoroethane	0.74	13		U
75-69-4	Trichlorofluoromethane	1.3	13		U
75-01-4	Vinyl chloride	1.5	13		U
1330-20-7	Xylene(total)	0.94	13		U

lee
4/4/09

FORM 1
VOLATILE ORGANICS ANALYSIS DATA SHEET

CLIENT SAMPLE NO. 23

MR08-SS285-09A

Lab Name: EMPIRICAL LABS Contract: CH2MHILL

Lab Code: NA Case No.: NA SAS No.: NA SDG No.: LEJEUNE050

Matrix: (soil/water) SOIL Lab Sample ID: 0901103-23

Sample wt/vol: 4.3 (g/mL) G Lab File ID: 0110323B

Level: (low/med) LOW Date Sampled: 01/13/09 16:40

% Moisture: not dec. 23 Date Analyzed: 01/21/09 12:45

GC Column: RTX-VRX ID: 0.25 (mm) Dilution Factor: 1.0

Soil Extract Volume:_____(uL) Soil Aliquot Volume: _____(uL)

CONCENTRATION UNITS: (ug/L or ug/Kg) UG/KG

CAS NO.	COMPOUND	MDL	RL	CONC	Q
67-64-1	Acetone	3.0	15	82	~~B~~
71-43-2	Benzene	0.70	15		U
75-27-4	Bromodichloromethane	0.45	15		U
75-25-2	Bromoform	1.5	15		U
74-83-9	Bromomethane	1.1	15		U
78-93-3	2-Butanone	2.1	15		U
75-15-0	Carbon disulfide	2.0	15		U
56-23-5	Carbon tetrachloride	1.3	15		U
108-90-7	Chlorobenzene	0.51	15		U
75-00-3	Chloroethane	1.6	15		U
67-66-3	Chloroform	0.82	15		U
74-87-3	Chloromethane	0.78	15		U
110-82-7	Cyclohexane	0.81	15	1.3	J
124-48-1	Dibromochloromethane	0.51	15		U
96-12-8	1,2-Dibromo-3-chloropropane	1.8	7.5		U
106-93-4	1,2-Dibromoethane	0.64	15		U
95-50-1	1,2-Dichlorobenzene	0.56	15		U
541-73-1	1,3-Dichlorobenzene	1.3	15		U
106-46-7	1,4-Dichlorobenzene	0.82	15		U
75-71-8	Dichlorodifluoromethane	1.6	15		U
75-34-3	1,1-Dichloroethane	0.81	15		U
107-06-2	1,2-Dichloroethane	0.69	15		U
75-35-4	1,1-Dichloroethene	1.8	15		U
156-59-2	cis-1,2-Dichloroethene	1.8	15		U
156-60-5	trans-1,2-Dichloroethene	1.6	15		U
78-87-5	1,2-Dichloropropane	0.69	15		U
10061-01-5	cis-1,3-Dichloropropene	0.75	15		U
10061-02-6	trans-1,3-Dichloropropene	0.48	15		U
100-41-4	Ethylbenzene	1.1	15		U
591-78-6	2-Hexanone	3.4	15		U
98-82-8	Isopropylbenzene	1.3	15		U
79-20-9	Methyl acetate	2.4	15		U
75-09-2	Methylene chloride	0.93	15	15u ~~2.1~~	~~JB~~ B
108-87-2	Methyl cyclohexane	0.45	15	0.72	J
1634-04-4	Methyl tert-butyl ether	0.48	15		U
108-10-1	4-Methyl-2-pentanone	0.87	15		U
100-42-5	Styrene	0.52	15		U
79-34-5	1,1,2,2-Tetrachloroethane	0.64	15		U
127-18-4	Tetrachloroethene	1.4	15		U

CW 4/4/09

FORM 1
VOLATILE ORGANICS ANALYSIS DATA SHEET

CLIENT SAMPLE NO. 23

MR08-SS285-09A

Lab Name: EMPIRICAL LABS Contract: CH2MHILL

Lab Code: NA Case No.: NA SAS No.: NA SDG No.: LEJEUNE050

Matrix: (soil/water) SOIL Lab Sample ID: 0901103-23

Sample wt/vol: 4.3 (g/mL) G Lab File ID: 0110323B

Level: (low/med) LOW Date Sampled: 01/13/09 16:40

% Moisture: not dec. 23 Date Analyzed: 01/21/09 12:45

GC Column: RTX-VRX ID: 0.25 (mm) Dilution Factor: 1.0

Soil Extract Volume:_____(uL) Soil Aliquot Volume: _____(uL)

CONCENTRATION UNITS: (ug/L or ug/Kg) UG/KG

CAS NO.	COMPOUND	MDL	RL	CONC	Q
108-88-3	Toluene	1.3	15		U
120-82-1	1,2,4-Trichlorobenzene	0.27	15		U
71-55-6	1,1,1-Trichloroethane	1.4	15		U
79-00-5	1,1,2-Trichloroethane	0.52	15		U
79-01-6	Trichloroethene	1.3	15		U
76-13-1	Trichlorotrifluoroethane	0.82	15		U
75-69-4	Trichlorofluoromethane	1.4	15		U
75-01-4	Vinyl chloride	1.6	15		U
1330-20-7	Xylene(total)	1.0	15		U

RLW 4/4/09

FORM 1
VOLATILE ORGANICS ANALYSIS DATA SHEET

CLIENT SAMPLE NO. 24

MR08-IS28
5-8-9-09A

Lab Name: EMPIRICAL LABS Contract: CH2MHILL

Lab Code: NA Case No.: NA SAS No.: NA SDG No.: LEJEUNE050

Matrix: (soil/water) SOIL Lab Sample ID: 0901103-24

Sample wt/vol: 4.9 (g/mL) G Lab File ID: 0110324A

Level: (low/med) LOW Date Sampled: 01/13/09 16:55

% Moisture: not dec. 8 Date Analyzed: 01/20/09 20:35

GC Column: RTX-VRX ID: 0.25 (mm) Dilution Factor: 1.0

Soil Extract Volume:_____(uL) Soil Aliquot Volume: _____(uL)

CONCENTRATION UNITS: (ug/L or ug/Kg) UG/KG

CAS NO.	COMPOUND	MDL	RL	CONC	Q
67-64-1	Acetone	2.2	11	11UJ ~~7.8~~	~~JB~~ CCH B
71-43-2	Benzene	0.52	11		U
75-27-4	Bromodichloromethane	0.33	11		U
75-25-2	Bromoform	1.1	11		U
74-83-9	Bromomethane	0.80	11		U
78-93-3	2-Butanone	1.6	11		U
75-15-0	Carbon disulfide	1.4	11		U
56-23-5	Carbon tetrachloride	0.98	11		U
108-90-7	Chlorobenzene	0.38	11		U
75-00-3	Chloroethane	1.2	11		U
67-66-3	Chloroform	0.61	11		U
74-87-3	Chloromethane	0.58	11		U
110-82-7	Cyclohexane	0.60	11	0.88	J
124-48-1	Dibromochloromethane	0.38	11		U
96-12-8	1,2-Dibromo-3-chloropropane	1.3	5.6		U
106-93-4	1,2-Dibromoethane	0.48	11		U
95-50-1	1,2-Dichlorobenzene	0.41	11		U
541-73-1	1,3-Dichlorobenzene	0.93	11		U
106-46-7	1,4-Dichlorobenzene	0.61	11		U
75-71-8	Dichlorodifluoromethane	1.2	11		U
75-34-3	1,1-Dichloroethane	0.60	11		U
107-06-2	1,2-Dichloroethane	0.51	11		U
75-35-4	1,1-Dichloroethene	1.3	11		U
156-59-2	cis-1,2-Dichloroethene	1.3	11		U
156-60-5	trans-1,2-Dichloroethene	1.2	11		U
78-87-5	1,2-Dichloropropane	0.51	11		U
10061-01-5	cis-1,3-Dichloropropene	0.56	11		U
10061-02-6	trans-1,3-Dichloropropene	0.36	11		U
100-41-4	Ethylbenzene	0.83	11		U
591-78-6	2-Hexanone	2.6	11		U
98-82-8	Isopropylbenzene	0.98	11		U
79-20-9	Methyl acetate	1.8	11		U
75-09-2	Methylene chloride	0.69	11	11UJ ~~3.1~~	~~JB~~CCH B
108-87-2	Methyl cyclohexane	0.33	11	0.61	J
1634-04-4	Methyl tert-butyl ether	0.36	11		U
108-10-1	4-Methyl-2-pentanone	0.64	11		U
100-42-5	Styrene	0.39	11		U
79-34-5	1,1,2,2-Tetrachloroethane	0.48	11		U
127-18-4	Tetrachloroethene	1.1	11		U

FORM I VOA

MW 4/14/09

FORM 1
VOLATILE ORGANICS ANALYSIS DATA SHEET

CLIENT SAMPLE NO.

MR08-IS28
5-8-9-09A

24

Lab Name: EMPIRICAL LABS Contract: CH2MHILL

Lab Code: NA Case No.: NA SAS No.: NA SDG No.: LEJEUNE050

Matrix: (soil/water) SOIL Lab Sample ID: 0901103-24

Sample wt/vol: 4.9 (g/mL) G Lab File ID: 0110324A

Level: (low/med) LOW Date Sampled: 01/13/09 16:55

% Moisture: not dec. 8 Date Analyzed: 01/20/09 20:35

GC Column: RTX-VRX ID: 0.25 (mm) Dilution Factor: 1.0

Soil Extract Volume:_____(uL) Soil Aliquot Volume: _____(uL)

CONCENTRATION UNITS: (ug/L or ug/Kg) UG/KG

CAS NO.	COMPOUND	MDL	RL	CONC	Q
108-88-3	Toluene	0.95	11	11u ~~1.3~~	~~J~~
120-82-1	1,2,4-Trichlorobenzene	0.20	11		U
71-55-6	1,1,1-Trichloroethane	1.00	11		U
79-00-5	1,1,2-Trichloroethane	0.39	11		U
79-01-6	Trichloroethene	0.94	11		U
76-13-1	Trichlorotrifluoroethane	0.61	11		U
75-69-4	Trichlorofluoromethane	1.0	11		U
75-01-4	Vinyl chloride	1.2	11		U
1330-20-7	Xylene(total)	0.78	11		U

BL

FORM I VOA

fcw
4/4/09

FORM 1
VOLATILE ORGANICS ANALYSIS DATA SHEET

CLIENT SAMPLE NO. 25

MR08-EB01
011309-SS

Lab Name: EMPIRICAL LABS Contract: CH2MHILL

Lab Code: NA Case No.: NA SAS No.: NA SDG No.: LEJEUNE050

Matrix: (soil/water) WATER Lab Sample ID: 0901103-25

Sample wt/vol: 5.000 (g/mL) ML Lab File ID: 0110325

Level: (low/med) LOW Date Sampled: 01/13/09 10:00

% Moisture: not dec. _____ Date Analyzed: 01/16/09 23:22

GC Column: RTX-VRX ID: 0.25 (mm) Dilution Factor: 1.0

Soil Extract Volume:_____(uL) Soil Aliquot Volume: _____(uL)

CONCENTRATION UNITS: (ug/L or ug/Kg) UG/L

CAS NO.	COMPOUND	MDL	RL	CONC	Q
67-64-1	Acetone	0.84	2.5		U
71-43-2	Benzene	0.11	1.0		U
75-27-4	Bromodichloromethane	0.10	1.0		U
75-25-2	Bromoform	0.10	1.0		U
74-83-9	Bromomethane	0.32	1.0		~~U~~ UJ CQ
78-93-3	2-Butanone	1.0	3.0		U
75-15-0	Carbon disulfide	0.13	1.0		U
56-23-5	Carbon tetrachloride	0.15	1.0		U
108-90-7	Chlorobenzene	0.10	1.0		U
75-00-3	Chloroethane	0.18	1.0		U
67-66-3	Chloroform	0.11	1.0		U
74-87-3	Chloromethane	0.29	1.0		U
110-82-7	Cyclohexane	0.20	1.0		U
124-48-1	Dibromochloromethane	0.10	1.0		U
96-12-8	1,2-Dibromo-3-chloropropane	0.11	1.0		U
106-93-4	1,2-Dibromoethane	0.10	1.0		U
95-50-1	1,2-Dichlorobenzene	0.10	1.0		U
541-73-1	1,3-Dichlorobenzene	0.13	1.0		U
106-46-7	1,4-Dichlorobenzene	0.10	1.0		U
75-71-8	Dichlorodifluoromethane	0.22	1.0		U
75-34-3	1,1-Dichloroethane	0.12	1.0		U
107-06-2	1,2-Dichloroethane	0.10	1.0		U
75-35-4	1,1-Dichloroethene	0.15	1.0		U
156-59-2	cis-1,2-Dichloroethene	0.13	1.0		U
156-60-5	trans-1,2-Dichloroethene	0.13	1.0		U
78-87-5	1,2-Dichloropropane	0.10	1.0		U
10061-01-5	cis-1,3-Dichloropropene	0.11	1.0		U
10061-02-6	trans-1,3-Dichloropropene	0.10	1.0		U
100-41-4	Ethylbenzene	0.13	1.0		U
591-78-6	2-Hexanone	0.30	1.0		U
98-82-8	Isopropylbenzene	0.15	1.0		U
79-20-9	Methyl acetate	0.30	1.0		U
75-09-2	Methylene chloride	0.14	1.0	1.0 u ~~0.66~~ ~~JB~~	B
108-87-2	Methyl cyclohexane	0.17	1.0		U
1634-04-4	Methyl tert-butyl ether	0.10	1.0		U
108-10-1	4-Methyl-2-pentanone	0.29	1.0		U
100-42-5	Styrene	0.10	1.0		U
79-34-5	1,1,2,2-Tetrachloroethane	0.10	1.0		U
127-18-4	Tetrachloroethene	0.15	1.0		U

FORM I VOA

fw 4/14/09

FORM 1
VOLATILE ORGANICS ANALYSIS DATA SHEET

CLIENT SAMPLE NO. 25

MR08-EB01
011309-SS

Lab Name: EMPIRICAL LABS Contract: CH2MHILL

Lab Code: NA Case No.: NA SAS No.: NA SDG No.: LEJEUNE050

Matrix: (soil/water) WATER Lab Sample ID: 0901103-25

Sample wt/vol: 5.000 (g/mL) ML Lab File ID: 0110325

Level: (low/med) LOW Date Sampled: 01/13/09 10:00

% Moisture: not dec. _____ Date Analyzed: 01/16/09 23:22

GC Column: RTX-VRX ID: 0.25 (mm) Dilution Factor: 1.0

Soil Extract Volume:_____(uL) Soil Aliquot Volume: _____(uL)

CONCENTRATION UNITS: (ug/L or ug/Kg) UG/L

CAS NO.	COMPOUND	MDL	RL	CONC	Q
108-88-3	Toluene	0.10	1.0	16	
120-82-1	1,2,4-Trichlorobenzene	0.10	1.0		U
71-55-6	1,1,1-Trichloroethane	0.17	1.0		U
79-00-5	1,1,2-Trichloroethane	0.10	1.0		U
79-01-6	Trichloroethene	0.13	1.0		U
76-13-1	Trichlorotrifluoroethane	0.18	1.0		U
75-69-4	Trichlorofluoromethane	0.17	1.0		U
75-01-4	Vinyl chloride	0.18	1.0		U
1330-20-7	Xylene(total)	0.22	1.0		U

MW
9/4/09

FORM 1
VOLATILE ORGANICS ANALYSIS DATA SHEET

CLIENT SAMPLE NO.

MR08-TB01011309 26

Lab Name: EMPIRICAL LABS Contract: CH2MHILL

Lab Code: NA Case No.: NA SAS No.: NA SDG No.: LEJEUNE050

Matrix: (soil/water) WATER Lab Sample ID: 0901103-26

Sample wt/vol: 5.000 (g/mL) ML Lab File ID: 0110326

Level: (low/med) LOW Date Sampled: 01/13/09 10:30

% Moisture: not dec. _____ Date Analyzed: 01/16/09 21:53

GC Column: RTX-VRX ID: 0.25 (mm) Dilution Factor: 1.0

Soil Extract Volume:_____(uL) Soil Aliquot Volume: _____(uL)

CONCENTRATION UNITS: (ug/L or ug/Kg) UG/L

CAS NO.	COMPOUND	MDL	RL	CONC	Q	
67-64-1	Acetone	0.84	2.5		U	
71-43-2	Benzene	0.11	1.0		U	
75-27-4	Bromodichloromethane	0.10	1.0		U	
75-25-2	Bromoform	0.10	1.0		U	
74-83-9	Bromomethane	0.32	1.0		~~U~~ UJ	CC
78-93-3	2-Butanone	1.0	3.0		U	
75-15-0	Carbon disulfide	0.13	1.0		U	
56-23-5	Carbon tetrachloride	0.15	1.0		U	
108-90-7	Chlorobenzene	0.10	1.0		U	
75-00-3	Chloroethane	0.18	1.0		U	
67-66-3	Chloroform	0.11	1.0		U	
74-87-3	Chloromethane	0.29	1.0		U	
110-82-7	Cyclohexane	0.20	1.0		U	
124-48-1	Dibromochloromethane	0.10	1.0		U	
96-12-8	1,2-Dibromo-3-chloropropane	0.11	1.0		U	
106-93-4	1,2-Dibromoethane	0.10	1.0		U	
95-50-1	1,2-Dichlorobenzene	0.10	1.0		U	
541-73-1	1,3-Dichlorobenzene	0.13	1.0		U	
106-46-7	1,4-Dichlorobenzene	0.10	1.0		U	
75-71-8	Dichlorodifluoromethane	0.22	1.0		U	
75-34-3	1,1-Dichloroethane	0.12	1.0		U	
107-06-2	1,2-Dichloroethane	0.10	1.0		U	
75-35-4	1,1-Dichloroethene	0.15	1.0		U	
156-59-2	cis-1,2-Dichloroethene	0.13	1.0		U	
156-60-5	trans-1,2-Dichloroethene	0.13	1.0		U	
78-87-5	1,2-Dichloropropane	0.10	1.0		U	
10061-01-5	cis-1,3-Dichloropropene	0.11	1.0		U	
10061-02-6	trans-1,3-Dichloropropene	0.10	1.0		U	
100-41-4	Ethylbenzene	0.13	1.0		U	
591-78-6	2-Hexanone	0.30	1.0		U	
98-82-8	Isopropylbenzene	0.15	1.0		U	
79-20-9	Methyl acetate	0.30	1.0		U	
75-09-2	Methylene chloride	0.14	1.0	1.0 ~~0.66~~ ~~JB~~		BL
108-87-2	Methyl cyclohexane	0.17	1.0		U	
1634-04-4	Methyl tert-butyl ether	0.10	1.0		U	
108-10-1	4-Methyl-2-pentanone	0.29	1.0		U	
100-42-5	Styrene	0.10	1.0		U	
79-34-5	1,1,2,2-Tetrachloroethane	0.10	1.0		U	
127-18-4	Tetrachloroethene	0.15	1.0		U	

FORM I VOA

RW 4/14/09

FORM 1
VOLATILE ORGANICS ANALYSIS DATA SHEET

CLIENT SAMPLE NO.

MR08-TB01011309

26

Lab Name: EMPIRICAL LABS Contract: CH2MHILL

Lab Code: NA Case No.: NA SAS No.: NA SDG No.: LEJEUNE050

Matrix: (soil/water) WATER Lab Sample ID: 0901103-26

Sample wt/vol: 5.000 (g/mL) ML Lab File ID: 0110326

Level: (low/med) LOW Date Sampled: 01/13/09 10:30

% Moisture: not dec. _____ Date Analyzed: 01/16/09 21:53

GC Column: RTX-VRX ID: 0.25 (mm) Dilution Factor: 1.0

Soil Extract Volume:_____(uL) Soil Aliquot Volume: _____(uL)

CONCENTRATION UNITS: (ug/L or ug/Kg) UG/L

CAS NO.	COMPOUND	MDL	RL	CONC	Q
108-88-3	Toluene	0.10	1.0		U
120-82-1	1,2,4-Trichlorobenzene	0.10	1.0		U
71-55-6	1,1,1-Trichloroethane	0.17	1.0		U
79-00-5	1,1,2-Trichloroethane	0.10	1.0		U
79-01-6	Trichloroethene	0.13	1.0		U
76-13-1	Trichlorotrifluoroethane	0.18	1.0		U
75-69-4	Trichlorofluoromethane	0.17	1.0		U
75-01-4	Vinyl chloride	0.18	1.0		U
1330-20-7	Xylene(total)	0.22	1.0		U

lw
9/4/09

ENVIRONMENTAL
Data Services, Inc.

VOLATILE ORGANIC COMPOUNDS
USEPA Region IV - Level IV Review

Site: MCB Camp Lejeune, TO-09 SDG #: LEJEUNE051

Client: CH2M HILL, Inc., Virginia Beach, Virginia Date: April 4, 2009

Laboratory: Empirical Laboratories, Nashville, Tennessee Reviewer: Nancy Weaver

EDS ID	Client Sample ID	Laboratory Sample ID	Matrix
1	MR08-SS271-09A	0901145-01	Soil
2	MR08-IS271-4-5-09A	0901145-02	Soil
3	MR08-SS270-09A	0901145-03	Soil
4	MR08-IS270-9-10-09A	0901145-04	Soil
5	MR08-SS269-09A	0901145-05	Soil
6	MR08-SS269D-09A	0901145-06	Soil
7	MR08-IS269-7-8-09A	0901145-07	Soil
8	MR08-IS269D-8-7-09A	0901145-08	Soil
9	MR08-IS268-7-8-09A	0901145-09	Soil
9MS	MR08-IS268-7-8-09AMS	0901145-09MS	Soil
9MSD	MR08-IS268-7-8-09AMSD	0901145-09MSD	Soil
10	MR08-SS268-09A	0901145-10	Soil
10MS	MR08-SS268-09AMS	0901145-10MS	Soil
10MSD	MR08-SS268-09AMSD	0901145-10MSD	Soil
11	MR08-SS267-09A	0901145-11	Soil
12	MR08-IS267-7-8-09A	0901145-12	Soil
13	MR08-EB012009	0901145-13	Water
14	MR08-IS236-7-8-09A	0901145-14	Soil
15	MR08-SS236-09A	0901145-15	Soil
16	MR08-SS222-09A	0901145-16	Soil
17	MR08-IS222-4-5-09A	0901145-17	Soil
18	MR08-IS223-4-5-09A	0901145-18	Soil
19	MR08-SS223-09A	0901145-19	Soil
20	MR08-IS212-4-5-09A	0901145-20	Soil
21	MR08-SS212-09A	0901145-21	Soil
22	MR08-IS213-4-5-09A	0901145-22	Soil
23	MR08-SS213-09A	0901145-23	Soil
24	MR08-TB012009	0901145-24	Water
25	MR08-TB012109	0901145-25	Water

The USEPA "Contract Laboratory Program National Functional Guidelines for Organic Data Review," October 1999, and professional judgement were used in evaluating the data in this summary report.

Holding Times - All samples were analyzed within 14 days for preserved water and soil samples.

GC/MS Tuning - All of the BFB tunes in the initial and continuing calibrations met the percent relative abundance criteria.

Initial Calibration - The initial calibrations exhibited acceptable %RSD and mean RRF values.

Continuing Calibration - The continuing calibrations exhibited acceptable %D and RRF values except the following.

CCAL Date	Compound	%D/RRF	Qualifier	Affected Samples
1/24/09	2-Butanone	53.9%	J/UJ	1-12, 14, 15
1/26/09	Acetone	36.7%	J/UJ	16
1/28/09	Bromomethane	30.1%	J/UJ	24, 25

Surrogates - All samples exhibited acceptable surrogate recoveries except the following.

Sample ID	Surrogate	%R	Qualifier
11	S1-Dibromofluoromethane	129%	J
14	S1-Dibromofluoromethane	None	All ND
16	S1-Dibromofluoromethane	126%	None - Already qualified due to CCAL
22	S1-Dibromofluoromethane	None	All ND

MS/MSD - The MS/MSD sample exhibited acceptable %R and RPD values except the following.

MS/MSD Sample ID	Compound	MS/MSD %R/RPD	Qualifier
9	Bromodichloromethane	133%/Ok/Ok	None - All ND
	Carbon disulfide	167%/Ok/Ok	None - All ND
	Chloroform	127%/Ok/Ok	None - All ND
	Chloromethane	133%/Ok/Ok	None - All ND
	Cyclohexane	144%/Ok/Ok	None - All ND
	Dibromochloromethane	132%/Ok/Ok	None - All ND
	1, 1-Dichloroethane	139%/Ok/Ok	None - All ND
	1, 2-Dichloroethane	130%/Ok/Ok	None - All ND
	1, 1-Dichloroethene	131%/Ok/Ok	None - All ND
	cis-1, 2-Dichloroethene	130%/Ok/Ok	None - All ND
	1, 2-Dichloropropane	126%/Ok/Ok	None - All ND
	cis-1, 3-Dichloropropene	138%/129%/Ok	None - All ND
	trans-1, 3-Dichloropropene	145%/139%/Ok	None - All ND
	Methyl tert-butyl ether	157%/Ok/Ok	None - All ND
	4-Methyl-2-pentanone	160%/167%/Ok	None - All ND
	1, 1, 2-Trichloroethane	126%/Ok/Ok	None - All ND
	Trichloroethene	128%/Ok/Ok	None - All ND

MS/MSD Sample ID	Compound	MS/MSD %R/RPD	Qualifier
10	Acetone	229%/238%/Ok	None - All ND
	Chlorobenzene	72%/60%/Ok	J/UJ
	Chloromethane	158%/145%/Ok	None - All ND
	1, 2-Dichlorobenzene	43%/32%/Ok	J/UJ
	1, 3-Dichlorobenzene	44%/34%/Ok	J/UJ
	1, 4-Dichlorobenzene	44%/34%/Ok	J/UJ
	Dichlorodifluoromethane	144%/137%/Ok	None - All ND
	1, 1-Dichloroethane	136%/128%/Ok	None - All ND
	1, 2-Dichloroethane	138%/128%/Ok	None - All ND
	1, 1-Dichloroethene	138%/Ok/Ok	None - All ND
	cis-1, 2-Dichloroethene	127%/Ok/Ok	None - All ND
	Ethylbenzene	74%/60%/Ok	J/UJ
	2-Hexanone	155%/Ok/Ok	None - All ND
	Isopropylbenzene	70%/54%/Ok	J/UJ
	Methylene chloride	143%/Ok/Ok	None - All ND
	Methyl cyclohexane	Ok/55%/Ok	J/UJ
	Methyl tert-butyl ether	185%/173%/Ok	None - All ND
	4-Methyl 2-pentanone	182%/157%/Ok	None - All ND
	Styrene	60%/49%/Ok	J/UJ
	Tetrachloroethene	Ok/58%/Ok	J/UJ
	1, 2, 4-Trichlorobenzene	22%/14%/41%	J/UJ
	Xylene	Ok/58%/Ok	U/UJ

Laboratory Control Sample - The LCS samples exhibited acceptable %R values.

Internal Standard (IS) Area Performance - All internal standards met response and retention time (RT) criteria.

Method Blank - The method blanks exhibited the following contamination.

Blank ID	Compound	Conc.	Action Level	Qualifier	Affected Samples
V5BLK0124	Acetone	6.1 ug/kg	61 ug/kg	U	4, 6, 7, 12, 14, 15
	2-Hexanone	3.5 ug/kg	17.5 ug/kg	None	All ND
	Methylene chloride	6.6 ug/kg	66 ug/kg	U	1-12, 14, 15
	4-Methyl-2-pentanone	1.1 ug/kg	5.5 ug/kg	None	All ND
	1, 2, 4-Trichlorobenzene	0.51 ug/kg	2.55 ug/kg	U	1-3
V5BLK0124E	2-Hexanone	2.4 ug/kg	12.0 ug/kg	None	All ND
	Methylene chloride	4.4 ug/kg	44 ug/kg	U	17-23
	1, 2, 4-Trichlorobenzene	0.33 ug/kg	1.65 ug/kg	None	All ND
V5BLK0126	Methylene chloride	3.1 ug/kg	31 ug/kg	U	16
	1, 2, 4-Trichlorobenzene	0.39 ug/kg	1.95 ug/kg	None	All ND
V3BLK0127	Methylene chloride	0.29 ug/L	2.9 ug/L	U	13
	1, 2, 4-Trichlorobenzene	0.20 ug/L	1.0 ug/L	None	All ND
V3BLK0128	Methylene chloride	0.41 ug/L	4.1 ug/L	U	24, 25
	1, 2, 4-Trichlorobenzene	0.18 ug/L	0.9 ug/L	U	24

Trip, Field, Equipment Blank - Field QC results are summarized below.

Blank ID	Compound	Conc. ug/L	Action Level ug/kg	Qualifier	Affected Samples
MR08-EB012009	Toluene	2.6	13	U	1, 11, 21
MR08FB012609	Acetone	1.4	14	U	17-19, 22
	Chlorobenzene	0.31	1.55	None	All ND
	Chloroform	0.12	0.60	None	All ND
MR08-TB012009	ND	-	-	-	-
MR08-TB012109	ND	-	-	-	-

Field Duplicates - Field duplicate results are summarized below.

Compound	MR08-SS269-09A ug/kg	MR08-SS269D-09A ug/kg	RPD	Qualifier
Acetone	94	51 U	NC	None
Butanone	12	12 U	NC	None
1, 2-Dibromo-3-chloropropane	5.5	6.1 U	NC	None

Compound	MR08-IS269-7-8-09A ug/kg	MR08-IS269D-8-7-09A ug/kg	RPD	Qualifier
None	ND	ND	-	-

Tentatively Identified Compounds (TICs) - TICs were not reported.

Compound Quantitation - No discrepancies were identified.

FORM 1
VOLATILE ORGANICS ANALYSIS DATA SHEET

CLIENT SAMPLE NO.

MR08-SS271-09A

Lab Name: EMPIRICAL LABS Contract: CH2MHILL

Lab Code: NA Case No.: NA SAS No.: NA SDG No.: LEJEUNE051

Matrix: (soil/water) SOIL Lab Sample ID: 0901145-01

Sample wt/vol: 4.8 (g/mL) G Lab File ID: 0114501A

Level: (low/med) LOW Date Sampled: 01/19/09 11:00

% Moisture: not dec. 5 Date Analyzed: 01/24/09 12:11

GC Column: RTX-VRX ID: 0.25 (mm) Dilution Factor: 1.0

Soil Extract Volume:_____(uL) Soil Aliquot Volume: _____(uL)

CONCENTRATION UNITS: (ug/L or ug/Kg) UG/KG

CAS NO.	COMPOUND	MDL	RL	CONC	Q
67-64-1	Acetone	2.2	11		U
71-43-2	Benzene	0.51	11	1.00	J
75-27-4	Bromodichloromethane	0.33	11		U
75-25-2	Bromoform	1.1	11		U
74-83-9	Bromomethane	0.78	11		U
78-93-3	2-Butanone	1.5	11		~~U~~ UJ CCH
75-15-0	Carbon disulfide	1.4	11		U
56-23-5	Carbon tetrachloride	0.96	11		U
108-90-7	Chlorobenzene	0.37	11		U
75-00-3	Chloroethane	1.2	11		U
67-66-3	Chloroform	0.60	11		U
74-87-3	Chloromethane	0.56	11		U
110-82-7	Cyclohexane	0.59	11		U
124-48-1	Dibromochloromethane	0.37	11		U
96-12-8	1,2-Dibromo-3-chloropropane	1.3	5.4		U
106-93-4	1,2-Dibromoethane	0.47	11		U
95-50-1	1,2-Dichlorobenzene	0.40	11		U
541-73-1	1,3-Dichlorobenzene	0.91	11		U
106-46-7	1,4-Dichlorobenzene	0.60	11		U
75-71-8	Dichlorodifluoromethane	1.2	11		U
75-34-3	1,1-Dichloroethane	0.59	11		U
107-06-2	1,2-Dichloroethane	0.50	11		U
75-35-4	1,1-Dichloroethene	1.3	11		U
156-59-2	cis-1,2-Dichloroethene	1.3	11		U
156-60-5	trans-1,2-Dichloroethene	1.2	11		U
78-87-5	1,2-Dichloropropane	0.50	11		U
10061-01-5	cis-1,3-Dichloropropene	0.54	11		U
10061-02-6	trans-1,3-Dichloropropene	0.35	11		U
100-41-4	Ethylbenzene	0.82	11	4.3	J
591-78-6	2-Hexanone	2.5	11		U
98-82-8	Isopropylbenzene	0.96	11		U
79-20-9	Methyl acetate	1.7	11		U
75-09-2	Methylene chloride	0.67	11	11U ~~1.8~~ ~~JB~~	B1
108-87-2	Methyl cyclohexane	0.33	11	0.38	J
1634-04-4	Methyl tert-butyl ether	0.35	11		U
108-10-1	4-Methyl-2-pentanone	0.63	11		U
100-42-5	Styrene	0.38	11		U
79-34-5	1,1,2,2-Tetrachloroethane	0.47	11		U
127-18-4	Tetrachloroethene	1.0	11		U

FORM I VOA

NW
4/14/09

FORM 1
VOLATILE ORGANICS ANALYSIS DATA SHEET

CLIENT SAMPLE NO.

MR08-SS271-09A

Lab Name: EMPIRICAL LABS Contract: CH2MHILL

Lab Code: NA Case No.: NA SAS No.: NA SDG No.: LEJEUNE051

Matrix: (soil/water) SOIL Lab Sample ID: 0901145-01

Sample wt/vol: 4.8 (g/mL) G Lab File ID: 0114501A

Level: (low/med) LOW Date Sampled: 01/19/09 11:00

% Moisture: not dec. 5 Date Analyzed: 01/24/09 12:11

GC Column: RTX-VRX ID: 0.25 (mm) Dilution Factor: 1.0

Soil Extract Volume:_____(uL) Soil Aliquot Volume: _____(uL)

CONCENTRATION UNITS: (ug/L or ug/Kg) UG/KG

CAS NO.	COMPOUND	MDL	RL	CONC	Q	
108-88-3	Toluene	0.94	11	114 ~~2.6~~	~~J~~	BL
120-82-1	1,2,4-Trichlorobenzene	0.20	11	114 ~~0.34~~	~~JB~~	BL
71-55-6	1,1,1-Trichloroethane	0.98	11		U	
79-00-5	1,1,2-Trichloroethane	0.38	11		U	
79-01-6	Trichloroethene	0.92	11		U	
76-13-1	Trichlorotrifluoroethane	0.60	11		U	
75-69-4	Trichlorofluoromethane	1.0	11		U	
75-01-4	Vinyl chloride	1.2	11		U	
1330-20-7	Xylene(total)	0.76	11		U	

MW
4/4/09

FORM 1
VOLATILE ORGANICS ANALYSIS DATA SHEET

CLIENT SAMPLE NO. 2

MR08-IS27
1-4-5-09A

Lab Name: EMPIRICAL LABS Contract: CH2MHILL

Lab Code: NA Case No.: NA SAS No.: NA SDG No.: LEJEUNE051

Matrix: (soil/water) SOIL Lab Sample ID: 0901145-02

Sample wt/vol: 4.4 (g/mL) G Lab File ID: 0114502A

Level: (low/med) LOW Date Sampled: 01/19/09 11:20

% Moisture: not dec. 5 Date Analyzed: 01/24/09 12:42

GC Column: RTX-VRX ID: 0.25 (mm) Dilution Factor: 1.0

Soil Extract Volume:_____(uL) Soil Aliquot Volume: _____(uL)

CONCENTRATION UNITS: (ug/L or ug/Kg) UG/KG

CAS NO.	COMPOUND	MDL	RL	CONC	Q	
67-64-1	Acetone	2.4	12		U	
71-43-2	Benzene	0.56	12		U	
75-27-4	Bromodichloromethane	0.36	12		U	
75-25-2	Bromoform	1.2	12		U	
74-83-9	Bromomethane	0.86	12		U	
78-93-3	2-Butanone	1.7	12		~~U~~ UJ	CCH
75-15-0	Carbon disulfide	1.6	12		U	
56-23-5	Carbon tetrachloride	1.0	12		U	
108-90-7	Chlorobenzene	0.41	12		U	
75-00-3	Chloroethane	1.3	12		U	
67-66-3	Chloroform	0.66	12		U	
74-87-3	Chloromethane	0.62	12		U	
110-82-7	Cyclohexane	0.65	12		U	
124-48-1	Dibromochloromethane	0.41	12		U	
96-12-8	1,2-Dibromo-3-chloropropane	1.4	6.0		U	
106-93-4	1,2-Dibromoethane	0.52	12		U	
95-50-1	1,2-Dichlorobenzene	0.44	12		U	
541-73-1	1,3-Dichlorobenzene	1.0	12		U	
106-46-7	1,4-Dichlorobenzene	0.66	12		U	
75-71-8	Dichlorodifluoromethane	1.3	12		U	
75-34-3	1,1-Dichloroethane	0.65	12		U	
107-06-2	1,2-Dichloroethane	0.55	12		U	
75-35-4	1,1-Dichloroethene	1.4	12		U	
156-59-2	cis-1,2-Dichloroethene	1.4	12		U	
156-60-5	trans-1,2-Dichloroethene	1.3	12		U	
78-87-5	1,2-Dichloropropane	0.55	12		U	
10061-01-5	cis-1,3-Dichloropropene	0.60	12		U	
10061-02-6	trans-1,3-Dichloropropene	0.38	12		U	
100-41-4	Ethylbenzene	0.90	12		U	
591-78-6	2-Hexanone	2.8	12		U	
98-82-8	Isopropylbenzene	1.0	12		U	
79-20-9	Methyl acetate	1.9	12		U	
75-09-2	Methylene chloride	0.74	12	12u ~~2.2~~	~~JB~~	BL
108-87-2	Methyl cyclohexane	0.36	12		U	
1634-04-4	Methyl tert-butyl ether	0.38	12		U	
108-10-1	4-Methyl-2-pentanone	0.70	12		U	
100-42-5	Styrene	0.42	12		U	
79-34-5	1,1,2,2-Tetrachloroethane	0.52	12		U	
127-18-4	Tetrachloroethene	1.2	12		U	

FORM I VOA

LW 4/4/09

FORM 1
VOLATILE ORGANICS ANALYSIS DATA SHEET

CLIENT SAMPLE NO. 2

MR08-IS27
1-4-5-09A

Lab Name: EMPIRICAL LABS Contract: CH2MHILL

Lab Code: NA Case No.: NA SAS No.: NA SDG No.: LEJEUNE051

Matrix: (soil/water) SOIL Lab Sample ID: 0901145-02

Sample wt/vol: 4.4 (g/mL) G Lab File ID: 0114502A

Level: (low/med) LOW Date Sampled: 01/19/09 11:20

% Moisture: not dec. 5 Date Analyzed: 01/24/09 12:42

GC Column: RTX-VRX ID: 0.25 (mm) Dilution Factor: 1.0

Soil Extract Volume:_____(uL) Soil Aliquot Volume: _____(uL)

CONCENTRATION UNITS: (ug/L or ug/Kg) UG/KG

CAS NO.	COMPOUND	MDL	RL	CONC	Q
108-88-3	Toluene	1.0	12		U
120-82-1	1,2,4-Trichlorobenzene	0.22	12	12U ~~0.29~~ ~~JB~~	BL
71-55-6	1,1,1-Trichloroethane	1.1	12		U
79-00-5	1,1,2-Trichloroethane	0.42	12		U
79-01-6	Trichloroethene	1.0	12		U
76-13-1	Trichlorotrifluoroethane	0.66	12		U
75-69-4	Trichlorofluoromethane	1.1	12		U
75-01-4	Vinyl chloride	1.3	12		U
1330-20-7	Xylene(total)	0.84	12		U

NW
4/4/09

FORM 1
VOLATILE ORGANICS ANALYSIS DATA SHEET

CLIENT SAMPLE NO. 3

MR08-SS270-09A

Lab Name: EMPIRICAL LABS Contract: CH2MHILL

Lab Code: NA Case No.: NA SAS No.: NA SDG No.: LEJEUNE051

Matrix: (soil/water) SOIL Lab Sample ID: 0901145-03

Sample wt/vol: 4.6 (g/mL) G Lab File ID: 0114503A

Level: (low/med) LOW Date Sampled: 01/19/09 11:45

% Moisture: not dec. 19 Date Analyzed: 01/24/09 13:13

GC Column: RTX-VRX ID: 0.25 (mm) Dilution Factor: 1.0

Soil Extract Volume:_____(uL) Soil Aliquot Volume: _____(uL)

CONCENTRATION UNITS: (ug/L or ug/Kg) UG/KG

CAS NO.	COMPOUND	MDL	RL	CONC	Q	
67-64-1	Acetone	2.7	14		U	
71-43-2	Benzene	0.64	14		U	
75-27-4	Bromodichloromethane	0.41	14		U	
75-25-2	Bromoform	1.4	14		U	
74-83-9	Bromomethane	0.97	14		U	
78-93-3	2-Butanone	1.9	14	28	J	CC4
75-15-0	Carbon disulfide	1.8	14		U	
56-23-5	Carbon tetrachloride	1.2	14		U	
108-90-7	Chlorobenzene	0.46	14		U	
75-00-3	Chloroethane	1.5	14		U	
67-66-3	Chloroform	0.74	14		U	
74-87-3	Chloromethane	0.70	14		U	
110-82-7	Cyclohexane	0.73	14		U	
124-48-1	Dibromochloromethane	0.46	14		U	
96-12-8	1,2-Dibromo-3-chloropropane	1.6	6.8		U	
106-93-4	1,2-Dibromoethane	0.58	14		U	
95-50-1	1,2-Dichlorobenzene	0.50	14		U	
541-73-1	1,3-Dichlorobenzene	1.1	14		U	
106-46-7	1,4-Dichlorobenzene	0.74	14		U	
75-71-8	Dichlorodifluoromethane	1.5	14		U	
75-34-3	1,1-Dichloroethane	0.73	14		U	
107-06-2	1,2-Dichloroethane	0.62	14		U	
75-35-4	1,1-Dichloroethene	1.6	14		U	
156-59-2	cis-1,2-Dichloroethene	1.6	14		U	
156-60-5	trans-1,2-Dichloroethene	1.5	14		U	
78-87-5	1,2-Dichloropropane	0.62	14		U	
10061-01-5	cis-1,3-Dichloropropene	0.68	14		U	
10061-02-6	trans-1,3-Dichloropropene	0.43	14		U	
100-41-4	Ethylbenzene	1.0	14		U	
591-78-6	2-Hexanone	3.1	14		U	
98-82-8	Isopropylbenzene	1.2	14		U	
79-20-9	Methyl acetate	2.2	14		U	
75-09-2	Methylene chloride	0.84	14	14u ~~2.4~~ ~~JB~~		BL
108-87-2	Methyl cyclohexane	0.41	14		U	
1634-04-4	Methyl tert-butyl ether	0.43	14		U	
108-10-1	4-Methyl-2-pentanone	0.78	14		U	
100-42-5	Styrene	0.47	14		U	
79-34-5	1,1,2,2-Tetrachloroethane	0.58	14		U	
127-18-4	Tetrachloroethene	1.3	14		U	

hw
4/13/09

FORM 1
VOLATILE ORGANICS ANALYSIS DATA SHEET

CLIENT SAMPLE NO. 3

MR08-SS270-09A

Lab Name: EMPIRICAL LABS Contract: CH2MHILL

Lab Code: NA Case No.: NA SAS No.: NA SDG No.: LEJEUNE051

Matrix: (soil/water) SOIL Lab Sample ID: 0901145-03

Sample wt/vol: 4.6 (g/mL) G Lab File ID: 0114503A

Level: (low/med) LOW Date Sampled: 01/19/09 11:45

% Moisture: not dec. 19 Date Analyzed: 01/24/09 13:13

GC Column: RTX-VRX ID: 0.25 (mm) Dilution Factor: 1.0

Soil Extract Volume:_____(uL) Soil Aliquot Volume: _____(uL)

CONCENTRATION UNITS: (ug/L or ug/Kg) UG/KG

CAS NO.	COMPOUND	MDL	RL	CONC	Q
108-88-3	Toluene	1.2	14		U
120-82-1	1,2,4-Trichlorobenzene	0.24	14	14u ~~0.34~~	~~JB~~ BL
71-55-6	1,1,1-Trichloroethane	1.2	14		U
79-00-5	1,1,2-Trichloroethane	0.47	14		U
79-01-6	Trichloroethene	1.2	14		U
76-13-1	Trichlorotrifluoroethane	0.74	14		U
75-69-4	Trichlorofluoromethane	1.3	14		U
75-01-4	Vinyl chloride	1.5	14		U
1330-20-7	Xylene(total)	0.95	14		U

NW
4/9/09

FORM 1
VOLATILE ORGANICS ANALYSIS DATA SHEET

CLIENT SAMPLE NO. 4

MR08-IS27
0-9-10-09A

Lab Name: EMPIRICAL LABS Contract: CH2MHILL

Lab Code: NA Case No.: NA SAS No.: NA SDG No.: LEJEUNE051

Matrix: (soil/water) SOIL Lab Sample ID: 0901145-04

Sample wt/vol: 4.5 (g/mL) G Lab File ID: 0114504A

Level: (low/med) LOW Date Sampled: 01/19/09 12:05

% Moisture: not dec. 7 Date Analyzed: 01/24/09 13:44

GC Column: RTX-VRX ID: 0.25 (mm) Dilution Factor: 1.0

Soil Extract Volume:_____(uL) Soil Aliquot Volume: _____(uL)

CONCENTRATION UNITS: (ug/L or ug/Kg) UG/KG

CAS NO.	COMPOUND	MDL	RL	CONC	Q	
67-64-1	Acetone	2.4	12	12U ~~7.5~~	~~JB~~	BL
71-43-2	Benzene	0.56	12		U	
75-27-4	Bromodichloromethane	0.36	12		U	
75-25-2	Bromoform	1.2	12		U	
74-83-9	Bromomethane	0.86	12		U	
78-93-3	2-Butanone	1.7	12		~~U~~ UJ	CC
75-15-0	Carbon disulfide	1.5	12		U	
56-23-5	Carbon tetrachloride	1.0	12		U	
108-90-7	Chlorobenzene	0.40	12		U	
75-00-3	Chloroethane	1.3	12		U	
67-66-3	Chloroform	0.65	12		U	
74-87-3	Chloromethane	0.62	12		U	
110-82-7	Cyclohexane	0.64	12		U	
124-48-1	Dibromochloromethane	0.40	12		U	
96-12-8	1,2-Dibromo-3-chloropropane	1.4	5.9		U	
106-93-4	1,2-Dibromoethane	0.51	12		U	
95-50-1	1,2-Dichlorobenzene	0.44	12		U	
541-73-1	1,3-Dichlorobenzene	1.00	12		U	
106-46-7	1,4-Dichlorobenzene	0.65	12		U	
75-71-8	Dichlorodifluoromethane	1.3	12		U	
75-34-3	1,1-Dichloroethane	0.64	12		U	
107-06-2	1,2-Dichloroethane	0.55	12		U	
75-35-4	1,1-Dichloroethene	1.4	12		U	
156-59-2	cis-1,2-Dichloroethene	1.4	12		U	
156-60-5	trans-1,2-Dichloroethene	1.3	12		U	
78-87-5	1,2-Dichloropropane	0.55	12		U	
10061-01-5	cis-1,3-Dichloropropene	0.59	12		U	
10061-02-6	trans-1,3-Dichloropropene	0.38	12		U	
100-41-4	Ethylbenzene	0.89	12		U	
~~591-78-6~~	~~2-Hexanone~~	2.7	12		U	
98-82-8	Isopropylbenzene	1.0	12		U	
79-20-9	Methyl acetate	1.9	12		U	
75-09-2	Methylene chloride	0.74	12	12U ~~2.1~~	~~JB~~	BL
108-87-2	Methyl cyclohexane	0.36	12		U	
1634-04-4	Methyl tert-butyl ether	0.38	12		U	
108-10-1	4-Methyl-2-pentanone	0.69	12		U	
100-42-5	Styrene	0.42	12		U	
79-34-5	1,1,2,2-Tetrachloroethane	0.51	12		U	
127-18-4	Tetrachloroethene	1.2	12		U	

NW
4/24/09

FORM 1
VOLATILE ORGANICS ANALYSIS DATA SHEET

CLIENT SAMPLE NO. 4

MR08-IS27
0-9-10-09A

Lab Name: EMPIRICAL LABS Contract: CH2MHILL

Lab Code: NA Case No.: NA SAS No.: NA SDG No.: LEJEUNE051

Matrix: (soil/water) SOIL Lab Sample ID: 0901145-04

Sample wt/vol: 4.5 (g/mL) G Lab File ID: 0114504A

Level: (low/med) LOW Date Sampled: 01/19/09 12:05

% Moisture: not dec. 7 Date Analyzed: 01/24/09 13:44

GC Column: RTX-VRX ID: 0.25 (mm) Dilution Factor: 1.0

Soil Extract Volume:_____(uL) Soil Aliquot Volume: _____(uL)

CONCENTRATION UNITS: (ug/L or ug/Kg) UG/KG

CAS NO.	COMPOUND	MDL	RL	CONC	Q
108-88-3	Toluene	1.0	12		U
120-82-1	1,2,4-Trichlorobenzene	0.21	12		U
71-55-6	1,1,1-Trichloroethane	1.1	12		U
79-00-5	1,1,2-Trichloroethane	0.42	12		U
79-01-6	Trichloroethene	1.0	12		U
76-13-1	Trichlorotrifluoroethane	0.65	12		U
75-69-4	Trichlorofluoromethane	1.1	12		U
75-01-4	Vinyl chloride	1.3	12		U
1330-20-7	Xylene(total)	0.83	12		U

NW
4/14/09

5

FORM 1
VOLATILE ORGANICS ANALYSIS DATA SHEET

CLIENT SAMPLE NO.

MR08-SS269-09A

Lab Name: EMPIRICAL LABS Contract: CH2MHILL

Lab Code: NA Case No.: NA SAS No.: NA SDG No.: LEJEUNE051

Matrix: (soil/water) SOIL Lab Sample ID: 0901145-05

Sample wt/vol: 5.4 (g/mL) G Lab File ID: 0114505A

Level: (low/med) LOW Date Sampled: 01/19/09 13:50

% Moisture: not dec. 15 Date Analyzed: 01/24/09 14:15

GC Column: RTX-VRX ID: 0.25 (mm) Dilution Factor: 1.0

Soil Extract Volume:_____(uL) Soil Aliquot Volume: _____(uL)

CONCENTRATION UNITS: (ug/L or ug/Kg) UG/KG

CAS NO.	COMPOUND	MDL	RL	CONC	Q
67-64-1	Acetone	2.2	11	94	~~B~~
71-43-2	Benzene	0.51	11		U
75-27-4	Bromodichloromethane	0.33	11		U
75-25-2	Bromoform	1.1	11		U
74-83-9	Bromomethane	0.79	11		U
78-93-3	2-Butanone	1.5	11	12	J CU
75-15-0	Carbon disulfide	1.4	11		U
56-23-5	Carbon tetrachloride	0.96	11		U
108-90-7	Chlorobenzene	0.37	11		U
75-00-3	Chloroethane	1.2	11		U
67-66-3	Chloroform	0.60	11		U
74-87-3	Chloromethane	0.57	11		U
110-82-7	Cyclohexane	0.59	11		U
124-48-1	Dibromochloromethane	0.37	11		U
96-12-8	1,2-Dibromo-3-chloropropane	1.3	5.5		U
106-93-4	1,2-Dibromoethane	0.47	11		U
95-50-1	1,2-Dichlorobenzene	0.40	11		U
541-73-1	1,3-Dichlorobenzene	0.92	11		U
106-46-7	1,4-Dichlorobenzene	0.60	11		U
75-71-8	Dichlorodifluoromethane	1.2	11		U
75-34-3	1,1-Dichloroethane	0.59	11		U
107-06-2	1,2-Dichloroethane	0.50	11		U
75-35-4	1,1-Dichloroethene	1.3	11		U
156-59-2	cis-1,2-Dichloroethene	1.3	11		U
156-60-5	trans-1,2-Dichloroethene	1.2	11		U
78-87-5	1,2-Dichloropropane	0.50	11		U
10061-01-5	cis-1,3-Dichloropropene	0.55	11		U
10061-02-6	trans-1,3-Dichloropropene	0.35	11		U
100-41-4	Ethylbenzene	0.82	11		U
~~591-78-6~~	~~2-Hexanone~~	2.5	11		U
98-82-8	Isopropylbenzene	0.96	11		U
79-20-9	Methyl acetate	1.7	11		U
75-09-2	Methylene chloride	0.68	11	1u ~~1.9 JB~~	B
108-87-2	Methyl cyclohexane	0.33	11		U
1634-04-4	Methyl tert-butyl ether	0.35	11		U
108-10-1	4-Methyl-2-pentanone	0.63	11		U
100-42-5	Styrene	0.38	11		U
79-34-5	1,1,2,2-Tetrachloroethane	0.47	11		U
127-18-4	Tetrachloroethene	1.1	11		U

FORM I VOA

NW
4/4/09

FORM 1
VOLATILE ORGANICS ANALYSIS DATA SHEET

CLIENT SAMPLE NO. 5

MR08-SS269-09A

Lab Name: EMPIRICAL LABS Contract: CH2MHILL

Lab Code: NA Case No.: NA SAS No.: NA SDG No.: LEJEUNE051

Matrix: (soil/water) SOIL Lab Sample ID: 0901145-05

Sample wt/vol: 5.4 (g/mL) G Lab File ID: 0114505A

Level: (low/med) LOW Date Sampled: 01/19/09 13:50

% Moisture: not dec. 15 Date Analyzed: 01/24/09 14:15

GC Column: RTX-VRX ID: 0.25 (mm) Dilution Factor: 1.0

Soil Extract Volume:_____(uL) Soil Aliquot Volume: _____(uL)

CONCENTRATION UNITS: (ug/L or ug/Kg) UG/KG

CAS NO.	COMPOUND	MDL	RL	CONC	Q
108-88-3	Toluene	0.94	11		U
120-82-1	1,2,4-Trichlorobenzene	0.20	11		U
71-55-6	1,1,1-Trichloroethane	0.98	11		U
79-00-5	1,1,2-Trichloroethane	0.38	11		U
79-01-6	Trichloroethene	0.93	11		U
76-13-1	Trichlorotrifluoroethane	0.60	11		U
75-69-4	Trichlorofluoromethane	1.0	11		U
75-01-4	Vinyl chloride	1.2	11		U
1330-20-7	Xylene(total)	0.76	11		U

NW
4/4/09

FORM 1
VOLATILE ORGANICS ANALYSIS DATA SHEET

CLIENT SAMPLE NO. 6

MR08-SS269D-09A

Lab Name: EMPIRICAL LABS Contract: CH2MHILL

Lab Code: NA Case No.: NA SAS No.: NA SDG No.: LEJEUNE051

Matrix: (soil/water) SOIL Lab Sample ID: 0901145-06

Sample wt/vol: 4.8 (g/mL) G Lab File ID: 0114506A

Level: (low/med) LOW Date Sampled: 01/19/09 13:50

% Moisture: not dec. 14 Date Analyzed: 01/24/09 14:46

GC Column: RTX-VRX ID: 0.25 (mm) Dilution Factor: 1.0

Soil Extract Volume:_____(uL) Soil Aliquot Volume: _____(uL)

CONCENTRATION UNITS: (ug/L or ug/Kg) UG/KG

CAS NO.	COMPOUND	MDL	RL	CONC	Q	
67-64-1	Acetone	2.4	12	51	~~B~~ U	BL
71-43-2	Benzene	0.58	12		U	
75-27-4	Bromodichloromethane	0.37	12		U	
75-25-2	Bromoform	1.2	12		U	
74-83-9	Bromomethane	0.88	12		U	
78-93-3	2-Butanone	1.7	12		~~U~~ UJ	CCI
75-15-0	Carbon disulfide	1.6	12		U	
56-23-5	Carbon tetrachloride	1.1	12		U	
108-90-7	Chlorobenzene	0.42	12		U	
75-00-3	Chloroethane	1.3	12		U	
67-66-3	Chloroform	0.67	12		U	
74-87-3	Chloromethane	0.64	12		U	
110-82-7	Cyclohexane	0.66	12		U	
124-48-1	Dibromochloromethane	0.42	12		U	
96-12-8	1,2-Dibromo-3-chloropropane	1.5	6.1		U	
106-93-4	1,2-Dibromoethane	0.53	12		U	
95-50-1	1,2-Dichlorobenzene	0.45	12		U	
541-73-1	1,3-Dichlorobenzene	1.0	12		U	
106-46-7	1,4-Dichlorobenzene	0.67	12		U	
75-71-8	Dichlorodifluoromethane	1.3	12		U	
75-34-3	1,1-Dichloroethane	0.66	12		U	
107-06-2	1,2-Dichloroethane	0.56	12		U	
75-35-4	1,1-Dichloroethene	1.5	12		U	
156-59-2	cis-1,2-Dichloroethene	1.5	12		U	
156-60-5	trans-1,2-Dichloroethene	1.3	12		U	
78-87-5	1,2-Dichloropropane	0.56	12		U	
10061-01-5	cis-1,3-Dichloropropene	0.61	12		U	
10061-02-6	trans-1,3-Dichloropropene	0.39	12		U	
100-41-4	Ethylbenzene	0.92	12		U	
~~591-78-6~~	~~2-Hexanone~~	~~2.8~~	~~12~~		~~U~~	
98-82-8	Isopropylbenzene	1.1	12		U	
79-20-9	Methyl acetate	2.0	12		U	
75-09-2	Methylene chloride	0.76	12	124 ~~1.8~~	~~JB~~	B
108-87-2	Methyl cyclohexane	0.37	12		U	
1634-04-4	Methyl tert-butyl ether	0.39	12		U	
108-10-1	4-Methyl-2-pentanone	0.71	12		U	
100-42-5	Styrene	0.43	12		U	
79-34-5	1,1,2,2-Tetrachloroethane	0.53	12		U	
127-18-4	Tetrachloroethene	1.2	12		U	

FORM I VOA

NW
4/14/09

FORM 1
VOLATILE ORGANICS ANALYSIS DATA SHEET

CLIENT SAMPLE NO. 4

MR08-SS269D-09A

Lab Name: EMPIRICAL LABS Contract: CH2MHILL

Lab Code: NA Case No.: NA SAS No.: NA SDG No.: LEJEUNE051

Matrix: (soil/water) SOIL Lab Sample ID: 0901145-06

Sample wt/vol: 4.8 (g/mL) G Lab File ID: 0114506A

Level: (low/med) LOW Date Sampled: 01/19/09 13:50

% Moisture: not dec. 14 Date Analyzed: 01/24/09 14:46

GC Column: RTX-VRX ID: 0.25 (mm) Dilution Factor: 1.0

Soil Extract Volume:_____(uL) Soil Aliquot Volume: _____(uL)

CONCENTRATION UNITS: (ug/L or ug/Kg) UG/KG

CAS NO.	COMPOUND	MDL	RL	CONC	Q
108-88-3	Toluene	1.0	12		U
120-82-1	1,2,4-Trichlorobenzene	0.22	12		U
71-55-6	1,1,1-Trichloroethane	1.1	12		U
79-00-5	1,1,2-Trichloroethane	0.43	12		U
79-01-6	Trichloroethene	1.0	12		U
76-13-1	Trichlorotrifluoroethane	0.67	12		U
75-69-4	Trichlorofluoromethane	1.2	12		U
75-01-4	Vinyl chloride	1.3	12		U
1330-20-7	Xylene(total)	0.86	12		U

WW
4/4/09

FORM 1
VOLATILE ORGANICS ANALYSIS DATA SHEET

CLIENT SAMPLE NO. 7

MR08-IS26
9-7-8-09A

Lab Name: EMPIRICAL LABS Contract: CH2MHILL

Lab Code: NA Case No.: NA SAS No.: NA SDG No.: LEJEUNE051

Matrix: (soil/water) SOIL Lab Sample ID: 0901145-07

Sample wt/vol: 4.6 (g/mL) G Lab File ID: 0114507A

Level: (low/med) LOW Date Sampled: 01/19/09 13:55

% Moisture: not dec. 4 Date Analyzed: 01/24/09 15:17

GC Column: RTX-VRX ID: 0.25 (mm) Dilution Factor: 1.0

Soil Extract Volume:_____(uL) Soil Aliquot Volume: _____(uL)

CONCENTRATION UNITS: (ug/L or ug/Kg) UG/KG

CAS NO.	COMPOUND	MDL	RL	CONC	Q	
67-64-1	Acetone	2.3	11	11u	~~3.2 JB~~	BL
71-43-2	Benzene	0.54	11		U	
75-27-4	Bromodichloromethane	0.34	11		U	
75-25-2	Bromoform	1.1	11		U	
74-83-9	Bromomethane	0.82	11		U	
78-93-3	2-Butanone	1.6	11		~~U~~ UJ	CC
75-15-0	Carbon disulfide	1.5	11		U	
56-23-5	Carbon tetrachloride	1.0	11		U	
108-90-7	Chlorobenzene	0.39	11		U	
75-00-3	Chloroethane	1.2	11		U	
67-66-3	Chloroform	0.63	11		U	
74-87-3	Chloromethane	0.59	11		U	
110-82-7	Cyclohexane	0.62	11		U	
124-48-1	Dibromochloromethane	0.39	11		U	
96-12-8	1,2-Dibromo-3-chloropropane	1.4	5.7		U	
106-93-4	1,2-Dibromoethane	0.49	11		U	
95-50-1	1,2-Dichlorobenzene	0.42	11		U	
541-73-1	1,3-Dichlorobenzene	0.96	11		U	
106-46-7	1,4-Dichlorobenzene	0.63	11		U	
75-71-8	Dichlorodifluoromethane	1.2	11		U	
75-34-3	1,1-Dichloroethane	0.62	11		U	
107-06-2	1,2-Dichloroethane	0.52	11		U	
75-35-4	1,1-Dichloroethene	1.4	11		U	
156-59-2	cis-1,2-Dichloroethene	1.4	11		U	
156-60-5	trans-1,2-Dichloroethene	1.2	11		U	
78-87-5	1,2-Dichloropropane	0.52	11		U	
10061-01-5	cis-1,3-Dichloropropene	0.57	11		U	
10061-02-6	trans-1,3-Dichloropropene	0.36	11		U	
100-41-4	Ethylbenzene	0.86	11		U	
591-78-6	2-Hexanone	2.6	11		U	
98-82-8	Isopropylbenzene	1.0	11		U	
79-20-9	Methyl acetate	1.8	11		U	
75-09-2	Methylene chloride	0.71	11	11u	~~2.0 JB~~	BL
108-87-2	Methyl cyclohexane	0.34	11		U	
1634-04-4	Methyl tert-butyl ether	0.36	11		U	
108-10-1	4-Methyl-2-pentanone	0.66	11		U	
100-42-5	Styrene	0.40	11		U	
79-34-5	1,1,2,2-Tetrachloroethane	0.49	11		U	
127-18-4	Tetrachloroethene	1.1	11		U	

WW
4/4/09

FORM 1
VOLATILE ORGANICS ANALYSIS DATA SHEET

CLIENT SAMPLE NO. 7

MR08-IS26
9-7-8-09A

Lab Name: EMPIRICAL LABS Contract: CH2MHILL

Lab Code: NA Case No.: NA SAS No.: NA SDG No.: LEJEUNE051

Matrix: (soil/water) SOIL Lab Sample ID: 0901145-07

Sample wt/vol: 4.6 (g/mL) G Lab File ID: 0114507A

Level: (low/med) LOW Date Sampled: 01/19/09 13:55

% Moisture: not dec. 4 Date Analyzed: 01/24/09 15:17

GC Column: RTX-VRX ID: 0.25 (mm) Dilution Factor: 1.0

Soil Extract Volume:_____(uL) Soil Aliquot Volume: _____(uL)

CONCENTRATION UNITS: (ug/L or ug/Kg) UG/KG

CAS NO.	COMPOUND	MDL	RL	CONC	Q
108-88-3	Toluene	0.98	11		U
120-82-1	1,2,4-Trichlorobenzene	0.20	11		U
71-55-6	1,1,1-Trichloroethane	1.0	11		U
79-00-5	1,1,2-Trichloroethane	0.40	11		U
79-01-6	Trichloroethene	0.97	11		U
76-13-1	Trichlorotrifluoroethane	0.63	11		U
75-69-4	Trichlorofluoromethane	1.1	11		U
75-01-4	Vinyl chloride	1.2	11		U
1330-20-7	Xylene(total)	0.80	11		U

UW
4/4/09

FORM 1
VOLATILE ORGANICS ANALYSIS DATA SHEET

CLIENT SAMPLE NO. 8

MR08-IS26
9D-8-7-09A

Lab Name: EMPIRICAL LABS Contract: CH2MHILL

Lab Code: NA Case No.: NA SAS No.: NA SDG No.: LEJEUNE051

Matrix: (soil/water) SOIL Lab Sample ID: 0901145-08

Sample wt/vol: 5.7 (g/mL) G Lab File ID: 0114508A

Level: (low/med) LOW Date Sampled: 01/19/09 13:55

% Moisture: not dec. 5 Date Analyzed: 01/24/09 15:48

GC Column: RTX-VRX ID: 0.25 (mm) Dilution Factor: 1.0

Soil Extract Volume:_____(uL) Soil Aliquot Volume: _____(uL)

CONCENTRATION UNITS: (ug/L or ug/Kg) UG/KG

CAS NO.	COMPOUND	MDL	RL	CONC	Q
67-64-1	Acetone	1.8	9.3		U
71-43-2	Benzene	0.44	9.3		U
75-27-4	Bromodichloromethane	0.28	9.3		U
75-25-2	Bromoform	0.93	9.3		U
74-83-9	Bromomethane	0.67	9.3		U
78-93-3	2-Butanone	1.3	9.3		~~U~~ UJ CU
75-15-0	Carbon disulfide	1.2	9.3		U
56-23-5	Carbon tetrachloride	0.82	9.3		U
108-90-7	Chlorobenzene	0.32	9.3		U
75-00-3	Chloroethane	1.0	9.3		U
67-66-3	Chloroform	0.51	9.3		U
74-87-3	Chloromethane	0.48	9.3		U
110-82-7	Cyclohexane	0.50	9.3		U
124-48-1	Dibromochloromethane	0.32	9.3		U
96-12-8	1,2-Dibromo-3-chloropropane	1.1	4.6		U
106-93-4	1,2-Dibromoethane	0.40	9.3		U
95-50-1	1,2-Dichlorobenzene	0.34	9.3		U
541-73-1	1,3-Dichlorobenzene	0.78	9.3		U
106-46-7	1,4-Dichlorobenzene	0.51	9.3		U
75-71-8	Dichlorodifluoromethane	1.0	9.3		U
75-34-3	1,1-Dichloroethane	0.50	9.3		U
107-06-2	1,2-Dichloroethane	0.43	9.3		U
75-35-4	1,1-Dichloroethene	1.1	9.3		U
156-59-2	cis-1,2-Dichloroethene	1.1	9.3		U
156-60-5	trans-1,2-Dichloroethene	1.0	9.3		U
78-87-5	1,2-Dichloropropane	0.43	9.3		U
10061-01-5	cis-1,3-Dichloropropene	0.46	9.3		U
10061-02-6	trans-1,3-Dichloropropene	0.30	9.3		U
100-41-4	Ethylbenzene	0.70	9.3		U
591-78-6	2-Hexanone	2.1	9.3		U
98-82-8	Isopropylbenzene	0.82	9.3		U
79-20-9	Methyl acetate	1.5	9.3		U
75-09-2	Methylene chloride	0.58	9.3	9.34 ~~1.6~~ ~~JB~~	B
108-87-2	Methyl cyclohexane	0.28	9.3		U
1634-04-4	Methyl tert-butyl ether	0.30	9.3		U
108-10-1	4-Methyl-2-pentanone	0.54	9.3		U
100-42-5	Styrene	0.32	9.3		U
79-34-5	1,1,2,2-Tetrachloroethane	0.40	9.3		U
127-18-4	Tetrachloroethene	0.90	9.3		U

FORM I VOA

HW
4/4/09

FORM 1
VOLATILE ORGANICS ANALYSIS DATA SHEET

CLIENT SAMPLE NO. 8

MR08-IS26
9D-7-8-09A

Lab Name: EMPIRICAL LABS Contract: CH2MHILL

Lab Code: NA Case No.: NA SAS No.: NA SDG No.: LEJEUNE051

Matrix: (soil/water) SOIL Lab Sample ID: 0901145-08

Sample wt/vol: 5.7 (g/mL) G Lab File ID: 0114508A

Level: (low/med) LOW Date Sampled: 01/19/09 13:55

% Moisture: not dec. 5 Date Analyzed: 01/24/09 15:48

GC Column: RTX-VRX ID: 0.25 (mm) Dilution Factor: 1.0

Soil Extract Volume:_____(uL) Soil Aliquot Volume: _____(uL)

CONCENTRATION UNITS: (ug/L or ug/Kg) UG/KG

CAS NO.	COMPOUND	MDL	RL	CONC	Q
108-88-3	Toluene	0.80	9.3		U
120-82-1	1,2,4-Trichlorobenzene	0.17	9.3		U
71-55-6	1,1,1-Trichloroethane	0.84	9.3		U
79-00-5	1,1,2-Trichloroethane	0.32	9.3		U
79-01-6	Trichloroethene	0.79	9.3		U
76-13-1	Trichlorotrifluoroethane	0.51	9.3		U
75-69-4	Trichlorofluoromethane	0.88	9.3		U
75-01-4	Vinyl chloride	1.0	9.3		U
1330-20-7	Xylene(total)	0.65	9.3		U

MW
4/14/09

FORM 1
VOLATILE ORGANICS ANALYSIS DATA SHEET

CLIENT SAMPLE NO. 9

MR08-IS2
68-7-8-09A

Lab Name: EMPIRICAL LABS Contract: CH2MHILL

Lab Code: NA Case No.: NA SAS No.: NA SDG No.: LEJEUNE051

Matrix: (soil/water) SOIL Lab Sample ID: 0901145-09

Sample wt/vol: 5.6 (g/mL) G Lab File ID: 0114509A

Level: (low/med) LOW Date Sampled: 01/19/09 14:45

% Moisture: not dec. 11 Date Analyzed: 01/24/09 16:19

GC Column: RTX-VRX ID: 0.25 (mm) Dilution Factor: 1.0

Soil Extract Volume:_____(uL) Soil Aliquot Volume: _____(uL)

CONCENTRATION UNITS: (ug/L or ug/Kg) UG/KG

CAS NO.	COMPOUND	MDL	RL	CONC	Q	
67-64-1	Acetone	2.0	10		U	
71-43-2	Benzene	0.47	10		U	
75-27-4	Bromodichloromethane	0.30	10		U	
75-25-2	Bromoform	1.0	10		U	
74-83-9	Bromomethane	0.72	10		U	
78-93-3	2-Butanone	1.4	10		~~U~~ UJ	CU
75-15-0	Carbon disulfide	1.3	10		U	
56-23-5	Carbon tetrachloride	0.88	10		U	
108-90-7	Chlorobenzene	0.34	10		U	
75-00-3	Chloroethane	1.1	10		U	
67-66-3	Chloroform	0.55	10		U	
74-87-3	Chloromethane	0.52	10		U	
110-82-7	Cyclohexane	0.54	10		U	
124-48-1	Dibromochloromethane	0.34	10		U	
96-12-8	1,2-Dibromo-3-chloropropane	1.2	5.0		U	
106-93-4	1,2-Dibromoethane	0.43	10		U	
95-50-1	1,2-Dichlorobenzene	0.37	10		U	
541-73-1	1,3-Dichlorobenzene	0.84	10		U	
106-46-7	1,4-Dichlorobenzene	0.55	10		U	
75-71-8	Dichlorodifluoromethane	1.1	10		U	
75-34-3	1,1-Dichloroethane	0.54	10		U	
107-06-2	1,2-Dichloroethane	0.46	10		U	
75-35-4	1,1-Dichloroethene	1.2	10		U	
156-59-2	cis-1,2-Dichloroethene	1.2	10		U	
156-60-5	trans-1,2-Dichloroethene	1.1	10		U	
78-87-5	1,2-Dichloropropane	0.46	10		U	
10061-01-5	cis-1,3-Dichloropropene	0.50	10		U	
10061-02-6	trans-1,3-Dichloropropene	0.32	10		U	
100-41-4	Ethylbenzene	0.75	10		U	
591-78-6	2-Hexanone	2.3	10		U	
98-82-8	Isopropylbenzene	0.88	10		U	
79-20-9	Methyl acetate	1.6	10		U	
75-09-2	Methylene chloride	0.62	10	10U	~~1.6 JB~~	BL
108-87-2	Methyl cyclohexane	0.30	10		U	
1634-04-4	Methyl tert-butyl ether	0.32	10		U	
108-10-1	4-Methyl-2-pentanone	0.58	10		U	
100-42-5	Styrene	0.35	10		U	
79-34-5	1,1,2,2-Tetrachloroethane	0.43	10		U	
127-18-4	Tetrachloroethene	0.97	10		U	

LW
4/4/09

9

FORM 1
VOLATILE ORGANICS ANALYSIS DATA SHEET

CLIENT SAMPLE NO.

MR08-IS2
68-7-8-09A

Lab Name: EMPIRICAL LABS Contract: CH2MHILL

Lab Code: NA Case No.: NA SAS No.: NA SDG No.: LEJEUNE051

Matrix: (soil/water) SOIL Lab Sample ID: 0901145-09

Sample wt/vol: 5.6 (g/mL) G Lab File ID: 0114509A

Level: (low/med) LOW Date Sampled: 01/19/09 14:45

% Moisture: not dec. 11 Date Analyzed: 01/24/09 16:19

GC Column: RTX-VRX ID: 0.25 (mm) Dilution Factor: 1.0

Soil Extract Volume:_____(uL) Soil Aliquot Volume: _____(uL)

CONCENTRATION UNITS: (ug/L or ug/Kg) UG/KG

CAS NO.	COMPOUND	MDL	RL	CONC	Q
108-88-3	Toluene	0.86	10		U
120-82-1	1,2,4-Trichlorobenzene	0.18	10		U
71-55-6	1,1,1-Trichloroethane	0.90	10		U
79-00-5	1,1,2-Trichloroethane	0.35	10		U
79-01-6	Trichloroethene	0.85	10		U
76-13-1	Trichlorotrifluoroethane	0.55	10		U
75-69-4	Trichlorofluoromethane	0.95	10		U
75-01-4	Vinyl chloride	1.1	10		U
1330-20-7	Xylene(total)	0.70	10		U

LW
4/4/09

FORM 1
VOLATILE ORGANICS ANALYSIS DATA SHEET

CLIENT SAMPLE NO. 10

MR08-SS268-09A

Lab Name: EMPIRICAL LABS Contract: CH2MHILL

Lab Code: NA Case No.: NA SAS No.: NA SDG No.: LEJEUNE051

Matrix: (soil/water) SOIL Lab Sample ID: 0901145-10

Sample wt/vol: 5.8 (g/mL) G Lab File ID: 0114510A

Level: (low/med) LOW Date Sampled: 01/19/09 15:00

% Moisture: not dec. 21 Date Analyzed: 01/24/09 16:49

GC Column: RTX-VRX ID: 0.25 (mm) Dilution Factor: 1.0

Soil Extract Volume:_____(uL) Soil Aliquot Volume: _____(uL)

CONCENTRATION UNITS: (ug/L or ug/Kg) UG/KG

CAS NO.	COMPOUND	MDL	RL	CONC	Q	
67-64-1	Acetone	2.2	11		U	
71-43-2	Benzene	0.52	11		U	
75-27-4	Bromodichloromethane	0.33	11		U	
75-25-2	Bromoform	1.1	11		U	
74-83-9	Bromomethane	0.79	11		U	
78-93-3	2-Butanone	1.5	11		~~U~~ UJ	CC
75-15-0	Carbon disulfide	1.4	11		U	
56-23-5	Carbon tetrachloride	0.96	11		U	
108-90-7	Chlorobenzene	0.37	11		~~U~~ UJ	MS
75-00-3	Chloroethane	1.2	11		U	
67-66-3	Chloroform	0.60	11		U	
74-87-3	Chloromethane	0.57	11		U	
110-82-7	Cyclohexane	0.59	11		U	
124-48-1	Dibromochloromethane	0.37	11		U	
96-12-8	1,2-Dibromo-3-chloropropane	1.3	5.5		U	
106-93-4	1,2-Dibromoethane	0.47	11		U	
95-50-1	1,2-Dichlorobenzene	0.41	11		~~U~~ UJ	MS
541-73-1	1,3-Dichlorobenzene	0.92	11		U	
106-46-7	1,4-Dichlorobenzene	0.60	11		U	
75-71-8	Dichlorodifluoromethane	1.2	11		U	
75-34-3	1,1-Dichloroethane	0.59	11		U	
107-06-2	1,2-Dichloroethane	0.50	11		U	
75-35-4	1,1-Dichloroethene	1.3	11		U	
156-59-2	cis-1,2-Dichloroethene	1.3	11		U	
156-60-5	trans-1,2-Dichloroethene	1.2	11		U	
78-87-5	1,2-Dichloropropane	0.50	11		U	
10061-01-5	cis-1,3-Dichloropropene	0.55	11		U	
10061-02-6	trans-1,3-Dichloropropene	0.35	11		U	
100-41-4	Ethylbenzene	0.82	11		~~U~~ UJ	MS
591-78-6	2-Hexanone	2.5	11		U	
98-82-8	Isopropylbenzene	0.96	11		~~U~~ UJ	MS
79-20-9	Methyl acetate	1.8	11		U	
75-09-2	Methylene chloride	0.68	11	11u	~~1.8 JB~~	B
108-87-2	Methyl cyclohexane	0.33	11		~~U~~ UJ	MS
1634-04-4	Methyl tert-butyl ether	0.35	11		U	
108-10-1	4-Methyl-2-pentanone	0.64	11		U	
100-42-5	Styrene	0.38	11		~~U~~ UJ	MS
79-34-5	1,1,2,2-Tetrachloroethane	0.47	11		U	
127-18-4	Tetrachloroethene	1.1	11		~~U~~ UJ	M

MW 1/26/09

FORM 1
VOLATILE ORGANICS ANALYSIS DATA SHEET

CLIENT SAMPLE NO. 10

MR08-SS268-09A

Lab Name: EMPIRICAL LABS Contract: CH2MHILL

Lab Code: NA Case No.: NA SAS No.: NA SDG No.: LEJEUNE051

Matrix: (soil/water) SOIL Lab Sample ID: 0901145-10

Sample wt/vol: 5.8 (g/mL) G Lab File ID: 0114510A

Level: (low/med) LOW Date Sampled: 01/19/09 15:00

% Moisture: not dec. 21 Date Analyzed: 01/24/09 16:49

GC Column: RTX-VRX ID: 0.25 (mm) Dilution Factor: 1.0

Soil Extract Volume:_____(uL) Soil Aliquot Volume: _____(uL)

CONCENTRATION UNITS: (ug/L or ug/Kg) UG/KG

CAS NO.	COMPOUND	MDL	RL	CONC	Q	
108-88-3	Toluene	0.94	11		U	
120-82-1	1,2,4-Trichlorobenzene	0.20	11		~~U~~ UJ	MS
71-55-6	1,1,1-Trichloroethane	0.99	11		U	
79-00-5	1,1,2-Trichloroethane	0.38	11		U	
79-01-6	Trichloroethene	0.93	11		U	
76-13-1	Trichlorotrifluoroethane	0.60	11		U	
75-69-4	Trichlorofluoromethane	1.0	11		U	
75-01-4	Vinyl chloride	1.2	11		U	
1330-20-7	Xylene(total)	0.77	11		~~U~~ UJ	MS

FORM I VOA

NW
4/14/09

FORM 1
VOLATILE ORGANICS ANALYSIS DATA SHEET

CLIENT SAMPLE NO. 11

MR08-SS267-09A

Lab Name: EMPIRICAL LABS Contract: CH2MHILL

Lab Code: NA Case No.: NA SAS No.: NA SDG No.: LEJEUNE051

Matrix: (soil/water) SOIL Lab Sample ID: 0901145-11

Sample wt/vol: 3.8 (g/mL) G Lab File ID: 0114511A

Level: (low/med) LOW Date Sampled: 01/19/09 15:35

% Moisture: not dec. 4 Date Analyzed: 01/24/09 17:20

GC Column: RTX-VRX ID: 0.25 (mm) Dilution Factor: 1.0

Soil Extract Volume:_____(uL) Soil Aliquot Volume: _____(uL)

CONCENTRATION UNITS: (ug/L or ug/Kg) UG/KG

CAS NO.	COMPOUND	MDL	RL	CONC	Q	
67-64-1	Acetone	2.8	14		U	
71-43-2	Benzene	0.65	14	0.95	~~J~~ J	SSH
75-27-4	Bromodichloromethane	0.41	14		U	
75-25-2	Bromoform	1.4	14		U	
74-83-9	Bromomethane	0.99	14		U	
78-93-3	2-Butanone	1.9	14		~~U~~ UJ	CCH
75-15-0	Carbon disulfide	1.8	14		U	
56-23-5	Carbon tetrachloride	1.2	14		U	
108-90-7	Chlorobenzene	0.47	14		U	
75-00-3	Chloroethane	1.5	14		U	
67-66-3	Chloroform	0.76	14		U	
74-87-3	Chloromethane	0.72	14		U	
110-82-7	Cyclohexane	0.74	14		U	
124-48-1	Dibromochloromethane	0.47	14		U	
96-12-8	1,2-Dibromo-3-chloropropane	1.6	6.9		U	
106-93-4	1,2-Dibromoethane	0.59	14		U	
95-50-1	1,2-Dichlorobenzene	0.51	14		U	
541-73-1	1,3-Dichlorobenzene	1.2	14		U	
106-46-7	1,4-Dichlorobenzene	0.76	14		U	
75-71-8	Dichlorodifluoromethane	1.5	14		U	
75-34-3	1,1-Dichloroethane	0.74	14		U	
107-06-2	1,2-Dichloroethane	0.63	14		U	
75-35-4	1,1-Dichloroethene	1.6	14		U	
156-59-2	cis-1,2-Dichloroethene	1.6	14		U	
156-60-5	trans-1,2-Dichloroethene	1.5	14		U	
78-87-5	1,2-Dichloropropane	0.63	14		U	
10061-01-5	cis-1,3-Dichloropropene	0.69	14		U	
10061-02-6	trans-1,3-Dichloropropene	0.44	14		U	
100-41-4	Ethylbenzene	1.0	14	6.1	~~J~~ J	SS
591-78-6	2-Hexanone	3.2	14		U	
98-82-8	Isopropylbenzene	1.2	14		U	
79-20-9	Methyl acetate	2.2	14		U	
75-09-2	Methylene chloride	0.86	14	14U	~~2.2 JB~~	BL
108-87-2	Methyl cyclohexane	0.41	14	0.58	~~J~~ J	SS
1634-04-4	Methyl tert-butyl ether	0.44	14		U	
108-10-1	4-Methyl-2-pentanone	0.80	14		U	
100-42-5	Styrene	0.48	14		U	
79-34-5	1,1,2,2-Tetrachloroethane	0.59	14		U	
127-18-4	Tetrachloroethene	1.3	14		U	

FORM I VOA

NW
4/4/09

FORM 1
VOLATILE ORGANICS ANALYSIS DATA SHEET

CLIENT SAMPLE NO. 11

MR08-SS267-09A

Lab Name: EMPIRICAL LABS Contract: CH2MHILL

Lab Code: NA Case No.: NA SAS No.: NA SDG No.: LEJEUNE051

Matrix: (soil/water) SOIL Lab Sample ID: 0901145-11

Sample wt/vol: 3.8 (g/mL) G Lab File ID: 0114511A

Level: (low/med) LOW Date Sampled: 01/19/09 15:35

% Moisture: not dec. 4 Date Analyzed: 01/24/09 17:20

GC Column: RTX-VRX ID: 0.25 (mm) Dilution Factor: 1.0

Soil Extract Volume:_____(uL) Soil Aliquot Volume: _____(uL)

CONCENTRATION UNITS: (ug/L or ug/Kg) UG/KG

CAS NO.	COMPOUND	MDL	RL	CONC	Q
108-88-3	Toluene	1.2	14	14U ~~2.9~~	~~J~~ BL
120-82-1	1,2,4-Trichlorobenzene	0.25	14		U
71-55-6	1,1,1-Trichloroethane	1.2	14		U
79-00-5	1,1,2-Trichloroethane	0.48	14		U
79-01-6	Trichloroethene	1.2	14		U
76-13-1	Trichlorotrifluoroethane	0.76	14		U
75-69-4	Trichlorofluoromethane	1.3	14		U
75-01-4	Vinyl chloride	1.5	14		U
1330-20-7	Xylene(total)	0.96	14		U

UW
4/14/09

FORM 1
VOLATILE ORGANICS ANALYSIS DATA SHEET

CLIENT SAMPLE NO. 12

MR08-IS26
7-7-8-09A

Lab Name: EMPIRICAL LABS Contract: CH2MHILL

Lab Code: NA Case No.: NA SAS No.: NA SDG No.: LEJEUNE051

Matrix: (soil/water) SOIL Lab Sample ID: 0901145-12

Sample wt/vol: 5.5 (g/mL) G Lab File ID: 0114512A

Level: (low/med) LOW Date Sampled: 01/19/09 15:55

% Moisture: not dec. 12 Date Analyzed: 01/24/09 17:51

GC Column: RTX-VRX ID: 0.25 (mm) Dilution Factor: 1.0

Soil Extract Volume:_____(uL) Soil Aliquot Volume: _____(uL)

CONCENTRATION UNITS: (ug/L or ug/Kg) UG/KG

CAS NO.	COMPOUND	MDL	RL	CONC	Q	
67-64-1	Acetone	2.0	10	10U	~~4.4 JB~~	BL
71-43-2	Benzene	0.48	10		U	
75-27-4	Bromodichloromethane	0.31	10		U	
75-25-2	Bromoform	1.0	10		U	
74-83-9	Bromomethane	0.74	10		U	
78-93-3	2-Butanone	1.4	10		~~U~~ UJ	CU
75-15-0	Carbon disulfide	1.3	10		U	
56-23-5	Carbon tetrachloride	0.90	10		U	
108-90-7	Chlorobenzene	0.35	10		U	
75-00-3	Chloroethane	1.1	10		U	
67-66-3	Chloroform	0.56	10		U	
74-87-3	Chloromethane	0.53	10		U	
110-82-7	Cyclohexane	0.55	10		U	
124-48-1	Dibromochloromethane	0.35	10		U	
96-12-8	1,2-Dibromo-3-chloropropane	1.2	5.1		U	
106-93-4	1,2-Dibromoethane	0.44	10		U	
95-50-1	1,2-Dichlorobenzene	0.38	10		U	
541-73-1	1,3-Dichlorobenzene	0.86	10		U	
106-46-7	1,4-Dichlorobenzene	0.56	10		U	
75-71-8	Dichlorodifluoromethane	1.1	10		U	
75-34-3	1,1-Dichloroethane	0.55	10		U	
107-06-2	1,2-Dichloroethane	0.47	10		U	
75-35-4	1,1-Dichloroethene	1.2	10		U	
156-59-2	cis-1,2-Dichloroethene	1.2	10		U	
156-60-5	trans-1,2-Dichloroethene	1.1	10		U	
78-87-5	1,2-Dichloropropane	0.47	10		U	
10061-01-5	cis-1,3-Dichloropropene	0.51	10		U	
10061-02-6	trans-1,3-Dichloropropene	0.33	10		U	
100-41-4	Ethylbenzene	0.77	10		U	
591-78-6	2-Hexanone	2.4	10		U	
98-82-8	Isopropylbenzene	0.90	10		U	
79-20-9	Methyl acetate	1.6	10		U	
75-09-2	Methylene chloride	0.64	10	10U	~~1.8 JB~~	B
108-87-2	Methyl cyclohexane	0.31	10		U	
1634-04-4	Methyl tert-butyl ether	0.33	10		U	
108-10-1	4-Methyl-2-pentanone	0.60	10		U	
100-42-5	Styrene	0.36	10		U	
79-34-5	1,1,2,2-Tetrachloroethane	0.44	10		U	
127-18-4	Tetrachloroethene	1.00	10		U	

4/14/09

FORM 1
VOLATILE ORGANICS ANALYSIS DATA SHEET

CLIENT SAMPLE NO. 12

MR08-IS26
7-7-8-09A

Lab Name: EMPIRICAL LABS Contract: CH2MHILL

Lab Code: NA Case No.: NA SAS No.: NA SDG No.: LEJEUNE051

Matrix: (soil/water) SOIL Lab Sample ID: 0901145-12

Sample wt/vol: 5.5 (g/mL) G Lab File ID: 0114512A

Level: (low/med) LOW Date Sampled: 01/19/09 15:55

% Moisture: not dec. 12 Date Analyzed: 01/24/09 17:51

GC Column: RTX-VRX ID: 0.25 (mm) Dilution Factor: 1.0

Soil Extract Volume:_____(uL) Soil Aliquot Volume: _____(uL)

CONCENTRATION UNITS: (ug/L or ug/Kg) UG/KG

CAS NO.	COMPOUND	MDL	RL	CONC	Q
108-88-3	Toluene	0.88	10		U
120-82-1	1,2,4-Trichlorobenzene	0.18	10		U
71-55-6	1,1,1-Trichloroethane	0.92	10		U
79-00-5	1,1,2-Trichloroethane	0.36	10		U
79-01-6	Trichloroethene	0.87	10		U
76-13-1	Trichlorotrifluoroethane	0.56	10		U
75-69-4	Trichlorofluoromethane	0.98	10		U
75-01-4	Vinyl chloride	1.1	10		U
1330-20-7	Xylene(total)	0.72	10		U

AW
4/14/09

FORM 1
VOLATILE ORGANICS ANALYSIS DATA SHEET

CLIENT SAMPLE NO. 13

MR08-EB012009

Lab Name: EMPIRICAL LABS Contract: CH2MHILL

Lab Code: NA Case No.: NA SAS No.: NA SDG No.: LEJEUNE051

Matrix: (soil/water) WATER Lab Sample ID: 0901145-13

Sample wt/vol: 5.000 (g/mL) ML Lab File ID: 0114513

Level: (low/med) LOW Date Sampled: 01/20/09 07:10

% Moisture: not dec. _____ Date Analyzed: 01/27/09 15:52

GC Column: RTX-VRX ID: 0.25 (mm) Dilution Factor: 1.0

Soil Extract Volume:_____(uL) Soil Aliquot Volume: _____(uL)

CONCENTRATION UNITS: (ug/L or ug/Kg) UG/L

CAS NO.	COMPOUND	MDL	RL	CONC	Q
67-64-1	Acetone	0.84	2.5		U
71-43-2	Benzene	0.11	1.0		U
75-27-4	Bromodichloromethane	0.10	1.0		U
75-25-2	Bromoform	0.10	1.0		U
74-83-9	Bromomethane	0.32	1.0		U
78-93-3	2-Butanone	1.0	3.0		U
75-15-0	Carbon disulfide	0.13	1.0		U
56-23-5	Carbon tetrachloride	0.15	1.0		U
108-90-7	Chlorobenzene	0.10	1.0		U
75-00-3	Chloroethane	0.18	1.0		U
67-66-3	Chloroform	0.11	1.0		U
74-87-3	Chloromethane	0.29	1.0		U
110-82-7	Cyclohexane	0.20	1.0		U
124-48-1	Dibromochloromethane	0.10	1.0		U
96-12-8	1,2-Dibromo-3-chloropropane	0.11	1.0		U
106-93-4	1,2-Dibromoethane	0.10	1.0		U
95-50-1	1,2-Dichlorobenzene	0.10	1.0		U
541-73-1	1,3-Dichlorobenzene	0.13	1.0		U
106-46-7	1,4-Dichlorobenzene	0.10	1.0		U
75-71-8	Dichlorodifluoromethane	0.22	1.0		U
75-34-3	1,1-Dichloroethane	0.12	1.0		U
107-06-2	1,2-Dichloroethane	0.10	1.0		U
75-35-4	1,1-Dichloroethene	0.15	1.0		U
156-59-2	cis-1,2-Dichloroethene	0.13	1.0		U
156-60-5	trans-1,2-Dichloroethene	0.13	1.0		U
78-87-5	1,2-Dichloropropane	0.10	1.0		U
10061-01-5	cis-1,3-Dichloropropene	0.11	1.0		U
10061-02-6	trans-1,3-Dichloropropene	0.10	1.0		U
100-41-4	Ethylbenzene	0.13	1.0		U
591-78-6	2-Hexanone	0.30	2.0		U
98-82-8	Isopropylbenzene	0.15	1.0		U
79-20-9	Methyl acetate	0.30	1.0		U
75-09-2	Methylene chloride	0.14	1.0	1.0u ~~0.44~~ ~~JB~~	B
108-87-2	Methyl cyclohexane	0.17	1.0		U
1634-04-4	Methyl tert-butyl ether	0.10	1.0		U
108-10-1	4-Methyl-2-pentanone	0.29	1.0		U
100-42-5	Styrene	0.10	1.0		U
79-34-5	1,1,2,2-Tetrachloroethane	0.10	1.0		U
127-18-4	Tetrachloroethene	0.15	1.0		U

KW
4/14/09

FORM 1
VOLATILE ORGANICS ANALYSIS DATA SHEET

CLIENT SAMPLE NO. 13

MR08-EB012009

Lab Name: EMPIRICAL LABS Contract: CH2MHILL

Lab Code: NA Case No.: NA SAS No.: NA SDG No.: LEJEUNE051

Matrix: (soil/water) WATER Lab Sample ID: 0901145-13

Sample wt/vol: 5.000 (g/mL) ML Lab File ID: 0114513

Level: (low/med) LOW Date Sampled: 01/20/09 07:10

% Moisture: not dec. _____ Date Analyzed: 01/27/09 15:52

GC Column: RTX-VRX ID: 0.25 (mm) Dilution Factor: 1.0

Soil Extract Volume:_____(uL) Soil Aliquot Volume: _____(uL)

CONCENTRATION UNITS: (ug/L or ug/Kg) UG/L

CAS NO.	COMPOUND	MDL	RL	CONC	Q
108-88-3	Toluene	0.10	1.0	2.6	
120-82-1	1,2,4-Trichlorobenzene	0.10	1.0		U
71-55-6	1,1,1-Trichloroethane	0.17	1.0		U
79-00-5	1,1,2-Trichloroethane	0.10	1.0		U
79-01-6	Trichloroethene	0.13	1.0		U
76-13-1	Trichlorotrifluoroethane	0.18	1.0		U
75-69-4	Trichlorofluoromethane	0.17	1.0		U
75-01-4	Vinyl chloride	0.18	1.0		U
1330-20-7	Xylene(total)	0.22	1.0		U

JW 4/14/09

FORM 1
VOLATILE ORGANICS ANALYSIS DATA SHEET

CLIENT SAMPLE NO. 14

MR08-IS23
6-7-8-09A

Lab Name: EMPIRICAL LABS Contract: CH2MHILL

Lab Code: NA Case No.: NA SAS No.: NA SDG No.: LEJEUNE051

Matrix: (soil/water) SOIL Lab Sample ID: 0901145-14

Sample wt/vol: 5.9 (g/mL) G Lab File ID: 0114514A

Level: (low/med) LOW Date Sampled: 01/20/09 09:15

% Moisture: not dec. 16 Date Analyzed: 01/24/09 18:22

GC Column: RTX-VRX ID: 0.25 (mm) Dilution Factor: 1.0

Soil Extract Volume:_____(uL) Soil Aliquot Volume: _____(uL)

CONCENTRATION UNITS: (ug/L or ug/Kg) UG/KG

CAS NO.	COMPOUND	MDL	RL	CONC	Q	
67-64-1	Acetone	2.0	10	10U	~~4.5 JB~~	BL
71-43-2	Benzene	0.47	10		U	
75-27-4	Bromodichloromethane	0.30	10		U	
75-25-2	Bromoform	1.0	10		U	
74-83-9	Bromomethane	0.73	10		U	
78-93-3	2-Butanone	1.4	10		U	
75-15-0	Carbon disulfide	1.3	10		U	
56-23-5	Carbon tetrachloride	0.89	10		U	
108-90-7	Chlorobenzene	0.34	10		U	
75-00-3	Chloroethane	1.1	10		U	
67-66-3	Chloroform	0.56	10		U	
74-87-3	Chloromethane	0.52	10		U	
110-82-7	Cyclohexane	0.54	10		U	
124-48-1	Dibromochloromethane	0.34	10		U	
96-12-8	1,2-Dibromo-3-chloropropane	1.2	5.0		U	
106-93-4	1,2-Dibromoethane	0.43	10		U	
95-50-1	1,2-Dichlorobenzene	0.37	10		U	
541-73-1	1,3-Dichlorobenzene	0.85	10		U	
106-46-7	1,4-Dichlorobenzene	0.56	10		U	
75-71-8	Dichlorodifluoromethane	1.1	10		U	
75-34-3	1,1-Dichloroethane	0.54	10		U	
107-06-2	1,2-Dichloroethane	0.46	10		U	
75-35-4	1,1-Dichloroethene	1.2	10		U	
156-59-2	cis-1,2-Dichloroethene	1.2	10		U	
156-60-5	trans-1,2-Dichloroethene	1.1	10		U	
78-87-5	1,2-Dichloropropane	0.46	10		U	
10061-01-5	cis-1,3-Dichloropropene	0.50	10		U	
10061-02-6	trans-1,3-Dichloropropene	0.32	10		U	
100-41-4	Ethylbenzene	0.76	10		U	
591-78-6	2-Hexanone	2.3	10		U	
98-82-8	Isopropylbenzene	0.89	10		U	
79-20-9	Methyl acetate	1.6	10		U	
75-09-2	Methylene chloride	0.63	10	10U	~~1.9 JB~~	BL
108-87-2	Methyl cyclohexane	0.30	10		U	
1634-04-4	Methyl tert-butyl ether	0.32	10		U	
108-10-1	4-Methyl-2-pentanone	0.59	10		U	
100-42-5	Styrene	0.35	10		U	
79-34-5	1,1,2,2-Tetrachloroethane	0.43	10		U	
127-18-4	Tetrachloroethene	0.98	10		U	

MW
4/14/09

FORM 1
VOLATILE ORGANICS ANALYSIS DATA SHEET

CLIENT SAMPLE NO. 14

MR08-IS23
6-7-8-09A

Lab Name: EMPIRICAL LABS Contract: CH2MHILL

Lab Code: NA Case No.: NA SAS No.: NA SDG No.: LEJEUNE051

Matrix: (soil/water) SOIL Lab Sample ID: 0901145-14

Sample wt/vol: 5.9 (g/mL) G Lab File ID: 0114514A

Level: (low/med) LOW Date Sampled: 01/20/09 09:15

% Moisture: not dec. 16 Date Analyzed: 01/24/09 18:22

GC Column: RTX-VRX ID: 0.25 (mm) Dilution Factor: 1.0

Soil Extract Volume:_____(uL) Soil Aliquot Volume: _____(uL)

CONCENTRATION UNITS: (ug/L or ug/Kg) UG/KG

CAS NO.	COMPOUND	MDL	RL	CONC	Q
108-88-3	Toluene	0.87	10		U
120-82-1	1,2,4-Trichlorobenzene	0.18	10		U
71-55-6	1,1,1-Trichloroethane	0.91	10		U
79-00-5	1,1,2-Trichloroethane	0.35	10		U
79-01-6	Trichloroethene	0.86	10		U
76-13-1	Trichlorotrifluoroethane	0.56	10		U
75-69-4	Trichlorofluoromethane	0.96	10		U
75-01-4	Vinyl chloride	1.1	10		U
1330-20-7	Xylene(total)	0.71	10		U

MW 4/14/09

FORM 1
VOLATILE ORGANICS ANALYSIS DATA SHEET

CLIENT SAMPLE NO. 15

MR08-SS236-09A

Lab Name: EMPIRICAL LABS Contract: CH2MHILL

Lab Code: NA Case No.: NA SAS No.: NA SDG No.: LEJEUNE051

Matrix: (soil/water) SOIL Lab Sample ID: 0901145-15

Sample wt/vol: 4.9 (g/mL) G Lab File ID: 0114515A

Level: (low/med) LOW Date Sampled: 01/20/09 09:10

% Moisture: not dec. 17 Date Analyzed: 01/24/09 18:53

GC Column: RTX-VRX ID: 0.25 (mm) Dilution Factor: 1.0

Soil Extract Volume:_____(uL) Soil Aliquot Volume: _____(uL)

CONCENTRATION UNITS: (ug/L or ug/Kg) UG/KG

CAS NO.	COMPOUND	MDL	RL	CONC	Q	
67-64-1	Acetone	2.4	12	56	~~B~~U	BL
71-43-2	Benzene	0.57	12		U	
75-27-4	Bromodichloromethane	0.37	12		U	
75-25-2	Bromoform	1.2	12		U	
74-83-9	Bromomethane	0.88	12		U	
78-93-3	2-Butanone	1.7	12	4.3	J	
75-15-0	Carbon disulfide	1.6	12		U	
56-23-5	Carbon tetrachloride	1.1	12		U	
108-90-7	Chlorobenzene	0.42	12		U	
75-00-3	Chloroethane	1.3	12		U	
67-66-3	Chloroform	0.67	12		U	
74-87-3	Chloromethane	0.64	12		U	
110-82-7	Cyclohexane	0.66	12		U	
124-48-1	Dibromochloromethane	0.42	12		U	
96-12-8	1,2-Dibromo-3-chloropropane	1.5	6.1		U	
106-93-4	1,2-Dibromoethane	0.52	12		U	
95-50-1	1,2-Dichlorobenzene	0.45	12		U	
541-73-1	1,3-Dichlorobenzene	1.0	12		U	
106-46-7	1,4-Dichlorobenzene	0.67	12		U	
75-71-8	Dichlorodifluoromethane	1.3	12		U	
75-34-3	1,1-Dichloroethane	0.66	12		U	
107-06-2	1,2-Dichloroethane	0.56	12		U	
75-35-4	1,1-Dichloroethene	1.5	12		U	
156-59-2	cis-1,2-Dichloroethene	1.5	12		U	
156-60-5	trans-1,2-Dichloroethene	1.3	12		U	
78-87-5	1,2-Dichloropropane	0.56	12		U	
10061-01-5	cis-1,3-Dichloropropene	0.61	12		U	
10061-02-6	trans-1,3-Dichloropropene	0.39	12		U	
100-41-4	Ethylbenzene	0.92	12		U	
591-78-6	2-Hexanone	2.8	12		U	
98-82-8	Isopropylbenzene	1.1	12		U	
79-20-9	Methyl acetate	2.0	12		U	
75-09-2	Methylene chloride	0.76	12	12u	~~2.0~~ ~~JB~~	BL
108-87-2	Methyl cyclohexane	0.37	12		U	
1634-04-4	Methyl tert-butyl ether	0.39	12		U	
108-10-1	4-Methyl-2-pentanone	0.71	12		U	
100-42-5	Styrene	0.43	12		U	
79-34-5	1,1,2,2-Tetrachloroethane	0.52	12		U	
127-18-4	Tetrachloroethene	1.2	12		U	

MW 4/14/09

FORM 1
VOLATILE ORGANICS ANALYSIS DATA SHEET

CLIENT SAMPLE NO. 15

MR08-SS236-09A

Lab Name: EMPIRICAL LABS Contract: CH2MHILL

Lab Code: NA Case No.: NA SAS No.: NA SDG No.: LEJEUNE051

Matrix: (soil/water) SOIL Lab Sample ID: 0901145-15

Sample wt/vol: 4.9 (g/mL) G Lab File ID: 0114515A

Level: (low/med) LOW Date Sampled: 01/20/09 09:10

% Moisture: not dec. 17 Date Analyzed: 01/24/09 18:53

GC Column: RTX-VRX ID: 0.25 (mm) Dilution Factor: 1.0

Soil Extract Volume:_____(uL) Soil Aliquot Volume: _____(uL)

CONCENTRATION UNITS: (ug/L or ug/Kg) UG/KG

CAS NO.	COMPOUND	MDL	RL	CONC	Q
108-88-3	Toluene	1.0	12		U
120-82-1	1,2,4-Trichlorobenzene	0.22	12		U
71-55-6	1,1,1-Trichloroethane	1.1	12		U
79-00-5	1,1,2-Trichloroethane	0.43	12		U
79-01-6	Trichloroethene	1.0	12		U
76-13-1	Trichlorotrifluoroethane	0.67	12		U
75-69-4	Trichlorofluoromethane	1.2	12		U
75-01-4	Vinyl chloride	1.3	12		U
1330-20-7	Xylene(total)	0.86	12		U

NW
4/4/09

FORM 1
VOLATILE ORGANICS ANALYSIS DATA SHEET

CLIENT SAMPLE NO. 16

MR08-SS222-09A

Lab Name: EMPIRICAL LABS Contract: CH2MHILL

Lab Code: NA Case No.: NA SAS No.: NA SDG No.: LEJEUNE051

Matrix: (soil/water) SOIL Lab Sample ID: 0901145-16

Sample wt/vol: 3.9 (g/mL) G Lab File ID: 0114516B

Level: (low/med) LOW Date Sampled: 01/20/09 09:20

% Moisture: not dec. 11 Date Analyzed: 01/26/09 17:16

GC Column: RTX-VRX ID: 0.25 (mm) Dilution Factor: 1.0

Soil Extract Volume:_____(uL) Soil Aliquot Volume: _____(uL)

CONCENTRATION UNITS: (ug/L or ug/Kg) UG/KG

CAS NO.	COMPOUND	MDL	RL	CONC	Q	
67-64-1	Acetone	2.9	14	26	J	CU
71-43-2	Benzene	0.68	14		U	
75-27-4	Bromodichloromethane	0.44	14		U	
75-25-2	Bromoform	1.4	14		U	
74-83-9	Bromomethane	1.0	14		U	
78-93-3	2-Butanone	2.0	14		U	
75-15-0	Carbon disulfide	1.9	14		U	
56-23-5	Carbon tetrachloride	1.3	14		U	
108-90-7	Chlorobenzene	0.50	14		U	
75-00-3	Chloroethane	1.6	14		U	
67-66-3	Chloroform	0.80	14		U	
74-87-3	Chloromethane	0.76	14		U	
110-82-7	Cyclohexane	0.79	14		U	
124-48-1	Dibromochloromethane	0.50	14		U	
96-12-8	1,2-Dibromo-3-chloropropane	1.8	7.3		U	
106-93-4	1,2-Dibromoethane	0.63	14		U	
95-50-1	1,2-Dichlorobenzene	0.54	14		U	
541-73-1	1,3-Dichlorobenzene	1.2	14		U	
106-46-7	1,4-Dichlorobenzene	0.80	14		U	
75-71-8	Dichlorodifluoromethane	1.6	14		U	
75-34-3	1,1-Dichloroethane	0.79	14		U	
107-06-2	1,2-Dichloroethane	0.67	14		U	
75-35-4	1,1-Dichloroethene	1.8	14		U	
156-59-2	cis-1,2-Dichloroethene	1.8	14		U	
156-60-5	trans-1,2-Dichloroethene	1.6	14		U	
78-87-5	1,2-Dichloropropane	0.67	14		U	
10061-01-5	cis-1,3-Dichloropropene	0.73	14		U	
10061-02-6	trans-1,3-Dichloropropene	0.47	14		U	
100-41-4	Ethylbenzene	1.1	14		U	
591-78-6	2-Hexanone	3.4	14		U	
98-82-8	Isopropylbenzene	1.3	14		U	
79-20-9	Methyl acetate	2.3	14		U	
75-09-2	Methylene chloride	0.90	14	14u	~~2.4 JB~~	B
108-87-2	Methyl cyclohexane	0.44	14		U	
1634-04-4	Methyl tert-butyl ether	0.47	14		U	
108-10-1	4-Methyl-2-pentanone	0.85	14		U	
100-42-5	Styrene	0.51	14		U	
79-34-5	1,1,2,2-Tetrachloroethane	0.63	14		U	
127-18-4	Tetrachloroethene	1.4	14		U	

FORM I VOA

NW
4/4/09

FORM 1
VOLATILE ORGANICS ANALYSIS DATA SHEET

CLIENT SAMPLE NO. 16

MR08-SS222-09A

Lab Name: EMPIRICAL LABS Contract: CH2MHILL

Lab Code: NA Case No.: NA SAS No.: NA SDG No.: LEJEUNE051

Matrix: (soil/water) SOIL Lab Sample ID: 0901145-16

Sample wt/vol: 3.9 (g/mL) G Lab File ID: 0114516B

Level: (low/med) LOW Date Sampled: 01/20/09 09:20

% Moisture: not dec. 11 Date Analyzed: 01/26/09 17:16

GC Column: RTX-VRX ID: 0.25 (mm) Dilution Factor: 1.0

Soil Extract Volume:_____(uL) Soil Aliquot Volume: _____(uL)

CONCENTRATION UNITS: (ug/L or ug/Kg) UG/KG

CAS NO.	COMPOUND	MDL	RL	CONC	Q
108-88-3	Toluene	1.2	14		U
120-82-1	1,2,4-Trichlorobenzene	0.26	14		U
71-55-6	1,1,1-Trichloroethane	1.3	14		U
79-00-5	1,1,2-Trichloroethane	0.51	14		U
79-01-6	Trichloroethene	1.2	14		U
76-13-1	Trichlorotrifluoroethane	0.80	14		U
75-69-4	Trichlorofluoromethane	1.4	14		U
75-01-4	Vinyl chloride	1.6	14		U
1330-20-7	Xylene(total)	1.0	14		U

NW
4/4/09

FORM 1
VOLATILE ORGANICS ANALYSIS DATA SHEET

CLIENT SAMPLE NO. 17

MR08-IS22
2-4-5-09A

Lab Name: EMPIRICAL LABS Contract: CH2MHILL

Lab Code: NA Case No.: NA SAS No.: NA SDG No.: LEJEUNE051

Matrix: (soil/water) SOIL Lab Sample ID: 0901145-17

Sample wt/vol: 5.2 (g/mL) G Lab File ID: 0114517A

Level: (low/med) LOW Date Sampled: 01/20/09 09:25

% Moisture: not dec. 11 Date Analyzed: 01/25/09 01:03

GC Column: RTX-VRX ID: 0.25 (mm) Dilution Factor: 1.0

Soil Extract Volume:_____(uL) Soil Aliquot Volume: _____(uL)

CONCENTRATION UNITS: (ug/L or ug/Kg) UG/KG

CAS NO.	COMPOUND	MDL	RL	CONC	Q	
67-64-1	Acetone	2.2	11	11u ~~4.5~~	~~J~~	BL
71-43-2	Benzene	0.51	11		U	
75-27-4	Bromodichloromethane	0.32	11		U	
75-25-2	Bromoform	1.1	11		U	
74-83-9	Bromomethane	0.78	11		U	
78-93-3	2-Butanone	1.5	11		U	
75-15-0	Carbon disulfide	1.4	11		U	
56-23-5	Carbon tetrachloride	0.96	11		U	
108-90-7	Chlorobenzene	0.37	11		U	
75-00-3	Chloroethane	1.2	11		U	
67-66-3	Chloroform	0.60	11		U	
74-87-3	Chloromethane	0.56	11		U	
110-82-7	Cyclohexane	0.59	11		U	
124-48-1	Dibromochloromethane	0.37	11		U	
96-12-8	1,2-Dibromo-3-chloropropane	1.3	5.4		U	
106-93-4	1,2-Dibromoethane	0.47	11		U	
95-50-1	1,2-Dichlorobenzene	0.40	11		U	
541-73-1	1,3-Dichlorobenzene	0.91	11		U	
106-46-7	1,4-Dichlorobenzene	0.60	11		U	
75-71-8	Dichlorodifluoromethane	1.2	11		U	
75-34-3	1,1-Dichloroethane	0.59	11		U	
107-06-2	1,2-Dichloroethane	0.50	11		U	
75-35-4	1,1-Dichloroethene	1.3	11		U	
156-59-2	cis-1,2-Dichloroethene	1.3	11		U	
156-60-5	trans-1,2-Dichloroethene	1.2	11		U	
78-87-5	1,2-Dichloropropane	0.50	11		U	
10061-01-5	cis-1,3-Dichloropropene	0.54	11		U	
10061-02-6	trans-1,3-Dichloropropene	0.35	11		U	
100-41-4	Ethylbenzene	0.81	11		U	
591-78-6	2-Hexanone	2.5	11		U	
98-82-8	Isopropylbenzene	0.96	11		U	
79-20-9	Methyl acetate	1.7	11		U	
75-09-2	Methylene chloride	0.67	11	11u ~~1.9~~	~~JB~~	BL
108-87-2	Methyl cyclohexane	0.32	11		U	
1634-04-4	Methyl tert-butyl ether	0.35	11		U	
108-10-1	4-Methyl-2-pentanone	0.63	11		U	
100-42-5	Styrene	0.38	11		U	
79-34-5	1,1,2,2-Tetrachloroethane	0.47	11		U	
127-18-4	Tetrachloroethene	1.0	11		U	

FORM I VOA

MW 4/4/09

FORM 1
VOLATILE ORGANICS ANALYSIS DATA SHEET

CLIENT SAMPLE NO. 17

MR08-IS22
2-4-5-09A

Lab Name: EMPIRICAL LABS Contract: CH2MHILL

Lab Code: NA Case No.: NA SAS No.: NA SDG No.: LEJEUNE051

Matrix: (soil/water) SOIL Lab Sample ID: 0901145-17

Sample wt/vol: 5.2 (g/mL) G Lab File ID: 0114517A

Level: (low/med) LOW Date Sampled: 01/20/09 09:25

% Moisture: not dec. 11 Date Analyzed: 01/25/09 01:03

GC Column: RTX-VRX ID: 0.25 (mm) Dilution Factor: 1.0

Soil Extract Volume:_____(uL) Soil Aliquot Volume: _____(uL)

CONCENTRATION UNITS: (ug/L or ug/Kg) UG/KG

CAS NO.	COMPOUND	MDL	RL	CONC	Q
108-88-3	Toluene	0.93	11		U
120-82-1	1,2,4-Trichlorobenzene	0.20	11		U
71-55-6	1,1,1-Trichloroethane	0.98	11		U
79-00-5	1,1,2-Trichloroethane	0.38	11		U
79-01-6	Trichloroethene	0.92	11		U
76-13-1	Trichlorotrifluoroethane	0.60	11		U
75-69-4	Trichlorofluoromethane	1.0	11		U
75-01-4	Vinyl chloride	1.2	11		U
1330-20-7	Xylene(total)	0.76	11		U

lw 4/4/09

FORM 1
VOLATILE ORGANICS ANALYSIS DATA SHEET

CLIENT SAMPLE NO. 18

MR08-IS22
3-4-5-09A

Lab Name: EMPIRICAL LABS Contract: CH2MHILL

Lab Code: NA Case No.: NA SAS No.: NA SDG No.: LEJEUNE051

Matrix: (soil/water) SOIL Lab Sample ID: 0901145-18

Sample wt/vol: 5.7 (g/mL) G Lab File ID: 0114518A

Level: (low/med) LOW Date Sampled: 01/20/09 09:55

% Moisture: not dec. 11 Date Analyzed: 01/25/09 01:33

GC Column: RTX-VRX ID: 0.25 (mm) Dilution Factor: 1.0

Soil Extract Volume:_____(uL) Soil Aliquot Volume: _____(uL)

CONCENTRATION UNITS: (ug/L or ug/Kg) UG/KG

CAS NO.	COMPOUND	MDL	RL	CONC	Q	
67-64-1	Acetone	1.9	9.7	9.1u ~~4.3~~	~~J~~	BL
71-43-2	Benzene	0.46	9.7		U	
75-27-4	Bromodichloromethane	0.29	9.7		U	
75-25-2	Bromoform	0.97	9.7		U	
74-83-9	Bromomethane	0.70	9.7		U	
78-93-3	2-Butanone	1.4	9.7		U	
75-15-0	Carbon disulfide	1.3	9.7		U	
56-23-5	Carbon tetrachloride	0.86	9.7		U	
108-90-7	Chlorobenzene	0.33	9.7		U	
75-00-3	Chloroethane	1.1	9.7		U	
67-66-3	Chloroform	0.54	9.7		U	
74-87-3	Chloromethane	0.51	9.7		U	
110-82-7	Cyclohexane	0.53	9.7		U	
124-48-1	Dibromochloromethane	0.33	9.7		U	
96-12-8	1,2-Dibromo-3-chloropropane	1.2	4.9		U	
106-93-4	1,2-Dibromoethane	0.42	9.7		U	
95-50-1	1,2-Dichlorobenzene	0.36	9.7		U	
541-73-1	1,3-Dichlorobenzene	0.82	9.7		U	
106-46-7	1,4-Dichlorobenzene	0.54	9.7		U	
75-71-8	Dichlorodifluoromethane	1.1	9.7		U	
75-34-3	1,1-Dichloroethane	0.53	9.7		U	
107-06-2	1,2-Dichloroethane	0.45	9.7		U	
75-35-4	1,1-Dichloroethene	1.2	9.7		U	
156-59-2	cis-1,2-Dichloroethene	1.2	9.7		U	
156-60-5	trans-1,2-Dichloroethene	1.1	9.7		U	
78-87-5	1,2-Dichloropropane	0.45	9.7		U	
10061-01-5	cis-1,3-Dichloropropene	0.49	9.7		U	
10061-02-6	trans-1,3-Dichloropropene	0.31	9.7		U	
100-41-4	Ethylbenzene	0.73	9.7		U	
591-78-6	2-Hexanone	2.2	9.7		U	
98-82-8	Isopropylbenzene	0.86	9.7		U	
79-20-9	Methyl acetate	1.6	9.7		U	
75-09-2	Methylene chloride	0.60	9.7	9.1u ~~1.8~~	~~JB~~	B
108-87-2	Methyl cyclohexane	0.29	9.7		U	
1634-04-4	Methyl tert-butyl ether	0.31	9.7		U	
108-10-1	4-Methyl-2-pentanone	0.56	9.7		U	
100-42-5	Styrene	0.34	9.7		U	
79-34-5	1,1,2,2-Tetrachloroethane	0.42	9.7		U	
127-18-4	Tetrachloroethene	0.94	9.7		U	

FORM I VOA

MW 4/4/09

FORM 1
VOLATILE ORGANICS ANALYSIS DATA SHEET

CLIENT SAMPLE NO. 18

MR08-IS22
3-4-5-09A

Lab Name: EMPIRICAL LABS Contract: CH2MHILL

Lab Code: NA Case No.: NA SAS No.: NA SDG No.: LEJEUNE051

Matrix: (soil/water) SOIL Lab Sample ID: 0901145-18

Sample wt/vol: 5.7 (g/mL) G Lab File ID: 0114518A

Level: (low/med) LOW Date Sampled: 01/20/09 09:55

% Moisture: not dec. 11 Date Analyzed: 01/25/09 01:33

GC Column: RTX-VRX ID: 0.25 (mm) Dilution Factor: 1.0

Soil Extract Volume:_____(uL) Soil Aliquot Volume: _____(uL)

CONCENTRATION UNITS: (ug/L or ug/Kg) UG/KG

CAS NO.	COMPOUND	MDL	RL	CONC	Q
108-88-3	Toluene	0.84	9.7		U
120-82-1	1,2,4-Trichlorobenzene	0.18	9.7		U
71-55-6	1,1,1-Trichloroethane	0.88	9.7		U
79-00-5	1,1,2-Trichloroethane	0.34	9.7		U
79-01-6	Trichloroethene	0.83	9.7		U
76-13-1	Trichlorotrifluoroethane	0.54	9.7		U
75-69-4	Trichlorofluoromethane	0.92	9.7		U
75-01-4	Vinyl chloride	1.1	9.7		U
1330-20-7	Xylene(total)	0.68	9.7		U

fw 4/4/09

19

FORM 1
VOLATILE ORGANICS ANALYSIS DATA SHEET

CLIENT SAMPLE NO.

MR08-SS223-09A

Lab Name: EMPIRICAL LABS Contract: CH2MHILL

Lab Code: NA Case No.: NA SAS No.: NA SDG No.: LEJEUNE051

Matrix: (soil/water) SOIL Lab Sample ID: 0901145-19

Sample wt/vol: 5.4 (g/mL) G Lab File ID: 0114519A

Level: (low/med) LOW Date Sampled: 01/20/09 10:00

% Moisture: not dec. 11 Date Analyzed: 01/25/09 02:04

GC Column: RTX-VRX ID: 0.25 (mm) Dilution Factor: 1.0

Soil Extract Volume:_____(uL) Soil Aliquot Volume: _____(uL)

CONCENTRATION UNITS: (ug/L or ug/Kg) UG/KG

CAS NO.	COMPOUND	MDL	RL	CONC	Q
67-64-1	Acetone	2.1	10	10	~~J~~ U BL
71-43-2	Benzene	0.49	10	0.57	J
75-27-4	Bromodichloromethane	0.31	10		U
75-25-2	Bromoform	1.0	10		U
74-83-9	Bromomethane	0.75	10		U
78-93-3	2-Butanone	1.4	10		U
75-15-0	Carbon disulfide	1.4	10		U
56-23-5	Carbon tetrachloride	0.92	10		U
108-90-7	Chlorobenzene	0.35	10		U
75-00-3	Chloroethane	1.1	10		U
67-66-3	Chloroform	0.57	10		U
74-87-3	Chloromethane	0.54	10		U
110-82-7	Cyclohexane	0.56	10		U
124-48-1	Dibromochloromethane	0.35	10		U
96-12-8	1,2-Dibromo-3-chloropropane	1.2	5.2		U
106-93-4	1,2-Dibromoethane	0.45	10		U
95-50-1	1,2-Dichlorobenzene	0.38	10		U
541-73-1	1,3-Dichlorobenzene	0.87	10		U
106-46-7	1,4-Dichlorobenzene	0.57	10		U
75-71-8	Dichlorodifluoromethane	1.1	10		U
75-34-3	1,1-Dichloroethane	0.56	10		U
107-06-2	1,2-Dichloroethane	0.48	10		U
75-35-4	1,1-Dichloroethene	1.2	10		U
156-59-2	cis-1,2-Dichloroethene	1.2	10		U
156-60-5	trans-1,2-Dichloroethene	1.1	10		U
78-87-5	1,2-Dichloropropane	0.48	10		U
10061-01-5	cis-1,3-Dichloropropene	0.52	10		U
10061-02-6	trans-1,3-Dichloropropene	0.33	10		U
100-41-4	Ethylbenzene	0.78	10		U
~~591-78-6~~	~~2-Hexanone~~	~~2.4~~	~~10~~		~~U~~
98-82-8	Isopropylbenzene	0.92	10		U
79-20-9	Methyl acetate	1.7	10		U
75-09-2	Methylene chloride	0.64	10	10U	~~1.8 JB~~ B
108-87-2	Methyl cyclohexane	0.31	10		U
1634-04-4	Methyl tert-butyl ether	0.33	10		U
108-10-1	4-Methyl-2-pentanone	0.60	10		U
100-42-5	Styrene	0.36	10		U
79-34-5	1,1,2,2-Tetrachloroethane	0.45	10		U
127-18-4	Tetrachloroethene	1.0	10		U

FORM I VOA

LW 9/14/09

19

FORM 1
VOLATILE ORGANICS ANALYSIS DATA SHEET

CLIENT SAMPLE NO.

MR08-SS223-09A

Lab Name: EMPIRICAL LABS Contract: CH2MHILL

Lab Code: NA Case No.: NA SAS No.: NA SDG No.: LEJEUNE051

Matrix: (soil/water) SOIL Lab Sample ID: 0901145-19

Sample wt/vol: 5.4 (g/mL) G Lab File ID: 0114519A

Level: (low/med) LOW Date Sampled: 01/20/09 10:00

% Moisture: not dec. 11 Date Analyzed: 01/25/09 02:04

GC Column: RTX-VRX ID: 0.25 (mm) Dilution Factor: 1.0

Soil Extract Volume:_____(uL) Soil Aliquot Volume: _____(uL)

CONCENTRATION UNITS: (ug/L or ug/Kg) UG/KG

CAS NO.	COMPOUND	MDL	RL	CONC	Q
108-88-3	Toluene	0.90	10		U
120-82-1	1,2,4-Trichlorobenzene	0.19	10		U
71-55-6	1,1,1-Trichloroethane	0.94	10		U
79-00-5	1,1,2-Trichloroethane	0.36	10		U
79-01-6	Trichloroethene	0.88	10		U
76-13-1	Trichlorotrifluoroethane	0.57	10		U
75-69-4	Trichlorofluoromethane	0.99	10		U
75-01-4	Vinyl chloride	1.1	10		U
1330-20-7	Xylene(total)	0.73	10		U

LW 4/14/09

FORM 1
VOLATILE ORGANICS ANALYSIS DATA SHEET

CLIENT SAMPLE NO. 20

MR08-IS21
2-4-5-09A

Lab Name: EMPIRICAL LABS Contract: CH2MHILL

Lab Code: NA Case No.: NA SAS No.: NA SDG No.: LEJEUNE051

Matrix: (soil/water) SOIL Lab Sample ID: 0901145-20

Sample wt/vol: 5.0 (g/mL) G Lab File ID: 0114520A

Level: (low/med) LOW Date Sampled: 01/20/09 10:25

% Moisture: not dec. 14 Date Analyzed: 01/25/09 02:35

GC Column: RTX-VRX ID: 0.25 (mm) Dilution Factor: 1.0

Soil Extract Volume:_____(uL) Soil Aliquot Volume: _____(uL)

CONCENTRATION UNITS: (ug/L or ug/Kg) UG/KG

CAS NO.	COMPOUND	MDL	RL	CONC	Q
67-64-1	Acetone	2.3	12		U
71-43-2	Benzene	0.55	12		U
75-27-4	Bromodichloromethane	0.35	12		U
75-25-2	Bromoform	1.2	12		U
74-83-9	Bromomethane	0.84	12		U
78-93-3	2-Butanone	1.6	12		U
75-15-0	Carbon disulfide	1.5	12		U
56-23-5	Carbon tetrachloride	1.0	12		U
108-90-7	Chlorobenzene	0.40	12		U
75-00-3	Chloroethane	1.3	12		U
67-66-3	Chloroform	0.64	12		U
74-87-3	Chloromethane	0.60	12		U
110-82-7	Cyclohexane	0.63	12		U
124-48-1	Dibromochloromethane	0.40	12		U
96-12-8	1,2-Dibromo-3-chloropropane	1.4	5.8		U
106-93-4	1,2-Dibromoethane	0.50	12		U
95-50-1	1,2-Dichlorobenzene	0.43	12		U
541-73-1	1,3-Dichlorobenzene	0.98	12		U
106-46-7	1,4-Dichlorobenzene	0.64	12		U
75-71-8	Dichlorodifluoromethane	1.3	12		U
75-34-3	1,1-Dichloroethane	0.63	12		U
107-06-2	1,2-Dichloroethane	0.54	12		U
75-35-4	1,1-Dichloroethene	1.4	12		U
156-59-2	cis-1,2-Dichloroethene	1.4	12		U
156-60-5	trans-1,2-Dichloroethene	1.3	12		U
78-87-5	1,2-Dichloropropane	0.54	12		U
10061-01-5	cis-1,3-Dichloropropene	0.58	12		U
10061-02-6	trans-1,3-Dichloropropene	0.37	12		U
100-41-4	Ethylbenzene	0.87	12		U
591-78-6	2-Hexanone	2.7	12		U
98-82-8	Isopropylbenzene	1.0	12		U
79-20-9	Methyl acetate	1.9	12		U
75-09-2	Methylene chloride	0.72	12	12U	~~2.3 JB~~ BL
108-87-2	Methyl cyclohexane	0.35	12		U
1634-04-4	Methyl tert-butyl ether	0.37	12		U
108-10-1	4-Methyl-2-pentanone	0.68	12		U
100-42-5	Styrene	0.41	12		U
79-34-5	1,1,2,2-Tetrachloroethane	0.50	12		U
127-18-4	Tetrachloroethene	1.1	12		U

FORM I VOA

LW
4/4/09

20

FORM 1
VOLATILE ORGANICS ANALYSIS DATA SHEET

CLIENT SAMPLE NO.

MR08-IS21
2-4-5-09A

Lab Name: EMPIRICAL LABS Contract: CH2MHILL

Lab Code: NA Case No.: NA SAS No.: NA SDG No.: LEJEUNE051

Matrix: (soil/water) SOIL Lab Sample ID: 0901145-20

Sample wt/vol: 5.0 (g/mL) G Lab File ID: 0114520A

Level: (low/med) LOW Date Sampled: 01/20/09 10:25

% Moisture: not dec. 14 Date Analyzed: 01/25/09 02:35

GC Column: RTX-VRX ID: 0.25 (mm) Dilution Factor: 1.0

Soil Extract Volume:_____(uL) Soil Aliquot Volume: _____(uL)

CONCENTRATION UNITS: (ug/L or ug/Kg) UG/KG

CAS NO.	COMPOUND	MDL	RL	CONC	Q
108-88-3	Toluene	1.0	12		U
120-82-1	1,2,4-Trichlorobenzene	0.21	12		U
71-55-6	1,1,1-Trichloroethane	1.0	12		U
79-00-5	1,1,2-Trichloroethane	0.41	12		U
79-01-6	Trichloroethene	0.99	12		U
76-13-1	Trichlorotrifluoroethane	0.64	12		U
75-69-4	Trichlorofluoromethane	1.1	12		U
75-01-4	Vinyl chloride	1.3	12		U
1330-20-7	Xylene(total)	0.82	12		U

lw
4/4/09

21

FORM 1
VOLATILE ORGANICS ANALYSIS DATA SHEET

CLIENT SAMPLE NO.

MR08-SS212-09A

Lab Name: EMPIRICAL LABS Contract: CH2MHILL

Lab Code: NA Case No.: NA SAS No.: NA SDG No.: LEJEUNE051

Matrix: (soil/water) SOIL Lab Sample ID: 0901145-21

Sample wt/vol: 5.5 (g/mL) G Lab File ID: 0114521A

Level: (low/med) LOW Date Sampled: 01/20/09 10:30

% Moisture: not dec. 14 Date Analyzed: 01/25/09 03:06

GC Column: RTX-VRX ID: 0.25 (mm) Dilution Factor: 1.0

Soil Extract Volume:_____(uL) Soil Aliquot Volume: _____(uL)

CONCENTRATION UNITS: (ug/L or ug/Kg) UG/KG

CAS NO.	COMPOUND	MDL	RL	CONC	Q
67-64-1	Acetone	2.1	10		U
71-43-2	Benzene	0.50	10	0.88	J
75-27-4	Bromodichloromethane	0.32	10		U
75-25-2	Bromoform	1.0	10		U
74-83-9	Bromomethane	0.76	10		U
78-93-3	2-Butanone	1.5	10		U
75-15-0	Carbon disulfide	1.4	10	2.0	J
56-23-5	Carbon tetrachloride	0.93	10		U
108-90-7	Chlorobenzene	0.36	10		U
75-00-3	Chloroethane	1.2	10		U
67-66-3	Chloroform	0.58	10		U
74-87-3	Chloromethane	0.55	10		U
110-82-7	Cyclohexane	0.57	10		U
124-48-1	Dibromochloromethane	0.36	10		U
96-12-8	1,2-Dibromo-3-chloropropane	1.3	5.3		U
106-93-4	1,2-Dibromoethane	0.46	10		U
95-50-1	1,2-Dichlorobenzene	0.39	10		U
541-73-1	1,3-Dichlorobenzene	0.89	10		U
106-46-7	1,4-Dichlorobenzene	0.58	10		U
75-71-8	Dichlorodifluoromethane	1.2	10		U
75-34-3	1,1-Dichloroethane	0.57	10		U
107-06-2	1,2-Dichloroethane	0.49	10		U
75-35-4	1,1-Dichloroethene	1.3	10		U
156-59-2	cis-1,2-Dichloroethene	1.3	10		U
156-60-5	trans-1,2-Dichloroethene	1.2	10		U
78-87-5	1,2-Dichloropropane	0.49	10		U
10061-01-5	cis-1,3-Dichloropropene	0.53	10		U
10061-02-6	trans-1,3-Dichloropropene	0.34	10		U
100-41-4	Ethylbenzene	0.79	10	0.84	J
591-78-6	2-Hexanone	2.4	10		U
98-82-8	Isopropylbenzene	0.93	10		U
79-20-9	Methyl acetate	1.7	10		U
75-09-2	Methylene chloride	0.66	10	10U ~~1.9 JB~~	B
108-87-2	Methyl cyclohexane	0.32	10	0.50	J
1634-04-4	Methyl tert-butyl ether	0.34	10		U
108-10-1	4-Methyl-2-pentanone	0.61	10		U
100-42-5	Styrene	0.37	10		U
79-34-5	1,1,2,2-Tetrachloroethane	0.46	10		U
127-18-4	Tetrachloroethene	1.0	10		U

FORM I VOA

MW
4/4/09

FORM 1
VOLATILE ORGANICS ANALYSIS DATA SHEET

CLIENT SAMPLE NO. 21

MR08-SS212-09A

Lab Name: EMPIRICAL LABS Contract: CH2MHILL

Lab Code: NA Case No.: NA SAS No.: NA SDG No.: LEJEUNE051

Matrix: (soil/water) SOIL Lab Sample ID: 0901145-21

Sample wt/vol: 5.5 (g/mL) G Lab File ID: 0114521A

Level: (low/med) LOW Date Sampled: 01/20/09 10:30

% Moisture: not dec. 14 Date Analyzed: 01/25/09 03:06

GC Column: RTX-VRX ID: 0.25 (mm) Dilution Factor: 1.0

Soil Extract Volume:_____(uL) Soil Aliquot Volume: _____(uL)

CONCENTRATION UNITS: (ug/L or ug/Kg) UG/KG

CAS NO.	COMPOUND	MDL	RL	CONC	Q
108-88-3	Toluene	0.91	10	10U ~~0.94~~	~~J~~ U BL
120-82-1	1,2,4-Trichlorobenzene	0.19	10		U
71-55-6	1,1,1-Trichloroethane	0.95	10		U
79-00-5	1,1,2-Trichloroethane	0.37	10		U
79-01-6	Trichloroethene	0.90	10		U
76-13-1	Trichlorotrifluoroethane	0.58	10		U
75-69-4	Trichlorofluoromethane	1.0	10		U
75-01-4	Vinyl chloride	1.2	10		U
1330-20-7	Xylene(total)	0.74	10		U

FORM I VOA

DW 4/4/09

FORM 1
VOLATILE ORGANICS ANALYSIS DATA SHEET

CLIENT SAMPLE NO. 22

MR08-IS21
3-4-5-09A

Lab Name: EMPIRICAL LABS Contract: CH2MHILL

Lab Code: NA Case No.: NA SAS No.: NA SDG No.: LEJEUNE051

Matrix: (soil/water) SOIL Lab Sample ID: 0901145-22

Sample wt/vol: 5.5 (g/mL) G Lab File ID: 0114522A

Level: (low/med) LOW Date Sampled: 01/20/09 10:50

% Moisture: not dec. 15 Date Analyzed: 01/25/09 03:36

GC Column: RTX-VRX ID: 0.25 (mm) Dilution Factor: 1.0

Soil Extract Volume:_____(uL) Soil Aliquot Volume: _____(uL)

CONCENTRATION UNITS: (ug/L or ug/Kg) UG/KG

CAS NO.	COMPOUND	MDL	RL	CONC	Q	
67-64-1	Acetone	2.1	11	114	~~6.5 J~~	BL
71-43-2	Benzene	0.50	11		U	
75-27-4	Bromodichloromethane	0.32	11		U	
75-25-2	Bromoform	1.1	11		U	
74-83-9	Bromomethane	0.77	11		U	
78-93-3	2-Butanone	1.5	11		U	
75-15-0	Carbon disulfide	1.4	11		U	
56-23-5	Carbon tetrachloride	0.94	11		U	
108-90-7	Chlorobenzene	0.36	11		U	
75-00-3	Chloroethane	1.2	11		U	
67-66-3	Chloroform	0.59	11		U	
74-87-3	Chloromethane	0.56	11		U	
110-82-7	Cyclohexane	0.58	11		U	
124-48-1	Dibromochloromethane	0.36	11		U	
96-12-8	1,2-Dibromo-3-chloropropane	1.3	5.4		U	
106-93-4	1,2-Dibromoethane	0.46	11		U	
95-50-1	1,2-Dichlorobenzene	0.40	11		U	
541-73-1	1,3-Dichlorobenzene	0.90	11		U	
106-46-7	1,4-Dichlorobenzene	0.59	11		U	
75-71-8	Dichlorodifluoromethane	1.2	11		U	
75-34-3	1,1-Dichloroethane	0.58	11		U	
107-06-2	1,2-Dichloroethane	0.49	11		U	
75-35-4	1,1-Dichloroethene	1.3	11		U	
156-59-2	cis-1,2-Dichloroethene	1.3	11		U	
156-60-5	trans-1,2-Dichloroethene	1.2	11		U	
78-87-5	1,2-Dichloropropane	0.49	11		U	
10061-01-5	cis-1,3-Dichloropropene	0.54	11		U	
10061-02-6	trans-1,3-Dichloropropene	0.34	11		U	
100-41-4	Ethylbenzene	0.80	11		U	
591-78-6	2-Hexanone	2.5	11		U	
~~98-82-8~~	~~Isopropylbenzene~~	~~0.94~~	~~11~~		~~U~~	
79-20-9	Methyl acetate	1.7	11		U	
75-09-2	Methylene chloride	0.66	11	114	~~1.9 JB~~	BL
108-87-2	Methyl cyclohexane	0.32	11		U	
1634-04-4	Methyl tert-butyl ether	0.34	11		U	
108-10-1	4-Methyl-2-pentanone	0.62	11		U	
100-42-5	Styrene	0.38	11		U	
79-34-5	1,1,2,2-Tetrachloroethane	0.46	11		U	
127-18-4	Tetrachloroethene	1.0	11		U	

fcw
01/01/09

FORM 1
VOLATILE ORGANICS ANALYSIS DATA SHEET

CLIENT SAMPLE NO. 22

MR08-IS21
3-4-5-09A

Lab Name: EMPIRICAL LABS Contract: CH2MHILL

Lab Code: NA Case No.: NA SAS No.: NA SDG No.: LEJEUNE051

Matrix: (soil/water) SOIL Lab Sample ID: 0901145-22

Sample wt/vol: 5.5 (g/mL) G Lab File ID: 0114522A

Level: (low/med) LOW Date Sampled: 01/20/09 10:50

% Moisture: not dec. 15 Date Analyzed: 01/25/09 03:36

GC Column: RTX-VRX ID: 0.25 (mm) Dilution Factor: 1.0

Soil Extract Volume:_____(uL) Soil Aliquot Volume: _____(uL)

CONCENTRATION UNITS: (ug/L or ug/Kg) UG/KG

CAS NO.	COMPOUND	MDL	RL	CONC	Q
108-88-3	Toluene	0.92	11		U
120-82-1	1,2,4-Trichlorobenzene	0.19	11		U
71-55-6	1,1,1-Trichloroethane	0.96	11		U
79-00-5	1,1,2-Trichloroethane	0.38	11		U
79-01-6	Trichloroethene	0.91	11		U
76-13-1	Trichlorotrifluoroethane	0.59	11		U
75-69-4	Trichlorofluoromethane	1.0	11		U
75-01-4	Vinyl chloride	1.2	11		U
1330-20-7	Xylene(total)	0.75	11		U

LW
4/4/09

FORM 1
VOLATILE ORGANICS ANALYSIS DATA SHEET

CLIENT SAMPLE NO. 23

MR08-SS213-09A

Lab Name: EMPIRICAL LABS Contract: CH2MHILL

Lab Code: NA Case No.: NA SAS No.: NA SDG No.: LEJEUNE051

Matrix: (soil/water) SOIL Lab Sample ID: 0901145-23

Sample wt/vol: 5.9 (g/mL) G Lab File ID: 0114523A

Level: (low/med) LOW Date Sampled: 01/20/09 10:55

% Moisture: not dec. 11 Date Analyzed: 01/25/09 04:07

GC Column: RTX-VRX ID: 0.25 (mm) Dilution Factor: 1.0

Soil Extract Volume:_____(uL) Soil Aliquot Volume: _____(uL)

CONCENTRATION UNITS: (ug/L or ug/Kg) UG/KG

CAS NO.	COMPOUND	MDL	RL	CONC	Q
67-64-1	Acetone	1.9	9.5		U
71-43-2	Benzene	0.45	9.5	0.58	J
75-27-4	Bromodichloromethane	0.28	9.5		U
75-25-2	Bromoform	0.95	9.5		U
74-83-9	Bromomethane	0.68	9.5		U
78-93-3	2-Butanone	1.3	9.5		U
75-15-0	Carbon disulfide	1.2	9.5		U
56-23-5	Carbon tetrachloride	0.84	9.5		U
108-90-7	Chlorobenzene	0.32	9.5		U
75-00-3	Chloroethane	1.0	9.5		U
67-66-3	Chloroform	0.52	9.5		U
74-87-3	Chloromethane	0.49	9.5		U
110-82-7	Cyclohexane	0.51	9.5		U
124-48-1	Dibromochloromethane	0.32	9.5		U
96-12-8	1,2-Dibromo-3-chloropropane	1.1	4.7		U
106-93-4	1,2-Dibromoethane	0.41	9.5		U
95-50-1	1,2-Dichlorobenzene	0.35	9.5		U
541-73-1	1,3-Dichlorobenzene	0.80	9.5		U
106-46-7	1,4-Dichlorobenzene	0.52	9.5		U
75-71-8	Dichlorodifluoromethane	1.0	9.5		U
75-34-3	1,1-Dichloroethane	0.51	9.5		U
107-06-2	1,2-Dichloroethane	0.44	9.5		U
75-35-4	1,1-Dichloroethene	1.1	9.5		U
156-59-2	cis-1,2-Dichloroethene	1.1	9.5		U
156-60-5	trans-1,2-Dichloroethene	1.0	9.5		U
78-87-5	1,2-Dichloropropane	0.44	9.5		U
10061-01-5	cis-1,3-Dichloropropene	0.47	9.5		U
10061-02-6	trans-1,3-Dichloropropene	0.30	9.5		U
100-41-4	Ethylbenzene	0.71	9.5		U
591-78-6	2-Hexanone	2.2	9.5		U
98-82-8	Isopropylbenzene	0.84	9.5		U
79-20-9	Methyl acetate	1.5	9.5		U
75-09-2	Methylene chloride	0.59	9.5	9.5u 1.5 ~~JB~~	B
108-87-2	Methyl cyclohexane	0.28	9.5	0.34	J
1634-04-4	Methyl tert-butyl ether	0.30	9.5		U
108-10-1	4-Methyl-2-pentanone	0.55	9.5		U
100-42-5	Styrene	0.33	9.5		U
79-34-5	1,1,2,2-Tetrachloroethane	0.41	9.5		U
127-18-4	Tetrachloroethene	0.92	9.5		U

FORM I VOA

JW
4/4/09

FORM 1
VOLATILE ORGANICS ANALYSIS DATA SHEET

CLIENT SAMPLE NO. 23

MR08-SS213-09A

Lab Name: EMPIRICAL LABS Contract: CH2MHILL

Lab Code: NA Case No.: NA SAS No.: NA SDG No.: LEJEUNE051

Matrix: (soil/water) SOIL Lab Sample ID: 0901145-23

Sample wt/vol: 5.9 (g/mL) G Lab File ID: 0114523A

Level: (low/med) LOW Date Sampled: 01/20/09 10:55

% Moisture: not dec. 11 Date Analyzed: 01/25/09 04:07

GC Column: RTX-VRX ID: 0.25 (mm) Dilution Factor: 1.0

Soil Extract Volume:_____(uL) Soil Aliquot Volume: _____(uL)

CONCENTRATION UNITS: (ug/L or ug/Kg) UG/KG

CAS NO.	COMPOUND	MDL	RL	CONC	Q
108-88-3	Toluene	0.82	9.5		U
120-82-1	1,2,4-Trichlorobenzene	0.17	9.5		U
71-55-6	1,1,1-Trichloroethane	0.85	9.5		U
79-00-5	1,1,2-Trichloroethane	0.33	9.5		U
79-01-6	Trichloroethene	0.81	9.5		U
76-13-1	Trichlorotrifluoroethane	0.52	9.5		U
75-69-4	Trichlorofluoromethane	0.90	9.5		U
75-01-4	Vinyl chloride	1.0	9.5		U
1330-20-7	Xylene(total)	0.66	9.5		U

JW 4/4/09

FORM 1
VOLATILE ORGANICS ANALYSIS DATA SHEET

CLIENT SAMPLE NO. 24

MR08-TB012009

Lab Name: EMPIRICAL LABS Contract: CH2MHILL

Lab Code: NA Case No.: NA SAS No.: NA SDG No.: LEJEUNE051

Matrix: (soil/water) WATER Lab Sample ID: 0901145-24

Sample wt/vol: 5.000 (g/mL) ML Lab File ID: 0114524

Level: (low/med) LOW Date Sampled: 01/20/09 :

% Moisture: not dec. _____ Date Analyzed: 01/28/09 13:34

GC Column: RTX-VRX ID: 0.25 (mm) Dilution Factor: 1.0

Soil Extract Volume:_____(uL) Soil Aliquot Volume: _____(uL)

CONCENTRATION UNITS: (ug/L or ug/Kg) UG/L

CAS NO.	COMPOUND	MDL	RL	CONC	Q
67-64-1	Acetone	0.84	2.5		U
71-43-2	Benzene	0.11	1.0		U
75-27-4	Bromodichloromethane	0.10	1.0		U
75-25-2	Bromoform	0.10	1.0		U
74-83-9	Bromomethane	0.32	1.0		~~U~~UJ CC
78-93-3	2-Butanone	1.0	3.0		U
75-15-0	Carbon disulfide	0.13	1.0		U
56-23-5	Carbon tetrachloride	0.15	1.0		U
108-90-7	Chlorobenzene	0.10	1.0		U
75-00-3	Chloroethane	0.18	1.0		U
67-66-3	Chloroform	0.11	1.0		U
74-87-3	Chloromethane	0.29	1.0		U
110-82-7	Cyclohexane	0.20	1.0		U
124-48-1	Dibromochloromethane	0.10	1.0		U
96-12-8	1,2-Dibromo-3-chloropropane	0.11	1.0		U
106-93-4	1,2-Dibromoethane	0.10	1.0		U
95-50-1	1,2-Dichlorobenzene	0.10	1.0		U
541-73-1	1,3-Dichlorobenzene	0.13	1.0		U
106-46-7	1,4-Dichlorobenzene	0.10	1.0		U
75-71-8	Dichlorodifluoromethane	0.22	1.0		U
75-34-3	1,1-Dichloroethane	0.12	1.0		U
107-06-2	1,2-Dichloroethane	0.10	1.0		U
75-35-4	1,1-Dichloroethene	0.15	1.0		U
156-59-2	cis-1,2-Dichloroethene	0.13	1.0		U
156-60-5	trans-1,2-Dichloroethene	0.13	1.0		U
78-87-5	1,2-Dichloropropane	0.10	1.0		U
10061-01-5	cis-1,3-Dichloropropene	0.11	1.0		U
10061-02-6	trans-1,3-Dichloropropene	0.10	1.0		U
100-41-4	Ethylbenzene	0.13	1.0		U
591-78-6	2-Hexanone	0.30	2.0		U
98-82-8	Isopropylbenzene	0.15	1.0		U
79-20-9	Methyl acetate	0.30	1.0		U
75-09-2	Methylene chloride	0.14	1.0	1.0	~~B~~U B
108-87-2	Methyl cyclohexane	0.17	1.0		U
1634-04-4	Methyl tert-butyl ether	0.10	1.0		U
108-10-1	4-Methyl-2-pentanone	0.29	1.0		U
100-42-5	Styrene	0.10	1.0		U
79-34-5	1,1,2,2-Tetrachloroethane	0.10	1.0		U
127-18-4	Tetrachloroethene	0.15	1.0		U

FORM I VOA

LW 4/4/09

FORM 1
VOLATILE ORGANICS ANALYSIS DATA SHEET

CLIENT SAMPLE NO. 24

MR08-TB012009

Lab Name: EMPIRICAL LABS Contract: CH2MHILL

Lab Code: NA Case No.: NA SAS No.: NA SDG No.: LEJEUNE051

Matrix: (soil/water) WATER Lab Sample ID: 0901145-24

Sample wt/vol: 5.000 (g/mL) ML Lab File ID: 0114524

Level: (low/med) LOW Date Sampled: 01/20/09 :

% Moisture: not dec. _____ Date Analyzed: 01/28/09 13:34

GC Column: RTX-VRX ID: 0.25 (mm) Dilution Factor: 1.0

Soil Extract Volume:_____(uL) Soil Aliquot Volume: _____(uL)

CONCENTRATION UNITS: (ug/L or ug/Kg) UG/L

CAS NO.	COMPOUND	MDL	RL	CONC	Q
108-88-3	Toluene	0.10	1.0		U
120-82-1	1,2,4-Trichlorobenzene	0.10	1.0	1.04 ~~0.16~~ ~~JB~~	BL
71-55-6	1,1,1-Trichloroethane	0.17	1.0		U
79-00-5	1,1,2-Trichloroethane	0.10	1.0		U
79-01-6	Trichloroethene	0.13	1.0		U
76-13-1	Trichlorotrifluoroethane	0.18	1.0		U
75-69-4	Trichlorofluoromethane	0.17	1.0		U
75-01-4	Vinyl chloride	0.18	1.0		U
1330-20-7	Xylene(total)	0.22	1.0		U

MW
4/4/09

FORM 1
VOLATILE ORGANICS ANALYSIS DATA SHEET

CLIENT SAMPLE NO. 25

MR08-TB012109

Lab Name: EMPIRICAL LABS Contract: CH2MHILL

Lab Code: NA Case No.: NA SAS No.: NA SDG No.: LEJEUNE051

Matrix: (soil/water) WATER Lab Sample ID: 0901145-25

Sample wt/vol: 5.000 (g/mL) ML Lab File ID: 0114525

Level: (low/med) LOW Date Sampled: 01/21/09 :

% Moisture: not dec. _____ Date Analyzed: 01/28/09 14:04

GC Column: RTX-VRX ID: 0.25 (mm) Dilution Factor: 1.0

Soil Extract Volume:_____(uL) Soil Aliquot Volume: _____(uL)

CONCENTRATION UNITS: (ug/L or ug/Kg) UG/L

CAS NO.	COMPOUND	MDL	RL	CONC	Q
67-64-1	Acetone	0.84	2.5		U
71-43-2	Benzene	0.11	1.0		U
75-27-4	Bromodichloromethane	0.10	1.0		U
75-25-2	Bromoform	0.10	1.0		U
74-83-9	Bromomethane	0.32	1.0		~~U~~ UJ CCH
78-93-3	2-Butanone	1.0	3.0		U
75-15-0	Carbon disulfide	0.13	1.0		U
56-23-5	Carbon tetrachloride	0.15	1.0		U
108-90-7	Chlorobenzene	0.10	1.0		U
75-00-3	Chloroethane	0.18	1.0		U
67-66-3	Chloroform	0.11	1.0		U
74-87-3	Chloromethane	0.29	1.0		U
110-82-7	Cyclohexane	0.20	1.0		U
124-48-1	Dibromochloromethane	0.10	1.0		U
96-12-8	1,2-Dibromo-3-chloropropane	0.11	1.0		U
106-93-4	1,2-Dibromoethane	0.10	1.0		U
95-50-1	1,2-Dichlorobenzene	0.10	1.0		U
541-73-1	1,3-Dichlorobenzene	0.13	1.0		U
106-46-7	1,4-Dichlorobenzene	0.10	1.0		U
75-71-8	Dichlorodifluoromethane	0.22	1.0		U
75-34-3	1,1-Dichloroethane	0.12	1.0		U
107-06-2	1,2-Dichloroethane	0.10	1.0		U
75-35-4	1,1-Dichloroethene	0.15	1.0		U
156-59-2	cis-1,2-Dichloroethene	0.13	1.0		U
156-60-5	trans-1,2-Dichloroethene	0.13	1.0		U
78-87-5	1,2-Dichloropropane	0.10	1.0		U
10061-01-5	cis-1,3-Dichloropropene	0.11	1.0		U
10061-02-6	trans-1,3-Dichloropropene	0.10	1.0		U
100-41-4	Ethylbenzene	0.13	1.0		U
591-78-6	2-Hexanone	0.30	2.0		U
98-82-8	Isopropylbenzene	0.15	1.0		U
79-20-9	Methyl acetate	0.30	1.0		U
75-09-2	Methylene chloride	0.14	1.0	1.0U ~~0.92 JB~~	BL
108-87-2	Methyl cyclohexane	0.17	1.0		U
1634-04-4	Methyl tert-butyl ether	0.10	1.0		U
108-10-1	4-Methyl-2-pentanone	0.29	1.0		U
100-42-5	Styrene	0.10	1.0		U
79-34-5	1,1,2,2-Tetrachloroethane	0.10	1.0		U
127-18-4	Tetrachloroethene	0.15	1.0		U

FORM I VOA

4/4/09

FORM 1
VOLATILE ORGANICS ANALYSIS DATA SHEET

CLIENT SAMPLE NO. 25

MR08-TB012109

Lab Name: EMPIRICAL LABS Contract: CH2MHILL

Lab Code: NA Case No.: NA SAS No.: NA SDG No.: LEJEUNE051

Matrix: (soil/water) WATER Lab Sample ID: 0901145-25

Sample wt/vol: 5.000 (g/mL) ML Lab File ID: 0114525

Level: (low/med) LOW Date Sampled: 01/21/09 :

% Moisture: not dec. _____ Date Analyzed: 01/28/09 14:04

GC Column: RTX-VRX ID: 0.25 (mm) Dilution Factor: 1.0

Soil Extract Volume:_____(uL) Soil Aliquot Volume: _____(uL)

CONCENTRATION UNITS: (ug/L or ug/Kg) UG/L

CAS NO.	COMPOUND	MDL	RL	CONC	Q
108-88-3	Toluene	0.10	1.0		U
120-82-1	1,2,4-Trichlorobenzene	0.10	1.0		U
71-55-6	1,1,1-Trichloroethane	0.17	1.0		U
79-00-5	1,1,2-Trichloroethane	0.10	1.0		U
79-01-6	Trichloroethene	0.13	1.0		U
76-13-1	Trichlorotrifluoroethane	0.18	1.0		U
75-69-4	Trichlorofluoromethane	0.17	1.0		U
75-01-4	Vinyl chloride	0.18	1.0		U
1330-20-7	Xylene(total)	0.22	1.0		U

fw
4/4/09

ENVIRONMENTAL
Data Services, Inc.

VOLATILE ORGANIC COMPOUNDS
USEPA Region IV - Level IV Review

Site: MCB Camp Lejeune, TO-09 SDG #: LEJEUNE054

Client: CH2M HILL, Inc., Virginia Beach, Virginia Date: April 5, 2009

Laboratory: Empirical Laboratories, Nashville, Tennessee Reviewer: Nancy Weaver

EDS ID	Client Sample ID	Laboratory Sample ID	Matrix
1	MR08-IS247-8-10-09A	0901189-01	Soil
2	MR08-SS247-09A	0901189-02	Soil
3	MR08-IS319-9-10-09A	0901189-03	Soil
4	MR08-IS319D-9-10-09A	0901189-04	Soil
5	MR08-SS319-09A	0901189-05	Soil
6	MR08-SS319D-09A	0901189-06	Soil
7	MR08-SS318-09A	0901189-07	Soil
8	MR08-IS318-4-5-09A	0901189-08	Soil
9	MR08-SS317-09A	0901189-09	Soil
10	MR08-IS317-4-5-09A	0901189-10	Soil
11	MR08-SS153-09A	0901189-11	Soil
12	MR08-IS153-2-3-09A	0901189-12	Soil
13	MR08-SS162-09A	0901189-13	Soil
14	MR08-IS162-4-5-09A	0901189-14	Soil
15	MR08-SS316-09A	0901189-15	Soil
16	MR08-IS316-4-5-09A	0901189-16	Soil
17	MR08-IS315-4-5-09A	0901189-17	Soil
18	MR08-SS315-09A	0901189-18	Soil
19	MR08-IS314-4-5-09A	0901189-19	Soil
20	MR08-EB012109	0901189-20	Water
21	MR08-EB012209	0901189-21	Water
22	MR08-SS314-09A	0901189-22	Soil
23	MR08-IS337-4-5-09A	0901189-23	Soil
24	MR08-SS337-09A	0901189-24	Soil
25	MR08-SS336-09A	0901189-25	Soil
26	MR08-IS336-4-5-09A	0901189-26	Soil
27	MR08-IS335-4-5-09A	0901189-27	Soil
28	MR08-SS335-09A	0901189-28	Soil
29	MR08-SS334-09A	0901189-29	Soil
30	MR08-IS334-4-5-09A	0901189-30	Soil
31	MR08-SS333-09A	0901189-31	Soil
32	MR08-IS333-4-5-09A	0901189-32	Soil
33	MR08-IS332-4-5-09A	0901189-33	Soil
34	MR08-SS332-09A	0901189-34	Soil
35	MR08-SS343-09A	0901189-35	Soil

EDS ID	Client Sample ID	Laboratory Sample ID	Matrix
36	MR08-IS343-4-5-09A	0901189-36	Soil
37	MR08-SS342-09A	0901189-37	Soil
38	MR08-IS342-4-5-09A	0901189-38	Soil
39	MR08-IS341-4-5-09A	0901189-39	Soil
40	MR08-SS341-09A	0901189-40	Soil
41	MR08-SS340-09A	0901189-41	Soil
42	MR08-IS340-4-5-09A	0901189-42	Soil
43	MR08-SS339-09A	0901189-43	Soil
44	MR08-IS339-4-5-09A	0901189-44	Soil
45	MR08-SS338-09A	0901189-45	Soil
46	MR08-SS338D-09A	0901189-46	Soil
47	MR08-IS338-4-5-09A	0901189-47	Soil
48	MR08-IS338D-4-5-09A	0901189-48	Soil
49	MR08-EB012309	0901189-49	Water
50	MR08-IS363-4-5-09A	0901189-50	Soil
51	MR08-SS363-09A	0901189-51	Soil
52	MR08-IS364-4-5-09A	0901189-52	Soil
53	MR08-SS364-09A	0901189-53	Soil
54	MR08-IS365-4-5-09A	0901189-54	Soil
55	MR08-SS365-09A	0901189-55	Soil
56	MR08-SS366-09A	0901189-56	Soil
57	MR08-IS366-4-5-09A	0901189-57	Soil
58	MR08-TB03-012309	0901189-58	Water
59	MR08-TB01-012309	0901189-59	Water
60	MR08-TB02-012309	0901189-60	Water

The USEPA "Contract Laboratory Program National Functional Guidelines for Organic Data Review," October 1999, and professional judgement were used in evaluating the data in this summary report.

Holding Times - All samples were analyzed within 14 days for preserved water and soil samples.

GC/MS Tuning - All of the BFB tunes in the initial and continuing calibrations met the percent relative abundance criteria.

Initial Calibration - The initial calibrations exhibited acceptable %RSD and mean RRF values.

Continuing Calibration - The continuing calibrations exhibited acceptable %D and RRF values except the following.

CCAL Date	Compound	%D/RRF	Qualifier	Affected Samples
1/27/09	Acetone	30.1%	J/UJ	1-5, 18
1/30/09	Bromomethane	45.5%	J/UJ	20, 21, 49, 58-60

Surrogates - All samples exhibited acceptable surrogate recoveries except the following.

Sample ID	Surrogate	%R	Qualifier
10	S1-Dibromofluoromethane	128%	None - All ND
14	S1-Dibromofluoromethane	133%	J - Positive results
26	S1-Dibromofluoromethane	126%	None - All ND
27	S1-Dibromofluoromethane	126%	None - All ND
36	S1-Dibromofluoromethane	126%	None - All ND
43	S1-Dibromofluoromethane	126%	J - Positive results
44	S1-Dibromofluoromethane	127%	None - All ND
45	S1-Dibromofluoromethane	126%	None - All ND

MS/MSD - A MS/MSD sample was not analyzed from this data package.

Laboratory Control Sample - The LCS samples exhibited acceptable %R values.

Internal Standard (IS) Area Performance - All internal standards met response and retention time (RT) criteria.

Method Blank - The method blanks exhibited the following contamination.

Blank ID	Compound	Conc.	Action Level	Qualifier	Affected Samples
V5BLK0127	Acetone	4.2 ug/kg	42 ug/kg	U	1, 3, 4
	Methylene chloride	5.2 ug/kg	52 ug/kg	U	1-5, 18
	4-Methyl-2-pentanone	0.74 ug/kg	3.7 ug/kg	None	All ND
	1, 2, 4-Trichlorobenzene	0.39 ug/kg	1.95 ug/kg	None	All ND
V5BLK0127E	Acetone	3.2 ug/kg	32 ug/kg	U	10, 12, 16, 17, 19, 23, 26, 27
	Methylene chloride	4.8 ug/kg	48 ug/kg	U	6-17, 19, 22-27
V5BLK0128	Methylene chloride	2.4 ug/kg	24 ug/kg	U	28-45
	1, 2, 4-Trichlorobenzene	0.27 ug/kg	1.35 ug/kg	None	All ND
V5BLK0128E	Acetone	3.2 ug/kg	32 ug/kg	U	50, 52, 54, 56
	Methylene chloride	4.1 ug/kg	41 ug/kg	U	46-48, 50, 52-57
V3BLK0130	Methylene chloride	0.42 ug/L	4.2 ug/L	U	20, 21, 49, 58-60
	1, 2, 4-Trichlorobenzene	0.17 ug/L	0.85 ug/L	None	All ND

Trip, Field, Equipment Blank - Field QC results are summarized below.

Blank ID	Compound	Conc. ug/L	Action Level ug/kg	Qualifier	Affected Samples
MR08-EB012109	Acetone	1.6	16	None	Already qualified or ND or >10X
	Toluene	0.36	1.8	None	Already qualified or ND or >5X

MR08-EB012309	Acetone	1.1	11	None	Already qualified or ND or >10X
	Toluene	0.43	2.15	None	Already qualified or ND or >5X
MR08-EB012209	Acetone	1.7	17	None	Already qualified or ND or >10X
	Toluene	0.37	1.85	U	46
MR08-FB012609	Acetone	1.4	14	U	30, 32, 33, 36
	Chlorobenzene	0.31	1.55	None	All ND
	Chloroform	0.12	0.60	None	All ND
MR08-EB012309	Acetone	1.1	11	None	Already qualified or ND or >10X
	Toluene	0.43	2.15	None	Already qualified or ND or >5X
MR08-TB03-012309	None - ND	-	-	-	-
MR08-TB01-012309	None - ND	-	-	-	-
MR08-TB02-012309	None - ND	-	-	-	-

Field Duplicates - Field duplicate results are summarized below.

Compound	MR08-IS319-9-10-09A ug/kg	MR08-IS319D-9-10-09A ug/kg	RPD	Qualifier
None	ND	ND	-	-

Compound	MR08-SS319-09A ug/kg	MR08-SS319D-09A ug/kg	RPD	Qualifier
Acetone	46	64	33%	None

Compound	MR08-SS338-09A ug/kg	MR08-SS338D-09A ug/kg	RPD	Qualifier
Benzene	8.3 U	1.1	NC	None
Ethylbenzene	8.3 U	1.7	NC	None
Methyl cyclohexane	8.3 U	0.86	NC	None

Compound	MR08-IS338-4-5-09A ug/kg	MR08-IS338D-4-5-09A ug/kg	RPD	Qualifier
None	ND	ND	-	-

Tentatively Identified Compounds (TICs) - TICs were not reported.

Compound Quantitation - Several samples exhibited high concentrations of target compounds over the calibration range and were flagged (E) by the laboratory. The samples were not diluted and reanalyzed and the reviewer qualified these results as estimated (J).

Several percent moistures were not available and the samples had to be reported on a wet weight basis.

FORM 1
VOLATILE ORGANICS ANALYSIS DATA SHEET

CLIENT SAMPLE NO.

MR08-IS24
7-8-10-09A

Lab Name: EMPIRICAL LABS Contract: CH2MHILL

Lab Code: NA Case No.: NA SAS No.: NA SDG No.: LEJEUNE054

Matrix: (soil/water) SOIL Lab Sample ID: 0901189-01

Sample wt/vol: 3.2 (g/mL) G Lab File ID: 0118901A

Level: (low/med) LOW Date Sampled: 01/21/09 10:10

% Moisture: not dec. 5 Date Analyzed: 01/27/09 15:44

GC Column: RTX-VRX ID: 0.25 (mm) Dilution Factor: 1.0

Soil Extract Volume:_____(uL) Soil Aliquot Volume: _____(uL)

CONCENTRATION UNITS: (ug/L or ug/Kg) UG/KG

CAS NO.	COMPOUND	MDL	RL	CONC	Q
67-64-1	Acetone	3.3	16	16 UJ ~~10 JB~~ CCH	BC
71-43-2	Benzene	0.77	16		U
75-27-4	Bromodichloromethane	0.49	16		U
75-25-2	Bromoform	1.6	16		U
74-83-9	Bromomethane	1.2	16		U
78-93-3	2-Butanone	2.3	16		U
75-15-0	Carbon disulfide	2.1	16		U
56-23-5	Carbon tetrachloride	1.4	16		U
108-90-7	Chlorobenzene	0.56	16		U
75-00-3	Chloroethane	1.8	16		U
67-66-3	Chloroform	0.90	16		U
74-87-3	Chloromethane	0.86	16		U
110-82-7	Cyclohexane	0.89	16		U
124-48-1	Dibromochloromethane	0.56	16		U
96-12-8	1,2-Dibromo-3-chloropropane	2.0	8.2		U
106-93-4	1,2-Dibromoethane	0.71	16		U
95-50-1	1,2-Dichlorobenzene	0.61	16		U
541-73-1	1,3-Dichlorobenzene	1.4	16		U
106-46-7	1,4-Dichlorobenzene	0.90	16		U
75-71-8	Dichlorodifluoromethane	1.8	16		U
75-34-3	1,1-Dichloroethane	0.89	16		U
107-06-2	1,2-Dichloroethane	0.76	16		U
75-35-4	1,1-Dichloroethene	2.0	16		U
156-59-2	cis-1,2-Dichloroethene	2.0	16		U
156-60-5	trans-1,2-Dichloroethene	1.8	16		U
78-87-5	1,2-Dichloropropane	0.76	16		U
10061-01-5	cis-1,3-Dichloropropene	0.82	16		U
10061-02-6	trans-1,3-Dichloropropene	0.53	16		U
100-41-4	Ethylbenzene	1.2	16		U
591-78-6	2-Hexanone	3.8	16		U
98-82-8	Isopropylbenzene	1.4	16		U
79-20-9	Methyl acetate	2.6	16		U
75-09-2	Methylene chloride	1.0	16	16 U ~~2.7 JB~~	BL
108-87-2	Methyl cyclohexane	0.49	16		U
1634-04-4	Methyl tert-butyl ether	0.53	16		U
108-10-1	4-Methyl-2-pentanone	0.95	16		U
100-42-5	Styrene	0.58	16		U
79-34-5	1,1,2,2-Tetrachloroethane	0.71	16		U
127-18-4	Tetrachloroethene	1.6	16		U

NW
4/5/09

FORM 1
VOLATILE ORGANICS ANALYSIS DATA SHEET

CLIENT SAMPLE NO.

MR08-IS24
7-8-10-09A

Lab Name: EMPIRICAL LABS Contract: CH2MHILL

Lab Code: NA Case No.: NA SAS No.: NA SDG No.: LEJEUNE054

Matrix: (soil/water) SOIL Lab Sample ID: 0901189-01

Sample wt/vol: 3.2 (g/mL) G Lab File ID: 0118901A

Level: (low/med) LOW Date Sampled: 01/21/09 10:10

% Moisture: not dec. 5 Date Analyzed: 01/27/09 15:44

GC Column: RTX-VRX ID: 0.25 (mm) Dilution Factor: 1.0

Soil Extract Volume:_____(uL) Soil Aliquot Volume: _____(uL)

CONCENTRATION UNITS: (ug/L or ug/Kg) UG/KG

CAS NO.	COMPOUND	MDL	RL	CONC	Q
108-88-3	Toluene	1.4	16		U
120-82-1	1,2,4-Trichlorobenzene	0.30	16		U
71-55-6	1,1,1-Trichloroethane	1.5	16		U
79-00-5	1,1,2-Trichloroethane	0.58	16		U
79-01-6	Trichloroethene	1.4	16		U
76-13-1	Trichlorotrifluoroethane	0.90	16		U
75-69-4	Trichlorofluoromethane	1.6	16		U
75-01-4	Vinyl chloride	1.8	16		U
1330-20-7	Xylene(total)	1.2	16		U

NW 4/5/09

FORM 1
VOLATILE ORGANICS ANALYSIS DATA SHEET

CLIENT SAMPLE NO.

2

MR08-SS247-09A

Lab Name: EMPIRICAL LABS Contract: CH2MHILL

Lab Code: NA Case No.: NA SAS No.: NA SDG No.: LEJEUNE054

Matrix: (soil/water) SOIL Lab Sample ID: 0901189-02

Sample wt/vol: 4.7 (g/mL) G Lab File ID: 0118902A

Level: (low/med) LOW Date Sampled: 01/21/09 10:20

% Moisture: not dec. 8 Date Analyzed: 01/27/09 16:15

GC Column: RTX-VRX ID: 0.25 (mm) Dilution Factor: 1.0

Soil Extract Volume:_____(uL) Soil Aliquot Volume: _____(uL)

CONCENTRATION UNITS: (ug/L or ug/Kg) UG/KG

CAS NO.	COMPOUND	MDL	RL	CONC	Q	
67-64-1	Acetone	2.3	12		~~U~~ UJ	CC
71-43-2	Benzene	0.54	12		U	
75-27-4	Bromodichloromethane	0.34	12		U	
75-25-2	Bromoform	1.2	12		U	
74-83-9	Bromomethane	0.83	12		U	
78-93-3	2-Butanone	1.6	12		U	
75-15-0	Carbon disulfide	1.5	12		U	
56-23-5	Carbon tetrachloride	1.0	12		U	
108-90-7	Chlorobenzene	0.39	12		U	
75-00-3	Chloroethane	1.3	12		U	
67-66-3	Chloroform	0.63	12		U	
74-87-3	Chloromethane	0.60	12		U	
110-82-7	Cyclohexane	0.62	12		U	
124-48-1	Dibromochloromethane	0.39	12		U	
96-12-8	1,2-Dibromo-3-chloropropane	1.4	5.8		U	
106-93-4	1,2-Dibromoethane	0.50	12		U	
95-50-1	1,2-Dichlorobenzene	0.43	12		U	
541-73-1	1,3-Dichlorobenzene	0.97	12		U	
106-46-7	1,4-Dichlorobenzene	0.63	12		U	
75-71-8	Dichlorodifluoromethane	1.3	12		U	
75-34-3	1,1-Dichloroethane	0.62	12		U	
107-06-2	1,2-Dichloroethane	0.53	12		U	
75-35-4	1,1-Dichloroethene	1.4	12		U	
156-59-2	cis-1,2-Dichloroethene	1.4	12		U	
156-60-5	trans-1,2-Dichloroethene	1.3	12		U	
78-87-5	1,2-Dichloropropane	0.53	12		U	
10061-01-5	cis-1,3-Dichloropropene	0.58	12		U	
10061-02-6	trans-1,3-Dichloropropene	0.37	12		U	
100-41-4	Ethylbenzene	0.86	12		U	
591-78-6	2-Hexanone	2.6	12		U	
98-82-8	Isopropylbenzene	1.0	12		U	
79-20-9	Methyl acetate	1.8	12		U	
75-09-2	Methylene chloride	0.71	12	12u	~~1.5~~ JB	B
108-87-2	Methyl cyclohexane	0.34	12		U	
1634-04-4	Methyl tert-butyl ether	0.37	12		U	
108-10-1	4-Methyl-2-pentanone	0.67	12		U	
100-42-5	Styrene	0.40	12		U	
79-34-5	1,1,2,2-Tetrachloroethane	0.50	12		U	
127-18-4	Tetrachloroethene	1.1	12		U	

FORM I VOA

NW
4/15/09

FORM 1
VOLATILE ORGANICS ANALYSIS DATA SHEET

CLIENT SAMPLE NO.

MR08-SS247-09A

2

Lab Name: EMPIRICAL LABS Contract: CH2MHILL

Lab Code: NA Case No.: NA SAS No.: NA SDG No.: LEJEUNE054

Matrix: (soil/water) SOIL Lab Sample ID: 0901189-02

Sample wt/vol: 4.7 (g/mL) G Lab File ID: 0118902A

Level: (low/med) LOW Date Sampled: 01/21/09 10:20

% Moisture: not dec. 8 Date Analyzed: 01/27/09 16:15

GC Column: RTX-VRX ID: 0.25 (mm) Dilution Factor: 1.0

Soil Extract Volume:_____(uL) Soil Aliquot Volume: _____(uL)

CONCENTRATION UNITS: (ug/L or ug/Kg) UG/KG

CAS NO.	COMPOUND	MDL	RL	CONC	Q
108-88-3	Toluene	0.99	12		U
120-82-1	1,2,4-Trichlorobenzene	0.21	12		U
71-55-6	1,1,1-Trichloroethane	1.0	12		U
79-00-5	1,1,2-Trichloroethane	0.40	12		U
79-01-6	Trichloroethene	0.98	12		U
76-13-1	Trichlorotrifluoroethane	0.63	12		U
75-69-4	Trichlorofluoromethane	1.1	12		U
75-01-4	Vinyl chloride	1.3	12		U
1330-20-7	Xylene(total)	0.81	12		U

NW
4/15/09

FORM 1
VOLATILE ORGANICS ANALYSIS DATA SHEET

CLIENT SAMPLE NO.

MR08-IS31
9-9-10-09A

3

Lab Name: EMPIRICAL LABS Contract: CH2MHILL

Lab Code: NA Case No.: NA SAS No.: NA SDG No.: LEJEUNE054

Matrix: (soil/water) SOIL Lab Sample ID: 0901189-03

Sample wt/vol: 6.3 (g/mL) G Lab File ID: 0118903A

Level: (low/med) LOW Date Sampled: 01/21/09 11:00

% Moisture: not dec. 18 Date Analyzed: 01/27/09 16:46

GC Column: RTX-VRX ID: 0.25 (mm) Dilution Factor: 1.0

Soil Extract Volume:_____(uL) Soil Aliquot Volume: _____(uL)

CONCENTRATION UNITS: (ug/L or ug/Kg) UG/KG

CAS NO.	COMPOUND	MDL	RL	CONC	Q
67-64-1	Acetone	1.9	9.6	9.6U ~~4.4~~	~~JB~~ CUBL
71-43-2	Benzene	0.45	9.6		U
75-27-4	Bromodichloromethane	0.29	9.6		U
75-25-2	Bromoform	0.96	9.6		U
74-83-9	Bromomethane	0.70	9.6		U
78-93-3	2-Butanone	1.4	9.6		U
75-15-0	Carbon disulfide	1.2	9.6		U
56-23-5	Carbon tetrachloride	0.85	9.6		U
108-90-7	Chlorobenzene	0.33	9.6		U
75-00-3	Chloroethane	1.1	9.6		U
67-66-3	Chloroform	0.53	9.6		U
74-87-3	Chloromethane	0.50	9.6		U
110-82-7	Cyclohexane	0.52	9.6		U
124-48-1	Dibromochloromethane	0.33	9.6		U
96-12-8	1,2-Dibromo-3-chloropropane	1.2	4.8		U
106-93-4	1,2-Dibromoethane	0.42	9.6		U
95-50-1	1,2-Dichlorobenzene	0.36	9.6		U
541-73-1	1,3-Dichlorobenzene	0.81	9.6		U
106-46-7	1,4-Dichlorobenzene	0.53	9.6		U
75-71-8	Dichlorodifluoromethane	1.1	9.6		U
75-34-3	1,1-Dichloroethane	0.52	9.6		U
107-06-2	1,2-Dichloroethane	0.44	9.6		U
75-35-4	1,1-Dichloroethene	1.2	9.6		U
156-59-2	cis-1,2-Dichloroethene	1.2	9.6		U
156-60-5	trans-1,2-Dichloroethene	1.1	9.6		U
78-87-5	1,2-Dichloropropane	0.44	9.6		U
10061-01-5	cis-1,3-Dichloropropene	0.48	9.6		U
10061-02-6	trans-1,3-Dichloropropene	0.31	9.6		U
100-41-4	Ethylbenzene	0.72	9.6		U
591-78-6	2-Hexanone	2.2	9.6		U
98-82-8	Isopropylbenzene	0.85	9.6		U
79-20-9	Methyl acetate	1.5	9.6		U
75-09-2	Methylene chloride	0.60	9.6	9.6U ~~1.2~~	~~JB~~ B
108-87-2	Methyl cyclohexane	0.29	9.6		U
1634-04-4	Methyl tert-butyl ether	0.31	9.6		U
108-10-1	4-Methyl-2-pentanone	0.56	9.6		U
100-42-5	Styrene	0.34	9.6		U
79-34-5	1,1,2,2-Tetrachloroethane	0.42	9.6		U
127-18-4	Tetrachloroethene	0.94	9.6		U

MW
4/5/09

FORM 1
VOLATILE ORGANICS ANALYSIS DATA SHEET

CLIENT SAMPLE NO.

3

MR08-IS31
9-9-10-09A

Lab Name: EMPIRICAL LABS Contract: CH2MHILL

Lab Code: NA Case No.: NA SAS No.: NA SDG No.: LEJEUNE054

Matrix: (soil/water) SOIL Lab Sample ID: 0901189-03

Sample wt/vol: 6.3 (g/mL) G Lab File ID: 0118903A

Level: (low/med) LOW Date Sampled: 01/21/09 11:00

% Moisture: not dec. 18 Date Analyzed: 01/27/09 16:46

GC Column: RTX-VRX ID: 0.25 (mm) Dilution Factor: 1.0

Soil Extract Volume:_____(uL) Soil Aliquot Volume: _____(uL)

CONCENTRATION UNITS: (ug/L or ug/Kg) UG/KG

CAS NO.	COMPOUND	MDL	RL	CONC	Q
108-88-3	Toluene	0.83	9.6		U
120-82-1	1,2,4-Trichlorobenzene	0.17	9.6		U
71-55-6	1,1,1-Trichloroethane	0.87	9.6		U
79-00-5	1,1,2-Trichloroethane	0.34	9.6		U
79-01-6	Trichloroethene	0.82	9.6		U
76-13-1	Trichlorotrifluoroethane	0.53	9.6		U
75-69-4	Trichlorofluoromethane	0.92	9.6		U
75-01-4	Vinyl chloride	1.1	9.6		U
1330-20-7	Xylene(total)	0.68	9.6		U

NW
4/15/09

FORM 1
VOLATILE ORGANICS ANALYSIS DATA SHEET

CLIENT SAMPLE NO.

MR08-IS31
9D-9-10-09A

4

Lab Name: EMPIRICAL LABS Contract: CH2MHILL

Lab Code: NA Case No.: NA SAS No.: NA SDG No.: LEJEUNE054

Matrix: (soil/water) SOIL Lab Sample ID: 0901189-04

Sample wt/vol: 6.2 (g/mL) G Lab File ID: 0118904A

Level: (low/med) LOW Date Sampled: 01/21/09 11:00

% Moisture: not dec. 0 Date Analyzed: 01/27/09 17:17

GC Column: RTX-VRX ID: 0.25 (mm) Dilution Factor: 1.0

Soil Extract Volume:_____(uL) Soil Aliquot Volume: _____(uL)

CONCENTRATION UNITS: (ug/L or ug/Kg) UG/KG

CAS NO.	COMPOUND	MDL	RL	CONC	Q
67-64-1	Acetone	1.6	8.0	8.0UJ ~~3.8~~	~~JB~~ ~~CU~~ BU
71-43-2	Benzene	0.38	8.0		U
75-27-4	Bromodichloromethane	0.24	8.0		U
75-25-2	Bromoform	0.80	8.0		U
74-83-9	Bromomethane	0.58	8.0		U
78-93-3	2-Butanone	1.1	8.0		U
75-15-0	Carbon disulfide	1.0	8.0		U
56-23-5	Carbon tetrachloride	0.71	8.0		U
108-90-7	Chlorobenzene	0.27	8.0		U
75-00-3	Chloroethane	0.88	8.0		U
67-66-3	Chloroform	0.44	8.0		U
74-87-3	Chloromethane	0.42	8.0		U
110-82-7	Cyclohexane	0.43	8.0		U
124-48-1	Dibromochloromethane	0.27	8.0		U
96-12-8	1,2-Dibromo-3-chloropropane	0.97	4.0		U
106-93-4	1,2-Dibromoethane	0.35	8.0		U
95-50-1	1,2-Dichlorobenzene	0.30	8.0		U
541-73-1	1,3-Dichlorobenzene	0.68	8.0		U
106-46-7	1,4-Dichlorobenzene	0.44	8.0		U
75-71-8	Dichlorodifluoromethane	0.88	8.0		U
75-34-3	1,1-Dichloroethane	0.43	8.0		U
107-06-2	1,2-Dichloroethane	0.37	8.0		U
75-35-4	1,1-Dichloroethene	0.97	8.0		U
156-59-2	cis-1,2-Dichloroethene	0.97	8.0		U
156-60-5	trans-1,2-Dichloroethene	0.88	8.0		U
78-87-5	1,2-Dichloropropane	0.37	8.0		U
10061-01-5	cis-1,3-Dichloropropene	0.40	8.0		U
10061-02-6	trans-1,3-Dichloropropene	0.26	8.0		U
100-41-4	Ethylbenzene	0.60	8.0		U
591-78-6	2-Hexanone	1.8	8.0		U
98-82-8	Isopropylbenzene	0.71	8.0		U
79-20-9	Methyl acetate	1.3	8.0		U
75-09-2	Methylene chloride	0.50	8.0	8.0U ~~1.0~~	JB BI
108-87-2	Methyl cyclohexane	0.24	8.0		U
1634-04-4	Methyl tert-butyl ether	0.26	8.0		U
108-10-1	4-Methyl-2-pentanone	0.47	8.0		U
100-42-5	Styrene	0.28	8.0		U
79-34-5	1,1,2,2-Tetrachloroethane	0.35	8.0		U
127-18-4	Tetrachloroethene	0.78	8.0		U

FORM I VOA

MW
4/5/09

FORM 1
VOLATILE ORGANICS ANALYSIS DATA SHEET

CLIENT SAMPLE NO.

MR08-IS31
9D-9-10-09A

4

Lab Name: EMPIRICAL LABS Contract: CH2MHILL

Lab Code: NA Case No.: NA SAS No.: NA SDG No.: LEJEUNE054

Matrix: (soil/water) SOIL Lab Sample ID: 0901189-04

Sample wt/vol: 6.2 (g/mL) G Lab File ID: 0118904A

Level: (low/med) LOW Date Sampled: 01/21/09 11:00

% Moisture: not dec. 0 Date Analyzed: 01/27/09 17:17

GC Column: RTX-VRX ID: 0.25 (mm) Dilution Factor: 1.0

Soil Extract Volume:_____(uL) Soil Aliquot Volume: _____(uL)

CONCENTRATION UNITS: (ug/L or ug/Kg) UG/KG

CAS NO.	COMPOUND	MDL	RL	CONC	Q
108-88-3	Toluene	0.69	8.0		U
120-82-1	1,2,4-Trichlorobenzene	0.14	8.0		U
71-55-6	1,1,1-Trichloroethane	0.72	8.0		U
79-00-5	1,1,2-Trichloroethane	0.28	8.0		U
79-01-6	Trichloroethene	0.68	8.0		U
76-13-1	Trichlorotrifluoroethane	0.44	8.0		U
75-69-4	Trichlorofluoromethane	0.76	8.0		U
75-01-4	Vinyl chloride	0.88	8.0		U
1330-20-7	Xylene(total)	0.56	8.0		U

Sample reported as wet weight due to % moisture not available.

NW
4/5/09

FORM 1
VOLATILE ORGANICS ANALYSIS DATA SHEET

CLIENT SAMPLE NO.

5

MR08-SS319-09A

Lab Name: EMPIRICAL LABS Contract: CH2MHILL

Lab Code: NA Case No.: NA SAS No.: NA SDG No.: LEJEUNE054

Matrix: (soil/water) SOIL Lab Sample ID: 0901189-05

Sample wt/vol: 5.6 (g/mL) G Lab File ID: 0118905A

Level: (low/med) LOW Date Sampled: 01/21/09 11:20

% Moisture: not dec. 15 Date Analyzed: 01/27/09 17:48

GC Column: RTX-VRX ID: 0.25 (mm) Dilution Factor: 1.0

Soil Extract Volume:_____(uL) Soil Aliquot Volume: _____(uL)

CONCENTRATION UNITS: (ug/L or ug/Kg) UG/KG

CAS NO.	COMPOUND	MDL	RL	CONC	Q
67-64-1	Acetone	2.1	10	46	~~B~~ J CCH
71-43-2	Benzene	0.49	10		U
75-27-4	Bromodichloromethane	0.31	10		U
75-25-2	Bromoform	1.0	10		U
74-83-9	Bromomethane	0.75	10		U
78-93-3	2-Butanone	1.4	10		U
75-15-0	Carbon disulfide	1.4	10		U
56-23-5	Carbon tetrachloride	0.91	10		U
108-90-7	Chlorobenzene	0.35	10		U
75-00-3	Chloroethane	1.1	10		U
67-66-3	Chloroform	0.57	10		U
74-87-3	Chloromethane	0.54	10		U
110-82-7	Cyclohexane	0.56	10		U
124-48-1	Dibromochloromethane	0.35	10		U
96-12-8	1,2-Dibromo-3-chloropropane	1.2	5.2		U
106-93-4	1,2-Dibromoethane	0.45	10		U
95-50-1	1,2-Dichlorobenzene	0.38	10		U
541-73-1	1,3-Dichlorobenzene	0.87	10		U
106-46-7	1,4-Dichlorobenzene	0.57	10		U
75-71-8	Dichlorodifluoromethane	1.1	10		U
75-34-3	1,1-Dichloroethane	0.56	10		U
107-06-2	1,2-Dichloroethane	0.48	10		U
75-35-4	1,1-Dichloroethene	1.2	10		U
156-59-2	cis-1,2-Dichloroethene	1.2	10		U
156-60-5	trans-1,2-Dichloroethene	1.1	10		U
78-87-5	1,2-Dichloropropane	0.48	10		U
10061-01-5	cis-1,3-Dichloropropene	0.52	10		U
10061-02-6	trans-1,3-Dichloropropene	0.33	10		U
100-41-4	Ethylbenzene	0.78	10		U
591-78-6	2-Hexanone	2.4	10		U
98-82-8	Isopropylbenzene	0.91	10		U
79-20-9	Methyl acetate	1.7	10		U
75-09-2	Methylene chloride	0.64	10	10U	~~1.3 JB~~ f
108-87-2	Methyl cyclohexane	0.31	10		U
1634-04-4	Methyl tert-butyl ether	0.33	10		U
108-10-1	4-Methyl-2-pentanone	0.60	10		U
100-42-5	Styrene	0.36	10		U
79-34-5	1,1,2,2-Tetrachloroethane	0.45	10		U
127-18-4	Tetrachloroethene	1.0	10		U

FORM I VOA

NW
4/5/09

FORM 1
VOLATILE ORGANICS ANALYSIS DATA SHEET

CLIENT SAMPLE NO. 5

MR08-SS319-09A

Lab Name: EMPIRICAL LABS Contract: CH2MHILL

Lab Code: NA Case No.: NA SAS No.: NA SDG No.: LEJEUNE054

Matrix: (soil/water) SOIL Lab Sample ID: 0901189-05

Sample wt/vol: 5.6 (g/mL) G Lab File ID: 0118905A

Level: (low/med) LOW Date Sampled: 01/21/09 11:20

% Moisture: not dec. 15 Date Analyzed: 01/27/09 17:48

GC Column: RTX-VRX ID: 0.25 (mm) Dilution Factor: 1.0

Soil Extract Volume:_____(uL) Soil Aliquot Volume: _____(uL)

CONCENTRATION UNITS: (ug/L or ug/Kg) UG/KG

CAS NO.	COMPOUND	MDL	RL	CONC	Q
108-88-3	Toluene	0.89	10		U
120-82-1	1,2,4-Trichlorobenzene	0.19	10		U
71-55-6	1,1,1-Trichloroethane	0.93	10		U
79-00-5	1,1,2-Trichloroethane	0.36	10		U
79-01-6	Trichloroethene	0.88	10		U
76-13-1	Trichlorotrifluoroethane	0.57	10		U
75-69-4	Trichlorofluoromethane	0.99	10		U
75-01-4	Vinyl chloride	1.1	10		U
1330-20-7	Xylene(total)	0.73	10		U

NW
4/15/09

FORM 1
VOLATILE ORGANICS ANALYSIS DATA SHEET

CLIENT SAMPLE NO.

6

MR08-SS319D-09A

Lab Name: EMPIRICAL LABS Contract: CH2MHILL

Lab Code: NA Case No.: NA SAS No.: NA SDG No.: LEJEUNE054

Matrix: (soil/water) SOIL Lab Sample ID: 0901189-06

Sample wt/vol: 5.7 (g/mL) G Lab File ID: 0118906A

Level: (low/med) LOW Date Sampled: 01/21/09 11:20

% Moisture: not dec. 0 Date Analyzed: 01/27/09 22:26

GC Column: RTX-VRX ID: 0.25 (mm) Dilution Factor: 1.0

Soil Extract Volume:_____(uL) Soil Aliquot Volume: _____(uL)

CONCENTRATION UNITS: (ug/L or ug/Kg) UG/KG

CAS NO.	COMPOUND	MDL	RL	CONC	Q
67-64-1	Acetone	1.8	8.8	64	~~B~~
71-43-2	Benzene	0.41	8.8		U
75-27-4	Bromodichloromethane	0.26	8.8		U
75-25-2	Bromoform	0.88	8.8		U
74-83-9	Bromomethane	0.63	8.8		U
78-93-3	2-Butanone	1.2	8.8		U
75-15-0	Carbon disulfide	1.1	8.8		U
56-23-5	Carbon tetrachloride	0.77	8.8		U
108-90-7	Chlorobenzene	0.30	8.8		U
75-00-3	Chloroethane	0.97	8.8		U
67-66-3	Chloroform	0.48	8.8		U
74-87-3	Chloromethane	0.46	8.8		U
110-82-7	Cyclohexane	0.48	8.8		U
124-48-1	Dibromochloromethane	0.30	8.8		U
96-12-8	1,2-Dibromo-3-chloropropane	1.0	4.4		U
106-93-4	1,2-Dibromoethane	0.38	8.8		U
95-50-1	1,2-Dichlorobenzene	0.32	8.8		U
541-73-1	1,3-Dichlorobenzene	0.74	8.8		U
106-46-7	1,4-Dichlorobenzene	0.48	8.8		U
75-71-8	Dichlorodifluoromethane	0.97	8.8		U
75-34-3	1,1-Dichloroethane	0.48	8.8		U
107-06-2	1,2-Dichloroethane	0.40	8.8		U
75-35-4	1,1-Dichloroethene	1.0	8.8		U
156-59-2	cis-1,2-Dichloroethene	1.0	8.8		U
156-60-5	trans-1,2-Dichloroethene	0.97	8.8		U
78-87-5	1,2-Dichloropropane	0.40	8.8		U
10061-01-5	cis-1,3-Dichloropropene	0.44	8.8		U
10061-02-6	trans-1,3-Dichloropropene	0.28	8.8		U
100-41-4	Ethylbenzene	0.66	8.8		U
591-78-6	2-Hexanone	2.0	8.8		U
98-82-8	Isopropylbenzene	0.77	8.8		U
79-20-9	Methyl acetate	1.4	8.8		U
75-09-2	Methylene chloride	0.54	8.8	8.8u ~~1.6~~	~~JB~~ B
108-87-2	Methyl cyclohexane	0.26	8.8		U
1634-04-4	Methyl tert-butyl ether	0.28	8.8		U
108-10-1	4-Methyl-2-pentanone	0.51	8.8		U
100-42-5	Styrene	0.31	8.8		U
79-34-5	1,1,2,2-Tetrachloroethane	0.38	8.8		U
127-18-4	Tetrachloroethene	0.85	8.8		U

NW 4/5/09

FORM 1
VOLATILE ORGANICS ANALYSIS DATA SHEET

CLIENT SAMPLE NO.

6

MR08-SS319D-09A

Lab Name: EMPIRICAL LABS Contract: CH2MHILL

Lab Code: NA Case No.: NA SAS No.: NA SDG No.: LEJEUNE054

Matrix: (soil/water) SOIL Lab Sample ID: 0901189-06

Sample wt/vol: 5.7 (g/mL) G Lab File ID: 0118906A

Level: (low/med) LOW Date Sampled: 01/21/09 11:20

% Moisture: not dec. 0 Date Analyzed: 01/27/09 22:26

GC Column: RTX-VRX ID: 0.25 (mm) Dilution Factor: 1.0

Soil Extract Volume:_____(uL) Soil Aliquot Volume: _____(uL)

CONCENTRATION UNITS: (ug/L or ug/Kg) UG/KG

CAS NO.	COMPOUND	MDL	RL	CONC	Q
108-88-3	Toluene	0.76	8.8		U
120-82-1	1,2,4-Trichlorobenzene	0.16	8.8		U
71-55-6	1,1,1-Trichloroethane	0.79	8.8		U
79-00-5	1,1,2-Trichloroethane	0.31	8.8		U
79-01-6	Trichloroethene	0.75	8.8		U
76-13-1	Trichlorotrifluoroethane	0.48	8.8		U
75-69-4	Trichlorofluoromethane	0.84	8.8		U
75-01-4	Vinyl chloride	0.97	8.8		U
1330-20-7	Xylene(total)	0.62	8.8		U

Sample reported as wet weight due to % moisture not available.

NW
4/5/09

FORM 1
VOLATILE ORGANICS ANALYSIS DATA SHEET

CLIENT SAMPLE NO. 7

MR08-SS318-09A

Lab Name: EMPIRICAL LABS Contract: CH2MHILL

Lab Code: NA Case No.: NA SAS No.: NA SDG No.: LEJEUNE054

Matrix: (soil/water) SOIL Lab Sample ID: 0901189-07

Sample wt/vol: 5.5 (g/mL) G Lab File ID: 0118907A

Level: (low/med) LOW Date Sampled: 01/21/09 12:50

% Moisture: not dec. 0 Date Analyzed: 01/27/09 22:57

GC Column: RTX-VRX ID: 0.25 (mm) Dilution Factor: 1.0

Soil Extract Volume:_____(uL) Soil Aliquot Volume: _____(uL)

CONCENTRATION UNITS: (ug/L or ug/Kg) UG/KG

CAS NO.	COMPOUND	MDL	RL	CONC	Q
67-64-1	Acetone	1.8	9.2	40	~~B~~
71-43-2	Benzene	0.43	9.2	0.53	J
75-27-4	Bromodichloromethane	0.28	9.2		U
75-25-2	Bromoform	0.92	9.2		U
74-83-9	Bromomethane	0.66	9.2		U
78-93-3	2-Butanone	1.3	9.2		U
75-15-0	Carbon disulfide	1.2	9.2		U
56-23-5	Carbon tetrachloride	0.81	9.2		U
108-90-7	Chlorobenzene	0.31	9.2		U
75-00-3	Chloroethane	1.0	9.2		U
67-66-3	Chloroform	0.50	9.2		U
74-87-3	Chloromethane	0.48	9.2		U
110-82-7	Cyclohexane	0.50	9.2		U
124-48-1	Dibromochloromethane	0.31	9.2		U
96-12-8	1,2-Dibromo-3-chloropropane	1.1	4.6		U
106-93-4	1,2-Dibromoethane	0.39	9.2		U
95-50-1	1,2-Dichlorobenzene	0.34	9.2		U
541-73-1	1,3-Dichlorobenzene	0.77	9.2		U
106-46-7	1,4-Dichlorobenzene	0.50	9.2		U
75-71-8	Dichlorodifluoromethane	1.0	9.2		U
75-34-3	1,1-Dichloroethane	0.50	9.2		U
107-06-2	1,2-Dichloroethane	0.42	9.2		U
75-35-4	1,1-Dichloroethene	1.1	9.2		U
156-59-2	cis-1,2-Dichloroethene	1.1	9.2		U
156-60-5	trans-1,2-Dichloroethene	1.0	9.2		U
78-87-5	1,2-Dichloropropane	0.42	9.2		U
10061-01-5	cis-1,3-Dichloropropene	0.46	9.2		U
10061-02-6	trans-1,3-Dichloropropene	0.29	9.2		U
100-41-4	Ethylbenzene	0.69	9.2		U
591-78-6	2-Hexanone	2.1	9.2		U
98-82-8	Isopropylbenzene	0.81	9.2		U
79-20-9	Methyl acetate	1.5	9.2		U
75-09-2	Methylene chloride	0.57	9.2	9.24 ~~1.2~~	~~JB~~ B1
108-87-2	Methyl cyclohexane	0.28	9.2	0.30	J
1634-04-4	Methyl tert-butyl ether	0.29	9.2		U
108-10-1	4-Methyl-2-pentanone	0.53	9.2		U
100-42-5	Styrene	0.32	9.2		U
79-34-5	1,1,2,2-Tetrachloroethane	0.39	9.2		U
127-18-4	Tetrachloroethene	0.89	9.2		U

FORM I VOA

NW
4/15/09

FORM 1
VOLATILE ORGANICS ANALYSIS DATA SHEET

CLIENT SAMPLE NO.

7

MR08-SS318-09A

Lab Name: EMPIRICAL LABS Contract: CH2MHILL

Lab Code: NA Case No.: NA SAS No.: NA SDG No.: LEJEUNE054

Matrix: (soil/water) SOIL Lab Sample ID: 0901189-07

Sample wt/vol: 5.5 (g/mL) G Lab File ID: 0118907A

Level: (low/med) LOW Date Sampled: 01/21/09 12:50

% Moisture: not dec. 0 Date Analyzed: 01/27/09 22:57

GC Column: RTX-VRX ID: 0.25 (mm) Dilution Factor: 1.0

Soil Extract Volume:_____(uL) Soil Aliquot Volume: _____(uL)

CONCENTRATION UNITS: (ug/L or ug/Kg) UG/KG

CAS NO.	COMPOUND	MDL	RL	CONC	Q
108-88-3	Toluene	0.79	9.2		U
120-82-1	1,2,4-Trichlorobenzene	0.16	9.2		U
71-55-6	1,1,1-Trichloroethane	0.82	9.2		U
79-00-5	1,1,2-Trichloroethane	0.32	9.2		U
79-01-6	Trichloroethene	0.78	9.2		U
76-13-1	Trichlorotrifluoroethane	0.50	9.2		U
75-69-4	Trichlorofluoromethane	0.87	9.2		U
75-01-4	Vinyl chloride	1.0	9.2		U
1330-20-7	Xylene(total)	0.64	9.2		U

Sample reported as wet weight due to % moisture not available.

MW 4/5/09

FORM 1
VOLATILE ORGANICS ANALYSIS DATA SHEET

CLIENT SAMPLE NO.

MR08-IS31
8-4-5-09A

8

Lab Name: EMPIRICAL LABS Contract: CH2MHILL

Lab Code: NA Case No.: NA SAS No.: NA SDG No.: LEJEUNE054

Matrix: (soil/water) SOIL Lab Sample ID: 0901189-08

Sample wt/vol: 4.6 (g/mL) G Lab File ID: 0118908A

Level: (low/med) LOW Date Sampled: 01/21/09 12:55

% Moisture: not dec. 4 Date Analyzed: 01/27/09 23:28

GC Column: RTX-VRX ID: 0.25 (mm) Dilution Factor: 1.0

Soil Extract Volume:_____(uL) Soil Aliquot Volume: _____(uL)

CONCENTRATION UNITS: (ug/L or ug/Kg) UG/KG

CAS NO.	COMPOUND	MDL	RL	CONC	Q
67-64-1	Acetone	2.2	11		U
71-43-2	Benzene	0.53	11		U
75-27-4	Bromodichloromethane	0.34	11		U
75-25-2	Bromoform	1.1	11		U
74-83-9	Bromomethane	0.81	11		U
78-93-3	2-Butanone	1.6	11		U
75-15-0	Carbon disulfide	1.5	11		U
56-23-5	Carbon tetrachloride	0.99	11		U
108-90-7	Chlorobenzene	0.38	11		U
75-00-3	Chloroethane	1.2	11		U
67-66-3	Chloroform	0.62	11		U
74-87-3	Chloromethane	0.58	11		U
110-82-7	Cyclohexane	0.61	11		U
124-48-1	Dibromochloromethane	0.38	11		U
96-12-8	1,2-Dibromo-3-chloropropane	1.4	5.6		U
106-93-4	1,2-Dibromoethane	0.48	11		U
95-50-1	1,2-Dichlorobenzene	0.42	11		U
541-73-1	1,3-Dichlorobenzene	0.94	11		U
106-46-7	1,4-Dichlorobenzene	0.62	11		U
75-71-8	Dichlorodifluoromethane	1.2	11		U
75-34-3	1,1-Dichloroethane	0.61	11		U
107-06-2	1,2-Dichloroethane	0.52	11		U
75-35-4	1,1-Dichloroethene	1.4	11		U
156-59-2	cis-1,2-Dichloroethene	1.4	11		U
156-60-5	trans-1,2-Dichloroethene	1.2	11		U
78-87-5	1,2-Dichloropropane	0.52	11		U
10061-01-5	cis-1,3-Dichloropropene	0.56	11		U
10061-02-6	trans-1,3-Dichloropropene	0.36	11		U
100-41-4	Ethylbenzene	0.84	11		U
591-78-6	2-Hexanone	2.6	11		U
98-82-8	Isopropylbenzene	0.99	11		U
79-20-9	Methyl acetate	1.8	11		U
75-09-2	Methylene chloride	0.70	11	11u ~~1.7 JB~~	B
108-87-2	Methyl cyclohexane	0.34	11		U
1634-04-4	Methyl tert-butyl ether	0.36	11		U
108-10-1	4-Methyl-2-pentanone	0.65	11		U
100-42-5	Styrene	0.39	11		U
79-34-5	1,1,2,2-Tetrachloroethane	0.48	11		U
127-18-4	Tetrachloroethene	1.1	11		U

FORM I VOA

NW
4/5/09

FORM 1
VOLATILE ORGANICS ANALYSIS DATA SHEET

CLIENT SAMPLE NO. 8

MR08-IS31
8-4-5-09A

Lab Name: EMPIRICAL LABS Contract: CH2MHILL

Lab Code: NA Case No.: NA SAS No.: NA SDG No.: LEJEUNE054

Matrix: (soil/water) SOIL Lab Sample ID: 0901189-08

Sample wt/vol: 4.6 (g/mL) G Lab File ID: 0118908A

Level: (low/med) LOW Date Sampled: 01/21/09 12:55

% Moisture: not dec. 4 Date Analyzed: 01/27/09 23:28

GC Column: RTX-VRX ID: 0.25 (mm) Dilution Factor: 1.0

Soil Extract Volume:_____(uL) Soil Aliquot Volume: _____(uL)

CONCENTRATION UNITS: (ug/L or ug/Kg) UG/KG

CAS NO.	COMPOUND	MDL	RL	CONC	Q
108-88-3	Toluene	0.97	11		U
120-82-1	1,2,4-Trichlorobenzene	0.20	11		U
71-55-6	1,1,1-Trichloroethane	1.0	11		U
79-00-5	1,1,2-Trichloroethane	0.39	11		U
79-01-6	Trichloroethene	0.96	11		U
76-13-1	Trichlorotrifluoroethane	0.62	11		U
75-69-4	Trichlorofluoromethane	1.1	11		U
75-01-4	Vinyl chloride	1.2	11		U
1330-20-7	Xylene(total)	0.79	11		U

NW
4/5/09

FORM 1
VOLATILE ORGANICS ANALYSIS DATA SHEET

CLIENT SAMPLE NO. 9

MR08-SS317-09A

Lab Name: EMPIRICAL LABS Contract: CH2MHILL

Lab Code: NA Case No.: NA SAS No.: NA SDG No.: LEJEUNE054

Matrix: (soil/water) SOIL Lab Sample ID: 0901189-09

Sample wt/vol: 3.6 (g/mL) G Lab File ID: 0118909A

Level: (low/med) LOW Date Sampled: 01/21/09 13:15

% Moisture: not dec. 28 Date Analyzed: 01/27/09 23:59

GC Column: RTX-VRX ID: 0.25 (mm) Dilution Factor: 1.0

Soil Extract Volume:_____(uL) Soil Aliquot Volume: _____(uL)

CONCENTRATION UNITS: (ug/L or ug/Kg) UG/KG

CAS NO.	COMPOUND	MDL	RL	CONC	Q
67-64-1	Acetone	3.9	19		U
71-43-2	Benzene	0.91	19		U
75-27-4	Bromodichloromethane	0.58	19		U
75-25-2	Bromoform	1.9	19		U
74-83-9	Bromomethane	1.4	19		U
78-93-3	2-Butanone	2.7	19	26	
75-15-0	Carbon disulfide	2.5	19		U
56-23-5	Carbon tetrachloride	1.7	19		U
108-90-7	Chlorobenzene	0.66	19		U
75-00-3	Chloroethane	2.1	19		U
67-66-3	Chloroform	1.1	19		U
74-87-3	Chloromethane	1.0	19		U
110-82-7	Cyclohexane	1.0	19		U
124-48-1	Dibromochloromethane	0.66	19		U
96-12-8	1,2-Dibromo-3-chloropropane	2.3	9.7		U
106-93-4	1,2-Dibromoethane	0.83	19		U
95-50-1	1,2-Dichlorobenzene	0.72	19		U
541-73-1	1,3-Dichlorobenzene	1.6	19		U
106-46-7	1,4-Dichlorobenzene	1.1	19		U
75-71-8	Dichlorodifluoromethane	2.1	19		U
75-34-3	1,1-Dichloroethane	1.0	19		U
107-06-2	1,2-Dichloroethane	0.89	19		U
75-35-4	1,1-Dichloroethene	2.3	19		U
156-59-2	cis-1,2-Dichloroethene	2.3	19		U
156-60-5	trans-1,2-Dichloroethene	2.1	19		U
78-87-5	1,2-Dichloropropane	0.89	19		U
10061-01-5	cis-1,3-Dichloropropene	0.97	19		U
10061-02-6	trans-1,3-Dichloropropene	0.62	19		U
100-41-4	Ethylbenzene	1.4	19		U
591-78-6	2-Hexanone	4.4	19		U
98-82-8	Isopropylbenzene	1.7	19		U
79-20-9	Methyl acetate	3.1	19		U
75-09-2	Methylene chloride	1.2	19	19u ~~2.6 JB~~	B
108-87-2	Methyl cyclohexane	0.58	19		U
1634-04-4	Methyl tert-butyl ether	0.62	19		U
108-10-1	4-Methyl-2-pentanone	1.1	19		U
100-42-5	Styrene	0.68	19		U
79-34-5	1,1,2,2-Tetrachloroethane	0.83	19		U
127-18-4	Tetrachloroethene	1.9	19		U

FORM I VOA

NW
4/15/09

FORM 1
VOLATILE ORGANICS ANALYSIS DATA SHEET

CLIENT SAMPLE NO.

MR08-SS317-09A

9

Lab Name: EMPIRICAL LABS Contract: CH2MHILL

Lab Code: NA Case No.: NA SAS No.: NA SDG No.: LEJEUNE054

Matrix: (soil/water) SOIL Lab Sample ID: 0901189-09

Sample wt/vol: 3.6 (g/mL) G Lab File ID: 0118909A

Level: (low/med) LOW Date Sampled: 01/21/09 13:15

% Moisture: not dec. 28 Date Analyzed: 01/27/09 23:59

GC Column: RTX-VRX ID: 0.25 (mm) Dilution Factor: 1.0

Soil Extract Volume:_____(uL) Soil Aliquot Volume: _____(uL)

CONCENTRATION UNITS: (ug/L or ug/Kg) UG/KG

CAS NO.	COMPOUND	MDL	RL	CONC	Q
108-88-3	Toluene	1.7	19		U
120-82-1	1,2,4-Trichlorobenzene	0.35	19		U
71-55-6	1,1,1-Trichloroethane	1.7	19		U
79-00-5	1,1,2-Trichloroethane	0.68	19		U
79-01-6	Trichloroethene	1.6	19		U
76-13-1	Trichlorotrifluoroethane	1.1	19		U
75-69-4	Trichlorofluoromethane	1.8	19		U
75-01-4	Vinyl chloride	2.1	19		U
1330-20-7	Xylene(total)	1.4	19		U

NW
4/5/09

FORM 1
VOLATILE ORGANICS ANALYSIS DATA SHEET

CLIENT SAMPLE NO. 10

MR08-IS31
7-4-5-09A

Lab Name: EMPIRICAL LABS Contract: CH2MHILL

Lab Code: NA Case No.: NA SAS No.: NA SDG No.: LEJEUNE054

Matrix: (soil/water) SOIL Lab Sample ID: 0901189-10

Sample wt/vol: 5.0 (g/mL) G Lab File ID: 0118910A

Level: (low/med) LOW Date Sampled: 01/21/09 13:20

% Moisture: not dec. 0 Date Analyzed: 01/28/09 00:29

GC Column: RTX-VRX ID: 0.25 (mm) Dilution Factor: 1.0

Soil Extract Volume:_____(uL) Soil Aliquot Volume: _____(uL)

CONCENTRATION UNITS: (ug/L or ug/Kg) UG/KG

CAS NO.	COMPOUND	MDL	RL	CONC	Q	
67-64-1	Acetone	2.0	10	10U	~~4.9 JB~~	BL
71-43-2	Benzene	0.47	10		U	
75-27-4	Bromodichloromethane	0.30	10		U	
75-25-2	Bromoform	1.0	10		U	
74-83-9	Bromomethane	0.72	10		U	
78-93-3	2-Butanone	1.4	10		U	
75-15-0	Carbon disulfide	1.3	10		U	
56-23-5	Carbon tetrachloride	0.88	10		U	
108-90-7	Chlorobenzene	0.34	10		U	
75-00-3	Chloroethane	1.1	10		U	
67-66-3	Chloroform	0.55	10		U	
74-87-3	Chloromethane	0.52	10		U	
110-82-7	Cyclohexane	0.54	10		U	
124-48-1	Dibromochloromethane	0.34	10		U	
96-12-8	1,2-Dibromo-3-chloropropane	1.2	5.0		U	
106-93-4	1,2-Dibromoethane	0.43	10		U	
95-50-1	1,2-Dichlorobenzene	0.37	10		U	
541-73-1	1,3-Dichlorobenzene	0.84	10		U	
106-46-7	1,4-Dichlorobenzene	0.55	10		U	
75-71-8	Dichlorodifluoromethane	1.1	10		U	
75-34-3	1,1-Dichloroethane	0.54	10		U	
107-06-2	1,2-Dichloroethane	0.46	10		U	
75-35-4	1,1-Dichloroethene	1.2	10		U	
156-59-2	cis-1,2-Dichloroethene	1.2	10		U	
156-60-5	trans-1,2-Dichloroethene	1.1	10		U	
78-87-5	1,2-Dichloropropane	0.46	10		U	
10061-01-5	cis-1,3-Dichloropropene	0.50	10		U	
10061-02-6	trans-1,3-Dichloropropene	0.32	10		U	
100-41-4	Ethylbenzene	0.75	10		U	
591-78-6	2-Hexanone	2.3	10		U	
98-82-8	Isopropylbenzene	0.88	10		U	
79-20-9	Methyl acetate	1.6	10		U	
75-09-2	Methylene chloride	0.62	10	10U	~~1.5 JB~~	B
108-87-2	Methyl cyclohexane	0.30	10		U	
1634-04-4	Methyl tert-butyl ether	0.32	10		U	
108-10-1	4-Methyl-2-pentanone	0.58	10		U	
100-42-5	Styrene	0.35	10		U	
79-34-5	1,1,2,2-Tetrachloroethane	0.43	10		U	
127-18-4	Tetrachloroethene	0.98	10		U	

FORM I VOA

MW 4/15/09

FORM 1
VOLATILE ORGANICS ANALYSIS DATA SHEET

CLIENT SAMPLE NO.

MR08-IS31
7-4-5-09A

10

Lab Name: EMPIRICAL LABS Contract: CH2MHILL

Lab Code: NA Case No.: NA SAS No.: NA SDG No.: LEJEUNE054

Matrix: (soil/water) SOIL Lab Sample ID: 0901189-10

Sample wt/vol: 5.0 (g/mL) G Lab File ID: 0118910A

Level: (low/med) LOW Date Sampled: 01/21/09 13:20

% Moisture: not dec. 0 Date Analyzed: 01/28/09 00:29

GC Column: RTX-VRX ID: 0.25 (mm) Dilution Factor: 1.0

Soil Extract Volume:_____(uL) Soil Aliquot Volume: _____(uL)

CONCENTRATION UNITS: (ug/L or ug/Kg) UG/KG

CAS NO.	COMPOUND	MDL	RL	CONC	Q
108-88-3	Toluene	0.86	10		U
120-82-1	1,2,4-Trichlorobenzene	0.18	10		U
71-55-6	1,1,1-Trichloroethane	0.90	10		U
79-00-5	1,1,2-Trichloroethane	0.35	10		U
79-01-6	Trichloroethene	0.86	10		U
76-13-1	Trichlorotrifluoroethane	0.55	10		U
75-69-4	Trichlorofluoromethane	0.96	10		U
75-01-4	Vinyl chloride	1.1	10		U
1330-20-7	Xylene(total)	0.70	10		U

Sample reported as wet weight due to % moisture not available.

NW
4/5/09

FORM 1
VOLATILE ORGANICS ANALYSIS DATA SHEET

CLIENT SAMPLE NO.

MR08-SS153-09A

11

Lab Name: EMPIRICAL LABS Contract: CH2MHILL

Lab Code: NA Case No.: NA SAS No.: NA SDG No.: LEJEUNE054

Matrix: (soil/water) SOIL Lab Sample ID: 0901189-11

Sample wt/vol: 5.9 (g/mL) G Lab File ID: 0118911A

Level: (low/med) LOW Date Sampled: 01/21/09 13:50

% Moisture: not dec. 13 Date Analyzed: 01/28/09 01:00

GC Column: RTX-VRX ID: 0.25 (mm) Dilution Factor: 1.0

Soil Extract Volume:_____(uL) Soil Aliquot Volume: _____(uL)

CONCENTRATION UNITS: (ug/L or ug/Kg) UG/KG

CAS NO.	COMPOUND	MDL	RL	CONC	Q
67-64-1	Acetone	1.9	9.7		U
71-43-2	Benzene	0.46	9.7	1.2	J
75-27-4	Bromodichloromethane	0.29	9.7		U
75-25-2	Bromoform	0.97	9.7		U
74-83-9	Bromomethane	0.70	9.7		U
78-93-3	2-Butanone	1.4	9.7		U
75-15-0	Carbon disulfide	1.3	9.7		U
56-23-5	Carbon tetrachloride	0.85	9.7		U
108-90-7	Chlorobenzene	0.33	9.7		U
75-00-3	Chloroethane	1.1	9.7		U
67-66-3	Chloroform	0.53	9.7		U
74-87-3	Chloromethane	0.50	9.7		U
110-82-7	Cyclohexane	0.52	9.7		U
124-48-1	Dibromochloromethane	0.33	9.7		U
96-12-8	1,2-Dibromo-3-chloropropane	1.2	4.8		U
106-93-4	1,2-Dibromoethane	0.42	9.7		U
95-50-1	1,2-Dichlorobenzene	0.36	9.7		U
541-73-1	1,3-Dichlorobenzene	0.81	9.7		U
106-46-7	1,4-Dichlorobenzene	0.53	9.7		U
75-71-8	Dichlorodifluoromethane	1.1	9.7		U
75-34-3	1,1-Dichloroethane	0.52	9.7		U
107-06-2	1,2-Dichloroethane	0.45	9.7		U
75-35-4	1,1-Dichloroethene	1.2	9.7		U
156-59-2	cis-1,2-Dichloroethene	1.2	9.7		U
156-60-5	trans-1,2-Dichloroethene	1.1	9.7		U
78-87-5	1,2-Dichloropropane	0.45	9.7		U
10061-01-5	cis-1,3-Dichloropropene	0.48	9.7		U
10061-02-6	trans-1,3-Dichloropropene	0.31	9.7		U
100-41-4	Ethylbenzene	0.73	9.7	3.0	J
591-78-6	2-Hexanone	2.2	9.7		U
98-82-8	Isopropylbenzene	0.85	9.7		U
79-20-9	Methyl acetate	1.6	9.7		U
75-09-2	Methylene chloride	0.60	9.7	9.7U ~~1.3~~ ~~JB~~	B
108-87-2	Methyl cyclohexane	0.29	9.7	0.46	J
1634-04-4	Methyl tert-butyl ether	0.31	9.7		U
108-10-1	4-Methyl-2-pentanone	0.56	9.7		U
100-42-5	Styrene	0.34	9.7		U
79-34-5	1,1,2,2-Tetrachloroethane	0.42	9.7		U
127-18-4	Tetrachloroethene	0.94	9.7		U

FORM I VOA

NW
4/15/09

FORM 1
VOLATILE ORGANICS ANALYSIS DATA SHEET

CLIENT SAMPLE NO.

11

MR08-SS153-09A

Lab Name: EMPIRICAL LABS Contract: CH2MHILL

Lab Code: NA Case No.: NA SAS No.: NA SDG No.: LEJEUNE054

Matrix: (soil/water) SOIL Lab Sample ID: 0901189-11

Sample wt/vol: 5.9 (g/mL) G Lab File ID: 0118911A

Level: (low/med) LOW Date Sampled: 01/21/09 13:50

% Moisture: not dec. 13 Date Analyzed: 01/28/09 01:00

GC Column: RTX-VRX ID: 0.25 (mm) Dilution Factor: 1.0

Soil Extract Volume:_____(uL) Soil Aliquot Volume: _____(uL)

CONCENTRATION UNITS: (ug/L or ug/Kg) UG/KG

CAS NO.	COMPOUND	MDL	RL	CONC	Q
108-88-3	Toluene	0.83	9.7	2.2	J
120-82-1	1,2,4-Trichlorobenzene	0.17	9.7		U
71-55-6	1,1,1-Trichloroethane	0.87	9.7		U
79-00-5	1,1,2-Trichloroethane	0.34	9.7		U
79-01-6	Trichloroethene	0.82	9.7		U
76-13-1	Trichlorotrifluoroethane	0.53	9.7		U
75-69-4	Trichlorofluoromethane	0.92	9.7		U
75-01-4	Vinyl chloride	1.1	9.7		U
1330-20-7	Xylene(total)	0.68	9.7		U

MW
4/5/09

FORM 1
VOLATILE ORGANICS ANALYSIS DATA SHEET

CLIENT SAMPLE NO.

MR08-IS15
3-2-3-09A

12

Lab Name: EMPIRICAL LABS Contract: CH2MHILL

Lab Code: NA Case No.: NA SAS No.: NA SDG No.: LEJEUNE054

Matrix: (soil/water) SOIL Lab Sample ID: 0901189-12

Sample wt/vol: 6.5 (g/mL) G Lab File ID: 0118912A

Level: (low/med) LOW Date Sampled: 01/21/09 13:55

% Moisture: not dec. 12 Date Analyzed: 01/28/09 01:31

GC Column: RTX-VRX ID: 0.25 (mm) Dilution Factor: 1.0

Soil Extract Volume:_____(uL) Soil Aliquot Volume: _____(uL)

CONCENTRATION UNITS: (ug/L or ug/Kg) UG/KG

CAS NO.	COMPOUND	MDL	RL	CONC	Q	
67-64-1	Acetone	1.8	8.8	22	~~B~~U	BL
71-43-2	Benzene	0.41	8.8		U	
75-27-4	Bromodichloromethane	0.26	8.8		U	
75-25-2	Bromoform	0.88	8.8		U	
74-83-9	Bromomethane	0.63	8.8		U	
78-93-3	2-Butanone	1.2	8.8		U	
75-15-0	Carbon disulfide	1.1	8.8		U	
56-23-5	Carbon tetrachloride	0.77	8.8		U	
108-90-7	Chlorobenzene	0.30	8.8		U	
75-00-3	Chloroethane	0.96	8.8		U	
67-66-3	Chloroform	0.48	8.8		U	
74-87-3	Chloromethane	0.46	8.8		U	
110-82-7	Cyclohexane	0.47	8.8		U	
124-48-1	Dibromochloromethane	0.30	8.8		U	
96-12-8	1,2-Dibromo-3-chloropropane	1.0	4.4		U	
106-93-4	1,2-Dibromoethane	0.38	8.8		U	
95-50-1	1,2-Dichlorobenzene	0.32	8.8		U	
541-73-1	1,3-Dichlorobenzene	0.74	8.8		U	
106-46-7	1,4-Dichlorobenzene	0.48	8.8		U	
75-71-8	Dichlorodifluoromethane	0.96	8.8		U	
75-34-3	1,1-Dichloroethane	0.47	8.8		U	
107-06-2	1,2-Dichloroethane	0.40	8.8		U	
75-35-4	1,1-Dichloroethene	1.0	8.8		U	
156-59-2	cis-1,2-Dichloroethene	1.0	8.8		U	
156-60-5	trans-1,2-Dichloroethene	0.96	8.8		U	
78-87-5	1,2-Dichloropropane	0.40	8.8		U	
10061-01-5	cis-1,3-Dichloropropene	0.44	8.8		U	
10061-02-6	trans-1,3-Dichloropropene	0.28	8.8		U	
100-41-4	Ethylbenzene	0.66	8.8		U	
591-78-6	2-Hexanone	2.0	8.8		U	
98-82-8	Isopropylbenzene	0.77	8.8		U	
79-20-9	Methyl acetate	1.4	8.8		U	
75-09-2	Methylene chloride	0.54	8.8	8.8u ~~2.3 JB~~		B
108-87-2	Methyl cyclohexane	0.26	8.8		U	
1634-04-4	Methyl tert-butyl ether	0.28	8.8		U	
108-10-1	4-Methyl-2-pentanone	0.51	8.8		U	
100-42-5	Styrene	0.31	8.8		U	
79-34-5	1,1,2,2-Tetrachloroethane	0.38	8.8		U	
127-18-4	Tetrachloroethene	0.85	8.8		U	

FORM I VOA

rW
4/5/09

FORM 1
VOLATILE ORGANICS ANALYSIS DATA SHEET

CLIENT SAMPLE NO.

MR08-IS15
3-2-3-09A

12

Lab Name: EMPIRICAL LABS Contract: CH2MHILL

Lab Code: NA Case No.: NA SAS No.: NA SDG No.: LEJEUNE054

Matrix: (soil/water) SOIL Lab Sample ID: 0901189-12

Sample wt/vol: 6.5 (g/mL) G Lab File ID: 0118912A

Level: (low/med) LOW Date Sampled: 01/21/09 13:55

% Moisture: not dec. 12 Date Analyzed: 01/28/09 01:31

GC Column: RTX-VRX ID: 0.25 (mm) Dilution Factor: 1.0

Soil Extract Volume:_____(uL) Soil Aliquot Volume: _____(uL)

CONCENTRATION UNITS: (ug/L or ug/Kg) UG/KG

CAS NO.	COMPOUND	MDL	RL	CONC	Q
108-88-3	Toluene	0.75	8.8		U
120-82-1	1,2,4-Trichlorobenzene	0.16	8.8		U
71-55-6	1,1,1-Trichloroethane	0.79	8.8		U
79-00-5	1,1,2-Trichloroethane	0.31	8.8		U
79-01-6	Trichloroethene	0.74	8.8		U
76-13-1	Trichlorotrifluoroethane	0.48	8.8		U
75-69-4	Trichlorofluoromethane	0.83	8.8		U
75-01-4	Vinyl chloride	0.96	8.8		U
1330-20-7	Xylene(total)	0.61	8.8		U

NW
4/5/09

FORM 1
VOLATILE ORGANICS ANALYSIS DATA SHEET

CLIENT SAMPLE NO.

MR08-SS162-09A

13

Lab Name: EMPIRICAL LABS Contract: CH2MHILL

Lab Code: NA Case No.: NA SAS No.: NA SDG No.: LEJEUNE054

Matrix: (soil/water) SOIL Lab Sample ID: 0901189-13

Sample wt/vol: 5.3 (g/mL) G Lab File ID: 0118913A

Level: (low/med) LOW Date Sampled: 01/21/09 14:25

% Moisture: not dec. 9 Date Analyzed: 01/28/09 02:02

GC Column: RTX-VRX ID: 0.25 (mm) Dilution Factor: 1.0

Soil Extract Volume:_____(uL) Soil Aliquot Volume: _____(uL)

CONCENTRATION UNITS: (ug/L or ug/Kg) UG/KG

CAS NO.	COMPOUND	MDL	RL	CONC	Q
67-64-1	Acetone	2.1	10		U
71-43-2	Benzene	0.49	10	1.1	J
75-27-4	Bromodichloromethane	0.31	10		U
75-25-2	Bromoform	1.0	10		U
74-83-9	Bromomethane	0.75	10		U
78-93-3	2-Butanone	1.5	10		U
75-15-0	Carbon disulfide	1.4	10		U
56-23-5	Carbon tetrachloride	0.92	10		U
108-90-7	Chlorobenzene	0.36	10		U
75-00-3	Chloroethane	1.1	10		U
67-66-3	Chloroform	0.57	10		U
74-87-3	Chloromethane	0.54	10		U
110-82-7	Cyclohexane	0.56	10		U
124-48-1	Dibromochloromethane	0.36	10		U
96-12-8	1,2-Dibromo-3-chloropropane	1.2	5.2		U
106-93-4	1,2-Dibromoethane	0.45	10		U
95-50-1	1,2-Dichlorobenzene	0.39	10		U
541-73-1	1,3-Dichlorobenzene	0.88	10		U
106-46-7	1,4-Dichlorobenzene	0.57	10		U
75-71-8	Dichlorodifluoromethane	1.1	10		U
75-34-3	1,1-Dichloroethane	0.56	10		U
107-06-2	1,2-Dichloroethane	0.48	10		U
75-35-4	1,1-Dichloroethene	1.2	10		U
156-59-2	cis-1,2-Dichloroethene	1.2	10		U
156-60-5	trans-1,2-Dichloroethene	1.1	10		U
78-87-5	1,2-Dichloropropane	0.48	10		U
10061-01-5	cis-1,3-Dichloropropene	0.52	10		U
10061-02-6	trans-1,3-Dichloropropene	0.33	10		U
100-41-4	Ethylbenzene	0.78	10	2.3	J
591-78-6	2-Hexanone	2.4	10		U
98-82-8	Isopropylbenzene	0.92	10		U
79-20-9	Methyl acetate	1.7	10		U
75-09-2	Methylene chloride	0.65	10	10U ~~1.4~~	~~JB~~ B
108-87-2	Methyl cyclohexane	0.31	10	0.40	J
1634-04-4	Methyl tert-butyl ether	0.33	10		U
108-10-1	4-Methyl-2-pentanone	0.60	10		U
100-42-5	Styrene	0.36	10		U
79-34-5	1,1,2,2-Tetrachloroethane	0.45	10		U
127-18-4	Tetrachloroethene	1.0	10		U

FORM I VOA

NW
4/15/09

FORM 1
VOLATILE ORGANICS ANALYSIS DATA SHEET

CLIENT SAMPLE NO. 13

MR08-SS162-09A

Lab Name: EMPIRICAL LABS Contract: CH2MHILL

Lab Code: NA Case No.: NA SAS No.: NA SDG No.: LEJEUNE054

Matrix: (soil/water) SOIL Lab Sample ID: 0901189-13

Sample wt/vol: 5.3 (g/mL) G Lab File ID: 0118913A

Level: (low/med) LOW Date Sampled: 01/21/09 14:25

% Moisture: not dec. 9 Date Analyzed: 01/28/09 02:02

GC Column: RTX-VRX ID: 0.25 (mm) Dilution Factor: 1.0

Soil Extract Volume:_____(uL) Soil Aliquot Volume: _____(uL)

CONCENTRATION UNITS: (ug/L or ug/Kg) UG/KG

CAS NO.	COMPOUND	MDL	RL	CONC	Q
108-88-3	Toluene	0.90	10	1.9	J
120-82-1	1,2,4-Trichlorobenzene	0.19	10		U
71-55-6	1,1,1-Trichloroethane	0.94	10		U
79-00-5	1,1,2-Trichloroethane	0.36	10		U
79-01-6	Trichloroethene	0.89	10		U
76-13-1	Trichlorotrifluoroethane	0.57	10		U
75-69-4	Trichlorofluoromethane	0.99	10		U
75-01-4	Vinyl chloride	1.1	10		U
1330-20-7	Xylene(total)	0.73	10		U

UW
9/5/09

FORM 1
VOLATILE ORGANICS ANALYSIS DATA SHEET

CLIENT SAMPLE NO.

MR08-IS16
2-4-5-09A

14

Lab Name: EMPIRICAL LABS Contract: CH2MHILL

Lab Code: NA Case No.: NA SAS No.: NA SDG No.: LEJEUNE054

Matrix: (soil/water) SOIL Lab Sample ID: 0901189-14

Sample wt/vol: 5.0 (g/mL) G Lab File ID: 0118914A

Level: (low/med) LOW Date Sampled: 01/21/09 14:30

% Moisture: not dec. 7 Date Analyzed: 01/28/09 02:33

GC Column: RTX-VRX ID: 0.25 (mm) Dilution Factor: 1.0

Soil Extract Volume:_____(uL) Soil Aliquot Volume: _____(uL)

CONCENTRATION UNITS: (ug/L or ug/Kg) UG/KG

CAS NO.	COMPOUND	MDL	RL	CONC	Q	
67-64-1	Acetone	2.2	11	71	~~B~~ J	SS
71-43-2	Benzene	0.51	11		U	
75-27-4	Bromodichloromethane	0.32	11		U	
75-25-2	Bromoform	1.1	11		U	
74-83-9	Bromomethane	0.78	11		U	
78-93-3	2-Butanone	1.5	11	13	J	SS
75-15-0	Carbon disulfide	1.4	11		U	
56-23-5	Carbon tetrachloride	0.95	11		U	
108-90-7	Chlorobenzene	0.37	11		U	
75-00-3	Chloroethane	1.2	11		U	
67-66-3	Chloroform	0.60	11		U	
74-87-3	Chloromethane	0.56	11		U	
110-82-7	Cyclohexane	0.58	11		U	
124-48-1	Dibromochloromethane	0.37	11		U	
96-12-8	1,2-Dibromo-3-chloropropane	1.3	5.4		U	
106-93-4	1,2-Dibromoethane	0.46	11		U	
95-50-1	1,2-Dichlorobenzene	0.40	11		U	
541-73-1	1,3-Dichlorobenzene	0.91	11		U	
106-46-7	1,4-Dichlorobenzene	0.60	11		U	
75-71-8	Dichlorodifluoromethane	1.2	11		U	
75-34-3	1,1-Dichloroethane	0.58	11		U	
107-06-2	1,2-Dichloroethane	0.50	11		U	
75-35-4	1,1-Dichloroethene	1.3	11		U	
156-59-2	cis-1,2-Dichloroethene	1.3	11		U	
156-60-5	trans-1,2-Dichloroethene	1.2	11		U	
78-87-5	1,2-Dichloropropane	0.50	11		U	
10061-01-5	cis-1,3-Dichloropropene	0.54	11		U	
10061-02-6	trans-1,3-Dichloropropene	0.35	11		U	
100-41-4	Ethylbenzene	0.81	11		U	
591-78-6	2-Hexanone	2.5	11		U	
98-82-8	Isopropylbenzene	0.95	11		U	
79-20-9	Methyl acetate	1.7	11		U	
75-09-2	Methylene chloride	0.67	11	11u	~~1.7~~ JB	B
108-87-2	Methyl cyclohexane	0.32	11		U	
1634-04-4	Methyl tert-butyl ether	0.35	11		U	
108-10-1	4-Methyl-2-pentanone	0.63	11		U	
100-42-5	Styrene	0.38	11		U	
79-34-5	1,1,2,2-Tetrachloroethane	0.46	11		U	
127-18-4	Tetrachloroethene	1.0	11		U	

NW
4/5/09

FORM 1
VOLATILE ORGANICS ANALYSIS DATA SHEET

CLIENT SAMPLE NO.

14

MR08-IS16
2-4-5-09A

Lab Name: EMPIRICAL LABS Contract: CH2MHILL

Lab Code: NA Case No.: NA SAS No.: NA SDG No.: LEJEUNE054

Matrix: (soil/water) SOIL Lab Sample ID: 0901189-14

Sample wt/vol: 5.0 (g/mL) G Lab File ID: 0118914A

Level: (low/med) LOW Date Sampled: 01/21/09 14:30

% Moisture: not dec. 7 Date Analyzed: 01/28/09 02:33

GC Column: RTX-VRX ID: 0.25 (mm) Dilution Factor: 1.0

Soil Extract Volume:_____(uL) Soil Aliquot Volume: _____(uL)

CONCENTRATION UNITS: (ug/L or ug/Kg) UG/KG

CAS NO.	COMPOUND	MDL	RL	CONC	Q
108-88-3	Toluene	0.93	11		U
120-82-1	1,2,4-Trichlorobenzene	0.19	11		U
71-55-6	1,1,1-Trichloroethane	0.97	11		U
79-00-5	1,1,2-Trichloroethane	0.38	11		U
79-01-6	Trichloroethene	0.92	11		U
76-13-1	Trichlorotrifluoroethane	0.60	11		U
75-69-4	Trichlorofluoromethane	1.0	11		U
75-01-4	Vinyl chloride	1.2	11		U
1330-20-7	Xylene(total)	0.76	11		U

NW
4/5/09

FORM 1
VOLATILE ORGANICS ANALYSIS DATA SHEET

CLIENT SAMPLE NO. 15

MR08-SS316-09A

Lab Name: EMPIRICAL LABS Contract: CH2MHILL

Lab Code: NA Case No.: NA SAS No.: NA SDG No.: LEJEUNE054

Matrix: (soil/water) SOIL Lab Sample ID: 0901189-15

Sample wt/vol: 4.9 (g/mL) G Lab File ID: 0118915A

Level: (low/med) LOW Date Sampled: 01/21/09 15:15

% Moisture: not dec. 12 Date Analyzed: 01/28/09 03:04

GC Column: RTX-VRX ID: 0.25 (mm) Dilution Factor: 1.0

Soil Extract Volume:_____(uL) Soil Aliquot Volume: _____(uL)

CONCENTRATION UNITS: (ug/L or ug/Kg) UG/KG

CAS NO.	COMPOUND	MDL	RL	CONC	Q
67-64-1	Acetone	2.3	12		U
71-43-2	Benzene	0.54	12		U
75-27-4	Bromodichloromethane	0.35	12		U
75-25-2	Bromoform	1.2	12		U
74-83-9	Bromomethane	0.83	12		U
78-93-3	2-Butanone	1.6	12		U
75-15-0	Carbon disulfide	1.5	12		U
56-23-5	Carbon tetrachloride	1.0	12		U
108-90-7	Chlorobenzene	0.39	12		U
75-00-3	Chloroethane	1.3	12		U
67-66-3	Chloroform	0.64	12		U
74-87-3	Chloromethane	0.60	12		U
110-82-7	Cyclohexane	0.62	12		U
124-48-1	Dibromochloromethane	0.39	12		U
96-12-8	1,2-Dibromo-3-chloropropane	1.4	5.8		U
106-93-4	1,2-Dibromoethane	0.50	12		U
95-50-1	1,2-Dichlorobenzene	0.43	12		U
541-73-1	1,3-Dichlorobenzene	0.97	12		U
106-46-7	1,4-Dichlorobenzene	0.64	12		U
75-71-8	Dichlorodifluoromethane	1.3	12		U
75-34-3	1,1-Dichloroethane	0.62	12		U
107-06-2	1,2-Dichloroethane	0.53	12		U
75-35-4	1,1-Dichloroethene	1.4	12		U
156-59-2	cis-1,2-Dichloroethene	1.4	12		U
156-60-5	trans-1,2-Dichloroethene	1.3	12		U
78-87-5	1,2-Dichloropropane	0.53	12		U
10061-01-5	cis-1,3-Dichloropropene	0.58	12		U
10061-02-6	trans-1,3-Dichloropropene	0.37	12		U
100-41-4	Ethylbenzene	0.87	12		U
591-78-6	2-Hexanone	2.7	12		U
98-82-8	Isopropylbenzene	1.0	12		U
79-20-9	Methyl acetate	1.8	12		U
75-09-2	Methylene chloride	0.72	12	12u	~~1.6 JB~~ B
108-87-2	Methyl cyclohexane	0.35	12		U
1634-04-4	Methyl tert-butyl ether	0.37	12		U
108-10-1	4-Methyl-2-pentanone	0.67	12		U
100-42-5	Styrene	0.40	12		U
79-34-5	1,1,2,2-Tetrachloroethane	0.50	12		U
127-18-4	Tetrachloroethene	1.1	12		U

FORM I VOA

UW
4/15/09

FORM 1
VOLATILE ORGANICS ANALYSIS DATA SHEET

CLIENT SAMPLE NO. 15

MR08-SS316-09A

Lab Name: EMPIRICAL LABS Contract: CH2MHILL

Lab Code: NA Case No.: NA SAS No.: NA SDG No.: LEJEUNE054

Matrix: (soil/water) SOIL Lab Sample ID: 0901189-15

Sample wt/vol: 4.9 (g/mL) G Lab File ID: 0118915A

Level: (low/med) LOW Date Sampled: 01/21/09 15:15

% Moisture: not dec. 12 Date Analyzed: 01/28/09 03:04

GC Column: RTX-VRX ID: 0.25 (mm) Dilution Factor: 1.0

Soil Extract Volume:_____(uL) Soil Aliquot Volume: _____(uL)

CONCENTRATION UNITS: (ug/L or ug/Kg) UG/KG

CAS NO.	COMPOUND	MDL	RL	CONC	Q
108-88-3	Toluene	1.00	12		U
120-82-1	1,2,4-Trichlorobenzene	0.21	12		U
71-55-6	1,1,1-Trichloroethane	1.0	12		U
79-00-5	1,1,2-Trichloroethane	0.40	12		U
79-01-6	Trichloroethene	0.98	12		U
76-13-1	Trichlorotrifluoroethane	0.64	12		U
75-69-4	Trichlorofluoromethane	1.1	12		U
75-01-4	Vinyl chloride	1.3	12		U
1330-20-7	Xylene(total)	0.81	12		U

MW
4/15/09

FORM 1
VOLATILE ORGANICS ANALYSIS DATA SHEET

CLIENT SAMPLE NO.

MR08-IS31
6-4-5-09A

16

Lab Name: EMPIRICAL LABS Contract: CH2MHILL

Lab Code: NA Case No.: NA SAS No.: NA SDG No.: LEJEUNE054

Matrix: (soil/water) SOIL Lab Sample ID: 0901189-16

Sample wt/vol: 4.9 (g/mL) G Lab File ID: 0118916A

Level: (low/med) LOW Date Sampled: 01/21/09 15:20

% Moisture: not dec. 12 Date Analyzed: 01/28/09 03:35

GC Column: RTX-VRX ID: 0.25 (mm) Dilution Factor: 1.0

Soil Extract Volume:_____(uL) Soil Aliquot Volume: _____(uL)

CONCENTRATION UNITS: (ug/L or ug/Kg) UG/KG

CAS NO.	COMPOUND	MDL	RL	CONC	Q
67-64-1	Acetone	2.3	12	12u ~~9.8~~	~~JB~~ B
71-43-2	Benzene	0.54	12		U
75-27-4	Bromodichloromethane	0.34	12		U
75-25-2	Bromoform	1.2	12		U
74-83-9	Bromomethane	0.83	12		U
78-93-3	2-Butanone	1.6	12		U
75-15-0	Carbon disulfide	1.5	12		U
56-23-5	Carbon tetrachloride	1.0	12		U
108-90-7	Chlorobenzene	0.39	12		U
75-00-3	Chloroethane	1.3	12		U
67-66-3	Chloroform	0.63	12		U
74-87-3	Chloromethane	0.60	12		U
110-82-7	Cyclohexane	0.62	12		U
124-48-1	Dibromochloromethane	0.39	12		U
96-12-8	1,2-Dibromo-3-chloropropane	1.4	5.8		U
106-93-4	1,2-Dibromoethane	0.49	12		U
95-50-1	1,2-Dichlorobenzene	0.42	12		U
541-73-1	1,3-Dichlorobenzene	0.97	12		U
106-46-7	1,4-Dichlorobenzene	0.63	12		U
75-71-8	Dichlorodifluoromethane	1.3	12		U
75-34-3	1,1-Dichloroethane	0.62	12		U
107-06-2	1,2-Dichloroethane	0.53	12		U
75-35-4	1,1-Dichloroethene	1.4	12		U
156-59-2	cis-1,2-Dichloroethene	1.4	12		U
156-60-5	trans-1,2-Dichloroethene	1.3	12		U
78-87-5	1,2-Dichloropropane	0.53	12		U
10061-01-5	cis-1,3-Dichloropropene	0.58	12		U
10061-02-6	trans-1,3-Dichloropropene	0.37	12		U
100-41-4	Ethylbenzene	0.86	12		U
591-78-6	2-Hexanone	2.6	12		U
98-82-8	Isopropylbenzene	1.0	12		U
79-20-9	Methyl acetate	1.8	12		U
75-09-2	Methylene chloride	0.71	12	12u ~~1.6~~	~~JB~~ B
108-87-2	Methyl cyclohexane	0.34	12		U
1634-04-4	Methyl tert-butyl ether	0.37	12		U
108-10-1	4-Methyl-2-pentanone	0.67	12		U
100-42-5	Styrene	0.40	12		U
79-34-5	1,1,2,2-Tetrachloroethane	0.49	12		U
127-18-4	Tetrachloroethene	1.1	12		U

NW
4/5/09

FORM 1
VOLATILE ORGANICS ANALYSIS DATA SHEET

CLIENT SAMPLE NO. 16

MR08-IS31
6-4-5-09A

Lab Name: EMPIRICAL LABS Contract: CH2MHILL

Lab Code: NA Case No.: NA SAS No.: NA SDG No.: LEJEUNE054

Matrix: (soil/water) SOIL Lab Sample ID: 0901189-16

Sample wt/vol: 4.9 (g/mL) G Lab File ID: 0118916A

Level: (low/med) LOW Date Sampled: 01/21/09 15:20

% Moisture: not dec. 12 Date Analyzed: 01/28/09 03:35

GC Column: RTX-VRX ID: 0.25 (mm) Dilution Factor: 1.0

Soil Extract Volume:_____(uL) Soil Aliquot Volume: _____(uL)

CONCENTRATION UNITS: (ug/L or ug/Kg) UG/KG

CAS NO.	COMPOUND	MDL	RL	CONC	Q
108-88-3	Toluene	0.99	12		U
120-82-1	1,2,4-Trichlorobenzene	0.21	12		U
71-55-6	1,1,1-Trichloroethane	1.0	12		U
79-00-5	1,1,2-Trichloroethane	0.40	12		U
79-01-6	Trichloroethene	0.98	12		U
76-13-1	Trichlorotrifluoroethane	0.63	12		U
75-69-4	Trichlorofluoromethane	1.1	12		U
75-01-4	Vinyl chloride	1.3	12		U
1330-20-7	Xylene(total)	0.80	12		U

MW
4/15/09

FORM 1
VOLATILE ORGANICS ANALYSIS DATA SHEET

CLIENT SAMPLE NO. 17

MR08-IS31
5-4-5-09A

Lab Name: EMPIRICAL LABS Contract: CH2MHILL

Lab Code: NA Case No.: NA SAS No.: NA SDG No.: LEJEUNE054

Matrix: (soil/water) SOIL Lab Sample ID: 0901189-17

Sample wt/vol: 5.0 (g/mL) G Lab File ID: 0118917A

Level: (low/med) LOW Date Sampled: 01/21/09 15:30

% Moisture: not dec. 8 Date Analyzed: 01/28/09 04:06

GC Column: RTX-VRX ID: 0.25 (mm) Dilution Factor: 1.0

Soil Extract Volume:_____(uL) Soil Aliquot Volume: _____(uL)

CONCENTRATION UNITS: (ug/L or ug/Kg) UG/KG

CAS NO.	COMPOUND	MDL	RL	CONC	Q	
67-64-1	Acetone	2.2	11	11U	~~5.6~~ JB	BL
71-43-2	Benzene	0.51	11		U	
75-27-4	Bromodichloromethane	0.33	11		U	
75-25-2	Bromoform	1.1	11		U	
74-83-9	Bromomethane	0.78	11		U	
78-93-3	2-Butanone	1.5	11		U	
75-15-0	Carbon disulfide	1.4	11		U	
56-23-5	Carbon tetrachloride	0.96	11		U	
108-90-7	Chlorobenzene	0.37	11		U	
75-00-3	Chloroethane	1.2	11		U	
67-66-3	Chloroform	0.60	11		U	
74-87-3	Chloromethane	0.57	11		U	
110-82-7	Cyclohexane	0.59	11		U	
124-48-1	Dibromochloromethane	0.37	11		U	
96-12-8	1,2-Dibromo-3-chloropropane	1.3	5.4		U	
106-93-4	1,2-Dibromoethane	0.47	11		U	
95-50-1	1,2-Dichlorobenzene	0.40	11		U	
541-73-1	1,3-Dichlorobenzene	0.91	11		U	
106-46-7	1,4-Dichlorobenzene	0.60	11		U	
75-71-8	Dichlorodifluoromethane	1.2	11		U	
75-34-3	1,1-Dichloroethane	0.59	11		U	
107-06-2	1,2-Dichloroethane	0.50	11		U	
75-35-4	1,1-Dichloroethene	1.3	11		U	
156-59-2	cis-1,2-Dichloroethene	1.3	11		U	
156-60-5	trans-1,2-Dichloroethene	1.2	11		U	
78-87-5	1,2-Dichloropropane	0.50	11		U	
10061-01-5	cis-1,3-Dichloropropene	0.54	11		U	
10061-02-6	trans-1,3-Dichloropropene	0.35	11		U	
100-41-4	Ethylbenzene	0.82	11		U	
591-78-6	2-Hexanone	2.5	11		U	
98-82-8	Isopropylbenzene	0.96	11		U	
79-20-9	Methyl acetate	1.7	11		U	
75-09-2	Methylene chloride	0.68	11	11U	~~1.5~~ JB	B
108-87-2	Methyl cyclohexane	0.33	11		U	
1634-04-4	Methyl tert-butyl ether	0.35	11		U	
108-10-1	4-Methyl-2-pentanone	0.63	11		U	
100-42-5	Styrene	0.38	11		U	
79-34-5	1,1,2,2-Tetrachloroethane	0.47	11		U	
127-18-4	Tetrachloroethene	1.0	11		U	

FORM I VOA

NW
4/5/09

FORM 1
VOLATILE ORGANICS ANALYSIS DATA SHEET

CLIENT SAMPLE NO.

MR08-IS31
5-4-5-09A

17

Lab Name: EMPIRICAL LABS Contract: CH2MHILL

Lab Code: NA Case No.: NA SAS No.: NA SDG No.: LEJEUNE054

Matrix: (soil/water) SOIL Lab Sample ID: 0901189-17

Sample wt/vol: 5.0 (g/mL) G Lab File ID: 0118917A

Level: (low/med) LOW Date Sampled: 01/21/09 15:30

% Moisture: not dec. 8 Date Analyzed: 01/28/09 04:06

GC Column: RTX-VRX ID: 0.25 (mm) Dilution Factor: 1.0

Soil Extract Volume:_____(uL) Soil Aliquot Volume: _____(uL)

CONCENTRATION UNITS: (ug/L or ug/Kg) UG/KG

CAS NO.	COMPOUND	MDL	RL	CONC	Q
108-88-3	Toluene	0.94	11		U
120-82-1	1,2,4-Trichlorobenzene	0.20	11		U
71-55-6	1,1,1-Trichloroethane	0.98	11		U
79-00-5	1,1,2-Trichloroethane	0.38	11		U
79-01-6	Trichloroethene	0.92	11		U
76-13-1	Trichlorotrifluoroethane	0.60	11		U
75-69-4	Trichlorofluoromethane	1.0	11		U
75-01-4	Vinyl chloride	1.2	11		U
1330-20-7	Xylene(total)	0.76	11		U

nw
415609

FORM 1
VOLATILE ORGANICS ANALYSIS DATA SHEET

CLIENT SAMPLE NO.

18

MR08-SS315-09A

Lab Name: EMPIRICAL LABS Contract: CH2MHILL

Lab Code: NA Case No.: NA SAS No.: NA SDG No.: LEJEUNE054

Matrix: (soil/water) SOIL Lab Sample ID: 0901189-18

Sample wt/vol: 4.6 (g/mL) G Lab File ID: 0118918B

Level: (low/med) LOW Date Sampled: 01/21/09 15:40

% Moisture: not dec. 19 Date Analyzed: 01/27/09 18:19

GC Column: RTX-VRX ID: 0.25 (mm) Dilution Factor: 1.0

Soil Extract Volume:_____(uL) Soil Aliquot Volume: _____(uL)

CONCENTRATION UNITS: (ug/L or ug/Kg) UG/KG

CAS NO.	COMPOUND	MDL	RL	CONC	Q
67-64-1	Acetone	2.7	14	170	~~B~~ J
71-43-2	Benzene	0.64	14		U
75-27-4	Bromodichloromethane	0.41	14		U
75-25-2	Bromoform	1.4	14		U
74-83-9	Bromomethane	0.98	14		U
78-93-3	2-Butanone	1.9	14		U
75-15-0	Carbon disulfide	1.8	14		U
56-23-5	Carbon tetrachloride	1.2	14		U
108-90-7	Chlorobenzene	0.46	14		U
75-00-3	Chloroethane	1.5	14		U
67-66-3	Chloroform	0.74	14		U
74-87-3	Chloromethane	0.70	14		U
110-82-7	Cyclohexane	0.73	14		U
124-48-1	Dibromochloromethane	0.46	14		U
96-12-8	1,2-Dibromo-3-chloropropane	1.6	6.8		U
106-93-4	1,2-Dibromoethane	0.58	14		U
95-50-1	1,2-Dichlorobenzene	0.50	14		U
541-73-1	1,3-Dichlorobenzene	1.1	14		U
106-46-7	1,4-Dichlorobenzene	0.74	14		U
75-71-8	Dichlorodifluoromethane	1.5	14		U
75-34-3	1,1-Dichloroethane	0.73	14		U
107-06-2	1,2-Dichloroethane	0.62	14		U
75-35-4	1,1-Dichloroethene	1.6	14		U
156-59-2	cis-1,2-Dichloroethene	1.6	14		U
156-60-5	trans-1,2-Dichloroethene	1.5	14		U
78-87-5	1,2-Dichloropropane	0.62	14		U
10061-01-5	cis-1,3-Dichloropropene	0.68	14		U
10061-02-6	trans-1,3-Dichloropropene	0.43	14		U
100-41-4	Ethylbenzene	1.0	14		U
591-78-6	2-Hexanone	3.1	14		U
98-82-8	Isopropylbenzene	1.2	14		U
79-20-9	Methyl acetate	2.2	14		U
75-09-2	Methylene chloride	0.84	14	14u	1.7 ~~JB~~ B
108-87-2	Methyl cyclohexane	0.41	14		U
1634-04-4	Methyl tert-butyl ether	0.43	14		U
108-10-1	4-Methyl-2-pentanone	0.79	14		U
100-42-5	Styrene	0.47	14		U
79-34-5	1,1,2,2-Tetrachloroethane	0.58	14		U
127-18-4	Tetrachloroethene	1.3	14		U

FORM I VOA

NW
4/5/09

FORM 1
VOLATILE ORGANICS ANALYSIS DATA SHEET

CLIENT SAMPLE NO.

18

MR08-SS315-09A

Lab Name: EMPIRICAL LABS Contract: CH2MHILL

Lab Code: NA Case No.: NA SAS No.: NA SDG No.: LEJEUNE054

Matrix: (soil/water) SOIL Lab Sample ID: 0901189-18

Sample wt/vol: 4.6 (g/mL) G Lab File ID: 0118918B

Level: (low/med) LOW Date Sampled: 01/21/09 15:40

% Moisture: not dec. 19 Date Analyzed: 01/27/09 18:19

GC Column: RTX-VRX ID: 0.25 (mm) Dilution Factor: 1.0

Soil Extract Volume:_____(uL) Soil Aliquot Volume: _____(uL)

CONCENTRATION UNITS: (ug/L or ug/Kg) UG/KG

CAS NO.	COMPOUND	MDL	RL	CONC	Q
108-88-3	Toluene	1.2	14		U
120-82-1	1,2,4-Trichlorobenzene	0.24	14		U
71-55-6	1,1,1-Trichloroethane	1.2	14		U
79-00-5	1,1,2-Trichloroethane	0.47	14		U
79-01-6	Trichloroethene	1.2	14		U
76-13-1	Trichlorotrifluoroethane	0.74	14		U
75-69-4	Trichlorofluoromethane	1.3	14		U
75-01-4	Vinyl chloride	1.5	14		U
1330-20-7	Xylene(total)	0.95	14		U

WW
4/15/09

FORM 1
VOLATILE ORGANICS ANALYSIS DATA SHEET

CLIENT SAMPLE NO.

MR08-IS31
4-4-5-09A

19

Lab Name: EMPIRICAL LABS Contract: CH2MHILL

Lab Code: NA Case No.: NA SAS No.: NA SDG No.: LEJEUNE054

Matrix: (soil/water) SOIL Lab Sample ID: 0901189-19

Sample wt/vol: 5.0 (g/mL) G Lab File ID: 0118919A

Level: (low/med) LOW Date Sampled: 01/21/09 15:40

% Moisture: not dec. 6 Date Analyzed: 01/28/09 04:36

GC Column: RTX-VRX ID: 0.25 (mm) Dilution Factor: 1.0

Soil Extract Volume:_____(uL) Soil Aliquot Volume: _____(uL)

CONCENTRATION UNITS: (ug/L or ug/Kg) UG/KG

CAS NO.	COMPOUND	MDL	RL	CONC	Q	
67-64-1	Acetone	2.1	11	11u	~~6.3 JB~~	Bl
71-43-2	Benzene	0.50	11		U	
75-27-4	Bromodichloromethane	0.32	11		U	
75-25-2	Bromoform	1.1	11		U	
74-83-9	Bromomethane	0.77	11		U	
78-93-3	2-Butanone	1.5	11		U	
75-15-0	Carbon disulfide	1.4	11		U	
56-23-5	Carbon tetrachloride	0.94	11		U	
108-90-7	Chlorobenzene	0.36	11		U	
75-00-3	Chloroethane	1.2	11		U	
67-66-3	Chloroform	0.58	11		U	
74-87-3	Chloromethane	0.55	11		U	
110-82-7	Cyclohexane	0.57	11		U	
124-48-1	Dibromochloromethane	0.36	11		U	
96-12-8	1,2-Dibromo-3-chloropropane	1.3	5.3		U	
106-93-4	1,2-Dibromoethane	0.46	11		U	
95-50-1	1,2-Dichlorobenzene	0.39	11		U	
541-73-1	1,3-Dichlorobenzene	0.89	11		U	
106-46-7	1,4-Dichlorobenzene	0.58	11		U	
75-71-8	Dichlorodifluoromethane	1.2	11		U	
75-34-3	1,1-Dichloroethane	0.57	11		U	
107-06-2	1,2-Dichloroethane	0.49	11		U	
75-35-4	1,1-Dichloroethene	1.3	11		U	
156-59-2	cis-1,2-Dichloroethene	1.3	11		U	
156-60-5	trans-1,2-Dichloroethene	1.2	11		U	
78-87-5	1,2-Dichloropropane	0.49	11		U	
10061-01-5	cis-1,3-Dichloropropene	0.53	11		U	
10061-02-6	trans-1,3-Dichloropropene	0.34	11		U	
100-41-4	Ethylbenzene	0.80	11		U	
591-78-6	2-Hexanone	2.4	11		U	
98-82-8	Isopropylbenzene	0.94	11		U	
79-20-9	Methyl acetate	1.7	11		U	
75-09-2	Methylene chloride	0.66	11	11u	~~1.5 JB~~	Bl
108-87-2	Methyl cyclohexane	0.32	11		U	
1634-04-4	Methyl tert-butyl ether	0.34	11		U	
108-10-1	4-Methyl-2-pentanone	0.62	11		U	
100-42-5	Styrene	0.37	11		U	
79-34-5	1,1,2,2-Tetrachloroethane	0.46	11		U	
127-18-4	Tetrachloroethene	1.0	11		U	

FORM I VOA

NW
4/15/09

FORM 1
VOLATILE ORGANICS ANALYSIS DATA SHEET

CLIENT SAMPLE NO.

MR08-IS31
4-4-5-09A

19

Lab Name: EMPIRICAL LABS Contract: CH2MHILL

Lab Code: NA Case No.: NA SAS No.: NA SDG No.: LEJEUNE054

Matrix: (soil/water) SOIL Lab Sample ID: 0901189-19

Sample wt/vol: 5.0 (g/mL) G Lab File ID: 0118919A

Level: (low/med) LOW Date Sampled: 01/21/09 15:40

% Moisture: not dec. 6 Date Analyzed: 01/28/09 04:36

GC Column: RTX-VRX ID: 0.25 (mm) Dilution Factor: 1.0

Soil Extract Volume:_____(uL) Soil Aliquot Volume: _____(uL)

CONCENTRATION UNITS: (ug/L or ug/Kg) UG/KG

CAS NO.	COMPOUND	MDL	RL	CONC	Q
108-88-3	Toluene	0.92	11		U
120-82-1	1,2,4-Trichlorobenzene	0.19	11		U
71-55-6	1,1,1-Trichloroethane	0.96	11		U
79-00-5	1,1,2-Trichloroethane	0.37	11		U
79-01-6	Trichloroethene	0.90	11		U
76-13-1	Trichlorotrifluoroethane	0.58	11		U
75-69-4	Trichlorofluoromethane	1.0	11		U
75-01-4	Vinyl chloride	1.2	11		U
1330-20-7	Xylene(total)	0.74	11		U

NW
4/15/09

FORM 1
VOLATILE ORGANICS ANALYSIS DATA SHEET

CLIENT SAMPLE NO. 20

MR08-EB012109

Lab Name: EMPIRICAL LABS Contract: CH2MHILL

Lab Code: NA Case No.: NA SAS No.: NA SDG No.: LEJEUNE054

Matrix: (soil/water) WATER Lab Sample ID: 0901189-20

Sample wt/vol: 5.000 (g/mL) ML Lab File ID: 0118920

Level: (low/med) LOW Date Sampled: 01/21/09 08:00

% Moisture: not dec. _____ Date Analyzed: 01/30/09 21:27

GC Column: RTX-VRX ID: 0.25 (mm) Dilution Factor: 1.0

Soil Extract Volume:_____(uL) Soil Aliquot Volume: _____(uL)

CONCENTRATION UNITS: (ug/L or ug/Kg) UG/L

CAS NO.	COMPOUND	MDL	RL	CONC	Q
67-64-1	Acetone	0.84	2.5	1.6	J
71-43-2	Benzene	0.11	1.0		U
75-27-4	Bromodichloromethane	0.10	1.0		U
75-25-2	Bromoform	0.10	1.0		U
74-83-9	Bromomethane	0.32	1.0		~~U~~ UJ CO
78-93-3	2-Butanone	1.0	3.0		U
75-15-0	Carbon disulfide	0.13	1.0		U
56-23-5	Carbon tetrachloride	0.15	1.0		U
108-90-7	Chlorobenzene	0.10	1.0		U
75-00-3	Chloroethane	0.18	1.0		U
67-66-3	Chloroform	0.11	1.0		U
74-87-3	Chloromethane	0.29	1.0		U
110-82-7	Cyclohexane	0.20	1.0		U
124-48-1	Dibromochloromethane	0.10	1.0		U
96-12-8	1,2-Dibromo-3-chloropropane	0.11	1.0		U
106-93-4	1,2-Dibromoethane	0.10	1.0		U
95-50-1	1,2-Dichlorobenzene	0.10	1.0		U
541-73-1	1,3-Dichlorobenzene	0.13	1.0		U
106-46-7	1,4-Dichlorobenzene	0.10	1.0		U
75-71-8	Dichlorodifluoromethane	0.22	1.0		U
75-34-3	1,1-Dichloroethane	0.12	1.0		U
107-06-2	1,2-Dichloroethane	0.10	1.0		U
75-35-4	1,1-Dichloroethene	0.15	1.0		U
156-59-2	cis-1,2-Dichloroethene	0.13	1.0		U
156-60-5	trans-1,2-Dichloroethene	0.13	1.0		U
78-87-5	1,2-Dichloropropane	0.10	1.0		U
10061-01-5	cis-1,3-Dichloropropene	0.11	1.0		U
10061-02-6	trans-1,3-Dichloropropene	0.10	1.0		U
100-41-4	Ethylbenzene	0.13	1.0		U
591-78-6	2-Hexanone	0.30	2.0		U
98-82-8	Isopropylbenzene	0.15	1.0		U
79-20-9	Methyl acetate	0.30	1.0		U
75-09-2	Methylene chloride	0.14	1.0	1.0U ~~0.62~~	~~JB~~ B
108-87-2	Methyl cyclohexane	0.17	1.0		U
1634-04-4	Methyl tert-butyl ether	0.10	1.0		U
108-10-1	4-Methyl-2-pentanone	0.29	1.0		U
100-42-5	Styrene	0.10	1.0		U
79-34-5	1,1,2,2-Tetrachloroethane	0.10	1.0		U
127-18-4	Tetrachloroethene	0.15	1.0		U

uw
41569

FORM 1
VOLATILE ORGANICS ANALYSIS DATA SHEET

CLIENT SAMPLE NO.

20

MR08-EB012109

Lab Name: EMPIRICAL LABS Contract: CH2MHILL

Lab Code: NA Case No.: NA SAS No.: NA SDG No.: LEJEUNE054

Matrix: (soil/water) WATER Lab Sample ID: 0901189-20

Sample wt/vol: 5.000 (g/mL) ML Lab File ID: 0118920

Level: (low/med) LOW Date Sampled: 01/21/09 08:00

% Moisture: not dec. _____ Date Analyzed: 01/30/09 21:27

GC Column: RTX-VRX ID: 0.25 (mm) Dilution Factor: 1.0

Soil Extract Volume:_____(uL) Soil Aliquot Volume: _____(uL)

CONCENTRATION UNITS: (ug/L or ug/Kg) UG/L

CAS NO.	COMPOUND	MDL	RL	CONC	Q
108-88-3	Toluene	0.10	1.0	0.36	J
120-82-1	1,2,4-Trichlorobenzene	0.10	1.0		U
71-55-6	1,1,1-Trichloroethane	0.17	1.0		U
79-00-5	1,1,2-Trichloroethane	0.10	1.0		U
79-01-6	Trichloroethene	0.13	1.0		U
76-13-1	Trichlorotrifluoroethane	0.18	1.0		U
75-69-4	Trichlorofluoromethane	0.17	1.0		U
75-01-4	Vinyl chloride	0.18	1.0		U
1330-20-7	Xylene(total)	0.22	1.0		U

LW
4/5/09

FORM 1
VOLATILE ORGANICS ANALYSIS DATA SHEET

CLIENT SAMPLE NO.

21

MR08-EB012209

Lab Name: EMPIRICAL LABS Contract: CH2MHILL

Lab Code: NA Case No.: NA SAS No.: NA SDG No.: LEJEUNE054

Matrix: (soil/water) WATER Lab Sample ID: 0901189-21

Sample wt/vol: 5.000 (g/mL) ML Lab File ID: 0118921

Level: (low/med) LOW Date Sampled: 01/22/09 07:50

% Moisture: not dec. _____ Date Analyzed: 01/30/09 21:57

GC Column: RTX-VRX ID: 0.25 (mm) Dilution Factor: 1.0

Soil Extract Volume:_____(uL) Soil Aliquot Volume: _____(uL)

CONCENTRATION UNITS: (ug/L or ug/Kg) UG/L

CAS NO.	COMPOUND	MDL	RL	CONC	Q
67-64-1	Acetone	0.84	2.5	1.7	J
71-43-2	Benzene	0.11	1.0		U
75-27-4	Bromodichloromethane	0.10	1.0		U
75-25-2	Bromoform	0.10	1.0		U
74-83-9	Bromomethane	0.32	1.0		~~U~~ UJ CU
78-93-3	2-Butanone	1.0	3.0		U
75-15-0	Carbon disulfide	0.13	1.0		U
56-23-5	Carbon tetrachloride	0.15	1.0		U
108-90-7	Chlorobenzene	0.10	1.0		U
75-00-3	Chloroethane	0.18	1.0		U
67-66-3	Chloroform	0.11	1.0		U
74-87-3	Chloromethane	0.29	1.0		U
110-82-7	Cyclohexane	0.20	1.0		U
124-48-1	Dibromochloromethane	0.10	1.0		U
96-12-8	1,2-Dibromo-3-chloropropane	0.11	1.0		U
106-93-4	1,2-Dibromoethane	0.10	1.0		U
95-50-1	1,2-Dichlorobenzene	0.10	1.0		U
541-73-1	1,3-Dichlorobenzene	0.13	1.0		U
106-46-7	1,4-Dichlorobenzene	0.10	1.0		U
75-71-8	Dichlorodifluoromethane	0.22	1.0		U
75-34-3	1,1-Dichloroethane	0.12	1.0		U
107-06-2	1,2-Dichloroethane	0.10	1.0		U
75-35-4	1,1-Dichloroethene	0.15	1.0		U
156-59-2	cis-1,2-Dichloroethene	0.13	1.0		U
156-60-5	trans-1,2-Dichloroethene	0.13	1.0		U
78-87-5	1,2-Dichloropropane	0.10	1.0		U
10061-01-5	cis-1,3-Dichloropropene	0.11	1.0		U
10061-02-6	trans-1,3-Dichloropropene	0.10	1.0		U
100-41-4	Ethylbenzene	0.13	1.0		U
591-78-6	2-Hexanone	0.30	2.0		U
98-82-8	Isopropylbenzene	0.15	1.0		U
79-20-9	Methyl acetate	0.30	1.0		U
75-09-2	Methylene chloride	0.14	1.0	1.04 ~~0.64~~	~~JB~~ B
108-87-2	Methyl cyclohexane	0.17	1.0		U
1634-04-4	Methyl tert-butyl ether	0.10	1.0		U
108-10-1	4-Methyl-2-pentanone	0.29	1.0		U
100-42-5	Styrene	0.10	1.0		U
79-34-5	1,1,2,2-Tetrachloroethane	0.10	1.0		U
127-18-4	Tetrachloroethene	0.15	1.0		U

2W
4/5/09

FORM 1
VOLATILE ORGANICS ANALYSIS DATA SHEET

CLIENT SAMPLE NO.

21

MR08-EB012209

Lab Name: EMPIRICAL LABS Contract: CH2MHILL

Lab Code: NA Case No.: NA SAS No.: NA SDG No.: LEJEUNE054

Matrix: (soil/water) WATER Lab Sample ID: 0901189-21

Sample wt/vol: 5.000 (g/mL) ML Lab File ID: 0118921

Level: (low/med) LOW Date Sampled: 01/22/09 07:50

% Moisture: not dec. _____ Date Analyzed: 01/30/09 21:57

GC Column: RTX-VRX ID: 0.25 (mm) Dilution Factor: 1.0

Soil Extract Volume:_____(uL) Soil Aliquot Volume: _____(uL)

CONCENTRATION UNITS: (ug/L or ug/Kg) UG/L

CAS NO.	COMPOUND	MDL	RL	CONC	Q
108-88-3	Toluene	0.10	1.0	0.37	J
120-82-1	1,2,4-Trichlorobenzene	0.10	1.0		U
71-55-6	1,1,1-Trichloroethane	0.17	1.0		U
79-00-5	1,1,2-Trichloroethane	0.10	1.0		U
79-01-6	Trichloroethene	0.13	1.0		U
76-13-1	Trichlorotrifluoroethane	0.18	1.0		U
75-69-4	Trichlorofluoromethane	0.17	1.0		U
75-01-4	Vinyl chloride	0.18	1.0		U
1330-20-7	Xylene(total)	0.22	1.0		U

NW
4/5/09

FORM 1
VOLATILE ORGANICS ANALYSIS DATA SHEET

CLIENT SAMPLE NO.

MR08-SS314-09A

22

Lab Name: EMPIRICAL LABS Contract: CH2MHILL

Lab Code: NA Case No.: NA SAS No.: NA SDG No.: LEJEUNE054

Matrix: (soil/water) SOIL Lab Sample ID: 0901189-22

Sample wt/vol: 4.0 (g/mL) G Lab File ID: 0118922A

Level: (low/med) LOW Date Sampled: 01/22/09 08:15

% Moisture: not dec. 18 Date Analyzed: 01/28/09 05:07

GC Column: RTX-VRX ID: 0.25 (mm) Dilution Factor: 1.0

Soil Extract Volume:_____(uL) Soil Aliquot Volume: _____(uL)

CONCENTRATION UNITS: (ug/L or ug/Kg) UG/KG

CAS NO.	COMPOUND	MDL	RL	CONC	Q
67-64-1	Acetone	3.0	15	560	~~B~~
71-43-2	Benzene	0.71	15		U
75-27-4	Bromodichloromethane	0.45	15		U
75-25-2	Bromoform	1.5	15		U
74-83-9	Bromomethane	1.1	15		U
78-93-3	2-Butanone	2.1	15		U
75-15-0	Carbon disulfide	2.0	15		U
56-23-5	Carbon tetrachloride	1.3	15		U
108-90-7	Chlorobenzene	0.51	15		U
75-00-3	Chloroethane	1.7	15		U
67-66-3	Chloroform	0.83	15		U
74-87-3	Chloromethane	0.78	15		U
110-82-7	Cyclohexane	0.82	15		U
124-48-1	Dibromochloromethane	0.51	15		U
96-12-8	1,2-Dibromo-3-chloropropane	1.8	7.6		U
106-93-4	1,2-Dibromoethane	0.65	15		U
95-50-1	1,2-Dichlorobenzene	0.56	15		U
541-73-1	1,3-Dichlorobenzene	1.3	15		U
106-46-7	1,4-Dichlorobenzene	0.83	15		U
75-71-8	Dichlorodifluoromethane	1.7	15		U
75-34-3	1,1-Dichloroethane	0.82	15		U
107-06-2	1,2-Dichloroethane	0.70	15		U
75-35-4	1,1-Dichloroethene	1.8	15		U
156-59-2	cis-1,2-Dichloroethene	1.8	15		U
156-60-5	trans-1,2-Dichloroethene	1.7	15		U
78-87-5	1,2-Dichloropropane	0.70	15		U
10061-01-5	cis-1,3-Dichloropropene	0.76	15		U
10061-02-6	trans-1,3-Dichloropropene	0.48	15		U
100-41-4	Ethylbenzene	1.1	15		U
591-78-6	2-Hexanone	3.5	15		U
98-82-8	Isopropylbenzene	1.3	15		U
79-20-9	Methyl acetate	2.4	15		U
75-09-2	Methylene chloride	0.94	15	15u	~~2.4 JB~~ Bu
108-87-2	Methyl cyclohexane	0.45	15		U
1634-04-4	Methyl tert-butyl ether	0.48	15		U
108-10-1	4-Methyl-2-pentanone	0.88	15		U
100-42-5	Styrene	0.53	15		U
79-34-5	1,1,2,2-Tetrachloroethane	0.65	15		U
127-18-4	Tetrachloroethene	1.5	15		U

FORM I VOA

LW
4/5/09

FORM 1
VOLATILE ORGANICS ANALYSIS DATA SHEET

CLIENT SAMPLE NO. 22

MR08-SS314-09A

Lab Name: EMPIRICAL LABS Contract: CH2MHILL

Lab Code: NA Case No.: NA SAS No.: NA SDG No.: LEJEUNE054

Matrix: (soil/water) SOIL Lab Sample ID: 0901189-22

Sample wt/vol: 4.0 (g/mL) G Lab File ID: 0118922A

Level: (low/med) LOW Date Sampled: 01/22/09 08:15

% Moisture: not dec. 18 Date Analyzed: 01/28/09 05:07

GC Column: RTX-VRX ID: 0.25 (mm) Dilution Factor: 1.0

Soil Extract Volume:_____(uL) Soil Aliquot Volume: _____(uL)

CONCENTRATION UNITS: (ug/L or ug/Kg) UG/KG

CAS NO.	COMPOUND	MDL	RL	CONC	Q
108-88-3	Toluene	1.3	15		U
120-82-1	1,2,4-Trichlorobenzene	0.27	15		U
71-55-6	1,1,1-Trichloroethane	1.4	15		U
79-00-5	1,1,2-Trichloroethane	0.53	15		U
79-01-6	Trichloroethene	1.3	15		U
76-13-1	Trichlorotrifluoroethane	0.83	15		U
75-69-4	Trichlorofluoromethane	1.4	15		U
75-01-4	Vinyl chloride	1.7	15		U
1330-20-7	Xylene(total)	1.0	15		U

UW
4/5/09

FORM 1
VOLATILE ORGANICS ANALYSIS DATA SHEET

CLIENT SAMPLE NO. 23

MR08-IS33
7-4.5-5.5-09A

Lab Name: EMPIRICAL LABS Contract: CH2MHILL

Lab Code: NA Case No.: NA SAS No.: NA SDG No.: LEJEUNE054

Matrix: (soil/water) SOIL Lab Sample ID: 0901189-23

Sample wt/vol: 5.0 (g/mL) G Lab File ID: 0118923A

Level: (low/med) LOW Date Sampled: 01/22/09 08:45

% Moisture: not dec. 8 Date Analyzed: 01/28/09 05:38

GC Column: RTX-VRX ID: 0.25 (mm) Dilution Factor: 1.0

Soil Extract Volume:_____(uL) Soil Aliquot Volume: _____(uL)

CONCENTRATION UNITS: (ug/L or ug/Kg) UG/KG

CAS NO.	COMPOUND	MDL	RL	CONC	Q	
67-64-1	Acetone	2.2	11	11u	~~8.4~~ ~~JB~~	BL
71-43-2	Benzene	0.51	11		U	
75-27-4	Bromodichloromethane	0.32	11		U	
75-25-2	Bromoform	1.1	11		U	
74-83-9	Bromomethane	0.78	11		U	
78-93-3	2-Butanone	1.5	11		U	
75-15-0	Carbon disulfide	1.4	11		U	
56-23-5	Carbon tetrachloride	0.95	11		U	
108-90-7	Chlorobenzene	0.37	11		U	
75-00-3	Chloroethane	1.2	11		U	
67-66-3	Chloroform	0.60	11		U	
74-87-3	Chloromethane	0.56	11		U	
110-82-7	Cyclohexane	0.58	11		U	
124-48-1	Dibromochloromethane	0.37	11		U	
96-12-8	1,2-Dibromo-3-chloropropane	1.3	5.4		U	
106-93-4	1,2-Dibromoethane	0.47	11		U	
95-50-1	1,2-Dichlorobenzene	0.40	11		U	
541-73-1	1,3-Dichlorobenzene	0.91	11		U	
106-46-7	1,4-Dichlorobenzene	0.60	11		U	
75-71-8	Dichlorodifluoromethane	1.2	11		U	
75-34-3	1,1-Dichloroethane	0.58	11		U	
107-06-2	1,2-Dichloroethane	0.50	11		U	
75-35-4	1,1-Dichloroethene	1.3	11		U	
156-59-2	cis-1,2-Dichloroethene	1.3	11		U	
156-60-5	trans-1,2-Dichloroethene	1.2	11		U	
78-87-5	1,2-Dichloropropane	0.50	11		U	
10061-01-5	cis-1,3-Dichloropropene	0.54	11		U	
10061-02-6	trans-1,3-Dichloropropene	0.35	11		U	
100-41-4	Ethylbenzene	0.81	11		U	
591-78-6	2-Hexanone	2.5	11		U	
98-82-8	Isopropylbenzene	0.95	11		U	
79-20-9	Methyl acetate	1.7	11		U	
75-09-2	Methylene chloride	0.67	11	11u	~~1.6~~ ~~JB~~	B
108-87-2	Methyl cyclohexane	0.32	11		U	
1634-04-4	Methyl tert-butyl ether	0.35	11		U	
108-10-1	4-Methyl-2-pentanone	0.63	11		U	
100-42-5	Styrene	0.38	11		U	
79-34-5	1,1,2,2-Tetrachloroethane	0.47	11		U	
127-18-4	Tetrachloroethene	1.0	11		U	

FORM I VOA

LW
4/5/09

FORM 1
VOLATILE ORGANICS ANALYSIS DATA SHEET

CLIENT SAMPLE NO.

23

MR08-IS33
7-4.5-5.5-09A

Lab Name: EMPIRICAL LABS Contract: CH2MHILL

Lab Code: NA Case No.: NA SAS No.: NA SDG No.: LEJEUNE054

Matrix: (soil/water) SOIL Lab Sample ID: 0901189-23

Sample wt/vol: 5.0 (g/mL) G Lab File ID: 0118923A

Level: (low/med) LOW Date Sampled: 01/22/09 08:45

% Moisture: not dec. 8 Date Analyzed: 01/28/09 05:38

GC Column: RTX-VRX ID: 0.25 (mm) Dilution Factor: 1.0

Soil Extract Volume:_____(uL) Soil Aliquot Volume: _____(uL)

CONCENTRATION UNITS: (ug/L or ug/Kg) UG/KG

CAS NO.	COMPOUND	MDL	RL	CONC	Q
108-88-3	Toluene	0.93	11		U
120-82-1	1,2,4-Trichlorobenzene	0.20	11		U
71-55-6	1,1,1-Trichloroethane	0.98	11		U
79-00-5	1,1,2-Trichloroethane	0.38	11		U
79-01-6	Trichloroethene	0.92	11		U
76-13-1	Trichlorotrifluoroethane	0.60	11		U
75-69-4	Trichlorofluoromethane	1.0	11		U
75-01-4	Vinyl chloride	1.2	11		U
1330-20-7	Xylene(total)	0.76	11		U

MW
4/5/09

FORM 1
VOLATILE ORGANICS ANALYSIS DATA SHEET

CLIENT SAMPLE NO. 24

MR08-SS337-09A

Lab Name: EMPIRICAL LABS Contract: CH2MHILL

Lab Code: NA Case No.: NA SAS No.: NA SDG No.: LEJEUNE054

Matrix: (soil/water) SOIL Lab Sample ID: 0901189-24

Sample wt/vol: 4.1 (g/mL) G Lab File ID: 0118924A

Level: (low/med) LOW Date Sampled: 01/22/09 08:50

% Moisture: not dec. 21 Date Analyzed: 01/28/09 06:09

GC Column: RTX-VRX ID: 0.25 (mm) Dilution Factor: 1.0

Soil Extract Volume:_____(uL) Soil Aliquot Volume: _____(uL)

CONCENTRATION UNITS: (ug/L or ug/Kg) UG/KG

CAS NO.	COMPOUND	MDL	RL	CONC	Q
67-64-1	Acetone	3.1	15	620	~~BE~~ J LF
71-43-2	Benzene	0.72	15		U
75-27-4	Bromodichloromethane	0.46	15		U
75-25-2	Bromoform	1.5	15		U
74-83-9	Bromomethane	1.1	15		U
78-93-3	2-Butanone	2.2	15	37	
75-15-0	Carbon disulfide	2.0	15		U
56-23-5	Carbon tetrachloride	1.4	15		U
108-90-7	Chlorobenzene	0.52	15		U
75-00-3	Chloroethane	1.7	15		U
67-66-3	Chloroform	0.84	15		U
74-87-3	Chloromethane	0.80	15		U
110-82-7	Cyclohexane	0.83	15		U
124-48-1	Dibromochloromethane	0.52	15		U
96-12-8	1,2-Dibromo-3-chloropropane	1.8	7.7		U
106-93-4	1,2-Dibromoethane	0.66	15		U
95-50-1	1,2-Dichlorobenzene	0.57	15		U
541-73-1	1,3-Dichlorobenzene	1.3	15		U
106-46-7	1,4-Dichlorobenzene	0.84	15		U
75-71-8	Dichlorodifluoromethane	1.7	15		U
75-34-3	1,1-Dichloroethane	0.83	15		U
107-06-2	1,2-Dichloroethane	0.71	15		U
75-35-4	1,1-Dichloroethene	1.8	15		U
156-59-2	cis-1,2-Dichloroethene	1.8	15		U
156-60-5	trans-1,2-Dichloroethene	1.7	15		U
78-87-5	1,2-Dichloropropane	0.71	15		U
10061-01-5	cis-1,3-Dichloropropene	0.77	15		U
10061-02-6	trans-1,3-Dichloropropene	0.49	15		U
100-41-4	Ethylbenzene	1.2	15		U
591-78-6	2-Hexanone	3.5	15		U
98-82-8	Isopropylbenzene	1.4	15		U
79-20-9	Methyl acetate	2.4	15		U
75-09-2	Methylene chloride	0.95	15	154	~~3.5 JB~~ B
108-87-2	Methyl cyclohexane	0.46	15		U
1634-04-4	Methyl tert-butyl ether	0.49	15		U
108-10-1	4-Methyl-2-pentanone	0.89	15		U
100-42-5	Styrene	0.54	15		U
79-34-5	1,1,2,2-Tetrachloroethane	0.66	15		U
127-18-4	Tetrachloroethene	1.5	15		U

FORM I VOA

MW
4/5/09

FORM 1
VOLATILE ORGANICS ANALYSIS DATA SHEET

CLIENT SAMPLE NO.

24

MR08-SS337-09A

Lab Name: EMPIRICAL LABS Contract: CH2MHILL

Lab Code: NA Case No.: NA SAS No.: NA SDG No.: LEJEUNE054

Matrix: (soil/water) SOIL Lab Sample ID: 0901189-24

Sample wt/vol: 4.1 (g/mL) G Lab File ID: 0118924A

Level: (low/med) LOW Date Sampled: 01/22/09 08:50

% Moisture: not dec. 21 Date Analyzed: 01/28/09 06:09

GC Column: RTX-VRX ID: 0.25 (mm) Dilution Factor: 1.0

Soil Extract Volume:_____(uL) Soil Aliquot Volume: _____(uL)

CONCENTRATION UNITS: (ug/L or ug/Kg) UG/KG

CAS NO.	COMPOUND	MDL	RL	CONC	Q
108-88-3	Toluene	1.3	15	2.0	~~J~~
120-82-1	1,2,4-Trichlorobenzene	0.28	15		U
71-55-6	1,1,1-Trichloroethane	1.4	15		U
79-00-5	1,1,2-Trichloroethane	0.54	15		U
79-01-6	Trichloroethene	1.3	15		U
76-13-1	Trichlorotrifluoroethane	0.84	15		U
75-69-4	Trichlorofluoromethane	1.4	15		U
75-01-4	Vinyl chloride	1.7	15		U
1330-20-7	Xylene(total)	1.1	15		U

JW
4/5/09

FORM 1
VOLATILE ORGANICS ANALYSIS DATA SHEET

CLIENT SAMPLE NO. 25

MR08-SS336-09A

Lab Name: EMPIRICAL LABS Contract: CH2MHILL

Lab Code: NA Case No.: NA SAS No.: NA SDG No.: LEJEUNE054

Matrix: (soil/water) SOIL Lab Sample ID: 0901189-25

Sample wt/vol: 3.2 (g/mL) G Lab File ID: 0118925A

Level: (low/med) LOW Date Sampled: 01/22/09 09:05

% Moisture: not dec. 11 Date Analyzed: 01/28/09 06:40

GC Column: RTX-VRX ID: 0.25 (mm) Dilution Factor: 1.0

Soil Extract Volume:_____(uL) Soil Aliquot Volume: _____(uL)

CONCENTRATION UNITS: (ug/L or ug/Kg) UG/KG

CAS NO.	COMPOUND	MDL	RL	CONC	Q
67-64-1	Acetone	3.6	18	720 ~~720~~ ~~BE~~	J LR
71-43-2	Benzene	0.84	18		U
75-27-4	Bromodichloromethane	0.54	18		U
75-25-2	Bromoform	1.8	18		U
74-83-9	Bromomethane	1.3	18		U
78-93-3	2-Butanone	2.5	18		U
75-15-0	Carbon disulfide	2.3	18		U
56-23-5	Carbon tetrachloride	1.6	18		U
108-90-7	Chlorobenzene	0.61	18		U
75-00-3	Chloroethane	2.0	18		U
67-66-3	Chloroform	0.98	18		U
74-87-3	Chloromethane	0.93	18		U
110-82-7	Cyclohexane	0.96	18		U
124-48-1	Dibromochloromethane	0.61	18		U
96-12-8	1,2-Dibromo-3-chloropropane	2.1	8.9		U
106-93-4	1,2-Dibromoethane	0.77	18		U
95-50-1	1,2-Dichlorobenzene	0.66	18		U
541-73-1	1,3-Dichlorobenzene	1.5	18		U
106-46-7	1,4-Dichlorobenzene	0.98	18		U
75-71-8	Dichlorodifluoromethane	2.0	18		U
75-34-3	1,1-Dichloroethane	0.96	18		U
107-06-2	1,2-Dichloroethane	0.82	18		U
75-35-4	1,1-Dichloroethene	2.1	18		U
156-59-2	cis-1,2-Dichloroethene	2.1	18		U
156-60-5	trans-1,2-Dichloroethene	2.0	18		U
78-87-5	1,2-Dichloropropane	0.82	18		U
10061-01-5	cis-1,3-Dichloropropene	0.89	18		U
10061-02-6	trans-1,3-Dichloropropene	0.57	18		U
100-41-4	Ethylbenzene	1.3	18		U
591-78-6	2-Hexanone	4.1	18		U
98-82-8	Isopropylbenzene	1.6	18		U
79-20-9	Methyl acetate	2.8	18		U
75-09-2	Methylene chloride	1.1	18	184 ~~3.0~~ ~~JB~~	B
108-87-2	Methyl cyclohexane	0.54	18		U
1634-04-4	Methyl tert-butyl ether	0.57	18		U
108-10-1	4-Methyl-2-pentanone	1.0	18		U
100-42-5	Styrene	0.62	18		U
79-34-5	1,1,2,2-Tetrachloroethane	0.77	18		U
127-18-4	Tetrachloroethene	1.7	18		U

LW 4/5/09

FORM 1
VOLATILE ORGANICS ANALYSIS DATA SHEET

CLIENT SAMPLE NO. 25

MR08-SS336-09A

Lab Name: EMPIRICAL LABS Contract: CH2MHILL

Lab Code: NA Case No.: NA SAS No.: NA SDG No.: LEJEUNE054

Matrix: (soil/water) SOIL Lab Sample ID: 0901189-25

Sample wt/vol: 3.2 (g/mL) G Lab File ID: 0118925A

Level: (low/med) LOW Date Sampled: 01/22/09 09:05

% Moisture: not dec. 11 Date Analyzed: 01/28/09 06:40

GC Column: RTX-VRX ID: 0.25 (mm) Dilution Factor: 1.0

Soil Extract Volume:_____(uL) Soil Aliquot Volume: _____(uL)

CONCENTRATION UNITS: (ug/L or ug/Kg) UG/KG

CAS NO.	COMPOUND	MDL	RL	CONC	Q
108-88-3	Toluene	1.5	18	3.0	J
120-82-1	1,2,4-Trichlorobenzene	0.32	18		U
71-55-6	1,1,1-Trichloroethane	1.6	18		U
79-00-5	1,1,2-Trichloroethane	0.62	18		U
79-01-6	Trichloroethene	1.5	18		U
76-13-1	Trichlorotrifluoroethane	0.98	18		U
75-69-4	Trichlorofluoromethane	1.7	18		U
75-01-4	Vinyl chloride	2.0	18		U
1330-20-7	Xylene(total)	1.2	18		U

NW
4/5/09

FORM 1
VOLATILE ORGANICS ANALYSIS DATA SHEET

CLIENT SAMPLE NO. 26

MR08-IS33
6-4-5-09A

Lab Name: EMPIRICAL LABS Contract: CH2MHILL

Lab Code: NA Case No.: NA SAS No.: NA SDG No.: LEJEUNE054

Matrix: (soil/water) SOIL Lab Sample ID: 0901189-26

Sample wt/vol: 6.4 (g/mL) G Lab File ID: 0118926A

Level: (low/med) LOW Date Sampled: 01/22/09 09:15

% Moisture: not dec. 16 Date Analyzed: 01/28/09 07:11

GC Column: RTX-VRX ID: 0.25 (mm) Dilution Factor: 1.0

Soil Extract Volume:_____(uL) Soil Aliquot Volume: _____(uL)

CONCENTRATION UNITS: (ug/L or ug/Kg) UG/KG

CAS NO.	COMPOUND	MDL	RL	CONC	Q	
67-64-1	Acetone	1.9	9.3	9.3	U ~~9.8 B~~	B1
71-43-2	Benzene	0.44	9.3		U	
75-27-4	Bromodichloromethane	0.28	9.3		U	
75-25-2	Bromoform	0.93	9.3		U	
74-83-9	Bromomethane	0.67	9.3		U	
78-93-3	2-Butanone	1.3	9.3		U	
75-15-0	Carbon disulfide	1.2	9.3		U	
56-23-5	Carbon tetrachloride	0.82	9.3		U	
108-90-7	Chlorobenzene	0.32	9.3		U	
75-00-3	Chloroethane	1.0	9.3		U	
67-66-3	Chloroform	0.51	9.3		U	
74-87-3	Chloromethane	0.48	9.3		U	
110-82-7	Cyclohexane	0.50	9.3		U	
124-48-1	Dibromochloromethane	0.32	9.3		U	
96-12-8	1,2-Dibromo-3-chloropropane	1.1	4.7		U	
106-93-4	1,2-Dibromoethane	0.40	9.3		U	
95-50-1	1,2-Dichlorobenzene	0.34	9.3		U	
541-73-1	1,3-Dichlorobenzene	0.78	9.3		U	
106-46-7	1,4-Dichlorobenzene	0.51	9.3		U	
75-71-8	Dichlorodifluoromethane	1.0	9.3		U	
75-34-3	1,1-Dichloroethane	0.50	9.3		U	
107-06-2	1,2-Dichloroethane	0.43	9.3		U	
75-35-4	1,1-Dichloroethene	1.1	9.3		U	
156-59-2	cis-1,2-Dichloroethene	1.1	9.3		U	
156-60-5	trans-1,2-Dichloroethene	1.0	9.3		U	
78-87-5	1,2-Dichloropropane	0.43	9.3		U	
10061-01-5	cis-1,3-Dichloropropene	0.47	9.3		U	
10061-02-6	trans-1,3-Dichloropropene	0.30	9.3		U	
100-41-4	Ethylbenzene	0.70	9.3		U	
591-78-6	2-Hexanone	2.1	9.3		U	
98-82-8	Isopropylbenzene	0.82	9.3		U	
79-20-9	Methyl acetate	1.5	9.3		U	
75-09-2	Methylene chloride	0.58	9.3	9.3	U ~~1.6 JB~~	B1
108-87-2	Methyl cyclohexane	0.28	9.3		U	
1634-04-4	Methyl tert-butyl ether	0.30	9.3		U	
108-10-1	4-Methyl-2-pentanone	0.54	9.3		U	
100-42-5	Styrene	0.33	9.3		U	
79-34-5	1,1,2,2-Tetrachloroethane	0.40	9.3		U	
127-18-4	Tetrachloroethene	0.90	9.3		U	

FORM I VOA

MW
4/5/09

FORM 1
VOLATILE ORGANICS ANALYSIS DATA SHEET

CLIENT SAMPLE NO.

26

MR08-IS33
6-4-5-09A

Lab Name: EMPIRICAL LABS Contract: CH2MHILL

Lab Code: NA Case No.: NA SAS No.: NA SDG No.: LEJEUNE054

Matrix: (soil/water) SOIL Lab Sample ID: 0901189-26

Sample wt/vol: 6.4 (g/mL) G Lab File ID: 0118926A

Level: (low/med) LOW Date Sampled: 01/22/09 09:15

% Moisture: not dec. 16 Date Analyzed: 01/28/09 07:11

GC Column: RTX-VRX ID: 0.25 (mm) Dilution Factor: 1.0

Soil Extract Volume:_____(uL) Soil Aliquot Volume: _____(uL)

CONCENTRATION UNITS: (ug/L or ug/Kg) UG/KG

CAS NO.	COMPOUND	MDL	RL	CONC	Q
108-88-3	Toluene	0.80	9.3		U
120-82-1	1,2,4-Trichlorobenzene	0.17	9.3		U
71-55-6	1,1,1-Trichloroethane	0.84	9.3		U
79-00-5	1,1,2-Trichloroethane	0.33	9.3		U
79-01-6	Trichloroethene	0.79	9.3		U
76-13-1	Trichlorotrifluoroethane	0.51	9.3		U
75-69-4	Trichlorofluoromethane	0.88	9.3		U
75-01-4	Vinyl chloride	1.0	9.3		U
1330-20-7	Xylene(total)	0.65	9.3		U

MW
4/5/09

FORM 1
VOLATILE ORGANICS ANALYSIS DATA SHEET

CLIENT SAMPLE NO. 27

MR08-IS33
5-4-5-09A

Lab Name: EMPIRICAL LABS Contract: CH2MHILL

Lab Code: NA Case No.: NA SAS No.: NA SDG No.: LEJEUNE054

Matrix: (soil/water) SOIL Lab Sample ID: 0901189-27

Sample wt/vol: 5.2 (g/mL) G Lab File ID: 0118927A

Level: (low/med) LOW Date Sampled: 01/22/09 09:35

% Moisture: not dec. 7 Date Analyzed: 01/28/09 07:41

GC Column: RTX-VRX ID: 0.25 (mm) Dilution Factor: 1.0

Soil Extract Volume:_____(uL) Soil Aliquot Volume: _____(uL)

CONCENTRATION UNITS: (ug/L or ug/Kg) UG/KG

CAS NO.	COMPOUND	MDL	RL	CONC	Q	
67-64-1	Acetone	2.1	10	10u	~~5.6 JB~~	Bu
71-43-2	Benzene	0.49	10		U	
75-27-4	Bromodichloromethane	0.31	10		U	
75-25-2	Bromoform	1.0	10		U	
74-83-9	Bromomethane	0.75	10		U	
78-93-3	2-Butanone	1.4	10		U	
75-15-0	Carbon disulfide	1.4	10		U	
56-23-5	Carbon tetrachloride	0.92	10		U	
108-90-7	Chlorobenzene	0.35	10		U	
75-00-3	Chloroethane	1.1	10		U	
67-66-3	Chloroform	0.57	10		U	
74-87-3	Chloromethane	0.54	10		U	
110-82-7	Cyclohexane	0.56	10		U	
124-48-1	Dibromochloromethane	0.35	10		U	
96-12-8	1,2-Dibromo-3-chloropropane	1.2	5.2		U	
106-93-4	1,2-Dibromoethane	0.45	10		U	
95-50-1	1,2-Dichlorobenzene	0.38	10		U	
541-73-1	1,3-Dichlorobenzene	0.87	10		U	
106-46-7	1,4-Dichlorobenzene	0.57	10		U	
75-71-8	Dichlorodifluoromethane	1.1	10		U	
75-34-3	1,1-Dichloroethane	0.56	10		U	
107-06-2	1,2-Dichloroethane	0.48	10		U	
75-35-4	1,1-Dichloroethene	1.2	10		U	
156-59-2	cis-1,2-Dichloroethene	1.2	10		U	
156-60-5	trans-1,2-Dichloroethene	1.1	10		U	
78-87-5	1,2-Dichloropropane	0.48	10		U	
10061-01-5	cis-1,3-Dichloropropene	0.52	10		U	
10061-02-6	trans-1,3-Dichloropropene	0.33	10		U	
100-41-4	Ethylbenzene	0.78	10		U	
591-78-6	2-Hexanone	2.4	10		U	
98-82-8	Isopropylbenzene	0.92	10		U	
79-20-9	Methyl acetate	1.7	10		U	
75-09-2	Methylene chloride	0.64	10	10u	~~1.6 JB~~	B
108-87-2	Methyl cyclohexane	0.31	10		U	
1634-04-4	Methyl tert-butyl ether	0.33	10		U	
108-10-1	4-Methyl-2-pentanone	0.60	10		U	
100-42-5	Styrene	0.36	10		U	
79-34-5	1,1,2,2-Tetrachloroethane	0.45	10		U	
127-18-4	Tetrachloroethene	1.0	10		U	

MW
4/5/09

FORM 1
VOLATILE ORGANICS ANALYSIS DATA SHEET

CLIENT SAMPLE NO.

27

MR08-IS33
5-4-5-09A

Lab Name: EMPIRICAL LABS Contract: CH2MHILL

Lab Code: NA Case No.: NA SAS No.: NA SDG No.: LEJEUNE054

Matrix: (soil/water) SOIL Lab Sample ID: 0901189-27

Sample wt/vol: 5.2 (g/mL) G Lab File ID: 0118927A

Level: (low/med) LOW Date Sampled: 01/22/09 09:35

% Moisture: not dec. 7 Date Analyzed: 01/28/09 07:41

GC Column: RTX-VRX ID: 0.25 (mm) Dilution Factor: 1.0

Soil Extract Volume:_____(uL) Soil Aliquot Volume: _____(uL)

CONCENTRATION UNITS: (ug/L or ug/Kg) UG/KG

CAS NO.	COMPOUND	MDL	RL	CONC	Q
108-88-3	Toluene	0.90	10		U
120-82-1	1,2,4-Trichlorobenzene	0.19	10		U
71-55-6	1,1,1-Trichloroethane	0.94	10		U
79-00-5	1,1,2-Trichloroethane	0.36	10		U
79-01-6	Trichloroethene	0.88	10		U
76-13-1	Trichlorotrifluoroethane	0.57	10		U
75-69-4	Trichlorofluoromethane	0.99	10		U
75-01-4	Vinyl chloride	1.1	10		U
1330-20-7	Xylene(total)	0.73	10		U

lw
4/5/09

FORM 1
VOLATILE ORGANICS ANALYSIS DATA SHEET

CLIENT SAMPLE NO. 28

MR08-SS335-09A

Lab Name: EMPIRICAL LABS Contract: CH2MHILL

Lab Code: NA Case No.: NA SAS No.: NA SDG No.: LEJEUNE054

Matrix: (soil/water) SOIL Lab Sample ID: 0901189-28

Sample wt/vol: 4.6 (g/mL) G Lab File ID: 0118928A

Level: (low/med) LOW Date Sampled: 01/22/09 09:50

% Moisture: not dec. 14 Date Analyzed: 01/28/09 11:30

GC Column: RTX-VRX ID: 0.25 (mm) Dilution Factor: 1.0

Soil Extract Volume:_____(uL) Soil Aliquot Volume: _____(uL)

CONCENTRATION UNITS: (ug/L or ug/Kg) UG/KG

CAS NO.	COMPOUND	MDL	RL	CONC	Q
67-64-1	Acetone	2.5	12		U
71-43-2	Benzene	0.59	12	0.60	J
75-27-4	Bromodichloromethane	0.38	12		U
75-25-2	Bromoform	1.2	12		U
74-83-9	Bromomethane	0.90	12		U
78-93-3	2-Butanone	1.8	12		U
75-15-0	Carbon disulfide	1.6	12		U
56-23-5	Carbon tetrachloride	1.1	12		U
108-90-7	Chlorobenzene	0.43	12		U
75-00-3	Chloroethane	1.4	12		U
67-66-3	Chloroform	0.69	12		U
74-87-3	Chloromethane	0.65	12		U
110-82-7	Cyclohexane	0.68	12		U
124-48-1	Dibromochloromethane	0.43	12		U
96-12-8	1,2-Dibromo-3-chloropropane	1.5	6.3		U
106-93-4	1,2-Dibromoethane	0.54	12		U
95-50-1	1,2-Dichlorobenzene	0.46	12		U
541-73-1	1,3-Dichlorobenzene	1.0	12		U
106-46-7	1,4-Dichlorobenzene	0.69	12		U
75-71-8	Dichlorodifluoromethane	1.4	12		U
75-34-3	1,1-Dichloroethane	0.68	12		U
107-06-2	1,2-Dichloroethane	0.58	12		U
75-35-4	1,1-Dichloroethene	1.5	12		U
156-59-2	cis-1,2-Dichloroethene	1.5	12		U
156-60-5	trans-1,2-Dichloroethene	1.4	12		U
78-87-5	1,2-Dichloropropane	0.58	12		U
10061-01-5	cis-1,3-Dichloropropene	0.63	12		U
10061-02-6	trans-1,3-Dichloropropene	0.40	12		U
100-41-4	Ethylbenzene	0.94	12		U
591-78-6	2-Hexanone	2.9	12		U
98-82-8	Isopropylbenzene	1.1	12		U
79-20-9	Methyl acetate	2.0	12		U
75-09-2	Methylene chloride	0.78	12	12u ~~1.4~~ ~~JB~~	B
108-87-2	Methyl cyclohexane	0.38	12		U
1634-04-4	Methyl tert-butyl ether	0.40	12		U
108-10-1	4-Methyl-2-pentanone	0.73	12	1.2	J
100-42-5	Styrene	0.44	12		U
79-34-5	1,1,2,2-Tetrachloroethane	0.54	12		U
127-18-4	Tetrachloroethene	1.2	12		U

FORM I VOA

LW
4/5/09

FORM 1
VOLATILE ORGANICS ANALYSIS DATA SHEET

CLIENT SAMPLE NO.

28

MR08-SS335-09A

Lab Name: EMPIRICAL LABS Contract: CH2MHILL

Lab Code: NA Case No.: NA SAS No.: NA SDG No.: LEJEUNE054

Matrix: (soil/water) SOIL Lab Sample ID: 0901189-28

Sample wt/vol: 4.6 (g/mL) G Lab File ID: 0118928A

Level: (low/med) LOW Date Sampled: 01/22/09 09:50

% Moisture: not dec. 14 Date Analyzed: 01/28/09 11:30

GC Column: RTX-VRX ID: 0.25 (mm) Dilution Factor: 1.0

Soil Extract Volume:_____(uL) Soil Aliquot Volume: _____(uL)

CONCENTRATION UNITS: (ug/L or ug/Kg) UG/KG

CAS NO.	COMPOUND	MDL	RL	CONC	Q
108-88-3	Toluene	1.1	12	2.3	J
120-82-1	1,2,4-Trichlorobenzene	0.23	12		U
71-55-6	1,1,1-Trichloroethane	1.1	12		U
79-00-5	1,1,2-Trichloroethane	0.44	12		U
79-01-6	Trichloroethene	1.1	12		U
76-13-1	Trichlorotrifluoroethane	0.69	12		U
75-69-4	Trichlorofluoromethane	1.2	12		U
75-01-4	Vinyl chloride	1.4	12		U
1330-20-7	Xylene(total)	0.88	12		U

JCW 4/15/09

FORM 1
VOLATILE ORGANICS ANALYSIS DATA SHEET

CLIENT SAMPLE NO.

29

MR08-SS334-09A

Lab Name: EMPIRICAL LABS Contract: CH2MHILL

Lab Code: NA Case No.: NA SAS No.: NA SDG No.: LEJEUNE054

Matrix: (soil/water) SOIL Lab Sample ID: 0901189-29

Sample wt/vol: 3.5 (g/mL) G Lab File ID: 0118929A

Level: (low/med) LOW Date Sampled: 01/22/09 10:15

% Moisture: not dec. 23 Date Analyzed: 01/28/09 12:01

GC Column: RTX-VRX ID: 0.25 (mm) Dilution Factor: 1.0

Soil Extract Volume:_____(uL) Soil Aliquot Volume: _____(uL)

CONCENTRATION UNITS: (ug/L or ug/Kg) UG/KG

CAS NO.	COMPOUND	MDL	RL	CONC	Q
67-64-1	Acetone	3.7	19	320	
71-43-2	Benzene	0.88	19		U
75-27-4	Bromodichloromethane	0.56	19		U
75-25-2	Bromoform	1.9	19		U
74-83-9	Bromomethane	1.3	19		U
78-93-3	2-Butanone	2.6	19	30	
75-15-0	Carbon disulfide	2.4	19		U
56-23-5	Carbon tetrachloride	1.6	19		U
108-90-7	Chlorobenzene	0.64	19		U
75-00-3	Chloroethane	2.0	19		U
67-66-3	Chloroform	1.0	19		U
74-87-3	Chloromethane	0.97	19		U
110-82-7	Cyclohexane	1.0	19		U
124-48-1	Dibromochloromethane	0.64	19		U
96-12-8	1,2-Dibromo-3-chloropropane	2.2	9.4		U
106-93-4	1,2-Dibromoethane	0.80	19		U
95-50-1	1,2-Dichlorobenzene	0.69	19		U
541-73-1	1,3-Dichlorobenzene	1.6	19		U
106-46-7	1,4-Dichlorobenzene	1.0	19		U
75-71-8	Dichlorodifluoromethane	2.0	19		U
75-34-3	1,1-Dichloroethane	1.0	19		U
107-06-2	1,2-Dichloroethane	0.86	19		U
75-35-4	1,1-Dichloroethene	2.2	19		U
156-59-2	cis-1,2-Dichloroethene	2.2	19		U
156-60-5	trans-1,2-Dichloroethene	2.0	19		U
78-87-5	1,2-Dichloropropane	0.86	19		U
10061-01-5	cis-1,3-Dichloropropene	0.94	19		U
10061-02-6	trans-1,3-Dichloropropene	0.60	19		U
100-41-4	Ethylbenzene	1.4	19		U
591-78-6	2-Hexanone	4.3	19		U
98-82-8	Isopropylbenzene	1.6	19		U
79-20-9	Methyl acetate	3.0	19		U
75-09-2	Methylene chloride	1.2	19	19u ~~2.3 JB~~	B
108-87-2	Methyl cyclohexane	0.56	19		U
1634-04-4	Methyl tert-butyl ether	0.60	19		U
108-10-1	4-Methyl-2-pentanone	1.1	19		U
100-42-5	Styrene	0.66	19		U
79-34-5	1,1,2,2-Tetrachloroethane	0.80	19		U
127-18-4	Tetrachloroethene	1.8	19		U

FORM I VOA

lw 4/5/09

FORM 1
VOLATILE ORGANICS ANALYSIS DATA SHEET

CLIENT SAMPLE NO. 29

MR08-SS334-09A

Lab Name: EMPIRICAL LABS Contract: CH2MHILL

Lab Code: NA Case No.: NA SAS No.: NA SDG No.: LEJEUNE054

Matrix: (soil/water) SOIL Lab Sample ID: 0901189-29

Sample wt/vol: 3.5 (g/mL) G Lab File ID: 0118929A

Level: (low/med) LOW Date Sampled: 01/22/09 10:15

% Moisture: not dec. 23 Date Analyzed: 01/28/09 12:01

GC Column: RTX-VRX ID: 0.25 (mm) Dilution Factor: 1.0

Soil Extract Volume:_____(uL) Soil Aliquot Volume: _____(uL)

CONCENTRATION UNITS: (ug/L or ug/Kg) UG/KG

CAS NO.	COMPOUND	MDL	RL	CONC	Q
108-88-3	Toluene	1.6	19		U
120-82-1	1,2,4-Trichlorobenzene	0.34	19		U
71-55-6	1,1,1-Trichloroethane	1.7	19		U
79-00-5	1,1,2-Trichloroethane	0.66	19		U
79-01-6	Trichloroethene	1.6	19		U
76-13-1	Trichlorotrifluoroethane	1.0	19		U
75-69-4	Trichlorofluoromethane	1.8	19		U
75-01-4	Vinyl chloride	2.0	19		U
1330-20-7	Xylene(total)	1.3	19		U

MW
4/5/09

FORM 1
VOLATILE ORGANICS ANALYSIS DATA SHEET

CLIENT SAMPLE NO.

MR08-IS33
4-4-5-09A

30

Lab Name: EMPIRICAL LABS Contract: CH2MHILL

Lab Code: NA Case No.: NA SAS No.: NA SDG No.: LEJEUNE054

Matrix: (soil/water) SOIL Lab Sample ID: 0901189-30

Sample wt/vol: 5.7 (g/mL) G Lab File ID: 0118930A

Level: (low/med) LOW Date Sampled: 01/22/09 10:25

% Moisture: not dec. 9 Date Analyzed: 01/28/09 12:32

GC Column: RTX-VRX ID: 0.25 (mm) Dilution Factor: 1.0

Soil Extract Volume:_____(uL) Soil Aliquot Volume: _____(uL)

CONCENTRATION UNITS: (ug/L or ug/Kg) UG/KG

CAS NO.	COMPOUND	MDL	RL	CONC	Q	
67-64-1	Acetone	1.9	9.6	9.6U ~~5.1~~	~~J~~	B
71-43-2	Benzene	0.45	9.6		U	
75-27-4	Bromodichloromethane	0.29	9.6		U	
75-25-2	Bromoform	0.96	9.6		U	
74-83-9	Bromomethane	0.69	9.6		U	
78-93-3	2-Butanone	1.3	9.6		U	
75-15-0	Carbon disulfide	1.2	9.6		U	
56-23-5	Carbon tetrachloride	0.85	9.6		U	
108-90-7	Chlorobenzene	0.33	9.6		U	
75-00-3	Chloroethane	1.0	9.6		U	
67-66-3	Chloroform	0.53	9.6		U	
74-87-3	Chloromethane	0.50	9.6		U	
110-82-7	Cyclohexane	0.52	9.6		U	
124-48-1	Dibromochloromethane	0.33	9.6		U	
96-12-8	1,2-Dibromo-3-chloropropane	1.2	4.8		U	
106-93-4	1,2-Dibromoethane	0.41	9.6		U	
95-50-1	1,2-Dichlorobenzene	0.36	9.6		U	
541-73-1	1,3-Dichlorobenzene	0.81	9.6		U	
106-46-7	1,4-Dichlorobenzene	0.53	9.6		U	
75-71-8	Dichlorodifluoromethane	1.0	9.6		U	
75-34-3	1,1-Dichloroethane	0.52	9.6		U	
107-06-2	1,2-Dichloroethane	0.44	9.6		U	
75-35-4	1,1-Dichloroethene	1.2	9.6		U	
156-59-2	cis-1,2-Dichloroethene	1.2	9.6		U	
156-60-5	trans-1,2-Dichloroethene	1.0	9.6		U	
78-87-5	1,2-Dichloropropane	0.44	9.6		U	
10061-01-5	cis-1,3-Dichloropropene	0.48	9.6		U	
10061-02-6	trans-1,3-Dichloropropene	0.31	9.6		U	
100-41-4	Ethylbenzene	0.72	9.6		U	
591-78-6	2-Hexanone	2.2	9.6		U	
98-82-8	Isopropylbenzene	0.85	9.6		U	
79-20-9	Methyl acetate	1.5	9.6		U	
75-09-2	Methylene chloride	0.60	9.6	9.6U ~~1.3~~	~~JB~~	B
108-87-2	Methyl cyclohexane	0.29	9.6		U	
1634-04-4	Methyl tert-butyl ether	0.31	9.6		U	
108-10-1	4-Methyl-2-pentanone	0.56	9.6		U	
100-42-5	Styrene	0.34	9.6		U	
79-34-5	1,1,2,2-Tetrachloroethane	0.41	9.6		U	
127-18-4	Tetrachloroethene	0.93	9.6		U	

LW
4/5/09

FORM 1
VOLATILE ORGANICS ANALYSIS DATA SHEET

CLIENT SAMPLE NO. 30

MR08-IS33
4-4-5-09A

Lab Name: EMPIRICAL LABS Contract: CH2MHILL

Lab Code: NA Case No.: NA SAS No.: NA SDG No.: LEJEUNE054

Matrix: (soil/water) SOIL Lab Sample ID: 0901189-30

Sample wt/vol: 5.7 (g/mL) G Lab File ID: 0118930A

Level: (low/med) LOW Date Sampled: 01/22/09 10:25

% Moisture: not dec. 9 Date Analyzed: 01/28/09 12:32

GC Column: RTX-VRX ID: 0.25 (mm) Dilution Factor: 1.0

Soil Extract Volume:_____(uL) Soil Aliquot Volume: _____(uL)

CONCENTRATION UNITS: (ug/L or ug/Kg) UG/KG

CAS NO.	COMPOUND	MDL	RL	CONC	Q
108-88-3	Toluene	0.83	9.6		U
120-82-1	1,2,4-Trichlorobenzene	0.17	9.6		U
71-55-6	1,1,1-Trichloroethane	0.86	9.6		U
79-00-5	1,1,2-Trichloroethane	0.34	9.6		U
79-01-6	Trichloroethene	0.82	9.6		U
76-13-1	Trichlorotrifluoroethane	0.53	9.6		U
75-69-4	Trichlorofluoromethane	0.91	9.6		U
75-01-4	Vinyl chloride	1.0	9.6		U
1330-20-7	Xylene(total)	0.67	9.6		U

fw
4/5/09

FORM 1
VOLATILE ORGANICS ANALYSIS DATA SHEET

CLIENT SAMPLE NO. 31

MR08-SS333-09A

Lab Name: EMPIRICAL LABS Contract: CH2MHILL

Lab Code: NA Case No.: NA SAS No.: NA SDG No.: LEJEUNE054

Matrix: (soil/water) SOIL Lab Sample ID: 0901189-31

Sample wt/vol: 4.0 (g/mL) G Lab File ID: 0118931A

Level: (low/med) LOW Date Sampled: 01/22/09 10:45

% Moisture: not dec. 12 Date Analyzed: 01/28/09 13:03

GC Column: RTX-VRX ID: 0.25 (mm) Dilution Factor: 1.0

Soil Extract Volume:_____(uL) Soil Aliquot Volume: _____(uL)

CONCENTRATION UNITS: (ug/L or ug/Kg) UG/KG

CAS NO.	COMPOUND	MDL	RL	CONC	Q
67-64-1	Acetone	2.8	14	94	
71-43-2	Benzene	0.66	14		U
75-27-4	Bromodichloromethane	0.42	14		U
75-25-2	Bromoform	1.4	14		U
74-83-9	Bromomethane	1.0	14		U
78-93-3	2-Butanone	2.0	14		U
75-15-0	Carbon disulfide	1.8	14		U
56-23-5	Carbon tetrachloride	1.2	14		U
108-90-7	Chlorobenzene	0.48	14		U
75-00-3	Chloroethane	1.6	14		U
67-66-3	Chloroform	0.78	14		U
74-87-3	Chloromethane	0.73	14		U
110-82-7	Cyclohexane	0.76	14		U
124-48-1	Dibromochloromethane	0.48	14		U
96-12-8	1,2-Dibromo-3-chloropropane	1.7	7.0		U
106-93-4	1,2-Dibromoethane	0.61	14		U
95-50-1	1,2-Dichlorobenzene	0.52	14		U
541-73-1	1,3-Dichlorobenzene	1.2	14		U
106-46-7	1,4-Dichlorobenzene	0.78	14		U
75-71-8	Dichlorodifluoromethane	1.6	14		U
75-34-3	1,1-Dichloroethane	0.76	14		U
107-06-2	1,2-Dichloroethane	0.65	14		U
75-35-4	1,1-Dichloroethene	1.7	14		U
156-59-2	cis-1,2-Dichloroethene	1.7	14		U
156-60-5	trans-1,2-Dichloroethene	1.6	14		U
78-87-5	1,2-Dichloropropane	0.65	14		U
10061-01-5	cis-1,3-Dichloropropene	0.70	14		U
10061-02-6	trans-1,3-Dichloropropene	0.45	14		U
100-41-4	Ethylbenzene	1.0	14		U
591-78-6	2-Hexanone	3.2	14		U
98-82-8	Isopropylbenzene	1.2	14		U
79-20-9	Methyl acetate	2.2	14		U
75-09-2	Methylene chloride	0.88	14	144	~~1.6 JB~~ B1
108-87-2	Methyl cyclohexane	0.42	14		U
1634-04-4	Methyl tert-butyl ether	0.45	14		U
108-10-1	4-Methyl-2-pentanone	0.82	14		U
100-42-5	Styrene	0.49	14		U
79-34-5	1,1,2,2-Tetrachloroethane	0.61	14		U
127-18-4	Tetrachloroethene	1.4	14		U

FORM I VOA

MW 4/5/09

FORM 1
VOLATILE ORGANICS ANALYSIS DATA SHEET

CLIENT SAMPLE NO. 31

MR08-SS333-09A

Lab Name: EMPIRICAL LABS Contract: CH2MHILL

Lab Code: NA Case No.: NA SAS No.: NA SDG No.: LEJEUNE054

Matrix: (soil/water) SOIL Lab Sample ID: 0901189-31

Sample wt/vol: 4.0 (g/mL) G Lab File ID: 0118931A

Level: (low/med) LOW Date Sampled: 01/22/09 10:45

% Moisture: not dec. 12 Date Analyzed: 01/28/09 13:03

GC Column: RTX-VRX ID: 0.25 (mm) Dilution Factor: 1.0

Soil Extract Volume:_____(uL) Soil Aliquot Volume: _____(uL)

CONCENTRATION UNITS: (ug/L or ug/Kg) UG/KG

CAS NO.	COMPOUND	MDL	RL	CONC	Q
108-88-3	Toluene	1.2	14		U
120-82-1	1,2,4-Trichlorobenzene	0.25	14		U
71-55-6	1,1,1-Trichloroethane	1.3	14		U
79-00-5	1,1,2-Trichloroethane	0.49	14		U
79-01-6	Trichloroethene	1.2	14		U
76-13-1	Trichlorotrifluoroethane	0.78	14		U
75-69-4	Trichlorofluoromethane	1.3	14		U
75-01-4	Vinyl chloride	1.6	14		U
1330-20-7	Xylene(total)	0.99	14		U

JW 4/5/09

FORM 1
VOLATILE ORGANICS ANALYSIS DATA SHEET

CLIENT SAMPLE NO. 32

MR08-IS33
3-4-5-09A

Lab Name: EMPIRICAL LABS Contract: CH2MHILL

Lab Code: NA Case No.: NA SAS No.: NA SDG No.: LEJEUNE054

Matrix: (soil/water) SOIL Lab Sample ID: 0901189-32

Sample wt/vol: 6.0 (g/mL) G Lab File ID: 0118932A

Level: (low/med) LOW Date Sampled: 01/22/09 10:30

% Moisture: not dec. 13 Date Analyzed: 01/28/09 13:34

GC Column: RTX-VRX ID: 0.25 (mm) Dilution Factor: 1.0

Soil Extract Volume:_____(uL) Soil Aliquot Volume: _____(uL)

CONCENTRATION UNITS: (ug/L or ug/Kg) UG/KG

CAS NO.	COMPOUND	MDL	RL	CONC	Q	
67-64-1	Acetone	1.9	9.5	9.5U ~~6.7~~	~~J~~	BL
71-43-2	Benzene	0.45	9.5		U	
75-27-4	Bromodichloromethane	0.28	9.5		U	
75-25-2	Bromoform	0.95	9.5		U	
74-83-9	Bromomethane	0.68	9.5		U	
78-93-3	2-Butanone	1.3	9.5		U	
75-15-0	Carbon disulfide	1.2	9.5		U	
56-23-5	Carbon tetrachloride	0.84	9.5		U	
108-90-7	Chlorobenzene	0.32	9.5		U	
75-00-3	Chloroethane	1.0	9.5		U	
67-66-3	Chloroform	0.52	9.5		U	
74-87-3	Chloromethane	0.50	9.5		U	
110-82-7	Cyclohexane	0.51	9.5		U	
124-48-1	Dibromochloromethane	0.32	9.5		U	
96-12-8	1,2-Dibromo-3-chloropropane	1.1	4.8		U	
106-93-4	1,2-Dibromoethane	0.41	9.5		U	
95-50-1	1,2-Dichlorobenzene	0.35	9.5		U	
541-73-1	1,3-Dichlorobenzene	0.80	9.5		U	
106-46-7	1,4-Dichlorobenzene	0.52	9.5		U	
75-71-8	Dichlorodifluoromethane	1.0	9.5		U	
75-34-3	1,1-Dichloroethane	0.51	9.5		U	
107-06-2	1,2-Dichloroethane	0.44	9.5		U	
75-35-4	1,1-Dichloroethene	1.1	9.5		U	
156-59-2	cis-1,2-Dichloroethene	1.1	9.5		U	
156-60-5	trans-1,2-Dichloroethene	1.0	9.5		U	
78-87-5	1,2-Dichloropropane	0.44	9.5		U	
10061-01-5	cis-1,3-Dichloropropene	0.48	9.5		U	
10061-02-6	trans-1,3-Dichloropropene	0.30	9.5		U	
100-41-4	Ethylbenzene	0.71	9.5		U	
591-78-6	2-Hexanone	2.2	9.5		U	
98-82-8	Isopropylbenzene	0.84	9.5		U	
79-20-9	Methyl acetate	1.5	9.5		U	
75-09-2	Methylene chloride	0.59	9.5	9.5U ~~1.3~~	~~JB~~	BL
108-87-2	Methyl cyclohexane	0.28	9.5		U	
1634-04-4	Methyl tert-butyl ether	0.30	9.5		U	
108-10-1	4-Methyl-2-pentanone	0.55	9.5		U	
100-42-5	Styrene	0.33	9.5		U	
79-34-5	1,1,2,2-Tetrachloroethane	0.41	9.5		U	
127-18-4	Tetrachloroethene	0.92	9.5		U	

FORM I VOA

MW
4/5/09

FORM 1
VOLATILE ORGANICS ANALYSIS DATA SHEET

CLIENT SAMPLE NO.

MR08-IS33
3-4-5-09A

32

Lab Name: EMPIRICAL LABS Contract: CH2MHILL

Lab Code: NA Case No.: NA SAS No.: NA SDG No.: LEJEUNE054

Matrix: (soil/water) SOIL Lab Sample ID: 0901189-32

Sample wt/vol: 6.0 (g/mL) G Lab File ID: 0118932A

Level: (low/med) LOW Date Sampled: 01/22/09 10:30

% Moisture: not dec. 13 Date Analyzed: 01/28/09 13:34

GC Column: RTX-VRX ID: 0.25 (mm) Dilution Factor: 1.0

Soil Extract Volume:_____(uL) Soil Aliquot Volume: _____(uL)

CONCENTRATION UNITS: (ug/L or ug/Kg) UG/KG

CAS NO.	COMPOUND	MDL	RL	CONC	Q
108-88-3	Toluene	0.82	9.5		U
120-82-1	1,2,4-Trichlorobenzene	0.17	9.5		U
71-55-6	1,1,1-Trichloroethane	0.86	9.5		U
79-00-5	1,1,2-Trichloroethane	0.33	9.5		U
79-01-6	Trichloroethene	0.81	9.5		U
76-13-1	Trichlorotrifluoroethane	0.52	9.5		U
75-69-4	Trichlorofluoromethane	0.90	9.5		U
75-01-4	Vinyl chloride	1.0	9.5		U
1330-20-7	Xylene(total)	0.67	9.5		U

MW 4/5/09

FORM 1
VOLATILE ORGANICS ANALYSIS DATA SHEET

CLIENT SAMPLE NO. 33

MR08-IS33
2-4-5-09A

Lab Name: EMPIRICAL LABS Contract: CH2MHILL

Lab Code: NA Case No.: NA SAS No.: NA SDG No.: LEJEUNE054

Matrix: (soil/water) SOIL Lab Sample ID: 0901189-33

Sample wt/vol: 3.6 (g/mL) G Lab File ID: 0118933A

Level: (low/med) LOW Date Sampled: 01/22/09 11:00

% Moisture: not dec. 6 Date Analyzed: 01/28/09 14:05

GC Column: RTX-VRX ID: 0.25 (mm) Dilution Factor: 1.0

Soil Extract Volume:_____(uL) Soil Aliquot Volume: _____(uL)

CONCENTRATION UNITS: (ug/L or ug/Kg) UG/KG

CAS NO.	COMPOUND	MDL	RL	CONC	Q	
67-64-1	Acetone	3.0	15	15u	~~12 J~~	Bl
71-43-2	Benzene	0.70	15		U	
75-27-4	Bromodichloromethane	0.45	15		U	
75-25-2	Bromoform	1.5	15		U	
74-83-9	Bromomethane	1.1	15		U	
78-93-3	2-Butanone	2.1	15		U	
75-15-0	Carbon disulfide	1.9	15		U	
56-23-5	Carbon tetrachloride	1.3	15		U	
108-90-7	Chlorobenzene	0.51	15		U	
75-00-3	Chloroethane	1.6	15		U	
67-66-3	Chloroform	0.82	15		U	
74-87-3	Chloromethane	0.78	15		U	
110-82-7	Cyclohexane	0.80	15		U	
124-48-1	Dibromochloromethane	0.51	15		U	
96-12-8	1,2-Dibromo-3-chloropropane	1.8	7.4		U	
106-93-4	1,2-Dibromoethane	0.64	15		U	
95-50-1	1,2-Dichlorobenzene	0.55	15		U	
541-73-1	1,3-Dichlorobenzene	1.2	15		U	
106-46-7	1,4-Dichlorobenzene	0.82	15		U	
75-71-8	Dichlorodifluoromethane	1.6	15		U	
75-34-3	1,1-Dichloroethane	0.80	15		U	
107-06-2	1,2-Dichloroethane	0.69	15		U	
75-35-4	1,1-Dichloroethene	1.8	15		U	
156-59-2	cis-1,2-Dichloroethene	1.8	15		U	
156-60-5	trans-1,2-Dichloroethene	1.6	15		U	
78-87-5	1,2-Dichloropropane	0.69	15		U	
10061-01-5	cis-1,3-Dichloropropene	0.74	15		U	
10061-02-6	trans-1,3-Dichloropropene	0.48	15		U	
100-41-4	Ethylbenzene	1.1	15		U	
591-78-6	2-Hexanone	3.4	15		U	
98-82-8	Isopropylbenzene	1.3	15		U	
79-20-9	Methyl acetate	2.4	15		U	
75-09-2	Methylene chloride	0.92	15	15u	~~2.3 JB~~	Bl
108-87-2	Methyl cyclohexane	0.45	15		U	
1634-04-4	Methyl tert-butyl ether	0.48	15		U	
108-10-1	4-Methyl-2-pentanone	0.86	15		U	
100-42-5	Styrene	0.52	15		U	
79-34-5	1,1,2,2-Tetrachloroethane	0.64	15		U	
127-18-4	Tetrachloroethene	1.4	15		U	

FORM I VOA

MW
4/5/09

FORM 1
VOLATILE ORGANICS ANALYSIS DATA SHEET

CLIENT SAMPLE NO.

33

MR08-IS33
2-4-5-09A

Lab Name: EMPIRICAL LABS Contract: CH2MHILL

Lab Code: NA Case No.: NA SAS No.: NA SDG No.: LEJEUNE054

Matrix: (soil/water) SOIL Lab Sample ID: 0901189-33

Sample wt/vol: 3.6 (g/mL) G Lab File ID: 0118933A

Level: (low/med) LOW Date Sampled: 01/22/09 11:00

% Moisture: not dec. 6 Date Analyzed: 01/28/09 14:05

GC Column: RTX-VRX ID: 0.25 (mm) Dilution Factor: 1.0

Soil Extract Volume:_____(uL) Soil Aliquot Volume: _____(uL)

CONCENTRATION UNITS: (ug/L or ug/Kg) UG/KG

CAS NO.	COMPOUND	MDL	RL	CONC	Q
108-88-3	Toluene	1.3	15		U
120-82-1	1,2,4-Trichlorobenzene	0.27	15		U
71-55-6	1,1,1-Trichloroethane	1.3	15		U
79-00-5	1,1,2-Trichloroethane	0.52	15		U
79-01-6	Trichloroethene	1.3	15		U
76-13-1	Trichlorotrifluoroethane	0.82	15		U
75-69-4	Trichlorofluoromethane	1.4	15		U
75-01-4	Vinyl chloride	1.6	15		U
1330-20-7	Xylene(total)	1.0	15		U

lw
4/5/09

FORM 1
VOLATILE ORGANICS ANALYSIS DATA SHEET

CLIENT SAMPLE NO.

34

MR08-SS332-09A

Lab Name: EMPIRICAL LABS Contract: CH2MHILL

Lab Code: NA Case No.: NA SAS No.: NA SDG No.: LEJEUNE054

Matrix: (soil/water) SOIL Lab Sample ID: 0901189-34

Sample wt/vol: 5.2 (g/mL) G Lab File ID: 0118934A

Level: (low/med) LOW Date Sampled: 01/22/09 11:00

% Moisture: not dec. 17 Date Analyzed: 01/28/09 14:36

GC Column: RTX-VRX ID: 0.25 (mm) Dilution Factor: 1.0

Soil Extract Volume:_____(uL) Soil Aliquot Volume: _____(uL)

CONCENTRATION UNITS: (ug/L or ug/Kg) UG/KG

CAS NO.	COMPOUND	MDL	RL	CONC	Q
67-64-1	Acetone	2.3	12	350	
71-43-2	Benzene	0.55	12	0.70	J
75-27-4	Bromodichloromethane	0.35	12		U
75-25-2	Bromoform	1.2	12		U
74-83-9	Bromomethane	0.84	12		U
78-93-3	2-Butanone	1.6	12	69	
75-15-0	Carbon disulfide	1.5	12		U
56-23-5	Carbon tetrachloride	1.0	12		U
108-90-7	Chlorobenzene	0.40	12		U
75-00-3	Chloroethane	1.3	12		U
67-66-3	Chloroform	0.64	12		U
74-87-3	Chloromethane	0.61	12		U
110-82-7	Cyclohexane	0.63	12		U
124-48-1	Dibromochloromethane	0.40	12		U
96-12-8	1,2-Dibromo-3-chloropropane	1.4	5.9		U
106-93-4	1,2-Dibromoethane	0.50	12		U
95-50-1	1,2-Dichlorobenzene	0.43	12		U
541-73-1	1,3-Dichlorobenzene	0.98	12		U
106-46-7	1,4-Dichlorobenzene	0.64	12		U
75-71-8	Dichlorodifluoromethane	1.3	12		U
75-34-3	1,1-Dichloroethane	0.63	12		U
107-06-2	1,2-Dichloroethane	0.54	12		U
75-35-4	1,1-Dichloroethene	1.4	12		U
156-59-2	cis-1,2-Dichloroethene	1.4	12		U
156-60-5	trans-1,2-Dichloroethene	1.3	12		U
78-87-5	1,2-Dichloropropane	0.54	12		U
10061-01-5	cis-1,3-Dichloropropene	0.59	12		U
10061-02-6	trans-1,3-Dichloropropene	0.38	12		U
100-41-4	Ethylbenzene	0.88	12		U
591-78-6	2-Hexanone	2.7	12	3.0	J
98-82-8	Isopropylbenzene	1.0	12		U
79-20-9	Methyl acetate	1.9	12		U
75-09-2	Methylene chloride	0.73	12	12u ~~1.4~~	~~JB~~ U BL
108-87-2	Methyl cyclohexane	0.35	12		U
1634-04-4	Methyl tert-butyl ether	0.38	12		U
108-10-1	4-Methyl-2-pentanone	0.68	12	2.6	J
100-42-5	Styrene	0.41	12		U
79-34-5	1,1,2,2-Tetrachloroethane	0.50	12		U
127-18-4	Tetrachloroethene	1.1	12		U

FORM I VOA

lw 4/5/09

FORM 1
VOLATILE ORGANICS ANALYSIS DATA SHEET

CLIENT SAMPLE NO.

MR08-SS332-09A

3C

Lab Name: EMPIRICAL LABS Contract: CH2MHILL

Lab Code: NA Case No.: NA SAS No.: NA SDG No.: LEJEUNE054

Matrix: (soil/water) SOIL Lab Sample ID: 0901189-34

Sample wt/vol: 5.2 (g/mL) G Lab File ID: 0118934A

Level: (low/med) LOW Date Sampled: 01/22/09 11:00

% Moisture: not dec. 17 Date Analyzed: 01/28/09 14:36

GC Column: RTX-VRX ID: 0.25 (mm) Dilution Factor: 1.0

Soil Extract Volume:_____(uL) Soil Aliquot Volume: _____(uL)

CONCENTRATION UNITS: (ug/L or ug/Kg) UG/KG

CAS NO.	COMPOUND	MDL	RL	CONC	Q
108-88-3	Toluene	1.0	12		U
120-82-1	1,2,4-Trichlorobenzene	0.21	12		U
71-55-6	1,1,1-Trichloroethane	1.0	12		U
79-00-5	1,1,2-Trichloroethane	0.41	12		U
79-01-6	Trichloroethene	1.00	12		U
76-13-1	Trichlorotrifluoroethane	0.64	12		U
75-69-4	Trichlorofluoromethane	1.1	12		U
75-01-4	Vinyl chloride	1.3	12		U
1330-20-7	Xylene(total)	0.82	12		U

JW
4/5/09

FORM 1
VOLATILE ORGANICS ANALYSIS DATA SHEET

CLIENT SAMPLE NO. 35

MR08-SS343-09A

Lab Name: EMPIRICAL LABS Contract: CH2MHILL

Lab Code: NA Case No.: NA SAS No.: NA SDG No.: LEJEUNE054

Matrix: (soil/water) SOIL Lab Sample ID: 0901189-35

Sample wt/vol: 6.4 (g/mL) G Lab File ID: 0118935A

Level: (low/med) LOW Date Sampled: 01/22/09 12:40

% Moisture: not dec. 6 Date Analyzed: 01/28/09 15:07

GC Column: RTX-VRX ID: 0.25 (mm) Dilution Factor: 1.0

Soil Extract Volume:_____(uL) Soil Aliquot Volume: _____(uL)

CONCENTRATION UNITS: (ug/L or ug/Kg) UG/KG

CAS NO.	COMPOUND	MDL	RL	CONC	Q
67-64-1	Acetone	1.7	8.4	240	
71-43-2	Benzene	0.39	8.4	0.56	J
75-27-4	Bromodichloromethane	0.25	8.4		U
75-25-2	Bromoform	0.84	8.4		U
74-83-9	Bromomethane	0.60	8.4		U
78-93-3	2-Butanone	1.2	8.4		U
75-15-0	Carbon disulfide	1.1	8.4		U
56-23-5	Carbon tetrachloride	0.74	8.4		U
108-90-7	Chlorobenzene	0.28	8.4		U
75-00-3	Chloroethane	0.92	8.4		U
67-66-3	Chloroform	0.46	8.4		U
74-87-3	Chloromethane	0.44	8.4		U
110-82-7	Cyclohexane	0.45	8.4		U
124-48-1	Dibromochloromethane	0.28	8.4		U
96-12-8	1,2-Dibromo-3-chloropropane	1.0	4.2		U
106-93-4	1,2-Dibromoethane	0.36	8.4		U
95-50-1	1,2-Dichlorobenzene	0.31	8.4		U
541-73-1	1,3-Dichlorobenzene	0.70	8.4		U
106-46-7	1,4-Dichlorobenzene	0.46	8.4		U
75-71-8	Dichlorodifluoromethane	0.92	8.4		U
75-34-3	1,1-Dichloroethane	0.45	8.4		U
107-06-2	1,2-Dichloroethane	0.38	8.4		U
75-35-4	1,1-Dichloroethene	1.0	8.4		U
156-59-2	cis-1,2-Dichloroethene	1.0	8.4		U
156-60-5	trans-1,2-Dichloroethene	0.92	8.4		U
78-87-5	1,2-Dichloropropane	0.38	8.4		U
10061-01-5	cis-1,3-Dichloropropene	0.42	8.4		U
10061-02-6	trans-1,3-Dichloropropene	0.27	8.4		U
100-41-4	Ethylbenzene	0.63	8.4	3.0	J
591-78-6	2-Hexanone	1.9	8.4		U
98-82-8	Isopropylbenzene	0.74	8.4		U
79-20-9	Methyl acetate	1.3	8.4		U
75-09-2	Methylene chloride	0.52	8.4	8.4u ~~1.1~~ ~~JB~~	B
108-87-2	Methyl cyclohexane	0.25	8.4		U
1634-04-4	Methyl tert-butyl ether	0.27	8.4		U
108-10-1	4-Methyl-2-pentanone	0.49	8.4		U
100-42-5	Styrene	0.29	8.4		U
79-34-5	1,1,2,2-Tetrachloroethane	0.36	8.4		U
127-18-4	Tetrachloroethene	0.81	8.4		U

FORM I VOA

NW
4/5/09

FORM 1
VOLATILE ORGANICS ANALYSIS DATA SHEET

CLIENT SAMPLE NO. 35

MR08-SS343-09A

Lab Name: EMPIRICAL LABS Contract: CH2MHILL

Lab Code: NA Case No.: NA SAS No.: NA SDG No.: LEJEUNE054

Matrix: (soil/water) SOIL Lab Sample ID: 0901189-35

Sample wt/vol: 6.4 (g/mL) G Lab File ID: 0118935A

Level: (low/med) LOW Date Sampled: 01/22/09 12:40

% Moisture: not dec. 6 Date Analyzed: 01/28/09 15:07

GC Column: RTX-VRX ID: 0.25 (mm) Dilution Factor: 1.0

Soil Extract Volume:_____(uL) Soil Aliquot Volume: _____(uL)

CONCENTRATION UNITS: (ug/L or ug/Kg) UG/KG

CAS NO.	COMPOUND	MDL	RL	CONC	Q
108-88-3	Toluene	0.72	8.4	1.6	J
120-82-1	1,2,4-Trichlorobenzene	0.15	8.4		U
71-55-6	1,1,1-Trichloroethane	0.75	8.4		U
79-00-5	1,1,2-Trichloroethane	0.29	8.4		U
79-01-6	Trichloroethene	0.71	8.4		U
76-13-1	Trichlorotrifluoroethane	0.46	8.4		U
75-69-4	Trichlorofluoromethane	0.80	8.4		U
75-01-4	Vinyl chloride	0.92	8.4		U
1330-20-7	Xylene(total)	0.59	8.4		U

fw
415609

FORM 1
VOLATILE ORGANICS ANALYSIS DATA SHEET

CLIENT SAMPLE NO.

MR08-IS34
3-4-5-09A

36

Lab Name: EMPIRICAL LABS Contract: CH2MHILL

Lab Code: NA Case No.: NA SAS No.: NA SDG No.: LEJEUNE054

Matrix: (soil/water) SOIL Lab Sample ID: 0901189-36

Sample wt/vol: 5.7 (g/mL) G Lab File ID: 0118936A

Level: (low/med) LOW Date Sampled: 01/22/09 12:45

% Moisture: not dec. 8 Date Analyzed: 01/28/09 15:38

GC Column: RTX-VRX ID: 0.25 (mm) Dilution Factor: 1.0

Soil Extract Volume:_____(uL) Soil Aliquot Volume: _____(uL)

CONCENTRATION UNITS: (ug/L or ug/Kg) UG/KG

CAS NO.	COMPOUND	MDL	RL	CONC	Q	
67-64-1	Acetone	1.9	9.6	9.6U ~~9.0~~	~~J~~	B
71-43-2	Benzene	0.45	9.6		U	
75-27-4	Bromodichloromethane	0.29	9.6		U	
75-25-2	Bromoform	0.96	9.6		U	
74-83-9	Bromomethane	0.69	9.6		U	
78-93-3	2-Butanone	1.3	9.6		U	
75-15-0	Carbon disulfide	1.2	9.6		U	
56-23-5	Carbon tetrachloride	0.84	9.6		U	
108-90-7	Chlorobenzene	0.32	9.6		U	
75-00-3	Chloroethane	1.0	9.6		U	
67-66-3	Chloroform	0.53	9.6		U	
74-87-3	Chloromethane	0.50	9.6		U	
110-82-7	Cyclohexane	0.52	9.6		U	
124-48-1	Dibromochloromethane	0.32	9.6		U	
96-12-8	1,2-Dibromo-3-chloropropane	1.1	4.8		U	
106-93-4	1,2-Dibromoethane	0.41	9.6		U	
95-50-1	1,2-Dichlorobenzene	0.35	9.6		U	
541-73-1	1,3-Dichlorobenzene	0.80	9.6		U	
106-46-7	1,4-Dichlorobenzene	0.53	9.6		U	
75-71-8	Dichlorodifluoromethane	1.0	9.6		U	
75-34-3	1,1-Dichloroethane	0.52	9.6		U	
107-06-2	1,2-Dichloroethane	0.44	9.6		U	
75-35-4	1,1-Dichloroethene	1.1	9.6		U	
156-59-2	cis-1,2-Dichloroethene	1.1	9.6		U	
156-60-5	trans-1,2-Dichloroethene	1.0	9.6		U	
78-87-5	1,2-Dichloropropane	0.44	9.6		U	
10061-01-5	cis-1,3-Dichloropropene	0.48	9.6		U	
10061-02-6	trans-1,3-Dichloropropene	0.31	9.6		U	
100-41-4	Ethylbenzene	0.72	9.6		U	
591-78-6	2-Hexanone	2.2	9.6		U	
98-82-8	Isopropylbenzene	0.84	9.6		U	
79-20-9	Methyl acetate	1.5	9.6		U	
75-09-2	Methylene chloride	0.59	9.6	9.6U ~~1.2~~	~~JB~~	B1
108-87-2	Methyl cyclohexane	0.29	9.6		U	
1634-04-4	Methyl tert-butyl ether	0.31	9.6		U	
108-10-1	4-Methyl-2-pentanone	0.56	9.6		U	
100-42-5	Styrene	0.33	9.6		U	
79-34-5	1,1,2,2-Tetrachloroethane	0.41	9.6		U	
127-18-4	Tetrachloroethene	0.93	9.6		U	

FORM I VOA

JeW
4/5/09

FORM 1
VOLATILE ORGANICS ANALYSIS DATA SHEET

CLIENT SAMPLE NO. 36

MR08-IS34
3-4-5-09A

Lab Name: EMPIRICAL LABS Contract: CH2MHILL

Lab Code: NA Case No.: NA SAS No.: NA SDG No.: LEJEUNE054

Matrix: (soil/water) SOIL Lab Sample ID: 0901189-36

Sample wt/vol: 5.7 (g/mL) G Lab File ID: 0118936A

Level: (low/med) LOW Date Sampled: 01/22/09 12:45

% Moisture: not dec. 8 Date Analyzed: 01/28/09 15:38

GC Column: RTX-VRX ID: 0.25 (mm) Dilution Factor: 1.0

Soil Extract Volume:_____(uL) Soil Aliquot Volume: _____(uL)

CONCENTRATION UNITS: (ug/L or ug/Kg) UG/KG

CAS NO.	COMPOUND	MDL	RL	CONC	Q
108-88-3	Toluene	0.82	9.6		U
120-82-1	1,2,4-Trichlorobenzene	0.17	9.6		U
71-55-6	1,1,1-Trichloroethane	0.86	9.6		U
79-00-5	1,1,2-Trichloroethane	0.33	9.6		U
79-01-6	Trichloroethene	0.81	9.6		U
76-13-1	Trichlorotrifluoroethane	0.53	9.6		U
75-69-4	Trichlorofluoromethane	0.91	9.6		U
75-01-4	Vinyl chloride	1.0	9.6		U
1330-20-7	Xylene(total)	0.67	9.6		U

JW
4/5/09

FORM 1
VOLATILE ORGANICS ANALYSIS DATA SHEET

CLIENT SAMPLE NO. 37

MR08-SS342-09A

Lab Name: EMPIRICAL LABS Contract: CH2MHILL

Lab Code: NA Case No.: NA SAS No.: NA SDG No.: LEJEUNE054

Matrix: (soil/water) SOIL Lab Sample ID: 0901189-37

Sample wt/vol: 5.1 (g/mL) G Lab File ID: 0118937A

Level: (low/med) LOW Date Sampled: 01/22/09 13:05

% Moisture: not dec. 24 Date Analyzed: 01/28/09 16:09

GC Column: RTX-VRX ID: 0.25 (mm) Dilution Factor: 1.0

Soil Extract Volume:_____(uL) Soil Aliquot Volume: _____(uL)

CONCENTRATION UNITS: (ug/L or ug/Kg) UG/KG

CAS NO.	COMPOUND	MDL	RL	CONC	Q
67-64-1	Acetone	2.6	13	180	
71-43-2	Benzene	0.60	13		U
75-27-4	Bromodichloromethane	0.38	13		U
75-25-2	Bromoform	1.3	13		U
74-83-9	Bromomethane	0.92	13		U
78-93-3	2-Butanone	1.8	13		U
75-15-0	Carbon disulfide	1.7	13		U
56-23-5	Carbon tetrachloride	1.1	13		U
108-90-7	Chlorobenzene	0.44	13		U
75-00-3	Chloroethane	1.4	13		U
67-66-3	Chloroform	0.70	13		U
74-87-3	Chloromethane	0.66	13		U
110-82-7	Cyclohexane	0.69	13		U
124-48-1	Dibromochloromethane	0.44	13		U
96-12-8	1,2-Dibromo-3-chloropropane	1.5	6.4		U
106-93-4	1,2-Dibromoethane	0.55	13		U
95-50-1	1,2-Dichlorobenzene	0.47	13		U
541-73-1	1,3-Dichlorobenzene	1.1	13		U
106-46-7	1,4-Dichlorobenzene	0.70	13		U
75-71-8	Dichlorodifluoromethane	1.4	13		U
75-34-3	1,1-Dichloroethane	0.69	13		U
107-06-2	1,2-Dichloroethane	0.59	13		U
75-35-4	1,1-Dichloroethene	1.5	13		U
156-59-2	cis-1,2-Dichloroethene	1.5	13		U
156-60-5	trans-1,2-Dichloroethene	1.4	13		U
78-87-5	1,2-Dichloropropane	0.59	13		U
10061-01-5	cis-1,3-Dichloropropene	0.64	13		U
10061-02-6	trans-1,3-Dichloropropene	0.41	13		U
100-41-4	Ethylbenzene	0.96	13		U
591-78-6	2-Hexanone	2.9	13		U
98-82-8	Isopropylbenzene	1.1	13		U
79-20-9	Methyl acetate	2.0	13		U
75-09-2	Methylene chloride	0.79	13	13u ~~1.5~~	~~JB~~ B
108-87-2	Methyl cyclohexane	0.38	13		U
1634-04-4	Methyl tert-butyl ether	0.41	13		U
108-10-1	4-Methyl-2-pentanone	0.74	13		U
100-42-5	Styrene	0.45	13		U
79-34-5	1,1,2,2-Tetrachloroethane	0.55	13		U
127-18-4	Tetrachloroethene	1.2	13		U

FORM I VOA

lw 4/5/09

FORM 1
VOLATILE ORGANICS ANALYSIS DATA SHEET

CLIENT SAMPLE NO. 37

MR08-SS342-09A

Lab Name: EMPIRICAL LABS Contract: CH2MHILL

Lab Code: NA Case No.: NA SAS No.: NA SDG No.: LEJEUNE054

Matrix: (soil/water) SOIL Lab Sample ID: 0901189-37

Sample wt/vol: 5.1 (g/mL) G Lab File ID: 0118937A

Level: (low/med) LOW Date Sampled: 01/22/09 13:05

% Moisture: not dec. 24 Date Analyzed: 01/28/09 16:09

GC Column: RTX-VRX ID: 0.25 (mm) Dilution Factor: 1.0

Soil Extract Volume:_____(uL) Soil Aliquot Volume: _____(uL)

CONCENTRATION UNITS: (ug/L or ug/Kg) UG/KG

CAS NO.	COMPOUND	MDL	RL	CONC	Q
108-88-3	Toluene	1.1	13		U
120-82-1	1,2,4-Trichlorobenzene	0.23	13		U
71-55-6	1,1,1-Trichloroethane	1.2	13		U
79-00-5	1,1,2-Trichloroethane	0.45	13		U
79-01-6	Trichloroethene	1.1	13		U
76-13-1	Trichlorotrifluoroethane	0.70	13		U
75-69-4	Trichlorofluoromethane	1.2	13		U
75-01-4	Vinyl chloride	1.4	13		U
1330-20-7	Xylene(total)	0.90	13		U

hw
41509

FORM 1
VOLATILE ORGANICS ANALYSIS DATA SHEET

CLIENT SAMPLE NO.

MR08-IS34
2-4-5-09A

38

Lab Name: EMPIRICAL LABS Contract: CH2MHILL

Lab Code: NA Case No.: NA SAS No.: NA SDG No.: LEJEUNE054

Matrix: (soil/water) SOIL Lab Sample ID: 0901189-38

Sample wt/vol: 6.3 (g/mL) G Lab File ID: 0118938A

Level: (low/med) LOW Date Sampled: 01/22/09 13:10

% Moisture: not dec. 10 Date Analyzed: 01/28/09 16:40

GC Column: RTX-VRX ID: 0.25 (mm) Dilution Factor: 1.0

Soil Extract Volume:_____(uL) Soil Aliquot Volume: _____(uL)

CONCENTRATION UNITS: (ug/L or ug/Kg) UG/KG

CAS NO.	COMPOUND	MDL	RL	CONC	Q
67-64-1	Acetone	1.8	8.9	45	
71-43-2	Benzene	0.42	8.9		U
75-27-4	Bromodichloromethane	0.27	8.9		U
75-25-2	Bromoform	0.89	8.9		U
74-83-9	Bromomethane	0.64	8.9		U
78-93-3	2-Butanone	1.2	8.9		U
75-15-0	Carbon disulfide	1.2	8.9		U
56-23-5	Carbon tetrachloride	0.78	8.9		U
108-90-7	Chlorobenzene	0.30	8.9		U
75-00-3	Chloroethane	0.98	8.9		U
67-66-3	Chloroform	0.49	8.9		U
74-87-3	Chloromethane	0.46	8.9		U
110-82-7	Cyclohexane	0.48	8.9		U
124-48-1	Dibromochloromethane	0.30	8.9		U
96-12-8	1,2-Dibromo-3-chloropropane	1.1	4.4		U
106-93-4	1,2-Dibromoethane	0.38	8.9		U
95-50-1	1,2-Dichlorobenzene	0.33	8.9		U
541-73-1	1,3-Dichlorobenzene	0.74	8.9		U
106-46-7	1,4-Dichlorobenzene	0.49	8.9		U
75-71-8	Dichlorodifluoromethane	0.98	8.9		U
75-34-3	1,1-Dichloroethane	0.48	8.9		U
107-06-2	1,2-Dichloroethane	0.41	8.9		U
75-35-4	1,1-Dichloroethene	1.1	8.9		U
156-59-2	cis-1,2-Dichloroethene	1.1	8.9		U
156-60-5	trans-1,2-Dichloroethene	0.98	8.9		U
78-87-5	1,2-Dichloropropane	0.41	8.9		U
10061-01-5	cis-1,3-Dichloropropene	0.44	8.9		U
10061-02-6	trans-1,3-Dichloropropene	0.28	8.9		U
100-41-4	Ethylbenzene	0.66	8.9		U
591-78-6	2-Hexanone	2.0	8.9		U
98-82-8	Isopropylbenzene	0.78	8.9		U
79-20-9	Methyl acetate	1.4	8.9		U
75-09-2	Methylene chloride	0.55	8.9	8.9u ~~1.3~~	~~JB~~ B
108-87-2	Methyl cyclohexane	0.27	8.9		U
1634-04-4	Methyl tert-butyl ether	0.28	8.9		U
108-10-1	4-Methyl-2-pentanone	0.51	8.9		U
100-42-5	Styrene	0.31	8.9		U
79-34-5	1,1,2,2-Tetrachloroethane	0.38	8.9		U
127-18-4	Tetrachloroethene	0.86	8.9		U

FORM I VOA

lee 9/15/09

FORM 1
VOLATILE ORGANICS ANALYSIS DATA SHEET

CLIENT SAMPLE NO. 38

MR08-IS34
2-4-5-09A

Lab Name: EMPIRICAL LABS Contract: CH2MHILL

Lab Code: NA Case No.: NA SAS No.: NA SDG No.: LEJEUNE054

Matrix: (soil/water) SOIL Lab Sample ID: 0901189-38

Sample wt/vol: 6.3 (g/mL) G Lab File ID: 0118938A

Level: (low/med) LOW Date Sampled: 01/22/09 13:10

% Moisture: not dec. 10 Date Analyzed: 01/28/09 16:40

GC Column: RTX-VRX ID: 0.25 (mm) Dilution Factor: 1.0

Soil Extract Volume:_____(uL) Soil Aliquot Volume: _____(uL)

CONCENTRATION UNITS: (ug/L or ug/Kg) UG/KG

CAS NO.	COMPOUND	MDL	RL	CONC	Q
108-88-3	Toluene	0.76	8.9		U
120-82-1	1,2,4-Trichlorobenzene	0.16	8.9		U
71-55-6	1,1,1-Trichloroethane	0.80	8.9		U
79-00-5	1,1,2-Trichloroethane	0.31	8.9		U
79-01-6	Trichloroethene	0.75	8.9		U
76-13-1	Trichlorotrifluoroethane	0.49	8.9		U
75-69-4	Trichlorofluoromethane	0.84	8.9		U
75-01-4	Vinyl chloride	0.98	8.9		U
1330-20-7	Xylene(total)	0.62	8.9		U

LW
4/5/09

FORM 1
VOLATILE ORGANICS ANALYSIS DATA SHEET

CLIENT SAMPLE NO. 39

MR08-IS34
1-4-5-09A

Lab Name: EMPIRICAL LABS Contract: CH2MHILL

Lab Code: NA Case No.: NA SAS No.: NA SDG No.: LEJEUNE054

Matrix: (soil/water) SOIL Lab Sample ID: 0901189-39

Sample wt/vol: 5.3 (g/mL) G Lab File ID: 0118939A

Level: (low/med) LOW Date Sampled: 01/22/09 13:30

% Moisture: not dec. 9 Date Analyzed: 01/28/09 17:11

GC Column: RTX-VRX ID: 0.25 (mm) Dilution Factor: 1.0

Soil Extract Volume:_____(uL) Soil Aliquot Volume: _____(uL)

CONCENTRATION UNITS: (ug/L or ug/Kg) UG/KG

CAS NO.	COMPOUND	MDL	RL	CONC	Q
67-64-1	Acetone	2.1	10		U
71-43-2	Benzene	0.49	10		U
75-27-4	Bromodichloromethane	0.31	10		U
75-25-2	Bromoform	1.0	10		U
74-83-9	Bromomethane	0.75	10		U
78-93-3	2-Butanone	1.4	10		U
75-15-0	Carbon disulfide	1.4	10		U
56-23-5	Carbon tetrachloride	0.92	10		U
108-90-7	Chlorobenzene	0.35	10		U
75-00-3	Chloroethane	1.1	10		U
67-66-3	Chloroform	0.57	10		U
74-87-3	Chloromethane	0.54	10		U
110-82-7	Cyclohexane	0.56	10		U
124-48-1	Dibromochloromethane	0.35	10		U
96-12-8	1,2-Dibromo-3-chloropropane	1.2	5.2		U
106-93-4	1,2-Dibromoethane	0.45	10		U
95-50-1	1,2-Dichlorobenzene	0.38	10		U
541-73-1	1,3-Dichlorobenzene	0.87	10		U
106-46-7	1,4-Dichlorobenzene	0.57	10		U
75-71-8	Dichlorodifluoromethane	1.1	10		U
75-34-3	1,1-Dichloroethane	0.56	10		U
107-06-2	1,2-Dichloroethane	0.48	10		U
75-35-4	1,1-Dichloroethene	1.2	10		U
156-59-2	cis-1,2-Dichloroethene	1.2	10		U
156-60-5	trans-1,2-Dichloroethene	1.1	10		U
78-87-5	1,2-Dichloropropane	0.48	10		U
10061-01-5	cis-1,3-Dichloropropene	0.52	10		U
10061-02-6	trans-1,3-Dichloropropene	0.33	10		U
100-41-4	Ethylbenzene	0.78	10		U
591-78-6	2-Hexanone	2.4	10		U
98-82-8	Isopropylbenzene	0.92	10		U
79-20-9	Methyl acetate	1.7	10		U
75-09-2	Methylene chloride	0.64	10	10U ~~1.3 JB~~	B
108-87-2	Methyl cyclohexane	0.31	10		U
1634-04-4	Methyl tert-butyl ether	0.33	10		U
108-10-1	4-Methyl-2-pentanone	0.60	10		U
100-42-5	Styrene	0.36	10		U
79-34-5	1,1,2,2-Tetrachloroethane	0.45	10		U
127-18-4	Tetrachloroethene	1.0	10		U

FORM I VOA

lw 4/5/09

FORM 1
VOLATILE ORGANICS ANALYSIS DATA SHEET

CLIENT SAMPLE NO. 39

MR08-IS34
1-4-5-09A

Lab Name: EMPIRICAL LABS Contract: CH2MHILL

Lab Code: NA Case No.: NA SAS No.: NA SDG No.: LEJEUNE054

Matrix: (soil/water) SOIL Lab Sample ID: 0901189-39

Sample wt/vol: 5.3 (g/mL) G Lab File ID: 0118939A

Level: (low/med) LOW Date Sampled: 01/22/09 13:30

% Moisture: not dec. 9 Date Analyzed: 01/28/09 17:11

GC Column: RTX-VRX ID: 0.25 (mm) Dilution Factor: 1.0

Soil Extract Volume:_____(uL) Soil Aliquot Volume: _____(uL)

CONCENTRATION UNITS: (ug/L or ug/Kg) UG/KG

CAS NO.	COMPOUND	MDL	RL	CONC	Q
108-88-3	Toluene	0.89	10		U
120-82-1	1,2,4-Trichlorobenzene	0.19	10		U
71-55-6	1,1,1-Trichloroethane	0.94	10		U
79-00-5	1,1,2-Trichloroethane	0.36	10		U
79-01-6	Trichloroethene	0.88	10		U
76-13-1	Trichlorotrifluoroethane	0.57	10		U
75-69-4	Trichlorofluoromethane	0.99	10		U
75-01-4	Vinyl chloride	1.1	10		U
1330-20-7	Xylene(total)	0.73	10		U

lw
4/5/09

FORM 1
VOLATILE ORGANICS ANALYSIS DATA SHEET

CLIENT SAMPLE NO. 40

MR08-SS341-09A

Lab Name: EMPIRICAL LABS Contract: CH2MHILL

Lab Code: NA Case No.: NA SAS No.: NA SDG No.: LEJEUNE054

Matrix: (soil/water) SOIL Lab Sample ID: 0901189-40

Sample wt/vol: 5.3 (g/mL) G Lab File ID: 0118940A

Level: (low/med) LOW Date Sampled: 01/22/09 13:35

% Moisture: not dec. 17 Date Analyzed: 01/28/09 17:41

GC Column: RTX-VRX ID: 0.25 (mm) Dilution Factor: 1.0

Soil Extract Volume:_____(uL) Soil Aliquot Volume: _____(uL)

CONCENTRATION UNITS: (ug/L or ug/Kg) UG/KG

CAS NO.	COMPOUND	MDL	RL	CONC	Q
67-64-1	Acetone	2.3	11	260	
71-43-2	Benzene	0.54	11		U
75-27-4	Bromodichloromethane	0.34	11		U
75-25-2	Bromoform	1.1	11		U
74-83-9	Bromomethane	0.82	11		U
78-93-3	2-Butanone	1.6	11		U
75-15-0	Carbon disulfide	1.5	11		U
56-23-5	Carbon tetrachloride	1.0	11		U
108-90-7	Chlorobenzene	0.39	11		U
75-00-3	Chloroethane	1.3	11		U
67-66-3	Chloroform	0.63	11		U
74-87-3	Chloromethane	0.60	11		U
110-82-7	Cyclohexane	0.62	11		U
124-48-1	Dibromochloromethane	0.39	11		U
96-12-8	1,2-Dibromo-3-chloropropane	1.4	5.7		U
106-93-4	1,2-Dibromoethane	0.49	11		U
95-50-1	1,2-Dichlorobenzene	0.42	11		U
541-73-1	1,3-Dichlorobenzene	0.96	11		U
106-46-7	1,4-Dichlorobenzene	0.63	11		U
75-71-8	Dichlorodifluoromethane	1.3	11		U
75-34-3	1,1-Dichloroethane	0.62	11		U
107-06-2	1,2-Dichloroethane	0.53	11		U
75-35-4	1,1-Dichloroethene	1.4	11		U
156-59-2	cis-1,2-Dichloroethene	1.4	11		U
156-60-5	trans-1,2-Dichloroethene	1.3	11		U
78-87-5	1,2-Dichloropropane	0.53	11		U
10061-01-5	cis-1,3-Dichloropropene	0.57	11		U
10061-02-6	trans-1,3-Dichloropropene	0.37	11		U
100-41-4	Ethylbenzene	0.86	11		U
591-78-6	2-Hexanone	2.6	11		U
98-82-8	Isopropylbenzene	1.0	11		U
79-20-9	Methyl acetate	1.8	11		U
75-09-2	Methylene chloride	0.71	11	11u	~~1.5 JB~~
108-87-2	Methyl cyclohexane	0.34	11		U
1634-04-4	Methyl tert-butyl ether	0.37	11		U
108-10-1	4-Methyl-2-pentanone	0.66	11		U
100-42-5	Styrene	0.40	11		U
79-34-5	1,1,2,2-Tetrachloroethane	0.49	11		U
127-18-4	Tetrachloroethene	1.1	11		U

FORM I VOA

LEW 4/5/09

FORM 1
VOLATILE ORGANICS ANALYSIS DATA SHEET

CLIENT SAMPLE NO. 40

MR08-SS341-09A

Lab Name: EMPIRICAL LABS Contract: CH2MHILL

Lab Code: NA Case No.: NA SAS No.: NA SDG No.: LEJEUNE054

Matrix: (soil/water) SOIL Lab Sample ID: 0901189-40

Sample wt/vol: 5.3 (g/mL) G Lab File ID: 0118940A

Level: (low/med) LOW Date Sampled: 01/22/09 13:35

% Moisture: not dec. 17 Date Analyzed: 01/28/09 17:41

GC Column: RTX-VRX ID: 0.25 (mm) Dilution Factor: 1.0

Soil Extract Volume:_____(uL) Soil Aliquot Volume: _____(uL)

CONCENTRATION UNITS: (ug/L or ug/Kg) UG/KG

CAS NO.	COMPOUND	MDL	RL	CONC	Q
108-88-3	Toluene	0.98	11		U
120-82-1	1,2,4-Trichlorobenzene	0.21	11		U
71-55-6	1,1,1-Trichloroethane	1.0	11		U
79-00-5	1,1,2-Trichloroethane	0.40	11		U
79-01-6	Trichloroethene	0.97	11		U
76-13-1	Trichlorotrifluoroethane	0.63	11		U
75-69-4	Trichlorofluoromethane	1.1	11		U
75-01-4	Vinyl chloride	1.3	11		U
1330-20-7	Xylene(total)	0.80	11		U

JCW
4/15/09

FORM 1
VOLATILE ORGANICS ANALYSIS DATA SHEET

CLIENT SAMPLE NO. 41

MR08-SS340-09A

Lab Name: EMPIRICAL LABS Contract: CH2MHILL

Lab Code: NA Case No.: NA SAS No.: NA SDG No.: LEJEUNE054

Matrix: (soil/water) SOIL Lab Sample ID: 0901189-41

Sample wt/vol: 5.3 (g/mL) G Lab File ID: 0118941A

Level: (low/med) LOW Date Sampled: 01/22/09 14:15

% Moisture: not dec. 23 Date Analyzed: 01/28/09 18:12

GC Column: RTX-VRX ID: 0.25 (mm) Dilution Factor: 1.0

Soil Extract Volume:_____(uL) Soil Aliquot Volume: _____(uL)

CONCENTRATION UNITS: (ug/L or ug/Kg) UG/KG

CAS NO.	COMPOUND	MDL	RL	CONC	Q
67-64-1	Acetone	2.4	12		U
71-43-2	Benzene	0.58	12		U
75-27-4	Bromodichloromethane	0.37	12		U
75-25-2	Bromoform	1.2	12		U
74-83-9	Bromomethane	0.88	12		U
78-93-3	2-Butanone	1.7	12	10	J
75-15-0	Carbon disulfide	1.6	12		U
56-23-5	Carbon tetrachloride	1.1	12		U
108-90-7	Chlorobenzene	0.42	12		U
75-00-3	Chloroethane	1.4	12		U
67-66-3	Chloroform	0.68	12		U
74-87-3	Chloromethane	0.64	12		U
110-82-7	Cyclohexane	0.66	12		U
124-48-1	Dibromochloromethane	0.42	12		U
96-12-8	1,2-Dibromo-3-chloropropane	1.5	6.1		U
106-93-4	1,2-Dibromoethane	0.53	12		U
95-50-1	1,2-Dichlorobenzene	0.46	12		U
541-73-1	1,3-Dichlorobenzene	1.0	12		U
106-46-7	1,4-Dichlorobenzene	0.68	12		U
75-71-8	Dichlorodifluoromethane	1.4	12		U
75-34-3	1,1-Dichloroethane	0.66	12		U
107-06-2	1,2-Dichloroethane	0.56	12		U
75-35-4	1,1-Dichloroethene	1.5	12		U
156-59-2	cis-1,2-Dichloroethene	1.5	12		U
156-60-5	trans-1,2-Dichloroethene	1.4	12		U
78-87-5	1,2-Dichloropropane	0.56	12		U
10061-01-5	cis-1,3-Dichloropropene	0.61	12		U
10061-02-6	trans-1,3-Dichloropropene	0.39	12		U
100-41-4	Ethylbenzene	0.92	12		U
591-78-6	2-Hexanone	2.8	12		U
98-82-8	Isopropylbenzene	1.1	12		U
79-20-9	Methyl acetate	2.0	12		U
75-09-2	Methylene chloride	0.76	12	12u ~~1.2~~	~~JB~~ B
108-87-2	Methyl cyclohexane	0.37	12		U
1634-04-4	Methyl tert-butyl ether	0.39	12		U
108-10-1	4-Methyl-2-pentanone	0.71	12		U
100-42-5	Styrene	0.43	12		U
79-34-5	1,1,2,2-Tetrachloroethane	0.53	12		U
127-18-4	Tetrachloroethene	1.2	12		U

FORM I VOA

LCW
4/15/09

FORM 1
VOLATILE ORGANICS ANALYSIS DATA SHEET

CLIENT SAMPLE NO. 41

MR08-SS340-09A

Lab Name: EMPIRICAL LABS Contract: CH2MHILL

Lab Code: NA Case No.: NA SAS No.: NA SDG No.: LEJEUNE054

Matrix: (soil/water) SOIL Lab Sample ID: 0901189-41

Sample wt/vol: 5.3 (g/mL) G Lab File ID: 0118941A

Level: (low/med) LOW Date Sampled: 01/22/09 14:15

% Moisture: not dec. 23 Date Analyzed: 01/28/09 18:12

GC Column: RTX-VRX ID: 0.25 (mm) Dilution Factor: 1.0

Soil Extract Volume:_____(uL) Soil Aliquot Volume: _____(uL)

CONCENTRATION UNITS: (ug/L or ug/Kg) UG/KG

CAS NO.	COMPOUND	MDL	RL	CONC	Q
108-88-3	Toluene	1.0	12		U
120-82-1	1,2,4-Trichlorobenzene	0.22	12		U
71-55-6	1,1,1-Trichloroethane	1.1	12		U
79-00-5	1,1,2-Trichloroethane	0.43	12		U
79-01-6	Trichloroethene	1.0	12		U
76-13-1	Trichlorotrifluoroethane	0.68	12		U
75-69-4	Trichlorofluoromethane	1.2	12		U
75-01-4	Vinyl chloride	1.4	12		U
1330-20-7	Xylene(total)	0.86	12		U

NO
4/8/09

FORM 1
VOLATILE ORGANICS ANALYSIS DATA SHEET

CLIENT SAMPLE NO. 42

MR08-IS34
0-4-5-09A

Lab Name: EMPIRICAL LABS Contract: CH2MHILL

Lab Code: NA Case No.: NA SAS No.: NA SDG No.: LEJEUNE054

Matrix: (soil/water) SOIL Lab Sample ID: 0901189-42

Sample wt/vol: 6.9 (g/mL) G Lab File ID: 0118942A

Level: (low/med) LOW Date Sampled: 01/22/09 14:20

% Moisture: not dec. 12 Date Analyzed: 01/28/09 18:43

GC Column: RTX-VRX ID: 0.25 (mm) Dilution Factor: 1.0

Soil Extract Volume:_____(uL) Soil Aliquot Volume: _____(uL)

CONCENTRATION UNITS: (ug/L or ug/Kg) UG/KG

CAS NO.	COMPOUND	MDL	RL	CONC	Q
67-64-1	Acetone	1.6	8.3	29	
71-43-2	Benzene	0.39	8.3		U
75-27-4	Bromodichloromethane	0.25	8.3		U
75-25-2	Bromoform	0.83	8.3		U
74-83-9	Bromomethane	0.60	8.3		U
78-93-3	2-Butanone	1.2	8.3		U
75-15-0	Carbon disulfide	1.1	8.3		U
56-23-5	Carbon tetrachloride	0.73	8.3		U
108-90-7	Chlorobenzene	0.28	8.3		U
75-00-3	Chloroethane	0.91	8.3		U
67-66-3	Chloroform	0.45	8.3		U
74-87-3	Chloromethane	0.43	8.3		U
110-82-7	Cyclohexane	0.45	8.3		U
124-48-1	Dibromochloromethane	0.28	8.3		U
96-12-8	1,2-Dibromo-3-chloropropane	0.99	4.1		U
106-93-4	1,2-Dibromoethane	0.36	8.3		U
95-50-1	1,2-Dichlorobenzene	0.31	8.3		U
541-73-1	1,3-Dichlorobenzene	0.69	8.3		U
106-46-7	1,4-Dichlorobenzene	0.45	8.3		U
75-71-8	Dichlorodifluoromethane	0.91	8.3		U
75-34-3	1,1-Dichloroethane	0.45	8.3		U
107-06-2	1,2-Dichloroethane	0.38	8.3		U
75-35-4	1,1-Dichloroethene	0.99	8.3		U
156-59-2	cis-1,2-Dichloroethene	0.99	8.3		U
156-60-5	trans-1,2-Dichloroethene	0.91	8.3		U
78-87-5	1,2-Dichloropropane	0.38	8.3		U
10061-01-5	cis-1,3-Dichloropropene	0.41	8.3		U
10061-02-6	trans-1,3-Dichloropropene	0.26	8.3		U
100-41-4	Ethylbenzene	0.62	8.3		U
591-78-6	2-Hexanone	1.9	8.3		U
98-82-8	Isopropylbenzene	0.73	8.3		U
79-20-9	Methyl acetate	1.3	8.3		U
75-09-2	Methylene chloride	0.51	8.3	8.3u ~~1.2 JB~~	B
108-87-2	Methyl cyclohexane	0.25	8.3		U
1634-04-4	Methyl tert-butyl ether	0.26	8.3		U
108-10-1	4-Methyl-2-pentanone	0.48	8.3		U
100-42-5	Styrene	0.29	8.3		U
79-34-5	1,1,2,2-Tetrachloroethane	0.36	8.3		U
127-18-4	Tetrachloroethene	0.80	8.3		U

FORM I VOA

lw
4/15/09

FORM 1
VOLATILE ORGANICS ANALYSIS DATA SHEET

CLIENT SAMPLE NO. 42

MR08-IS34
0-4-5-09A

Lab Name: EMPIRICAL LABS Contract: CH2MHILL

Lab Code: NA Case No.: NA SAS No.: NA SDG No.: LEJEUNE054

Matrix: (soil/water) SOIL Lab Sample ID: 0901189-42

Sample wt/vol: 6.9 (g/mL) G Lab File ID: 0118942A

Level: (low/med) LOW Date Sampled: 01/22/09 14:20

% Moisture: not dec. 12 Date Analyzed: 01/28/09 18:43

GC Column: RTX-VRX ID: 0.25 (mm) Dilution Factor: 1.0

Soil Extract Volume:_____(uL) Soil Aliquot Volume: _____(uL)

CONCENTRATION UNITS: (ug/L or ug/Kg) UG/KG

CAS NO.	COMPOUND	MDL	RL	CONC	Q
108-88-3	Toluene	0.71	8.3		U
120-82-1	1,2,4-Trichlorobenzene	0.15	8.3		U
71-55-6	1,1,1-Trichloroethane	0.74	8.3		U
79-00-5	1,1,2-Trichloroethane	0.29	8.3		U
79-01-6	Trichloroethene	0.70	8.3		U
76-13-1	Trichlorotrifluoroethane	0.45	8.3		U
75-69-4	Trichlorofluoromethane	0.78	8.3		U
75-01-4	Vinyl chloride	0.91	8.3		U
1330-20-7	Xylene(total)	0.58	8.3		U

lew 4/5/09

FORM 1
VOLATILE ORGANICS ANALYSIS DATA SHEET

CLIENT SAMPLE NO. 43

MR08-SS339-09A

Lab Name: EMPIRICAL LABS Contract: CH2MHILL

Lab Code: NA Case No.: NA SAS No.: NA SDG No.: LEJEUNE054

Matrix: (soil/water) SOIL Lab Sample ID: 0901189-43

Sample wt/vol: 3.9 (g/mL) G Lab File ID: 0118943A

Level: (low/med) LOW Date Sampled: 01/22/09 14:35

% Moisture: not dec. 21 Date Analyzed: 01/28/09 19:14

GC Column: RTX-VRX ID: 0.25 (mm) Dilution Factor: 1.0

Soil Extract Volume:_____(uL) Soil Aliquot Volume: _____(uL)

CONCENTRATION UNITS: (ug/L or ug/Kg) UG/KG

CAS NO.	COMPOUND	MDL	RL	CONC	Q	
67-64-1	Acetone	3.3	16	89	J	SSH
71-43-2	Benzene	0.77	16		U	
75-27-4	Bromodichloromethane	0.49	16		U	
75-25-2	Bromoform	1.6	16		U	
74-83-9	Bromomethane	1.2	16		U	
78-93-3	2-Butanone	2.3	16		U	
75-15-0	Carbon disulfide	2.1	16		U	
56-23-5	Carbon tetrachloride	1.4	16		U	
108-90-7	Chlorobenzene	0.55	16		U	
75-00-3	Chloroethane	1.8	16		U	
67-66-3	Chloroform	0.90	16		U	
74-87-3	Chloromethane	0.85	16		U	
110-82-7	Cyclohexane	0.88	16		U	
124-48-1	Dibromochloromethane	0.55	16		U	
96-12-8	1,2-Dibromo-3-chloropropane	2.0	8.2		U	
106-93-4	1,2-Dibromoethane	0.70	16		U	
95-50-1	1,2-Dichlorobenzene	0.60	16		U	
541-73-1	1,3-Dichlorobenzene	1.4	16		U	
106-46-7	1,4-Dichlorobenzene	0.90	16		U	
75-71-8	Dichlorodifluoromethane	1.8	16		U	
75-34-3	1,1-Dichloroethane	0.88	16		U	
107-06-2	1,2-Dichloroethane	0.75	16		U	
75-35-4	1,1-Dichloroethene	2.0	16		U	
156-59-2	cis-1,2-Dichloroethene	2.0	16		U	
156-60-5	trans-1,2-Dichloroethene	1.8	16		U	
78-87-5	1,2-Dichloropropane	0.75	16		U	
10061-01-5	cis-1,3-Dichloropropene	0.82	16		U	
10061-02-6	trans-1,3-Dichloropropene	0.52	16		U	
100-41-4	Ethylbenzene	1.2	16		U	
591-78-6	2-Hexanone	3.8	16		U	
98-82-8	Isopropylbenzene	1.4	16		U	
79-20-9	Methyl acetate	2.6	16		U	
75-09-2	Methylene chloride	1.0	16	164	~~2.3 JB~~	B1
108-87-2	Methyl cyclohexane	0.49	16		U	
1634-04-4	Methyl tert-butyl ether	0.52	16		U	
108-10-1	4-Methyl-2-pentanone	0.95	16		U	
100-42-5	Styrene	0.57	16		U	
79-34-5	1,1,2,2-Tetrachloroethane	0.70	16		U	
127-18-4	Tetrachloroethene	1.6	16		U	

FORM I VOA

4/5/09

FORM 1
VOLATILE ORGANICS ANALYSIS DATA SHEET

CLIENT SAMPLE NO. 43

MR08-SS339-09A

Lab Name: EMPIRICAL LABS Contract: CH2MHILL

Lab Code: NA Case No.: NA SAS No.: NA SDG No.: LEJEUNE054

Matrix: (soil/water) SOIL Lab Sample ID: 0901189-43

Sample wt/vol: 3.9 (g/mL) G Lab File ID: 0118943A

Level: (low/med) LOW Date Sampled: 01/22/09 14:35

% Moisture: not dec. 21 Date Analyzed: 01/28/09 19:14

GC Column: RTX-VRX ID: 0.25 (mm) Dilution Factor: 1.0

Soil Extract Volume:_____(uL) Soil Aliquot Volume: _____(uL)

CONCENTRATION UNITS: (ug/L or ug/Kg) UG/KG

CAS NO.	COMPOUND	MDL	RL	CONC	Q
108-88-3	Toluene	1.4	16		U
120-82-1	1,2,4-Trichlorobenzene	0.29	16		U
71-55-6	1,1,1-Trichloroethane	1.5	16		U
79-00-5	1,1,2-Trichloroethane	0.57	16		U
79-01-6	Trichloroethene	1.4	16		U
76-13-1	Trichlorotrifluoroethane	0.90	16		U
75-69-4	Trichlorofluoromethane	1.5	16		U
75-01-4	Vinyl chloride	1.8	16		U
1330-20-7	Xylene(total)	1.1	16		U

lew 4/5/09

FORM 1
VOLATILE ORGANICS ANALYSIS DATA SHEET

CLIENT SAMPLE NO.

44

MR08-IS33
9-4-5-09A

Lab Name: EMPIRICAL LABS Contract: CH2MHILL

Lab Code: NA Case No.: NA SAS No.: NA SDG No.: LEJEUNE054

Matrix: (soil/water) SOIL Lab Sample ID: 0901189-44

Sample wt/vol: 5.5 (g/mL) G Lab File ID: 0118944A

Level: (low/med) LOW Date Sampled: 01/22/09 14:30

% Moisture: not dec. 8 Date Analyzed: 01/28/09 19:45

GC Column: RTX-VRX ID: 0.25 (mm) Dilution Factor: 1.0

Soil Extract Volume:_____(uL) Soil Aliquot Volume: _____(uL)

CONCENTRATION UNITS: (ug/L or ug/Kg) UG/KG

CAS NO.	COMPOUND	MDL	RL	CONC	Q
67-64-1	Acetone	2.0	10		U
71-43-2	Benzene	0.47	10		U
75-27-4	Bromodichloromethane	0.30	10		U
75-25-2	Bromoform	1.00	10		U
74-83-9	Bromomethane	0.72	10		U
78-93-3	2-Butanone	1.4	10		U
75-15-0	Carbon disulfide	1.3	10		U
56-23-5	Carbon tetrachloride	0.88	10		U
108-90-7	Chlorobenzene	0.34	10		U
75-00-3	Chloroethane	1.1	10		U
67-66-3	Chloroform	0.55	10		U
74-87-3	Chloromethane	0.52	10		U
110-82-7	Cyclohexane	0.54	10		U
124-48-1	Dibromochloromethane	0.34	10		U
96-12-8	1,2-Dibromo-3-chloropropane	1.2	5.0		U
106-93-4	1,2-Dibromoethane	0.43	10		U
95-50-1	1,2-Dichlorobenzene	0.37	10		U
541-73-1	1,3-Dichlorobenzene	0.84	10		U
106-46-7	1,4-Dichlorobenzene	0.55	10		U
75-71-8	Dichlorodifluoromethane	1.1	10		U
75-34-3	1,1-Dichloroethane	0.54	10		U
107-06-2	1,2-Dichloroethane	0.46	10		U
75-35-4	1,1-Dichloroethene	1.2	10		U
156-59-2	cis-1,2-Dichloroethene	1.2	10		U
156-60-5	trans-1,2-Dichloroethene	1.1	10		U
78-87-5	1,2-Dichloropropane	0.46	10		U
10061-01-5	cis-1,3-Dichloropropene	0.50	10		U
10061-02-6	trans-1,3-Dichloropropene	0.32	10		U
100-41-4	Ethylbenzene	0.75	10		U
591-78-6	2-Hexanone	2.3	10		U
98-82-8	Isopropylbenzene	0.88	10		U
79-20-9	Methyl acetate	1.6	10		U
75-09-2	Methylene chloride	0.62	10	10U	~~1.4 JB~~ B
108-87-2	Methyl cyclohexane	0.30	10		U
1634-04-4	Methyl tert-butyl ether	0.32	10		U
108-10-1	4-Methyl-2-pentanone	0.58	10		U
100-42-5	Styrene	0.35	10		U
79-34-5	1,1,2,2-Tetrachloroethane	0.43	10		U
127-18-4	Tetrachloroethene	0.97	10		U

FORM I VOA

RW 4/5/09

FORM 1
VOLATILE ORGANICS ANALYSIS DATA SHEET

CLIENT SAMPLE NO. 44

MR08-IS33
9-4-5-09A

Lab Name: EMPIRICAL LABS Contract: CH2MHILL

Lab Code: NA Case No.: NA SAS No.: NA SDG No.: LEJEUNE054

Matrix: (soil/water) SOIL Lab Sample ID: 0901189-44

Sample wt/vol: 5.5 (g/mL) G Lab File ID: 0118944A

Level: (low/med) LOW Date Sampled: 01/22/09 14:30

% Moisture: not dec. 8 Date Analyzed: 01/28/09 19:45

GC Column: RTX-VRX ID: 0.25 (mm) Dilution Factor: 1.0

Soil Extract Volume:_____(uL) Soil Aliquot Volume: _____(uL)

CONCENTRATION UNITS: (ug/L or ug/Kg) UG/KG

CAS NO.	COMPOUND	MDL	RL	CONC	Q
108-88-3	Toluene	0.86	10		U
120-82-1	1,2,4-Trichlorobenzene	0.18	10		U
71-55-6	1,1,1-Trichloroethane	0.90	10		U
79-00-5	1,1,2-Trichloroethane	0.35	10		U
79-01-6	Trichloroethene	0.85	10		U
76-13-1	Trichlorotrifluoroethane	0.55	10		U
75-69-4	Trichlorofluoromethane	0.95	10		U
75-01-4	Vinyl chloride	1.1	10		U
1330-20-7	Xylene(total)	0.70	10		U

DEW
4/15/09

FORM 1
VOLATILE ORGANICS ANALYSIS DATA SHEET

CLIENT SAMPLE NO. 45

MR08-SS338-09A

Lab Name: EMPIRICAL LABS Contract: CH2MHILL

Lab Code: NA Case No.: NA SAS No.: NA SDG No.: LEJEUNE054

Matrix: (soil/water) SOIL Lab Sample ID: 0901189-45

Sample wt/vol: 6.0 (g/mL) G Lab File ID: 0118945A

Level: (low/med) LOW Date Sampled: 01/22/09 16:00

% Moisture: not dec. 0 Date Analyzed: 01/28/09 20:16

GC Column: RTX-VRX ID: 0.25 (mm) Dilution Factor: 1.0

Soil Extract Volume:_____(uL) Soil Aliquot Volume: _____(uL)

CONCENTRATION UNITS: (ug/L or ug/Kg) UG/KG

CAS NO.	COMPOUND	MDL	RL	CONC	Q
67-64-1	Acetone	1.6	8.3		U
71-43-2	Benzene	0.39	8.3		U
75-27-4	Bromodichloromethane	0.25	8.3		U
75-25-2	Bromoform	0.83	8.3		U
74-83-9	Bromomethane	0.60	8.3		U
78-93-3	2-Butanone	1.2	8.3		U
75-15-0	Carbon disulfide	1.1	8.3		U
56-23-5	Carbon tetrachloride	0.73	8.3		U
108-90-7	Chlorobenzene	0.28	8.3		U
75-00-3	Chloroethane	0.91	8.3		U
67-66-3	Chloroform	0.46	8.3		U
74-87-3	Chloromethane	0.43	8.3		U
110-82-7	Cyclohexane	0.45	8.3		U
124-48-1	Dibromochloromethane	0.28	8.3		U
96-12-8	1,2-Dibromo-3-chloropropane	1.00	4.1		U
106-93-4	1,2-Dibromoethane	0.36	8.3		U
95-50-1	1,2-Dichlorobenzene	0.31	8.3		U
541-73-1	1,3-Dichlorobenzene	0.70	8.3		U
106-46-7	1,4-Dichlorobenzene	0.46	8.3		U
75-71-8	Dichlorodifluoromethane	0.91	8.3		U
75-34-3	1,1-Dichloroethane	0.45	8.3		U
107-06-2	1,2-Dichloroethane	0.38	8.3		U
75-35-4	1,1-Dichloroethene	1.00	8.3		U
156-59-2	cis-1,2-Dichloroethene	1.00	8.3		U
156-60-5	trans-1,2-Dichloroethene	0.91	8.3		U
78-87-5	1,2-Dichloropropane	0.38	8.3		U
10061-01-5	cis-1,3-Dichloropropene	0.41	8.3		U
10061-02-6	trans-1,3-Dichloropropene	0.26	8.3		U
100-41-4	Ethylbenzene	0.62	8.3		U
591-78-6	2-Hexanone	1.9	8.3		U
98-82-8	Isopropylbenzene	0.73	8.3		U
79-20-9	Methyl acetate	1.3	8.3		U
75-09-2	Methylene chloride	0.51	8.3	8.3u ~~1.1~~	~~JB~~ B
108-87-2	Methyl cyclohexane	0.25	8.3		U
1634-04-4	Methyl tert-butyl ether	0.26	8.3		U
108-10-1	4-Methyl-2-pentanone	0.48	8.3		U
100-42-5	Styrene	0.29	8.3		U
79-34-5	1,1,2,2-Tetrachloroethane	0.36	8.3		U
127-18-4	Tetrachloroethene	0.80	8.3		U

FORM I VOA

LW 4/5/09

FORM 1
VOLATILE ORGANICS ANALYSIS DATA SHEET

CLIENT SAMPLE NO.

45

MR08-SS338-09A

Lab Name: EMPIRICAL LABS Contract: CH2MHILL

Lab Code: NA Case No.: NA SAS No.: NA SDG No.: LEJEUNE054

Matrix: (soil/water) SOIL Lab Sample ID: 0901189-45

Sample wt/vol: 6.0 (g/mL) G Lab File ID: 0118945A

Level: (low/med) LOW Date Sampled: 01/22/09 16:00

% Moisture: not dec. 0 Date Analyzed: 01/28/09 20:16

GC Column: RTX-VRX ID: 0.25 (mm) Dilution Factor: 1.0

Soil Extract Volume:_____(uL) Soil Aliquot Volume: _____(uL)

CONCENTRATION UNITS: (ug/L or ug/Kg) UG/KG

CAS NO.	COMPOUND	MDL	RL	CONC	Q
108-88-3	Toluene	0.71	8.3		U
120-82-1	1,2,4-Trichlorobenzene	0.15	8.3		U
71-55-6	1,1,1-Trichloroethane	0.75	8.3		U
79-00-5	1,1,2-Trichloroethane	0.29	8.3		U
79-01-6	Trichloroethene	0.70	8.3		U
76-13-1	Trichlorotrifluoroethane	0.46	8.3		U
75-69-4	Trichlorofluoromethane	0.79	8.3		U
75-01-4	Vinyl chloride	0.91	8.3		U
1330-20-7	Xylene(total)	0.58	8.3		U

Sample reported as wet weight due to % moisture not available.

Dew
4/5/09

FORM 1
VOLATILE ORGANICS ANALYSIS DATA SHEET

CLIENT SAMPLE NO.

46

MR08-SS338D-09A

Lab Name: EMPIRICAL LABS Contract: CH2MHILL

Lab Code: NA Case No.: NA SAS No.: NA SDG No.: LEJEUNE054

Matrix: (soil/water) SOIL Lab Sample ID: 0901189-46

Sample wt/vol: 5.1 (g/mL) G Lab File ID: 0118946A

Level: (low/med) LOW Date Sampled: 01/22/09 16:00

% Moisture: not dec. 0 Date Analyzed: 01/29/09 02:26

GC Column: RTX-VRX ID: 0.25 (mm) Dilution Factor: 1.0

Soil Extract Volume:_____(uL) Soil Aliquot Volume: _____(uL)

CONCENTRATION UNITS: (ug/L or ug/Kg) UG/KG

CAS NO.	COMPOUND	MDL	RL	CONC	Q
67-64-1	Acetone	1.9	9.7		U
71-43-2	Benzene	0.46	9.7	1.1	J
75-27-4	Bromodichloromethane	0.29	9.7		U
75-25-2	Bromoform	0.97	9.7		U
74-83-9	Bromomethane	0.70	9.7		U
78-93-3	2-Butanone	1.4	9.7		U
75-15-0	Carbon disulfide	1.3	9.7		U
56-23-5	Carbon tetrachloride	0.86	9.7		U
108-90-7	Chlorobenzene	0.33	9.7		U
75-00-3	Chloroethane	1.1	9.7		U
67-66-3	Chloroform	0.54	9.7		U
74-87-3	Chloromethane	0.51	9.7		U
110-82-7	Cyclohexane	0.53	9.7		U
124-48-1	Dibromochloromethane	0.33	9.7		U
96-12-8	1,2-Dibromo-3-chloropropane	1.2	4.9		U
106-93-4	1,2-Dibromoethane	0.42	9.7		U
95-50-1	1,2-Dichlorobenzene	0.36	9.7		U
541-73-1	1,3-Dichlorobenzene	0.82	9.7		U
106-46-7	1,4-Dichlorobenzene	0.54	9.7		U
75-71-8	Dichlorodifluoromethane	1.1	9.7		U
75-34-3	1,1-Dichloroethane	0.53	9.7		U
107-06-2	1,2-Dichloroethane	0.45	9.7		U
75-35-4	1,1-Dichloroethene	1.2	9.7		U
156-59-2	cis-1,2-Dichloroethene	1.2	9.7		U
156-60-5	trans-1,2-Dichloroethene	1.1	9.7		U
78-87-5	1,2-Dichloropropane	0.45	9.7		U
10061-01-5	cis-1,3-Dichloropropene	0.49	9.7		U
10061-02-6	trans-1,3-Dichloropropene	0.31	9.7		U
100-41-4	Ethylbenzene	0.73	9.7	1.7	J
591-78-6	2-Hexanone	2.2	9.7		U
98-82-8	Isopropylbenzene	0.86	9.7		U
79-20-9	Methyl acetate	1.6	9.7		U
75-09-2	Methylene chloride	0.60	9.7	9.74 ~~0.90~~	~~JB~~ B
108-87-2	Methyl cyclohexane	0.29	9.7	0.86	J
1634-04-4	Methyl tert-butyl ether	0.31	9.7		U
108-10-1	4-Methyl-2-pentanone	0.56	9.7		U
100-42-5	Styrene	0.34	9.7		U
79-34-5	1,1,2,2-Tetrachloroethane	0.42	9.7		U
127-18-4	Tetrachloroethene	0.94	9.7		U

LW
4/5/09

FORM 1
VOLATILE ORGANICS ANALYSIS DATA SHEET

CLIENT SAMPLE NO. 46

MR08-SS338D-09A

Lab Name: EMPIRICAL LABS Contract: CH2MHILL

Lab Code: NA Case No.: NA SAS No.: NA SDG No.: LEJEUNE054

Matrix: (soil/water) SOIL Lab Sample ID: 0901189-46

Sample wt/vol: 5.1 (g/mL) G Lab File ID: 0118946A

Level: (low/med) LOW Date Sampled: 01/22/09 16:00

% Moisture: not dec. 0 Date Analyzed: 01/29/09 02:26

GC Column: RTX-VRX ID: 0.25 (mm) Dilution Factor: 1.0

Soil Extract Volume:_____(uL) Soil Aliquot Volume: _____(uL)

CONCENTRATION UNITS: (ug/L or ug/Kg) UG/KG

CAS NO.	COMPOUND	MDL	RL	CONC	Q
108-88-3	Toluene	0.84	9.7	9.74 ~~1.5~~	~~J~~ B
120-82-1	1,2,4-Trichlorobenzene	0.18	9.7		U
71-55-6	1,1,1-Trichloroethane	0.88	9.7		U
79-00-5	1,1,2-Trichloroethane	0.34	9.7		U
79-01-6	Trichloroethene	0.83	9.7		U
76-13-1	Trichlorotrifluoroethane	0.54	9.7		U
75-69-4	Trichlorofluoromethane	0.92	9.7		U
75-01-4	Vinyl chloride	1.1	9.7		U
1330-20-7	Xylene(total)	0.68	9.7		U

Sample reported as wet weight due to % moisture not available.

lee
4/5/09

FORM 1
VOLATILE ORGANICS ANALYSIS DATA SHEET

CLIENT SAMPLE NO. 47

MR08-IS33
8-4-5-09A

Lab Name: EMPIRICAL LABS Contract: CH2MHILL

Lab Code: NA Case No.: NA SAS No.: NA SDG No.: LEJEUNE054

Matrix: (soil/water) SOIL Lab Sample ID: 0901189-47

Sample wt/vol: 5.5 (g/mL) G Lab File ID: 0118947A

Level: (low/med) LOW Date Sampled: 01/22/09 16:10

% Moisture: not dec. 10 Date Analyzed: 01/29/09 02:57

GC Column: RTX-VRX ID: 0.25 (mm) Dilution Factor: 1.0

Soil Extract Volume:_____(uL) Soil Aliquot Volume: _____(uL)

CONCENTRATION UNITS: (ug/L or ug/Kg) UG/KG

CAS NO.	COMPOUND	MDL	RL	CONC	Q
67-64-1	Acetone	2.0	10		U
71-43-2	Benzene	0.47	10		U
75-27-4	Bromodichloromethane	0.30	10		U
75-25-2	Bromoform	1.0	10		U
74-83-9	Bromomethane	0.73	10		U
78-93-3	2-Butanone	1.4	10		U
75-15-0	Carbon disulfide	1.3	10		U
56-23-5	Carbon tetrachloride	0.89	10		U
108-90-7	Chlorobenzene	0.34	10		U
75-00-3	Chloroethane	1.1	10		U
67-66-3	Chloroform	0.56	10		U
74-87-3	Chloromethane	0.52	10		U
110-82-7	Cyclohexane	0.54	10		U
124-48-1	Dibromochloromethane	0.34	10		U
96-12-8	1,2-Dibromo-3-chloropropane	1.2	5.0		U
106-93-4	1,2-Dibromoethane	0.43	10		U
95-50-1	1,2-Dichlorobenzene	0.37	10		U
541-73-1	1,3-Dichlorobenzene	0.85	10		U
106-46-7	1,4-Dichlorobenzene	0.56	10		U
75-71-8	Dichlorodifluoromethane	1.1	10		U
75-34-3	1,1-Dichloroethane	0.54	10		U
107-06-2	1,2-Dichloroethane	0.46	10		U
75-35-4	1,1-Dichloroethene	1.2	10		U
156-59-2	cis-1,2-Dichloroethene	1.2	10		U
156-60-5	trans-1,2-Dichloroethene	1.1	10		U
78-87-5	1,2-Dichloropropane	0.46	10		U
10061-01-5	cis-1,3-Dichloropropene	0.50	10		U
10061-02-6	trans-1,3-Dichloropropene	0.32	10		U
100-41-4	Ethylbenzene	0.76	10		U
591-78-6	2-Hexanone	2.3	10		U
98-82-8	Isopropylbenzene	0.89	10		U
79-20-9	Methyl acetate	1.6	10		U
75-09-2	Methylene chloride	0.63	10	10U ~~1.1~~ ~~JB~~	B
108-87-2	Methyl cyclohexane	0.30	10		U
1634-04-4	Methyl tert-butyl ether	0.32	10		U
108-10-1	4-Methyl-2-pentanone	0.59	10		U
100-42-5	Styrene	0.35	10		U
79-34-5	1,1,2,2-Tetrachloroethane	0.43	10		U
127-18-4	Tetrachloroethene	0.98	10		U

FORM I VOA

lw 4/15/09

FORM 1
VOLATILE ORGANICS ANALYSIS DATA SHEET

CLIENT SAMPLE NO. 47

MR08-IS33
8-4-5-09A

Lab Name: EMPIRICAL LABS Contract: CH2MHILL

Lab Code: NA Case No.: NA SAS No.: NA SDG No.: LEJEUNE054

Matrix: (soil/water) SOIL Lab Sample ID: 0901189-47

Sample wt/vol: 5.5 (g/mL) G Lab File ID: 0118947A

Level: (low/med) LOW Date Sampled: 01/22/09 16:10

% Moisture: not dec. 10 Date Analyzed: 01/29/09 02:57

GC Column: RTX-VRX ID: 0.25 (mm) Dilution Factor: 1.0

Soil Extract Volume:_____(uL) Soil Aliquot Volume:_____(uL)

CONCENTRATION UNITS: (ug/L or ug/Kg) UG/KG

CAS NO.	COMPOUND	MDL	RL	CONC	Q
108-88-3	Toluene	0.87	10		U
120-82-1	1,2,4-Trichlorobenzene	0.18	10		U
71-55-6	1,1,1-Trichloroethane	0.91	10		U
79-00-5	1,1,2-Trichloroethane	0.35	10		U
79-01-6	Trichloroethene	0.86	10		U
76-13-1	Trichlorotrifluoroethane	0.56	10		U
75-69-4	Trichlorofluoromethane	0.96	10		U
75-01-4	Vinyl chloride	1.1	10		U
1330-20-7	Xylene(total)	0.71	10		U

lw
4/5/09

FORM 1
VOLATILE ORGANICS ANALYSIS DATA SHEET

CLIENT SAMPLE NO. 48

MR08-IS33
8D-4-5-09A

Lab Name: EMPIRICAL LABS Contract: CH2MHILL

Lab Code: NA Case No.: NA SAS No.: NA SDG No.: LEJEUNE054

Matrix: (soil/water) SOIL Lab Sample ID: 0901189-48

Sample wt/vol: 5.6 (g/mL) G Lab File ID: 0118948A

Level: (low/med) LOW Date Sampled: 01/22/09 16:10

% Moisture: not dec. 11 Date Analyzed: 01/29/09 03:28

GC Column: RTX-VRX ID: 0.25 (mm) Dilution Factor: 1.0

Soil Extract Volume:_____(uL) Soil Aliquot Volume: _____(uL)

CONCENTRATION UNITS: (ug/L or ug/Kg) UG/KG

CAS NO.	COMPOUND	MDL	RL	CONC	Q
67-64-1	Acetone	2.0	10		U
71-43-2	Benzene	0.47	10		U
75-27-4	Bromodichloromethane	0.30	10		U
75-25-2	Bromoform	1.0	10		U
74-83-9	Bromomethane	0.72	10		U
78-93-3	2-Butanone	1.4	10		U
75-15-0	Carbon disulfide	1.3	10		U
56-23-5	Carbon tetrachloride	0.88	10		U
108-90-7	Chlorobenzene	0.34	10		U
75-00-3	Chloroethane	1.1	10		U
67-66-3	Chloroform	0.55	10		U
74-87-3	Chloromethane	0.52	10		U
110-82-7	Cyclohexane	0.54	10		U
124-48-1	Dibromochloromethane	0.34	10		U
96-12-8	1,2-Dibromo-3-chloropropane	1.2	5.0		U
106-93-4	1,2-Dibromoethane	0.43	10		U
95-50-1	1,2-Dichlorobenzene	0.37	10		U
541-73-1	1,3-Dichlorobenzene	0.84	10		U
106-46-7	1,4-Dichlorobenzene	0.55	10		U
75-71-8	Dichlorodifluoromethane	1.1	10		U
75-34-3	1,1-Dichloroethane	0.54	10		U
107-06-2	1,2-Dichloroethane	0.46	10		U
75-35-4	1,1-Dichloroethene	1.2	10		U
156-59-2	cis-1,2-Dichloroethene	1.2	10		U
156-60-5	trans-1,2-Dichloroethene	1.1	10		U
78-87-5	1,2-Dichloropropane	0.46	10		U
10061-01-5	cis-1,3-Dichloropropene	0.50	10		U
10061-02-6	trans-1,3-Dichloropropene	0.32	10		U
100-41-4	Ethylbenzene	0.75	10		U
591-78-6	2-Hexanone	2.3	10		U
98-82-8	Isopropylbenzene	0.88	10		U
79-20-9	Methyl acetate	1.6	10		U
75-09-2	Methylene chloride	0.62	10	10u	~~1.0 JB~~ B
108-87-2	Methyl cyclohexane	0.30	10		U
1634-04-4	Methyl tert-butyl ether	0.32	10		U
108-10-1	4-Methyl-2-pentanone	0.58	10		U
100-42-5	Styrene	0.35	10		U
79-34-5	1,1,2,2-Tetrachloroethane	0.43	10		U
127-18-4	Tetrachloroethene	0.97	10		U

FORM I VOA

Rev 4/5/09

FORM 1
VOLATILE ORGANICS ANALYSIS DATA SHEET

CLIENT SAMPLE NO.

48

MR08-IS33
8D-4-5-09A

Lab Name: EMPIRICAL LABS Contract: CH2MHILL

Lab Code: NA Case No.: NA SAS No.: NA SDG No.: LEJEUNE054

Matrix: (soil/water) SOIL Lab Sample ID: 0901189-48

Sample wt/vol: 5.6 (g/mL) G Lab File ID: 0118948A

Level: (low/med) LOW Date Sampled: 01/22/09 16:10

% Moisture: not dec. 11 Date Analyzed: 01/29/09 03:28

GC Column: RTX-VRX ID: 0.25 (mm) Dilution Factor: 1.0

Soil Extract Volume:_____(uL) Soil Aliquot Volume: _____(uL)

CONCENTRATION UNITS: (ug/L or ug/Kg) UG/KG

CAS NO.	COMPOUND	MDL	RL	CONC	Q
108-88-3	Toluene	0.86	10		U
120-82-1	1,2,4-Trichlorobenzene	0.18	10		U
71-55-6	1,1,1-Trichloroethane	0.90	10		U
79-00-5	1,1,2-Trichloroethane	0.35	10		U
79-01-6	Trichloroethene	0.85	10		U
76-13-1	Trichlorotrifluoroethane	0.55	10		U
75-69-4	Trichlorofluoromethane	0.95	10		U
75-01-4	Vinyl chloride	1.1	10		U
1330-20-7	Xylene(total)	0.70	10		U

lew
4/5/09

FORM 1
VOLATILE ORGANICS ANALYSIS DATA SHEET

CLIENT SAMPLE NO.

49

MR08-EB012309

Lab Name: EMPIRICAL LABS Contract: CH2MHILL

Lab Code: NA Case No.: NA SAS No.: NA SDG No.: LEJEUNE054

Matrix: (soil/water) WATER Lab Sample ID: 0901189-49

Sample wt/vol: 5.000 (g/mL) ML Lab File ID: 0118949

Level: (low/med) LOW Date Sampled: 01/23/09 07:30

% Moisture: not dec. _____ Date Analyzed: 01/30/09 22:27

GC Column: RTX-VRX ID: 0.25 (mm) Dilution Factor: 1.0

Soil Extract Volume:_____(uL) Soil Aliquot Volume: _____(uL)

CONCENTRATION UNITS: (ug/L or ug/Kg) UG/L

CAS NO.	COMPOUND	MDL	RL	CONC	Q
67-64-1	Acetone	0.84	2.5	1.1	J
71-43-2	Benzene	0.11	1.0		U
75-27-4	Bromodichloromethane	0.10	1.0		U
75-25-2	Bromoform	0.10	1.0		U
74-83-9	Bromomethane	0.32	1.0		~~U~~ UJ CC
78-93-3	2-Butanone	1.0	3.0		U
75-15-0	Carbon disulfide	0.13	1.0		U
56-23-5	Carbon tetrachloride	0.15	1.0		U
108-90-7	Chlorobenzene	0.10	1.0		U
75-00-3	Chloroethane	0.18	1.0		U
67-66-3	Chloroform	0.11	1.0		U
74-87-3	Chloromethane	0.29	1.0		U
110-82-7	Cyclohexane	0.20	1.0		U
124-48-1	Dibromochloromethane	0.10	1.0		U
96-12-8	1,2-Dibromo-3-chloropropane	0.11	1.0		U
106-93-4	1,2-Dibromoethane	0.10	1.0		U
95-50-1	1,2-Dichlorobenzene	0.10	1.0		U
541-73-1	1,3-Dichlorobenzene	0.13	1.0		U
106-46-7	1,4-Dichlorobenzene	0.10	1.0		U
75-71-8	Dichlorodifluoromethane	0.22	1.0		U
75-34-3	1,1-Dichloroethane	0.12	1.0		U
107-06-2	1,2-Dichloroethane	0.10	1.0		U
75-35-4	1,1-Dichloroethene	0.15	1.0		U
156-59-2	cis-1,2-Dichloroethene	0.13	1.0		U
156-60-5	trans-1,2-Dichloroethene	0.13	1.0		U
78-87-5	1,2-Dichloropropane	0.10	1.0		U
10061-01-5	cis-1,3-Dichloropropene	0.11	1.0		U
10061-02-6	trans-1,3-Dichloropropene	0.10	1.0		U
100-41-4	Ethylbenzene	0.13	1.0		U
591-78-6	2-Hexanone	0.30	2.0		U
98-82-8	Isopropylbenzene	0.15	1.0		U
79-20-9	Methyl acetate	0.30	1.0		U
75-09-2	Methylene chloride	0.14	1.0	1.02 ~~0.62~~ ~~JB~~	B
108-87-2	Methyl cyclohexane	0.17	1.0		U
1634-04-4	Methyl tert-butyl ether	0.10	1.0		U
108-10-1	4-Methyl-2-pentanone	0.29	1.0		U
100-42-5	Styrene	0.10	1.0		U
79-34-5	1,1,2,2-Tetrachloroethane	0.10	1.0		U
127-18-4	Tetrachloroethene	0.15	1.0		U

FORM I VOA

LW
4/5/09

FORM 1
VOLATILE ORGANICS ANALYSIS DATA SHEET

CLIENT SAMPLE NO. 49

MR08-EB012309

Lab Name: EMPIRICAL LABS Contract: CH2MHILL

Lab Code: NA Case No.: NA SAS No.: NA SDG No.: LEJEUNE054

Matrix: (soil/water) WATER Lab Sample ID: 0901189-49

Sample wt/vol: 5.000 (g/mL) ML Lab File ID: 0118949

Level: (low/med) LOW Date Sampled: 01/23/09 07:30

% Moisture: not dec. _____ Date Analyzed: 01/30/09 22:27

GC Column: RTX-VRX ID: 0.25 (mm) Dilution Factor: 1.0

Soil Extract Volume:_____(uL) Soil Aliquot Volume: _____(uL)

CONCENTRATION UNITS: (ug/L or ug/Kg) UG/L

CAS NO.	COMPOUND	MDL	RL	CONC	Q
108-88-3	Toluene	0.10	1.0	0.43	J
120-82-1	1,2,4-Trichlorobenzene	0.10	1.0		U
71-55-6	1,1,1-Trichloroethane	0.17	1.0		U
79-00-5	1,1,2-Trichloroethane	0.10	1.0		U
79-01-6	Trichloroethene	0.13	1.0		U
76-13-1	Trichlorotrifluoroethane	0.18	1.0		U
75-69-4	Trichlorofluoromethane	0.17	1.0		U
75-01-4	Vinyl chloride	0.18	1.0		U
1330-20-7	Xylene(total)	0.22	1.0		U

lw
41509

FORM 1
VOLATILE ORGANICS ANALYSIS DATA SHEET

CLIENT SAMPLE NO. 50

MR08-IS36
3-4-5-09A

Lab Name: EMPIRICAL LABS Contract: CH2MHILL

Lab Code: NA Case No.: NA SAS No.: NA SDG No.: LEJEUNE054

Matrix: (soil/water) SOIL Lab Sample ID: 0901189-50

Sample wt/vol: 5.0 (g/mL) G Lab File ID: 0118950A

Level: (low/med) LOW Date Sampled: 01/23/09 08:45

% Moisture: not dec. 11 Date Analyzed: 01/29/09 03:59

GC Column: RTX-VRX ID: 0.25 (mm) Dilution Factor: 1.0

Soil Extract Volume:_____(uL) Soil Aliquot Volume: _____(uL)

CONCENTRATION UNITS: (ug/L or ug/Kg) UG/KG

CAS NO.	COMPOUND	MDL	RL	CONC	Q	
67-64-1	Acetone	2.2	11	11u	~~5.4 JB~~	Bl
71-43-2	Benzene	0.52	11		U	
75-27-4	Bromodichloromethane	0.33	11		U	
75-25-2	Bromoform	1.1	11		U	
74-83-9	Bromomethane	0.80	11		U	
78-93-3	2-Butanone	1.6	11		U	
75-15-0	Carbon disulfide	1.4	11		U	
56-23-5	Carbon tetrachloride	0.98	11		U	
108-90-7	Chlorobenzene	0.38	11		U	
75-00-3	Chloroethane	1.2	11		U	
67-66-3	Chloroform	0.61	11		U	
74-87-3	Chloromethane	0.58	11		U	
110-82-7	Cyclohexane	0.60	11		U	
124-48-1	Dibromochloromethane	0.38	11		U	
96-12-8	1,2-Dibromo-3-chloropropane	1.3	5.6		U	
106-93-4	1,2-Dibromoethane	0.48	11		U	
95-50-1	1,2-Dichlorobenzene	0.41	11		U	
541-73-1	1,3-Dichlorobenzene	0.94	11		U	
106-46-7	1,4-Dichlorobenzene	0.61	11		U	
75-71-8	Dichlorodifluoromethane	1.2	11		U	
75-34-3	1,1-Dichloroethane	0.60	11		U	
107-06-2	1,2-Dichloroethane	0.51	11		U	
75-35-4	1,1-Dichloroethene	1.3	11		U	
156-59-2	cis-1,2-Dichloroethene	1.3	11		U	
156-60-5	trans-1,2-Dichloroethene	1.2	11		U	
78-87-5	1,2-Dichloropropane	0.51	11		U	
10061-01-5	cis-1,3-Dichloropropene	0.56	11		U	
10061-02-6	trans-1,3-Dichloropropene	0.36	11		U	
100-41-4	Ethylbenzene	0.84	11		U	
591-78-6	2-Hexanone	2.6	11		U	
98-82-8	Isopropylbenzene	0.98	11		U	
79-20-9	Methyl acetate	1.8	11		U	
75-09-2	Methylene chloride	0.69	11	11u	~~1.2 JB~~	B
108-87-2	Methyl cyclohexane	0.33	11		U	
1634-04-4	Methyl tert-butyl ether	0.36	11		U	
108-10-1	4-Methyl-2-pentanone	0.65	11		U	
100-42-5	Styrene	0.39	11		U	
79-34-5	1,1,2,2-Tetrachloroethane	0.48	11		U	
127-18-4	Tetrachloroethene	1.1	11		U	

LW 4/5/09

FORM 1
VOLATILE ORGANICS ANALYSIS DATA SHEET

CLIENT SAMPLE NO. 50

MR08-IS36
3-4-5-09A

Lab Name: EMPIRICAL LABS Contract: CH2MHILL

Lab Code: NA Case No.: NA SAS No.: NA SDG No.: LEJEUNE054

Matrix: (soil/water) SOIL Lab Sample ID: 0901189-50

Sample wt/vol: 5.0 (g/mL) G Lab File ID: 0118950A

Level: (low/med) LOW Date Sampled: 01/23/09 08:45

% Moisture: not dec. 11 Date Analyzed: 01/29/09 03:59

GC Column: RTX-VRX ID: 0.25 (mm) Dilution Factor: 1.0

Soil Extract Volume:_____(uL) Soil Aliquot Volume: _____(uL)

CONCENTRATION UNITS: (ug/L or ug/Kg) UG/KG

CAS NO.	COMPOUND	MDL	RL	CONC	Q
108-88-3	Toluene	0.96	11		U
120-82-1	1,2,4-Trichlorobenzene	0.20	11		U
71-55-6	1,1,1-Trichloroethane	1.0	11		U
79-00-5	1,1,2-Trichloroethane	0.39	11		U
79-01-6	Trichloroethene	0.95	11		U
76-13-1	Trichlorotrifluoroethane	0.61	11		U
75-69-4	Trichlorofluoromethane	1.0	11		U
75-01-4	Vinyl chloride	1.2	11		U
1330-20-7	Xylene(total)	0.78	11		U

DEW
4/5/09

FORM 1
VOLATILE ORGANICS ANALYSIS DATA SHEET

CLIENT SAMPLE NO. 51

MR08-SS363-09A

Lab Name: EMPIRICAL LABS Contract: CH2MHILL

Lab Code: NA Case No.: NA SAS No.: NA SDG No.: LEJEUNE054

Matrix: (soil/water) SOIL Lab Sample ID: 0901189-51

Sample wt/vol: 3.3 (g/mL) G Lab File ID: 0118951A

Level: (low/med) LOW Date Sampled: 01/23/09 08:50

% Moisture: not dec. 12 Date Analyzed: 01/29/09 04:30

GC Column: RTX-VRX ID: 0.25 (mm) Dilution Factor: 1.0

Soil Extract Volume:_____(uL) Soil Aliquot Volume: _____(uL)

CONCENTRATION UNITS: (ug/L or ug/Kg) UG/KG

CAS NO.	COMPOUND	MDL	RL	CONC	Q
67-64-1	Acetone	3.4	17	52	~~B~~
71-43-2	Benzene	0.81	17		U
75-27-4	Bromodichloromethane	0.52	17		U
75-25-2	Bromoform	1.7	17		U
74-83-9	Bromomethane	1.2	17		U
78-93-3	2-Butanone	2.4	17		U
75-15-0	Carbon disulfide	2.2	17		U
56-23-5	Carbon tetrachloride	1.5	17		U
108-90-7	Chlorobenzene	0.58	17		U
75-00-3	Chloroethane	1.9	17		U
67-66-3	Chloroform	0.94	17		U
74-87-3	Chloromethane	0.89	17		U
110-82-7	Cyclohexane	0.93	17		U
124-48-1	Dibromochloromethane	0.58	17		U
96-12-8	1,2-Dibromo-3-chloropropane	2.1	8.6		U
106-93-4	1,2-Dibromoethane	0.74	17		U
95-50-1	1,2-Dichlorobenzene	0.64	17		U
541-73-1	1,3-Dichlorobenzene	1.4	17		U
106-46-7	1,4-Dichlorobenzene	0.94	17		U
75-71-8	Dichlorodifluoromethane	1.9	17		U
75-34-3	1,1-Dichloroethane	0.93	17		U
107-06-2	1,2-Dichloroethane	0.79	17		U
75-35-4	1,1-Dichloroethene	2.1	17		U
156-59-2	cis-1,2-Dichloroethene	2.1	17		U
156-60-5	trans-1,2-Dichloroethene	1.9	17		U
78-87-5	1,2-Dichloropropane	0.79	17		U
10061-01-5	cis-1,3-Dichloropropene	0.86	17		U
10061-02-6	trans-1,3-Dichloropropene	0.55	17		U
100-41-4	Ethylbenzene	1.3	17		U
591-78-6	2-Hexanone	4.0	17		U
98-82-8	Isopropylbenzene	1.5	17		U
79-20-9	Methyl acetate	2.8	17		U
75-09-2	Methylene chloride	1.1	17		U
108-87-2	Methyl cyclohexane	0.52	17		U
1634-04-4	Methyl tert-butyl ether	0.55	17		U
108-10-1	4-Methyl-2-pentanone	1.00	17		U
100-42-5	Styrene	0.60	17		U
79-34-5	1,1,2,2-Tetrachloroethane	0.74	17		U
127-18-4	Tetrachloroethene	1.7	17		U

LW 4/5/09

FORM 1
VOLATILE ORGANICS ANALYSIS DATA SHEET

CLIENT SAMPLE NO. 51

MR08-SS363-09A

Lab Name: EMPIRICAL LABS Contract: CH2MHILL

Lab Code: NA Case No.: NA SAS No.: NA SDG No.: LEJEUNE054

Matrix: (soil/water) SOIL Lab Sample ID: 0901189-51

Sample wt/vol: 3.3 (g/mL) G Lab File ID: 0118951A

Level: (low/med) LOW Date Sampled: 01/23/09 08:50

% Moisture: not dec. 12 Date Analyzed: 01/29/09 04:30

GC Column: RTX-VRX ID: 0.25 (mm) Dilution Factor: 1.0

Soil Extract Volume:_____(uL) Soil Aliquot Volume: _____(uL)

CONCENTRATION UNITS: (ug/L or ug/Kg) UG/KG

CAS NO.	COMPOUND	MDL	RL	CONC	Q
108-88-3	Toluene	1.5	17		U
120-82-1	1,2,4-Trichlorobenzene	0.31	17		U
71-55-6	1,1,1-Trichloroethane	1.5	17		U
79-00-5	1,1,2-Trichloroethane	0.60	17		U
79-01-6	Trichloroethene	1.5	17		U
76-13-1	Trichlorotrifluoroethane	0.94	17		U
75-69-4	Trichlorofluoromethane	1.6	17		U
75-01-4	Vinyl chloride	1.9	17		U
1330-20-7	Xylene(total)	1.2	17		U

JEW
4/5/09

FORM 1
VOLATILE ORGANICS ANALYSIS DATA SHEET

CLIENT SAMPLE NO. 52

MR08-IS36
4-4-5-09A

Lab Name: EMPIRICAL LABS Contract: CH2MHILL

Lab Code: NA Case No.: NA SAS No.: NA SDG No.: LEJEUNE054

Matrix: (soil/water) SOIL Lab Sample ID: 0901189-52

Sample wt/vol: 5.9 (g/mL) G Lab File ID: 0118952A

Level: (low/med) LOW Date Sampled: 01/23/09 09:10

% Moisture: not dec. 14 Date Analyzed: 01/29/09 05:01

GC Column: RTX-VRX ID: 0.25 (mm) Dilution Factor: 1.0

Soil Extract Volume:_____(uL) Soil Aliquot Volume: _____(uL)

CONCENTRATION UNITS: (ug/L or ug/Kg) UG/KG

CAS NO.	COMPOUND	MDL	RL	CONC	Q	
67-64-1	Acetone	2.0	9.9	12	~~B~~ u	B
71-43-2	Benzene	0.46	9.9		U	
75-27-4	Bromodichloromethane	0.30	9.9		U	
75-25-2	Bromoform	0.99	9.9		U	
74-83-9	Bromomethane	0.71	9.9		U	
78-93-3	2-Butanone	1.4	9.9		U	
75-15-0	Carbon disulfide	1.3	9.9		U	
56-23-5	Carbon tetrachloride	0.87	9.9		U	
108-90-7	Chlorobenzene	0.34	9.9		U	
75-00-3	Chloroethane	1.1	9.9		U	
67-66-3	Chloroform	0.54	9.9		U	
74-87-3	Chloromethane	0.51	9.9		U	
110-82-7	Cyclohexane	0.53	9.9		U	
124-48-1	Dibromochloromethane	0.34	9.9		U	
96-12-8	1,2-Dibromo-3-chloropropane	1.2	4.9		U	
106-93-4	1,2-Dibromoethane	0.42	9.9		U	
95-50-1	1,2-Dichlorobenzene	0.36	9.9		U	
541-73-1	1,3-Dichlorobenzene	0.83	9.9		U	
106-46-7	1,4-Dichlorobenzene	0.54	9.9		U	
75-71-8	Dichlorodifluoromethane	1.1	9.9		U	
75-34-3	1,1-Dichloroethane	0.53	9.9		U	
107-06-2	1,2-Dichloroethane	0.45	9.9		U	
75-35-4	1,1-Dichloroethene	1.2	9.9		U	
156-59-2	cis-1,2-Dichloroethene	1.2	9.9		U	
156-60-5	trans-1,2-Dichloroethene	1.1	9.9		U	
78-87-5	1,2-Dichloropropane	0.45	9.9		U	
10061-01-5	cis-1,3-Dichloropropene	0.49	9.9		U	
10061-02-6	trans-1,3-Dichloropropene	0.32	9.9		U	
100-41-4	Ethylbenzene	0.74	9.9		U	
591-78-6	2-Hexanone	2.3	9.9		U	
98-82-8	Isopropylbenzene	0.87	9.9		U	
79-20-9	Methyl acetate	1.6	9.9		U	
75-09-2	Methylene chloride	0.61	9.9	9.9u ~~1.1~~	~~JB~~	B
108-87-2	Methyl cyclohexane	0.30	9.9		U	
1634-04-4	Methyl tert-butyl ether	0.32	9.9		U	
108-10-1	4-Methyl-2-pentanone	0.57	9.9		U	
100-42-5	Styrene	0.34	9.9		U	
79-34-5	1,1,2,2-Tetrachloroethane	0.42	9.9		U	
127-18-4	Tetrachloroethene	0.96	9.9		U	

FORM I VOA

Leo 4/5/09

FORM 1
VOLATILE ORGANICS ANALYSIS DATA SHEET

CLIENT SAMPLE NO. 52

MR08-IS36
4-4-5-09A

Lab Name: EMPIRICAL LABS Contract: CH2MHILL

Lab Code: NA Case No.: NA SAS No.: NA SDG No.: LEJEUNE054

Matrix: (soil/water) SOIL Lab Sample ID: 0901189-52

Sample wt/vol: 5.9 (g/mL) G Lab File ID: 0118952A

Level: (low/med) LOW Date Sampled: 01/23/09 09:10

% Moisture: not dec. 14 Date Analyzed: 01/29/09 05:01

GC Column: RTX-VRX ID: 0.25 (mm) Dilution Factor: 1.0

Soil Extract Volume:_____(uL) Soil Aliquot Volume: _____(uL)

CONCENTRATION UNITS: (ug/L or ug/Kg) UG/KG

CAS NO.	COMPOUND	MDL	RL	CONC	Q
108-88-3	Toluene	0.85	9.9		U
120-82-1	1,2,4-Trichlorobenzene	0.18	9.9		U
71-55-6	1,1,1-Trichloroethane	0.89	9.9		U
79-00-5	1,1,2-Trichloroethane	0.34	9.9		U
79-01-6	Trichloroethene	0.84	9.9		U
76-13-1	Trichlorotrifluoroethane	0.54	9.9		U
75-69-4	Trichlorofluoromethane	0.94	9.9		U
75-01-4	Vinyl chloride	1.1	9.9		U
1330-20-7	Xylene(total)	0.69	9.9		U

MW
4/5/09

FORM 1
VOLATILE ORGANICS ANALYSIS DATA SHEET

CLIENT SAMPLE NO.

53

MR08-SS364-09A

Lab Name: EMPIRICAL LABS Contract: CH2MHILL

Lab Code: NA Case No.: NA SAS No.: NA SDG No.: LEJEUNE054

Matrix: (soil/water) SOIL Lab Sample ID: 0901189-53

Sample wt/vol: 2.4 (g/mL) G Lab File ID: 0118953A

Level: (low/med) LOW Date Sampled: 01/23/09 09:15

% Moisture: not dec. 22 Date Analyzed: 01/29/09 05:32

GC Column: RTX-VRX ID: 0.25 (mm) Dilution Factor: 1.0

Soil Extract Volume:_____(uL) Soil Aliquot Volume: _____(uL)

CONCENTRATION UNITS: (ug/L or ug/Kg) UG/KG

CAS NO.	COMPOUND	MDL	RL	CONC	Q
67-64-1	Acetone	5.3	26	100	~~B~~
71-43-2	Benzene	1.2	26		U
75-27-4	Bromodichloromethane	0.80	26		U
75-25-2	Bromoform	2.6	26		U
74-83-9	Bromomethane	1.9	26		U
78-93-3	2-Butanone	3.7	26		U
75-15-0	Carbon disulfide	3.4	26		U
56-23-5	Carbon tetrachloride	2.3	26		U
108-90-7	Chlorobenzene	0.90	26		U
75-00-3	Chloroethane	2.9	26		U
67-66-3	Chloroform	1.4	26		U
74-87-3	Chloromethane	1.4	26		U
110-82-7	Cyclohexane	1.4	26		U
124-48-1	Dibromochloromethane	0.90	26		U
96-12-8	1,2-Dibromo-3-chloropropane	3.2	13		U
106-93-4	1,2-Dibromoethane	1.1	26		U
95-50-1	1,2-Dichlorobenzene	0.98	26		U
541-73-1	1,3-Dichlorobenzene	2.2	26		U
106-46-7	1,4-Dichlorobenzene	1.4	26		U
75-71-8	Dichlorodifluoromethane	2.9	26		U
75-34-3	1,1-Dichloroethane	1.4	26		U
107-06-2	1,2-Dichloroethane	1.2	26		U
75-35-4	1,1-Dichloroethene	3.2	26		U
156-59-2	cis-1,2-Dichloroethene	3.2	26		U
156-60-5	trans-1,2-Dichloroethene	2.9	26		U
78-87-5	1,2-Dichloropropane	1.2	26		U
10061-01-5	cis-1,3-Dichloropropene	1.3	26		U
10061-02-6	trans-1,3-Dichloropropene	0.85	26		U
100-41-4	Ethylbenzene	2.0	26		U
591-78-6	2-Hexanone	6.1	26		U
98-82-8	Isopropylbenzene	2.3	26		U
79-20-9	Methyl acetate	4.2	26		U
75-09-2	Methylene chloride	1.6	26	26u ~~3.0~~	~~JB~~ B
108-87-2	Methyl cyclohexane	0.80	26		U
1634-04-4	Methyl tert-butyl ether	0.85	26		U
108-10-1	4-Methyl-2-pentanone	1.5	26		U
100-42-5	Styrene	0.93	26		U
79-34-5	1,1,2,2-Tetrachloroethane	1.1	26		U
127-18-4	Tetrachloroethene	2.6	26		U

FORM I VOA

LEW
4/15/09

FORM 1
VOLATILE ORGANICS ANALYSIS DATA SHEET

CLIENT SAMPLE NO. 53

MR08-SS364-09A

Lab Name: EMPIRICAL LABS Contract: CH2MHILL

Lab Code: NA Case No.: NA SAS No.: NA SDG No.: LEJEUNE054

Matrix: (soil/water) SOIL Lab Sample ID: 0901189-53

Sample wt/vol: 2.4 (g/mL) G Lab File ID: 0118953A

Level: (low/med) LOW Date Sampled: 01/23/09 09:15

% Moisture: not dec. 22 Date Analyzed: 01/29/09 05:32

GC Column: RTX-VRX ID: 0.25 (mm) Dilution Factor: 1.0

Soil Extract Volume:_____(uL) Soil Aliquot Volume: _____(uL)

CONCENTRATION UNITS: (ug/L or ug/Kg) UG/KG

CAS NO.	COMPOUND	MDL	RL	CONC	Q
108-88-3	Toluene	2.3	26		U
120-82-1	1,2,4-Trichlorobenzene	0.48	26		U
71-55-6	1,1,1-Trichloroethane	2.4	26		U
79-00-5	1,1,2-Trichloroethane	0.93	26		U
79-01-6	Trichloroethene	2.2	26		U
76-13-1	Trichlorotrifluoroethane	1.4	26		U
75-69-4	Trichlorofluoromethane	2.5	26		U
75-01-4	Vinyl chloride	2.9	26		U
1330-20-7	Xylene(total)	1.8	26		U

fcw
4/15/09

FORM 1
VOLATILE ORGANICS ANALYSIS DATA SHEET

CLIENT SAMPLE NO. 54

MR08-IS36
5-4-5-09A

Lab Name: EMPIRICAL LABS Contract: CH2MHILL

Lab Code: NA Case No.: NA SAS No.: NA SDG No.: LEJEUNE054

Matrix: (soil/water) SOIL Lab Sample ID: 0901189-54

Sample wt/vol: 5.3 (g/mL) G Lab File ID: 0118954A

Level: (low/med) LOW Date Sampled: 01/23/09 09:40

% Moisture: not dec. 6 Date Analyzed: 01/29/09 06:03

GC Column: RTX-VRX ID: 0.25 (mm) Dilution Factor: 1.0

Soil Extract Volume:_____(uL) Soil Aliquot Volume: _____(uL)

CONCENTRATION UNITS: (ug/L or ug/Kg) UG/KG

CAS NO.	COMPOUND	MDL	RL	CONC	Q	
67-64-1	Acetone	2.0	9.9	9.9u ~~3.9~~	~~JB~~	BL
71-43-2	Benzene	0.46	9.9		U	
75-27-4	Bromodichloromethane	0.30	9.9		U	
75-25-2	Bromoform	0.99	9.9		U	
74-83-9	Bromomethane	0.71	9.9		U	
78-93-3	2-Butanone	1.4	9.9		U	
75-15-0	Carbon disulfide	1.3	9.9		U	
56-23-5	Carbon tetrachloride	0.87	9.9		U	
108-90-7	Chlorobenzene	0.34	9.9		U	
75-00-3	Chloroethane	1.1	9.9		U	
67-66-3	Chloroform	0.54	9.9		U	
74-87-3	Chloromethane	0.52	9.9		U	
110-82-7	Cyclohexane	0.54	9.9		U	
124-48-1	Dibromochloromethane	0.34	9.9		U	
96-12-8	1,2-Dibromo-3-chloropropane	1.2	5.0		U	
106-93-4	1,2-Dibromoethane	0.43	9.9		U	
95-50-1	1,2-Dichlorobenzene	0.37	9.9		U	
541-73-1	1,3-Dichlorobenzene	0.83	9.9		U	
106-46-7	1,4-Dichlorobenzene	0.54	9.9		U	
75-71-8	Dichlorodifluoromethane	1.1	9.9		U	
75-34-3	1,1-Dichloroethane	0.54	9.9		U	
107-06-2	1,2-Dichloroethane	0.46	9.9		U	
75-35-4	1,1-Dichloroethene	1.2	9.9		U	
156-59-2	cis-1,2-Dichloroethene	1.2	9.9		U	
156-60-5	trans-1,2-Dichloroethene	1.1	9.9		U	
78-87-5	1,2-Dichloropropane	0.46	9.9		U	
10061-01-5	cis-1,3-Dichloropropene	0.50	9.9		U	
10061-02-6	trans-1,3-Dichloropropene	0.32	9.9		U	
100-41-4	Ethylbenzene	0.74	9.9		U	
591-78-6	2-Hexanone	2.3	9.9		U	
98-82-8	Isopropylbenzene	0.87	9.9		U	
79-20-9	Methyl acetate	1.6	9.9		U	
75-09-2	Methylene chloride	0.61	9.9	9.9u ~~1.0~~	~~JB~~	BL
108-87-2	Methyl cyclohexane	0.30	9.9		U	
1634-04-4	Methyl tert-butyl ether	0.32	9.9		U	
108-10-1	4-Methyl-2-pentanone	0.57	9.9		U	
100-42-5	Styrene	0.35	9.9		U	
79-34-5	1,1,2,2-Tetrachloroethane	0.43	9.9		U	
127-18-4	Tetrachloroethene	0.96	9.9		U	

FORM I VOA

RW
4/5/09

FORM 1
VOLATILE ORGANICS ANALYSIS DATA SHEET

CLIENT SAMPLE NO. 54

MR08-IS36
5-4-5-09A

Lab Name: EMPIRICAL LABS Contract: CH2MHILL

Lab Code: NA Case No.: NA SAS No.: NA SDG No.: LEJEUNE054

Matrix: (soil/water) SOIL Lab Sample ID: 0901189-54

Sample wt/vol: 5.3 (g/mL) G Lab File ID: 0118954A

Level: (low/med) LOW Date Sampled: 01/23/09 09:40

% Moisture: not dec. 6 Date Analyzed: 01/29/09 06:03

GC Column: RTX-VRX ID: 0.25 (mm) Dilution Factor: 1.0

Soil Extract Volume:_____(uL) Soil Aliquot Volume: _____(uL)

CONCENTRATION UNITS: (ug/L or ug/Kg) UG/KG

CAS NO.	COMPOUND	MDL	RL	CONC	Q
108-88-3	Toluene	0.85	9.9		U
120-82-1	1,2,4-Trichlorobenzene	0.18	9.9		U
71-55-6	1,1,1-Trichloroethane	0.89	9.9		U
79-00-5	1,1,2-Trichloroethane	0.35	9.9		U
79-01-6	Trichloroethene	0.84	9.9		U
76-13-1	Trichlorotrifluoroethane	0.54	9.9		U
75-69-4	Trichlorofluoromethane	0.94	9.9		U
75-01-4	Vinyl chloride	1.1	9.9		U
1330-20-7	Xylene(total)	0.69	9.9		U

MW
41569

FORM 1
VOLATILE ORGANICS ANALYSIS DATA SHEET

CLIENT SAMPLE NO. 55

MR08-SS365-09A

Lab Name: EMPIRICAL LABS Contract: CH2MHILL

Lab Code: NA Case No.: NA SAS No.: NA SDG No.: LEJEUNE054

Matrix: (soil/water) SOIL Lab Sample ID: 0901189-55

Sample wt/vol: 4.1 (g/mL) G Lab File ID: 0118955A

Level: (low/med) LOW Date Sampled: 01/23/09 09:45

% Moisture: not dec. 12 Date Analyzed: 01/29/09 06:34

GC Column: RTX-VRX ID: 0.25 (mm) Dilution Factor: 1.0

Soil Extract Volume:_____(uL) Soil Aliquot Volume: _____(uL)

CONCENTRATION UNITS: (ug/L or ug/Kg) UG/KG

CAS NO.	COMPOUND	MDL	RL	CONC	Q
67-64-1	Acetone	2.7	14	66	~~B~~
71-43-2	Benzene	0.64	14		U
75-27-4	Bromodichloromethane	0.41	14		U
75-25-2	Bromoform	1.4	14		U
74-83-9	Bromomethane	0.98	14		U
78-93-3	2-Butanone	1.9	14		U
75-15-0	Carbon disulfide	1.8	14		U
56-23-5	Carbon tetrachloride	1.2	14		U
108-90-7	Chlorobenzene	0.46	14		U
75-00-3	Chloroethane	1.5	14		U
67-66-3	Chloroform	0.75	14		U
74-87-3	Chloromethane	0.71	14		U
110-82-7	Cyclohexane	0.74	14		U
124-48-1	Dibromochloromethane	0.46	14		U
96-12-8	1,2-Dibromo-3-chloropropane	1.6	6.8		U
106-93-4	1,2-Dibromoethane	0.59	14		U
95-50-1	1,2-Dichlorobenzene	0.50	14		U
541-73-1	1,3-Dichlorobenzene	1.1	14		U
106-46-7	1,4-Dichlorobenzene	0.75	14		U
75-71-8	Dichlorodifluoromethane	1.5	14		U
75-34-3	1,1-Dichloroethane	0.74	14		U
107-06-2	1,2-Dichloroethane	0.63	14		U
75-35-4	1,1-Dichloroethene	1.6	14		U
156-59-2	cis-1,2-Dichloroethene	1.6	14		U
156-60-5	trans-1,2-Dichloroethene	1.5	14		U
78-87-5	1,2-Dichloropropane	0.63	14		U
10061-01-5	cis-1,3-Dichloropropene	0.68	14		U
10061-02-6	trans-1,3-Dichloropropene	0.44	14		U
100-41-4	Ethylbenzene	1.0	14		U
591-78-6	2-Hexanone	3.1	14		U
98-82-8	Isopropylbenzene	1.2	14		U
79-20-9	Methyl acetate	2.2	14		U
75-09-2	Methylene chloride	0.85	14	144	~~1.8 JB~~ BL
108-87-2	Methyl cyclohexane	0.41	14		U
1634-04-4	Methyl tert-butyl ether	0.44	14		U
108-10-1	4-Methyl-2-pentanone	0.79	14	5.1	J
100-42-5	Styrene	0.48	14		U
79-34-5	1,1,2,2-Tetrachloroethane	0.59	14		U
127-18-4	Tetrachloroethene	1.3	14		U

FORM I VOA

JLW 4/15/09

FORM 1
VOLATILE ORGANICS ANALYSIS DATA SHEET

CLIENT SAMPLE NO. 55

MR08-SS365-09A

Lab Name: EMPIRICAL LABS Contract: CH2MHILL

Lab Code: NA Case No.: NA SAS No.: NA SDG No.: LEJEUNE054

Matrix: (soil/water) SOIL Lab Sample ID: 0901189-55

Sample wt/vol: 4.1 (g/mL) G Lab File ID: 0118955A

Level: (low/med) LOW Date Sampled: 01/23/09 09:45

% Moisture: not dec. 12 Date Analyzed: 01/29/09 06:34

GC Column: RTX-VRX ID: 0.25 (mm) Dilution Factor: 1.0

Soil Extract Volume:_____(uL) Soil Aliquot Volume: _____(uL)

CONCENTRATION UNITS: (ug/L or ug/Kg) UG/KG

CAS NO.	COMPOUND	MDL	RL	CONC	Q
108-88-3	Toluene	1.2	14		U
120-82-1	1,2,4-Trichlorobenzene	0.24	14		U
71-55-6	1,1,1-Trichloroethane	1.2	14		U
79-00-5	1,1,2-Trichloroethane	0.48	14		U
79-01-6	Trichloroethene	1.2	14		U
76-13-1	Trichlorotrifluoroethane	0.75	14		U
75-69-4	Trichlorofluoromethane	1.3	14		U
75-01-4	Vinyl chloride	1.5	14		U
1330-20-7	Xylene(total)	0.96	14		U

fw
4/5/09

FORM 1
VOLATILE ORGANICS ANALYSIS DATA SHEET

CLIENT SAMPLE NO. 56

MR08-SS366-09A

Lab Name: EMPIRICAL LABS Contract: CH2MHILL

Lab Code: NA Case No.: NA SAS No.: NA SDG No.: LEJEUNE054

Matrix: (soil/water) SOIL Lab Sample ID: 0901189-56

Sample wt/vol: 5.2 (g/mL) G Lab File ID: 0118956A

Level: (low/med) LOW Date Sampled: 01/23/09 10:15

% Moisture: not dec. 14 Date Analyzed: 01/29/09 07:04

GC Column: RTX-VRX ID: 0.25 (mm) Dilution Factor: 1.0

Soil Extract Volume:_____(uL) Soil Aliquot Volume: _____(uL)

CONCENTRATION UNITS: (ug/L or ug/Kg) UG/KG

CAS NO.	COMPOUND	MDL	RL	CONC	Q	
67-64-1	Acetone	2.2	11	11u	~~9.8 JB~~	BL
71-43-2	Benzene	0.53	11		U	
75-27-4	Bromodichloromethane	0.34	11		U	
75-25-2	Bromoform	1.1	11		U	
74-83-9	Bromomethane	0.81	11		U	
78-93-3	2-Butanone	1.6	11		U	
75-15-0	Carbon disulfide	1.5	11		U	
56-23-5	Carbon tetrachloride	0.99	11		U	
108-90-7	Chlorobenzene	0.38	11		U	
75-00-3	Chloroethane	1.2	11		U	
67-66-3	Chloroform	0.62	11		U	
74-87-3	Chloromethane	0.58	11		U	
110-82-7	Cyclohexane	0.61	11		U	
124-48-1	Dibromochloromethane	0.38	11		U	
96-12-8	1,2-Dibromo-3-chloropropane	1.4	5.6		U	
106-93-4	1,2-Dibromoethane	0.48	11		U	
95-50-1	1,2-Dichlorobenzene	0.42	11		U	
541-73-1	1,3-Dichlorobenzene	0.94	11		U	
106-46-7	1,4-Dichlorobenzene	0.62	11		U	
75-71-8	Dichlorodifluoromethane	1.2	11		U	
75-34-3	1,1-Dichloroethane	0.61	11		U	
107-06-2	1,2-Dichloroethane	0.52	11		U	
75-35-4	1,1-Dichloroethene	1.4	11		U	
156-59-2	cis-1,2-Dichloroethene	1.4	11		U	
156-60-5	trans-1,2-Dichloroethene	1.2	11		U	
78-87-5	1,2-Dichloropropane	0.52	11		U	
10061-01-5	cis-1,3-Dichloropropene	0.56	11		U	
10061-02-6	trans-1,3-Dichloropropene	0.36	11		U	
100-41-4	Ethylbenzene	0.84	11		U	
591-78-6	2-Hexanone	2.6	11		U	
98-82-8	Isopropylbenzene	0.99	11		U	
79-20-9	Methyl acetate	1.8	11		U	
75-09-2	Methylene chloride	0.70	11	11u	~~1.4 JB~~	BL
108-87-2	Methyl cyclohexane	0.34	11		U	
1634-04-4	Methyl tert-butyl ether	0.36	11		U	
108-10-1	4-Methyl-2-pentanone	0.65	11		U	
100-42-5	Styrene	0.39	11		U	
79-34-5	1,1,2,2-Tetrachloroethane	0.48	11		U	
127-18-4	Tetrachloroethene	1.1	11		U	

FORM I VOA

MW 4/15/09

FORM 1
VOLATILE ORGANICS ANALYSIS DATA SHEET

CLIENT SAMPLE NO. 56

MR08-SS366-09A

Lab Name: EMPIRICAL LABS Contract: CH2MHILL

Lab Code: NA Case No.: NA SAS No.: NA SDG No.: LEJEUNE054

Matrix: (soil/water) SOIL Lab Sample ID: 0901189-56

Sample wt/vol: 5.2 (g/mL) G Lab File ID: 0118956A

Level: (low/med) LOW Date Sampled: 01/23/09 10:15

% Moisture: not dec. 14 Date Analyzed: 01/29/09 07:04

GC Column: RTX-VRX ID: 0.25 (mm) Dilution Factor: 1.0

Soil Extract Volume:_____(uL) Soil Aliquot Volume: _____(uL)

CONCENTRATION UNITS: (ug/L or ug/Kg) UG/KG

CAS NO.	COMPOUND	MDL	RL	CONC	Q
108-88-3	Toluene	0.97	11		U
120-82-1	1,2,4-Trichlorobenzene	0.20	11		U
71-55-6	1,1,1-Trichloroethane	1.0	11		U
79-00-5	1,1,2-Trichloroethane	0.39	11		U
79-01-6	Trichloroethene	0.96	11		U
76-13-1	Trichlorotrifluoroethane	0.62	11		U
75-69-4	Trichlorofluoromethane	1.1	11		U
75-01-4	Vinyl chloride	1.2	11		U
1330-20-7	Xylene(total)	0.79	11		U

LED
4/15/09

FORM 1
VOLATILE ORGANICS ANALYSIS DATA SHEET

CLIENT SAMPLE NO. 57

MR08-IS36
6-4-5-09A

Lab Name: EMPIRICAL LABS Contract: CH2MHILL

Lab Code: NA Case No.: NA SAS No.: NA SDG No.: LEJEUNE054

Matrix: (soil/water) SOIL Lab Sample ID: 0901189-57

Sample wt/vol: 6.0 (g/mL) G Lab File ID: 0118957A

Level: (low/med) LOW Date Sampled: 01/23/09 10:20

% Moisture: not dec. 11 Date Analyzed: 01/29/09 07:35

GC Column: RTX-VRX ID: 0.25 (mm) Dilution Factor: 1.0

Soil Extract Volume:_____(uL) Soil Aliquot Volume: _____(uL)

CONCENTRATION UNITS: (ug/L or ug/Kg) UG/KG

CAS NO.	COMPOUND	MDL	RL	CONC	Q
67-64-1	Acetone	1.9	9.3		U
71-43-2	Benzene	0.44	9.3		U
75-27-4	Bromodichloromethane	0.28	9.3		U
75-25-2	Bromoform	0.93	9.3		U
74-83-9	Bromomethane	0.67	9.3		U
78-93-3	2-Butanone	1.3	9.3		U
75-15-0	Carbon disulfide	1.2	9.3		U
56-23-5	Carbon tetrachloride	0.82	9.3		U
108-90-7	Chlorobenzene	0.32	9.3		U
75-00-3	Chloroethane	1.0	9.3		U
67-66-3	Chloroform	0.51	9.3		U
74-87-3	Chloromethane	0.48	9.3		U
110-82-7	Cyclohexane	0.50	9.3		U
124-48-1	Dibromochloromethane	0.32	9.3		U
96-12-8	1,2-Dibromo-3-chloropropane	1.1	4.7		U
106-93-4	1,2-Dibromoethane	0.40	9.3		U
95-50-1	1,2-Dichlorobenzene	0.34	9.3		U
541-73-1	1,3-Dichlorobenzene	0.78	9.3		U
106-46-7	1,4-Dichlorobenzene	0.51	9.3		U
75-71-8	Dichlorodifluoromethane	1.0	9.3		U
75-34-3	1,1-Dichloroethane	0.50	9.3		U
107-06-2	1,2-Dichloroethane	0.43	9.3		U
75-35-4	1,1-Dichloroethene	1.1	9.3		U
156-59-2	cis-1,2-Dichloroethene	1.1	9.3		U
156-60-5	trans-1,2-Dichloroethene	1.0	9.3		U
78-87-5	1,2-Dichloropropane	0.43	9.3		U
10061-01-5	cis-1,3-Dichloropropene	0.47	9.3		U
10061-02-6	trans-1,3-Dichloropropene	0.30	9.3		U
100-41-4	Ethylbenzene	0.70	9.3		U
591-78-6	2-Hexanone	2.1	9.3		U
98-82-8	Isopropylbenzene	0.82	9.3		U
79-20-9	Methyl acetate	1.5	9.3		U
75-09-2	Methylene chloride	0.58	9.3	9.3 U ~~1.2 JB~~	B
108-87-2	Methyl cyclohexane	0.28	9.3		U
1634-04-4	Methyl tert-butyl ether	0.30	9.3		U
108-10-1	4-Methyl-2-pentanone	0.54	9.3		U
100-42-5	Styrene	0.33	9.3		U
79-34-5	1,1,2,2-Tetrachloroethane	0.40	9.3		U
127-18-4	Tetrachloroethene	0.91	9.3		U

FORM I VOA

MLJ
4/5/09

FORM 1
VOLATILE ORGANICS ANALYSIS DATA SHEET

CLIENT SAMPLE NO.

MR08-IS36
6-4-5-09A

57

Lab Name: EMPIRICAL LABS Contract: CH2MHILL

Lab Code: NA Case No.: NA SAS No.: NA SDG No.: LEJEUNE054

Matrix: (soil/water) SOIL Lab Sample ID: 0901189-57

Sample wt/vol: 6.0 (g/mL) G Lab File ID: 0118957A

Level: (low/med) LOW Date Sampled: 01/23/09 10:20

% Moisture: not dec. 11 Date Analyzed: 01/29/09 07:35

GC Column: RTX-VRX ID: 0.25 (mm) Dilution Factor: 1.0

Soil Extract Volume:_____(uL) Soil Aliquot Volume: _____(uL)

CONCENTRATION UNITS: (ug/L or ug/Kg) UG/KG

CAS NO.	COMPOUND	MDL	RL	CONC	Q
108-88-3	Toluene	0.80	9.3		U
120-82-1	1,2,4-Trichlorobenzene	0.17	9.3		U
71-55-6	1,1,1-Trichloroethane	0.84	9.3		U
79-00-5	1,1,2-Trichloroethane	0.33	9.3		U
79-01-6	Trichloroethene	0.79	9.3		U
76-13-1	Trichlorotrifluoroethane	0.51	9.3		U
75-69-4	Trichlorofluoromethane	0.89	9.3		U
75-01-4	Vinyl chloride	1.0	9.3		U
1330-20-7	Xylene(total)	0.65	9.3		U

fw
415169

FORM 1
VOLATILE ORGANICS ANALYSIS DATA SHEET

CLIENT SAMPLE NO.

MR08-TB0
3-012309

58

Lab Name: EMPIRICAL LABS Contract: CH2MHILL

Lab Code: NA Case No.: NA SAS No.: NA SDG No.: LEJEUNE054

Matrix: (soil/water) WATER Lab Sample ID: 0901189-58

Sample wt/vol: 5.000 (g/mL) ML Lab File ID: 0118958

Level: (low/med) LOW Date Sampled: 01/23/09 :

% Moisture: not dec. _____ Date Analyzed: 01/30/09 19:28

GC Column: RTX-VRX ID: 0.25 (mm) Dilution Factor: 1.0

Soil Extract Volume:_____(uL) Soil Aliquot Volume: _____(uL)

CONCENTRATION UNITS: (ug/L or ug/Kg) UG/L

CAS NO.	COMPOUND	MDL	RL	CONC	Q
67-64-1	Acetone	0.84	2.5		U
71-43-2	Benzene	0.11	1.0		U
75-27-4	Bromodichloromethane	0.10	1.0		U
75-25-2	Bromoform	0.10	1.0		U
74-83-9	Bromomethane	0.32	1.0		~~U~~ UJ CC
78-93-3	2-Butanone	1.0	3.0		U
75-15-0	Carbon disulfide	0.13	1.0		U
56-23-5	Carbon tetrachloride	0.15	1.0		U
108-90-7	Chlorobenzene	0.10	1.0		U
75-00-3	Chloroethane	0.18	1.0		U
67-66-3	Chloroform	0.11	1.0		U
74-87-3	Chloromethane	0.29	1.0		U
110-82-7	Cyclohexane	0.20	1.0		U
124-48-1	Dibromochloromethane	0.10	1.0		U
96-12-8	1,2-Dibromo-3-chloropropane	0.11	1.0		U
106-93-4	1,2-Dibromoethane	0.10	1.0		U
95-50-1	1,2-Dichlorobenzene	0.10	1.0		U
541-73-1	1,3-Dichlorobenzene	0.13	1.0		U
106-46-7	1,4-Dichlorobenzene	0.10	1.0		U
75-71-8	Dichlorodifluoromethane	0.22	1.0		U
75-34-3	1,1-Dichloroethane	0.12	1.0		U
107-06-2	1,2-Dichloroethane	0.10	1.0		U
75-35-4	1,1-Dichloroethene	0.15	1.0		U
156-59-2	cis-1,2-Dichloroethene	0.13	1.0		U
156-60-5	trans-1,2-Dichloroethene	0.13	1.0		U
78-87-5	1,2-Dichloropropane	0.10	1.0		U
10061-01-5	cis-1,3-Dichloropropene	0.11	1.0		U
10061-02-6	trans-1,3-Dichloropropene	0.10	1.0		U
100-41-4	Ethylbenzene	0.13	1.0		U
591-78-6	2-Hexanone	0.30	2.0		U
98-82-8	Isopropylbenzene	0.15	1.0		U
79-20-9	Methyl acetate	0.30	1.0		U
75-09-2	Methylene chloride	0.14	1.0	1.0U	~~0.68 JB~~ Bi
108-87-2	Methyl cyclohexane	0.17	1.0		U
1634-04-4	Methyl tert-butyl ether	0.10	1.0		U
108-10-1	4-Methyl-2-pentanone	0.29	1.0		U
100-42-5	Styrene	0.10	1.0		U
79-34-5	1,1,2,2-Tetrachloroethane	0.10	1.0		U
127-18-4	Tetrachloroethene	0.15	1.0		U

fw 4/5/09

FORM 1
VOLATILE ORGANICS ANALYSIS DATA SHEET

CLIENT SAMPLE NO.

MR08-TB0
3-012309

58

Lab Name: EMPIRICAL LABS Contract: CH2MHILL

Lab Code: NA Case No.: NA SAS No.: NA SDG No.: LEJEUNE054

Matrix: (soil/water) WATER Lab Sample ID: 0901189-58

Sample wt/vol: 5.000 (g/mL) ML Lab File ID: 0118958

Level: (low/med) LOW Date Sampled: 01/23/09 :

% Moisture: not dec. _____ Date Analyzed: 01/30/09 19:28

GC Column: RTX-VRX ID: 0.25 (mm) Dilution Factor: 1.0

Soil Extract Volume:_____(uL) Soil Aliquot Volume: _____(uL)

CONCENTRATION UNITS: (ug/L or ug/Kg) UG/L

CAS NO.	COMPOUND	MDL	RL	CONC	Q
108-88-3	Toluene	0.10	1.0		U
120-82-1	1,2,4-Trichlorobenzene	0.10	1.0		U
71-55-6	1,1,1-Trichloroethane	0.17	1.0		U
79-00-5	1,1,2-Trichloroethane	0.10	1.0		U
79-01-6	Trichloroethene	0.13	1.0		U
76-13-1	Trichlorotrifluoroethane	0.18	1.0		U
75-69-4	Trichlorofluoromethane	0.17	1.0		U
75-01-4	Vinyl chloride	0.18	1.0		U
1330-20-7	Xylene(total)	0.22	1.0		U

lw
4/15/09

FORM 1
VOLATILE ORGANICS ANALYSIS DATA SHEET

CLIENT SAMPLE NO.

MR08-TB0
1-012309

59

Lab Name: EMPIRICAL LABS Contract: CH2MHILL

Lab Code: NA Case No.: NA SAS No.: NA SDG No.: LEJEUNE054

Matrix: (soil/water) WATER Lab Sample ID: 0901189-59

Sample wt/vol: 5.000 (g/mL) ML Lab File ID: 0118959

Level: (low/med) LOW Date Sampled: 01/23/09 :

% Moisture: not dec. _____ Date Analyzed: 01/30/09 19:58

GC Column: RTX-VRX ID: 0.25 (mm) Dilution Factor: 1.0

Soil Extract Volume:_____(uL) Soil Aliquot Volume: _____(uL)

CONCENTRATION UNITS: (ug/L or ug/Kg) UG/L

CAS NO.	COMPOUND	MDL	RL	CONC	Q
67-64-1	Acetone	0.84	2.5		U
71-43-2	Benzene	0.11	1.0		U
75-27-4	Bromodichloromethane	0.10	1.0		U
75-25-2	Bromoform	0.10	1.0		U
74-83-9	Bromomethane	0.32	1.0		~~U~~ UJ C
78-93-3	2-Butanone	1.0	3.0		U
75-15-0	Carbon disulfide	0.13	1.0		U
56-23-5	Carbon tetrachloride	0.15	1.0		U
108-90-7	Chlorobenzene	0.10	1.0		U
75-00-3	Chloroethane	0.18	1.0		U
67-66-3	Chloroform	0.11	1.0		U
74-87-3	Chloromethane	0.29	1.0		U
110-82-7	Cyclohexane	0.20	1.0		U
124-48-1	Dibromochloromethane	0.10	1.0		U
96-12-8	1,2-Dibromo-3-chloropropane	0.11	1.0		U
106-93-4	1,2-Dibromoethane	0.10	1.0		U
95-50-1	1,2-Dichlorobenzene	0.10	1.0		U
541-73-1	1,3-Dichlorobenzene	0.13	1.0		U
106-46-7	1,4-Dichlorobenzene	0.10	1.0		U
75-71-8	Dichlorodifluoromethane	0.22	1.0		U
75-34-3	1,1-Dichloroethane	0.12	1.0		U
107-06-2	1,2-Dichloroethane	0.10	1.0		U
75-35-4	1,1-Dichloroethene	0.15	1.0		U
156-59-2	cis-1,2-Dichloroethene	0.13	1.0		U
156-60-5	trans-1,2-Dichloroethene	0.13	1.0		U
78-87-5	1,2-Dichloropropane	0.10	1.0		U
10061-01-5	cis-1,3-Dichloropropene	0.11	1.0		U
10061-02-6	trans-1,3-Dichloropropene	0.10	1.0		U
100-41-4	Ethylbenzene	0.13	1.0		U
591-78-6	2-Hexanone	0.30	2.0		U
98-82-8	Isopropylbenzene	0.15	1.0		U
79-20-9	Methyl acetate	0.30	1.0		U
75-09-2	Methylene chloride	0.14	1.0	1.3	~~U~~ B
108-87-2	Methyl cyclohexane	0.17	1.0		U
1634-04-4	Methyl tert-butyl ether	0.10	1.0		U
108-10-1	4-Methyl-2-pentanone	0.29	1.0		U
100-42-5	Styrene	0.10	1.0		U
79-34-5	1,1,2,2-Tetrachloroethane	0.10	1.0		U
127-18-4	Tetrachloroethene	0.15	1.0		U

FORM I VOA

lew 4/5/09

FORM 1
VOLATILE ORGANICS ANALYSIS DATA SHEET

CLIENT SAMPLE NO.

MR08-TB0
1-012309

59

Lab Name: EMPIRICAL LABS Contract: CH2MHILL

Lab Code: NA Case No.: NA SAS No.: NA SDG No.: LEJEUNE054

Matrix: (soil/water) WATER Lab Sample ID: 0901189-59

Sample wt/vol: 5.000 (g/mL) ML Lab File ID: 0118959

Level: (low/med) LOW Date Sampled: 01/23/09 :

% Moisture: not dec. _____ Date Analyzed: 01/30/09 19:58

GC Column: RTX-VRX ID: 0.25 (mm) Dilution Factor: 1.0

Soil Extract Volume:_____(uL) Soil Aliquot Volume: _____(uL)

CONCENTRATION UNITS: (ug/L or ug/Kg) UG/L

CAS NO.	COMPOUND	MDL	RL	CONC	Q
108-88-3	Toluene	0.10	1.0		U
120-82-1	1,2,4-Trichlorobenzene	0.10	1.0		U
71-55-6	1,1,1-Trichloroethane	0.17	1.0		U
79-00-5	1,1,2-Trichloroethane	0.10	1.0		U
79-01-6	Trichloroethene	0.13	1.0		U
76-13-1	Trichlorotrifluoroethane	0.18	1.0		U
75-69-4	Trichlorofluoromethane	0.17	1.0		U
75-01-4	Vinyl chloride	0.18	1.0		U
1330-20-7	Xylene(total)	0.22	1.0		U

MW
4/5/09

FORM 1
VOLATILE ORGANICS ANALYSIS DATA SHEET

CLIENT SAMPLE NO. 60

MR08-TB0
2-012309

Lab Name: EMPIRICAL LABS Contract: CH2MHILL

Lab Code: NA Case No.: NA SAS No.: NA SDG No.: LEJEUNE054

Matrix: (soil/water) WATER Lab Sample ID: 0901189-60

Sample wt/vol: 5.000 (g/mL) ML Lab File ID: 0118960

Level: (low/med) LOW Date Sampled: 01/23/09 :

% Moisture: not dec. _____ Date Analyzed: 01/30/09 20:27

GC Column: RTX-VRX ID: 0.25 (mm) Dilution Factor: 1.0

Soil Extract Volume:_____(uL) Soil Aliquot Volume: _____(uL)

CONCENTRATION UNITS: (ug/L or ug/Kg) UG/L

CAS NO.	COMPOUND	MDL	RL	CONC	Q
67-64-1	Acetone	0.84	2.5		U
71-43-2	Benzene	0.11	1.0		U
75-27-4	Bromodichloromethane	0.10	1.0		U
75-25-2	Bromoform	0.10	1.0		U
74-83-9	Bromomethane	0.32	1.0		~~U~~ UJ
78-93-3	2-Butanone	1.0	3.0		U
75-15-0	Carbon disulfide	0.13	1.0		U
56-23-5	Carbon tetrachloride	0.15	1.0		U
108-90-7	Chlorobenzene	0.10	1.0		U
75-00-3	Chloroethane	0.18	1.0		U
67-66-3	Chloroform	0.11	1.0		U
74-87-3	Chloromethane	0.29	1.0		U
110-82-7	Cyclohexane	0.20	1.0		U
124-48-1	Dibromochloromethane	0.10	1.0		U
96-12-8	1,2-Dibromo-3-chloropropane	0.11	1.0		U
106-93-4	1,2-Dibromoethane	0.10	1.0		U
95-50-1	1,2-Dichlorobenzene	0.10	1.0		U
541-73-1	1,3-Dichlorobenzene	0.13	1.0		U
106-46-7	1,4-Dichlorobenzene	0.10	1.0		U
75-71-8	Dichlorodifluoromethane	0.22	1.0		U
75-34-3	1,1-Dichloroethane	0.12	1.0		U
107-06-2	1,2-Dichloroethane	0.10	1.0		U
75-35-4	1,1-Dichloroethene	0.15	1.0		U
156-59-2	cis-1,2-Dichloroethene	0.13	1.0		U
156-60-5	trans-1,2-Dichloroethene	0.13	1.0		U
78-87-5	1,2-Dichloropropane	0.10	1.0		U
10061-01-5	cis-1,3-Dichloropropene	0.11	1.0		U
10061-02-6	trans-1,3-Dichloropropene	0.10	1.0		U
100-41-4	Ethylbenzene	0.13	1.0		U
591-78-6	2-Hexanone	0.30	2.0		U
98-82-8	Isopropylbenzene	0.15	1.0		U
79-20-9	Methyl acetate	0.30	1.0		U
75-09-2	Methylene chloride	0.14	1.0	1.04 ~~0.98~~	~~JB~~ B
108-87-2	Methyl cyclohexane	0.17	1.0		U
1634-04-4	Methyl tert-butyl ether	0.10	1.0		U
108-10-1	4-Methyl-2-pentanone	0.29	1.0		U
100-42-5	Styrene	0.10	1.0		U
79-34-5	1,1,2,2-Tetrachloroethane	0.10	1.0		U
127-18-4	Tetrachloroethene	0.15	1.0		U

FORM I VOA

LW
4/5/09

FORM 1
VOLATILE ORGANICS ANALYSIS DATA SHEET

CLIENT SAMPLE NO.

MR08-TB0
2-012309

60

Lab Name: EMPIRICAL LABS Contract: CH2MHILL

Lab Code: NA Case No.: NA SAS No.: NA SDG No.: LEJEUNE054

Matrix: (soil/water) WATER Lab Sample ID: 0901189-60

Sample wt/vol: 5.000 (g/mL) ML Lab File ID: 0118960

Level: (low/med) LOW Date Sampled: 01/23/09 :

% Moisture: not dec. _____ Date Analyzed: 01/30/09 20:27

GC Column: RTX-VRX ID: 0.25 (mm) Dilution Factor: 1.0

Soil Extract Volume:_____(uL) Soil Aliquot Volume: _____(uL)

CONCENTRATION UNITS: (ug/L or ug/Kg) UG/L

CAS NO.	COMPOUND	MDL	RL	CONC	Q
108-88-3	Toluene	0.10	1.0		U
120-82-1	1,2,4-Trichlorobenzene	0.10	1.0		U
71-55-6	1,1,1-Trichloroethane	0.17	1.0		U
79-00-5	1,1,2-Trichloroethane	0.10	1.0		U
79-01-6	Trichloroethene	0.13	1.0		U
76-13-1	Trichlorotrifluoroethane	0.18	1.0		U
75-69-4	Trichlorofluoromethane	0.17	1.0		U
75-01-4	Vinyl chloride	0.18	1.0		U
1330-20-7	Xylene(total)	0.22	1.0		U

4/5/09

ENVIRONMENTAL
Data Services, Inc.

VOLATILE ORGANIC COMPOUNDS
USEPA Region IV - Level IV Review

Site: MCB Camp Lejeune, TO-09 SDG #: LEJEUNE056

Client: CH2M HILL, Inc., Virginia Beach, Virginia Date: April 8, 2009

Laboratory: Empirical Laboratories, Nashville, Tennessee Reviewer: Nancy Weaver

EDS ID	Client Sample ID	Laboratory Sample ID	Matrix
1	MR08-IS362-4-5-09A	0901201-01	Soil
2	MR08-SS362-09A	0901201-02	Soil
3	MR08-SS367-09A	0901201-03	Soil
4	MR08-IS367-4-5-09A	0901201-04	Soil
5	MR08-SS356-09A	0901201-05	Soil
6	MR08-IS356-4-5-09A	0901201-06	Soil
7	MR08-SS357-09A	0901201-07	Soil
8	MR08-IS357-4-5-09A	0901201-08	Soil
9	MR08-SS358-09A	0901201-09	Soil
10	MR08-IS358-4-5-09A	0901201-10	Soil
11	MR08-IS359-4-5-09A	0901201-11	Soil
12	MR08-SS359-09A	0901201-12	Soil
13	MR08-IS360-4-5-09A	0901201-13	Soil
14	MR08-IS360D-4-5-09A	0901201-14	Soil
15	MR08-SS360-09A	0901201-15	Soil
16	MR08-SS360D-09A	0901201-16	Soil
17	MR08-SS361-09A	0901201-17	Soil
18	MR08-IS361-4-5-09A	0901201-18	Soil
19	MR08-SS368-09A	0901201-19	Soil
20	MR08-IS368-4-5-09A	0901201-20	Soil
21	MR08-SS355-09A	0901201-21	Soil
22	MR08-IS355-4-5-09A	0901201-22	Soil
23	MR08-EB012409	0901201-23	Water
24	MR08-IS344-2-3-09A	0901201-24	Soil
25	MR08-SS344-09A	0901201-25	Soil
26	MR08-SS331-09A	0901201-26	Soil
27	MR08-IS331-4-5-09A	0901201-27	Soil
28	MR08-SS330-09A	0901201-28	Soil
29	MR08-IS330-0-1-09A	0901201-29	Soil
30	MR08-IS329-1-2-09A	0901201-30	Soil
30MS	MR08-IS329-1-2-09AMS	0901201-30MS	Soil
30MSD	MR08-IS329-1-2-09AMSD	0901201-30MSD	Soil
31	MR08-SS329-09A	0901201-31	Soil
31MS	MR08-SS329-09AMS	0901201-31MS	Soil
31MSD	MR08-SS329-09AMSD	0901201-31MSD	Soil

EDS ID	Client Sample ID	Laboratory Sample ID	Matrix
32	MR08-SS345-09A	0901201-32	Soil
33	MR08-SS345D-09A	0901201-33	Soil
34	MR08-IS345-1-2-09A	0901201-34	Soil
35	MR08-IS345D-1-2-09A	0901201-35	Soil
36	MR08-SS346-09A	0901201-36	Soil
36RE	MR08-SS346-09ARE	0901201-36RE	Soil
37	MR08-IS346-1-2-09A	0901201-37	Soil
38	MR08-SS354-09A	0901201-38	Soil
39	MR08-IS354-1-2-09A	0901201-39	Soil
40	MR08-SS369-09A	0901201-40	Soil
41	MR08-SS369D-09A	0901201-41	Soil
42	MR08-IS369-1-2-09A	0901201-42	Soil
43	MR08-IS369D-1-2-09A	0901201-43	Soil
44	MR08-SS370-09A	0901201-44	Soil
44RE	MR08-SS370-09ARE	0901201-44RE	Soil
45	MR08-IS370-1-2-09A	0901201-45	Soil
46	MR08-SS353-09A	0901201-46	Soil
47	MR08-IS353-1-2-09A	0901201-47	Soil
47RE	MR08-IS353-1-2-09ARE	0901201-47RE	Soil
47DL	MR08-IS353-1-2-09ADL	0901201-47DL	Soil
48	MR08-SS328-09A	0901201-48	Soil
48DL	MR08-SS328-09ADL	0901201-48DL	Soil
49	MR08-IS328-4-5-09A	0901201-49	Soil
50	MR08-SS347-09A	0901201-50	Soil
51	MR08-IS347-3-4-09A	0901201-51	Soil
52	MR08-EB012509	0901201-52	Water
53	MR08-SS279-09A	0901201-53	Soil
54	MR08-SS279D-09A	0901201-54	Soil
55	MR08-IS279-1-2-09A	0901201-55	Soil
55DL	MR08-IS279-1-2-09ADL	0901201-55DL	Soil
56	MR08-IS279D-1-2-09A	0901201-56	Soil
57	MR08-IS352-1-2-09A	0901201-57	Soil
58	MR08-SS352-09A	0901201-58	Soil
58RE	MR08-SS352-09ARE	0901201-58RE	Soil
59	MR08-SS371-09A	0901201-59	Soil
59RE	MR08-SS371-09ARE	0901201-59RE	Soil
60	MR08-IS371-1-2-09A	0901201-60	Soil
61	MR08-SS373-09A	0901201-61	Soil
61DL	MR08-SS373-09ADL	0901201-61DL	Soil
62	MR08-SS373D-09A	0901201-62	Soil
63	MR08-IS373-2-3-09A	0901201-63	Soil
64	MR08-IS373D-2-3-09A	0901201-64	Soil
65	MR08-IS350-3-4-09A	0901201-65	Soil
66	MR08-SS350-09A	0901201-66	Soil
67	MR08-SS349-09A	0901201-67	Soil
68	MR08-IS349-3-4-09A	0901201-68	Soil
69	MR08-SS326-09A	0901201-69	Soil
70	MR08-IS326-4-5-09A	0901201-70	Soil
71	MR08-SS327-09A	0901201-71	Soil
72	MR08-IS327-2-3-09A	0901201-72	Soil

EDS ID	Client Sample ID	Laboratory Sample ID	Matrix
73	MR08-SS372-09A	0901201-73	Soil
73MS	MR08-SS372-09AMS	0901201-73MS	Soil
73MSD	MR08-SS372-09AMSD	0901201-73MSD	Soil
74	MR08-IS372-1-2-09A	0901201-74	Soil
74MS	MR08-IS372-1-2-09AMS	0901201-74MS	Soil
74MSD	MR08-IS372-1-2-09AMSD	0901201-74MSD	Soil
75	MR08-SS324-09A	0901201-75	Soil
76	MR08-IS324-3-4-09A	0901201-76	Soil
77	MR08-SS325-09A	0901201-77	Soil
78	MR08-IS325-3-4-09A	0901201-78	Soil
79	MR08-SS323-09A	0901201-79	Soil
80	MR08-IS323-2-3-09A	0901201-80	Soil
81	MR08-EB012609	0901201-81	Water
82	MR08-FB012609	0901201-82	Water
83	MR08-SS321-09A	0901201-83	Soil
84	MR08-IS321-2-3-09A	0901201-84	Soil
85	MR08-SS322-09A	0901201-85	Soil
86	MR08-IS322-2-3-09A	0901201-86	Soil
87	MR08-SS320-09A	0901201-87	Soil
88	MR08-IS320-2-3-09A	0901201-88	Soil
89	MR08-SS351-09A	0901201-89	Soil
89MS	MR08-SS351-09AMS	0901201-89MS	Soil
89MSD	MR08-SS351-09AMSD	0901201-89MSD	Soil
90	MR08-IS351-2-3-09A	0901201-90	Soil
90MS	MR08-IS351-2-3-09AMS	0901201-90MS	Soil
90MSD	MR08-IS351-2-3-09AMSD	0901201-90MSD	Soil
91	MR08-SS348-09A	0901201-91	Soil
92	MR08-IS348-2-3-09A	0901201-92	Soil
93	MR08-TB1-012609	0901201-93	Water
94	MR08-TB2-012609	0901201-94	Water
95	MR08-TB3-012609	0901201-95	Water
96	MR08-TB4-012609	0901201-96	Water
97	MR08-TB5-012609	0901201-97	Water
98	MR08-TB6-012609	0901201-98	Water
99	MR08-SS349D-09A	0901203-01	Soil
100	MR08-IS349D-3-4-09A	0901203-02	Soil

The USEPA "Contract Laboratory Program National Functional Guidelines for Organic Data Review," October 1999, and professional judgement were used in evaluating the data in this summary report.

Holding Times - All samples were analyzed within 14 days for preserved water and soil samples.

GC/MS Tuning - All of the BFB tunes in the initial and continuing calibrations met the percent relative abundance criteria.

Initial Calibration - The initial calibrations exhibited acceptable %RSD and mean RRF values.

Continuing Calibration - The continuing calibrations exhibited acceptable %D and RRF values except the following.

CCAL Date	Compound	%D/RRF	Qualifier	Affected Samples
1/31/09	Dichlorodifluoromethane	29.6%	J/UJ	23, 52
2/1/09	Bromomethane	31.8%	J/UJ	82, 93-98
	Dichlorodifluoromethane	25.9%	J/UJ	82, 93-98
	2-Hexanone	26.7%	J/UJ	82, 93-98
2/3/09 (0655)	Dichlorodifluoromethane	30.3%	J/UJ	1-4, 6-11, 13-18
2/3/09 (1327)	Bromomethane	30.2%	J/UJ	81
	Dichlorodifluoromethane	25.2%	J/UJ	81
2/3/09 (1948)	2-Butanone	56.7%	J/UJ	19-22, 24-32
	Dichlorodifluoromethane	26.8%	J/UJ	19-22, 24-32
2/4/09 (0810)	Dichlorodifluoromethane	30.3%	J/UJ	5, 12, 62-68, 70, 71, 73, 74
2/4/09 (1319)	2-Butanone	189.2%	J/UJ	33, 36RE, 44RE, 45, 88, 91, 92, 61DL
2/4/09 (2133)	2-Butanone	33.4%	J/UJ	72, 75-80, 83-87, 89, 90
	Dichlorodifluoromethane	32.9%	J/UJ	72, 75-80, 83-87, 89, 90
2/6/09	Dichlorodifluoromethane	40.5%	J/UJ	47DL, 48DL, 55DL
2/16/09	Methyl acetate	33.6%	J/UJ	69

Surrogates - All samples exhibited acceptable surrogate recoveries except the following.

Sample ID	Surrogate	%R	Qualifier
4	S1-Dibromofluoromethane	131%	None - All ND
9	S1-Dibromofluoromethane	127%	J - Positive results
12	S1-Dibromofluoromethane	130%	J - Positive results
18	S1-Dibromofluoromethane	130%	None - All ND
20	S1-Dibromofluoromethane	132%	None - All ND
29	S1-Dibromofluoromethane	126%	J - Positive results
30	S1-Dibromofluoromethane	132%	None - All ND
32	S1-Dibromofluoromethane	135%	J - Positive results
36	S4-Bromofluorobenzene	78%	J/UJ
44	S4-Bromofluorobenzene	75%	J/UJ
47	S3-Toluene-d8	161%	J/UJ
	S4-Bromofluorobenzene	60%	
47RE	S1-Dibromofluoromethane	129%	J/UJ
	S3-Toluene-d8	188%	
	S4-Bromofluorobenzene	54%	
48	S3-Toluene-d8	124%	J/UJ
	S4-Bromofluorobenzene	72%	
55	S4-Bromofluorobenzene	77%	J/UJ
58	S4-Bromofluorobenzene	77%	J/UJ
58RE	S4-Bromofluorobenzene	74%	J/UJ
59	S4-Bromofluorobenzene	73%	J/UJ
59RE	S4-Bromofluorobenzene	72%	J/UJ
64	S1-Dibromofluoromethane	129%	None - All ND
65	S1-Dibromofluoromethane	138%	None - All ND

Sample ID	Surrogate	%R	Qualifier
66	S1-Dibromofluoromethane	130%	J - Positive results
68	S1-Dibromofluoromethane	136%	None - All ND
87	S1-Dibromofluoromethane	126%	J - Positive results
89	S1-Dibromofluoromethane	126%	None - All ND
90	S1-Dibromofluoromethane	128%	None - All ND

MS/MSD - A The MS/MSD sample exhibited acceptable %R and RPD values except the following.

MS/MSD Sample ID	Compound	MS/MSD %R/RPD	Qualifier
30	Benzene	67%/73%/Ok	J/UJ
	Bromodichloromethane	68%/Ok/Ok	J/UJ
	Bromoform	53%/Ok/Ok	J/UJ
	Carbon tetrachloride	62%/Ok/Ok	J/UJ
	Chlorobenzene	42%/47%/Ok	J/UJ
	Dibromochloromethane	63%/Ok/Ok	J/UJ
	1, 2-Dibromo-3-chloropropane	38%/Ok/Ok	J/UJ
	1,2-Dibromoethane	60%/62%/Ok	J/UJ
	1, 2-Dichlorobenzene	22%/25%/Ok	J/UJ
	1, 3-Dichlorobenzene	24%/26%/Ok	J/UJ
	1, 4-Dichlorobenzene	25%/29%/Ok	J/UJ
	1, 2-dichloropropene	69%/Ok/Ok	J/UJ
	cis-1, 3-Dichloropropene	64%/68%/Ok	J/UJ
	Ethylbenzene	49%/51%/Ok	J/UJ
	Isopropylbenzene	46%/50%/Ok	J/UJ
	Methyl acetate	23%/24%/Ok	J/UJ
	Methyl cyclohexane	50%/54%/Ok	J/UJ
	Styrene	32%/36%/Ok	J/UJ
	1, 1, 2, 2, -Tetrachloroethane	54%/Ok/Ok	J/UJ
	Tetrachloroethene	45%/51%/Ok	J/UJ
	Toluene	52%/62%/Ok	J/UJ
	1, 2, 4-Trichlorobenzene	8%/11%/31	J/R
	1, 1, 1-Trichloroethane	68%/Ok/Ok	J/UJ
	Trichloroethene	56%/66%/Ok	J/UJ
	Xylene (total)	43%/48%/Ok	J/UJ
31	Benzene	62%/61%/Ok	J/UJ
	Bromodichloromethane	63%/66%/Ok	J/UJ
	Bromoform	49%/54%/Ok	J/UJ
	Carbon tetrachloride	56%/57%/Ok	J/UJ
	Chlorobenzene	38%/39%/Ok	J/UJ
	Cyclohexane	51%/50%/Ok	J/UJ
	Dibromochloromethane	58%/63%/Ok	J/UJ
	1, 2-Dibromoethane	58%/60%/Ok	J/UJ
	1, 2-Dichlorobenzene	20%/23%/Ok	J/UJ
	1, 3-Dichlorobenzene	22%/23%/Ok	J/UJ
	1, 4-Dichlorobenzene	22%/26%/34	J/UJ
	1, 2-Dichloropropane	68%/67%/Ok	J/UJ
	cis-1, 3-Dichloropropene	64%/57%/Ok	J/UJ
	trans-1, 3-Dichloropropene	63%/Ok/Ok	J/UJ
	Ethylbenzene	42%/41%/Ok	J/UJ

MS/MSD Sample ID	Compound	MS/MSD %R/RPD	Qualifier
31 (cont.)	Isopropylbenzene	36%/39%/Ok	J/UJ
	Methyl cyclohexane	36%/34%/Ok	J/UJ
	Styrene	32%/33%/Ok	J/UJ
	1, 1, 2, 2-Tetrachloroethane	51%/Ok/Ok	J/UJ
	Tetrachloroethene	38%/41%/Ok	J/UJ
	Toluene	47%/50%/Ok	J/UJ
	1, 2, 4-Trichlorobenzene	10%/10%/Ok	J/UJ
	1, 1, 1-Trichloroethane	60%/63%/Ok	J/UJ
	Trichloroethene	53%/53%/Ok	J/UJ
	Xylene (total)	38%/39%/Ok	J/UJ
73	Acetone	Ok/Ok/58	None for RPD alone
	Benzene	52%/62%/47	J/UJ
	Bromodichloromethane	52%/63%/46	J/UJ
	Bromoform	35%/44%/Ok	J/UJ
	Bromomethane	Ok/Ok/60	None for RPD alone
	Carbon disulfide	Ok/Ok/56	None for RPD alone
	Carbon tetrachloride	45%/52%/52	J/UJ
	Chlorobenzene	35%/39%/53	J/UJ
	Chloroethane	Ok/Ok/47	None for RPD alone
	Chloroform	62%/Ok/50	J/UJ
	Chloromethane	Ok/Ok/60	None for RPD alone
	Cyclohexane	40%/44%/55	J/UJ
	Dibromochloromethane	44%/56%/42	J/UJ
	1, 2-Dibromo-3-chloropropane	27%/34%/44	J/UJ
	1, 2-Dibromoethane	46%/56%/47	J/UJ
	1, 2-Dichlorobenzene	17%/19%/55	J/UJ
	1, 3-Dichlorobenzene	18%/21%/50	J/UJ
	1, 4-Dichlorobenzene	20%/24%/49	J/UJ
	Dichlorodifluoromethane	Ok/Ok/52	None for RPD alone
	1, 1-Dichloroethane	68%/Ok/52	J/UJ
	1, 2-Dichloroethane	64%/Ok/57	J/UJ
	1, 1-Dichloroethene	Ok/Ok/53	None for RPD alone
	cis-1, 2-Dichloroethene	59%/Ok/47	J/UJ
	trans-1, 2-Dichloroethene	58%/Ok/48	J/UJ
	1, 2-dichloropropane	57%/64%/54	J/UJ
	cis-1, 3-Dichloropropene	50%/58%/51	J/UJ
	trans-1, 3-Dichloropropene	54%/63%/51	J/UJ
	Ethylbenzene	34%/40%/50	J/UJ
	2-Hexanone	Ok/Ok/55	None for RPD alone
	Isopropylbenzene	32%/35%/57	J/UJ
	Methyl acetate	Ok/Ok/32	None for RPD alone
	Methylene chloride	Ok/Ok/60	None for RPD alone
	Methyl cyclohexane	31%/33%/60	J/UJ
	Methyl tert-butyl ether	Ok/Ok/54	None for RPD alone
	4-Methyl-2-butyl ether	Ok/Ok/56	None for RPD alone
	Styrene	27%/32%/49	J/UJ
	1, 1, 2, 2-Tetrachloroethane	38%/44%/50	J/UJ
	Tetrachloroethene	32%/37%/51	J/UJ
	Toluene	46%/49%/57	J/UJ
	1, 2, 4-Trichlorobenzene	8%/9%/53	J/R
	1, 1, 1-Trichloroethane	50%/58%/50	J/UJ

MS/MSD Sample ID	Compound	MS/MSD %R/RPD	Qualifier
73 (cont.)	1, 1, 2-Trichloroethane	51%/58%/53	J/UJ
	Trichloroethene	43%/52%/48	J/UJ
	Trichlorotrifluoroethane	54%/Ok/51	J/UJ
	Trichlorofluoromethane	Ok/Ok/49	None for RPD alone
	Vinyl chloride	Ok/Ok/58	None for RPD alone
	Xylene (total)	32%/38%/48	J/UJ
74	Benzene	74%/Ok/Ok	J/UJ
	Chlorobenzene	57%/61%/Ok	J/UJ
	1, 2-Dibromoethane	68%/Ok/Ok	J/UJ
	1, 2-Dichlorobenzene	39%/44%/Ok	J/UJ
	1, 3-Dichlorobenzene	40%/44%/Ok	J/UJ
	1, 4-Dichlorobenzene	41%/48%/Ok	J/UJ
	Ethylbenzene	57%/67%/Ok	J/UJ
	Isopropylbenzene	55%/59%/Ok	J/UJ
	Methyl cyclohexane	46%/55%/Ok	J/UJ
	Styrene	56%/58%/Ok	J/UJ
	Tetrachloroethene	53%/59%/Ok	J/UJ
	Toluene	66%/Ok/Ok	J/UJ
	1, 2, 4-Trichlorobenzene	22%/26%/Ok	J/UJ
	Trichloroethene	66%/71%/Ok	J/UJ
	Xylene (total)	58%/60%/Ok	J/UJ
89	Acetone	Ok/Ok/110	None for RPD alone
	Benzene	50%/69%/70	J/UJ
	Bromodichloromethane	54%/67%/61	J/UJ
	Bromoform	37%/48%/64	J/UJ
	Bromomethane	Ok/Ok/59	None for RPD alone
	2-Butanone	Ok/2%/191	J/R
	Carbon disulfide	Ok/Ok/70	None for RPD alone
	Carbon tetrachloride	41%/54%/66	J/UJ
	Chlorobenzene	28%/42%/66	J/UJ
	Chloroethane	Ok/Ok/61	None for RPD alone
	Chloroform	59%/Ok/59%	J/UJ
	Chloromethane	Ok/Ok/48	None for RPD alone
	Cyclohexane	32%/44%/68	J/UJ
	Dibromochloromethane	45%/59%/65	J/UJ
	1, 2-Dibromo-3-chloropropane	27%/37%/70	J/UJ
	1, 2-Dibromoethane	41%/56%/67	J/UJ
	1, 2-Dichlorobenzene	14%/20%/73	J/UJ
	1, 3-Dichlorobenzene	15%/19%/66	J/UJ
	1, 4-Dichlorobenzene	15%/22%/75	J/UJ
	Dichlorodifluoromethane	Ok/Ok/55	None for RPD alone
	1, 1-Dichloroethane	66%/Ok/60	J/UJ
	1, 2-Dichloroethane	59%/Ok/63	J/UJ
	1, 1-Dichloroethene	63%/Ok/61	J/UJ
	cis-1, 2-Dichloroethene	56%/Ok/61	J/UJ
	trans-1, 2-Dichloroethene	57%/Ok/67	J/UJ
	1, 2-Dichloropropane	52%/64%/59	J/UJ
	cis-1, 3-Dichloropropene	46%/61%/66	J/UJ
	trans-1, 3-Dichloropropene	44%/Ok/75	J/UJ
	Ethylbenzene	30%/37%/54	J/UJ
	2-Hexanone	Ok/Ok/86	None for RPD alone

MS/MSD Sample ID	Compound	MS/MSD %R/RPD	Qualifier
89 (cont.)	Isopropylbenzene	25%/31%/86	J/UJ
	Methyl acetate	Ok/Ok/73	None for RPD alone
	Methylene chloride	Ok/Ok/62	None for RPD alone
	Methyl cyclohexane	23%/34%/77	J/UJ
	Methyl tert-butyl ether	Ok/Ok/55	None for RPD alone
	4-Methyl-2-pentanone	Ok/Ok/68	None for RPD alone
	Styrene	22%/39%/88	J/UJ
	1, 1, 2, 2-Tetrachloroethane	40%/48%/55	J/UJ
	Tetrachloroethene	27%/36%/68	J/UJ
	Toluene	40%/52%/65	J/UJ
	1, 2, 4-Trichlorobenzene	6%/7%/67	J/R
	1, 1, 1-Trichloroethane	50%/62%/60	J/UJ
	1, 1, 2-Trichloroethane	52%/Ok/61	J/UJ
	Trichloroethene	40%/58%/74	J/UJ
	Trichlorotrifluoroethane	51%/Ok/59	J/UJ
	Trichlorofluoromethane	Ok/Ok/57	None for RPD alone
	Vinyl chloride	Ok/Ok/55	None for RPD alone
	Xylene (total)	28%/36%/65	J/UJ
90	Benzene	60%/69%/Ok	J/UJ
	Bromodichloromethane	61%/68%/Ok	J/UJ
	Bromoform	53%/Ok/Ok	J/UJ
	Carbon tetrachloride	63%/Ok/Ok	J/UJ
	Chlorobenzene	56%/64%/Ok	J/UJ
	Chloroform	66%/69%/Ok	J/UJ
	Dibromochloromethane	57%/65%/Ok	J/UJ
	1, 2-Dibromoethane	49%/58%/Ok	J/UJ
	1, 2-Dichlorobenzene	54%/61%/Ok	J/UJ
	1, 3-Dichlorobenzene	55%/63%/Ok	J/UJ
	1, 4-Dichlorobenzene	55%/59%/Ok	J/UJ
	Dichloroethane	70%/73%/Ok	J/UJ
	1, 2-Dichloroethane	57%/61%/Ok	J/UJ
	cis-1, 2-Dichloroethene	62%/Ok/Ok	J/UJ
	1, 2-Dichloropropane	57%/65%/Ok	J/UJ
	cis-1, 3-Dichloropropene	59%/62%/Ok	J/UJ
	trans-1, 3-Dichloropropene	58%/Ok/Ok	J/UJ
	Ethylbenzene	60%/72%/Ok	J/UJ
	Isopropylbenzene	65%/23%/Ok	J/UJ
	Methyl acetate	22%/23%/Ok	J/UJ
	Methyl cyclohexane	64%/66%/Ok	J/UJ
	Styrene	57%/Ok/Ok	J/UJ
	Tetrachloroethene	56%/64%/Ok	J/UJ
	Toluene	60%/Ok/Ok	J/UJ
	1, 2, 4-Trichlorobenzene	44%/50%/Ok	J/UJ
	1, 1, 1-Trichloroethane	64%/Ok/Ok	J/UJ
	1, 1, 2-Trichloroethane	53%/Ok/Ok	J/UJ
	Trichloroethene	62%/65%/Ok	J/UJ
	Xylene (total)	59%/Ok/Ok	J/UJ

Laboratory Control Sample - The LCS samples exhibited acceptable %R values except the following.

LCS ID	Compound	%R	Qualifier	Affected Samples
V1BLK0203	Chloromethane	158%	None	All ND
	Dichlorodifluoromethane	171%	None	All ND
V1BLK0203E	Chloromethane	163%	None	All ND
	Dichlorodifluoromethane	175%	None	All ND
	Vinyl chloride	128%	None	All ND
V1BLK0204	Chloromethane	163%	None	All ND
	Dichlorodifluoromethane	180%	None	All ND
	Vinyl chloride	128%	None	All ND

Internal Standard (IS) Area Performance - All internal standards met response and retention time (RT) criteria except the following.

Sample ID	Internal Standard	Area Count	Qualifier
36	IS3-1,4-Dichlorobenzene-d4	Low	J/UJ
36RE	IS3-1,4-Dichlorobenzene-d4	Low	J/UJ
44	IS3-1,4-Dichlorobenzene-d4	Low	J/UJ
44RE	IS3-1,4-Dichlorobenzene-d4	Low	J/UJ
47	IS2-Chlorobenzene-d5	Low	J/UJ
	IS3-1,4-Dichlorobenzene-d4	Severely Low	J/R
47RE	IS1-Fluorobenzene	Low	J/UJ
	IS2-Chlorobenzene-d5	Severely Low	J/R
	IS3-1,4-Dichlorobenzene-d4	Severely Low	J/R
48	IS3-1,4-Dichlorobenzene-d4	Low	J/UJ
54	IS3-1,4-Dichlorobenzene-d4	Low	J/UJ
58	IS3-1,4-Dichlorobenzene-d4	Low	J/UJ
58RE	IS3-1,4-Dichlorobenzene-d4	Low	J/UJ
59	IS3-1,4-Dichlorobenzene-d4	Low	J/UJ
59RE	IS3-1,4-Dichlorobenzene-d4	Low	J/UJ
61	IS3-1,4-Dichlorobenzene-d4	Low	J/UJ

Method Blank - The method blanks exhibited the following contamination.

Blank ID	Compound	Conc.	Action Level	Qualifier	Affected Samples
V3BLK0130F	Methylene chloride	0.21 ug/L	2.1 ug/L	U	23, 52
	1, 2, 4-Trichlorobenzene	0.24 ug/L	1.2 ug/L	None	All ND
V3BLK0201	Methylene chloride	0.52 ug/L	5.2 ug/L	U	94-96
	1, 2, 4-Trichlorobenzene	0.17 ug/L	0.85 ug/L	None	All ND
V1BLK0203	Methylene chloride	3.2 ug/kg	32 ug/kg	U	34-44, 50
V3BLK0203	Methylene chloride	0.25 ug/L	2.5 ug/L	U	81
	1, 2, 4-Trichlorobenzene	0.14 ug/L	0.70 ug/L	U	81
V5BLK0203	Methylene chloride	2.9 ug/kg	29 ug/kg	U	1-4, 6-11, 13-18
	1, 2, 4-Trichlorobenzene	0.19 ug/kg	0.95 ug/kg	None	All ND
V1BLK0203E	Methylene chloride	2.1 ug/kg	21 ug/kg	U	46-49, 51, 53-60
V5BLK0203E	Acetone	3.5 ug/kg	35 ug/kg	U	20, 22, 24, 30, 100
	Methylene chloride	2.4 ug/kg	24 ug/kg	U	19-22, 24-32, 99, 100

Blank ID	Compound	Conc.	Action Level	Qualifier	Affected Samples
V5BLK0203E	1, 2, 4-Trichlorobenzene	0.25 ug/kg	1.25 ug/kg	None	All ND
V1BLK0204	Methylene chloride	1.2 ug/kg	12 ug/kg	U	33, 36RE, 45, 47RE, 58RE, 88, 91, 92
V5BLK0204	Acetone	3.6 ug/kg	36 ug/kg	U	63-65, 67, 68, 70, 74
	Methylene chloride	1.3 ug/kg	13 ug/kg	U	5, 12, 63-65, 67, 68, 70, 71, 73, 74
	1, 2, 4-Trichlorobenzene	0.19 ug/kg	0.95 ug/kg	None	All ND
V5BLK0204E	Methylene chloride	2.1 ug/kg	21 ug/kg	U	72, 75-78, 80, 83-87, 89, 90
	1, 2, 4-Trichlorobenzene	0.24 ug/kg	1.2 ug/kg	None	All ND
V5MBLK0216	Methylene chloride	89 ug/kg	890 ug/kg	U	69
	1, 2, 4-Trichlorobenzene	18 ug/kg	90 ug/kg	U	69

Trip, Field, Equipment Blank - Field QC results are summarized below.

Blank ID	Compound	Conc. ug/L	Action Level ug/kg	Qualifier	Affected Samples
MR08-TB1-012609	ND	-	-	-	-
MR08-TB2-012609	ND	-	-	-	-
MR08-TB3-012609	ND	-	-	-	-
MR08-TB4-012609	ND	-	-	-	-
MR08-TB5-012609	ND	-	-	-	-
MR08-TB6-012609	ND	-	-	-	-
MR08-EB012409	Acetone	1.3	13	None	See FB
	Chlorobenzene	0.24	1.2	None	See FB
	Chloroform	0.12	0.60	None	See FB
MR08-EB012509	Acetone	1.9	19	U	54-56, 72, 76, 78, 80
	Chlorobenzene	0.25	1.25	None	See FB
MR08-FB012609	Acetone	1.4	14	U	1, 4, 6-8, 11, 13, 14, 17, 18, 33, 36RE, 40-43, 46, 49, 51
	Chlorobenzene	0.31	1.55	None	All ND or >5X
	Chloroform	0.12	0.60	None	All ND or >5X
MR08-EB012609	Acetone	2.2	22	U	84-86, 88, 90-92
	Chlorobenzene	0.20	0.60	None	All ND

Field Duplicates - Field duplicate results are summarized below.

Compound	MR08-IS360-4-5-09A ug/kg	MR08-IS360D-4-5-09A ug/kg	RPD	Qualifier
None	ND	ND	-	-

Compound	MR08-SS360-09A ug/kg	MR08-SS360D-09A ug/kg	RPD	Qualifier
Acetone	31	28	10%	None

Compound	MR08-SS345-09A ug/kg	MR08-SS345D-09A ug/kg	RPD	Qualifier
Benzene	11 U	0.63	NC	None
Chloroform	0.61	10 U	NC	None
Methylcyclohexane	11 U	0.40	NC	None
Ethylbenzene	11 U	2.1	NC	None
Toluene	11 U	1.1	NC	None

Compound	MR08-IS345-1-2-09A ug/kg	MR08-IS345D-1-2-09A ug/kg	RPD	Qualifier
Acetone	22	20	10%	None
2-Butanone	49 U	3.5	NC	None

Compound	MR08-SS369-09A ug/kg	MR08-SS369D-09A ug/kg	RPD	Qualifier
Benzene	1.2	1.2	0%	None
Cyclohexane	0.89	0.73	20%	None
Ethylbenzene	9.3	7.3	24%	None
Methyl cyclohexane	0.95	0.88	8%	None
Toluene	3.6	3.0	18%	None

Compound	MR08-IS369-1-2--09A ug/kg	MR08-IS369D-1-2-09A ug/kg	RPD	Qualifier
ND	ND	ND	-	-

Compound	MR08-SS279-09A ug/kg	MR08-SS279D-09A ug/kg	RPD	Qualifier
Benzene	1.2	1.3	8%	None
Cyclohexane	11 U	0.80	NC	None
Methylcyclohexane	0.77	0.60	25%	None
Ethylbenzene	13	10	26%	None
Toluene	4.5	4.2	7%	None

Compound	MR08-SS373-09A ug/kg	MR08-SS373D-09A ug/kg	RPD	Qualifier
Acetone	290	330	13%	None
2-Butanone	42	33	24%	None
Toluene	2.8	15 U	NC	None

Compound	MR08-IS373-2-3-09A ug/kg	MR08-IS373D-2-3-09A ug/kg	RPD	Qualifier
None	ND	ND	-	-

Compound	MR08-SS349-09A ug/kg	MR08-SS349D-09A ug/kg	RPD	Qualifier
Acetone	36	150	123%	None
Bromodichloromethane	0.84	11 U	NC	None
Chloroform	10	2.4	123%	None
Toluene	0.98	11 U	NC	None

Compound	MR08-IS349-3-4-09A ug/kg	MR08-IS349D-3-4-09A ug/kg	RPD	Qualifier
Acetone	9.2 U	9.8	NC	None

Tentatively Identified Compounds (TICs) - TICs were not reported.

Compound Quantitation - Several samples exhibited high concentrations of target compounds over the calibration range and were flagged (E). The laboratory diluted and reanalyzed the samples and the dilution results for these compounds should be used for reporting. .

Several samples exhibited internal standard and/or surrogate deficiencies. These samples were reanalyzed at various dilutions. Refer to Form Is for which were used for reporting purposes.

FORM 1
VOLATILE ORGANICS ANALYSIS DATA SHEET

CLIENT SAMPLE NO.

MR08-IS36
2-4-5-09A

1

Lab Name: EMPIRICAL LABS Contract: CH2MHILL

Lab Code: NA Case No.: NA SAS No.: NA SDG No.: LEJEUNE056

Matrix: (soil/water) SOIL Lab Sample ID: 0901201-01

Sample wt/vol: 5.3 (g/mL) G Lab File ID: 0120101A

Level: (low/med) LOW Date Sampled: 01/23/09 08:25

% Moisture: not dec. 10 Date Analyzed: 02/03/09 08:59

GC Column: RTX-VRX ID: 0.25 (mm) Dilution Factor: 1.0

Soil Extract Volume:_____(uL) Soil Aliquot Volume: _____(uL)

CONCENTRATION UNITS: (ug/L or ug/Kg) UG/KG

CAS NO.	COMPOUND	MDL	RL	CONC	Q	
67-64-1	Acetone	2.1	10	10U ~~6.2~~	~~J~~	BL
71-43-2	Benzene	0.49	10		U	
75-27-4	Bromodichloromethane	0.31	10		U	
75-25-2	Bromoform	1.0	10		U	
74-83-9	Bromomethane	0.75	10		U	
78-93-3	2-Butanone	1.4	10		U	
75-15-0	Carbon disulfide	1.4	10		U	
56-23-5	Carbon tetrachloride	0.91	10		U	
108-90-7	Chlorobenzene	0.35	10		U	
75-00-3	Chloroethane	1.1	10		U	
67-66-3	Chloroform	0.57	10		U	
74-87-3	Chloromethane	0.54	10		U	
110-82-7	Cyclohexane	0.56	10		U	
124-48-1	Dibromochloromethane	0.35	10		U	
96-12-8	1,2-Dibromo-3-chloropropane	1.2	5.2		U	
106-93-4	1,2-Dibromoethane	0.45	10		U	
95-50-1	1,2-Dichlorobenzene	0.38	10		U	
541-73-1	1,3-Dichlorobenzene	0.87	10		U	
106-46-7	1,4-Dichlorobenzene	0.57	10		U	
75-71-8	Dichlorodifluoromethane	1.1	10		~~U~~ UJ	CCH
75-34-3	1,1-Dichloroethane	0.56	10		U	
107-06-2	1,2-Dichloroethane	0.48	10		U	
75-35-4	1,1-Dichloroethene	1.2	10		U	
156-59-2	cis-1,2-Dichloroethene	1.2	10		U	
156-60-5	trans-1,2-Dichloroethene	1.1	10		U	
78-87-5	1,2-Dichloropropane	0.48	10		U	
10061-01-5	cis-1,3-Dichloropropene	0.52	10		U	
10061-02-6	trans-1,3-Dichloropropene	0.33	10		U	
100-41-4	Ethylbenzene	0.78	10		U	
591-78-6	2-Hexanone	2.4	10		U	
98-82-8	Isopropylbenzene	0.91	10		U	
79-20-9	Methyl acetate	1.7	10		U	
75-09-2	Methylene chloride	0.64	10	10U ~~1.0~~	~~JB~~	BL
108-87-2	Methyl cyclohexane	0.31	10		U	
1634-04-4	Methyl tert-butyl ether	0.33	10		U	
108-10-1	4-Methyl-2-pentanone	0.60	10		U	
100-42-5	Styrene	0.36	10		U	
79-34-5	1,1,2,2-Tetrachloroethane	0.45	10		U	
127-18-4	Tetrachloroethene	1.0	10		U	

FORM I VOA

NW
11/6/09

FORM 1
VOLATILE ORGANICS ANALYSIS DATA SHEET

CLIENT SAMPLE NO.

MR08-IS36
2-4-5-09A

Lab Name: EMPIRICAL LABS Contract: CH2MHILL

Lab Code: NA Case No.: NA SAS No.: NA SDG No.: LEJEUNE056

Matrix: (soil/water) SOIL Lab Sample ID: 0901201-01

Sample wt/vol: 5.3 (g/mL) G Lab File ID: 0120101A

Level: (low/med) LOW Date Sampled: 01/23/09 08:25

% Moisture: not dec. 10 Date Analyzed: 02/03/09 08:59

GC Column: RTX-VRX ID: 0.25 (mm) Dilution Factor: 1.0

Soil Extract Volume:_____(uL) Soil Aliquot Volume: _____(uL)

CONCENTRATION UNITS: (ug/L or ug/Kg) UG/KG

CAS NO.	COMPOUND	MDL	RL	CONC	Q
108-88-3	Toluene	0.89	10		U
120-82-1	1,2,4-Trichlorobenzene	0.19	10		U
71-55-6	1,1,1-Trichloroethane	0.94	10		U
79-00-5	1,1,2-Trichloroethane	0.36	10		U
79-01-6	Trichloroethene	0.88	10		U
76-13-1	Trichlorotrifluoroethane	0.57	10		U
75-69-4	Trichlorofluoromethane	0.99	10		U
75-01-4	Vinyl chloride	1.1	10		U
1330-20-7	Xylene(total)	0.73	10		U

NW
4/6/09

FORM 1
VOLATILE ORGANICS ANALYSIS DATA SHEET

CLIENT SAMPLE NO.

MR08-SS362-09A

2

Lab Name: EMPIRICAL LABS Contract: CH2MHILL

Lab Code: NA Case No.: NA SAS No.: NA SDG No.: LEJEUNE056

Matrix: (soil/water) SOIL Lab Sample ID: 0901201-02

Sample wt/vol: 4.3 (g/mL) G Lab File ID: 0120102A

Level: (low/med) LOW Date Sampled: 01/23/09 08:30

% Moisture: not dec. 23 Date Analyzed: 02/03/09 09:30

GC Column: RTX-VRX ID: 0.25 (mm) Dilution Factor: 1.0

Soil Extract Volume:_____(uL) Soil Aliquot Volume: _____(uL)

CONCENTRATION UNITS: (ug/L or ug/Kg) UG/KG

CAS NO.	COMPOUND	MDL	RL	CONC	Q
67-64-1	Acetone	3.0	15	210	
71-43-2	Benzene	0.72	15		U
75-27-4	Bromodichloromethane	0.46	15		U
75-25-2	Bromoform	1.5	15		U
74-83-9	Bromomethane	1.1	15		U
78-93-3	2-Butanone	2.1	15		U
75-15-0	Carbon disulfide	2.0	15		U
56-23-5	Carbon tetrachloride	1.3	15		U
108-90-7	Chlorobenzene	0.52	15		U
75-00-3	Chloroethane	1.7	15		U
67-66-3	Chloroform	0.84	15		U
74-87-3	Chloromethane	0.79	15		U
110-82-7	Cyclohexane	0.82	15		U
124-48-1	Dibromochloromethane	0.52	15		U
96-12-8	1,2-Dibromo-3-chloropropane	1.8	7.6		U
106-93-4	1,2-Dibromoethane	0.66	15		U
95-50-1	1,2-Dichlorobenzene	0.56	15		U
541-73-1	1,3-Dichlorobenzene	1.3	15		U
106-46-7	1,4-Dichlorobenzene	0.84	15		U
75-71-8	Dichlorodifluoromethane	1.7	15		~~U~~ UJ CCI
75-34-3	1,1-Dichloroethane	0.82	15		U
107-06-2	1,2-Dichloroethane	0.70	15		U
75-35-4	1,1-Dichloroethene	1.8	15		U
156-59-2	cis-1,2-Dichloroethene	1.8	15		U
156-60-5	trans-1,2-Dichloroethene	1.7	15		U
78-87-5	1,2-Dichloropropane	0.70	15		U
10061-01-5	cis-1,3-Dichloropropene	0.76	15		U
10061-02-6	trans-1,3-Dichloropropene	0.49	15		U
100-41-4	Ethylbenzene	1.1	15		U
591-78-6	2-Hexanone	3.5	15		U
98-82-8	Isopropylbenzene	1.3	15		U
79-20-9	Methyl acetate	2.4	15		U
75-09-2	Methylene chloride	0.94	15	15U	~~1.4 JB~~ BI
108-87-2	Methyl cyclohexane	0.46	15		U
1634-04-4	Methyl tert-butyl ether	0.49	15		U
108-10-1	4-Methyl-2-pentanone	0.88	15		U
100-42-5	Styrene	0.53	15		U
79-34-5	1,1,2,2-Tetrachloroethane	0.66	15		U
127-18-4	Tetrachloroethene	1.5	15		U

FORM I VOA

MW 4/2/09

FORM 1
VOLATILE ORGANICS ANALYSIS DATA SHEET

CLIENT SAMPLE NO.

MR08-SS362-09A

2

Lab Name: EMPIRICAL LABS Contract: CH2MHILL

Lab Code: NA Case No.: NA SAS No.: NA SDG No.: LEJEUNE056

Matrix: (soil/water) SOIL Lab Sample ID: 0901201-02

Sample wt/vol: 4.3 (g/mL) G Lab File ID: 0120102A

Level: (low/med) LOW Date Sampled: 01/23/09 08:30

% Moisture: not dec. 23 Date Analyzed: 02/03/09 09:30

GC Column: RTX-VRX ID: 0.25 (mm) Dilution Factor: 1.0

Soil Extract Volume:_____(uL) Soil Aliquot Volume: _____(uL)

CONCENTRATION UNITS: (ug/L or ug/Kg) UG/KG

CAS NO.	COMPOUND	MDL	RL	CONC	Q
108-88-3	Toluene	1.3	15		U
120-82-1	1,2,4-Trichlorobenzene	0.27	15		U
71-55-6	1,1,1-Trichloroethane	1.4	15		U
79-00-5	1,1,2-Trichloroethane	0.53	15		U
79-01-6	Trichloroethene	1.3	15		U
76-13-1	Trichlorotrifluoroethane	0.84	15		U
75-69-4	Trichlorofluoromethane	1.4	15		U
75-01-4	Vinyl chloride	1.7	15		U
1330-20-7	Xylene(total)	1.1	15		U

MW
4/6/09

FORM 1
VOLATILE ORGANICS ANALYSIS DATA SHEET

CLIENT SAMPLE NO. 3

MR08-SS367-09A

Lab Name: EMPIRICAL LABS Contract: CH2MHILL

Lab Code: NA Case No.: NA SAS No.: NA SDG No.: LEJEUNE056

Matrix: (soil/water) SOIL Lab Sample ID: 0901201-03

Sample wt/vol: 5.5 (g/mL) G Lab File ID: 0120103A

Level: (low/med) LOW Date Sampled: 01/23/09 10:40

% Moisture: not dec. 6 Date Analyzed: 02/03/09 10:00

GC Column: RTX-VRX ID: 0.25 (mm) Dilution Factor: 1.0

Soil Extract Volume:_____(uL) Soil Aliquot Volume: _____(uL)

CONCENTRATION UNITS: (ug/L or ug/Kg) UG/KG

CAS NO.	COMPOUND	MDL	RL	CONC	Q
67-64-1	Acetone	1.9	9.6	15	
71-43-2	Benzene	0.45	9.6		U
75-27-4	Bromodichloromethane	0.29	9.6		U
75-25-2	Bromoform	0.96	9.6		U
74-83-9	Bromomethane	0.69	9.6		U
78-93-3	2-Butanone	1.3	9.6		U
75-15-0	Carbon disulfide	1.2	9.6		U
56-23-5	Carbon tetrachloride	0.84	9.6		U
108-90-7	Chlorobenzene	0.33	9.6		U
75-00-3	Chloroethane	1.0	9.6		U
67-66-3	Chloroform	0.53	9.6		U
74-87-3	Chloromethane	0.50	9.6		U
110-82-7	Cyclohexane	0.52	9.6		U
124-48-1	Dibromochloromethane	0.33	9.6		U
96-12-8	1,2-Dibromo-3-chloropropane	1.2	4.8		U
106-93-4	1,2-Dibromoethane	0.41	9.6		U
95-50-1	1,2-Dichlorobenzene	0.35	9.6		U
541-73-1	1,3-Dichlorobenzene	0.80	9.6		U
106-46-7	1,4-Dichlorobenzene	0.53	9.6		U
75-71-8	Dichlorodifluoromethane	1.0	9.6		~~U~~ UJ CC
75-34-3	1,1-Dichloroethane	0.52	9.6		U
107-06-2	1,2-Dichloroethane	0.44	9.6		U
75-35-4	1,1-Dichloroethene	1.2	9.6		U
156-59-2	cis-1,2-Dichloroethene	1.2	9.6		U
156-60-5	trans-1,2-Dichloroethene	1.0	9.6		U
78-87-5	1,2-Dichloropropane	0.44	9.6		U
10061-01-5	cis-1,3-Dichloropropene	0.48	9.6		U
10061-02-6	trans-1,3-Dichloropropene	0.31	9.6		U
100-41-4	Ethylbenzene	0.72	9.6		U
591-78-6	2-Hexanone	2.2	9.6		U
98-82-8	Isopropylbenzene	0.84	9.6		U
79-20-9	Methyl acetate	1.5	9.6		U
75-09-2	Methylene chloride	0.59	9.6	9.6 U ~~0.98 JB~~	B
108-87-2	Methyl cyclohexane	0.29	9.6		U
1634-04-4	Methyl tert-butyl ether	0.31	9.6		U
108-10-1	4-Methyl-2-pentanone	0.56	9.6		U
100-42-5	Styrene	0.34	9.6		U
79-34-5	1,1,2,2-Tetrachloroethane	0.41	9.6		U
127-18-4	Tetrachloroethene	0.93	9.6		U

LW
4/6/09

FORM 1
VOLATILE ORGANICS ANALYSIS DATA SHEET

CLIENT SAMPLE NO. 3

MR08-SS367-09A

Lab Name: EMPIRICAL LABS Contract: CH2MHILL

Lab Code: NA Case No.: NA SAS No.: NA SDG No.: LEJEUNE056

Matrix: (soil/water) SOIL Lab Sample ID: 0901201-03

Sample wt/vol: 5.5 (g/mL) G Lab File ID: 0120103A

Level: (low/med) LOW Date Sampled: 01/23/09 10:40

% Moisture: not dec. 6 Date Analyzed: 02/03/09 10:00

GC Column: RTX-VRX ID: 0.25 (mm) Dilution Factor: 1.0

Soil Extract Volume:_____(uL) Soil Aliquot Volume: _____(uL)

CONCENTRATION UNITS: (ug/L or ug/Kg) UG/KG

CAS NO.	COMPOUND	MDL	RL	CONC	Q
108-88-3	Toluene	0.82	9.6		U
120-82-1	1,2,4-Trichlorobenzene	0.17	9.6		U
71-55-6	1,1,1-Trichloroethane	0.86	9.6		U
79-00-5	1,1,2-Trichloroethane	0.34	9.6		U
79-01-6	Trichloroethene	0.82	9.6		U
76-13-1	Trichlorotrifluoroethane	0.53	9.6		U
75-69-4	Trichlorofluoromethane	0.91	9.6		U
75-01-4	Vinyl chloride	1.0	9.6		U
1330-20-7	Xylene(total)	0.67	9.6		U

KW
4/6/09

FORM 1
VOLATILE ORGANICS ANALYSIS DATA SHEET

CLIENT SAMPLE NO.

MR08-IS36
7-4-5-09A

4

Lab Name: EMPIRICAL LABS Contract: CH2MHILL

Lab Code: NA Case No.: NA SAS No.: NA SDG No.: LEJEUNE056

Matrix: (soil/water) SOIL Lab Sample ID: 0901201-04

Sample wt/vol: 5.4 (g/mL) G Lab File ID: 0120104A

Level: (low/med) LOW Date Sampled: 01/23/09 10:45

% Moisture: not dec. 5 Date Analyzed: 02/03/09 10:31

GC Column: RTX-VRX ID: 0.25 (mm) Dilution Factor: 1.0

Soil Extract Volume:_____(uL) Soil Aliquot Volume: _____(uL)

CONCENTRATION UNITS: (ug/L or ug/Kg) UG/KG

CAS NO.	COMPOUND	MDL	RL	CONC	Q	
67-64-1	Acetone	2.0	9.8	9.8U ~~3.8~~	~~J~~	BL
71-43-2	Benzene	0.46	9.8		U	
75-27-4	Bromodichloromethane	0.30	9.8		U	
75-25-2	Bromoform	0.98	9.8		U	
74-83-9	Bromomethane	0.71	9.8		U	
78-93-3	2-Butanone	1.4	9.8		U	
75-15-0	Carbon disulfide	1.3	9.8		U	
56-23-5	Carbon tetrachloride	0.87	9.8		U	
108-90-7	Chlorobenzene	0.33	9.8		U	
75-00-3	Chloroethane	1.1	9.8		U	
67-66-3	Chloroform	0.54	9.8		U	
74-87-3	Chloromethane	0.51	9.8		U	
110-82-7	Cyclohexane	0.53	9.8		U	
124-48-1	Dibromochloromethane	0.33	9.8		U	
96-12-8	1,2-Dibromo-3-chloropropane	1.2	4.9		U	
106-93-4	1,2-Dibromoethane	0.42	9.8		U	
95-50-1	1,2-Dichlorobenzene	0.36	9.8		U	
541-73-1	1,3-Dichlorobenzene	0.83	9.8		U	
106-46-7	1,4-Dichlorobenzene	0.54	9.8		U	
75-71-8	Dichlorodifluoromethane	1.1	9.8		~~U~~ UJ	CC
75-34-3	1,1-Dichloroethane	0.53	9.8		U	
107-06-2	1,2-Dichloroethane	0.45	9.8		U	
75-35-4	1,1-Dichloroethene	1.2	9.8		U	
156-59-2	cis-1,2-Dichloroethene	1.2	9.8		U	
156-60-5	trans-1,2-Dichloroethene	1.1	9.8		U	
78-87-5	1,2-Dichloropropane	0.45	9.8		U	
10061-01-5	cis-1,3-Dichloropropene	0.49	9.8		U	
10061-02-6	trans-1,3-Dichloropropene	0.31	9.8		U	
100-41-4	Ethylbenzene	0.74	9.8		U	
591-78-6	2-Hexanone	2.3	9.8		U	
98-82-8	Isopropylbenzene	0.87	9.8		U	
79-20-9	Methyl acetate	1.6	9.8		U	
75-09-2	Methylene chloride	0.61	9.8	9.8U ~~1.0~~	~~JB~~	BL
108-87-2	Methyl cyclohexane	0.30	9.8		U	
1634-04-4	Methyl tert-butyl ether	0.31	9.8		U	
108-10-1	4-Methyl-2-pentanone	0.57	9.8		U	
100-42-5	Styrene	0.34	9.8		U	
79-34-5	1,1,2,2-Tetrachloroethane	0.42	9.8		U	
127-18-4	Tetrachloroethene	0.95	9.8		U	

FORM I VOA

NW
4/2/09

FORM 1
VOLATILE ORGANICS ANALYSIS DATA SHEET

CLIENT SAMPLE NO.

MR08-IS36
7-4-5-09A

4

Lab Name: EMPIRICAL LABS Contract: CH2MHILL

Lab Code: NA Case No.: NA SAS No.: NA SDG No.: LEJEUNE056

Matrix: (soil/water) SOIL Lab Sample ID: 0901201-04

Sample wt/vol: 5.4 (g/mL) G Lab File ID: 0120104A

Level: (low/med) LOW Date Sampled: 01/23/09 10:45

% Moisture: not dec. 5 Date Analyzed: 02/03/09 10:31

GC Column: RTX-VRX ID: 0.25 (mm) Dilution Factor: 1.0

Soil Extract Volume:_____(uL) Soil Aliquot Volume: _____(uL)

CONCENTRATION UNITS: (ug/L or ug/Kg) UG/KG

CAS NO.	COMPOUND	MDL	RL	CONC	Q
108-88-3	Toluene	0.85	9.8		U
120-82-1	1,2,4-Trichlorobenzene	0.18	9.8		U
71-55-6	1,1,1-Trichloroethane	0.88	9.8		U
79-00-5	1,1,2-Trichloroethane	0.34	9.8		U
79-01-6	Trichloroethene	0.84	9.8		U
76-13-1	Trichlorotrifluoroethane	0.54	9.8		U
75-69-4	Trichlorofluoromethane	0.94	9.8		U
75-01-4	Vinyl chloride	1.1	9.8		U
1330-20-7	Xylene(total)	0.69	9.8		U

FORM I VOA

AW
4/6/09

FORM 1
VOLATILE ORGANICS ANALYSIS DATA SHEET

CLIENT SAMPLE NO.

5

MR08-SS356-09A

Lab Name: EMPIRICAL LABS Contract: CH2MHILL

Lab Code: NA Case No.: NA SAS No.: NA SDG No.: LEJEUNE056

Matrix: (soil/water) SOIL Lab Sample ID: 0901201-05

Sample wt/vol: 5.1 (g/mL) G Lab File ID: 0120105B

Level: (low/med) LOW Date Sampled: 01/23/09 11:30

% Moisture: not dec. 13 Date Analyzed: 02/04/09 14:52

GC Column: RTX-VRX ID: 0.25 (mm) Dilution Factor: 1.0

Soil Extract Volume:_____(uL) Soil Aliquot Volume: _____(uL)

CONCENTRATION UNITS: (ug/L or ug/Kg) UG/KG

CAS NO.	COMPOUND	MDL	RL	CONC	Q
67-64-1	Acetone	2.2	11	42	~~B~~
71-43-2	Benzene	0.53	11		U
75-27-4	Bromodichloromethane	0.34	11		U
75-25-2	Bromoform	1.1	11		U
74-83-9	Bromomethane	0.81	11		U
78-93-3	2-Butanone	1.6	11	8.5	J
75-15-0	Carbon disulfide	1.4	11	1.6	J
56-23-5	Carbon tetrachloride	0.98	11		U
108-90-7	Chlorobenzene	0.38	11		U
75-00-3	Chloroethane	1.2	11		U
67-66-3	Chloroform	0.62	11		U
74-87-3	Chloromethane	0.58	11		U
110-82-7	Cyclohexane	0.60	11		U
124-48-1	Dibromochloromethane	0.38	11		U
96-12-8	1,2-Dibromo-3-chloropropane	1.3	5.6		U
106-93-4	1,2-Dibromoethane	0.48	11		U
95-50-1	1,2-Dichlorobenzene	0.41	11		U
541-73-1	1,3-Dichlorobenzene	0.94	11		U
106-46-7	1,4-Dichlorobenzene	0.62	11		U
75-71-8	Dichlorodifluoromethane	1.2	11		~~U~~ UJ CC
75-34-3	1,1-Dichloroethane	0.60	11		U
107-06-2	1,2-Dichloroethane	0.51	11		U
75-35-4	1,1-Dichloroethene	1.3	11		U
156-59-2	cis-1,2-Dichloroethene	1.3	11		U
156-60-5	trans-1,2-Dichloroethene	1.2	11		U
78-87-5	1,2-Dichloropropane	0.51	11		U
10061-01-5	cis-1,3-Dichloropropene	0.56	11		U
10061-02-6	trans-1,3-Dichloropropene	0.36	11		U
100-41-4	Ethylbenzene	0.84	11		U
591-78-6	2-Hexanone	2.6	11		U
98-82-8	Isopropylbenzene	0.98	11		U
79-20-9	Methyl acetate	1.8	11		U
75-09-2	Methylene chloride	0.69	11	11U	~~1.1 JB~~ B
108-87-2	Methyl cyclohexane	0.34	11		U
1634-04-4	Methyl tert-butyl ether	0.36	11		U
108-10-1	4-Methyl-2-pentanone	0.65	11		U
100-42-5	Styrene	0.39	11		U
79-34-5	1,1,2,2-Tetrachloroethane	0.48	11		U
127-18-4	Tetrachloroethene	1.1	11		U

FORM I VOA

NW 4/16/09

FORM 1
VOLATILE ORGANICS ANALYSIS DATA SHEET

CLIENT SAMPLE NO. 5

MR08-SS356-09A

Lab Name: EMPIRICAL LABS Contract: CH2MHILL

Lab Code: NA Case No.: NA SAS No.: NA SDG No.: LEJEUNE056

Matrix: (soil/water) SOIL Lab Sample ID: 0901201-05

Sample wt/vol: 5.1 (g/mL) G Lab File ID: 0120105B

Level: (low/med) LOW Date Sampled: 01/23/09 11:30

% Moisture: not dec. 13 Date Analyzed: 02/04/09 14:52

GC Column: RTX-VRX ID: 0.25 (mm) Dilution Factor: 1.0

Soil Extract Volume:_____(uL) Soil Aliquot Volume: _____(uL)

CONCENTRATION UNITS: (ug/L or ug/Kg) UG/KG

CAS NO.	COMPOUND	MDL	RL	CONC	Q
108-88-3	Toluene	0.96	11		U
120-82-1	1,2,4-Trichlorobenzene	0.20	11		U
71-55-6	1,1,1-Trichloroethane	1.0	11		U
79-00-5	1,1,2-Trichloroethane	0.39	11		U
79-01-6	Trichloroethene	0.95	11		U
76-13-1	Trichlorotrifluoroethane	0.62	11		U
75-69-4	Trichlorofluoromethane	1.1	11		U
75-01-4	Vinyl chloride	1.2	11		U
1330-20-7	Xylene(total)	0.78	11		U

HW
4/16/09

FORM 1
VOLATILE ORGANICS ANALYSIS DATA SHEET

CLIENT SAMPLE NO.

MR08-IS35
6-4-5-09A

Lab Name: EMPIRICAL LABS Contract: CH2MHILL

Lab Code: NA Case No.: NA SAS No.: NA SDG No.: LEJEUNE056

Matrix: (soil/water) SOIL Lab Sample ID: 0901201-06

Sample wt/vol: 5.0 (g/mL) G Lab File ID: 0120106A

Level: (low/med) LOW Date Sampled: 01/23/09 11:35

% Moisture: not dec. 8 Date Analyzed: 02/03/09 11:33

GC Column: RTX-VRX ID: 0.25 (mm) Dilution Factor: 1.0

Soil Extract Volume:_____(uL) Soil Aliquot Volume: _____(uL)

CONCENTRATION UNITS: (ug/L or ug/Kg) UG/KG

CAS NO.	COMPOUND	MDL	RL	CONC	Q
67-64-1	Acetone	2.2	11	11u ~~4.9~~	~~J~~
71-43-2	Benzene	0.52	11		U
75-27-4	Bromodichloromethane	0.33	11		U
75-25-2	Bromoform	1.1	11		U
74-83-9	Bromomethane	0.79	11		U
78-93-3	2-Butanone	1.5	11		U
75-15-0	Carbon disulfide	1.4	11		U
56-23-5	Carbon tetrachloride	0.97	11		U
108-90-7	Chlorobenzene	0.37	11		U
75-00-3	Chloroethane	1.2	11		U
67-66-3	Chloroform	0.61	11		U
74-87-3	Chloromethane	0.57	11		U
110-82-7	Cyclohexane	0.60	11		U
124-48-1	Dibromochloromethane	0.37	11		U
96-12-8	1,2-Dibromo-3-chloropropane	1.3	5.5		U
106-93-4	1,2-Dibromoethane	0.47	11		U
95-50-1	1,2-Dichlorobenzene	0.41	11		U
541-73-1	1,3-Dichlorobenzene	0.93	11		U
106-46-7	1,4-Dichlorobenzene	0.61	11		U
75-71-8	Dichlorodifluoromethane	1.2	11		~~U~~ UJ
75-34-3	1,1-Dichloroethane	0.60	11		U
107-06-2	1,2-Dichloroethane	0.51	11		U
75-35-4	1,1-Dichloroethene	1.3	11		U
156-59-2	cis-1,2-Dichloroethene	1.3	11		U
156-60-5	trans-1,2-Dichloroethene	1.2	11		U
78-87-5	1,2-Dichloropropane	0.51	11		U
10061-01-5	cis-1,3-Dichloropropene	0.55	11		U
10061-02-6	trans-1,3-Dichloropropene	0.35	11		U
100-41-4	Ethylbenzene	0.83	11		U
591-78-6	2-Hexanone	2.5	11		U
98-82-8	Isopropylbenzene	0.97	11		U
79-20-9	Methyl acetate	1.8	11		U
75-09-2	Methylene chloride	0.68	11	11u ~~1.0~~	~~JB~~
108-87-2	Methyl cyclohexane	0.33	11		U
1634-04-4	Methyl tert-butyl ether	0.35	11		U
108-10-1	4-Methyl-2-pentanone	0.64	11		U
100-42-5	Styrene	0.38	11		U
79-34-5	1,1,2,2-Tetrachloroethane	0.47	11		U
127-18-4	Tetrachloroethene	1.1	11		U

NW 4/6/09

FORM 1
VOLATILE ORGANICS ANALYSIS DATA SHEET

CLIENT SAMPLE NO.

6

MR08-IS35
6-4-5-09A

Lab Name: EMPIRICAL LABS Contract: CH2MHILL

Lab Code: NA Case No.: NA SAS No.: NA SDG No.: LEJEUNE056

Matrix: (soil/water) SOIL Lab Sample ID: 0901201-06

Sample wt/vol: 5.0 (g/mL) G Lab File ID: 0120106A

Level: (low/med) LOW Date Sampled: 01/23/09 11:35

% Moisture: not dec. 8 Date Analyzed: 02/03/09 11:33

GC Column: RTX-VRX ID: 0.25 (mm) Dilution Factor: 1.0

Soil Extract Volume:_____(uL) Soil Aliquot Volume: _____(uL)

CONCENTRATION UNITS: (ug/L or ug/Kg) UG/KG

CAS NO.	COMPOUND	MDL	RL	CONC	Q
108-88-3	Toluene	0.95	11		U
120-82-1	1,2,4-Trichlorobenzene	0.20	11		U
71-55-6	1,1,1-Trichloroethane	0.99	11		U
79-00-5	1,1,2-Trichloroethane	0.38	11		U
79-01-6	Trichloroethene	0.94	11		U
76-13-1	Trichlorotrifluoroethane	0.61	11		U
75-69-4	Trichlorofluoromethane	1.0	11		U
75-01-4	Vinyl chloride	1.2	11		U
1330-20-7	Xylene(total)	0.77	11		U

LW
4/6/09

FORM 1
VOLATILE ORGANICS ANALYSIS DATA SHEET

CLIENT SAMPLE NO. 7

MR08-SS357-09A

Lab Name: EMPIRICAL LABS Contract: CH2MHILL

Lab Code: NA Case No.: NA SAS No.: NA SDG No.: LEJEUNE056

Matrix: (soil/water) SOIL Lab Sample ID: 0901201-07

Sample wt/vol: 6.5 (g/mL) G Lab File ID: 0120107A

Level: (low/med) LOW Date Sampled: 01/23/09 13:05

% Moisture: not dec. 12 Date Analyzed: 02/03/09 12:04

GC Column: RTX-VRX ID: 0.25 (mm) Dilution Factor: 1.0

Soil Extract Volume:_____(uL) Soil Aliquot Volume: _____(uL)

CONCENTRATION UNITS: (ug/L or ug/Kg) UG/KG

CAS NO.	COMPOUND	MDL	RL	CONC	Q	
67-64-1	Acetone	1.8	8.8	8.8U ~~8.1~~	~~J~~	B
71-43-2	Benzene	0.41	8.8		U	
75-27-4	Bromodichloromethane	0.26	8.8		U	
75-25-2	Bromoform	0.88	8.8		U	
74-83-9	Bromomethane	0.63	8.8		U	
78-93-3	2-Butanone	1.2	8.8		U	
75-15-0	Carbon disulfide	1.1	8.8		U	
56-23-5	Carbon tetrachloride	0.77	8.8		U	
108-90-7	Chlorobenzene	0.30	8.8		U	
75-00-3	Chloroethane	0.96	8.8		U	
67-66-3	Chloroform	0.48	8.8		U	
74-87-3	Chloromethane	0.46	8.8		U	
110-82-7	Cyclohexane	0.47	8.8		U	
124-48-1	Dibromochloromethane	0.30	8.8		U	
96-12-8	1,2-Dibromo-3-chloropropane	1.0	4.4		U	
106-93-4	1,2-Dibromoethane	0.38	8.8		U	
95-50-1	1,2-Dichlorobenzene	0.32	8.8		U	
541-73-1	1,3-Dichlorobenzene	0.74	8.8		U	
106-46-7	1,4-Dichlorobenzene	0.48	8.8		U	
75-71-8	Dichlorodifluoromethane	0.96	8.8		~~U~~ UJ	CC
75-34-3	1,1-Dichloroethane	0.47	8.8		U	
107-06-2	1,2-Dichloroethane	0.40	8.8		U	
75-35-4	1,1-Dichloroethene	1.0	8.8		U	
156-59-2	cis-1,2-Dichloroethene	1.0	8.8		U	
156-60-5	trans-1,2-Dichloroethene	0.96	8.8		U	
78-87-5	1,2-Dichloropropane	0.40	8.8		U	
10061-01-5	cis-1,3-Dichloropropene	0.44	8.8		U	
10061-02-6	trans-1,3-Dichloropropene	0.28	8.8		U	
100-41-4	Ethylbenzene	0.66	8.8		U	
591-78-6	2-Hexanone	2.0	8.8		U	
98-82-8	Isopropylbenzene	0.77	8.8		U	
79-20-9	Methyl acetate	1.4	8.8		U	
75-09-2	Methylene chloride	0.54	8.8	8.8U ~~0.83~~	~~JB~~	B
108-87-2	Methyl cyclohexane	0.26	8.8		U	
1634-04-4	Methyl tert-butyl ether	0.28	8.8		U	
108-10-1	4-Methyl-2-pentanone	0.51	8.8		U	
100-42-5	Styrene	0.31	8.8		U	
79-34-5	1,1,2,2-Tetrachloroethane	0.38	8.8		U	
127-18-4	Tetrachloroethene	0.85	8.8		U	

MW 02/12/09

FORM 1
VOLATILE ORGANICS ANALYSIS DATA SHEET

CLIENT SAMPLE NO. 7

MR08-SS357-09A

Lab Name: EMPIRICAL LABS Contract: CH2MHILL

Lab Code: NA Case No.: NA SAS No.: NA SDG No.: LEJEUNE056

Matrix: (soil/water) SOIL Lab Sample ID: 0901201-07

Sample wt/vol: 6.5 (g/mL) G Lab File ID: 0120107A

Level: (low/med) LOW Date Sampled: 01/23/09 13:05

% Moisture: not dec. 12 Date Analyzed: 02/03/09 12:04

GC Column: RTX-VRX ID: 0.25 (mm) Dilution Factor: 1.0

Soil Extract Volume:_____(uL) Soil Aliquot Volume: _____(uL)

CONCENTRATION UNITS: (ug/L or ug/Kg) UG/KG

CAS NO.	COMPOUND	MDL	RL	CONC	Q
108-88-3	Toluene	0.75	8.8		U
120-82-1	1,2,4-Trichlorobenzene	0.16	8.8		U
71-55-6	1,1,1-Trichloroethane	0.79	8.8		U
79-00-5	1,1,2-Trichloroethane	0.31	8.8		U
79-01-6	Trichloroethene	0.74	8.8		U
76-13-1	Trichlorotrifluoroethane	0.48	8.8		U
75-69-4	Trichlorofluoromethane	0.83	8.8		U
75-01-4	Vinyl chloride	0.96	8.8		U
1330-20-7	Xylene(total)	0.61	8.8		U

NW
4/6/09

FORM 1
VOLATILE ORGANICS ANALYSIS DATA SHEET

CLIENT SAMPLE NO. 8

MR08-IS35
7-4-5-09A

Lab Name: EMPIRICAL LABS Contract: CH2MHILL

Lab Code: NA Case No.: NA SAS No.: NA SDG No.: LEJEUNE056

Matrix: (soil/water) SOIL Lab Sample ID: 0901201-08

Sample wt/vol: 6.0 (g/mL) G Lab File ID: 0120108A

Level: (low/med) LOW Date Sampled: 01/23/09 13:10

% Moisture: not dec. 12 Date Analyzed: 02/03/09 12:35

GC Column: RTX-VRX ID: 0.25 (mm) Dilution Factor: 1.0

Soil Extract Volume:_____(uL) Soil Aliquot Volume: _____(uL)

CONCENTRATION UNITS: (ug/L or ug/Kg) UG/KG

CAS NO.	COMPOUND	MDL	RL	CONC	Q
67-64-1	Acetone	1.9	9.5	9.5u ~~6.6~~	~~J~~ B
71-43-2	Benzene	0.45	9.5		U
75-27-4	Bromodichloromethane	0.28	9.5		U
75-25-2	Bromoform	0.95	9.5		U
74-83-9	Bromomethane	0.69	9.5		U
78-93-3	2-Butanone	1.3	9.5		U
75-15-0	Carbon disulfide	1.2	9.5		U
56-23-5	Carbon tetrachloride	0.84	9.5		U
108-90-7	Chlorobenzene	0.32	9.5		U
75-00-3	Chloroethane	1.0	9.5		U
67-66-3	Chloroform	0.52	9.5		U
74-87-3	Chloromethane	0.50	9.5		U
110-82-7	Cyclohexane	0.51	9.5		U
124-48-1	Dibromochloromethane	0.32	9.5		U
96-12-8	1,2-Dibromo-3-chloropropane	1.1	4.8		U
106-93-4	1,2-Dibromoethane	0.41	9.5		U
95-50-1	1,2-Dichlorobenzene	0.35	9.5		U
541-73-1	1,3-Dichlorobenzene	0.80	9.5		U
106-46-7	1,4-Dichlorobenzene	0.52	9.5		U
75-71-8	Dichlorodifluoromethane	1.0	9.5		~~U~~ UJ CCV
75-34-3	1,1-Dichloroethane	0.51	9.5		U
107-06-2	1,2-Dichloroethane	0.44	9.5		U
75-35-4	1,1-Dichloroethene	1.1	9.5		U
156-59-2	cis-1,2-Dichloroethene	1.1	9.5		U
156-60-5	trans-1,2-Dichloroethene	1.0	9.5		U
78-87-5	1,2-Dichloropropane	0.44	9.5		U
10061-01-5	cis-1,3-Dichloropropene	0.48	9.5		U
10061-02-6	trans-1,3-Dichloropropene	0.30	9.5		U
100-41-4	Ethylbenzene	0.71	9.5		U
591-78-6	2-Hexanone	2.2	9.5		U
98-82-8	Isopropylbenzene	0.84	9.5		U
79-20-9	Methyl acetate	1.5	9.5		U
75-09-2	Methylene chloride	0.59	9.5	9.5u ~~0.93~~	~~JB~~ B
108-87-2	Methyl cyclohexane	0.28	9.5		U
1634-04-4	Methyl tert-butyl ether	0.30	9.5		U
108-10-1	4-Methyl-2-pentanone	0.55	9.5		U
100-42-5	Styrene	0.33	9.5		U
79-34-5	1,1,2,2-Tetrachloroethane	0.41	9.5		U
127-18-4	Tetrachloroethene	0.92	9.5		U

NW
4/6/09

FORM 1
VOLATILE ORGANICS ANALYSIS DATA SHEET

CLIENT SAMPLE NO.

8

MR08-IS35
7-4-5-09A

Lab Name: EMPIRICAL LABS Contract: CH2MHILL

Lab Code: NA Case No.: NA SAS No.: NA SDG No.: LEJEUNE056

Matrix: (soil/water) SOIL Lab Sample ID: 0901201-08

Sample wt/vol: 6.0 (g/mL) G Lab File ID: 0120108A

Level: (low/med) LOW Date Sampled: 01/23/09 13:10

% Moisture: not dec. 12 Date Analyzed: 02/03/09 12:35

GC Column: RTX-VRX ID: 0.25 (mm) Dilution Factor: 1.0

Soil Extract Volume:_____(uL) Soil Aliquot Volume: _____(uL)

CONCENTRATION UNITS: (ug/L or ug/Kg) UG/KG

CAS NO.	COMPOUND	MDL	RL	CONC	Q
108-88-3	Toluene	0.82	9.5		U
120-82-1	1,2,4-Trichlorobenzene	0.17	9.5		U
71-55-6	1,1,1-Trichloroethane	0.86	9.5		U
79-00-5	1,1,2-Trichloroethane	0.33	9.5		U
79-01-6	Trichloroethene	0.81	9.5		U
76-13-1	Trichlorotrifluoroethane	0.52	9.5		U
75-69-4	Trichlorofluoromethane	0.90	9.5		U
75-01-4	Vinyl chloride	1.0	9.5		U
1330-20-7	Xylene(total)	0.67	9.5		U

NW
4/6/09

FORM 1
VOLATILE ORGANICS ANALYSIS DATA SHEET

CLIENT SAMPLE NO. 9

MR08-SS358-09A

Lab Name: EMPIRICAL LABS Contract: CH2MHILL

Lab Code: NA Case No.: NA SAS No.: NA SDG No.: LEJEUNE056

Matrix: (soil/water) SOIL Lab Sample ID: 0901201-09

Sample wt/vol: 4.7 (g/mL) G Lab File ID: 0120109A

Level: (low/med) LOW Date Sampled: 01/23/09 13:40

% Moisture: not dec. 10 Date Analyzed: 02/03/09 13:06

GC Column: RTX-VRX ID: 0.25 (mm) Dilution Factor: 1.0

Soil Extract Volume:_____(uL) Soil Aliquot Volume: _____(uL)

CONCENTRATION UNITS: (ug/L or ug/Kg) UG/KG

CAS NO.	COMPOUND	MDL	RL	CONC	Q
67-64-1	Acetone	2.4	12		U
71-43-2	Benzene	0.56	12	0.91	~~J~~ J SS1
75-27-4	Bromodichloromethane	0.35	12		U
75-25-2	Bromoform	1.2	12		U
74-83-9	Bromomethane	0.85	12		U
78-93-3	2-Butanone	1.6	12		U
75-15-0	Carbon disulfide	1.5	12		U
56-23-5	Carbon tetrachloride	1.0	12		U
108-90-7	Chlorobenzene	0.40	12		U
75-00-3	Chloroethane	1.3	12		U
67-66-3	Chloroform	0.65	12		U
74-87-3	Chloromethane	0.62	12		U
110-82-7	Cyclohexane	0.64	12		U
124-48-1	Dibromochloromethane	0.40	12		U
96-12-8	1,2-Dibromo-3-chloropropane	1.4	5.9		U
106-93-4	1,2-Dibromoethane	0.51	12		U
95-50-1	1,2-Dichlorobenzene	0.44	12		U
541-73-1	1,3-Dichlorobenzene	0.99	12		U
106-46-7	1,4-Dichlorobenzene	0.65	12		U
75-71-8	Dichlorodifluoromethane	1.3	12		~~U~~ UJ CC4
75-34-3	1,1-Dichloroethane	0.64	12		U
107-06-2	1,2-Dichloroethane	0.54	12		U
75-35-4	1,1-Dichloroethene	1.4	12		U
156-59-2	cis-1,2-Dichloroethene	1.4	12		U
156-60-5	trans-1,2-Dichloroethene	1.3	12		U
78-87-5	1,2-Dichloropropane	0.54	12		U
10061-01-5	cis-1,3-Dichloropropene	0.59	12		U
10061-02-6	trans-1,3-Dichloropropene	0.38	12		U
100-41-4	Ethylbenzene	0.89	12	6.2	~~J~~ J SS
591-78-6	2-Hexanone	2.7	12		U
98-82-8	Isopropylbenzene	1.0	12		U
79-20-9	Methyl acetate	1.9	12		U
75-09-2	Methylene chloride	0.73	12	124 ~~1.1 JB~~	B1
108-87-2	Methyl cyclohexane	0.35	12	0.49	~~J~~ J SS
1634-04-4	Methyl tert-butyl ether	0.38	12		U
108-10-1	4-Methyl-2-pentanone	0.69	12		U
100-42-5	Styrene	0.41	12		U
79-34-5	1,1,2,2-Tetrachloroethane	0.51	12		U
127-18-4	Tetrachloroethene	1.1	12		U

MW 4/16/09

FORM 1
VOLATILE ORGANICS ANALYSIS DATA SHEET

CLIENT SAMPLE NO.

9

MR08-SS358-09A

Lab Name: EMPIRICAL LABS Contract: CH2MHILL

Lab Code: NA Case No.: NA SAS No.: NA SDG No.: LEJEUNE056

Matrix: (soil/water) SOIL Lab Sample ID: 0901201-09

Sample wt/vol: 4.7 (g/mL) G Lab File ID: 0120109A

Level: (low/med) LOW Date Sampled: 01/23/09 13:40

% Moisture: not dec. 10 Date Analyzed: 02/03/09 13:06

GC Column: RTX-VRX ID: 0.25 (mm) Dilution Factor: 1.0

Soil Extract Volume:_____(uL) Soil Aliquot Volume: _____(uL)

CONCENTRATION UNITS: (ug/L or ug/Kg) UG/KG

CAS NO.	COMPOUND	MDL	RL	CONC	Q
108-88-3	Toluene	1.0	12	3.0	~~J~~ J
120-82-1	1,2,4-Trichlorobenzene	0.21	12		U
71-55-6	1,1,1-Trichloroethane	1.1	12		U
79-00-5	1,1,2-Trichloroethane	0.41	12		U
79-01-6	Trichloroethene	1.0	12		U
76-13-1	Trichlorotrifluoroethane	0.65	12		U
75-69-4	Trichlorofluoromethane	1.1	12		U
75-01-4	Vinyl chloride	1.3	12		U
1330-20-7	Xylene(total)	0.83	12		U

SSH

NW
416609

FORM 1
VOLATILE ORGANICS ANALYSIS DATA SHEET

CLIENT SAMPLE NO.

MR08-IS35
8-4-5-09A

10

Lab Name: EMPIRICAL LABS Contract: CH2MHILL

Lab Code: NA Case No.: NA SAS No.: NA SDG No.: LEJEUNE056

Matrix: (soil/water) SOIL Lab Sample ID: 0901201-10

Sample wt/vol: 4.6 (g/mL) G Lab File ID: 0120110A

Level: (low/med) LOW Date Sampled: 01/23/09 13:45

% Moisture: not dec. 3 Date Analyzed: 02/03/09 13:38

GC Column: RTX-VRX ID: 0.25 (mm) Dilution Factor: 1.0

Soil Extract Volume:_____(uL) Soil Aliquot Volume: _____(uL)

CONCENTRATION UNITS: (ug/L or ug/Kg) UG/KG

CAS NO.	COMPOUND	MDL	RL	CONC	Q
67-64-1	Acetone	2.2	11		U
71-43-2	Benzene	0.52	11		U
75-27-4	Bromodichloromethane	0.33	11		U
75-25-2	Bromoform	1.1	11		U
74-83-9	Bromomethane	0.80	11		U
78-93-3	2-Butanone	1.6	11		U
75-15-0	Carbon disulfide	1.4	11		U
56-23-5	Carbon tetrachloride	0.98	11		U
108-90-7	Chlorobenzene	0.38	11		U
75-00-3	Chloroethane	1.2	11		U
67-66-3	Chloroform	0.61	11		U
74-87-3	Chloromethane	0.58	11		U
110-82-7	Cyclohexane	0.60	11		U
124-48-1	Dibromochloromethane	0.38	11		U
96-12-8	1,2-Dibromo-3-chloropropane	1.3	5.6		U
106-93-4	1,2-Dibromoethane	0.48	11		U
95-50-1	1,2-Dichlorobenzene	0.41	11		U
541-73-1	1,3-Dichlorobenzene	0.94	11		U
106-46-7	1,4-Dichlorobenzene	0.61	11		U
75-71-8	Dichlorodifluoromethane	1.2	11		~~U~~ UJ CC
75-34-3	1,1-Dichloroethane	0.60	11		U
107-06-2	1,2-Dichloroethane	0.51	11		U
75-35-4	1,1-Dichloroethene	1.3	11		U
156-59-2	cis-1,2-Dichloroethene	1.3	11		U
156-60-5	trans-1,2-Dichloroethene	1.2	11		U
78-87-5	1,2-Dichloropropane	0.51	11		U
10061-01-5	cis-1,3-Dichloropropene	0.56	11		U
10061-02-6	trans-1,3-Dichloropropene	0.36	11		U
100-41-4	Ethylbenzene	0.84	11		U
591-78-6	2-Hexanone	2.6	11		U
98-82-8	Isopropylbenzene	0.98	11		U
79-20-9	Methyl acetate	1.8	11		U
75-09-2	Methylene chloride	0.69	11	11U	~~1.4 JB~~
108-87-2	Methyl cyclohexane	0.33	11		U
1634-04-4	Methyl tert-butyl ether	0.36	11		U
108-10-1	4-Methyl-2-pentanone	0.64	11		U
100-42-5	Styrene	0.39	11		U
79-34-5	1,1,2,2-Tetrachloroethane	0.48	11		U
127-18-4	Tetrachloroethene	1.1	11		U

NW
4/1/09

FORM 1
VOLATILE ORGANICS ANALYSIS DATA SHEET

CLIENT SAMPLE NO.

MR08-IS35
8-4-5-09A

10

Lab Name: EMPIRICAL LABS Contract: CH2MHILL

Lab Code: NA Case No.: NA SAS No.: NA SDG No.: LEJEUNE056

Matrix: (soil/water) SOIL Lab Sample ID: 0901201-10

Sample wt/vol: 4.6 (g/mL) G Lab File ID: 0120110A

Level: (low/med) LOW Date Sampled: 01/23/09 13:45

% Moisture: not dec. 3 Date Analyzed: 02/03/09 13:38

GC Column: RTX-VRX ID: 0.25 (mm) Dilution Factor: 1.0

Soil Extract Volume:_____(uL) Soil Aliquot Volume: _____(uL)

CONCENTRATION UNITS: (ug/L or ug/Kg) UG/KG

CAS NO.	COMPOUND	MDL	RL	CONC	Q
108-88-3	Toluene	0.96	11		U
120-82-1	1,2,4-Trichlorobenzene	0.20	11		U
71-55-6	1,1,1-Trichloroethane	1.0	11		U
79-00-5	1,1,2-Trichloroethane	0.39	11		U
79-01-6	Trichloroethene	0.95	11		U
76-13-1	Trichlorotrifluoroethane	0.61	11		U
75-69-4	Trichlorofluoromethane	1.0	11		U
75-01-4	Vinyl chloride	1.2	11		U
1330-20-7	Xylene(total)	0.78	11		U

NW
4/6/09

FORM 1
VOLATILE ORGANICS ANALYSIS DATA SHEET

CLIENT SAMPLE NO. 11

MR08-IS35
9-4-5-09A

Lab Name: EMPIRICAL LABS Contract: CH2MHILL

Lab Code: NA Case No.: NA SAS No.: NA SDG No.: LEJEUNE056

Matrix: (soil/water) SOIL Lab Sample ID: 0901201-11

Sample wt/vol: 5.5 (g/mL) G Lab File ID: 0120111A

Level: (low/med) LOW Date Sampled: 01/23/09 14:05

% Moisture: not dec. 8 Date Analyzed: 02/03/09 14:08

GC Column: RTX-VRX ID: 0.25 (mm) Dilution Factor: 1.0

Soil Extract Volume:_____(uL) Soil Aliquot Volume: _____(uL)

CONCENTRATION UNITS: (ug/L or ug/Kg) UG/KG

CAS NO.	COMPOUND	MDL	RL	CONC	Q	
67-64-1	Acetone	2.0	9.8	9.8U ~~3.5~~	~~J~~	BC
71-43-2	Benzene	0.46	9.8		U	
75-27-4	Bromodichloromethane	0.29	9.8		U	
75-25-2	Bromoform	0.98	9.8		U	
74-83-9	Bromomethane	0.70	9.8		U	
78-93-3	2-Butanone	1.4	9.8		U	
75-15-0	Carbon disulfide	1.3	9.8		U	
56-23-5	Carbon tetrachloride	0.86	9.8		U	
108-90-7	Chlorobenzene	0.33	9.8		U	
75-00-3	Chloroethane	1.1	9.8		U	
67-66-3	Chloroform	0.54	9.8		U	
74-87-3	Chloromethane	0.51	9.8		U	
110-82-7	Cyclohexane	0.53	9.8		U	
124-48-1	Dibromochloromethane	0.33	9.8		U	
96-12-8	1,2-Dibromo-3-chloropropane	1.2	4.9		U	
106-93-4	1,2-Dibromoethane	0.42	9.8		U	
95-50-1	1,2-Dichlorobenzene	0.36	9.8		U	
541-73-1	1,3-Dichlorobenzene	0.82	9.8		U	
106-46-7	1,4-Dichlorobenzene	0.54	9.8		U	
75-71-8	Dichlorodifluoromethane	1.1	9.8		~~U~~ UJ	CC
75-34-3	1,1-Dichloroethane	0.53	9.8		U	
107-06-2	1,2-Dichloroethane	0.45	9.8		U	
75-35-4	1,1-Dichloroethene	1.2	9.8		U	
156-59-2	cis-1,2-Dichloroethene	1.2	9.8		U	
156-60-5	trans-1,2-Dichloroethene	1.1	9.8		U	
78-87-5	1,2-Dichloropropane	0.45	9.8		U	
10061-01-5	cis-1,3-Dichloropropene	0.49	9.8		U	
10061-02-6	trans-1,3-Dichloropropene	0.31	9.8		U	
100-41-4	Ethylbenzene	0.73	9.8		U	
591-78-6	2-Hexanone	2.2	9.8		U	
98-82-8	Isopropylbenzene	0.86	9.8		U	
79-20-9	Methyl acetate	1.6	9.8		U	
75-09-2	Methylene chloride	0.61	9.8	9.8U ~~1.2~~	~~JB~~	B
108-87-2	Methyl cyclohexane	0.29	9.8		U	
1634-04-4	Methyl tert-butyl ether	0.31	9.8		U	
108-10-1	4-Methyl-2-pentanone	0.57	9.8		U	
100-42-5	Styrene	0.34	9.8		U	
79-34-5	1,1,2,2-Tetrachloroethane	0.42	9.8		U	
127-18-4	Tetrachloroethene	0.95	9.8		U	

FORM I VOA

MW 4/16/09

FORM 1
VOLATILE ORGANICS ANALYSIS DATA SHEET

CLIENT SAMPLE NO.

MR08-IS35
9-4-5-09A

Lab Name: EMPIRICAL LABS Contract: CH2MHILL

Lab Code: NA Case No.: NA SAS No.: NA SDG No.: LEJEUNE056

Matrix: (soil/water) SOIL Lab Sample ID: 0901201-11

Sample wt/vol: 5.5 (g/mL) G Lab File ID: 0120111A

Level: (low/med) LOW Date Sampled: 01/23/09 14:05

% Moisture: not dec. 8 Date Analyzed: 02/03/09 14:08

GC Column: RTX-VRX ID: 0.25 (mm) Dilution Factor: 1.0

Soil Extract Volume:_____(uL) Soil Aliquot Volume: _____(uL)

CONCENTRATION UNITS: (ug/L or ug/Kg) UG/KG

CAS NO.	COMPOUND	MDL	RL	CONC	Q
108-88-3	Toluene	0.84	9.8		U
120-82-1	1,2,4-Trichlorobenzene	0.18	9.8		U
71-55-6	1,1,1-Trichloroethane	0.88	9.8		U
79-00-5	1,1,2-Trichloroethane	0.34	9.8		U
79-01-6	Trichloroethene	0.83	9.8		U
76-13-1	Trichlorotrifluoroethane	0.54	9.8		U
75-69-4	Trichlorofluoromethane	0.93	9.8		U
75-01-4	Vinyl chloride	1.1	9.8		U
1330-20-7	Xylene(total)	0.68	9.8		U

MW
11/1/09

FORM 1
VOLATILE ORGANICS ANALYSIS DATA SHEET

CLIENT SAMPLE NO. 12

MR08-SS359-09A

Lab Name: EMPIRICAL LABS Contract: CH2MHILL

Lab Code: NA Case No.: NA SAS No.: NA SDG No.: LEJEUNE056

Matrix: (soil/water) SOIL Lab Sample ID: 0901201-12

Sample wt/vol: 5.4 (g/mL) G Lab File ID: 0120112B

Level: (low/med) LOW Date Sampled: 01/23/09 14:10

% Moisture: not dec. 7 Date Analyzed: 02/04/09 15:23

GC Column: RTX-VRX ID: 0.25 (mm) Dilution Factor: 1.0

Soil Extract Volume:_____(uL) Soil Aliquot Volume: _____(uL)

CONCENTRATION UNITS: (ug/L or ug/Kg) UG/KG

CAS NO.	COMPOUND	MDL	RL	CONC	Q	
67-64-1	Acetone	2.0	9.9		U	
71-43-2	Benzene	0.47	9.9	0.51	~~J~~ J	SS
75-27-4	Bromodichloromethane	0.30	9.9		U	
75-25-2	Bromoform	0.99	9.9		U	
74-83-9	Bromomethane	0.71	9.9		U	
78-93-3	2-Butanone	1.4	9.9		U	
75-15-0	Carbon disulfide	1.3	9.9		U	
56-23-5	Carbon tetrachloride	0.87	9.9		U	
108-90-7	Chlorobenzene	0.34	9.9		U	
75-00-3	Chloroethane	1.1	9.9		U	
67-66-3	Chloroform	0.54	9.9		U	
74-87-3	Chloromethane	0.52	9.9		U	
110-82-7	Cyclohexane	0.54	9.9		U	
124-48-1	Dibromochloromethane	0.34	9.9		U	
96-12-8	1,2-Dibromo-3-chloropropane	1.2	5.0		U	
106-93-4	1,2-Dibromoethane	0.43	9.9		U	
95-50-1	1,2-Dichlorobenzene	0.37	9.9		U	
541-73-1	1,3-Dichlorobenzene	0.83	9.9		U	
106-46-7	1,4-Dichlorobenzene	0.54	9.9		U	
75-71-8	Dichlorodifluoromethane	1.1	9.9		~~J~~ UJ	CC
75-34-3	1,1-Dichloroethane	0.54	9.9		U	
107-06-2	1,2-Dichloroethane	0.46	9.9		U	
75-35-4	1,1-Dichloroethene	1.2	9.9		U	
156-59-2	cis-1,2-Dichloroethene	1.2	9.9		U	
156-60-5	trans-1,2-Dichloroethene	1.1	9.9		U	
78-87-5	1,2-Dichloropropane	0.46	9.9		U	
10061-01-5	cis-1,3-Dichloropropene	0.50	9.9		U	
10061-02-6	trans-1,3-Dichloropropene	0.32	9.9		U	
100-41-4	Ethylbenzene	0.74	9.9	1.5	~~J~~ J	SS
591-78-6	2-Hexanone	2.3	9.9		U	
98-82-8	Isopropylbenzene	0.87	9.9		U	
79-20-9	Methyl acetate	1.6	9.9		U	
75-09-2	Methylene chloride	0.62	9.9	9.9u 1.2	~~JB~~	BI
108-87-2	Methyl cyclohexane	0.30	9.9		U	
1634-04-4	Methyl tert-butyl ether	0.32	9.9		U	
108-10-1	4-Methyl-2-pentanone	0.58	9.9		U	
100-42-5	Styrene	0.35	9.9		U	
79-34-5	1,1,2,2-Tetrachloroethane	0.43	9.9		U	
127-18-4	Tetrachloroethene	0.96	9.9		U	

AW
4/6/09

FORM 1
VOLATILE ORGANICS ANALYSIS DATA SHEET

CLIENT SAMPLE NO. 12

MR08-SS359-09A

Lab Name: EMPIRICAL LABS Contract: CH2MHILL

Lab Code: NA Case No.: NA SAS No.: NA SDG No.: LEJEUNE056

Matrix: (soil/water) SOIL Lab Sample ID: 0901201-12

Sample wt/vol: 5.4 (g/mL) G Lab File ID: 0120112B

Level: (low/med) LOW Date Sampled: 01/23/09 14:10

% Moisture: not dec. 7 Date Analyzed: 02/04/09 15:23

GC Column: RTX-VRX ID: 0.25 (mm) Dilution Factor: 1.0

Soil Extract Volume:_____(uL) Soil Aliquot Volume: _____(uL)

CONCENTRATION UNITS: (ug/L or ug/Kg) UG/KG

CAS NO.	COMPOUND	MDL	RL	CONC	Q
108-88-3	Toluene	0.85	9.9	1.0	~~U~~ J SSL
120-82-1	1,2,4-Trichlorobenzene	0.18	9.9		U
71-55-6	1,1,1-Trichloroethane	0.89	9.9		U
79-00-5	1,1,2-Trichloroethane	0.35	9.9		U
79-01-6	Trichloroethene	0.84	9.9		U
76-13-1	Trichlorotrifluoroethane	0.54	9.9		U
75-69-4	Trichlorofluoromethane	0.94	9.9		U
75-01-4	Vinyl chloride	1.1	9.9		U
1330-20-7	Xylene(total)	0.69	9.9		U

NW
4/6/09

FORM 1
VOLATILE ORGANICS ANALYSIS DATA SHEET

CLIENT SAMPLE NO. 13

MR08-IS36
0-4-5-09A

Lab Name: EMPIRICAL LABS Contract: CH2MHILL

Lab Code: NA Case No.: NA SAS No.: NA SDG No.: LEJEUNE056

Matrix: (soil/water) SOIL Lab Sample ID: 0901201-13

Sample wt/vol: 4.9 (g/mL) G Lab File ID: 0120113A

Level: (low/med) LOW Date Sampled: 01/23/09 14:40

% Moisture: not dec. 10 Date Analyzed: 02/03/09 15:10

GC Column: RTX-VRX ID: 0.25 (mm) Dilution Factor: 1.0

Soil Extract Volume:_____(uL) Soil Aliquot Volume: _____(uL)

CONCENTRATION UNITS: (ug/L or ug/Kg) UG/KG

CAS NO.	COMPOUND	MDL	RL	CONC	Q	
67-64-1	Acetone	2.3	11	11u	~~7.1 J~~	B
71-43-2	Benzene	0.53	11		U	
75-27-4	Bromodichloromethane	0.34	11		U	
75-25-2	Bromoform	1.1	11		U	
74-83-9	Bromomethane	0.82	11		U	
78-93-3	2-Butanone	1.6	11		U	
75-15-0	Carbon disulfide	1.5	11		U	
56-23-5	Carbon tetrachloride	1.00	11		U	
108-90-7	Chlorobenzene	0.38	11		U	
75-00-3	Chloroethane	1.2	11		U	
67-66-3	Chloroform	0.62	11		U	
74-87-3	Chloromethane	0.59	11		U	
110-82-7	Cyclohexane	0.61	11		U	
124-48-1	Dibromochloromethane	0.38	11		U	
96-12-8	1,2-Dibromo-3-chloropropane	1.4	5.7		U	
106-93-4	1,2-Dibromoethane	0.49	11		U	
95-50-1	1,2-Dichlorobenzene	0.42	11		U	
541-73-1	1,3-Dichlorobenzene	0.95	11		U	
106-46-7	1,4-Dichlorobenzene	0.62	11		U	
75-71-8	Dichlorodifluoromethane	1.2	11		~~U~~ UJ	CL
75-34-3	1,1-Dichloroethane	0.61	11		U	
107-06-2	1,2-Dichloroethane	0.52	11		U	
75-35-4	1,1-Dichloroethene	1.4	11		U	
156-59-2	cis-1,2-Dichloroethene	1.4	11		U	
156-60-5	trans-1,2-Dichloroethene	1.2	11		U	
78-87-5	1,2-Dichloropropane	0.52	11		U	
10061-01-5	cis-1,3-Dichloropropene	0.57	11		U	
10061-02-6	trans-1,3-Dichloropropene	0.36	11		U	
100-41-4	Ethylbenzene	0.85	11		U	
591-78-6	2-Hexanone	2.6	11		U	
98-82-8	Isopropylbenzene	1.00	11		U	
79-20-9	Methyl acetate	1.8	11		U	
75-09-2	Methylene chloride	0.70	11	11u	~~1.2 JB~~	B
108-87-2	Methyl cyclohexane	0.34	11		U	
1634-04-4	Methyl tert-butyl ether	0.36	11		U	
108-10-1	4-Methyl-2-pentanone	0.66	11		U	
100-42-5	Styrene	0.40	11		U	
79-34-5	1,1,2,2-Tetrachloroethane	0.49	11		U	
127-18-4	Tetrachloroethene	1.1	11		U	

FORM I VOA

NW
4/6/09

FORM 1
VOLATILE ORGANICS ANALYSIS DATA SHEET

CLIENT SAMPLE NO.

MR08-IS36
0-4-5-09A

13

Lab Name: EMPIRICAL LABS Contract: CH2MHILL

Lab Code: NA Case No.: NA SAS No.: NA SDG No.: LEJEUNE056

Matrix: (soil/water) SOIL Lab Sample ID: 0901201-13

Sample wt/vol: 4.9 (g/mL) G Lab File ID: 0120113A

Level: (low/med) LOW Date Sampled: 01/23/09 14:40

% Moisture: not dec. 10 Date Analyzed: 02/03/09 15:10

GC Column: RTX-VRX ID: 0.25 (mm) Dilution Factor: 1.0

Soil Extract Volume:_____(uL) Soil Aliquot Volume: _____(uL)

CONCENTRATION UNITS: (ug/L or ug/Kg) UG/KG

CAS NO.	COMPOUND	MDL	RL	CONC	Q
108-88-3	Toluene	0.98	11		U
120-82-1	1,2,4-Trichlorobenzene	0.20	11		U
71-55-6	1,1,1-Trichloroethane	1.0	11		U
79-00-5	1,1,2-Trichloroethane	0.40	11		U
79-01-6	Trichloroethene	0.96	11		U
76-13-1	Trichlorotrifluoroethane	0.62	11		U
75-69-4	Trichlorofluoromethane	1.1	11		U
75-01-4	Vinyl chloride	1.2	11		U
1330-20-7	Xylene(total)	0.79	11		U

NW
4/6/09

FORM 1
VOLATILE ORGANICS ANALYSIS DATA SHEET

CLIENT SAMPLE NO. 14

MR08-IS36
0D-4-5-09A

Lab Name: EMPIRICAL LABS Contract: CH2MHILL

Lab Code: NA Case No.: NA SAS No.: NA SDG No.: LEJEUNE056

Matrix: (soil/water) SOIL Lab Sample ID: 0901201-14

Sample wt/vol: 6.2 (g/mL) G Lab File ID: 0120114A

Level: (low/med) LOW Date Sampled: 01/23/09 14:40

% Moisture: not dec. 10 Date Analyzed: 02/03/09 15:41

GC Column: RTX-VRX ID: 0.25 (mm) Dilution Factor: 1.0

Soil Extract Volume:_____(uL) Soil Aliquot Volume: _____(uL)

CONCENTRATION UNITS: (ug/L or ug/Kg) UG/KG

CAS NO.	COMPOUND	MDL	RL	CONC	Q	
67-64-1	Acetone	1.8	9.0	9.0u ~~8.7~~	~~J~~	B
71-43-2	Benzene	0.42	9.0		U	
75-27-4	Bromodichloromethane	0.27	9.0		U	
75-25-2	Bromoform	0.90	9.0		U	
74-83-9	Bromomethane	0.64	9.0		U	
78-93-3	2-Butanone	1.2	9.0		U	
75-15-0	Carbon disulfide	1.2	9.0		U	
56-23-5	Carbon tetrachloride	0.79	9.0		U	
108-90-7	Chlorobenzene	0.30	9.0		U	
75-00-3	Chloroethane	0.98	9.0		U	
67-66-3	Chloroform	0.49	9.0		U	
74-87-3	Chloromethane	0.46	9.0		U	
110-82-7	Cyclohexane	0.48	9.0		U	
124-48-1	Dibromochloromethane	0.30	9.0		U	
96-12-8	1,2-Dibromo-3-chloropropane	1.1	4.5		U	
106-93-4	1,2-Dibromoethane	0.38	9.0		U	
95-50-1	1,2-Dichlorobenzene	0.33	9.0		U	
541-73-1	1,3-Dichlorobenzene	0.75	9.0		U	
106-46-7	1,4-Dichlorobenzene	0.49	9.0		U	
75-71-8	Dichlorodifluoromethane	0.98	9.0		~~U~~ UJ	CU
75-34-3	1,1-Dichloroethane	0.48	9.0		U	
107-06-2	1,2-Dichloroethane	0.41	9.0		U	
75-35-4	1,1-Dichloroethene	1.1	9.0		U	
156-59-2	cis-1,2-Dichloroethene	1.1	9.0		U	
156-60-5	trans-1,2-Dichloroethene	0.98	9.0		U	
78-87-5	1,2-Dichloropropane	0.41	9.0		U	
10061-01-5	cis-1,3-Dichloropropene	0.45	9.0		U	
10061-02-6	trans-1,3-Dichloropropene	0.29	9.0		U	
100-41-4	Ethylbenzene	0.67	9.0		U	
591-78-6	2-Hexanone	2.0	9.0		U	
98-82-8	Isopropylbenzene	0.79	9.0		U	
79-20-9	Methyl acetate	1.4	9.0		U	
75-09-2	Methylene chloride	0.56	9.0	9.0u ~~1.2~~	~~JB~~	B
108-87-2	Methyl cyclohexane	0.27	9.0		U	
1634-04-4	Methyl tert-butyl ether	0.29	9.0		U	
108-10-1	4-Methyl-2-pentanone	0.52	9.0		U	
100-42-5	Styrene	0.31	9.0		U	
79-34-5	1,1,2,2-Tetrachloroethane	0.38	9.0		U	
127-18-4	Tetrachloroethene	0.87	9.0		U	

FORM I VOA

NW
4/6/09

FORM 1
VOLATILE ORGANICS ANALYSIS DATA SHEET

CLIENT SAMPLE NO. 14

MR08-IS36
0D-4-5-09A

Lab Name: EMPIRICAL LABS Contract: CH2MHILL

Lab Code: NA Case No.: NA SAS No.: NA SDG No.: LEJEUNE056

Matrix: (soil/water) SOIL Lab Sample ID: 0901201-14

Sample wt/vol: 6.2 (g/mL) G Lab File ID: 0120114A

Level: (low/med) LOW Date Sampled: 01/23/09 14:40

% Moisture: not dec. 10 Date Analyzed: 02/03/09 15:41

GC Column: RTX-VRX ID: 0.25 (mm) Dilution Factor: 1.0

Soil Extract Volume:_____(uL) Soil Aliquot Volume: _____(uL)

CONCENTRATION UNITS: (ug/L or ug/Kg) UG/KG

CAS NO.	COMPOUND	MDL	RL	CONC	Q
108-88-3	Toluene	0.77	9.0		U
120-82-1	1,2,4-Trichlorobenzene	0.16	9.0		U
71-55-6	1,1,1-Trichloroethane	0.80	9.0		U
79-00-5	1,1,2-Trichloroethane	0.31	9.0		U
79-01-6	Trichloroethene	0.76	9.0		U
76-13-1	Trichlorotrifluoroethane	0.49	9.0		U
75-69-4	Trichlorofluoromethane	0.85	9.0		U
75-01-4	Vinyl chloride	0.98	9.0		U
1330-20-7	Xylene(total)	0.63	9.0		U

AW
4/6/09

FORM 1
VOLATILE ORGANICS ANALYSIS DATA SHEET

CLIENT SAMPLE NO. 15

MR08-SS360-09A

Lab Name: EMPIRICAL LABS Contract: CH2MHILL

Lab Code: NA Case No.: NA SAS No.: NA SDG No.: LEJEUNE056

Matrix: (soil/water) SOIL Lab Sample ID: 0901201-15

Sample wt/vol: 5.3 (g/mL) G Lab File ID: 0120115A

Level: (low/med) LOW Date Sampled: 01/23/09 14:50

% Moisture: not dec. 11 Date Analyzed: 02/03/09 16:12

GC Column: RTX-VRX ID: 0.25 (mm) Dilution Factor: 1.0

Soil Extract Volume:_____(uL) Soil Aliquot Volume: _____(uL)

CONCENTRATION UNITS: (ug/L or ug/Kg) UG/KG

CAS NO.	COMPOUND	MDL	RL	CONC	Q
67-64-1	Acetone	2.1	11	31	
71-43-2	Benzene	0.50	11		U
75-27-4	Bromodichloromethane	0.32	11		U
75-25-2	Bromoform	1.1	11		U
74-83-9	Bromomethane	0.77	11		U
78-93-3	2-Butanone	1.5	11		U
75-15-0	Carbon disulfide	1.4	11		U
56-23-5	Carbon tetrachloride	0.94	11		U
108-90-7	Chlorobenzene	0.36	11		U
75-00-3	Chloroethane	1.2	11		U
67-66-3	Chloroform	0.59	11		U
74-87-3	Chloromethane	0.56	11		U
110-82-7	Cyclohexane	0.58	11		U
124-48-1	Dibromochloromethane	0.36	11		U
96-12-8	1,2-Dibromo-3-chloropropane	1.3	5.3		U
106-93-4	1,2-Dibromoethane	0.46	11		U
95-50-1	1,2-Dichlorobenzene	0.40	11		U
541-73-1	1,3-Dichlorobenzene	0.90	11		U
106-46-7	1,4-Dichlorobenzene	0.59	11		U
75-71-8	Dichlorodifluoromethane	1.2	11		~~U~~ UJCC
75-34-3	1,1-Dichloroethane	0.58	11		U
107-06-2	1,2-Dichloroethane	0.49	11		U
75-35-4	1,1-Dichloroethene	1.3	11		U
156-59-2	cis-1,2-Dichloroethene	1.3	11		U
156-60-5	trans-1,2-Dichloroethene	1.2	11		U
78-87-5	1,2-Dichloropropane	0.49	11		U
10061-01-5	cis-1,3-Dichloropropene	0.53	11		U
10061-02-6	trans-1,3-Dichloropropene	0.34	11		U
100-41-4	Ethylbenzene	0.80	11		U
591-78-6	2-Hexanone	2.4	11		U
98-82-8	Isopropylbenzene	0.94	11		U
79-20-9	Methyl acetate	1.7	11		U
75-09-2	Methylene chloride	0.66	11	1.4 ~~JB~~	E
108-87-2	Methyl cyclohexane	0.32	11		U
1634-04-4	Methyl tert-butyl ether	0.34	11		U
108-10-1	4-Methyl-2-pentanone	0.62	11		U
100-42-5	Styrene	0.37	11		U
79-34-5	1,1,2,2-Tetrachloroethane	0.46	11		U
127-18-4	Tetrachloroethene	1.0	11		U

FORM I VOA

KW 4/6/09

FORM 1
VOLATILE ORGANICS ANALYSIS DATA SHEET

CLIENT SAMPLE NO. 15

MR08-SS360-09A

Lab Name: EMPIRICAL LABS Contract: CH2MHILL

Lab Code: NA Case No.: NA SAS No.: NA SDG No.: LEJEUNE056

Matrix: (soil/water) SOIL Lab Sample ID: 0901201-15

Sample wt/vol: 5.3 (g/mL) G Lab File ID: 0120115A

Level: (low/med) LOW Date Sampled: 01/23/09 14:50

% Moisture: not dec. 11 Date Analyzed: 02/03/09 16:12

GC Column: RTX-VRX ID: 0.25 (mm) Dilution Factor: 1.0

Soil Extract Volume:_____(uL) Soil Aliquot Volume: _____(uL)

CONCENTRATION UNITS: (ug/L or ug/Kg) UG/KG

CAS NO.	COMPOUND	MDL	RL	CONC	Q
108-88-3	Toluene	0.92	11		U
120-82-1	1,2,4-Trichlorobenzene	0.19	11		U
71-55-6	1,1,1-Trichloroethane	0.96	11		U
79-00-5	1,1,2-Trichloroethane	0.37	11		U
79-01-6	Trichloroethene	0.91	11		U
76-13-1	Trichlorotrifluoroethane	0.59	11		U
75-69-4	Trichlorofluoromethane	1.0	11		U
75-01-4	Vinyl chloride	1.2	11		U
1330-20-7	Xylene(total)	0.75	11		U

NW
41609

FORM 1
VOLATILE ORGANICS ANALYSIS DATA SHEET

CLIENT SAMPLE NO. 16

MR08-SS360D-09A

Lab Name: EMPIRICAL LABS Contract: CH2MHILL

Lab Code: NA Case No.: NA SAS No.: NA SDG No.: LEJEUNE056

Matrix: (soil/water) SOIL Lab Sample ID: 0901201-16

Sample wt/vol: 4.8 (g/mL) G Lab File ID: 0120116A

Level: (low/med) LOW Date Sampled: 01/23/09 14:50

% Moisture: not dec. 10 Date Analyzed: 02/03/09 16:43

GC Column: RTX-VRX ID: 0.25 (mm) Dilution Factor: 1.0

Soil Extract Volume:_____(uL) Soil Aliquot Volume: _____(uL)

CONCENTRATION UNITS: (ug/L or ug/Kg) UG/KG

CAS NO.	COMPOUND	MDL	RL	CONC	Q
67-64-1	Acetone	2.3	12	28	
71-43-2	Benzene	0.55	12		U
75-27-4	Bromodichloromethane	0.35	12		U
75-25-2	Bromoform	1.2	12		U
74-83-9	Bromomethane	0.84	12		U
78-93-3	2-Butanone	1.6	12		U
75-15-0	Carbon disulfide	1.5	12		U
56-23-5	Carbon tetrachloride	1.0	12		U
108-90-7	Chlorobenzene	0.40	12		U
75-00-3	Chloroethane	1.3	12		U
67-66-3	Chloroform	0.64	12		U
74-87-3	Chloromethane	0.61	12		U
110-82-7	Cyclohexane	0.63	12		U
124-48-1	Dibromochloromethane	0.40	12		U
96-12-8	1,2-Dibromo-3-chloropropane	1.4	5.9		U
106-93-4	1,2-Dibromoethane	0.50	12		U
95-50-1	1,2-Dichlorobenzene	0.43	12		U
541-73-1	1,3-Dichlorobenzene	0.98	12		U
106-46-7	1,4-Dichlorobenzene	0.64	12		U
75-71-8	Dichlorodifluoromethane	1.3	12		~~U~~ UJ CCV
75-34-3	1,1-Dichloroethane	0.63	12		U
107-06-2	1,2-Dichloroethane	0.54	12		U
75-35-4	1,1-Dichloroethene	1.4	12		U
156-59-2	cis-1,2-Dichloroethene	1.4	12		U
156-60-5	trans-1,2-Dichloroethene	1.3	12		U
78-87-5	1,2-Dichloropropane	0.54	12		U
10061-01-5	cis-1,3-Dichloropropene	0.59	12		U
10061-02-6	trans-1,3-Dichloropropene	0.38	12		U
100-41-4	Ethylbenzene	0.88	12		U
591-78-6	2-Hexanone	2.7	12		U
98-82-8	Isopropylbenzene	1.0	12		U
79-20-9	Methyl acetate	1.9	12		U
75-09-2	Methylene chloride	0.73	12	12U	~~1.3 JB~~ B
108-87-2	Methyl cyclohexane	0.35	12		U
1634-04-4	Methyl tert-butyl ether	0.38	12		U
108-10-1	4-Methyl-2-pentanone	0.68	12		U
100-42-5	Styrene	0.41	12		U
79-34-5	1,1,2,2-Tetrachloroethane	0.50	12		U
127-18-4	Tetrachloroethene	1.1	12		U

FORM I VOA

NW 4/6/09

FORM 1
VOLATILE ORGANICS ANALYSIS DATA SHEET

CLIENT SAMPLE NO. 16

MR08-SS360D-09A

Lab Name: EMPIRICAL LABS Contract: CH2MHILL

Lab Code: NA Case No.: NA SAS No.: NA SDG No.: LEJEUNE056

Matrix: (soil/water) SOIL Lab Sample ID: 0901201-16

Sample wt/vol: 4.8 (g/mL) G Lab File ID: 0120116A

Level: (low/med) LOW Date Sampled: 01/23/09 14:50

% Moisture: not dec. 10 Date Analyzed: 02/03/09 16:43

GC Column: RTX-VRX ID: 0.25 (mm) Dilution Factor: 1.0

Soil Extract Volume:_____(uL) Soil Aliquot Volume: _____(uL)

CONCENTRATION UNITS: (ug/L or ug/Kg) UG/KG

CAS NO.	COMPOUND	MDL	RL	CONC	Q
108-88-3	Toluene	1.0	12		U
120-82-1	1,2,4-Trichlorobenzene	0.21	12		U
71-55-6	1,1,1-Trichloroethane	1.0	12		U
79-00-5	1,1,2-Trichloroethane	0.41	12		U
79-01-6	Trichloroethene	1.00	12		U
76-13-1	Trichlorotrifluoroethane	0.64	12		U
75-69-4	Trichlorofluoromethane	1.1	12		U
75-01-4	Vinyl chloride	1.3	12		U
1330-20-7	Xylene(total)	0.82	12		U

NW
4/6/09

FORM 1
VOLATILE ORGANICS ANALYSIS DATA SHEET

CLIENT SAMPLE NO. 17

MR08-SS361-09A

Lab Name: EMPIRICAL LABS Contract: CH2MHILL

Lab Code: NA Case No.: NA SAS No.: NA SDG No.: LEJEUNE056

Matrix: (soil/water) SOIL Lab Sample ID: 0901201-17

Sample wt/vol: 5.6 (g/mL) G Lab File ID: 0120117A

Level: (low/med) LOW Date Sampled: 01/23/09 15:15

% Moisture: not dec. 8 Date Analyzed: 02/03/09 17:14

GC Column: RTX-VRX ID: 0.25 (mm) Dilution Factor: 1.0

Soil Extract Volume:_____(uL) Soil Aliquot Volume: _____(uL)

CONCENTRATION UNITS: (ug/L or ug/Kg) UG/KG

CAS NO.	COMPOUND	MDL	RL	CONC	Q
67-64-1	Acetone	2.0	9.8	12	u B
71-43-2	Benzene	0.46	9.8		U
75-27-4	Bromodichloromethane	0.29	9.8		U
75-25-2	Bromoform	0.98	9.8		U
74-83-9	Bromomethane	0.70	9.8		U
78-93-3	2-Butanone	1.4	9.8		U
75-15-0	Carbon disulfide	1.3	9.8		U
56-23-5	Carbon tetrachloride	0.86	9.8		U
108-90-7	Chlorobenzene	0.33	9.8		U
75-00-3	Chloroethane	1.1	9.8		U
67-66-3	Chloroform	0.54	9.8		U
74-87-3	Chloromethane	0.51	9.8		U
110-82-7	Cyclohexane	0.53	9.8		U
124-48-1	Dibromochloromethane	0.33	9.8		U
96-12-8	1,2-Dibromo-3-chloropropane	1.2	4.9		U
106-93-4	1,2-Dibromoethane	0.42	9.8		U
95-50-1	1,2-Dichlorobenzene	0.36	9.8		U
541-73-1	1,3-Dichlorobenzene	0.82	9.8		U
106-46-7	1,4-Dichlorobenzene	0.54	9.8		U
75-71-8	Dichlorodifluoromethane	1.1	9.8		~~U~~ US CCH
75-34-3	1,1-Dichloroethane	0.53	9.8		U
107-06-2	1,2-Dichloroethane	0.45	9.8		U
75-35-4	1,1-Dichloroethene	1.2	9.8		U
156-59-2	cis-1,2-Dichloroethene	1.2	9.8		U
156-60-5	trans-1,2-Dichloroethene	1.1	9.8		U
78-87-5	1,2-Dichloropropane	0.45	9.8		U
10061-01-5	cis-1,3-Dichloropropene	0.49	9.8		U
10061-02-6	trans-1,3-Dichloropropene	0.31	9.8		U
100-41-4	Ethylbenzene	0.73	9.8		U
591-78-6	2-Hexanone	2.2	9.8		U
98-82-8	Isopropylbenzene	0.86	9.8		U
79-20-9	Methyl acetate	1.6	9.8		U
75-09-2	Methylene chloride	0.60	9.8	9.8U ~~0.99~~ ~~JB~~	BL
108-87-2	Methyl cyclohexane	0.29	9.8		U
1634-04-4	Methyl tert-butyl ether	0.31	9.8		U
108-10-1	4-Methyl-2-pentanone	0.57	9.8		U
100-42-5	Styrene	0.34	9.8		U
79-34-5	1,1,2,2-Tetrachloroethane	0.42	9.8		U
127-18-4	Tetrachloroethene	0.95	9.8		U

FORM I VOA

KEO 4/6/09

FORM 1
VOLATILE ORGANICS ANALYSIS DATA SHEET

CLIENT SAMPLE NO.

17

MR08-SS361-09A

Lab Name: EMPIRICAL LABS Contract: CH2MHILL

Lab Code: NA Case No.: NA SAS No.: NA SDG No.: LEJEUNE056

Matrix: (soil/water) SOIL Lab Sample ID: 0901201-17

Sample wt/vol: 5.6 (g/mL) G Lab File ID: 0120117A

Level: (low/med) LOW Date Sampled: 01/23/09 15:15

% Moisture: not dec. 8 Date Analyzed: 02/03/09 17:14

GC Column: RTX-VRX ID: 0.25 (mm) Dilution Factor: 1.0

Soil Extract Volume:_____(uL) Soil Aliquot Volume: _____(uL)

CONCENTRATION UNITS: (ug/L or ug/Kg) UG/KG

CAS NO.	COMPOUND	MDL	RL	CONC	Q
108-88-3	Toluene	0.84	9.8		U
120-82-1	1,2,4-Trichlorobenzene	0.18	9.8		U
71-55-6	1,1,1-Trichloroethane	0.88	9.8		U
79-00-5	1,1,2-Trichloroethane	0.34	9.8		U
79-01-6	Trichloroethene	0.83	9.8		U
76-13-1	Trichlorotrifluoroethane	0.54	9.8		U
75-69-4	Trichlorofluoromethane	0.93	9.8		U
75-01-4	Vinyl chloride	1.1	9.8		U
1330-20-7	Xylene(total)	0.68	9.8		U

MW
4/4/09

FORM 1
VOLATILE ORGANICS ANALYSIS DATA SHEET

CLIENT SAMPLE NO. 18

MR08-IS36
1-4-5-09A

Lab Name: EMPIRICAL LABS Contract: CH2MHILL

Lab Code: NA Case No.: NA SAS No.: NA SDG No.: LEJEUNE056

Matrix: (soil/water) SOIL Lab Sample ID: 0901201-18

Sample wt/vol: 5.8 (g/mL) G Lab File ID: 0120118A

Level: (low/med) LOW Date Sampled: 01/23/09 15:20

% Moisture: not dec. 12 Date Analyzed: 02/03/09 17:44

GC Column: RTX-VRX ID: 0.25 (mm) Dilution Factor: 1.0

Soil Extract Volume:_____(uL) Soil Aliquot Volume: _____(uL)

CONCENTRATION UNITS: (ug/L or ug/Kg) UG/KG

CAS NO.	COMPOUND	MDL	RL	CONC	Q	
67-64-1	Acetone	2.0	9.8	9.8u ~~1.6~~	~~J~~	B
71-43-2	Benzene	0.46	9.8		U	
75-27-4	Bromodichloromethane	0.29	9.8		U	
75-25-2	Bromoform	0.98	9.8		U	
74-83-9	Bromomethane	0.70	9.8		U	
78-93-3	2-Butanone	1.4	9.8		U	
75-15-0	Carbon disulfide	1.3	9.8		U	
56-23-5	Carbon tetrachloride	0.86	9.8		U	
108-90-7	Chlorobenzene	0.33	9.8		U	
75-00-3	Chloroethane	1.1	9.8		U	
67-66-3	Chloroform	0.54	9.8		U	
74-87-3	Chloromethane	0.51	9.8		U	
110-82-7	Cyclohexane	0.53	9.8		U	
124-48-1	Dibromochloromethane	0.33	9.8		U	
96-12-8	1,2-Dibromo-3-chloropropane	1.2	4.9		U	
106-93-4	1,2-Dibromoethane	0.42	9.8		U	
95-50-1	1,2-Dichlorobenzene	0.36	9.8		U	
541-73-1	1,3-Dichlorobenzene	0.82	9.8		U	
106-46-7	1,4-Dichlorobenzene	0.54	9.8		U	
75-71-8	Dichlorodifluoromethane	1.1	9.8		~~U~~ UJ	CC
75-34-3	1,1-Dichloroethane	0.53	9.8		U	
107-06-2	1,2-Dichloroethane	0.45	9.8		U	
75-35-4	1,1-Dichloroethene	1.2	9.8		U	
156-59-2	cis-1,2-Dichloroethene	1.2	9.8		U	
156-60-5	trans-1,2-Dichloroethene	1.1	9.8		U	
78-87-5	1,2-Dichloropropane	0.45	9.8		U	
10061-01-5	cis-1,3-Dichloropropene	0.49	9.8		U	
10061-02-6	trans-1,3-Dichloropropene	0.31	9.8		U	
100-41-4	Ethylbenzene	0.73	9.8		U	
591-78-6	2-Hexanone	2.2	9.8		U	
98-82-8	Isopropylbenzene	0.86	9.8		U	
79-20-9	Methyl acetate	1.6	9.8		U	
75-09-2	Methylene chloride	0.60	9.8	9.8u ~~1.2~~	~~JB~~	BL
108-87-2	Methyl cyclohexane	0.29	9.8		U	
1634-04-4	Methyl tert-butyl ether	0.31	9.8		U	
108-10-1	4-Methyl-2-pentanone	0.56	9.8		U	
100-42-5	Styrene	0.34	9.8		U	
79-34-5	1,1,2,2-Tetrachloroethane	0.42	9.8		U	
127-18-4	Tetrachloroethene	0.95	9.8		U	

MW 4/6/09

FORM 1
VOLATILE ORGANICS ANALYSIS DATA SHEET

CLIENT SAMPLE NO. 18

MR08-IS36
1-4-5-09A

Lab Name: EMPIRICAL LABS Contract: CH2MHILL

Lab Code: NA Case No.: NA SAS No.: NA SDG No.: LEJEUNE056

Matrix: (soil/water) SOIL Lab Sample ID: 0901201-18

Sample wt/vol: 5.8 (g/mL) G Lab File ID: 0120118A

Level: (low/med) LOW Date Sampled: 01/23/09 15:20

% Moisture: not dec. 12 Date Analyzed: 02/03/09 17:44

GC Column: RTX-VRX ID: 0.25 (mm) Dilution Factor: 1.0

Soil Extract Volume:_____(uL) Soil Aliquot Volume: _____(uL)

CONCENTRATION UNITS: (ug/L or ug/Kg) UG/KG

CAS NO.	COMPOUND	MDL	RL	CONC	Q
108-88-3	Toluene	0.84	9.8		U
120-82-1	1,2,4-Trichlorobenzene	0.18	9.8		U
71-55-6	1,1,1-Trichloroethane	0.88	9.8		U
79-00-5	1,1,2-Trichloroethane	0.34	9.8		U
79-01-6	Trichloroethene	0.83	9.8		U
76-13-1	Trichlorotrifluoroethane	0.54	9.8		U
75-69-4	Trichlorofluoromethane	0.93	9.8		U
75-01-4	Vinyl chloride	1.1	9.8		U
1330-20-7	Xylene(total)	0.68	9.8		U

NW
4/6/09

FORM 1
VOLATILE ORGANICS ANALYSIS DATA SHEET

CLIENT SAMPLE NO. 19

MR08-SS368-09A

Lab Name: EMPIRICAL LABS Contract: CH2MHILL

Lab Code: NA Case No.: NA SAS No.: NA SDG No.: LEJEUNE056

Matrix: (soil/water) SOIL Lab Sample ID: 0901201-19

Sample wt/vol: 4.8 (g/mL) G Lab File ID: 0120119A

Level: (low/med) LOW Date Sampled: 01/23/09 15:40

% Moisture: not dec. 23 Date Analyzed: 02/03/09 22:53

GC Column: RTX-VRX ID: 0.25 (mm) Dilution Factor: 1.0

Soil Extract Volume:_____(uL) Soil Aliquot Volume: _____(uL)

CONCENTRATION UNITS: (ug/L or ug/Kg) UG/KG

CAS NO.	COMPOUND	MDL	RL	CONC	Q
67-64-1	Acetone	2.7	14	160	~~B~~
71-43-2	Benzene	0.64	14	1.0	J
75-27-4	Bromodichloromethane	0.41	14		U
75-25-2	Bromoform	1.4	14		U
74-83-9	Bromomethane	0.98	14		U
78-93-3	2-Butanone	1.9	14	27	J CCH
75-15-0	Carbon disulfide	1.8	14	7.6	J
56-23-5	Carbon tetrachloride	1.2	14		U
108-90-7	Chlorobenzene	0.46	14		U
75-00-3	Chloroethane	1.5	14		U
67-66-3	Chloroform	0.75	14		U
74-87-3	Chloromethane	0.71	14		U
110-82-7	Cyclohexane	0.73	14		U
124-48-1	Dibromochloromethane	0.46	14		U
96-12-8	1,2-Dibromo-3-chloropropane	1.6	6.8		U
106-93-4	1,2-Dibromoethane	0.58	14		U
95-50-1	1,2-Dichlorobenzene	0.50	14		U
541-73-1	1,3-Dichlorobenzene	1.1	14		U
106-46-7	1,4-Dichlorobenzene	0.75	14		U
75-71-8	Dichlorodifluoromethane	1.5	14		~~U~~ UJ CCL
75-34-3	1,1-Dichloroethane	0.73	14		U
107-06-2	1,2-Dichloroethane	0.62	14		U
75-35-4	1,1-Dichloroethene	1.6	14		U
156-59-2	cis-1,2-Dichloroethene	1.6	14		U
156-60-5	trans-1,2-Dichloroethene	1.5	14		U
78-87-5	1,2-Dichloropropane	0.62	14		U
10061-01-5	cis-1,3-Dichloropropene	0.68	14		U
10061-02-6	trans-1,3-Dichloropropene	0.44	14		U
100-41-4	Ethylbenzene	1.0	14		U
591-78-6	2-Hexanone	3.1	14		U
98-82-8	Isopropylbenzene	1.2	14		U
79-20-9	Methyl acetate	2.2	14		U
75-09-2	Methylene chloride	0.84	14	14u ~~1.4~~	JB E
108-87-2	Methyl cyclohexane	0.41	14		U
1634-04-4	Methyl tert-butyl ether	0.44	14		U
108-10-1	4-Methyl-2-pentanone	0.79	14		U
100-42-5	Styrene	0.48	14		U
79-34-5	1,1,2,2-Tetrachloroethane	0.58	14		U
127-18-4	Tetrachloroethene	1.3	14		U

FORM I VOA

NW 02/06/09

19

FORM 1
VOLATILE ORGANICS ANALYSIS DATA SHEET

CLIENT SAMPLE NO.

MR08-SS368-09A

Lab Name: EMPIRICAL LABS Contract: CH2MHILL

Lab Code: NA Case No.: NA SAS No.: NA SDG No.: LEJEUNE056

Matrix: (soil/water) SOIL Lab Sample ID: 0901201-19

Sample wt/vol: 4.8 (g/mL) G Lab File ID: 0120119A

Level: (low/med) LOW Date Sampled: 01/23/09 15:40

% Moisture: not dec. 23 Date Analyzed: 02/03/09 22:53

GC Column: RTX-VRX ID: 0.25 (mm) Dilution Factor: 1.0

Soil Extract Volume:_____(uL) Soil Aliquot Volume: _____(uL)

CONCENTRATION UNITS: (ug/L or ug/Kg) UG/KG

CAS NO.	COMPOUND	MDL	RL	CONC	Q
108-88-3	Toluene	1.2	14		U
120-82-1	1,2,4-Trichlorobenzene	0.24	14		U
71-55-6	1,1,1-Trichloroethane	1.2	14		U
79-00-5	1,1,2-Trichloroethane	0.48	14		U
79-01-6	Trichloroethene	1.2	14		U
76-13-1	Trichlorotrifluoroethane	0.75	14		U
75-69-4	Trichlorofluoromethane	1.3	14		U
75-01-4	Vinyl chloride	1.5	14		U
1330-20-7	Xylene(total)	0.95	14		U

JW 4/6/09

FORM 1
VOLATILE ORGANICS ANALYSIS DATA SHEET

CLIENT SAMPLE NO. 20

MR08-IS36
8-4-5-09A

Lab Name: EMPIRICAL LABS Contract: CH2MHILL

Lab Code: NA Case No.: NA SAS No.: NA SDG No.: LEJEUNE056

Matrix: (soil/water) SOIL Lab Sample ID: 0901201-20

Sample wt/vol: 6.1 (g/mL) G Lab File ID: 0120120A

Level: (low/med) LOW Date Sampled: 01/23/09 15:50

% Moisture: not dec. 12 Date Analyzed: 02/03/09 23:24

GC Column: RTX-VRX ID: 0.25 (mm) Dilution Factor: 1.0

Soil Extract Volume:_____(uL) Soil Aliquot Volume: _____(uL)

CONCENTRATION UNITS: (ug/L or ug/Kg) UG/KG

CAS NO.	COMPOUND	MDL	RL	CONC	Q	
67-64-1	Acetone	1.9	9.4	9.4U ~~5.7~~	~~JB~~	Bl
71-43-2	Benzene	0.44	9.4		U	
75-27-4	Bromodichloromethane	0.28	9.4		U	
75-25-2	Bromoform	0.94	9.4		U	
74-83-9	Bromomethane	0.68	9.4		U	
78-93-3	2-Butanone	1.3	9.4		~~U~~ UJ	CCH
75-15-0	Carbon disulfide	1.2	9.4		U	
56-23-5	Carbon tetrachloride	0.83	9.4		U	
108-90-7	Chlorobenzene	0.32	9.4		U	
75-00-3	Chloroethane	1.0	9.4		U	
67-66-3	Chloroform	0.52	9.4		U	
74-87-3	Chloromethane	0.49	9.4		U	
110-82-7	Cyclohexane	0.51	9.4		U	
124-48-1	Dibromochloromethane	0.32	9.4		U	
96-12-8	1,2-Dibromo-3-chloropropane	1.1	4.7		U	
106-93-4	1,2-Dibromoethane	0.40	9.4		U	
95-50-1	1,2-Dichlorobenzene	0.35	9.4		U	
541-73-1	1,3-Dichlorobenzene	0.79	9.4		U	
106-46-7	1,4-Dichlorobenzene	0.52	9.4		U	
75-71-8	Dichlorodifluoromethane	1.0	9.4		~~U~~ UJ	CCH
75-34-3	1,1-Dichloroethane	0.51	9.4		U	
107-06-2	1,2-Dichloroethane	0.43	9.4		U	
75-35-4	1,1-Dichloroethene	1.1	9.4		U	
156-59-2	cis-1,2-Dichloroethene	1.1	9.4		U	
156-60-5	trans-1,2-Dichloroethene	1.0	9.4		U	
78-87-5	1,2-Dichloropropane	0.43	9.4		U	
10061-01-5	cis-1,3-Dichloropropene	0.47	9.4		U	
10061-02-6	trans-1,3-Dichloropropene	0.30	9.4		U	
100-41-4	Ethylbenzene	0.70	9.4		U	
591-78-6	2-Hexanone	2.2	9.4		U	
98-82-8	Isopropylbenzene	0.83	9.4		U	
79-20-9	Methyl acetate	1.5	9.4		U	
75-09-2	Methylene chloride	0.58	9.4	9.4U ~~1.1~~	~~JB~~	Bl
108-87-2	Methyl cyclohexane	0.28	9.4		U	
1634-04-4	Methyl tert-butyl ether	0.30	9.4		U	
108-10-1	4-Methyl-2-pentanone	0.54	9.4		U	
100-42-5	Styrene	0.33	9.4		U	
79-34-5	1,1,2,2-Tetrachloroethane	0.40	9.4		U	
127-18-4	Tetrachloroethene	0.91	9.4		U	

MW 4/6/09

FORM 1
VOLATILE ORGANICS ANALYSIS DATA SHEET

CLIENT SAMPLE NO. 20

MR08-IS36
8-4-5-09A

Lab Name: EMPIRICAL LABS Contract: CH2MHILL

Lab Code: NA Case No.: NA SAS No.: NA SDG No.: LEJEUNE056

Matrix: (soil/water) SOIL Lab Sample ID: 0901201-20

Sample wt/vol: 6.1 (g/mL) G Lab File ID: 0120120A

Level: (low/med) LOW Date Sampled: 01/23/09 15:50

% Moisture: not dec. 12 Date Analyzed: 02/03/09 23:24

GC Column: RTX-VRX ID: 0.25 (mm) Dilution Factor: 1.0

Soil Extract Volume:_____(uL) Soil Aliquot Volume: _____(uL)

CONCENTRATION UNITS: (ug/L or ug/Kg) UG/KG

CAS NO.	COMPOUND	MDL	RL	CONC	Q
108-88-3	Toluene	0.81	9.4		U
120-82-1	1,2,4-Trichlorobenzene	0.17	9.4		U
71-55-6	1,1,1-Trichloroethane	0.85	9.4		U
79-00-5	1,1,2-Trichloroethane	0.33	9.4		U
79-01-6	Trichloroethene	0.80	9.4		U
76-13-1	Trichlorotrifluoroethane	0.52	9.4		U
75-69-4	Trichlorofluoromethane	0.89	9.4		U
75-01-4	Vinyl chloride	1.0	9.4		U
1330-20-7	Xylene(total)	0.66	9.4		U

MW
4/16/09

FORM 1
VOLATILE ORGANICS ANALYSIS DATA SHEET

CLIENT SAMPLE NO. 21

MR08-SS355-09A

Lab Name: EMPIRICAL LABS Contract: CH2MHILL

Lab Code: NA Case No.: NA SAS No.: NA SDG No.: LEJEUNE056

Matrix: (soil/water) SOIL Lab Sample ID: 0901201-21

Sample wt/vol: 5.3 (g/mL) G Lab File ID: 0120121A

Level: (low/med) LOW Date Sampled: 01/23/09 16:00

% Moisture: not dec. 15 Date Analyzed: 02/03/09 23:55

GC Column: RTX-VRX ID: 0.25 (mm) Dilution Factor: 1.0

Soil Extract Volume:_____(uL) Soil Aliquot Volume: _____(uL)

CONCENTRATION UNITS: (ug/L or ug/Kg) UG/KG

CAS NO.	COMPOUND	MDL	RL	CONC	Q
67-64-1	Acetone	2.2	11	120	~~B~~
71-43-2	Benzene	0.53	11	0.76	J
75-27-4	Bromodichloromethane	0.34	11		U
75-25-2	Bromoform	1.1	11		U
74-83-9	Bromomethane	0.81	11		U
78-93-3	2-Butanone	1.6	11		~~J~~ UJ CC
75-15-0	Carbon disulfide	1.4	11	4.5	J
56-23-5	Carbon tetrachloride	0.99	11		U
108-90-7	Chlorobenzene	0.38	11		U
75-00-3	Chloroethane	1.2	11		U
67-66-3	Chloroform	0.62	11		U
74-87-3	Chloromethane	0.58	11		U
110-82-7	Cyclohexane	0.60	11		U
124-48-1	Dibromochloromethane	0.38	11		U
96-12-8	1,2-Dibromo-3-chloropropane	1.3	5.6		U
106-93-4	1,2-Dibromoethane	0.48	11		U
95-50-1	1,2-Dichlorobenzene	0.42	11		U
541-73-1	1,3-Dichlorobenzene	0.94	11		U
106-46-7	1,4-Dichlorobenzene	0.62	11		U
75-71-8	Dichlorodifluoromethane	1.2	11		~~J~~ UJ CC
75-34-3	1,1-Dichloroethane	0.60	11		U
107-06-2	1,2-Dichloroethane	0.52	11		U
75-35-4	1,1-Dichloroethene	1.3	11		U
156-59-2	cis-1,2-Dichloroethene	1.3	11		U
156-60-5	trans-1,2-Dichloroethene	1.2	11		U
78-87-5	1,2-Dichloropropane	0.52	11		U
10061-01-5	cis-1,3-Dichloropropene	0.56	11		U
10061-02-6	trans-1,3-Dichloropropene	0.36	11		U
100-41-4	Ethylbenzene	0.84	11		U
591-78-6	2-Hexanone	2.6	11		U
98-82-8	Isopropylbenzene	0.99	11		U
79-20-9	Methyl acetate	1.8	11		U
75-09-2	Methylene chloride	0.70	11	11U	~~1.3 JB~~ B
108-87-2	Methyl cyclohexane	0.34	11		U
1634-04-4	Methyl tert-butyl ether	0.36	11		U
108-10-1	4-Methyl-2-pentanone	0.65	11		U
100-42-5	Styrene	0.39	11		U
79-34-5	1,1,2,2-Tetrachloroethane	0.48	11		U
127-18-4	Tetrachloroethene	1.1	11		U

FORM I VOA

NW
2/11/09

FORM 1
VOLATILE ORGANICS ANALYSIS DATA SHEET

CLIENT SAMPLE NO.

21

MR08-SS355-09A

Lab Name: EMPIRICAL LABS Contract: CH2MHILL

Lab Code: NA Case No.: NA SAS No.: NA SDG No.: LEJEUNE056

Matrix: (soil/water) SOIL Lab Sample ID: 0901201-21

Sample wt/vol: 5.3 (g/mL) G Lab File ID: 0120121A

Level: (low/med) LOW Date Sampled: 01/23/09 16:00

% Moisture: not dec. 15 Date Analyzed: 02/03/09 23:55

GC Column: RTX-VRX ID: 0.25 (mm) Dilution Factor: 1.0

Soil Extract Volume:_____(uL) Soil Aliquot Volume: _____(uL)

CONCENTRATION UNITS: (ug/L or ug/Kg) UG/KG

CAS NO.	COMPOUND	MDL	RL	CONC	Q
108-88-3	Toluene	0.96	11		U
120-82-1	1,2,4-Trichlorobenzene	0.20	11		U
71-55-6	1,1,1-Trichloroethane	1.0	11		U
79-00-5	1,1,2-Trichloroethane	0.39	11		U
79-01-6	Trichloroethene	0.95	11		U
76-13-1	Trichlorotrifluoroethane	0.62	11		U
75-69-4	Trichlorofluoromethane	1.1	11		U
75-01-4	Vinyl chloride	1.2	11		U
1330-20-7	Xylene(total)	0.78	11		U

MW
4/1/09

FORM 1
VOLATILE ORGANICS ANALYSIS DATA SHEET

CLIENT SAMPLE NO. 22

MR08-IS35
5-4-5-09A

Lab Name: EMPIRICAL LABS Contract: CH2MHILL

Lab Code: NA Case No.: NA SAS No.: NA SDG No.: LEJEUNE056

Matrix: (soil/water) SOIL Lab Sample ID: 0901201-22

Sample wt/vol: 5.5 (g/mL) G Lab File ID: 0120122A

Level: (low/med) LOW Date Sampled: 01/23/09 16:10

% Moisture: not dec. 10 Date Analyzed: 02/04/09 00:25

GC Column: RTX-VRX ID: 0.25 (mm) Dilution Factor: 1.0

Soil Extract Volume:_____(uL) Soil Aliquot Volume: _____(uL)

CONCENTRATION UNITS: (ug/L or ug/Kg) UG/KG

CAS NO.	COMPOUND	MDL	RL	CONC	Q	
67-64-1	Acetone	2.0	10	10U	~~4.9 JB~~	B
71-43-2	Benzene	0.47	10		U	
75-27-4	Bromodichloromethane	0.30	10		U	
75-25-2	Bromoform	1.0	10		U	
74-83-9	Bromomethane	0.73	10		U	
78-93-3	2-Butanone	1.4	10		~~U~~ US CU	
75-15-0	Carbon disulfide	1.3	10		U	
56-23-5	Carbon tetrachloride	0.89	10		U	
108-90-7	Chlorobenzene	0.34	10		U	
75-00-3	Chloroethane	1.1	10		U	
67-66-3	Chloroform	0.56	10		U	
74-87-3	Chloromethane	0.52	10		U	
110-82-7	Cyclohexane	0.54	10		U	
124-48-1	Dibromochloromethane	0.34	10		U	
96-12-8	1,2-Dibromo-3-chloropropane	1.2	5.0		U	
106-93-4	1,2-Dibromoethane	0.43	10		U	
95-50-1	1,2-Dichlorobenzene	0.37	10		U	
541-73-1	1,3-Dichlorobenzene	0.85	10		U	
106-46-7	1,4-Dichlorobenzene	0.56	10		U	
75-71-8	Dichlorodifluoromethane	1.1	10		~~U~~ US CU	
75-34-3	1,1-Dichloroethane	0.54	10		U	
107-06-2	1,2-Dichloroethane	0.46	10		U	
75-35-4	1,1-Dichloroethene	1.2	10		U	
156-59-2	cis-1,2-Dichloroethene	1.2	10		U	
156-60-5	trans-1,2-Dichloroethene	1.1	10		U	
78-87-5	1,2-Dichloropropane	0.46	10		U	
10061-01-5	cis-1,3-Dichloropropene	0.50	10		U	
10061-02-6	trans-1,3-Dichloropropene	0.32	10		U	
100-41-4	Ethylbenzene	0.76	10		U	
591-78-6	2-Hexanone	2.3	10		U	
98-82-8	Isopropylbenzene	0.89	10		U	
79-20-9	Methyl acetate	1.6	10		U	
75-09-2	Methylene chloride	0.63	10	10U	~~1.3 JB~~	B
108-87-2	Methyl cyclohexane	0.30	10		U	
1634-04-4	Methyl tert-butyl ether	0.32	10		U	
108-10-1	4-Methyl-2-pentanone	0.59	10		U	
100-42-5	Styrene	0.35	10		U	
79-34-5	1,1,2,2-Tetrachloroethane	0.43	10		U	
127-18-4	Tetrachloroethene	0.98	10		U	

MW 6/6/09

FORM 1
VOLATILE ORGANICS ANALYSIS DATA SHEET

CLIENT SAMPLE NO. 22

MR08-IS35
5-4-5-09A

Lab Name: EMPIRICAL LABS Contract: CH2MHILL

Lab Code: NA Case No.: NA SAS No.: NA SDG No.: LEJEUNE056

Matrix: (soil/water) SOIL Lab Sample ID: 0901201-22

Sample wt/vol: 5.5 (g/mL) G Lab File ID: 0120122A

Level: (low/med) LOW Date Sampled: 01/23/09 16:10

% Moisture: not dec. 10 Date Analyzed: 02/04/09 00:25

GC Column: RTX-VRX ID: 0.25 (mm) Dilution Factor: 1.0

Soil Extract Volume:_____(uL) Soil Aliquot Volume: _____(uL)

CONCENTRATION UNITS: (ug/L or ug/Kg) UG/KG

CAS NO.	COMPOUND	MDL	RL	CONC	Q
108-88-3	Toluene	0.87	10		U
120-82-1	1,2,4-Trichlorobenzene	0.18	10		U
71-55-6	1,1,1-Trichloroethane	0.91	10		U
79-00-5	1,1,2-Trichloroethane	0.35	10		U
79-01-6	Trichloroethene	0.86	10		U
76-13-1	Trichlorotrifluoroethane	0.56	10		U
75-69-4	Trichlorofluoromethane	0.96	10		U
75-01-4	Vinyl chloride	1.1	10		U
1330-20-7	Xylene(total)	0.71	10		U

LeW
4/6/09

FORM 1
VOLATILE ORGANICS ANALYSIS DATA SHEET

CLIENT SAMPLE NO. 23

MR08-EB012409

Lab Name: EMPIRICAL LABS Contract: CH2MHILL

Lab Code: NA Case No.: NA SAS No.: NA SDG No.: LEJEUNE056

Matrix: (soil/water) WATER Lab Sample ID: 0901201-23

Sample wt/vol: 5.000 (g/mL) ML Lab File ID: 0120123

Level: (low/med) LOW Date Sampled: 01/24/09 07:45

% Moisture: not dec. _____ Date Analyzed: 01/31/09 22:53

GC Column: RTX-VRX ID: 0.25 (mm) Dilution Factor: 1.0

Soil Extract Volume:_____(uL) Soil Aliquot Volume: _____(uL)

CONCENTRATION UNITS: (ug/L or ug/Kg) UG/L

CAS NO.	COMPOUND	MDL	RL	CONC	Q
67-64-1	Acetone	0.84	2.5	1.3	J
71-43-2	Benzene	0.11	1.0		U
75-27-4	Bromodichloromethane	0.10	1.0		U
75-25-2	Bromoform	0.10	1.0		U
74-83-9	Bromomethane	0.32	1.0		U
78-93-3	2-Butanone	1.0	3.0		U
75-15-0	Carbon disulfide	0.13	1.0		U
56-23-5	Carbon tetrachloride	0.15	1.0		U
108-90-7	Chlorobenzene	0.10	1.0	0.24	J
75-00-3	Chloroethane	0.18	1.0		U
67-66-3	Chloroform	0.11	1.0	0.12	J
74-87-3	Chloromethane	0.29	1.0		U
110-82-7	Cyclohexane	0.20	1.0		U
124-48-1	Dibromochloromethane	0.10	1.0		U
96-12-8	1,2-Dibromo-3-chloropropane	0.11	1.0		U
106-93-4	1,2-Dibromoethane	0.10	1.0		U
95-50-1	1,2-Dichlorobenzene	0.10	1.0		U
541-73-1	1,3-Dichlorobenzene	0.13	1.0		U
106-46-7	1,4-Dichlorobenzene	0.10	1.0		U
75-71-8	Dichlorodifluoromethane	0.22	1.0		~~U~~ UJ CU
75-34-3	1,1-Dichloroethane	0.12	1.0		U
107-06-2	1,2-Dichloroethane	0.10	1.0		U
75-35-4	1,1-Dichloroethene	0.15	1.0		U
156-59-2	cis-1,2-Dichloroethene	0.13	1.0		U
156-60-5	trans-1,2-Dichloroethene	0.13	1.0		U
78-87-5	1,2-Dichloropropane	0.10	1.0		U
10061-01-5	cis-1,3-Dichloropropene	0.11	1.0		U
10061-02-6	trans-1,3-Dichloropropene	0.10	1.0		U
100-41-4	Ethylbenzene	0.13	1.0		U
591-78-6	2-Hexanone	0.30	2.0		U
98-82-8	Isopropylbenzene	0.15	1.0		U
79-20-9	Methyl acetate	0.30	1.0		U
75-09-2	Methylene chloride	0.14	1.0	1.04 ~~0.76~~ ~~JB~~	B
108-87-2	Methyl cyclohexane	0.17	1.0		U
1634-04-4	Methyl tert-butyl ether	0.10	1.0		U
108-10-1	4-Methyl-2-pentanone	0.29	1.0		U
100-42-5	Styrene	0.10	1.0		U
79-34-5	1,1,2,2-Tetrachloroethane	0.10	1.0		U
127-18-4	Tetrachloroethene	0.15	1.0		U

FORM I VOA

RW 4/6/09

FORM 1
VOLATILE ORGANICS ANALYSIS DATA SHEET

CLIENT SAMPLE NO. 23

MR08-EB012409

Lab Name: EMPIRICAL LABS Contract: CH2MHILL

Lab Code: NA Case No.: NA SAS No.: NA SDG No.: LEJEUNE056

Matrix: (soil/water) WATER Lab Sample ID: 0901201-23

Sample wt/vol: 5.000 (g/mL) ML Lab File ID: 0120123

Level: (low/med) LOW Date Sampled: 01/24/09 07:45

% Moisture: not dec. _____ Date Analyzed: 01/31/09 22:53

GC Column: RTX-VRX ID: 0.25 (mm) Dilution Factor: 1.0

Soil Extract Volume:_____(uL) Soil Aliquot Volume: _____(uL)

CONCENTRATION UNITS: (ug/L or ug/Kg) UG/L

CAS NO.	COMPOUND	MDL	RL	CONC	Q
108-88-3	Toluene	0.10	1.0		U
120-82-1	1,2,4-Trichlorobenzene	0.10	1.0		U
71-55-6	1,1,1-Trichloroethane	0.17	1.0		U
79-00-5	1,1,2-Trichloroethane	0.10	1.0		U
79-01-6	Trichloroethene	0.13	1.0		U
76-13-1	Trichlorotrifluoroethane	0.18	1.0		U
75-69-4	Trichlorofluoromethane	0.17	1.0		U
75-01-4	Vinyl chloride	0.18	1.0		U
1330-20-7	Xylene(total)	0.22	1.0		U

NW
4/6/09

FORM 1
VOLATILE ORGANICS ANALYSIS DATA SHEET

CLIENT SAMPLE NO. 24

MR08-IS34
4-2-3-09A

Lab Name: EMPIRICAL LABS Contract: CH2MHILL

Lab Code: NA Case No.: NA SAS No.: NA SDG No.: LEJEUNE056

Matrix: (soil/water) SOIL Lab Sample ID: 0901201-24

Sample wt/vol: 6.3 (g/mL) G Lab File ID: 0120124A

Level: (low/med) LOW Date Sampled: 01/24/09 09:00

% Moisture: not dec. 14 Date Analyzed: 02/04/09 00:56

GC Column: RTX-VRX ID: 0.25 (mm) Dilution Factor: 1.0

Soil Extract Volume:_____(uL) Soil Aliquot Volume: _____(uL)

CONCENTRATION UNITS: (ug/L or ug/Kg) UG/KG

CAS NO.	COMPOUND	MDL	RL	CONC	Q	
67-64-1	Acetone	1.8	9.1	13	~~B~~ U	BL
71-43-2	Benzene	0.43	9.1		U	
75-27-4	Bromodichloromethane	0.27	9.1		U	
75-25-2	Bromoform	0.91	9.1		U	
74-83-9	Bromomethane	0.66	9.1		U	
78-93-3	2-Butanone	1.3	9.1		~~U~~ U-J	CCV
75-15-0	Carbon disulfide	1.2	9.1		U	
56-23-5	Carbon tetrachloride	0.80	9.1		U	
108-90-7	Chlorobenzene	0.31	9.1		U	
75-00-3	Chloroethane	1.0	9.1		U	
67-66-3	Chloroform	0.50	9.1		U	
74-87-3	Chloromethane	0.47	9.1		U	
110-82-7	Cyclohexane	0.49	9.1		U	
124-48-1	Dibromochloromethane	0.31	9.1		U	
96-12-8	1,2-Dibromo-3-chloropropane	1.1	4.6		U	
106-93-4	1,2-Dibromoethane	0.39	9.1		U	
95-50-1	1,2-Dichlorobenzene	0.34	9.1		U	
541-73-1	1,3-Dichlorobenzene	0.76	9.1		U	
106-46-7	1,4-Dichlorobenzene	0.50	9.1		U	
75-71-8	Dichlorodifluoromethane	1.0	9.1		~~U~~ U-J	CCV
75-34-3	1,1-Dichloroethane	0.49	9.1		U	
107-06-2	1,2-Dichloroethane	0.42	9.1		U	
75-35-4	1,1-Dichloroethene	1.1	9.1		U	
156-59-2	cis-1,2-Dichloroethene	1.1	9.1		U	
156-60-5	trans-1,2-Dichloroethene	1.0	9.1		U	
78-87-5	1,2-Dichloropropane	0.42	9.1		U	
10061-01-5	cis-1,3-Dichloropropene	0.46	9.1		U	
10061-02-6	trans-1,3-Dichloropropene	0.29	9.1		U	
100-41-4	Ethylbenzene	0.68	9.1		U	
591-78-6	2-Hexanone	2.1	9.1		U	
98-82-8	Isopropylbenzene	0.80	9.1		U	
79-20-9	Methyl acetate	1.4	9.1		U	
75-09-2	Methylene chloride	0.56	9.1	9.1	1 ~~0~~ ~~JB~~	BL
108-87-2	Methyl cyclohexane	0.27	9.1		U	
1634-04-4	Methyl tert-butyl ether	0.29	9.1		U	
108-10-1	4-Methyl-2-pentanone	0.53	9.1		U	
100-42-5	Styrene	0.32	9.1		U	
79-34-5	1,1,2,2-Tetrachloroethane	0.39	9.1		U	
127-18-4	Tetrachloroethene	0.88	9.1		U	

nw
4/6/09

FORM 1
VOLATILE ORGANICS ANALYSIS DATA SHEET

CLIENT SAMPLE NO.

MR08-IS34
4-2-3-09A

Lab Name: EMPIRICAL LABS Contract: CH2MHILL

Lab Code: NA Case No.: NA SAS No.: NA SDG No.: LEJEUNE056

Matrix: (soil/water) SOIL Lab Sample ID: 0901201-24

Sample wt/vol: 6.3 (g/mL) G Lab File ID: 0120124A

Level: (low/med) LOW Date Sampled: 01/24/09 09:00

% Moisture: not dec. 14 Date Analyzed: 02/04/09 00:56

GC Column: RTX-VRX ID: 0.25 (mm) Dilution Factor: 1.0

Soil Extract Volume:_____(uL) Soil Aliquot Volume: _____(uL)

CONCENTRATION UNITS: (ug/L or ug/Kg) UG/KG

CAS NO.	COMPOUND	MDL	RL	CONC	Q
108-88-3	Toluene	0.78	9.1		U
120-82-1	1,2,4-Trichlorobenzene	0.16	9.1		U
71-55-6	1,1,1-Trichloroethane	0.82	9.1		U
79-00-5	1,1,2-Trichloroethane	0.32	9.1		U
79-01-6	Trichloroethene	0.77	9.1		U
76-13-1	Trichlorotrifluoroethane	0.50	9.1		U
75-69-4	Trichlorofluoromethane	0.86	9.1		U
75-01-4	Vinyl chloride	1.0	9.1		U
1330-20-7	Xylene(total)	0.64	9.1		U

NW
4/4/09

FORM 1
VOLATILE ORGANICS ANALYSIS DATA SHEET

CLIENT SAMPLE NO. 25

MR08-SS344-09A

Lab Name: EMPIRICAL LABS Contract: CH2MHILL

Lab Code: NA Case No.: NA SAS No.: NA SDG No.: LEJEUNE056

Matrix: (soil/water) SOIL Lab Sample ID: 0901201-25

Sample wt/vol: 3.4 (g/mL) G Lab File ID: 0120125A

Level: (low/med) LOW Date Sampled: 01/24/09 09:05

% Moisture: not dec. 22 Date Analyzed: 02/04/09 01:27

GC Column: RTX-VRX ID: 0.25 (mm) Dilution Factor: 1.0

Soil Extract Volume:_____(uL) Soil Aliquot Volume: _____(uL)

CONCENTRATION UNITS: (ug/L or ug/Kg) UG/KG

CAS NO.	COMPOUND	MDL	RL	CONC	Q
67-64-1	Acetone	3.8	19	200	~~B~~
71-43-2	Benzene	0.88	19		U
75-27-4	Bromodichloromethane	0.56	19		U
75-25-2	Bromoform	1.9	19		U
74-83-9	Bromomethane	1.4	19		U
78-93-3	2-Butanone	2.6	19		~~U~~ UJ CCH
75-15-0	Carbon disulfide	2.4	19		U
56-23-5	Carbon tetrachloride	1.6	19		U
108-90-7	Chlorobenzene	0.64	19		U
75-00-3	Chloroethane	2.1	19		U
67-66-3	Chloroform	1.0	19		U
74-87-3	Chloromethane	0.98	19		U
110-82-7	Cyclohexane	1.0	19		U
124-48-1	Dibromochloromethane	0.64	19		U
96-12-8	1,2-Dibromo-3-chloropropane	2.2	9.4		U
106-93-4	1,2-Dibromoethane	0.81	19		U
95-50-1	1,2-Dichlorobenzene	0.69	19		U
541-73-1	1,3-Dichlorobenzene	1.6	19		U
106-46-7	1,4-Dichlorobenzene	1.0	19		U
75-71-8	Dichlorodifluoromethane	2.1	19		~~U~~ UJ CCH
75-34-3	1,1-Dichloroethane	1.0	19		U
107-06-2	1,2-Dichloroethane	0.86	19		U
75-35-4	1,1-Dichloroethene	2.2	19		U
156-59-2	cis-1,2-Dichloroethene	2.2	19		U
156-60-5	trans-1,2-Dichloroethene	2.1	19		U
78-87-5	1,2-Dichloropropane	0.86	19		U
10061-01-5	cis-1,3-Dichloropropene	0.94	19		U
10061-02-6	trans-1,3-Dichloropropene	0.60	19		U
100-41-4	Ethylbenzene	1.4	19		U
591-78-6	2-Hexanone	4.3	19		U
98-82-8	Isopropylbenzene	1.6	19		U
79-20-9	Methyl acetate	3.0	19		U
75-09-2	Methylene chloride	1.2	19	19u	~~2.3 JB~~ B1
108-87-2	Methyl cyclohexane	0.56	19		U
1634-04-4	Methyl tert-butyl ether	0.60	19		U
108-10-1	4-Methyl-2-pentanone	1.1	19		U
100-42-5	Styrene	0.66	19		U
79-34-5	1,1,2,2-Tetrachloroethane	0.81	19		U
127-18-4	Tetrachloroethene	1.8	19		U

FORM I VOA

NW
4/6/09

FORM 1
VOLATILE ORGANICS ANALYSIS DATA SHEET

CLIENT SAMPLE NO. 25

MR08-SS344-09A

Lab Name: EMPIRICAL LABS Contract: CH2MHILL

Lab Code: NA Case No.: NA SAS No.: NA SDG No.: LEJEUNE056

Matrix: (soil/water) SOIL Lab Sample ID: 0901201-25

Sample wt/vol: 3.4 (g/mL) G Lab File ID: 0120125A

Level: (low/med) LOW Date Sampled: 01/24/09 09:05

% Moisture: not dec. 22 Date Analyzed: 02/04/09 01:27

GC Column: RTX-VRX ID: 0.25 (mm) Dilution Factor: 1.0

Soil Extract Volume:_____(uL) Soil Aliquot Volume: _____(uL)

CONCENTRATION UNITS: (ug/L or ug/Kg) UG/KG

CAS NO.	COMPOUND	MDL	RL	CONC	Q
108-88-3	Toluene	1.6	19	2.3	J
120-82-1	1,2,4-Trichlorobenzene	0.34	19		U
71-55-6	1,1,1-Trichloroethane	1.7	19		U
79-00-5	1,1,2-Trichloroethane	0.66	19		U
79-01-6	Trichloroethene	1.6	19		U
76-13-1	Trichlorotrifluoroethane	1.0	19		U
75-69-4	Trichlorofluoromethane	1.8	19		U
75-01-4	Vinyl chloride	2.1	19		U
1330-20-7	Xylene(total)	1.3	19		U

MW
4/6/09

FORM 1
VOLATILE ORGANICS ANALYSIS DATA SHEET

CLIENT SAMPLE NO. 26

MR08-SS331-09A

Lab Name: EMPIRICAL LABS Contract: CH2MHILL

Lab Code: NA Case No.: NA SAS No.: NA SDG No.: LEJEUNE056

Matrix: (soil/water) SOIL Lab Sample ID: 0901201-26

Sample wt/vol: 5.3 (g/mL) G Lab File ID: 0120126A

Level: (low/med) LOW Date Sampled: 01/24/09 09:20

% Moisture: not dec. 13 Date Analyzed: 02/04/09 01:58

GC Column: RTX-VRX ID: 0.25 (mm) Dilution Factor: 1.0

Soil Extract Volume:_____(uL) Soil Aliquot Volume: _____(uL)

CONCENTRATION UNITS: (ug/L or ug/Kg) UG/KG

CAS NO.	COMPOUND	MDL	RL	CONC	Q
67-64-1	Acetone	2.2	11		U
71-43-2	Benzene	0.51	11	0.65	J
75-27-4	Bromodichloromethane	0.33	11		U
75-25-2	Bromoform	1.1	11		U
74-83-9	Bromomethane	0.79	11		U
78-93-3	2-Butanone	1.5	11		~~U~~ UJ CCH
75-15-0	Carbon disulfide	1.4	11	2.3	J
56-23-5	Carbon tetrachloride	0.96	11		U
108-90-7	Chlorobenzene	0.37	11		U
75-00-3	Chloroethane	1.2	11		U
67-66-3	Chloroform	0.60	11	0.62	J
74-87-3	Chloromethane	0.57	11		U
110-82-7	Cyclohexane	0.59	11		U
124-48-1	Dibromochloromethane	0.37	11		U
96-12-8	1,2-Dibromo-3-chloropropane	1.3	5.5		U
106-93-4	1,2-Dibromoethane	0.47	11		U
95-50-1	1,2-Dichlorobenzene	0.40	11		U
541-73-1	1,3-Dichlorobenzene	0.92	11		U
106-46-7	1,4-Dichlorobenzene	0.60	11		U
75-71-8	Dichlorodifluoromethane	1.2	11		~~U~~ UJ CCH
75-34-3	1,1-Dichloroethane	0.59	11		U
107-06-2	1,2-Dichloroethane	0.50	11		U
75-35-4	1,1-Dichloroethene	1.3	11		U
156-59-2	cis-1,2-Dichloroethene	1.3	11		U
156-60-5	trans-1,2-Dichloroethene	1.2	11		U
78-87-5	1,2-Dichloropropane	0.50	11		U
10061-01-5	cis-1,3-Dichloropropene	0.55	11		U
10061-02-6	trans-1,3-Dichloropropene	0.35	11		U
100-41-4	Ethylbenzene	0.82	11		U
591-78-6	2-Hexanone	2.5	11		U
98-82-8	Isopropylbenzene	0.96	11		U
79-20-9	Methyl acetate	1.7	11		U
75-09-2	Methylene chloride	0.68	11	114 1.5	~~JB~~ B
108-87-2	Methyl cyclohexane	0.33	11		U
1634-04-4	Methyl tert-butyl ether	0.35	11		U
108-10-1	4-Methyl-2-pentanone	0.63	11	1.0	J
100-42-5	Styrene	0.38	11		U
79-34-5	1,1,2,2-Tetrachloroethane	0.47	11		U
127-18-4	Tetrachloroethene	1.0	11		U

NW
4/6/09

26

FORM 1
VOLATILE ORGANICS ANALYSIS DATA SHEET

CLIENT SAMPLE NO.

MR08-SS331-09A

Lab Name: EMPIRICAL LABS Contract: CH2MHILL

Lab Code: NA Case No.: NA SAS No.: NA SDG No.: LEJEUNE056

Matrix: (soil/water) SOIL Lab Sample ID: 0901201-26

Sample wt/vol: 5.3 (g/mL) G Lab File ID: 0120126A

Level: (low/med) LOW Date Sampled: 01/24/09 09:20

% Moisture: not dec. 13 Date Analyzed: 02/04/09 01:58

GC Column: RTX-VRX ID: 0.25 (mm) Dilution Factor: 1.0

Soil Extract Volume:_____(uL) Soil Aliquot Volume: _____(uL)

CONCENTRATION UNITS: (ug/L or ug/Kg) UG/KG

CAS NO.	COMPOUND	MDL	RL	CONC	Q
108-88-3	Toluene	0.94	11		U
120-82-1	1,2,4-Trichlorobenzene	0.20	11		U
71-55-6	1,1,1-Trichloroethane	0.98	11		U
79-00-5	1,1,2-Trichloroethane	0.38	11		U
79-01-6	Trichloroethene	0.93	11		U
76-13-1	Trichlorotrifluoroethane	0.60	11		U
75-69-4	Trichlorofluoromethane	1.0	11		U
75-01-4	Vinyl chloride	1.2	11		U
1330-20-7	Xylene(total)	0.76	11		U

MW 416609

FORM 1
VOLATILE ORGANICS ANALYSIS DATA SHEET

CLIENT SAMPLE NO. 27

MR08-IS33
1-4-5-09A

Lab Name: EMPIRICAL LABS Contract: CH2MHILL

Lab Code: NA Case No.: NA SAS No.: NA SDG No.: LEJEUNE056

Matrix: (soil/water) SOIL Lab Sample ID: 0901201-27

Sample wt/vol: 5.5 (g/mL) G Lab File ID: 0120127A

Level: (low/med) LOW Date Sampled: 01/24/09 09:25

% Moisture: not dec. 11 Date Analyzed: 02/04/09 02:29

GC Column: RTX-VRX ID: 0.25 (mm) Dilution Factor: 1.0

Soil Extract Volume:_____(uL) Soil Aliquot Volume: _____(uL)

CONCENTRATION UNITS: (ug/L or ug/Kg) UG/KG

CAS NO.	COMPOUND	MDL	RL	CONC	Q
67-64-1	Acetone	2.0	10		U
71-43-2	Benzene	0.48	10		U
75-27-4	Bromodichloromethane	0.30	10		U
75-25-2	Bromoform	1.0	10		U
74-83-9	Bromomethane	0.73	10		U
78-93-3	2-Butanone	1.4	10		~~U~~ JUSCCH
75-15-0	Carbon disulfide	1.3	10		U
56-23-5	Carbon tetrachloride	0.89	10		U
108-90-7	Chlorobenzene	0.34	10		U
75-00-3	Chloroethane	1.1	10		U
67-66-3	Chloroform	0.56	10		U
74-87-3	Chloromethane	0.53	10		U
110-82-7	Cyclohexane	0.55	10		U
124-48-1	Dibromochloromethane	0.34	10		U
96-12-8	1,2-Dibromo-3-chloropropane	1.2	5.1		U
106-93-4	1,2-Dibromoethane	0.44	10		U
95-50-1	1,2-Dichlorobenzene	0.37	10		U
541-73-1	1,3-Dichlorobenzene	0.85	10		U
106-46-7	1,4-Dichlorobenzene	0.56	10		U
75-71-8	Dichlorodifluoromethane	1.1	10		~~U~~ JUSCCH
75-34-3	1,1-Dichloroethane	0.55	10		U
107-06-2	1,2-Dichloroethane	0.47	10		U
75-35-4	1,1-Dichloroethene	1.2	10		U
156-59-2	cis-1,2-Dichloroethene	1.2	10		U
156-60-5	trans-1,2-Dichloroethene	1.1	10		U
78-87-5	1,2-Dichloropropane	0.47	10		U
10061-01-5	cis-1,3-Dichloropropene	0.51	10		U
10061-02-6	trans-1,3-Dichloropropene	0.32	10		U
100-41-4	Ethylbenzene	0.76	10		U
591-78-6	2-Hexanone	2.3	10		U
98-82-8	Isopropylbenzene	0.89	10		U
79-20-9	Methyl acetate	1.6	10		U
75-09-2	Methylene chloride	0.63	10	10U	~~1.2 JB~~ B
108-87-2	Methyl cyclohexane	0.30	10		U
1634-04-4	Methyl tert-butyl ether	0.32	10		U
108-10-1	4-Methyl-2-pentanone	0.59	10		U
100-42-5	Styrene	0.35	10		U
79-34-5	1,1,2,2-Tetrachloroethane	0.44	10		U
127-18-4	Tetrachloroethene	0.98	10		U

4/6/09

FORM 1
VOLATILE ORGANICS ANALYSIS DATA SHEET

CLIENT SAMPLE NO. 27

MR08-IS33
1-4-5-09A

Lab Name: EMPIRICAL LABS Contract: CH2MHILL

Lab Code: NA Case No.: NA SAS No.: NA SDG No.: LEJEUNE056

Matrix: (soil/water) SOIL Lab Sample ID: 0901201-27

Sample wt/vol: 5.5 (g/mL) G Lab File ID: 0120127A

Level: (low/med) LOW Date Sampled: 01/24/09 09:25

% Moisture: not dec. 11 Date Analyzed: 02/04/09 02:29

GC Column: RTX-VRX ID: 0.25 (mm) Dilution Factor: 1.0

Soil Extract Volume:_____(uL) Soil Aliquot Volume: _____(uL)

CONCENTRATION UNITS: (ug/L or ug/Kg) UG/KG

CAS NO.	COMPOUND	MDL	RL	CONC	Q
108-88-3	Toluene	0.87	10		U
120-82-1	1,2,4-Trichlorobenzene	0.18	10		U
71-55-6	1,1,1-Trichloroethane	0.91	10		U
79-00-5	1,1,2-Trichloroethane	0.35	10		U
79-01-6	Trichloroethene	0.86	10		U
76-13-1	Trichlorotrifluoroethane	0.56	10		U
75-69-4	Trichlorofluoromethane	0.96	10		U
75-01-4	Vinyl chloride	1.1	10		U
1330-20-7	Xylene(total)	0.71	10		U

lew
4/6/09

FORM 1
VOLATILE ORGANICS ANALYSIS DATA SHEET

CLIENT SAMPLE NO. 28

MR08-SS330-09A

Lab Name: EMPIRICAL LABS Contract: CH2MHILL

Lab Code: NA Case No.: NA SAS No.: NA SDG No.: LEJEUNE056

Matrix: (soil/water) SOIL Lab Sample ID: 0901201-28

Sample wt/vol: 3.6 (g/mL) G Lab File ID: 0120128A

Level: (low/med) LOW Date Sampled: 01/24/09 09:40

% Moisture: not dec. 10 Date Analyzed: 02/04/09 03:00

GC Column: RTX-VRX ID: 0.25 (mm) Dilution Factor: 1.0

Soil Extract Volume:_____(uL) Soil Aliquot Volume: _____(uL)

CONCENTRATION UNITS: (ug/L or ug/Kg) UG/KG

CAS NO.	COMPOUND	MDL	RL	CONC	Q
67-64-1	Acetone	3.0	15		U
71-43-2	Benzene	0.72	15	2.2	J
75-27-4	Bromodichloromethane	0.46	15		U
75-25-2	Bromoform	1.5	15		U
74-83-9	Bromomethane	1.1	15		U
78-93-3	2-Butanone	2.1	15		~~U~~ UJ CC
75-15-0	Carbon disulfide	2.0	15	4.3	J
56-23-5	Carbon tetrachloride	1.3	15		U
108-90-7	Chlorobenzene	0.52	15		U
75-00-3	Chloroethane	1.7	15		U
67-66-3	Chloroform	0.84	15		U
74-87-3	Chloromethane	0.79	15		U
110-82-7	Cyclohexane	0.82	15		U
124-48-1	Dibromochloromethane	0.52	15		U
96-12-8	1,2-Dibromo-3-chloropropane	1.8	7.6		U
106-93-4	1,2-Dibromoethane	0.66	15		U
95-50-1	1,2-Dichlorobenzene	0.56	15		U
541-73-1	1,3-Dichlorobenzene	1.3	15		U
106-46-7	1,4-Dichlorobenzene	0.84	15		U
75-71-8	Dichlorodifluoromethane	1.7	15		~~U~~ UJ CC
75-34-3	1,1-Dichloroethane	0.82	15		U
107-06-2	1,2-Dichloroethane	0.70	15		U
75-35-4	1,1-Dichloroethene	1.8	15		U
156-59-2	cis-1,2-Dichloroethene	1.8	15		U
156-60-5	trans-1,2-Dichloroethene	1.7	15		U
78-87-5	1,2-Dichloropropane	0.70	15		U
10061-01-5	cis-1,3-Dichloropropene	0.76	15		U
10061-02-6	trans-1,3-Dichloropropene	0.49	15		U
100-41-4	Ethylbenzene	1.1	15		U
591-78-6	2-Hexanone	3.5	15		U
98-82-8	Isopropylbenzene	1.3	15		U
79-20-9	Methyl acetate	2.4	15		U
75-09-2	Methylene chloride	0.95	15	15u	~~1.9 JB~~ BU
108-87-2	Methyl cyclohexane	0.46	15		U
1634-04-4	Methyl tert-butyl ether	0.49	15		U
108-10-1	4-Methyl-2-pentanone	0.89	15	3.0	J
100-42-5	Styrene	0.53	15		U
79-34-5	1,1,2,2-Tetrachloroethane	0.66	15		U
127-18-4	Tetrachloroethene	1.5	15		U

FORM I VOA

NW 4/16/09

FORM 1
VOLATILE ORGANICS ANALYSIS DATA SHEET

CLIENT SAMPLE NO.

MR08-SS330-09A

28

Lab Name: EMPIRICAL LABS Contract: CH2MHILL

Lab Code: NA Case No.: NA SAS No.: NA SDG No.: LEJEUNE056

Matrix: (soil/water) SOIL Lab Sample ID: 0901201-28

Sample wt/vol: 3.6 (g/mL) G Lab File ID: 0120128A

Level: (low/med) LOW Date Sampled: 01/24/09 09:40

% Moisture: not dec. 10 Date Analyzed: 02/04/09 03:00

GC Column: RTX-VRX ID: 0.25 (mm) Dilution Factor: 1.0

Soil Extract Volume:_____(uL) Soil Aliquot Volume: _____(uL)

CONCENTRATION UNITS: (ug/L or ug/Kg) UG/KG

CAS NO.	COMPOUND	MDL	RL	CONC	Q
108-88-3	Toluene	1.3	15	2.5	J
120-82-1	1,2,4-Trichlorobenzene	0.28	15		U
71-55-6	1,1,1-Trichloroethane	1.4	15		U
79-00-5	1,1,2-Trichloroethane	0.53	15		U
79-01-6	Trichloroethene	1.3	15		U
76-13-1	Trichlorotrifluoroethane	0.84	15		U
75-69-4	Trichlorofluoromethane	1.4	15		U
75-01-4	Vinyl chloride	1.7	15		U
1330-20-7	Xylene(total)	1.1	15		U

QW
4/6/09

FORM 1
VOLATILE ORGANICS ANALYSIS DATA SHEET

CLIENT SAMPLE NO.

MR08-IS33
0-0-1-09A

29

Lab Name: EMPIRICAL LABS Contract: CH2MHILL

Lab Code: NA Case No.: NA SAS No.: NA SDG No.: LEJEUNE056

Matrix: (soil/water) SOIL Lab Sample ID: 0901201-29

Sample wt/vol: 5.1 (g/mL) G Lab File ID: 0120129A

Level: (low/med) LOW Date Sampled: 01/24/09 09:50

% Moisture: not dec. 11 Date Analyzed: 02/04/09 03:30

GC Column: RTX-VRX ID: 0.25 (mm) Dilution Factor: 1.0

Soil Extract Volume:_____(uL) Soil Aliquot Volume: _____(uL)

CONCENTRATION UNITS: (ug/L or ug/Kg) UG/KG

CAS NO.	COMPOUND	MDL	RL	CONC	Q
67-64-1	Acetone	2.2	11	45	~~B~~ J SSI
71-43-2	Benzene	0.52	11		U
75-27-4	Bromodichloromethane	0.33	11		U
75-25-2	Bromoform	1.1	11		U
74-83-9	Bromomethane	0.79	11		U
78-93-3	2-Butanone	1.5	11		~~U~~ UJ CCV
75-15-0	Carbon disulfide	1.4	11		U
56-23-5	Carbon tetrachloride	0.97	11		U
108-90-7	Chlorobenzene	0.37	11		U
75-00-3	Chloroethane	1.2	11		U
67-66-3	Chloroform	0.60	11		U
74-87-3	Chloromethane	0.57	11		U
110-82-7	Cyclohexane	0.59	11		U
124-48-1	Dibromochloromethane	0.37	11		U
96-12-8	1,2-Dibromo-3-chloropropane	1.3	5.5		U
106-93-4	1,2-Dibromoethane	0.47	11		U
95-50-1	1,2-Dichlorobenzene	0.41	11		U
541-73-1	1,3-Dichlorobenzene	0.92	11		U
106-46-7	1,4-Dichlorobenzene	0.60	11		U
75-71-8	Dichlorodifluoromethane	1.2	11		~~U~~ UJ CCV
75-34-3	1,1-Dichloroethane	0.59	11		U
107-06-2	1,2-Dichloroethane	0.50	11		U
75-35-4	1,1-Dichloroethene	1.3	11		U
156-59-2	cis-1,2-Dichloroethene	1.3	11		U
156-60-5	trans-1,2-Dichloroethene	1.2	11		U
78-87-5	1,2-Dichloropropane	0.50	11		U
10061-01-5	cis-1,3-Dichloropropene	0.55	11		U
10061-02-6	trans-1,3-Dichloropropene	0.35	11		U
100-41-4	Ethylbenzene	0.82	11		U
591-78-6	2-Hexanone	2.5	11		U
98-82-8	Isopropylbenzene	0.97	11		U
79-20-9	Methyl acetate	1.8	11		U
75-09-2	Methylene chloride	0.68	11	11u	~~1.5 JB~~ B
108-87-2	Methyl cyclohexane	0.33	11		U
1634-04-4	Methyl tert-butyl ether	0.35	11		U
108-10-1	4-Methyl-2-pentanone	0.64	11		U
100-42-5	Styrene	0.38	11		U
79-34-5	1,1,2,2-Tetrachloroethane	0.47	11		U
127-18-4	Tetrachloroethene	1.1	11		U

MW 02/12/09

FORM 1
VOLATILE ORGANICS ANALYSIS DATA SHEET

CLIENT SAMPLE NO. 29

MR08-IS33
0-0-1-09A

Lab Name: EMPIRICAL LABS Contract: CH2MHILL

Lab Code: NA Case No.: NA SAS No.: NA SDG No.: LEJEUNE056

Matrix: (soil/water) SOIL Lab Sample ID: 0901201-29

Sample wt/vol: 5.1 (g/mL) G Lab File ID: 0120129A

Level: (low/med) LOW Date Sampled: 01/24/09 09:50

% Moisture: not dec. 11 Date Analyzed: 02/04/09 03:30

GC Column: RTX-VRX ID: 0.25 (mm) Dilution Factor: 1.0

Soil Extract Volume:_____(uL) Soil Aliquot Volume: _____(uL)

CONCENTRATION UNITS: (ug/L or ug/Kg) UG/KG

CAS NO.	COMPOUND	MDL	RL	CONC	Q
108-88-3	Toluene	0.94	11		U
120-82-1	1,2,4-Trichlorobenzene	0.20	11		U
71-55-6	1,1,1-Trichloroethane	0.99	11		U
79-00-5	1,1,2-Trichloroethane	0.38	11		U
79-01-6	Trichloroethene	0.93	11		U
76-13-1	Trichlorotrifluoroethane	0.60	11		U
75-69-4	Trichlorofluoromethane	1.0	11		U
75-01-4	Vinyl chloride	1.2	11		U
1330-20-7	Xylene(total)	0.77	11		U

MW
01/29/09

FORM 1
VOLATILE ORGANICS ANALYSIS DATA SHEET

CLIENT SAMPLE NO.

MR08-IS3
29-1-2-09A

30

Lab Name: EMPIRICAL LABS Contract: CH2MHILL

Lab Code: NA Case No.: NA SAS No.: NA SDG No.: LEJEUNE056

Matrix: (soil/water) SOIL Lab Sample ID: 0901201-30

Sample wt/vol: 5.1 (g/mL) G Lab File ID: 0120130A

Level: (low/med) LOW Date Sampled: 01/24/09 10:15

% Moisture: not dec. 7 Date Analyzed: 02/04/09 04:01

GC Column: RTX-VRX ID: 0.25 (mm) Dilution Factor: 1.0

Soil Extract Volume:_____(uL) Soil Aliquot Volume: _____(uL)

CONCENTRATION UNITS: (ug/L or ug/Kg) UG/KG

CAS NO.	COMPOUND	MDL	RL	CONC	Q	
67-64-1	Acetone	2.1	10	10U ~~5.4~~	~~JB~~	Bl
71-43-2	Benzene	0.50	10		~~U~~ UJ	MS
75-27-4	Bromodichloromethane	0.32	10		~~U~~	
75-25-2	Bromoform	1.0	10		~~U~~	
74-83-9	Bromomethane	0.76	10		U	
78-93-3	2-Butanone	1.5	10		~~U~~ UJ	CC
75-15-0	Carbon disulfide	1.4	10		U	
56-23-5	Carbon tetrachloride	0.93	10		~~U~~ UJ	MS
108-90-7	Chlorobenzene	0.36	10		~~U~~ UJ	MS
75-00-3	Chloroethane	1.2	10		U	
67-66-3	Chloroform	0.58	10		U	
74-87-3	Chloromethane	0.55	10		U	
110-82-7	Cyclohexane	0.57	10		U	
124-48-1	Dibromochloromethane	0.36	10		~~U~~ UJ	MS
96-12-8	1,2-Dibromo-3-chloropropane	1.3	5.3		U	
106-93-4	1,2-Dibromoethane	0.45	10		U	
95-50-1	1,2-Dichlorobenzene	0.39	10		U	
541-73-1	1,3-Dichlorobenzene	0.89	10		U	
106-46-7	1,4-Dichlorobenzene	0.58	10		U	
75-71-8	Dichlorodifluoromethane	1.2	10		~~U~~ UJ	CC
75-34-3	1,1-Dichloroethane	0.57	10		U	
107-06-2	1,2-Dichloroethane	0.48	10		U	
75-35-4	1,1-Dichloroethene	1.3	10		U	
156-59-2	cis-1,2-Dichloroethene	1.3	10		U	
156-60-5	trans-1,2-Dichloroethene	1.2	10		U	
78-87-5	1,2-Dichloropropane	0.48	10		~~U~~ UJ	MS
10061-01-5	cis-1,3-Dichloropropene	0.53	10		~~U~~ UJ	MS
10061-02-6	trans-1,3-Dichloropropene	0.34	10		U	
100-41-4	Ethylbenzene	0.79	10		~~U~~ UJ	M
591-78-6	2-Hexanone	2.4	10		U	
98-82-8	Isopropylbenzene	0.93	10		~~U~~ UJ	MS
79-20-9	Methyl acetate	1.7	10		~~U~~ UJ	M
75-09-2	Methylene chloride	0.66	10	10U ~~1.1~~	~~JB~~	Bl
108-87-2	Methyl cyclohexane	0.32	10		~~U~~ UJ	MS
1634-04-4	Methyl tert-butyl ether	0.34	10		U	
108-10-1	4-Methyl-2-pentanone	0.61	10		U	
100-42-5	Styrene	0.37	10		~~U~~ UJ	MS
79-34-5	1,1,2,2-Tetrachloroethane	0.45	10		~~U~~	
127-18-4	Tetrachloroethene	1.0	10		~~U~~	

LW
4/16/09

FORM 1
VOLATILE ORGANICS ANALYSIS DATA SHEET

CLIENT SAMPLE NO. 30

MR08-IS3
29-1-2-09A

Lab Name: EMPIRICAL LABS Contract: CH2MHILL

Lab Code: NA Case No.: NA SAS No.: NA SDG No.: LEJEUNE056

Matrix: (soil/water) SOIL Lab Sample ID: 0901201-30

Sample wt/vol: 5.1 (g/mL) G Lab File ID: 0120130A

Level: (low/med) LOW Date Sampled: 01/24/09 10:15

% Moisture: not dec. 7 Date Analyzed: 02/04/09 04:01

GC Column: RTX-VRX ID: 0.25 (mm) Dilution Factor: 1.0

Soil Extract Volume:_____(uL) Soil Aliquot Volume: _____(uL)

CONCENTRATION UNITS: (ug/L or ug/Kg) UG/KG

CAS NO.	COMPOUND	MDL	RL	CONC	Q	
108-88-3------	Toluene	0.91	10		~~U~~ UJ	MS
120-82-1------	1,2,4-Trichlorobenzene	0.19	10		~~U~~ R	
71-55-6-------	1,1,1-Trichloroethane	0.95	10		~~U~~ UJ	↓
79-00-5-------	1,1,2-Trichloroethane	0.37	10		U	
79-01-6-------	Trichloroethene	0.90	10		~~U~~ UJ	MS
76-13-1-------	Trichlorotrifluoroethane	0.58	10		U	
75-69-4-------	Trichlorofluoromethane	1.0	10		U	
75-01-4-------	Vinyl chloride	1.2	10		U	
1330-20-7-----	Xylene(total)	0.74	10		~~U~~ UJ	M

4/6/09

FORM 1
VOLATILE ORGANICS ANALYSIS DATA SHEET

CLIENT SAMPLE NO. 31

MR08-SS329-09A

Lab Name: EMPIRICAL LABS Contract: CH2MHILL

Lab Code: NA Case No.: NA SAS No.: NA SDG No.: LEJEUNE056

Matrix: (soil/water) SOIL Lab Sample ID: 0901201-31

Sample wt/vol: 5.0 (g/mL) G Lab File ID: 0120131A

Level: (low/med) LOW Date Sampled: 01/24/09 10:10

% Moisture: not dec. 11 Date Analyzed: 02/04/09 04:32

GC Column: RTX-VRX ID: 0.25 (mm) Dilution Factor: 1.0

Soil Extract Volume:_____(uL) Soil Aliquot Volume: _____(uL)

CONCENTRATION UNITS: (ug/L or ug/Kg) UG/KG

CAS NO.	COMPOUND	MDL	RL	CONC	Q	
67-64-1	Acetone	2.2	11		U	
71-43-2	Benzene	0.53	11		U UJ	MS1
75-27-4	Bromodichloromethane	0.34	11		U	
75-25-2	Bromoform	1.1	11		U	
74-83-9	Bromomethane	0.81	11		U	
78-93-3	2-Butanone	1.6	11		U UJ	CC
75-15-0	Carbon disulfide	1.4	11		U	
56-23-5	Carbon tetrachloride	0.99	11		U UJ	MS
108-90-7	Chlorobenzene	0.38	11		U UJ	MS
75-00-3	Chloroethane	1.2	11		U	
67-66-3	Chloroform	0.62	11		U	
74-87-3	Chloromethane	0.58	11		U	
110-82-7	Cyclohexane	0.61	11		U UJ	MS
124-48-1	Dibromochloromethane	0.38	11		U UJ	MS
96-12-8	1,2-Dibromo-3-chloropropane	1.3	5.6		U	
106-93-4	1,2-Dibromoethane	0.48	11		U UJ	MS
95-50-1	1,2-Dichlorobenzene	0.42	11		U	
541-73-1	1,3-Dichlorobenzene	0.94	11		U	
106-46-7	1,4-Dichlorobenzene	0.62	11		U	
75-71-8	Dichlorodifluoromethane	1.2	11		U UJ	CC
75-34-3	1,1-Dichloroethane	0.61	11		U	
107-06-2	1,2-Dichloroethane	0.52	11		U	
75-35-4	1,1-Dichloroethene	1.3	11		U	
156-59-2	cis-1,2-Dichloroethene	1.3	11		U	
156-60-5	trans-1,2-Dichloroethene	1.2	11		U	
78-87-5	1,2-Dichloropropane	0.52	11		U UJ	M
10061-01-5	cis-1,3-Dichloropropene	0.56	11		U	
10061-02-6	trans-1,3-Dichloropropene	0.36	11		U	
100-41-4	Ethylbenzene	0.84	11		U UJ	M
591-78-6	2-Hexanone	2.6	11		U	
98-82-8	Isopropylbenzene	0.99	11		U UJ	M
79-20-9	Methyl acetate	1.8	11		U	
75-09-2	Methylene chloride	0.70	11	11u 1.2	JB	B
108-87-2	Methyl cyclohexane	0.34	11		U UJ	M
1634-04-4	Methyl tert-butyl ether	0.36	11		U	
108-10-1	4-Methyl-2-pentanone	0.65	11	0.77	J	
100-42-5	Styrene	0.39	11		U UJ	M
79-34-5	1,1,2,2-Tetrachloroethane	0.48	11		U	
127-18-4	Tetrachloroethene	1.1	11		U	

FORM I VOA

[illegible] 2/11/09

FORM 1
VOLATILE ORGANICS ANALYSIS DATA SHEET

CLIENT SAMPLE NO.

31

MR08-SS329-09A

Lab Name: EMPIRICAL LABS Contract: CH2MHILL

Lab Code: NA Case No.: NA SAS No.: NA SDG No.: LEJEUNE056

Matrix: (soil/water) SOIL Lab Sample ID: 0901201-31

Sample wt/vol: 5.0 (g/mL) G Lab File ID: 0120131A

Level: (low/med) LOW Date Sampled: 01/24/09 10:10

% Moisture: not dec. 11 Date Analyzed: 02/04/09 04:32

GC Column: RTX-VRX ID: 0.25 (mm) Dilution Factor: 1.0

Soil Extract Volume:_____(uL) Soil Aliquot Volume: _____(uL)

CONCENTRATION UNITS: (ug/L or ug/Kg) UG/KG

CAS NO.	COMPOUND	MDL	RL	CONC	Q	
108-88-3	Toluene	0.96	11		~~U~~ UJ	MS
120-82-1	1,2,4-Trichlorobenzene	0.20	11		~~U~~	
71-55-6	1,1,1-Trichloroethane	1.0	11		~~U~~	
79-00-5	1,1,2-Trichloroethane	0.39	11		U	
79-01-6	Trichloroethene	0.95	11		~~U~~ UJ	M
76-13-1	Trichlorotrifluoroethane	0.62	11		U	
75-69-4	Trichlorofluoromethane	1.1	11		U	
75-01-4	Vinyl chloride	1.2	11		U	
1330-20-7	Xylene(total)	0.78	11		~~U~~ UJ	M

FORM I VOA

KLW
4/6/09

FORM 1
VOLATILE ORGANICS ANALYSIS DATA SHEET

CLIENT SAMPLE NO. 32

MR08-SS345-09A

Lab Name: EMPIRICAL LABS Contract: CH2MHILL

Lab Code: NA Case No.: NA SAS No.: NA SDG No.: LEJEUNE056

Matrix: (soil/water) SOIL Lab Sample ID: 0901201-32

Sample wt/vol: 5.0 (g/mL) G Lab File ID: 0120132A

Level: (low/med) LOW Date Sampled: 01/24/09 11:00

% Moisture: not dec. 8 Date Analyzed: 02/04/09 05:03

GC Column: RTX-VRX ID: 0.25 (mm) Dilution Factor: 1.0

Soil Extract Volume:_____(uL) Soil Aliquot Volume: _____(uL)

CONCENTRATION UNITS: (ug/L or ug/Kg) UG/KG

CAS NO.	COMPOUND	MDL	RL	CONC	Q
67-64-1	Acetone	2.2	11		U
71-43-2	Benzene	0.51	11		U
75-27-4	Bromodichloromethane	0.32	11		U
75-25-2	Bromoform	1.1	11		U
74-83-9	Bromomethane	0.78	11		U
78-93-3	2-Butanone	1.5	11		~~U~~ UJ CCV
75-15-0	Carbon disulfide	1.4	11		U
56-23-5	Carbon tetrachloride	0.95	11		U
108-90-7	Chlorobenzene	0.37	11		U
75-00-3	Chloroethane	1.2	11		U
67-66-3	Chloroform	0.59	11	0.61	~~J~~ J SSC
74-87-3	Chloromethane	0.56	11		U
110-82-7	Cyclohexane	0.58	11		U
124-48-1	Dibromochloromethane	0.37	11		U
96-12-8	1,2-Dibromo-3-chloropropane	1.3	5.4		U
106-93-4	1,2-Dibromoethane	0.46	11		U
95-50-1	1,2-Dichlorobenzene	0.40	11		U
541-73-1	1,3-Dichlorobenzene	0.91	11		U
106-46-7	1,4-Dichlorobenzene	0.59	11		U
75-71-8	Dichlorodifluoromethane	1.2	11		~~U~~ UJ CCV
75-34-3	1,1-Dichloroethane	0.58	11		U
107-06-2	1,2-Dichloroethane	0.50	11		U
75-35-4	1,1-Dichloroethene	1.3	11		U
156-59-2	cis-1,2-Dichloroethene	1.3	11		U
156-60-5	trans-1,2-Dichloroethene	1.2	11		U
78-87-5	1,2-Dichloropropane	0.50	11		U
10061-01-5	cis-1,3-Dichloropropene	0.54	11		U
10061-02-6	trans-1,3-Dichloropropene	0.34	11		U
100-41-4	Ethylbenzene	0.81	11		U
591-78-6	2-Hexanone	2.5	11		U
98-82-8	Isopropylbenzene	0.95	11		U
79-20-9	Methyl acetate	1.7	11		U
75-09-2	Methylene chloride	0.67	11	11u	~~1.4 JB~~ B
108-87-2	Methyl cyclohexane	0.32	11		U
1634-04-4	Methyl tert-butyl ether	0.34	11		U
108-10-1	4-Methyl-2-pentanone	0.62	11		U
100-42-5	Styrene	0.38	11		U
79-34-5	1,1,2,2-Tetrachloroethane	0.46	11		U
127-18-4	Tetrachloroethene	1.0	11		U

FORM I VOA

RW 4/6/09

FORM 1
VOLATILE ORGANICS ANALYSIS DATA SHEET

CLIENT SAMPLE NO. 32

MR08-SS345-09A

Lab Name: EMPIRICAL LABS Contract: CH2MHILL

Lab Code: NA Case No.: NA SAS No.: NA SDG No.: LEJEUNE056

Matrix: (soil/water) SOIL Lab Sample ID: 0901201-32

Sample wt/vol: 5.0 (g/mL) G Lab File ID: 0120132A

Level: (low/med) LOW Date Sampled: 01/24/09 11:00

% Moisture: not dec. 8 Date Analyzed: 02/04/09 05:03

GC Column: RTX-VRX ID: 0.25 (mm) Dilution Factor: 1.0

Soil Extract Volume:_____(uL) Soil Aliquot Volume: _____(uL)

CONCENTRATION UNITS: (ug/L or ug/Kg) UG/KG

CAS NO.	COMPOUND	MDL	RL	CONC	Q
108-88-3	Toluene	0.93	11		U
120-82-1	1,2,4-Trichlorobenzene	0.19	11		U
71-55-6	1,1,1-Trichloroethane	0.97	11		U
79-00-5	1,1,2-Trichloroethane	0.38	11		U
79-01-6	Trichloroethene	0.92	11		U
76-13-1	Trichlorotrifluoroethane	0.59	11		U
75-69-4	Trichlorofluoromethane	1.0	11		U
75-01-4	Vinyl chloride	1.2	11		U
1330-20-7	Xylene(total)	0.76	11		U

fw 4/6/09

FORM 1
VOLATILE ORGANICS ANALYSIS DATA SHEET

CLIENT SAMPLE NO. 33

MR08-SS345D-09A

Lab Name: EMPIRICAL LABS Contract: CH2MHILL

Lab Code: NA Case No.: NA SAS No.: NA SDG No.: LEJEUNE056

Matrix: (soil/water) SOIL Lab Sample ID: 0901201-33

Sample wt/vol: 5.4 (g/mL) G Lab File ID: 0120133B

Level: (low/med) LOW Date Sampled: 01/24/09 11:00

% Moisture: not dec. 12 Date Analyzed: 02/04/09 16:35

GC Column: RTX-VRX ID: 0.25 (mm) Dilution Factor: 1.0

Soil Extract Volume:_____(uL) Soil Aliquot Volume: _____(uL)

CONCENTRATION UNITS: (ug/L or ug/Kg) UG/KG

CAS NO.	COMPOUND	MDL	RL	CONC	Q	
67-64-1	Acetone	2.1	10	10U ~~7.8~~	~~J~~	B
71-43-2	Benzene	0.49	10	0.63	J	
75-27-4	Bromodichloromethane	0.31	10		U	
75-25-2	Bromoform	1.0	10		U	
74-83-9	Bromomethane	0.76	10		U	
78-93-3	2-Butanone	1.5	10		~~U~~ UJ	CU
75-15-0	Carbon disulfide	1.4	10		U	
56-23-5	Carbon tetrachloride	0.92	10		U	
108-90-7	Chlorobenzene	0.36	10		U	
75-00-3	Chloroethane	1.2	10		U	
67-66-3	Chloroform	0.58	10		U	
74-87-3	Chloromethane	0.54	10		U	
110-82-7	Cyclohexane	0.57	10		U	
124-48-1	Dibromochloromethane	0.36	10		U	
96-12-8	1,2-Dibromo-3-chloropropane	1.2	5.2		U	
106-93-4	1,2-Dibromoethane	0.45	10		U	
95-50-1	1,2-Dichlorobenzene	0.39	10		U	
541-73-1	1,3-Dichlorobenzene	0.88	10		U	
106-46-7	1,4-Dichlorobenzene	0.58	10		U	
75-71-8	Dichlorodifluoromethane	1.2	10		U	
75-34-3	1,1-Dichloroethane	0.57	10		U	
107-06-2	1,2-Dichloroethane	0.48	10		U	
75-35-4	1,1-Dichloroethene	1.2	10		U	
156-59-2	cis-1,2-Dichloroethene	1.2	10		U	
156-60-5	trans-1,2-Dichloroethene	1.2	10		U	
78-87-5	1,2-Dichloropropane	0.48	10		U	
10061-01-5	cis-1,3-Dichloropropene	0.52	10		U	
10061-02-6	trans-1,3-Dichloropropene	0.34	10		U	
100-41-4	Ethylbenzene	0.79	10	2.1	J	
591-78-6	2-Hexanone	2.4	10		U	
98-82-8	Isopropylbenzene	0.92	10		U	
79-20-9	Methyl acetate	1.7	10		U	
75-09-2	Methylene chloride	0.65	10	10U ~~1.4~~	~~JB~~	BL
108-87-2	Methyl cyclohexane	0.31	10	0.40	J	
1634-04-4	Methyl tert-butyl ether	0.34	10		U	
108-10-1	4-Methyl-2-pentanone	0.61	10		U	
100-42-5	Styrene	0.37	10		U	
79-34-5	1,1,2,2-Tetrachloroethane	0.45	10		U	
127-18-4	Tetrachloroethene	1.0	10		U	

FORM I VOA

MW 4/1/09

FORM 1
VOLATILE ORGANICS ANALYSIS DATA SHEET

CLIENT SAMPLE NO.

33

MR08-SS345D-09A

Lab Name: EMPIRICAL LABS Contract: CH2MHILL

Lab Code: NA Case No.: NA SAS No.: NA SDG No.: LEJEUNE056

Matrix: (soil/water) SOIL Lab Sample ID: 0901201-33

Sample wt/vol: 5.4 (g/mL) G Lab File ID: 0120133B

Level: (low/med) LOW Date Sampled: 01/24/09 11:00

% Moisture: not dec. 12 Date Analyzed: 02/04/09 16:35

GC Column: RTX-VRX ID: 0.25 (mm) Dilution Factor: 1.0

Soil Extract Volume:_____(uL) Soil Aliquot Volume: _____(uL)

CONCENTRATION UNITS: (ug/L or ug/Kg) UG/KG

CAS NO.	COMPOUND	MDL	RL	CONC	Q
108-88-3	Toluene	0.90	10	1.1	J
120-82-1	1,2,4-Trichlorobenzene	0.19	10		U
71-55-6	1,1,1-Trichloroethane	0.94	10		U
79-00-5	1,1,2-Trichloroethane	0.37	10		U
79-01-6	Trichloroethene	0.89	10		U
76-13-1	Trichlorotrifluoroethane	0.58	10		U
75-69-4	Trichlorofluoromethane	1.00	10		U
75-01-4	Vinyl chloride	1.2	10		U
1330-20-7	Xylene(total)	0.73	10		U

MLJ
4/6/09

FORM 1
VOLATILE ORGANICS ANALYSIS DATA SHEET

CLIENT SAMPLE NO.

MR08-IS34
5-1-2-09A

34

Lab Name: EMPIRICAL LABS Contract: CH2MHILL

Lab Code: NA Case No.: NA SAS No.: NA SDG No.: LEJEUNE056

Matrix: (soil/water) SOIL Lab Sample ID: 0901201-34

Sample wt/vol: 5.7 (g/mL) G Lab File ID: 0120134A

Level: (low/med) LOW Date Sampled: 01/24/09 11:05

% Moisture: not dec. 11 Date Analyzed: 02/03/09 12:26

GC Column: RTX-VRX ID: 0.25 (mm) Dilution Factor: 1.0

Soil Extract Volume:_____(uL) Soil Aliquot Volume: _____(uL)

CONCENTRATION UNITS: (ug/L or ug/Kg) UG/KG

CAS NO.	COMPOUND	MDL	RL	CONC	Q
67-64-1	Acetone	2.0	49	22	J
71-43-2	Benzene	0.46	4.9		U
75-27-4	Bromodichloromethane	0.30	4.9		U
75-25-2	Bromoform	0.98	4.9		U
74-83-9	Bromomethane	0.71	9.8		U
78-93-3	2-Butanone	1.4	49		U
75-15-0	Carbon disulfide	1.3	4.9		U
56-23-5	Carbon tetrachloride	0.87	4.9		U
108-90-7	Chlorobenzene	0.34	4.9		U
75-00-3	Chloroethane	1.1	9.8		U
67-66-3	Chloroform	0.54	4.9		U
74-87-3	Chloromethane	0.51	9.8		U
110-82-7	Cyclohexane	0.53	9.8		U
124-48-1	Dibromochloromethane	0.34	4.9		U
96-12-8	1,2-Dibromo-3-chloropropane	1.2	9.8		U
106-93-4	1,2-Dibromoethane	0.42	4.9		U
95-50-1	1,2-Dichlorobenzene	0.36	4.9		U
541-73-1	1,3-Dichlorobenzene	0.83	4.9		U
106-46-7	1,4-Dichlorobenzene	0.54	4.9		U
75-71-8	Dichlorodifluoromethane	1.1	9.8		U
75-34-3	1,1-Dichloroethane	0.53	4.9		U
107-06-2	1,2-Dichloroethane	0.45	4.9		U
75-35-4	1,1-Dichloroethene	1.2	4.9		U
156-59-2	cis-1,2-Dichloroethene	1.2	4.9		U
156-60-5	trans-1,2-Dichloroethene	1.1	4.9		U
78-87-5	1,2-Dichloropropane	0.45	4.9		U
10061-01-5	cis-1,3-Dichloropropene	0.49	4.9		U
10061-02-6	trans-1,3-Dichloropropene	0.32	4.9		U
100-41-4	Ethylbenzene	0.74	4.9		U
591-78-6	2-Hexanone	2.3	25		U
98-82-8	Isopropylbenzene	0.87	4.9		U
79-20-9	Methyl acetate	1.6	4.9		U
75-09-2	Methylene chloride	0.61	9.8	9.8U ~~1.2 JB~~	B
108-87-2	Methyl cyclohexane	0.30	4.9		U
1634-04-4	Methyl tert-butyl ether	0.32	4.9		U
108-10-1	4-Methyl-2-pentanone	0.57	25		U
100-42-5	Styrene	0.34	4.9		U
79-34-5	1,1,2,2-Tetrachloroethane	0.42	4.9		U
127-18-4	Tetrachloroethene	0.96	4.9		U

FORM I VOA

AW 11/1/09

FORM 1
VOLATILE ORGANICS ANALYSIS DATA SHEET

CLIENT SAMPLE NO. 34

MR08-IS34
5-1-2-09A

Lab Name: EMPIRICAL LABS Contract: CH2MHILL

Lab Code: NA Case No.: NA SAS No.: NA SDG No.: LEJEUNE056

Matrix: (soil/water) SOIL Lab Sample ID: 0901201-34

Sample wt/vol: 5.7 (g/mL) G Lab File ID: 0120134A

Level: (low/med) LOW Date Sampled: 01/24/09 11:05

% Moisture: not dec. 11 Date Analyzed: 02/03/09 12:26

GC Column: RTX-VRX ID: 0.25 (mm) Dilution Factor: 1.0

Soil Extract Volume:_____(uL) Soil Aliquot Volume: _____(uL)

CONCENTRATION UNITS: (ug/L or ug/Kg) UG/KG

CAS NO.	COMPOUND	MDL	RL	CONC	Q
108-88-3	Toluene	0.85	4.9		U
120-82-1	1,2,4-Trichlorobenzene	0.18	4.9		U
71-55-6	1,1,1-Trichloroethane	0.89	4.9		U
79-00-5	1,1,2-Trichloroethane	0.34	4.9		U
79-01-6	Trichloroethene	0.84	4.9		U
76-13-1	Trichlorotrifluoroethane	0.54	4.9		U
75-69-4	Trichlorofluoromethane	0.94	9.8		U
75-01-4	Vinyl chloride	1.1	9.8		U
1330-20-7	Xylene(total)	0.69	4.9		U

4/6/09

FORM 1
VOLATILE ORGANICS ANALYSIS DATA SHEET

CLIENT SAMPLE NO. 35

MR08-IS34
5D-1-2-09A

Lab Name: EMPIRICAL LABS Contract: CH2MHILL

Lab Code: NA Case No.: NA SAS No.: NA SDG No.: LEJEUNE056

Matrix: (soil/water) SOIL Lab Sample ID: 0901201-35

Sample wt/vol: 5.3 (g/mL) G Lab File ID: 0120135A

Level: (low/med) LOW Date Sampled: 01/24/09 11:05

% Moisture: not dec. 11 Date Analyzed: 02/03/09 13:05

GC Column: RTX-VRX ID: 0.25 (mm) Dilution Factor: 1.0

Soil Extract Volume:_____(uL) Soil Aliquot Volume: _____(uL)

CONCENTRATION UNITS: (ug/L or ug/Kg) UG/KG

CAS NO.	COMPOUND	MDL	RL	CONC	Q
67-64-1	Acetone	2.1	52	20	J
71-43-2	Benzene	0.49	5.2		U
75-27-4	Bromodichloromethane	0.32	5.2		U
75-25-2	Bromoform	1.0	5.2		U
74-83-9	Bromomethane	0.76	10		U
78-93-3	2-Butanone	1.5	52	3.5	J
75-15-0	Carbon disulfide	1.4	5.2		U
56-23-5	Carbon tetrachloride	0.92	5.2		U
108-90-7	Chlorobenzene	0.36	5.2		U
75-00-3	Chloroethane	1.2	10		U
67-66-3	Chloroform	0.58	5.2		U
74-87-3	Chloromethane	0.55	10		U
110-82-7	Cyclohexane	0.57	10		U
124-48-1	Dibromochloromethane	0.36	5.2		U
96-12-8	1,2-Dibromo-3-chloropropane	1.3	10		U
106-93-4	1,2-Dibromoethane	0.45	5.2		U
95-50-1	1,2-Dichlorobenzene	0.39	5.2		U
541-73-1	1,3-Dichlorobenzene	0.88	5.2		U
106-46-7	1,4-Dichlorobenzene	0.58	5.2		U
75-71-8	Dichlorodifluoromethane	1.2	10		U
75-34-3	1,1-Dichloroethane	0.57	5.2		U
107-06-2	1,2-Dichloroethane	0.48	5.2		U
75-35-4	1,1-Dichloroethene	1.3	5.2		U
156-59-2	cis-1,2-Dichloroethene	1.3	5.2		U
156-60-5	trans-1,2-Dichloroethene	1.2	5.2		U
78-87-5	1,2-Dichloropropane	0.48	5.2		U
10061-01-5	cis-1,3-Dichloropropene	0.52	5.2		U
10061-02-6	trans-1,3-Dichloropropene	0.34	5.2		U
100-41-4	Ethylbenzene	0.79	5.2		U
591-78-6	2-Hexanone	2.4	26		U
98-82-8	Isopropylbenzene	0.92	5.2		U
79-20-9	Methyl acetate	1.7	5.2		U
75-09-2	Methylene chloride	0.65	10	10U	~~5.0 JB~~ B
108-87-2	Methyl cyclohexane	0.32	5.2		U
1634-04-4	Methyl tert-butyl ether	0.34	5.2		U
108-10-1	4-Methyl-2-pentanone	0.61	26		U
100-42-5	Styrene	0.37	5.2		U
79-34-5	1,1,2,2-Tetrachloroethane	0.45	5.2		U
127-18-4	Tetrachloroethene	1.0	5.2		U

FORM 1
VOLATILE ORGANICS ANALYSIS DATA SHEET

CLIENT SAMPLE NO. 35

MR08-IS34
5D-1-2-09A

Lab Name: EMPIRICAL LABS Contract: CH2MHILL

Lab Code: NA Case No.: NA SAS No.: NA SDG No.: LEJEUNE056

Matrix: (soil/water) SOIL Lab Sample ID: 0901201-35

Sample wt/vol: 5.3 (g/mL) G Lab File ID: 0120135A

Level: (low/med) LOW Date Sampled: 01/24/09 11:05

% Moisture: not dec. 11 Date Analyzed: 02/03/09 13:05

GC Column: RTX-VRX ID: 0.25 (mm) Dilution Factor: 1.0

Soil Extract Volume:_____(uL) Soil Aliquot Volume: _____(uL)

CONCENTRATION UNITS: (ug/L or ug/Kg) UG/KG

CAS NO.	COMPOUND	MDL	RL	CONC	Q
108-88-3	Toluene	0.90	5.2		U
120-82-1	1,2,4-Trichlorobenzene	0.19	5.2		U
71-55-6	1,1,1-Trichloroethane	0.94	5.2		U
79-00-5	1,1,2-Trichloroethane	0.37	5.2		U
79-01-6	Trichloroethene	0.89	5.2		U
76-13-1	Trichlorotrifluoroethane	0.58	5.2		U
75-69-4	Trichlorofluoromethane	1.00	10		U
75-01-4	Vinyl chloride	1.2	10		U
1330-20-7	Xylene(total)	0.74	5.2		U

fuu
4/6/09

FORM 1
VOLATILE ORGANICS ANALYSIS DATA SHEET

CLIENT SAMPLE NO.

MR08-SS346-09A

36

Lab Name: EMPIRICAL LABS Contract: CH2MHILL

Lab Code: NA Case No.: NA SAS No.: NA SDG No.: LEJEUNE056

Matrix: (soil/water) SOIL Lab Sample ID: 0901201-36

Sample wt/vol: 5.3 (g/mL) G Lab File ID: 0120136A

Level: (low/med) LOW Date Sampled: 01/24/09 11:30

% Moisture: not dec. 6 Date Analyzed: 02/03/09 13:44

GC Column: RTX-VRX ID: 0.25 (mm) Dilution Factor: 1.0

Soil Extract Volume:_____(uL) Soil Aliquot Volume: _____(uL)

CONCENTRATION UNITS: (ug/L or ug/Kg) UG/KG

CAS NO.	COMPOUND	MDL	RL	CONC	Q	
67-64-1	Acetone	2.0	50	16	J J	SSI
71-43-2	Benzene	0.47	5.0	0.89	J J	
75-27-4	Bromodichloromethane	0.30	5.0		U UJ	
75-25-2	Bromoform	0.99	5.0		U	
74-83-9	Bromomethane	0.72	9.9		U	
78-93-3	2-Butanone	1.4	50	6.2	J J	
75-15-0	Carbon disulfide	1.3	5.0		U UJ	
56-23-5	Carbon tetrachloride	0.87	5.0		U	
108-90-7	Chlorobenzene	0.34	5.0		U	
75-00-3	Chloroethane	1.1	9.9		U	
67-66-3	Chloroform	0.55	5.0		U	
74-87-3	Chloromethane	0.52	9.9		U	
110-82-7	Cyclohexane	0.54	9.9		U	
124-48-1	Dibromochloromethane	0.34	5.0		U	
96-12-8	1,2-Dibromo-3-chloropropane	1.2	9.9		U UJ	ISI
106-93-4	1,2-Dibromoethane	0.43	5.0		U UJ	SSI
95-50-1	1,2-Dichlorobenzene	0.37	5.0		U UJ	ISI
541-73-1	1,3-Dichlorobenzene	0.83	5.0		U	
106-46-7	1,4-Dichlorobenzene	0.55	5.0		U	
75-71-8	Dichlorodifluoromethane	1.1	9.9		U	SS
75-34-3	1,1-Dichloroethane	0.54	5.0		U	
107-06-2	1,2-Dichloroethane	0.46	5.0		U	
75-35-4	1,1-Dichloroethene	1.2	5.0		U	
156-59-2	cis-1,2-Dichloroethene	1.2	5.0		U	
156-60-5	trans-1,2-Dichloroethene	1.1	5.0		U	
78-87-5	1,2-Dichloropropane	0.46	5.0		U	
10061-01-5	cis-1,3-Dichloropropene	0.50	5.0		U	
10061-02-6	trans-1,3-Dichloropropene	0.32	5.0		U	
100-41-4	Ethylbenzene	0.74	5.0	5.6	J	
591-78-6	2-Hexanone	2.3	25		U UJ	
98-82-8	Isopropylbenzene	0.87	5.0		U	
79-20-9	Methyl acetate	1.6	5.0		U	
75-09-2	Methylene chloride	0.62	9.9	9.9 ~~1.3~~	UJ ~~JB~~	SSL BI
108-87-2	Methyl cyclohexane	0.30	5.0	0.40	J J	SS
1634-04-4	Methyl tert-butyl ether	0.32	5.0		U UJ	
108-10-1	4-Methyl-2-pentanone	0.58	25		U	
100-42-5	Styrene	0.35	5.0		U	
79-34-5	1,1,2,2-Tetrachloroethane	0.43	5.0		U UJ	IS
127-18-4	Tetrachloroethene	0.96	5.0		U	SS

FORM I VOA

4/1/09

FORM 1
VOLATILE ORGANICS ANALYSIS DATA SHEET

CLIENT SAMPLE NO. 36

MR08-SS346-09A

Lab Name: EMPIRICAL LABS Contract: CH2MHILL

Lab Code: NA Case No.: NA SAS No.: NA SDG No.: LEJEUNE056

Matrix: (soil/water) SOIL Lab Sample ID: 0901201-36

Sample wt/vol: 5.3 (g/mL) G Lab File ID: 0120136A

Level: (low/med) LOW Date Sampled: 01/24/09 11:30

% Moisture: not dec. 6 Date Analyzed: 02/03/09 13:44

GC Column: RTX-VRX ID: 0.25 (mm) Dilution Factor: 1.0

Soil Extract Volume:_____(uL) Soil Aliquot Volume: _____(uL)

CONCENTRATION UNITS: (ug/L or ug/Kg) UG/KG

CAS NO.	COMPOUND	MDL	RL	CONC	Q	
108-88-3------	Toluene	0.85	5.0	2.7	~~U~~ J	SSI
120-82-1------	1,2,4-Trichlorobenzene	0.18	5.0		~~U~~ UJ	JS
71-55-6-------	1,1,1-Trichloroethane	0.89	5.0		U	SSI
79-00-5-------	1,1,2-Trichloroethane	0.35	5.0		U	
79-01-6-------	Trichloroethene	0.84	5.0		U	
76-13-1-------	Trichlorotrifluoroethane	0.55	5.0		U	
75-69-4-------	Trichlorofluoromethane	0.94	9.9		U	
75-01-4-------	Vinyl chloride	1.1	9.9		U	
1330-20-7-----	Xylene(total)	0.70	5.0		U	

FORM I VOA

MW 4/6/09

FORM 1
VOLATILE ORGANICS ANALYSIS DATA SHEET

CLIENT SAMPLE NO. 36RE

MR08-SS346-09AR~~E~~

Lab Name: EMPIRICAL LABS Contract: CH2MHILL

Lab Code: NA Case No.: NA SAS No.: NA SDG No.: LEJEUNE056

Matrix: (soil/water) SOIL Lab Sample ID: 0901201-36R~~E~~

Sample wt/vol: 5.1 (g/mL) G Lab File ID: 0120136B

Level: (low/med) LOW Date Sampled: 01/24/09 11:30 use orig NAK

% Moisture: not dec. 6 Date Analyzed: 02/04/09 17:14

GC Column: RTX-VRX ID: 0.25 (mm) Dilution Factor: 1.0

Soil Extract Volume:_____(uL) Soil Aliquot Volume: _____(uL)

CONCENTRATION UNITS: (ug/L or ug/Kg) UG/KG

CAS NO.	COMPOUND	MDL	RL	CONC	Q	
67-64-1	Acetone	2.1	10	10U ~~9.3~~	~~J~~	BC
71-43-2	Benzene	0.49	10		U	
75-27-4	Bromodichloromethane	0.31	10		U	
75-25-2	Bromoform	1.0	10		U	
74-83-9	Bromomethane	0.75	10		U	
78-93-3	2-Butanone	1.5	10		~~U~~ UJ	CH
75-15-0	Carbon disulfide	1.4	10		U	
56-23-5	Carbon tetrachloride	0.92	10		U	
108-90-7	Chlorobenzene	0.36	10		U	
75-00-3	Chloroethane	1.2	10		U	
67-66-3	Chloroform	0.58	10		U	
74-87-3	Chloromethane	0.54	10		U	
110-82-7	Cyclohexane	0.56	10		U	
124-48-1	Dibromochloromethane	0.36	10		U	
96-12-8	1,2-Dibromo-3-chloropropane	1.2	5.2		~~U~~ UJ	IS
106-93-4	1,2-Dibromoethane	0.45	10		U	
95-50-1	1,2-Dichlorobenzene	0.39	10		~~U~~ UJ	IS
541-73-1	1,3-Dichlorobenzene	0.88	10		U	
106-46-7	1,4-Dichlorobenzene	0.58	10		U	
75-71-8	Dichlorodifluoromethane	1.2	10		U	
75-34-3	1,1-Dichloroethane	0.56	10		U	
107-06-2	1,2-Dichloroethane	0.48	10		U	
75-35-4	1,1-Dichloroethene	1.2	10		U	
156-59-2	cis-1,2-Dichloroethene	1.2	10		U	
156-60-5	trans-1,2-Dichloroethene	1.2	10		U	
78-87-5	1,2-Dichloropropane	0.48	10		U	
10061-01-5	cis-1,3-Dichloropropene	0.52	10		U	
10061-02-6	trans-1,3-Dichloropropene	0.34	10		U	
100-41-4	Ethylbenzene	0.79	10	5.6	J	
591-78-6	2-Hexanone	2.4	10		U	
98-82-8	Isopropylbenzene	0.92	10		U	
79-20-9	Methyl acetate	1.7	10		U	
75-09-2	Methylene chloride	0.65	10	10U ~~1.6~~	~~JB~~	B
108-87-2	Methyl cyclohexane	0.31	10		U	
1634-04-4	Methyl tert-butyl ether	0.34	10		U	
108-10-1	4-Methyl-2-pentanone	0.61	10		U	
100-42-5	Styrene	0.37	10		U	
79-34-5	1,1,2,2-Tetrachloroethane	0.45	10		~~U~~ UJ	IS
127-18-4	Tetrachloroethene	1.0	10		U	

FORM 1
VOLATILE ORGANICS ANALYSIS DATA SHEET

CLIENT SAMPLE NO. 36RE

MR08-SS346-09ARE

Lab Name: EMPIRICAL LABS Contract: CH2MHILL

Lab Code: NA Case No.: NA SAS No.: NA SDG No.: LEJEUNE056

Matrix: (soil/water) SOIL Lab Sample ID: 0901201-36RE

Sample wt/vol: 5.1 (g/mL) G Lab File ID: 0120136B

Level: (low/med) LOW Date Sampled: 01/24/09 11:30

% Moisture: not dec. 6 Date Analyzed: 02/04/09 17:14

GC Column: RTX-VRX ID: 0.25 (mm) Dilution Factor: 1.0

Soil Extract Volume:_____(uL) Soil Aliquot Volume: _____(uL)

use original

CONCENTRATION UNITS: (ug/L or ug/Kg) UG/KG

CAS NO.	COMPOUND	MDL	RL	CONC	Q
108-88-3	Toluene	0.90	10	2.1	J
120-82-1	1,2,4-Trichlorobenzene	0.19	10		U UJ ISC
71-55-6	1,1,1-Trichloroethane	0.94	10		U
79-00-5	1,1,2-Trichloroethane	0.37	10		U
79-01-6	Trichloroethene	0.89	10		U
76-13-1	Trichlorotrifluoroethane	0.58	10		U
75-69-4	Trichlorofluoromethane	1.00	10		U
75-01-4	Vinyl chloride	1.2	10		U
1330-20-7	Xylene(total)	0.73	10		U

4/6/09

FORM 1
VOLATILE ORGANICS ANALYSIS DATA SHEET

CLIENT SAMPLE NO. 37

MR08-IS34
6-1-2-09A

Lab Name: EMPIRICAL LABS Contract: CH2MHILL

Lab Code: NA Case No.: NA SAS No.: NA SDG No.: LEJEUNE056

Matrix: (soil/water) SOIL Lab Sample ID: 0901201-37

Sample wt/vol: 6.0 (g/mL) G Lab File ID: 0120137A

Level: (low/med) LOW Date Sampled: 01/24/09 11:40

% Moisture: not dec. 14 Date Analyzed: 02/03/09 14:24

GC Column: RTX-VRX ID: 0.25 (mm) Dilution Factor: 1.0

Soil Extract Volume:_____(uL) Soil Aliquot Volume: _____(uL)

CONCENTRATION UNITS: (ug/L or ug/Kg) UG/KG

CAS NO.	COMPOUND	MDL	RL	CONC	Q
67-64-1	Acetone	1.9	48	16	J
71-43-2	Benzene	0.45	4.8		U
75-27-4	Bromodichloromethane	0.29	4.8		U
75-25-2	Bromoform	0.96	4.8		U
74-83-9	Bromomethane	0.69	9.6		U
78-93-3	2-Butanone	1.3	48		U
75-15-0	Carbon disulfide	1.2	4.8		U
56-23-5	Carbon tetrachloride	0.85	4.8		U
108-90-7	Chlorobenzene	0.33	4.8		U
75-00-3	Chloroethane	1.0	9.6		U
67-66-3	Chloroform	0.53	4.8		U
74-87-3	Chloromethane	0.50	9.6		U
110-82-7	Cyclohexane	0.52	9.6		U
124-48-1	Dibromochloromethane	0.33	4.8		U
96-12-8	1,2-Dibromo-3-chloropropane	1.2	9.6		U
106-93-4	1,2-Dibromoethane	0.41	4.8		U
95-50-1	1,2-Dichlorobenzene	0.36	4.8		U
541-73-1	1,3-Dichlorobenzene	0.81	4.8		U
106-46-7	1,4-Dichlorobenzene	0.53	4.8		U
75-71-8	Dichlorodifluoromethane	1.0	9.6		U
75-34-3	1,1-Dichloroethane	0.52	4.8		U
107-06-2	1,2-Dichloroethane	0.44	4.8		U
75-35-4	1,1-Dichloroethene	1.2	4.8		U
156-59-2	cis-1,2-Dichloroethene	1.2	4.8		U
156-60-5	trans-1,2-Dichloroethene	1.0	4.8		U
78-87-5	1,2-Dichloropropane	0.44	4.8		U
10061-01-5	cis-1,3-Dichloropropene	0.48	4.8		U
10061-02-6	trans-1,3-Dichloropropene	0.31	4.8		U
100-41-4	Ethylbenzene	0.72	4.8		U
591-78-6	2-Hexanone	2.2	24		U
98-82-8	Isopropylbenzene	0.85	4.8		U
79-20-9	Methyl acetate	1.5	4.8		U
75-09-2	Methylene chloride	0.60	9.6	9.6u ~~1.2~~	~~JB~~ B1
108-87-2	Methyl cyclohexane	0.29	4.8		U
1634-04-4	Methyl tert-butyl ether	0.31	4.8		U
108-10-1	4-Methyl-2-pentanone	0.56	24		U
100-42-5	Styrene	0.34	4.8		U
79-34-5	1,1,2,2-Tetrachloroethane	0.41	4.8		U
127-18-4	Tetrachloroethene	0.93	4.8	1.4	J

LW 2/1/09

FORM 1
VOLATILE ORGANICS ANALYSIS DATA SHEET

CLIENT SAMPLE NO.

MR08-IS34
6-1-2-09A

37

Lab Name: EMPIRICAL LABS Contract: CH2MHILL

Lab Code: NA Case No.: NA SAS No.: NA SDG No.: LEJEUNE056

Matrix: (soil/water) SOIL Lab Sample ID: 0901201-37

Sample wt/vol: 6.0 (g/mL) G Lab File ID: 0120137A

Level: (low/med) LOW Date Sampled: 01/24/09 11:40

% Moisture: not dec. 14 Date Analyzed: 02/03/09 14:24

GC Column: RTX-VRX ID: 0.25 (mm) Dilution Factor: 1.0

Soil Extract Volume:_____(uL) Soil Aliquot Volume: _____(uL)

CONCENTRATION UNITS: (ug/L or ug/Kg) UG/KG

CAS NO.	COMPOUND	MDL	RL	CONC	Q
108-88-3	Toluene	0.83	4.8		U
120-82-1	1,2,4-Trichlorobenzene	0.17	4.8		U
71-55-6	1,1,1-Trichloroethane	0.87	4.8		U
79-00-5	1,1,2-Trichloroethane	0.34	4.8		U
79-01-6	Trichloroethene	0.82	4.8		U
76-13-1	Trichlorotrifluoroethane	0.53	4.8		U
75-69-4	Trichlorofluoromethane	0.91	9.6		U
75-01-4	Vinyl chloride	1.0	9.6		U
1330-20-7	Xylene(total)	0.67	4.8		U

lw
4/6/09

FORM 1
VOLATILE ORGANICS ANALYSIS DATA SHEET

CLIENT SAMPLE NO.

38

MR08-SS354-09A

Lab Name: EMPIRICAL LABS Contract: CH2MHILL

Lab Code: NA Case No.: NA SAS No.: NA SDG No.: LEJEUNE056

Matrix: (soil/water) SOIL Lab Sample ID: 0901201-38

Sample wt/vol: 5.3 (g/mL) G Lab File ID: 0120138A

Level: (low/med) LOW Date Sampled: 01/24/09 13:10

% Moisture: not dec. 5 Date Analyzed: 02/03/09 15:03

GC Column: RTX-VRX ID: 0.25 (mm) Dilution Factor: 1.0

Soil Extract Volume:_____(uL) Soil Aliquot Volume: _____(uL)

CONCENTRATION UNITS: (ug/L or ug/Kg) UG/KG

CAS NO.	COMPOUND	MDL	RL	CONC	Q
67-64-1	Acetone	2.0	48	20	J
71-43-2	Benzene	0.47	4.8		U
75-27-4	Bromodichloromethane	0.30	4.8		U
75-25-2	Bromoform	1.0	4.8		U
74-83-9	Bromomethane	0.72	9.5		U
78-93-3	2-Butanone	1.4	48	4.8	J
75-15-0	Carbon disulfide	1.3	4.8		U
56-23-5	Carbon tetrachloride	0.88	4.8		U
108-90-7	Chlorobenzene	0.34	4.8		U
75-00-3	Chloroethane	1.1	9.5		U
67-66-3	Chloroform	0.55	4.8		U
74-87-3	Chloromethane	0.52	9.5		U
110-82-7	Cyclohexane	0.54	9.5		U
124-48-1	Dibromochloromethane	0.34	4.8		U
96-12-8	1,2-Dibromo-3-chloropropane	1.2	9.5		U
106-93-4	1,2-Dibromoethane	0.43	4.8		U
95-50-1	1,2-Dichlorobenzene	0.37	4.8		U
541-73-1	1,3-Dichlorobenzene	0.84	4.8		U
106-46-7	1,4-Dichlorobenzene	0.55	4.8		U
75-71-8	Dichlorodifluoromethane	1.1	9.5		U
75-34-3	1,1-Dichloroethane	0.54	4.8		U
107-06-2	1,2-Dichloroethane	0.46	4.8		U
75-35-4	1,1-Dichloroethene	1.2	4.8		U
156-59-2	cis-1,2-Dichloroethene	1.2	4.8		U
156-60-5	trans-1,2-Dichloroethene	1.1	4.8		U
78-87-5	1,2-Dichloropropane	0.46	4.8		U
10061-01-5	cis-1,3-Dichloropropene	0.50	4.8		U
10061-02-6	trans-1,3-Dichloropropene	0.32	4.8		U
100-41-4	Ethylbenzene	0.76	4.8	1.9	J
591-78-6	2-Hexanone	2.3	24		U
98-82-8	Isopropylbenzene	0.88	4.8		U
79-20-9	Methyl acetate	1.6	4.8		U
75-09-2	Methylene chloride	0.62	9.5	14	~~B~~U BL
108-87-2	Methyl cyclohexane	0.30	4.8		U
1634-04-4	Methyl tert-butyl ether	0.32	4.8		U
108-10-1	4-Methyl-2-pentanone	0.58	24		U
100-42-5	Styrene	0.35	4.8		U
79-34-5	1,1,2,2-Tetrachloroethane	0.43	4.8		U
127-18-4	Tetrachloroethene	0.98	4.8		U

FORM I VOA

lew 4/1/09

FORM 1
VOLATILE ORGANICS ANALYSIS DATA SHEET

CLIENT SAMPLE NO. 38

MR08-SS354-09A

Lab Name: EMPIRICAL LABS Contract: CH2MHILL

Lab Code: NA Case No.: NA SAS No.: NA SDG No.: LEJEUNE056

Matrix: (soil/water) SOIL Lab Sample ID: 0901201-38

Sample wt/vol: 5.3 (g/mL) G Lab File ID: 0120138A

Level: (low/med) LOW Date Sampled: 01/24/09 13:10

% Moisture: not dec. 5 Date Analyzed: 02/03/09 15:03

GC Column: RTX-VRX ID: 0.25 (mm) Dilution Factor: 1.0

Soil Extract Volume:_____(uL) Soil Aliquot Volume: _____(uL)

CONCENTRATION UNITS: (ug/L or ug/Kg) UG/KG

CAS NO.	COMPOUND	MDL	RL	CONC	Q
108-88-3	Toluene	0.86	4.8		U
120-82-1	1,2,4-Trichlorobenzene	0.18	4.8		U
71-55-6	1,1,1-Trichloroethane	0.91	4.8		U
79-00-5	1,1,2-Trichloroethane	0.35	4.8		U
79-01-6	Trichloroethene	0.86	4.8		U
76-13-1	Trichlorotrifluoroethane	0.55	4.8		U
75-69-4	Trichlorofluoromethane	0.96	9.5		U
75-01-4	Vinyl chloride	1.1	9.5		U
1330-20-7	Xylene(total)	0.70	4.8		U

lw
4/6/09

FORM 1
VOLATILE ORGANICS ANALYSIS DATA SHEET

CLIENT SAMPLE NO. 39

MR08-IS35
4-1-2-09A

Lab Name: EMPIRICAL LABS Contract: CH2MHILL

Lab Code: NA Case No.: NA SAS No.: NA SDG No.: LEJEUNE056

Matrix: (soil/water) SOIL Lab Sample ID: 0901201-39

Sample wt/vol: 6.2 (g/mL) G Lab File ID: 0120139A

Level: (low/med) LOW Date Sampled: 01/24/09 13:15

% Moisture: not dec. 16 Date Analyzed: 02/03/09 15:42

GC Column: RTX-VRX ID: 0.25 (mm) Dilution Factor: 1.0

Soil Extract Volume:_____(uL) Soil Aliquot Volume: _____(uL)

CONCENTRATION UNITS: (ug/L or ug/Kg) UG/KG

CAS NO.	COMPOUND	MDL	RL	CONC	Q
67-64-1	Acetone	1.9	48	20	J
71-43-2	Benzene	0.45	4.8		U
75-27-4	Bromodichloromethane	0.29	4.8		U
75-25-2	Bromoform	0.96	4.8		U
74-83-9	Bromomethane	0.69	9.6		U
78-93-3	2-Butanone	1.3	48		U
75-15-0	Carbon disulfide	1.2	4.8		U
56-23-5	Carbon tetrachloride	0.84	4.8		U
108-90-7	Chlorobenzene	0.33	4.8		U
75-00-3	Chloroethane	1.0	9.6		U
67-66-3	Chloroform	0.53	4.8		U
74-87-3	Chloromethane	0.50	9.6		U
110-82-7	Cyclohexane	0.52	9.6		U
124-48-1	Dibromochloromethane	0.33	4.8		U
96-12-8	1,2-Dibromo-3-chloropropane	1.2	9.6		U
106-93-4	1,2-Dibromoethane	0.41	4.8		U
95-50-1	1,2-Dichlorobenzene	0.36	4.8		U
541-73-1	1,3-Dichlorobenzene	0.81	4.8		U
106-46-7	1,4-Dichlorobenzene	0.53	4.8		U
75-71-8	Dichlorodifluoromethane	1.0	9.6		U
75-34-3	1,1-Dichloroethane	0.52	4.8		U
107-06-2	1,2-Dichloroethane	0.44	4.8		U
75-35-4	1,1-Dichloroethene	1.2	4.8		U
156-59-2	cis-1,2-Dichloroethene	1.2	4.8		U
156-60-5	trans-1,2-Dichloroethene	1.0	4.8		U
78-87-5	1,2-Dichloropropane	0.44	4.8		U
10061-01-5	cis-1,3-Dichloropropene	0.48	4.8		U
10061-02-6	trans-1,3-Dichloropropene	0.31	4.8		U
100-41-4	Ethylbenzene	0.72	4.8		U
591-78-6	2-Hexanone	2.2	24		U
98-82-8	Isopropylbenzene	0.84	4.8		U
79-20-9	Methyl acetate	1.5	4.8		U
75-09-2	Methylene chloride	0.60	9.6	9.64	~~1.4 JB~~ B
108-87-2	Methyl cyclohexane	0.29	4.8		U
1634-04-4	Methyl tert-butyl ether	0.31	4.8		U
108-10-1	4-Methyl-2-pentanone	0.56	24		U
100-42-5	Styrene	0.34	4.8		U
79-34-5	1,1,2,2-Tetrachloroethane	0.41	4.8		U
127-18-4	Tetrachloroethene	0.93	4.8		U

lw
02/4/09

FORM 1
VOLATILE ORGANICS ANALYSIS DATA SHEET

CLIENT SAMPLE NO.

MR08-IS35
4-1-2-09A

39

Lab Name: EMPIRICAL LABS Contract: CH2MHILL

Lab Code: NA Case No.: NA SAS No.: NA SDG No.: LEJEUNE056

Matrix: (soil/water) SOIL Lab Sample ID: 0901201-39

Sample wt/vol: 6.2 (g/mL) G Lab File ID: 0120139A

Level: (low/med) LOW Date Sampled: 01/24/09 13:15

% Moisture: not dec. 16 Date Analyzed: 02/03/09 15:42

GC Column: RTX-VRX ID: 0.25 (mm) Dilution Factor: 1.0

Soil Extract Volume:_____(uL) Soil Aliquot Volume: _____(uL)

CONCENTRATION UNITS: (ug/L or ug/Kg) UG/KG

CAS NO.	COMPOUND	MDL	RL	CONC	Q
108-88-3	Toluene	0.83	4.8		U
120-82-1	1,2,4-Trichlorobenzene	0.17	4.8		U
71-55-6	1,1,1-Trichloroethane	0.86	4.8		U
79-00-5	1,1,2-Trichloroethane	0.34	4.8		U
79-01-6	Trichloroethene	0.82	4.8		U
76-13-1	Trichlorotrifluoroethane	0.53	4.8		U
75-69-4	Trichlorofluoromethane	0.91	9.6		U
75-01-4	Vinyl chloride	1.0	9.6		U
1330-20-7	Xylene(total)	0.67	4.8		U

lw
4/6/09

FORM 1
VOLATILE ORGANICS ANALYSIS DATA SHEET

CLIENT SAMPLE NO.

40

MR08-SS369-09A

Lab Name: EMPIRICAL LABS Contract: CH2MHILL

Lab Code: NA Case No.: NA SAS No.: NA SDG No.: LEJEUNE056

Matrix: (soil/water) SOIL Lab Sample ID: 0901201-40

Sample wt/vol: 4.7 (g/mL) G Lab File ID: 0120140A

Level: (low/med) LOW Date Sampled: 01/24/09 13:30

% Moisture: not dec. 9 Date Analyzed: 02/03/09 16:21

GC Column: RTX-VRX ID: 0.25 (mm) Dilution Factor: 1.0

Soil Extract Volume:_____(uL) Soil Aliquot Volume: _____(uL)

CONCENTRATION UNITS: (ug/L or ug/Kg) UG/KG

CAS NO.	COMPOUND	MDL	RL	CONC	Q
67-64-1	Acetone	2.3	53	53U ~~9.9~~	~~J~~
71-43-2	Benzene	0.55	5.3	1.2	J
75-27-4	Bromodichloromethane	0.35	5.3		U
75-25-2	Bromoform	1.2	5.3		U
74-83-9	Bromomethane	0.84	11		U
78-93-3	2-Butanone	1.6	53		U
75-15-0	Carbon disulfide	1.5	5.3		U
56-23-5	Carbon tetrachloride	1.0	5.3		U
108-90-7	Chlorobenzene	0.40	5.3		U
75-00-3	Chloroethane	1.3	11		U
67-66-3	Chloroform	0.64	5.3		U
74-87-3	Chloromethane	0.61	11		U
110-82-7	Cyclohexane	0.63	11	0.89	J
124-48-1	Dibromochloromethane	0.40	5.3		U
96-12-8	1,2-Dibromo-3-chloropropane	1.4	11		U
106-93-4	1,2-Dibromoethane	0.50	5.3		U
95-50-1	1,2-Dichlorobenzene	0.43	5.3		U
541-73-1	1,3-Dichlorobenzene	0.98	5.3		U
106-46-7	1,4-Dichlorobenzene	0.64	5.3		U
75-71-8	Dichlorodifluoromethane	1.3	11		U
75-34-3	1,1-Dichloroethane	0.63	5.3		U
107-06-2	1,2-Dichloroethane	0.54	5.3		U
75-35-4	1,1-Dichloroethene	1.4	5.3		U
156-59-2	cis-1,2-Dichloroethene	1.4	5.3		U
156-60-5	trans-1,2-Dichloroethene	1.3	5.3		U
78-87-5	1,2-Dichloropropane	0.54	5.3		U
10061-01-5	cis-1,3-Dichloropropene	0.58	5.3		U
10061-02-6	trans-1,3-Dichloropropene	0.37	5.3		U
100-41-4	Ethylbenzene	0.87	5.3	9.3	
591-78-6	2-Hexanone	2.7	27		U
98-82-8	Isopropylbenzene	1.0	5.3		U
79-20-9	Methyl acetate	1.9	5.3		U
75-09-2	Methylene chloride	0.72	11	11U ~~1.2~~	~~JB~~ B
108-87-2	Methyl cyclohexane	0.35	5.3	0.95	J
1634-04-4	Methyl tert-butyl ether	0.37	5.3		U
108-10-1	4-Methyl-2-pentanone	0.68	27		U
100-42-5	Styrene	0.41	5.3		U
79-34-5	1,1,2,2-Tetrachloroethane	0.50	5.3		U
127-18-4	Tetrachloroethene	1.1	5.3		U

WJ 11/6/09

FORM 1
VOLATILE ORGANICS ANALYSIS DATA SHEET

CLIENT SAMPLE NO. 4D

MR08-SS369-09A

Lab Name: EMPIRICAL LABS Contract: CH2MHILL

Lab Code: NA Case No.: NA SAS No.: NA SDG No.: LEJEUNE056

Matrix: (soil/water) SOIL Lab Sample ID: 0901201-40

Sample wt/vol: 4.7 (g/mL) G Lab File ID: 0120140A

Level: (low/med) LOW Date Sampled: 01/24/09 13:30

% Moisture: not dec. 9 Date Analyzed: 02/03/09 16:21

GC Column: RTX-VRX ID: 0.25 (mm) Dilution Factor: 1.0

Soil Extract Volume:_____(uL) Soil Aliquot Volume: _____(uL)

CONCENTRATION UNITS: (ug/L or ug/Kg) UG/KG

CAS NO.	COMPOUND	MDL	RL	CONC	Q
108-88-3	Toluene	1.0	5.3	3.6	J
120-82-1	1,2,4-Trichlorobenzene	0.21	5.3		U
71-55-6	1,1,1-Trichloroethane	1.0	5.3		U
79-00-5	1,1,2-Trichloroethane	0.41	5.3		U
79-01-6	Trichloroethene	0.99	5.3		U
76-13-1	Trichlorotrifluoroethane	0.64	5.3		U
75-69-4	Trichlorofluoromethane	1.1	11		U
75-01-4	Vinyl chloride	1.3	11		U
1330-20-7	Xylene(total)	0.82	5.3		U

lus
4/6/09

FORM 1
VOLATILE ORGANICS ANALYSIS DATA SHEET

CLIENT SAMPLE NO. 41

MR08-SS369D-09A

Lab Name: EMPIRICAL LABS Contract: CH2MHILL

Lab Code: NA Case No.: NA SAS No.: NA SDG No.: LEJEUNE056

Matrix: (soil/water) SOIL Lab Sample ID: 0901201-41

Sample wt/vol: 5.7 (g/mL) G Lab File ID: 0120141A

Level: (low/med) LOW Date Sampled: 01/24/09 13:30

% Moisture: not dec. 7 Date Analyzed: 02/03/09 17:00

GC Column: RTX-VRX ID: 0.25 (mm) Dilution Factor: 1.0

Soil Extract Volume:_____(uL) Soil Aliquot Volume: _____(uL)

CONCENTRATION UNITS: (ug/L or ug/Kg) UG/KG

CAS NO.	COMPOUND	MDL	RL	CONC	Q
67-64-1	Acetone	1.9	47	47u ~~10~~ ~~J~~	B
71-43-2	Benzene	0.44	4.7	1.2	J
75-27-4	Bromodichloromethane	0.28	4.7		U
75-25-2	Bromoform	0.93	4.7		U
74-83-9	Bromomethane	0.67	9.3		U
78-93-3	2-Butanone	1.3	47		U
75-15-0	Carbon disulfide	1.2	4.7		U
56-23-5	Carbon tetrachloride	0.82	4.7		U
108-90-7	Chlorobenzene	0.32	4.7		U
75-00-3	Chloroethane	1.0	9.3		U
67-66-3	Chloroform	0.51	4.7		U
74-87-3	Chloromethane	0.48	9.3		U
110-82-7	Cyclohexane	0.50	9.3	0.73	J
124-48-1	Dibromochloromethane	0.32	4.7		U
96-12-8	1,2-Dibromo-3-chloropropane	1.1	9.3		U
106-93-4	1,2-Dibromoethane	0.40	4.7		U
95-50-1	1,2-Dichlorobenzene	0.34	4.7		U
541-73-1	1,3-Dichlorobenzene	0.78	4.7		U
106-46-7	1,4-Dichlorobenzene	0.51	4.7		U
75-71-8	Dichlorodifluoromethane	1.0	9.3		U
75-34-3	1,1-Dichloroethane	0.50	4.7		U
107-06-2	1,2-Dichloroethane	0.43	4.7		U
75-35-4	1,1-Dichloroethene	1.1	4.7		U
156-59-2	cis-1,2-Dichloroethene	1.1	4.7		U
156-60-5	trans-1,2-Dichloroethene	1.0	4.7		U
78-87-5	1,2-Dichloropropane	0.43	4.7		U
10061-01-5	cis-1,3-Dichloropropene	0.47	4.7		U
10061-02-6	trans-1,3-Dichloropropene	0.30	4.7		U
100-41-4	Ethylbenzene	0.70	4.7	7.3	
591-78-6	2-Hexanone	2.1	23		U
98-82-8	Isopropylbenzene	0.82	4.7		U
79-20-9	Methyl acetate	1.5	4.7		U
75-09-2	Methylene chloride	0.58	9.3	9.3u ~~1.2~~ ~~JB~~	B
108-87-2	Methyl cyclohexane	0.28	4.7	0.88	J
1634-04-4	Methyl tert-butyl ether	0.30	4.7		U
108-10-1	4-Methyl-2-pentanone	0.54	23		U
100-42-5	Styrene	0.33	4.7		U
79-34-5	1,1,2,2-Tetrachloroethane	0.40	4.7		U
127-18-4	Tetrachloroethene	0.90	4.7		U

lw 2/11/09

FORM 1
VOLATILE ORGANICS ANALYSIS DATA SHEET

CLIENT SAMPLE NO. 41

MR08-SS369D-09A

Lab Name: EMPIRICAL LABS Contract: CH2MHILL

Lab Code: NA Case No.: NA SAS No.: NA SDG No.: LEJEUNE056

Matrix: (soil/water) SOIL Lab Sample ID: 0901201-41

Sample wt/vol: 5.7 (g/mL) G Lab File ID: 0120141A

Level: (low/med) LOW Date Sampled: 01/24/09 13:30

% Moisture: not dec. 7 Date Analyzed: 02/03/09 17:00

GC Column: RTX-VRX ID: 0.25 (mm) Dilution Factor: 1.0

Soil Extract Volume:_____(uL) Soil Aliquot Volume: _____(uL)

CONCENTRATION UNITS: (ug/L or ug/Kg) UG/KG

CAS NO.	COMPOUND	MDL	RL	CONC	Q
108-88-3	Toluene	0.80	4.7	3.0	J
120-82-1	1,2,4-Trichlorobenzene	0.17	4.7		U
71-55-6	1,1,1-Trichloroethane	0.84	4.7		U
79-00-5	1,1,2-Trichloroethane	0.33	4.7		U
79-01-6	Trichloroethene	0.79	4.7		U
76-13-1	Trichlorotrifluoroethane	0.51	4.7		U
75-69-4	Trichlorofluoromethane	0.89	9.3		U
75-01-4	Vinyl chloride	1.0	9.3		U
1330-20-7	Xylene(total)	0.65	4.7		U

RW
4/6/09

FORM 1
VOLATILE ORGANICS ANALYSIS DATA SHEET

CLIENT SAMPLE NO. 42

MR08-IS36
9-1-2-09A

Lab Name: EMPIRICAL LABS Contract: CH2MHILL

Lab Code: NA Case No.: NA SAS No.: NA SDG No.: LEJEUNE056

Matrix: (soil/water) SOIL Lab Sample ID: 0901201-42

Sample wt/vol: 5.9 (g/mL) G Lab File ID: 0120142A

Level: (low/med) LOW Date Sampled: 01/24/09 13:45

% Moisture: not dec. 9 Date Analyzed: 02/03/09 17:40

GC Column: RTX-VRX ID: 0.25 (mm) Dilution Factor: 1.0

Soil Extract Volume:_____(uL) Soil Aliquot Volume: _____(uL)

CONCENTRATION UNITS: (ug/L or ug/Kg) UG/KG

CAS NO.	COMPOUND	MDL	RL	CONC	Q	
67-64-1	Acetone	1.8	46	46u ~~7.5~~	~~J~~	B
71-43-2	Benzene	0.43	4.6		U	
75-27-4	Bromodichloromethane	0.28	4.6		U	
75-25-2	Bromoform	0.92	4.6		U	
74-83-9	Bromomethane	0.66	9.2		U	
78-93-3	2-Butanone	1.3	46		U	
75-15-0	Carbon disulfide	1.2	4.6		U	
56-23-5	Carbon tetrachloride	0.81	4.6		U	
108-90-7	Chlorobenzene	0.31	4.6		U	
75-00-3	Chloroethane	1.0	9.2		U	
67-66-3	Chloroform	0.51	4.6		U	
74-87-3	Chloromethane	0.48	9.2		U	
110-82-7	Cyclohexane	0.50	9.2		U	
124-48-1	Dibromochloromethane	0.31	4.6		U	
96-12-8	1,2-Dibromo-3-chloropropane	1.1	9.2		U	
106-93-4	1,2-Dibromoethane	0.40	4.6		U	
95-50-1	1,2-Dichlorobenzene	0.34	4.6		U	
541-73-1	1,3-Dichlorobenzene	0.77	4.6		U	
106-46-7	1,4-Dichlorobenzene	0.51	4.6		U	
75-71-8	Dichlorodifluoromethane	1.0	9.2		U	
75-34-3	1,1-Dichloroethane	0.50	4.6		U	
107-06-2	1,2-Dichloroethane	0.42	4.6		U	
75-35-4	1,1-Dichloroethene	1.1	4.6		U	
156-59-2	cis-1,2-Dichloroethene	1.1	4.6		U	
156-60-5	trans-1,2-Dichloroethene	1.0	4.6		U	
78-87-5	1,2-Dichloropropane	0.42	4.6		U	
10061-01-5	cis-1,3-Dichloropropene	0.46	4.6		U	
10061-02-6	trans-1,3-Dichloropropene	0.29	4.6		U	
100-41-4	Ethylbenzene	0.69	4.6		U	
591-78-6	2-Hexanone	2.1	23		U	
98-82-8	Isopropylbenzene	0.81	4.6		U	
79-20-9	Methyl acetate	1.5	4.6		U	
75-09-2	Methylene chloride	0.57	9.2	9.2u ~~1.2~~	~~JB~~	B
108-87-2	Methyl cyclohexane	0.28	4.6		U	
1634-04-4	Methyl tert-butyl ether	0.29	4.6		U	
108-10-1	4-Methyl-2-pentanone	0.53	23		U	
100-42-5	Styrene	0.32	4.6		U	
79-34-5	1,1,2,2-Tetrachloroethane	0.40	4.6		U	
127-18-4	Tetrachloroethene	0.89	4.6		U	

LW 4/1/09

FORM 1
VOLATILE ORGANICS ANALYSIS DATA SHEET

CLIENT SAMPLE NO.

MR08-IS36
9-1-2-09A

42

Lab Name: EMPIRICAL LABS Contract: CH2MHILL

Lab Code: NA Case No.: NA SAS No.: NA SDG No.: LEJEUNE056

Matrix: (soil/water) SOIL Lab Sample ID: 0901201-42

Sample wt/vol: 5.9 (g/mL) G Lab File ID: 0120142A

Level: (low/med) LOW Date Sampled: 01/24/09 13:45

% Moisture: not dec. 9 Date Analyzed: 02/03/09 17:40

GC Column: RTX-VRX ID: 0.25 (mm) Dilution Factor: 1.0

Soil Extract Volume:_____(uL) Soil Aliquot Volume: _____(uL)

CONCENTRATION UNITS: (ug/L or ug/Kg) UG/KG

CAS NO.	COMPOUND	MDL	RL	CONC	Q
108-88-3	Toluene	0.79	4.6		U
120-82-1	1,2,4-Trichlorobenzene	0.16	4.6		U
71-55-6	1,1,1-Trichloroethane	0.83	4.6		U
79-00-5	1,1,2-Trichloroethane	0.32	4.6		U
79-01-6	Trichloroethene	0.78	4.6		U
76-13-1	Trichlorotrifluoroethane	0.51	4.6		U
75-69-4	Trichlorofluoromethane	0.87	9.2		U
75-01-4	Vinyl chloride	1.0	9.2		U
1330-20-7	Xylene(total)	0.64	4.6		U

FORM I VOA

Rev
4/6/09

FORM 1
VOLATILE ORGANICS ANALYSIS DATA SHEET

CLIENT SAMPLE NO.

MR08-IS36
9D-1-2-09A

43

Lab Name: EMPIRICAL LABS Contract: CH2MHILL

Lab Code: NA Case No.: NA SAS No.: NA SDG No.: LEJEUNE056

Matrix: (soil/water) SOIL Lab Sample ID: 0901201-43

Sample wt/vol: 5.7 (g/mL) G Lab File ID: 0120143A

Level: (low/med) LOW Date Sampled: 01/24/09 13:45

% Moisture: not dec. 11 Date Analyzed: 02/03/09 18:19

GC Column: RTX-VRX ID: 0.25 (mm) Dilution Factor: 1.0

Soil Extract Volume:_____(uL) Soil Aliquot Volume: _____(uL)

CONCENTRATION UNITS: (ug/L or ug/Kg) UG/KG

CAS NO.	COMPOUND	MDL	RL	CONC	Q	
67-64-1	Acetone	2.0	44	44u ~~5.6~~	~~J~~	BL
71-43-2	Benzene	0.46	4.4		U	
75-27-4	Bromodichloromethane	0.30	4.4		U	
75-25-2	Bromoform	0.99	4.4		U	
74-83-9	Bromomethane	0.71	8.8		U	
78-93-3	2-Butanone	1.4	44		U	
75-15-0	Carbon disulfide	1.3	4.4		U	
56-23-5	Carbon tetrachloride	0.87	4.4		U	
108-90-7	Chlorobenzene	0.34	4.4		U	
75-00-3	Chloroethane	1.1	8.8		U	
67-66-3	Chloroform	0.54	4.4		U	
74-87-3	Chloromethane	0.51	8.8		U	
110-82-7	Cyclohexane	0.53	8.8		U	
124-48-1	Dibromochloromethane	0.34	4.4		U	
96-12-8	1,2-Dibromo-3-chloropropane	1.2	8.8		U	
106-93-4	1,2-Dibromoethane	0.42	4.4		U	
95-50-1	1,2-Dichlorobenzene	0.37	4.4		U	
541-73-1	1,3-Dichlorobenzene	0.83	4.4		U	
106-46-7	1,4-Dichlorobenzene	0.54	4.4		U	
75-71-8	Dichlorodifluoromethane	1.1	8.8		U	
75-34-3	1,1-Dichloroethane	0.53	4.4		U	
107-06-2	1,2-Dichloroethane	0.46	4.4		U	
75-35-4	1,1-Dichloroethene	1.2	4.4		U	
156-59-2	cis-1,2-Dichloroethene	1.2	4.4		U	
156-60-5	trans-1,2-Dichloroethene	1.1	4.4		U	
78-87-5	1,2-Dichloropropane	0.46	4.4		U	
10061-01-5	cis-1,3-Dichloropropene	0.50	4.4		U	
10061-02-6	trans-1,3-Dichloropropene	0.32	4.4		U	
100-41-4	Ethylbenzene	0.74	4.4		U	
591-78-6	2-Hexanone	2.3	22		U	
98-82-8	Isopropylbenzene	0.87	4.4		U	
79-20-9	Methyl acetate	1.6	4.4		U	
75-09-2	Methylene chloride	0.61	8.8	8.8u ~~1.2~~	~~JB~~	BL
108-87-2	Methyl cyclohexane	0.30	4.4		U	
1634-04-4	Methyl tert-butyl ether	0.32	4.4		U	
108-10-1	4-Methyl-2-pentanone	0.57	22		U	
100-42-5	Styrene	0.35	4.4		U	
79-34-5	1,1,2,2-Tetrachloroethane	0.42	4.4		U	
127-18-4	Tetrachloroethene	0.96	4.4		U	

FORM 1
VOLATILE ORGANICS ANALYSIS DATA SHEET

CLIENT SAMPLE NO.

MR08-IS36
9D-1-2-09A

43

Lab Name: EMPIRICAL LABS Contract: CH2MHILL

Lab Code: NA Case No.: NA SAS No.: NA SDG No.: LEJEUNE056

Matrix: (soil/water) SOIL Lab Sample ID: 0901201-43

Sample wt/vol: 5.7 (g/mL) G Lab File ID: 0120143A

Level: (low/med) LOW Date Sampled: 01/24/09 13:45

% Moisture: not dec. 11 Date Analyzed: 02/03/09 18:19

GC Column: RTX-VRX ID: 0.25 (mm) Dilution Factor: 1.0

Soil Extract Volume:_____(uL) Soil Aliquot Volume: _____(uL)

CONCENTRATION UNITS: (ug/L or ug/Kg) UG/KG

CAS NO.	COMPOUND	MDL	RL	CONC	Q
108-88-3	Toluene	0.85	4.4		U
120-82-1	1,2,4-Trichlorobenzene	0.18	4.4		U
71-55-6	1,1,1-Trichloroethane	0.89	4.4		U
79-00-5	1,1,2-Trichloroethane	0.35	4.4		U
79-01-6	Trichloroethene	0.84	4.4		U
76-13-1	Trichlorotrifluoroethane	0.54	4.4		U
75-69-4	Trichlorofluoromethane	0.94	8.8		U
75-01-4	Vinyl chloride	1.1	8.8		U
1330-20-7	Xylene(total)	0.69	4.4		U

4/6/09

FORM 1
VOLATILE ORGANICS ANALYSIS DATA SHEET

CLIENT SAMPLE NO.

MR08-SS370-09A 44

Lab Name: EMPIRICAL LABS Contract: CH2MHILL

Lab Code: NA Case No.: NA SAS No.: NA SDG No.: LEJEUNE056

Matrix: (soil/water) SOIL Lab Sample ID: 0901201-44

Sample wt/vol: 4.6 (g/mL) G Lab File ID: 0120144A

Level: (low/med) LOW Date Sampled: 01/24/09 14:00

% Moisture: not dec. 17 Date Analyzed: 02/03/09 18:58

GC Column: RTX-VRX ID: 0.25 (mm) Dilution Factor: 1.0

Soil Extract Volume:_____(uL) Soil Aliquot Volume: _____(uL)

CONCENTRATION UNITS: (ug/L or ug/Kg) UG/KG

CAS NO.	COMPOUND	MDL	RL	CONC	Q	
67-64-1	Acetone	2.6	66	320	J	SS
71-43-2	Benzene	0.62	6.6		U UJ	
75-27-4	Bromodichloromethane	0.39	6.6		U	
75-25-2	Bromoform	1.3	6.6		U	
74-83-9	Bromomethane	0.95	13		U	
78-93-3	2-Butanone	1.8	66	19	J J	
75-15-0	Carbon disulfide	1.7	6.6		U UJ	
56-23-5	Carbon tetrachloride	1.2	6.6		U	
108-90-7	Chlorobenzene	0.45	6.6		U	
75-00-3	Chloroethane	1.4	13		U	
67-66-3	Chloroform	0.72	6.6		U	
74-87-3	Chloromethane	0.68	13		U	
110-82-7	Cyclohexane	0.71	13		U	
124-48-1	Dibromochloromethane	0.45	6.6		U	
96-12-8	1,2-Dibromo-3-chloropropane	1.6	13		~~U~~ UJ	IS
106-93-4	1,2-Dibromoethane	0.56	6.6		U UJ	SS
95-50-1	1,2-Dichlorobenzene	0.49	6.6		U UJ	ISL
541-73-1	1,3-Dichlorobenzene	1.1	6.6		U	
106-46-7	1,4-Dichlorobenzene	0.72	6.6		U	
75-71-8	Dichlorodifluoromethane	1.4	13		U	SS
75-34-3	1,1-Dichloroethane	0.71	6.6		U	
107-06-2	1,2-Dichloroethane	0.60	6.6		U	
75-35-4	1,1-Dichloroethene	1.6	6.6		U	
156-59-2	cis-1,2-Dichloroethene	1.6	6.6		U	
156-60-5	trans-1,2-Dichloroethene	1.4	6.6		U	
78-87-5	1,2-Dichloropropane	0.60	6.6		U	
10061-01-5	cis-1,3-Dichloropropene	0.66	6.6		U	
10061-02-6	trans-1,3-Dichloropropene	0.42	6.6		U	
100-41-4	Ethylbenzene	0.99	6.6		U	
591-78-6	2-Hexanone	3.0	33		U	
98-82-8	Isopropylbenzene	1.2	6.6		U	
79-20-9	Methyl acetate	2.1	6.6		U	
75-09-2	Methylene chloride	0.82	13	13UJ	~~1.7 UB~~ SSL	B
108-87-2	Methyl cyclohexane	0.39	6.6		U UJ	SS
1634-04-4	Methyl tert-butyl ether	0.42	6.6		U	
108-10-1	4-Methyl-2-pentanone	0.76	33	22	J J	
100-42-5	Styrene	0.46	6.6		U UJ	
79-34-5	1,1,2,2-Tetrachloroethane	0.56	6.6		~~U~~ UJ	I
127-18-4	Tetrachloroethene	1.3	6.6		~~U~~ UJ	SS

FORM I VOA

9/6/09

FORM 1
VOLATILE ORGANICS ANALYSIS DATA SHEET

CLIENT SAMPLE NO.

MR08-SS370-09A

44

Lab Name: EMPIRICAL LABS Contract: CH2MHILL

Lab Code: NA Case No.: NA SAS No.: NA SDG No.: LEJEUNE056

Matrix: (soil/water) SOIL Lab Sample ID: 0901201-44

Sample wt/vol: 4.6 (g/mL) G Lab File ID: 0120144A

Level: (low/med) LOW Date Sampled: 01/24/09 14:00

% Moisture: not dec. 17 Date Analyzed: 02/03/09 18:58

GC Column: RTX-VRX ID: 0.25 (mm) Dilution Factor: 1.0

Soil Extract Volume:_____(uL) Soil Aliquot Volume: _____(uL)

CONCENTRATION UNITS: (ug/L or ug/Kg) UG/KG

CAS NO.	COMPOUND	MDL	RL	CONC	Q
108-88-3	Toluene	1.1	6.6	2.2	~~J~~ J SSI
120-82-1	1,2,4-Trichlorobenzene	0.24	6.6		~~U~~ UJ ~~SSI~~
71-55-6	1,1,1-Trichloroethane	1.2	6.6		U SSI
79-00-5	1,1,2-Trichloroethane	0.46	6.6		U
79-01-6	Trichloroethene	1.1	6.6		U
76-13-1	Trichlorotrifluoroethane	0.72	6.6		U
75-69-4	Trichlorofluoromethane	1.2	13		U
75-01-4	Vinyl chloride	1.4	13		U
1330-20-7	Xylene(total)	0.92	6.6		U

Qu
4/6/09

FORM 1
VOLATILE ORGANICS ANALYSIS DATA SHEET

CLIENT SAMPLE NO. 44RE

MR08-SS370-09ARE

Lab Name: EMPIRICAL LABS Contract: CH2MHILL

Lab Code: NA Case No.: NA SAS No.: NA SDG No.: LEJEUNE056

Matrix: (soil/water) SOIL Lab Sample ID: 0901201-44RE

Sample wt/vol: 4.6 (g/mL) G Lab File ID: 0120144B

Level: (low/med) LOW Date Sampled: 01/24/09 14:00 use - original

% Moisture: not dec. 17 Date Analyzed: 02/04/09 17:54

GC Column: RTX-VRX ID: 0.25 (mm) Dilution Factor: 1.0

Soil Extract Volume:_____(uL) Soil Aliquot Volume: _____(uL)

CONCENTRATION UNITS: (ug/L or ug/Kg) UG/KG

CAS NO.	COMPOUND	MDL	RL	CONC	Q
67-64-1	Acetone	2.6	13	240	
71-43-2	Benzene	0.62	13		U
75-27-4	Bromodichloromethane	0.39	13		U
75-25-2	Bromoform	1.3	13		U
74-83-9	Bromomethane	0.95	13		U
78-93-3	2-Butanone	1.8	13		~~U~~ UJ CCH
75-15-0	Carbon disulfide	1.7	13		U
56-23-5	Carbon tetrachloride	1.2	13		U
108-90-7	Chlorobenzene	0.45	13		U
75-00-3	Chloroethane	1.4	13		U
67-66-3	Chloroform	0.72	13		U
74-87-3	Chloromethane	0.68	13		U
110-82-7	Cyclohexane	0.71	13		U
124-48-1	Dibromochloromethane	0.45	13		U
96-12-8	1,2-Dibromo-3-chloropropane	1.6	6.6		~~U~~ UJ IL
106-93-4	1,2-Dibromoethane	0.56	13		U
95-50-1	1,2-Dichlorobenzene	0.49	13		~~U~~ UJ IL
541-73-1	1,3-Dichlorobenzene	1.1	13		U
106-46-7	1,4-Dichlorobenzene	0.72	13		U
75-71-8	Dichlorodifluoromethane	1.4	13		U
75-34-3	1,1-Dichloroethane	0.71	13		U
107-06-2	1,2-Dichloroethane	0.60	13		U
75-35-4	1,1-Dichloroethene	1.6	13		U
156-59-2	cis-1,2-Dichloroethene	1.6	13		U
156-60-5	trans-1,2-Dichloroethene	1.4	13		U
78-87-5	1,2-Dichloropropane	0.60	13		U
10061-01-5	cis-1,3-Dichloropropene	0.66	13		U
10061-02-6	trans-1,3-Dichloropropene	0.42	13		U
100-41-4	Ethylbenzene	0.99	13		U
591-78-6	2-Hexanone	3.0	13		U
98-82-8	Isopropylbenzene	1.2	13		U
79-20-9	Methyl acetate	2.1	13		U
75-09-2	Methylene chloride	0.82	13		U
108-87-2	Methyl cyclohexane	0.39	13		U
1634-04-4	Methyl tert-butyl ether	0.42	13		U
108-10-1	4-Methyl-2-pentanone	0.76	13		U
100-42-5	Styrene	0.46	13		U
79-34-5	1,1,2,2-Tetrachloroethane	0.56	13		~~U~~ UJ IS1
127-18-4	Tetrachloroethene	1.3	13		U

FORM I VOA

LW 11/6/09

FORM 1
VOLATILE ORGANICS ANALYSIS DATA SHEET

CLIENT SAMPLE NO.

MR08-SS370-09AR 44RE

Lab Name: EMPIRICAL LABS Contract: CH2MHILL

Lab Code: NA Case No.: NA SAS No.: NA SDG No.: LEJEUNE056

Matrix: (soil/water) SOIL Lab Sample ID: 0901201-44R

Sample wt/vol: 4.6 (g/mL) G Lab File ID: 0120144B

Level: (low/med) LOW Date Sampled: 01/24/09 14:00

% Moisture: not dec. 17 Date Analyzed: 02/04/09 17:54

GC Column: RTX-VRX ID: 0.25 (mm) Dilution Factor: 1.0 Use orig

Soil Extract Volume:_____(uL) Soil Aliquot Volume: _____(uL)

CONCENTRATION UNITS: (ug/L or ug/Kg) UG/KG

CAS NO.	COMPOUND	MDL	RL	CONC	Q
108-88-3	Toluene	1.1	13	1.5	J
120-82-1	1,2,4-Trichlorobenzene	0.24	13		~~U~~ J
71-55-6	1,1,1-Trichloroethane	1.2	13		U
79-00-5	1,1,2-Trichloroethane	0.46	13		U
79-01-6	Trichloroethene	1.1	13		U
76-13-1	Trichlorotrifluoroethane	0.72	13		U
75-69-4	Trichlorofluoromethane	1.2	13		U
75-01-4	Vinyl chloride	1.4	13		U
1330-20-7	Xylene(total)	0.92	13		U

RE

FORM I VOA

kw 4/6/09

FORM 1
VOLATILE ORGANICS ANALYSIS DATA SHEET

CLIENT SAMPLE NO.

45

MR08-IS37
0-1-2-09A

Lab Name: EMPIRICAL LABS Contract: CH2MHILL

Lab Code: NA Case No.: NA SAS No.: NA SDG No.: LEJEUNE056

Matrix: (soil/water) SOIL Lab Sample ID: 0901201-45

Sample wt/vol: 5.7 (g/mL) G Lab File ID: 0120145B

Level: (low/med) LOW Date Sampled: 01/24/09 14:10

% Moisture: not dec. 10 Date Analyzed: 02/04/09 18:33

GC Column: RTX-VRX ID: 0.25 (mm) Dilution Factor: 1.0

Soil Extract Volume:_____(uL) Soil Aliquot Volume: _____(uL)

CONCENTRATION UNITS: (ug/L or ug/Kg) UG/KG

CAS NO.	COMPOUND	MDL	RL	CONC	Q
67-64-1	Acetone	2.0	9.8	21	
71-43-2	Benzene	0.46	9.8		U
75-27-4	Bromodichloromethane	0.29	9.8		U
75-25-2	Bromoform	0.98	9.8		U
74-83-9	Bromomethane	0.70	9.8		U
78-93-3	2-Butanone	1.4	9.8		~~U~~ 5U CCL
75-15-0	Carbon disulfide	1.3	9.8		U
56-23-5	Carbon tetrachloride	0.86	9.8		U
108-90-7	Chlorobenzene	0.33	9.8		U
75-00-3	Chloroethane	1.1	9.8		U
67-66-3	Chloroform	0.54	9.8		U
74-87-3	Chloromethane	0.51	9.8		U
110-82-7	Cyclohexane	0.53	9.8		U
124-48-1	Dibromochloromethane	0.33	9.8		U
96-12-8	1,2-Dibromo-3-chloropropane	1.2	4.9		U
106-93-4	1,2-Dibromoethane	0.42	9.8		U
95-50-1	1,2-Dichlorobenzene	0.36	9.8		U
541-73-1	1,3-Dichlorobenzene	0.82	9.8		U
106-46-7	1,4-Dichlorobenzene	0.54	9.8		U
75-71-8	Dichlorodifluoromethane	1.1	9.8		U
75-34-3	1,1-Dichloroethane	0.53	9.8		U
107-06-2	1,2-Dichloroethane	0.45	9.8		U
75-35-4	1,1-Dichloroethene	1.2	9.8		U
156-59-2	cis-1,2-Dichloroethene	1.2	9.8		U
156-60-5	trans-1,2-Dichloroethene	1.1	9.8		U
78-87-5	1,2-Dichloropropane	0.45	9.8		U
10061-01-5	cis-1,3-Dichloropropene	0.49	9.8		U
10061-02-6	trans-1,3-Dichloropropene	0.31	9.8		U
100-41-4	Ethylbenzene	0.73	9.8		U
591-78-6	2-Hexanone	2.2	9.8		U
98-82-8	Isopropylbenzene	0.86	9.8		U
79-20-9	Methyl acetate	1.6	9.8		U
75-09-2	Methylene chloride	0.61	9.8	9.8U 1.2	JB Bi
108-87-2	Methyl cyclohexane	0.29	9.8		U
1634-04-4	Methyl tert-butyl ether	0.31	9.8		U
108-10-1	4-Methyl-2-pentanone	0.57	9.8		U
100-42-5	Styrene	0.34	9.8		U
79-34-5	1,1,2,2-Tetrachloroethane	0.42	9.8		U
127-18-4	Tetrachloroethene	0.95	9.8		U

LW
4/6/09

FORM 1
VOLATILE ORGANICS ANALYSIS DATA SHEET

CLIENT SAMPLE NO. 45

MR08-IS37
0-1-2-09A

Lab Name: EMPIRICAL LABS Contract: CH2MHILL

Lab Code: NA Case No.: NA SAS No.: NA SDG No.: LEJEUNE056

Matrix: (soil/water) SOIL Lab Sample ID: 0901201-45

Sample wt/vol: 5.7 (g/mL) G Lab File ID: 0120145B

Level: (low/med) LOW Date Sampled: 01/24/09 14:10

% Moisture: not dec. 10 Date Analyzed: 02/04/09 18:33

GC Column: RTX-VRX ID: 0.25 (mm) Dilution Factor: 1.0

Soil Extract Volume:_____(uL) Soil Aliquot Volume: _____(uL)

CONCENTRATION UNITS: (ug/L or ug/Kg) UG/KG

CAS NO.	COMPOUND	MDL	RL	CONC	Q
108-88-3	Toluene	0.84	9.8		U
120-82-1	1,2,4-Trichlorobenzene	0.18	9.8		U
71-55-6	1,1,1-Trichloroethane	0.88	9.8		U
79-00-5	1,1,2-Trichloroethane	0.34	9.8		U
79-01-6	Trichloroethene	0.83	9.8		U
76-13-1	Trichlorotrifluoroethane	0.54	9.8		U
75-69-4	Trichlorofluoromethane	0.93	9.8		U
75-01-4	Vinyl chloride	1.1	9.8		U
1330-20-7	Xylene(total)	0.68	9.8		U

4/6/09

FORM 1
VOLATILE ORGANICS ANALYSIS DATA SHEET

CLIENT SAMPLE NO. 46

MR08-SS353-09A

Lab Name: EMPIRICAL LABS Contract: CH2MHILL

Lab Code: NA Case No.: NA SAS No.: NA SDG No.: LEJEUNE056

Matrix: (soil/water) SOIL Lab Sample ID: 0901201-46

Sample wt/vol: 5.4 (g/mL) G Lab File ID: 0120146A

Level: (low/med) LOW Date Sampled: 01/24/09 14:25

% Moisture: not dec. 7 Date Analyzed: 02/04/09 01:59

GC Column: RTX-VRX ID: 0.25 (mm) Dilution Factor: 1.0

Soil Extract Volume:_____(uL) Soil Aliquot Volume: _____(uL)

CONCENTRATION UNITS: (ug/L or ug/Kg) UG/KG

CAS NO.	COMPOUND	MDL	RL	CONC	Q	
67-64-1	Acetone	2.0	10	10	u	BL
71-43-2	Benzene	0.47	10	0.98	J	
75-27-4	Bromodichloromethane	0.30	10		U	
75-25-2	Bromoform	1.00	10		U	
74-83-9	Bromomethane	0.72	10		U	
78-93-3	2-Butanone	1.4	10		U	
75-15-0	Carbon disulfide	1.3	10		U	
56-23-5	Carbon tetrachloride	0.88	10		U	
108-90-7	Chlorobenzene	0.34	10		U	
75-00-3	Chloroethane	1.1	10		U	
67-66-3	Chloroform	0.55	10		U	
74-87-3	Chloromethane	0.52	10		U	
110-82-7	Cyclohexane	0.54	10		U	
124-48-1	Dibromochloromethane	0.34	10		U	
96-12-8	1,2-Dibromo-3-chloropropane	1.2	5.0		U	
106-93-4	1,2-Dibromoethane	0.43	10		U	
95-50-1	1,2-Dichlorobenzene	0.37	10		U	
541-73-1	1,3-Dichlorobenzene	0.84	10		U	
106-46-7	1,4-Dichlorobenzene	0.55	10		U	
75-71-8	Dichlorodifluoromethane	1.1	10		U	
75-34-3	1,1-Dichloroethane	0.54	10		U	
107-06-2	1,2-Dichloroethane	0.46	10		U	
75-35-4	1,1-Dichloroethene	1.2	10		U	
156-59-2	cis-1,2-Dichloroethene	1.2	10		U	
156-60-5	trans-1,2-Dichloroethene	1.1	10		U	
78-87-5	1,2-Dichloropropane	0.46	10		U	
10061-01-5	cis-1,3-Dichloropropene	0.50	10		U	
10061-02-6	trans-1,3-Dichloropropene	0.32	10		U	
100-41-4	Ethylbenzene	0.75	10	12		
591-78-6	2-Hexanone	2.3	10		U	
98-82-8	Isopropylbenzene	0.88	10		U	
79-20-9	Methyl acetate	1.6	10		U	
75-09-2	Methylene chloride	0.62	10	10u ~~1.0~~	~~JB~~	B1
108-87-2	Methyl cyclohexane	0.30	10		U	
1634-04-4	Methyl tert-butyl ether	0.32	10		U	
108-10-1	4-Methyl-2-pentanone	0.58	10		U	
100-42-5	Styrene	0.35	10		U	
79-34-5	1,1,2,2-Tetrachloroethane	0.43	10		U	
127-18-4	Tetrachloroethene	0.97	10		U	

lw 4/6/09

FORM 1
VOLATILE ORGANICS ANALYSIS DATA SHEET

CLIENT SAMPLE NO.

46

MR08-SS353-09A

Lab Name: EMPIRICAL LABS Contract: CH2MHILL

Lab Code: NA Case No.: NA SAS No.: NA SDG No.: LEJEUNE056

Matrix: (soil/water) SOIL Lab Sample ID: 0901201-46

Sample wt/vol: 5.4 (g/mL) G Lab File ID: 0120146A

Level: (low/med) LOW Date Sampled: 01/24/09 14:25

% Moisture: not dec. 7 Date Analyzed: 02/04/09 01:59

GC Column: RTX-VRX ID: 0.25 (mm) Dilution Factor: 1.0

Soil Extract Volume:_____(uL) Soil Aliquot Volume: _____(uL)

CONCENTRATION UNITS: (ug/L or ug/Kg) UG/KG

CAS NO.	COMPOUND	MDL	RL	CONC	Q
108-88-3	Toluene	0.86	10	4.1	J
120-82-1	1,2,4-Trichlorobenzene	0.18	10		U
71-55-6	1,1,1-Trichloroethane	0.90	10		U
79-00-5	1,1,2-Trichloroethane	0.35	10		U
79-01-6	Trichloroethene	0.85	10		U
76-13-1	Trichlorotrifluoroethane	0.55	10		U
75-69-4	Trichlorofluoromethane	0.95	10		U
75-01-4	Vinyl chloride	1.1	10		U
1330-20-7	Xylene(total)	0.70	10		U

lw
4/6/09

FORM 1
VOLATILE ORGANICS ANALYSIS DATA SHEET

CLIENT SAMPLE NO. 47

MR08-IS35
3-1-2-09A

Lab Name: EMPIRICAL LABS Contract: CH2MHILL

Lab Code: NA Case No.: NA SAS No.: NA SDG No.: LEJEUNE056

Matrix: (soil/water) SOIL Lab Sample ID: 0901201-47

Sample wt/vol: 6.0 (g/mL) G Lab File ID: 0120147A

Level: (low/med) LOW Date Sampled: 01/24/09 14:30

% Moisture: not dec. 27 Date Analyzed: 02/04/09 02:39 Use Medium Level

GC Column: RTX-VRX ID: 0.25 (mm) Dilution Factor: 1.0

Soil Extract Volume:_____(uL) Soil Aliquot Volume: _____(uL)

CONCENTRATION UNITS: (ug/L or ug/Kg) UG/KG

CAS NO.	COMPOUND	MDL	RL	CONC	Q	
67-64-1	Acetone	2.3	12	120	J	SSL
71-43-2	Benzene	0.54	12		U UJ	SSL
75-27-4	Bromodichloromethane	0.34	12		U UJ	ISL
75-25-2	Bromoform	1.2	12		U UJ	ISL
74-83-9	Bromomethane	0.83	12		U UJ	SSL
78-93-3	2-Butanone	1.6	12	15	J	
75-15-0	Carbon disulfide	1.5	12		U UJ	
56-23-5	Carbon tetrachloride	1.0	12		U UJ	
108-90-7	Chlorobenzene	0.39	12		U UJ	ISL
75-00-3	Chloroethane	1.3	12		U	SSL
67-66-3	Chloroform	0.63	12		U	
74-87-3	Chloromethane	0.60	12		U	
110-82-7	Cyclohexane	0.62	12		U	
124-48-1	Dibromochloromethane	0.39	12		U UJ	ISL
96-12-8	1,2-Dibromo-3-chloropropane	1.4	5.8		U R	ISL
106-93-4	1,2-Dibromoethane	0.49	12		U UJ	ISL
95-50-1	1,2-Dichlorobenzene	0.42	12		U R	ISL
541-73-1	1,3-Dichlorobenzene	0.97	12		U	
106-46-7	1,4-Dichlorobenzene	0.63	12		U	
75-71-8	Dichlorodifluoromethane	1.3	12		U UJ	SSL
75-34-3	1,1-Dichloroethane	0.62	12		U	
107-06-2	1,2-Dichloroethane	0.53	12		U	
75-35-4	1,1-Dichloroethene	1.4	12		U	
156-59-2	cis-1,2-Dichloroethene	1.4	12		U	
156-60-5	trans-1,2-Dichloroethene	1.3	12		U	
78-87-5	1,2-Dichloropropane	0.53	12		U	
10061-01-5	cis-1,3-Dichloropropene	0.58	12		U	
10061-02-6	trans-1,3-Dichloropropene	0.37	12		U UJ	ISL
100-41-4	Ethylbenzene	0.86	12		U UJ	ISL
591-78-6	2-Hexanone	2.6	12		U UJ	ISL
98-82-8	Isopropylbenzene	1.0	12		U UJ	SSL
79-20-9	Methyl acetate	1.8	12		U UJ	SSL
75-09-2	Methylene chloride	0.71	12	12UJ 1.8	JB	SSL BL
108-87-2	Methyl cyclohexane	0.34	12		U UJ	SSL
1634-04-4	Methyl tert-butyl ether	0.37	12		U	
108-10-1	4-Methyl-2-pentanone	0.67	12		U	
100-42-5	Styrene	0.40	12		U UJ	ISL
79-34-5	1,1,2,2-Tetrachloroethane	0.49	12		U R	ISL
127-18-4	Tetrachloroethene	1.1	12		U UJ	ISL

RD

LW 4/16/09

FORM 1
VOLATILE ORGANICS ANALYSIS DATA SHEET

CLIENT SAMPLE NO.

47

MR08-IS35
3-1-2-09A

Lab Name: EMPIRICAL LABS Contract: CH2MHILL

Lab Code: NA Case No.: NA SAS No.: NA SDG No.: LEJEUNE056

Matrix: (soil/water) SOIL Lab Sample ID: 0901201-47

Sample wt/vol: 6.0 (g/mL) G Lab File ID: 0120147A

Level: (low/med) LOW Date Sampled: 01/24/09 14:30

% Moisture: not dec. 27 Date Analyzed: 02/04/09 02:39

GC Column: RTX-VRX ID: 0.25 (mm) Dilution Factor: 1.0

Soil Extract Volume:_____(uL) Soil Aliquot Volume: _____(uL)

Use Medium Level

CONCENTRATION UNITS: (ug/L or ug/Kg) UG/KG

CAS NO.	COMPOUND	MDL	RL	CONC	Q	
108-88-3	Toluene	0.99	12	6.8	~~U~~ J	FSL
120-82-1	1,2,4-Trichlorobenzene	0.21	12		~~U~~ R	FSL
71-55-6	1,1,1-Trichloroethane	1.0	12		~~U~~ UJ	SSL
79-00-5	1,1,2-Trichloroethane	0.40	12		~~U~~ UJ	FSL
79-01-6	Trichloroethene	0.98	12		~~U~~ UJ	SSL
76-13-1	Trichlorotrifluoroethane	0.63	12		~~U~~	
75-69-4	Trichlorofluoromethane	1.1	12		~~U~~	
75-01-4	Vinyl chloride	1.3	12		~~U~~	
1330-20-7	Xylene(total)	0.80	12		~~U~~ UJ	FSL

R DL

FORM I VOA

lew 9/6/09

FORM 1
VOLATILE ORGANICS ANALYSIS DATA SHEET

CLIENT SAMPLE NO. 4 RE

MR08-IS35
3-1-2-09AR2

Lab Name: EMPIRICAL LABS Contract: CH2MHILL

Lab Code: NA Case No.: NA SAS No.: NA SDG No.: LEJEUNE056

Matrix: (soil/water) SOIL Lab Sample ID: 0901201-47R2

Sample wt/vol: 3.2 (g/mL) G Lab File ID: 0120147B

Level: (low/med) LOW Date Sampled: 01/24/09 14:30 low medium level

% Moisture: not dec. 27 Date Analyzed: 02/04/09 19:12

GC Column: RTX-VRX ID: 0.25 (mm) Dilution Factor: 1.0

Soil Extract Volume:_____(uL) Soil Aliquot Volume: _____(uL)

CONCENTRATION UNITS: (ug/L or ug/Kg) UG/KG

CAS NO.	COMPOUND	MDL	RL	CONC	Q	
67-64-1	Acetone	4.3	21	430	J	SSL
71-43-2	Benzene	1.0	21	1.3	~~U~~ J	SSL
75-27-4	Bromodichloromethane	0.64	21		~~U~~ R	ISL
75-25-2	Bromoform	2.1	21		~~U~~ R	ISL
74-83-9	Bromomethane	1.5	21		U UJ	SSL
78-93-3	2-Butanone	3.0	21		U	
75-15-0	Carbon disulfide	2.8	21		U	
56-23-5	Carbon tetrachloride	1.9	21		U	
108-90-7	Chlorobenzene	0.73	21		~~U~~ R	ISL
75-00-3	Chloroethane	2.4	21		U UJ	SSL
67-66-3	Chloroform	1.2	21		U	
74-87-3	Chloromethane	1.1	21		U	
110-82-7	Cyclohexane	1.2	21		U	
124-48-1	Dibromochloromethane	0.73	21		U R	ISL
96-12-8	1,2-Dibromo-3-chloropropane	2.6	11		U	
106-93-4	1,2-Dibromoethane	0.92	21		U	
95-50-1	1,2-Dichlorobenzene	0.79	21		U	
541-73-1	1,3-Dichlorobenzene	1.8	21		U	
106-46-7	1,4-Dichlorobenzene	1.2	21		U	
75-71-8	Dichlorodifluoromethane	2.4	21		U UJ	SSL
75-34-3	1,1-Dichloroethane	1.2	21		U	
107-06-2	1,2-Dichloroethane	0.98	21		U	
75-35-4	1,1-Dichloroethene	2.6	21		U	
156-59-2	cis-1,2-Dichloroethene	2.6	21		U	
156-60-5	trans-1,2-Dichloroethene	2.4	21		U	
78-87-5	1,2-Dichloropropane	0.98	21		U	
10061-01-5	cis-1,3-Dichloropropene	1.1	21		U	
10061-02-6	trans-1,3-Dichloropropene	0.68	21		U R	ISL
100-41-4	Ethylbenzene	1.6	21		U	
591-78-6	2-Hexanone	4.9	21		U	
98-82-8	Isopropylbenzene	1.9	21		U UJ	SSL
79-20-9	Methyl acetate	3.4	21		U UJ	SSL
75-09-2	Methylene chloride	1.3	21	21UJ	~~12 JB~~ SSL	BC
108-87-2	Methyl cyclohexane	0.64	21		U UJ	SSL
1634-04-4	Methyl tert-butyl ether	0.68	21		U	
108-10-1	4-Methyl-2-pentanone	1.2	21		U	
100-42-5	Styrene	0.75	21		U R	ISL
79-34-5	1,1,2,2-Tetrachloroethane	0.92	21		U	
127-18-4	Tetrachloroethene	2.1	21		U	

FORM I VOA

LW 4/6/09

FORM 1
VOLATILE ORGANICS ANALYSIS DATA SHEET

CLIENT SAMPLE NO.

MR08-IS35
3-1-2-09AR2

4RE

Lab Name: EMPIRICAL LABS Contract: CH2MHILL

Lab Code: NA Case No.: NA SAS No.: NA SDG No.: LEJEUNE056

Matrix: (soil/water) SOIL Lab Sample ID: 0901201-47R2

Sample wt/vol: 3.2 (g/mL) G Lab File ID: 0120147B

Level: (low/med) LOW Date Sampled: 01/24/09 14:30

% Moisture: not dec. 27 Date Analyzed: 02/04/09 19:12

Use medium level

GC Column: RTX-VRX ID: 0.25 (mm) Dilution Factor: 1.0

Soil Extract Volume:_____(uL) Soil Aliquot Volume: _____(uL)

CONCENTRATION UNITS: (ug/L or ug/Kg) UG/KG

CAS NO.	COMPOUND	MDL	RL	CONC	Q
108-88-3	Toluene	1.8	21	17	~~U~~ J ISL
120-82-1	1,2,4-Trichlorobenzene	0.38	21		~~U~~ R ISL
71-55-6	1,1,1-Trichloroethane	1.9	21		~~U~~ UJ SSL
79-00-5	1,1,2-Trichloroethane	0.75	21		~~U~~ R ISL
79-01-6	Trichloroethene	1.8	21		~~U~~ UJ SSL
76-13-1	Trichlorotrifluoroethane	1.2	21		U
75-69-4	Trichlorofluoromethane	2.0	21		U
75-01-4	Vinyl chloride	2.4	21		U
1330-20-7	Xylene(total)	1.5	21		~~U~~ R ISL

RDL

FORM I VOA

PW 4/6/09

FORM 1
VOLATILE ORGANICS ANALYSIS DATA SHEET

CLIENT SAMPLE NO.

MR08-IS35
3-1-2-09AD

470L

Lab Name: EMPIRICAL LABS Contract: CH2MHILL

Lab Code: NA Case No.: NA SAS No.: NA SDG No.: LEJEUNE056

Matrix: (soil/water) SOIL Lab Sample ID: 0901201-47DL

Sample wt/vol: 6.4 (g/mL) G Lab File ID: 0120147D

Level: (low/med) MED Date Sampled: 01/24/09 14:30

% Moisture: not dec. 27 Date Analyzed: 02/06/09 19:33

GC Column: RTX-VRX ID: 0.25 (mm) Dilution Factor: 1.0

Soil Extract Volume: 5000(uL) Soil Aliquot Volume: 100(uL)

CONCENTRATION UNITS: (ug/L or ug/Kg) UG/KG

CAS NO.	COMPOUND	MDL	RL	CONC	Q
67-64-1	Acetone	110	530	330	J
71-43-2	Benzene	25	530		U
75-27-4	Bromodichloromethane	16	530		U
75-25-2	Bromoform	53	530		U
74-83-9	Bromomethane	38	530		U
78-93-3	2-Butanone	75	530		U
75-15-0	Carbon disulfide	69	530		U
56-23-5	Carbon tetrachloride	47	530		U
108-90-7	Chlorobenzene	18	530		U
75-00-3	Chloroethane	59	530		U
67-66-3	Chloroform	29	530		U
74-87-3	Chloromethane	28	530		U
110-82-7	Cyclohexane	29	530		U
124-48-1	Dibromochloromethane	18	530		U
96-12-8	1,2-Dibromo-3-chloropropane	64	270		U
106-93-4	1,2-Dibromoethane	23	530		U
95-50-1	1,2-Dichlorobenzene	20	530		U
541-73-1	1,3-Dichlorobenzene	45	530		U
106-46-7	1,4-Dichlorobenzene	29	530		U
75-71-8	Dichlorodifluoromethane	59	530		~~U~~ UJ CC
75-34-3	1,1-Dichloroethane	29	530		U
107-06-2	1,2-Dichloroethane	24	530		U
75-35-4	1,1-Dichloroethene	64	530		U
156-59-2	cis-1,2-Dichloroethene	64	530		U
156-60-5	trans-1,2-Dichloroethene	59	530		U
78-87-5	1,2-Dichloropropane	24	530		U
10061-01-5	cis-1,3-Dichloropropene	27	530		U
10061-02-6	trans-1,3-Dichloropropene	17	530		U
100-41-4	Ethylbenzene	40	530		U
591-78-6	2-Hexanone	120	530		U
98-82-8	Isopropylbenzene	47	530		U
79-20-9	Methyl acetate	85	530		U
75-09-2	Methylene chloride	33	530	3200	~~B~~
108-87-2	Methyl cyclohexane	16	530		U
1634-04-4	Methyl tert-butyl ether	17	530		U
108-10-1	4-Methyl-2-pentanone	31	530		U
100-42-5	Styrene	19	530		U
79-34-5	1,1,2,2-Tetrachloroethane	23	530		U
127-18-4	Tetrachloroethene	52	530		U

MW 4/6/09

FORM 1
VOLATILE ORGANICS ANALYSIS DATA SHEET

CLIENT SAMPLE NO.

MR08-IS35
3-1-2-09AD

470L

Lab Name: EMPIRICAL LABS Contract: CH2MHILL

Lab Code: NA Case No.: NA SAS No.: NA SDG No.: LEJEUNE056

Matrix: (soil/water) SOIL Lab Sample ID: 0901201-47DL

Sample wt/vol: 6.4 (g/mL) G Lab File ID: 0120147D

Level: (low/med) MED Date Sampled: 01/24/09 14:30

% Moisture: not dec. 27 Date Analyzed: 02/06/09 19:33

GC Column: RTX-VRX ID: 0.25 (mm) Dilution Factor: 1.0

Soil Extract Volume: 5000(uL) Soil Aliquot Volume: 100(uL)

CONCENTRATION UNITS: (ug/L or ug/Kg) UG/KG

CAS NO.	COMPOUND	MDL	RL	CONC	Q
108-88-3	Toluene	46	530		U
120-82-1	1,2,4-Trichlorobenzene	9.6	530		U
71-55-6	1,1,1-Trichloroethane	48	530		U
79-00-5	1,1,2-Trichloroethane	19	530		U
79-01-6	Trichloroethene	45	530		U
76-13-1	Trichlorotrifluoroethane	29	530		U
75-69-4	Trichlorofluoromethane	51	530		U
75-01-4	Vinyl chloride	59	530		U
1330-20-7	Xylene(total)	37	530		U

fdw
91609

FORM 1
VOLATILE ORGANICS ANALYSIS DATA SHEET

CLIENT SAMPLE NO. 48

MR08-SS328-09A

Lab Name: EMPIRICAL LABS Contract: CH2MHILL

Lab Code: NA Case No.: NA SAS No.: NA SDG No.: LEJEUNE056

Matrix: (soil/water) SOIL Lab Sample ID: 0901201-48

Sample wt/vol: 4.5 (g/mL) G Lab File ID: 0120148A

Level: (low/med) LOW Date Sampled: 01/24/09 15:00

% Moisture: not dec. 12 Date Analyzed: 02/04/09 03:18

Use medium level

GC Column: RTX-VRX ID: 0.25 (mm) Dilution Factor: 1.0

Soil Extract Volume:_____(uL) Soil Aliquot Volume: _____(uL)

CONCENTRATION UNITS: (ug/L or ug/Kg) UG/KG

CAS NO.	COMPOUND	MDL	RL	CONC	Q	
67-64-1	Acetone	2.5	12	97	J	SSL
71-43-2	Benzene	0.59	12	0.67	J	
75-27-4	Bromodichloromethane	0.38	12		U UJ	
75-25-2	Bromoform	1.2	12		U	
74-83-9	Bromomethane	0.90	12		U	
78-93-3	2-Butanone	1.8	12		U	
75-15-0	Carbon disulfide	1.6	12		U	
56-23-5	Carbon tetrachloride	1.1	12		U	
108-90-7	Chlorobenzene	0.43	12		U	
75-00-3	Chloroethane	1.4	12		U	
67-66-3	Chloroform	0.69	12		U	
74-87-3	Chloromethane	0.65	12		U	
110-82-7	Cyclohexane	0.68	12		U	
124-48-1	Dibromochloromethane	0.43	12		U	
96-12-8	1,2-Dibromo-3-chloropropane	1.5	6.3		~~U~~ UJ	ISL
106-93-4	1,2-Dibromoethane	0.54	12		U	SSL
95-50-1	1,2-Dichlorobenzene	0.46	12		U UJ	ISL
541-73-1	1,3-Dichlorobenzene	1.0	12		U	
106-46-7	1,4-Dichlorobenzene	0.69	12		U	
75-71-8	Dichlorodifluoromethane	1.4	12		U	SSL
75-34-3	1,1-Dichloroethane	0.68	12		U	
107-06-2	1,2-Dichloroethane	0.58	12		U	
75-35-4	1,1-Dichloroethene	1.5	12		U	
156-59-2	cis-1,2-Dichloroethene	1.5	12		U	
156-60-5	trans-1,2-Dichloroethene	1.4	12		U	
78-87-5	1,2-Dichloropropane	0.58	12		U	
10061-01-5	cis-1,3-Dichloropropene	0.63	12		U	
10061-02-6	trans-1,3-Dichloropropene	0.40	12		U	
100-41-4	Ethylbenzene	0.94	12		U	
591-78-6	2-Hexanone	2.9	12		U	
98-82-8	Isopropylbenzene	1.1	12		U	
79-20-9	Methyl acetate	2.0	12		U	
75-09-2	Methylene chloride	0.78	12	12UJ ~~1.6~~	JB SSL	BX
108-87-2	Methyl cyclohexane	0.38	12		U UJ	SSL
1634-04-4	Methyl tert-butyl ether	0.40	12		U	
108-10-1	4-Methyl-2-pentanone	0.73	12		U	
100-42-5	Styrene	0.44	12		U	
79-34-5	1,1,2,2-Tetrachloroethane	0.54	12		~~U~~ UJ	ISL
127-18-4	Tetrachloroethene	1.2	12		U UJ	SSL

FORM I VOA

MW 4/6/09

FORM 1
VOLATILE ORGANICS ANALYSIS DATA SHEET

CLIENT SAMPLE NO.

MR08-SS328-09A 48

Lab Name: EMPIRICAL LABS Contract: CH2MHILL

Lab Code: NA Case No.: NA SAS No.: NA SDG No.: LEJEUNE056

Matrix: (soil/water) SOIL Lab Sample ID: 0901201-48

Sample wt/vol: 4.5 (g/mL) G Lab File ID: 0120148A

Level: (low/med) LOW Date Sampled: 01/24/09 15:00

% Moisture: not dec. 12 Date Analyzed: 02/04/09 03:18

GC Column: RTX-VRX ID: 0.25 (mm) Dilution Factor: 1.0

Soil Extract Volume:_____(uL) Soil Aliquot Volume: _____(uL)

Use medium level

CONCENTRATION UNITS: (ug/L or ug/Kg) UG/KG

CAS NO.	COMPOUND	MDL	RL	CONC	Q
108-88-3	Toluene	1.1	12	4.3	J J SSL
120-82-1	1,2,4-Trichlorobenzene	0.22	12		~~U~~ UJ SSL
71-55-6	1,1,1-Trichloroethane	1.1	12		U SSL
79-00-5	1,1,2-Trichloroethane	0.44	12		U
79-01-6	Trichloroethene	1.1	12		U
76-13-1	Trichlorotrifluoroethane	0.69	12		U
75-69-4	Trichlorofluoromethane	1.2	12		U
75-01-4	Vinyl chloride	1.4	12		U
1330-20-7	Xylene(total)	0.88	12		U

R

FORM I VOA

LW 4/6/09

FORM 1
VOLATILE ORGANICS ANALYSIS DATA SHEET

CLIENT SAMPLE NO. 48DL

MR08-SS3
28-09ADL

Lab Name: EMPIRICAL LABS Contract: CH2MHILL

Lab Code: NA Case No.: NA SAS No.: NA SDG No.: LEJEUNE056

Matrix: (soil/water) SOIL Lab Sample ID: 0901201-48DL

Sample wt/vol: 4.5 (g/mL) G Lab File ID: 0120148D

Level: (low/med) MED Date Sampled: 01/24/09 15:00

% Moisture: not dec. 12 Date Analyzed: 02/06/09 20:04

GC Column: RTX-VRX ID: 0.25 (mm) Dilution Factor: 1.0

Soil Extract Volume: 5000(uL) Soil Aliquot Volume: 100(uL)

CONCENTRATION UNITS: (ug/L or ug/Kg) UG/KG

CAS NO.	COMPOUND	MDL	RL	CONC	Q
67-64-1	Acetone	120	630		UD
71-43-2	Benzene	30	630		UD
75-27-4	Bromodichloromethane	19	630		UD
75-25-2	Bromoform	63	630		UD
74-83-9	Bromomethane	45	630		UD
78-93-3	2-Butanone	88	630		UD
75-15-0	Carbon disulfide	82	630		UD
56-23-5	Carbon tetrachloride	55	630		UD
108-90-7	Chlorobenzene	21	630		UD
75-00-3	Chloroethane	69	630		UD
67-66-3	Chloroform	34	630		UD
74-87-3	Chloromethane	33	630		UD
110-82-7	Cyclohexane	34	630		UD
124-48-1	Dibromochloromethane	21	630		UD
96-12-8	1,2-Dibromo-3-chloropropane	75	310		UD
106-93-4	1,2-Dibromoethane	27	630		UD
95-50-1	1,2-Dichlorobenzene	23	630		UD
541-73-1	1,3-Dichlorobenzene	53	630		UD
106-46-7	1,4-Dichlorobenzene	34	630		UD
75-71-8	Dichlorodifluoromethane	69	630		UD us cc
75-34-3	1,1-Dichloroethane	34	630		UD
107-06-2	1,2-Dichloroethane	29	630		UD
75-35-4	1,1-Dichloroethene	75	630		UD
156-59-2	cis-1,2-Dichloroethene	75	630		UD
156-60-5	trans-1,2-Dichloroethene	69	630		UD
78-87-5	1,2-Dichloropropane	29	630		UD
10061-01-5	cis-1,3-Dichloropropene	31	630		UD
10061-02-6	trans-1,3-Dichloropropene	20	630		UD
100-41-4	Ethylbenzene	47	630		UD
591-78-6	2-Hexanone	140	630		UD
98-82-8	Isopropylbenzene	55	630		UD
79-20-9	Methyl acetate	100	630		UD
75-09-2	Methylene chloride	39	630	4100	~~UD~~
108-87-2	Methyl cyclohexane	19	630		UD
1634-04-4	Methyl tert-butyl ether	20	630		UD
108-10-1	4-Methyl-2-pentanone	36	630		UD
100-42-5	Styrene	22	630		UD
79-34-5	1,1,2,2-Tetrachloroethane	27	630		UD
127-18-4	Tetrachloroethene	61	630		UD

FORM I VOA

LW
4/6/09

FORM 1
VOLATILE ORGANICS ANALYSIS DATA SHEET

CLIENT SAMPLE NO.

MR08-SS3
28-09ADL

48DL

Lab Name: EMPIRICAL LABS Contract: CH2MHILL

Lab Code: NA Case No.: NA SAS No.: NA SDG No.: LEJEUNE056

Matrix: (soil/water) SOIL Lab Sample ID: 0901201-48DL

Sample wt/vol: 4.5 (g/mL) G Lab File ID: 0120148D

Level: (low/med) MED Date Sampled: 01/24/09 15:00

% Moisture: not dec. 12 Date Analyzed: 02/06/09 20:04

GC Column: RTX-VRX ID: 0.25 (mm) Dilution Factor: 1.0

Soil Extract Volume: 5000(uL) Soil Aliquot Volume: 100(uL)

CONCENTRATION UNITS: (ug/L or ug/Kg) UG/KG

CAS NO.	COMPOUND	MDL	RL	CONC	Q
108-88-3	Toluene	54	630		UD
120-82-1	1,2,4-Trichlorobenzene	11	630		UD
71-55-6	1,1,1-Trichloroethane	56	630		UD
79-00-5	1,1,2-Trichloroethane	22	630		UD
79-01-6	Trichloroethene	53	630		UD
76-13-1	Trichlorotrifluoroethane	34	630		UD
75-69-4	Trichlorofluoromethane	60	630		UD
75-01-4	Vinyl chloride	69	630		UD
1330-20-7	Xylene(total)	44	630		UD

FORM I VOA

JW 4/6/09

FORM 1
VOLATILE ORGANICS ANALYSIS DATA SHEET

CLIENT SAMPLE NO. 49

MR08-IS32
8-4-5-09A

Lab Name: EMPIRICAL LABS Contract: CH2MHILL

Lab Code: NA Case No.: NA SAS No.: NA SDG No.: LEJEUNE056

Matrix: (soil/water) SOIL Lab Sample ID: 0901201-49

Sample wt/vol: 5.5 (g/mL) G Lab File ID: 0120149A

Level: (low/med) LOW Date Sampled: 01/24/09 15:10

% Moisture: not dec. 11 Date Analyzed: 02/04/09 03:57

GC Column: RTX-VRX ID: 0.25 (mm) Dilution Factor: 1.0

Soil Extract Volume:_____(uL) Soil Aliquot Volume: _____(uL)

CONCENTRATION UNITS: (ug/L or ug/Kg) UG/KG

CAS NO.	COMPOUND	MDL	RL	CONC	Q	
67-64-1	Acetone	2.0	10	12	u	B
71-43-2	Benzene	0.48	10		U	
75-27-4	Bromodichloromethane	0.30	10		U	
75-25-2	Bromoform	1.0	10		U	
74-83-9	Bromomethane	0.73	10		U	
78-93-3	2-Butanone	1.4	10		U	
75-15-0	Carbon disulfide	1.3	10		U	
56-23-5	Carbon tetrachloride	0.89	10		U	
108-90-7	Chlorobenzene	0.34	10		U	
75-00-3	Chloroethane	1.1	10		U	
67-66-3	Chloroform	0.56	10		U	
74-87-3	Chloromethane	0.53	10		U	
110-82-7	Cyclohexane	0.55	10		U	
124-48-1	Dibromochloromethane	0.34	10		U	
96-12-8	1,2-Dibromo-3-chloropropane	1.2	5.1		U	
106-93-4	1,2-Dibromoethane	0.44	10		U	
95-50-1	1,2-Dichlorobenzene	0.37	10		U	
541-73-1	1,3-Dichlorobenzene	0.85	10		U	
106-46-7	1,4-Dichlorobenzene	0.56	10		U	
75-71-8	Dichlorodifluoromethane	1.1	10		U	
75-34-3	1,1-Dichloroethane	0.55	10		U	
107-06-2	1,2-Dichloroethane	0.46	10		U	
75-35-4	1,1-Dichloroethene	1.2	10		U	
156-59-2	cis-1,2-Dichloroethene	1.2	10		U	
156-60-5	trans-1,2-Dichloroethene	1.1	10		U	
78-87-5	1,2-Dichloropropane	0.46	10		U	
10061-01-5	cis-1,3-Dichloropropene	0.51	10		U	
10061-02-6	trans-1,3-Dichloropropene	0.32	10		U	
100-41-4	Ethylbenzene	0.76	10		U	
591-78-6	2-Hexanone	2.3	10		U	
98-82-8	Isopropylbenzene	0.89	10		U	
79-20-9	Methyl acetate	1.6	10		U	
75-09-2	Methylene chloride	0.63	10	10u	~~1.2 JB~~	B
108-87-2	Methyl cyclohexane	0.30	10		U	
1634-04-4	Methyl tert-butyl ether	0.32	10		U	
108-10-1	4-Methyl-2-pentanone	0.59	10		U	
100-42-5	Styrene	0.35	10		U	
79-34-5	1,1,2,2-Tetrachloroethane	0.44	10		U	
127-18-4	Tetrachloroethene	0.98	10		U	

FORM I VOA

RW 4/6/09

FORM 1
VOLATILE ORGANICS ANALYSIS DATA SHEET

CLIENT SAMPLE NO. 49

MR08-IS32
8-4-5-09A

Lab Name: EMPIRICAL LABS Contract: CH2MHILL

Lab Code: NA Case No.: NA SAS No.: NA SDG No.: LEJEUNE056

Matrix: (soil/water) SOIL Lab Sample ID: 0901201-49

Sample wt/vol: 5.5 (g/mL) G Lab File ID: 0120149A

Level: (low/med) LOW Date Sampled: 01/24/09 15:10

% Moisture: not dec. 11 Date Analyzed: 02/04/09 03:57

GC Column: RTX-VRX ID: 0.25 (mm) Dilution Factor: 1.0

Soil Extract Volume:_____(uL) Soil Aliquot Volume: _____(uL)

CONCENTRATION UNITS: (ug/L or ug/Kg) UG/KG

CAS NO.	COMPOUND	MDL	RL	CONC	Q
108-88-3	Toluene	0.87	10		U
120-82-1	1,2,4-Trichlorobenzene	0.18	10		U
71-55-6	1,1,1-Trichloroethane	0.91	10		U
79-00-5	1,1,2-Trichloroethane	0.35	10		U
79-01-6	Trichloroethene	0.86	10		U
76-13-1	Trichlorotrifluoroethane	0.56	10		U
75-69-4	Trichlorofluoromethane	0.96	10		U
75-01-4	Vinyl chloride	1.1	10		U
1330-20-7	Xylene(total)	0.71	10		U

MW 4/6/09

FORM 1
VOLATILE ORGANICS ANALYSIS DATA SHEET

CLIENT SAMPLE NO. 50

MR08-SS347-09A

Lab Name: EMPIRICAL LABS Contract: CH2MHILL

Lab Code: NA Case No.: NA SAS No.: NA SDG No.: LEJEUNE056

Matrix: (soil/water) SOIL Lab Sample ID: 0901201-50

Sample wt/vol: 4.6 (g/mL) G Lab File ID: 0120150B

Level: (low/med) LOW Date Sampled: 01/24/09 15:40

% Moisture: not dec. 8 Date Analyzed: 02/03/09 20:17

GC Column: RTX-VRX ID: 0.25 (mm) Dilution Factor: 1.0

Soil Extract Volume:_____(uL) Soil Aliquot Volume: _____(uL)

CONCENTRATION UNITS: (ug/L or ug/Kg) UG/KG

CAS NO.	COMPOUND	MDL	RL	CONC	Q
67-64-1	Acetone	2.4	59	16	J
71-43-2	Benzene	0.56	5.9	1.1	J
75-27-4	Bromodichloromethane	0.36	5.9		U
75-25-2	Bromoform	1.2	5.9		U
74-83-9	Bromomethane	0.85	12		U
78-93-3	2-Butanone	1.7	59		U
75-15-0	Carbon disulfide	1.5	5.9		U
56-23-5	Carbon tetrachloride	1.0	5.9		U
108-90-7	Chlorobenzene	0.40	5.9		U
75-00-3	Chloroethane	1.3	12		U
67-66-3	Chloroform	0.65	5.9		U
74-87-3	Chloromethane	0.62	12		U
110-82-7	Cyclohexane	0.64	12	0.64	J
124-48-1	Dibromochloromethane	0.40	5.9		U
96-12-8	1,2-Dibromo-3-chloropropane	1.4	12		U
106-93-4	1,2-Dibromoethane	0.51	5.9		U
95-50-1	1,2-Dichlorobenzene	0.44	5.9		U
541-73-1	1,3-Dichlorobenzene	1.00	5.9		U
106-46-7	1,4-Dichlorobenzene	0.65	5.9		U
75-71-8	Dichlorodifluoromethane	1.3	12		U
75-34-3	1,1-Dichloroethane	0.64	5.9		U
107-06-2	1,2-Dichloroethane	0.54	5.9		U
75-35-4	1,1-Dichloroethene	1.4	5.9		U
156-59-2	cis-1,2-Dichloroethene	1.4	5.9		U
156-60-5	trans-1,2-Dichloroethene	1.3	5.9		U
78-87-5	1,2-Dichloropropane	0.54	5.9		U
10061-01-5	cis-1,3-Dichloropropene	0.59	5.9		U
10061-02-6	trans-1,3-Dichloropropene	0.38	5.9		U
100-41-4	Ethylbenzene	0.89	5.9	5.4	J
591-78-6	2-Hexanone	2.7	30		U
98-82-8	Isopropylbenzene	1.0	5.9		U
79-20-9	Methyl acetate	1.9	5.9		U
75-09-2	Methylene chloride	0.74	12	124 ~~1.5~~	~~JB~~ B
108-87-2	Methyl cyclohexane	0.36	5.9	0.72	J
1634-04-4	Methyl tert-butyl ether	0.38	5.9		U
108-10-1	4-Methyl-2-pentanone	0.69	30		U
100-42-5	Styrene	0.42	5.9		U
79-34-5	1,1,2,2-Tetrachloroethane	0.51	5.9		U
127-18-4	Tetrachloroethene	1.2	5.9		U

MW 4/6/09

FORM 1
VOLATILE ORGANICS ANALYSIS DATA SHEET

CLIENT SAMPLE NO. 50

MR08-SS347-09A

Lab Name: EMPIRICAL LABS Contract: CH2MHILL

Lab Code: NA Case No.: NA SAS No.: NA SDG No.: LEJEUNE056

Matrix: (soil/water) SOIL Lab Sample ID: 0901201-50

Sample wt/vol: 4.6 (g/mL) G Lab File ID: 0120150B

Level: (low/med) LOW Date Sampled: 01/24/09 15:40

% Moisture: not dec. 8 Date Analyzed: 02/03/09 20:17

GC Column: RTX-VRX ID: 0.25 (mm) Dilution Factor: 1.0

Soil Extract Volume:_____(uL) Soil Aliquot Volume: _____(uL)

CONCENTRATION UNITS: (ug/L or ug/Kg) UG/KG

CAS NO.	COMPOUND	MDL	RL	CONC	Q
108-88-3	Toluene	1.0	5.9	2.6	J
120-82-1	1,2,4-Trichlorobenzene	0.21	5.9		U
71-55-6	1,1,1-Trichloroethane	1.1	5.9		U
79-00-5	1,1,2-Trichloroethane	0.42	5.9		U
79-01-6	Trichloroethene	1.0	5.9		U
76-13-1	Trichlorotrifluoroethane	0.65	5.9		U
75-69-4	Trichlorofluoromethane	1.1	12		U
75-01-4	Vinyl chloride	1.3	12		U
1330-20-7	Xylene(total)	0.83	5.9		U

Dew 4/6/09

FORM 1
VOLATILE ORGANICS ANALYSIS DATA SHEET

CLIENT SAMPLE NO. 51

MR08-IS34
7-3-4-09A

Lab Name: EMPIRICAL LABS Contract: CH2MHILL

Lab Code: NA Case No.: NA SAS No.: NA SDG No.: LEJEUNE056

Matrix: (soil/water) SOIL Lab Sample ID: 0901201-51

Sample wt/vol: 6.6 (g/mL) G Lab File ID: 0120151A

Level: (low/med) LOW Date Sampled: 01/24/09 15:50

% Moisture: not dec. 13 Date Analyzed: 02/04/09 04:36

GC Column: RTX-VRX ID: 0.25 (mm) Dilution Factor: 1.0

Soil Extract Volume:_____(uL) Soil Aliquot Volume: _____(uL)

CONCENTRATION UNITS: (ug/L or ug/Kg) UG/KG

CAS NO.	COMPOUND	MDL	RL	CONC	Q	
67-64-1	Acetone	1.7	8.7	8.7U ~~5.4~~	~~J~~	a
71-43-2	Benzene	0.41	8.7		U	
75-27-4	Bromodichloromethane	0.26	8.7		U	
75-25-2	Bromoform	0.87	8.7		U	
74-83-9	Bromomethane	0.62	8.7		U	
78-93-3	2-Butanone	1.2	8.7		U	
75-15-0	Carbon disulfide	1.1	8.7		U	
56-23-5	Carbon tetrachloride	0.76	8.7		U	
108-90-7	Chlorobenzene	0.30	8.7		U	
75-00-3	Chloroethane	0.96	8.7		U	
67-66-3	Chloroform	0.48	8.7		U	
74-87-3	Chloromethane	0.45	8.7		U	
110-82-7	Cyclohexane	0.47	8.7		U	
124-48-1	Dibromochloromethane	0.30	8.7		U	
96-12-8	1,2-Dibromo-3-chloropropane	1.0	4.3		U	
106-93-4	1,2-Dibromoethane	0.37	8.7		U	
95-50-1	1,2-Dichlorobenzene	0.32	8.7		U	
541-73-1	1,3-Dichlorobenzene	0.73	8.7		U	
106-46-7	1,4-Dichlorobenzene	0.48	8.7		U	
75-71-8	Dichlorodifluoromethane	0.96	8.7		U	
75-34-3	1,1-Dichloroethane	0.47	8.7		U	
107-06-2	1,2-Dichloroethane	0.40	8.7		U	
75-35-4	1,1-Dichloroethene	1.0	8.7		U	
156-59-2	cis-1,2-Dichloroethene	1.0	8.7		U	
156-60-5	trans-1,2-Dichloroethene	0.96	8.7		U	
78-87-5	1,2-Dichloropropane	0.40	8.7		U	
10061-01-5	cis-1,3-Dichloropropene	0.43	8.7		U	
10061-02-6	trans-1,3-Dichloropropene	0.28	8.7		U	
100-41-4	Ethylbenzene	0.65	8.7		U	
591-78-6	2-Hexanone	2.0	8.7		U	
98-82-8	Isopropylbenzene	0.76	8.7		U	
79-20-9	Methyl acetate	1.4	8.7		U	
75-09-2	Methylene chloride	0.54	8.7	8.7U ~~0.96~~	~~JB~~	B
108-87-2	Methyl cyclohexane	0.26	8.7		U	
1634-04-4	Methyl tert-butyl ether	0.28	8.7		U	
108-10-1	4-Methyl-2-pentanone	0.50	8.7		U	
100-42-5	Styrene	0.30	8.7		U	
79-34-5	1,1,2,2-Tetrachloroethane	0.37	8.7		U	
127-18-4	Tetrachloroethene	0.84	8.7		U	

LW 4/6/09

FORM 1
VOLATILE ORGANICS ANALYSIS DATA SHEET

CLIENT SAMPLE NO. 51

MR08-IS34
7-3-4-09A

Lab Name: EMPIRICAL LABS Contract: CH2MHILL

Lab Code: NA Case No.: NA SAS No.: NA SDG No.: LEJEUNE056

Matrix: (soil/water) SOIL Lab Sample ID: 0901201-51

Sample wt/vol: 6.6 (g/mL) G Lab File ID: 0120151A

Level: (low/med) LOW Date Sampled: 01/24/09 15:50

% Moisture: not dec. 13 Date Analyzed: 02/04/09 04:36

GC Column: RTX-VRX ID: 0.25 (mm) Dilution Factor: 1.0

Soil Extract Volume:_____(uL) Soil Aliquot Volume: _____(uL)

CONCENTRATION UNITS: (ug/L or ug/Kg) UG/KG

CAS NO.	COMPOUND	MDL	RL	CONC	Q
108-88-3	Toluene	0.75	8.7		U
120-82-1	1,2,4-Trichlorobenzene	0.16	8.7		U
71-55-6	1,1,1-Trichloroethane	0.78	8.7		U
79-00-5	1,1,2-Trichloroethane	0.30	8.7		U
79-01-6	Trichloroethene	0.74	8.7		U
76-13-1	Trichlorotrifluoroethane	0.48	8.7		U
75-69-4	Trichlorofluoromethane	0.82	8.7		U
75-01-4	Vinyl chloride	0.96	8.7		U
1330-20-7	Xylene(total)	0.61	8.7		U

fw
4/6/09

FORM 1
VOLATILE ORGANICS ANALYSIS DATA SHEET

CLIENT SAMPLE NO. 52

MR08-EB012509

Lab Name: EMPIRICAL LABS Contract: CH2MHILL

Lab Code: NA Case No.: NA SAS No.: NA SDG No.: LEJEUNE056

Matrix: (soil/water) WATER Lab Sample ID: 0901201-52

Sample wt/vol: 5.000 (g/mL) ML Lab File ID: 0120152

Level: (low/med) LOW Date Sampled: 01/25/09 07:45

% Moisture: not dec. _____ Date Analyzed: 01/31/09 23:23

GC Column: RTX-VRX ID: 0.25 (mm) Dilution Factor: 1.0

Soil Extract Volume:_____(uL) Soil Aliquot Volume: _____(uL)

CONCENTRATION UNITS: (ug/L or ug/Kg) UG/L

CAS NO.	COMPOUND	MDL	RL	CONC	Q
67-64-1	Acetone	0.84	2.5	1.9	J
71-43-2	Benzene	0.11	1.0		U
75-27-4	Bromodichloromethane	0.10	1.0		U
75-25-2	Bromoform	0.10	1.0		U
74-83-9	Bromomethane	0.32	1.0		U
78-93-3	2-Butanone	1.0	3.0		U
75-15-0	Carbon disulfide	0.13	1.0		U
56-23-5	Carbon tetrachloride	0.15	1.0		U
108-90-7	Chlorobenzene	0.10	1.0	0.25	J
75-00-3	Chloroethane	0.18	1.0		U
67-66-3	Chloroform	0.11	1.0		U
74-87-3	Chloromethane	0.29	1.0		U
110-82-7	Cyclohexane	0.20	1.0		U
124-48-1	Dibromochloromethane	0.10	1.0		U
96-12-8	1,2-Dibromo-3-chloropropane	0.11	1.0		U
106-93-4	1,2-Dibromoethane	0.10	1.0		U
95-50-1	1,2-Dichlorobenzene	0.10	1.0		U
541-73-1	1,3-Dichlorobenzene	0.13	1.0		U
106-46-7	1,4-Dichlorobenzene	0.10	1.0		U
75-71-8	Dichlorodifluoromethane	0.22	1.0		U UJ CO
75-34-3	1,1-Dichloroethane	0.12	1.0		U
107-06-2	1,2-Dichloroethane	0.10	1.0		U
75-35-4	1,1-Dichloroethene	0.15	1.0		U
156-59-2	cis-1,2-Dichloroethene	0.13	1.0		U
156-60-5	trans-1,2-Dichloroethene	0.13	1.0		U
78-87-5	1,2-Dichloropropane	0.10	1.0		U
10061-01-5	cis-1,3-Dichloropropene	0.11	1.0		U
10061-02-6	trans-1,3-Dichloropropene	0.10	1.0		U
100-41-4	Ethylbenzene	0.13	1.0		U
591-78-6	2-Hexanone	0.30	2.0		U
98-82-8	Isopropylbenzene	0.15	1.0		U
79-20-9	Methyl acetate	0.30	1.0		U
75-09-2	Methylene chloride	0.14	1.0	1.0u ~~0.48~~ ~~JB~~	B
108-87-2	Methyl cyclohexane	0.17	1.0		U
1634-04-4	Methyl tert-butyl ether	0.10	1.0		U
108-10-1	4-Methyl-2-pentanone	0.29	1.0		U
100-42-5	Styrene	0.10	1.0		U
79-34-5	1,1,2,2-Tetrachloroethane	0.10	1.0		U
127-18-4	Tetrachloroethene	0.15	1.0		U

uw
01/09

FORM 1
VOLATILE ORGANICS ANALYSIS DATA SHEET

CLIENT SAMPLE NO. 52

MR08-EB012509

Lab Name: EMPIRICAL LABS Contract: CH2MHILL

Lab Code: NA Case No.: NA SAS No.: NA SDG No.: LEJEUNE056

Matrix: (soil/water) WATER Lab Sample ID: 0901201-52

Sample wt/vol: 5.000 (g/mL) ML Lab File ID: 0120152

Level: (low/med) LOW Date Sampled: 01/25/09 07:45

% Moisture: not dec. _____ Date Analyzed: 01/31/09 23:23

GC Column: RTX-VRX ID: 0.25 (mm) Dilution Factor: 1.0

Soil Extract Volume:_____(uL) Soil Aliquot Volume: _____(uL)

CONCENTRATION UNITS: (ug/L or ug/Kg) UG/L

CAS NO.	COMPOUND	MDL	RL	CONC	Q
108-88-3	Toluene	0.10	1.0		U
120-82-1	1,2,4-Trichlorobenzene	0.10	1.0		U
71-55-6	1,1,1-Trichloroethane	0.17	1.0		U
79-00-5	1,1,2-Trichloroethane	0.10	1.0		U
79-01-6	Trichloroethene	0.13	1.0		U
76-13-1	Trichlorotrifluoroethane	0.18	1.0		U
75-69-4	Trichlorofluoromethane	0.17	1.0		U
75-01-4	Vinyl chloride	0.18	1.0		U
1330-20-7	Xylene(total)	0.22	1.0		U

kw
4/6/09

FORM 1
VOLATILE ORGANICS ANALYSIS DATA SHEET

CLIENT SAMPLE NO. 53

MR08-SS279-09A

Lab Name: EMPIRICAL LABS Contract: CH2MHILL

Lab Code: NA Case No.: NA SAS No.: NA SDG No.: LEJEUNE056

Matrix: (soil/water) SOIL Lab Sample ID: 0901201-53

Sample wt/vol: 4.8 (g/mL) G Lab File ID: 0120153A

Level: (low/med) LOW Date Sampled: 01/25/09 08:40

% Moisture: not dec. 7 Date Analyzed: 02/04/09 05:15

GC Column: RTX-VRX ID: 0.25 (mm) Dilution Factor: 1.0

Soil Extract Volume:_____(uL) Soil Aliquot Volume: _____(uL)

CONCENTRATION UNITS: (ug/L or ug/Kg) UG/KG

CAS NO.	COMPOUND	MDL	RL	CONC	Q
67-64-1	Acetone	2.2	11		U
71-43-2	Benzene	0.53	11	1.2	J
75-27-4	Bromodichloromethane	0.34	11		U
75-25-2	Bromoform	1.1	11		U
74-83-9	Bromomethane	0.81	11		U
78-93-3	2-Butanone	1.6	11		U
75-15-0	Carbon disulfide	1.5	11		U
56-23-5	Carbon tetrachloride	0.99	11		U
108-90-7	Chlorobenzene	0.38	11		U
75-00-3	Chloroethane	1.2	11		U
67-66-3	Chloroform	0.62	11		U
74-87-3	Chloromethane	0.58	11		U
110-82-7	Cyclohexane	0.61	11		U
124-48-1	Dibromochloromethane	0.38	11		U
96-12-8	1,2-Dibromo-3-chloropropane	1.4	5.6		U
106-93-4	1,2-Dibromoethane	0.48	11		U
95-50-1	1,2-Dichlorobenzene	0.42	11		U
541-73-1	1,3-Dichlorobenzene	0.94	11		U
106-46-7	1,4-Dichlorobenzene	0.62	11		U
75-71-8	Dichlorodifluoromethane	1.2	11		U
75-34-3	1,1-Dichloroethane	0.61	11		U
107-06-2	1,2-Dichloroethane	0.52	11		U
75-35-4	1,1-Dichloroethene	1.4	11		U
156-59-2	cis-1,2-Dichloroethene	1.4	11		U
156-60-5	trans-1,2-Dichloroethene	1.2	11		U
78-87-5	1,2-Dichloropropane	0.52	11		U
10061-01-5	cis-1,3-Dichloropropene	0.56	11		U
10061-02-6	trans-1,3-Dichloropropene	0.36	11		U
100-41-4	Ethylbenzene	0.84	11	13	
591-78-6	2-Hexanone	2.6	11		U
98-82-8	Isopropylbenzene	0.99	11		U
79-20-9	Methyl acetate	1.8	11		U
75-09-2	Methylene chloride	0.70	11	114 ~~1.2~~ ~~JB~~	B
108-87-2	Methyl cyclohexane	0.34	11	0.77	J
1634-04-4	Methyl tert-butyl ether	0.36	11		U
108-10-1	4-Methyl-2-pentanone	0.65	11		U
100-42-5	Styrene	0.39	11		U
79-34-5	1,1,2,2-Tetrachloroethane	0.48	11		U
127-18-4	Tetrachloroethene	1.1	11		U

FORM I VOA

RW 02/06/09

FORM 1
VOLATILE ORGANICS ANALYSIS DATA SHEET

CLIENT SAMPLE NO. 53

MR08-SS279-09A

Lab Name: EMPIRICAL LABS Contract: CH2MHILL

Lab Code: NA Case No.: NA SAS No.: NA SDG No.: LEJEUNE056

Matrix: (soil/water) SOIL Lab Sample ID: 0901201-53

Sample wt/vol: 4.8 (g/mL) G Lab File ID: 0120153A

Level: (low/med) LOW Date Sampled: 01/25/09 08:40

% Moisture: not dec. 7 Date Analyzed: 02/04/09 05:15

GC Column: RTX-VRX ID: 0.25 (mm) Dilution Factor: 1.0

Soil Extract Volume:_____(uL) Soil Aliquot Volume: _____(uL)

CONCENTRATION UNITS: (ug/L or ug/Kg) UG/KG

CAS NO.	COMPOUND	MDL	RL	CONC	Q
108-88-3	Toluene	0.97	11	4.5	J
120-82-1	1,2,4-Trichlorobenzene	0.20	11		U
71-55-6	1,1,1-Trichloroethane	1.0	11		U
79-00-5	1,1,2-Trichloroethane	0.39	11		U
79-01-6	Trichloroethene	0.96	11		U
76-13-1	Trichlorotrifluoroethane	0.62	11		U
75-69-4	Trichlorofluoromethane	1.1	11		U
75-01-4	Vinyl chloride	1.2	11		U
1330-20-7	Xylene(total)	0.79	11		U

LW
4/6/09

FORM 1
VOLATILE ORGANICS ANALYSIS DATA SHEET

CLIENT SAMPLE NO. 54

MR08-SS279D-09A

Lab Name: EMPIRICAL LABS Contract: CH2MHILL

Lab Code: NA Case No.: NA SAS No.: NA SDG No.: LEJEUNE056

Matrix: (soil/water) SOIL Lab Sample ID: 0901201-54

Sample wt/vol: 5.2 (g/mL) G Lab File ID: 0120154A

Level: (low/med) LOW Date Sampled: 01/25/09 08:40

% Moisture: not dec. 6 Date Analyzed: 02/04/09 05:55

GC Column: RTX-VRX ID: 0.25 (mm) Dilution Factor: 1.0

Soil Extract Volume:_____(uL) Soil Aliquot Volume: _____(uL)

CONCENTRATION UNITS: (ug/L or ug/Kg) UG/KG

CAS NO.	COMPOUND	MDL	RL	CONC	Q	
67-64-1	Acetone	2.0	10	10U ~~9.6~~	~~J~~	B
71-43-2	Benzene	0.48	10	1.3	J	
75-27-4	Bromodichloromethane	0.30	10		U	
75-25-2	Bromoform	1.0	10		U	
74-83-9	Bromomethane	0.73	10		U	
78-93-3	2-Butanone	1.4	10		U	
75-15-0	Carbon disulfide	1.3	10		U	
56-23-5	Carbon tetrachloride	0.89	10		U	
108-90-7	Chlorobenzene	0.34	10		U	
75-00-3	Chloroethane	1.1	10		U	
67-66-3	Chloroform	0.56	10		U	
74-87-3	Chloromethane	0.53	10		U	
110-82-7	Cyclohexane	0.55	10	0.80	J	
124-48-1	Dibromochloromethane	0.34	10		U	
96-12-8	1,2-Dibromo-3-chloropropane	1.2	5.1		~~U~~ UJ	ISL
106-93-4	1,2-Dibromoethane	0.44	10		U	
95-50-1	1,2-Dichlorobenzene	0.38	10		~~U~~ UJ	ISL
541-73-1	1,3-Dichlorobenzene	0.85	10		U	
106-46-7	1,4-Dichlorobenzene	0.56	10		U	
75-71-8	Dichlorodifluoromethane	1.1	10		U	
75-34-3	1,1-Dichloroethane	0.55	10		U	
107-06-2	1,2-Dichloroethane	0.47	10		U	
75-35-4	1,1-Dichloroethene	1.2	10		U	
156-59-2	cis-1,2-Dichloroethene	1.2	10		U	
156-60-5	trans-1,2-Dichloroethene	1.1	10		U	
78-87-5	1,2-Dichloropropane	0.47	10		U	
10061-01-5	cis-1,3-Dichloropropene	0.51	10		U	
10061-02-6	trans-1,3-Dichloropropene	0.32	10		U	
100-41-4	Ethylbenzene	0.76	10	10		
591-78-6	2-Hexanone	2.3	10		U	
98-82-8	Isopropylbenzene	0.89	10		U	
79-20-9	Methyl acetate	1.6	10		U	
75-09-2	Methylene chloride	0.63	10	10U ~~1.4~~	~~JB~~	B1
108-87-2	Methyl cyclohexane	0.30	10	0.60	J	
1634-04-4	Methyl tert-butyl ether	0.32	10		U	
108-10-1	4-Methyl-2-pentanone	0.59	10		U	
100-42-5	Styrene	0.36	10		U	
79-34-5	1,1,2,2-Tetrachloroethane	0.44	10		~~U~~ UJ	ISS
127-18-4	Tetrachloroethene	0.98	10		U	

ew 11/6/09

FORM 1
VOLATILE ORGANICS ANALYSIS DATA SHEET

CLIENT SAMPLE NO. 54

MR08-SS279D-09A

Lab Name: EMPIRICAL LABS Contract: CH2MHILL

Lab Code: NA Case No.: NA SAS No.: NA SDG No.: LEJEUNE056

Matrix: (soil/water) SOIL Lab Sample ID: 0901201-54

Sample wt/vol: 5.2 (g/mL) G Lab File ID: 0120154A

Level: (low/med) LOW Date Sampled: 01/25/09 08:40

% Moisture: not dec. 6 Date Analyzed: 02/04/09 05:55

GC Column: RTX-VRX ID: 0.25 (mm) Dilution Factor: 1.0

Soil Extract Volume:_____(uL) Soil Aliquot Volume: _____(uL)

CONCENTRATION UNITS: (ug/L or ug/Kg) UG/KG

CAS NO.	COMPOUND	MDL	RL	CONC	Q
108-88-3	Toluene	0.87	10	4.2	J
120-82-1	1,2,4-Trichlorobenzene	0.18	10		~~U~~ J ISL
71-55-6	1,1,1-Trichloroethane	0.91	10		U
79-00-5	1,1,2-Trichloroethane	0.36	10		U
79-01-6	Trichloroethene	0.86	10		U
76-13-1	Trichlorotrifluoroethane	0.56	10		U
75-69-4	Trichlorofluoromethane	0.96	10		U
75-01-4	Vinyl chloride	1.1	10		U
1330-20-7	Xylene(total)	0.71	10		U

lew
4/6/09

FORM 1
VOLATILE ORGANICS ANALYSIS DATA SHEET

CLIENT SAMPLE NO.

MR08-IS27
9-1-2-09A

55

Lab Name: EMPIRICAL LABS Contract: CH2MHILL

Lab Code: NA Case No.: NA SAS No.: NA SDG No.: LEJEUNE056

Matrix: (soil/water) SOIL Lab Sample ID: 0901201-55

Sample wt/vol: 3.9 (g/mL) G Lab File ID: 0120155A

Level: (low/med) LOW Date Sampled: 01/25/09 08:50

% Moisture: not dec. 12 Date Analyzed: 02/04/09 08:34

GC Column: RTX-VRX ID: 0.25 (mm) Dilution Factor: 1.0

Soil Extract Volume:_____(uL) Soil Aliquot Volume: _____(uL)

Use medium level

CONCENTRATION UNITS: (ug/L or ug/Kg) UG/KG

CAS NO.	COMPOUND	MDL	RL	CONC	Q	
67-64-1	Acetone	2.9	14	14	~~J~~ UJ	SSI BL SSL
71-43-2	Benzene	0.68	14		U	
75-27-4	Bromodichloromethane	0.44	14		U	
75-25-2	Bromoform	1.4	14		U	
74-83-9	Bromomethane	1.0	14		U	
78-93-3	2-Butanone	2.0	14		U	
75-15-0	Carbon disulfide	1.9	14		U	
56-23-5	Carbon tetrachloride	1.3	14		U	
108-90-7	Chlorobenzene	0.50	14		U	
75-00-3	Chloroethane	1.6	14		U	
67-66-3	Chloroform	0.80	14		U	
74-87-3	Chloromethane	0.76	14		U	
110-82-7	Cyclohexane	0.79	14		U	
124-48-1	Dibromochloromethane	0.50	14		U	
96-12-8	1,2-Dibromo-3-chloropropane	1.7	7.3		U	
106-93-4	1,2-Dibromoethane	0.63	14		U	
95-50-1	1,2-Dichlorobenzene	0.54	14		U	
541-73-1	1,3-Dichlorobenzene	1.2	14		U	
106-46-7	1,4-Dichlorobenzene	0.80	14		U	
75-71-8	Dichlorodifluoromethane	1.6	14		U	
75-34-3	1,1-Dichloroethane	0.79	14		U	
107-06-2	1,2-Dichloroethane	0.67	14		U	
75-35-4	1,1-Dichloroethene	1.7	14		U	
156-59-2	cis-1,2-Dichloroethene	1.7	14		U	
156-60-5	trans-1,2-Dichloroethene	1.6	14		U	
78-87-5	1,2-Dichloropropane	0.67	14		U	
10061-01-5	cis-1,3-Dichloropropene	0.73	14		U	
10061-02-6	trans-1,3-Dichloropropene	0.47	14		U	
100-41-4	Ethylbenzene	1.1	14		U	
591-78-6	2-Hexanone	3.4	14		U	
98-82-8	Isopropylbenzene	1.3	14		U	
79-20-9	Methyl acetate	2.3	14		U	
75-09-2	Methylene chloride	0.90	14	14UJ	2.2 ~~JB~~ SSL	BL
108-87-2	Methyl cyclohexane	0.44	14		UUJ	SS
1634-04-4	Methyl tert-butyl ether	0.47	14		U	
108-10-1	4-Methyl-2-pentanone	0.84	14		U	
100-42-5	Styrene	0.51	14		U	
79-34-5	1,1,2,2-Tetrachloroethane	0.63	14		U	
127-18-4	Tetrachloroethene	1.4	14		U	

DL

4/6/09

FORM 1
VOLATILE ORGANICS ANALYSIS DATA SHEET

CLIENT SAMPLE NO. 55

MR08-IS27
9-1-2-09A

Lab Name: EMPIRICAL LABS Contract: CH2MHILL

Lab Code: NA Case No.: NA SAS No.: NA SDG No.: LEJEUNE056

Matrix: (soil/water) SOIL Lab Sample ID: 0901201-55

Sample wt/vol: 3.9 (g/mL) G Lab File ID: 0120155A

Level: (low/med) LOW Date Sampled: 01/25/09 08:50

% Moisture: not dec. 12 Date Analyzed: 02/04/09 06:34

GC Column: RTX-VRX ID: 0.25 (mm) Dilution Factor: 1.0

Soil Extract Volume:_____(uL) Soil Aliquot Volume: _____(uL)

Use medium level

CONCENTRATION UNITS: (ug/L or ug/Kg) UG/KG

CAS NO.	COMPOUND	MDL	RL	CONC	Q
108-88-3	Toluene	1.2	14		U
120-82-1	1,2,4-Trichlorobenzene	0.26	14		U
71-55-6	1,1,1-Trichloroethane	1.3	14		U
79-00-5	1,1,2-Trichloroethane	0.51	14		U
79-01-6	Trichloroethene	1.2	14		U
76-13-1	Trichlorotrifluoroethane	0.80	14		U
75-69-4	Trichlorofluoromethane	1.4	14		U
75-01-4	Vinyl chloride	1.6	14		U
1330-20-7	Xylene(total)	1.0	14		U

ks SSL

FORM I VOA

CW 4/6/09

FORM 1
VOLATILE ORGANICS ANALYSIS DATA SHEET

CLIENT SAMPLE NO.

MR08-IS27
9-1-2-09AD

55DL

Lab Name: EMPIRICAL LABS Contract: CH2MHILL

Lab Code: NA Case No.: NA SAS No.: NA SDG No.: LEJEUNE056

Matrix: (soil/water) SOIL Lab Sample ID: 0901201-55DL

Sample wt/vol: 5.2 (g/mL) G Lab File ID: 0120155D

Level: (low/med) MED Date Sampled: 01/25/09 08:50

% Moisture: not dec. 12 Date Analyzed: 02/06/09 20:35

GC Column: RTX-VRX ID: 0.25 (mm) Dilution Factor: 1.0

Soil Extract Volume: 5000(uL) Soil Aliquot Volume: 100(uL)

CONCENTRATION UNITS: (ug/L or ug/Kg) UG/KG

CAS NO.	COMPOUND	MDL	RL	CONC	Q
67-64-1	Acetone	110	540		U
71-43-2	Benzene	26	540		U
75-27-4	Bromodichloromethane	16	540		U
75-25-2	Bromoform	54	540		U
74-83-9	Bromomethane	39	540		U
78-93-3	2-Butanone	76	540		U
75-15-0	Carbon disulfide	71	540		U
56-23-5	Carbon tetrachloride	48	540		U
108-90-7	Chlorobenzene	18	540		U
75-00-3	Chloroethane	60	540		U
67-66-3	Chloroform	30	540		U
74-87-3	Chloromethane	28	540		U
110-82-7	Cyclohexane	29	540		U
124-48-1	Dibromochloromethane	18	540		U
96-12-8	1,2-Dibromo-3-chloropropane	66	270		U
106-93-4	1,2-Dibromoethane	23	540		U
95-50-1	1,2-Dichlorobenzene	20	540		U
541-73-1	1,3-Dichlorobenzene	46	540		U
106-46-7	1,4-Dichlorobenzene	30	540		U
75-71-8	Dichlorodifluoromethane	60	540		U UJ CC
75-34-3	1,1-Dichloroethane	29	540		U
107-06-2	1,2-Dichloroethane	25	540		U
75-35-4	1,1-Dichloroethene	66	540		U
156-59-2	cis-1,2-Dichloroethene	66	540		U
156-60-5	trans-1,2-Dichloroethene	60	540		U
78-87-5	1,2-Dichloropropane	25	540		U
10061-01-5	cis-1,3-Dichloropropene	27	540		U
10061-02-6	trans-1,3-Dichloropropene	17	540		U
100-41-4	Ethylbenzene	41	540		U
591-78-6	2-Hexanone	120	540		U
98-82-8	Isopropylbenzene	48	540		U
79-20-9	Methyl acetate	87	540		U
75-09-2	Methylene chloride	34	540	3300	~~B~~
108-87-2	Methyl cyclohexane	16	540		U
1634-04-4	Methyl tert-butyl ether	17	540		U
108-10-1	4-Methyl-2-pentanone	32	540		U
100-42-5	Styrene	19	540		U
79-34-5	1,1,2,2-Tetrachloroethane	23	540		U
127-18-4	Tetrachloroethene	53	540		U

4/6/09

FORM 1
VOLATILE ORGANICS ANALYSIS DATA SHEET

CLIENT SAMPLE NO. 55DL

MR08-IS27
9-1-2-09AD

Lab Name: EMPIRICAL LABS Contract: CH2MHILL

Lab Code: NA Case No.: NA SAS No.: NA SDG No.: LEJEUNE056

Matrix: (soil/water) SOIL Lab Sample ID: 0901201-55DL

Sample wt/vol: 5.2 (g/mL) G Lab File ID: 0120155D

Level: (low/med) MED Date Sampled: 01/25/09 08:50

% Moisture: not dec. 12 Date Analyzed: 02/06/09 20:35

GC Column: RTX-VRX ID: 0.25 (mm) Dilution Factor: 1.0

Soil Extract Volume: 5000(uL) Soil Aliquot Volume: 100(uL)

CONCENTRATION UNITS: (ug/L or ug/Kg) UG/KG

CAS NO.	COMPOUND	MDL	RL	CONC	Q
108-88-3	Toluene	47	540	61	J
120-82-1	1,2,4-Trichlorobenzene	9.8	540		U
71-55-6	1,1,1-Trichloroethane	49	540		U
79-00-5	1,1,2-Trichloroethane	19	540		U
79-01-6	Trichloroethene	46	540		U
76-13-1	Trichlorotrifluoroethane	30	540		U
75-69-4	Trichlorofluoromethane	52	540		U
75-01-4	Vinyl chloride	60	540		U
1330-20-7	Xylene(total)	38	540		U

LW
4/6/09

FORM 1
VOLATILE ORGANICS ANALYSIS DATA SHEET

CLIENT SAMPLE NO. 56

MR08-IS27
9D-1-2-09A

Lab Name: EMPIRICAL LABS Contract: CH2MHILL

Lab Code: NA Case No.: NA SAS No.: NA SDG No.: LEJEUNE056

Matrix: (soil/water) SOIL Lab Sample ID: 0901201-56

Sample wt/vol: 5.1 (g/mL) G Lab File ID: 0120156A

Level: (low/med) LOW Date Sampled: 01/25/09 08:50

% Moisture: not dec. 19 Date Analyzed: 02/04/09 07:13

GC Column: RTX-VRX ID: 0.25 (mm) Dilution Factor: 1.0

Soil Extract Volume:_____(uL) Soil Aliquot Volume: _____(uL)

CONCENTRATION UNITS: (ug/L or ug/Kg) UG/KG

CAS NO.	COMPOUND	MDL	RL	CONC	Q	
67-64-1	Acetone	2.4	12	12	U	BL
71-43-2	Benzene	0.57	12		U	
75-27-4	Bromodichloromethane	0.36	12		U	
75-25-2	Bromoform	1.2	12		U	
74-83-9	Bromomethane	0.87	12		U	
78-93-3	2-Butanone	1.7	12		U	
75-15-0	Carbon disulfide	1.6	12		U	
56-23-5	Carbon tetrachloride	1.1	12		U	
108-90-7	Chlorobenzene	0.41	12		U	
75-00-3	Chloroethane	1.3	12		U	
67-66-3	Chloroform	0.66	12		U	
74-87-3	Chloromethane	0.63	12		U	
110-82-7	Cyclohexane	0.65	12		U	
124-48-1	Dibromochloromethane	0.41	12		U	
96-12-8	1,2-Dibromo-3-chloropropane	1.4	6.0		U	
106-93-4	1,2-Dibromoethane	0.52	12		U	
95-50-1	1,2-Dichlorobenzene	0.45	12		U	
541-73-1	1,3-Dichlorobenzene	1.0	12		U	
106-46-7	1,4-Dichlorobenzene	0.66	12		U	
75-71-8	Dichlorodifluoromethane	1.3	12		U	
75-34-3	1,1-Dichloroethane	0.65	12		U	
107-06-2	1,2-Dichloroethane	0.56	12		U	
75-35-4	1,1-Dichloroethene	1.4	12		U	
156-59-2	cis-1,2-Dichloroethene	1.4	12		U	
156-60-5	trans-1,2-Dichloroethene	1.3	12		U	
78-87-5	1,2-Dichloropropane	0.56	12		U	
10061-01-5	cis-1,3-Dichloropropene	0.60	12		U	
10061-02-6	trans-1,3-Dichloropropene	0.39	12		U	
100-41-4	Ethylbenzene	0.90	12		U	
591-78-6	2-Hexanone	2.8	12		U	
98-82-8	Isopropylbenzene	1.1	12		U	
79-20-9	Methyl acetate	1.9	12		U	
75-09-2	Methylene chloride	0.75	12	12U	~~1.5 JB~~	BL
108-87-2	Methyl cyclohexane	0.36	12		U	
1634-04-4	Methyl tert-butyl ether	0.39	12		U	
108-10-1	4-Methyl-2-pentanone	0.70	12		U	
100-42-5	Styrene	0.42	12		U	
79-34-5	1,1,2,2-Tetrachloroethane	0.52	12		U	
127-18-4	Tetrachloroethene	1.2	12		U	

fub 4/1/09

FORM 1
VOLATILE ORGANICS ANALYSIS DATA SHEET

CLIENT SAMPLE NO.

MR08-IS27
9D-1-2-09A

56

Lab Name: EMPIRICAL LABS Contract: CH2MHILL

Lab Code: NA Case No.: NA SAS No.: NA SDG No.: LEJEUNE056

Matrix: (soil/water) SOIL Lab Sample ID: 0901201-56

Sample wt/vol: 5.1 (g/mL) G Lab File ID: 0120156A

Level: (low/med) LOW Date Sampled: 01/25/09 08:50

% Moisture: not dec. 19 Date Analyzed: 02/04/09 07:13

GC Column: RTX-VRX ID: 0.25 (mm) Dilution Factor: 1.0

Soil Extract Volume:_____(uL) Soil Aliquot Volume: _____(uL)

CONCENTRATION UNITS: (ug/L or ug/Kg) UG/KG

CAS NO.	COMPOUND	MDL	RL	CONC	Q
108-88-3	Toluene	1.0	12		U
120-82-1	1,2,4-Trichlorobenzene	0.22	12		U
71-55-6	1,1,1-Trichloroethane	1.1	12		U
79-00-5	1,1,2-Trichloroethane	0.42	12		U
79-01-6	Trichloroethene	1.0	12		U
76-13-1	Trichlorotrifluoroethane	0.66	12		U
75-69-4	Trichlorofluoromethane	1.1	12		U
75-01-4	Vinyl chloride	1.3	12		U
1330-20-7	Xylene(total)	0.84	12		U

RW
4/6/09

FORM 1
VOLATILE ORGANICS ANALYSIS DATA SHEET

CLIENT SAMPLE NO.

57

MR08-IS35
2-1-2-09A

Lab Name: EMPIRICAL LABS Contract: CH2MHILL

Lab Code: NA Case No.: NA SAS No.: NA SDG No.: LEJEUNE056

Matrix: (soil/water) SOIL Lab Sample ID: 0901201-57

Sample wt/vol: 5.8 (g/mL) G Lab File ID: 0120157A

Level: (low/med) LOW Date Sampled: 01/25/09 09:30

% Moisture: not dec. 11 Date Analyzed: 02/04/09 07:52

GC Column: RTX-VRX ID: 0.25 (mm) Dilution Factor: 1.0

Soil Extract Volume:_____(uL) Soil Aliquot Volume: _____(uL)

CONCENTRATION UNITS: (ug/L or ug/Kg) UG/KG

CAS NO.	COMPOUND	MDL	RL	CONC	Q
67-64-1	Acetone	1.9	9.6	36	
71-43-2	Benzene	0.45	9.6		U
75-27-4	Bromodichloromethane	0.29	9.6		U
75-25-2	Bromoform	0.96	9.6		U
74-83-9	Bromomethane	0.69	9.6		U
78-93-3	2-Butanone	1.3	9.6	3.6	J
75-15-0	Carbon disulfide	1.2	9.6		U
56-23-5	Carbon tetrachloride	0.84	9.6		U
108-90-7	Chlorobenzene	0.33	9.6		U
75-00-3	Chloroethane	1.0	9.6		U
67-66-3	Chloroform	0.53	9.6		U
74-87-3	Chloromethane	0.50	9.6		U
110-82-7	Cyclohexane	0.52	9.6		U
124-48-1	Dibromochloromethane	0.33	9.6		U
96-12-8	1,2-Dibromo-3-chloropropane	1.2	4.8		U
106-93-4	1,2-Dibromoethane	0.41	9.6		U
95-50-1	1,2-Dichlorobenzene	0.36	9.6		U
541-73-1	1,3-Dichlorobenzene	0.81	9.6		U
106-46-7	1,4-Dichlorobenzene	0.53	9.6		U
75-71-8	Dichlorodifluoromethane	1.0	9.6		U
75-34-3	1,1-Dichloroethane	0.52	9.6		U
107-06-2	1,2-Dichloroethane	0.44	9.6		U
75-35-4	1,1-Dichloroethene	1.2	9.6		U
156-59-2	cis-1,2-Dichloroethene	1.2	9.6		U
156-60-5	trans-1,2-Dichloroethene	1.0	9.6		U
78-87-5	1,2-Dichloropropane	0.44	9.6		U
10061-01-5	cis-1,3-Dichloropropene	0.48	9.6		U
10061-02-6	trans-1,3-Dichloropropene	0.31	9.6		U
100-41-4	Ethylbenzene	0.72	9.6		U
591-78-6	2-Hexanone	2.2	9.6		U
98-82-8	Isopropylbenzene	0.84	9.6		U
79-20-9	Methyl acetate	1.5	9.6		U
75-09-2	Methylene chloride	0.60	9.6	9.6 ~~1.0~~	~~JB~~ B
108-87-2	Methyl cyclohexane	0.29	9.6		U
1634-04-4	Methyl tert-butyl ether	0.31	9.6		U
108-10-1	4-Methyl-2-pentanone	0.56	9.6		U
100-42-5	Styrene	0.34	9.6		U
79-34-5	1,1,2,2-Tetrachloroethane	0.41	9.6		U
127-18-4	Tetrachloroethene	0.93	9.6		U

LW 2/6/09

FORM 1
VOLATILE ORGANICS ANALYSIS DATA SHEET

CLIENT SAMPLE NO. 57

MR08-IS35
2-1-2-09A

Lab Name: EMPIRICAL LABS Contract: CH2MHILL

Lab Code: NA Case No.: NA SAS No.: NA SDG No.: LEJEUNE056

Matrix: (soil/water) SOIL Lab Sample ID: 0901201-57

Sample wt/vol: 5.8 (g/mL) G Lab File ID: 0120157A

Level: (low/med) LOW Date Sampled: 01/25/09 09:30

% Moisture: not dec. 11 Date Analyzed: 02/04/09 07:52

GC Column: RTX-VRX ID: 0.25 (mm) Dilution Factor: 1.0

Soil Extract Volume:_____(uL) Soil Aliquot Volume: _____(uL)

CONCENTRATION UNITS: (ug/L or ug/Kg) UG/KG

CAS NO.	COMPOUND	MDL	RL	CONC	Q
108-88-3	Toluene	0.82	9.6		U
120-82-1	1,2,4-Trichlorobenzene	0.17	9.6		U
71-55-6	1,1,1-Trichloroethane	0.86	9.6		U
79-00-5	1,1,2-Trichloroethane	0.34	9.6		U
79-01-6	Trichloroethene	0.82	9.6		U
76-13-1	Trichlorotrifluoroethane	0.53	9.6		U
75-69-4	Trichlorofluoromethane	0.91	9.6		U
75-01-4	Vinyl chloride	1.0	9.6		U
1330-20-7	Xylene(total)	0.67	9.6		U

MW
4/6/09

FORM 1
VOLATILE ORGANICS ANALYSIS DATA SHEET

CLIENT SAMPLE NO. 58

MR08-SS352-09A

Lab Name: EMPIRICAL LABS Contract: CH2MHILL

Lab Code: NA Case No.: NA SAS No.: NA SDG No.: LEJEUNE056

Matrix: (soil/water) SOIL Lab Sample ID: 0901201-58

Sample wt/vol: 3.5 (g/mL) G Lab File ID: 0120158A

Level: (low/med) LOW Date Sampled: 01/25/09 09:25

% Moisture: not dec. 17 Date Analyzed: 02/04/09 08:31

GC Column: RTX-VRX ID: 0.25 (mm) Dilution Factor: 1.0

Soil Extract Volume:_____(uL) Soil Aliquot Volume:_____(uL)

use reanalysis

CONCENTRATION UNITS: (ug/L or ug/Kg) UG/KG

CAS NO.	COMPOUND	MDL	RL	CONC	Q	
67-64-1	Acetone	3.5	17	320	J	SSL
71-43-2	Benzene	0.82	17		U UJ	
75-27-4	Bromodichloromethane	0.52	17		U	
75-25-2	Bromoform	1.7	17		U	
74-83-9	Bromomethane	1.2	17		U	
78-93-3	2-Butanone	2.4	17		U	
75-15-0	Carbon disulfide	2.3	17		U	
56-23-5	Carbon tetrachloride	1.5	17		U	
108-90-7	Chlorobenzene	0.59	17		U	
75-00-3	Chloroethane	1.9	17		U	
67-66-3	Chloroform	0.96	17		U	
74-87-3	Chloromethane	0.91	17		U	
110-82-7	Cyclohexane	0.94	17		U	
124-48-1	Dibromochloromethane	0.59	17		U	
96-12-8	1,2-Dibromo-3-chloropropane	2.1	8.7		U UJ	ISL
106-93-4	1,2-Dibromoethane	0.75	17		U UJ	SSL
95-50-1	1,2-Dichlorobenzene	0.65	17		U UJ	ISL
541-73-1	1,3-Dichlorobenzene	1.5	17		U	
106-46-7	1,4-Dichlorobenzene	0.96	17		U	
75-71-8	Dichlorodifluoromethane	1.9	17		U UJ	SSL
75-34-3	1,1-Dichloroethane	0.94	17		U	
107-06-2	1,2-Dichloroethane	0.80	17		U	
75-35-4	1,1-Dichloroethene	2.1	17		U	
156-59-2	cis-1,2-Dichloroethene	2.1	17		U	
156-60-5	trans-1,2-Dichloroethene	1.9	17		U	
78-87-5	1,2-Dichloropropane	0.80	17		U	
10061-01-5	cis-1,3-Dichloropropene	0.87	17		U	
10061-02-6	trans-1,3-Dichloropropene	0.56	17		U	
100-41-4	Ethylbenzene	1.3	17		U	
591-78-6	2-Hexanone	4.0	17		U	
98-82-8	Isopropylbenzene	1.5	17		U	
79-20-9	Methyl acetate	2.8	17		U	
75-09-2	Methylene chloride	1.1	17	17 UJ	~~1.9 JB~~	SSL
108-87-2	Methyl cyclohexane	0.52	17		U UJ	SSL
1634-04-4	Methyl tert-butyl ether	0.56	17		U	
108-10-1	4-Methyl-2-pentanone	1.0	17		U	
100-42-5	Styrene	0.61	17		U	
79-34-5	1,1,2,2-Tetrachloroethane	0.75	17		U UJ	ISL
127-18-4	Tetrachloroethene	1.7	17		U UJ	SSL

FORM I VOA

[illegible] 2/1/09

FORM 1
VOLATILE ORGANICS ANALYSIS DATA SHEET

CLIENT SAMPLE NO. 58

MR08-SS352-09A

Lab Name: EMPIRICAL LABS Contract: CH2MHILL

Lab Code: NA Case No.: NA SAS No.: NA SDG No.: LEJEUNE056

Matrix: (soil/water) SOIL Lab Sample ID: 0901201-58

Sample wt/vol: 3.5 (g/mL) G Lab File ID: 0120158A

Level: (low/med) LOW Date Sampled: 01/25/09 09:25

% Moisture: not dec. 17 Date Analyzed: 02/04/09 08:31

GC Column: RTX-VRX ID: 0.25 (mm) Dilution Factor: 1.0

Soil Extract Volume:_____(uL) Soil Aliquot Volume: _____(uL)

use reanalyst

CONCENTRATION UNITS: (ug/L or ug/Kg) UG/KG

CAS NO.	COMPOUND	MDL	RL	CONC	Q	
108-88-3	Toluene	1.5	17		U UJ	SSL
120-82-1	1,2,4-Trichlorobenzene	0.31	17		U UJ	SSL
71-55-6	1,1,1-Trichloroethane	1.6	17		U	SSL
79-00-5	1,1,2-Trichloroethane	0.61	17		U	
79-01-6	Trichloroethene	1.5	17		U	
76-13-1	Trichlorotrifluoroethane	0.96	17		U	
75-69-4	Trichlorofluoromethane	1.7	17		U	
75-01-4	Vinyl chloride	1.9	17		U	
1330-20-7	Xylene(total)	1.2	17		U	

Jeu 4/6/09

FORM 1
VOLATILE ORGANICS ANALYSIS DATA SHEET

CLIENT SAMPLE NO.

MR08-SS352-09ARE 58RE

Lab Name: EMPIRICAL LABS Contract: CH2MHILL

Lab Code: NA Case No.: NA SAS No.: NA SDG No.: LEJEUNE056

Matrix: (soil/water) SOIL Lab Sample ID: 0901201-58RE

Sample wt/vol: 4.6 (g/mL) G Lab File ID: 0120158B

Level: (low/med) LOW Date Sampled: 01/25/09 09:25

% Moisture: not dec. 17 Date Analyzed: 02/04/09 21:09

GC Column: RTX-VRX ID: 0.25 (mm) Dilution Factor: 1.0

Soil Extract Volume:_____(uL) Soil Aliquot Volume: _____(uL)

CONCENTRATION UNITS: (ug/L or ug/Kg) UG/KG

CAS NO.	COMPOUND	MDL	RL	CONC	Q	
67-64-1	Acetone	2.6	13	330	J	SSL
71-43-2	Benzene	0.62	13		U UJ	
75-27-4	Bromodichloromethane	0.39	13		U	
75-25-2	Bromoform	1.3	13		U	
74-83-9	Bromomethane	0.95	13		U	
78-93-3	2-Butanone	1.8	13	23	J	
75-15-0	Carbon disulfide	1.7	13		U UJ	
56-23-5	Carbon tetrachloride	1.2	13		U	
108-90-7	Chlorobenzene	0.45	13		U	
75-00-3	Chloroethane	1.4	13		U	
67-66-3	Chloroform	0.72	13		U	
74-87-3	Chloromethane	0.68	13		U	
110-82-7	Cyclohexane	0.71	13		U	
124-48-1	Dibromochloromethane	0.45	13		U	
96-12-8	1,2-Dibromo-3-chloropropane	1.6	6.6		~~U~~ UJ	IS
106-93-4	1,2-Dibromoethane	0.56	13		~~U~~ UJ	SS
95-50-1	1,2-Dichlorobenzene	0.49	13		U UJ	IS
541-73-1	1,3-Dichlorobenzene	1.1	13		U	
106-46-7	1,4-Dichlorobenzene	0.72	13		U	
75-71-8	Dichlorodifluoromethane	1.4	13		U	SS
75-34-3	1,1-Dichloroethane	0.71	13		U	
107-06-2	1,2-Dichloroethane	0.60	13		U	
75-35-4	1,1-Dichloroethene	1.6	13		U	
156-59-2	cis-1,2-Dichloroethene	1.6	13		U	
156-60-5	trans-1,2-Dichloroethene	1.4	13		U	
78-87-5	1,2-Dichloropropane	0.60	13		U	
10061-01-5	cis-1,3-Dichloropropene	0.66	13		U	
10061-02-6	trans-1,3-Dichloropropene	0.42	13		U	
100-41-4	Ethylbenzene	0.98	13		U	
591-78-6	2-Hexanone	3.0	13		U	
98-82-8	Isopropylbenzene	1.2	13		U	
79-20-9	Methyl acetate	2.1	13		U	
75-09-2	Methylene chloride	0.81	13	13 UJ	~~1.5 JB~~ SSL	BL
108-87-2	Methyl cyclohexane	0.39	13		U UJ	SS
1634-04-4	Methyl tert-butyl ether	0.42	13		U	
108-10-1	4-Methyl-2-pentanone	0.76	13		U	
100-42-5	Styrene	0.46	13		U	
79-34-5	1,1,2,2-Tetrachloroethane	0.56	13		~~U~~ UJ	IS
127-18-4	Tetrachloroethene	1.3	13		~~U~~ UJ	SS

FORM I VOA

46609

FORM 1
VOLATILE ORGANICS ANALYSIS DATA SHEET

CLIENT SAMPLE NO. 58RE

MR08-SS352-09ARE

Lab Name: EMPIRICAL LABS Contract: CH2MHILL

Lab Code: NA Case No.: NA SAS No.: NA SDG No.: LEJEUNE056

Matrix: (soil/water) SOIL Lab Sample ID: 0901201-58RE

Sample wt/vol: 4.6 (g/mL) G Lab File ID: 0120158B

Level: (low/med) LOW Date Sampled: 01/25/09 09:25

% Moisture: not dec. 17 Date Analyzed: 02/04/09 21:09

GC Column: RTX-VRX ID: 0.25 (mm) Dilution Factor: 1.0

Soil Extract Volume:_____(uL) Soil Aliquot Volume: _____(uL)

CONCENTRATION UNITS: (ug/L or ug/Kg) UG/KG

CAS NO.	COMPOUND	MDL	RL	CONC	Q	
108-88-3	Toluene	1.1	13		~~U~~ UJ	SSL
120-82-1	1,2,4-Trichlorobenzene	0.24	13		~~U~~ UJ	SSL
71-55-6	1,1,1-Trichloroethane	1.2	13		U	SSL
79-00-5	1,1,2-Trichloroethane	0.46	13		U	
79-01-6	Trichloroethene	1.1	13		U	
76-13-1	Trichlorotrifluoroethane	0.72	13		U	
75-69-4	Trichlorofluoromethane	1.2	13		U	
75-01-4	Vinyl chloride	1.4	13		U	
1330-20-7	Xylene(total)	0.92	13		U	

FORM I VOA

MW 4/16/09

FORM 1
VOLATILE ORGANICS ANALYSIS DATA SHEET

CLIENT SAMPLE NO. 59

MR08-SS371-09A

Lab Name: EMPIRICAL LABS Contract: CH2MHILL

Lab Code: NA Case No.: NA SAS No.: NA SDG No.: LEJEUNE056

Matrix: (soil/water) SOIL Lab Sample ID: 0901201-59

Sample wt/vol: 3.4 (g/mL) G Lab File ID: 0120159A

Level: (low/med) LOW Date Sampled: 01/25/09 09:45

% Moisture: not dec. 17 Date Analyzed: 02/04/09 09:10 Use reanalysis

GC Column: RTX-VRX ID: 0.25 (mm) Dilution Factor: 1.0

Soil Extract Volume:_____(uL) Soil Aliquot Volume: _____(uL)

CONCENTRATION UNITS: (ug/L or ug/Kg) UG/KG

CAS NO.	COMPOUND	MDL	RL	CONC	Q	
67-64-1	Acetone	3.5	18	310	J	SSL
71-43-2	Benzene	0.83	18		U UJ	
75-27-4	Bromodichloromethane	0.53	18		U	
75-25-2	Bromoform	1.8	18		U	
74-83-9	Bromomethane	1.3	18		U	
78-93-3	2-Butanone	2.5	18		U	
75-15-0	Carbon disulfide	2.3	18		U	
56-23-5	Carbon tetrachloride	1.6	18		U	
108-90-7	Chlorobenzene	0.60	18		U	
75-00-3	Chloroethane	1.9	18		U	
67-66-3	Chloroform	0.97	18		U	
74-87-3	Chloromethane	0.92	18		U	
110-82-7	Cyclohexane	0.96	18		U	
124-48-1	Dibromochloromethane	0.60	18		U	
96-12-8	1,2-Dibromo-3-chloropropane	2.1	8.8		~~U~~ UJ	FSL
106-93-4	1,2-Dibromoethane	0.76	18		~~U~~ UJ	SS
95-50-1	1,2-Dichlorobenzene	0.66	18		U UJ	SSL
541-73-1	1,3-Dichlorobenzene	1.5	18		U	
106-46-7	1,4-Dichlorobenzene	0.97	18		U	SS
75-71-8	Dichlorodifluoromethane	1.9	18		U	
75-34-3	1,1-Dichloroethane	0.96	18		U	
107-06-2	1,2-Dichloroethane	0.81	18		U	
75-35-4	1,1-Dichloroethene	2.1	18		U	
156-59-2	cis-1,2-Dichloroethene	2.1	18		U	
156-60-5	trans-1,2-Dichloroethene	1.9	18		U	
78-87-5	1,2-Dichloropropane	0.81	18		U	
10061-01-5	cis-1,3-Dichloropropene	0.88	18		U	
10061-02-6	trans-1,3-Dichloropropene	0.57	18		U	
100-41-4	Ethylbenzene	1.3	18		U	
591-78-6	2-Hexanone	4.1	18		U	
98-82-8	Isopropylbenzene	1.6	18		U	
79-20-9	Methyl acetate	2.8	18		U	
75-09-2	Methylene chloride	1.1	18	18UJ	~~2.0~~ JB SSL	B
108-87-2	Methyl cyclohexane	0.53	18		U UJ	SS
1634-04-4	Methyl tert-butyl ether	0.57	18		U	
108-10-1	4-Methyl-2-pentanone	1.0	18		U	
100-42-5	Styrene	0.62	18		U	
79-34-5	1,1,2,2-Tetrachloroethane	0.76	18		~~U~~ UJ	FSL
127-18-4	Tetrachloroethene	1.7	18		U UJ	SS

Revised 2/24/09 CG

FORM I VOA

LW 4/16/09

FORM 1
VOLATILE ORGANICS ANALYSIS DATA SHEET

CLIENT SAMPLE NO. 59

MR08-SS371-09A

Lab Name: EMPIRICAL LABS Contract: CH2MHILL

Lab Code: NA Case No.: NA SAS No.: NA SDG No.: LEJEUNE056

Matrix: (soil/water) SOIL Lab Sample ID: 0901201-59

Sample wt/vol: 3.4 (g/mL) G Lab File ID: 0120159A

Level: (low/med) LOW Date Sampled: 01/25/09 09:45

% Moisture: not dec. 17 Date Analyzed: 02/04/09 09:10 Use reanalysis

GC Column: RTX-VRX ID: 0.25 (mm) Dilution Factor: 1.0

Soil Extract Volume:_____(uL) Soil Aliquot Volume: _____(uL)

CONCENTRATION UNITS: (ug/L or ug/Kg) UG/KG

CAS NO.	COMPOUND	MDL	RL	CONC	Q	
108-88-3------	Toluene	1.5	18	1.7	~~U~~ J	SSL
120-82-1------	1,2,4-Trichlorobenzene	0.32	18		~~U~~ UJ	IS
71-55-6-------	1,1,1-Trichloroethane	1.6	18		~~U~~	SSL
79-00-5-------	1,1,2-Trichloroethane	0.62	18		~~U~~	
79-01-6-------	Trichloroethene	1.5	18		~~U~~	
76-13-1-------	Trichlorotrifluoroethane	0.97	18		~~U~~	
75-69-4-------	Trichlorofluoromethane	1.7	18		~~U~~	
75-01-4-------	Vinyl chloride	1.9	18		~~U~~	
1330-20-7-----	Xylene(total)	1.2	18		~~U~~	

R RE

FORM I VOA

Revised 2/24/09 CG

MW 4/6/09

FORM 1
VOLATILE ORGANICS ANALYSIS DATA SHEET

CLIENT SAMPLE NO. 69RE

MR08-SS371-09AR

Lab Name: EMPIRICAL LABS Contract: CH2MHILL

Lab Code: NA Case No.: NA SAS No.: NA SDG No.: LEJEUNE056

Matrix: (soil/water) SOIL Lab Sample ID: 0901201-59R

Sample wt/vol: 3.9 (g/mL) G Lab File ID: 0120159B

Level: (low/med) LOW Date Sampled: 01/25/09 09:45

% Moisture: not dec. 17 Date Analyzed: 02/04/09 21:48

GC Column: RTX-VRX ID: 0.25 (mm) Dilution Factor: 1.0

Soil Extract Volume:_____(uL) Soil Aliquot Volume: _____(uL)

CONCENTRATION UNITS: (ug/L or ug/Kg) UG/KG

CAS NO.	COMPOUND	MDL	RL	CONC	Q	
67-64-1	Acetone	3.1	16	390	J	SSL
71-43-2	Benzene	0.73	16		U UJ	
75-27-4	Bromodichloromethane	0.47	16		U	
75-25-2	Bromoform	1.6	16		U	
74-83-9	Bromomethane	1.1	16		U	
78-93-3	2-Butanone	2.2	16	31	J	
75-15-0	Carbon disulfide	2.0	16		U UJ	
56-23-5	Carbon tetrachloride	1.4	16		U	
108-90-7	Chlorobenzene	0.53	16		U	
75-00-3	Chloroethane	1.7	16		U	
67-66-3	Chloroform	0.86	16		U	
74-87-3	Chloromethane	0.81	16		U	
110-82-7	Cyclohexane	0.84	16		U	
124-48-1	Dibromochloromethane	0.53	16		U	
96-12-8	1,2-Dibromo-3-chloropropane	1.9	7.8		U UJ	I SL
106-93-4	1,2-Dibromoethane	0.67	16		U UJ	S SL
95-50-1	1,2-Dichlorobenzene	0.58	16		U UJ	I SL
541-73-1	1,3-Dichlorobenzene	1.3	16		U	
106-46-7	1,4-Dichlorobenzene	0.86	16		U	
75-71-8	Dichlorodifluoromethane	1.7	16		U UJ	SSL
75-34-3	1,1-Dichloroethane	0.84	16		U	
107-06-2	1,2-Dichloroethane	0.72	16		U	
75-35-4	1,1-Dichloroethene	1.9	16		U	
156-59-2	cis-1,2-Dichloroethene	1.9	16		U	
156-60-5	trans-1,2-Dichloroethene	1.7	16		U	
78-87-5	1,2-Dichloropropane	0.72	16		U	
10061-01-5	cis-1,3-Dichloropropene	0.78	16		U	
10061-02-6	trans-1,3-Dichloropropene	0.50	16		U	
100-41-4	Ethylbenzene	1.2	16		U	
591-78-6	2-Hexanone	3.6	16		U	
98-82-8	Isopropylbenzene	1.4	16		U	
79-20-9	Methyl acetate	2.5	16		U	
75-09-2	Methylene chloride	0.97	16		U	
108-87-2	Methyl cyclohexane	0.47	16		U	
1634-04-4	Methyl tert-butyl ether	0.50	16		U	
108-10-1	4-Methyl-2-pentanone	0.90	16		U	
100-42-5	Styrene	0.55	16		U	
79-34-5	1,1,2,2-Tetrachloroethane	0.67	16		U UJ	I SL
127-18-4	Tetrachloroethene	1.5	16		U UJ	S SL

FORM I VOA

Revised 2/24/09 CG

ehw 1/16/09

FORM 1
VOLATILE ORGANICS ANALYSIS DATA SHEET

CLIENT SAMPLE NO. 59RE

MR08-SS371-09ARE

Lab Name: EMPIRICAL LABS Contract: CH2MHILL

Lab Code: NA Case No.: NA SAS No.: NA SDG No.: LEJEUNE056

Matrix: (soil/water) SOIL Lab Sample ID: 0901201-59RE

Sample wt/vol: 3.9 (g/mL) G Lab File ID: 0120159B

Level: (low/med) LOW Date Sampled: 01/25/09 09:45

% Moisture: not dec. 17 Date Analyzed: 02/04/09 21:48

GC Column: RTX-VRX ID: 0.25 (mm) Dilution Factor: 1.0

Soil Extract Volume:_____(uL) Soil Aliquot Volume: _____(uL)

CONCENTRATION UNITS: (ug/L or ug/Kg) UG/KG

CAS NO.	COMPOUND	MDL	RL	CONC	Q
108-88-3	Toluene	1.3	16	1.5	~~U~~ J SSL
120-82-1	1,2,4-Trichlorobenzene	0.28	16		~~U~~ UJ SSL
71-55-6	1,1,1-Trichloroethane	1.4	16		U SSL
79-00-5	1,1,2-Trichloroethane	0.55	16		U
79-01-6	Trichloroethene	1.3	16		U
76-13-1	Trichlorotrifluoroethane	0.86	16		U
75-69-4	Trichlorofluoromethane	1.5	16		U
75-01-4	Vinyl chloride	1.7	16		U
1330-20-7	Xylene(total)	1.1	16		U

FORM I VOA

Revised 2/24/09 CG

4/6/09

FORM 1
VOLATILE ORGANICS ANALYSIS DATA SHEET

CLIENT SAMPLE NO. 60

MR08-IS27
1-1-2-09A

Lab Name: EMPIRICAL LABS Contract: CH2MHILL

Lab Code: NA Case No.: NA SAS No.: NA SDG No.: LEJEUNE056

Matrix: (soil/water) SOIL Lab Sample ID: 0901201-60

Sample wt/vol: 6.7 (g/mL) G Lab File ID: 0120160A

Level: (low/med) LOW Date Sampled: 01/25/09 09:50

% Moisture: not dec. 14 Date Analyzed: 02/04/09 09:49

GC Column: RTX-VRX ID: 0.25 (mm) Dilution Factor: 1.0

Soil Extract Volume:_____(uL) Soil Aliquot Volume: _____(uL)

CONCENTRATION UNITS: (ug/L or ug/Kg) UG/KG

CAS NO.	COMPOUND	MDL	RL	CONC	Q
67-64-1	Acetone	1.7	8.6	67	
71-43-2	Benzene	0.40	8.6		U
75-27-4	Bromodichloromethane	0.26	8.6		U
75-25-2	Bromoform	0.86	8.6		U
74-83-9	Bromomethane	0.62	8.6		U
78-93-3	2-Butanone	1.2	8.6	4.0	J
75-15-0	Carbon disulfide	1.1	8.6		U
56-23-5	Carbon tetrachloride	0.76	8.6		U
108-90-7	Chlorobenzene	0.29	8.6		U
75-00-3	Chloroethane	0.95	8.6		U
67-66-3	Chloroform	0.47	8.6		U
74-87-3	Chloromethane	0.45	8.6		U
110-82-7	Cyclohexane	0.46	8.6		U
124-48-1	Dibromochloromethane	0.29	8.6		U
96-12-8	1,2-Dibromo-3-chloropropane	1.0	4.3		U
106-93-4	1,2-Dibromoethane	0.37	8.6		U
95-50-1	1,2-Dichlorobenzene	0.32	8.6		U
541-73-1	1,3-Dichlorobenzene	0.72	8.6		U
106-46-7	1,4-Dichlorobenzene	0.47	8.6		U
75-71-8	Dichlorodifluoromethane	0.95	8.6		U
75-34-3	1,1-Dichloroethane	0.46	8.6		U
107-06-2	1,2-Dichloroethane	0.40	8.6		U
75-35-4	1,1-Dichloroethene	1.0	8.6		U
156-59-2	cis-1,2-Dichloroethene	1.0	8.6		U
156-60-5	trans-1,2-Dichloroethene	0.95	8.6		U
78-87-5	1,2-Dichloropropane	0.40	8.6		U
10061-01-5	cis-1,3-Dichloropropene	0.43	8.6		U
10061-02-6	trans-1,3-Dichloropropene	0.28	8.6		U
100-41-4	Ethylbenzene	0.65	8.6		U
591-78-6	2-Hexanone	2.0	8.6		U
98-82-8	Isopropylbenzene	0.76	8.6		U
79-20-9	Methyl acetate	1.4	8.6		U
75-09-2	Methylene chloride	0.53	8.6	8.6L ~~0.76~~ ~~JB~~	B
108-87-2	Methyl cyclohexane	0.26	8.6		U
1634-04-4	Methyl tert-butyl ether	0.28	8.6		U
108-10-1	4-Methyl-2-pentanone	0.50	8.6		U
100-42-5	Styrene	0.30	8.6		U
79-34-5	1,1,2,2-Tetrachloroethane	0.37	8.6		U
127-18-4	Tetrachloroethene	0.84	8.6		U

Revised 2/24/09 CG

EW 1/11/09

FORM 1
VOLATILE ORGANICS ANALYSIS DATA SHEET

CLIENT SAMPLE NO. 60

MR08-IS37
1-1-2-09A

Lab Name: EMPIRICAL LABS Contract: CH2MHILL

Lab Code: NA Case No.: NA SAS No.: NA SDG No.: LEJEUNE056

Matrix: (soil/water) SOIL Lab Sample ID: 0901201-60

Sample wt/vol: 6.7 (g/mL) G Lab File ID: 0120160A

Level: (low/med) LOW Date Sampled: 01/25/09 09:50

% Moisture: not dec. 14 Date Analyzed: 02/04/09 09:49

GC Column: RTX-VRX ID: 0.25 (mm) Dilution Factor: 1.0

Soil Extract Volume:_____(uL) Soil Aliquot Volume: _____(uL)

CONCENTRATION UNITS: (ug/L or ug/Kg) UG/KG

CAS NO.	COMPOUND	MDL	RL	CONC	Q
108-88-3	Toluene	0.74	8.6		U
120-82-1	1,2,4-Trichlorobenzene	0.16	8.6		U
71-55-6	1,1,1-Trichloroethane	0.78	8.6		U
79-00-5	1,1,2-Trichloroethane	0.30	8.6		U
79-01-6	Trichloroethene	0.73	8.6		U
76-13-1	Trichlorotrifluoroethane	0.47	8.6		U
75-69-4	Trichlorofluoromethane	0.82	8.6		U
75-01-4	Vinyl chloride	0.95	8.6		U
1330-20-7	Xylene(total)	0.60	8.6		U

Rev 4/6/09

Revised 2/24/09 CG

61

FORM 1
VOLATILE ORGANICS ANALYSIS DATA SHEET

CLIENT SAMPLE NO.

MR08-SS373-09A

Lab Name: EMPIRICAL LABS Contract: CH2MHILL

Lab Code: NA Case No.: NA SAS No.: NA SDG No.: LEJEUNE056

Matrix: (soil/water) SOIL Lab Sample ID: 0901201-61

Sample wt/vol: 3.2 (g/mL) G Lab File ID: 0120161B

Level: (low/med) LOW Date Sampled: 01/25/09 10:45

% Moisture: not dec. 28 Date Analyzed: 02/03/09 20:56

GC Column: RTX-VRX ID: 0.25 (mm) Dilution Factor: 1.0

Soil Extract Volume:_____(uL) Soil Aliquot Volume: _____(uL)

CONCENTRATION UNITS: (ug/L or ug/Kg) UG/KG

CAS NO.	COMPOUND	MDL	RL	CONC	Q
67-64-1	Acetone	4.3	78	290	
71-43-2	Benzene	1.0	7.8		U
75-27-4	Bromodichloromethane	0.65	7.8		U
75-25-2	Bromoform	2.2	7.8		U
74-83-9	Bromomethane	1.6	16		U
78-93-3	2-Butanone	3.0	78	42	J
75-15-0	Carbon disulfide	2.8	7.8		U
56-23-5	Carbon tetrachloride	1.9	7.8		U
108-90-7	Chlorobenzene	0.74	7.8		U
75-00-3	Chloroethane	2.4	16		U
67-66-3	Chloroform	1.2	7.8		U
74-87-3	Chloromethane	1.1	16		U
110-82-7	Cyclohexane	1.2	16		U
124-48-1	Dibromochloromethane	0.74	7.8		U
96-12-8	1,2-Dibromo-3-chloropropane	2.6	16		~~U~~ UJ IS
106-93-4	1,2-Dibromoethane	0.93	7.8		U
95-50-1	1,2-Dichlorobenzene	0.80	7.8		~~U~~ UJ IS
541-73-1	1,3-Dichlorobenzene	1.8	7.8		U
106-46-7	1,4-Dichlorobenzene	1.2	7.8		U
75-71-8	Dichlorodifluoromethane	2.4	16		U
75-34-3	1,1-Dichloroethane	1.2	7.8		U
107-06-2	1,2-Dichloroethane	1.00	7.8		U
75-35-4	1,1-Dichloroethene	2.6	7.8		U
156-59-2	cis-1,2-Dichloroethene	2.6	7.8		U
156-60-5	trans-1,2-Dichloroethene	2.4	7.8		U
78-87-5	1,2-Dichloropropane	1.00	7.8		U
10061-01-5	cis-1,3-Dichloropropene	1.1	7.8		U
10061-02-6	trans-1,3-Dichloropropene	0.69	7.8		U
100-41-4	Ethylbenzene	1.6	7.8		U
591-78-6	2-Hexanone	5.0	39		U
98-82-8	Isopropylbenzene	1.9	7.8		U
79-20-9	Methyl acetate	3.5	7.8		U
75-09-2	Methylene chloride	1.3	16		U
108-87-2	Methyl cyclohexane	0.65	7.8		U
1634-04-4	Methyl tert-butyl ether	0.69	7.8		U
108-10-1	4-Methyl-2-pentanone	1.2	39		U
100-42-5	Styrene	0.76	7.8		U
79-34-5	1,1,2,2-Tetrachloroethane	0.93	7.8		~~U~~ UJ IS
127-18-4	Tetrachloroethene	2.1	7.8		U

FORM I VOA

41669

FORM 1
VOLATILE ORGANICS ANALYSIS DATA SHEET

CLIENT SAMPLE NO. 61

MR08-SS373-09A

Lab Name: EMPIRICAL LABS Contract: CH2MHILL

Lab Code: NA Case No.: NA SAS No.: NA SDG No.: LEJEUNE056

Matrix: (soil/water) SOIL Lab Sample ID: 0901201-61

Sample wt/vol: 3.2 (g/mL) G Lab File ID: 0120161B

Level: (low/med) LOW Date Sampled: 01/25/09 10:45

% Moisture: not dec. 28 Date Analyzed: 02/03/09 20:56

GC Column: RTX-VRX ID: 0.25 (mm) Dilution Factor: 1.0

Soil Extract Volume:_____(uL) Soil Aliquot Volume: _____(uL)

CONCENTRATION UNITS: (ug/L or ug/Kg) UG/KG

CAS NO.	COMPOUND	MDL	RL	CONC	Q
108-88-3	Toluene	1.9	7.8	2.8	J
120-82-1	1,2,4-Trichlorobenzene	0.39	7.8		~~U~~ UJ FSL
71-55-6	1,1,1-Trichloroethane	2.0	7.8		U
79-00-5	1,1,2-Trichloroethane	0.76	7.8		U
79-01-6	Trichloroethene	1.8	7.8		U
76-13-1	Trichlorotrifluoroethane	1.2	7.8		U
75-69-4	Trichlorofluoromethane	2.0	16		U
75-01-4	Vinyl chloride	2.4	16		U
1330-20-7	Xylene(total)	1.5	7.8		U

FORM I VOA

MW 4/6/09

FORM 1
VOLATILE ORGANICS ANALYSIS DATA SHEET

CLIENT SAMPLE NO. 61DL

MR08-SS3
73-09ADL

Lab Name: EMPIRICAL LABS Contract: CH2MHILL

Lab Code: NA Case No.: NA SAS No.: NA SDG No.: LEJEUNE056

Matrix: (soil/water) SOIL Lab Sample ID: 0901201-61DL

Sample wt/vol: 3.3 (g/mL) G Lab File ID: 0120161D

Level: (low/med) MED Date Sampled: 01/25/09 10:45

% Moisture: not dec. 28 Date Analyzed: 02/05/09 00:25 use original

GC Column: RTX-VRX ID: 0.25 (mm) Dilution Factor: 1.0

Soil Extract Volume: 5000(uL) Soil Aliquot Volume: 100(uL)

CONCENTRATION UNITS: (ug/L or ug/Kg) UG/KG

CAS NO.	COMPOUND	MDL	RL	CONC	Q
67-64-1	Acetone	210	1000		UD
71-43-2	Benzene	50	1000		UD
75-27-4	Bromodichloromethane	32	1000		UD
75-25-2	Bromoform	100	1000		UD
74-83-9	Bromomethane	76	1000		UD
78-93-3	2-Butanone	150	1000		UD UJ CCV
75-15-0	Carbon disulfide	140	1000		UD
56-23-5	Carbon tetrachloride	93	1000		UD
108-90-7	Chlorobenzene	36	1000		UD
75-00-3	Chloroethane	120	1000		UD
67-66-3	Chloroform	58	1000		UD
74-87-3	Chloromethane	55	1000		UD
110-82-7	Cyclohexane	57	1000		UD
124-48-1	Dibromochloromethane	36	1000		UD
96-12-8	1,2-Dibromo-3-chloropropane	130	530		UD
106-93-4	1,2-Dibromoethane	45	1000		UD
95-50-1	1,2-Dichlorobenzene	39	1000		UD
541-73-1	1,3-Dichlorobenzene	89	1000		UD
106-46-7	1,4-Dichlorobenzene	58	1000		UD
75-71-8	Dichlorodifluoromethane	120	1000		UD
75-34-3	1,1-Dichloroethane	57	1000		UD
107-06-2	1,2-Dichloroethane	49	1000		UD
75-35-4	1,1-Dichloroethene	130	1000		UD
156-59-2	cis-1,2-Dichloroethene	130	1000		UD
156-60-5	trans-1,2-Dichloroethene	120	1000		UD
78-87-5	1,2-Dichloropropane	49	1000		UD
10061-01-5	cis-1,3-Dichloropropene	53	1000		UD
10061-02-6	trans-1,3-Dichloropropene	34	1000		UD
100-41-4	Ethylbenzene	79	1000		UD
591-78-6	2-Hexanone	240	1000		UD
98-82-8	Isopropylbenzene	93	1000		UD
79-20-9	Methyl acetate	170	1000		UD
75-09-2	Methylene chloride	66	1000		UD
108-87-2	Methyl cyclohexane	32	1000		UD
1634-04-4	Methyl tert-butyl ether	34	1000		UD
108-10-1	4-Methyl-2-pentanone	61	1000		UD
100-42-5	Styrene	37	1000		UD
79-34-5	1,1,2,2-Tetrachloroethane	45	1000		UD
127-18-4	Tetrachloroethene	100	1000		UD

DL

FORM I VOA

RW 4/6/09

FORM 1
VOLATILE ORGANICS ANALYSIS DATA SHEET

CLIENT SAMPLE NO. 61DL

MR08-SS3
73-09ADL

Lab Name: EMPIRICAL LABS Contract: CH2MHILL

Lab Code: NA Case No.: NA SAS No.: NA SDG No.: LEJEUNE056

Matrix: (soil/water) SOIL Lab Sample ID: 0901201-61DL

Sample wt/vol: 3.3 (g/mL) G Lab File ID: 0120161D

Level: (low/med) MED Date Sampled: 01/25/09 10:45 Use original

% Moisture: not dec. 28 Date Analyzed: 02/05/09 00:25

GC Column: RTX-VRX ID: 0.25 (mm) Dilution Factor: 1.0

Soil Extract Volume: 5000(uL) Soil Aliquot Volume: 100(uL)

CONCENTRATION UNITS: (ug/L or ug/Kg) UG/KG

CAS NO.	COMPOUND	MDL	RL	CONC	Q
108-88-3	Toluene	91	1000		UD
120-82-1	1,2,4-Trichlorobenzene	19	1000		UD
71-55-6	1,1,1-Trichloroethane	95	1000		UD
79-00-5	1,1,2-Trichloroethane	37	1000		UD
79-01-6	Trichloroethene	90	1000		UD
76-13-1	Trichlorotrifluoroethane	58	1000		UD
75-69-4	Trichlorofluoromethane	100	1000		UD
75-01-4	Vinyl chloride	120	1000		UD
1330-20-7	Xylene(total)	74	1000		UD

R D

FORM I VOA

RW 4/6/09

FORM 1
VOLATILE ORGANICS ANALYSIS DATA SHEET

CLIENT SAMPLE NO. 62

MR08-SS373D-09A

Lab Name: EMPIRICAL LABS Contract: CH2MHILL

Lab Code: NA Case No.: NA SAS No.: NA SDG No.: LEJEUNE056

Matrix: (soil/water) SOIL Lab Sample ID: 0901201-62

Sample wt/vol: 3.4 (g/mL) G Lab File ID: 0120162A

Level: (low/med) LOW Date Sampled: 01/25/09 10:45

% Moisture: not dec. 0 Date Analyzed: 02/04/09 10:14

GC Column: RTX-VRX ID: 0.25 (mm) Dilution Factor: 1.0

Soil Extract Volume:_____(uL) Soil Aliquot Volume: _____(uL)

CONCENTRATION UNITS: (ug/L or ug/Kg) UG/KG

CAS NO.	COMPOUND	MDL	RL	CONC	Q
67-64-1	Acetone	2.9	15	330	~~B~~
71-43-2	Benzene	0.69	15		U
75-27-4	Bromodichloromethane	0.44	15		U
75-25-2	Bromoform	1.5	15		U
74-83-9	Bromomethane	1.0	15		U
78-93-3	2-Butanone	2.0	15	33	
75-15-0	Carbon disulfide	1.9	15		U
56-23-5	Carbon tetrachloride	1.3	15		U
108-90-7	Chlorobenzene	0.50	15		U
75-00-3	Chloroethane	1.6	15		U
67-66-3	Chloroform	0.81	15		U
74-87-3	Chloromethane	0.76	15		U
110-82-7	Cyclohexane	0.79	15		U
124-48-1	Dibromochloromethane	0.50	15		U
96-12-8	1,2-Dibromo-3-chloropropane	1.8	7.3		U
106-93-4	1,2-Dibromoethane	0.63	15		U
95-50-1	1,2-Dichlorobenzene	0.54	15		U
541-73-1	1,3-Dichlorobenzene	1.2	15		U
106-46-7	1,4-Dichlorobenzene	0.81	15		U
75-71-8	Dichlorodifluoromethane	1.6	15		~~U~~ UJ CCH
75-34-3	1,1-Dichloroethane	0.79	15		U
107-06-2	1,2-Dichloroethane	0.67	15		U
75-35-4	1,1-Dichloroethene	1.8	15		U
156-59-2	cis-1,2-Dichloroethene	1.8	15		U
156-60-5	trans-1,2-Dichloroethene	1.6	15		U
78-87-5	1,2-Dichloropropane	0.67	15		U
10061-01-5	cis-1,3-Dichloropropene	0.73	15		U
10061-02-6	trans-1,3-Dichloropropene	0.47	15		U
100-41-4	Ethylbenzene	1.1	15		U
591-78-6	2-Hexanone	3.4	15		U
98-82-8	Isopropylbenzene	1.3	15		U
79-20-9	Methyl acetate	2.3	15		U
75-09-2	Methylene chloride	0.91	15		U
108-87-2	Methyl cyclohexane	0.44	15		U
1634-04-4	Methyl tert-butyl ether	0.47	15		U
108-10-1	4-Methyl-2-pentanone	0.85	15		U
100-42-5	Styrene	0.51	15		U
79-34-5	1,1,2,2-Tetrachloroethane	0.63	15		U
127-18-4	Tetrachloroethene	1.4	15		U

lw 4/6/09

FORM 1
VOLATILE ORGANICS ANALYSIS DATA SHEET

CLIENT SAMPLE NO. 62

MR08-SS373D-09A

Lab Name: EMPIRICAL LABS Contract: CH2MHILL

Lab Code: NA Case No.: NA SAS No.: NA SDG No.: LEJEUNE056

Matrix: (soil/water) SOIL Lab Sample ID: 0901201-62

Sample wt/vol: 3.4 (g/mL) G Lab File ID: 0120162A

Level: (low/med) LOW Date Sampled: 01/25/09 10:45

% Moisture: not dec. 0 Date Analyzed: 02/04/09 10:14

GC Column: RTX-VRX ID: 0.25 (mm) Dilution Factor: 1.0

Soil Extract Volume:_____(uL) Soil Aliquot Volume: _____(uL)

CONCENTRATION UNITS: (ug/L or ug/Kg) UG/KG

CAS NO.	COMPOUND	MDL	RL	CONC	Q
108-88-3	Toluene	1.3	15		U
120-82-1	1,2,4-Trichlorobenzene	0.26	15		U
71-55-6	1,1,1-Trichloroethane	1.3	15		U
79-00-5	1,1,2-Trichloroethane	0.51	15		U
79-01-6	Trichloroethene	1.2	15		U
76-13-1	Trichlorotrifluoroethane	0.81	15		U
75-69-4	Trichlorofluoromethane	1.4	15		U
75-01-4	Vinyl chloride	1.6	15		U
1330-20-7	Xylene(total)	1.0	15		U

Sample reported as wet weight due to % moisture not available.

Ben
4/6/09

FORM 1
VOLATILE ORGANICS ANALYSIS DATA SHEET

CLIENT SAMPLE NO. 63

MR08-IS37
3-2-3-09A

Lab Name: EMPIRICAL LABS Contract: CH2MHILL

Lab Code: NA Case No.: NA SAS No.: NA SDG No.: LEJEUNE056

Matrix: (soil/water) SOIL Lab Sample ID: 0901201-63

Sample wt/vol: 5.5 (g/mL) G Lab File ID: 0120163A

Level: (low/med) LOW Date Sampled: 01/25/09 10:50

% Moisture: not dec. 13 Date Analyzed: 02/04/09 10:45

GC Column: RTX-VRX ID: 0.25 (mm) Dilution Factor: 1.0

Soil Extract Volume:_____(uL) Soil Aliquot Volume: _____(uL)

CONCENTRATION UNITS: (ug/L or ug/Kg) UG/KG

CAS NO.	COMPOUND	MDL	RL	CONC	Q	
67-64-1	Acetone	2.1	10	19	~~B~~ U	BL
71-43-2	Benzene	0.49	10		U	
75-27-4	Bromodichloromethane	0.31	10		U	
75-25-2	Bromoform	1.0	10		U	
74-83-9	Bromomethane	0.75	10		U	
78-93-3	2-Butanone	1.4	10		U	
75-15-0	Carbon disulfide	1.4	10		U	
56-23-5	Carbon tetrachloride	0.92	10		U	
108-90-7	Chlorobenzene	0.35	10		U	
75-00-3	Chloroethane	1.1	10		U	
67-66-3	Chloroform	0.57	10		U	
74-87-3	Chloromethane	0.54	10		U	
110-82-7	Cyclohexane	0.56	10		U	
124-48-1	Dibromochloromethane	0.35	10		U	
96-12-8	1,2-Dibromo-3-chloropropane	1.2	5.2		U	
106-93-4	1,2-Dibromoethane	0.45	10		U	
95-50-1	1,2-Dichlorobenzene	0.38	10		U	
541-73-1	1,3-Dichlorobenzene	0.87	10		U	
106-46-7	1,4-Dichlorobenzene	0.57	10		U	
75-71-8	Dichlorodifluoromethane	1.1	10		~~U~~ UJ	CC
75-34-3	1,1-Dichloroethane	0.56	10		U	
107-06-2	1,2-Dichloroethane	0.48	10		U	
75-35-4	1,1-Dichloroethene	1.2	10		U	
156-59-2	cis-1,2-Dichloroethene	1.2	10		U	
156-60-5	trans-1,2-Dichloroethene	1.1	10		U	
78-87-5	1,2-Dichloropropane	0.48	10		U	
10061-01-5	cis-1,3-Dichloropropene	0.52	10		U	
10061-02-6	trans-1,3-Dichloropropene	0.33	10		U	
100-41-4	Ethylbenzene	0.78	10		U	
591-78-6	2-Hexanone	2.4	10		U	
98-82-8	Isopropylbenzene	0.92	10		U	
79-20-9	Methyl acetate	1.7	10		U	
75-09-2	Methylene chloride	0.64	10	10U	~~1.1~~ ~~JB~~	C
108-87-2	Methyl cyclohexane	0.31	10		U	
1634-04-4	Methyl tert-butyl ether	0.33	10		U	
108-10-1	4-Methyl-2-pentanone	0.60	10		U	
100-42-5	Styrene	0.36	10		U	
79-34-5	1,1,2,2-Tetrachloroethane	0.45	10		U	
127-18-4	Tetrachloroethene	1.0	10		U	

LW 4/6/09

FORM 1
VOLATILE ORGANICS ANALYSIS DATA SHEET

CLIENT SAMPLE NO. 63

MR08-IS37
3-2-3-09A

Lab Name: EMPIRICAL LABS Contract: CH2MHILL

Lab Code: NA Case No.: NA SAS No.: NA SDG No.: LEJEUNE056

Matrix: (soil/water) SOIL Lab Sample ID: 0901201-63

Sample wt/vol: 5.5 (g/mL) G Lab File ID: 0120163A

Level: (low/med) LOW Date Sampled: 01/25/09 10:50

% Moisture: not dec. 13 Date Analyzed: 02/04/09 10:45

GC Column: RTX-VRX ID: 0.25 (mm) Dilution Factor: 1.0

Soil Extract Volume:_____(uL) Soil Aliquot Volume: _____(uL)

CONCENTRATION UNITS: (ug/L or ug/Kg) UG/KG

CAS NO.	COMPOUND	MDL	RL	CONC	Q
108-88-3	Toluene	0.89	10		U
120-82-1	1,2,4-Trichlorobenzene	0.19	10		U
71-55-6	1,1,1-Trichloroethane	0.94	10		U
79-00-5	1,1,2-Trichloroethane	0.36	10		U
79-01-6	Trichloroethene	0.88	10		U
76-13-1	Trichlorotrifluoroethane	0.57	10		U
75-69-4	Trichlorofluoromethane	0.99	10		U
75-01-4	Vinyl chloride	1.1	10		U
1330-20-7	Xylene(total)	0.73	10		U

lw
4/6/09

FORM 1
VOLATILE ORGANICS ANALYSIS DATA SHEET

CLIENT SAMPLE NO. 64

MR08-IS37
3D-2-3-09A

Lab Name: EMPIRICAL LABS Contract: CH2MHILL

Lab Code: NA Case No.: NA SAS No.: NA SDG No.: LEJEUNE056

Matrix: (soil/water) SOIL Lab Sample ID: 0901201-64

Sample wt/vol: 5.5 (g/mL) G Lab File ID: 0120164A

Level: (low/med) LOW Date Sampled: 01/25/09 10:50

% Moisture: not dec. 13 Date Analyzed: 02/04/09 11:16

GC Column: RTX-VRX ID: 0.25 (mm) Dilution Factor: 1.0

Soil Extract Volume:_____(uL) Soil Aliquot Volume: _____(uL)

CONCENTRATION UNITS: (ug/L or ug/Kg) UG/KG

CAS NO.	COMPOUND	MDL	RL	CONC	Q	
67-64-1	Acetone	2.1	10	25	~~B~~ U	BL
71-43-2	Benzene	0.49	10		U	
75-27-4	Bromodichloromethane	0.31	10		U	
75-25-2	Bromoform	1.0	10		U	
74-83-9	Bromomethane	0.75	10		U	
78-93-3	2-Butanone	1.4	10		U	
75-15-0	Carbon disulfide	1.4	10		U	
56-23-5	Carbon tetrachloride	0.92	10		U	
108-90-7	Chlorobenzene	0.35	10		U	
75-00-3	Chloroethane	1.1	10		U	
67-66-3	Chloroform	0.57	10		U	
74-87-3	Chloromethane	0.54	10		U	
110-82-7	Cyclohexane	0.56	10		U	
124-48-1	Dibromochloromethane	0.35	10		U	
96-12-8	1,2-Dibromo-3-chloropropane	1.2	5.2		U	
106-93-4	1,2-Dibromoethane	0.45	10		U	
95-50-1	1,2-Dichlorobenzene	0.38	10		U	
541-73-1	1,3-Dichlorobenzene	0.87	10		U	
106-46-7	1,4-Dichlorobenzene	0.57	10		U	
75-71-8	Dichlorodifluoromethane	1.1	10		~~U~~ UJ	CC
75-34-3	1,1-Dichloroethane	0.56	10		U	
107-06-2	1,2-Dichloroethane	0.48	10		U	
75-35-4	1,1-Dichloroethene	1.2	10		U	
156-59-2	cis-1,2-Dichloroethene	1.2	10		U	
156-60-5	trans-1,2-Dichloroethene	1.1	10		U	
78-87-5	1,2-Dichloropropane	0.48	10		U	
10061-01-5	cis-1,3-Dichloropropene	0.52	10		U	
10061-02-6	trans-1,3-Dichloropropene	0.33	10		U	
100-41-4	Ethylbenzene	0.78	10		U	
591-78-6	2-Hexanone	2.4	10		U	
98-82-8	Isopropylbenzene	0.92	10		U	
79-20-9	Methyl acetate	1.7	10		U	
75-09-2	Methylene chloride	0.64	10	104	~~1.2~~ ~~JB~~	BL
108-87-2	Methyl cyclohexane	0.31	10		U	
1634-04-4	Methyl tert-butyl ether	0.33	10		U	
108-10-1	4-Methyl-2-pentanone	0.60	10		U	
100-42-5	Styrene	0.36	10		U	
79-34-5	1,1,2,2-Tetrachloroethane	0.45	10		U	
127-18-4	Tetrachloroethene	1.0	10		U	

FORM 1
VOLATILE ORGANICS ANALYSIS DATA SHEET

CLIENT SAMPLE NO. 64

MR08-IS37
3D-2-3-09A

Lab Name: EMPIRICAL LABS Contract: CH2MHILL

Lab Code: NA Case No.: NA SAS No.: NA SDG No.: LEJEUNE056

Matrix: (soil/water) SOIL Lab Sample ID: 0901201-64

Sample wt/vol: 5.5 (g/mL) G Lab File ID: 0120164A

Level: (low/med) LOW Date Sampled: 01/25/09 10:50

% Moisture: not dec. 13 Date Analyzed: 02/04/09 11:16

GC Column: RTX-VRX ID: 0.25 (mm) Dilution Factor: 1.0

Soil Extract Volume:_____(uL) Soil Aliquot Volume: _____(uL)

CONCENTRATION UNITS: (ug/L or ug/Kg) UG/KG

CAS NO.	COMPOUND	MDL	RL	CONC	Q
108-88-3	Toluene	0.89	10		U
120-82-1	1,2,4-Trichlorobenzene	0.19	10		U
71-55-6	1,1,1-Trichloroethane	0.94	10		U
79-00-5	1,1,2-Trichloroethane	0.36	10		U
79-01-6	Trichloroethene	0.88	10		U
76-13-1	Trichlorotrifluoroethane	0.57	10		U
75-69-4	Trichlorofluoromethane	0.99	10		U
75-01-4	Vinyl chloride	1.1	10		U
1330-20-7	Xylene(total)	0.73	10		U

JCW
4/6/09

FORM 1
VOLATILE ORGANICS ANALYSIS DATA SHEET

CLIENT SAMPLE NO.

MR08-IS35
0-3-4-09A

65

Lab Name: EMPIRICAL LABS Contract: CH2MHILL

Lab Code: NA Case No.: NA SAS No.: NA SDG No.: LEJEUNE056

Matrix: (soil/water) SOIL Lab Sample ID: 0901201-65

Sample wt/vol: 5.9 (g/mL) G Lab File ID: 0120165A

Level: (low/med) LOW Date Sampled: 01/25/09 11:15

% Moisture: not dec. 20 Date Analyzed: 02/04/09 11:46

GC Column: RTX-VRX ID: 0.25 (mm) Dilution Factor: 1.0

Soil Extract Volume:_____(uL) Soil Aliquot Volume: _____(uL)

CONCENTRATION UNITS: (ug/L or ug/Kg) UG/KG

CAS NO.	COMPOUND	MDL	RL	CONC	Q	
67-64-1	Acetone	2.1	11	12	~~B~~U	BL
71-43-2	Benzene	0.50	11		U	
75-27-4	Bromodichloromethane	0.32	11		U	
75-25-2	Bromoform	1.1	11		U	
74-83-9	Bromomethane	0.76	11		U	
78-93-3	2-Butanone	1.5	11		U	
75-15-0	Carbon disulfide	1.4	11		U	
56-23-5	Carbon tetrachloride	0.94	11		U	
108-90-7	Chlorobenzene	0.36	11		U	
75-00-3	Chloroethane	1.2	11		U	
67-66-3	Chloroform	0.58	11		U	
74-87-3	Chloromethane	0.55	11		U	
110-82-7	Cyclohexane	0.57	11		U	
124-48-1	Dibromochloromethane	0.36	11		U	
96-12-8	1,2-Dibromo-3-chloropropane	1.3	5.3		U	
106-93-4	1,2-Dibromoethane	0.46	11		U	
95-50-1	1,2-Dichlorobenzene	0.39	11		U	
541-73-1	1,3-Dichlorobenzene	0.89	11		U	
106-46-7	1,4-Dichlorobenzene	0.58	11		U	
75-71-8	Dichlorodifluoromethane	1.2	11		~~U~~UJ	CCH
75-34-3	1,1-Dichloroethane	0.57	11		U	
107-06-2	1,2-Dichloroethane	0.49	11		U	
75-35-4	1,1-Dichloroethene	1.3	11		U	
156-59-2	cis-1,2-Dichloroethene	1.3	11		U	
156-60-5	trans-1,2-Dichloroethene	1.2	11		U	
78-87-5	1,2-Dichloropropane	0.49	11		U	
10061-01-5	cis-1,3-Dichloropropene	0.53	11		U	
10061-02-6	trans-1,3-Dichloropropene	0.34	11		U	
100-41-4	Ethylbenzene	0.80	11		U	
591-78-6	2-Hexanone	2.4	11		U	
98-82-8	Isopropylbenzene	0.94	11		U	
79-20-9	Methyl acetate	1.7	11		U	
75-09-2	Methylene chloride	0.66	11	11u	1.~~2 JB~~	B1
108-87-2	Methyl cyclohexane	0.32	11		U	
1634-04-4	Methyl tert-butyl ether	0.34	11		U	
108-10-1	4-Methyl-2-pentanone	0.62	11		U	
100-42-5	Styrene	0.37	11		U	
79-34-5	1,1,2,2-Tetrachloroethane	0.46	11		U	
127-18-4	Tetrachloroethene	1.0	11		U	

FORM I VOA

MW 2/11/09

FORM 1
VOLATILE ORGANICS ANALYSIS DATA SHEET

CLIENT SAMPLE NO. 65

MR08-IS35
0-3-4-09A

Lab Name: EMPIRICAL LABS Contract: CH2MHILL

Lab Code: NA Case No.: NA SAS No.: NA SDG No.: LEJEUNE056

Matrix: (soil/water) SOIL Lab Sample ID: 0901201-65

Sample wt/vol: 5.9 (g/mL) G Lab File ID: 0120165A

Level: (low/med) LOW Date Sampled: 01/25/09 11:15

% Moisture: not dec. 20 Date Analyzed: 02/04/09 11:46

GC Column: RTX-VRX ID: 0.25 (mm) Dilution Factor: 1.0

Soil Extract Volume:_____(uL) Soil Aliquot Volume: _____(uL)

CONCENTRATION UNITS: (ug/L or ug/Kg) UG/KG

CAS NO.	COMPOUND	MDL	RL	CONC	Q
108-88-3	Toluene	0.91	11		U
120-82-1	1,2,4-Trichlorobenzene	0.19	11		U
71-55-6	1,1,1-Trichloroethane	0.96	11		U
79-00-5	1,1,2-Trichloroethane	0.37	11		U
79-01-6	Trichloroethene	0.90	11		U
76-13-1	Trichlorotrifluoroethane	0.58	11		U
75-69-4	Trichlorofluoromethane	1.0	11		U
75-01-4	Vinyl chloride	1.2	11		U
1330-20-7	Xylene(total)	0.74	11		U

RW
4/6/09

FORM 1
VOLATILE ORGANICS ANALYSIS DATA SHEET

CLIENT SAMPLE NO.

MR08-SS350-09A

Lab Name: EMPIRICAL LABS Contract: CH2MHILL

Lab Code: NA Case No.: NA SAS No.: NA SDG No.: LEJEUNE056

Matrix: (soil/water) SOIL Lab Sample ID: 0901201-66

Sample wt/vol: 3.4 (g/mL) G Lab File ID: 0120166A

Level: (low/med) LOW Date Sampled: 01/25/09 11:20

% Moisture: not dec. 19 Date Analyzed: 02/04/09 12:17

GC Column: RTX-VRX ID: 0.25 (mm) Dilution Factor: 1.0

Soil Extract Volume:_____(uL) Soil Aliquot Volume: _____(uL)

CONCENTRATION UNITS: (ug/L or ug/Kg) UG/KG

CAS NO.	COMPOUND	MDL	RL	CONC	Q	
67-64-1	Acetone	3.6	18	240	~~B~~ J	SSI
71-43-2	Benzene	0.85	18	1.1	~~J~~ J	SS
75-27-4	Bromodichloromethane	0.54	18		U	
75-25-2	Bromoform	1.8	18		U	
74-83-9	Bromomethane	1.3	18		U	
78-93-3	2-Butanone	2.5	18	31	J	SSI
75-15-0	Carbon disulfide	2.3	18		U	
56-23-5	Carbon tetrachloride	1.6	18		U	
108-90-7	Chlorobenzene	0.61	18		U	
75-00-3	Chloroethane	2.0	18		U	
67-66-3	Chloroform	0.99	18		U	
74-87-3	Chloromethane	0.94	18		U	
110-82-7	Cyclohexane	0.97	18		U	
124-48-1	Dibromochloromethane	0.61	18		U	
96-12-8	1,2-Dibromo-3-chloropropane	2.2	9.0		U	
106-93-4	1,2-Dibromoethane	0.78	18		U	
95-50-1	1,2-Dichlorobenzene	0.67	18		U	
541-73-1	1,3-Dichlorobenzene	1.5	18		U	
106-46-7	1,4-Dichlorobenzene	0.99	18		U	
75-71-8	Dichlorodifluoromethane	2.0	18		~~U~~ UJ	CCV
75-34-3	1,1-Dichloroethane	0.97	18		U	
107-06-2	1,2-Dichloroethane	0.83	18		U	
75-35-4	1,1-Dichloroethene	2.2	18		U	
156-59-2	cis-1,2-Dichloroethene	2.2	18		U	
156-60-5	trans-1,2-Dichloroethene	2.0	18		U	
78-87-5	1,2-Dichloropropane	0.83	18		U	
10061-01-5	cis-1,3-Dichloropropene	0.90	18		U	
10061-02-6	trans-1,3-Dichloropropene	0.58	18		U	
100-41-4	Ethylbenzene	1.4	18		U	
591-78-6	2-Hexanone	4.1	18		U	
98-82-8	Isopropylbenzene	1.6	18		U	
79-20-9	Methyl acetate	2.9	18		U	
75-09-2	Methylene chloride	1.1	18		U	
108-87-2	Methyl cyclohexane	0.54	18		U	
1634-04-4	Methyl tert-butyl ether	0.58	18		U	
108-10-1	4-Methyl-2-pentanone	1.0	18		U	
100-42-5	Styrene	0.63	18		U	
79-34-5	1,1,2,2-Tetrachloroethane	0.78	18		U	
127-18-4	Tetrachloroethene	1.7	18		U	

LW 1/11/09

FORM 1
VOLATILE ORGANICS ANALYSIS DATA SHEET

CLIENT SAMPLE NO. 66

MR08-SS350-09A

Lab Name: EMPIRICAL LABS Contract: CH2MHILL

Lab Code: NA Case No.: NA SAS No.: NA SDG No.: LEJEUNE056

Matrix: (soil/water) SOIL Lab Sample ID: 0901201-66

Sample wt/vol: 3.4 (g/mL) G Lab File ID: 0120166A

Level: (low/med) LOW Date Sampled: 01/25/09 11:20

% Moisture: not dec. 19 Date Analyzed: 02/04/09 12:17

GC Column: RTX-VRX ID: 0.25 (mm) Dilution Factor: 1.0

Soil Extract Volume:_____(uL) Soil Aliquot Volume: _____(uL)

CONCENTRATION UNITS: (ug/L or ug/Kg) UG/KG

CAS NO.	COMPOUND	MDL	RL	CONC	Q
108-88-3	Toluene	1.6	18	3.5	~~U~~ J
120-82-1	1,2,4-Trichlorobenzene	0.32	18		U
71-55-6	1,1,1-Trichloroethane	1.6	18		U
79-00-5	1,1,2-Trichloroethane	0.63	18		U
79-01-6	Trichloroethene	1.5	18		U
76-13-1	Trichlorotrifluoroethane	0.99	18		U
75-69-4	Trichlorofluoromethane	1.7	18		U
75-01-4	Vinyl chloride	2.0	18		U
1330-20-7	Xylene(total)	1.3	18		U

SSH

FORM I VOA

lew 9/6/09

FORM 1
VOLATILE ORGANICS ANALYSIS DATA SHEET

CLIENT SAMPLE NO. 67

MR08-SS349-09A

Lab Name: EMPIRICAL LABS Contract: CH2MHILL

Lab Code: NA Case No.: NA SAS No.: NA SDG No.: LEJEUNE056

Matrix: (soil/water) SOIL Lab Sample ID: 0901201-67

Sample wt/vol: 5.4 (g/mL) G Lab File ID: 0120167A

Level: (low/med) LOW Date Sampled: 01/25/09 13:15

% Moisture: not dec. 11 Date Analyzed: 02/04/09 12:48

GC Column: RTX-VRX ID: 0.25 (mm) Dilution Factor: 1.0

Soil Extract Volume:_____(uL) Soil Aliquot Volume: _____(uL)

CONCENTRATION UNITS: (ug/L or ug/Kg) UG/KG

CAS NO.	COMPOUND	MDL	RL	CONC	Q	
67-64-1	Acetone	2.1	10	36	~~B~~ U	BL
71-43-2	Benzene	0.48	10		U	
75-27-4	Bromodichloromethane	0.31	10	0.84	J	
75-25-2	Bromoform	1.0	10		U	
74-83-9	Bromomethane	0.74	10		U	
78-93-3	2-Butanone	1.4	10		U	
75-15-0	Carbon disulfide	1.3	10		U	
56-23-5	Carbon tetrachloride	0.91	10		U	
108-90-7	Chlorobenzene	0.35	10		U	
75-00-3	Chloroethane	1.1	10		U	
67-66-3	Chloroform	0.57	10	10	J	
74-87-3	Chloromethane	0.54	10		U	
110-82-7	Cyclohexane	0.56	10		U	
124-48-1	Dibromochloromethane	0.35	10		U	
96-12-8	1,2-Dibromo-3-chloropropane	1.2	5.2		U	
106-93-4	1,2-Dibromoethane	0.44	10		U	
95-50-1	1,2-Dichlorobenzene	0.38	10		U	
541-73-1	1,3-Dichlorobenzene	0.87	10		U	
106-46-7	1,4-Dichlorobenzene	0.57	10		U	
75-71-8	Dichlorodifluoromethane	1.1	10		~~U~~ UJ	CCH
75-34-3	1,1-Dichloroethane	0.56	10		U	
107-06-2	1,2-Dichloroethane	0.48	10		U	
75-35-4	1,1-Dichloroethene	1.2	10		U	
156-59-2	cis-1,2-Dichloroethene	1.2	10		U	
156-60-5	trans-1,2-Dichloroethene	1.1	10		U	
78-87-5	1,2-Dichloropropane	0.48	10		U	
10061-01-5	cis-1,3-Dichloropropene	0.52	10		U	
10061-02-6	trans-1,3-Dichloropropene	0.33	10		U	
100-41-4	Ethylbenzene	0.77	10		U	
591-78-6	2-Hexanone	2.4	10		U	
98-82-8	Isopropylbenzene	0.91	10		U	
79-20-9	Methyl acetate	1.6	10		U	
75-09-2	Methylene chloride	0.64	10	10U	~~1.2~~ ~~JB~~	BL
108-87-2	Methyl cyclohexane	0.31	10		U	
1634-04-4	Methyl tert-butyl ether	0.33	10		U	
108-10-1	4-Methyl-2-pentanone	0.60	10		U	
100-42-5	Styrene	0.36	10		U	
79-34-5	1,1,2,2-Tetrachloroethane	0.44	10		U	
127-18-4	Tetrachloroethene	1.0	10		U	

FORM I VOA

MW 4/6/09

FORM 1
VOLATILE ORGANICS ANALYSIS DATA SHEET

CLIENT SAMPLE NO. 67

MR08-SS349-09A

Lab Name: EMPIRICAL LABS Contract: CH2MHILL

Lab Code: NA Case No.: NA SAS No.: NA SDG No.: LEJEUNE056

Matrix: (soil/water) SOIL Lab Sample ID: 0901201-67

Sample wt/vol: 5.4 (g/mL) G Lab File ID: 0120167A

Level: (low/med) LOW Date Sampled: 01/25/09 13:15

% Moisture: not dec. 11 Date Analyzed: 02/04/09 12:48

GC Column: RTX-VRX ID: 0.25 (mm) Dilution Factor: 1.0

Soil Extract Volume:_____(uL) Soil Aliquot Volume: _____(uL)

CONCENTRATION UNITS: (ug/L or ug/Kg) UG/KG

CAS NO.	COMPOUND	MDL	RL	CONC	Q
108-88-3	Toluene	0.89	10	0.98	J
120-82-1	1,2,4-Trichlorobenzene	0.18	10		U
71-55-6	1,1,1-Trichloroethane	0.93	10		U
79-00-5	1,1,2-Trichloroethane	0.36	10		U
79-01-6	Trichloroethene	0.88	10		U
76-13-1	Trichlorotrifluoroethane	0.57	10		U
75-69-4	Trichlorofluoromethane	0.98	10		U
75-01-4	Vinyl chloride	1.1	10		U
1330-20-7	Xylene(total)	0.72	10		U

lew
4/6/09

FORM 1
VOLATILE ORGANICS ANALYSIS DATA SHEET

CLIENT SAMPLE NO. 68

MR08-IS34
9-3-4-09A

Lab Name: EMPIRICAL LABS Contract: CH2MHILL

Lab Code: NA Case No.: NA SAS No.: NA SDG No.: LEJEUNE056

Matrix: (soil/water) SOIL Lab Sample ID: 0901201-68

Sample wt/vol: 6.4 (g/mL) G Lab File ID: 0120168A

Level: (low/med) LOW Date Sampled: 01/25/09 13:20

% Moisture: not dec. 16 Date Analyzed: 02/04/09 13:19

GC Column: RTX-VRX ID: 0.25 (mm) Dilution Factor: 1.0

Soil Extract Volume:_____(uL) Soil Aliquot Volume: _____(uL)

CONCENTRATION UNITS: (ug/L or ug/Kg) UG/KG

CAS NO.	COMPOUND	MDL	RL	CONC	Q	
67-64-1	Acetone	1.8	9.2	9.2u ~~8.0~~	JB	B
71-43-2	Benzene	0.43	9.2		U	
75-27-4	Bromodichloromethane	0.28	9.2		U	
75-25-2	Bromoform	0.92	9.2		U	
74-83-9	Bromomethane	0.66	9.2		U	
78-93-3	2-Butanone	1.3	9.2		U	
75-15-0	Carbon disulfide	1.2	9.2		U	
56-23-5	Carbon tetrachloride	0.81	9.2		U	
108-90-7	Chlorobenzene	0.31	9.2		U	
75-00-3	Chloroethane	1.0	9.2		U	
67-66-3	Chloroform	0.51	9.2		U	
74-87-3	Chloromethane	0.48	9.2		U	
110-82-7	Cyclohexane	0.50	9.2		U	
124-48-1	Dibromochloromethane	0.31	9.2		U	
96-12-8	1,2-Dibromo-3-chloropropane	1.1	4.6		U	
106-93-4	1,2-Dibromoethane	0.40	9.2		U	
95-50-1	1,2-Dichlorobenzene	0.34	9.2		U	
541-73-1	1,3-Dichlorobenzene	0.78	9.2		U	
106-46-7	1,4-Dichlorobenzene	0.51	9.2		U	
75-71-8	Dichlorodifluoromethane	1.0	9.2		UJ	UJ CCA
75-34-3	1,1-Dichloroethane	0.50	9.2		U	
107-06-2	1,2-Dichloroethane	0.42	9.2		U	
75-35-4	1,1-Dichloroethene	1.1	9.2		U	
156-59-2	cis-1,2-Dichloroethene	1.1	9.2		U	
156-60-5	trans-1,2-Dichloroethene	1.0	9.2		U	
78-87-5	1,2-Dichloropropane	0.42	9.2		U	
10061-01-5	cis-1,3-Dichloropropene	0.46	9.2		U	
10061-02-6	trans-1,3-Dichloropropene	0.30	9.2		U	
100-41-4	Ethylbenzene	0.69	9.2		U	
591-78-6	2-Hexanone	2.1	9.2		U	
98-82-8	Isopropylbenzene	0.81	9.2		U	
79-20-9	Methyl acetate	1.5	9.2		U	
75-09-2	Methylene chloride	0.57	9.2	9.2u ~~0.85~~	~~JB~~	B
108-87-2	Methyl cyclohexane	0.28	9.2		U	
1634-04-4	Methyl tert-butyl ether	0.30	9.2		U	
108-10-1	4-Methyl-2-pentanone	0.54	9.2		U	
100-42-5	Styrene	0.32	9.2		U	
79-34-5	1,1,2,2-Tetrachloroethane	0.40	9.2		U	
127-18-4	Tetrachloroethene	0.90	9.2		U	

LW 2/11/09

FORM 1
VOLATILE ORGANICS ANALYSIS DATA SHEET

CLIENT SAMPLE NO. 68

MR08-IS34
9-3-4-09A

Lab Name: EMPIRICAL LABS Contract: CH2MHILL

Lab Code: NA Case No.: NA SAS No.: NA SDG No.: LEJEUNE056

Matrix: (soil/water) SOIL Lab Sample ID: 0901201-68

Sample wt/vol: 6.4 (g/mL) G Lab File ID: 0120168A

Level: (low/med) LOW Date Sampled: 01/25/09 13:20

% Moisture: not dec. 16 Date Analyzed: 02/04/09 13:19

GC Column: RTX-VRX ID: 0.25 (mm) Dilution Factor: 1.0

Soil Extract Volume:_____(uL) Soil Aliquot Volume: _____(uL)

CONCENTRATION UNITS: (ug/L or ug/Kg) UG/KG

CAS NO.	COMPOUND	MDL	RL	CONC	Q
108-88-3	Toluene	0.80	9.2		U
120-82-1	1,2,4-Trichlorobenzene	0.17	9.2		U
71-55-6	1,1,1-Trichloroethane	0.83	9.2		U
79-00-5	1,1,2-Trichloroethane	0.32	9.2		U
79-01-6	Trichloroethene	0.79	9.2		U
76-13-1	Trichlorotrifluoroethane	0.51	9.2		U
75-69-4	Trichlorofluoromethane	0.88	9.2		U
75-01-4	Vinyl chloride	1.0	9.2		U
1330-20-7	Xylene(total)	0.65	9.2		U

JCW 4/6/09

FORM 1
VOLATILE ORGANICS ANALYSIS DATA SHEET

CLIENT SAMPLE NO.

MR08-SS326-09A 69

Lab Name: EMPIRICAL LABS Contract: CH2MHILL

Lab Code: NA Case No.: NA SAS No.: NA SDG No.: LEJEUNE056

Matrix: (soil/water) SOIL Lab Sample ID: 0901201-69

Sample wt/vol: 3.3 (g/mL) G Lab File ID: 0120169D

Level: (low/med) MED Date Sampled: 01/25/09 13:30

% Moisture: not dec. 11 Date Analyzed: 02/16/09 10:55

GC Column: RTX-VRX ID: 0.25 (mm) Dilution Factor: 1.0

Soil Extract Volume: 5000(uL) Soil Aliquot Volume: 100(uL)

CONCENTRATION UNITS: (ug/L or ug/Kg) UG/KG

CAS NO.	COMPOUND	MDL	RL	CONC	Q
67-64-1	Acetone	170	860		U
71-43-2	Benzene	40	860		U
75-27-4	Bromodichloromethane	26	860		U
75-25-2	Bromoform	86	860		U
74-83-9	Bromomethane	62	860		U
78-93-3	2-Butanone	120	860		U
75-15-0	Carbon disulfide	110	860		U
56-23-5	Carbon tetrachloride	75	860		U
108-90-7	Chlorobenzene	29	860		U
75-00-3	Chloroethane	94	860		U
67-66-3	Chloroform	47	860		U
74-87-3	Chloromethane	44	860		U
110-82-7	Cyclohexane	46	860		U
124-48-1	Dibromochloromethane	29	860		U
96-12-8	1,2-Dibromo-3-chloropropane	100	430		U
106-93-4	1,2-Dibromoethane	37	860		U
95-50-1	1,2-Dichlorobenzene	32	860		U
541-73-1	1,3-Dichlorobenzene	72	860		U
106-46-7	1,4-Dichlorobenzene	47	860		U
75-71-8	Dichlorodifluoromethane	94	860		U
75-34-3	1,1-Dichloroethane	46	860		U
107-06-2	1,2-Dichloroethane	39	860		U
75-35-4	1,1-Dichloroethene	100	860		U
156-59-2	cis-1,2-Dichloroethene	100	860		U
156-60-5	trans-1,2-Dichloroethene	94	860		U
78-87-5	1,2-Dichloropropane	39	860		U
10061-01-5	cis-1,3-Dichloropropene	43	860		U
10061-02-6	trans-1,3-Dichloropropene	27	860		U
100-41-4	Ethylbenzene	64	860		U
591-78-6	2-Hexanone	200	860		U
98-82-8	Isopropylbenzene	75	860		U
79-20-9	Methyl acetate	140	860		UUJ CH
75-09-2	Methylene chloride	53	860	860L ~~260 JB~~	BL
108-87-2	Methyl cyclohexane	26	860		U
1634-04-4	Methyl tert-butyl ether	27	860		U
108-10-1	4-Methyl-2-pentanone	50	860		U
100-42-5	Styrene	30	860		U
79-34-5	1,1,2,2-Tetrachloroethane	37	860		U
127-18-4	Tetrachloroethene	83	860		U

FORM I VOA

JLW 4/6/09

FORM 1
VOLATILE ORGANICS ANALYSIS DATA SHEET

CLIENT SAMPLE NO. 69

MR08-SS326-09A

Lab Name: EMPIRICAL LABS Contract: CH2MHILL

Lab Code: NA Case No.: NA SAS No.: NA SDG No.: LEJEUNE056

Matrix: (soil/water) SOIL Lab Sample ID: 0901201-69

Sample wt/vol: 3.3 (g/mL) G Lab File ID: 0120169D

Level: (low/med) MED Date Sampled: 01/25/09 13:30

% Moisture: not dec. 11 Date Analyzed: 02/16/09 10:55

GC Column: RTX-VRX ID: 0.25 (mm) Dilution Factor: 1.0

Soil Extract Volume: 5000(uL) Soil Aliquot Volume: 100(uL)

CONCENTRATION UNITS: (ug/L or ug/Kg) UG/KG

CAS NO.	COMPOUND	MDL	RL	CONC	Q
108-88-3	Toluene	74	860		U
120-82-1	1,2,4-Trichlorobenzene	15	860	860U ~~20~~ ~~JB~~	BL
71-55-6	1,1,1-Trichloroethane	77	860		U
79-00-5	1,1,2-Trichloroethane	30	860		U
79-01-6	Trichloroethene	73	860		U
76-13-1	Trichlorotrifluoroethane	47	860		U
75-69-4	Trichlorofluoromethane	81	860		U
75-01-4	Vinyl chloride	94	860		U
1330-20-7	Xylene(total)	60	860		U

FORM I VOA

PW 4/6/09

FORM 1
VOLATILE ORGANICS ANALYSIS DATA SHEET

CLIENT SAMPLE NO.

MR08-IS32
6-4-5-09A

Lab Name: EMPIRICAL LABS Contract: CH2MHILL

Lab Code: NA Case No.: NA SAS No.: NA SDG No.: LEJEUNE056

Matrix: (soil/water) SOIL Lab Sample ID: 0901201-70

Sample wt/vol: 6.1 (g/mL) G Lab File ID: 0120170A

Level: (low/med) LOW Date Sampled: 01/25/09 13:45

% Moisture: not dec. 12 Date Analyzed: 02/04/09 13:50

GC Column: RTX-VRX ID: 0.25 (mm) Dilution Factor: 1.0

Soil Extract Volume:_____(uL) Soil Aliquot Volume: _____(uL)

CONCENTRATION UNITS: (ug/L or ug/Kg) UG/KG

CAS NO.	COMPOUND	MDL	RL	CONC	Q
67-64-1	Acetone	1.9	9.3	9.3u ~~8.5~~	~~JB~~ BL
71-43-2	Benzene	0.44	9.3		U
75-27-4	Bromodichloromethane	0.28	9.3		U
75-25-2	Bromoform	0.93	9.3		U
74-83-9	Bromomethane	0.67	9.3		U
78-93-3	2-Butanone	1.3	9.3		U
75-15-0	Carbon disulfide	1.2	9.3		U
56-23-5	Carbon tetrachloride	0.82	9.3		U
108-90-7	Chlorobenzene	0.32	9.3		U
75-00-3	Chloroethane	1.0	9.3		U
67-66-3	Chloroform	0.51	9.3		U
74-87-3	Chloromethane	0.48	9.3		U
110-82-7	Cyclohexane	0.50	9.3		U
124-48-1	Dibromochloromethane	0.32	9.3		U
96-12-8	1,2-Dibromo-3-chloropropane	1.1	4.6		U
106-93-4	1,2-Dibromoethane	0.40	9.3		U
95-50-1	1,2-Dichlorobenzene	0.34	9.3		U
541-73-1	1,3-Dichlorobenzene	0.78	9.3		U
106-46-7	1,4-Dichlorobenzene	0.51	9.3		U
75-71-8	Dichlorodifluoromethane	1.0	9.3		~~U~~ UJ CCH
75-34-3	1,1-Dichloroethane	0.50	9.3		U
107-06-2	1,2-Dichloroethane	0.43	9.3		U
75-35-4	1,1-Dichloroethene	1.1	9.3		U
156-59-2	cis-1,2-Dichloroethene	1.1	9.3		U
156-60-5	trans-1,2-Dichloroethene	1.0	9.3		U
78-87-5	1,2-Dichloropropane	0.43	9.3		U
10061-01-5	cis-1,3-Dichloropropene	0.46	9.3		U
10061-02-6	trans-1,3-Dichloropropene	0.30	9.3		U
100-41-4	Ethylbenzene	0.70	9.3		U
591-78-6	2-Hexanone	2.1	9.3		U
98-82-8	Isopropylbenzene	0.82	9.3		U
79-20-9	Methyl acetate	1.5	9.3		U
75-09-2	Methylene chloride	0.58	9.3	9.3u ~~1.1~~	~~JB~~ BL
108-87-2	Methyl cyclohexane	0.28	9.3		U
1634-04-4	Methyl tert-butyl ether	0.30	9.3		U
108-10-1	4-Methyl-2-pentanone	0.54	9.3		U
100-42-5	Styrene	0.32	9.3		U
79-34-5	1,1,2,2-Tetrachloroethane	0.40	9.3		U
127-18-4	Tetrachloroethene	0.90	9.3		U

LW 11/6/09

FORM 1
VOLATILE ORGANICS ANALYSIS DATA SHEET

CLIENT SAMPLE NO. 70

MR08-IS32
6-4-5-09A

Lab Name: EMPIRICAL LABS Contract: CH2MHILL

Lab Code: NA Case No.: NA SAS No.: NA SDG No.: LEJEUNE056

Matrix: (soil/water) SOIL Lab Sample ID: 0901201-70

Sample wt/vol: 6.1 (g/mL) G Lab File ID: 0120170A

Level: (low/med) LOW Date Sampled: 01/25/09 13:45

% Moisture: not dec. 12 Date Analyzed: 02/04/09 13:50

GC Column: RTX-VRX ID: 0.25 (mm) Dilution Factor: 1.0

Soil Extract Volume:_____(uL) Soil Aliquot Volume: _____(uL)

CONCENTRATION UNITS: (ug/L or ug/Kg) UG/KG

CAS NO.	COMPOUND	MDL	RL	CONC	Q
108-88-3	Toluene	0.80	9.3		U
120-82-1	1,2,4-Trichlorobenzene	0.17	9.3		U
71-55-6	1,1,1-Trichloroethane	0.84	9.3		U
79-00-5	1,1,2-Trichloroethane	0.32	9.3		U
79-01-6	Trichloroethene	0.79	9.3		U
76-13-1	Trichlorotrifluoroethane	0.51	9.3		U
75-69-4	Trichlorofluoromethane	0.88	9.3		U
75-01-4	Vinyl chloride	1.0	9.3		U
1330-20-7	Xylene(total)	0.65	9.3		U

DEW 4/6/09

FORM 1
VOLATILE ORGANICS ANALYSIS DATA SHEET

CLIENT SAMPLE NO. 71

MR08-SS327-09A

Lab Name: EMPIRICAL LABS Contract: CH2MHILL

Lab Code: NA Case No.: NA SAS No.: NA SDG No.: LEJEUNE056

Matrix: (soil/water) SOIL Lab Sample ID: 0901201-71

Sample wt/vol: 3.8 (g/mL) G Lab File ID: 0120171A

Level: (low/med) LOW Date Sampled: 01/25/09 13:55

% Moisture: not dec. 29 Date Analyzed: 02/04/09 14:21

GC Column: RTX-VRX ID: 0.25 (mm) Dilution Factor: 1.0

Soil Extract Volume:_____(uL) Soil Aliquot Volume: _____(uL)

CONCENTRATION UNITS: (ug/L or ug/Kg) UG/KG

CAS NO.	COMPOUND	MDL	RL	CONC	Q
67-64-1	Acetone	3.7	19	290	~~B~~
71-43-2	Benzene	0.88	19		U
75-27-4	Bromodichloromethane	0.56	19		U
75-25-2	Bromoform	1.9	19		U
74-83-9	Bromomethane	1.3	19		U
78-93-3	2-Butanone	2.6	19		U
75-15-0	Carbon disulfide	2.4	19		U
56-23-5	Carbon tetrachloride	1.6	19		U
108-90-7	Chlorobenzene	0.64	19		U
75-00-3	Chloroethane	2.0	19		U
67-66-3	Chloroform	1.0	19		U
74-87-3	Chloromethane	0.97	19		U
110-82-7	Cyclohexane	1.0	19		U
124-48-1	Dibromochloromethane	0.64	19		U
96-12-8	1,2-Dibromo-3-chloropropane	2.2	9.3		U
106-93-4	1,2-Dibromoethane	0.80	19		U
95-50-1	1,2-Dichlorobenzene	0.69	19		U
541-73-1	1,3-Dichlorobenzene	1.6	19		U
106-46-7	1,4-Dichlorobenzene	1.0	19		U
75-71-8	Dichlorodifluoromethane	2.0	19		~~U~~ UJ CCV
75-34-3	1,1-Dichloroethane	1.0	19		U
107-06-2	1,2-Dichloroethane	0.86	19		U
75-35-4	1,1-Dichloroethene	2.2	19		U
156-59-2	cis-1,2-Dichloroethene	2.2	19		U
156-60-5	trans-1,2-Dichloroethene	2.0	19		U
78-87-5	1,2-Dichloropropane	0.86	19		U
10061-01-5	cis-1,3-Dichloropropene	0.93	19		U
10061-02-6	trans-1,3-Dichloropropene	0.60	19		U
100-41-4	Ethylbenzene	1.4	19		U
591-78-6	2-Hexanone	4.3	19		U
98-82-8	Isopropylbenzene	1.6	19		U
79-20-9	Methyl acetate	3.0	19		U
75-09-2	Methylene chloride	1.2	19	19u	~~8.2 JB~~ B
108-87-2	Methyl cyclohexane	0.56	19		U
1634-04-4	Methyl tert-butyl ether	0.60	19		U
108-10-1	4-Methyl-2-pentanone	1.1	19		U
100-42-5	Styrene	0.65	19		U
79-34-5	1,1,2,2-Tetrachloroethane	0.80	19		U
127-18-4	Tetrachloroethene	1.8	19		U

FORM I VOA

LEW 4/6/09

FORM 1
VOLATILE ORGANICS ANALYSIS DATA SHEET

CLIENT SAMPLE NO. 71

MR08-SS327-09A

Lab Name: EMPIRICAL LABS Contract: CH2MHILL

Lab Code: NA Case No.: NA SAS No.: NA SDG No.: LEJEUNE056

Matrix: (soil/water) SOIL Lab Sample ID: 0901201-71

Sample wt/vol: 3.8 (g/mL) G Lab File ID: 0120171A

Level: (low/med) LOW Date Sampled: 01/25/09 13:55

% Moisture: not dec. 29 Date Analyzed: 02/04/09 14:21

GC Column: RTX-VRX ID: 0.25 (mm) Dilution Factor: 1.0

Soil Extract Volume:_____(uL) Soil Aliquot Volume: _____(uL)

CONCENTRATION UNITS: (ug/L or ug/Kg) UG/KG

CAS NO.	COMPOUND	MDL	RL	CONC	Q
108-88-3	Toluene	1.6	19		U
120-82-1	1,2,4-Trichlorobenzene	0.34	19		U
71-55-6	1,1,1-Trichloroethane	1.7	19		U
79-00-5	1,1,2-Trichloroethane	0.65	19		U
79-01-6	Trichloroethene	1.6	19		U
76-13-1	Trichlorotrifluoroethane	1.0	19		U
75-69-4	Trichlorofluoromethane	1.8	19		U
75-01-4	Vinyl chloride	2.0	19		U
1330-20-7	Xylene(total)	1.3	19		U

JEW 4/6/09

FORM 1
VOLATILE ORGANICS ANALYSIS DATA SHEET

CLIENT SAMPLE NO. 72

MR08-IS32
7-2-3-09A

Lab Name: EMPIRICAL LABS Contract: CH2MHILL

Lab Code: NA Case No.: NA SAS No.: NA SDG No.: LEJEUNE056

Matrix: (soil/water) SOIL Lab Sample ID: 0901201-72

Sample wt/vol: 6.2 (g/mL) G Lab File ID: 0120172A

Level: (low/med) LOW Date Sampled: 01/25/09 14:10

% Moisture: not dec. 11 Date Analyzed: 02/04/09 23:37

GC Column: RTX-VRX ID: 0.25 (mm) Dilution Factor: 1.0

Soil Extract Volume:_____(uL) Soil Aliquot Volume: _____(uL)

CONCENTRATION UNITS: (ug/L or ug/Kg) UG/KG

CAS NO.	COMPOUND	MDL	RL	CONC	Q	
67-64-1	Acetone	1.8	9.1	9.1u ~~5.2~~	~~J~~	BL
71-43-2	Benzene	0.43	9.1		U	
75-27-4	Bromodichloromethane	0.27	9.1		U	
75-25-2	Bromoform	0.91	9.1		U	
74-83-9	Bromomethane	0.65	9.1		U	
78-93-3	2-Butanone	1.3	9.1		~~U~~ UJ	CU
75-15-0	Carbon disulfide	1.2	9.1		U	
56-23-5	Carbon tetrachloride	0.80	9.1		U	
108-90-7	Chlorobenzene	0.31	9.1		U	
75-00-3	Chloroethane	1.00	9.1		U	
67-66-3	Chloroform	0.50	9.1		U	
74-87-3	Chloromethane	0.47	9.1		U	
110-82-7	Cyclohexane	0.49	9.1		U	
124-48-1	Dibromochloromethane	0.31	9.1		U	
96-12-8	1,2-Dibromo-3-chloropropane	1.1	4.5		U	
106-93-4	1,2-Dibromoethane	0.39	9.1		U	
95-50-1	1,2-Dichlorobenzene	0.34	9.1		U	
541-73-1	1,3-Dichlorobenzene	0.76	9.1		U	
106-46-7	1,4-Dichlorobenzene	0.50	9.1		U	
75-71-8	Dichlorodifluoromethane	1.00	9.1		~~U~~ UJ	CU
75-34-3	1,1-Dichloroethane	0.49	9.1		U	
107-06-2	1,2-Dichloroethane	0.42	9.1		U	
75-35-4	1,1-Dichloroethene	1.1	9.1		U	
156-59-2	cis-1,2-Dichloroethene	1.1	9.1		U	
156-60-5	trans-1,2-Dichloroethene	1.00	9.1		U	
78-87-5	1,2-Dichloropropane	0.42	9.1		U	
10061-01-5	cis-1,3-Dichloropropene	0.45	9.1		U	
10061-02-6	trans-1,3-Dichloropropene	0.29	9.1		U	
100-41-4	Ethylbenzene	0.68	9.1		U	
591-78-6	2-Hexanone	2.1	9.1		U	
98-82-8	Isopropylbenzene	0.80	9.1		U	
79-20-9	Methyl acetate	1.4	9.1		U	
75-09-2	Methylene chloride	0.56	9.1	9.1u ~~1.0~~	~~JB~~	B
108-87-2	Methyl cyclohexane	0.27	9.1		U	
1634-04-4	Methyl tert-butyl ether	0.29	9.1		U	
108-10-1	4-Methyl-2-pentanone	0.52	9.1		U	
100-42-5	Styrene	0.32	9.1		U	
79-34-5	1,1,2,2-Tetrachloroethane	0.39	9.1		U	
127-18-4	Tetrachloroethene	0.88	9.1		U	

LW 2/16/09

FORM 1
VOLATILE ORGANICS ANALYSIS DATA SHEET

CLIENT SAMPLE NO.

MR08-IS32
7-2-3-09A

72

Lab Name: EMPIRICAL LABS Contract: CH2MHILL

Lab Code: NA Case No.: NA SAS No.: NA SDG No.: LEJEUNE056

Matrix: (soil/water) SOIL Lab Sample ID: 0901201-72

Sample wt/vol: 6.2 (g/mL) G Lab File ID: 0120172A

Level: (low/med) LOW Date Sampled: 01/25/09 14:10

% Moisture: not dec. 11 Date Analyzed: 02/04/09 23:37

GC Column: RTX-VRX ID: 0.25 (mm) Dilution Factor: 1.0

Soil Extract Volume:_____(uL) Soil Aliquot Volume: _____(uL)

CONCENTRATION UNITS: (ug/L or ug/Kg) UG/KG

CAS NO.	COMPOUND	MDL	RL	CONC	Q
108-88-3	Toluene	0.78	9.1		U
120-82-1	1,2,4-Trichlorobenzene	0.16	9.1		U
71-55-6	1,1,1-Trichloroethane	0.82	9.1		U
79-00-5	1,1,2-Trichloroethane	0.32	9.1		U
79-01-6	Trichloroethene	0.77	9.1		U
76-13-1	Trichlorotrifluoroethane	0.50	9.1		U
75-69-4	Trichlorofluoromethane	0.86	9.1		U
75-01-4	Vinyl chloride	1.00	9.1		U
1330-20-7	Xylene(total)	0.63	9.1		U

MW
4/6/09

FORM 1
VOLATILE ORGANICS ANALYSIS DATA SHEET

CLIENT SAMPLE NO. 73

MR08-SS372-09A

Lab Name: EMPIRICAL LABS Contract: CH2MHILL

Lab Code: NA Case No.: NA SAS No.: NA SDG No.: LEJEUNE056

Matrix: (soil/water) SOIL Lab Sample ID: 0901201-73

Sample wt/vol: 4.8 (g/mL) G Lab File ID: 0120173A

Level: (low/med) LOW Date Sampled: 01/25/09 10:00

% Moisture: not dec. 19 Date Analyzed: 02/04/09 15:54

GC Column: RTX-VRX ID: 0.25 (mm) Dilution Factor: 1.0

Soil Extract Volume:_____(uL) Soil Aliquot Volume: _____(uL)

CONCENTRATION UNITS: (ug/L or ug/Kg) UG/KG

CAS NO.	COMPOUND	MDL	RL	CONC	Q	
67-64-1	Acetone	2.6	13	210	~~B~~	
71-43-2	Benzene	0.61	13	1.3	~~J~~ J	MS
75-27-4	Bromodichloromethane	0.39	13		U UJ	MS
75-25-2	Bromoform	1.3	13		U ↓	↓
74-83-9	Bromomethane	0.94	13		U	
78-93-3	2-Butanone	1.8	13		U	
75-15-0	Carbon disulfide	1.7	13	2.1	J	
56-23-5	Carbon tetrachloride	1.1	13		U UJ	MS
108-90-7	Chlorobenzene	0.44	13		U UJ	↓
75-00-3	Chloroethane	1.4	13		U	
67-66-3	Chloroform	0.72	13		U UJ	MS
74-87-3	Chloromethane	0.68	13		U	
110-82-7	Cyclohexane	0.70	13		U UJ	MS
124-48-1	Dibromochloromethane	0.44	13		U UJ	
96-12-8	1,2-Dibromo-3-chloropropane	1.6	6.5		U	
106-93-4	1,2-Dibromoethane	0.56	13		U	
95-50-1	1,2-Dichlorobenzene	0.48	13		U	
541-73-1	1,3-Dichlorobenzene	1.1	13		U	
106-46-7	1,4-Dichlorobenzene	0.72	13		U ↓	↓
75-71-8	Dichlorodifluoromethane	1.4	13		U UJ	CC
75-34-3	1,1-Dichloroethane	0.70	13		U UJ	M
107-06-2	1,2-Dichloroethane	0.60	13		U UJ	M
75-35-4	1,1-Dichloroethene	1.6	13		U	
156-59-2	cis-1,2-Dichloroethene	1.6	13		U UJ	M
156-60-5	trans-1,2-Dichloroethene	1.4	13		U	
78-87-5	1,2-Dichloropropane	0.60	13		U	
10061-01-5	cis-1,3-Dichloropropene	0.65	13		U	
10061-02-6	trans-1,3-Dichloropropene	0.42	13		U ↓	↓
100-41-4	Ethylbenzene	0.98	13		U UJ	M
591-78-6	2-Hexanone	3.0	13		U	
98-82-8	Isopropylbenzene	1.1	13		U UJ	M
79-20-9	Methyl acetate	2.1	13		U	
75-09-2	Methylene chloride	0.81	13	13u	~~1.4~~ ~~JB~~	B
108-87-2	Methyl cyclohexane	0.39	13		U UJ	M
1634-04-4	Methyl tert-butyl ether	0.42	13		U	
108-10-1	4-Methyl-2-pentanone	0.76	13		U	
100-42-5	Styrene	0.46	13		U UJ	M
79-34-5	1,1,2,2-Tetrachloroethane	0.56	13		U	
127-18-4	Tetrachloroethene	1.3	13		U ↓	↓

FORM I VOA

NW 2/11/09

FORM 1
VOLATILE ORGANICS ANALYSIS DATA SHEET

CLIENT SAMPLE NO.

MR08-SS372-09A

73

Lab Name: EMPIRICAL LABS Contract: CH2MHILL

Lab Code: NA Case No.: NA SAS No.: NA SDG No.: LEJEUNE056

Matrix: (soil/water) SOIL Lab Sample ID: 0901201-73

Sample wt/vol: 4.8 (g/mL) G Lab File ID: 0120173A

Level: (low/med) LOW Date Sampled: 01/25/09 10:00

% Moisture: not dec. 19 Date Analyzed: 02/04/09 15:54

GC Column: RTX-VRX ID: 0.25 (mm) Dilution Factor: 1.0

Soil Extract Volume:_____(uL) Soil Aliquot Volume: _____(uL)

CONCENTRATION UNITS: (ug/L or ug/Kg) UG/KG

CAS NO.	COMPOUND	MDL	RL	CONC	Q	
108-88-3	Toluene	1.1	13	1.8	~~J~~ J	MS
120-82-1	1,2,4-Trichlorobenzene	0.23	13		~~U~~ R	↓
71-55-6	1,1,1-Trichloroethane	1.2	13		U UJ	↓
79-00-5	1,1,2-Trichloroethane	0.46	13		U	↓
79-01-6	Trichloroethene	1.1	13		U	↓
76-13-1	Trichlorotrifluoroethane	0.72	13		U	↓
75-69-4	Trichlorofluoromethane	1.2	13		U	
75-01-4	Vinyl chloride	1.4	13		U	
1330-20-7	Xylene(total)	0.91	13		~~U~~ UJ	MS

FORM I VOA

lw 4/6/09

FORM 1
VOLATILE ORGANICS ANALYSIS DATA SHEET

CLIENT SAMPLE NO. 74

MR08-IS3
72-1-2-09A

Lab Name: EMPIRICAL LABS Contract: CH2MHILL

Lab Code: NA Case No.: NA SAS No.: NA SDG No.: LEJEUNE056

Matrix: (soil/water) SOIL Lab Sample ID: 0901201-74

Sample wt/vol: 5.0 (g/mL) G Lab File ID: 0120174A

Level: (low/med) LOW Date Sampled: 01/25/09 10:10

% Moisture: not dec. 9 Date Analyzed: 02/04/09 16:25

GC Column: RTX-VRX ID: 0.25 (mm) Dilution Factor: 1.0

Soil Extract Volume:_____(uL) Soil Aliquot Volume: _____(uL)

CONCENTRATION UNITS: (ug/L or ug/Kg) UG/KG

CAS NO.	COMPOUND	MDL	RL	CONC	Q	
67-64-1	Acetone	2.2	11	11u	~~8.3 JB~~	B
71-43-2	Benzene	0.51	11		~~U~~ UJ	MS
75-27-4	Bromodichloromethane	0.33	11		U	
75-25-2	Bromoform	1.1	11		U	
74-83-9	Bromomethane	0.79	11		U	
78-93-3	2-Butanone	1.5	11		U	
75-15-0	Carbon disulfide	1.4	11		U	
56-23-5	Carbon tetrachloride	0.96	11		U	
108-90-7	Chlorobenzene	0.37	11		~~U~~ UJ	MS
75-00-3	Chloroethane	1.2	11		U	
67-66-3	Chloroform	0.60	11		U	
74-87-3	Chloromethane	0.57	11		U	
110-82-7	Cyclohexane	0.59	11		U	
124-48-1	Dibromochloromethane	0.37	11		U	
96-12-8	1,2-Dibromo-3-chloropropane	1.3	5.5		U	
106-93-4	1,2-Dibromoethane	0.47	11		U UJ	MS
95-50-1	1,2-Dichlorobenzene	0.40	11		U	
541-73-1	1,3-Dichlorobenzene	0.92	11		U	
106-46-7	1,4-Dichlorobenzene	0.60	11		U	
75-71-8	Dichlorodifluoromethane	1.2	11		~~U~~ UJ	CC
75-34-3	1,1-Dichloroethane	0.59	11		U	
107-06-2	1,2-Dichloroethane	0.50	11		U	
75-35-4	1,1-Dichloroethene	1.3	11		U	
156-59-2	cis-1,2-Dichloroethene	1.3	11		U	
156-60-5	trans-1,2-Dichloroethene	1.2	11		U	
78-87-5	1,2-Dichloropropane	0.50	11		U	
10061-01-5	cis-1,3-Dichloropropene	0.55	11		U	
10061-02-6	trans-1,3-Dichloropropene	0.35	11		U	
100-41-4	Ethylbenzene	0.82	11		~~U~~ UJ	MS
591-78-6	2-Hexanone	2.5	11		U	
98-82-8	Isopropylbenzene	0.96	11		~~U~~ UJ	MS
79-20-9	Methyl acetate	1.8	11		U	
75-09-2	Methylene chloride	0.68	11	11u	~~1.4 JB~~	BL
108-87-2	Methyl cyclohexane	0.33	11		~~U~~ UJ	MS
1634-04-4	Methyl tert-butyl ether	0.35	11		U	
108-10-1	4-Methyl-2-pentanone	0.64	11		U	
100-42-5	Styrene	0.38	11		~~U~~ UJ	MS
79-34-5	1,1,2,2-Tetrachloroethane	0.47	11		U	
127-18-4	Tetrachloroethene	1.1	11		~~U~~ UJ	MS

FORM I VOA

LW 016609

FORM 1
VOLATILE ORGANICS ANALYSIS DATA SHEET

CLIENT SAMPLE NO. 74

MR08-IS3
72-1-2-09A

Lab Name: EMPIRICAL LABS Contract: CH2MHILL

Lab Code: NA Case No.: NA SAS No.: NA SDG No.: LEJEUNE056

Matrix: (soil/water) SOIL Lab Sample ID: 0901201-74

Sample wt/vol: 5.0 (g/mL) G Lab File ID: 0120174A

Level: (low/med) LOW Date Sampled: 01/25/09 10:10

% Moisture: not dec. 9 Date Analyzed: 02/04/09 16:25

GC Column: RTX-VRX ID: 0.25 (mm) Dilution Factor: 1.0

Soil Extract Volume:_____(uL) Soil Aliquot Volume: _____(uL)

CONCENTRATION UNITS: (ug/L or ug/Kg) UG/KG

CAS NO.	COMPOUND	MDL	RL	CONC	Q	
108-88-3	Toluene	0.94	11		~~U~~ UJ	M
120-82-1	1,2,4-Trichlorobenzene	0.20	11		~~U~~ UJ	J
71-55-6	1,1,1-Trichloroethane	0.99	11		U	
79-00-5	1,1,2-Trichloroethane	0.38	11		U	
79-01-6	Trichloroethene	0.93	11		~~U~~ UJ	M
76-13-1	Trichlorotrifluoroethane	0.60	11		U	
75-69-4	Trichlorofluoromethane	1.0	11		U	
75-01-4	Vinyl chloride	1.2	11		U	
1330-20-7	Xylene(total)	0.77	11		~~U~~ UJ	M

FORM I VOA

LW 4/6/09

FORM 1
VOLATILE ORGANICS ANALYSIS DATA SHEET

CLIENT SAMPLE NO. 75

MR08-SS324-09A

Lab Name: EMPIRICAL LABS Contract: CH2MHILL

Lab Code: NA Case No.: NA SAS No.: NA SDG No.: LEJEUNE056

Matrix: (soil/water) SOIL Lab Sample ID: 0901201-75

Sample wt/vol: 2.0 (g/mL) G Lab File ID: 0120175A

Level: (low/med) LOW Date Sampled: 01/25/09 14:25

% Moisture: not dec. 6 Date Analyzed: 02/05/09 00:08

GC Column: RTX-VRX ID: 0.25 (mm) Dilution Factor: 1.0

Soil Extract Volume:_____(uL) Soil Aliquot Volume: _____(uL)

CONCENTRATION UNITS: (ug/L or ug/Kg) UG/KG

CAS NO.	COMPOUND	MDL	RL	CONC	Q
67-64-1	Acetone	5.4	27	250	
71-43-2	Benzene	1.3	27		U
75-27-4	Bromodichloromethane	0.80	27		U
75-25-2	Bromoform	2.7	27		U
74-83-9	Bromomethane	1.9	27		U
78-93-3	2-Butanone	3.8	27		~~U~~ UJ CC
75-15-0	Carbon disulfide	3.5	27		U
56-23-5	Carbon tetrachloride	2.4	27		U
108-90-7	Chlorobenzene	0.91	27		U
75-00-3	Chloroethane	3.0	27		U
67-66-3	Chloroform	1.5	27		U
74-87-3	Chloromethane	1.4	27		U
110-82-7	Cyclohexane	1.4	27		U
124-48-1	Dibromochloromethane	0.91	27		U
96-12-8	1,2-Dibromo-3-chloropropane	3.2	13		U
106-93-4	1,2-Dibromoethane	1.2	27		U
95-50-1	1,2-Dichlorobenzene	0.99	27		U
541-73-1	1,3-Dichlorobenzene	2.2	27		U
106-46-7	1,4-Dichlorobenzene	1.5	27		U
75-71-8	Dichlorodifluoromethane	3.0	27		~~U~~ UJ CC
75-34-3	1,1-Dichloroethane	1.4	27		U
107-06-2	1,2-Dichloroethane	1.2	27		U
75-35-4	1,1-Dichloroethene	3.2	27		U
156-59-2	cis-1,2-Dichloroethene	3.2	27		U
156-60-5	trans-1,2-Dichloroethene	3.0	27		U
78-87-5	1,2-Dichloropropane	1.2	27		U
10061-01-5	cis-1,3-Dichloropropene	1.3	27		U
10061-02-6	trans-1,3-Dichloropropene	0.86	27		U
100-41-4	Ethylbenzene	2.0	27	5.2	J
591-78-6	2-Hexanone	6.2	27		U
98-82-8	Isopropylbenzene	2.4	27		U
79-20-9	Methyl acetate	4.3	27		U
75-09-2	Methylene chloride	1.7	27	21u ~~5.5~~	~~JB~~ BL
108-87-2	Methyl cyclohexane	0.80	27		U
1634-04-4	Methyl tert-butyl ether	0.86	27		U
108-10-1	4-Methyl-2-pentanone	1.6	27		U
100-42-5	Styrene	0.94	27		U
79-34-5	1,1,2,2-Tetrachloroethane	1.2	27		U
127-18-4	Tetrachloroethene	2.6	27		U

FORM I VOA

tw 4/6/09

FORM 1
VOLATILE ORGANICS ANALYSIS DATA SHEET

CLIENT SAMPLE NO. 75

MR08-SS324-09A

Lab Name: EMPIRICAL LABS Contract: CH2MHILL

Lab Code: NA Case No.: NA SAS No.: NA SDG No.: LEJEUNE056

Matrix: (soil/water) SOIL Lab Sample ID: 0901201-75

Sample wt/vol: 2.0 (g/mL) G Lab File ID: 0120175A

Level: (low/med) LOW Date Sampled: 01/25/09 14:25

% Moisture: not dec. 6 Date Analyzed: 02/05/09 00:08

GC Column: RTX-VRX ID: 0.25 (mm) Dilution Factor: 1.0

Soil Extract Volume:_____(uL) Soil Aliquot Volume: _____(uL)

CONCENTRATION UNITS: (ug/L or ug/Kg) UG/KG

CAS NO.	COMPOUND	MDL	RL	CONC	Q
108-88-3	Toluene	2.3	27	5.5	J
120-82-1	1,2,4-Trichlorobenzene	0.48	27		U
71-55-6	1,1,1-Trichloroethane	2.4	27		U
79-00-5	1,1,2-Trichloroethane	0.94	27		U
79-01-6	Trichloroethene	2.3	27		U
76-13-1	Trichlorotrifluoroethane	1.5	27		U
75-69-4	Trichlorofluoromethane	2.6	27		U
75-01-4	Vinyl chloride	3.0	27		U
1330-20-7	Xylene(total)	1.9	27	10	J

Jew 4/6/09

FORM 1
VOLATILE ORGANICS ANALYSIS DATA SHEET

CLIENT SAMPLE NO. 76

MR08-IS32
4-3-4-09A

Lab Name: EMPIRICAL LABS Contract: CH2MHILL

Lab Code: NA Case No.: NA SAS No.: NA SDG No.: LEJEUNE056

Matrix: (soil/water) SOIL Lab Sample ID: 0901201-76

Sample wt/vol: 5.7 (g/mL) G Lab File ID: 0120176A

Level: (low/med) LOW Date Sampled: 01/25/09 14:30

% Moisture: not dec. 10 Date Analyzed: 02/05/09 00:39

GC Column: RTX-VRX ID: 0.25 (mm) Dilution Factor: 1.0

Soil Extract Volume:_____(uL) Soil Aliquot Volume: _____(uL)

CONCENTRATION UNITS: (ug/L or ug/Kg) UG/KG

CAS NO.	COMPOUND	MDL	RL	CONC	Q	
67-64-1	Acetone	1.9	9.7	9.14 ~~9.2~~	~~J~~	Q
71-43-2	Benzene	0.45	9.7		U	
75-27-4	Bromodichloromethane	0.29	9.7		U	
75-25-2	Bromoform	0.97	9.7		U	
74-83-9	Bromomethane	0.70	9.7		U	
78-93-3	2-Butanone	1.4	9.7		~~U~~ UJ	CCH
75-15-0	Carbon disulfide	1.2	9.7		U	
56-23-5	Carbon tetrachloride	0.85	9.7		U	
108-90-7	Chlorobenzene	0.33	9.7		U	
75-00-3	Chloroethane	1.1	9.7		U	
67-66-3	Chloroform	0.53	9.7		U	
74-87-3	Chloromethane	0.50	9.7		U	
110-82-7	Cyclohexane	0.52	9.7		U	
124-48-1	Dibromochloromethane	0.33	9.7		U	
96-12-8	1,2-Dibromo-3-chloropropane	1.2	4.8		U	
106-93-4	1,2-Dibromoethane	0.42	9.7		U	
95-50-1	1,2-Dichlorobenzene	0.36	9.7		U	
541-73-1	1,3-Dichlorobenzene	0.81	9.7		U	
106-46-7	1,4-Dichlorobenzene	0.53	9.7		U	
75-71-8	Dichlorodifluoromethane	1.1	9.7		~~U~~ UJ	CCH
75-34-3	1,1-Dichloroethane	0.52	9.7		U	
107-06-2	1,2-Dichloroethane	0.44	9.7		U	
75-35-4	1,1-Dichloroethene	1.2	9.7		U	
156-59-2	cis-1,2-Dichloroethene	1.2	9.7		U	
156-60-5	trans-1,2-Dichloroethene	1.1	9.7		U	
78-87-5	1,2-Dichloropropane	0.44	9.7		U	
10061-01-5	cis-1,3-Dichloropropene	0.48	9.7		U	
10061-02-6	trans-1,3-Dichloropropene	0.31	9.7		U	
100-41-4	Ethylbenzene	0.72	9.7		U	
591-78-6	2-Hexanone	2.2	9.7		U	
98-82-8	Isopropylbenzene	0.85	9.7		U	
79-20-9	Methyl acetate	1.5	9.7		U	
75-09-2	Methylene chloride	0.60	9.7	9.14 ~~1.2~~	~~JB~~	B1
108-87-2	Methyl cyclohexane	0.29	9.7		U	
1634-04-4	Methyl tert-butyl ether	0.31	9.7		U	
108-10-1	4-Methyl-2-pentanone	0.56	9.7		U	
100-42-5	Styrene	0.34	9.7		U	
79-34-5	1,1,2,2-Tetrachloroethane	0.42	9.7		U	
127-18-4	Tetrachloroethene	0.94	9.7		U	

MW 1/1/09

FORM 1
VOLATILE ORGANICS ANALYSIS DATA SHEET

CLIENT SAMPLE NO. 76

MR08-IS32
4-3-4-09A

Lab Name: EMPIRICAL LABS Contract: CH2MHILL

Lab Code: NA Case No.: NA SAS No.: NA SDG No.: LEJEUNE056

Matrix: (soil/water) SOIL Lab Sample ID: 0901201-76

Sample wt/vol: 5.7 (g/mL) G Lab File ID: 0120176A

Level: (low/med) LOW Date Sampled: 01/25/09 14:30

% Moisture: not dec. 10 Date Analyzed: 02/05/09 00:39

GC Column: RTX-VRX ID: 0.25 (mm) Dilution Factor: 1.0

Soil Extract Volume:_____(uL) Soil Aliquot Volume: _____(uL)

CONCENTRATION UNITS: (ug/L or ug/Kg) UG/KG

CAS NO.	COMPOUND	MDL	RL	CONC	Q
108-88-3	Toluene	0.83	9.7		U
120-82-1	1,2,4-Trichlorobenzene	0.17	9.7		U
71-55-6	1,1,1-Trichloroethane	0.87	9.7		U
79-00-5	1,1,2-Trichloroethane	0.34	9.7		U
79-01-6	Trichloroethene	0.82	9.7		U
76-13-1	Trichlorotrifluoroethane	0.53	9.7		U
75-69-4	Trichlorofluoromethane	0.92	9.7		U
75-01-4	Vinyl chloride	1.1	9.7		U
1330-20-7	Xylene(total)	0.68	9.7		U

FORM I VOA

LW
4/6/09

FORM 1
VOLATILE ORGANICS ANALYSIS DATA SHEET

CLIENT SAMPLE NO. 77

MR08-SS325-09A

Lab Name: EMPIRICAL LABS Contract: CH2MHILL

Lab Code: NA Case No.: NA SAS No.: NA SDG No.: LEJEUNE056

Matrix: (soil/water) SOIL Lab Sample ID: 0901201-77

Sample wt/vol: 3.8 (g/mL) G Lab File ID: 0120177A

Level: (low/med) LOW Date Sampled: 01/25/09 14:45

% Moisture: not dec. 15 Date Analyzed: 02/05/09 01:09

GC Column: RTX-VRX ID: 0.25 (mm) Dilution Factor: 1.0

Soil Extract Volume:_____(uL) Soil Aliquot Volume: _____(uL)

CONCENTRATION UNITS: (ug/L or ug/Kg) UG/KG

CAS NO.	COMPOUND	MDL	RL	CONC	Q
67-64-1	Acetone	3.1	16	400	
71-43-2	Benzene	0.73	16	2.5	J
75-27-4	Bromodichloromethane	0.47	16		U
75-25-2	Bromoform	1.6	16		U
74-83-9	Bromomethane	1.1	16		U
78-93-3	2-Butanone	2.2	16	47	J CCH
75-15-0	Carbon disulfide	2.0	16	2.7	J
56-23-5	Carbon tetrachloride	1.4	16		U
108-90-7	Chlorobenzene	0.53	16		U
75-00-3	Chloroethane	1.7	16		U
67-66-3	Chloroform	0.86	16		U
74-87-3	Chloromethane	0.81	16		U
110-82-7	Cyclohexane	0.84	16		U
124-48-1	Dibromochloromethane	0.53	16		U
96-12-8	1,2-Dibromo-3-chloropropane	1.9	7.8		U
106-93-4	1,2-Dibromoethane	0.67	16		U
95-50-1	1,2-Dichlorobenzene	0.58	16		U
541-73-1	1,3-Dichlorobenzene	1.3	16		U
106-46-7	1,4-Dichlorobenzene	0.86	16		U
75-71-8	Dichlorodifluoromethane	1.7	16		~~U~~ J CCH
75-34-3	1,1-Dichloroethane	0.84	16		U
107-06-2	1,2-Dichloroethane	0.72	16		U
75-35-4	1,1-Dichloroethene	1.9	16		U
156-59-2	cis-1,2-Dichloroethene	1.9	16		U
156-60-5	trans-1,2-Dichloroethene	1.7	16		U
78-87-5	1,2-Dichloropropane	0.72	16		U
10061-01-5	cis-1,3-Dichloropropene	0.78	16		U
10061-02-6	trans-1,3-Dichloropropene	0.50	16		U
100-41-4	Ethylbenzene	1.2	16		U
591-78-6	2-Hexanone	3.6	16		U
98-82-8	Isopropylbenzene	1.4	16		U
79-20-9	Methyl acetate	2.5	16		U
75-09-2	Methylene chloride	0.96	16	16 u ~~1.6~~	~~JB~~ BL
108-87-2	Methyl cyclohexane	0.47	16		U
1634-04-4	Methyl tert-butyl ether	0.50	16		U
108-10-1	4-Methyl-2-pentanone	0.90	16		U
100-42-5	Styrene	0.54	16		U
79-34-5	1,1,2,2-Tetrachloroethane	0.67	16		U
127-18-4	Tetrachloroethene	1.5	16		U

LW 2/1/09

FORM 1
VOLATILE ORGANICS ANALYSIS DATA SHEET

CLIENT SAMPLE NO. 77

MR08-SS325-09A

Lab Name: EMPIRICAL LABS Contract: CH2MHILL

Lab Code: NA Case No.: NA SAS No.: NA SDG No.: LEJEUNE056

Matrix: (soil/water) SOIL Lab Sample ID: 0901201-77

Sample wt/vol: 3.8 (g/mL) G Lab File ID: 0120177A

Level: (low/med) LOW Date Sampled: 01/25/09 14:45

% Moisture: not dec. 15 Date Analyzed: 02/05/09 01:09

GC Column: RTX-VRX ID: 0.25 (mm) Dilution Factor: 1.0

Soil Extract Volume:_____(uL) Soil Aliquot Volume: _____(uL)

CONCENTRATION UNITS: (ug/L or ug/Kg) UG/KG

CAS NO.	COMPOUND	MDL	RL	CONC	Q
108-88-3	Toluene	1.3	16	2.0	J
120-82-1	1,2,4-Trichlorobenzene	0.28	16		U
71-55-6	1,1,1-Trichloroethane	1.4	16		U
79-00-5	1,1,2-Trichloroethane	0.54	16		U
79-01-6	Trichloroethene	1.3	16		U
76-13-1	Trichlorotrifluoroethane	0.86	16		U
75-69-4	Trichlorofluoromethane	1.5	16		U
75-01-4	Vinyl chloride	1.7	16		U
1330-20-7	Xylene(total)	1.1	16		U

MW
41609

FORM 1
VOLATILE ORGANICS ANALYSIS DATA SHEET

CLIENT SAMPLE NO. 78

MR08-IS32
5-3-4-09A

Lab Name: EMPIRICAL LABS Contract: CH2MHILL

Lab Code: NA Case No.: NA SAS No.: NA SDG No.: LEJEUNE056

Matrix: (soil/water) SOIL Lab Sample ID: 0901201-78

Sample wt/vol: 6.1 (g/mL) G Lab File ID: 0120178A

Level: (low/med) LOW Date Sampled: 01/25/09 14:50

% Moisture: not dec. 12 Date Analyzed: 02/05/09 01:40

GC Column: RTX-VRX ID: 0.25 (mm) Dilution Factor: 1.0

Soil Extract Volume:_____(uL) Soil Aliquot Volume: _____(uL)

CONCENTRATION UNITS: (ug/L or ug/Kg) UG/KG

CAS NO.	COMPOUND	MDL	RL	CONC	Q	
67-64-1	Acetone	1.8	9.3	9.3u ~~7.2~~	J	B
71-43-2	Benzene	0.44	9.3		U	
75-27-4	Bromodichloromethane	0.28	9.3		U	
75-25-2	Bromoform	0.93	9.3		U	
74-83-9	Bromomethane	0.67	9.3		U	
78-93-3	2-Butanone	1.3	9.3		~~U~~ UJ CCH	
75-15-0	Carbon disulfide	1.2	9.3		U	
56-23-5	Carbon tetrachloride	0.82	9.3		U	
108-90-7	Chlorobenzene	0.32	9.3		U	
75-00-3	Chloroethane	1.0	9.3		U	
67-66-3	Chloroform	0.51	9.3		U	
74-87-3	Chloromethane	0.48	9.3		U	
110-82-7	Cyclohexane	0.50	9.3		U	
124-48-1	Dibromochloromethane	0.32	9.3		U	
96-12-8	1,2-Dibromo-3-chloropropane	1.1	4.6		U	
106-93-4	1,2-Dibromoethane	0.40	9.3		U	
95-50-1	1,2-Dichlorobenzene	0.34	9.3		U	
541-73-1	1,3-Dichlorobenzene	0.78	9.3		U	
106-46-7	1,4-Dichlorobenzene	0.51	9.3		U	
75-71-8	Dichlorodifluoromethane	1.0	9.3		~~U~~ UJ CCA	
75-34-3	1,1-Dichloroethane	0.50	9.3		U	
107-06-2	1,2-Dichloroethane	0.43	9.3		U	
75-35-4	1,1-Dichloroethene	1.1	9.3		U	
156-59-2	cis-1,2-Dichloroethene	1.1	9.3		U	
156-60-5	trans-1,2-Dichloroethene	1.0	9.3		U	
78-87-5	1,2-Dichloropropane	0.43	9.3		U	
10061-01-5	cis-1,3-Dichloropropene	0.46	9.3		U	
10061-02-6	trans-1,3-Dichloropropene	0.30	9.3		U	
100-41-4	Ethylbenzene	0.70	9.3		U	
591-78-6	2-Hexanone	2.1	9.3		U	
98-82-8	Isopropylbenzene	0.82	9.3		U	
79-20-9	Methyl acetate	1.5	9.3		U	
75-09-2	Methylene chloride	0.58	9.3	9.3u ~~1.1~~	~~JB~~	B
108-87-2	Methyl cyclohexane	0.28	9.3		U	
1634-04-4	Methyl tert-butyl ether	0.30	9.3		U	
108-10-1	4-Methyl-2-pentanone	0.54	9.3		U	
100-42-5	Styrene	0.32	9.3		U	
79-34-5	1,1,2,2-Tetrachloroethane	0.40	9.3		U	
127-18-4	Tetrachloroethene	0.90	9.3		U	

FORM I VOA

UW 4/6/09

FORM 1
VOLATILE ORGANICS ANALYSIS DATA SHEET

CLIENT SAMPLE NO. 78

MR08-IS32
5-3-4-09A

Lab Name: EMPIRICAL LABS Contract: CH2MHILL

Lab Code: NA Case No.: NA SAS No.: NA SDG No.: LEJEUNE056

Matrix: (soil/water) SOIL Lab Sample ID: 0901201-78

Sample wt/vol: 6.1 (g/mL) G Lab File ID: 0120178A

Level: (low/med) LOW Date Sampled: 01/25/09 14:50

% Moisture: not dec. 12 Date Analyzed: 02/05/09 01:40

GC Column: RTX-VRX ID: 0.25 (mm) Dilution Factor: 1.0

Soil Extract Volume:_____(uL) Soil Aliquot Volume: _____(uL)

CONCENTRATION UNITS: (ug/L or ug/Kg) UG/KG

CAS NO.	COMPOUND	MDL	RL	CONC	Q
108-88-3	Toluene	0.80	9.3		U
120-82-1	1,2,4-Trichlorobenzene	0.17	9.3		U
71-55-6	1,1,1-Trichloroethane	0.84	9.3		U
79-00-5	1,1,2-Trichloroethane	0.32	9.3		U
79-01-6	Trichloroethene	0.79	9.3		U
76-13-1	Trichlorotrifluoroethane	0.51	9.3		U
75-69-4	Trichlorofluoromethane	0.88	9.3		U
75-01-4	Vinyl chloride	1.0	9.3		U
1330-20-7	Xylene(total)	0.65	9.3		U

LW
4/6/09

FORM 1
VOLATILE ORGANICS ANALYSIS DATA SHEET

CLIENT SAMPLE NO. 79

MR08-SS323-09A

Lab Name: EMPIRICAL LABS Contract: CH2MHILL

Lab Code: NA Case No.: NA SAS No.: NA SDG No.: LEJEUNE056

Matrix: (soil/water) SOIL Lab Sample ID: 0901201-79

Sample wt/vol: 5.2 (g/mL) G Lab File ID: 0120179A

Level: (low/med) LOW Date Sampled: 01/25/09 15:30

% Moisture: not dec. 17 Date Analyzed: 02/05/09 02:11

GC Column: RTX-VRX ID: 0.25 (mm) Dilution Factor: 1.0

Soil Extract Volume:_____(uL) Soil Aliquot Volume: _____(uL)

CONCENTRATION UNITS: (ug/L or ug/Kg) UG/KG

CAS NO.	COMPOUND	MDL	RL	CONC	Q
67-64-1	Acetone	2.3	11	100	
71-43-2	Benzene	0.54	11	0.88	J
75-27-4	Bromodichloromethane	0.34	11		U
75-25-2	Bromoform	1.1	11		U
74-83-9	Bromomethane	0.83	11		U
78-93-3	2-Butanone	1.6	11	18	J CC
75-15-0	Carbon disulfide	1.5	11		U
56-23-5	Carbon tetrachloride	1.0	11		U
108-90-7	Chlorobenzene	0.39	11		U
75-00-3	Chloroethane	1.3	11		U
67-66-3	Chloroform	0.63	11		U
74-87-3	Chloromethane	0.60	11		U
110-82-7	Cyclohexane	0.62	11		U
124-48-1	Dibromochloromethane	0.39	11		U
96-12-8	1,2-Dibromo-3-chloropropane	1.4	5.7		U
106-93-4	1,2-Dibromoethane	0.49	11		U
95-50-1	1,2-Dichlorobenzene	0.42	11		U
541-73-1	1,3-Dichlorobenzene	0.96	11		U
106-46-7	1,4-Dichlorobenzene	0.63	11		U
75-71-8	Dichlorodifluoromethane	1.3	11		~~U~~ UJ CC
75-34-3	1,1-Dichloroethane	0.62	11		U
107-06-2	1,2-Dichloroethane	0.53	11		U
75-35-4	1,1-Dichloroethene	1.4	11		U
156-59-2	cis-1,2-Dichloroethene	1.4	11		U
156-60-5	trans-1,2-Dichloroethene	1.3	11		U
78-87-5	1,2-Dichloropropane	0.53	11		U
10061-01-5	cis-1,3-Dichloropropene	0.57	11		U
10061-02-6	trans-1,3-Dichloropropene	0.37	11		U
100-41-4	Ethylbenzene	0.86	11	1.0	J
591-78-6	2-Hexanone	2.6	11		U
98-82-8	Isopropylbenzene	1.0	11		U
79-20-9	Methyl acetate	1.8	11		U
75-09-2	Methylene chloride	0.71	11		U
108-87-2	Methyl cyclohexane	0.34	11		U
1634-04-4	Methyl tert-butyl ether	0.37	11		U
108-10-1	4-Methyl-2-pentanone	0.67	11		U
100-42-5	Styrene	0.40	11		U
79-34-5	1,1,2,2-Tetrachloroethane	0.49	11		U
127-18-4	Tetrachloroethene	1.1	11		U

fw 1/11/09

FORM 1
VOLATILE ORGANICS ANALYSIS DATA SHEET

CLIENT SAMPLE NO. 79

MR08-SS323-09A

Lab Name: EMPIRICAL LABS Contract: CH2MHILL

Lab Code: NA Case No.: NA SAS No.: NA SDG No.: LEJEUNE056

Matrix: (soil/water) SOIL Lab Sample ID: 0901201-79

Sample wt/vol: 5.2 (g/mL) G Lab File ID: 0120179A

Level: (low/med) LOW Date Sampled: 01/25/09 15:30

% Moisture: not dec. 17 Date Analyzed: 02/05/09 02:11

GC Column: RTX-VRX ID: 0.25 (mm) Dilution Factor: 1.0

Soil Extract Volume:_____(uL) Soil Aliquot Volume: _____(uL)

CONCENTRATION UNITS: (ug/L or ug/Kg) UG/KG

CAS NO.	COMPOUND	MDL	RL	CONC	Q
108-88-3	Toluene	0.99	11	1.4	J
120-82-1	1,2,4-Trichlorobenzene	0.21	11		U
71-55-6	1,1,1-Trichloroethane	1.0	11		U
79-00-5	1,1,2-Trichloroethane	0.40	11		U
79-01-6	Trichloroethene	0.98	11		U
76-13-1	Trichlorotrifluoroethane	0.63	11		U
75-69-4	Trichlorofluoromethane	1.1	11		U
75-01-4	Vinyl chloride	1.3	11		U
1330-20-7	Xylene(total)	0.80	11		U

gw 4/6/09

FORM 1
VOLATILE ORGANICS ANALYSIS DATA SHEET

CLIENT SAMPLE NO. 80

MR08-IS32
3-2-3-09A

Lab Name: EMPIRICAL LABS Contract: CH2MHILL

Lab Code: NA Case No.: NA SAS No.: NA SDG No.: LEJEUNE056

Matrix: (soil/water) SOIL Lab Sample ID: 0901201-80

Sample wt/vol: 5.8 (g/mL) G Lab File ID: 0120180A

Level: (low/med) LOW Date Sampled: 01/25/09 15:40

% Moisture: not dec. 13 Date Analyzed: 02/05/09 02:42

GC Column: RTX-VRX ID: 0.25 (mm) Dilution Factor: 1.0

Soil Extract Volume:_____(uL) Soil Aliquot Volume: _____(uL)

CONCENTRATION UNITS: (ug/L or ug/Kg) UG/KG

CAS NO.	COMPOUND	MDL	RL	CONC	Q	
67-64-1	Acetone	2.0	9.8	12	U	B
71-43-2	Benzene	0.46	9.8		U	
75-27-4	Bromodichloromethane	0.30	9.8		U	
75-25-2	Bromoform	0.98	9.8		U	
74-83-9	Bromomethane	0.71	9.8		U	
78-93-3	2-Butanone	1.4	9.8		~~U~~ UJ	CCV
75-15-0	Carbon disulfide	1.3	9.8		U	
56-23-5	Carbon tetrachloride	0.87	9.8		U	
108-90-7	Chlorobenzene	0.33	9.8		U	
75-00-3	Chloroethane	1.1	9.8		U	
67-66-3	Chloroform	0.54	9.8		U	
74-87-3	Chloromethane	0.51	9.8		U	
110-82-7	Cyclohexane	0.53	9.8		U	
124-48-1	Dibromochloromethane	0.33	9.8		U	
96-12-8	1,2-Dibromo-3-chloropropane	1.2	4.9		U	
106-93-4	1,2-Dibromoethane	0.42	9.8		U	
95-50-1	1,2-Dichlorobenzene	0.36	9.8		U	
541-73-1	1,3-Dichlorobenzene	0.83	9.8		U	
106-46-7	1,4-Dichlorobenzene	0.54	9.8		U	
75-71-8	Dichlorodifluoromethane	1.1	9.8		~~U~~ UJ	CCV
75-34-3	1,1-Dichloroethane	0.53	9.8		U	
107-06-2	1,2-Dichloroethane	0.45	9.8		U	
75-35-4	1,1-Dichloroethene	1.2	9.8		U	
156-59-2	cis-1,2-Dichloroethene	1.2	9.8		U	
156-60-5	trans-1,2-Dichloroethene	1.1	9.8		U	
78-87-5	1,2-Dichloropropane	0.45	9.8		U	
10061-01-5	cis-1,3-Dichloropropene	0.49	9.8		U	
10061-02-6	trans-1,3-Dichloropropene	0.32	9.8		U	
100-41-4	Ethylbenzene	0.74	9.8		U	
591-78-6	2-Hexanone	2.3	9.8		U	
98-82-8	Isopropylbenzene	0.87	9.8		U	
79-20-9	Methyl acetate	1.6	9.8		U	
75-09-2	Methylene chloride	0.61	9.8	9.84 ~~1.7~~	~~JB~~	B
108-87-2	Methyl cyclohexane	0.30	9.8		U	
1634-04-4	Methyl tert-butyl ether	0.32	9.8		U	
108-10-1	4-Methyl-2-pentanone	0.57	9.8		U	
100-42-5	Styrene	0.34	9.8		U	
79-34-5	1,1,2,2-Tetrachloroethane	0.42	9.8		U	
127-18-4	Tetrachloroethene	0.96	9.8		U	

LW 1.1.9

FORM 1
VOLATILE ORGANICS ANALYSIS DATA SHEET

CLIENT SAMPLE NO. 80

MR08-IS32
3-2-3-09A

Lab Name: EMPIRICAL LABS Contract: CH2MHILL

Lab Code: NA Case No.: NA SAS No.: NA SDG No.: LEJEUNE056

Matrix: (soil/water) SOIL Lab Sample ID: 0901201-80

Sample wt/vol: 5.8 (g/mL) G Lab File ID: 0120180A

Level: (low/med) LOW Date Sampled: 01/25/09 15:40

% Moisture: not dec. 13 Date Analyzed: 02/05/09 02:42

GC Column: RTX-VRX ID: 0.25 (mm) Dilution Factor: 1.0

Soil Extract Volume:_____(uL) Soil Aliquot Volume: _____(uL)

CONCENTRATION UNITS: (ug/L or ug/Kg) UG/KG

CAS NO.	COMPOUND	MDL	RL	CONC	Q
108-88-3	Toluene	0.85	9.8		U
120-82-1	1,2,4-Trichlorobenzene	0.18	9.8		U
71-55-6	1,1,1-Trichloroethane	0.89	9.8		U
79-00-5	1,1,2-Trichloroethane	0.34	9.8		U
79-01-6	Trichloroethene	0.84	9.8		U
76-13-1	Trichlorotrifluoroethane	0.54	9.8		U
75-69-4	Trichlorofluoromethane	0.94	9.8		U
75-01-4	Vinyl chloride	1.1	9.8		U
1330-20-7	Xylene(total)	0.69	9.8		U

MW 4/6/09

FORM 1
VOLATILE ORGANICS ANALYSIS DATA SHEET

CLIENT SAMPLE NO.

81

MR08-EB012609

Lab Name: EMPIRICAL LABS Contract: CH2MHILL

Lab Code: NA Case No.: NA SAS No.: NA SDG No.: LEJEUNE056

Matrix: (soil/water) WATER Lab Sample ID: 0901201-81

Sample wt/vol: 5.000 (g/mL) ML Lab File ID: 0120181

Level: (low/med) LOW Date Sampled: 01/26/09 07:40

% Moisture: not dec. _____ Date Analyzed: 02/03/09 15:55

GC Column: RTX-VRX ID: 0.25 (mm) Dilution Factor: 1.0

Soil Extract Volume:_____(uL) Soil Aliquot Volume: _____(uL)

CONCENTRATION UNITS: (ug/L or ug/Kg) UG/L

CAS NO.	COMPOUND	MDL	RL	CONC	Q
67-64-1	Acetone	0.84	2.5	2.2	J
71-43-2	Benzene	0.11	1.0		U
75-27-4	Bromodichloromethane	0.10	1.0		U
75-25-2	Bromoform	0.10	1.0		U
74-83-9	Bromomethane	0.32	1.0		~~U~~ UJ CCH
78-93-3	2-Butanone	1.0	3.0		U
75-15-0	Carbon disulfide	0.13	1.0		U
56-23-5	Carbon tetrachloride	0.15	1.0		U
108-90-7	Chlorobenzene	0.10	1.0	0.20	J
75-00-3	Chloroethane	0.18	1.0		U
67-66-3	Chloroform	0.11	1.0		U
74-87-3	Chloromethane	0.29	1.0		U
110-82-7	Cyclohexane	0.20	1.0		U
124-48-1	Dibromochloromethane	0.10	1.0		U
96-12-8	1,2-Dibromo-3-chloropropane	0.11	1.0		U
106-93-4	1,2-Dibromoethane	0.10	1.0		U
95-50-1	1,2-Dichlorobenzene	0.10	1.0		U
541-73-1	1,3-Dichlorobenzene	0.13	1.0		U
106-46-7	1,4-Dichlorobenzene	0.10	1.0		U
75-71-8	Dichlorodifluoromethane	0.22	1.0		~~U~~ UJ CCH
75-34-3	1,1-Dichloroethane	0.12	1.0		U
107-06-2	1,2-Dichloroethane	0.10	1.0		U
75-35-4	1,1-Dichloroethene	0.15	1.0		U
156-59-2	cis-1,2-Dichloroethene	0.13	1.0		U
156-60-5	trans-1,2-Dichloroethene	0.13	1.0		U
78-87-5	1,2-Dichloropropane	0.10	1.0		U
10061-01-5	cis-1,3-Dichloropropene	0.11	1.0		U
10061-02-6	trans-1,3-Dichloropropene	0.10	1.0		U
100-41-4	Ethylbenzene	0.13	1.0		U
591-78-6	2-Hexanone	0.30	2.0		U
98-82-8	Isopropylbenzene	0.15	1.0		U
79-20-9	Methyl acetate	0.30	1.0		U
75-09-2	Methylene chloride	0.14	1.0	1.0u ~~0.42 JB~~	BL
108-87-2	Methyl cyclohexane	0.17	1.0		U
1634-04-4	Methyl tert-butyl ether	0.10	1.0		U
108-10-1	4-Methyl-2-pentanone	0.29	1.0		U
100-42-5	Styrene	0.10	1.0		U
79-34-5	1,1,2,2-Tetrachloroethane	0.10	1.0		U
127-18-4	Tetrachloroethene	0.15	1.0		U

FORM I VOA

MW 4/6/09

FORM 1
VOLATILE ORGANICS ANALYSIS DATA SHEET

CLIENT SAMPLE NO. 81

MR08-EB012609

Lab Name: EMPIRICAL LABS Contract: CH2MHILL

Lab Code: NA Case No.: NA SAS No.: NA SDG No.: LEJEUNE056

Matrix: (soil/water) WATER Lab Sample ID: 0901201-81

Sample wt/vol: 5.000 (g/mL) ML Lab File ID: 0120181

Level: (low/med) LOW Date Sampled: 01/26/09 07:40

% Moisture: not dec. _____ Date Analyzed: 02/03/09 15:55

GC Column: RTX-VRX ID: 0.25 (mm) Dilution Factor: 1.0

Soil Extract Volume:_____(uL) Soil Aliquot Volume: _____(uL)

CONCENTRATION UNITS: (ug/L or ug/Kg) UG/L

CAS NO.	COMPOUND	MDL	RL	CONC	Q
108-88-3	Toluene	0.10	1.0		U
120-82-1	1,2,4-Trichlorobenzene	0.10	1.0	1.0U ~~0.14~~ ~~JB~~	BL
71-55-6	1,1,1-Trichloroethane	0.17	1.0		U
79-00-5	1,1,2-Trichloroethane	0.10	1.0		U
79-01-6	Trichloroethene	0.13	1.0		U
76-13-1	Trichlorotrifluoroethane	0.18	1.0		U
75-69-4	Trichlorofluoromethane	0.17	1.0		U
75-01-4	Vinyl chloride	0.18	1.0		U
1330-20-7	Xylene(total)	0.22	1.0		U

lw 4/6/09

FORM 1
VOLATILE ORGANICS ANALYSIS DATA SHEET

CLIENT SAMPLE NO. 82

MR08-FB012609

Lab Name: EMPIRICAL LABS Contract: CH2MHILL

Lab Code: NA Case No.: NA SAS No.: NA SDG No.: LEJEUNE056

Matrix: (soil/water) WATER Lab Sample ID: 0901201-82

Sample wt/vol: 5.000 (g/mL) ML Lab File ID: 0120182

Level: (low/med) LOW Date Sampled: 01/26/09 08:10

% Moisture: not dec. _____ Date Analyzed: 02/01/09 10:11

GC Column: RTX-VRX ID: 0.25 (mm) Dilution Factor: 1.0

Soil Extract Volume:_____(uL) Soil Aliquot Volume: _____(uL)

CONCENTRATION UNITS: (ug/L or ug/Kg) UG/L

CAS NO.	COMPOUND	MDL	RL	CONC	Q
67-64-1	Acetone	0.84	2.5	1.4	J
71-43-2	Benzene	0.11	1.0		U
75-27-4	Bromodichloromethane	0.10	1.0		U
75-25-2	Bromoform	0.10	1.0		U
74-83-9	Bromomethane	0.32	1.0		~~U~~ UJ CCH
78-93-3	2-Butanone	1.0	3.0		U
75-15-0	Carbon disulfide	0.13	1.0		U
56-23-5	Carbon tetrachloride	0.15	1.0		U
108-90-7	Chlorobenzene	0.10	1.0	0.31	J
75-00-3	Chloroethane	0.18	1.0		U
67-66-3	Chloroform	0.11	1.0	0.12	J
74-87-3	Chloromethane	0.29	1.0		U
110-82-7	Cyclohexane	0.20	1.0		U
124-48-1	Dibromochloromethane	0.10	1.0		U
96-12-8	1,2-Dibromo-3-chloropropane	0.11	1.0		U
106-93-4	1,2-Dibromoethane	0.10	1.0		U
95-50-1	1,2-Dichlorobenzene	0.10	1.0		U
541-73-1	1,3-Dichlorobenzene	0.13	1.0		U
106-46-7	1,4-Dichlorobenzene	0.10	1.0		U
75-71-8	Dichlorodifluoromethane	0.22	1.0		~~U~~ UJ CCH
75-34-3	1,1-Dichloroethane	0.12	1.0		U
107-06-2	1,2-Dichloroethane	0.10	1.0		U
75-35-4	1,1-Dichloroethene	0.15	1.0		U
156-59-2	cis-1,2-Dichloroethene	0.13	1.0		U
156-60-5	trans-1,2-Dichloroethene	0.13	1.0		U
78-87-5	1,2-Dichloropropane	0.10	1.0		U
10061-01-5	cis-1,3-Dichloropropene	0.11	1.0		U
10061-02-6	trans-1,3-Dichloropropene	0.10	1.0		U
100-41-4	Ethylbenzene	0.13	1.0		U
591-78-6	2-Hexanone	0.30	2.0		~~U~~ UJ CCH
98-82-8	Isopropylbenzene	0.15	1.0		U
79-20-9	Methyl acetate	0.30	1.0		U
75-09-2	Methylene chloride	0.14	1.0		U
108-87-2	Methyl cyclohexane	0.17	1.0		U
1634-04-4	Methyl tert-butyl ether	0.10	1.0		U
108-10-1	4-Methyl-2-pentanone	0.29	1.0		U
100-42-5	Styrene	0.10	1.0		U
79-34-5	1,1,2,2-Tetrachloroethane	0.10	1.0		U
127-18-4	Tetrachloroethene	0.15	1.0		U

MW 4/6/09

FORM 1
VOLATILE ORGANICS ANALYSIS DATA SHEET

CLIENT SAMPLE NO. 82

MR08-FB012609

Lab Name: EMPIRICAL LABS Contract: CH2MHILL

Lab Code: NA Case No.: NA SAS No.: NA SDG No.: LEJEUNE056

Matrix: (soil/water) WATER Lab Sample ID: 0901201-82

Sample wt/vol: 5.000 (g/mL) ML Lab File ID: 0120182

Level: (low/med) LOW Date Sampled: 01/26/09 08:10

% Moisture: not dec. _____ Date Analyzed: 02/01/09 10:11

GC Column: RTX-VRX ID: 0.25 (mm) Dilution Factor: 1.0

Soil Extract Volume:_____(uL) Soil Aliquot Volume: _____(uL)

CONCENTRATION UNITS: (ug/L or ug/Kg) UG/L

CAS NO.	COMPOUND	MDL	RL	CONC	Q
108-88-3	Toluene	0.10	1.0		U
120-82-1	1,2,4-Trichlorobenzene	0.10	1.0		U
71-55-6	1,1,1-Trichloroethane	0.17	1.0		U
79-00-5	1,1,2-Trichloroethane	0.10	1.0		U
79-01-6	Trichloroethene	0.13	1.0		U
76-13-1	Trichlorotrifluoroethane	0.18	1.0		U
75-69-4	Trichlorofluoromethane	0.17	1.0		U
75-01-4	Vinyl chloride	0.18	1.0		U
1330-20-7	Xylene(total)	0.22	1.0		U

QW
4/6/09

FORM 1
VOLATILE ORGANICS ANALYSIS DATA SHEET

CLIENT SAMPLE NO. 83

MR08-SS321-09A

Lab Name: EMPIRICAL LABS Contract: CH2MHILL

Lab Code: NA Case No.: NA SAS No.: NA SDG No.: LEJEUNE056

Matrix: (soil/water) SOIL Lab Sample ID: 0901201-83

Sample wt/vol: 4.3 (g/mL) G Lab File ID: 0120183A

Level: (low/med) LOW Date Sampled: 01/26/09 08:30

% Moisture: not dec. 7 Date Analyzed: 02/05/09 03:13

GC Column: RTX-VRX ID: 0.25 (mm) Dilution Factor: 1.0

Soil Extract Volume:_____(uL) Soil Aliquot Volume: _____(uL)

CONCENTRATION UNITS: (ug/L or ug/Kg) UG/KG

CAS NO.	COMPOUND	MDL	RL	CONC	Q
67-64-1	Acetone	2.5	12		U
71-43-2	Benzene	0.58	12	0.64	J
75-27-4	Bromodichloromethane	0.37	12		U
75-25-2	Bromoform	1.2	12		U
74-83-9	Bromomethane	0.90	12		U
78-93-3	2-Butanone	1.7	12		~~U~~ UJ CU
75-15-0	Carbon disulfide	1.6	12		U
56-23-5	Carbon tetrachloride	1.1	12		U
108-90-7	Chlorobenzene	0.42	12		U
75-00-3	Chloroethane	1.4	12		U
67-66-3	Chloroform	0.68	12		U
74-87-3	Chloromethane	0.65	12		U
110-82-7	Cyclohexane	0.67	12		U
124-48-1	Dibromochloromethane	0.42	12		U
96-12-8	1,2-Dibromo-3-chloropropane	1.5	6.2		U
106-93-4	1,2-Dibromoethane	0.53	12		U
95-50-1	1,2-Dichlorobenzene	0.46	12		U
541-73-1	1,3-Dichlorobenzene	1.0	12		U
106-46-7	1,4-Dichlorobenzene	0.68	12		U
75-71-8	Dichlorodifluoromethane	1.4	12		~~U~~ UJ CU
75-34-3	1,1-Dichloroethane	0.67	12		U
107-06-2	1,2-Dichloroethane	0.57	12		U
75-35-4	1,1-Dichloroethene	1.5	12		U
156-59-2	cis-1,2-Dichloroethene	1.5	12		U
156-60-5	trans-1,2-Dichloroethene	1.4	12		U
78-87-5	1,2-Dichloropropane	0.57	12		U
10061-01-5	cis-1,3-Dichloropropene	0.62	12		U
10061-02-6	trans-1,3-Dichloropropene	0.40	12		U
100-41-4	Ethylbenzene	0.93	12	3.1	J
591-78-6	2-Hexanone	2.8	12		U
98-82-8	Isopropylbenzene	1.1	12		U
79-20-9	Methyl acetate	2.0	12		U
75-09-2	Methylene chloride	0.77	12	12u ~~1.4~~ ~~JB~~	B
108-87-2	Methyl cyclohexane	0.37	12		U
1634-04-4	Methyl tert-butyl ether	0.40	12		U
108-10-1	4-Methyl-2-pentanone	0.72	12		U
100-42-5	Styrene	0.44	12		U
79-34-5	1,1,2,2-Tetrachloroethane	0.53	12		U
127-18-4	Tetrachloroethene	1.2	12		U

FORM I VOA

LW 10/6/09

FORM 1
VOLATILE ORGANICS ANALYSIS DATA SHEET

CLIENT SAMPLE NO. 83

MR08-SS321-09A

Lab Name: EMPIRICAL LABS Contract: CH2MHILL

Lab Code: NA Case No.: NA SAS No.: NA SDG No.: LEJEUNE056

Matrix: (soil/water) SOIL Lab Sample ID: 0901201-83

Sample wt/vol: 4.3 (g/mL) G Lab File ID: 0120183A

Level: (low/med) LOW Date Sampled: 01/26/09 08:30

% Moisture: not dec. 7 Date Analyzed: 02/05/09 03:13

GC Column: RTX-VRX ID: 0.25 (mm) Dilution Factor: 1.0

Soil Extract Volume:_____(uL) Soil Aliquot Volume: _____(uL)

CONCENTRATION UNITS: (ug/L or ug/Kg) UG/KG

CAS NO.	COMPOUND	MDL	RL	CONC	Q
108-88-3	Toluene	1.1	12	1.8	J
120-82-1	1,2,4-Trichlorobenzene	0.22	12		U
71-55-6	1,1,1-Trichloroethane	1.1	12		U
79-00-5	1,1,2-Trichloroethane	0.44	12		U
79-01-6	Trichloroethene	1.0	12		U
76-13-1	Trichlorotrifluoroethane	0.68	12		U
75-69-4	Trichlorofluoromethane	1.2	12		U
75-01-4	Vinyl chloride	1.4	12		U
1330-20-7	Xylene(total)	0.87	12		U

MW 4/6/09

FORM 1
VOLATILE ORGANICS ANALYSIS DATA SHEET

CLIENT SAMPLE NO. 84

MR08-IS32
1-2-3-09A

Lab Name: EMPIRICAL LABS Contract: CH2MHILL

Lab Code: NA Case No.: NA SAS No.: NA SDG No.: LEJEUNE056

Matrix: (soil/water) SOIL Lab Sample ID: 0901201-84

Sample wt/vol: 6.2 (g/mL) G Lab File ID: 0120184A

Level: (low/med) LOW Date Sampled: 01/26/09 08:35

% Moisture: not dec. 10 Date Analyzed: 02/05/09 03:44

GC Column: RTX-VRX ID: 0.25 (mm) Dilution Factor: 1.0

Soil Extract Volume:_____(uL) Soil Aliquot Volume: _____(uL)

CONCENTRATION UNITS: (ug/L or ug/Kg) UG/KG

CAS NO.	COMPOUND	MDL	RL	CONC	Q	
67-64-1	Acetone	1.8	9.0	9.0U ~~5.7 J~~		B
71-43-2	Benzene	0.42	9.0		U	
75-27-4	Bromodichloromethane	0.27	9.0		U	
75-25-2	Bromoform	0.90	9.0		U	
74-83-9	Bromomethane	0.65	9.0		U	
78-93-3	2-Butanone	1.3	9.0		~~U~~ UJ CC	
75-15-0	Carbon disulfide	1.2	9.0		U	
56-23-5	Carbon tetrachloride	0.79	9.0		U	
108-90-7	Chlorobenzene	0.31	9.0		U	
75-00-3	Chloroethane	0.99	9.0		U	
67-66-3	Chloroform	0.50	9.0		U	
74-87-3	Chloromethane	0.47	9.0		U	
110-82-7	Cyclohexane	0.49	9.0		U	
124-48-1	Dibromochloromethane	0.31	9.0		U	
96-12-8	1,2-Dibromo-3-chloropropane	1.1	4.5		U	
106-93-4	1,2-Dibromoethane	0.39	9.0		U	
95-50-1	1,2-Dichlorobenzene	0.33	9.0		U	
541-73-1	1,3-Dichlorobenzene	0.76	9.0		U	
106-46-7	1,4-Dichlorobenzene	0.50	9.0		U	
75-71-8	Dichlorodifluoromethane	0.99	9.0		~~U~~ UJ CCH	
75-34-3	1,1-Dichloroethane	0.49	9.0		U	
107-06-2	1,2-Dichloroethane	0.42	9.0		U	
75-35-4	1,1-Dichloroethene	1.1	9.0		U	
156-59-2	cis-1,2-Dichloroethene	1.1	9.0		U	
156-60-5	trans-1,2-Dichloroethene	0.99	9.0		U	
78-87-5	1,2-Dichloropropane	0.42	9.0		U	
10061-01-5	cis-1,3-Dichloropropene	0.45	9.0		U	
10061-02-6	trans-1,3-Dichloropropene	0.29	9.0		U	
100-41-4	Ethylbenzene	0.68	9.0		U	
591-78-6	2-Hexanone	2.1	9.0		U	
98-82-8	Isopropylbenzene	0.79	9.0		U	
79-20-9	Methyl acetate	1.4	9.0		U	
75-09-2	Methylene chloride	0.56	9.0	9.0U ~~1.0 JB~~		B
108-87-2	Methyl cyclohexane	0.27	9.0		U	
1634-04-4	Methyl tert-butyl ether	0.29	9.0		U	
108-10-1	4-Methyl-2-pentanone	0.52	9.0		U	
100-42-5	Styrene	0.32	9.0		U	
79-34-5	1,1,2,2-Tetrachloroethane	0.39	9.0		U	
127-18-4	Tetrachloroethene	0.88	9.0		U	

FORM I VOA

LW 9/6/09

FORM 1
VOLATILE ORGANICS ANALYSIS DATA SHEET

CLIENT SAMPLE NO. 84

MR08-IS32
1-2-3-09A

Lab Name: EMPIRICAL LABS Contract: CH2MHILL

Lab Code: NA Case No.: NA SAS No.: NA SDG No.: LEJEUNE056

Matrix: (soil/water) SOIL Lab Sample ID: 0901201-84

Sample wt/vol: 6.2 (g/mL) G Lab File ID: 0120184A

Level: (low/med) LOW Date Sampled: 01/26/09 08:35

% Moisture: not dec. 10 Date Analyzed: 02/05/09 03:44

GC Column: RTX-VRX ID: 0.25 (mm) Dilution Factor: 1.0

Soil Extract Volume:_____(uL) Soil Aliquot Volume: _____(uL)

CONCENTRATION UNITS: (ug/L or ug/Kg) UG/KG

CAS NO.	COMPOUND	MDL	RL	CONC	Q
108-88-3	Toluene	0.78	9.0		U
120-82-1	1,2,4-Trichlorobenzene	0.16	9.0		U
71-55-6	1,1,1-Trichloroethane	0.81	9.0		U
79-00-5	1,1,2-Trichloroethane	0.32	9.0		U
79-01-6	Trichloroethene	0.77	9.0		U
76-13-1	Trichlorotrifluoroethane	0.50	9.0		U
75-69-4	Trichlorofluoromethane	0.86	9.0		U
75-01-4	Vinyl chloride	0.99	9.0		U
1330-20-7	Xylene(total)	0.63	9.0		U

lw 9/6/09

FORM 1
VOLATILE ORGANICS ANALYSIS DATA SHEET

CLIENT SAMPLE NO. 85

MR08-SS322-09A

Lab Name: EMPIRICAL LABS Contract: CH2MHILL

Lab Code: NA Case No.: NA SAS No.: NA SDG No.: LEJEUNE056

Matrix: (soil/water) SOIL Lab Sample ID: 0901201-85

Sample wt/vol: 5.3 (g/mL) G Lab File ID: 0120185A

Level: (low/med) LOW Date Sampled: 01/26/09 08:45

% Moisture: not dec. 8 Date Analyzed: 02/05/09 04:14

GC Column: RTX-VRX ID: 0.25 (mm) Dilution Factor: 1.0

Soil Extract Volume:_____(uL) Soil Aliquot Volume: _____(uL)

CONCENTRATION UNITS: (ug/L or ug/Kg) UG/KG

CAS NO.	COMPOUND	MDL	RL	CONC	Q	
67-64-1	Acetone	2.0	10	12	U	BL
71-43-2	Benzene	0.48	10		U	
75-27-4	Bromodichloromethane	0.30	10		U	
75-25-2	Bromoform	1.0	10		U	
74-83-9	Bromomethane	0.73	10		U	
78-93-3	2-Butanone	1.4	10		~~U~~ UJ	CCA
75-15-0	Carbon disulfide	1.3	10		U	
56-23-5	Carbon tetrachloride	0.89	10		U	
108-90-7	Chlorobenzene	0.34	10		U	
75-00-3	Chloroethane	1.1	10		U	
67-66-3	Chloroform	0.56	10		U	
74-87-3	Chloromethane	0.53	10		U	
110-82-7	Cyclohexane	0.55	10		U	
124-48-1	Dibromochloromethane	0.34	10		U	
96-12-8	1,2-Dibromo-3-chloropropane	1.2	5.1		U	
106-93-4	1,2-Dibromoethane	0.44	10		U	
95-50-1	1,2-Dichlorobenzene	0.38	10		U	
541-73-1	1,3-Dichlorobenzene	0.85	10		U	
106-46-7	1,4-Dichlorobenzene	0.56	10		U	
75-71-8	Dichlorodifluoromethane	1.1	10		~~U~~ UJ	CCA
75-34-3	1,1-Dichloroethane	0.55	10		U	
107-06-2	1,2-Dichloroethane	0.47	10		U	
75-35-4	1,1-Dichloroethene	1.2	10		U	
156-59-2	cis-1,2-Dichloroethene	1.2	10		U	
156-60-5	trans-1,2-Dichloroethene	1.1	10		U	
78-87-5	1,2-Dichloropropane	0.47	10		U	
10061-01-5	cis-1,3-Dichloropropene	0.51	10		U	
10061-02-6	trans-1,3-Dichloropropene	0.32	10		U	
100-41-4	Ethylbenzene	0.76	10		U	
591-78-6	2-Hexanone	2.3	10		U	
98-82-8	Isopropylbenzene	0.89	10		U	
79-20-9	Methyl acetate	1.6	10		U	
75-09-2	Methylene chloride	0.63	10	10U	~~1.2 JB~~	BL
108-87-2	Methyl cyclohexane	0.30	10		U	
1634-04-4	Methyl tert-butyl ether	0.32	10		U	
108-10-1	4-Methyl-2-pentanone	0.59	10		U	
100-42-5	Styrene	0.36	10		U	
79-34-5	1,1,2,2-Tetrachloroethane	0.44	10		U	
127-18-4	Tetrachloroethene	0.98	10		U	

FORM I VOA

4/6/09

FORM 1
VOLATILE ORGANICS ANALYSIS DATA SHEET

CLIENT SAMPLE NO. 85

MR08-SS322-09A

Lab Name: EMPIRICAL LABS Contract: CH2MHILL

Lab Code: NA Case No.: NA SAS No.: NA SDG No.: LEJEUNE056

Matrix: (soil/water) SOIL Lab Sample ID: 0901201-85

Sample wt/vol: 5.3 (g/mL) G Lab File ID: 0120185A

Level: (low/med) LOW Date Sampled: 01/26/09 08:45

% Moisture: not dec. 8 Date Analyzed: 02/05/09 04:14

GC Column: RTX-VRX ID: 0.25 (mm) Dilution Factor: 1.0

Soil Extract Volume:_____(uL) Soil Aliquot Volume: _____(uL)

CONCENTRATION UNITS: (ug/L or ug/Kg) UG/KG

CAS NO.	COMPOUND	MDL	RL	CONC	Q
108-88-3	Toluene	0.87	10		U
120-82-1	1,2,4-Trichlorobenzene	0.18	10		U
71-55-6	1,1,1-Trichloroethane	0.91	10		U
79-00-5	1,1,2-Trichloroethane	0.36	10		U
79-01-6	Trichloroethene	0.86	10		U
76-13-1	Trichlorotrifluoroethane	0.56	10		U
75-69-4	Trichlorofluoromethane	0.96	10		U
75-01-4	Vinyl chloride	1.1	10		U
1330-20-7	Xylene(total)	0.71	10		U

lee 4/6/09

FORM 1
VOLATILE ORGANICS ANALYSIS DATA SHEET

CLIENT SAMPLE NO.

MR08-IS32
2-2-3-09A

86

Lab Name: EMPIRICAL LABS Contract: CH2MHILL

Lab Code: NA Case No.: NA SAS No.: NA SDG No.: LEJEUNE056

Matrix: (soil/water) SOIL Lab Sample ID: 0901201-86

Sample wt/vol: 6.4 (g/mL) G Lab File ID: 0120186A

Level: (low/med) LOW Date Sampled: 01/26/09 08:55

% Moisture: not dec. 12 Date Analyzed: 02/05/09 04:45

GC Column: RTX-VRX ID: 0.25 (mm) Dilution Factor: 1.0

Soil Extract Volume:_____(uL) Soil Aliquot Volume: _____(uL)

CONCENTRATION UNITS: (ug/L or ug/Kg) UG/KG

CAS NO.	COMPOUND	MDL	RL	CONC	Q	
67-64-1	Acetone	1.8	8.9	10	u	BL
71-43-2	Benzene	0.42	8.9		U	
75-27-4	Bromodichloromethane	0.27	8.9		U	
75-25-2	Bromoform	0.89	8.9		U	
74-83-9	Bromomethane	0.64	8.9		U	
78-93-3	2-Butanone	1.2	8.9		~~U~~ UJ	CC
75-15-0	Carbon disulfide	1.2	8.9		U	
56-23-5	Carbon tetrachloride	0.78	8.9		U	
108-90-7	Chlorobenzene	0.30	8.9		U	
75-00-3	Chloroethane	0.98	8.9		U	
67-66-3	Chloroform	0.49	8.9		U	
74-87-3	Chloromethane	0.46	8.9		U	
110-82-7	Cyclohexane	0.48	8.9		U	
124-48-1	Dibromochloromethane	0.30	8.9		U	
96-12-8	1,2-Dibromo-3-chloropropane	1.1	4.4		U	
106-93-4	1,2-Dibromoethane	0.38	8.9		U	
95-50-1	1,2-Dichlorobenzene	0.33	8.9		U	
541-73-1	1,3-Dichlorobenzene	0.75	8.9		U	
106-46-7	1,4-Dichlorobenzene	0.49	8.9		U	
75-71-8	Dichlorodifluoromethane	0.98	8.9		~~U~~ UJ	CC
75-34-3	1,1-Dichloroethane	0.48	8.9		U	
107-06-2	1,2-Dichloroethane	0.41	8.9		U	
75-35-4	1,1-Dichloroethene	1.1	8.9		U	
156-59-2	cis-1,2-Dichloroethene	1.1	8.9		U	
156-60-5	trans-1,2-Dichloroethene	0.98	8.9		U	
78-87-5	1,2-Dichloropropane	0.41	8.9		U	
10061-01-5	cis-1,3-Dichloropropene	0.44	8.9		U	
10061-02-6	trans-1,3-Dichloropropene	0.28	8.9		U	
100-41-4	Ethylbenzene	0.67	8.9		U	
591-78-6	2-Hexanone	2.0	8.9		U	
98-82-8	Isopropylbenzene	0.78	8.9		U	
79-20-9	Methyl acetate	1.4	8.9		U	
75-09-2	Methylene chloride	0.55	8.9	8.9u 1.1	~~UB~~	BL
108-87-2	Methyl cyclohexane	0.27	8.9		U	
1634-04-4	Methyl tert-butyl ether	0.28	8.9		U	
108-10-1	4-Methyl-2-pentanone	0.52	8.9		U	
100-42-5	Styrene	0.31	8.9		U	
79-34-5	1,1,2,2-Tetrachloroethane	0.38	8.9		U	
127-18-4	Tetrachloroethene	0.86	8.9		U	

FORM I VOA

LW 4/6/09

FORM 1
VOLATILE ORGANICS ANALYSIS DATA SHEET

CLIENT SAMPLE NO.

86

MR08-IS32
2-2-3-09A

Lab Name: EMPIRICAL LABS Contract: CH2MHILL

Lab Code: NA Case No.: NA SAS No.: NA SDG No.: LEJEUNE056

Matrix: (soil/water) SOIL Lab Sample ID: 0901201-86

Sample wt/vol: 6.4 (g/mL) G Lab File ID: 0120186A

Level: (low/med) LOW Date Sampled: 01/26/09 08:55

% Moisture: not dec. 12 Date Analyzed: 02/05/09 04:45

GC Column: RTX-VRX ID: 0.25 (mm) Dilution Factor: 1.0

Soil Extract Volume:_____(uL) Soil Aliquot Volume: _____(uL)

CONCENTRATION UNITS: (ug/L or ug/Kg) UG/KG

CAS NO.	COMPOUND	MDL	RL	CONC	Q
108-88-3	Toluene	0.76	8.9		U
120-82-1	1,2,4-Trichlorobenzene	0.16	8.9		U
71-55-6	1,1,1-Trichloroethane	0.80	8.9		U
79-00-5	1,1,2-Trichloroethane	0.31	8.9		U
79-01-6	Trichloroethene	0.76	8.9		U
76-13-1	Trichlorotrifluoroethane	0.49	8.9		U
75-69-4	Trichlorofluoromethane	0.84	8.9		U
75-01-4	Vinyl chloride	0.98	8.9		U
1330-20-7	Xylene(total)	0.62	8.9		U

MW 4/6/09

FORM 1
VOLATILE ORGANICS ANALYSIS DATA SHEET

CLIENT SAMPLE NO. 87

MR08-SS320-09A

Lab Name: EMPIRICAL LABS Contract: CH2MHILL

Lab Code: NA Case No.: NA SAS No.: NA SDG No.: LEJEUNE056

Matrix: (soil/water) SOIL Lab Sample ID: 0901201-87

Sample wt/vol: 5.3 (g/mL) G Lab File ID: 0120187A

Level: (low/med) LOW Date Sampled: 01/26/09 09:15

% Moisture: not dec. 25 Date Analyzed: 02/05/09 05:16

GC Column: RTX-VRX ID: 0.25 (mm) Dilution Factor: 1.0

Soil Extract Volume:_____(uL) Soil Aliquot Volume: _____(uL)

CONCENTRATION UNITS: (ug/L or ug/Kg) UG/KG

CAS NO.	COMPOUND	MDL	RL	CONC	Q	
67-64-1	Acetone	2.5	12	290	J	SS
71-43-2	Benzene	0.59	12		U	
75-27-4	Bromodichloromethane	0.37	12		U	
75-25-2	Bromoform	1.2	12		U	
74-83-9	Bromomethane	0.90	12		U	
78-93-3	2-Butanone	1.7	12		~~U~~ UJ	CCV
75-15-0	Carbon disulfide	1.6	12		U	
56-23-5	Carbon tetrachloride	1.1	12		U	
108-90-7	Chlorobenzene	0.42	12		U	
75-00-3	Chloroethane	1.4	12		U	
67-66-3	Chloroform	0.68	12		U	
74-87-3	Chloromethane	0.65	12		U	
110-82-7	Cyclohexane	0.67	12		U	
124-48-1	Dibromochloromethane	0.42	12		U	
96-12-8	1,2-Dibromo-3-chloropropane	1.5	6.2		U	
106-93-4	1,2-Dibromoethane	0.54	12		U	
95-50-1	1,2-Dichlorobenzene	0.46	12		U	
541-73-1	1,3-Dichlorobenzene	1.0	12		U	
106-46-7	1,4-Dichlorobenzene	0.68	12		U	
75-71-8	Dichlorodifluoromethane	1.4	12		~~U~~ UJ	CCV
75-34-3	1,1-Dichloroethane	0.67	12		U	
107-06-2	1,2-Dichloroethane	0.57	12		U	
75-35-4	1,1-Dichloroethene	1.5	12		U	
156-59-2	cis-1,2-Dichloroethene	1.5	12		U	
156-60-5	trans-1,2-Dichloroethene	1.4	12		U	
78-87-5	1,2-Dichloropropane	0.57	12		U	
10061-01-5	cis-1,3-Dichloropropene	0.62	12		U	
10061-02-6	trans-1,3-Dichloropropene	0.40	12		U	
100-41-4	Ethylbenzene	0.94	12		U	
591-78-6	2-Hexanone	2.9	12		U	
98-82-8	Isopropylbenzene	1.1	12		U	
79-20-9	Methyl acetate	2.0	12		U	
75-09-2	Methylene chloride	0.77	12	12u	~~1.6 JB~~	B
108-87-2	Methyl cyclohexane	0.37	12		U	
1634-04-4	Methyl tert-butyl ether	0.40	12		U	
108-10-1	4-Methyl-2-pentanone	0.72	12		U	
100-42-5	Styrene	0.44	12		U	
79-34-5	1,1,2,2-Tetrachloroethane	0.54	12		U	
127-18-4	Tetrachloroethene	1.2	12		U	

FORM I VOA

Lew 4/6/09

FORM 1
VOLATILE ORGANICS ANALYSIS DATA SHEET

CLIENT SAMPLE NO. 87

MR08-SS320-09A

Lab Name: EMPIRICAL LABS Contract: CH2MHILL

Lab Code: NA Case No.: NA SAS No.: NA SDG No.: LEJEUNE056

Matrix: (soil/water) SOIL Lab Sample ID: 0901201-87

Sample wt/vol: 5.3 (g/mL) G Lab File ID: 0120187A

Level: (low/med) LOW Date Sampled: 01/26/09 09:15

% Moisture: not dec. 25 Date Analyzed: 02/05/09 05:16

GC Column: RTX-VRX ID: 0.25 (mm) Dilution Factor: 1.0

Soil Extract Volume:_____(uL) Soil Aliquot Volume: _____(uL)

CONCENTRATION UNITS: (ug/L or ug/Kg) UG/KG

CAS NO.	COMPOUND	MDL	RL	CONC	Q
108-88-3	Toluene	1.1	12		U
120-82-1	1,2,4-Trichlorobenzene	0.22	12		U
71-55-6	1,1,1-Trichloroethane	1.1	12		U
79-00-5	1,1,2-Trichloroethane	0.44	12		U
79-01-6	Trichloroethene	1.1	12		U
76-13-1	Trichlorotrifluoroethane	0.68	12		U
75-69-4	Trichlorofluoromethane	1.2	12		U
75-01-4	Vinyl chloride	1.4	12		U
1330-20-7	Xylene(total)	0.87	12		U

4/6/09

FORM 1
VOLATILE ORGANICS ANALYSIS DATA SHEET

CLIENT SAMPLE NO. 88

MR08-IS32
0-2-3-09A

Lab Name: EMPIRICAL LABS Contract: CH2MHILL

Lab Code: NA Case No.: NA SAS No.: NA SDG No.: LEJEUNE056

Matrix: (soil/water) SOIL Lab Sample ID: 0901201-88

Sample wt/vol: 5.9 (g/mL) G Lab File ID: 0120188A

Level: (low/med) LOW Date Sampled: 01/26/09 09:20

% Moisture: not dec. 11 Date Analyzed: 02/04/09 22:28

GC Column: RTX-VRX ID: 0.25 (mm) Dilution Factor: 1.0

Soil Extract Volume:_____(uL) Soil Aliquot Volume: _____(uL)

CONCENTRATION UNITS: (ug/L or ug/Kg) UG/KG

CAS NO.	COMPOUND	MDL	RL	CONC	Q	
67-64-1	Acetone	1.9	9.6	9.6 ~~8.6~~	~~J~~	BL
71-43-2	Benzene	0.45	9.6		U	
75-27-4	Bromodichloromethane	0.29	9.6		U	
75-25-2	Bromoform	0.96	9.6		U	
74-83-9	Bromomethane	0.69	9.6		U	
78-93-3	2-Butanone	1.3	9.6		~~U~~ UJ	CU
75-15-0	Carbon disulfide	1.2	9.6		U	
56-23-5	Carbon tetrachloride	0.84	9.6		U	
108-90-7	Chlorobenzene	0.32	9.6		U	
75-00-3	Chloroethane	1.0	9.6		U	
67-66-3	Chloroform	0.53	9.6		U	
74-87-3	Chloromethane	0.50	9.6		U	
110-82-7	Cyclohexane	0.52	9.6		U	
124-48-1	Dibromochloromethane	0.32	9.6		U	
96-12-8	1,2-Dibromo-3-chloropropane	1.1	4.8		U	
106-93-4	1,2-Dibromoethane	0.41	9.6		U	
95-50-1	1,2-Dichlorobenzene	0.35	9.6		U	
541-73-1	1,3-Dichlorobenzene	0.80	9.6		U	
106-46-7	1,4-Dichlorobenzene	0.53	9.6		U	
75-71-8	Dichlorodifluoromethane	1.0	9.6		U	
75-34-3	1,1-Dichloroethane	0.52	9.6		U	
107-06-2	1,2-Dichloroethane	0.44	9.6		U	
75-35-4	1,1-Dichloroethene	1.1	9.6		U	
156-59-2	cis-1,2-Dichloroethene	1.1	9.6		U	
156-60-5	trans-1,2-Dichloroethene	1.0	9.6		U	
78-87-5	1,2-Dichloropropane	0.44	9.6		U	
10061-01-5	cis-1,3-Dichloropropene	0.48	9.6		U	
10061-02-6	trans-1,3-Dichloropropene	0.31	9.6		U	
100-41-4	Ethylbenzene	0.72	9.6		U	
591-78-6	2-Hexanone	2.2	9.6		U	
98-82-8	Isopropylbenzene	0.84	9.6		U	
79-20-9	Methyl acetate	1.5	9.6		U	
75-09-2	Methylene chloride	0.59	9.6	9.6 ~~2.1~~	~~JB~~	B
108-87-2	Methyl cyclohexane	0.29	9.6		U	
1634-04-4	Methyl tert-butyl ether	0.31	9.6		U	
108-10-1	4-Methyl-2-pentanone	0.56	9.6		U	
100-42-5	Styrene	0.34	9.6		U	
79-34-5	1,1,2,2-Tetrachloroethane	0.41	9.6		U	
127-18-4	Tetrachloroethene	0.93	9.6		U	

FORM I VOA

Lew 4/16/09

FORM 1
VOLATILE ORGANICS ANALYSIS DATA SHEET

CLIENT SAMPLE NO. 88

MR08-IS32
0-2-3-09A

Lab Name: EMPIRICAL LABS Contract: CH2MHILL

Lab Code: NA Case No.: NA SAS No.: NA SDG No.: LEJEUNE056

Matrix: (soil/water) SOIL Lab Sample ID: 0901201-88

Sample wt/vol: 5.9 (g/mL) G Lab File ID: 0120188A

Level: (low/med) LOW Date Sampled: 01/26/09 09:20

% Moisture: not dec. 11 Date Analyzed: 02/04/09 22:28

GC Column: RTX-VRX ID: 0.25 (mm) Dilution Factor: 1.0

Soil Extract Volume:_____(uL) Soil Aliquot Volume: _____(uL)

CONCENTRATION UNITS: (ug/L or ug/Kg) UG/KG

CAS NO.	COMPOUND	MDL	RL	CONC	Q
108-88-3	Toluene	0.82	9.6		U
120-82-1	1,2,4-Trichlorobenzene	0.17	9.6		U
71-55-6	1,1,1-Trichloroethane	0.86	9.6		U
79-00-5	1,1,2-Trichloroethane	0.34	9.6		U
79-01-6	Trichloroethene	0.81	9.6		U
76-13-1	Trichlorotrifluoroethane	0.53	9.6		U
75-69-4	Trichlorofluoromethane	0.91	9.6		U
75-01-4	Vinyl chloride	1.0	9.6		U
1330-20-7	Xylene(total)	0.67	9.6		U

FORM I VOA

JEW 4/26/09

FORM 1
VOLATILE ORGANICS ANALYSIS DATA SHEET

CLIENT SAMPLE NO. 89

MR08-SS351-09A

Lab Name: EMPIRICAL LABS Contract: CH2MHILL

Lab Code: NA Case No.: NA SAS No.: NA SDG No.: LEJEUNE056

Matrix: (soil/water) SOIL Lab Sample ID: 0901201-89

Sample wt/vol: 5.0 (g/mL) G Lab File ID: 0120189A

Level: (low/med) LOW Date Sampled: 01/26/09 09:40

% Moisture: not dec. 9 Date Analyzed: 02/05/09 05:47

GC Column: RTX-VRX ID: 0.25 (mm) Dilution Factor: 1.0

Soil Extract Volume:_____(uL) Soil Aliquot Volume: _____(uL)

CONCENTRATION UNITS: (ug/L or ug/Kg) UG/KG

CAS NO.	COMPOUND	MDL	RL	CONC	Q		
67-64-1	Acetone	2.2	11		U		
71-43-2	Benzene	0.52	11		U	UJ	MS
75-27-4	Bromodichloromethane	0.33	11		U		
75-25-2	Bromoform	1.1	11		U		
74-83-9	Bromomethane	0.79	11		U		
78-93-3	2-Butanone	1.5	11		~~U~~	R	MS
75-15-0	Carbon disulfide	1.4	11		U		
56-23-5	Carbon tetrachloride	0.97	11		U	UJ	MS
108-90-7	Chlorobenzene	0.37	11		U	UJ	MS
75-00-3	Chloroethane	1.2	11		U		
67-66-3	Chloroform	0.61	11		~~U~~	UJ	MS
74-87-3	Chloromethane	0.57	11		U		
110-82-7	Cyclohexane	0.60	11		U	UJ	MS
124-48-1	Dibromochloromethane	0.37	11		U		
96-12-8	1,2-Dibromo-3-chloropropane	1.3	5.5		U		
106-93-4	1,2-Dibromoethane	0.47	11		U		
95-50-1	1,2-Dichlorobenzene	0.41	11		U		
541-73-1	1,3-Dichlorobenzene	0.93	11		U		
106-46-7	1,4-Dichlorobenzene	0.61	11		U		
75-71-8	Dichlorodifluoromethane	1.2	11		~~U~~	UJ	CC
75-34-3	1,1-Dichloroethane	0.60	11		U	UJ	M
107-06-2	1,2-Dichloroethane	0.51	11		U		
75-35-4	1,1-Dichloroethene	1.3	11		U		
156-59-2	cis-1,2-Dichloroethene	1.3	11		U		
156-60-5	trans-1,2-Dichloroethene	1.2	11		U		
78-87-5	1,2-Dichloropropane	0.51	11		U		
10061-01-5	cis-1,3-Dichloropropene	0.55	11		U		
10061-02-6	trans-1,3-Dichloropropene	0.35	11		U		
100-41-4	Ethylbenzene	0.83	11	1.3	~~J~~	J	MS
591-78-6	2-Hexanone	2.5	11		U		
98-82-8	Isopropylbenzene	0.97	11		~~U~~	UJ	M
79-20-9	Methyl acetate	1.8	11		U		
75-09-2	Methylene chloride	0.68	11	11U	~~1.3~~	~~JB~~	B
108-87-2	Methyl cyclohexane	0.33	11		~~U~~	UJ	MS
1634-04-4	Methyl tert-butyl ether	0.35	11		U		
108-10-1	4-Methyl-2-pentanone	0.64	11		U		
100-42-5	Styrene	0.38	11		U	UJ	MS
79-34-5	1,1,2,2-Tetrachloroethane	0.47	11		U		
127-18-4	Tetrachloroethene	1.1	11		U		

FORM I VOA

LW 2/6/09

FORM 1
VOLATILE ORGANICS ANALYSIS DATA SHEET

CLIENT SAMPLE NO. 89

MR08-SS351-09A

Lab Name: EMPIRICAL LABS Contract: CH2MHILL

Lab Code: NA Case No.: NA SAS No.: NA SDG No.: LEJEUNE056

Matrix: (soil/water) SOIL Lab Sample ID: 0901201-89

Sample wt/vol: 5.0 (g/mL) G Lab File ID: 0120189A

Level: (low/med) LOW Date Sampled: 01/26/09 09:40

% Moisture: not dec. 9 Date Analyzed: 02/05/09 05:47

GC Column: RTX-VRX ID: 0.25 (mm) Dilution Factor: 1.0

Soil Extract Volume:_____(uL) Soil Aliquot Volume: _____(uL)

CONCENTRATION UNITS: (ug/L or ug/Kg) UG/KG

CAS NO.	COMPOUND	MDL	RL	CONC	Q	
108-88-3	Toluene	0.95	11		~~U~~ UJ	MSL
120-82-1	1,2,4-Trichlorobenzene	0.20	11		~~U~~ R	
71-55-6	1,1,1-Trichloroethane	0.99	11		~~U~~ UJ	
79-00-5	1,1,2-Trichloroethane	0.38	11		~~U~~	
79-01-6	Trichloroethene	0.94	11		~~U~~	
76-13-1	Trichlorotrifluoroethane	0.61	11		~~U~~	
75-69-4	Trichlorofluoromethane	1.0	11		U	
75-01-4	Vinyl chloride	1.2	11		U	
1330-20-7	Xylene(total)	0.77	11		~~U~~ UJ	MSL

FORM I VOA

JCW 4/6/09

FORM 1
VOLATILE ORGANICS ANALYSIS DATA SHEET

CLIENT SAMPLE NO.

MR08-IS3
51-2-3-0

90

Lab Name: EMPIRICAL LABS Contract: CH2MHILL

Lab Code: NA Case No.: NA SAS No.: NA SDG No.: LEJEUNE056

Matrix: (soil/water) SOIL Lab Sample ID: 0901201-90

Sample wt/vol: 6.2 (g/mL) G Lab File ID: 0120190A

Level: (low/med) LOW Date Sampled: 01/26/09 09:45

% Moisture: not dec. 14 Date Analyzed: 02/05/09 06:17

GC Column: RTX-VRX ID: 0.25 (mm) Dilution Factor: 1.0

Soil Extract Volume:_____(uL) Soil Aliquot Volume: _____(uL)

CONCENTRATION UNITS: (ug/L or ug/Kg) UG/KG

CAS NO.	COMPOUND	MDL	RL	CONC	Q	
67-64-1	Acetone	1.9	9.4	9.44 ~~5.2~~	~~J~~	B
71-43-2	Benzene	0.44	9.4		~~U~~ UJ	M
75-27-4	Bromodichloromethane	0.28	9.4		U	
75-25-2	Bromoform	0.94	9.4		U	
74-83-9	Bromomethane	0.68	9.4		U	
78-93-3	2-Butanone	1.3	9.4		~~U~~ UJ	CC
75-15-0	Carbon disulfide	1.2	9.4		U	
56-23-5	Carbon tetrachloride	0.83	9.4		~~U~~ UJ	M
108-90-7	Chlorobenzene	0.32	9.4		~~U~~ UJ	
75-00-3	Chloroethane	1.0	9.4		U	
67-66-3	Chloroform	0.52	9.4		~~U~~ UJ	M
74-87-3	Chloromethane	0.49	9.4		U	
110-82-7	Cyclohexane	0.51	9.4		U	
124-48-1	Dibromochloromethane	0.32	9.4		~~U~~ UJ	M
96-12-8	1,2-Dibromo-3-chloropropane	1.1	4.7		U	
106-93-4	1,2-Dibromoethane	0.40	9.4		~~U~~ UJ	M
95-50-1	1,2-Dichlorobenzene	0.35	9.4		U	
541-73-1	1,3-Dichlorobenzene	0.79	9.4		U	
106-46-7	1,4-Dichlorobenzene	0.52	9.4		U	
75-71-8	Dichlorodifluoromethane	1.0	9.4		~~U~~ UJ	CC
75-34-3	1,1-Dichloroethane	0.51	9.4		~~U~~ UJ	M
107-06-2	1,2-Dichloroethane	0.43	9.4		~~U~~ UJ	M
75-35-4	1,1-Dichloroethene	1.1	9.4		U	
156-59-2	cis-1,2-Dichloroethene	1.1	9.4		~~U~~ UJ	M
156-60-5	trans-1,2-Dichloroethene	1.0	9.4		U	
78-87-5	1,2-Dichloropropane	0.43	9.4		~~U~~ UJ	M
10061-01-5	cis-1,3-Dichloropropene	0.47	9.4		U	
10061-02-6	trans-1,3-Dichloropropene	0.30	9.4		U	
100-41-4	Ethylbenzene	0.70	9.4		~~U~~ UJ	M
591-78-6	2-Hexanone	2.2	9.4		U	
98-82-8	Isopropylbenzene	0.83	9.4		~~U~~ UJ	M
79-20-9	Methyl acetate	1.5	9.4		~~U~~ UJ	M
75-09-2	Methylene chloride	0.58	9.4	9.44 ~~1.0~~	~~JB~~	
108-87-2	Methyl cyclohexane	0.28	9.4		~~U~~ UJ	M
1634-04-4	Methyl tert-butyl ether	0.30	9.4		U	
108-10-1	4-Methyl-2-pentanone	0.54	9.4		U	
100-42-5	Styrene	0.33	9.4		~~U~~ UJ	M
79-34-5	1,1,2,2-Tetrachloroethane	0.40	9.4		U	
127-18-4	Tetrachloroethene	0.91	9.4		~~U~~ UJ	M

LW 46669

FORM 1
VOLATILE ORGANICS ANALYSIS DATA SHEET

CLIENT SAMPLE NO.

90

MR08-IS3
51-2-3-0

Lab Name: EMPIRICAL LABS Contract: CH2MHILL

Lab Code: NA Case No.: NA SAS No.: NA SDG No.: LEJEUNE056

Matrix: (soil/water) SOIL Lab Sample ID: 0901201-90

Sample wt/vol: 6.2 (g/mL) G Lab File ID: 0120190A

Level: (low/med) LOW Date Sampled: 01/26/09 09:45

% Moisture: not dec. 14 Date Analyzed: 02/05/09 06:17

GC Column: RTX-VRX ID: 0.25 (mm) Dilution Factor: 1.0

Soil Extract Volume:_____(uL) Soil Aliquot Volume: _____(uL)

CONCENTRATION UNITS: (ug/L or ug/Kg) UG/KG

CAS NO.	COMPOUND	MDL	RL	CONC	Q	
108-88-3	Toluene	0.81	9.4		U UJ	MS
120-82-1	1,2,4-Trichlorobenzene	0.17	9.4		U	
71-55-6	1,1,1-Trichloroethane	0.85	9.4		U	
79-00-5	1,1,2-Trichloroethane	0.33	9.4		U	
79-01-6	Trichloroethene	0.80	9.4		U	
76-13-1	Trichlorotrifluoroethane	0.52	9.4		U	
75-69-4	Trichlorofluoromethane	0.89	9.4		U	
75-01-4	Vinyl chloride	1.0	9.4		U	
1330-20-7	Xylene(total)	0.66	9.4		~~U~~ UJ	MS

FORM I VOA

MW
4/2/09

FORM 1
VOLATILE ORGANICS ANALYSIS DATA SHEET

CLIENT SAMPLE NO.

91

MR08-SS348-09A

Lab Name: EMPIRICAL LABS Contract: CH2MHILL

Lab Code: NA Case No.: NA SAS No.: NA SDG No.: LEJEUNE056

Matrix: (soil/water) SOIL Lab Sample ID: 0901201-91

Sample wt/vol: 4.3 (g/mL) G Lab File ID: 0120191A

Level: (low/med) LOW Date Sampled: 01/26/09 10:20

% Moisture: not dec. 4 Date Analyzed: 02/04/09 23:07

GC Column: RTX-VRX ID: 0.25 (mm) Dilution Factor: 1.0

Soil Extract Volume:_____(uL) Soil Aliquot Volume: _____(uL)

CONCENTRATION UNITS: (ug/L or ug/Kg) UG/KG

CAS NO.	COMPOUND	MDL	RL	CONC	Q	
67-64-1	Acetone	2.4	12	124 ~~9.2~~	~~J~~	BL
71-43-2	Benzene	0.57	12	0.70	J	
75-27-4	Bromodichloromethane	0.36	12		U	
75-25-2	Bromoform	1.2	12		U	
74-83-9	Bromomethane	0.88	12		U	
78-93-3	2-Butanone	1.7	12		~~J~~ UJ CC4	
75-15-0	Carbon disulfide	1.6	12		U	
56-23-5	Carbon tetrachloride	1.1	12		U	
108-90-7	Chlorobenzene	0.41	12		U	
75-00-3	Chloroethane	1.3	12		U	
67-66-3	Chloroform	0.67	12		U	
74-87-3	Chloromethane	0.63	12		U	
110-82-7	Cyclohexane	0.66	12		U	
124-48-1	Dibromochloromethane	0.41	12		U	
96-12-8	1,2-Dibromo-3-chloropropane	1.5	6.1		U	
106-93-4	1,2-Dibromoethane	0.52	12		U	
95-50-1	1,2-Dichlorobenzene	0.45	12		U	
541-73-1	1,3-Dichlorobenzene	1.0	12		U	
106-46-7	1,4-Dichlorobenzene	0.67	12		U	
75-71-8	Dichlorodifluoromethane	1.3	12		U	
75-34-3	1,1-Dichloroethane	0.66	12		U	
107-06-2	1,2-Dichloroethane	0.56	12		U	
75-35-4	1,1-Dichloroethene	1.5	12		U	
156-59-2	cis-1,2-Dichloroethene	1.5	12		U	
156-60-5	trans-1,2-Dichloroethene	1.3	12		U	
78-87-5	1,2-Dichloropropane	0.56	12		U	
10061-01-5	cis-1,3-Dichloropropene	0.61	12		U	
10061-02-6	trans-1,3-Dichloropropene	0.39	12		U	
100-41-4	Ethylbenzene	0.91	12	6.4	J	
591-78-6	2-Hexanone	2.8	12		U	
98-82-8	Isopropylbenzene	1.1	12		U	
79-20-9	Methyl acetate	1.9	12		U	
75-09-2	Methylene chloride	0.76	12	124 ~~1.7~~	~~JB~~	BL
108-87-2	Methyl cyclohexane	0.36	12		U	
1634-04-4	Methyl tert-butyl ether	0.39	12		U	
108-10-1	4-Methyl-2-pentanone	0.71	12		U	
100-42-5	Styrene	0.43	12		U	
79-34-5	1,1,2,2-Tetrachloroethane	0.52	12		U	
127-18-4	Tetrachloroethene	1.2	12		U	

LEW 4/6/09

FORM 1
VOLATILE ORGANICS ANALYSIS DATA SHEET

CLIENT SAMPLE NO.

MR08-SS348-09A

91

Lab Name: EMPIRICAL LABS Contract: CH2MHILL

Lab Code: NA Case No.: NA SAS No.: NA SDG No.: LEJEUNE056

Matrix: (soil/water) SOIL Lab Sample ID: 0901201-91

Sample wt/vol: 4.3 (g/mL) G Lab File ID: 0120191A

Level: (low/med) LOW Date Sampled: 01/26/09 10:20

% Moisture: not dec. 4 Date Analyzed: 02/04/09 23:07

GC Column: RTX-VRX ID: 0.25 (mm) Dilution Factor: 1.0

Soil Extract Volume:_____(uL) Soil Aliquot Volume: _____(uL)

CONCENTRATION UNITS: (ug/L or ug/Kg) UG/KG

CAS NO.	COMPOUND	MDL	RL	CONC	Q
108-88-3	Toluene	1.0	12	2.7	J
120-82-1	1,2,4-Trichlorobenzene	0.22	12		U
71-55-6	1,1,1-Trichloroethane	1.1	12		U
79-00-5	1,1,2-Trichloroethane	0.43	12		U
79-01-6	Trichloroethene	1.0	12		U
76-13-1	Trichlorotrifluoroethane	0.67	12		U
75-69-4	Trichlorofluoromethane	1.2	12		U
75-01-4	Vinyl chloride	1.3	12		U
1330-20-7	Xylene(total)	0.85	12		U

4/6/09

FORM 1
VOLATILE ORGANICS ANALYSIS DATA SHEET

CLIENT SAMPLE NO. 92

MR08-IS34
8-2-3-09A

Lab Name: EMPIRICAL LABS Contract: CH2MHILL

Lab Code: NA Case No.: NA SAS No.: NA SDG No.: LEJEUNE056

Matrix: (soil/water) SOIL Lab Sample ID: 0901201-92

Sample wt/vol: 5.6 (g/mL) G Lab File ID: 0120192A

Level: (low/med) LOW Date Sampled: 01/26/09 10:25

% Moisture: not dec. 14 Date Analyzed: 02/04/09 23:46

GC Column: RTX-VRX ID: 0.25 (mm) Dilution Factor: 1.0

Soil Extract Volume:_____(uL) Soil Aliquot Volume: _____(uL)

CONCENTRATION UNITS: (ug/L or ug/Kg) UG/KG

CAS NO.	COMPOUND	MDL	RL	CONC	Q	
67-64-1	Acetone	2.1	10	10u ~~4.5~~	~~J~~	BL
71-43-2	Benzene	0.49	10		U	
75-27-4	Bromodichloromethane	0.31	10		U	
75-25-2	Bromoform	1.0	10		U	
74-83-9	Bromomethane	0.75	10		U	
78-93-3	2-Butanone	1.4	10		~~U~~ UJ	CCH
75-15-0	Carbon disulfide	1.4	10		U	
56-23-5	Carbon tetrachloride	0.92	10		U	
108-90-7	Chlorobenzene	0.35	10		U	
75-00-3	Chloroethane	1.1	10		U	
67-66-3	Chloroform	0.57	10		U	
74-87-3	Chloromethane	0.54	10		U	
110-82-7	Cyclohexane	0.56	10		U	
124-48-1	Dibromochloromethane	0.35	10		U	
96-12-8	1,2-Dibromo-3-chloropropane	1.2	5.2		U	
106-93-4	1,2-Dibromoethane	0.45	10		U	
95-50-1	1,2-Dichlorobenzene	0.38	10		U	
541-73-1	1,3-Dichlorobenzene	0.88	10		U	
106-46-7	1,4-Dichlorobenzene	0.57	10		U	
75-71-8	Dichlorodifluoromethane	1.1	10		U	
75-34-3	1,1-Dichloroethane	0.56	10		U	
107-06-2	1,2-Dichloroethane	0.48	10		U	
75-35-4	1,1-Dichloroethene	1.2	10		U	
156-59-2	cis-1,2-Dichloroethene	1.2	10		U	
156-60-5	trans-1,2-Dichloroethene	1.1	10		U	
78-87-5	1,2-Dichloropropane	0.48	10		U	
10061-01-5	cis-1,3-Dichloropropene	0.52	10		U	
10061-02-6	trans-1,3-Dichloropropene	0.33	10		U	
100-41-4	Ethylbenzene	0.78	10		U	
591-78-6	2-Hexanone	2.4	10		U	
98-82-8	Isopropylbenzene	0.92	10		U	
79-20-9	Methyl acetate	1.7	10		U	
75-09-2	Methylene chloride	0.65	10	10u ~~1.8~~	~~JB~~	B
108-87-2	Methyl cyclohexane	0.31	10		U	
1634-04-4	Methyl tert-butyl ether	0.33	10		U	
108-10-1	4-Methyl-2-pentanone	0.60	10		U	
100-42-5	Styrene	0.36	10		U	
79-34-5	1,1,2,2-Tetrachloroethane	0.45	10		U	
127-18-4	Tetrachloroethene	1.0	10		U	

FORM I VOA

fw 1/16/09

FORM 1
VOLATILE ORGANICS ANALYSIS DATA SHEET

CLIENT SAMPLE NO.

92

MR08-IS34
8-2-3-09A

Lab Name: EMPIRICAL LABS Contract: CH2MHILL

Lab Code: NA Case No.: NA SAS No.: NA SDG No.: LEJEUNE056

Matrix: (soil/water) SOIL Lab Sample ID: 0901201-92

Sample wt/vol: 5.6 (g/mL) G Lab File ID: 0120192A

Level: (low/med) LOW Date Sampled: 01/26/09 10:25

% Moisture: not dec. 14 Date Analyzed: 02/04/09 23:46

GC Column: RTX-VRX ID: 0.25 (mm) Dilution Factor: 1.0

Soil Extract Volume:_____(uL) Soil Aliquot Volume: _____(uL)

CONCENTRATION UNITS: (ug/L or ug/Kg) UG/KG

CAS NO.	COMPOUND	MDL	RL	CONC	Q
108-88-3	Toluene	0.90	10		U
120-82-1	1,2,4-Trichlorobenzene	0.19	10		U
71-55-6	1,1,1-Trichloroethane	0.94	10		U
79-00-5	1,1,2-Trichloroethane	0.36	10		U
79-01-6	Trichloroethene	0.88	10		U
76-13-1	Trichlorotrifluoroethane	0.57	10		U
75-69-4	Trichlorofluoromethane	0.99	10		U
75-01-4	Vinyl chloride	1.1	10		U
1330-20-7	Xylene(total)	0.73	10		U

JCW
4/16/09

FORM 1
VOLATILE ORGANICS ANALYSIS DATA SHEET

CLIENT SAMPLE NO.

MR08-TB1-012609

93

Lab Name: EMPIRICAL LABS Contract: CH2MHILL

Lab Code: NA Case No.: NA SAS No.: NA SDG No.: LEJEUNE056

Matrix: (soil/water) WATER Lab Sample ID: 0901201-93

Sample wt/vol: 5.000 (g/mL) ML Lab File ID: 0120193

Level: (low/med) LOW Date Sampled: 01/26/09 14:00

% Moisture: not dec. _____ Date Analyzed: 02/01/09 10:41

GC Column: RTX-VRX ID: 0.25 (mm) Dilution Factor: 1.0

Soil Extract Volume:_____(uL) Soil Aliquot Volume: _____(uL)

CONCENTRATION UNITS: (ug/L or ug/Kg) UG/L

CAS NO.	COMPOUND	MDL	RL	CONC	Q
67-64-1	Acetone	0.84	2.5		U
71-43-2	Benzene	0.11	1.0		U
75-27-4	Bromodichloromethane	0.10	1.0		U
75-25-2	Bromoform	0.10	1.0		U
74-83-9	Bromomethane	0.32	1.0		~~U~~ UJ CCH
78-93-3	2-Butanone	1.0	3.0		U
75-15-0	Carbon disulfide	0.13	1.0		U
56-23-5	Carbon tetrachloride	0.15	1.0		U
108-90-7	Chlorobenzene	0.10	1.0		U
75-00-3	Chloroethane	0.18	1.0		U
67-66-3	Chloroform	0.11	1.0		U
74-87-3	Chloromethane	0.29	1.0		U
110-82-7	Cyclohexane	0.20	1.0		U
124-48-1	Dibromochloromethane	0.10	1.0		U
96-12-8	1,2-Dibromo-3-chloropropane	0.11	1.0		U
106-93-4	1,2-Dibromoethane	0.10	1.0		U
95-50-1	1,2-Dichlorobenzene	0.10	1.0		U
541-73-1	1,3-Dichlorobenzene	0.13	1.0		U
106-46-7	1,4-Dichlorobenzene	0.10	1.0		U
75-71-8	Dichlorodifluoromethane	0.22	1.0		~~U~~ UJ CCH
75-34-3	1,1-Dichloroethane	0.12	1.0		U
107-06-2	1,2-Dichloroethane	0.10	1.0		U
75-35-4	1,1-Dichloroethene	0.15	1.0		U
156-59-2	cis-1,2-Dichloroethene	0.13	1.0		U
156-60-5	trans-1,2-Dichloroethene	0.13	1.0		U
78-87-5	1,2-Dichloropropane	0.10	1.0		U
10061-01-5	cis-1,3-Dichloropropene	0.11	1.0		U
10061-02-6	trans-1,3-Dichloropropene	0.10	1.0		U
100-41-4	Ethylbenzene	0.13	1.0		U
591-78-6	2-Hexanone	0.30	2.0		~~U~~ UJ CCH
98-82-8	Isopropylbenzene	0.15	1.0		U
79-20-9	Methyl acetate	0.30	1.0		U
75-09-2	Methylene chloride	0.14	1.0		U
108-87-2	Methyl cyclohexane	0.17	1.0		U
1634-04-4	Methyl tert-butyl ether	0.10	1.0		U
108-10-1	4-Methyl-2-pentanone	0.29	1.0		U
100-42-5	Styrene	0.10	1.0		U
79-34-5	1,1,2,2-Tetrachloroethane	0.10	1.0		U
127-18-4	Tetrachloroethene	0.15	1.0		U

4/6/09

FORM 1
VOLATILE ORGANICS ANALYSIS DATA SHEET

CLIENT SAMPLE NO.

MR08-TB1-012609

93

Lab Name: EMPIRICAL LABS Contract: CH2MHILL

Lab Code: NA Case No.: NA SAS No.: NA SDG No.: LEJEUNE056

Matrix: (soil/water) WATER Lab Sample ID: 0901201-93

Sample wt/vol: 5.000 (g/mL) ML Lab File ID: 0120193

Level: (low/med) LOW Date Sampled: 01/26/09 14:00

% Moisture: not dec. _____ Date Analyzed: 02/01/09 10:41

GC Column: RTX-VRX ID: 0.25 (mm) Dilution Factor: 1.0

Soil Extract Volume:_____(uL) Soil Aliquot Volume: _____(uL)

CONCENTRATION UNITS: (ug/L or ug/Kg) UG/L

CAS NO.	COMPOUND	MDL	RL	CONC	Q
108-88-3	Toluene	0.10	1.0		U
120-82-1	1,2,4-Trichlorobenzene	0.10	1.0		U
71-55-6	1,1,1-Trichloroethane	0.17	1.0		U
79-00-5	1,1,2-Trichloroethane	0.10	1.0		U
79-01-6	Trichloroethene	0.13	1.0		U
76-13-1	Trichlorotrifluoroethane	0.18	1.0		U
75-69-4	Trichlorofluoromethane	0.17	1.0		U
75-01-4	Vinyl chloride	0.18	1.0		U
1330-20-7	Xylene(total)	0.22	1.0		U

fee
4/2/09

FORM 1
VOLATILE ORGANICS ANALYSIS DATA SHEET

CLIENT SAMPLE NO.

MR08-TB2-012609 94

Lab Name: EMPIRICAL LABS Contract: CH2MHILL

Lab Code: NA Case No.: NA SAS No.: NA SDG No.: LEJEUNE056

Matrix: (soil/water) WATER Lab Sample ID: 0901201-94

Sample wt/vol: 5.000 (g/mL) ML Lab File ID: 0120194

Level: (low/med) LOW Date Sampled: 01/26/09 14:00

% Moisture: not dec. _____ Date Analyzed: 02/01/09 11:10

GC Column: RTX-VRX ID: 0.25 (mm) Dilution Factor: 1.0

Soil Extract Volume:_____(uL) Soil Aliquot Volume: _____(uL)

CONCENTRATION UNITS: (ug/L or ug/Kg) UG/L

CAS NO.	COMPOUND	MDL	RL	CONC	Q
67-64-1	Acetone	0.84	2.5		U
71-43-2	Benzene	0.11	1.0		U
75-27-4	Bromodichloromethane	0.10	1.0		U
75-25-2	Bromoform	0.10	1.0		U
74-83-9	Bromomethane	0.32	1.0		~~U~~ UJ CCV
78-93-3	2-Butanone	1.0	3.0		U
75-15-0	Carbon disulfide	0.13	1.0		U
56-23-5	Carbon tetrachloride	0.15	1.0		U
108-90-7	Chlorobenzene	0.10	1.0		U
75-00-3	Chloroethane	0.18	1.0		U
67-66-3	Chloroform	0.11	1.0		U
74-87-3	Chloromethane	0.29	1.0		U
110-82-7	Cyclohexane	0.20	1.0		U
124-48-1	Dibromochloromethane	0.10	1.0		U
96-12-8	1,2-Dibromo-3-chloropropane	0.11	1.0		U
106-93-4	1,2-Dibromoethane	0.10	1.0		U
95-50-1	1,2-Dichlorobenzene	0.10	1.0		U
541-73-1	1,3-Dichlorobenzene	0.13	1.0		U
106-46-7	1,4-Dichlorobenzene	0.10	1.0		U
75-71-8	Dichlorodifluoromethane	0.22	1.0		~~U~~ UJ CCV
75-34-3	1,1-Dichloroethane	0.12	1.0		U
107-06-2	1,2-Dichloroethane	0.10	1.0		U
75-35-4	1,1-Dichloroethene	0.15	1.0		U
156-59-2	cis-1,2-Dichloroethene	0.13	1.0		U
156-60-5	trans-1,2-Dichloroethene	0.13	1.0		U
78-87-5	1,2-Dichloropropane	0.10	1.0		U
10061-01-5	cis-1,3-Dichloropropene	0.11	1.0		U
10061-02-6	trans-1,3-Dichloropropene	0.10	1.0		U
100-41-4	Ethylbenzene	0.13	1.0		U
591-78-6	2-Hexanone	0.30	2.0		~~U~~ UJ CCV
98-82-8	Isopropylbenzene	0.15	1.0		U
79-20-9	Methyl acetate	0.30	1.0		U
75-09-2	Methylene chloride	0.14	1.0	1.1	~~B~~ U BL
108-87-2	Methyl cyclohexane	0.17	1.0		U
1634-04-4	Methyl tert-butyl ether	0.10	1.0		U
108-10-1	4-Methyl-2-pentanone	0.29	1.0		U
100-42-5	Styrene	0.10	1.0		U
79-34-5	1,1,2,2-Tetrachloroethane	0.10	1.0		U
127-18-4	Tetrachloroethene	0.15	1.0		U

FORM I VOA

UW 4/6/09

FORM 1
VOLATILE ORGANICS ANALYSIS DATA SHEET

CLIENT SAMPLE NO.

MR08-TB2-012609

94

Lab Name: EMPIRICAL LABS Contract: CH2MHILL

Lab Code: NA Case No.: NA SAS No.: NA SDG No.: LEJEUNE056

Matrix: (soil/water) WATER Lab Sample ID: 0901201-94

Sample wt/vol: 5.000 (g/mL) ML Lab File ID: 0120194

Level: (low/med) LOW Date Sampled: 01/26/09 14:00

% Moisture: not dec. _____ Date Analyzed: 02/01/09 11:10

GC Column: RTX-VRX ID: 0.25 (mm) Dilution Factor: 1.0

Soil Extract Volume:_____(uL) Soil Aliquot Volume: _____(uL)

CONCENTRATION UNITS: (ug/L or ug/Kg) UG/L

CAS NO.	COMPOUND	MDL	RL	CONC	Q
108-88-3	Toluene	0.10	1.0		U
120-82-1	1,2,4-Trichlorobenzene	0.10	1.0		U
71-55-6	1,1,1-Trichloroethane	0.17	1.0		U
79-00-5	1,1,2-Trichloroethane	0.10	1.0		U
79-01-6	Trichloroethene	0.13	1.0		U
76-13-1	Trichlorotrifluoroethane	0.18	1.0		U
75-69-4	Trichlorofluoromethane	0.17	1.0		U
75-01-4	Vinyl chloride	0.18	1.0		U
1330-20-7	Xylene(total)	0.22	1.0		U

fw 4/6/09

FORM 1
VOLATILE ORGANICS ANALYSIS DATA SHEET

CLIENT SAMPLE NO.

MR08-TB3-012609

Lab Name: EMPIRICAL LABS Contract: CH2MHILL

Lab Code: NA Case No.: NA SAS No.: NA SDG No.: LEJEUNE056

Matrix: (soil/water) WATER Lab Sample ID: 0901201-95

Sample wt/vol: 5.000 (g/mL) ML Lab File ID: 0120195

Level: (low/med) LOW Date Sampled: 01/26/09 14:00

% Moisture: not dec. _____ Date Analyzed: 02/01/09 11:41

GC Column: RTX-VRX ID: 0.25 (mm) Dilution Factor: 1.0

Soil Extract Volume:_____(uL) Soil Aliquot Volume: _____(uL)

CONCENTRATION UNITS: (ug/L or ug/Kg) UG/L

CAS NO.	COMPOUND	MDL	RL	CONC	Q
67-64-1	Acetone	0.84	2.5		U
71-43-2	Benzene	0.11	1.0		U
75-27-4	Bromodichloromethane	0.10	1.0		U
75-25-2	Bromoform	0.10	1.0		U
74-83-9	Bromomethane	0.32	1.0		~~U~~ UJ CC
78-93-3	2-Butanone	1.0	3.0		U
75-15-0	Carbon disulfide	0.13	1.0		U
56-23-5	Carbon tetrachloride	0.15	1.0		U
108-90-7	Chlorobenzene	0.10	1.0		U
75-00-3	Chloroethane	0.18	1.0		U
67-66-3	Chloroform	0.11	1.0		U
74-87-3	Chloromethane	0.29	1.0		U
110-82-7	Cyclohexane	0.20	1.0		U
124-48-1	Dibromochloromethane	0.10	1.0		U
96-12-8	1,2-Dibromo-3-chloropropane	0.11	1.0		U
106-93-4	1,2-Dibromoethane	0.10	1.0		U
95-50-1	1,2-Dichlorobenzene	0.10	1.0		U
541-73-1	1,3-Dichlorobenzene	0.13	1.0		U
106-46-7	1,4-Dichlorobenzene	0.10	1.0		U
75-71-8	Dichlorodifluoromethane	0.22	1.0		~~U~~ UJ CC
75-34-3	1,1-Dichloroethane	0.12	1.0		U
107-06-2	1,2-Dichloroethane	0.10	1.0		U
75-35-4	1,1-Dichloroethene	0.15	1.0		U
156-59-2	cis-1,2-Dichloroethene	0.13	1.0		U
156-60-5	trans-1,2-Dichloroethene	0.13	1.0		U
78-87-5	1,2-Dichloropropane	0.10	1.0		U
10061-01-5	cis-1,3-Dichloropropene	0.11	1.0		U
10061-02-6	trans-1,3-Dichloropropene	0.10	1.0		U
100-41-4	Ethylbenzene	0.13	1.0		U
591-78-6	2-Hexanone	0.30	2.0		~~U~~ UJ CC
98-82-8	Isopropylbenzene	0.15	1.0		U
79-20-9	Methyl acetate	0.30	1.0		U
75-09-2	Methylene chloride	0.14	1.0	1.9	~~B~~ U B
108-87-2	Methyl cyclohexane	0.17	1.0		U
1634-04-4	Methyl tert-butyl ether	0.10	1.0		U
108-10-1	4-Methyl-2-pentanone	0.29	1.0		U
100-42-5	Styrene	0.10	1.0		U
79-34-5	1,1,2,2-Tetrachloroethane	0.10	1.0		U
127-18-4	Tetrachloroethene	0.15	1.0		U

MW 2/1/09

FORM 1
VOLATILE ORGANICS ANALYSIS DATA SHEET

CLIENT SAMPLE NO. 95

MR08-TB3-012609

Lab Name: EMPIRICAL LABS Contract: CH2MHILL

Lab Code: NA Case No.: NA SAS No.: NA SDG No.: LEJEUNE056

Matrix: (soil/water) WATER Lab Sample ID: 0901201-95

Sample wt/vol: 5.000 (g/mL) ML Lab File ID: 0120195

Level: (low/med) LOW Date Sampled: 01/26/09 14:00

% Moisture: not dec. _____ Date Analyzed: 02/01/09 11:41

GC Column: RTX-VRX ID: 0.25 (mm) Dilution Factor: 1.0

Soil Extract Volume:_____(uL) Soil Aliquot Volume: _____(uL)

CONCENTRATION UNITS: (ug/L or ug/Kg) UG/L

CAS NO.	COMPOUND	MDL	RL	CONC	Q
108-88-3	Toluene	0.10	1.0		U
120-82-1	1,2,4-Trichlorobenzene	0.10	1.0		U
71-55-6	1,1,1-Trichloroethane	0.17	1.0		U
79-00-5	1,1,2-Trichloroethane	0.10	1.0		U
79-01-6	Trichloroethene	0.13	1.0		U
76-13-1	Trichlorotrifluoroethane	0.18	1.0		U
75-69-4	Trichlorofluoromethane	0.17	1.0		U
75-01-4	Vinyl chloride	0.18	1.0		U
1330-20-7	Xylene(total)	0.22	1.0		U

4/6/09

FORM 1
VOLATILE ORGANICS ANALYSIS DATA SHEET

CLIENT SAMPLE NO. 96

MR08-TB4-012609

Lab Name: EMPIRICAL LABS Contract: CH2MHILL

Lab Code: NA Case No.: NA SAS No.: NA SDG No.: LEJEUNE056

Matrix: (soil/water) WATER Lab Sample ID: 0901201-96

Sample wt/vol: 5.000 (g/mL) ML Lab File ID: 0120196

Level: (low/med) LOW Date Sampled: 01/26/09 14:00

% Moisture: not dec. _____ Date Analyzed: 02/01/09 12:11

GC Column: RTX-VRX ID: 0.25 (mm) Dilution Factor: 1.0

Soil Extract Volume:_____(uL) Soil Aliquot Volume: _____(uL)

CONCENTRATION UNITS: (ug/L or ug/Kg) UG/L

CAS NO.	COMPOUND	MDL	RL	CONC	Q
67-64-1	Acetone	0.84	2.5		U
71-43-2	Benzene	0.11	1.0		U
75-27-4	Bromodichloromethane	0.10	1.0		U
75-25-2	Bromoform	0.10	1.0		U
74-83-9	Bromomethane	0.32	1.0		~~U~~ UJ CCH
78-93-3	2-Butanone	1.0	3.0		U
75-15-0	Carbon disulfide	0.13	1.0		U
56-23-5	Carbon tetrachloride	0.15	1.0		U
108-90-7	Chlorobenzene	0.10	1.0		U
75-00-3	Chloroethane	0.18	1.0		U
67-66-3	Chloroform	0.11	1.0		U
74-87-3	Chloromethane	0.29	1.0		U
110-82-7	Cyclohexane	0.20	1.0		U
124-48-1	Dibromochloromethane	0.10	1.0		U
96-12-8	1,2-Dibromo-3-chloropropane	0.11	1.0		U
106-93-4	1,2-Dibromoethane	0.10	1.0		U
95-50-1	1,2-Dichlorobenzene	0.10	1.0		U
541-73-1	1,3-Dichlorobenzene	0.13	1.0		U
106-46-7	1,4-Dichlorobenzene	0.10	1.0		U
75-71-8	Dichlorodifluoromethane	0.22	1.0		~~U~~ UJ CCH
75-34-3	1,1-Dichloroethane	0.12	1.0		U
107-06-2	1,2-Dichloroethane	0.10	1.0		U
75-35-4	1,1-Dichloroethene	0.15	1.0		U
156-59-2	cis-1,2-Dichloroethene	0.13	1.0		U
156-60-5	trans-1,2-Dichloroethene	0.13	1.0		U
78-87-5	1,2-Dichloropropane	0.10	1.0		U
10061-01-5	cis-1,3-Dichloropropene	0.11	1.0		U
10061-02-6	trans-1,3-Dichloropropene	0.10	1.0		U
100-41-4	Ethylbenzene	0.13	1.0		U
591-78-6	2-Hexanone	0.30	2.0		~~U~~ UJ CCH
98-82-8	Isopropylbenzene	0.15	1.0		U
79-20-9	Methyl acetate	0.30	1.0		U
75-09-2	Methylene chloride	0.14	1.0	1.8	~~B~~ U BL
108-87-2	Methyl cyclohexane	0.17	1.0		U
1634-04-4	Methyl tert-butyl ether	0.10	1.0		U
108-10-1	4-Methyl-2-pentanone	0.29	1.0		U
100-42-5	Styrene	0.10	1.0		U
79-34-5	1,1,2,2-Tetrachloroethane	0.10	1.0		U
127-18-4	Tetrachloroethene	0.15	1.0		U

FORM I VOA

MW 1/1/09

FORM 1
VOLATILE ORGANICS ANALYSIS DATA SHEET

CLIENT SAMPLE NO.

MR08-TB4-012609 96

Lab Name: EMPIRICAL LABS Contract: CH2MHILL

Lab Code: NA Case No.: NA SAS No.: NA SDG No.: LEJEUNE056

Matrix: (soil/water) WATER Lab Sample ID: 0901201-96

Sample wt/vol: 5.000 (g/mL) ML Lab File ID: 0120196

Level: (low/med) LOW Date Sampled: 01/26/09 14:00

% Moisture: not dec. _____ Date Analyzed: 02/01/09 12:11

GC Column: RTX-VRX ID: 0.25 (mm) Dilution Factor: 1.0

Soil Extract Volume:_____(uL) Soil Aliquot Volume: _____(uL)

CONCENTRATION UNITS: (ug/L or ug/Kg) UG/L

CAS NO.	COMPOUND	MDL	RL	CONC	Q
108-88-3	Toluene	0.10	1.0		U
120-82-1	1,2,4-Trichlorobenzene	0.10	1.0		U
71-55-6	1,1,1-Trichloroethane	0.17	1.0		U
79-00-5	1,1,2-Trichloroethane	0.10	1.0		U
79-01-6	Trichloroethene	0.13	1.0		U
76-13-1	Trichlorotrifluoroethane	0.18	1.0		U
75-69-4	Trichlorofluoromethane	0.17	1.0		U
75-01-4	Vinyl chloride	0.18	1.0		U
1330-20-7	Xylene(total)	0.22	1.0		U

KEW 4/06/09

FORM 1
VOLATILE ORGANICS ANALYSIS DATA SHEET

CLIENT SAMPLE NO. 97

MR08-TB5-012609

Lab Name: EMPIRICAL LABS Contract: CH2MHILL

Lab Code: NA Case No.: NA SAS No.: NA SDG No.: LEJEUNE056

Matrix: (soil/water) WATER Lab Sample ID: 0901201-97

Sample wt/vol: 5.000 (g/mL) ML Lab File ID: 0120197

Level: (low/med) LOW Date Sampled: 01/26/09 14:00

% Moisture: not dec. _____ Date Analyzed: 02/01/09 12:42

GC Column: RTX-VRX ID: 0.25 (mm) Dilution Factor: 1.0

Soil Extract Volume:_____(uL) Soil Aliquot Volume: _____(uL)

CONCENTRATION UNITS: (ug/L or ug/Kg) UG/L

CAS NO.	COMPOUND	MDL	RL	CONC	Q
67-64-1	Acetone	0.84	2.5		U
71-43-2	Benzene	0.11	1.0		U
75-27-4	Bromodichloromethane	0.10	1.0		U
75-25-2	Bromoform	0.10	1.0		U
74-83-9	Bromomethane	0.32	1.0		~~U~~ UJ CCH
78-93-3	2-Butanone	1.0	3.0		U
75-15-0	Carbon disulfide	0.13	1.0		U
56-23-5	Carbon tetrachloride	0.15	1.0		U
108-90-7	Chlorobenzene	0.10	1.0		U
75-00-3	Chloroethane	0.18	1.0		U
67-66-3	Chloroform	0.11	1.0		U
74-87-3	Chloromethane	0.29	1.0		U
110-82-7	Cyclohexane	0.20	1.0		U
124-48-1	Dibromochloromethane	0.10	1.0		U
96-12-8	1,2-Dibromo-3-chloropropane	0.11	1.0		U
106-93-4	1,2-Dibromoethane	0.10	1.0		U
95-50-1	1,2-Dichlorobenzene	0.10	1.0		U
541-73-1	1,3-Dichlorobenzene	0.13	1.0		U
106-46-7	1,4-Dichlorobenzene	0.10	1.0		U
75-71-8	Dichlorodifluoromethane	0.22	1.0		~~U~~ UJ CCH
75-34-3	1,1-Dichloroethane	0.12	1.0		U
107-06-2	1,2-Dichloroethane	0.10	1.0		U
75-35-4	1,1-Dichloroethene	0.15	1.0		U
156-59-2	cis-1,2-Dichloroethene	0.13	1.0		U
156-60-5	trans-1,2-Dichloroethene	0.13	1.0		U
78-87-5	1,2-Dichloropropane	0.10	1.0		U
10061-01-5	cis-1,3-Dichloropropene	0.11	1.0		U
10061-02-6	trans-1,3-Dichloropropene	0.10	1.0		U
100-41-4	Ethylbenzene	0.13	1.0		U
591-78-6	2-Hexanone	0.30	2.0		~~U~~ UJ CCH
98-82-8	Isopropylbenzene	0.15	1.0		U
79-20-9	Methyl acetate	0.30	1.0		U
75-09-2	Methylene chloride	0.14	1.0		U
108-87-2	Methyl cyclohexane	0.17	1.0		U
1634-04-4	Methyl tert-butyl ether	0.10	1.0		U
108-10-1	4-Methyl-2-pentanone	0.29	1.0		U
100-42-5	Styrene	0.10	1.0		U
79-34-5	1,1,2,2-Tetrachloroethane	0.10	1.0		U
127-18-4	Tetrachloroethene	0.15	1.0		U

lew 4/6/09

FORM 1
VOLATILE ORGANICS ANALYSIS DATA SHEET

CLIENT SAMPLE NO. 97

MR08-TB5-012609

Lab Name: EMPIRICAL LABS Contract: CH2MHILL

Lab Code: NA Case No.: NA SAS No.: NA SDG No.: LEJEUNE056

Matrix: (soil/water) WATER Lab Sample ID: 0901201-97

Sample wt/vol: 5.000 (g/mL) ML Lab File ID: 0120197

Level: (low/med) LOW Date Sampled: 01/26/09 14:00

% Moisture: not dec. _____ Date Analyzed: 02/01/09 12:42

GC Column: RTX-VRX ID: 0.25 (mm) Dilution Factor: 1.0

Soil Extract Volume:_____(uL) Soil Aliquot Volume: _____(uL)

CONCENTRATION UNITS: (ug/L or ug/Kg) UG/L

CAS NO.	COMPOUND	MDL	RL	CONC	Q
108-88-3	Toluene	0.10	1.0		U
120-82-1	1,2,4-Trichlorobenzene	0.10	1.0		U
71-55-6	1,1,1-Trichloroethane	0.17	1.0		U
79-00-5	1,1,2-Trichloroethane	0.10	1.0		U
79-01-6	Trichloroethene	0.13	1.0		U
76-13-1	Trichlorotrifluoroethane	0.18	1.0		U
75-69-4	Trichlorofluoromethane	0.17	1.0		U
75-01-4	Vinyl chloride	0.18	1.0		U
1330-20-7	Xylene(total)	0.22	1.0		U

MW 9/6/09

FORM 1
VOLATILE ORGANICS ANALYSIS DATA SHEET

CLIENT SAMPLE NO. 98

MR08-TB6-012609

Lab Name: EMPIRICAL LABS Contract: CH2MHILL

Lab Code: NA Case No.: NA SAS No.: NA SDG No.: LEJEUNE056

Matrix: (soil/water) WATER Lab Sample ID: 0901201-98

Sample wt/vol: 5.000 (g/mL) ML Lab File ID: 0120198

Level: (low/med) LOW Date Sampled: 01/26/09 14:00

% Moisture: not dec. _____ Date Analyzed: 02/01/09 13:12

GC Column: RTX-VRX ID: 0.25 (mm) Dilution Factor: 1.0

Soil Extract Volume:_____(uL) Soil Aliquot Volume: _____(uL)

CONCENTRATION UNITS: (ug/L or ug/Kg) UG/L

CAS NO.	COMPOUND	MDL	RL	CONC	Q
67-64-1	Acetone	0.84	2.5		U
71-43-2	Benzene	0.11	1.0		U
75-27-4	Bromodichloromethane	0.10	1.0		U
75-25-2	Bromoform	0.10	1.0		U
74-83-9	Bromomethane	0.32	1.0		~~U~~ UJ CCH
78-93-3	2-Butanone	1.0	3.0		U
75-15-0	Carbon disulfide	0.13	1.0		U
56-23-5	Carbon tetrachloride	0.15	1.0		U
108-90-7	Chlorobenzene	0.10	1.0		U
75-00-3	Chloroethane	0.18	1.0		U
67-66-3	Chloroform	0.11	1.0		U
74-87-3	Chloromethane	0.29	1.0		U
110-82-7	Cyclohexane	0.20	1.0		U
124-48-1	Dibromochloromethane	0.10	1.0		U
96-12-8	1,2-Dibromo-3-chloropropane	0.11	1.0		U
106-93-4	1,2-Dibromoethane	0.10	1.0		U
95-50-1	1,2-Dichlorobenzene	0.10	1.0		U
541-73-1	1,3-Dichlorobenzene	0.13	1.0		U
106-46-7	1,4-Dichlorobenzene	0.10	1.0		U
75-71-8	Dichlorodifluoromethane	0.22	1.0		~~U~~ UJ CCH
75-34-3	1,1-Dichloroethane	0.12	1.0		U
107-06-2	1,2-Dichloroethane	0.10	1.0		U
75-35-4	1,1-Dichloroethene	0.15	1.0		U
156-59-2	cis-1,2-Dichloroethene	0.13	1.0		U
156-60-5	trans-1,2-Dichloroethene	0.13	1.0		U
78-87-5	1,2-Dichloropropane	0.10	1.0		U
10061-01-5	cis-1,3-Dichloropropene	0.11	1.0		U
10061-02-6	trans-1,3-Dichloropropene	0.10	1.0		U
100-41-4	Ethylbenzene	0.13	1.0		U
591-78-6	2-Hexanone	0.30	2.0		~~U~~ UJ CCH
98-82-8	Isopropylbenzene	0.15	1.0		U
79-20-9	Methyl acetate	0.30	1.0		U
75-09-2	Methylene chloride	0.14	1.0		U
108-87-2	Methyl cyclohexane	0.17	1.0		U
1634-04-4	Methyl tert-butyl ether	0.10	1.0		U
108-10-1	4-Methyl-2-pentanone	0.29	1.0		U
100-42-5	Styrene	0.10	1.0		U
79-34-5	1,1,2,2-Tetrachloroethane	0.10	1.0		U
127-18-4	Tetrachloroethene	0.15	1.0		U

MW 4/6/09

FORM 1
VOLATILE ORGANICS ANALYSIS DATA SHEET

CLIENT SAMPLE NO. 98

MR08-TB6-012609

Lab Name: EMPIRICAL LABS Contract: CH2MHILL

Lab Code: NA Case No.: NA SAS No.: NA SDG No.: LEJEUNE056

Matrix: (soil/water) WATER Lab Sample ID: 0901201-98

Sample wt/vol: 5.000 (g/mL) ML Lab File ID: 0120198

Level: (low/med) LOW Date Sampled: 01/26/09 14:00

% Moisture: not dec. _____ Date Analyzed: 02/01/09 13:12

GC Column: RTX-VRX ID: 0.25 (mm) Dilution Factor: 1.0

Soil Extract Volume:_____(uL) Soil Aliquot Volume: _____(uL)

CONCENTRATION UNITS: (ug/L or ug/Kg) UG/L

CAS NO.	COMPOUND	MDL	RL	CONC	Q
108-88-3	Toluene	0.10	1.0		U
120-82-1	1,2,4-Trichlorobenzene	0.10	1.0		U
71-55-6	1,1,1-Trichloroethane	0.17	1.0		U
79-00-5	1,1,2-Trichloroethane	0.10	1.0		U
79-01-6	Trichloroethene	0.13	1.0		U
76-13-1	Trichlorotrifluoroethane	0.18	1.0		U
75-69-4	Trichlorofluoromethane	0.17	1.0		U
75-01-4	Vinyl chloride	0.18	1.0		U
1330-20-7	Xylene(total)	0.22	1.0		U

lw 4/6/09

FORM 1
VOLATILE ORGANICS ANALYSIS DATA SHEET

CLIENT SAMPLE NO.

99

MR08-SS349D-09A

Lab Name: EMPIRICAL LABS Contract: CH2MHILL

Lab Code: NA Case No.: NA SAS No.: NA SDG No.: LEJEUNE056

Matrix: (soil/water) SOIL Lab Sample ID: 0901203-01

Sample wt/vol: 5.3 (g/mL) G Lab File ID: 0120301A

Level: (low/med) LOW Date Sampled: 01/25/09 13:15

% Moisture: not dec. 12 Date Analyzed: 02/03/09 21:51

GC Column: RTX-VRX ID: 0.25 (mm) Dilution Factor: 1.0

Soil Extract Volume:_____(uL) Soil Aliquot Volume: _____(uL)

CONCENTRATION UNITS: (ug/L or ug/Kg) UG/KG

CAS NO.	COMPOUND	MDL	RL	CONC	Q
67-64-1	Acetone	2.2	11	150	~~B~~
71-43-2	Benzene	0.51	11		U
75-27-4	Bromodichloromethane	0.32	11		U
75-25-2	Bromoform	1.1	11		U
74-83-9	Bromomethane	0.78	11		U
78-93-3	2-Butanone	1.5	11		U
75-15-0	Carbon disulfide	1.4	11		U
56-23-5	Carbon tetrachloride	0.95	11		U
108-90-7	Chlorobenzene	0.37	11		U
75-00-3	Chloroethane	1.2	11		U
67-66-3	Chloroform	0.59	11	2.4	J
74-87-3	Chloromethane	0.56	11		U
110-82-7	Cyclohexane	0.58	11		U
124-48-1	Dibromochloromethane	0.37	11		U
96-12-8	1,2-Dibromo-3-chloropropane	1.3	5.4		U
106-93-4	1,2-Dibromoethane	0.46	11		U
95-50-1	1,2-Dichlorobenzene	0.40	11		U
541-73-1	1,3-Dichlorobenzene	0.90	11		U
106-46-7	1,4-Dichlorobenzene	0.59	11		U
75-71-8	Dichlorodifluoromethane	1.2	11		U
75-34-3	1,1-Dichloroethane	0.58	11		U
107-06-2	1,2-Dichloroethane	0.50	11		U
75-35-4	1,1-Dichloroethene	1.3	11		U
156-59-2	cis-1,2-Dichloroethene	1.3	11		U
156-60-5	trans-1,2-Dichloroethene	1.2	11		U
78-87-5	1,2-Dichloropropane	0.50	11		U
10061-01-5	cis-1,3-Dichloropropene	0.54	11		U
10061-02-6	trans-1,3-Dichloropropene	0.34	11		U
100-41-4	Ethylbenzene	0.81	11		U
591-78-6	2-Hexanone	2.5	11		U
98-82-8	Isopropylbenzene	0.95	11		U
79-20-9	Methyl acetate	1.7	11		U
75-09-2	Methylene chloride	0.67	11	11a ~~1.2~~	~~JB~~ BL
108-87-2	Methyl cyclohexane	0.32	11		U
1634-04-4	Methyl tert-butyl ether	0.34	11		U
108-10-1	4-Methyl-2-pentanone	0.62	11		U
100-42-5	Styrene	0.38	11		U
79-34-5	1,1,2,2-Tetrachloroethane	0.46	11		U
127-18-4	Tetrachloroethene	1.0	11		U

FORM I VOA

MW 4/6/09

FORM 1
VOLATILE ORGANICS ANALYSIS DATA SHEET

CLIENT SAMPLE NO.

MR08-SS349D-09A

99

Lab Name: EMPIRICAL LABS Contract: CH2MHILL

Lab Code: NA Case No.: NA SAS No.: NA SDG No.: LEJEUNE056

Matrix: (soil/water) SOIL Lab Sample ID: 0901203-01

Sample wt/vol: 5.3 (g/mL) G Lab File ID: 0120301A

Level: (low/med) LOW Date Sampled: 01/25/09 13:15

% Moisture: not dec. 12 Date Analyzed: 02/03/09 21:51

GC Column: RTX-VRX ID: 0.25 (mm) Dilution Factor: 1.0

Soil Extract Volume:_____(uL) Soil Aliquot Volume: _____(uL)

CONCENTRATION UNITS: (ug/L or ug/Kg) UG/KG

CAS NO.	COMPOUND	MDL	RL	CONC	Q
108-88-3	Toluene	0.93	11		U
120-82-1	1,2,4-Trichlorobenzene	0.19	11		U
71-55-6	1,1,1-Trichloroethane	0.97	11		U
79-00-5	1,1,2-Trichloroethane	0.38	11		U
79-01-6	Trichloroethene	0.92	11		U
76-13-1	Trichlorotrifluoroethane	0.59	11		U
75-69-4	Trichlorofluoromethane	1.0	11		U
75-01-4	Vinyl chloride	1.2	11		U
1330-20-7	Xylene(total)	0.75	11		U

fcw 4/6/09

FORM 1
VOLATILE ORGANICS ANALYSIS DATA SHEET

CLIENT SAMPLE NO.

MR08-IS34
9D-3-4-09A

100

Lab Name: EMPIRICAL LABS Contract: CH2MHILL

Lab Code: NA Case No.: NA SAS No.: NA SDG No.: LEJEUNE056

Matrix: (soil/water) SOIL Lab Sample ID: 0901203-02

Sample wt/vol: 6.2 (g/mL) G Lab File ID: 0120302A

Level: (low/med) LOW Date Sampled: 01/25/09 13:20

% Moisture: not dec. 14 Date Analyzed: 02/03/09 22:22

GC Column: RTX-VRX ID: 0.25 (mm) Dilution Factor: 1.0

Soil Extract Volume:_____(uL) Soil Aliquot Volume: _____(uL)

CONCENTRATION UNITS: (ug/L or ug/Kg) UG/KG

CAS NO.	COMPOUND	MDL	RL	CONC	Q
67-64-1	Acetone	1.9	9.4	9.8	~~B~~ u BL
71-43-2	Benzene	0.44	9.4		U
75-27-4	Bromodichloromethane	0.28	9.4		U
75-25-2	Bromoform	0.94	9.4		U
74-83-9	Bromomethane	0.68	9.4		U
78-93-3	2-Butanone	1.3	9.4		U
75-15-0	Carbon disulfide	1.2	9.4		U
56-23-5	Carbon tetrachloride	0.82	9.4		U
108-90-7	Chlorobenzene	0.32	9.4		U
75-00-3	Chloroethane	1.0	9.4		U
67-66-3	Chloroform	0.52	9.4		U
74-87-3	Chloromethane	0.49	9.4		U
110-82-7	Cyclohexane	0.51	9.4		U
124-48-1	Dibromochloromethane	0.32	9.4		U
96-12-8	1,2-Dibromo-3-chloropropane	1.1	4.7		U
106-93-4	1,2-Dibromoethane	0.40	9.4		U
95-50-1	1,2-Dichlorobenzene	0.35	9.4		U
541-73-1	1,3-Dichlorobenzene	0.79	9.4		U
106-46-7	1,4-Dichlorobenzene	0.52	9.4		U
75-71-8	Dichlorodifluoromethane	1.0	9.4		U
75-34-3	1,1-Dichloroethane	0.51	9.4		U
107-06-2	1,2-Dichloroethane	0.43	9.4		U
75-35-4	1,1-Dichloroethene	1.1	9.4		U
156-59-2	cis-1,2-Dichloroethene	1.1	9.4		U
156-60-5	trans-1,2-Dichloroethene	1.0	9.4		U
78-87-5	1,2-Dichloropropane	0.43	9.4		U
10061-01-5	cis-1,3-Dichloropropene	0.47	9.4		U
10061-02-6	trans-1,3-Dichloropropene	0.30	9.4		U
100-41-4	Ethylbenzene	0.70	9.4		U
591-78-6	2-Hexanone	2.2	9.4		U
98-82-8	Isopropylbenzene	0.82	9.4		U
79-20-9	Methyl acetate	1.5	9.4		U
75-09-2	Methylene chloride	0.58	9.4	9.4u ~~4.6~~	~~JB~~ BL
108-87-2	Methyl cyclohexane	0.28	9.4		U
1634-04-4	Methyl tert-butyl ether	0.30	9.4		U
108-10-1	4-Methyl-2-pentanone	0.54	9.4		U
100-42-5	Styrene	0.33	9.4		U
79-34-5	1,1,2,2-Tetrachloroethane	0.40	9.4		U
127-18-4	Tetrachloroethene	0.91	9.4		U

FORM I VOA

lw 4/6/09

FORM 1
VOLATILE ORGANICS ANALYSIS DATA SHEET

CLIENT SAMPLE NO.

MR08-IS34
9D-3-4-09A

100

Lab Name: EMPIRICAL LABS Contract: CH2MHILL

Lab Code: NA Case No.: NA SAS No.: NA SDG No.: LEJEUNE056

Matrix: (soil/water) SOIL Lab Sample ID: 0901203-02

Sample wt/vol: 6.2 (g/mL) G Lab File ID: 0120302A

Level: (low/med) LOW Date Sampled: 01/25/09 13:20

% Moisture: not dec. 14 Date Analyzed: 02/03/09 22:22

GC Column: RTX-VRX ID: 0.25 (mm) Dilution Factor: 1.0

Soil Extract Volume:_____(uL) Soil Aliquot Volume: _____(uL)

CONCENTRATION UNITS: (ug/L or ug/Kg) UG/KG

CAS NO.	COMPOUND	MDL	RL	CONC	Q
108-88-3	Toluene	0.81	9.4		U
120-82-1	1,2,4-Trichlorobenzene	0.17	9.4		U
71-55-6	1,1,1-Trichloroethane	0.84	9.4		U
79-00-5	1,1,2-Trichloroethane	0.33	9.4		U
79-01-6	Trichloroethene	0.80	9.4		U
76-13-1	Trichlorotrifluoroethane	0.52	9.4		U
75-69-4	Trichlorofluoromethane	0.89	9.4		U
75-01-4	Vinyl chloride	1.0	9.4		U
1330-20-7	Xylene(total)	0.66	9.4		U

MW 4/6/09

KATAHDIN ANALYTICAL SERVICES
Report of Analytical Results

10

Client: CH2MHill
Project: TO-009 Lejeune
PO No:
Sample Date: 01/24/09
Received Date: 01/27/09
Extraction Date: 01/30/09
Analysis Date: 13-FEB-2009 21:08
Report Date: 02/25/2009
Matrix: SOIL
% Solids: 86.9

Lab ID: SC0410-19
Client ID: MR08-IS345D-1-2-09A
SDG: TO9-45
Extracted by: AC
Extraction Method: SW846 3550
Analyst: JCG
Analysis Method: SW846 8270C
Lab Prep Batch: WG60320
Units: ug/Kgdrywt

CAS#	Compound	Flags	Results	DF	PQL	Adj.PQL	Adj.MDL	
100-52-7	Benzaldehyde	~~U~~ UJ	580	1.0	500	580	140	JCB
108-95-2	Phenol	U	580	1.0	500	580	180	
111-44-4	Bis(2-Chloroethyl)ether	U	380	1.0	330	380	93	
95-57-8	2-Chlorophenol	U	580	1.0	500	580	190	
95-48-7	2-Methylphenol	U	690	1.0	600	690	230	
108-60-1	2,2'-Oxybis(1-chloropropane)	~~U~~ UJ	380	1.0	330	380	100	CCH
98-86-2	Acetophenone	U	690	1.0	600	690	200	
621-64-7	N-Nitroso-di-n-propylamine	U	380	1.0	330	380	95	
65794-96-9	3&4-Methylphenol	U	690	1.0	600	690	220	
67-72-1	Hexachloroethane	U	380	1.0	330	380	110	
98-95-3	Nitrobenzene	U	380	1.0	330	380	100	
78-59-1	Isophorone	U	380	1.0	330	380	86	
88-75-5	2-Nitrophenol	U	690	1.0	600	690	190	
105-67-9	2,4-Dimethylphenol	U	580	1.0	500	580	190	
111-91-1	Bis(2-Chloroethoxy)methane	U	380	1.0	330	380	110	
120-83-2	2,4-Dichlorophenol	U	580	1.0	500	580	170	
106-47-8	4-Chloroaniline	U	580	1.0	500	580	140	
105-60-2	Caprolactam	~~U~~ UJ	580	1.0	500	580	160	BSL
59-50-7	4-Chloro-3-Methylphenol	U	580	1.0	500	580	190	
88-06-2	2,4,6-Trichlorophenol	U	580	1.0	500	580	180	
95-95-4	2,4,5-Trichlorophenol	U	580	1.0	500	580	180	
91-58-7	2-Chloronaphthalene	U	380	1.0	330	380	100	
92-52-4	1,1'-Biphenyl	~~U~~ UJ	380	1.0	330	380	84	CCH
88-74-4	2-Nitroaniline	U	580	1.0	500	580	86	
131-11-3	Dimethyl Phthalate	U	380	1.0	330	380	90	
606-20-2	2,6-Dinitrotoluene	U	380	1.0	330	380	91	
208-96-8	Acenaphthylene	U	380	1.0	330	380	80	
99-09-2	3-Nitroaniline	U	580	1.0	500	580	110	
83-32-9	Acenaphthene	U	380	1.0	330	380	75	
51-28-5	2,4-Dinitrophenol	U	1400	1.0	1200	1400	430	
132-64-9	Dibenzofuran	U	380	1.0	330	380	91	
100-02-7	4-Nitrophenol	U	1400	1.0	1200	1400	360	
121-14-2	2,4-Dinitrotoluene	U	380	1.0	330	380	98	
84-66-2	Diethylphthalate	U	380	1.0	330	380	92	
7005-72-3	4-Chlorophenyl-phenylether	U	380	1.0	330	380	90	
100-01-6	4-Nitroaniline	U	580	1.0	500	580	150	
534-52-1	4,6-Dinitro-2-Methylphenol	~~U~~ UJ	1400	1.0	1200	1400	390	CCH
86-30-6	N-Nitrosodiphenylamine	U	760	1.0	660	760	250	
101-55-3	4-Bromophenyl-phenylether	U	380	1.0	330	380	98	
1912-24-9	Atrazine	U	380	1.0	330	380	100	
87-86-5	Pentachlorophenol	~~U~~ UJ	940	1.0	820	940	270	CCH
120-12-7	Anthracene	U	380	1.0	330	380	97	
86-74-8	Carbazole	U	580	1.0	500	580	130	

JLW 4/18/09

KATAHDIN ANALYTICAL SERVICES
Report of Analytical Results

10

Client: CH2MHill
Project: TO-009 Lejeune
PO No:
Sample Date: 01/24/09
Received Date: 01/27/09
Extraction Date: 01/30/09
Analysis Date: 13-FEB-2009 21:08
Report Date: 02/25/2009
Matrix: SOIL
% Solids: 86.9

Lab ID: SC0410-19
Client ID: MR08-IS345D-1-2-09A
SDG: TO9-45
Extracted by: AC
Extraction Method: SW846 3550
Analyst: JCG
Analysis Method: SW846 8270C
Lab Prep Batch: WG60320
Units: ug/Kgdrywt

CAS#	Compound	Flags	Results	DF	PQL	Adj.PQL	Adj.MDL
84-74-2	Di-n-butylphthalate	U	380	1.0	330	380	120
85-68-7	Butylbenzylphthalate	U	380	1.0	330	380	110
91-94-1	3,3'-Dichlorobenzidine	U	580	1.0	500	580	130
218-01-9	Chrysene	U	380	1.0	330	380	110
117-81-7	bis(2-Ethylhexyl)phthalate	~~JB~~ 380U	~~200~~	1.0	330	380	110 BL
117-84-0	Di-n-octylphthalate	U	380	1.0	330	380	240
367-12-4	2-Fluorophenol		63%				
13127-88-3	Phenol-D6		69%				
4165-60-0	Nitrobenzene-D5		86%				
321-60-8	2-Fluorobiphenyl		98%				
118-79-6	2,4,6-Tribromophenol		43%				
1718-51-0	Terphenyl-D14		94%				

hw 4/18/09

ENVIRONMENTAL
Data Services, Inc.

POLYNUCLEAR AROMATIC COMPOUNDS BY 8270SIM

USEPA Region IV - Level IV Review

Site: MCB Camp Lejeune, TO-09 SDG #: TO9-26

Client: CH2M HILL, Inc., Virginia Beach, Virginia Date: April 14, 2009

Laboratory: Katahdin Analytical Services, Scarborough, Maine Reviewer: Nancy Weaver

EDS ID	Client Sample ID	Laboratory Sample ID	Matrix
1	MR08-SS149-09A	SC0049-2	Soil
2	MR08-IS149-3-4-09A	SC0049-4	Soil
3	MR08-SS142-09A	SC0049-6	Soil
4	MR08-IS142-2-3-09A	SC0049-8	Soil
5	MR08-SS149D-09A	SC0049-10	Soil
6	MR08-IS149D-3-4-09A	SC0049-12	Soil
7	MR08-SS143-09A	SC0049-14	Soil
8	MR08-IS143-2-3-09A	SC0049-16	Soil
9	MR08-SS144-09A	SC0049-18	Soil
9DL	MR08-SS144-09ADL	SC0049-18DL	Soil
10	MR08-IS144-3-4-09A	SC0049-20	Soil
11	MR08-SS145-09A	SC0049-22	Soil
12	MR08-IS145-3-4-09A	SC0049-24	Soil
12DL	MR08-IS145-3-4-09ADL	SC0049-24DL	Soil
13	MR08-SS146-09A	SC0049-26	Soil
14	MR08-IS146-2-3-09A	SC0049-28	Soil
14DL	MR08-IS146-2-3-09ADL	SC0049-28DL	Soil
15	MR08-SS147-09A	SC0049-30	Soil
16	MR08-IS147-2-3-09A	SC0049-32	Soil
17	MR08-SS148-09A	SC0049-34	Soil
17DL	MR08-SS148-09ADL	SC0049-34DL	Soil
18	MR08-IS148-2-3-09A	SC0049-36	Soil
19	MR08-SS195-09A	SC0066-2	Soil
20	MR08-SS141-09A	SC0066-4	Soil
20MS	MR08-SS141-09AMS	SC0066-4MS	Soil
20MSD	MR08-SS141-09AMSD	SC0066-4MSD	Soil

The USEPA "Contract Laboratory Program National Functional Guidelines for Organic Data Review," October 1999, and professional judgement were used in evaluating the data in this summary report.

Holding Times - All samples were extracted within 14 days for soil samples and analyzed within 40 days for all samples.

GC/MS Tuning - All of the DFTPP tunes in the initial and continuing calibrations met the percent relative abundance criteria.

Initial Calibration - The initial calibrations exhibited acceptable %RSD and mean RRF values.

Continuing Calibration - The continuing calibrations exhibited acceptable %D and RRF values except the following.

CCAL Date	Compound	%D/RRF	Qualifier	Affected Samples
01/20/09	Naphthalene	27.23%	J/UJ	9, 10
	Indeno (1, 2, 3-cd) pyrene	43.76%	J/UJ	10
	Dibenzo (a, h) anthracene	29.39%	J/UJ	10
	Hexachlorobutadiene	38.40%	J/UJ	9, 10
	Hexachlorocyclopentadiene	43.43%	J/UJ	9, 10
01/21/09	Hexachlorocyclopentadiene	68.59%	J/UJ	1-5
01/22/09	Dibenzo (a, h) anthracene	31.45%	J/UJ	18
	Hexachlorobenzene	26.56%	J/UJ	18
01/28/09	Hexachlorobutadiene	26.24%	None	Already qualified due to surrogates

Surrogates - All samples exhibited acceptable surrogate recoveries except the following.

Sample ID	Surrogate	%R	Qualifier
12*	S4-Pyrene-d10	3%	J/R
12RE	S4-Pyrene-d10	4%	J/R

* - Use for reporting purposes

MS/MSD - The MS/MSD sample exhibited acceptable %R and RPD values except the following.

MS/MSD Sample ID	Compound	MS/MSD %R/RPD	Qualifier
20	2-Methylnaphthalene	Ok/56%/Ok	J/UJ
	Hexachlorocyclopentadiene	27%/29%/Ok	J/UJ

Laboratory Control Sample - The LCS samples exhibited acceptable %R values except the following.

LCS ID	Compound	%R	Qualifier	Affected Samples
WG59649-LCS	2-Methylnaphthalene	140%	J	6, 13, 14, 17
WG59686-LCS	2-Methylnaphthalene	57%	J/UJ	19
	Hexachlorocyclopentadiene	23%	J/UJ	19

Internal Standard (IS) Area Performance - All internal standards met response and retention time (RT) criteria except the following.

Sample ID	Internal Standard	Area Count	Qualifier
9	IS6-Perylene-d12	High	J -Positive results
12	IS5-Chrysene-d12	High	None - Associated compounds ND
12RE	IS5-Chrysene-d12	High	None - Associated compounds ND
14	IS5-Chrysene-d12	High	J -Positive results
	IS6-Perylene-d12	High	J -Positive results
17	IS5-Chrysene-d12	High	J - Positive results
	IS6-Perylene-d12	High	J - Positive results

Method Blank - The method blanks were free of contamination.

Field, Equipment Blank - Field QC results are summarized below.

Blank ID	Compound	Conc. ug/L	Action Level ug/L	Qualifier	Affected Samples
MR08-EB01010509-SS	None - ND	-	-	-	-
MR08-EB01010509-IS	None - ND	-	-	-	-
MR08-FB01011009	None - ND	-	-	-	-

Field Duplicates - Field duplicate results are summarized below.

Compound	MR08-SS149-09A ug/kg	MR08-SS149D-09A ug/kg	RPD	Qualifier
Phenanthrene	11	6.0	59%	None
Fluoranthene	33	36	9%	None
Pyrene	27	26	4%	None
Benzo (a) anthracene	18	14	25%	None
Benzo (b) fluoranthene	27	45	50%	None
Benzo (k) fluoranthene	12	18	40%	None
Benzo (a) pyrene	14	20	35%	None
Indeno (1,2,3-cd) pyrene	11	16	37%	None
Dibenzo (a,h) anthracene	5.1	4.1	22%	None
Benzo (g,h,i) perylene	11	16	37%	None

Compound	MR08-IS149-3-4-09A ug/kg	MR08-IS149D-3-4-09A ug/kg	RPD	Qualifier
2-Methylnaphthalene	11 U	4.0	NC	None
Phenanthrene	11 U	16	NC	None
Fluoranthene	2.6	68	185%	None
Pyrene	3.0	46	176%	None
Benzo (a) anthracene	11 U	29	NC	None
Benzo (b) fluoranthene	11 U	54	NC	None

Compound	MR08-IS149-3-4-09A ug/kg	MR08-IS149D-3-4-09A ug/kg	RPD	Qualifier
Benzo (k) fluoranthene	11 U	40	NC	None
Benzo (a) pyrene	11 U	35	NC	None
Indeno (1,2,3-cd) pyrene	11 U	25	NC	None
Dibenzo (a,h) anthracene	11 U	8.7	NC	None
Benzo (g,h,i) perylene	11 U	24	NC	None

Compound Quantitation - No discrepancies were identified.

KATAHDIN ANALYTICAL SERVICES
Report of Analytical Results

Client: CH2MHill
Project: TO-009 Lejeune
PO No:
Sample Date: 01/05/09
Received Date: 01/07/09
Extraction Date: 01/08/09
Analysis Date: 21-JAN-2009 13:26
Report Date: 01/29/2009
Matrix: SOIL
% Solids: 88.6

Lab ID: SC0049-2
Client ID: MR08-SS149-09A
SDG: TO9-26
Extracted by: AC
Extraction Method: SW846 3550
Analyst: JLP
Analysis Method: SW846 M8270C
Lab Prep Batch: WG59649
Units: ug/Kgdrywt

CAS#	Compound	Flags	Results	DF	PQL	Adj.PQL	Adj.MDL	
91-20-3	Naphthalene	U	11	1.0	10	11	2.9	
91-57-6	2-Methylnaphthalene	U	11	1.0	10	11	2.5	
86-73-7	Fluorene	U	11	1.0	10	11	3.6	
85-01-8	Phenanthrene	J	11	1.0	10	11	2.0	
206-44-0	Fluoranthene		33	1.0	10	11	2.0	
129-00-0	Pyrene		27	1.0	10	11	2.4	
56-55-3	Benzo(a)anthracene		18	1.0	10	11	2.1	
205-99-2	Benzo(b)fluoranthene		27	1.0	10	11	2.7	
207-08-9	Benzo(k)fluoranthene		12	1.0	10	11	3.5	
50-32-8	Benzo(a)pyrene		14	1.0	10	11	3.7	
193-39-5	Indeno(1,2,3-cd)pyrene	J	11	1.0	10	11	2.1	
53-70-3	Dibenzo(a,h)anthracene	J	5.1	1.0	10	11	2.0	
191-24-2	Benzo(g,h,i)perylene	J	11	1.0	10	11	2.2	
118-74-1	Hexachlorobenzene	U	11	1.0	10	11	2.0	
87-68-3	Hexachlorobutadiene	U	11	1.0	10	11	2.6	
77-47-4	Hexachlorocyclopentadiene	~~U~~ UJ	11	1.0	10	11	1.7	CCH
7297-45-2	2-Methylnaphthalene-D10		105%					
367-12-4	2,4-Dibromophenol		79%					
81103-79-9	Fluorene-d10		82%					
1718-51-1	Pyrene-D10		95%					

MW
4/14/09

2

KATAHDIN ANALYTICAL SERVICES
Report of Analytical Results

Client: CH2MHill
Project: TO-009 Lejeune
PO No:
Sample Date: 01/05/09
Received Date: 01/07/09
Extraction Date: 01/08/09
Analysis Date: 21-JAN-2009 14:06
Report Date: 01/28/2009
Matrix: SOIL
% Solids: 87.2

Lab ID: SC0049-4
Client ID: MR08-IS149-3-4-09A
SDG: TO9-26
Extracted by: AC
Extraction Method: SW846 3550
Analyst: JLP
Analysis Method: SW846 M8270C
Lab Prep Batch: WG59649
Units: ug/Kgdrywt

CAS#	Compound	Flags	Results	DF	PQL	Adj.PQL	Adj.MDL
91-20-3	Naphthalene	U	11	1.0	10	11	3.0
91-57-6	2-Methylnaphthalene	U	11	1.0	10	11	2.5
86-73-7	Fluorene	U	11	1.0	10	11	3.7
85-01-8	Phenanthrene	U	11	1.0	10	11	2.1
206-44-0	Fluoranthene	J	2.6	1.0	10	11	2.1
129-00-0	Pyrene	J	3.0	1.0	10	11	2.4
56-55-3	Benzo(a)anthracene	U	11	1.0	10	11	2.2
205-99-2	Benzo(b)fluoranthene	U	11	1.0	10	11	2.8
207-08-9	Benzo(k)fluoranthene	U	11	1.0	10	11	3.6
50-32-8	Benzo(a)pyrene	U	11	1.0	10	11	3.8
193-39-5	Indeno(1,2,3-cd)pyrene	U	11	1.0	10	11	2.2
53-70-3	Dibenzo(a,h)anthracene	U	11	1.0	10	11	2.1
191-24-2	Benzo(g,h,i)perylene	U	11	1.0	10	11	2.3
118-74-1	Hexachlorobenzene	U	11	1.0	10	11	2.1
87-68-3	Hexachlorobutadiene	U	11	1.0	10	11	2.6
77-47-4	Hexachlorocyclopentadiene	~~U~~ UJ	11	1.0	10	11	1.7 CCH
7297-45-2	2-Methylnaphthalene-D10		71%				
367-12-4	2,4-Dibromophenol		64%				
81103-79-9	Fluorene-d10		76%				
1718-51-1	Pyrene-D10		101%				

lw
4/14/09

3

KATAHDIN ANALYTICAL SERVICES
Report of Analytical Results

Client: CH2MHill
Project: TO-009 Lejeune
PO No:
Sample Date: 01/05/09
Received Date: 01/07/09
Extraction Date: 01/08/09
Analysis Date: 21-JAN-2009 14:46
Report Date: 01/28/2009
Matrix: SOIL
% Solids: 94.3

Lab ID: SC0049-6
Client ID: MR08-SS142-09A
SDG: TO9-26
Extracted by: AC
Extraction Method: SW846 3550
Analyst: JLP
Analysis Method: SW846 M8270C
Lab Prep Batch: WG59649
Units: ug/Kgdrywt

CAS#	Compound	Flags	Results	DF	PQL	Adj.PQL	Adj.MDL	
91-20-3	Naphthalene	U	10	1.0	10	10	2.8	
91-57-6	2-Methylnaphthalene	U	10	1.0	10	10	2.3	
86-73-7	Fluorene	U	10	1.0	10	10	3.4	
85-01-8	Phenanthrene	J	2.1	1.0	10	10	1.9	
206-44-0	Fluoranthene	J	5.3	1.0	10	10	1.9	
129-00-0	Pyrene	J	4.7	1.0	10	10	2.2	
56-55-3	Benzo(a)anthracene	J	2.6	1.0	10	10	2.0	
205-99-2	Benzo(b)fluoranthene	U	10	1.0	10	10	2.5	
207-08-9	Benzo(k)fluoranthene	U	10	1.0	10	10	3.3	
50-32-8	Benzo(a)pyrene	U	10	1.0	10	10	3.5	
193-39-5	Indeno(1,2,3-cd)pyrene	J	2.7	1.0	10	10	2.0	
53-70-3	Dibenzo(a,h)anthracene	U	10	1.0	10	10	1.9	
191-24-2	Benzo(g,h,i)perylene	J	3.0	1.0	10	10	2.1	
118-74-1	Hexachlorobenzene	U	10	1.0	10	10	1.9	
87-68-3	Hexachlorobutadiene	U	10	1.0	10	10	2.4	
77-47-4	Hexachlorocyclopentadiene	~~U~~ UJ	10	1.0	10	10	1.6	CCH
7297-45-2	2-Methylnaphthalene-D10		85%					
367-12-4	2,4-Dibromophenol		73%					
81103-79-9	Fluorene-d10		79%					
1718-51-1	Pyrene-D10		97%					

lw
4/14/09

4

KATAHDIN ANALYTICAL SERVICES
Report of Analytical Results

Client: CH2MHill
Project: TO-009 Lejeune
PO No:
Sample Date: 01/05/09
Received Date: 01/07/09
Extraction Date: 01/08/09
Analysis Date: 21-JAN-2009 15:26
Report Date: 01/28/2009
Matrix: SOIL
% Solids: 84.0

Lab ID: SC0049-8
Client ID: MR08-IS142-2-3-09A
SDG: TO9-26
Extracted by: AC
Extraction Method: SW846 3550
Analyst: JLP
Analysis Method: SW846 M8270C
Lab Prep Batch: WG59649
Units: ug/Kgdrywt

CAS#	Compound	Flags	Results	DF	PQL	Adj.PQL	Adj.MDL	
91-20-3	Naphthalene	U	12	1.0	10	12	3.1	
91-57-6	2-Methylnaphthalene	U	12	1.0	10	12	2.6	
86-73-7	Fluorene	U	12	1.0	10	12	3.8	
85-01-8	Phenanthrene	U	12	1.0	10	12	2.1	
206-44-0	Fluoranthene	U	12	1.0	10	12	2.1	
129-00-0	Pyrene	U	12	1.0	10	12	2.5	
56-55-3	Benzo(a)anthracene	U	12	1.0	10	12	2.3	
205-99-2	Benzo(b)fluoranthene	U	12	1.0	10	12	2.8	
207-08-9	Benzo(k)fluoranthene	U	12	1.0	10	12	3.7	
50-32-8	Benzo(a)pyrene	U	12	1.0	10	12	3.9	
193-39-5	Indeno(1,2,3-cd)pyrene	U	12	1.0	10	12	2.3	
53-70-3	Dibenzo(a,h)anthracene	U	12	1.0	10	12	2.1	
191-24-2	Benzo(g,h,i)perylene	U	12	1.0	10	12	2.4	
118-74-1	Hexachlorobenzene	U	12	1.0	10	12	2.1	
87-68-3	Hexachlorobutadiene	U	12	1.0	10	12	2.7	
77-47-4	Hexachlorocyclopentadiene	~~U~~ UJ	12	1.0	10	12	1.8	CEH
7297-45-2	2-Methylnaphthalene-D10		78%					
367-12-4	2,4-Dibromophenol		83%					
81103-79-9	Fluorene-d10		81%					
1718-51-1	Pyrene-D10		98%					

JW
4/14/09

KATAHDIN ANALYTICAL SERVICES
Report of Analytical Results

Client: CH2MHill
Project: TO-009 Lejeune
PO No:
Sample Date: 01/05/09
Received Date: 01/07/09
Extraction Date: 01/08/09
Analysis Date: 21-JAN-2009 16:07
Report Date: 01/28/2009
Matrix: SOIL
% Solids: 92.7

Lab ID: SC0049-10
Client ID: MR08-SS149D-09A
SDG: TO9-26
Extracted by: AC
Extraction Method: SW846 3550
Analyst: JLP
Analysis Method: SW846 M8270C
Lab Prep Batch: WG59649
Units: ug/Kgdrywt

CAS#	Compound	Flags	Results	DF	PQL	Adj.PQL	Adj.MDL	
91-20-3	Naphthalene	U	11	1.0	10	11	2.8	
91-57-6	2-Methylnaphthalene	U	11	1.0	10	11	2.4	
86-73-7	Fluorene	U	11	1.0	10	11	3.4	
85-01-8	Phenanthrene	J	6.0	1.0	10	11	1.9	
206-44-0	Fluoranthene		36	1.0	10	11	1.9	
129-00-0	Pyrene		26	1.0	10	11	2.3	
56-55-3	Benzo(a)anthracene		14	1.0	10	11	2.0	
205-99-2	Benzo(b)fluoranthene		45	1.0	10	11	2.6	
207-08-9	Benzo(k)fluoranthene		18	1.0	10	11	3.3	
50-32-8	Benzo(a)pyrene		20	1.0	10	11	3.6	
193-39-5	Indeno(1,2,3-cd)pyrene		16	1.0	10	11	2.0	
53-70-3	Dibenzo(a,h)anthracene	J	4.1	1.0	10	11	1.9	
191-24-2	Benzo(g,h,i)perylene		16	1.0	10	11	2.2	
118-74-1	Hexachlorobenzene	U	11	1.0	10	11	1.9	
87-68-3	Hexachlorobutadiene	U	11	1.0	10	11	2.5	
77-47-4	Hexachlorocyclopentadiene	~~U~~ UJ	11	1.0	10	11	1.6	CCH
7297-45-2	2-Methylnaphthalene-D10		76%					
367-12-4	2,4-Dibromophenol		68%					
81103-79-9	Fluorene-d10		74%					
1718-51-1	Pyrene-D10		87%					

MW
4/14/09

6

KATAHDIN ANALYTICAL SERVICES
Report of Analytical Results

Client: CH2MHill
Project: TO-009 Lejeune
PO No:
Sample Date: 01/05/09
Received Date: 01/07/09
Extraction Date: 01/08/09
Analysis Date: 21-JAN-2009 22:53
Report Date: 01/28/2009
Matrix: SOIL
% Solids: 88.2

Lab ID: SC0049-12
Client ID: MR08-IS149D-3-4-09A
SDG: TO9-26
Extracted by: AC
Extraction Method: SW846 3550
Analyst: JCG
Analysis Method: SW846 M8270C
Lab Prep Batch: WG59649
Units: ug/Kgdrywt

CAS#	Compound	Flags	Results	DF	PQL	Adj.PQL	Adj.MDL
91-20-3	Naphthalene	U	11	1.0	10	11	2.9
91-57-6	2-Methylnaphthalene	~~J~~ J	4.0	1.0	10	11	2.5 BSH
86-73-7	Fluorene	U	11	1.0	10	11	3.6
85-01-8	Phenanthrene		16	1.0	10	11	2.0
206-44-0	Fluoranthene		68	1.0	10	11	2.0
129-00-0	Pyrene		46	1.0	10	11	2.4
56-55-3	Benzo(a)anthracene		29	1.0	10	11	2.2
205-99-2	Benzo(b)fluoranthene		54	1.0	10	11	2.7
207-08-9	Benzo(k)fluoranthene		40	1.0	10	11	3.5
50-32-8	Benzo(a)pyrene		35	1.0	10	11	3.7
193-39-5	Indeno(1,2,3-cd)pyrene		25	1.0	10	11	2.2
53-70-3	Dibenzo(a,h)anthracene	J	8.7	1.0	10	11	2.0
191-24-2	Benzo(g,h,i)perylene		24	1.0	10	11	2.3
118-74-1	Hexachlorobenzene	U	11	1.0	10	11	2.0
87-68-3	Hexachlorobutadiene	U	11	1.0	10	11	2.6
77-47-4	Hexachlorocyclopentadiene	U	11	1.0	10	11	1.7
7297-45-2	2-Methylnaphthalene-D10		88%				
367-12-4	2,4-Dibromophenol		76%				
81103-79-9	Fluorene-d10		85%				
1718-51-1	Pyrene-D10		84%				

lw
4/14/09

7

KATAHDIN ANALYTICAL SERVICES
Report of Analytical Results

Client: CH2MHill
Project: TO-009 Lejeune
PO No:
Sample Date: 01/05/09
Received Date: 01/07/09
Extraction Date: 01/08/09
Analysis Date: 21-JAN-2009 23:33
Report Date: 01/28/2009
Matrix: SOIL
% Solids: 94.5

Lab ID: SC0049-14
Client ID: MR08-SS143-09A
SDG: TO9-26
Extracted by: AC
Extraction Method: SW846 3550
Analyst: JCG
Analysis Method: SW846 M8270C
Lab Prep Batch: WG59649
Units: ug/Kgdrywt

CAS#	Compound	Flags	Results	DF	PQL	Adj.PQL	Adj.MDL
91-20-3	Naphthalene	U	10	1.0	10	10	2.8
91-57-6	2-Methylnaphthalene	U	10	1.0	10	10	2.3
86-73-7	Fluorene	U	10	1.0	10	10	3.4
85-01-8	Phenanthrene	J	2.0	1.0	10	10	1.9
206-44-0	Fluoranthene	J	6.3	1.0	10	10	1.9
129-00-0	Pyrene	J	3.8	1.0	10	10	2.2
56-55-3	Benzo(a)anthracene	J	2.1	1.0	10	10	2.0
205-99-2	Benzo(b)fluoranthene	J	9.5	1.0	10	10	2.5
207-08-9	Benzo(k)fluoranthene	J	3.6	1.0	10	10	3.3
50-32-8	Benzo(a)pyrene	U	10	1.0	10	10	3.5
193-39-5	Indeno(1,2,3-cd)pyrene	J	3.3	1.0	10	10	2.0
53-70-3	Dibenzo(a,h)anthracene	U	10	1.0	10	10	1.9
191-24-2	Benzo(g,h,i)perylene	J	3.4	1.0	10	10	2.1
118-74-1	Hexachlorobenzene	U	10	1.0	10	10	1.9
87-68-3	Hexachlorobutadiene	U	10	1.0	10	10	2.4
77-47-4	Hexachlorocyclopentadiene	U	10	1.0	10	10	1.6
7297-45-2	2-Methylnaphthalene-D10		81%				
367-12-4	2,4-Dibromophenol		70%				
81103-79-9	Fluorene-d10		80%				
1718-51-1	Pyrene-D10		79%				

lw
4/14/09

8

KATAHDIN ANALYTICAL SERVICES
Report of Analytical Results

Client: CH2MHill
Project: TO-009 Lejeune
PO No:
Sample Date: 01/05/09
Received Date: 01/07/09
Extraction Date: 01/08/09
Analysis Date: 23-JAN-2009 17:35
Report Date: 01/29/2009
Matrix: SOIL
% Solids: 85.6

Lab ID: SC0049-16RA
Client ID: MR08-IS143-2-3-09A
SDG: TO9-26
Extracted by: AC
Extraction Method: SW846 3550
Analyst: JCG
Analysis Method: SW846 M8270C
Lab Prep Batch: WG59649
Units: ug/Kgdrywt

CAS#	Compound	Flags	Results	DF	PQL	Adj.PQL	Adj.MDL
91-20-3	Naphthalene	U	12	1.0	10	12	3.0
91-57-6	2-Methylnaphthalene	U	12	1.0	10	12	2.6
86-73-7	Fluorene	U	12	1.0	10	12	3.7
85-01-8	Phenanthrene	U	12	1.0	10	12	2.1
206-44-0	Fluoranthene	U	12	1.0	10	12	2.1
129-00-0	Pyrene	U	12	1.0	10	12	2.4
56-55-3	Benzo(a)anthracene	U	12	1.0	10	12	2.2
205-99-2	Benzo(b)fluoranthene	U	12	1.0	10	12	2.8
207-08-9	Benzo(k)fluoranthene	U	12	1.0	10	12	3.6
50-32-8	Benzo(a)pyrene	U	12	1.0	10	12	3.8
193-39-5	Indeno(1,2,3-cd)pyrene	U	12	1.0	10	12	2.2
53-70-3	Dibenzo(a,h)anthracene	U	12	1.0	10	12	2.1
191-24-2	Benzo(g,h,i)perylene	J	2.7	1.0	10	12	2.3
118-74-1	Hexachlorobenzene	U	12	1.0	10	12	2.1
87-68-3	Hexachlorobutadiene	U	12	1.0	10	12	2.7
77-47-4	Hexachlorocyclopentadiene	J	2.2	1.0	10	12	1.8
7297-45-2	2-Methylnaphthalene-D10		55%				
367-12-4	2,4-Dibromophenol		68%				
81103-79-9	Fluorene-d10		76%				
1718-51-1	Pyrene-D10		99%				

JCG 1/14/09

9

KATAHDIN ANALYTICAL SERVICES
Report of Analytical Results

Client: CH2MHill
Project: TO-009 Lejeune
PO No:
Sample Date: 01/05/09
Received Date: 01/07/09
Extraction Date: 01/08/09
Analysis Date: 22-JAN-2009 00:53
Report Date: 01/28/2009
Matrix: SOIL
% Solids: 94.4

Lab ID: SC0049-18
Client ID: MR08-SS144-09A
SDG: TO9-26
Extracted by: AC
Extraction Method: SW846 3550
Analyst: JCG
Analysis Method: SW846 M8270C
Lab Prep Batch: WG59649
Units: ug/Kgdrywt

CAS#	Compound	Flags	Results	DF	PQL	Adj.PQL	Adj.MDL
91-20-3	Naphthalene	~~U~~ UJ	10	1.0	10	10	2.8 CCH
91-57-6	2-Methylnaphthalene	U	10	1.0	10	10	2.3
86-73-7	Fluorene	U	10	1.0	10	10	3.4
85-01-8	Phenanthrene		38	1.0	10	10	1.9
206-44-0	Fluoranthene	~~E~~	480 ~~460~~	~~1.0~~ 4.0	10	42 ~~10~~	~~7.6~~ 1.9 R DL
129-00-0	Pyrene	~~E~~	500 ~~400~~	~~1.0~~	10	~~10~~	~~8.9~~ 2.2
56-55-3	Benzo(a)anthracene	~~E~~	340 ~~360~~	~~1.0~~	10	~~10~~	~~8.0~~ 2.0
205-99-2	Benzo(b)fluoranthene	~~E~~	660 ~~620~~	~~1.0~~	10	~~10~~	~~10~~ 2.5
207-08-9	Benzo(k)fluoranthene	~~E~~	380 ~~330~~	~~1.0~~	10	~~10~~	~~13~~ 3.3
50-32-8	Benzo(a)pyrene	~~E~~	350 ~~350~~	~~1.0~~	10	~~10~~	~~14~~ 3.5
193-39-5	Indeno(1,2,3-cd)pyrene		J 270	1.0	10	10	2.0 ISH
53-70-3	Dibenzo(a,h)anthracene		110	1.0	10	10	1.9
191-24-2	Benzo(g,h,i)perylene		240	1.0	10	10	2.1
118-74-1	Hexachlorobenzene	U	10	1.0	10	10	1.9
87-68-3	Hexachlorobutadiene	~~U~~ UJ	10	1.0	10	10	2.4 CCH
77-47-4	Hexachlorocyclopentadiene	~~U~~ UJ	10	1.0	10	10	1.6 CCH
7297-45-2	2-Methylnaphthalene-D10		86%				
367-12-4	2,4-Dibromophenol		56%				
81103-79-9	Fluorene-d10		85%				
1718-51-1	Pyrene-D10		77%				

lw 4/14/09

9DL

KATAHDIN ANALYTICAL SERVICES
Report of Analytical Results

Client: CH2MHill
Project: TO-009 Lejeune
PO No:
Sample Date: 01/05/09
Received Date: 01/07/09
Extraction Date: 01/08/09
Analysis Date: 22-JAN-2009 18:23
Report Date: 01/28/2009
Matrix: SOIL
% Solids: 94.4

Lab ID: SC0049-18DL
Client ID: MR08-SS144-09A
SDG: TO9-26
Extracted by: AC
Extraction Method: SW846 3550
Analyst: JCG
Analysis Method: SW846 M8270C
Lab Prep Batch: WG59649
Units: ug/Kgdrywt

Use original

R DL

CAS#	Compound	Flags	Results	DF	PQL	Adj.PQL	Adj.MDL
91-20-3	Naphthalene	U	42	4.0	10	42	11
91-57-6	2-Methylnaphthalene	U	42	4.0	10	42	9.3
86-73-7	Fluorene	U	42	4.0	10	42	14
85-01-8	Phenanthrene	J	38	4.0	10	42	7.6
206-44-0	Fluoranthene		480	4.0	10	42	7.6
129-00-0	Pyrene		500	4.0	10	42	8.9
56-55-3	Benzo(a)anthracene		340	4.0	10	42	8.0
205-99-2	Benzo(b)fluoranthene		660	4.0	10	42	10
207-08-9	Benzo(k)fluoranthene		380	4.0	10	42	13
50-32-8	Benzo(a)pyrene		350	4.0	10	42	14
193-39-5	Indeno(1,2,3-cd)pyrene		240	4.0	10	42	8.0
53-70-3	Dibenzo(a,h)anthracene		67	4.0	10	42	7.6
191-24-2	Benzo(g,h,i)perylene		290	4.0	10	42	8.5
118-74-1	Hexachlorobenzene	U	42	4.0	10	42	7.6
87-68-3	Hexachlorobutadiene	U	42	4.0	10	42	9.7
77-47-4	Hexachlorocyclopentadiene	U	42	4.0	10	42	6.4
7297-45-2	2-Methylnaphthalene-D10		97%				
367-12-4	2,4-Dibromophenol		54%				
81103-79-9	Fluorene-d10		81%				
1718-51-1	Pyrene-D10		87%				

WLS
4/14/09

10

KATAHDIN ANALYTICAL SERVICES
Report of Analytical Results

Client: CH2MHill
Project: TO-009 Lejeune
PO No:
Sample Date: 01/05/09
Received Date: 01/07/09
Extraction Date: 01/08/09
Analysis Date: 23-JAN-2009 18:16
Report Date: 01/29/2009
Matrix: SOIL
% Solids: 85.5

Lab ID: SC0049-20RA
Client ID: MR08-IS144-3-4-09A
SDG: TO9-26
Extracted by: AC
Extraction Method: SW846 3550
Analyst: JCG
Analysis Method: SW846 M8270C
Lab Prep Batch: WG59649
Units: ug/Kgdrywt

CAS#	Compound	Flags	Results	DF	PQL	Adj.PQL	Adj.MDL	
91-20-3	Naphthalene	~~U~~ UJ	12	1.0	10	12	3.0	CCH
91-57-6	2-Methylnaphthalene	U	12	1.0	10	12	2.6	
86-73-7	Fluorene	U	12	1.0	10	12	3.7	
85-01-8	Phenanthrene	U	12	1.0	10	12	2.1	
206-44-0	Fluoranthene	U	12	1.0	10	12	2.1	
129-00-0	Pyrene	U	12	1.0	10	12	2.4	
56-55-3	Benzo(a)anthracene	U	12	1.0	10	12	2.2	
205-99-2	Benzo(b)fluoranthene	U	12	1.0	10	12	2.8	
207-08-9	Benzo(k)fluoranthene	U	12	1.0	10	12	3.6	
50-32-8	Benzo(a)pyrene	U	12	1.0	10	12	3.8	
193-39-5	Indeno(1,2,3-cd)pyrene	~~U~~ UJ	12	1.0	10	12	2.2	CCH
53-70-3	Dibenzo(a,h)anthracene	~~U~~ UJ	12	1.0	10	12	2.1	CCH
191-24-2	Benzo(g,h,i)perylene	U	12	1.0	10	12	2.3	
118-74-1	Hexachlorobenzene	U	12	1.0	10	12	2.1	
87-68-3	Hexachlorobutadiene	~~U~~ UJ	12	1.0	10	12	2.7	CCH
77-47-4	Hexachlorocyclopentadiene	~~U~~ UJ	12	1.0	10	12	1.8	CCH
7297-45-2	2-Methylnaphthalene-D10		68%					
367-12-4	2,4-Dibromophenol		80%					
81103-79-9	Fluorene-d10		88%					
1718-51-1	Pyrene-D10		118%					

fcw
4/14/09

11

KATAHDIN ANALYTICAL SERVICES
Report of Analytical Results

Client: CH2MHill
Project: TO-009 Lejeune
PO No:
Sample Date: 01/05/09
Received Date: 01/07/09
Extraction Date: 01/08/09
Analysis Date: 22-JAN-2009 02:13
Report Date: 01/28/2009
Matrix: SOIL
% Solids: 94.6

Lab ID: SC0049-22
Client ID: MR08-SS145-09A
SDG: TO9-26
Extracted by: AC
Extraction Method: SW846 3550
Analyst: JCG
Analysis Method: SW846 M8270C
Lab Prep Batch: WG59649
Units: ug/Kgdrywt

CAS#	Compound	Flags	Results	DF	PQL	Adj.PQL	Adj.MDL
91-20-3	Naphthalene	U	10	1.0	10	10	2.7
91-57-6	2-Methylnaphthalene	U	10	1.0	10	10	2.3
86-73-7	Fluorene	U	10	1.0	10	10	3.4
85-01-8	Phenanthrene	U	10	1.0	10	10	1.9
206-44-0	Fluoranthene	J	6.9	1.0	10	10	1.9
129-00-0	Pyrene	J	4.3	1.0	10	10	2.2
56-55-3	Benzo(a)anthracene	J	2.6	1.0	10	10	2.0
205-99-2	Benzo(b)fluoranthene		11	1.0	10	10	2.5
207-08-9	Benzo(k)fluoranthene	J	4.9	1.0	10	10	3.3
50-32-8	Benzo(a)pyrene	J	3.8	1.0	10	10	3.5
193-39-5	Indeno(1,2,3-cd)pyrene	J	2.9	1.0	10	10	2.0
53-70-3	Dibenzo(a,h)anthracene	U	10	1.0	10	10	1.9
191-24-2	Benzo(g,h,i)perylene	J	3.2	1.0	10	10	2.1
118-74-1	Hexachlorobenzene	U	10	1.0	10	10	1.9
87-68-3	Hexachlorobutadiene	U	10	1.0	10	10	2.4
77-47-4	Hexachlorocyclopentadiene	U	10	1.0	10	10	1.6
7297-45-2	2-Methylnaphthalene-D10		84%				
367-12-4	2,4-Dibromophenol		67%				
81103-79-9	Fluorene-d10		72%				
1718-51-1	Pyrene-D10		61%				

lew
4/14/09

12

KATAHDIN ANALYTICAL SERVICES
Report of Analytical Results

Client: CH2MHill
Project: TO-009 Lejeune
PO No:
Sample Date: 01/05/09
Received Date: 01/07/09
Extraction Date: 01/08/09
Analysis Date: 22-JAN-2009 02:53
Report Date: 01/28/2009
Matrix: SOIL
% Solids: 89.2

Lab ID: SC0049-24
Client ID: MR08-IS145-3-4-09A
SDG: TO9-26
Extracted by: AC
Extraction Method: SW846 3550
Analyst: JCG
Analysis Method: SW846 M8270C
Lab Prep Batch: WG59649
Units: ug/Kgdrywt

CAS#	Compound	Flags		Results	DF	PQL	Adj.PQL	Adj.MDL	
91-20-3	Naphthalene	U	R	11	1.0	10	11	2.9	SSL
91-57-6	2-Methylnaphthalene	U		11	1.0	10	11	2.5	
86-73-7	Fluorene	U		11	1.0	10	11	3.6	
85-01-8	Phenanthrene	U		11	1.0	10	11	2.0	
206-44-0	Fluoranthene	J	J	2.2	1.0	10	11	2.0	
129-00-0	Pyrene	U	R	11	1.0	10	11	2.4	
56-55-3	Benzo(a)anthracene	U		11	1.0	10	11	2.1	
205-99-2	Benzo(b)fluoranthene	U		11	1.0	10	11	2.7	
207-08-9	Benzo(k)fluoranthene	U		11	1.0	10	11	3.5	
50-32-8	Benzo(a)pyrene	U		11	1.0	10	11	3.7	
193-39-5	Indeno(1,2,3-cd)pyrene	U		11	1.0	10	11	2.1	
53-70-3	Dibenzo(a,h)anthracene	U		11	1.0	10	11	2.0	
191-24-2	Benzo(g,h,i)perylene	U		11	1.0	10	11	2.2	
118-74-1	Hexachlorobenzene	U		11	1.0	10	11	2.0	
87-68-3	Hexachlorobutadiene	U		11	1.0	10	11	2.6	
77-47-4	Hexachlorocyclopentadiene	U		11	1.0	10	11	1.7	
7297-45-2	2-Methylnaphthalene-D10			69%					
367-12-4	2,4-Dibromophenol			73%					
81103-79-9	Fluorene-d10			84%					
1718-51-1	Pyrene-D10			* 3%					

JW
4/14/09

12RE

KATAHDIN ANALYTICAL SERVICES
Report of Analytical Results

Client: CH2MHill
Project: TO-009 Lejeune
PO No:
Sample Date: 01/05/09
Received Date: 01/07/09
Extraction Date: 01/08/09
Analysis Date: 28-JAN-2009 15:24
Report Date: 01/29/2009
Matrix: SOIL
% Solids: 89.2

Lab ID: SC0049-24RA
Client ID: MR08-IS145-3-4-09A
SDG: TO9-26
Extracted by: AC
Extraction Method: SW846 3550
Analyst: JLP
Analysis Method: SW846 M8270C
Lab Prep Batch: WG59649
Units: ug/Kgdrywt

Use original

CAS#	Compound	Flags	Results	DF	PQL	Adj.PQL	Adj.MDL	
91-20-3	Naphthalene	~~U~~ R	11	1.0	10	11	2.9	SSL
91-57-6	2-Methylnaphthalene	~~U~~	11	1.0	10	11	2.5	
86-73-7	Fluorene	~~U~~	11	1.0	10	11	3.6	
85-01-8	Phenanthrene	~~U~~	11	1.0	10	11	2.0	
206-44-0	Fluoranthene	~~J~~ J	2.1	1.0	10	11	2.0	
129-00-0	Pyrene	~~U~~ R	11	1.0	10	11	2.4	
56-55-3	Benzo(a)anthracene	~~U~~	11	1.0	10	11	2.1	
205-99-2	Benzo(b)fluoranthene	~~U~~	11	1.0	10	11	2.7	
207-08-9	Benzo(k)fluoranthene	~~U~~	11	1.0	10	11	3.5	
50-32-8	Benzo(a)pyrene	~~U~~	11	1.0	10	11	3.7	
193-39-5	Indeno(1,2,3-cd)pyrene	~~U~~	11	1.0	10	11	2.1	
53-70-3	Dibenzo(a,h)anthracene	~~U~~	11	1.0	10	11	2.0	
191-24-2	Benzo(g,h,i)perylene	~~U~~	11	1.0	10	11	2.2	
118-74-1	Hexachlorobenzene	~~U~~	11	1.0	10	11	2.0	
87-68-3	Hexachlorobutadiene	~~U~~	11	1.0	10	11	2.6	
77-47-4	Hexachlorocyclopentadiene	~~U~~	11	1.0	10	11	1.7	
7297-45-2	2-Methylnaphthalene-D10		62%					
367-12-4	2,4-Dibromophenol		62%					
81103-79-9	Fluorene-d10		81%					
1718-51-1	Pyrene-D10		* 4%					

RE

R

Lw
4/14/09

13

KATAHDIN ANALYTICAL SERVICES
Report of Analytical Results

Client: CH2MHill
Project: TO-009 Lejeune
PO No:
Sample Date: 01/05/09
Received Date: 01/07/09
Extraction Date: 01/08/09
Analysis Date: 23-JAN-2009 18:57
Report Date: 01/28/2009
Matrix: SOIL
% Solids: 95.7

Lab ID: SC0049-26RA
Client ID: MR08-SS146-09A
SDG: TO9-26
Extracted by: AC
Extraction Method: SW846 3550
Analyst: JCG
Analysis Method: SW846 M8270C
Lab Prep Batch: WG59649
Units: ug/Kgdrywt

CAS#	Compound	Flags	Results	DF	PQL	Adj.PQL	Adj.MDL
91-20-3	Naphthalene		42	1.0	10	10	2.7
91-57-6	2-Methylnaphthalene	J	14	1.0	10	10	2.3 BSH
86-73-7	Fluorene		14	1.0	10	10	3.3
85-01-8	Phenanthrene		27	1.0	10	10	1.9
206-44-0	Fluoranthene		110	1.0	10	10	1.9
129-00-0	Pyrene		120	1.0	10	10	2.2
56-55-3	Benzo(a)anthracene		45	1.0	10	10	2.0
205-99-2	Benzo(b)fluoranthene		120	1.0	10	10	2.5
207-08-9	Benzo(k)fluoranthene		37	1.0	10	10	3.2
50-32-8	Benzo(a)pyrene		40	1.0	10	10	3.4
193-39-5	Indeno(1,2,3-cd)pyrene		43	1.0	10	10	2.0
53-70-3	Dibenzo(a,h)anthracene		14	1.0	10	10	1.9
191-24-2	Benzo(g,h,i)perylene		41	1.0	10	10	2.1
118-74-1	Hexachlorobenzene	U	10	1.0	10	10	1.9
87-68-3	Hexachlorobutadiene	U	10	1.0	10	10	2.4
77-47-4	Hexachlorocyclopentadiene	U	10	1.0	10	10	1.6
7297-45-2	2-Methylnaphthalene-D10		63%				
367-12-4	2,4-Dibromophenol		70%				
81103-79-9	Fluorene-d10		85%				
1718-51-1	Pyrene-D10		111%				

fw
4/14/09

KATAHDIN ANALYTICAL SERVICES
Report of Analytical Results

Client: CH2MHill
Project: TO-009 Lejeune
PO No:
Sample Date: 01/05/09
Received Date: 01/07/09
Extraction Date: 01/08/09
Analysis Date: 22-JAN-2009 04:13
Report Date: 01/28/2009
Matrix: SOIL
% Solids: 85.5

Lab ID: SC0049-28
Client ID: MR08-IS146-2-3-09A
SDG: TO9-26
Extracted by: AC
Extraction Method: SW846 3550
Analyst: JCG
Analysis Method: SW846 M8270C
Lab Prep Batch: WG59649
Units: ug/Kgdrywt

CAS#	Compound	Flags	Results	DF	PQL	Adj.PQL	Adj.MDL	
91-20-3	Naphthalene		21	1.0	10	12	3.0	
91-57-6	2-Methylnaphthalene		J 13	1.0	10	12	2.6	BSH
86-73-7	Fluorene		130	1.0	10	12	3.7	
85-01-8	Phenanthrene	~~E~~	1200 ~~890~~	8 1.0	10	94 ~~12~~ 17	~~2.1~~	R DL
206-44-0	Fluoranthene	~~E~~	1300 ~~1300~~	1.0	10	~~12~~ 17	~~2.1~~	
129-00-0	Pyrene	~~E~~	1100 ~~670~~	1.0	10	~~12~~ 20	~~2.4~~	
56-55-3	Benzo(a)anthracene	~~E~~	550 ~~540~~	1.0	10	~~12~~ 18	~~2.2~~	
205-99-2	Benzo(b)fluoranthene	~~E~~	530 ~~470~~	1.0	10	~~12~~ 22	~~2.8~~	
207-08-9	Benzo(k)fluoranthene		J 270	1.0	10	12	3.6	ISH
50-32-8	Benzo(a)pyrene	~~E~~	400 ~~370~~	8 1.0	10	94 ~~12~~ 31	~~3.9~~	R DL
193-39-5	Indeno(1,2,3-cd)pyrene		J 200	1.0	10	12	2.2	ISH
53-70-3	Dibenzo(a,h)anthracene		77	1.0	10	12	2.1	
191-24-2	Benzo(g,h,i)perylene		150	1.0	10	12	2.3	
118-74-1	Hexachlorobenzene	U	12	1.0	10	12	2.1	
87-68-3	Hexachlorobutadiene	U	12	1.0	10	12	2.7	
77-47-4	Hexachlorocyclopentadiene	U	12	1.0	10	12	1.8	
7297-45-2	2-Methylnaphthalene-D10		98%					
367-12-4	2,4-Dibromophenol		71%					
81103-79-9	Fluorene-d10		94%					
1718-51-1	Pyrene-D10		72%					

lcw
4/14/09

14DL

KATAHDIN ANALYTICAL SERVICES
Report of Analytical Results

Client: CH2MHill
Project: TO-009 Lejeune
PO No:
Sample Date: 01/05/09
Received Date: 01/07/09
Extraction Date: 01/08/09
Analysis Date: 22-JAN-2009 19:03
Report Date: 01/28/2009
Matrix: SOIL
% Solids: 85.5

Lab ID: SC0049-28DL
Client ID: MR08-IS146-2-3-09A
SDG: TO9-26
Extracted by: AC
Extraction Method: SW846 3550
Analyst: JCG
Analysis Method: SW846 M8270C
Lab Prep Batch: WG59649
Units: ug/Kgdrywt

use original

RDL

CAS#	Compound	Flags	Results	DF	PQL	Adj.PQL	Adj.MDL
91-20-3	Naphthalene	J	29	8.0	10	94	24
91-57-6	2-Methylnaphthalene	U	94	8.0	10	94	20
86-73-7	Fluorene		140	8.0	10	94	30
85-01-8	Phenanthrene		1200	8.0	10	94	17
206-44-0	Fluoranthene		1300	8.0	10	94	17
129-00-0	Pyrene		1100	8.0	10	94	20
56-55-3	Benzo(a)anthracene		550	8.0	10	94	18
205-99-2	Benzo(b)fluoranthene		530	8.0	10	94	22
207-08-9	Benzo(k)fluoranthene		270	8.0	10	94	29
50-32-8	Benzo(a)pyrene		400	8.0	10	94	31
193-39-5	Indeno(1,2,3-cd)pyrene		240	8.0	10	94	18
53-70-3	Dibenzo(a,h)anthracene	U	94	8.0	10	94	17
191-24-2	Benzo(g,h,i)perylene		200	8.0	10	94	19
118-74-1	Hexachlorobenzene	U	94	8.0	10	94	17
87-68-3	Hexachlorobutadiene	U	94	8.0	10	94	22
77-47-4	Hexachlorocyclopentadiene	U	94	8.0	10	94	14
7297-45-2	2-Methylnaphthalene-D10		88%				
367-12-4	2,4-Dibromophenol		148%				
81103-79-9	Fluorene-d10		91%				
1718-51-1	Pyrene-D10		114%				

lw
4/14/09

KATAHDIN ANALYTICAL SERVICES
Report of Analytical Results

Client: CH2MHill
Project: TO-009 Lejeune
PO No:
Sample Date: 01/05/09
Received Date: 01/07/09
Extraction Date: 01/08/09
Analysis Date: 23-JAN-2009 19:38
Report Date: 01/28/2009
Matrix: SOIL
% Solids: 90.3

Lab ID: SC0049-30RA
Client ID: MR08-SS147-09A
SDG: TO9-26
Extracted by: AC
Extraction Method: SW846 3550
Analyst: JCG
Analysis Method: SW846 M8270C
Lab Prep Batch: WG59649
Units: ug/Kgdrywt

CAS#	Compound	Flags	Results	DF	PQL	Adj.PQL	Adj.MDL
91-20-3	Naphthalene	U	11	1.0	10	11	2.9
91-57-6	2-Methylnaphthalene	U	11	1.0	10	11	2.4
86-73-7	Fluorene	U	11	1.0	10	11	3.5
85-01-8	Phenanthrene		22	1.0	10	11	2.0
206-44-0	Fluoranthene		140	1.0	10	11	2.0
129-00-0	Pyrene		130	1.0	10	11	2.3
56-55-3	Benzo(a)anthracene		66	1.0	10	11	2.1
205-99-2	Benzo(b)fluoranthene		150	1.0	10	11	2.6
207-08-9	Benzo(k)fluoranthene		82	1.0	10	11	3.4
50-32-8	Benzo(a)pyrene		57	1.0	10	11	3.6
193-39-5	Indeno(1,2,3-cd)pyrene		53	1.0	10	11	2.1
53-70-3	Dibenzo(a,h)anthracene		20	1.0	10	11	2.0
191-24-2	Benzo(g,h,i)perylene		50	1.0	10	11	2.2
118-74-1	Hexachlorobenzene	U	11	1.0	10	11	2.0
87-68-3	Hexachlorobutadiene	U	11	1.0	10	11	2.5
77-47-4	Hexachlorocyclopentadiene	U	11	1.0	10	11	1.7
7297-45-2	2-Methylnaphthalene-D10		63%				
367-12-4	2,4-Dibromophenol		68%				
81103-79-9	Fluorene-d10		87%				
1718-51-1	Pyrene-D10		108%				

MW
4/14/09

KATAHDIN ANALYTICAL SERVICES
Report of Analytical Results

Client: CH2MHill
Project: TO-009 Lejeune
PO No:
Sample Date: 01/05/09
Received Date: 01/07/09
Extraction Date: 01/08/09
Analysis Date: 22-JAN-2009 05:32
Report Date: 01/28/2009
Matrix: SOIL
% Solids: 87.6

Lab ID: SC0049-32
Client ID: MR08-IS147-2-3-09A
SDG: TO9-26
Extracted by: AC
Extraction Method: SW846 3550
Analyst: JCG
Analysis Method: SW846 M8270C
Lab Prep Batch: WG59649
Units: ug/Kgdrywt

CAS#	Compound	Flags	Results	DF	PQL	Adj.PQL	Adj.MDL
91-20-3	Naphthalene	J	3.1	1.0	10	11	3.0
91-57-6	2-Methylnaphthalene	U	11	1.0	10	11	2.5
86-73-7	Fluorene	J	5.8	1.0	10	11	3.6
85-01-8	Phenanthrene		66	1.0	10	11	2.0
206-44-0	Fluoranthene		180	1.0	10	11	2.0
129-00-0	Pyrene		110	1.0	10	11	2.4
56-55-3	Benzo(a)anthracene		80	1.0	10	11	2.2
205-99-2	Benzo(b)fluoranthene		79	1.0	10	11	2.7
207-08-9	Benzo(k)fluoranthene		62	1.0	10	11	3.5
50-32-8	Benzo(a)pyrene		59	1.0	10	11	3.8
193-39-5	Indeno(1,2,3-cd)pyrene		28	1.0	10	11	2.2
53-70-3	Dibenzo(a,h)anthracene	J	8.6	1.0	10	11	2.0
191-24-2	Benzo(g,h,i)perylene		21	1.0	10	11	2.3
118-74-1	Hexachlorobenzene	U	11	1.0	10	11	2.0
87-68-3	Hexachlorobutadiene	U	11	1.0	10	11	2.6
77-47-4	Hexachlorocyclopentadiene	U	11	1.0	10	11	1.7
7297-45-2	2-Methylnaphthalene-D10		125%				
367-12-4	2,4-Dibromophenol		80%				
81103-79-9	Fluorene-d10		91%				
1718-51-1	Pyrene-D10		77%				

Ges
4/14/09

KATAHDIN ANALYTICAL SERVICES
Report of Analytical Results

Client: CH2MHill
Project: TO-009 Lejeune
PO No:
Sample Date: 01/05/09
Received Date: 01/07/09
Extraction Date: 01/08/09
Analysis Date: 22-JAN-2009 12:38
Report Date: 01/28/2009
Matrix: SOIL
% Solids: 77.0

Lab ID: SC0049-34
Client ID: MR08-SS148-09A
SDG: TO9-26
Extracted by: AC
Extraction Method: SW846 3550
Analyst: JLP
Analysis Method: SW846 M8270C
Lab Prep Batch: WG59649
Units: ug/Kgdrywt

CAS#	Compound	Flags		Results	DF	PQL	Adj.PQL	Adj.MDL	
91-20-3	Naphthalene	J		7.0	1.0	10	13	3.4	
91-57-6	2-Methylnaphthalene	J	J	10	1.0	10	13	2.8	BSH
86-73-7	Fluorene	J		6.5	1.0	10	13	4.2	
85-01-8	Phenanthrene			130	1.0	10	13	2.3	
206-44-0	Fluoranthene	~~E~~	970	~~850~~ 5	1.0	10	65 ~~13~~ 12	~~2.3~~	RDL
129-00-0	Pyrene	~~E~~	640	~~510~~ 5	1.0	10	65 ~~13~~ 14	~~2.7~~	RDL
56-55-3	Benzo(a)anthracene		J	320	1.0	10	13	2.5	ISH
205-99-2	Benzo(b)fluoranthene	~~E~~	660	~~640~~ 5	1.0	10	65 ~~13~~ 16	~~3.1~~	RDL
207-08-9	Benzo(k)fluoranthene	~~E~~	380	~~360~~ 5	1.0	10	65 ~~13~~ 20	~~4.0~~	RDL
50-32-8	Benzo(a)pyrene		J	280	1.0	10	13	4.3	ISH
193-39-5	Indeno(1,2,3-cd)pyrene			180	1.0	10	13	2.5	
53-70-3	Dibenzo(a,h)anthracene			67	1.0	10	13	2.3	
191-24-2	Benzo(g,h,i)perylene			150	1.0	10	13	2.6	
118-74-1	Hexachlorobenzene	U		13	1.0	10	13	2.3	
87-68-3	Hexachlorobutadiene	U		13	1.0	10	13	3.0	
77-47-4	Hexachlorocyclopentadiene	U		13	1.0	10	13	1.9	
7297-45-2	2-Methylnaphthalene-D10			115%					
367-12-4	2,4-Dibromophenol			73%					
81103-79-9	Fluorene-d10			87%					
1718-51-1	Pyrene-D10			60%					

LW
4/14/09

17DL

KATAHDIN ANALYTICAL SERVICES
Report of Analytical Results

Client: CH2MHill
Project: TO-009 Lejeune
PO No:
Sample Date: 01/05/09
Received Date: 01/07/09
Extraction Date: 01/08/09
Analysis Date: 22-JAN-2009 19:44
Report Date: 01/28/2009
Matrix: SOIL
% Solids: 77.0

Lab ID: SC0049-34DL
Client ID: MR08-SS148-09A
SDG: TO9-26
Extracted by: AC
Extraction Method: SW846 3550
Analyst: JCG
Analysis Method: SW846 8270C
Lab Prep Batch: WG59645
Units: ug/Kgdrywt

Use ORIGINAL

R DL

CAS#	Compound	Flags	Results	DF	PQL	Adj.PQL	Adj.MDL	
91-20-3	Naphthalene	U	65	5.0	10	65	17	
91-57-6	2-Methylnaphthalene	U	65	5.0	10	65	14	
86-73-7	Fluorene	U	65	5.0	10	65	21	
85-01-8	Phenanthrene		140	~~5.0~~	10	65	12	
206-44-0	Fluoranthene		970	5.0	10	65	12	
129-00-0	Pyrene		640	5.0	10	65	14	
56-55-3	Benzo(a)anthracene		320	5.0	10	65	12	
205-99-2	Benzo(b)fluoranthene		660	5.0	10	65	16	
207-08-9	Benzo(k)fluoranthene		380	5.0	10	65	20	
50-32-8	Benzo(a)pyrene		300	5.0	10	65	21	
193-39-5	Indeno(1,2,3-cd)pyrene		270	5.0	10	65	12	
53-70-3	Dibenzo(a,h)anthracene	~~J~~ J	57	5.0	10	65	12	CCH
191-24-2	Benzo(g,h,i)perylene		290	5.0	10	65	13	
118-74-1	Hexachlorobenzene	~~U~~ UJ	65	5.0	10	65	12	CCH
87-68-3	Hexachlorobutadiene	U	65	5.0	10	65	15	
77-47-4	Hexachlorocyclopentadiene	U	65	5.0	10	65	9.7	
7297-45-2	2-Methylnaphthalene-D10		93%					
367-12-4	2,4-Dibromophenol		63%					
81103-79-9	Fluorene-d10		78%					
1718-51-1	Pyrene-D10		76%					

MW 4/14/09

KATAHDIN ANALYTICAL SERVICES
Report of Analytical Results

Client: CH2MHill
Project: TO-009 Lejeune
PO No:
Sample Date: 01/05/09
Received Date: 01/07/09
Extraction Date: 01/08/09
Analysis Date: 22-JAN-2009 11:58
Report Date: 01/28/2009
Matrix: SOIL
% Solids: 85.5

Lab ID: SC0049-36
Client ID: MR08-IS148-2-3-09A
SDG: TO9-26
Extracted by: AC
Extraction Method: SW846 3550
Analyst: JLP
Analysis Method: SW846 M8270C
Lab Prep Batch: WG59649
Units: ug/Kgdrywt

CAS#	Compound	Flags	Results	DF	PQL	Adj.PQL	Adj.MDL	
91-20-3	Naphthalene	U	12	1.0	10	12	3.0	
91-57-6	2-Methylnaphthalene	U	12	1.0	10	12	2.6	
86-73-7	Fluorene	U	12	1.0	10	12	3.7	
85-01-8	Phenanthrene	U	12	1.0	10	12	2.1	
206-44-0	Fluoranthene	U	12	1.0	10	12	2.1	
129-00-0	Pyrene	U	12	1.0	10	12	2.4	
56-55-3	Benzo(a)anthracene	U	12	1.0	10	12	2.2	
205-99-2	Benzo(b)fluoranthene	U	12	1.0	10	12	2.8	
207-08-9	Benzo(k)fluoranthene	U	12	1.0	10	12	3.6	
50-32-8	Benzo(a)pyrene	U	12	1.0	10	12	3.8	
193-39-5	Indeno(1,2,3-cd)pyrene	U	12	1.0	10	12	2.2	
53-70-3	Dibenzo(a,h)anthracene	~~U~~ UJ	12	1.0	10	12	2.1	CCH
191-24-2	Benzo(g,h,i)perylene	U	12	1.0	10	12	2.3	
118-74-1	Hexachlorobenzene	~~U~~ UJ	12	1.0	10	12	2.1	CCH
87-68-3	Hexachlorobutadiene	U	12	1.0	10	12	2.7	
77-47-4	Hexachlorocyclopentadiene	U	12	1.0	10	12	1.8	
7297-45-2	2-Methylnaphthalene-D10		90%					
367-12-4	2,4-Dibromophenol		65%					
81103-79-9	Fluorene-d10		67%					
1718-51-1	Pyrene-D10		69%					

MW
4/14/09

KATAHDIN ANALYTICAL SERVICES
Report of Analytical Results

Client: CH2MHill
Project: TO-009 Lejeune
PO No:
Sample Date: 01/06/09
Received Date: 01/08/09
Extraction Date: 01/09/09
Analysis Date: 21-JAN-2009 03:25
Report Date: 01/28/2009
Matrix: SOIL
% Solids: 84.0

Lab ID: SC0066-2
Client ID: MR08-SS195-09A
SDG: TO9-26
Extracted by: AC
Extraction Method: SW846 3550
Analyst: JCG
Analysis Method: SW846 M8270C
Lab Prep Batch: WG59686
Units: ug/Kgdrywt

CAS#	Compound	Flags		Results	DF	PQL	Adj.PQL	Adj.MDL	
91-20-3	Naphthalene	U		12	1.0	10	12	3.1	
91-57-6	2-Methylnaphthalene	~~U~~	UJ	12	1.0	10	12	2.6	BSL
86-73-7	Fluorene	U		12	1.0	10	12	3.8	
85-01-8	Phenanthrene			23	1.0	10	12	2.1	
206-44-0	Fluoranthene			60	1.0	10	12	2.1	
129-00-0	Pyrene			46	1.0	10	12	2.5	
56-55-3	Benzo(a)anthracene			25	1.0	10	12	2.3	
205-99-2	Benzo(b)fluoranthene			74	1.0	10	12	2.8	
207-08-9	Benzo(k)fluoranthene			13	1.0	10	12	3.7	
50-32-8	Benzo(a)pyrene			23	1.0	10	12	3.9	
193-39-5	Indeno(1,2,3-cd)pyrene			19	1.0	10	12	2.3	
53-70-3	Dibenzo(a,h)anthracene	U		12	1.0	10	12	2.1	
191-24-2	Benzo(g,h,i)perylene			17	1.0	10	12	2.4	
118-74-1	Hexachlorobenzene	U		12	1.0	10	12	2.1	
87-68-3	Hexachlorobutadiene	U		12	1.0	10	12	2.7	
77-47-4	Hexachlorocyclopentadiene	~~U~~	UJ	12	1.0	10	12	1.8	BSL
7297-45-2	2-Methylnaphthalene-D10			47%					
367-12-4	2,4-Dibromophenol			84%					
81103-79-9	Fluorene-d10			75%					
1718-51-1	Pyrene-D10			84%					

lw 4/14/09

20

KATAHDIN ANALYTICAL SERVICES
Report of Analytical Results

Client: CH2MHill
Project: TO-009 Lejeune
PO No:
Sample Date: 01/06/09
Received Date: 01/08/09
Extraction Date: 01/09/09
Analysis Date: 21-JAN-2009 04:05
Report Date: 01/28/2009
Matrix: SOIL
% Solids: 92.6

Lab ID: SC0066-4
Client ID: MR08-SS141-09A
SDG: TO9-26
Extracted by: AC
Extraction Method: SW846 3550
Analyst: JCG
Analysis Method: SW846 M8270C
Lab Prep Batch: WG59686
Units: ug/Kgdrywt

CAS#	Compound	Flags	Results	DF	PQL	Adj.PQL	Adj.MDL
91-20-3	Naphthalene	U	11	1.0	10	11	2.8
91-57-6	2-Methylnaphthalene	~~J~~ J	2.8	1.0	10	11	2.4 MSL
86-73-7	Fluorene	U	11	1.0	10	11	3.4
85-01-8	Phenanthrene	J	6.7	1.0	10	11	1.9
206-44-0	Fluoranthene		19	1.0	10	11	1.9
129-00-0	Pyrene		13	1.0	10	11	2.3
56-55-3	Benzo(a)anthracene	J	8.8	1.0	10	11	2.0
205-99-2	Benzo(b)fluoranthene	U	11	1.0	10	11	2.6
207-08-9	Benzo(k)fluoranthene	U	11	1.0	10	11	3.3
50-32-8	Benzo(a)pyrene		12	1.0	10	11	3.6
193-39-5	Indeno(1,2,3-cd)pyrene	J	10	1.0	10	11	2.0
53-70-3	Dibenzo(a,h)anthracene	U	11	1.0	10	11	1.9
191-24-2	Benzo(g,h,i)perylene	J	8.0	1.0	10	11	2.2
118-74-1	Hexachlorobenzene	U	11	1.0	10	11	1.9
87-68-3	Hexachlorobutadiene	U	11	1.0	10	11	2.5
77-47-4	Hexachlorocyclopentadiene	~~J~~ UJ	11	1.0	10	11	1.6 MSL
7297-45-2	2-Methylnaphthalene-D10		55%				
367-12-4	2,4-Dibromophenol		64%				
81103-79-9	Fluorene-d10		68%				
1718-51-1	Pyrene-D10		84%				

fw
4/14/09

ENVIRONMENTAL
Data Services, Inc.

SEMIVOLATILE ORGANIC COMPOUNDS
USEPA Region IV - Level IV Review

Site: MCB Camp Lejeune, TO-09 SDG #: TO9-26

Client: CH2M HILL, Inc., Virginia Beach, Virginia Date: April 14, 2009

Laboratory: Katahdin Analytical Services, Scarborough, Maine Reviewer: Nancy Weaver

EDS ID	Client Sample ID	Laboratory Sample ID	Matrix
1	MR08-SS149-09A	SC0049-1	Soil
2	MR08-IS149-3-4-09A	SC0049-3	Soil
3	MR08-SS142-09A	SC0049-5	Soil
4	MR08-IS142-2-3-09A	SC0049-7	Soil
5	MR08-SS149D-09A	SC0049-9	Soil
6	MR08-IS149D-3-4-09A	SC0049-11	Soil
7	MR08-SS143-09A	SC0049-13	Soil
8	MR08-IS143-2-3-09A	SC0049-15	Soil
9	MR08-SS144-09A	SC0049-17	Soil
10	MR08-IS144-3-4-09A	SC0049-19	Soil
11	MR08-SS145-09A	SC0049-21	Soil
12	MR08-IS145-3-4-09A	SC0049-23	Soil
13	MR08-SS146-09A	SC0049-25	Soil
14	MR08-IS146-2-3-09A	SC0049-27	Soil
15	MR08-SS147-09A	SC0049-29	Soil
16	MR08-IS147-2-3-09A	SC0049-31	Soil
17	MR08-SS148-09A	SC0049-33	Soil
18	MR08-IS148-2-3-09A	SC0049-35	Soil
19	MR08-SS195-09A	SC0066-1	Soil
20	MR08-SS141-09A	SC0066-3	Soil
20MS	MR08-SS141-09AMS	SC0066-3MS	Soil
20MSD	MR08-SS141-09AMSD	SC0066-3MSD	Soil

The USEPA "Contract Laboratory Program National Functional Guidelines for Organic Data Review," October 1999, and professional judgement were used in evaluating the data in this summary report.

Holding Times - All samples were extracted within 14 days for soil samples and analyzed within 40 days for all samples.

GC/MS Tuning - All of the DFTPP tunes in the initial and continuing calibrations met the percent relative abundance criteria.

Initial Calibration - The initial calibrations exhibited acceptable %RSD and mean RRF values except the following.

ICAL Date	Compound	%RSD/RRF	Qualifier	Affected Samples
01/12/09	Benzaldehyde	90.97%	J/UJ	All samples

Continuing Calibration - The continuing calibrations exhibited acceptable %D and RRF values except the following.

CCAL Date	Compound	%D/RRF	Qualifier	Affected Samples
01/17/09	Benzaldehyde	55.85%	None	Already qualified due to ICAL
	2,4-Dinitrophenol	28.42%	J/UJ	19, 20
01/21/09	Benzaldehyde	66.94%	None	Already qualified due to ICAL
	3-Nitroaniline	27.17%	J/UJ	1-12
	4-Nitrophenol	25.91%	J/UJ	1-12
	4-Nitroaniline	39.18%	J/UJ	1-12
	3,3'-Dichlorobenzidine	29.83%	J/UJ	1-12
01/22/09	Benzaldehyde	41.34%	None	Already qualified due to ICAL
	2,4-Dinitrophenol	32.52%	J/UJ	13-18
	4-Nitrophenol	30.62%	J/UJ	13-18
	4-Nitroaniline	33.46%	J/UJ	13-18
	3,3'-Dichlorobenzidine	33.35%	J/UJ	13-18

Surrogates - All samples exhibited acceptable surrogate recoveries except the following.

Sample ID	Surrogate	%R	Qualifier
5	S5-2,4,6-Tribromophenol	27%	None for 1 out
7	S5-2,4,6-Tribromophenol	33%	None for 1 out
15	S5-2,4,6-Tribromophenol	32%	None for 1 out

MS/MSD - The MS/MSD sample exhibited acceptable %R and RPD values except the following.

MS/MSD Sample ID	Compound	MS/MSD %R/RPD	Qualifier
20	Benzaldehyde	141%/247%/55	None - ND
	2-Methylphenol	Ok/Ok/38	None for RPD alone
	2,2'-Oxybis (1-chloropropane)	52%/53%/Ok	J/UJ
	Acetophenone	52%/51%/Ok	J/UJ
	3,4-Methylphenol	Ok/39%/Ok	J/UJ
	2,4-Dimethylphenol	Ok/4%/150	J/R
	4-Chloroaniline	Ok/8%/80	J/R
	3,3'-Dichlorobenzidine	Ok/Ok/51	None for RPD alone

Laboratory Control Sample - The LCS samples exhibited acceptable %R values except the following.

LCS ID	Compound	%R	Qualifier	Affected Samples
WG59648-LCS	Benzaldehyde	286%	None	All ND

Internal Standard (IS) Area Performance - All internal standards met response and retention time (RT) criteria.

Method Blank - The method blanks were free of contamination.

Field, Equipment Blank - Field QC results are summarized below.

Blank ID	Compound	Conc. ug/L	Action Level ug/kg	Qualifier	Affected Samples
MR08-EB01010509-IS	Diethylphthalate	2	666	None	All ND
	di-n-Butylphthalate	2	666	None	All ND
MR08-EB01010509-SS	di-n-Butylphthalate	2	666	None	All ND
MR08-FB01011009	None - ND	-	-	-	-

Field Duplicates - Field duplicate results are summarized below.

Compound	MR08-SS149-09A ug/kg	MR08-SS149D-09A ug/kg	RPD	Qualifier
None	ND	ND	-	-

Compound	MR08-IS149-3-4-09A ug/kg	MR08-IS149D-3-4-09A ug/kg	RPD	Qualifier
None	ND	ND	-	-

Tentatively Identified Compounds (TICs) - TICs were not reported.

Compound Quantitation - No discrepancies were identified.

KATAHDIN ANALYTICAL SERVICES
Report of Analytical Results

Client: CH2MHill
Project: TO-009 Lejeune
PO No:
Sample Date: 01/05/09
Received Date: 01/07/09
Extraction Date: 01/08/09
Analysis Date: 21-JAN-2009 08:27
Report Date: 01/27/2009
Matrix: SOIL
% Solids: 88.6

Lab ID: SC0049-1
Client ID: MR08-SS149-09A
SDG: TO9-26
Extracted by: AC
Extraction Method: SW846 3550
Analyst: JLP
Analysis Method: SW846 8270C
Lab Prep Batch: WG59648
Units: ug/Kgdrywt

CAS#	Compound	Flags	Results	DF	PQL	Adj.PQL	Adj.MDL	
100-52-7	Benzaldehyde	~~U~~ UJ	560	1.0	500	560	140	ICB
108-95-2	Phenol	U	560	1.0	500	560	180	
111-44-4	Bis(2-Chloroethyl)ether	U	370	1.0	330	370	91	
95-57-8	2-Chlorophenol	U	560	1.0	500	560	180	
95-48-7	2-Methylphenol	U	680	1.0	600	680	220	
108-60-1	2,2'-Oxybis(1-chloropropane)	U	370	1.0	330	370	100	
98-86-2	Acetophenone	U	680	1.0	600	680	200	
621-64-7	N-Nitroso-di-n-propylamine	U	370	1.0	330	370	94	
65794-96-9	3&4-Methylphenol	U	680	1.0	600	680	210	
67-72-1	Hexachloroethane	U	370	1.0	330	370	110	
98-95-3	Nitrobenzene	U	370	1.0	330	370	100	
78-59-1	Isophorone	U	370	1.0	330	370	85	
88-75-5	2-Nitrophenol	U	680	1.0	600	680	190	
105-67-9	2,4-Dimethylphenol	U	560	1.0	500	560	190	
111-91-1	Bis(2-Chloroethoxy)methane	U	370	1.0	330	370	110	
120-83-2	2,4-Dichlorophenol	U	560	1.0	500	560	170	
106-47-8	4-Chloroaniline	U	560	1.0	500	560	130	
105-60-2	Caprolactam	U	560	1.0	500	560	160	
59-50-7	4-Chloro-3-Methylphenol	U	560	1.0	500	560	190	
88-06-2	2,4,6-Trichlorophenol	U	560	1.0	500	560	180	
95-95-4	2,4,5-Trichlorophenol	U	560	1.0	500	560	180	
91-58-7	2-Chloronaphthalene	U	370	1.0	330	370	98	
92-52-4	1,1'-Biphenyl	U	370	1.0	330	370	82	
88-74-4	2-Nitroaniline	U	560	1.0	500	560	85	
131-11-3	Dimethyl Phthalate	U	370	1.0	330	370	88	
606-20-2	2,6-Dinitrotoluene	U	370	1.0	330	370	89	
208-96-8	Acenaphthylene	U	370	1.0	330	370	79	
99-09-2	3-Nitroaniline	~~U~~ UJ	560	1.0	500	560	110	CCH
83-32-9	Acenaphthene	U	370	1.0	330	370	73	
51-28-5	2,4-Dinitrophenol	U	1400	1.0	1200	1400	420	
132-64-9	Dibenzofuran	U	370	1.0	330	370	89	
100-02-7	4-Nitrophenol	~~U~~ UJ	1400	1.0	1200	1400	350	CCH
121-14-2	2,4-Dinitrotoluene	U	370	1.0	330	370	96	
84-66-2	Diethylphthalate	U	370	1.0	330	370	90	
7005-72-3	4-Chlorophenyl-phenylether	U	370	1.0	330	370	88	
100-01-6	4-Nitroaniline	~~U~~ UJ	560	1.0	500	560	150	CCH
534-52-1	4,6-Dinitro-2-Methylphenol	U	1400	1.0	1200	1400	380	
86-30-6	N-Nitrosodiphenylamine	U	740	1.0	660	740	250	
101-55-3	4-Bromophenyl-phenylether	U	370	1.0	330	370	96	
1912-24-9	Atrazine	U	370	1.0	330	370	100	
87-86-5	Pentachlorophenol	U	920	1.0	820	920	270	
120-12-7	Anthracene	U	370	1.0	330	370	95	
86-74-8	Carbazole	U	560	1.0	500	560	120	

lw 4/14/09

KATAHDIN ANALYTICAL SERVICES
Report of Analytical Results

Client: CH2MHill
Project: TO-009 Lejeune
PO No:
Sample Date: 01/05/09
Received Date: 01/07/09
Extraction Date: 01/08/09
Analysis Date: 21-JAN-2009 08:27
Report Date: 01/27/2009
Matrix: SOIL
% Solids: 88.6

Lab ID: SC0049-1
Client ID: MR08-SS149-09A
SDG: TO9-26
Extracted by: AC
Extraction Method: SW846 3550
Analyst: JLP
Analysis Method: SW846 8270C
Lab Prep Batch: WG59648
Units: ug/Kgdrywt

CAS#	Compound	Flags	Results	DF	PQL	Adj.PQL	Adj.MDL	
84-74-2	Di-n-butylphthalate	U	370	1.0	330	370	110	
85-68-7	Butylbenzylphthalate	U	370	1.0	330	370	100	
91-94-1	3,3'-Dichlorobenzidine	~~U~~ UJ	560	1.0	500	560	130	CCH
218-01-9	Chrysene	U	370	1.0	330	370	110	
117-81-7	bis(2-Ethylhexyl)phthalate	U	370	1.0	330	370	110	
117-84-0	Di-n-octylphthalate	U	370	1.0	330	370	240	
367-12-4	2-Fluorophenol		65%					
13127-88-3	Phenol-D6		64%					
4165-60-0	Nitrobenzene-D5		65%					
321-60-8	2-Fluorobiphenyl		72%					
118-79-6	2,4,6-Tribromophenol		50%					
1718-51-0	Terphenyl-D14		91%					

LCW
4/14/09

2

KATAHDIN ANALYTICAL SERVICES
Report of Analytical Results

Client: CH2MHill
Project: TO-009 Lejeune
PO No:
Sample Date: 01/05/09
Received Date: 01/07/09
Extraction Date: 01/08/09
Analysis Date: 21-JAN-2009 09:09
Report Date: 01/27/2009
Matrix: SOIL
% Solids: 87.2

Lab ID: SC0049-3
Client ID: MR08-IS149-3-4-09A
SDG: TO9-26
Extracted by: AC
Extraction Method: SW846 3550
Analyst: JLP
Analysis Method: SW846 8270C
Lab Prep Batch: WG59648
Units: ug/Kgdrywt

CAS#	Compound	Flags	Results	DF	PQL	Adj.PQL	Adj.MDL	
100-52-7	Benzaldehyde	~~U~~ UJ	570	1.0	500	570	140	ICB
108-95-2	Phenol	U	570	1.0	500	570	180	
111-44-4	Bis(2-Chloroethyl)ether	U	380	1.0	330	380	93	
95-57-8	2-Chlorophenol	U	570	1.0	500	570	190	
95-48-7	2-Methylphenol	U	690	1.0	600	690	230	
108-60-1	2,2'-Oxybis(1-chloropropane)	U	380	1.0	330	380	100	
98-86-2	Acetophenone	U	690	1.0	600	690	200	
621-64-7	N-Nitroso-di-n-propylamine	U	380	1.0	330	380	95	
65794-96-9	3&4-Methylphenol	U	690	1.0	600	690	210	
67-72-1	Hexachloroethane	U	380	1.0	330	380	110	
98-95-3	Nitrobenzene	U	380	1.0	330	380	100	
78-59-1	Isophorone	U	380	1.0	330	380	86	
88-75-5	2-Nitrophenol	U	690	1.0	600	690	190	
105-67-9	2,4-Dimethylphenol	U	570	1.0	500	570	190	
111-91-1	Bis(2-Chloroethoxy)methane	U	380	1.0	330	380	110	
120-83-2	2,4-Dichlorophenol	U	570	1.0	500	570	170	
106-47-8	4-Chloroaniline	U	570	1.0	500	570	140	
105-60-2	Caprolactam	U	570	1.0	500	570	160	
59-50-7	4-Chloro-3-Methylphenol	U	570	1.0	500	570	190	
88-06-2	2,4,6-Trichlorophenol	U	570	1.0	500	570	180	
95-95-4	2,4,5-Trichlorophenol	U	570	1.0	500	570	180	
91-58-7	2-Chloronaphthalene	U	380	1.0	330	380	100	
92-52-4	1,1'-Biphenyl	U	380	1.0	330	380	84	
88-74-4	2-Nitroaniline	U	570	1.0	500	570	86	
131-11-3	Dimethyl Phthalate	U	380	1.0	330	380	89	
606-20-2	2,6-Dinitrotoluene	U	380	1.0	330	380	91	
208-96-8	Acenaphthylene	U	380	1.0	330	380	80	
99-09-2	3-Nitroaniline	~~U~~ UJ	570	1.0	500	570	110	CCH
83-32-9	Acenaphthene	U	380	1.0	330	380	74	
51-28-5	2,4-Dinitrophenol	U	1400	1.0	1200	1400	430	
132-64-9	Dibenzofuran	U	380	1.0	330	380	91	
100-02-7	4-Nitrophenol	~~U~~ UJ	1400	1.0	1200	1400	350	CCH
121-14-2	2,4-Dinitrotoluene	U	380	1.0	330	380	97	
84-66-2	Diethylphthalate	U	380	1.0	330	380	92	
7005-72-3	4-Chlorophenyl-phenylether	U	380	1.0	330	380	89	
100-01-6	4-Nitroaniline	~~U~~ UJ	570	1.0	500	570	150	CCH
534-52-1	4,6-Dinitro-2-Methylphenol	U	1400	1.0	1200	1400	390	
86-30-6	N-Nitrosodiphenylamine	U	760	1.0	660	760	250	
101-55-3	4-Bromophenyl-phenylether	U	380	1.0	330	380	97	
1912-24-9	Atrazine	U	380	1.0	330	380	100	
87-86-5	Pentachlorophenol	U	940	1.0	820	940	270	
120-12-7	Anthracene	U	380	1.0	330	380	96	
86-74-8	Carbazole	U	570	1.0	500	570	130	

kw
4/14/09

2

KATAHDIN ANALYTICAL SERVICES
Report of Analytical Results

Client: CH2MHill
Project: TO-009 Lejeune
PO No:
Sample Date: 01/05/09
Received Date: 01/07/09
Extraction Date: 01/08/09
Analysis Date: 21-JAN-2009 09:09
Report Date: 01/27/2009
Matrix: SOIL
% Solids: 87.2

Lab ID: SC0049-3
Client ID: MR08-IS149-3-4-09A
SDG: TO9-26
Extracted by: AC
Extraction Method: SW846 3550
Analyst: JLP
Analysis Method: SW846 8270C
Lab Prep Batch: WG59648
Units: ug/Kgdrywt

CAS#	Compound	Flags	Results	DF	PQL	Adj.PQL	Adj.MDL	
84-74-2	Di-n-butylphthalate	U	380	1.0	330	380	120	
85-68-7	Butylbenzylphthalate	U	380	1.0	330	380	110	
91-94-1	3,3'-Dichlorobenzidine	~~U~~ UJ	570	1.0	500	570	130	CCH
218-01-9	Chrysene	U	380	1.0	330	380	110	
117-81-7	bis(2-Ethylhexyl)phthalate	U	380	1.0	330	380	110	
117-84-0	Di-n-octylphthalate	U	380	1.0	330	380	240	
367-12-4	2-Fluorophenol		50%					
13127-88-3	Phenol-D6		51%					
4165-60-0	Nitrobenzene-D5		50%					
321-60-8	2-Fluorobiphenyl		61%					
118-79-6	2,4,6-Tribromophenol		46%					
1718-51-0	Terphenyl-D14		90%					

lw 4/14/09

3

KATAHDIN ANALYTICAL SERVICES
Report of Analytical Results

Client: CH2MHill
Project: TO-009 Lejeune
PO No:
Sample Date: 01/05/09
Received Date: 01/07/09
Extraction Date: 01/08/09
Analysis Date: 21-JAN-2009 09:52
Report Date: 01/27/2009
Matrix: SOIL
% Solids: 94.3

Lab ID: SC0049-5
Client ID: MR08-SS142-09A
SDG: TO9-26
Extracted by: AC
Extraction Method: SW846 3550
Analyst: JLP
Analysis Method: SW846 8270C
Lab Prep Batch: WG59648
Units: ug/Kgdrywt

CAS#	Compound	Flags	Results	DF	PQL	Adj.PQL	Adj.MDL	
100-52-7	Benzaldehyde	~~U~~ UJ	530	1.0	500	530	130	JCB
108-95-2	Phenol	U	530	1.0	500	530	160	
111-44-4	Bis(2-Chloroethyl)ether	U	350	1.0	330	350	86	
95-57-8	2-Chlorophenol	U	530	1.0	500	530	170	
95-48-7	2-Methylphenol	U	640	1.0	600	640	210	
108-60-1	2,2'-Oxybis(1-chloropropane)	U	350	1.0	330	350	94	
98-86-2	Acetophenone	U	640	1.0	600	640	190	
621-64-7	N-Nitroso-di-n-propylamine	U	350	1.0	330	350	88	
65794-96-9	3&4-Methylphenol	U	640	1.0	600	640	200	
67-72-1	Hexachloroethane	U	350	1.0	330	350	100	
98-95-3	Nitrobenzene	U	350	1.0	330	350	96	
78-59-1	Isophorone	U	350	1.0	330	350	79	
88-75-5	2-Nitrophenol	U	640	1.0	600	640	180	
105-67-9	2,4-Dimethylphenol	U	530	1.0	500	530	170	
111-91-1	Bis(2-Chloroethoxy)methane	U	350	1.0	330	350	100	
120-83-2	2,4-Dichlorophenol	U	530	1.0	500	530	160	
106-47-8	4-Chloroaniline	U	530	1.0	500	530	130	
105-60-2	Caprolactam	U	530	1.0	500	530	150	
59-50-7	4-Chloro-3-Methylphenol	U	530	1.0	500	530	180	
88-06-2	2,4,6-Trichlorophenol	U	530	1.0	500	530	160	
95-95-4	2,4,5-Trichlorophenol	U	530	1.0	500	530	160	
91-58-7	2-Chloronaphthalene	U	350	1.0	330	350	92	
92-52-4	1,1'-Biphenyl	U	350	1.0	330	350	77	
88-74-4	2-Nitroaniline	U	530	1.0	500	530	79	
131-11-3	Dimethyl Phthalate	U	350	1.0	330	350	83	
606-20-2	2,6-Dinitrotoluene	U	350	1.0	330	350	84	
208-96-8	Acenaphthylene	U	350	1.0	330	350	74	
99-09-2	3-Nitroaniline	~~U~~ UJ	530	1.0	500	530	100	CCH
83-32-9	Acenaphthene	U	350	1.0	330	350	69	
51-28-5	2,4-Dinitrophenol	U	1300	1.0	1200	1300	400	
132-64-9	Dibenzofuran	U	350	1.0	330	350	84	
100-02-7	4-Nitrophenol	~~U~~ UJ	1300	1.0	1200	1300	330	CCH
121-14-2	2,4-Dinitrotoluene	U	350	1.0	330	350	90	
84-66-2	Diethylphthalate	U	350	1.0	330	350	85	
7005-72-3	4-Chlorophenyl-phenylether	U	350	1.0	330	350	83	
100-01-6	4-Nitroaniline	~~U~~ UJ	530	1.0	500	530	140	CCH
534-52-1	4,6-Dinitro-2-Methylphenol	U	1300	1.0	1200	1300	360	
86-30-6	N-Nitrosodiphenylamine	U	700	1.0	660	700	230	
101-55-3	4-Bromophenyl-phenylether	U	350	1.0	330	350	90	
1912-24-9	Atrazine	U	350	1.0	330	350	96	
87-86-5	Pentachlorophenol	U	870	1.0	820	870	250	
120-12-7	Anthracene	U	350	1.0	330	350	89	
86-74-8	Carbazole	U	530	1.0	500	530	120	

LW
4/14/09

3

KATAHDIN ANALYTICAL SERVICES
Report of Analytical Results

Client: CH2MHill
Project: TO-009 Lejeune
PO No:
Sample Date: 01/05/09
Received Date: 01/07/09
Extraction Date: 01/08/09
Analysis Date: 21-JAN-2009 09:52
Report Date: 01/27/2009
Matrix: SOIL
% Solids: 94.3

Lab ID: SC0049-5
Client ID: MR08-SS142-09A
SDG: TO9-26
Extracted by: AC
Extraction Method: SW846 3550
Analyst: JLP
Analysis Method: SW846 8270C
Lab Prep Batch: WG59648
Units: ug/Kgdrywt

CAS#	Compound	Flags	Results	DF	PQL	Adj.PQL	Adj.MDL	
84-74-2	Di-n-butylphthalate	U	350	1.0	330	350	110	
85-68-7	Butylbenzylphthalate	U	350	1.0	330	350	98	
91-94-1	3,3'-Dichlorobenzidine	~~J~~ UJ	530	1.0	500	530	120	CCH
218-01-9	Chrysene	U	350	1.0	330	350	100	
117-81-7	bis(2-Ethylhexyl)phthalate	J	170	1.0	330	350	100	
117-84-0	Di-n-octylphthalate	U	350	1.0	330	350	220	
367-12-4	2-Fluorophenol		63%					
13127-88-3	Phenol-D6		63%					
4165-60-0	Nitrobenzene-D5		66%					
321-60-8	2-Fluorobiphenyl		71%					
118-79-6	2,4,6-Tribromophenol		45%					
1718-51-0	Terphenyl-D14		91%					

MW 4/14/09

4

KATAHDIN ANALYTICAL SERVICES
Report of Analytical Results

Client: CH2MHill
Project: TO-009 Lejeune
PO No:
Sample Date: 01/05/09
Received Date: 01/07/09
Extraction Date: 01/08/09
Analysis Date: 21-JAN-2009 10:35
Report Date: 01/27/2009
Matrix: SOIL
% Solids: 84.0

Lab ID: SC0049-7
Client ID: MR88-IS142-2-3-09A
SDG: TO9-26
Extracted by: AC
Extraction Method: SW846 3550
Analyst: JLP
Analysis Method: SW846 8270C
Lab Prep Batch: WG59648
Units: ug/Kgdrywt

CAS#	Compound	Flags	Results	DF	PQL	Adj.PQL	Adj.MDL	
100-52-7	Benzaldehyde	~~U~~ UJ	600	1.0	500	600	140	ICB
108-95-2	Phenol	U	600	1.0	500	600	180	
111-44-4	Bis(2-Chloroethyl)ether	U	390	1.0	330	390	96	
95-57-8	2-Chlorophenol	U	600	1.0	500	600	200	
95-48-7	2-Methylphenol	U	710	1.0	600	710	240	
108-60-1	2,2'-Oxybis(1-chloropropane)	U	390	1.0	330	390	100	
98-86-2	Acetophenone	U	710	1.0	600	710	210	
621-64-7	N-Nitroso-di-n-propylamine	U	390	1.0	330	390	99	
65794-96-9	3&4-Methylphenol	U	710	1.0	600	710	220	
67-72-1	Hexachloroethane	U	390	1.0	330	390	110	
98-95-3	Nitrobenzene	U	390	1.0	330	390	110	
78-59-1	Isophorone	U	390	1.0	330	390	89	
88-75-5	2-Nitrophenol	U	710	1.0	600	710	200	
105-67-9	2,4-Dimethylphenol	U	600	1.0	500	600	200	
111-91-1	Bis(2-Chloroethoxy)methane	U	390	1.0	330	390	110	
120-83-2	2,4-Dichlorophenol	U	600	1.0	500	600	180	
106-47-8	4-Chloroaniline	U	600	1.0	500	600	140	
105-60-2	Caprolactam	U	600	1.0	500	600	170	
59-50-7	4-Chloro-3-Methylphenol	U	600	1.0	500	600	200	
88-06-2	2,4,6-Trichlorophenol	U	600	1.0	500	600	180	
95-95-4	2,4,5-Trichlorophenol	U	600	1.0	500	600	180	
91-58-7	2-Chloronaphthalene	U	390	1.0	330	390	100	
92-52-4	1,1'-Biphenyl	U	390	1.0	330	390	87	
88-74-4	2-Nitroaniline	U	600	1.0	500	600	89	
131-11-3	Dimethyl Phthalate	U	390	1.0	330	390	93	
606-20-2	2,6-Dinitrotoluene	U	390	1.0	330	390	94	
208-96-8	Acenaphthylene	U	390	1.0	330	390	83	
99-09-2	3-Nitroaniline	~~U~~ UJ	600	1.0	500	600	110	CCH
83-32-9	Acenaphthene	U	390	1.0	330	390	77	
51-28-5	2,4-Dinitrophenol	U	1400	1.0	1200	1400	450	
132-64-9	Dibenzofuran	U	390	1.0	330	390	94	
100-02-7	4-Nitrophenol	~~U~~ UJ	1400	1.0	1200	1400	370	CCH
121-14-2	2,4-Dinitrotoluene	U	390	1.0	330	390	100	
84-66-2	Diethylphthalate	U	390	1.0	330	390	95	
7005-72-3	4-Chlorophenyl-phenylether	U	390	1.0	330	390	93	
100-01-6	4-Nitroaniline	~~U~~ UJ	600	1.0	500	600	160	CCH
534-52-1	4,6-Dinitro-2-Methylphenol	U	1400	1.0	1200	1400	400	
86-30-6	N-Nitrosodiphenylamine	U	780	1.0	660	780	260	
101-55-3	4-Bromophenyl-phenylether	U	390	1.0	330	390	100	
1912-24-9	Atrazine	U	390	1.0	330	390	110	
87-86-5	Pentachlorophenol	U	980	1.0	820	980	280	
120-12-7	Anthracene	U	390	1.0	330	390	100	
86-74-8	Carbazole	U	600	1.0	500	600	130	

lw
4/14/09

KATAHDIN ANALYTICAL SERVICES
Report of Analytical Results

Client: CH2MHill
Project: TO-009 Lejeune
PO No:
Sample Date: 01/05/09
Received Date: 01/07/09
Extraction Date: 01/08/09
Analysis Date: 21-JAN-2009 10:35
Report Date: 01/27/2009
Matrix: SOIL
% Solids: 84.0

Lab ID: SC0049-7
Client ID: MR88-IS142-2-3-09A
SDG: TO9-26
Extracted by: AC
Extraction Method: SW846 3550
Analyst: JLP
Analysis Method: SW846 8270C
Lab Prep Batch: WG59648
Units: ug/Kgdrywt

CAS#	Compound	Flags	Results	DF	PQL	Adj.PQL	Adj.MDL	
84-74-2	Di-n-butylphthalate	U	390	1.0	330	390	120	
85-68-7	Butylbenzylphthalate	U	390	1.0	330	390	110	
91-94-1	3,3'-Dichlorobenzidine	~~U~~ UJ	600	1.0	500	600	140	CCH
218-01-9	Chrysene	U	390	1.0	330	390	110	
117-81-7	bis(2-Ethylhexyl)phthalate	U	390	1.0	330	390	120	
117-84-0	Di-n-octylphthalate	U	390	1.0	330	390	250	
367-12-4	2-Fluorophenol		70%					
13127-88-3	Phenol-D6		64%					
4165-60-0	Nitrobenzene-D5		69%					
321-60-8	2-Fluorobiphenyl		73%					
118-79-6	2,4,6-Tribromophenol		64%					
1718-51-0	Terphenyl-D14		91%					

lw
4/14/09

5

KATAHDIN ANALYTICAL SERVICES
Report of Analytical Results

Client: CH2MHill
Project: TO-009 Lejeune
PO No:
Sample Date: 01/05/09
Received Date: 01/07/09
Extraction Date: 01/08/09
Analysis Date: 21-JAN-2009 11:17
Report Date: 01/27/2009
Matrix: SOIL
% Solids: 92.7

Lab ID: SC0049-9
Client ID: MR08-SS149D-09A
SDG: TO9-26
Extracted by: AC
Extraction Method: SW846 3550
Analyst: JLP
Analysis Method: SW846 8270C
Lab Prep Batch: WG59648
Units: ug/Kgdrywt

CAS#	Compound	Flags	Results	DF	PQL	Adj.PQL	Adj.MDL	
100-52-7	Benzaldehyde	~~U~~ UJ	540	1.0	500	540	130	JCB
108-95-2	Phenol	U	540	1.0	500	540	170	
111-44-4	Bis(2-Chloroethyl)ether	U	360	1.0	330	360	87	
95-57-8	2-Chlorophenol	U	540	1.0	500	540	180	
95-48-7	2-Methylphenol	U	650	1.0	600	650	220	
108-60-1	2,2'-Oxybis(1-chloropropane)	U	360	1.0	330	360	96	
98-86-2	Acetophenone	U	650	1.0	600	650	190	
621-64-7	N-Nitroso-di-n-propylamine	U	360	1.0	330	360	90	
65794-96-9	3&4-Methylphenol	U	650	1.0	600	650	200	
67-72-1	Hexachloroethane	U	360	1.0	330	360	100	
98-95-3	Nitrobenzene	U	360	1.0	330	360	98	
78-59-1	Isophorone	U	360	1.0	330	360	81	
88-75-5	2-Nitrophenol	U	650	1.0	600	650	180	
105-67-9	2,4-Dimethylphenol	U	540	1.0	500	540	180	
111-91-1	Bis(2-Chloroethoxy)methane	U	360	1.0	330	360	100	
120-83-2	2,4-Dichlorophenol	U	540	1.0	500	540	160	
106-47-8	4-Chloroaniline	U	540	1.0	500	540	130	
105-60-2	Caprolactam	U	540	1.0	500	540	160	
59-50-7	4-Chloro-3-Methylphenol	U	540	1.0	500	540	180	
88-06-2	2,4,6-Trichlorophenol	U	540	1.0	500	540	170	
95-95-4	2,4,5-Trichlorophenol	U	540	1.0	500	540	170	
91-58-7	2-Chloronaphthalene	U	360	1.0	330	360	94	
92-52-4	1,1'-Biphenyl	U	360	1.0	330	360	79	
88-74-4	2-Nitroaniline	U	540	1.0	500	540	81	
131-11-3	Dimethyl Phthalate	U	360	1.0	330	360	84	
606-20-2	2,6-Dinitrotoluene	U	360	1.0	330	360	85	
208-96-8	Acenaphthylene	U	360	1.0	330	360	76	
99-09-2	3-Nitroaniline	~~U~~ UJ	540	1.0	500	540	100	CCH
83-32-9	Acenaphthene	U	360	1.0	330	360	70	
51-28-5	2,4-Dinitrophenol	U	1300	1.0	1200	1300	410	
132-64-9	Dibenzofuran	U	360	1.0	330	360	85	
100-02-7	4-Nitrophenol	~~U~~ UJ	1300	1.0	1200	1300	330	CCH
121-14-2	2,4-Dinitrotoluene	U	360	1.0	330	360	92	
84-66-2	Diethylphthalate	U	360	1.0	330	360	86	
7005-72-3	4-Chlorophenyl-phenylether	U	360	1.0	330	360	84	
100-01-6	4-Nitroaniline	~~U~~ UJ	540	1.0	500	540	140	CCH
534-52-1	4,6-Dinitro-2-Methylphenol	U	1300	1.0	1200	1300	360	
86-30-6	N-Nitrosodiphenylamine	U	710	1.0	660	710	240	
101-55-3	4-Bromophenyl-phenylether	U	360	1.0	330	360	92	
1912-24-9	Atrazine	U	360	1.0	330	360	98	
87-86-5	Pentachlorophenol	U	880	1.0	820	880	260	
120-12-7	Anthracene	U	360	1.0	330	360	91	
86-74-8	Carbazole	U	540	1.0	500	540	120	

QW
4/14/09

5

KATAHDIN ANALYTICAL SERVICES
Report of Analytical Results

Client: CH2MHill
Project: TO-009 Lejeune
PO No:
Sample Date: 01/05/09
Received Date: 01/07/09
Extraction Date: 01/08/09
Analysis Date: 21-JAN-2009 11:17
Report Date: 01/27/2009
Matrix: SOIL
% Solids: 92.7

Lab ID: SC0049-9
Client ID: MR08-SS149D-09A
SDG: TO9-26
Extracted by: AC
Extraction Method: SW846 3550
Analyst: JLP
Analysis Method: SW846 8270C
Lab Prep Batch: WG59648
Units: ug/Kgdrywt

CAS#	Compound	Flags	Results	DF	PQL	Adj.PQL	Adj.MDL	
84-74-2	Di-n-butylphthalate	U	360	1.0	330	360	110	
85-68-7	Butylbenzylphthalate	U	360	1.0	330	360	100	
91-94-1	3,3'-Dichlorobenzidine	~~U~~ UJ	540	1.0	500	540	120	CCH
218-01-9	Chrysene	U	360	1.0	330	360	100	
117-81-7	bis(2-Ethylhexyl)phthalate	U	360	1.0	330	360	100	
117-84-0	Di-n-octylphthalate	U	360	1.0	330	360	230	
367-12-4	2-Fluorophenol		44%					
13127-88-3	Phenol-D6		47%					
4165-60-0	Nitrobenzene-D5		58%					
321-60-8	2-Fluorobiphenyl		60%					
118-79-6	2,4,6-Tribromophenol		* 27%					
1718-51-0	Terphenyl-D14		84%					

lw
4/14/09

6

KATAHDIN ANALYTICAL SERVICES
Report of Analytical Results

Client: CH2MHill
Project: TO-009 Lejeune
PO No:
Sample Date: 01/05/09
Received Date: 01/07/09
Extraction Date: 01/08/09
Analysis Date: 21-JAN-2009 12:00
Report Date: 01/27/2009
Matrix: SOIL
% Solids: 88.2

Lab ID: SC0049-11
Client ID: MR08-IS149D-3-4-09A
SDG: TO9-26
Extracted by: AC
Extraction Method: SW846 3550
Analyst: JLP
Analysis Method: SW846 8270C
Lab Prep Batch: WG59648
Units: ug/Kgdrywt

CAS#	Compound	Flags	Results	DF	PQL	Adj.PQL	Adj.MDL	
100-52-7	Benzaldehyde	~~U~~ UJ	570	1.0	500	570	140	JCB
108-95-2	Phenol	U	570	1.0	500	570	180	
111-44-4	Bis(2-Chloroethyl)ether	U	370	1.0	330	370	92	
95-57-8	2-Chlorophenol	U	570	1.0	500	570	180	
95-48-7	2-Methylphenol	U	680	1.0	600	680	230	
108-60-1	2,2'-Oxybis(1-chloropropane)	U	370	1.0	330	370	100	
98-86-2	Acetophenone	U	680	1.0	600	680	200	
621-64-7	N-Nitroso-di-n-propylamine	U	370	1.0	330	370	94	
65794-96-9	3&4-Methylphenol	U	680	1.0	600	680	210	
67-72-1	Hexachloroethane	U	370	1.0	330	370	110	
98-95-3	Nitrobenzene	U	370	1.0	330	370	100	
78-59-1	Isophorone	U	370	1.0	330	370	85	
88-75-5	2-Nitrophenol	U	680	1.0	600	680	190	
105-67-9	2,4-Dimethylphenol	U	570	1.0	500	570	190	
111-91-1	Bis(2-Chloroethoxy)methane	U	370	1.0	330	370	110	
120-83-2	2,4-Dichlorophenol	U	570	1.0	500	570	170	
106-47-8	4-Chloroaniline	U	570	1.0	500	570	130	
105-60-2	Caprolactam	U	570	1.0	500	570	160	
59-50-7	4-Chloro-3-Methylphenol	U	570	1.0	500	570	190	
88-06-2	2,4,6-Trichlorophenol	U	570	1.0	500	570	180	
95-95-4	2,4,5-Trichlorophenol	U	570	1.0	500	570	180	
91-58-7	2-Chloronaphthalene	U	370	1.0	330	370	99	
92-52-4	1,1'-Biphenyl	U	370	1.0	330	370	83	
88-74-4	2-Nitroaniline	U	570	1.0	500	570	85	
131-11-3	Dimethyl Phthalate	U	370	1.0	330	370	88	
606-20-2	2,6-Dinitrotoluene	U	370	1.0	330	370	90	
208-96-8	Acenaphthylene	U	370	1.0	330	370	79	
99-09-2	3-Nitroaniline	~~U~~ UJ	570	1.0	500	570	110	CCH
83-32-9	Acenaphthene	U	370	1.0	330	370	74	
51-28-5	2,4-Dinitrophenol	U	1400	1.0	1200	1400	430	
132-64-9	Dibenzofuran	U	370	1.0	330	370	90	
100-02-7	4-Nitrophenol	~~U~~ UJ	1400	1.0	1200	1400	350	CCH
121-14-2	2,4-Dinitrotoluene	U	370	1.0	330	370	96	
84-66-2	Diethylphthalate	U	370	1.0	330	370	91	
7005-72-3	4-Chlorophenyl-phenylether	U	370	1.0	330	370	88	
100-01-6	4-Nitroaniline	~~U~~ UJ	570	1.0	500	570	150	CCH
534-52-1	4,6-Dinitro-2-Methylphenol	U	1400	1.0	1200	1400	380	
86-30-6	N-Nitrosodiphenylamine	U	750	1.0	660	750	250	
101-55-3	4-Bromophenyl-phenylether	U	370	1.0	330	370	96	
1912-24-9	Atrazine	U	370	1.0	330	370	100	
87-86-5	Pentachlorophenol	U	930	1.0	820	930	270	
120-12-7	Anthracene	U	370	1.0	330	370	95	
86-74-8	Carbazole	U	570	1.0	500	570	120	

lw
4/14/09

6

KATAHDIN ANALYTICAL SERVICES
Report of Analytical Results

Client: CH2MHill
Project: TO-009 Lejeune
PO No:
Sample Date: 01/05/09
Received Date: 01/07/09
Extraction Date: 01/08/09
Analysis Date: 21-JAN-2009 12:00
Report Date: 01/27/2009
Matrix: SOIL
% Solids: 88.2

Lab ID: SC0049-11
Client ID: MR08-IS149D-3-4-09A
SDG: TO9-26
Extracted by: AC
Extraction Method: SW846 3550
Analyst: JLP
Analysis Method: SW846 8270C
Lab Prep Batch: WG59648
Units: ug/Kgdrywt

CAS#	Compound	Flags	Results	DF	PQL	Adj.PQL	Adj.MDL	
84-74-2	Di-n-butylphthalate	U	370	1.0	330	370	110	
85-68-7	Butylbenzylphthalate	U	370	1.0	330	370	100	
91-94-1	3,3'-Dichlorobenzidine	~~U~~ UJ	570	1.0	500	570	130	CCH
218-01-9	Chrysene	U	370	1.0	330	370	110	
117-81-7	bis(2-Ethylhexyl)phthalate	U	370	1.0	330	370	110	
117-84-0	Di-n-octylphthalate	U	370	1.0	330	370	240	
367-12-4	2-Fluorophenol		70%					
13127-88-3	Phenol-D6		65%					
4165-60-0	Nitrobenzene-D5		69%					
321-60-8	2-Fluorobiphenyl		79%					
118-79-6	2,4,6-Tribromophenol		69%					
1718-51-0	Terphenyl-D14		105%					

Qw
4/14/09

7

KATAHDIN ANALYTICAL SERVICES
Report of Analytical Results

Client: CH2MHill
Project: TO-009 Lejeune
PO No:
Sample Date: 01/05/09
Received Date: 01/07/09
Extraction Date: 01/08/09
Analysis Date: 21-JAN-2009 12:43
Report Date: 01/27/2009
Matrix: SOIL
% Solids: 94.5

Lab ID: SC0049-13
Client ID: MR08-SS143-09A
SDG: TO9-26
Extracted by: AC
Extraction Method: SW846 3550
Analyst: JLP
Analysis Method: SW846 8270C
Lab Prep Batch: WG59648
Units: ug/Kgdrywt

CAS#	Compound	Flags	Results	DF	PQL	Adj.PQL	Adj.MDL	
100-52-7	Benzaldehyde	~~U~~ UJ	530	1.0	500	530	130	ICB
108-95-2	Phenol	U	530	1.0	500	530	160	
111-44-4	Bis(2-Chloroethyl)ether	U	350	1.0	330	350	86	
95-57-8	2-Chlorophenol	U	530	1.0	500	530	170	
95-48-7	2-Methylphenol	U	630	1.0	600	630	210	
108-60-1	2,2'-Oxybis(1-chloropropane)	U	350	1.0	330	350	94	
98-86-2	Acetophenone	U	630	1.0	600	630	190	
621-64-7	N-Nitroso-di-n-propylamine	U	350	1.0	330	350	88	
65794-96-9	3&4-Methylphenol	U	630	1.0	600	630	200	
67-72-1	Hexachloroethane	U	350	1.0	330	350	100	
98-95-3	Nitrobenzene	U	350	1.0	330	350	96	
78-59-1	Isophorone	U	350	1.0	330	350	79	
88-75-5	2-Nitrophenol	U	630	1.0	600	630	180	
105-67-9	2,4-Dimethylphenol	U	530	1.0	500	530	170	
111-91-1	Bis(2-Chloroethoxy)methane	U	350	1.0	330	350	100	
120-83-2	2,4-Dichlorophenol	U	530	1.0	500	530	160	
106-47-8	4-Chloroaniline	U	530	1.0	500	530	120	
105-60-2	Caprolactam	U	530	1.0	500	530	150	
59-50-7	4-Chloro-3-Methylphenol	U	530	1.0	500	530	180	
88-06-2	2,4,6-Trichlorophenol	U	530	1.0	500	530	160	
95-95-4	2,4,5-Trichlorophenol	U	530	1.0	500	530	160	
91-58-7	2-Chloronaphthalene	U	350	1.0	330	350	92	
92-52-4	1,1'-Biphenyl	U	350	1.0	330	350	77	
88-74-4	2-Nitroaniline	U	530	1.0	500	530	79	
131-11-3	Dimethyl Phthalate	U	350	1.0	330	350	82	
606-20-2	2,6-Dinitrotoluene	U	350	1.0	330	350	84	
208-96-8	Acenaphthylene	U	350	1.0	330	350	74	
99-09-2	3-Nitroaniline	~~U~~ UJ	530	1.0	500	530	99	CCH
83-32-9	Acenaphthene	U	350	1.0	330	350	69	
51-28-5	2,4-Dinitrophenol	U	1300	1.0	1200	1300	400	
132-64-9	Dibenzofuran	U	350	1.0	330	350	84	
100-02-7	4-Nitrophenol	~~U~~ UJ	1300	1.0	1200	1300	330	CCH
121-14-2	2,4-Dinitrotoluene	U	350	1.0	330	350	90	
84-66-2	Diethylphthalate	U	350	1.0	330	350	85	
7005-72-3	4-Chlorophenyl-phenylether	U	350	1.0	330	350	82	
100-01-6	4-Nitroaniline	~~U~~ UJ	530	1.0	500	530	140	CCH
534-52-1	4,6-Dinitro-2-Methylphenol	U	1300	1.0	1200	1300	360	
86-30-6	N-Nitrosodiphenylamine	U	700	1.0	660	700	230	
101-55-3	4-Bromophenyl-phenylether	U	350	1.0	330	350	90	
1912-24-9	Atrazine	U	350	1.0	330	350	96	
87-86-5	Pentachlorophenol	U	870	1.0	820	870	250	
120-12-7	Anthracene	U	350	1.0	330	350	89	
86-74-8	Carbazole	U	530	1.0	500	530	120	

lw
4/14/09

KATAHDIN ANALYTICAL SERVICES
Report of Analytical Results

Client: CH2MHill
Project: TO-009 Lejeune
PO No:
Sample Date: 01/05/09
Received Date: 01/07/09
Extraction Date: 01/08/09
Analysis Date: 21-JAN-2009 12:43
Report Date: 01/27/2009
Matrix: SOIL
% Solids: 94.5

Lab ID: SC0049-13
Client ID: MR08-SS143-09A
SDG: T09-26
Extracted by: AC
Extraction Method: SW846 3550
Analyst: JLP
Analysis Method: SW846 8270C
Lab Prep Batch: WG59648
Units: ug/Kgdrywt

CAS#	Compound	Flags	Results	DF	PQL	Adj.PQL	Adj.MDL	
84-74-2	Di-n-butylphthalate	U	350	1.0	330	350	110	
85-68-7	Butylbenzylphthalate	U	350	1.0	330	350	98	
91-94-1	3,3'-Dichlorobenzidine	~~U~~ UJ	530	1.0	500	530	120	CCH
218-01-9	Chrysene	U	350	1.0	330	350	100	
117-81-7	bis(2-Ethylhexyl)phthalate	U	350	1.0	330	350	100	
117-84-0	Di-n-octylphthalate	U	350	1.0	330	350	220	
367-12-4	2-Fluorophenol		50%					
13127-88-3	Phenol-D6		53%					
4165-60-0	Nitrobenzene-D5		62%					
321-60-8	2-Fluorobiphenyl		65%					
118-79-6	2,4,6-Tribromophenol		* 33%					
1718-51-0	Terphenyl-D14		94%					

RLW
4/14/09

8

KATAHDIN ANALYTICAL SERVICES
Report of Analytical Results

Client: CH2MHill
Project: TO-009 Lejeune
PO No:
Sample Date: 01/05/09
Received Date: 01/07/09
Extraction Date: 01/08/09
Analysis Date: 21-JAN-2009 13:25
Report Date: 01/27/2009
Matrix: SOIL
% Solids: 85.6

Lab ID: SC0049-15
Client ID: MR08-IS143-2-3-09A
SDG: TO9-26
Extracted by: AC
Extraction Method: SW846 3550
Analyst: JLP
Analysis Method: SW846 8270C
Lab Prep Batch: WG59648
Units: ug/Kgdrywt

CAS#	Compound	Flags	Results	DF	PQL	Adj.PQL	Adj.MDL	
100-52-7	Benzaldehyde	~~J~~ UJ	580	1.0	500	580	140	ICB
108-95-2	Phenol	U	580	1.0	500	580	180	
111-44-4	Bis(2-Chloroethyl)ether	U	380	1.0	330	380	94	
95-57-8	2-Chlorophenol	U	580	1.0	500	580	190	
95-48-7	2-Methylphenol	U	700	1.0	600	700	230	
108-60-1	2,2'-Oxybis(1-chloropropane)	U	380	1.0	330	380	100	
98-86-2	Acetophenone	U	700	1.0	600	700	210	
621-64-7	N-Nitroso-di-n-propylamine	U	380	1.0	330	380	97	
65794-96-9	3&4-Methylphenol	U	700	1.0	600	700	220	
67-72-1	Hexachloroethane	U	380	1.0	330	380	110	
98-95-3	Nitrobenzene	U	380	1.0	330	380	110	
78-59-1	Isophorone	U	380	1.0	330	380	88	
88-75-5	2-Nitrophenol	U	700	1.0	600	700	190	
105-67-9	2,4-Dimethylphenol	U	580	1.0	500	580	190	
111-91-1	Bis(2-Chloroethoxy)methane	U	380	1.0	330	380	110	
120-83-2	2,4-Dichlorophenol	U	580	1.0	500	580	180	
106-47-8	4-Chloroaniline	U	580	1.0	500	580	140	
105-60-2	Caprolactam	U	580	1.0	500	580	170	
59-50-7	4-Chloro-3-Methylphenol	U	580	1.0	500	580	190	
88-06-2	2,4,6-Trichlorophenol	U	580	1.0	500	580	180	
95-95-4	2,4,5-Trichlorophenol	U	580	1.0	500	580	180	
91-58-7	2-Chloronaphthalene	U	380	1.0	330	380	100	
92-52-4	1,1'-Biphenyl	U	380	1.0	330	380	85	
88-74-4	2-Nitroaniline	U	580	1.0	500	580	88	
131-11-3	Dimethyl Phthalate	U	380	1.0	330	380	91	
606-20-2	2,6-Dinitrotoluene	U	380	1.0	330	380	92	
208-96-8	Acenaphthylene	U	380	1.0	330	380	82	
99-09-2	3-Nitroaniline	~~J~~ UJ	580	1.0	500	580	110	CCH
83-32-9	Acenaphthene	U	380	1.0	330	380	76	
51-28-5	2,4-Dinitrophenol	U	1400	1.0	1200	1400	440	
132-64-9	Dibenzofuran	U	380	1.0	330	380	92	
100-02-7	4-Nitrophenol	~~J~~ UJ	1400	1.0	1200	1400	360	CCH
121-14-2	2,4-Dinitrotoluene	U	380	1.0	330	380	99	
84-66-2	Diethylphthalate	U	380	1.0	330	380	93	
7005-72-3	4-Chlorophenyl-phenylether	U	380	1.0	330	380	91	
100-01-6	4-Nitroaniline	~~J~~ UJ	580	1.0	500	580	160	CCH
534-52-1	4,6-Dinitro-2-Methylphenol	U	1400	1.0	1200	1400	390	
86-30-6	N-Nitrosodiphenylamine	U	770	1.0	660	770	260	
101-55-3	4-Bromophenyl-phenylether	U	380	1.0	330	380	99	
1912-24-9	Atrazine	U	380	1.0	330	380	110	
87-86-5	Pentachlorophenol	U	960	1.0	820	960	280	
120-12-7	Anthracene	U	380	1.0	330	380	98	
86-74-8	Carbazole	U	580	1.0	500	580	130	

Qcw
4/14/09

8

KATAHDIN ANALYTICAL SERVICES
Report of Analytical Results

Client: CH2MHill
Project: TO-009 Lejeune
PO No:
Sample Date: 01/05/09
Received Date: 01/07/09
Extraction Date: 01/08/09
Analysis Date: 21-JAN-2009 13:25
Report Date: 01/27/2009
Matrix: SOIL
% Solids: 85.6

Lab ID: SC0049-15
Client ID: MR08-IS143-2-3-09A
SDG: TO9-26
Extracted by: AC
Extraction Method: SW846 3550
Analyst: JLP
Analysis Method: SW846 8270C
Lab Prep Batch: WG59648
Units: ug/Kgdrywt

CAS#	Compound	Flags	Results	DF	PQL	Adj.PQL	Adj.MDL
84-74-2	Di-n-butylphthalate	U	380	1.0	330	380	120
85-68-7	Butylbenzylphthalate	U	380	1.0	330	380	110
91-94-1	3,3'-Dichlorobenzidine	~~J~~ UJ	580	1.0	500	580	130 CCH
218-01-9	Chrysene	U	380	1.0	330	380	110
117-81-7	bis(2-Ethylhexyl)phthalate	J	120	1.0	330	380	110
117-84-0	Di-n-octylphthalate	U	380	1.0	330	380	250
367-12-4	2-Fluorophenol		64%				
13127-88-3	Phenol-D6		63%				
4165-60-0	Nitrobenzene-D5		64%				
321-60-8	2-Fluorobiphenyl		67%				
118-79-6	2,4,6-Tribromophenol		54%				
1718-51-0	Terphenyl-D14		95%				

MW
4/14/09

9

KATAHDIN ANALYTICAL SERVICES
Report of Analytical Results

Client: CH2MHill
Project: TO-009 Lejeune
PO No:
Sample Date: 01/05/09
Received Date: 01/07/09
Extraction Date: 01/08/09
Analysis Date: 21-JAN-2009 14:08
Report Date: 01/27/2009
Matrix: SOIL
% Solids: 94.4

Lab ID: SC0049-17
Client ID: MR08-SS144-09A
SDG: TO9-26
Extracted by: AC
Extraction Method: SW846 3550
Analyst: JLP
Analysis Method: SW846 8270C
Lab Prep Batch: WG59648
Units: ug/Kgdrywt

CAS#	Compound	Flags	Results	DF	PQL	Adj.PQL	Adj.MDL	
100-52-7	Benzaldehyde	~~U~~ UJ	530	1.0	500	530	130	JCB
108-95-2	Phenol	U	530	1.0	500	530	160	
111-44-4	Bis(2-Chloroethyl)ether	U	350	1.0	330	350	86	
95-57-8	2-Chlorophenol	U	530	1.0	500	530	170	
95-48-7	2-Methylphenol	U	640	1.0	600	640	210	
108-60-1	2,2'-Oxybis(1-chloropropane)	U	350	1.0	330	350	94	
98-86-2	Acetophenone	U	640	1.0	600	640	190	
621-64-7	N-Nitroso-di-n-propylamine	U	350	1.0	330	350	88	
65794-96-9	3&4-Methylphenol	U	640	1.0	600	640	200	
67-72-1	Hexachloroethane	U	350	1.0	330	350	100	
98-95-3	Nitrobenzene	U	350	1.0	330	350	96	
78-59-1	Isophorone	U	350	1.0	330	350	79	
88-75-5	2-Nitrophenol	U	640	1.0	600	640	180	
105-67-9	2,4-Dimethylphenol	U	530	1.0	500	530	170	
111-91-1	Bis(2-Chloroethoxy)methane	U	350	1.0	330	350	100	
120-83-2	2,4-Dichlorophenol	U	530	1.0	500	530	160	
106-47-8	4-Chloroaniline	U	530	1.0	500	530	130	
105-60-2	Caprolactam	U	530	1.0	500	530	150	
59-50-7	4-Chloro-3-Methylphenol	U	530	1.0	500	530	180	
88-06-2	2,4,6-Trichlorophenol	U	530	1.0	500	530	160	
95-95-4	2,4,5-Trichlorophenol	U	530	1.0	500	530	160	
91-58-7	2-Chloronaphthalene	U	350	1.0	330	350	92	
92-52-4	1,1'-Biphenyl	U	350	1.0	330	350	77	
88-74-4	2-Nitroaniline	U	530	1.0	500	530	79	
131-11-3	Dimethyl Phthalate	U	350	1.0	330	350	83	
606-20-2	2,6-Dinitrotoluene	U	350	1.0	330	350	84	
208-96-8	Acenaphthylene	U	350	1.0	330	350	74	
99-09-2	3-Nitroaniline	~~U~~ UJ	530	1.0	500	530	100	CCH
83-32-9	Acenaphthene	U	350	1.0	330	350	69	
51-28-5	2,4-Dinitrophenol	U	1300	1.0	1200	1300	400	
132-64-9	Dibenzofuran	U	350	1.0	330	350	84	
100-02-7	4-Nitrophenol	~~U~~ UJ	1300	1.0	1200	1300	330	CCH
121-14-2	2,4-Dinitrotoluene	U	350	1.0	330	350	90	
84-66-2	Diethylphthalate	U	350	1.0	330	350	85	
7005-72-3	4-Chlorophenyl-phenylether	U	350	1.0	330	350	83	
100-01-6	4-Nitroaniline	~~U~~ UJ	530	1.0	500	530	140	CCH
534-52-1	4,6-Dinitro-2-Methylphenol	U	1300	1.0	1200	1300	360	
86-30-6	N-Nitrosodiphenylamine	U	700	1.0	660	700	230	
101-55-3	4-Bromophenyl-phenylether	U	350	1.0	330	350	90	
1912-24-9	Atrazine	U	350	1.0	330	350	96	
87-86-5	Pentachlorophenol	U	870	1.0	820	870	250	
120-12-7	Anthracene	U	350	1.0	330	350	89	
86-74-8	Carbazole	U	530	1.0	500	530	120	

Qw
4/14/09

9

KATAHDIN ANALYTICAL SERVICES
Report of Analytical Results

Client: CH2MHill
Project: TO-009 Lejeune
PO No:
Sample Date: 01/05/09
Received Date: 01/07/09
Extraction Date: 01/08/09
Analysis Date: 21-JAN-2009 14:08
Report Date: 01/27/2009
Matrix: SOIL
% Solids: 94.4

Lab ID: SC0049-17
Client ID: MR08-SS144-09A
SDG: TO9-26
Extracted by: AC
Extraction Method: SW846 3550
Analyst: JLP
Analysis Method: SW846 8270C
Lab Prep Batch: WG59648
Units: ug/Kgdrywt

CAS#	Compound	Flags	Results	DF	PQL	Adj.PQL	Adj.MDL	
84-74-2	Di-n-butylphthalate	U	350	1.0	330	350	110	
85-68-7	Butylbenzylphthalate	U	350	1.0	330	350	98	
91-94-1	3,3'-Dichlorobenzidine	~~J~~ UJ	530	1.0	500	530	120	CCH
218-01-9	Chrysene		410	1.0	330	350	100	
117-81-7	bis(2-Ethylhexyl)phthalate	J	180	1.0	330	350	100	
117-84-0	Di-n-octylphthalate	U	350	1.0	330	350	220	
367-12-4	2-Fluorophenol		61%					
13127-88-3	Phenol-D6		62%					
4165-60-0	Nitrobenzene-D5		72%					
321-60-8	2-Fluorobiphenyl		79%					
118-79-6	2,4,6-Tribromophenol		41%					
1718-51-0	Terphenyl-D14		104%					

JW
4/14/09

10

KATAHDIN ANALYTICAL SERVICES
Report of Analytical Results

Client: CH2MHill
Project: TO-009 Lejeune
PO No:
Sample Date: 01/05/09
Received Date: 01/07/09
Extraction Date: 01/08/09
Analysis Date: 21-JAN-2009 14:51
Report Date: 01/27/2009
Matrix: SOIL
% Solids: 85.5

Lab ID: SC0049-19
Client ID: MR08-IS144-3-4-09A
SDG: TO9-26
Extracted by: AC
Extraction Method: SW846 3550
Analyst: JLP
Analysis Method: SW846 8270C
Lab Prep Batch: WG59648
Units: ug/Kgdrywt

CAS#	Compound	Flags	Results	DF	PQL	Adj.PQL	Adj.MDL	
100-52-7	Benzaldehyde	~~U~~ UJ	580	1.0	500	580	140	JCB
108-95-2	Phenol	U	580	1.0	500	580	180	
111-44-4	Bis(2-Chloroethyl)ether	U	380	1.0	330	380	95	
95-57-8	2-Chlorophenol	U	580	1.0	500	580	190	
95-48-7	2-Methylphenol	U	700	1.0	600	700	230	
108-60-1	2,2'-Oxybis(1-chloropropane)	U	380	1.0	330	380	100	
98-86-2	Acetophenone	U	700	1.0	600	700	210	
621-64-7	N-Nitroso-di-n-propylamine	U	380	1.0	330	380	97	
65794-96-9	3&4-Methylphenol	U	700	1.0	600	700	220	
67-72-1	Hexachloroethane	U	380	1.0	330	380	110	
98-95-3	Nitrobenzene	U	380	1.0	330	380	110	
78-59-1	Isophorone	U	380	1.0	330	380	88	
88-75-5	2-Nitrophenol	U	700	1.0	600	700	200	
105-67-9	2,4-Dimethylphenol	U	580	1.0	500	580	190	
111-91-1	Bis(2-Chloroethoxy)methane	U	380	1.0	330	380	110	
120-83-2	2,4-Dichlorophenol	U	580	1.0	500	580	180	
106-47-8	4-Chloroaniline	U	580	1.0	500	580	140	
105-60-2	Caprolactam	U	580	1.0	500	580	170	
59-50-7	4-Chloro-3-Methylphenol	U	580	1.0	500	580	190	
88-06-2	2,4,6-Trichlorophenol	U	580	1.0	500	580	180	
95-95-4	2,4,5-Trichlorophenol	U	580	1.0	500	580	180	
91-58-7	2-Chloronaphthalene	U	380	1.0	330	380	100	
92-52-4	1,1'-Biphenyl	U	380	1.0	330	380	85	
88-74-4	2-Nitroaniline	U	580	1.0	500	580	88	
131-11-3	Dimethyl Phthalate	U	380	1.0	330	380	91	
606-20-2	2,6-Dinitrotoluene	U	380	1.0	330	380	92	
208-96-8	Acenaphthylene	U	380	1.0	330	380	82	
99-09-2	3-Nitroaniline	~~U~~ UJ	580	1.0	500	580	110	CCH
83-32-9	Acenaphthene	U	380	1.0	330	380	76	
51-28-5	2,4-Dinitrophenol	U	1400	1.0	1200	1400	440	
132-64-9	Dibenzofuran	U	380	1.0	330	380	92	
100-02-7	4-Nitrophenol	~~U~~ UJ	1400	1.0	1200	1400	360	CCH
121-14-2	2,4-Dinitrotoluene	U	380	1.0	330	380	99	
84-66-2	Diethylphthalate	U	380	1.0	330	380	94	
7005-72-3	4-Chlorophenyl-phenylether	U	380	1.0	330	380	91	
100-01-6	4-Nitroaniline	~~U~~ UJ	580	1.0	500	580	160	CCH
534-52-1	4,6-Dinitro-2-Methylphenol	U	1400	1.0	1200	1400	390	
86-30-6	N-Nitrosodiphenylamine	U	770	1.0	660	770	260	
101-55-3	4-Bromophenyl-phenylether	U	380	1.0	330	380	99	
1912-24-9	Atrazine	U	380	1.0	330	380	110	
87-86-5	Pentachlorophenol	U	960	1.0	820	960	280	
120-12-7	Anthracene	U	380	1.0	330	380	98	
86-74-8	Carbazole	U	580	1.0	500	580	130	

lew
4/14/09

10

KATAHDIN ANALYTICAL SERVICES
Report of Analytical Results

Client: CH2MHill
Project: TO-009 Lejeune
PO No:
Sample Date: 01/05/09
Received Date: 01/07/09
Extraction Date: 01/08/09
Analysis Date: 21-JAN-2009 14:51
Report Date: 01/27/2009
Matrix: SOIL
% Solids: 85.5

Lab ID: SC0049-19
Client ID: MR08-IS144-3-4-09A
SDG: TO9-26
Extracted by: AC
Extraction Method: SW846 3550
Analyst: JLP
Analysis Method: SW846 8270C
Lab Prep Batch: WG59648
Units: ug/Kgdrywt

CAS#	Compound	Flags	Results	DF	PQL	Adj.PQL	Adj.MDL	
84-74-2	Di-n-butylphthalate	U	380	1.0	330	380	120	
85-68-7	Butylbenzylphthalate	U	380	1.0	330	380	110	
91-94-1	3,3'-Dichlorobenzidine	~~U~~ UJ	580	1.0	500	580	130	CCH
218-01-9	Chrysene	U	380	1.0	330	380	110	
117-81-7	bis(2-Ethylhexyl)phthalate	U	380	1.0	330	380	110	
117-84-0	Di-n-octylphthalate	U	380	1.0	330	380	250	
367-12-4	2-Fluorophenol		69%					
13127-88-3	Phenol-D6		69%					
4165-60-0	Nitrobenzene-D5		71%					
321-60-8	2-Fluorobiphenyl		77%					
118-79-6	2,4,6-Tribromophenol		60%					
1718-51-0	Terphenyl-D14		96%					

JLW 4/14/09

11

KATAHDIN ANALYTICAL SERVICES
Report of Analytical Results

Client: CH2MHill
Project: TO-009 Lejeune
PO No:
Sample Date: 01/05/09
Received Date: 01/07/09
Extraction Date: 01/08/09
Analysis Date: 21-JAN-2009 15:33
Report Date: 01/27/2009
Matrix: SOIL
% Solids: 94.6

Lab ID: SC0049-21
Client ID: MR08-SS145-09A
SDG: TO9-26
Extracted by: AC
Extraction Method: SW846 3550
Analyst: JLP
Analysis Method: SW846 8270C
Lab Prep Batch: WG59648
Units: ug/Kgdrywt

CAS#	Compound	Flags	Results	DF	PQL	Adj.PQL	Adj.MDL	
100-52-7	Benzaldehyde	~~U~~ UJ	530	1.0	500	530	130	ICB
108-95-2	Phenol	U	530	1.0	500	530	160	
111-44-4	Bis(2-Chloroethyl)ether	U	350	1.0	330	350	86	
95-57-8	2-Chlorophenol	U	530	1.0	500	530	170	
95-48-7	2-Methylphenol	U	630	1.0	600	630	210	
108-60-1	2,2'-Oxybis(1-chloropropane)	U	350	1.0	330	350	94	
98-86-2	Acetophenone	U	630	1.0	600	630	190	
621-64-7	N-Nitroso-di-n-propylamine	U	350	1.0	330	350	88	
65794-96-9	3&4-Methylphenol	U	630	1.0	600	630	200	
67-72-1	Hexachloroethane	U	350	1.0	330	350	100	
98-95-3	Nitrobenzene	U	350	1.0	330	350	96	
78-59-1	Isophorone	U	350	1.0	330	350	79	
88-75-5	2-Nitrophenol	U	630	1.0	600	630	180	
105-67-9	2,4-Dimethylphenol	U	530	1.0	500	530	170	
111-91-1	Bis(2-Chloroethoxy)methane	U	350	1.0	330	350	100	
120-83-2	2,4-Dichlorophenol	U	530	1.0	500	530	160	
106-47-8	4-Chloroaniline	U	530	1.0	500	530	120	
105-60-2	Caprolactam	U	530	1.0	500	530	150	
59-50-7	4-Chloro-3-Methylphenol	U	530	1.0	500	530	180	
88-06-2	2,4,6-Trichlorophenol	U	530	1.0	500	530	160	
95-95-4	2,4,5-Trichlorophenol	U	530	1.0	500	530	160	
91-58-7	2-Chloronaphthalene	U	350	1.0	330	350	92	
92-52-4	1,1'-Biphenyl	U	350	1.0	330	350	77	
88-74-4	2-Nitroaniline	U	530	1.0	500	530	79	
131-11-3	Dimethyl Phthalate	U	350	1.0	330	350	82	
606-20-2	2,6-Dinitrotoluene	U	350	1.0	330	350	84	
208-96-8	Acenaphthylene	U	350	1.0	330	350	74	
99-09-2	3-Nitroaniline	~~U~~ UJ	530	1.0	500	530	99	CCH
83-32-9	Acenaphthene	U	350	1.0	330	350	69	
51-28-5	2,4-Dinitrophenol	U	1300	1.0	1200	1300	400	
132-64-9	Dibenzofuran	U	350	1.0	330	350	84	
100-02-7	4-Nitrophenol	~~U~~ UJ	1300	1.0	1200	1300	330	CCH
121-14-2	2,4-Dinitrotoluene	U	350	1.0	330	350	90	
84-66-2	Diethylphthalate	U	350	1.0	330	350	84	
7005-72-3	4-Chlorophenyl-phenylether	U	350	1.0	330	350	82	
100-01-6	4-Nitroaniline	~~U~~ UJ	530	1.0	500	530	140	CCH
534-52-1	4,6-Dinitro-2-Methylphenol	U	1300	1.0	1200	1300	360	
86-30-6	N-Nitrosodiphenylamine	U	700	1.0	660	700	230	
101-55-3	4-Bromophenyl-phenylether	U	350	1.0	330	350	90	
1912-24-9	Atrazine	U	350	1.0	330	350	96	
87-86-5	Pentachlorophenol	U	870	1.0	820	870	250	
120-12-7	Anthracene	U	350	1.0	330	350	89	
86-74-8	Carbazole	U	530	1.0	500	530	120	

RCW
4/14/09

KATAHDIN ANALYTICAL SERVICES
Report of Analytical Results

11

Client: CH2MHill
Project: TO-009 Lejeune
PO No:
Sample Date: 01/05/09
Received Date: 01/07/09
Extraction Date: 01/08/09
Analysis Date: 21-JAN-2009 15:33
Report Date: 01/27/2009
Matrix: SOIL
% Solids: 94.6

Lab ID: SC0049-21
Client ID: MR08-SS145-09A
SDG: TO9-26
Extracted by: AC
Extraction Method: SW846 3550
Analyst: JLP
Analysis Method: SW846 8270C
Lab Prep Batch: WG59648
Units: ug/Kgdrywt

CAS#	Compound	Flags	Results	DF	PQL	Adj.PQL	Adj.MDL
84-74-2	Di-n-butylphthalate	U	350	1.0	330	350	110
85-68-7	Butylbenzylphthalate	U	350	1.0	330	350	98
91-94-1	3,3'-Dichlorobenzidine	~~U~~ UJ	530	1.0	500	530	120 CCH
218-01-9	Chrysene	U	350	1.0	330	350	100
117-81-7	bis(2-Ethylhexyl)phthalate	U	350	1.0	330	350	100
117-84-0	Di-n-octylphthalate	U	350	1.0	330	350	220
367-12-4	2-Fluorophenol		53%				
13127-88-3	Phenol-D6		51%				
4165-60-0	Nitrobenzene-D5		62%				
321-60-8	2-Fluorobiphenyl		64%				
118-79-6	2,4,6-Tribromophenol		36%				
1718-51-0	Terphenyl-D14		81%				

MW
9/14/09

KATAHDIN ANALYTICAL SERVICES
Report of Analytical Results

Client: CH2MHill
Project: TO-009 Lejeune
PO No:
Sample Date: 01/05/09
Received Date: 01/07/09
Extraction Date: 01/08/09
Analysis Date: 21-JAN-2009 16:16
Report Date: 01/27/2009
Matrix: SOIL
% Solids: 89.2

Lab ID: SC0049-23
Client ID: MR08-IS145-3-4-09A
SDG: TO9-26
Extracted by: AC
Extraction Method: SW846 3550
Analyst: JLP
Analysis Method: SW846 8270C
Lab Prep Batch: WG59648
Units: ug/Kgdrywt

CAS#	Compound	Flags	Results	DF	PQL	Adj.PQL	Adj.MDL	
100-52-7	Benzaldehyde	~~U~~ UJ	560	1.0	500	560	130	JCB
108-95-2	Phenol	U	560	1.0	500	560	170	
111-44-4	Bis(2-Chloroethyl)ether	U	370	1.0	330	370	91	
95-57-8	2-Chlorophenol	U	560	1.0	500	560	180	
95-48-7	2-Methylphenol	U	670	1.0	600	670	220	
108-60-1	2,2'-Oxybis(1-chloropropane)	U	370	1.0	330	370	100	
98-86-2	Acetophenone	U	670	1.0	600	670	200	
621-64-7	N-Nitroso-di-n-propylamine	U	370	1.0	330	370	93	
65794-96-9	3&4-Methylphenol	U	670	1.0	600	670	210	
67-72-1	Hexachloroethane	U	370	1.0	330	370	110	
98-95-3	Nitrobenzene	U	370	1.0	330	370	100	
78-59-1	Isophorone	U	370	1.0	330	370	84	
88-75-5	2-Nitrophenol	U	670	1.0	600	670	190	
105-67-9	2,4-Dimethylphenol	U	560	1.0	500	560	180	
111-91-1	Bis(2-Chloroethoxy)methane	U	370	1.0	330	370	110	
120-83-2	2,4-Dichlorophenol	U	560	1.0	500	560	170	
106-47-8	4-Chloroaniline	U	560	1.0	500	560	130	
105-60-2	Caprolactam	U	560	1.0	500	560	160	
59-50-7	4-Chloro-3-Methylphenol	U	560	1.0	500	560	190	
88-06-2	2,4,6-Trichlorophenol	U	560	1.0	500	560	170	
95-95-4	2,4,5-Trichlorophenol	U	560	1.0	500	560	170	
91-58-7	2-Chloronaphthalene	U	370	1.0	330	370	98	
92-52-4	1,1'-Biphenyl	U	370	1.0	330	370	82	
88-74-4	2-Nitroaniline	U	560	1.0	500	560	84	
131-11-3	Dimethyl Phthalate	U	370	1.0	330	370	87	
606-20-2	2,6-Dinitrotoluene	U	370	1.0	330	370	88	
208-96-8	Acenaphthylene	U	370	1.0	330	370	78	
99-09-2	3-Nitroaniline	~~U~~ UJ	560	1.0	500	560	100	CCH
83-32-9	Acenaphthene	U	370	1.0	330	370	73	
51-28-5	2,4-Dinitrophenol	U	1300	1.0	1200	1300	420	
132-64-9	Dibenzofuran	U	370	1.0	330	370	88	
100-02-7	4-Nitrophenol	~~U~~ UJ	1300	1.0	1200	1300	350	CCH
121-14-2	2,4-Dinitrotoluene	U	370	1.0	330	370	95	
84-66-2	Diethylphthalate	U	370	1.0	330	370	90	
7005-72-3	4-Chlorophenyl-phenylether	U	370	1.0	330	370	87	
100-01-6	4-Nitroaniline	~~U~~ UJ	560	1.0	500	560	150	CCH
534-52-1	4,6-Dinitro-2-Methylphenol	U	1300	1.0	1200	1300	380	
86-30-6	N-Nitrosodiphenylamine	U	740	1.0	660	740	240	
101-55-3	4-Bromophenyl-phenylether	U	370	1.0	330	370	95	
1912-24-9	Atrazine	U	370	1.0	330	370	100	
87-86-5	Pentachlorophenol	U	920	1.0	820	920	260	
120-12-7	Anthracene	U	370	1.0	330	370	94	
86-74-8	Carbazole	U	560	1.0	500	560	120	

lw
4/14/09

KATAHDIN ANALYTICAL SERVICES
Report of Analytical Results

Client: CH2MHill
Project: TO-009 Lejeune
PO No:
Sample Date: 01/05/09
Received Date: 01/07/09
Extraction Date: 01/08/09
Analysis Date: 21-JAN-2009 16:16
Report Date: 01/27/2009
Matrix: SOIL
% Solids: 89.2

Lab ID: SC0049-23
Client ID: MR08-IS145-3-4-09A
SDG: TO9-26
Extracted by: AC
Extraction Method: SW846 3550
Analyst: JLP
Analysis Method: SW846 8270C
Lab Prep Batch: WG59648
Units: ug/Kgdrywt

CAS#	Compound	Flags	Results	DF	PQL	Adj.PQL	Adj.MDL	
84-74-2	Di-n-butylphthalate	U	370	1.0	330	370	110	
85-68-7	Butylbenzylphthalate	U	370	1.0	330	370	100	
91-94-1	3,3'-Dichlorobenzidine	~~U~~ UJ	560	1.0	500	560	130	CCH
218-01-9	Chrysene	U	370	1.0	330	370	110	
117-81-7	bis(2-Ethylhexyl)phthalate	U	370	1.0	330	370	110	
117-84-0	Di-n-octylphthalate	U	370	1.0	330	370	240	
367-12-4	2-Fluorophenol		60%					
13127-88-3	Phenol-D6		59%					
4165-60-0	Nitrobenzene-D5		67%					
321-60-8	2-Fluorobiphenyl		74%					
118-79-6	2,4,6-Tribromophenol		57%					
1718-51-0	Terphenyl-D14		98%					

lw
4/14/09

KATAHDIN ANALYTICAL SERVICES
Report of Analytical Results

Client: CH2MHill
Project: TO-009 Lejeune
PO No:
Sample Date: 01/05/09
Received Date: 01/07/09
Extraction Date: 01/08/09
Analysis Date: 22-JAN-2009 12:50
Report Date: 01/27/2009
Matrix: SOIL
% Solids: 95.7

Lab ID: SC0049-25
Client ID: MR08-SS146-09A
SDG: TO9-26
Extracted by: AC
Extraction Method: SW846 3550
Analyst: JLP
Analysis Method: SW846 8270C
Lab Prep Batch: WG59648
Units: ug/Kgdrywt

CAS#	Compound	Flags	Results	DF	PQL	Adj.PQL	Adj.MDL	
100-52-7	Benzaldehyde	~~U~~ UJ	520	1.0	500	520	120	JCB
108-95-2	Phenol	U	520	1.0	500	520	160	
111-44-4	Bis(2-Chloroethyl)ether	U	340	1.0	330	340	85	
95-57-8	2-Chlorophenol	U	520	1.0	500	520	170	
95-48-7	2-Methylphenol	U	630	1.0	600	630	210	
108-60-1	2,2'-Oxybis(1-chloropropane)	U	340	1.0	330	340	93	
98-86-2	Acetophenone	U	630	1.0	600	630	190	
621-64-7	N-Nitroso-di-n-propylamine	U	340	1.0	330	340	87	
65794-96-9	3&4-Methylphenol	U	630	1.0	600	630	200	
67-72-1	Hexachloroethane	U	340	1.0	330	340	100	
98-95-3	Nitrobenzene	U	340	1.0	330	340	95	
78-59-1	Isophorone	U	340	1.0	330	340	78	
88-75-5	2-Nitrophenol	U	630	1.0	600	630	170	
105-67-9	2,4-Dimethylphenol	U	520	1.0	500	520	170	
111-91-1	Bis(2-Chloroethoxy)methane	U	340	1.0	330	340	100	
120-83-2	2,4-Dichlorophenol	U	520	1.0	500	520	160	
106-47-8	4-Chloroaniline	U	520	1.0	500	520	120	
105-60-2	Caprolactam	U	520	1.0	500	520	150	
59-50-7	4-Chloro-3-Methylphenol	U	520	1.0	500	520	170	
88-06-2	2,4,6-Trichlorophenol	U	520	1.0	500	520	160	
95-95-4	2,4,5-Trichlorophenol	U	520	1.0	500	520	160	
91-58-7	2-Chloronaphthalene	U	340	1.0	330	340	91	
92-52-4	1,1'-Biphenyl	U	340	1.0	330	340	76	
88-74-4	2-Nitroaniline	U	520	1.0	500	520	78	
131-11-3	Dimethyl Phthalate	U	340	1.0	330	340	82	
606-20-2	2,6-Dinitrotoluene	U	340	1.0	330	340	82	
208-96-8	Acenaphthylene	U	340	1.0	330	340	73	
99-09-2	3-Nitroaniline	U	520	1.0	500	520	98	
83-32-9	Acenaphthene	U	340	1.0	330	340	68	
51-28-5	2,4-Dinitrophenol	~~U~~ UJ	1200	1.0	1200	1200	390	CCH
132-64-9	Dibenzofuran	U	340	1.0	330	340	82	
100-02-7	4-Nitrophenol	~~U~~ UJ	1200	1.0	1200	1200	320	CCH
121-14-2	2,4-Dinitrotoluene	U	340	1.0	330	340	89	
84-66-2	Diethylphthalate	U	340	1.0	330	340	84	
7005-72-3	4-Chlorophenyl-phenylether	U	340	1.0	330	340	82	
100-01-6	4-Nitroaniline	~~U~~ UJ	520	1.0	500	520	140	CCH
534-52-1	4,6-Dinitro-2-Methylphenol	U	1200	1.0	1200	1200	350	
86-30-6	N-Nitrosodiphenylamine	U	690	1.0	660	690	230	
101-55-3	4-Bromophenyl-phenylether	U	340	1.0	330	340	89	
1912-24-9	Atrazine	U	340	1.0	330	340	95	
87-86-5	Pentachlorophenol	U	860	1.0	820	860	250	
120-12-7	Anthracene	U	340	1.0	330	340	88	
86-74-8	Carbazole	U	520	1.0	500	520	120	

fw
4/14/09

KATAHDIN ANALYTICAL SERVICES
Report of Analytical Results

Client: CH2MHill
Project: TO-009 Lejeune
PO No:
Sample Date: 01/05/09
Received Date: 01/07/09
Extraction Date: 01/08/09
Analysis Date: 22-JAN-2009 12:50
Report Date: 01/27/2009
Matrix: SOIL
% Solids: 95.7

Lab ID: SC0049-25
Client ID: MR08-SS146-09A
SDG: TO9-26
Extracted by: AC
Extraction Method: SW846 3550
Analyst: JLP
Analysis Method: SW846 8270C
Lab Prep Batch: WG59648
Units: ug/Kgdrywt

CAS#	Compound	Flags	Results	DF	PQL	Adj.PQL	Adj.MDL	
84-74-2	Di-n-butylphthalate	U	340	1.0	330	340	100	
85-68-7	Butylbenzylphthalate	U	340	1.0	330	340	97	
91-94-1	3,3'-Dichlorobenzidine	~~U~~ UJ	520	1.0	500	520	120	CCH
218-01-9	Chrysene	U	340	1.0	330	340	99	
117-81-7	bis(2-Ethylhexyl)phthalate	U	340	1.0	330	340	100	
117-84-0	Di-n-octylphthalate	U	340	1.0	330	340	220	
367-12-4	2-Fluorophenol		59%					
13127-88-3	Phenol-D6		63%					
4165-60-0	Nitrobenzene-D5		65%					
321-60-8	2-Fluorobiphenyl		71%					
118-79-6	2,4,6-Tribromophenol		39%					
1718-51-0	Terphenyl-D14		90%					

JLW 4/14/09

KATAHDIN ANALYTICAL SERVICES
Report of Analytical Results

Client: CH2MHill
Project: TO-009 Lejeune
PO No:
Sample Date: 01/05/09
Received Date: 01/07/09
Extraction Date: 01/08/09
Analysis Date: 22-JAN-2009 13:32
Report Date: 01/27/2009
Matrix: SOIL
% Solids: 85.5

Lab ID: SC0049-27
Client ID: MR08-IS146-2-3-09A
SDG: TO9-26
Extracted by: AC
Extraction Method: SW846 3550
Analyst: JLP
Analysis Method: SW846 8270C
Lab Prep Batch: WG59648
Units: ug/Kgdrywt

CAS#	Compound	Flags	Results	DF	PQL	Adj.PQL	Adj.MDL	
100-52-7	Benzaldehyde	~~J~~ UJ	580	1.0	500	580	140	JCB
108-95-2	Phenol	U	580	1.0	500	580	180	
111-44-4	Bis(2-Chloroethyl)ether	U	390	1.0	330	390	95	
95-57-8	2-Chlorophenol	U	580	1.0	500	580	190	
95-48-7	2-Methylphenol	U	700	1.0	600	700	230	
108-60-1	2,2'-Oxybis(1-chloropropane)	U	390	1.0	330	390	100	
98-86-2	Acetophenone	U	700	1.0	600	700	210	
621-64-7	N-Nitroso-di-n-propylamine	U	390	1.0	330	390	97	
65794-96-9	3&4-Methylphenol	U	700	1.0	600	700	220	
67-72-1	Hexachloroethane	U	390	1.0	330	390	110	
98-95-3	Nitrobenzene	U	390	1.0	330	390	110	
78-59-1	Isophorone	U	390	1.0	330	390	88	
88-75-5	2-Nitrophenol	U	700	1.0	600	700	200	
105-67-9	2,4-Dimethylphenol	U	580	1.0	500	580	190	
111-91-1	Bis(2-Chloroethoxy)methane	U	390	1.0	330	390	110	
120-83-2	2,4-Dichlorophenol	U	580	1.0	500	580	180	
106-47-8	4-Chloroaniline	U	580	1.0	500	580	140	
105-60-2	Caprolactam	U	580	1.0	500	580	170	
59-50-7	4-Chloro-3-Methylphenol	U	580	1.0	500	580	190	
88-06-2	2,4,6-Trichlorophenol	U	580	1.0	500	580	180	
95-95-4	2,4,5-Trichlorophenol	U	580	1.0	500	580	180	
91-58-7	2-Chloronaphthalene	U	390	1.0	330	390	100	
92-52-4	1,1'-Biphenyl	U	390	1.0	330	390	85	
88-74-4	2-Nitroaniline	U	580	1.0	500	580	88	
131-11-3	Dimethyl Phthalate	U	390	1.0	330	390	91	
606-20-2	2,6-Dinitrotoluene	U	390	1.0	330	390	92	
208-96-8	Acenaphthylene	U	390	1.0	330	390	82	
99-09-2	3-Nitroaniline	U	580	1.0	500	580	110	
83-32-9	Acenaphthene	J	150	1.0	330	390	76	
51-28-5	2,4-Dinitrophenol	~~J~~ UJ	1400	1.0	1200	1400	440	CCH
132-64-9	Dibenzofuran	U	390	1.0	330	390	92	
100-02-7	4-Nitrophenol	~~J~~ UJ	1400	1.0	1200	1400	360	CCH
121-14-2	2,4-Dinitrotoluene	U	390	1.0	330	390	99	
84-66-2	Diethylphthalate	U	390	1.0	330	390	94	
7005-72-3	4-Chlorophenyl-phenylether	U	390	1.0	330	390	91	
100-01-6	4-Nitroaniline	~~J~~ UJ	580	1.0	500	580	160	CCH
534-52-1	4,6-Dinitro-2-Methylphenol	U	1400	1.0	1200	1400	390	
86-30-6	N-Nitrosodiphenylamine	U	770	1.0	660	770	260	
101-55-3	4-Bromophenyl-phenylether	U	390	1.0	330	390	99	
1912-24-9	Atrazine	U	390	1.0	330	390	110	
87-86-5	Pentachlorophenol	U	960	1.0	820	960	280	
120-12-7	Anthracene	J	220	1.0	330	390	98	
86-74-8	Carbazole	U	580	1.0	500	580	130	

MW
4/14/09

KATAHDIN ANALYTICAL SERVICES
Report of Analytical Results

Client: CH2MHill
Project: TO-009 Lejeune
PO No:
Sample Date: 01/05/09
Received Date: 01/07/09
Extraction Date: 01/08/09
Analysis Date: 22-JAN-2009 13:32
Report Date: 01/27/2009
Matrix: SOIL
% Solids: 85.5

Lab ID: SC0049-27
Client ID: MR08-IS146-2-3-09A
SDG: TO9-26
Extracted by: AC
Extraction Method: SW846 3550
Analyst: JLP
Analysis Method: SW846 8270C
Lab Prep Batch: WG59648
Units: ug/Kgdrywt

CAS#	Compound	Flags	Results	DF	PQL	Adj.PQL	Adj.MDL	
84-74-2	Di-n-butylphthalate	U	390	1.0	330	390	120	
85-68-7	Butylbenzylphthalate	U	390	1.0	330	390	110	
91-94-1	3,3'-Dichlorobenzidine	~~U~~ UJ	580	1.0	500	580	130	CCH
218-01-9	Chrysene		410	1.0	330	390	110	
117-81-7	bis(2-Ethylhexyl)phthalate	U	390	1.0	330	390	110	
117-84-0	Di-n-octylphthalate	U	390	1.0	330	390	250	
367-12-4	2-Fluorophenol		58%					
13127-88-3	Phenol-D6		64%					
4165-60-0	Nitrobenzene-D5		66%					
321-60-8	2-Fluorobiphenyl		74%					
118-79-6	2,4,6-Tribromophenol		38%					
1718-51-0	Terphenyl-D14		86%					

lwJ
4/14/09

KATAHDIN ANALYTICAL SERVICES
Report of Analytical Results

Client: CH2MHill
Project: TO-009 Lejeune
PO No:
Sample Date: 01/05/09
Received Date: 01/07/09
Extraction Date: 01/08/09
Analysis Date: 22-JAN-2009 14:14
Report Date: 01/27/2009
Matrix: SOIL
% Solids: 90.3

Lab ID: SC0049-29
Client ID: MR08-SS147-09A
SDG: TO9-26
Extracted by: AC
Extraction Method: SW846 3550
Analyst: JLP
Analysis Method: SW846 8270C
Lab Prep Batch: WG59648
Units: ug/Kgdrywt

CAS#	Compound	Flags	Results	DF	PQL	Adj.PQL	Adj.MDL	
100-52-7	Benzaldehyde	~~U~~ UJ	550	1.0	500	550	130	JCB
108-95-2	Phenol	U	550	1.0	500	550	170	
111-44-4	Bis(2-Chloroethyl)ether	U	360	1.0	330	360	90	
95-57-8	2-Chlorophenol	U	550	1.0	500	550	180	
95-48-7	2-Methylphenol	U	660	1.0	600	660	220	
108-60-1	2,2'-Oxybis(1-chloropropane)	U	360	1.0	330	360	98	
98-86-2	Acetophenone	U	660	1.0	600	660	200	
621-64-7	N-Nitroso-di-n-propylamine	U	360	1.0	330	360	92	
65794-96-9	3&4-Methylphenol	U	660	1.0	600	660	210	
67-72-1	Hexachloroethane	U	360	1.0	330	360	110	
98-95-3	Nitrobenzene	U	360	1.0	330	360	100	
78-59-1	Isophorone	U	360	1.0	330	360	83	
88-75-5	2-Nitrophenol	U	660	1.0	600	660	180	
105-67-9	2,4-Dimethylphenol	U	550	1.0	500	550	180	
111-91-1	Bis(2-Chloroethoxy)methane	U	360	1.0	330	360	110	
120-83-2	2,4-Dichlorophenol	U	550	1.0	500	550	170	
106-47-8	4-Chloroaniline	U	550	1.0	500	550	130	
105-60-2	Caprolactam	U	550	1.0	500	550	160	
59-50-7	4-Chloro-3-Methylphenol	U	550	1.0	500	550	180	
88-06-2	2,4,6-Trichlorophenol	U	550	1.0	500	550	170	
95-95-4	2,4,5-Trichlorophenol	U	550	1.0	500	550	170	
91-58-7	2-Chloronaphthalene	U	360	1.0	330	360	96	
92-52-4	1,1'-Biphenyl	U	360	1.0	330	360	81	
88-74-4	2-Nitroaniline	U	550	1.0	500	550	83	
131-11-3	Dimethyl Phthalate	U	360	1.0	330	360	86	
606-20-2	2,6-Dinitrotoluene	U	360	1.0	330	360	87	
208-96-8	Acenaphthylene	U	360	1.0	330	360	78	
99-09-2	3-Nitroaniline	U	550	1.0	500	550	100	
83-32-9	Acenaphthene	U	360	1.0	330	360	72	
51-28-5	2,4-Dinitrophenol	~~U~~ UJ	1300	1.0	1200	1300	420	CCH
132-64-9	Dibenzofuran	U	360	1.0	330	360	87	
100-02-7	4-Nitrophenol	~~U~~ UJ	1300	1.0	1200	1300	340	CCH
121-14-2	2,4-Dinitrotoluene	U	360	1.0	330	360	94	
84-66-2	Diethylphthalate	U	360	1.0	330	360	88	
7005-72-3	4-Chlorophenyl-phenylether	U	360	1.0	330	360	86	
100-01-6	4-Nitroaniline	~~U~~ UJ	550	1.0	500	550	150	CCH
534-52-1	4,6-Dinitro-2-Methylphenol	U	1300	1.0	1200	1300	370	
86-30-6	N-Nitrosodiphenylamine	U	730	1.0	660	730	240	
101-55-3	4-Bromophenyl-phenylether	U	360	1.0	330	360	94	
1912-24-9	Atrazine	U	360	1.0	330	360	100	
87-86-5	Pentachlorophenol	U	910	1.0	820	910	260	
120-12-7	Anthracene	U	360	1.0	330	360	93	
86-74-8	Carbazole	U	550	1.0	500	550	120	

QW
4/14/09

KATAHDIN ANALYTICAL SERVICES
Report of Analytical Results

Client: CH2MHill
Project: TO-009 Lejeune
PO No:
Sample Date: 01/05/09
Received Date: 01/07/09
Extraction Date: 01/08/09
Analysis Date: 22-JAN-2009 14:14
Report Date: 01/27/2009
Matrix: SOIL
% Solids: 90.3

Lab ID: SC0049-29
Client ID: MR08-SS147-09A
SDG: TO9-26
Extracted by: AC
Extraction Method: SW846 3550
Analyst: JLP
Analysis Method: SW846 8270C
Lab Prep Batch: WG59648
Units: ug/Kgdrywt

CAS#	Compound	Flags	Results	DF	PQL	Adj.PQL	Adj.MDL	
84-74-2	Di-n-butylphthalate	U	360	1.0	330	360	110	
85-68-7	Butylbenzylphthalate	U	360	1.0	330	360	100	
91-94-1	3,3'-Dichlorobenzidine	~~U~~ UJ	550	1.0	500	550	130	CCH
218-01-9	Chrysene	U	360	1.0	330	360	100	
117-81-7	bis(2-Ethylhexyl)phthalate	J	160	1.0	330	360	110	
117-84-0	Di-n-octylphthalate	U	360	1.0	330	360	230	
367-12-4	2-Fluorophenol		58%					
13127-88-3	Phenol-D6		68%					
4165-60-0	Nitrobenzene-D5		76%					
321-60-8	2-Fluorobiphenyl		78%					
118-79-6	2,4,6-Tribromophenol		* 32%					
1718-51-0	Terphenyl-D14		91%					

pkw
4/14/09

KATAHDIN ANALYTICAL SERVICES
Report of Analytical Results

Client: CH2MHill
Project: TO-009 Lejeune
PO No:
Sample Date: 01/05/09
Received Date: 01/07/09
Extraction Date: 01/08/09
Analysis Date: 22-JAN-2009 14:57
Report Date: 01/27/2009
Matrix: SOIL
% Solids: 87.6

Lab ID: SC0049-31
Client ID: MR08-IS147-2-3-09A
SDG: TO9-26
Extracted by: AC
Extraction Method: SW846 3550
Analyst: JLP
Analysis Method: SW846 8270C
Lab Prep Batch: WG59648
Units: ug/Kgdrywt

CAS#	Compound	Flags	Results	DF	PQL	Adj.PQL	Adj.MDL	
100-52-7	Benzaldehyde	~~U~~ UJ	570	1.0	500	570	140	ICB
108-95-2	Phenol	U	570	1.0	500	570	180	
111-44-4	Bis(2-Chloroethyl)ether	U	380	1.0	330	380	92	
95-57-8	2-Chlorophenol	U	570	1.0	500	570	190	
95-48-7	2-Methylphenol	U	680	1.0	600	680	230	
108-60-1	2,2'-Oxybis(1-chloropropane)	U	380	1.0	330	380	100	
98-86-2	Acetophenone	U	680	1.0	600	680	200	
621-64-7	N-Nitroso-di-n-propylamine	U	380	1.0	330	380	95	
65794-96-9	3&4-Methylphenol	U	680	1.0	600	680	210	
67-72-1	Hexachloroethane	U	380	1.0	330	380	110	
98-95-3	Nitrobenzene	U	380	1.0	330	380	100	
78-59-1	Isophorone	U	380	1.0	330	380	86	
88-75-5	2-Nitrophenol	U	680	1.0	600	680	190	
105-67-9	2,4-Dimethylphenol	U	570	1.0	500	570	190	
111-91-1	Bis(2-Chloroethoxy)methane	U	380	1.0	330	380	110	
120-83-2	2,4-Dichlorophenol	U	570	1.0	500	570	170	
106-47-8	4-Chloroaniline	U	570	1.0	500	570	140	
105-60-2	Caprolactam	U	570	1.0	500	570	160	
59-50-7	4-Chloro-3-Methylphenol	U	570	1.0	500	570	190	
88-06-2	2,4,6-Trichlorophenol	U	570	1.0	500	570	180	
95-95-4	2,4,5-Trichlorophenol	U	570	1.0	500	570	180	
91-58-7	2-Chloronaphthalene	U	380	1.0	330	380	99	
92-52-4	1,1'-Biphenyl	U	380	1.0	330	380	83	
88-74-4	2-Nitroaniline	U	570	1.0	500	570	86	
131-11-3	Dimethyl Phthalate	U	380	1.0	330	380	89	
606-20-2	2,6-Dinitrotoluene	U	380	1.0	330	380	90	
208-96-8	Acenaphthylene	U	380	1.0	330	380	80	
99-09-2	3-Nitroaniline	U	570	1.0	500	570	110	
83-32-9	Acenaphthene	U	380	1.0	330	380	74	
51-28-5	2,4-Dinitrophenol	~~U~~ UJ	1400	1.0	1200	1400	430	CCH
132-64-9	Dibenzofuran	U	380	1.0	330	380	90	
100-02-7	4-Nitrophenol	~~U~~ UJ	1400	1.0	1200	1400	350	CCH
121-14-2	2,4-Dinitrotoluene	U	380	1.0	330	380	97	
84-66-2	Diethylphthalate	U	380	1.0	330	380	91	
7005-72-3	4-Chlorophenyl-phenylether	U	380	1.0	330	380	89	
100-01-6	4-Nitroaniline	~~U~~ UJ	570	1.0	500	570	150	CCH
534-52-1	4,6-Dinitro-2-Methylphenol	U	1400	1.0	1200	1400	380	
86-30-6	N-Nitrosodiphenylamine	U	750	1.0	660	750	250	
101-55-3	4-Bromophenyl-phenylether	U	380	1.0	330	380	97	
1912-24-9	Atrazine	U	380	1.0	330	380	100	
87-86-5	Pentachlorophenol	U	940	1.0	820	940	270	
120-12-7	Anthracene	U	380	1.0	330	380	96	
86-74-8	Carbazole	U	570	1.0	500	570	130	

LW
4/14/09

16

KATAHDIN ANALYTICAL SERVICES
Report of Analytical Results

Client: CH2MHill
Project: TO-009 Lejeune
PO No:
Sample Date: 01/05/09
Received Date: 01/07/09
Extraction Date: 01/08/09
Analysis Date: 22-JAN-2009 14:57
Report Date: 01/27/2009
Matrix: SOIL
% Solids: 87.6

Lab ID: SC0049-31
Client ID: MR08-IS147-2-3-09A
SDG: TO9-26
Extracted by: AC
Extraction Method: SW846 3550
Analyst: JLP
Analysis Method: SW846 8270C
Lab Prep Batch: WG59648
Units: ug/Kgdrywt

CAS#	Compound	Flags	Results	DF	PQL	Adj.PQL	Adj.MDL	
84-74-2	Di-n-butylphthalate	U	380	1.0	330	380	120	
85-68-7	Butylbenzylphthalate	U	380	1.0	330	380	110	
91-94-1	3,3'-Dichlorobenzidine	~~U~~ UJ	570	1.0	500	570	130	CCH
218-01-9	Chrysene	U	380	1.0	330	380	110	
117-81-7	bis(2-Ethylhexyl)phthalate	U	380	1.0	330	380	110	
117-84-0	Di-n-octylphthalate	U	380	1.0	330	380	240	
367-12-4	2-Fluorophenol		65%					
13127-88-3	Phenol-D6		69%					
4165-60-0	Nitrobenzene-D5		74%					
321-60-8	2-Fluorobiphenyl		76%					
118-79-6	2,4,6-Tribromophenol		49%					
1718-51-0	Terphenyl-D14		83%					

JW 4/14/09

KATAHDIN ANALYTICAL SERVICES
Report of Analytical Results

Client: CH2MHill
Project: TO-009 Lejeune
PO No:
Sample Date: 01/05/09
Received Date: 01/07/09
Extraction Date: 01/08/09
Analysis Date: 22-JAN-2009 15:39
Report Date: 01/27/2009
Matrix: SOIL
% Solids: 77.0

Lab ID: SC0049-33
Client ID: MR08-SS148-09A
SDG: TO9-26
Extracted by: AC
Extraction Method: SW846 3550
Analyst: JLP
Analysis Method: SW846 8270C
Lab Prep Batch: WG59648
Units: ug/Kgdrywt

CAS#	Compound	Flags	Results	DF	PQL	Adj.PQL	Adj.MDL	
100-52-7	Benzaldehyde	~~U~~ UJ	650	1.0	500	650	160	ICB
108-95-2	Phenol	U	650	1.0	500	650	200	
111-44-4	Bis(2-Chloroethyl)ether	U	430	1.0	330	430	100	
95-57-8	2-Chlorophenol	U	650	1.0	500	650	210	
95-48-7	2-Methylphenol	U	780	1.0	600	780	260	
108-60-1	2,2'-Oxybis(1-chloropropane)	U	430	1.0	330	430	120	
98-86-2	Acetophenone	U	780	1.0	600	780	230	
621-64-7	N-Nitroso-di-n-propylamine	U	430	1.0	330	430	110	
65794-96-9	3&4-Methylphenol	U	780	1.0	600	780	240	
67-72-1	Hexachloroethane	U	430	1.0	330	430	120	
98-95-3	Nitrobenzene	U	430	1.0	330	430	120	
78-59-1	Isophorone	U	430	1.0	330	430	97	
88-75-5	2-Nitrophenol	U	780	1.0	600	780	220	
105-67-9	2,4-Dimethylphenol	U	650	1.0	500	650	210	
111-91-1	Bis(2-Chloroethoxy)methane	U	430	1.0	330	430	120	
120-83-2	2,4-Dichlorophenol	U	650	1.0	500	650	190	
106-47-8	4-Chloroaniline	U	650	1.0	500	650	150	
105-60-2	Caprolactam	U	650	1.0	500	650	190	
59-50-7	4-Chloro-3-Methylphenol	U	650	1.0	500	650	220	
88-06-2	2,4,6-Trichlorophenol	U	650	1.0	500	650	200	
95-95-4	2,4,5-Trichlorophenol	U	650	1.0	500	650	200	
91-58-7	2-Chloronaphthalene	U	430	1.0	330	430	110	
92-52-4	1,1'-Biphenyl	U	430	1.0	330	430	95	
88-74-4	2-Nitroaniline	U	650	1.0	500	650	97	
131-11-3	Dimethyl Phthalate	U	430	1.0	330	430	100	
606-20-2	2,6-Dinitrotoluene	U	430	1.0	330	430	100	
208-96-8	Acenaphthylene	U	430	1.0	330	430	91	
99-09-2	3-Nitroaniline	U	650	1.0	500	650	120	
83-32-9	Acenaphthene	U	430	1.0	330	430	84	
51-28-5	2,4-Dinitrophenol	~~U~~ UJ	1600	1.0	1200	1600	490	CCH
132-64-9	Dibenzofuran	U	430	1.0	330	430	100	
100-02-7	4-Nitrophenol	~~U~~ UJ	1600	1.0	1200	1600	400	CCH
121-14-2	2,4-Dinitrotoluene	U	430	1.0	330	430	110	
84-66-2	Diethylphthalate	U	430	1.0	330	430	100	
7005-72-3	4-Chlorophenyl-phenylether	U	430	1.0	330	430	100	
100-01-6	4-Nitroaniline	~~U~~ UJ	650	1.0	500	650	170	CCH
534-52-1	4,6-Dinitro-2-Methylphenol	U	1600	1.0	1200	1600	440	
86-30-6	N-Nitrosodiphenylamine	U	860	1.0	660	860	280	
101-55-3	4-Bromophenyl-phenylether	U	430	1.0	330	430	110	
1912-24-9	Atrazine	U	430	1.0	330	430	120	
87-86-5	Pentachlorophenol	U	1100	1.0	820	1100	310	
120-12-7	Anthracene	U	430	1.0	330	430	110	
86-74-8	Carbazole	U	650	1.0	500	650	140	

lw 4/14/09

KATAHDIN ANALYTICAL SERVICES
Report of Analytical Results

Client: CH2MHill
Project: TO-009 Lejeune
PO No:
Sample Date: 01/05/09
Received Date: 01/07/09
Extraction Date: 01/08/09
Analysis Date: 22-JAN-2009 15:39
Report Date: 01/27/2009
Matrix: SOIL
% Solids: 77.0

Lab ID: SC0049-33
Client ID: MR08-SS148-09A
SDG: TO9-26
Extracted by: AC
Extraction Method: SW846 3550
Analyst: JLP
Analysis Method: SW846 8270C
Lab Prep Batch: WG59648
Units: ug/Kgdrywt

CAS#	Compound	Flags	Results	DF	PQL	Adj.PQL	Adj.MDL	
84-74-2	Di-n-butylphthalate	U	430	1.0	330	430	130	
85-68-7	Butylbenzylphthalate	J	130	1.0	330	430	120	
91-94-1	3,3'-Dichlorobenzidine	~~J~~ UJ	650	1.0	500	650	150	CCH
218-01-9	Chrysene		520	1.0	330	430	120	
117-81-7	bis(2-Ethylhexyl)phthalate	J	420	1.0	330	430	130	
117-84-0	Di-n-octylphthalate	U	430	1.0	330	430	270	
367-12-4	2-Fluorophenol		69%					
13127-88-3	Phenol-D6		69%					
4165-60-0	Nitrobenzene-D5		85%					
321-60-8	2-Fluorobiphenyl		82%					
118-79-6	2,4,6-Tribromophenol		48%					
1718-51-0	Terphenyl-D14		95%					

QW
4/14/09

KATAHDIN ANALYTICAL SERVICES
Report of Analytical Results

Client: CH2MHill
Project: TO-009 Lejeune
PO No:
Sample Date: 01/05/09
Received Date: 01/07/09
Extraction Date: 01/08/09
Analysis Date: 22-JAN-2009 16:21
Report Date: 01/27/2009
Matrix: SOIL
% Solids: 85.5

Lab ID: SC0049-35
Client ID: MR08-IS148-2-3-09A
SDG: TO9-26
Extracted by: AC
Extraction Method: SW846 3550
Analyst: JLP
Analysis Method: SW846 8270C
Lab Prep Batch: WG59648
Units: ug/Kgdrywt

CAS#	Compound	Flags	Results	DF	PQL	Adj.PQL	Adj.MDL	
100-52-7	Benzaldehyde	~~U~~ UJ	580	1.0	500	580	140	ICB
108-95-2	Phenol	U	580	1.0	500	580	180	
111-44-4	Bis(2-Chloroethyl)ether	U	380	1.0	330	380	95	
95-57-8	2-Chlorophenol	U	580	1.0	500	580	190	
95-48-7	2-Methylphenol	U	700	1.0	600	700	230	
108-60-1	2,2'-Oxybis(1-chloropropane)	U	380	1.0	330	380	100	
98-86-2	Acetophenone	U	700	1.0	600	700	210	
621-64-7	N-Nitroso-di-n-propylamine	U	380	1.0	330	380	97	
65794-96-9	3&4-Methylphenol	U	700	1.0	600	700	220	
67-72-1	Hexachloroethane	U	380	1.0	330	380	110	
98-95-3	Nitrobenzene	U	380	1.0	330	380	110	
78-59-1	Isophorone	U	380	1.0	330	380	88	
88-75-5	2-Nitrophenol	U	700	1.0	600	700	200	
105-67-9	2,4-Dimethylphenol	U	580	1.0	500	580	190	
111-91-1	Bis(2-Chloroethoxy)methane	U	380	1.0	330	380	110	
120-83-2	2,4-Dichlorophenol	U	580	1.0	500	580	180	
106-47-8	4-Chloroaniline	U	580	1.0	500	580	140	
105-60-2	Caprolactam	U	580	1.0	500	580	170	
59-50-7	4-Chloro-3-Methylphenol	U	580	1.0	500	580	190	
88-06-2	2,4,6-Trichlorophenol	U	580	1.0	500	580	180	
95-95-4	2,4,5-Trichlorophenol	U	580	1.0	500	580	180	
91-58-7	2-Chloronaphthalene	U	380	1.0	330	380	100	
92-52-4	1,1'-Biphenyl	U	380	1.0	330	380	85	
88-74-4	2-Nitroaniline	U	580	1.0	500	580	88	
131-11-3	Dimethyl Phthalate	U	380	1.0	330	380	91	
606-20-2	2,6-Dinitrotoluene	U	380	1.0	330	380	92	
208-96-8	Acenaphthylene	U	380	1.0	330	380	82	
99-09-2	3-Nitroaniline	U	580	1.0	500	580	110	
83-32-9	Acenaphthene	U	380	1.0	330	380	76	
51-28-5	2,4-Dinitrophenol	~~U~~ UJ	1400	1.0	1200	1400	440	CCH
132-64-9	Dibenzofuran	U	380	1.0	330	380	92	
100-02-7	4-Nitrophenol	~~U~~ UJ	1400	1.0	1200	1400	360	CCH
121-14-2	2,4-Dinitrotoluene	U	380	1.0	330	380	99	
84-66-2	Diethylphthalate	U	380	1.0	330	380	94	
7005-72-3	4-Chlorophenyl-phenylether	U	380	1.0	330	380	91	
100-01-6	4-Nitroaniline	~~U~~ UJ	580	1.0	500	580	160	CCH
534-52-1	4,6-Dinitro-2-Methylphenol	U	1400	1.0	1200	1400	390	
86-30-6	N-Nitrosodiphenylamine	U	770	1.0	660	770	260	
101-55-3	4-Bromophenyl-phenylether	U	380	1.0	330	380	99	
1912-24-9	Atrazine	U	380	1.0	330	380	110	
87-86-5	Pentachlorophenol	U	960	1.0	820	960	280	
120-12-7	Anthracene	U	380	1.0	330	380	98	
86-74-8	Carbazole	U	580	1.0	500	580	130	

lw
4/14/09

18

KATAHDIN ANALYTICAL SERVICES
Report of Analytical Results

Client: CH2MHill
Project: TO-009 Lejeune
PO No:
Sample Date: 01/05/09
Received Date: 01/07/09
Extraction Date: 01/08/09
Analysis Date: 22-JAN-2009 16:21
Report Date: 01/27/2009
Matrix: SOIL
% Solids: 85.5

Lab ID: SC0049-35
Client ID: MR08-IS148-2-3-09A
SDG: T09-26
Extracted by: AC
Extraction Method: SW846 3550
Analyst: JLP
Analysis Method: SW846 8270C
Lab Prep Batch: WG59648
Units: ug/Kgdrywt

CAS#	Compound	Flags	Results	DF	PQL	Adj.PQL	Adj.MDL	
84-74-2	Di-n-butylphthalate	U	380	1.0	330	380	120	
85-68-7	Butylbenzylphthalate	U	380	1.0	330	380	110	
91-94-1	3,3'-Dichlorobenzidine	~~U~~ UJ	580	1.0	500	580	130	CCH
218-01-9	Chrysene	U	380	1.0	330	380	110	
117-81-7	bis(2-Ethylhexyl)phthalate	U	380	1.0	330	380	110	
117-84-0	Di-n-octylphthalate	U	380	1.0	330	380	250	
367-12-4	2-Fluorophenol		62%					
13127-88-3	Phenol-D6		57%					
4165-60-0	Nitrobenzene-D5		60%					
321-60-8	2-Fluorobiphenyl		65%					
118-79-6	2,4,6-Tribromophenol		57%					
1718-51-0	Terphenyl-D14		82%					

RW
4/14/09

KATAHDIN ANALYTICAL SERVICES
Report of Analytical Results

Client: CH2MHill
Project: TO-009 Lejeune
PO No:
Sample Date: 01/06/09
Received Date: 01/08/09
Extraction Date: 01/09/09
Analysis Date: 17-JAN-2009 20:03
Report Date: 01/27/2009
Matrix: SOIL
% Solids: 84.0

Lab ID: SC0066-1
Client ID: MR08-SS195-09A
SDG: TO9-26
Extracted by: AC
Extraction Method: SW846 3550
Analyst: JCG
Analysis Method: SW846 8270C
Lab Prep Batch: WG59685
Units: ug/Kgdrywt

CAS#	Compound	Flags	Results	DF	PQL	Adj.PQL	Adj.MDL	
100-52-7	Benzaldehyde	~~U~~ UJ	600	1.0	500	600	140	IIB
108-95-2	Phenol	U	600	1.0	500	600	180	
111-44-4	Bis(2-Chloroethyl)ether	U	390	1.0	330	390	96	
95-57-8	2-Chlorophenol	U	600	1.0	500	600	200	
95-48-7	2-Methylphenol	U	710	1.0	600	710	240	
108-60-1	2,2'-Oxybis(1-chloropropane)	U	390	1.0	330	390	100	
98-86-2	Acetophenone	U	710	1.0	600	710	210	
621-64-7	N-Nitroso-di-n-propylamine	U	390	1.0	330	390	99	
65794-96-9	3&4-Methylphenol	U	710	1.0	600	710	220	
67-72-1	Hexachloroethane	U	390	1.0	330	390	110	
98-95-3	Nitrobenzene	U	390	1.0	330	390	110	
78-59-1	Isophorone	U	390	1.0	330	390	89	
88-75-5	2-Nitrophenol	U	710	1.0	600	710	200	
105-67-9	2,4-Dimethylphenol	U	600	1.0	500	600	200	
111-91-1	Bis(2-Chloroethoxy)methane	U	390	1.0	330	390	110	
120-83-2	2,4-Dichlorophenol	U	600	1.0	500	600	180	
106-47-8	4-Chloroaniline	U	600	1.0	500	600	140	
105-60-2	Caprolactam	U	600	1.0	500	600	170	
59-50-7	4-Chloro-3-Methylphenol	U	600	1.0	500	600	200	
88-06-2	2,4,6-Trichlorophenol	U	600	1.0	500	600	180	
95-95-4	2,4,5-Trichlorophenol	U	600	1.0	500	600	180	
91-58-7	2-Chloronaphthalene	U	390	1.0	330	390	100	
92-52-4	1,1'-Biphenyl	U	390	1.0	330	390	87	
88-74-4	2-Nitroaniline	U	600	1.0	500	600	89	
131-11-3	Dimethyl Phthalate	U	390	1.0	330	390	93	
606-20-2	2,6-Dinitrotoluene	U	390	1.0	330	390	94	
208-96-8	Acenaphthylene	U	390	1.0	330	390	83	
99-09-2	3-Nitroaniline	U	600	1.0	500	600	110	
83-32-9	Acenaphthene	U	390	1.0	330	390	77	
51-28-5	2,4-Dinitrophenol	~~U~~ UJ	1400	1.0	1200	1400	450	CCH
132-64-9	Dibenzofuran	U	390	1.0	330	390	94	
100-02-7	4-Nitrophenol	U	1400	1.0	1200	1400	370	
121-14-2	2,4-Dinitrotoluene	U	390	1.0	330	390	100	
84-66-2	Diethylphthalate	U	390	1.0	330	390	95	
7005-72-3	4-Chlorophenyl-phenylether	U	390	1.0	330	390	93	
100-01-6	4-Nitroaniline	U	600	1.0	500	600	160	
534-52-1	4,6-Dinitro-2-Methylphenol	U	1400	1.0	1200	1400	400	
86-30-6	N-Nitrosodiphenylamine	U	780	1.0	660	780	260	
101-55-3	4-Bromophenyl-phenylether	U	390	1.0	330	390	100	
1912-24-9	Atrazine	U	390	1.0	330	390	110	
87-86-5	Pentachlorophenol	U	980	1.0	820	980	280	
120-12-7	Anthracene	U	390	1.0	330	390	100	
86-74-8	Carbazole	U	600	1.0	500	600	130	

MW 4/14/09

KATAHDIN ANALYTICAL SERVICES
Report of Analytical Results

Client: CH2MHill
Project: TO-009 Lejeune
PO No:
Sample Date: 01/06/09
Received Date: 01/08/09
Extraction Date: 01/09/09
Analysis Date: 17-JAN-2009 20:03
Report Date: 01/27/2009
Matrix: SOIL
% Solids: 84.0

Lab ID: SC0066-1
Client ID: MR08-SS195-09A
SDG: TO9-26
Extracted by: AC
Extraction Method: SW846 3550
Analyst: JCG
Analysis Method: SW846 8270C
Lab Prep Batch: WG59685
Units: ug/Kgdrywt

CAS#	Compound	Flags	Results	DF	PQL	Adj.PQL	Adj.MDL
84-74-2	Di-n-butylphthalate	U	390	1.0	330	390	120
85-68-7	Butylbenzylphthalate	U	390	1.0	330	390	110
91-94-1	3,3'-Dichlorobenzidine	U	600	1.0	500	600	140
218-01-9	Chrysene	U	390	1.0	330	390	110
117-81-7	bis(2-Ethylhexyl)phthalate	U	390	1.0	330	390	120
117-84-0	Di-n-octylphthalate	U	390	1.0	330	390	250
367-12-4	2-Fluorophenol		46%				
13127-88-3	Phenol-D6		40%				
4165-60-0	Nitrobenzene-D5		48%				
321-60-8	2-Fluorobiphenyl		57%				
118-79-6	2,4,6-Tribromophenol		62%				
1718-51-0	Terphenyl-D14		80%				

lew
4/14/09

20

KATAHDIN ANALYTICAL SERVICES
Report of Analytical Results

Client: CH2MHill
Project: TO-009 Lejeune
PO No:
Sample Date: 01/06/09
Received Date: 01/08/09
Extraction Date: 01/09/09
Analysis Date: 17-JAN-2009 20:45
Report Date: 01/27/2009
Matrix: SOIL
% Solids: 92.6

Lab ID: SC0066-3
Client ID: MR08-SS141-09A
SDG: TO9-26
Extracted by: AC
Extraction Method: SW846 3550
Analyst: JCG
Analysis Method: SW846 8270C
Lab Prep Batch: WG59685
Units: ug/Kgdrywt

CAS#	Compound	Flags	Results	DF	PQL	Adj.PQL	Adj.MDL	
100-52-7	Benzaldehyde	~~U~~ UJ	540	1.0	500	540	130	ICB
108-95-2	Phenol	U	540	1.0	500	540	170	
111-44-4	Bis(2-Chloroethyl)ether	U	360	1.0	330	360	87	
95-57-8	2-Chlorophenol	U	540	1.0	500	540	180	
95-48-7	2-Methylphenol	~~U~~ UJ	650	1.0	600	650	220	MSL
108-60-1	2,2'-Oxybis(1-chloropropane)	U	360	1.0	330	360	96	
98-86-2	Acetophenone	U	650	1.0	600	650	190	
621-64-7	N-Nitroso-di-n-propylamine	U	360	1.0	330	360	90	
65794-96-9	3&4-Methylphenol	~~U~~ UJ	650	1.0	600	650	200	MSL
67-72-1	Hexachloroethane	U	360	1.0	330	360	100	
98-95-3	Nitrobenzene	U	360	1.0	330	360	98	
78-59-1	Isophorone	U	360	1.0	330	360	81	
88-75-5	2-Nitrophenol	U	650	1.0	600	650	180	
105-67-9	2,4-Dimethylphenol	~~U~~ R	540	1.0	500	540	180	MSL
111-91-1	Bis(2-Chloroethoxy)methane	U	360	1.0	330	360	100	
120-83-2	2,4-Dichlorophenol	U	540	1.0	500	540	160	
106-47-8	4-Chloroaniline	~~U~~ R	540	1.0	500	540	130	MSL
105-60-2	Caprolactam	U	540	1.0	500	540	160	
59-50-7	4-Chloro-3-Methylphenol	U	540	1.0	500	540	180	
88-06-2	2,4,6-Trichlorophenol	U	540	1.0	500	540	170	
95-95-4	2,4,5-Trichlorophenol	U	540	1.0	500	540	170	
91-58-7	2-Chloronaphthalene	U	360	1.0	330	360	94	
92-52-4	1,1'-Biphenyl	U	360	1.0	330	360	79	
88-74-4	2-Nitroaniline	U	540	1.0	500	540	81	
131-11-3	Dimethyl Phthalate	U	360	1.0	330	360	84	
606-20-2	2,6-Dinitrotoluene	U	360	1.0	330	360	85	
208-96-8	Acenaphthylene	U	360	1.0	330	360	76	
99-09-2	3-Nitroaniline	U	540	1.0	500	540	100	
83-32-9	Acenaphthene	U	360	1.0	330	360	70	
51-28-5	2,4-Dinitrophenol	~~U~~ UJ	1300	1.0	1200	1300	410	CCH
132-64-9	Dibenzofuran	U	360	1.0	330	360	85	
100-02-7	4-Nitrophenol	U	1300	1.0	1200	1300	330	
121-14-2	2,4-Dinitrotoluene	U	360	1.0	330	360	92	
84-66-2	Diethylphthalate	U	360	1.0	330	360	86	
7005-72-3	4-Chlorophenyl-phenylether	U	360	1.0	330	360	84	
100-01-6	4-Nitroaniline	U	540	1.0	500	540	140	
534-52-1	4,6-Dinitro-2-Methylphenol	U	1300	1.0	1200	1300	360	
86-30-6	N-Nitrosodiphenylamine	U	710	1.0	660	710	240	
101-55-3	4-Bromophenyl-phenylether	U	360	1.0	330	360	92	
1912-24-9	Atrazine	U	360	1.0	330	360	98	
87-86-5	Pentachlorophenol	U	880	1.0	820	880	260	
120-12-7	Anthracene	U	360	1.0	330	360	91	
86-74-8	Carbazole	U	540	1.0	500	540	120	

MW 4/14/09

KATAHDIN ANALYTICAL SERVICES
Report of Analytical Results

Client: CH2MHill
Project: TO-009 Lejeune
PO No:
Sample Date: 01/06/09
Received Date: 01/08/09
Extraction Date: 01/09/09
Analysis Date: 17-JAN-2009 20:45
Report Date: 01/27/2009
Matrix: SOIL
% Solids: 92.6

Lab ID: SC0066-3
Client ID: MR08-SS141-09A
SDG: TO9-26
Extracted by: AC
Extraction Method: SW846 3550
Analyst: JCG
Analysis Method: SW846 8270C
Lab Prep Batch: WG59685
Units: ug/Kgdrywt

CAS#	Compound	Flags	Results	DF	PQL	Adj.PQL	Adj.MDL
84-74-2	Di-n-butylphthalate	U	360	1.0	330	360	110
85-68-7	Butylbenzylphthalate	U	360	1.0	330	360	100
91-94-1	3,3'-Dichlorobenzidine	U	540	1.0	500	540	120
218-01-9	Chrysene	U	360	1.0	330	360	100
117-81-7	bis(2-Ethylhexyl)phthalate	J	140	1.0	330	360	100
117-84-0	Di-n-octylphthalate	U	360	1.0	330	360	230
367-12-4	2-Fluorophenol		45%				
13127-88-3	Phenol-D6		42%				
4165-60-0	Nitrobenzene-D5		46%				
321-60-8	2-Fluorobiphenyl		55%				
118-79-6	2,4,6-Tribromophenol		57%				
1718-51-0	Terphenyl-D14		80%				

RW
4/14/09

ENVIRONMENTAL
Data Services, Inc.

POLYNUCLEAR AROMATIC COMPOUNDS BY 8270SIM

USEPA Region IV - Level IV Review

Site: MCB Camp Lejeune, TO-09 SDG #: TO9-27

Client: CH2M HILL, Inc., Virginia Beach, Virginia Date: April 14, 2009

Laboratory: Katahdin Analytical Services, Scarborough, Maine Reviewer: Nancy Weaver

EDS ID	Client Sample ID	Laboratory Sample ID	Matrix
1	MR08-EB01010509-SS	SC0050-2	Water
2	MR08-EB01010509-IS	SC0050-4	Water
3	MR08-EB01010609-SS	SC0068-2	Water
4	MR08-EB01010709-SS	SC0103-2	Water
5	MR08-EB01010809-SS	SC0129-2	Water
6	MR08-EB01010909-SS	SC0150-2	Water
7	MR08-EB01010909-IS	SC0150-4	Water
8	MR08-EB01011009-SS	SC0150-6	Water
9	MR08-FB01011009	SC0150-8	Water
10	MR08-EB01011109-SS	SC0150-10	Water
11	MR08-EB01011209-SS	SC0178-2	Water
12	MR08-EB0101309-SS	SC0212-2	Water
13	MR08-EB01011409-SS	SC0212-4	Water

The USEPA "Contract Laboratory Program National Functional Guidelines for Organic Data Review," October 1999, and professional judgement were used in evaluating the data in this summary report.

Holding Times - All samples were extracted within 7 days for water samples and analyzed within 40 days for all samples.

GC/MS Tuning - All of the DFTPP tunes in the initial and continuing calibrations met the percent relative abundance criteria.

Initial Calibration - The initial calibrations exhibited acceptable %RSD and mean RRF values.

Continuing Calibration - The continuing calibrations exhibited acceptable %D and RRF values except the following.

CCAL Date	Compound	%D/RRF	Qualifier	Affected Samples
01/19/09	Naphthalene	27.49%	J/UJ	4, 5
	Hexachlorobenzene	38.36%	J/UJ	4, 5
	Hexachlorobutadiene	39.30%	J/UJ	4, 5
01/20/09	Naphthalene	27.23%	J/UJ	11
	Ideno (1, 2 ,3-cd) pyrene	43.76%	J/UJ	11
	Dibenzo (a, h) anthracene	29.39%	J/UJ	11
	Hexachlorobutadiene	38.40%	J/UJ	11
	Hexachlorocyclopentadiene	43.43%	J/UJ	11
01/22/09	Dibenzo (a, h) anthracene	31.45%	J/UJ	12, 13
	Hexachlorobenzene	26.56%	J/UJ	12, 13
02/02/09	Hexachlorocyclopentadiene	177.88%	J/UJ	6-10

Surrogates - All samples exhibited acceptable surrogate recoveries except the following.

Sample ID	Surrogate	%R	Qualifier
1	S1-2-Methylnaphthalene-d10	142%	None - All ND
2	S1-2-Methylnaphthalene-d10	132%	None - All ND
3	S1-2-Methylnaphthalene-d10	122%	None - All ND
13	S1-2-Methylnaphthalene-d10	124%	None - All ND

MS/MSD - A MS/MSD sample was not analyzed.

Laboratory Control Sample - The LCS samples exhibited acceptable %R values except the following.

LCS ID	Compound	%R	Qualifier	Affected Samples
WG59674-LCS	Phenanthrene	110%	None	All ND
	Fluoranthene	122%	None	All ND
	Pyrene	106%	None	All ND
WG59749-LCS	Benzo (k) fluoranthene	151%	None	All ND
	Hexachlorocyclopentadiene	22%	J/UJ	4, 5
WG59879-LCS	Benzo (k) fluoranthene	140%	None	All ND
	Hexachlorocyclopentadiene	19%	J/UJ	12, 13

Internal Standard (IS) Area Performance - All internal standards met response and retention time (RT) criteria.

Method Blank - The method blanks were free of contamination.

Field, Equipment Blank - Field QC results are summarized below.

Blank ID	Compound	Conc. ug/L	Action Level ug/kg	Qualifier	Affected Samples
MR08-EB01010509-SS	None - ND	-	-	-	-
MR08-EB01010509-IS	None - ND	-	-	-	-
MR08-EB01010609-SS	None - ND	-	-	-	-
MR08-EB01010709-SS	Phenanthrene	0.060	10	None	See other data packages
MR08-EB01010809-SS	None - ND	-	-	-	-
MR08-EB01010909-SS	None - ND	-	-	-	-
MR08-EB01010909-IS	None - ND	-	-	-	-
MR08-EB01011009-SS	None - ND	-	-	-	-
MR08-FB01011009	None - ND	-	-	-	-
MR08-EB01011109-SS	None - ND	-	-	-	-
MR08-EB01011209-SS	None - ND	-	-	-	-
MR08-EB0101309-SS	Phenanthrene	0.063	10.5	None	See other data packages
	Pyrene	0.079	13.2	None	
MR08-EB01011409-SS	None - ND	-	-	-	-

Field Duplicates - Field duplicate samples were not analyzed.

Compound Quantitation - No discrepancies were identified.

KATAHDIN ANALYTICAL SERVICES
Report of Analytical Results

Client: CH2MHill
Project: TO-009 Lejeune
PO No:
Sample Date: 01/05/09
Received Date: 01/07/09
Extraction Date: 01/08/09
Analysis Date: 17-JAN-2009 13:02
Report Date: 02/06/2009
Matrix: WATER
% Solids: NA

Lab ID: SC0050-2
Client ID: MR08-EB01010509-SS
SDG: TO9-27
Extracted by: CB
Extraction Method: SW846 3510
Analyst: JCG
Analysis Method: SW846 M8270C
Lab Prep Batch: WG59657
Units: ug/L

CAS#	Compound	Flags	Results	DF	PQL	Adj.PQL	Adj.MDL
91-20-3	Naphthalene	U	0.24	1.0	0.25	0.24	0.060
91-57-6	2-Methylnaphthalene	U	0.24	1.0	0.25	0.24	0.073
86-73-7	Fluorene	U	0.24	1.0	0.25	0.24	0.058
85-01-8	Phenanthrene	U	0.24	1.0	0.25	0.24	0.048
206-44-0	Fluoranthene	U	0.24	1.0	0.25	0.24	0.069
129-00-0	Pyrene	U	0.24	1.0	0.25	0.24	0.056
56-55-3	Benzo(a)anthracene	U	0.24	1.0	0.25	0.24	0.043
205-99-2	Benzo(b)fluoranthene	U	0.25	1.0	0.27	0.25	0.084
207-08-9	Benzo(k)fluoranthene	U	0.24	1.0	0.25	0.24	0.046
50-32-8	Benzo(a)pyrene	U	0.24	1.0	0.25	0.24	0.062
193-39-5	Indeno(1,2,3-cd)pyrene	U	0.24	1.0	0.25	0.24	0.049
53-70-3	Dibenzo(a,h)anthracene	U	0.24	1.0	0.25	0.24	0.066
191-24-2	Benzo(g,h,i)perylene	U	0.24	1.0	0.25	0.24	0.061
118-74-1	Hexachlorobenzene	U	0.24	1.0	0.25	0.24	0.052
87-68-3	Hexachlorobutadiene	U	0.25	1.0	0.27	0.25	0.082
77-47-4	Hexachlorocyclopentadiene	U	0.24	1.0	0.25	0.24	0.063
7297-45-2	2-Methylnaphthalene-D10		*142%				
367-12-4	2,4-Dibromophenol		89%				
81103-79-9	Fluorene-d10		97%				
1718-51-1	Pyrene-D10		122%				

lW
4/14/09

2

KATAHDIN ANALYTICAL SERVICES
Report of Analytical Results

Client: CH2MHill
Project: TO-009 Lejeune
PO No:
Sample Date: 01/05/09
Received Date: 01/07/09
Extraction Date: 01/08/09
Analysis Date: 17-JAN-2009 13:42
Report Date: 02/06/2009
Matrix: WATER
% Solids: NA

Lab ID: SC0050-4
Client ID: MR08-EB01010509-IS
SDG: TO9-27
Extracted by: CB
Extraction Method: SW846 3510
Analyst: JCG
Analysis Method: SW846 M8270C
Lab Prep Batch: WG59657
Units: ug/L

CAS#	Compound	Flags	Results	DF	PQL	Adj.PQL	Adj.MDL
91-20-3	Naphthalene	U	0.24	1.0	0.25	0.24	0.060
91-57-6	2-Methylnaphthalene	U	0.24	1.0	0.25	0.24	0.073
86-73-7	Fluorene	U	0.24	1.0	0.25	0.24	0.058
85-01-8	Phenanthrene	U	0.24	1.0	0.25	0.24	0.048
206-44-0	Fluoranthene	U	0.24	1.0	0.25	0.24	0.069
129-00-0	Pyrene	U	0.24	1.0	0.25	0.24	0.056
56-55-3	Benzo(a)anthracene	U	0.24	1.0	0.25	0.24	0.043
205-99-2	Benzo(b)fluoranthene	U	0.25	1.0	0.27	0.25	0.084
207-08-9	Benzo(k)fluoranthene	U	0.24	1.0	0.25	0.24	0.046
50-32-8	Benzo(a)pyrene	U	0.24	1.0	0.25	0.24	0.062
193-39-5	Indeno(1,2,3-cd)pyrene	U	0.24	1.0	0.25	0.24	0.049
53-70-3	Dibenzo(a,h)anthracene	U	0.24	1.0	0.25	0.24	0.066
191-24-2	Benzo(g,h,i)perylene	U	0.24	1.0	0.25	0.24	0.061
118-74-1	Hexachlorobenzene	U	0.24	1.0	0.25	0.24	0.052
87-68-3	Hexachlorobutadiene	U	0.25	1.0	0.27	0.25	0.082
77-47-4	Hexachlorocyclopentadiene	U	0.24	1.0	0.25	0.24	0.063
7297-45-2	2-Methylnaphthalene-D10		*132%				
367-12-4	2,4-Dibromophenol		72%				
81103-79-9	Fluorene-d10		89%				
1718-51-1	Pyrene-D10		132%				

LLD 4/14/09

3

KATAHDIN ANALYTICAL SERVICES
Report of Analytical Results

Client: CH2MHill
Project: TO-009 Lejeune
PO No:
Sample Date: 01/06/09
Received Date: 01/08/09
Extraction Date: 01/09/09
Analysis Date: 17-JAN-2009 14:23
Report Date: 02/06/2009
Matrix: WATER
% Solids: NA

Lab ID: SC0068-2
Client ID: MR08-EB01010609-SS
SDG: TO9-27
Extracted by: CB
Extraction Method: SW846 3510
Analyst: JCG
Analysis Method: SW846 M8270C
Lab Prep Batch: WG59674
Units: ug/L

CAS#	Compound	Flags	Results	DF	PQL	Adj.PQL	Adj.MDL
91-20-3	Naphthalene	U	0.24	1.0	0.25	0.24	0.060
91-57-6	2-Methylnaphthalene	U	0.24	1.0	0.25	0.24	0.073
86-73-7	Fluorene	U	0.24	1.0	0.25	0.24	0.058
85-01-8	Phenanthrene	U	0.24	1.0	0.25	0.24	0.048
206-44-0	Fluoranthene	U	0.24	1.0	0.25	0.24	0.069
129-00-0	Pyrene	U	0.24	1.0	0.25	0.24	0.056
56-55-3	Benzo(a)anthracene	U	0.24	1.0	0.25	0.24	0.043
205-99-2	Benzo(b)fluoranthene	U	0.25	1.0	0.27	0.25	0.084
207-08-9	Benzo(k)fluoranthene	U	0.24	1.0	0.25	0.24	0.046
50-32-8	Benzo(a)pyrene	U	0.24	1.0	0.25	0.24	0.062
193-39-5	Indeno(1,2,3-cd)pyrene	U	0.24	1.0	0.25	0.24	0.049
53-70-3	Dibenzo(a,h)anthracene	U	0.24	1.0	0.25	0.24	0.066
191-24-2	Benzo(g,h,i)perylene	U	0.24	1.0	0.25	0.24	0.061
118-74-1	Hexachlorobenzene	U	0.24	1.0	0.25	0.24	0.052
87-68-3	Hexachlorobutadiene	U	0.25	1.0	0.27	0.25	0.082
77-47-4	Hexachlorocyclopentadiene	U	0.24	1.0	0.25	0.24	0.063
7297-45-2	2-Methylnaphthalene-D10		*122%				
367-12-4	2,4-Dibromophenol		81%				
81103-79-9	Fluorene-d10		102%				
1718-51-1	Pyrene-D10		134%				

DW
4/14/09

4

KATAHDIN ANALYTICAL SERVICES
Report of Analytical Results

Client: CH2MHill
Project: TO-009 Lejeune
PO No:
Sample Date: 01/07/09
Received Date: 01/09/09
Extraction Date: 01/13/09
Analysis Date: 19-JAN-2009 13:49
Report Date: 02/06/2009
Matrix: WATER
% Solids: NA

Lab ID: SC0103-2
Client ID: MR08-EB01010709-SS
SDG: TO9-27
Extracted by: CB
Extraction Method: SW846 3510
Analyst: JCG
Analysis Method: SW846 M8270C
Lab Prep Batch: WG59749
Units: ug/L

CAS#	Compound	Flags	Results	DF	PQL	Adj.PQL	Adj.MDL	
91-20-3	Naphthalene	~~U~~ UJ	0.24	1.0	0.25	0.24	0.060	CCH
91-57-6	2-Methylnaphthalene	U	0.24	1.0	0.25	0.24	0.073	
86-73-7	Fluorene	U	0.24	1.0	0.25	0.24	0.058	
85-01-8	Phenanthrene	J	0.060	1.0	0.25	0.24	0.048	
206-44-0	Fluoranthene	U	0.24	1.0	0.25	0.24	0.069	
129-00-0	Pyrene	U	0.24	1.0	0.25	0.24	0.056	
56-55-3	Benzo(a)anthracene	U	0.24	1.0	0.25	0.24	0.043	
205-99-2	Benzo(b)fluoranthene	U	0.25	1.0	0.27	0.25	0.084	
207-08-9	Benzo(k)fluoranthene	U	0.24	1.0	0.25	0.24	0.046	
50-32-8	Benzo(a)pyrene	U	0.24	1.0	0.25	0.24	0.062	
193-39-5	Indeno(1,2,3-cd)pyrene	U	0.24	1.0	0.25	0.24	0.049	
53-70-3	Dibenzo(a,h)anthracene	U	0.24	1.0	0.25	0.24	0.066	
191-24-2	Benzo(g,h,i)perylene	U	0.24	1.0	0.25	0.24	0.061	
118-74-1	Hexachlorobenzene	~~U~~ UJ	0.24	1.0	0.25	0.24	0.052	CCH
87-68-3	Hexachlorobutadiene	~~U~~ UJ	0.25	1.0	0.27	0.25	0.082	CCH
77-47-4	Hexachlorocyclopentadiene	~~U~~ UJ	0.24	1.0	0.25	0.24	0.063	BSL
7297-45-2	2-Methylnaphthalene-D10		73%					
367-12-4	2,4-Dibromophenol		71%					
81103-79-9	Fluorene-d10		87%					
1718-51-1	Pyrene-D10		116%					

lew
4/14/09

KATAHDIN ANALYTICAL SERVICES
Report of Analytical Results

Client: CH2MHill
Project: TO-009 Lejeune
PO No:
Sample Date: 01/08/09
Received Date: 01/10/09
Extraction Date: 01/13/09
Analysis Date: 19-JAN-2009 14:29
Report Date: 02/06/2009
Matrix: WATER
% Solids: NA

Lab ID: SC0129-2
Client ID: MR08-EB-01010809-SS
SDG: TO9-27
Extracted by: CB
Extraction Method: SW846 3510
Analyst: JCG
Analysis Method: SW846 M8270C
Lab Prep Batch: WG59749
Units: ug/L

CAS#	Compound	Flags	Results	DF	PQL	Adj.PQL	Adj.MDL	
91-20-3	Naphthalene	~~U~~ UJ	0.24	1.0	0.25	0.24	0.060	CCH
91-57-6	2-Methylnaphthalene	U	0.24	1.0	0.25	0.24	0.073	
86-73-7	Fluorene	U	0.24	1.0	0.25	0.24	0.058	
85-01-8	Phenanthrene	U	0.24	1.0	0.25	0.24	0.048	
206-44-0	Fluoranthene	U	0.24	1.0	0.25	0.24	0.069	
129-00-0	Pyrene	U	0.24	1.0	0.25	0.24	0.056	
56-55-3	Benzo(a)anthracene	U	0.24	1.0	0.25	0.24	0.043	
205-99-2	Benzo(b)fluoranthene	U	0.25	1.0	0.27	0.25	0.084	
207-08-9	Benzo(k)fluoranthene	U	0.24	1.0	0.25	0.24	0.046	
50-32-8	Benzo(a)pyrene	U	0.24	1.0	0.25	0.24	0.062	
193-39-5	Indeno(1,2,3-cd)pyrene	U	0.24	1.0	0.25	0.24	0.049	
53-70-3	Dibenzo(a,h)anthracene	U	0.24	1.0	0.25	0.24	0.066	
191-24-2	Benzo(g,h,i)perylene	U	0.24	1.0	0.25	0.24	0.061	
118-74-1	Hexachlorobenzene	~~U~~ UJ	0.24	1.0	0.25	0.24	0.052	CCH
87-68-3	Hexachlorobutadiene	~~U~~ UJ	0.25	1.0	0.27	0.25	0.082	CCH
77-47-4	Hexachlorocyclopentadiene	~~U~~ UJ	0.24	1.0	0.25	0.24	0.063	BSL
7297-45-2	2-Methylnaphthalene-D10		65%					
367-12-4	2,4-Dibromophenol		59%					
81103-79-9	Fluorene-d10		75%					
1718-51-1	Pyrene-D10		109%					

LW
4/14/09

6

KATAHDIN ANALYTICAL SERVICES
Report of Analytical Results

Client: CH2MHill
Project: TO-009 Lejeune
PO No:
Sample Date: 01/09/09
Received Date: 01/13/09
Extraction Date: 01/14/09
Analysis Date: 02-FEB-2009 13:19
Report Date: 02/06/2009
Matrix: WATER
% Solids: NA

Lab ID: SC0150-2
Client ID: MR08-EB01010909-SS
SDG: TO9-27
Extracted by: CB
Extraction Method: SW846 3510
Analyst: JLP
Analysis Method: SW846 M8270C
Lab Prep Batch: WG59788
Units: ug/L

CAS#	Compound	Flags	Results	DF	PQL	Adj.PQL	Adj.MDL	
91-20-3	Naphthalene	U	0.24	1.0	0.25	0.24	0.063	
91-57-6	2-Methylnaphthalene	U	0.24	1.0	0.25	0.24	0.075	
86-73-7	Fluorene	U	0.24	1.0	0.25	0.24	0.060	
85-01-8	Phenanthrene	U	0.24	1.0	0.25	0.24	0.050	
206-44-0	Fluoranthene	U	0.24	1.0	0.25	0.24	0.072	
129-00-0	Pyrene	U	0.24	1.0	0.25	0.24	0.058	
56-55-3	Benzo(a)anthracene	U	0.24	1.0	0.25	0.24	0.045	
205-99-2	Benzo(b)fluoranthene	U	0.26	1.0	0.27	0.26	0.087	
207-08-9	Benzo(k)fluoranthene	U	0.24	1.0	0.25	0.24	0.048	
50-32-8	Benzo(a)pyrene	U	0.24	1.0	0.25	0.24	0.065	
193-39-5	Indeno(1,2,3-cd)pyrene	U	0.24	1.0	0.25	0.24	0.051	
53-70-3	Dibenzo(a,h)anthracene	U	0.24	1.0	0.25	0.24	0.069	
191-24-2	Benzo(g,h,i)perylene	U	0.24	1.0	0.25	0.24	0.064	
118-74-1	Hexachlorobenzene	U	0.24	1.0	0.25	0.24	0.054	
87-68-3	Hexachlorobutadiene	U	0.26	1.0	0.27	0.26	0.085	
77-47-4	Hexachlorocyclopentadiene	~~U~~ UJ	0.24	1.0	0.25	0.24	0.066	CCH
7297-45-2	2-Methylnaphthalene-D10		78%					
367-12-4	2,4-Dibromophenol		94%					
81103-79-9	Fluorene-d10		82%					
1718-51-1	Pyrene-D10		134%					

LW
4/14/09

7

KATAHDIN ANALYTICAL SERVICES
Report of Analytical Results

Client: CH2MHill
Project: TO-009 Lejeune
PO No:
Sample Date: 01/09/09
Received Date: 01/13/09
Extraction Date: 01/14/09
Analysis Date: 02-FEB-2009 13:59
Report Date: 02/06/2009
Matrix: WATER
% Solids: NA

Lab ID: SC0150-4
Client ID: MR08-EB01010909-IS
SDG: TO9-27
Extracted by: CB
Extraction Method: SW846 3510
Analyst: JLP
Analysis Method: SW846 M8270C
Lab Prep Batch: WG59788
Units: ug/L

CAS#	Compound	Flags	Results	DF	PQL	Adj.PQL	Adj.MDL	
91-20-3	Naphthalene	U	0.24	1.0	0.25	0.24	0.060	
91-57-6	2-Methylnaphthalene	U	0.24	1.0	0.25	0.24	0.073	
86-73-7	Fluorene	U	0.24	1.0	0.25	0.24	0.058	
85-01-8	Phenanthrene	U	0.24	1.0	0.25	0.24	0.048	
206-44-0	Fluoranthene	U	0.24	1.0	0.25	0.24	0.069	
129-00-0	Pyrene	U	0.24	1.0	0.25	0.24	0.056	
56-55-3	Benzo(a)anthracene	U	0.24	1.0	0.25	0.24	0.043	
205-99-2	Benzo(b)fluoranthene	U	0.25	1.0	0.27	0.25	0.084	
207-08-9	Benzo(k)fluoranthene	U	0.24	1.0	0.25	0.24	0.046	
50-32-8	Benzo(a)pyrene	U	0.24	1.0	0.25	0.24	0.062	
193-39-5	Indeno(1,2,3-cd)pyrene	U	0.24	1.0	0.25	0.24	0.049	
53-70-3	Dibenzo(a,h)anthracene	U	0.24	1.0	0.25	0.24	0.066	
191-24-2	Benzo(g,h,i)perylene	U	0.24	1.0	0.25	0.24	0.061	
118-74-1	Hexachlorobenzene	U	0.24	1.0	0.25	0.24	0.052	
87-68-3	Hexachlorobutadiene	U	0.25	1.0	0.27	0.25	0.082	
77-47-4	Hexachlorocyclopentadiene	~~U~~ UJ	0.24	1.0	0.25	0.24	0.063	CCH
7297-45-2	2-Methylnaphthalene-D10		67%					
367-12-4	2,4-Dibromophenol		73%					
81103-79-9	Fluorene-d10		80%					
1718-51-1	Pyrene-D10		108%					

fw 4/14/09

8

KATAHDIN ANALYTICAL SERVICES
Report of Analytical Results

Client: CH2MHill
Project: TO-009 Lejeune
PO No:
Sample Date: 01/10/09
Received Date: 01/13/09
Extraction Date: 01/14/09
Analysis Date: 02-FEB-2009 14:39
Report Date: 02/06/2009
Matrix: WATER
% Solids: NA

Lab ID: SC0150-6
Client ID: MR08-EB01011009-SS
SDG: TO9-27
Extracted by: CB
Extraction Method: SW846 3510
Analyst: JLP
Analysis Method: SW846 M8270C
Lab Prep Batch: WG59788
Units: ug/L

CAS#	Compound	Flags	Results	DF	PQL	Adj.PQL	Adj.MDL	
91-20-3	Naphthalene	U	0.24	1.0	0.25	0.24	0.060	
91-57-6	2-Methylnaphthalene	U	0.24	1.0	0.25	0.24	0.073	
86-73-7	Fluorene	U	0.24	1.0	0.25	0.24	0.058	
85-01-8	Phenanthrene	U	0.24	1.0	0.25	0.24	0.048	
206-44-0	Fluoranthene	U	0.24	1.0	0.25	0.24	0.069	
129-00-0	Pyrene	U	0.24	1.0	0.25	0.24	0.056	
56-55-3	Benzo(a)anthracene	U	0.24	1.0	0.25	0.24	0.043	
205-99-2	Benzo(b)fluoranthene	U	0.25	1.0	0.27	0.25	0.084	
207-08-9	Benzo(k)fluoranthene	U	0.24	1.0	0.25	0.24	0.046	
50-32-8	Benzo(a)pyrene	U	0.24	1.0	0.25	0.24	0.062	
193-39-5	Indeno(1,2,3-cd)pyrene	U	0.24	1.0	0.25	0.24	0.049	
53-70-3	Dibenzo(a,h)anthracene	U	0.24	1.0	0.25	0.24	0.066	
191-24-2	Benzo(g,h,i)perylene	U	0.24	1.0	0.25	0.24	0.061	
118-74-1	Hexachlorobenzene	U	0.24	1.0	0.25	0.24	0.052	
87-68-3	Hexachlorobutadiene	U	0.25	1.0	0.27	0.25	0.082	
77-47-4	Hexachlorocyclopentadiene	~~U~~ UJ	0.24	1.0	0.25	0.24	0.063	CCH
7297-45-2	2-Methylnaphthalene-D10		85%					
367-12-4	2,4-Dibromophenol		100%					
81103-79-9	Fluorene-d10		92%					
1718-51-1	Pyrene-D10		134%					

MW 4/14/09

KATAHDIN ANALYTICAL SERVICES
Report of Analytical Results

Client: CH2MHill
Project: TO-009 Lejeune
PO No:
Sample Date: 01/10/09
Received Date: 01/13/09
Extraction Date: 01/14/09
Analysis Date: 02-FEB-2009 15:19
Report Date: 02/06/2009
Matrix: WATER
% Solids: NA

Lab ID: SC0150-8
Client ID: MR08-FB01011009
SDG: TO9-27
Extracted by: CB
Extraction Method: SW846 3510
Analyst: JLP
Analysis Method: SW846 M8270C
Lab Prep Batch: WG59788
Units: ug/L

CAS#	Compound	Flags	Results	DF	PQL	Adj.PQL	Adj.MDL	
91-20-3	Naphthalene	U	0.24	1.0	0.25	0.24	0.060	
91-57-6	2-Methylnaphthalene	U	0.24	1.0	0.25	0.24	0.073	
86-73-7	Fluorene	U	0.24	1.0	0.25	0.24	0.058	
85-01-8	Phenanthrene	U	0.24	1.0	0.25	0.24	0.048	
206-44-0	Fluoranthene	U	0.24	1.0	0.25	0.24	0.069	
129-00-0	Pyrene	U	0.24	1.0	0.25	0.24	0.056	
56-55-3	Benzo(a)anthracene	U	0.24	1.0	0.25	0.24	0.043	
205-99-2	Benzo(b)fluoranthene	U	0.25	1.0	0.27	0.25	0.084	
207-08-9	Benzo(k)fluoranthene	U	0.24	1.0	0.25	0.24	0.046	
50-32-8	Benzo(a)pyrene	U	0.24	1.0	0.25	0.24	0.062	
193-39-5	Indeno(1,2,3-cd)pyrene	U	0.24	1.0	0.25	0.24	0.049	
53-70-3	Dibenzo(a,h)anthracene	U	0.24	1.0	0.25	0.24	0.066	
191-24-2	Benzo(g,h,i)perylene	U	0.24	1.0	0.25	0.24	0.061	
118-74-1	Hexachlorobenzene	U	0.24	1.0	0.25	0.24	0.052	
87-68-3	Hexachlorobutadiene	U	0.25	1.0	0.27	0.25	0.082	
77-47-4	Hexachlorocyclopentadiene	~~U~~ UJ	0.24	1.0	0.25	0.24	0.063	CCH
7297-45-2	2-Methylnaphthalene-D10		77%					
367-12-4	2,4-Dibromophenol		85%					
81103-79-9	Fluorene-d10		86%					
1718-51-1	Pyrene-D10		106%					

MW
4/14/09

10

KATAHDIN ANALYTICAL SERVICES
Report of Analytical Results

Client: CH2MHill
Project: TO-009 Lejeune
PO No:
Sample Date: 01/11/09
Received Date: 01/13/09
Extraction Date: 01/14/09
Analysis Date: 02-FEB-2009 16:00
Report Date: 02/06/2009
Matrix: WATER
% Solids: NA

Lab ID: SC0150-10
Client ID: MR08-EB01011109-SS
SDG: TO9-27
Extracted by: CB
Extraction Method: SW846 3510
Analyst: JLP
Analysis Method: SW846 M8270C
Lab Prep Batch: WG59788
Units: ug/L

CAS#	Compound	Flags	Results	DF	PQL	Adj.PQL	Adj.MDL	
91-20-3	Naphthalene	U	0.24	1.0	0.25	0.24	0.060	
91-57-6	2-Methylnaphthalene	U	0.24	1.0	0.25	0.24	0.073	
86-73-7	Fluorene	U	0.24	1.0	0.25	0.24	0.058	
85-01-8	Phenanthrene	U	0.24	1.0	0.25	0.24	0.048	
206-44-0	Fluoranthene	U	0.24	1.0	0.25	0.24	0.069	
129-00-0	Pyrene	U	0.24	1.0	0.25	0.24	0.056	
56-55-3	Benzo(a)anthracene	U	0.24	1.0	0.25	0.24	0.043	
205-99-2	Benzo(b)fluoranthene	U	0.25	1.0	0.27	0.25	0.084	
207-08-9	Benzo(k)fluoranthene	U	0.24	1.0	0.25	0.24	0.046	
50-32-8	Benzo(a)pyrene	U	0.24	1.0	0.25	0.24	0.062	
193-39-5	Indeno(1,2,3-cd)pyrene	U	0.24	1.0	0.25	0.24	0.049	
53-70-3	Dibenzo(a,h)anthracene	U	0.24	1.0	0.25	0.24	0.066	
191-24-2	Benzo(g,h,i)perylene	U	0.24	1.0	0.25	0.24	0.061	
118-74-1	Hexachlorobenzene	U	0.24	1.0	0.25	0.24	0.052	
87-68-3	Hexachlorobutadiene	U	0.25	1.0	0.27	0.25	0.082	
77-47-4	Hexachlorocyclopentadiene	~~U~~ UJ	0.24	1.0	0.25	0.24	0.063	CCH
7297-45-2	2-Methylnaphthalene-D10		89%					
367-12-4	2,4-Dibromophenol		101%					
81103-79-9	Fluorene-d10		94%					
1718-51-1	Pyrene-D10		98%					

CW
4/14/09

11

KATAHDIN ANALYTICAL SERVICES
Report of Analytical Results

Client: CH2MHill
Project: TO-009 Lejeune
PO No:
Sample Date: 01/12/09
Received Date: 01/14/09
Extraction Date: 01/15/09
Analysis Date: 20-JAN-2009 21:24
Report Date: 02/06/2009
Matrix: WATER
% Solids: NA

Lab ID: SC0178-2
Client ID: MR08-EB01011209-SS
SDG: TO9-27
Extracted by: CB
Extraction Method: SW846 3510
Analyst: JCG
Analysis Method: SW846 M8270C
Lab Prep Batch: WG59813
Units: ug/L

CAS#	Compound	Flags	Results	DF	PQL	Adj.PQL	Adj.MDL	
91-20-3	Naphthalene	~~U~~ UJ	0.24	1.0	0.25	0.24	0.060	CCH
91-57-6	2-Methylnaphthalene	U	0.24	1.0	0.25	0.24	0.073	
86-73-7	Fluorene	U	0.24	1.0	0.25	0.24	0.058	
85-01-8	Phenanthrene	U	0.24	1.0	0.25	0.24	0.048	
206-44-0	Fluoranthene	U	0.24	1.0	0.25	0.24	0.069	
129-00-0	Pyrene	U	0.24	1.0	0.25	0.24	0.056	
56-55-3	Benzo(a)anthracene	U	0.24	1.0	0.25	0.24	0.043	
205-99-2	Benzo(b)fluoranthene	U	0.25	1.0	0.27	0.25	0.084	
207-08-9	Benzo(k)fluoranthene	U	0.24	1.0	0.25	0.24	0.046	
50-32-8	Benzo(a)pyrene	U	0.24	1.0	0.25	0.24	0.062	
193-39-5	Indeno(1,2,3-cd)pyrene	~~U~~ UJ	0.24	1.0	0.25	0.24	0.049	CCH
53-70-3	Dibenzo(a,h)anthracene	~~U~~ UJ	0.24	1.0	0.25	0.24	0.066	CCH
191-24-2	Benzo(g,h,i)perylene	U	0.24	1.0	0.25	0.24	0.061	
118-74-1	Hexachlorobenzene	U	0.24	1.0	0.25	0.24	0.052	
87-68-3	Hexachlorobutadiene	~~U~~ UJ	0.25	1.0	0.27	0.25	0.082	CCH
77-47-4	Hexachlorocyclopentadiene	~~U~~ UJ	0.24	1.0	0.25	0.24	0.063	CCH
7297-45-2	2-Methylnaphthalene-D10		70%					
367-12-4	2,4-Dibromophenol		68%					
81103-79-9	Fluorene-d10		78%					
1718-51-1	Pyrene-D10		109%					

lw 4/14/09

12

KATAHDIN ANALYTICAL SERVICES
Report of Analytical Results

Client: CH2MHill
Project: TO-009 Lejeune
PO No:
Sample Date: 01/13/09
Received Date: 01/15/09
Extraction Date: 01/16/09
Analysis Date: 22-JAN-2009 10:38
Report Date: 02/06/2009
Matrix: WATER
% Solids: NA

Lab ID: SC0212-2
Client ID: MR08-EB0101309-SS
SDG: TO9-27
Extracted by: KF
Extraction Method: SW846 3520
Analyst: JLP
Analysis Method: SW846 M8270C
Lab Prep Batch: WG59879
Units: ug/L

CAS#	Compound	Flags	Results	DF	PQL	Adj.PQL	Adj.MDL	
91-20-3	Naphthalene	U	0.24	1.0	0.25	0.24	0.060	
91-57-6	2-Methylnaphthalene	U	0.24	1.0	0.25	0.24	0.073	
86-73-7	Fluorene	U	0.24	1.0	0.25	0.24	0.058	
85-01-8	Phenanthrene	J	0.063	1.0	0.25	0.24	0.048	
206-44-0	Fluoranthene	U	0.24	1.0	0.25	0.24	0.069	
129-00-0	Pyrene	J	0.079	1.0	0.25	0.24	0.056	
56-55-3	Benzo(a)anthracene	U	0.24	1.0	0.25	0.24	0.043	
205-99-2	Benzo(b)fluoranthene	U	0.25	1.0	0.27	0.25	0.084	
207-08-9	Benzo(k)fluoranthene	U	0.24	1.0	0.25	0.24	0.046	
50-32-8	Benzo(a)pyrene	U	0.24	1.0	0.25	0.24	0.062	
193-39-5	Indeno(1,2,3-cd)pyrene	U	0.24	1.0	0.25	0.24	0.049	
53-70-3	Dibenzo(a,h)anthracene	~~U~~ UJ	0.24	1.0	0.25	0.24	0.066	CCH
191-24-2	Benzo(g,h,i)perylene	U	0.24	1.0	0.25	0.24	0.061	
118-74-1	Hexachlorobenzene	~~U~~ UJ	0.24	1.0	0.25	0.24	0.052	CCH
87-68-3	Hexachlorobutadiene	U	0.25	1.0	0.27	0.25	0.082	
77-47-4	Hexachlorocyclopentadiene	~~U~~ UJ	0.24	1.0	0.25	0.24	0.063	BSL
7297-45-2	2-Methylnaphthalene-D10		91%					
367-12-4	2,4-Dibromophenol		* 3%					
81103-79-9	Fluorene-d10		69%					
1718-51-1	Pyrene-D10		118%					

lew
4/14/09

KATAHDIN ANALYTICAL SERVICES
Report of Analytical Results

Client: CH2MHill
Project: TO-009 Lejeune
PO No:
Sample Date: 01/14/09
Received Date: 01/15/09
Extraction Date: 01/16/09
Analysis Date: 22-JAN-2009 11:18
Report Date: 02/06/2009
Matrix: WATER
% Solids: NA

Lab ID: SC0212-4
Client ID: MR08-EB01011409-SS
SDG: TO9-27
Extracted by: KF
Extraction Method: SW846 3520
Analyst: JLP
Analysis Method: SW846 M8270C
Lab Prep Batch: WG59879
Units: ug/L

CAS#	Compound	Flags	Results	DF	PQL	Adj.PQL	Adj.MDL	
91-20-3	Naphthalene	U	0.24	1.0	0.25	0.24	0.060	
91-57-6	2-Methylnaphthalene	U	0.24	1.0	0.25	0.24	0.073	
86-73-7	Fluorene	U	0.24	1.0	0.25	0.24	0.058	
85-01-8	Phenanthrene	U	0.24	1.0	0.25	0.24	0.048	
206-44-0	Fluoranthene	U	0.24	1.0	0.25	0.24	0.069	
129-00-0	Pyrene	U	0.24	1.0	0.25	0.24	0.056	
56-55-3	Benzo(a)anthracene	U	0.24	1.0	0.25	0.24	0.043	
205-99-2	Benzo(b)fluoranthene	U	0.25	1.0	0.27	0.25	0.084	
207-08-9	Benzo(k)fluoranthene	U	0.24	1.0	0.25	0.24	0.046	
50-32-8	Benzo(a)pyrene	U	0.24	1.0	0.25	0.24	0.062	
193-39-5	Indeno(1,2,3-cd)pyrene	U	0.24	1.0	0.25	0.24	0.049	
53-70-3	Dibenzo(a,h)anthracene	~~U~~ UJ	0.24	1.0	0.25	0.24	0.066	CCH
191-24-2	Benzo(g,h,i)perylene	U	0.24	1.0	0.25	0.24	0.061	
118-74-1	Hexachlorobenzene	~~U~~ UJ	0.24	1.0	0.25	0.24	0.052	CCH
87-68-3	Hexachlorobutadiene	U	0.25	1.0	0.27	0.25	0.082	
77-47-4	Hexachlorocyclopentadiene	~~U~~ UJ	0.24	1.0	0.25	0.24	0.063	BSL
7297-45-2	2-Methylnaphthalene-D10		*124%					
367-12-4	2,4-Dibromophenol		90%					
81103-79-9	Fluorene-d10		88%					
1718-51-1	Pyrene-D10		90%					

JLW 4/14/09

ENVIRONMENTAL
Data Services, Inc.

SEMIVOLATILE ORGANIC COMPOUNDS
USEPA Region IV - Level IV Review

Site: MCB Camp Lejeune, TO-09 SDG #: TO9-27

Client: CH2M HILL, Inc., Virginia Beach, Virginia Date: April 14, 2009

Laboratory: Katahdin Analytical Services, Scarborough, Maine Reviewer: Nancy Weaver

EDS ID	Client Sample ID	Laboratory Sample ID	Matrix
1	MR08-EB01010509-SS	SC0050-1	Water
2	MR08-EB01010509-IS	SC0050-3	Water
3	MR08-EB01010609-SS	SC0068-1	Water
4	MR08-EB01010709-SS	SC0103-1	Water
5	MR08-EB01010809-SS	SC0129-1	Water
6	MR08-EB01010909-SS	SC0150-1	Water
7	MR08-EB01010909-IS	SC0150-3	Water
8	MR08-EB01011009-SS	SC0150-5	Water
9	MR08-FB01011009	SC0150-7	Water
10	MR08-EB01011109-SS	SC0150-9	Water
11	MR08-EB01011209-SS	SC0178-1	Water
12	MR08-EB0101309-SS	SC0212-1	Water
12RE	MR08-EB0101309-SSRE	SC0212-1RE	Water
13	MR08-EB01011409-SS	SC0212-3	Water

The USEPA "Contract Laboratory Program National Functional Guidelines for Organic Data Review," October 1999, and professional judgement were used in evaluating the data in this summary report.

Holding Times - All samples were extracted within 7 days for water samples and analyzed within 40 days for all samples.

GC/MS Tuning - All of the DFTPP tunes in the initial and continuing calibrations met the percent relative abundance criteria.

Initial Calibration - The initial calibrations exhibited acceptable %RSD and mean RRF values except the following.

ICAL Date	Compound	%RSD/RRF	Qualifier	Affected Samples
01/12/09	Benzaldehyde	90.97%	J/UJ	12, 13

ICAL Date	Compound	%RSD/RRF	Qualifier	Affected Samples
01/13/09	Benzaldehyde	44.95%	J/UJ	1, 2, 4, 5

Continuing Calibration - The continuing calibrations exhibited acceptable %D and RRF values except the following.

CCAL Date	Compound	%D/RRF	Qualifier	Affected Samples
01/17/09	Benzaldehyde	72.91%	None	See ICAL
	3, 3'-Dichlorobenzidine	29.30%	J/UJ	1-3
	Di-n-octylphthalate	29.48%	J/UJ	1-3
01/19/09	Benzaldehyde	61.47%	None	See ICAL
	N-Nitroso-di-n-propylamine	25.40%	J/UJ	4, 5
	Dimethylphthalate	26.14%	J/UJ	4, 5
	3, 3'-Dichlorobenzidine	29.49%	J/UJ	4, 5
01/21/09	Benzaldehyde	80.23%	J/UJ	11
	Di-n-octylphthalate	29.04%	J/UJ	11
01/22/09	Benzaldehyde	41.34%	None	See ICAL
	2, 4-Dinitrophenol	32.52%	J/UJ	13
	4-Nitrophenol	30.62%	J/UJ	13
	4-Nitroaniline	33.46%	J/UJ	12, 13
	3, 3'-Dichlorobenzidine	33.35%	J/UJ	12, 13
01/27/09	4-Nitrophenol	32.69%	J/UJ	6-10, 12RE

Surrogates - All samples exhibited acceptable surrogate recoveries except the following.

Sample ID	Surrogate	%R	Qualifier
12	S1-2-Fluorophenol	0%	J/R - All acid compounds
	S2-Phenol-d6	0%	J/R - All acid compounds
	S5-2,4,6-Tribromophenol	0%	J/R - All acid compounds

MS/MSD - A MS/MSD sample was not analyzed.

Laboratory Control Sample - The LCS samples exhibited acceptable %R values except the following.

LCS ID	Compound	%R	Qualifier	Affected Samples
WG59880-LCS	Benzaldehyde	380%	None	All ND
	Caprolactam	89%	None	All ND
WG59656-LCS	Benzaldehyde	103%	None	All ND
WG59675-LCS	Benzaldehyde	85%	J/UJ	3
WG59748-LCS	Acetophenone	142%	None	All ND
	n-Nitrosodiphenylamine	171%	None	All ND

Internal Standard (IS) Area Performance - All internal standards met response and retention time (RT) criteria.

Method Blank - The method blanks exhibited the following contamination.

Blank ID	Compound	Conc. ug/L	Action Level ug/L	Qualifier	Affected Samples
WG59789-BLANK	bis (2-Ethylhexyl)phthalate	2	20	U	9, 10
WG59812-BLANK	Diethylphthalate	2	20	U	11

Field, Equipment Blank - Field QC results are summarized below.

Blank ID	Compound	Conc. ug/L	Action Level ug/kg	Qualifier	Affected Samples
MR08-EB01010509-SS	Diethylphthalate	2	666	None	Associated samples in other data packages
	Di-n-butylphthalate	2	666		
MR08-EB01010509-IS	Diethylphthalate	2	666		
	Di-n-butylphthalate	2	666		
MR08-EB01010609-SS	Diethylphthalate	2	666		
	Di-n-butylphthalate	1	333		
MR08-EB01010709-SS	None - ND	-	-	-	-
MR08-EB01010809-SS	None - ND	-	-	-	-
MR08-EB01010909-SS	None - ND	-	-	-	-
MR08-EB01010909-IS	None - ND	-	-	-	-
MR08-EB01011009-SS	None - ND	-	-	-	-
MR08-FB01011009	None - ND	-	-	-	-
MR08-EB01011109-IS	Di-n-butylphthalate	1	333	None	See other SDGs
MR08-EB01011209-SS	None - ND	-	-	-	-
MR08-EB0101309-SS	bis (2-Ethylhexyl) phthalate	3	1000	None	See other SDGs
MR08-EB0101309-SSRE	None - ND	-	-	-	-
MR08-EB01011409-SS	None - ND	-	-	-	-

Field Duplicates - Field duplicate samples were not analyzed.

Tentatively Identified Compounds (TICs) - TICs were not reported.

Compound Quantitation - No discrepancies were identified.

KATAHDIN ANALYTICAL SERVICES
Report of Analytical Results

Client: CH2MHill
Project: TO-009 Lejeune
PO No:
Sample Date: 01/05/09
Received Date: 01/07/09
Extraction Date: 01/08/09
Analysis Date: 17-JAN-2009 16:58
Report Date: 02/07/2009
Matrix: WATER
% Solids: NA

Lab ID: SC0050-1
Client ID: MR08-EB01010509-SS
SDG: T09-27
Extracted by: CB
Extraction Method: SW846 3510
Analyst: JCG
Analysis Method: SW846 8270C
Lab Prep Batch: WG59656
Units: ug/L

CAS#	Compound	Flags	Results	DF	PQL	Adj.PQL	Adj.MDL
100-52-7	Benzaldehyde	~~J~~ UJ	9	1.0	10	9	3 JCB
108-95-2	Phenol	U	9	1.0	10	9	2
111-44-4	Bis(2-Chloroethyl)ether	U	9	1.0	10	9	2
95-57-8	2-Chlorophenol	U	11	1.0	12	11	3
95-48-7	2-Methylphenol	U	11	1.0	12	11	4
108-60-1	2,2'-Oxybis(1-chloropropane)	U	9	1.0	10	9	2
98-86-2	Acetophenone	U	11	1.0	12	11	4
621-64-7	N-Nitroso-di-n-propylamine	U	9	1.0	10	9	2
65794-96-9	3&4-Methylphenol	U	9	1.0	10	9	2
67-72-1	Hexachloroethane	U	9	1.0	10	9	2
98-95-3	Nitrobenzene	U	9	1.0	10	9	2
78-59-1	Isophorone	U	9	1.0	10	9	2
88-75-5	2-Nitrophenol	U	9	1.0	10	9	3
105-67-9	2,4-Dimethylphenol	U	11	1.0	12	11	4
111-91-1	Bis(2-Chloroethoxy)methane	U	9	1.0	10	9	2
120-83-2	2,4-Dichlorophenol	U	11	1.0	12	11	4
106-47-8	4-Chloroaniline	U	9	1.0	10	9	2
105-60-2	Caprolactam	U	9	1.0	10	9	0.4
59-50-7	4-Chloro-3-Methylphenol	U	9	1.0	10	9	2
88-06-2	2,4,6-Trichlorophenol	U	9	1.0	10	9	3
95-95-4	2,4,5-Trichlorophenol	U	24	1.0	25	24	4
91-58-7	2-Chloronaphthalene	U	9	1.0	10	9	2
92-52-4	1,1'-Biphenyl	U	9	1.0	10	9	2
88-74-4	2-Nitroaniline	U	24	1.0	25	24	1
131-11-3	Dimethyl Phthalate	U	9	1.0	10	9	0.7
606-20-2	2,6-Dinitrotoluene	U	9	1.0	10	9	1.0
208-96-8	Acenaphthylene	U	9	1.0	10	9	2
99-09-2	3-Nitroaniline	U	24	1.0	25	24	1
83-32-9	Acenaphthene	U	9	1.0	10	9	2
51-28-5	2,4-Dinitrophenol	U	42	1.0	45	42	14
132-64-9	Dibenzofuran	U	9	1.0	10	9	1
100-02-7	4-Nitrophenol	U	24	1.0	25	24	5
121-14-2	2,4-Dinitrotoluene	U	9	1.0	10	9	1
84-66-2	Diethylphthalate	J	2	1.0	10	9	1
7005-72-3	4-Chlorophenyl-phenylether	U	9	1.0	10	9	1
100-01-6	4-Nitroaniline	U	24	1.0	25	24	2
534-52-1	4,6-Dinitro-2-Methylphenol	U	24	1.0	25	24	6
86-30-6	N-Nitrosodiphenylamine	U	9	1.0	10	9	2
101-55-3	4-Bromophenyl-phenylether	U	9	1.0	10	9	1
1912-24-9	Atrazine	U	9	1.0	10	9	2
87-86-5	Pentachlorophenol	U	24	1.0	25	24	7
120-12-7	Anthracene	U	9	1.0	10	9	1
86-74-8	Carbazole	U	9	1.0	10	9	1

MW 4/14/09

KATAHDIN ANALYTICAL SERVICES
Report of Analytical Results

Client: CH2MHill
Project: TO-009 Lejeune
PO No:
Sample Date: 01/05/09
Received Date: 01/07/09
Extraction Date: 01/08/09
Analysis Date: 17-JAN-2009 16:58
Report Date: 02/07/2009
Matrix: WATER
% Solids: NA

Lab ID: SC0050-1
Client ID: MR08-EB01010509-SS
SDG: TO9-27
Extracted by: CB
Extraction Method: SW846 3510
Analyst: JCG
Analysis Method: SW846 8270C
Lab Prep Batch: WG59656
Units: ug/L

CAS#	Compound	Flags	Results	DF	PQL	Adj.PQL	Adj.MDL	
84-74-2	Di-n-butylphthalate	J	2	1.0	10	9	1	
85-68-7	Butylbenzylphthalate	U	9	1.0	10	9	1	
91-94-1	3,3'-Dichlorobenzidine	~~U~~ UJ	9	1.0	10	9	3	CCH
218-01-9	Chrysene	U	9	1.0	10	9	1	
117-81-7	bis(2-Ethylhexyl)phthalate	U	9	1.0	10	9	2	
117-84-0	Di-n-octylphthalate	~~U~~ UJ	9	1.0	10	9	2	CCH
367-12-4	2-Fluorophenol		48%					
13127-88-3	Phenol-D6		32%					
4165-60-0	Nitrobenzene-D5		81%					
321-60-8	2-Fluorobiphenyl		77%					
118-79-6	2,4,6-Tribromophenol		81%					
1718-51-0	Terphenyl-D14		108%					

LW 4/14/09

2

KATAHDIN ANALYTICAL SERVICES
Report of Analytical Results

Client: CH2MHill
Project: TO-009 Lejeune
PO No:
Sample Date: 01/05/09
Received Date: 01/07/09
Extraction Date: 01/08/09
Analysis Date: 17-JAN-2009 17:43
Report Date: 02/07/2009
Matrix: WATER
% Solids: NA

Lab ID: SC0050-3
Client ID: MR08-EB01010509-IS
SDG: TO9-27
Extracted by: CB
Extraction Method: SW846 3510
Analyst: JCG
Analysis Method: SW846 8270C
Lab Prep Batch: WG59656
Units: ug/L

CAS#	Compound	Flags	Results	DF	PQL	Adj.PQL	Adj.MDL
100-52-7	Benzaldehyde	~~J~~ UJ	9	1.0	10	9	3 ICB
108-95-2	Phenol	U	9	1.0	10	9	2
111-44-4	Bis(2-Chloroethyl)ether	U	9	1.0	10	9	2
95-57-8	2-Chlorophenol	U	11	1.0	12	11	3
95-48-7	2-Methylphenol	U	11	1.0	12	11	4
108-60-1	2,2'-Oxybis(1-chloropropane)	U	9	1.0	10	9	2
98-86-2	Acetophenone	U	11	1.0	12	11	4
621-64-7	N-Nitroso-di-n-propylamine	U	9	1.0	10	9	2
65794-96-9	3&4-Methylphenol	U	9	1.0	10	9	2
67-72-1	Hexachloroethane	U	9	1.0	10	9	2
98-95-3	Nitrobenzene	U	9	1.0	10	9	2
78-59-1	Isophorone	U	9	1.0	10	9	2
88-75-5	2-Nitrophenol	U	9	1.0	10	9	3
105-67-9	2,4-Dimethylphenol	U	11	1.0	12	11	4
111-91-1	Bis(2-Chloroethoxy)methane	U	9	1.0	10	9	2
120-83-2	2,4-Dichlorophenol	U	11	1.0	12	11	4
106-47-8	4-Chloroaniline	U	9	1.0	10	9	2
105-60-2	Caprolactam	U	9	1.0	10	9	0.4
59-50-7	4-Chloro-3-Methylphenol	U	9	1.0	10	9	2
88-06-2	2,4,6-Trichlorophenol	U	9	1.0	10	9	3
95-95-4	2,4,5-Trichlorophenol	U	24	1.0	25	24	4
91-58-7	2-Chloronaphthalene	U	9	1.0	10	9	2
92-52-4	1,1'-Biphenyl	U	9	1.0	10	9	2
88-74-4	2-Nitroaniline	U	24	1.0	25	24	1
131-11-3	Dimethyl Phthalate	U	9	1.0	10	9	0.7
606-20-2	2,6-Dinitrotoluene	U	9	1.0	10	9	1.0
208-96-8	Acenaphthylene	U	9	1.0	10	9	2
99-09-2	3-Nitroaniline	U	24	1.0	25	24	1
83-32-9	Acenaphthene	U	9	1.0	10	9	2
51-28-5	2,4-Dinitrophenol	U	42	1.0	45	42	14
132-64-9	Dibenzofuran	U	9	1.0	10	9	1
100-02-7	4-Nitrophenol	U	24	1.0	25	24	5
121-14-2	2,4-Dinitrotoluene	U	9	1.0	10	9	1
84-66-2	Diethylphthalate	J	2	1.0	10	9	1
7005-72-3	4-Chlorophenyl-phenylether	U	9	1.0	10	9	1
100-01-6	4-Nitroaniline	U	24	1.0	25	24	2
534-52-1	4,6-Dinitro-2-Methylphenol	U	24	1.0	25	24	6
86-30-6	N-Nitrosodiphenylamine	U	9	1.0	10	9	2
101-55-3	4-Bromophenyl-phenylether	U	9	1.0	10	9	1
1912-24-9	Atrazine	U	9	1.0	10	9	2
87-86-5	Pentachlorophenol	U	24	1.0	25	24	7
120-12-7	Anthracene	U	9	1.0	10	9	1
86-74-8	Carbazole	U	9	1.0	10	9	1

lw 4/14/09

2

KATAHDIN ANALYTICAL SERVICES
Report of Analytical Results

Client: CH2MHill
Project: TO-009 Lejeune
PO No:
Sample Date: 01/05/09
Received Date: 01/07/09
Extraction Date: 01/08/09
Analysis Date: 17-JAN-2009 17:43
Report Date: 02/07/2009
Matrix: WATER
% Solids: NA

Lab ID: SC0050-3
Client ID: MR08-EB01010509-IS
SDG: TO9-27
Extracted by: CB
Extraction Method: SW846 3510
Analyst: JCG
Analysis Method: SW846 8270C
Lab Prep Batch: WG59656
Units: ug/L

CAS#	Compound	Flags	Results	DF	PQL	Adj.PQL	Adj.MDL	
84-74-2	Di-n-butylphthalate	J	2	1.0	10	9	1	
85-68-7	Butylbenzylphthalate	U	9	1.0	10	9	1	
91-94-1	3,3'-Dichlorobenzidine	~~U~~ UJ	9	1.0	10	9	3	CCH
218-01-9	Chrysene	U	9	1.0	10	9	1	
117-81-7	bis(2-Ethylhexyl)phthalate	U	9	1.0	10	9	2	
117-84-0	Di-n-octylphthalate	~~U~~ UJ	9	1.0	10	9	2	CCH
367-12-4	2-Fluorophenol		45%					
13127-88-3	Phenol-D6		30%					
4165-60-0	Nitrobenzene-D5		79%					
321-60-8	2-Fluorobiphenyl		78%					
118-79-6	2,4,6-Tribromophenol		78%					
1718-51-0	Terphenyl-D14		99%					

lw
4/14/09

3

KATAHDIN ANALYTICAL SERVICES
Report of Analytical Results

Client: CH2MHill
Project: TO-009 Lejeune
PO No:
Sample Date: 01/06/09
Received Date: 01/08/09
Extraction Date: 01/09/09
Analysis Date: 17-JAN-2009 20:30
Report Date: 02/07/2009
Matrix: WATER
% Solids: NA

Lab ID: SC0068-1
Client ID: MR08-EB01010609-SS
SDG: TO9-27
Extracted by: CB
Extraction Method: SW846 3510
Analyst: JCG
Analysis Method: SW846 8270C
Lab Prep Batch: WG59675
Units: ug/L

CAS#	Compound	Flags	Results	DF	PQL	Adj.PQL	Adj.MDL
100-52-7	Benzaldehyde	~~U~~ UJ	9	1.0	10	9	3 BSL
108-95-2	Phenol	U	9	1.0	10	9	2
111-44-4	Bis(2-Chloroethyl)ether	U	9	1.0	10	9	2
95-57-8	2-Chlorophenol	U	11	1.0	12	11	3
95-48-7	2-Methylphenol	U	11	1.0	12	11	4
108-60-1	2,2'-Oxybis(1-chloropropane)	U	9	1.0	10	9	2
98-86-2	Acetophenone	U	11	1.0	12	11	4
621-64-7	N-Nitroso-di-n-propylamine	U	9	1.0	10	9	2
65794-96-9	3&4-Methylphenol	U	9	1.0	10	9	2
67-72-1	Hexachloroethane	U	9	1.0	10	9	2
98-95-3	Nitrobenzene	U	9	1.0	10	9	2
78-59-1	Isophorone	U	9	1.0	10	9	2
88-75-5	2-Nitrophenol	U	9	1.0	10	9	3
105-67-9	2,4-Dimethylphenol	U	11	1.0	12	11	4
111-91-1	Bis(2-Chloroethoxy)methane	U	9	1.0	10	9	2
120-83-2	2,4-Dichlorophenol	U	11	1.0	12	11	4
106-47-8	4-Chloroaniline	U	9	1.0	10	9	2
105-60-2	Caprolactam	U	9	1.0	10	9	0.4
59-50-7	4-Chloro-3-Methylphenol	U	9	1.0	10	9	2
88-06-2	2,4,6-Trichlorophenol	U	9	1.0	10	9	3
95-95-4	2,4,5-Trichlorophenol	U	24	1.0	25	24	4
91-58-7	2-Chloronaphthalene	U	9	1.0	10	9	2
92-52-4	1,1'-Biphenyl	U	9	1.0	10	9	2
88-74-4	2-Nitroaniline	U	24	1.0	25	24	1
131-11-3	Dimethyl Phthalate	U	9	1.0	10	9	0.7
606-20-2	2,6-Dinitrotoluene	U	9	1.0	10	9	1.0
208-96-8	Acenaphthylene	U	9	1.0	10	9	2
99-09-2	3-Nitroaniline	U	24	1.0	25	24	1
83-32-9	Acenaphthene	U	9	1.0	10	9	2
51-28-5	2,4-Dinitrophenol	U	42	1.0	45	42	14
132-64-9	Dibenzofuran	U	9	1.0	10	9	1
100-02-7	4-Nitrophenol	U	24	1.0	25	24	5
121-14-2	2,4-Dinitrotoluene	U	9	1.0	10	9	1
84-66-2	Diethylphthalate	J	2	1.0	10	9	1
7005-72-3	4-Chlorophenyl-phenylether	U	9	1.0	10	9	1
100-01-6	4-Nitroaniline	U	24	1.0	25	24	2
534-52-1	4,6-Dinitro-2-Methylphenol	U	24	1.0	25	24	6
86-30-6	N-Nitrosodiphenylamine	U	9	1.0	10	9	2
101-55-3	4-Bromophenyl-phenylether	U	9	1.0	10	9	1
1912-24-9	Atrazine	U	9	1.0	10	9	2
87-86-5	Pentachlorophenol	U	24	1.0	25	24	7
120-12-7	Anthracene	U	9	1.0	10	9	1
86-74-8	Carbazole	U	9	1.0	10	9	1

RLW
4/14/09

3

KATAHDIN ANALYTICAL SERVICES
Report of Analytical Results

Client: CH2MHill
Project: TO-009 Lejeune
PO No:
Sample Date: 01/06/09
Received Date: 01/08/09
Extraction Date: 01/09/09
Analysis Date: 17-JAN-2009 20:30
Report Date: 02/07/2009
Matrix: WATER
% Solids: NA

Lab ID: SC0068-1
Client ID: MR08-EB01010609-SS
SDG: TO9-27
Extracted by: CB
Extraction Method: SW846 3510
Analyst: JCG
Analysis Method: SW846 8270C
Lab Prep Batch: WG59675
Units: ug/L

CAS#	Compound	Flags	Results	DF	PQL	Adj.PQL	Adj.MDL	
84-74-2	Di-n-butylphthalate	J	1	1.0	10	9	1	
85-68-7	Butylbenzylphthalate	U	9	1.0	10	9	1	
91-94-1	3,3'-Dichlorobenzidine	~~U~~ UJ	9	1.0	10	9	3	CCM
218-01-9	Chrysene	U	9	1.0	10	9	1	
117-81-7	bis(2-Ethylhexyl)phthalate	U	9	1.0	10	9	2	
117-84-0	Di-n-octylphthalate	~~U~~ UJ	9	1.0	10	9	2	CCM
367-12-4	2-Fluorophenol		44%					
13127-88-3	Phenol-D6		29%					
4165-60-0	Nitrobenzene-D5		80%					
321-60-8	2-Fluorobiphenyl		78%					
118-79-6	2,4,6-Tribromophenol		87%					
1718-51-0	Terphenyl-D14		109%					

QW
4/14/09

4

KATAHDIN ANALYTICAL SERVICES
Report of Analytical Results

Client: CH2MHill
Project: TO-009 Lejeune
PO No:
Sample Date: 01/07/09
Received Date: 01/09/09
Extraction Date: 01/13/09
Analysis Date: 19-JAN-2009 14:29
Report Date: 02/07/2009
Matrix: WATER
% Solids: NA

Lab ID: SC0103-1
Client ID: MR08-EB01010709-SS
SDG: TO9-27
Extracted by: CB
Extraction Method: SW846 3510
Analyst: JCG
Analysis Method: SW846 8270C
Lab Prep Batch: WG59748
Units: ug/L

CAS#	Compound	Flags	Results	DF	PQL	Adj.PQL	Adj.MDL	
100-52-7	Benzaldehyde	~~U~~ UJ	9	1.0	10	9	3	JCB
108-95-2	Phenol	U	9	1.0	10	9	2	
111-44-4	Bis(2-Chloroethyl)ether	U	9	1.0	10	9	2	
95-57-8	2-Chlorophenol	U	11	1.0	12	11	3	
95-48-7	2-Methylphenol	U	11	1.0	12	11	4	
108-60-1	2,2'-Oxybis(1-chloropropane)	U	9	1.0	10	9	2	
98-86-2	Acetophenone	U	11	1.0	12	11	4	
621-64-7	N-Nitroso-di-n-propylamine	~~U~~ UJ	9	1.0	10	9	2	CCH
65794-96-9	3&4-Methylphenol	U	9	1.0	10	9	2	
67-72-1	Hexachloroethane	U	9	1.0	10	9	2	
98-95-3	Nitrobenzene	U	9	1.0	10	9	2	
78-59-1	Isophorone	U	9	1.0	10	9	2	
88-75-5	2-Nitrophenol	U	9	1.0	10	9	3	
105-67-9	2,4-Dimethylphenol	U	11	1.0	12	11	4	
111-91-1	Bis(2-Chloroethoxy)methane	U	9	1.0	10	9	2	
120-83-2	2,4-Dichlorophenol	U	11	1.0	12	11	4	
106-47-8	4-Chloroaniline	U	9	1.0	10	9	2	
105-60-2	Caprolactam	U	9	1.0	10	9	0.4	
59-50-7	4-Chloro-3-Methylphenol	U	9	1.0	10	9	2	
88-06-2	2,4,6-Trichlorophenol	U	9	1.0	10	9	3	
95-95-4	2,4,5-Trichlorophenol	U	24	1.0	25	24	4	
91-58-7	2-Chloronaphthalene	U	9	1.0	10	9	2	
92-52-4	1,1'-Biphenyl	U	9	1.0	10	9	2	
88-74-4	2-Nitroaniline	U	24	1.0	25	24	1	
131-11-3	Dimethyl Phthalate	~~U~~ UJ	9	1.0	10	9	0.7	CCH
606-20-2	2,6-Dinitrotoluene	U	9	1.0	10	9	1.0	
208-96-8	Acenaphthylene	U	9	1.0	10	9	2	
99-09-2	3-Nitroaniline	U	24	1.0	25	24	1	
83-32-9	Acenaphthene	U	9	1.0	10	9	2	
51-28-5	2,4-Dinitrophenol	U	42	1.0	45	42	14	
132-64-9	Dibenzofuran	U	9	1.0	10	9	1	
100-02-7	4-Nitrophenol	U	24	1.0	25	24	5	
121-14-2	2,4-Dinitrotoluene	U	9	1.0	10	9	1	
84-66-2	Diethylphthalate	U	9	1.0	10	9	1	
7005-72-3	4-Chlorophenyl-phenylether	U	9	1.0	10	9	1	
100-01-6	4-Nitroaniline	U	24	1.0	25	24	2	
534-52-1	4,6-Dinitro-2-Methylphenol	U	24	1.0	25	24	6	
86-30-6	N-Nitrosodiphenylamine	U	9	1.0	10	9	2	
101-55-3	4-Bromophenyl-phenylether	U	9	1.0	10	9	1	
1912-24-9	Atrazine	U	9	1.0	10	9	2	
87-86-5	Pentachlorophenol	U	24	1.0	25	24	7	
120-12-7	Anthracene	U	9	1.0	10	9	1	
86-74-8	Carbazole	U	9	1.0	10	9	1	

lw
4/14/09

4

KATAHDIN ANALYTICAL SERVICES
Report of Analytical Results

Client: CH2MHill
Project: TO-009 Lejeune
PO No:
Sample Date: 01/07/09
Received Date: 01/09/09
Extraction Date: 01/13/09
Analysis Date: 19-JAN-2009 14:29
Report Date: 02/07/2009
Matrix: WATER
% Solids: NA

Lab ID: SC0103-1
Client ID: MR08-EB01010709-SS
SDG: TO9-27
Extracted by: CB
Extraction Method: SW846 3510
Analyst: JCG
Analysis Method: SW846 8270C
Lab Prep Batch: WG59748
Units: ug/L

CAS#	Compound	Flags	Results	DF	PQL	Adj.PQL	Adj.MDL
84-74-2	Di-n-butylphthalate	U	9	1.0	10	9	1
85-68-7	Butylbenzylphthalate	U	9	1.0	10	9	1
91-94-1	3,3'-Dichlorobenzidine	~~U~~ UJ	9	1.0	10	9	3 CCH
218-01-9	Chrysene	U	9	1.0	10	9	1
117-81-7	bis(2-Ethylhexyl)phthalate	U	9	1.0	10	9	2
117-84-0	Di-n-octylphthalate	U	9	1.0	10	9	2
367-12-4	2-Fluorophenol		42%				
13127-88-3	Phenol-D6		29%				
4165-60-0	Nitrobenzene-D5		72%				
321-60-8	2-Fluorobiphenyl		71%				
118-79-6	2,4,6-Tribromophenol		79%				
1718-51-0	Terphenyl-D14		109%				

LW
4/14/09

5

KATAHDIN ANALYTICAL SERVICES
Report of Analytical Results

Client: CH2MHill
Project: TO-009 Lejeune
PO No:
Sample Date: 01/08/09
Received Date: 01/10/09
Extraction Date: 01/13/09
Analysis Date: 19-JAN-2009 15:12
Report Date: 02/07/2009
Matrix: WATER
% Solids: NA

Lab ID: SC0129-1
Client ID: MR08-EB-01010809-SS
SDG: TO9-27
Extracted by: CB
Extraction Method: SW846 3510
Analyst: JCG
Analysis Method: SW846 8270C
Lab Prep Batch: WG59748
Units: ug/L

CAS#	Compound	Flags	Results	DF	PQL	Adj.PQL	Adj.MDL	
100-52-7	Benzaldehyde	~~U~~ UJ	9	1.0	10	9	3	JCB
108-95-2	Phenol	U	9	1.0	10	9	2	
111-44-4	Bis(2-Chloroethyl)ether	U	9	1.0	10	9	2	
95-57-8	2-Chlorophenol	U	11	1.0	12	11	3	
95-48-7	2-Methylphenol	U	11	1.0	12	11	4	
108-60-1	2,2'-Oxybis(1-chloropropane)	U	9	1.0	10	9	2	
98-86-2	Acetophenone	U	11	1.0	12	11	4	
621-64-7	N-Nitroso-di-n-propylamine	~~U~~ UJ	9	1.0	10	9	2	CCH
65794-96-9	3&4-Methylphenol	U	9	1.0	10	9	2	
67-72-1	Hexachloroethane	U	9	1.0	10	9	2	
98-95-3	Nitrobenzene	U	9	1.0	10	9	2	
78-59-1	Isophorone	U	9	1.0	10	9	2	
88-75-5	2-Nitrophenol	U	9	1.0	10	9	3	
105-67-9	2,4-Dimethylphenol	U	11	1.0	12	11	4	
111-91-1	Bis(2-Chloroethoxy)methane	U	9	1.0	10	9	2	
120-83-2	2,4-Dichlorophenol	U	11	1.0	12	11	4	
106-47-8	4-Chloroaniline	U	9	1.0	10	9	2	
105-60-2	Caprolactam	U	9	1.0	10	9	0.4	
59-50-7	4-Chloro-3-Methylphenol	U	9	1.0	10	9	2	
88-06-2	2,4,6-Trichlorophenol	U	9	1.0	10	9	3	
95-95-4	2,4,5-Trichlorophenol	U	24	1.0	25	24	4	
91-58-7	2-Chloronaphthalene	U	9	1.0	10	9	2	
92-52-4	1,1'-Biphenyl	U	9	1.0	10	9	2	
88-74-4	2-Nitroaniline	U	24	1.0	25	24	1	
131-11-3	Dimethyl Phthalate	~~U~~ UJ	9	1.0	10	9	0.7	CCH
606-20-2	2,6-Dinitrotoluene	U	9	1.0	10	9	1.0	
208-96-8	Acenaphthylene	U	9	1.0	10	9	2	
99-09-2	3-Nitroaniline	U	24	1.0	25	24	1	
83-32-9	Acenaphthene	U	9	1.0	10	9	2	
51-28-5	2,4-Dinitrophenol	U	42	1.0	45	42	14	
132-64-9	Dibenzofuran	U	9	1.0	10	9	1	
100-02-7	4-Nitrophenol	U	24	1.0	25	24	5	
121-14-2	2,4-Dinitrotoluene	U	9	1.0	10	9	1	
84-66-2	Diethylphthalate	U	9	1.0	10	9	1	
7005-72-3	4-Chlorophenyl-phenylether	U	9	1.0	10	9	1	
100-01-6	4-Nitroaniline	U	24	1.0	25	24	2	
534-52-1	4,6-Dinitro-2-Methylphenol	U	24	1.0	25	24	6	
86-30-6	N-Nitrosodiphenylamine	U	9	1.0	10	9	2	
101-55-3	4-Bromophenyl-phenylether	U	9	1.0	10	9	1	
1912-24-9	Atrazine	U	9	1.0	10	9	2	
87-86-5	Pentachlorophenol	U	24	1.0	25	24	7	
120-12-7	Anthracene	U	9	1.0	10	9	1	
86-74-8	Carbazole	U	9	1.0	10	9	1	

lw 4/14/09

5

KATAHDIN ANALYTICAL SERVICES
Report of Analytical Results

Client: CH2MHill
Project: TO-009 Lejeune
PO No:
Sample Date: 01/08/09
Received Date: 01/10/09
Extraction Date: 01/13/09
Analysis Date: 19-JAN-2009 15:12
Report Date: 02/07/2009
Matrix: WATER
% Solids: NA

Lab ID: SC0129-1
Client ID: MR08-EB-01010809-SS
SDG: TO9-27
Extracted by: CB
Extraction Method: SW846 3510
Analyst: JCG
Analysis Method: SW846 8270C
Lab Prep Batch: WG59748
Units: ug/L

CAS#	Compound	Flags	Results	DF	PQL	Adj.PQL	Adj.MDL	
84-74-2	Di-n-butylphthalate	U	9	1.0	10	9	1	
85-68-7	Butylbenzylphthalate	U	9	1.0	10	9	1	
91-94-1	3,3'-Dichlorobenzidine	~~U~~ UJ	9	1.0	10	9	3	CEY
218-01-9	Chrysene	U	9	1.0	10	9	1	
117-81-7	bis(2-Ethylhexyl)phthalate	U	9	1.0	10	9	2	
117-84-0	Di-n-octylphthalate	U	9	1.0	10	9	2	
367-12-4	2-Fluorophenol		30%					
13127-88-3	Phenol-D6		21%					
4165-60-0	Nitrobenzene-D5		60%					
321-60-8	2-Fluorobiphenyl		58%					
118-79-6	2,4,6-Tribromophenol		64%					
1718-51-0	Terphenyl-D14		76%					

LW
4/14/09

6

KATAHDIN ANALYTICAL SERVICES
Report of Analytical Results

Client: CH2MHill
Project: TO-009 Lejeune
PO No:
Sample Date: 01/09/09
Received Date: 01/13/09
Extraction Date: 01/14/09
Analysis Date: 27-JAN-2009 23:25
Report Date: 02/07/2009
Matrix: WATER
% Solids: NA

Lab ID: SC0150-1
Client ID: MR08-EB01010909-SS
SDG: TO9-27
Extracted by: CB
Extraction Method: SW846 3510
Analyst: JCG
Analysis Method: SW846 8270C
Lab Prep Batch: WG59789
Units: ug/L

CAS#	Compound	Flags	Results	DF	PQL	Adj.PQL	Adj.MDL
100-52-7	Benzaldehyde	U	10	1.0	10	10	3
108-95-2	Phenol	U	10	1.0	10	10	2
111-44-4	Bis(2-Chloroethyl)ether	U	10	1.0	10	10	2
95-57-8	2-Chlorophenol	U	12	1.0	12	12	3
95-48-7	2-Methylphenol	U	12	1.0	12	12	4
108-60-1	2,2'-Oxybis(1-chloropropane)	U	10	1.0	10	10	2
98-86-2	Acetophenone	U	12	1.0	12	12	4
621-64-7	N-Nitroso-di-n-propylamine	U	10	1.0	10	10	2
65794-96-9	3&4-Methylphenol	U	10	1.0	10	10	3
67-72-1	Hexachloroethane	U	10	1.0	10	10	2
98-95-3	Nitrobenzene	U	10	1.0	10	10	2
78-59-1	Isophorone	U	10	1.0	10	10	2
88-75-5	2-Nitrophenol	U	10	1.0	10	10	4
105-67-9	2,4-Dimethylphenol	U	12	1.0	12	12	4
111-91-1	Bis(2-Chloroethoxy)methane	U	10	1.0	10	10	2
120-83-2	2,4-Dichlorophenol	U	12	1.0	12	12	4
106-47-8	4-Chloroaniline	U	10	1.0	10	10	2
105-60-2	Caprolactam	U	10	1.0	10	10	0.4
59-50-7	4-Chloro-3-Methylphenol	U	10	1.0	10	10	2
88-06-2	2,4,6-Trichlorophenol	U	10	1.0	10	10	3
95-95-4	2,4,5-Trichlorophenol	U	24	1.0	25	24	4
91-58-7	2-Chloronaphthalene	U	10	1.0	10	10	2
92-52-4	1,1'-Biphenyl	U	10	1.0	10	10	2
88-74-4	2-Nitroaniline	U	24	1.0	25	24	2
131-11-3	Dimethyl Phthalate	U	10	1.0	10	10	0.8
606-20-2	2,6-Dinitrotoluene	U	10	1.0	10	10	1
208-96-8	Acenaphthylene	U	10	1.0	10	10	2
99-09-2	3-Nitroaniline	U	24	1.0	25	24	1
83-32-9	Acenaphthene	U	10	1.0	10	10	2
51-28-5	2,4-Dinitrophenol	U	44	1.0	45	44	15
132-64-9	Dibenzofuran	U	10	1.0	10	10	1
100-02-7	4-Nitrophenol	~~U~~ UJ	24	1.0	25	24	6 CCU
121-14-2	2,4-Dinitrotoluene	U	10	1.0	10	10	1
84-66-2	Diethylphthalate	U	10	1.0	10	10	1
7005-72-3	4-Chlorophenyl-phenylether	U	10	1.0	10	10	1
100-01-6	4-Nitroaniline	U	24	1.0	25	24	2
534-52-1	4,6-Dinitro-2-Methylphenol	U	24	1.0	25	24	6
86-30-6	N-Nitrosodiphenylamine	U	10	1.0	10	10	2
101-55-3	4-Bromophenyl-phenylether	U	10	1.0	10	10	1
1912-24-9	Atrazine	U	10	1.0	10	10	2
87-86-5	Pentachlorophenol	U	24	1.0	25	24	8
120-12-7	Anthracene	U	10	1.0	10	10	1
86-74-8	Carbazole	U	10	1.0	10	10	1

MW 4/14/09

KATAHDIN ANALYTICAL SERVICES
Report of Analytical Results

6

Client: CH2MHill
Project: TO-009 Lejeune
PO No:
Sample Date: 01/09/09
Received Date: 01/13/09
Extraction Date: 01/14/09
Analysis Date: 27-JAN-2009 23:25
Report Date: 02/07/2009
Matrix: WATER
% Solids: NA

Lab ID: SC0150-1
Client ID: MR08-EB01010909-SS
SDG: TO9-27
Extracted by: CB
Extraction Method: SW846 3510
Analyst: JCG
Analysis Method: SW846 8270C
Lab Prep Batch: WG59789
Units: ug/L

CAS#	Compound	Flags	Results	DF	PQL	Adj.PQL	Adj.MDL
84-74-2	Di-n-butylphthalate	U	10	1.0	10	10	1
85-68-7	Butylbenzylphthalate	U	10	1.0	10	10	1
91-94-1	3,3'-Dichlorobenzidine	U	10	1.0	10	10	3
218-01-9	Chrysene	U	10	1.0	10	10	1
117-81-7	bis(2-Ethylhexyl)phthalate	U	10	1.0	10	10	2
117-84-0	Di-n-octylphthalate	U	10	1.0	10	10	2
367-12-4	2-Fluorophenol		53%				
13127-88-3	Phenol-D6		38%				
4165-60-0	Nitrobenzene-D5		79%				
321-60-8	2-Fluorobiphenyl		74%				
118-79-6	2,4,6-Tribromophenol		75%				
1718-51-0	Terphenyl-D14		86%				

lw
4/14/09

7

KATAHDIN ANALYTICAL SERVICES
Report of Analytical Results

Client: CH2MHill
Project: TO-009 Lejeune
PO No:
Sample Date: 01/09/09
Received Date: 01/13/09
Extraction Date: 01/14/09
Analysis Date: 28-JAN-2009 00:07
Report Date: 02/07/2009
Matrix: WATER
% Solids: NA

Lab ID: SC0150-3
Client ID: MR08-EB01010909-IS
SDG: TO9-27
Extracted by: CB
Extraction Method: SW846 3510
Analyst: JCG
Analysis Method: SW846 8270C
Lab Prep Batch: WG59789
Units: ug/L

CAS#	Compound	Flags	Results	DF	PQL	Adj.PQL	Adj.MDL
100-52-7	Benzaldehyde	U	9	1.0	10	9	3
108-95-2	Phenol	U	9	1.0	10	9	2
111-44-4	Bis(2-Chloroethyl)ether	U	9	1.0	10	9	2
95-57-8	2-Chlorophenol	U	11	1.0	12	11	3
95-48-7	2-Methylphenol	U	11	1.0	12	11	4
108-60-1	2,2'-Oxybis(1-chloropropane)	U	9	1.0	10	9	2
98-86-2	Acetophenone	U	11	1.0	12	11	4
621-64-7	N-Nitroso-di-n-propylamine	U	9	1.0	10	9	2
65794-96-9	3&4-Methylphenol	U	9	1.0	10	9	2
67-72-1	Hexachloroethane	U	9	1.0	10	9	2
98-95-3	Nitrobenzene	U	9	1.0	10	9	2
78-59-1	Isophorone	U	9	1.0	10	9	2
88-75-5	2-Nitrophenol	U	9	1.0	10	9	3
105-67-9	2,4-Dimethylphenol	U	11	1.0	12	11	4
111-91-1	Bis(2-Chloroethoxy)methane	U	9	1.0	10	9	2
120-83-2	2,4-Dichlorophenol	U	11	1.0	12	11	4
106-47-8	4-Chloroaniline	U	9	1.0	10	9	2
105-60-2	Caprolactam	U	9	1.0	10	9	0.4
59-50-7	4-Chloro-3-Methylphenol	U	9	1.0	10	9	2
88-06-2	2,4,6-Trichlorophenol	U	9	1.0	10	9	3
95-95-4	2,4,5-Trichlorophenol	U	24	1.0	25	24	4
91-58-7	2-Chloronaphthalene	U	9	1.0	10	9	2
92-52-4	1,1'-Biphenyl	U	9	1.0	10	9	2
88-74-4	2-Nitroaniline	U	24	1.0	25	24	1
131-11-3	Dimethyl Phthalate	U	9	1.0	10	9	0.7
606-20-2	2,6-Dinitrotoluene	U	9	1.0	10	9	1.0
208-96-8	Acenaphthylene	U	9	1.0	10	9	2
99-09-2	3-Nitroaniline	U	24	1.0	25	24	1
83-32-9	Acenaphthene	U	9	1.0	10	9	2
51-28-5	2,4-Dinitrophenol	U	42	1.0	45	42	14
132-64-9	Dibenzofuran	U	9	1.0	10	9	1
100-02-7	4-Nitrophenol	~~U~~ UJ	24	1.0	25	24	5 CH
121-14-2	2,4-Dinitrotoluene	U	9	1.0	10	9	1
84-66-2	Diethylphthalate	U	9	1.0	10	9	1
7005-72-3	4-Chlorophenyl-phenylether	U	9	1.0	10	9	1
100-01-6	4-Nitroaniline	U	24	1.0	25	24	2
534-52-1	4,6-Dinitro-2-Methylphenol	U	24	1.0	25	24	6
86-30-6	N-Nitrosodiphenylamine	U	9	1.0	10	9	2
101-55-3	4-Bromophenyl-phenylether	U	9	1.0	10	9	1
1912-24-9	Atrazine	U	9	1.0	10	9	2
87-86-5	Pentachlorophenol	U	24	1.0	25	24	7
120-12-7	Anthracene	U	9	1.0	10	9	1
86-74-8	Carbazole	U	9	1.0	10	9	1

lw 4/14/09

7

KATAHDIN ANALYTICAL SERVICES
Report of Analytical Results

Client: CH2MHill
Project: TO-009 Lejeune
PO No:
Sample Date: 01/09/09
Received Date: 01/13/09
Extraction Date: 01/14/09
Analysis Date: 28-JAN-2009 00:07
Report Date: 02/07/2009
Matrix: WATER
% Solids: NA

Lab ID: SC0150-3
Client ID: MR08-EB01010909-IS
SDG: TO9-27
Extracted by: CB
Extraction Method: SW846 3510
Analyst: JCG
Analysis Method: SW846 8270C
Lab Prep Batch: WG59789
Units: ug/L

CAS#	Compound	Flags	Results	DF	PQL	Adj.PQL	Adj.MDL
84-74-2	Di-n-butylphthalate	U	9	1.0	10	9	1
85-68-7	Butylbenzylphthalate	U	9	1.0	10	9	1
91-94-1	3,3'-Dichlorobenzidine	U	9	1.0	10	9	3
218-01-9	Chrysene	U	9	1.0	10	9	1
117-81-7	bis(2-Ethylhexyl)phthalate	U	9	1.0	10	9	2
117-84-0	Di-n-octylphthalate	U	9	1.0	10	9	2
367-12-4	2-Fluorophenol		39%				
13127-88-3	Phenol-D6		29%				
4165-60-0	Nitrobenzene-D5		61%				
321-60-8	2-Fluorobiphenyl		62%				
118-79-6	2,4,6-Tribromophenol		70%				
1718-51-0	Terphenyl-D14		63%				

RW
4/14/09

8

KATAHDIN ANALYTICAL SERVICES
Report of Analytical Results

Client: CH2MHill
Project: TO-009 Lejeune
PO No:
Sample Date: 01/10/09
Received Date: 01/13/09
Extraction Date: 01/14/09
Analysis Date: 28-JAN-2009 00:49
Report Date: 02/07/2009
Matrix: WATER
% Solids: NA

Lab ID: SC0150-5
Client ID: MR08-EB01011009-SS
SDG: TO9-27
Extracted by: CB
Extraction Method: SW846 3510
Analyst: JCG
Analysis Method: SW846 8270C
Lab Prep Batch: WG59789
Units: ug/L

CAS#	Compound	Flags	Results	DF	PQL	Adj.PQL	Adj.MDL
100-52-7	Benzaldehyde	U	9	1.0	10	9	3
108-95-2	Phenol	U	9	1.0	10	9	2
111-44-4	Bis(2-Chloroethyl)ether	U	9	1.0	10	9	2
95-57-8	2-Chlorophenol	U	11	1.0	12	11	3
95-48-7	2-Methylphenol	U	11	1.0	12	11	4
108-60-1	2,2'-Oxybis(1-chloropropane)	U	9	1.0	10	9	2
98-86-2	Acetophenone	U	11	1.0	12	11	4
621-64-7	N-Nitroso-di-n-propylamine	U	9	1.0	10	9	2
65794-96-9	3&4-Methylphenol	U	9	1.0	10	9	2
67-72-1	Hexachloroethane	U	9	1.0	10	9	2
98-95-3	Nitrobenzene	U	9	1.0	10	9	2
78-59-1	Isophorone	U	9	1.0	10	9	2
88-75-5	2-Nitrophenol	U	9	1.0	10	9	3
105-67-9	2,4-Dimethylphenol	U	11	1.0	12	11	4
111-91-1	Bis(2-Chloroethoxy)methane	U	9	1.0	10	9	2
120-83-2	2,4-Dichlorophenol	U	11	1.0	12	11	4
106-47-8	4-Chloroaniline	U	9	1.0	10	9	2
105-60-2	Caprolactam	U	9	1.0	10	9	0.4
59-50-7	4-Chloro-3-Methylphenol	U	9	1.0	10	9	2
88-06-2	2,4,6-Trichlorophenol	U	9	1.0	10	9	3
95-95-4	2,4,5-Trichlorophenol	U	24	1.0	25	24	4
91-58-7	2-Chloronaphthalene	U	9	1.0	10	9	2
92-52-4	1,1'-Biphenyl	U	9	1.0	10	9	2
88-74-4	2-Nitroaniline	U	24	1.0	25	24	1
131-11-3	Dimethyl Phthalate	U	9	1.0	10	9	0.7
606-20-2	2,6-Dinitrotoluene	U	9	1.0	10	9	1.0
208-96-8	Acenaphthylene	U	9	1.0	10	9	2
99-09-2	3-Nitroaniline	U	24	1.0	25	24	1
83-32-9	Acenaphthene	U	9	1.0	10	9	2
51-28-5	2,4-Dinitrophenol	U	42	1.0	45	42	14
132-64-9	Dibenzofuran	U	9	1.0	10	9	1
100-02-7	4-Nitrophenol	~~U~~ UJ	24	1.0	25	24	5 CCil
121-14-2	2,4-Dinitrotoluene	U	9	1.0	10	9	1
84-66-2	Diethylphthalate	U	9	1.0	10	9	1
7005-72-3	4-Chlorophenyl-phenylether	U	9	1.0	10	9	1
100-01-6	4-Nitroaniline	U	24	1.0	25	24	2
534-52-1	4,6-Dinitro-2-Methylphenol	U	24	1.0	25	24	6
86-30-6	N-Nitrosodiphenylamine	U	9	1.0	10	9	2
101-55-3	4-Bromophenyl-phenylether	U	9	1.0	10	9	1
1912-24-9	Atrazine	U	9	1.0	10	9	2
87-86-5	Pentachlorophenol	U	24	1.0	25	24	7
120-12-7	Anthracene	U	9	1.0	10	9	1
86-74-8	Carbazole	U	9	1.0	10	9	1

MW 4/14/09

KATAHDIN ANALYTICAL SERVICES
Report of Analytical Results

Client: CH2MHill
Project: TO-009 Lejeune
PO No:
Sample Date: 01/10/09
Received Date: 01/13/09
Extraction Date: 01/14/09
Analysis Date: 28-JAN-2009 00:49
Report Date: 02/07/2009
Matrix: WATER
% Solids: NA

Lab ID: SC0150-5
Client ID: MR08-EB01011009-SS
SDG: TO9-27
Extracted by: CB
Extraction Method: SW846 3510
Analyst: JCG
Analysis Method: SW846 8270C
Lab Prep Batch: WG59789
Units: ug/L

CAS#	Compound	Flags	Results	DF	PQL	Adj.PQL	Adj.MDL
84-74-2	Di-n-butylphthalate	U	9	1.0	10	9	1
85-68-7	Butylbenzylphthalate	U	9	1.0	10	9	1
91-94-1	3,3'-Dichlorobenzidine	U	9	1.0	10	9	3
218-01-9	Chrysene	U	9	1.0	10	9	1
117-81-7	bis(2-Ethylhexyl)phthalate	U	9	1.0	10	9	2
117-84-0	Di-n-octylphthalate	U	9	1.0	10	9	2
367-12-4	2-Fluorophenol		50%				
13127-88-3	Phenol-D6		38%				
4165-60-0	Nitrobenzene-D5		76%				
321-60-8	2-Fluorobiphenyl		80%				
118-79-6	2,4,6-Tribromophenol		82%				
1718-51-0	Terphenyl-D14		76%				

lw 4/14/09

9

KATAHDIN ANALYTICAL SERVICES
Report of Analytical Results

Client: CH2MHill
Project: TO-009 Lejeune
PO No:
Sample Date: 01/10/09
Received Date: 01/13/09
Extraction Date: 01/14/09
Analysis Date: 28-JAN-2009 01:31
Report Date: 02/07/2009
Matrix: WATER
% Solids: NA

Lab ID: SC0150-7
Client ID: MR08-FB01011009
SDG: TO9-27
Extracted by: CB
Extraction Method: SW846 3510
Analyst: JCG
Analysis Method: SW846 8270C
Lab Prep Batch: WG59789
Units: ug/L

CAS#	Compound	Flags	Results	DF	PQL	Adj.PQL	Adj.MDL
100-52-7	Benzaldehyde	U	9	1.0	10	9	3
108-95-2	Phenol	U	9	1.0	10	9	2
111-44-4	Bis(2-Chloroethyl)ether	U	9	1.0	10	9	2
95-57-8	2-Chlorophenol	U	11	1.0	12	11	3
95-48-7	2-Methylphenol	U	11	1.0	12	11	4
108-60-1	2,2'-Oxybis(1-chloropropane)	U	9	1.0	10	9	2
98-86-2	Acetophenone	U	11	1.0	12	11	4
621-64-7	N-Nitroso-di-n-propylamine	U	9	1.0	10	9	2
65794-96-9	3&4-Methylphenol	U	9	1.0	10	9	2
67-72-1	Hexachloroethane	U	9	1.0	10	9	2
98-95-3	Nitrobenzene	U	9	1.0	10	9	2
78-59-1	Isophorone	U	9	1.0	10	9	2
88-75-5	2-Nitrophenol	U	9	1.0	10	9	3
105-67-9	2,4-Dimethylphenol	U	11	1.0	12	11	4
111-91-1	Bis(2-Chloroethoxy)methane	U	9	1.0	10	9	2
120-83-2	2,4-Dichlorophenol	U	11	1.0	12	11	4
106-47-8	4-Chloroaniline	U	9	1.0	10	9	2
105-60-2	Caprolactam	U	9	1.0	10	9	0.4
59-50-7	4-Chloro-3-Methylphenol	U	9	1.0	10	9	2
88-06-2	2,4,6-Trichlorophenol	U	9	1.0	10	9	3
95-95-4	2,4,5-Trichlorophenol	U	24	1.0	25	24	4
91-58-7	2-Chloronaphthalene	U	9	1.0	10	9	2
92-52-4	1,1'-Biphenyl	U	9	1.0	10	9	2
88-74-4	2-Nitroaniline	U	24	1.0	25	24	1
131-11-3	Dimethyl Phthalate	U	9	1.0	10	9	0.7
606-20-2	2,6-Dinitrotoluene	U	9	1.0	10	9	1.0
208-96-8	Acenaphthylene	U	9	1.0	10	9	2
99-09-2	3-Nitroaniline	U	24	1.0	25	24	1
83-32-9	Acenaphthene	U	9	1.0	10	9	2
51-28-5	2,4-Dinitrophenol	U	42	1.0	45	42	14
132-64-9	Dibenzofuran	U	9	1.0	10	9	1
100-02-7	4-Nitrophenol	~~U~~ UJ	24	1.0	25	24	5 CCH
121-14-2	2,4-Dinitrotoluene	U	9	1.0	10	9	1
84-66-2	Diethylphthalate	U	9	1.0	10	9	1
7005-72-3	4-Chlorophenyl-phenylether	U	9	1.0	10	9	1
100-01-6	4-Nitroaniline	U	24	1.0	25	24	2
534-52-1	4,6-Dinitro-2-Methylphenol	U	24	1.0	25	24	6
86-30-6	N-Nitrosodiphenylamine	U	9	1.0	10	9	2
101-55-3	4-Bromophenyl-phenylether	U	9	1.0	10	9	1
1912-24-9	Atrazine	U	9	1.0	10	9	2
87-86-5	Pentachlorophenol	U	24	1.0	25	24	7
120-12-7	Anthracene	U	9	1.0	10	9	1
86-74-8	Carbazole	U	9	1.0	10	9	1

LW 4/14/09

9

KATAHDIN ANALYTICAL SERVICES
Report of Analytical Results

Client: CH2MHill
Project: TO-009 Lejeune
PO No:
Sample Date: 01/10/09
Received Date: 01/13/09
Extraction Date: 01/14/09
Analysis Date: 28-JAN-2009 01:31
Report Date: 02/07/2009
Matrix: WATER
% Solids: NA

Lab ID: SC0150-7
Client ID: MR08-FB01011009
SDG: TO9-27
Extracted by: CB
Extraction Method: SW846 3510
Analyst: JCG
Analysis Method: SW846 8270C
Lab Prep Batch: WG59789
Units: ug/L

CAS#	Compound	Flags	Results	DF	PQL	Adj.PQL	Adj.MDL	
84-74-2	Di-n-butylphthalate	U	9	1.0	10	9	1	
85-68-7	Butylbenzylphthalate	U	9	1.0	10	9	1	
91-94-1	3,3'-Dichlorobenzidine	U	9	1.0	10	9	3	
218-01-9	Chrysene	U	9	1.0	10	9	1	
117-81-7	bis(2-Ethylhexyl)phthalate	~~JB~~ 9U	3	1.0	10	9	2	BL
117-84-0	Di-n-octylphthalate	U	9	1.0	10	9	2	
367-12-4	2-Fluorophenol		43%					
13127-88-3	Phenol-D6		32%					
4165-60-0	Nitrobenzene-D5		69%					
321-60-8	2-Fluorobiphenyl		61%					
118-79-6	2,4,6-Tribromophenol		68%					
1718-51-0	Terphenyl-D14		81%					

llw
4/14/09

KATAHDIN ANALYTICAL SERVICES
Report of Analytical Results

Client: CH2MHill
Project: TO-009 Lejeune
PO No:
Sample Date: 01/11/09
Received Date: 01/13/09
Extraction Date: 01/14/09
Analysis Date: 28-JAN-2009 02:14
Report Date: 02/07/2009
Matrix: WATER
% Solids: NA

Lab ID: SC0150-9
Client ID: MR08-EB01011109-SS
SDG: TO9-27
Extracted by: CB
Extraction Method: SW846 3510
Analyst: JCG
Analysis Method: SW846 8270C
Lab Prep Batch: WG59789
Units: ug/L

CAS#	Compound	Flags	Results	DF	PQL	Adj.PQL	Adj.MDL
100-52-7	Benzaldehyde	U	9	1.0	10	9	3
108-95-2	Phenol	U	9	1.0	10	9	2
111-44-4	Bis(2-Chloroethyl)ether	U	9	1.0	10	9	2
95-57-8	2-Chlorophenol	U	11	1.0	12	11	3
95-48-7	2-Methylphenol	U	11	1.0	12	11	4
108-60-1	2,2'-Oxybis(1-chloropropane)	U	9	1.0	10	9	2
98-86-2	Acetophenone	U	11	1.0	12	11	4
621-64-7	N-Nitroso-di-n-propylamine	U	9	1.0	10	9	2
65794-96-9	3&4-Methylphenol	U	9	1.0	10	9	2
67-72-1	Hexachloroethane	U	9	1.0	10	9	2
98-95-3	Nitrobenzene	U	9	1.0	10	9	2
78-59-1	Isophorone	U	9	1.0	10	9	2
88-75-5	2-Nitrophenol	U	9	1.0	10	9	3
105-67-9	2,4-Dimethylphenol	U	11	1.0	12	11	4
111-91-1	Bis(2-Chloroethoxy)methane	U	9	1.0	10	9	2
120-83-2	2,4-Dichlorophenol	U	11	1.0	12	11	4
106-47-8	4-Chloroaniline	U	9	1.0	10	9	2
105-60-2	Caprolactam	U	9	1.0	10	9	0.4
59-50-7	4-Chloro-3-Methylphenol	U	9	1.0	10	9	2
88-06-2	2,4,6-Trichlorophenol	U	9	1.0	10	9	3
95-95-4	2,4,5-Trichlorophenol	U	24	1.0	25	24	4
91-58-7	2-Chloronaphthalene	U	9	1.0	10	9	2
92-52-4	1,1'-Biphenyl	U	9	1.0	10	9	2
88-74-4	2-Nitroaniline	U	24	1.0	25	24	1
131-11-3	Dimethyl Phthalate	U	9	1.0	10	9	0.7
606-20-2	2,6-Dinitrotoluene	U	9	1.0	10	9	1.0
208-96-8	Acenaphthylene	U	9	1.0	10	9	2
99-09-2	3-Nitroaniline	U	24	1.0	25	24	1
83-32-9	Acenaphthene	U	9	1.0	10	9	2
51-28-5	2,4-Dinitrophenol	U	42	1.0	45	42	14
132-64-9	Dibenzofuran	U	9	1.0	10	9	1
100-02-7	4-Nitrophenol	~~U~~ UJ	24	1.0	25	24	5 CU
121-14-2	2,4-Dinitrotoluene	U	9	1.0	10	9	1
84-66-2	Diethylphthalate	U	9	1.0	10	9	1
7005-72-3	4-Chlorophenyl-phenylether	U	9	1.0	10	9	1
100-01-6	4-Nitroaniline	U	24	1.0	25	24	2
534-52-1	4,6-Dinitro-2-Methylphenol	U	24	1.0	25	24	6
86-30-6	N-Nitrosodiphenylamine	U	9	1.0	10	9	2
101-55-3	4-Bromophenyl-phenylether	U	9	1.0	10	9	1
1912-24-9	Atrazine	U	9	1.0	10	9	2
87-86-5	Pentachlorophenol	U	24	1.0	25	24	7
120-12-7	Anthracene	U	9	1.0	10	9	1
86-74-8	Carbazole	U	9	1.0	10	9	1

LW 4/14/09

10

KATAHDIN ANALYTICAL SERVICES
Report of Analytical Results

Client: CH2MHill
Project: TO-009 Lejeune
PO No:
Sample Date: 01/11/09
Received Date: 01/13/09
Extraction Date: 01/14/09
Analysis Date: 28-JAN-2009 02:14
Report Date: 02/07/2009
Matrix: WATER
% Solids: NA

Lab ID: SC0150-9
Client ID: MR08-EB01011109-SS
SDG: TO9-27
Extracted by: CB
Extraction Method: SW846 3510
Analyst: JCG
Analysis Method: SW846 8270C
Lab Prep Batch: WG59789
Units: ug/L

CAS#	Compound	Flags	Results	DF	PQL	Adj.PQL	Adj.MDL
84-74-2	Di-n-butylphthalate	J	1	1.0	10	9	1
85-68-7	Butylbenzylphthalate	U	9	1.0	10	9	1
91-94-1	3,3'-Dichlorobenzidine	U	9	1.0	10	9	3
218-01-9	Chrysene	U	9	1.0	10	9	1
117-81-7	bis(2-Ethylhexyl)phthalate	~~JB~~ 9U	2	1.0	10	9	2 BL
117-84-0	Di-n-octylphthalate	U	9	1.0	10	9	2
367-12-4	2-Fluorophenol		46%				
13127-88-3	Phenol-D6		32%				
4165-60-0	Nitrobenzene-D5		79%				
321-60-8	2-Fluorobiphenyl		78%				
118-79-6	2,4,6-Tribromophenol		78%				
1718-51-0	Terphenyl-D14		78%				

lw
4/14/09

11

KATAHDIN ANALYTICAL SERVICES
Report of Analytical Results

Client: CH2MHill
Project: TO-009 Lejeune
PO No:
Sample Date: 01/12/09
Received Date: 01/14/09
Extraction Date: 01/15/09
Analysis Date: 21-JAN-2009 15:28
Report Date: 02/07/2009
Matrix: WATER
% Solids: NA

Lab ID: SC0178-1
Client ID: MR08-EB01011209-SS
SDG: T09-27
Extracted by: CB
Extraction Method: SW846 3510
Analyst: JLP
Analysis Method: SW846 8270C
Lab Prep Batch: WG59812
Units: ug/L

CAS#	Compound	Flags	Results	DF	PQL	Adj.PQL	Adj.MDL
100-52-7	Benzaldehyde	~~U~~ UJ	9	1.0	10	9	3 CCH
108-95-2	Phenol	U	9	1.0	10	9	2
111-44-4	Bis(2-Chloroethyl)ether	U	9	1.0	10	9	2
95-57-8	2-Chlorophenol	U	11	1.0	12	11	3
95-48-7	2-Methylphenol	U	11	1.0	12	11	4
108-60-1	2,2'-Oxybis(1-chloropropane)	U	9	1.0	10	9	2
98-86-2	Acetophenone	U	11	1.0	12	11	4
621-64-7	N-Nitroso-di-n-propylamine	U	9	1.0	10	9	2
65794-96-9	3&4-Methylphenol	U	9	1.0	10	9	2
67-72-1	Hexachloroethane	U	9	1.0	10	9	2
98-95-3	Nitrobenzene	U	9	1.0	10	9	2
78-59-1	Isophorone	U	9	1.0	10	9	2
88-75-5	2-Nitrophenol	U	9	1.0	10	9	3
105-67-9	2,4-Dimethylphenol	U	11	1.0	12	11	4
111-91-1	Bis(2-Chloroethoxy)methane	U	9	1.0	10	9	2
120-83-2	2,4-Dichlorophenol	U	11	1.0	12	11	4
106-47-8	4-Chloroaniline	U	9	1.0	10	9	2
105-60-2	Caprolactam	U	9	1.0	10	9	0.4
59-50-7	4-Chloro-3-Methylphenol	U	9	1.0	10	9	2
88-06-2	2,4,6-Trichlorophenol	U	9	1.0	10	9	3
95-95-4	2,4,5-Trichlorophenol	U	24	1.0	25	24	4
91-58-7	2-Chloronaphthalene	U	9	1.0	10	9	2
92-52-4	1,1'-Biphenyl	U	9	1.0	10	9	2
88-74-4	2-Nitroaniline	U	24	1.0	25	24	1
131-11-3	Dimethyl Phthalate	U	9	1.0	10	9	0.7
606-20-2	2,6-Dinitrotoluene	U	9	1.0	10	9	1.0
208-96-8	Acenaphthylene	U	9	1.0	10	9	2
99-09-2	3-Nitroaniline	U	24	1.0	25	24	1
83-32-9	Acenaphthene	U	9	1.0	10	9	2
51-28-5	2,4-Dinitrophenol	U	42	1.0	45	42	14
132-64-9	Dibenzofuran	U	9	1.0	10	9	1
100-02-7	4-Nitrophenol	U	24	1.0	25	24	5
121-14-2	2,4-Dinitrotoluene	U	9	1.0	10	9	1
84-66-2	Diethylphthalate	~~UB~~ 9U	2	1.0	10	9	1 BL
7005-72-3	4-Chlorophenyl-phenylether	U	9	1.0	10	9	1
100-01-6	4-Nitroaniline	U	24	1.0	25	24	2
534-52-1	4,6-Dinitro-2-Methylphenol	U	24	1.0	25	24	6
86-30-6	N-Nitrosodiphenylamine	U	9	1.0	10	9	2
101-55-3	4-Bromophenyl-phenylether	U	9	1.0	10	9	1
1912-24-9	Atrazine	U	9	1.0	10	9	2
87-86-5	Pentachlorophenol	U	24	1.0	25	24	7
120-12-7	Anthracene	U	9	1.0	10	9	1
86-74-8	Carbazole	U	9	1.0	10	9	1

LW
4/14/09

11

KATAHDIN ANALYTICAL SERVICES
Report of Analytical Results

Client: CH2MHill
Project: TO-009 Lejeune
PO No:
Sample Date: 01/12/09
Received Date: 01/14/09
Extraction Date: 01/15/09
Analysis Date: 21-JAN-2009 15:28
Report Date: 02/07/2009
Matrix: WATER
% Solids: NA

Lab ID: SC0178-1
Client ID: MR08-EB01011209-SS
SDG: TO9-27
Extracted by: CB
Extraction Method: SW846 3510
Analyst: JLP
Analysis Method: SW846 8270C
Lab Prep Batch: WG59812
Units: ug/L

CAS#	Compound	Flags	Results	DF	PQL	Adj.PQL	Adj.MDL
84-74-2	Di-n-butylphthalate	U	9	1.0	10	9	1
85-68-7	Butylbenzylphthalate	U	9	1.0	10	9	1
91-94-1	3,3'-Dichlorobenzidine	U	9	1.0	10	9	3
218-01-9	Chrysene	U	9	1.0	10	9	1
117-81-7	bis(2-Ethylhexyl)phthalate	U	9	1.0	10	9	2
117-84-0	Di-n-octylphthalate	~~U~~ UJ	9	1.0	10	9	2
367-12-4	2-Fluorophenol		38%				
13127-88-3	Phenol-D6		20%				
4165-60-0	Nitrobenzene-D5		53%				
321-60-8	2-Fluorobiphenyl		64%				
118-79-6	2,4,6-Tribromophenol		80%				
1718-51-0	Terphenyl-D14		105%				

CW

KW 4/14/09

12

KATAHDIN ANALYTICAL SERVICES
Report of Analytical Results

Client: CH2MHill
Project: TO-009 Lejeune
PO No:
Sample Date: 01/13/09
Received Date: 01/15/09
Extraction Date: 01/16/09
Analysis Date: 22-JAN-2009 11:25
Report Date: 02/07/2009
Matrix: WATER
% Solids: NA

Lab ID: SC0212-1
Client ID: MR08-EB0101309-SS
SDG: TO9-27
Extracted by: KF
Extraction Method: SW846 3520
Analyst: JLP
Analysis Method: SW846 8270C
Lab Prep Batch: WG59880
Units: ug/L

CAS#	Compound	Flags	Results	DF	PQL	Adj.PQL	Adj.MDL	
100-52-7	Benzaldehyde	~~U~~ UJ	9	1.0	10	9	3	ICB
108-95-2	Phenol	~~U~~ R	9	1.0	10	9	2	SSL
111-44-4	Bis(2-Chloroethyl)ether	U	9	1.0	10	9	2	
95-57-8	2-Chlorophenol	~~U~~ R	11	1.0	12	11	3	SSL
95-48-7	2-Methylphenol	~~U~~ R	11	1.0	12	11	4	SSL
108-60-1	2,2'-Oxybis(1-chloropropane)	U	9	1.0	10	9	2	
98-86-2	Acetophenone	U	11	1.0	12	11	4	
621-64-7	N-Nitroso-di-n-propylamine	U	9	1.0	10	9	2	
65794-96-9	3&4-Methylphenol	~~U~~ R	9	1.0	10	9	2	SSL
67-72-1	Hexachloroethane	U	9	1.0	10	9	2	
98-95-3	Nitrobenzene	U	9	1.0	10	9	2	
78-59-1	Isophorone	U	9	1.0	10	9	2	
88-75-5	2-Nitrophenol	~~U~~ R	9	1.0	10	9	3	SSL
105-67-9	2,4-Dimethylphenol	~~U~~ R	11	1.0	12	11	4	SSL
111-91-1	Bis(2-Chloroethoxy)methane	U	9	1.0	10	9	2	
120-83-2	2,4-Dichlorophenol	~~U~~ R	11	1.0	12	11	4	SSL
106-47-8	4-Chloroaniline	U	9	1.0	10	9	2	
105-60-2	Caprolactam	U	9	1.0	10	9	0.4	
59-50-7	4-Chloro-3-Methylphenol	~~U~~ R	9	1.0	10	9	2	SSL
88-06-2	2,4,6-Trichlorophenol	~~U~~ ↓	9	1.0	10	9	3	↓
95-95-4	2,4,5-Trichlorophenol	~~U~~ ↓	24	1.0	25	24	4	
91-58-7	2-Chloronaphthalene	U	9	1.0	10	9	2	
92-52-4	1,1'-Biphenyl	U	9	1.0	10	9	2	
88-74-4	2-Nitroaniline	U	24	1.0	25	24	1	
131-11-3	Dimethyl Phthalate	U	9	1.0	10	9	0.7	
606-20-2	2,6-Dinitrotoluene	U	9	1.0	10	9	1.0	
208-96-8	Acenaphthylene	U	9	1.0	10	9	2	
99-09-2	3-Nitroaniline	U	24	1.0	25	24	1	
83-32-9	Acenaphthene	U	9	1.0	10	9	2	
51-28-5	2,4-Dinitrophenol	~~U~~ R	42	1.0	45	42	14	SSL
132-64-9	Dibenzofuran	U	9	1.0	10	9	1	
100-02-7	4-Nitrophenol	~~U~~ R	24	1.0	25	24	5	SSL
121-14-2	2,4-Dinitrotoluene	U	9	1.0	10	9	1	
84-66-2	Diethylphthalate	U	9	1.0	10	9	1	
7005-72-3	4-Chlorophenyl-phenylether	U	9	1.0	10	9	1	
100-01-6	4-Nitroaniline	~~U~~ UJ	24	1.0	25	24	2	CCH
534-52-1	4,6-Dinitro-2-Methylphenol	~~U~~ R	24	1.0	25	24	6	SSL
86-30-6	N-Nitrosodiphenylamine	U	9	1.0	10	9	2	
101-55-3	4-Bromophenyl-phenylether	U	9	1.0	10	9	1	
1912-24-9	Atrazine	U	9	1.0	10	9	2	
87-86-5	Pentachlorophenol	~~U~~ R	24	1.0	25	24	7	SSL
120-12-7	Anthracene	U	9	1.0	10	9	1	
86-74-8	Carbazole	U	9	1.0	10	9	1	

MW 4/14/09

KATAHDIN ANALYTICAL SERVICES
Report of Analytical Results

12

Client: CH2MHill
Project: TO-009 Lejeune
PO No:
Sample Date: 01/13/09
Received Date: 01/15/09
Extraction Date: 01/16/09
Analysis Date: 22-JAN-2009 11:25
Report Date: 02/07/2009
Matrix: WATER
% Solids: NA

Lab ID: SC0212-1
Client ID: MR08-EB0101309-SS
SDG: TO9-27
Extracted by: KF
Extraction Method: SW846 3520
Analyst: JLP
Analysis Method: SW846 8270C
Lab Prep Batch: WG59880
Units: ug/L

CAS#	Compound	Flags	Results	DF	PQL	Adj.PQL	Adj.MDL
84-74-2	Di-n-butylphthalate	U	9	1.0	10	9	1
85-68-7	Butylbenzylphthalate	U	9	1.0	10	9	1
91-94-1	3,3'-Dichlorobenzidine	~~U~~ UJ	9	1.0	10	9	3 CCH
218-01-9	Chrysene	U	9	1.0	10	9	1
117-81-7	bis(2-Ethylhexyl)phthalate	J	3	1.0	10	9	2
117-84-0	Di-n-octylphthalate	U	9	1.0	10	9	2
367-12-4	2-Fluorophenol		* 0%				
13127-88-3	Phenol-D6		* 0%				
4165-60-0	Nitrobenzene-D5		42%				
321-60-8	2-Fluorobiphenyl		53%				
118-79-6	2,4,6-Tribromophenol		* 0%				
1718-51-0	Terphenyl-D14		96%				

dlw
4/14/09

12RE

KATAHDIN ANALYTICAL SERVICES
Report of Analytical Results

Client: CH2MHill
Project: TO-009 Lejeune
PO No:
Sample Date: 01/13/09
Received Date: 01/15/09
Extraction Date: 01/26/09
Analysis Date: 28-JAN-2009 04:21
Report Date: 02/07/2009
Matrix: WATER
% Solids: NA

Lab ID: SC0212-1RE
Client ID: MR08-EB0101309-SS
SDG: TO9-27
Extracted by: CB
Extraction Method: SW846 3510
Analyst: JCG
Analysis Method: SW846 8270C
Lab Prep Batch: WG60166
Units: ug/L

CAS#	Compound	Flags	Results	DF	PQL	Adj.PQL	Adj.MDL
100-52-7	Benzaldehyde	U	10	1.0	10	10	3
108-95-2	Phenol	U	10	1.0	10	10	2
111-44-4	Bis(2-Chloroethyl)ether	U	10	1.0	10	10	2
95-57-8	2-Chlorophenol	U	11	1.0	12	11	3
95-48-7	2-Methylphenol	U	11	1.0	12	11	4
108-60-1	2,2'-Oxybis(1-chloropropane)	U	10	1.0	10	10	2
98-86-2	Acetophenone	U	11	1.0	12	11	4
621-64-7	N-Nitroso-di-n-propylamine	U	10	1.0	10	10	2
65794-96-9	3&4-Methylphenol	U	10	1.0	10	10	2
67-72-1	Hexachloroethane	U	10	1.0	10	10	2
98-95-3	Nitrobenzene	U	10	1.0	10	10	2
78-59-1	Isophorone	U	10	1.0	10	10	2
88-75-5	2-Nitrophenol	U	10	1.0	10	10	3
105-67-9	2,4-Dimethylphenol	U	11	1.0	12	11	4
111-91-1	Bis(2-Chloroethoxy)methane	U	10	1.0	10	10	2
120-83-2	2,4-Dichlorophenol	U	11	1.0	12	11	4
106-47-8	4-Chloroaniline	U	10	1.0	10	10	2
105-60-2	Caprolactam	U	10	1.0	10	10	0.4
59-50-7	4-Chloro-3-Methylphenol	U	10	1.0	10	10	2
88-06-2	2,4,6-Trichlorophenol	U	10	1.0	10	10	3
95-95-4	2,4,5-Trichlorophenol	U	24	1.0	25	24	4
91-58-7	2-Chloronaphthalene	U	10	1.0	10	10	2
92-52-4	1,1'-Biphenyl	U	10	1.0	10	10	2
88-74-4	2-Nitroaniline	U	24	1.0	25	24	1
131-11-3	Dimethyl Phthalate	U	10	1.0	10	10	0.8
606-20-2	2,6-Dinitrotoluene	U	10	1.0	10	10	1
208-96-8	Acenaphthylene	U	10	1.0	10	10	2
99-09-2	3-Nitroaniline	U	24	1.0	25	24	1
83-32-9	Acenaphthene	U	10	1.0	10	10	2
51-28-5	2,4-Dinitrophenol	U	43	1.0	45	43	14
132-64-9	Dibenzofuran	U	10	1.0	10	10	1
100-02-7	4-Nitrophenol	~~U~~ UJ	24	1.0	25	24	5 CEM
121-14-2	2,4-Dinitrotoluene	U	10	1.0	10	10	1
84-66-2	Diethylphthalate	U	10	1.0	10	10	1
7005-72-3	4-Chlorophenyl-phenylether	U	10	1.0	10	10	1
100-01-6	4-Nitroaniline	U	24	1.0	25	24	2
534-52-1	4,6-Dinitro-2-Methylphenol	U	24	1.0	25	24	6
86-30-6	N-Nitrosodiphenylamine	U	10	1.0	10	10	2
101-55-3	4-Bromophenyl-phenylether	U	10	1.0	10	10	1
1912-24-9	Atrazine	U	10	1.0	10	10	2
87-86-5	Pentachlorophenol	U	24	1.0	25	24	7
120-12-7	Anthracene	U	10	1.0	10	10	1
86-74-8	Carbazole	U	10	1.0	10	10	1

lw 4/14/09

12RE

KATAHDIN ANALYTICAL SERVICES
Report of Analytical Results

Client: CH2MHill
Project: TO-009 Lejeune
PO No:
Sample Date: 01/13/09
Received Date: 01/15/09
Extraction Date: 01/26/09
Analysis Date: 28-JAN-2009 04:21
Report Date: 02/07/2009
Matrix: WATER
% Solids: NA

Lab ID: SC0212-1RE
Client ID: MR08-EB0101309-SS
SDG: TO9-27
Extracted by: CB
Extraction Method: SW846 3510
Analyst: JCG
Analysis Method: SW846 8270C
Lab Prep Batch: WG60166
Units: ug/L

CAS#	Compound	Flags	Results	DF	PQL	Adj.PQL	Adj.MDL
84-74-2	Di-n-butylphthalate	U	10	1.0	10	10	1
85-68-7	Butylbenzylphthalate	U	10	1.0	10	10	1
91-94-1	3,3'-Dichlorobenzidine	U	10	1.0	10	10	3
218-01-9	Chrysene	U	10	1.0	10	10	1
117-81-7	bis(2-Ethylhexyl)phthalate	U	10	1.0	10	10	2
117-84-0	Di-n-octylphthalate	U	10	1.0	10	10	2
367-12-4	2-Fluorophenol		56%				
13127-88-3	Phenol-D6		40%				
4165-60-0	Nitrobenzene-D5		76%				
321-60-8	2-Fluorobiphenyl		80%				
118-79-6	2,4,6-Tribromophenol		98%				
1718-51-0	Terphenyl-D14		96%				

Jew
4/14/09

13

KATAHDIN ANALYTICAL SERVICES
Report of Analytical Results

Client: CH2MHill
Project: TO-009 Lejeune
PO No:
Sample Date: 01/14/09
Received Date: 01/15/09
Extraction Date: 01/16/09
Analysis Date: 22-JAN-2009 12:07
Report Date: 02/07/2009
Matrix: WATER
% Solids: NA

Lab ID: SC0212-3
Client ID: MR08-EB01011409-SS
SDG: TO9-27
Extracted by: KF
Extraction Method: SW846 3520
Analyst: JLP
Analysis Method: SW846 8270C
Lab Prep Batch: WG59880
Units: ug/L

CAS#	Compound	Flags	Results	DF	PQL	Adj.PQL	Adj.MDL	
100-52-7	Benzaldehyde	~~U~~ UJ	9	1.0	10	9	3	IUB
108-95-2	Phenol	U	9	1.0	10	9	2	
111-44-4	Bis(2-Chloroethyl)ether	U	9	1.0	10	9	2	
95-57-8	2-Chlorophenol	U	11	1.0	12	11	3	
95-48-7	2-Methylphenol	U	11	1.0	12	11	4	
108-60-1	2,2'-Oxybis(1-chloropropane)	U	9	1.0	10	9	2	
98-86-2	Acetophenone	U	11	1.0	12	11	4	
621-64-7	N-Nitroso-di-n-propylamine	U	9	1.0	10	9	2	
65794-96-9	3&4-Methylphenol	U	9	1.0	10	9	2	
67-72-1	Hexachloroethane	U	9	1.0	10	9	2	
98-95-3	Nitrobenzene	U	9	1.0	10	9	2	
78-59-1	Isophorone	U	9	1.0	10	9	2	
88-75-5	2-Nitrophenol	U	9	1.0	10	9	3	
105-67-9	2,4-Dimethylphenol	U	11	1.0	12	11	4	
111-91-1	Bis(2-Chloroethoxy)methane	U	9	1.0	10	9	2	
120-83-2	2,4-Dichlorophenol	U	11	1.0	12	11	4	
106-47-8	4-Chloroaniline	U	9	1.0	10	9	2	
105-60-2	Caprolactam	U	9	1.0	10	9	0.4	
59-50-7	4-Chloro-3-Methylphenol	U	9	1.0	10	9	2	
88-06-2	2,4,6-Trichlorophenol	U	9	1.0	10	9	3	
95-95-4	2,4,5-Trichlorophenol	U	24	1.0	25	24	4	
91-58-7	2-Chloronaphthalene	U	9	1.0	10	9	2	
92-52-4	1,1'-Biphenyl	U	9	1.0	10	9	2	
88-74-4	2-Nitroaniline	U	24	1.0	25	24	1	
131-11-3	Dimethyl Phthalate	U	9	1.0	10	9	0.7	
606-20-2	2,6-Dinitrotoluene	U	9	1.0	10	9	1.0	
208-96-8	Acenaphthylene	U	9	1.0	10	9	2	
99-09-2	3-Nitroaniline	U	24	1.0	25	24	1	
83-32-9	Acenaphthene	U	9	1.0	10	9	2	
51-28-5	2,4-Dinitrophenol	~~U~~ UJ	42	1.0	45	42	14	CCH
132-64-9	Dibenzofuran	U	9	1.0	10	9	1	
100-02-7	4-Nitrophenol	~~U~~ UJ	24	1.0	25	24	5	CCH
121-14-2	2,4-Dinitrotoluene	U	9	1.0	10	9	1	
84-66-2	Diethylphthalate	U	9	1.0	10	9	1	
7005-72-3	4-Chlorophenyl-phenylether	U	9	1.0	10	9	1	
100-01-6	4-Nitroaniline	~~U~~ UJ	24	1.0	25	24	2	CCH
534-52-1	4,6-Dinitro-2-Methylphenol	U	24	1.0	25	24	6	
86-30-6	N-Nitrosodiphenylamine	U	9	1.0	10	9	2	
101-55-3	4-Bromophenyl-phenylether	U	9	1.0	10	9	1	
1912-24-9	Atrazine	U	9	1.0	10	9	2	
87-86-5	Pentachlorophenol	U	24	1.0	25	24	7	
120-12-7	Anthracene	U	9	1.0	10	9	1	
86-74-8	Carbazole	U	9	1.0	10	9	1	

RW
4/14/09

13

KATAHDIN ANALYTICAL SERVICES
Report of Analytical Results

Client: CH2MHill
Project: TO-009 Lejeune
PO No:
Sample Date: 01/14/09
Received Date: 01/15/09
Extraction Date: 01/16/09
Analysis Date: 22-JAN-2009 12:07
Report Date: 02/07/2009
Matrix: WATER
% Solids: NA

Lab ID: SC0212-3
Client ID: MR08-EB01011409-SS
SDG: TO9-27
Extracted by: KF
Extraction Method: SW846 3520
Analyst: JLP
Analysis Method: SW846 8270C
Lab Prep Batch: WG59880
Units: ug/L

CAS#	Compound	Flags	Results	DF	PQL	Adj.PQL	Adj.MDL
84-74-2	Di-n-butylphthalate	U	9	1.0	10	9	1
85-68-7	Butylbenzylphthalate	U	9	1.0	10	9	1
91-94-1	3,3'-Dichlorobenzidine	~~U~~ UJ	9	1.0	10	9	3 CCH
218-01-9	Chrysene	U	9	1.0	10	9	1
117-81-7	bis(2-Ethylhexyl)phthalate	U	9	1.0	10	9	2
117-84-0	Di-n-octylphthalate	U	9	1.0	10	9	2
367-12-4	2-Fluorophenol		63%				
13127-88-3	Phenol-D6		66%				
4165-60-0	Nitrobenzene-D5		71%				
321-60-8	2-Fluorobiphenyl		71%				
118-79-6	2,4,6-Tribromophenol		65%				
1718-51-0	Terphenyl-D14		87%				

MW
4/14/09

ENVIRONMENTAL
Data Services, Inc.

POLYNUCLEAR AROMATIC COMPOUNDS BY 8270SIM

USEPA Region IV - Level IV Review

Site: MCB Camp Lejeune, TO-09 SDG #: TO9-28

Client: CH2M HILL, Inc., Virginia Beach, Virginia Date: March 14, 2009

Laboratory: Katahdin Analytical Services, Scarborough, Maine Reviewer: Nancy Weaver

EDS ID	Client Sample ID	Laboratory Sample ID	Matrix
1	MR08-IS195-6-7-09A	SC0067-2	Soil
2	MR08-SS192-09A	SC0067-4	Soil
3	MR08-IS192-5-6-09A	SC0067-6	Soil
3DL	MR08-IS192-5-6-09ADL	SC0067-6DL	Soil
4	MR08-SS171-09A	SC0067-8	Soil
5	MR08-IS171-8-9-09A	SC0067-10	Soil
6	MR08-SS168-09A	SC0067-12	Soil
6RE	MR08-SS168-09ARE	SC0067-12RE	Soil
7	MR08-IS168-2-3-09A	SC0067-14	Soil
8	MR08-SS151-09A	SC0067-16	Soil
9	MR08-IS151-4-5-09A	SC0067-18	Soil
10	MR08-SS150-09A	SC0067-20	Soil
11	MR08-IS150-2-3-09A	SC0067-22	Soil
12	MR08-IS141-2-3-09A	SC0067-24	Soil
12MS	MR08-IS141-2-3-09AMS	SC0067-24MS	Soil
12MSD	MR08-IS141-2-3-09AMSD	SC0067-24MSD	Soil
13	MR08-SS140-09A	SC0067-26	Soil
14	MR08-IS140-2-3-09A	SC0067-28	Soil
15	MR08-IS209-2-3-09A	SC0067-34	Soil
16	MR08-IS209D-2-3-09A	SC0067-36	Soil
17	MR08-SS210-09A	SC0067-38	Soil
17DL	MR08-SS210-09ADL	SC0067-38DL	Soil
18	MR08-IS210-2-3-09A	SC0067-40	Soil

The USEPA "Contract Laboratory Program National Functional Guidelines for Organic Data Review," October 1999, and professional judgment were used in evaluating the data in this summary report.

Holding Times - All samples were extracted within 14 days for soil samples and analyzed within 40 days for all samples.

GC/MS Tuning - All of the DFTPP tunes in the initial and continuing calibrations met the percent relative abundance criteria.

Initial Calibration - The initial calibrations exhibited acceptable %RSD and mean RRF values.

Continuing Calibration - The continuing calibrations exhibited acceptable %D and RRF values except the following.

CCAL Date	Compound	%D/RRF	Qualifier	Affected Samples
01/25/09	Benzo (b) fluoranthene	30.56%	J/UJ	1, 5, 7-10
01/26/09	Naphthalene	29.50%	J/UJ	3DL, 11-18
	2-Methylnaphthalene	31.87%	J/UJ	3DL, 11-18
	Phenanthrene	27.76%	J/UJ	3DL, 11-18
	Fluoranthene	38.22%	J/UJ	3DL, 11-16, 18
	Benzo (k) fluoranthene	28.90%	J/UJ	3DL, 11-16, 18
	Hexachlorobutadiene	47.32%	J/UJ	3DL, 11-18
	Hexachlorocyclopentadiene	38.40%	J/UJ	3DL, 11-18
01/27/09	Hexachlorocyclopentadiene	35.85%	J/UJ	6

Surrogates - All samples exhibited acceptable surrogate recoveries.

MS/MSD - The MS/MSD sample exhibited acceptable %R and RPD values.

Laboratory Control Sample - The LCS samples exhibited acceptable %R values except the following.

LCS ID	Compound	%R	Qualifier	Affected Samples
WG59707-LCS	Benzo(g,h,i)perylene	122%	J	1, 2, 3DL, 4-6, 6RE, 8, 10, 13, 17DL, 18

Internal Standard (IS) Area Performance - All internal standards met response and retention time (RT) criteria except the following.

Sample ID	Internal Standard	Area Count	Qualifier
3	IS6-Perylene-d12	High	J - Positive associated results

Method Blank - The method blanks were free of contamination.

Field, Equipment Blank - Field QC results are summarized below.

Blank ID	Compound	Conc. ug/L	Action Level ug/kg	Qualifier	Affected Samples
MR08-FB01011009	None - ND	-	-	-	-
MR08-EB01010609-SS	None - ND	-	-	-	-

Field Duplicates - Field duplicate results are summarized below.

Compound	MR08-IS209-2-3-09A ug/kg	MR08-IS209D-2-3-09A ug/kg	RPD	Qualifier
None	ND	ND	-	-

Tentatively Identified Compounds (TICs) - TICs were not reported.

Compound Quantitation - Several samples exhibited high concentrations of target compounds and were flagged (E) by the laboratory. The samples were diluted and reanalyzed and the dilution results for these compounds should be used for reporting.

EDS sample ID # 6 was analyzed at a 2X dilution and then reanalyzed at a 1X dilution. The reanalysis sample exhibited a high concentration of fluoranthene and was flagged (E) by the laboratory. The reviewer replaced the reanalysis result with the original result for this compound. All other reanalysis results should be used for reporting.

KATAHDIN ANALYTICAL SERVICES
Report of Analytical Results

Client: CH2MHill
Project: TO-009 Lejeune
PO No:
Sample Date: 01/06/09
Received Date: 01/08/09
Extraction Date: 01/10/09
Analysis Date: 25-JAN-2009 15:42
Report Date: 01/30/2009
Matrix: SOIL
% Solids: 90.9

Lab ID: SC0067-2
Client ID: MR08-IS195-6-7-09A
SDG: TO9-28
Extracted by: CB
Extraction Method: SW846 3550
Analyst: EKC
Analysis Method: SW846 M8270C
Lab Prep Batch: WG59707
Units: ug/Kgdrywt

CAS#	Compound	Flags		Results	DF	PQL	Adj.PQL	Adj.MDL	
91-20-3	Naphthalene	U		11	1.0	10	11	2.8	
91-57-6	2-Methylnaphthalene	U		11	1.0	10	11	2.4	
86-73-7	Fluorene	U		11	1.0	10	11	3.5	
85-01-8	Phenanthrene	U		11	1.0	10	11	2.0	
206-44-0	Fluoranthene	U		11	1.0	10	11	2.0	
129-00-0	Pyrene	U		11	1.0	10	11	2.3	
56-55-3	Benzo(a)anthracene	J		2.2	1.0	10	11	2.1	
205-99-2	Benzo(b)fluoranthene	~~U~~	UJ	11	1.0	10	11	2.6	CCH
207-08-9	Benzo(k)fluoranthene	U		11	1.0	10	11	3.4	
50-32-8	Benzo(a)pyrene	U		11	1.0	10	11	3.6	
193-39-5	Indeno(1,2,3-cd)pyrene	J		2.8	1.0	10	11	2.1	
53-70-3	Dibenzo(a,h)anthracene	U		11	1.0	10	11	2.0	
191-24-2	Benzo(g,h,i)perylene	~~U~~	J	4.7	1.0	10	11	2.2	BSH
118-74-1	Hexachlorobenzene	U		11	1.0	10	11	2.0	
87-68-3	Hexachlorobutadiene	U		11	1.0	10	11	2.5	
77-47-4	Hexachlorocyclopentadiene	U		11	1.0	10	11	1.6	
7297-45-2	2-Methylnaphthalene-D10			50%					
367-12-4	2,4-Dibromophenol			72%					
81103-79-9	Fluorene-d10			60%					
1718-51-1	Pyrene-D10			77%					

lcw
4/14/09

2

KATAHDIN ANALYTICAL SERVICES
Report of Analytical Results

Client: CH2MHill
Project: TO-009 Lejeune
PO No:
Sample Date: 01/06/09
Received Date: 01/08/09
Extraction Date: 01/10/09
Analysis Date: 27-JAN-2009 01:38
Report Date: 01/30/2009
Matrix: SOIL
% Solids: 73.6

Lab ID: SC0067-4RA
Client ID: MR08-SS192-09A
SDG: TO9-28
Extracted by: CB
Extraction Method: SW846 3550
Analyst: JCG
Analysis Method: SW846 M8270C
Lab Prep Batch: WG59707
Units: ug/Kgdrywt

CAS#	Compound	Flags	Results	DF	PQL	Adj.PQL	Adj.MDL
91-20-3	Naphthalene	U	14	1.0	10	14	3.5
91-57-6	2-Methylnaphthalene	U	14	1.0	10	14	3.0
86-73-7	Fluorene	U	14	1.0	10	14	4.3
85-01-8	Phenanthrene		29	1.0	10	14	2.4
206-44-0	Fluoranthene		91	1.0	10	14	2.4
129-00-0	Pyrene		79	1.0	10	14	2.8
56-55-3	Benzo(a)anthracene		49	1.0	10	14	2.6
205-99-2	Benzo(b)fluoranthene		72	1.0	10	14	3.2
207-08-9	Benzo(k)fluoranthene		77	1.0	10	14	4.2
50-32-8	Benzo(a)pyrene		54	1.0	10	14	4.5
193-39-5	Indeno(1,2,3-cd)pyrene		38	1.0	10	14	2.6
53-70-3	Dibenzo(a,h)anthracene	J	10	1.0	10	14	2.4
191-24-2	Benzo(g,h,i)perylene	J	33	1.0	10	14	2.7 BSH
118-74-1	Hexachlorobenzene	U	14	1.0	10	14	2.4
87-68-3	Hexachlorobutadiene	U	14	1.0	10	14	3.1
77-47-4	Hexachlorocyclopentadiene	U	14	1.0	10	14	2.0
7297-45-2	2-Methylnaphthalene-D10		53%				
367-12-4	2,4-Dibromophenol		79%				
81103-79-9	Fluorene-d10		79%				
1718-51-1	Pyrene-D10		82%				

lw
4/14/09

3

KATAHDIN ANALYTICAL SERVICES
Report of Analytical Results

Client: CH2MHill
Project: TO-009 Lejeune
PO No:
Sample Date: 01/06/09
Received Date: 01/08/09
Extraction Date: 01/10/09
Analysis Date: 25-JAN-2009 18:23
Report Date: 01/30/2009
Matrix: SOIL
% Solids: 76.2

Lab ID: SC0067-6
Client ID: MR08-IS192-5-6-09A
SDG: TO9-28
Extracted by: CB
Extraction Method: SW846 3550
Analyst: EKC
Analysis Method: SW846 M8270C
Lab Prep Batch: WG59707
Units: ug/Kgdrywt

CAS#	Compound	Flags	Results	DF	PQL	Adj.PQL	Adj.MDL	
91-20-3	Naphthalene	U	13	1.0	10	13	3.4	
91-57-6	2-Methylnaphthalene	U	13	1.0	10	13	2.9	
86-73-7	Fluorene		66	1.0	10	13	4.2	
85-01-8	Phenanthrene	~~E~~	510J CC4 ~~730~~ 4	1.0	10	52 13	9.4 ~~2.4~~	R DL
206-44-0	Fluoranthene	E	580J CC4 ~~770~~	1.0	10	13	9.4 ~~2.4~~	
129-00-0	Pyrene	E	540 ~~510~~	1.0	10	13	11 ~~2.8~~	
56-55-3	Benzo(a)anthracene	E	360 ~~360~~	1.0	10	13	10 ~~2.5~~	
205-99-2	Benzo(b)fluoranthene		J 290	1.0	10	13	3.2	ISH
207-08-9	Benzo(k)fluoranthene		160	1.0	10	13	4.1	
50-32-8	Benzo(a)pyrene		220	1.0	10	13	4.3	
193-39-5	Indeno(1,2,3-cd)pyrene		140	1.0	10	13	2.5	
53-70-3	Dibenzo(a,h)anthracene		40	1.0	10	13	2.4	
191-24-2	Benzo(g,h,i)perylene		100	1.0	10	13	2.6	
118-74-1	Hexachlorobenzene	U	13	1.0	10	13	2.4	
87-68-3	Hexachlorobutadiene	U	13	1.0	10	13	3.0	
77-47-4	Hexachlorocyclopentadiene	U	13	1.0	10	13	2.0	
7297-45-2	2-Methylnaphthalene-D10		54%					
367-12-4	2,4-Dibromophenol		78%					
81103-79-9	Fluorene-d10		79%					
1718-51-1	Pyrene-D10		78%					

JW
4/14/09

3DL

KATAHDIN ANALYTICAL SERVICES
Report of Analytical Results

Client: CH2MHill
Project: TO-009 Lejeune
PO No:
Sample Date: 01/06/09
Received Date: 01/08/09
Extraction Date: 01/10/09
Analysis Date: 26-JAN-2009 14:42
Report Date: 01/30/2009
Matrix: SOIL
% Solids: 76.2

Lab ID: SC0067-6DL
Client ID: MR08-IS192-5-6-09A
SDG: TO9-28
Extracted by: CB
Extraction Method: SW846 3550
Analyst: JLP
Analysis Method: SW846 M8270C
Lab Prep Batch: WG59707
Units: ug/Kgdrywt

Use original

CAS#	Compound	Flags		Results	DF	PQL	Adj.PQL	Adj.MDL	
91-20-3	Naphthalene	~~U~~	UJ	52	4.0	10	52	14	CCH
91-57-6	2-Methylnaphthalene	~~U~~	UJ	52	4.0	10	52	12	CCH
86-73-7	Fluorene			56	4.0	10	52	17	
85-01-8	Phenanthrene		J	510	4.0	10	52	9.4	CCH
206-44-0	Fluoranthene		J	580	4.0	10	52	9.4	CCH
129-00-0	Pyrene			540	4.0	10	52	11	
56-55-3	Benzo(a)anthracene			360	4.0	10	52	10	
205-99-2	Benzo(b)fluoranthene			270	4.0	10	52	13	
207-08-9	Benzo(k)fluoranthene		J	160	4.0	10	52	16	CCH
50-32-8	Benzo(a)pyrene			200	4.0	10	52	17	
193-39-5	Indeno(1,2,3-cd)pyrene			160	4.0	10	52	10	
53-70-3	Dibenzo(a,h)anthracene			67	4.0	10	52	9.4	
191-24-2	Benzo(g,h,i)perylene		J	110	4.0	10	52	10	BSH
118-74-1	Hexachlorobenzene	U		52	4.0	10	52	9.4	
87-68-3	Hexachlorobutadiene	~~U~~	UJ	52	4.0	10	52	12	CCH
77-47-4	Hexachlorocyclopentadiene	~~U~~	UJ	52	4.0	10	52	7.9	CCH
7297-45-2	2-Methylnaphthalene-D10			79%					
367-12-4	2,4-Dibromophenol			57%					
81103-79-9	Fluorene-d10			68%					
1718-51-1	Pyrene-D10			84%					

RDL

lw 4/14/09

KATAHDIN ANALYTICAL SERVICES
Report of Analytical Results

Client: CH2MHill
Project: TO-009 Lejeune
PO No:
Sample Date: 01/06/09
Received Date: 01/08/09
Extraction Date: 01/10/09
Analysis Date: 27-JAN-2009 02:17
Report Date: 01/30/2009
Matrix: SOIL
% Solids: 84.1

Lab ID: SC0067-8RA
Client ID: MR08-SS171-09A
SDG: TO9-28
Extracted by: CB
Extraction Method: SW846 3550
Analyst: JCG
Analysis Method: SW846 M8270C
Lab Prep Batch: WG59707
Units: ug/Kgdrywt

CAS#	Compound	Flags	Results	DF	PQL	Adj.PQL	Adj.MDL
91-20-3	Naphthalene	U	12	1.0	10	12	3.1
91-57-6	2-Methylnaphthalene	U	12	1.0	10	12	2.6
86-73-7	Fluorene	U	12	1.0	10	12	3.8
85-01-8	Phenanthrene	J	12	1.0	10	12	2.1
206-44-0	Fluoranthene		33	1.0	10	12	2.1
129-00-0	Pyrene		22	1.0	10	12	2.5
56-55-3	Benzo(a)anthracene		14	1.0	10	12	2.2
205-99-2	Benzo(b)fluoranthene		23	1.0	10	12	2.8
207-08-9	Benzo(k)fluoranthene		24	1.0	10	12	3.7
50-32-8	Benzo(a)pyrene		16	1.0	10	12	3.9
193-39-5	Indeno(1,2,3-cd)pyrene	J	10	1.0	10	12	2.2
53-70-3	Dibenzo(a,h)anthracene	J	4.4	1.0	10	12	2.1
191-24-2	Benzo(g,h,i)perylene	~~J~~ J	8.7	1.0	10	12	2.4 BSH
118-74-1	Hexachlorobenzene	U	12	1.0	10	12	2.1
87-68-3	Hexachlorobutadiene	U	12	1.0	10	12	2.7
77-47-4	Hexachlorocyclopentadiene	U	12	1.0	10	12	1.8
7297-45-2	2-Methylnaphthalene-D10		67%				
367-12-4	2,4-Dibromophenol		90%				
81103-79-9	Fluorene-d10		86%				
1718-51-1	Pyrene-D10		73%				

lw
4/14/09

5

KATAHDIN ANALYTICAL SERVICES
Report of Analytical Results

Client: CH2MHill
Project: TO-009 Lejeune
PO No:
Sample Date: 01/06/09
Received Date: 01/08/09
Extraction Date: 01/10/09
Analysis Date: 25-JAN-2009 16:22
Report Date: 01/30/2009
Matrix: SOIL
% Solids: 83.4

Lab ID: SC0067-10
Client ID: MR08-IS171-8-9-09A
SDG: TO9-28
Extracted by: CB
Extraction Method: SW846 3550
Analyst: EKC
Analysis Method: SW846 M8270C
Lab Prep Batch: WG59707
Units: ug/Kgdrywt

CAS#	Compound	Flags		Results	DF	PQL	Adj.PQL	Adj.MDL	
91-20-3	Naphthalene	U		12	1.0	10	12	3.1	
91-57-6	2-Methylnaphthalene	U		12	1.0	10	12	2.6	
86-73-7	Fluorene	U		12	1.0	10	12	3.8	
85-01-8	Phenanthrene	J		3.0	1.0	10	12	2.2	
206-44-0	Fluoranthene	J		3.4	1.0	10	12	2.2	
129-00-0	Pyrene	J		3.7	1.0	10	12	2.5	
56-55-3	Benzo(a)anthracene	J		4.2	1.0	10	12	2.3	
205-99-2	Benzo(b)fluoranthene	~~U~~	UJ	12	1.0	10	12	2.9	CCH
207-08-9	Benzo(k)fluoranthene	J		4.7	1.0	10	12	3.7	
50-32-8	Benzo(a)pyrene	U		12	1.0	10	12	4.0	
193-39-5	Indeno(1,2,3-cd)pyrene	J		3.3	1.0	10	12	2.3	
53-70-3	Dibenzo(a,h)anthracene	J		3.9	1.0	10	12	2.2	
191-24-2	Benzo(g,h,i)perylene	~~J~~	J	4.8	1.0	10	12	2.4	BSH
118-74-1	Hexachlorobenzene	U		12	1.0	10	12	2.2	
87-68-3	Hexachlorobutadiene	U		12	1.0	10	12	2.8	
77-47-4	Hexachlorocyclopentadiene	U		12	1.0	10	12	1.8	
7297-45-2	2-Methylnaphthalene-D10			40%					
367-12-4	2,4-Dibromophenol			69%					
81103-79-9	Fluorene-d10			59%					
1718-51-1	Pyrene-D10			70%					

lw 4/14/09

6

KATAHDIN ANALYTICAL SERVICES
Report of Analytical Results

Client: CH2MHill
Project: TO-009 Lejeune
PO No:
Sample Date: 01/06/09
Received Date: 01/08/09
Extraction Date: 01/10/09
Analysis Date: 27-JAN-2009 11:47
Report Date: 01/30/2009
Matrix: SOIL
% Solids: 86.6

Lab ID: SC0067-12DL
Client ID: MR08-SS168-09A
SDG: TO9-28
Extracted by: CB
Extraction Method: SW846 3550
Analyst: JLP
Analysis Method: SW846 M8270C
Lab Prep Batch: WG59707
Units: ug/Kgdrywt

Use reanalysis

CAS#	Compound	Flags	Results	DF	PQL	Adj.PQL	Adj.MDL	
91-20-3	Naphthalene	J	8.7	2.0	10	23	6.0	
91-57-6	2-Methylnaphthalene	U	23	2.0	10	23	5.1	
86-73-7	Fluorene		28	2.0	10	23	7.4	
85-01-8	Phenanthrene		260	2.0	10	23	4.2	
206-44-0	Fluoranthene		330	2.0	10	23	4.2	
129-00-0	Pyrene		270	2.0	10	23	4.8	
56-55-3	Benzo(a)anthracene		160	2.0	10	23	4.4	
205-99-2	Benzo(b)fluoranthene		200	2.0	10	23	5.5	
207-08-9	Benzo(k)fluoranthene		98	2.0	10	23	7.2	
50-32-8	Benzo(a)pyrene		110	2.0	10	23	7.6	
193-39-5	Indeno(1,2,3-cd)pyrene		54	2.0	10	23	4.4	
53-70-3	Dibenzo(a,h)anthracene		28	2.0	10	23	4.2	
191-24-2	Benzo(g,h,i)perylene	J	47	2.0	10	23	4.6	BSH
118-74-1	Hexachlorobenzene	U	23	2.0	10	23	4.2	
87-68-3	Hexachlorobutadiene	U	23	2.0	10	23	5.3	
77-47-4	Hexachlorocyclopentadiene	~~U~~ UJ	23	2.0	10	23	3.5	CCH
7297-45-2	2-Methylnaphthalene-D10		57%					
367-12-4	2,4-Dibromophenol		91%					
81103-79-9	Fluorene-d10		76%					
1718-51-1	Pyrene-D10		76%					

RE

lw
4/14/09

6RE

KATAHDIN ANALYTICAL SERVICES
Report of Analytical Results

Client: CH2MHill
Project: TO-009 Lejeune
PO No:
Sample Date: 01/06/09
Received Date: 01/08/09
Extraction Date: 01/10/09
Analysis Date: 27-JAN-2009 02:57
Report Date: 01/30/2009
Matrix: SOIL
% Solids: 86.6

Lab ID: SC0067-12RA
Client ID: MR08-SS168-09A
SDG: TO9-28
Extracted by: CB
Extraction Method: SW846 3550
Analyst: JCG
Analysis Method: SW846 M8270C
Lab Prep Batch: WG59707
Units: ug/Kgdrywt

CAS#	Compound	Flags	Results	DF	PQL	Adj.PQL	Adj.MDL
91-20-3	Naphthalene	J	8.3	1.0	10	12	3.0
91-57-6	2-Methylnaphthalene	J	3.8	1.0	10	12	2.5
86-73-7	Fluorene		28	1.0	10	12	3.7
85-01-8	Phenanthrene		260	1.0	10	12	2.1
206-44-0	Fluoranthene	~~E~~ 330	~~320~~	~~1.0~~ 2.0	10	23 ~~12~~ 4.2	~~2.1~~ R DL
129-00-0	Pyrene		250	1.0	10	12	2.4
56-55-3	Benzo(a)anthracene		160	1.0	10	12	2.2
205-99-2	Benzo(b)fluoranthene		160	1.0	10	12	2.8
207-08-9	Benzo(k)fluoranthene		120	1.0	10	12	3.6
50-32-8	Benzo(a)pyrene		110	1.0	10	12	3.8
193-39-5	Indeno(1,2,3-cd)pyrene		57	1.0	10	12	2.2
53-70-3	Dibenzo(a,h)anthracene		17	1.0	10	12	2.1
191-24-2	Benzo(g,h,i)perylene	J	46	1.0	10	12	2.3 BSH
118-74-1	Hexachlorobenzene	U	12	1.0	10	12	2.1
87-68-3	Hexachlorobutadiene	U	12	1.0	10	12	2.6
77-47-4	Hexachlorocyclopentadiene	U	12	1.0	10	12	1.7
7297-45-2	2-Methylnaphthalene-D10		51%				
367-12-4	2,4-Dibromophenol		81%				
81103-79-9	Fluorene-d10		78%				
1718-51-1	Pyrene-D10		66%				

JW
4/14/09

7

KATAHDIN ANALYTICAL SERVICES
Report of Analytical Results

Client: CH2MHill
Project: TO-009 Lejeune
PO No:
Sample Date: 01/06/09
Received Date: 01/08/09
Extraction Date: 01/10/09
Analysis Date: 25-JAN-2009 17:02
Report Date: 01/30/2009
Matrix: SOIL
% Solids: 83.8

Lab ID: SC0067-14
Client ID: MR08-IS168-2-3-09A
SDG: TO9-28
Extracted by: CB
Extraction Method: SW846 3550
Analyst: EKC
Analysis Method: SW846 M8270C
Lab Prep Batch: WG59707
Units: ug/Kgdrywt

CAS#	Compound	Flags	Results	DF	PQL	Adj.PQL	Adj.MDL
91-20-3	Naphthalene	U	12	1.0	10	12	3.1
91-57-6	2-Methylnaphthalene	U	12	1.0	10	12	2.6
86-73-7	Fluorene	U	12	1.0	10	12	3.8
85-01-8	Phenanthrene	U	12	1.0	10	12	2.1
206-44-0	Fluoranthene	U	12	1.0	10	12	2.1
129-00-0	Pyrene	U	12	1.0	10	12	2.5
56-55-3	Benzo(a)anthracene	U	12	1.0	10	12	2.3
205-99-2	Benzo(b)fluoranthene	~~U~~ UJ	12	1.0	10	12	2.9 CCH
207-08-9	Benzo(k)fluoranthene	U	12	1.0	10	12	3.7
50-32-8	Benzo(a)pyrene	U	12	1.0	10	12	3.9
193-39-5	Indeno(1,2,3-cd)pyrene	U	12	1.0	10	12	2.3
53-70-3	Dibenzo(a,h)anthracene	U	12	1.0	10	12	2.1
191-24-2	Benzo(g,h,i)perylene	U	12	1.0	10	12	2.4
118-74-1	Hexachlorobenzene	U	12	1.0	10	12	2.1
87-68-3	Hexachlorobutadiene	U	12	1.0	10	12	2.7
77-47-4	Hexachlorocyclopentadiene	U	12	1.0	10	12	1.8
7297-45-2	2-Methylnaphthalene-D10		48%				
367-12-4	2,4-Dibromophenol		59%				
81103-79-9	Fluorene-d10		61%				
1718-51-1	Pyrene-D10		76%				

lw
4/14/09

8

KATAHDIN ANALYTICAL SERVICES
Report of Analytical Results

Client: CH2MHill
Project: TO-009 Lejeune
PO No:
Sample Date: 01/06/09
Received Date: 01/08/09
Extraction Date: 01/10/09
Analysis Date: 25-JAN-2009 19:43
Report Date: 01/30/2009
Matrix: SOIL
% Solids: 87.5

Lab ID: SC0067-16
Client ID: MR08-SS151-09A
SDG: TO9-28
Extracted by: CB
Extraction Method: SW846 3550
Analyst: EKC
Analysis Method: SW846 M8270C
Lab Prep Batch: WG59707
Units: ug/Kgdrywt

CAS#	Compound	Flags	Results	DF	PQL	Adj.PQL	Adj.MDL	
91-20-3	Naphthalene	U	11	1.0	10	11	3.0	
91-57-6	2-Methylnaphthalene	U	11	1.0	10	11	2.5	
86-73-7	Fluorene	U	11	1.0	10	11	3.6	
85-01-8	Phenanthrene		13	1.0	10	11	2.0	
206-44-0	Fluoranthene		66	1.0	10	11	2.0	
129-00-0	Pyrene		69	1.0	10	11	2.4	
56-55-3	Benzo(a)anthracene		37	1.0	10	11	2.2	
205-99-2	Benzo(b)fluoranthene	J	76	1.0	10	11	2.7	CCH
207-08-9	Benzo(k)fluoranthene		51	1.0	10	11	3.5	
50-32-8	Benzo(a)pyrene		52	1.0	10	11	3.8	
193-39-5	Indeno(1,2,3-cd)pyrene		68	1.0	10	11	2.2	
53-70-3	Dibenzo(a,h)anthracene		15	1.0	10	11	2.0	
191-24-2	Benzo(g,h,i)perylene	J	58	1.0	10	11	2.3	BSH
118-74-1	Hexachlorobenzene	U	11	1.0	10	11	2.0	
87-68-3	Hexachlorobutadiene	U	11	1.0	10	11	2.6	
77-47-4	Hexachlorocyclopentadiene	U	11	1.0	10	11	1.7	
7297-45-2	2-Methylnaphthalene-D10		59%					
367-12-4	2,4-Dibromophenol		74%					
81103-79-9	Fluorene-d10		77%					
1718-51-1	Pyrene-D10		80%					

MW 4/14/09

9

KATAHDIN ANALYTICAL SERVICES
Report of Analytical Results

Client: CH2MHill
Project: TO-009 Lejeune
PO No:
Sample Date: 01/06/09
Received Date: 01/08/09
Extraction Date: 01/10/09
Analysis Date: 25-JAN-2009 17:42
Report Date: 01/30/2009
Matrix: SOIL
% Solids: 82.8

Lab ID: SC0067-18
Client ID: MR08-IS151-4-5-09A
SDG: TO9-28
Extracted by: CB
Extraction Method: SW846 3550
Analyst: EKC
Analysis Method: SW846 M8270C
Lab Prep Batch: WG59707
Units: ug/Kgdrywt

CAS#	Compound	Flags	Results	DF	PQL	Adj.PQL	Adj.MDL
91-20-3	Naphthalene	U	12	1.0	10	12	3.1
91-57-6	2-Methylnaphthalene	U	12	1.0	10	12	2.6
86-73-7	Fluorene	U	12	1.0	10	12	3.9
85-01-8	Phenanthrene	U	12	1.0	10	12	2.2
206-44-0	Fluoranthene	U	12	1.0	10	12	2.2
129-00-0	Pyrene	U	12	1.0	10	12	2.5
56-55-3	Benzo(a)anthracene	U	12	1.0	10	12	2.3
205-99-2	Benzo(b)fluoranthene	~~U~~ UJ	12	1.0	10	12	2.9 CCH
207-08-9	Benzo(k)fluoranthene	U	12	1.0	10	12	3.7
50-32-8	Benzo(a)pyrene	U	12	1.0	10	12	4.0
193-39-5	Indeno(1,2,3-cd)pyrene	U	12	1.0	10	12	2.3
53-70-3	Dibenzo(a,h)anthracene	U	12	1.0	10	12	2.2
191-24-2	Benzo(g,h,i)perylene	U	12	1.0	10	12	2.4
118-74-1	Hexachlorobenzene	U	12	1.0	10	12	2.2
87-68-3	Hexachlorobutadiene	U	12	1.0	10	12	2.8
77-47-4	Hexachlorocyclopentadiene	U	12	1.0	10	12	1.8
7297-45-2	2-Methylnaphthalene-D10		47%				
367-12-4	2,4-Dibromophenol		70%				
81103-79-9	Fluorene-d10		59%				
1718-51-1	Pyrene-D10		75%				

LW
4/14/09

KATAHDIN ANALYTICAL SERVICES
Report of Analytical Results

Client: CH2MHill
Project: TO-009 Lejeune
PO No:
Sample Date: 01/06/09
Received Date: 01/08/09
Extraction Date: 01/10/09
Analysis Date: 25-JAN-2009 19:03
Report Date: 01/30/2009
Matrix: SOIL
% Solids: 87.4

Lab ID: SC0067-20
Client ID: MR08-SS150-09A
SDG: TO9-28
Extracted by: CB
Extraction Method: SW846 3550
Analyst: EKC
Analysis Method: SW846 M8270C
Lab Prep Batch: WG59707
Units: ug/Kgdrywt

CAS#	Compound	Flags	Results	DF	PQL	Adj.PQL	Adj.MDL	
91-20-3	Naphthalene	U	11	1.0	10	11	3.0	
91-57-6	2-Methylnaphthalene	U	11	1.0	10	11	2.5	
86-73-7	Fluorene	U	11	1.0	10	11	3.7	
85-01-8	Phenanthrene	J	4.8	1.0	10	11	2.0	
206-44-0	Fluoranthene		24	1.0	10	11	2.0	
129-00-0	Pyrene		28	1.0	10	11	2.4	
56-55-3	Benzo(a)anthracene		12	1.0	10	11	2.2	
205-99-2	Benzo(b)fluoranthene	J	27	1.0	10	11	2.7	CCH
207-08-9	Benzo(k)fluoranthene		24	1.0	10	11	3.5	
50-32-8	Benzo(a)pyrene		16	1.0	10	11	3.8	
193-39-5	Indeno(1,2,3-cd)pyrene		24	1.0	10	11	2.2	
53-70-3	Dibenzo(a,h)anthracene	J	6.8	1.0	10	11	2.0	
191-24-2	Benzo(g,h,i)perylene	J	21	1.0	10	11	2.3	BSH
118-74-1	Hexachlorobenzene	U	11	1.0	10	11	2.0	
87-68-3	Hexachlorobutadiene	U	11	1.0	10	11	2.6	
77-47-4	Hexachlorocyclopentadiene	U	11	1.0	10	11	1.7	
7297-45-2	2-Methylnaphthalene-D10		53%					
367-12-4	2,4-Dibromophenol		67%					
81103-79-9	Fluorene-d10		70%					
1718-51-1	Pyrene-D10		76%					

lw
4/14/09

11

KATAHDIN ANALYTICAL SERVICES
Report of Analytical Results

Client: CH2MHill
Project: TO-009 Lejeune
PO No:
Sample Date: 01/06/09
Received Date: 01/08/09
Extraction Date: 01/10/09
Analysis Date: 26-JAN-2009 10:42
Report Date: 01/30/2009
Matrix: SOIL
% Solids: 84.2

Lab ID: SC0067-22
Client ID: MR08-IS150-2-3-09A
SDG: TO9-28
Extracted by: CB
Extraction Method: SW846 3550
Analyst: JLP
Analysis Method: SW846 M8270C
Lab Prep Batch: WG59707
Units: ug/Kgdrywt

CAS#	Compound	Flags	Results	DF	PQL	Adj.PQL	Adj.MDL	
91-20-3	Naphthalene	~~J~~ J	4.6	1.0	10	12	3.1	CCH
91-57-6	2-Methylnaphthalene	~~U~~ UJ	12	1.0	10	12	2.6	CCH
86-73-7	Fluorene	U	12	1.0	10	12	3.8	
85-01-8	Phenanthrene	~~U~~ UJ	12	1.0	10	12	2.1	CCH
206-44-0	Fluoranthene	~~U~~ UJ	12	1.0	10	12	2.1	CCH
129-00-0	Pyrene	J	2.5	1.0	10	12	2.5	
56-55-3	Benzo(a)anthracene	U	12	1.0	10	12	2.2	
205-99-2	Benzo(b)fluoranthene	U	12	1.0	10	12	2.8	
207-08-9	Benzo(k)fluoranthene	~~U~~ UJ	12	1.0	10	12	3.7	CCH
50-32-8	Benzo(a)pyrene	U	12	1.0	10	12	3.9	
193-39-5	Indeno(1,2,3-cd)pyrene	U	12	1.0	10	12	2.2	
53-70-3	Dibenzo(a,h)anthracene	U	12	1.0	10	12	2.1	
191-24-2	Benzo(g,h,i)perylene	U	12	1.0	10	12	2.4	
118-74-1	Hexachlorobenzene	U	12	1.0	10	12	2.1	
87-68-3	Hexachlorobutadiene	~~U~~ UJ	12	1.0	10	12	2.7	CCH
77-47-4	Hexachlorocyclopentadiene	~~U~~ UJ	12	1.0	10	12	1.8	CCH
7297-45-2	2-Methylnaphthalene-D10		75%					
367-12-4	2,4-Dibromophenol		77%					
81103-79-9	Fluorene-d10		70%					
1718-51-1	Pyrene-D10		111%					

lw
4/14/09

12

KATAHDIN ANALYTICAL SERVICES
Report of Analytical Results

Client: CH2MHill
Project: TO-009 Lejeune
PO No:
Sample Date: 01/06/09
Received Date: 01/08/09
Extraction Date: 01/10/09
Analysis Date: 26-JAN-2009 11:21
Report Date: 01/30/2009
Matrix: SOIL
% Solids: 87.2

Lab ID: SC0067-24
Client ID: 08-IS141-2-3-09A
SDG: TO9-28
Extracted by: CB
Extraction Method: SW846 3550
Analyst: JLP
Analysis Method: SW846 M8270C
Lab Prep Batch: WG59707
Units: ug/Kgdrywt

CAS#	Compound	Flags	Results	DF	PQL	Adj.PQL	Adj.MDL	
91-20-3	Naphthalene	~~U~~ UJ	11	1.0	10	11	3.0	CCH
91-57-6	2-Methylnaphthalene	~~U~~ UJ	11	1.0	10	11	2.5	CCH
86-73-7	Fluorene	U	11	1.0	10	11	3.7	
85-01-8	Phenanthrene	~~U~~ UJ	11	1.0	10	11	2.1	CCH
206-44-0	Fluoranthene	~~U~~ UJ	11	1.0	10	11	2.1	CCH
129-00-0	Pyrene	U	11	1.0	10	11	2.4	
56-55-3	Benzo(a)anthracene	U	11	1.0	10	11	2.2	
205-99-2	Benzo(b)fluoranthene	U	11	1.0	10	11	2.8	
207-08-9	Benzo(k)fluoranthene	~~U~~ UJ	11	1.0	10	11	3.6	CCH
50-32-8	Benzo(a)pyrene	U	11	1.0	10	11	3.8	
193-39-5	Indeno(1,2,3-cd)pyrene	U	11	1.0	10	11	2.2	
53-70-3	Dibenzo(a,h)anthracene	U	11	1.0	10	11	2.1	
191-24-2	Benzo(g,h,i)perylene	U	11	1.0	10	11	2.3	
118-74-1	Hexachlorobenzene	U	11	1.0	10	11	2.1	
87-68-3	Hexachlorobutadiene	~~U~~ UJ	11	1.0	10	11	2.6	CCH
77-47-4	Hexachlorocyclopentadiene	~~U~~ UJ	11	1.0	10	11	1.7	CCH
7297-45-2	2-Methylnaphthalene-D10		68%					
367-12-4	2,4-Dibromophenol		74%					
81103-79-9	Fluorene-d10		58%					
1718-51-1	Pyrene-D10		80%					

lw
4/14/09

KATAHDIN ANALYTICAL SERVICES
Report of Analytical Results

Client: CH2MHill
Project: TO-009 Lejeune
PO No:
Sample Date: 01/06/09
Received Date: 01/08/09
Extraction Date: 01/10/09
Analysis Date: 26-JAN-2009 12:01
Report Date: 01/30/2009
Matrix: SOIL
% Solids: 91.6

Lab ID: SC0067-26
Client ID: MR08-SS140-09A
SDG: TO9-28
Extracted by: CB
Extraction Method: SW846 3550
Analyst: JLP
Analysis Method: SW846 M8270C
Lab Prep Batch: WG59707
Units: ug/Kgdrywt

CAS#	Compound	Flags	Results	DF	PQL	Adj.PQL	Adj.MDL	
91-20-3	Naphthalene	~~U~~ UJ	11	1.0	10	11	2.8	CCH
91-57-6	2-Methylnaphthalene	~~U~~ UJ	11	1.0	10	11	2.4	CCH
86-73-7	Fluorene	U	11	1.0	10	11	3.5	
85-01-8	Phenanthrene	~~U~~ UJ	11	1.0	10	11	2.0	CCH
206-44-0	Fluoranthene	~~J~~ J	4.9	1.0	10	11	2.0	CCH
129-00-0	Pyrene	J	5.0	1.0	10	11	2.3	
56-55-3	Benzo(a)anthracene	J	3.0	1.0	10	11	2.1	
205-99-2	Benzo(b)fluoranthene	J	4.5	1.0	10	11	2.6	
207-08-9	Benzo(k)fluoranthene	~~J~~ J	4.8	1.0	10	11	3.4	CCH
50-32-8	Benzo(a)pyrene	U	11	1.0	10	11	3.6	
193-39-5	Indeno(1,2,3-cd)pyrene	J	4.6	1.0	10	11	2.1	
53-70-3	Dibenzo(a,h)anthracene	U	11	1.0	10	11	2.0	
191-24-2	Benzo(g,h,i)perylene	~~J~~ J	5.2	1.0	10	11	2.2	BSH
118-74-1	Hexachlorobenzene	U	11	1.0	10	11	2.0	
87-68-3	Hexachlorobutadiene	~~U~~ UJ	11	1.0	10	11	2.5	CCH
77-47-4	Hexachlorocyclopentadiene	~~U~~ UJ	11	1.0	10	11	1.6	CCH
7297-45-2	2-Methylnaphthalene-D10		74%					
367-12-4	2,4-Dibromophenol		64%					
81103-79-9	Fluorene-d10		62%					
1718-51-1	Pyrene-D10		77%					

DW
4/14/09

KATAHDIN ANALYTICAL SERVICES
Report of Analytical Results

Client: CH2MHill
Project: TO-009 Lejeune
PO No:
Sample Date: 01/06/09
Received Date: 01/08/09
Extraction Date: 01/10/09
Analysis Date: 26-JAN-2009 12:42
Report Date: 01/30/2009
Matrix: SOIL
% Solids: 89.0

Lab ID: SC0067-28
Client ID: MR08-IS140-2-3-09A
SDG: TO9-28
Extracted by: CB
Extraction Method: SW846 3550
Analyst: JLP
Analysis Method: SW846 M8270C
Lab Prep Batch: WG59707
Units: ug/Kgdrywt

CAS#	Compound	Flags	Results	DF	PQL	Adj.PQL	Adj.MDL	
91-20-3	Naphthalene	~~U~~ UJ	11	1.0	10	11	2.9	CCH
91-57-6	2-Methylnaphthalene	~~U~~ UJ	11	1.0	10	11	2.5	CCH
86-73-7	Fluorene	U	11	1.0	10	11	3.6	
85-01-8	Phenanthrene	~~U~~ UJ	11	1.0	10	11	2.0	CCH
206-44-0	Fluoranthene	~~U~~ UJ	11	1.0	10	11	2.0	CCH
129-00-0	Pyrene	U	11	1.0	10	11	2.4	
56-55-3	Benzo(a)anthracene	U	11	1.0	10	11	2.1	
205-99-2	Benzo(b)fluoranthene	U	11	1.0	10	11	2.7	
207-08-9	Benzo(k)fluoranthene	~~U~~ UJ	11	1.0	10	11	3.5	CCH
50-32-8	Benzo(a)pyrene	U	11	1.0	10	11	3.7	
193-39-5	Indeno(1,2,3-cd)pyrene	U	11	1.0	10	11	2.1	
53-70-3	Dibenzo(a,h)anthracene	U	11	1.0	10	11	2.0	
191-24-2	Benzo(g,h,i)perylene	U	11	1.0	10	11	2.2	
118-74-1	Hexachlorobenzene	U	11	1.0	10	11	2.0	
87-68-3	Hexachlorobutadiene	~~U~~ UJ	11	1.0	10	11	2.6	CCH
77-47-4	Hexachlorocyclopentadiene	~~U~~ UJ	11	1.0	10	11	1.7	CCH
7297-45-2	2-Methylnaphthalene-D10		83%					
367-12-4	2,4-Dibromophenol		77%					
81103-79-9	Fluorene-d10		67%					
1718-51-1	Pyrene-D10		78%					

RW 4/14/09

KATAHDIN ANALYTICAL SERVICES
Report of Analytical Results

Client: CH2MHill
Project: TO-009 Lejeune
PO No:
Sample Date: 01/06/09
Received Date: 01/08/09
Extraction Date: 01/10/09
Analysis Date: 26-JAN-2009 13:22
Report Date: 01/30/2009
Matrix: SOIL
% Solids: 86.8

Lab ID: SC0067-34
Client ID: MR08-IS209-2-3-09A
SDG: TO9-28
Extracted by: CB
Extraction Method: SW846 3550
Analyst: JLP
Analysis Method: SW846 M8270C
Lab Prep Batch: WG59707
Units: ug/Kgdrywt

CAS#	Compound	Flags	Results	DF	PQL	Adj.PQL	Adj.MDL	
91-20-3	Naphthalene	~~U~~ UJ	12	1.0	10	12	3.0	CCH
91-57-6	2-Methylnaphthalene	~~U~~ UJ	12	1.0	10	12	2.5	CCH
86-73-7	Fluorene	U	12	1.0	10	12	3.7	
85-01-8	Phenanthrene	~~U~~ UJ	12	1.0	10	12	2.1	CCH
206-44-0	Fluoranthene	~~U~~ UJ	12	1.0	10	12	2.1	CCH
129-00-0	Pyrene	U	12	1.0	10	12	2.4	
56-55-3	Benzo(a)anthracene	U	12	1.0	10	12	2.2	
205-99-2	Benzo(b)fluoranthene	U	12	1.0	10	12	2.8	
207-08-9	Benzo(k)fluoranthene	~~U~~ UJ	12	1.0	10	12	3.6	CCH
50-32-8	Benzo(a)pyrene	U	12	1.0	10	12	3.8	
193-39-5	Indeno(1,2,3-cd)pyrene	U	12	1.0	10	12	2.2	
53-70-3	Dibenzo(a,h)anthracene	U	12	1.0	10	12	2.1	
191-24-2	Benzo(g,h,i)perylene	U	12	1.0	10	12	2.3	
118-74-1	Hexachlorobenzene	U	12	1.0	10	12	2.1	
87-68-3	Hexachlorobutadiene	~~U~~ UJ	12	1.0	10	12	2.6	CCH
77-47-4	Hexachlorocyclopentadiene	~~U~~ UJ	12	1.0	10	12	1.7	CCH
7297-45-2	2-Methylnaphthalene-D10		77%					
367-12-4	2,4-Dibromophenol		63%					
81103-79-9	Fluorene-d10		66%					
1718-51-1	Pyrene-D10		85%					

MW
4/14/09

16

KATAHDIN ANALYTICAL SERVICES
Report of Analytical Results

Client: CH2MHill
Project: TO-009 Lejeune
PO No:
Sample Date: 01/06/09
Received Date: 01/08/09
Extraction Date: 01/10/09
Analysis Date: 26-JAN-2009 14:02
Report Date: 01/30/2009
Matrix: SOIL
% Solids: 92.4

Lab ID: SC0067-36
Client ID: MR08-IS209D-2-3-09A
SDG: TO9-28
Extracted by: CB
Extraction Method: SW846 3550
Analyst: JLP
Analysis Method: SW846 M8270C
Lab Prep Batch: WG59707
Units: ug/Kgdrywt

CAS#	Compound	Flags	Results	DF	PQL	Adj.PQL	Adj.MDL	
91-20-3	Naphthalene	~~U~~ UJ	11	1.0	10	11	2.8	CCH
91-57-6	2-Methylnaphthalene	~~U~~ UJ	11	1.0	10	11	2.4	CCH
86-73-7	Fluorene	U	11	1.0	10	11	3.5	
85-01-8	Phenanthrene	~~U~~ UJ	11	1.0	10	11	1.9	CCH
206-44-0	Fluoranthene	~~U~~ UJ	11	1.0	10	11	1.9	CCH
129-00-0	Pyrene	U	11	1.0	10	11	2.3	
56-55-3	Benzo(a)anthracene	U	11	1.0	10	11	2.0	
205-99-2	Benzo(b)fluoranthene	U	11	1.0	10	11	2.6	
207-08-9	Benzo(k)fluoranthene	~~U~~ UJ	11	1.0	10	11	3.4	CCH
50-32-8	Benzo(a)pyrene	U	11	1.0	10	11	3.6	
193-39-5	Indeno(1,2,3-cd)pyrene	U	11	1.0	10	11	2.0	
53-70-3	Dibenzo(a,h)anthracene	U	11	1.0	10	11	1.9	
191-24-2	Benzo(g,h,i)perylene	U	11	1.0	10	11	2.2	
118-74-1	Hexachlorobenzene	U	11	1.0	10	11	1.9	
87-68-3	Hexachlorobutadiene	~~U~~ UJ	11	1.0	10	11	2.5	CCH
77-47-4	Hexachlorocyclopentadiene	~~U~~ UJ	11	1.0	10	11	1.6	CCH
7297-45-2	2-Methylnaphthalene-D10		78%					
367-12-4	2,4-Dibromophenol		77%					
81103-79-9	Fluorene-d10		64%					
1718-51-1	Pyrene-D10		75%					

MW
4/14/09

17

KATAHDIN ANALYTICAL SERVICES
Report of Analytical Results

Client: CH2MHill
Project: TO-009 Lejeune
PO No:
Sample Date: 01/06/09
Received Date: 01/08/09
Extraction Date: 01/10/09
Analysis Date: 26-JAN-2009 16:03
Report Date: 01/30/2009
Matrix: SOIL
% Solids: 88.6

Lab ID: SC0067-38
Client ID: MR08-SS210-09A
SDG: TO9-28
Extracted by: CB
Extraction Method: SW846 3550
Analyst: JLP
Analysis Method: SW846 M8270C
Lab Prep Batch: WG59707
Units: ug/Kgdrywt

CAS#	Compound	Flags	Results	DF	PQL	Adj.PQL	Adj.MDL	
91-20-3	Naphthalene	~~J~~ J	3.4	1.0	10	11	2.9	CCH
91-57-6	2-Methylnaphthalene	~~J~~ J	5.4	1.0	10	11	2.5	CCH
86-73-7	Fluorene	J	5.6	1.0	10	11	3.6	
85-01-8	Phenanthrene	J	270	1.0	10	11	2.0	CCH
206-44-0	Fluoranthene	~~E~~ 310	~~700~~ 5	1.0	10	56 ~~11~~ 10	~~2.0~~	R DL
129-00-0	Pyrene	~~E~~ 1200	~~720~~	1.0	10	~~11~~ 10	~~2.4~~	
56-55-3	Benzo(a)anthracene	~~E~~ 1200	~~430~~	1.0	10	~~11~~ 12	~~2.1~~	
205-99-2	Benzo(b)fluoranthene	~~E~~ 540	~~490~~	1.0	10	~~11~~ 11	~~2.7~~	
207-08-9	Benzo(k)fluoranthene	~~E~~ 840	~~480~~	1.0	10	~~11~~ 14	~~3.5~~	
50-32-8	Benzo(a)pyrene	~~E~~ 660	~~560~~	1.0	10	~~11~~ 17	~~3.7~~	
193-39-5	Indeno(1,2,3-cd)pyrene	~~E~~ 590	~~530~~	1.0	10	~~11~~ 19	~~2.1~~	
53-70-3	Dibenzo(a,h)anthracene		200	1.0	10	11	2.0	
191-24-2	Benzo(g,h,i)perylene	~~E~~ 110	~~430~~ 5	1.0	10	56 ~~12~~ 10	~~2.2~~	R DL
118-74-1	Hexachlorobenzene	U	11	1.0	10	11	2.0	
87-68-3	Hexachlorobutadiene	~~U~~ UJ	11	1.0	10	11	2.6	CCH
77-47-4	Hexachlorocyclopentadiene	~~U~~ UJ	11	1.0	10	11	1.7	CCH
7297-45-2	2-Methylnaphthalene-D10		87%					
367-12-4	2,4-Dibromophenol		80%					
81103-79-9	Fluorene-d10		69%					
1718-51-1	Pyrene-D10		72%					

lw 4/14/09

1 7DL

KATAHDIN ANALYTICAL SERVICES
Report of Analytical Results

Client: CH2MHill
Project: TO-009 Lejeune
PO No:
Sample Date: 01/06/09
Received Date: 01/08/09
Extraction Date: 01/10/09
Analysis Date: 26-JAN-2009 23:39
Report Date: 01/30/2009
Matrix: SOIL
% Solids: 88.6

Lab ID: SC0067-38DL
Client ID: MR08-SS210-09A
SDG: TO9-28
Extracted by: CB
Extraction Method: SW846 3550
Analyst: JCG
Analysis Method: SW846 M8270C
Lab Prep Batch: WG59707
Units: ug/Kgdrywt

Use original

CAS#	Compound	Flags	Results	DF	PQL	Adj.PQL	Adj.MDL
91-20-3	Naphthalene	U	56	5.0	10	56	15
91-57-6	2-Methylnaphthalene	U	56	5.0	10	56	12
86-73-7	Fluorene	U	56	5.0	10	56	18
85-01-8	Phenanthrene		310	5.0	10	56	10
206-44-0	Fluoranthene		1200	5.0	10	56	10
129-00-0	Pyrene		1200	5.0	10	56	12
56-55-3	Benzo(a)anthracene		540	5.0	10	56	11
205-99-2	Benzo(b)fluoranthene		840	5.0	10	56	14
207-08-9	Benzo(k)fluoranthene		660	5.0	10	56	17
50-32-8	Benzo(a)pyrene		590	5.0	10	56	19
193-39-5	Indeno(1,2,3-cd)pyrene		410	5.0	10	56	11
53-70-3	Dibenzo(a,h)anthracene		110	5.0	10	56	10
191-24-2	Benzo(g,h,i)perylene	J	450	5.0	10	56	11 BSH
118-74-1	Hexachlorobenzene	U	56	5.0	10	56	10
87-68-3	Hexachlorobutadiene	U	56	5.0	10	56	13
77-47-4	Hexachlorocyclopentadiene	U	56	5.0	10	56	8.5
7297-45-2	2-Methylnaphthalene-D10		69%				
367-12-4	2,4-Dibromophenol		56%				
81103-79-9	Fluorene-d10		87%				
1718-51-1	Pyrene-D10		95%				

R DL

Qw 4/14/09

18

KATAHDIN ANALYTICAL SERVICES
Report of Analytical Results

Client: CH2MHill
Project: TO-009 Lejeune
PO No:
Sample Date: 01/06/09
Received Date: 01/08/09
Extraction Date: 01/10/09
Analysis Date: 26-JAN-2009 15:22
Report Date: 01/30/2009
Matrix: SOIL
% Solids: 87.4

Lab ID: SC0067-40
Client ID: MR08-IS210-2-3-09A
SDG: T09-28
Extracted by: CB
Extraction Method: SW846 3550
Analyst: JLP
Analysis Method: SW846 M8270C
Lab Prep Batch: WG59707
Units: ug/Kgdrywt

CAS#	Compound	Flags		Results	DF	PQL	Adj.PQL	Adj.MDL	
91-20-3	Naphthalene	U	UJ	11	1.0	10	11	3.0	CCH
91-57-6	2-Methylnaphthalene	U	UJ	11	1.0	10	11	2.5	CCH
86-73-7	Fluorene	U		11	1.0	10	11	3.6	
85-01-8	Phenanthrene		J	66	1.0	10	11	2.0	CCH
206-44-0	Fluoranthene		J	220	1.0	10	11	2.0	CCH
129-00-0	Pyrene		J	240	1.0	10	11	2.4	
56-55-3	Benzo(a)anthracene			120	1.0	10	11	2.2	
205-99-2	Benzo(b)fluoranthene			290	1.0	10	11	2.7	
207-08-9	Benzo(k)fluoranthene		J	120	1.0	10	11	3.5	CCH
50-32-8	Benzo(a)pyrene			160	1.0	10	11	3.8	
193-39-5	Indeno(1,2,3-cd)pyrene			200	1.0	10	11	2.2	
53-70-3	Dibenzo(a,h)anthracene			75	1.0	10	11	2.0	
191-24-2	Benzo(g,h,i)perylene		J	170	1.0	10	11	2.3	BSH
118-74-1	Hexachlorobenzene	U		11	1.0	10	11	2.0	
87-68-3	Hexachlorobutadiene	U	UJ	11	1.0	10	11	2.6	CCH
77-47-4	Hexachlorocyclopentadiene	U	UJ	11	1.0	10	11	1.7	CCH
7297-45-2	2-Methylnaphthalene-D10			79%					
367-12-4	2,4-Dibromophenol			77%					
81103-79-9	Fluorene-d10			66%					
1718-51-1	Pyrene-D10			85%					

lw 4/14/09

ENVIRONMENTAL
Data Services, Inc.

SEMIVOLATILE ORGANIC COMPOUNDS

USEPA Region IV - Level IV Review

Site: MCB Camp Lejeune, TO-09 SDG #: TO9-28

Client: CH2M HILL, Inc., Virginia Beach, Virginia Date: April 14, 2009

Laboratory: Katahdin Analytical Services, Scarborough, Maine Reviewer: Nancy Weaver

EDS ID	Client Sample ID	Laboratory Sample ID	Matrix
1	MR08-IS195-6-7-09A	SC0067-1	Soil
2	MR08-SS192-09A	SC0067-3	Soil
3	MR08-IS192-5-6-09A	SC0067-5	Soil
4	MR08-SS171-09A	SC0067-7	Soil
5	MR08-IS171-8-9-09A	SC0067-9	Soil
6	MR08-SS168-09A	SC0067-11	Soil
7	MR08-IS168-2-3-09A	SC0067-13	Soil
8	MR08-SS151-09A	SC0067-15	Soil
9	MR08-IS151-4-5-09A	SC0067-17	Soil
10	MR08-SS150-09A	SC0067-19	Soil
11	MR08-IS150-2-3-09A	SC0067-21	Soil
12	MR08-IS141-2-3-09A	SC0067-23	Soil
12MS	MR08-IS141-2-3-09AMS	SC0067-23MS	Soil
12MSD	MR08-IS141-2-3-09AMSD	SC0067-23MSD	Soil
13	MR08-SS140-09A	SC0067-25	Soil
14	MR08-IS140-2-3-09A	SC0067-27	Soil
15	MR08-IS209-2-3-09A	SC0067-33	Soil
16	MR08-IS209D-2-3-09A	SC0067-35	Soil
17	MR08-SS210-09A	SC0067-37	Soil
18	MR08-IS210-2-3-09A	SC0067-39	Soil

The USEPA "Contract Laboratory Program National Functional Guidelines for Organic Data Review," October 1999, and professional judgement were used in evaluating the data in this summary report.

Holding Times - All samples were extracted within 14 days for soil samples and analyzed within 40 days for all samples.

GC/MS Tuning - All of the DFTPP tunes in the initial and continuing calibrations met the percent relative abundance criteria.

Initial Calibration - The initial calibrations exhibited acceptable %RSD and mean RRF values except the following.

ICAL Date	Compound	%RSD/RRF	Qualifier	Affected Samples
01/12/09	Benzaldehyde	90.97%	J/UJ	All Samples

Continuing Calibration - The continuing calibrations exhibited acceptable %D and RRF values except the following.

CCAL Date	Compound	%D/RRF	Qualifier	Affected Samples
01/22/09	Benzaldehyde	54.92%	None	See ICAL
	3-Nitroaniline	35.23%	J/UJ	1-12
	2, 4-Dinitrophenol	29.75%	J/UJ	1-12
	4-Nitrophenol	33.07%	J/UJ	1-12
	4-Nitroaniline	43.26%	J/UJ	1-12
	3, 3'-Dichlorobenzidine	35.89%	J/UJ	1-12
01/23/09	Benzaldehyde	41.53%	J/UJ	13-18
	Caprolactam	26.12%	J/UJ	13-18
	3-Nitroaniline	32.30%	J/UJ	13-18
	2, 4-Dinitrophenol	40.19%	J/UJ	13-18
	4-Nitrophenol	50.33%	J/UJ	13-18
	4, 6-Dinitro-2-Methylphenol	31.04%	J/UJ	13-18

Surrogates - All samples exhibited acceptable surrogate recoveries.

MS/MSD - The MS/MSD sample exhibited acceptable %R and RPD values except the following

MS/MSD Sample ID	Compound	MS/MSD %R/RPD	Qualifier
12	Benzaldehyde	340%/374%/Ok	None - All ND

Laboratory Control Sample - The LCS samples exhibited acceptable %R values except the following.

LCS ID	Compound	%R	Qualifier	Affected Samples
WG59706-LCS	Benzaldehyde	266%	None	All ND

Internal Standard (IS) Area Performance - All internal standards met response and retention time (RT) criteria.

Method Blank - The method blanks were free of contamination.

Field, Equipment Blank - Field QC results are summarized below.

Blank ID	Compound	Conc. ug/L	Action Level ug/kg	Qualifier	Affected Samples
MR08-FB01011009	None - ND	-	-	-	-
MR08-EB01010609-SS	Diethylphthalate	2	660	None	All ND
	Di-n-butylphthalate	1	333	None	All ND

Field Duplicates - Field duplicate results are summarized below.

Compound	MR08-IS209-2-3-09A ug/kg	MR08-IS209D-2-3-09A ug/kg	RPD	Qualifier
None	ND	ND	-	-

Tentatively Identified Compounds (TICs) - TICs were not reported.

Compound Quantitation - No discrepancies were identified.

KATAHDIN ANALYTICAL SERVICES
Report of Analytical Results

Client: CH2MHill
Project: TO-009 Lejeune
PO No:
Sample Date: 01/06/09
Received Date: 01/08/09
Extraction Date: 01/10/09
Analysis Date: 22-JAN-2009 20:27
Report Date: 01/28/2009
Matrix: SOIL
% Solids: 90.9

Lab ID: SC0067-1
Client ID: MR08-IS195-6-7-09A
SDG: TO9-28
Extracted by: CB
Extraction Method: SW846 3550
Analyst: JCG
Analysis Method: SW846 8270C
Lab Prep Batch: WG59706
Units: ug/Kgdrywt

CAS#	Compound	Flags	Results	DF	PQL	Adj.PQL	Adj.MDL	
100-52-7	Benzaldehyde	~~U~~ UJ	550	1.0	500	550	130	JCB
108-95-2	Phenol	U	550	1.0	500	550	170	
111-44-4	Bis(2-Chloroethyl)ether	U	360	1.0	330	360	89	
95-57-8	2-Chlorophenol	U	550	1.0	500	550	180	
95-48-7	2-Methylphenol	U	660	1.0	600	660	220	
108-60-1	2,2'-Oxybis(1-chloropropane)	U	360	1.0	330	360	98	
98-86-2	Acetophenone	U	660	1.0	600	660	200	
621-64-7	N-Nitroso-di-n-propylamine	U	360	1.0	330	360	91	
65794-96-9	3&4-Methylphenol	U	660	1.0	600	660	200	
67-72-1	Hexachloroethane	U	360	1.0	330	360	100	
98-95-3	Nitrobenzene	U	360	1.0	330	360	100	
78-59-1	Isophorone	U	360	1.0	330	360	82	
88-75-5	2-Nitrophenol	U	660	1.0	600	660	180	
105-67-9	2,4-Dimethylphenol	U	550	1.0	500	550	180	
111-91-1	Bis(2-Chloroethoxy)methane	U	360	1.0	330	360	100	
120-83-2	2,4-Dichlorophenol	U	550	1.0	500	550	160	
106-47-8	4-Chloroaniline	U	550	1.0	500	550	130	
105-60-2	Caprolactam	U	550	1.0	500	550	160	
59-50-7	4-Chloro-3-Methylphenol	U	550	1.0	500	550	180	
88-06-2	2,4,6-Trichlorophenol	U	550	1.0	500	550	170	
95-95-4	2,4,5-Trichlorophenol	U	550	1.0	500	550	170	
91-58-7	2-Chloronaphthalene	U	360	1.0	330	360	96	
92-52-4	1,1'-Biphenyl	U	360	1.0	330	360	80	
88-74-4	2-Nitroaniline	U	550	1.0	500	550	82	
131-11-3	Dimethyl Phthalate	U	360	1.0	330	360	86	
606-20-2	2,6-Dinitrotoluene	U	360	1.0	330	360	87	
208-96-8	Acenaphthylene	U	360	1.0	330	360	77	
99-09-2	3-Nitroaniline	~~U~~ UJ	550	1.0	500	550	100	CCH
83-32-9	Acenaphthene	U	360	1.0	330	360	71	
51-28-5	2,4-Dinitrophenol	~~U~~ UJ	1300	1.0	1200	1300	410	CCH
132-64-9	Dibenzofuran	U	360	1.0	330	360	87	
100-02-7	4-Nitrophenol	~~U~~ UJ	1300	1.0	1200	1300	340	CCH
121-14-2	2,4-Dinitrotoluene	U	360	1.0	330	360	93	
84-66-2	Diethylphthalate	U	360	1.0	330	360	88	
7005-72-3	4-Chlorophenyl-phenylether	U	360	1.0	330	360	86	
100-01-6	4-Nitroaniline	~~U~~ UJ	550	1.0	500	550	150	CCH
534-52-1	4,6-Dinitro-2-Methylphenol	U	1300	1.0	1200	1300	370	
86-30-6	N-Nitrosodiphenylamine	U	720	1.0	660	720	240	
101-55-3	4-Bromophenyl-phenylether	U	360	1.0	330	360	93	
1912-24-9	Atrazine	U	360	1.0	330	360	100	
87-86-5	Pentachlorophenol	U	900	1.0	820	900	260	
120-12-7	Anthracene	U	360	1.0	330	360	92	
86-74-8	Carbazole	U	550	1.0	500	550	120	

lw 4/14/09

KATAHDIN ANALYTICAL SERVICES
Report of Analytical Results

Client: CH2MHill
Project: TO-009 Lejeune
PO No:
Sample Date: 01/06/09
Received Date: 01/08/09
Extraction Date: 01/10/09
Analysis Date: 22-JAN-2009 20:27
Report Date: 01/28/2009
Matrix: SOIL
% Solids: 90.9

Lab ID: SC0067-1
Client ID: MR08-IS195-6-7-09A
SDG: TO9-28
Extracted by: CB
Extraction Method: SW846 3550
Analyst: JCG
Analysis Method: SW846 8270C
Lab Prep Batch: WG59706
Units: ug/Kgdrywt

CAS#	Compound	Flags	Results	DF	PQL	Adj.PQL	Adj.MDL	
84-74-2	Di-n-butylphthalate	U	360	1.0	330	360	110	
85-68-7	Butylbenzylphthalate	U	360	1.0	330	360	100	
91-94-1	3,3'-Dichlorobenzidine	~~U~~ UJ	550	1.0	500	550	120	CCH
218-01-9	Chrysene	U	360	1.0	330	360	100	
117-81-7	bis(2-Ethylhexyl)phthalate	U	360	1.0	330	360	110	
117-84-0	Di-n-octylphthalate	U	360	1.0	330	360	230	
367-12-4	2-Fluorophenol		66%					
13127-88-3	Phenol-D6		65%					
4165-60-0	Nitrobenzene-D5		74%					
321-60-8	2-Fluorobiphenyl		70%					
118-79-6	2,4,6-Tribromophenol		59%					
1718-51-0	Terphenyl-D14		88%					

lw 4/14/09

2

KATAHDIN ANALYTICAL SERVICES
Report of Analytical Results

Client: CH2MHill
Project: TO-009 Lejeune
PO No:
Sample Date: 01/06/09
Received Date: 01/08/09
Extraction Date: 01/10/09
Analysis Date: 22-JAN-2009 21:09
Report Date: 01/28/2009
Matrix: SOIL
% Solids: 73.6

Lab ID: SC0067-3
Client ID: MR08-SS192-09A
SDG: TO9-28
Extracted by: CB
Extraction Method: SW846 3550
Analyst: JCG
Analysis Method: SW846 8270C
Lab Prep Batch: WG59706
Units: ug/Kgdrywt

CAS#	Compound	Flags	Results	DF	PQL	Adj.PQL	Adj.MDL	
100-52-7	Benzaldehyde	~~U~~ UJ	680	1.0	500	680	160	ICB
108-95-2	Phenol	U	680	1.0	500	680	210	
111-44-4	Bis(2-Chloroethyl)ether	U	450	1.0	330	450	110	
95-57-8	2-Chlorophenol	U	680	1.0	500	680	220	
95-48-7	2-Methylphenol	U	810	1.0	600	810	270	
108-60-1	2,2'-Oxybis(1-chloropropane)	U	450	1.0	330	450	120	
98-86-2	Acetophenone	U	810	1.0	600	810	240	
621-64-7	N-Nitroso-di-n-propylamine	U	450	1.0	330	450	110	
65794-96-9	3&4-Methylphenol	U	810	1.0	600	810	250	
67-72-1	Hexachloroethane	U	450	1.0	330	450	130	
98-95-3	Nitrobenzene	U	450	1.0	330	450	120	
78-59-1	Isophorone	U	450	1.0	330	450	100	
88-75-5	2-Nitrophenol	U	810	1.0	600	810	230	
105-67-9	2,4-Dimethylphenol	U	680	1.0	500	680	220	
111-91-1	Bis(2-Chloroethoxy)methane	U	450	1.0	330	450	130	
120-83-2	2,4-Dichlorophenol	U	680	1.0	500	680	200	
106-47-8	4-Chloroaniline	U	680	1.0	500	680	160	
105-60-2	Caprolactam	U	680	1.0	500	680	200	
59-50-7	4-Chloro-3-Methylphenol	U	680	1.0	500	680	220	
88-06-2	2,4,6-Trichlorophenol	U	680	1.0	500	680	210	
95-95-4	2,4,5-Trichlorophenol	U	680	1.0	500	680	210	
91-58-7	2-Chloronaphthalene	U	450	1.0	330	450	120	
92-52-4	1,1'-Biphenyl	U	450	1.0	330	450	99	
88-74-4	2-Nitroaniline	U	680	1.0	500	680	100	
131-11-3	Dimethyl Phthalate	U	450	1.0	330	450	100	
606-20-2	2,6-Dinitrotoluene	U	450	1.0	330	450	110	
208-96-8	Acenaphthylene	U	450	1.0	330	450	95	
99-09-2	3-Nitroaniline	~~U~~ UJ	680	1.0	500	680	130	CCH
83-32-9	Acenaphthene	U	450	1.0	330	450	88	
51-28-5	2,4-Dinitrophenol	~~U~~ UJ	1600	1.0	1200	1600	510	CCH
132-64-9	Dibenzofuran	U	450	1.0	330	450	110	
100-02-7	4-Nitrophenol	~~U~~ UJ	1600	1.0	1200	1600	420	CCH
121-14-2	2,4-Dinitrotoluene	U	450	1.0	330	450	120	
84-66-2	Diethylphthalate	U	450	1.0	330	450	110	
7005-72-3	4-Chlorophenyl-phenylether	U	450	1.0	330	450	100	
100-01-6	4-Nitroaniline	~~U~~ UJ	680	1.0	500	680	180	CCH
534-52-1	4,6-Dinitro-2-Methylphenol	U	1600	1.0	1200	1600	460	
86-30-6	N-Nitrosodiphenylamine	U	900	1.0	660	900	300	
101-55-3	4-Bromophenyl-phenylether	U	450	1.0	330	450	120	
1912-24-9	Atrazine	U	450	1.0	330	450	120	
87-86-5	Pentachlorophenol	U	1100	1.0	820	1100	320	
120-12-7	Anthracene	U	450	1.0	330	450	110	
86-74-8	Carbazole	U	680	1.0	500	680	150	

MW
4/14/09

2

KATAHDIN ANALYTICAL SERVICES
Report of Analytical Results

Client: CH2MHill
Project: TO-009 Lejeune
PO No:
Sample Date: 01/06/09
Received Date: 01/08/09
Extraction Date: 01/10/09
Analysis Date: 22-JAN-2009 21:09
Report Date: 01/28/2009
Matrix: SOIL
% Solids: 73.6

Lab ID: SC0067-3
Client ID: MR08-SS192-09A
SDG: TO9-28
Extracted by: CB
Extraction Method: SW846 3550
Analyst: JCG
Analysis Method: SW846 8270C
Lab Prep Batch: WG59706
Units: ug/Kgdrywt

CAS#	Compound	Flags	Results	DF	PQL	Adj.PQL	Adj.MDL	
84-74-2	Di-n-butylphthalate	U	450	1.0	330	450	140	
85-68-7	Butylbenzylphthalate	U	450	1.0	330	450	130	
91-94-1	3,3'-Dichlorobenzidine	~~U~~ UJ	680	1.0	500	680	150	CCH
218-01-9	Chrysene	U	450	1.0	330	450	130	
117-81-7	bis(2-Ethylhexyl)phthalate	J	170	1.0	330	450	130	
117-84-0	Di-n-octylphthalate	U	450	1.0	330	450	290	
367-12-4	2-Fluorophenol		65%					
13127-88-3	Phenol-D6		63%					
4165-60-0	Nitrobenzene-D5		67%					
321-60-8	2-Fluorobiphenyl		70%					
118-79-6	2,4,6-Tribromophenol		67%					
1718-51-0	Terphenyl-D14		82%					

QW
4/14/09

KATAHDIN ANALYTICAL SERVICES
Report of Analytical Results

3

Client: CH2MHill
Project: TO-009 Lejeune
PO No:
Sample Date: 01/06/09
Received Date: 01/08/09
Extraction Date: 01/10/09
Analysis Date: 22-JAN-2009 21:52
Report Date: 01/28/2009
Matrix: SOIL
% Solids: 76.2

Lab ID: SC0067-5
Client ID: MR08-IS192-5-6-09A
SDG: TO9-28
Extracted by: CB
Extraction Method: SW846 3550
Analyst: JCG
Analysis Method: SW846 8270C
Lab Prep Batch: WG59706
Units: ug/Kgdrywt

CAS#	Compound	Flags	Results	DF	PQL	Adj.PQL	Adj.MDL	
100-52-7	Benzaldehyde	~~U~~ UJ	660	1.0	500	660	160	ICB
108-95-2	Phenol	U	660	1.0	500	660	200	
111-44-4	Bis(2-Chloroethyl)ether	U	430	1.0	330	430	110	
95-57-8	2-Chlorophenol	U	660	1.0	500	660	220	
95-48-7	2-Methylphenol	U	790	1.0	600	790	260	
108-60-1	2,2'-Oxybis(1-chloropropane)	U	430	1.0	330	430	120	
98-86-2	Acetophenone	U	790	1.0	600	790	230	
621-64-7	N-Nitroso-di-n-propylamine	U	430	1.0	330	430	110	
65794-96-9	3&4-Methylphenol	U	790	1.0	600	790	240	
67-72-1	Hexachloroethane	U	430	1.0	330	430	130	
98-95-3	Nitrobenzene	U	430	1.0	330	430	120	
78-59-1	Isophorone	U	430	1.0	330	430	98	
88-75-5	2-Nitrophenol	U	790	1.0	600	790	220	
105-67-9	2,4-Dimethylphenol	U	660	1.0	500	660	220	
111-91-1	Bis(2-Chloroethoxy)methane	U	430	1.0	330	430	130	
120-83-2	2,4-Dichlorophenol	U	660	1.0	500	660	200	
106-47-8	4-Chloroaniline	U	660	1.0	500	660	160	
105-60-2	Caprolactam	U	660	1.0	500	660	190	
59-50-7	4-Chloro-3-Methylphenol	U	660	1.0	500	660	220	
88-06-2	2,4,6-Trichlorophenol	U	660	1.0	500	660	200	
95-95-4	2,4,5-Trichlorophenol	U	660	1.0	500	660	200	
91-58-7	2-Chloronaphthalene	U	430	1.0	330	430	110	
92-52-4	1,1'-Biphenyl	U	430	1.0	330	430	96	
88-74-4	2-Nitroaniline	U	660	1.0	500	660	98	
131-11-3	Dimethyl Phthalate	U	430	1.0	330	430	100	
606-20-2	2,6-Dinitrotoluene	U	430	1.0	330	430	100	
208-96-8	Acenaphthylene	U	430	1.0	330	430	92	
99-09-2	3-Nitroaniline	~~U~~ UJ	660	1.0	500	660	120	CCH
83-32-9	Acenaphthene	U	430	1.0	330	430	85	
51-28-5	2,4-Dinitrophenol	~~U~~ UJ	1600	1.0	1200	1600	490	CCH
132-64-9	Dibenzofuran	U	430	1.0	330	430	100	
100-02-7	4-Nitrophenol	~~U~~ UJ	1600	1.0	1200	1600	400	CCH
121-14-2	2,4-Dinitrotoluene	U	430	1.0	330	430	110	
84-66-2	Diethylphthalate	U	430	1.0	330	430	100	
7005-72-3	4-Chlorophenyl-phenylether	U	430	1.0	330	430	100	
100-01-6	4-Nitroaniline	~~U~~ UJ	660	1.0	500	660	180	CCH
534-52-1	4,6-Dinitro-2-Methylphenol	U	1600	1.0	1200	1600	440	
86-30-6	N-Nitrosodiphenylamine	U	870	1.0	660	870	290	
101-55-3	4-Bromophenyl-phenylether	U	430	1.0	330	430	110	
1912-24-9	Atrazine	U	430	1.0	330	430	120	
87-86-5	Pentachlorophenol	U	1100	1.0	820	1100	310	
120-12-7	Anthracene	J	180	1.0	330	430	110	
86-74-8	Carbazole	U	660	1.0	500	660	140	

LW 4/14/09

3

KATAHDIN ANALYTICAL SERVICES
Report of Analytical Results

Client: CH2MHill
Project: TO-009 Lejeune
PO No:
Sample Date: 01/06/09
Received Date: 01/08/09
Extraction Date: 01/10/09
Analysis Date: 22-JAN-2009 21:52
Report Date: 01/28/2009
Matrix: SOIL
% Solids: 76.2

Lab ID: SC0067-5
Client ID: MR08-IS192-5-6-09A
SDG: TO9-28
Extracted by: CB
Extraction Method: SW846 3550
Analyst: JCG
Analysis Method: SW846 8270C
Lab Prep Batch: WG59706
Units: ug/Kgdrywt

CAS#	Compound	Flags	Results	DF	PQL	Adj.PQL	Adj.MDL	
84-74-2	Di-n-butylphthalate	U	430	1.0	330	430	130	
85-68-7	Butylbenzylphthalate	U	430	1.0	330	430	120	
91-94-1	3,3'-Dichlorobenzidine	~~J~~ UJ	660	1.0	500	660	150	CCH
218-01-9	Chrysene	J	300	1.0	330	430	120	
117-81-7	bis(2-Ethylhexyl)phthalate	U	430	1.0	330	430	130	
117-84-0	Di-n-octylphthalate	U	430	1.0	330	430	280	
367-12-4	2-Fluorophenol		72%					
13127-88-3	Phenol-D6		64%					
4165-60-0	Nitrobenzene-D5		73%					
321-60-8	2-Fluorobiphenyl		73%					
118-79-6	2,4,6-Tribromophenol		79%					
1718-51-0	Terphenyl-D14		92%					

DW 4/14/09

4

KATAHDIN ANALYTICAL SERVICES
Report of Analytical Results

Client: CH2MHill
Project: TO-009 Lejeune
PO No:
Sample Date: 01/06/09
Received Date: 01/08/09
Extraction Date: 01/10/09
Analysis Date: 22-JAN-2009 22:34
Report Date: 01/28/2009
Matrix: SOIL
% Solids: 84.1

Lab ID: SC0067-7
Client ID: MR08-SS171-09A
SDG: TO9-28
Extracted by: CB
Extraction Method: SW846 3550
Analyst: JCG
Analysis Method: SW846 8270C
Lab Prep Batch: WG59706
Units: ug/Kgdrywt

CAS#	Compound	Flags	Results	DF	PQL	Adj.PQL	Adj.MDL	
100-52-7	Benzaldehyde	~~U~~ UJ	590	1.0	500	590	140	ICB
108-95-2	Phenol	U	590	1.0	500	590	180	
111-44-4	Bis(2-Chloroethyl)ether	U	390	1.0	330	390	96	
95-57-8	2-Chlorophenol	U	590	1.0	500	590	200	
95-48-7	2-Methylphenol	U	710	1.0	600	710	240	
108-60-1	2,2'-Oxybis(1-chloropropane)	U	390	1.0	330	390	100	
98-86-2	Acetophenone	U	710	1.0	600	710	210	
621-64-7	N-Nitroso-di-n-propylamine	U	390	1.0	330	390	99	
65794-96-9	3&4-Methylphenol	U	710	1.0	600	710	220	
67-72-1	Hexachloroethane	U	390	1.0	330	390	110	
98-95-3	Nitrobenzene	U	390	1.0	330	390	110	
78-59-1	Isophorone	U	390	1.0	330	390	89	
88-75-5	2-Nitrophenol	U	710	1.0	600	710	200	
105-67-9	2,4-Dimethylphenol	U	590	1.0	500	590	200	
111-91-1	Bis(2-Chloroethoxy)methane	U	390	1.0	330	390	110	
120-83-2	2,4-Dichlorophenol	U	590	1.0	500	590	180	
106-47-8	4-Chloroaniline	U	590	1.0	500	590	140	
105-60-2	Caprolactam	U	590	1.0	500	590	170	
59-50-7	4-Chloro-3-Methylphenol	U	590	1.0	500	590	200	
88-06-2	2,4,6-Trichlorophenol	U	590	1.0	500	590	180	
95-95-4	2,4,5-Trichlorophenol	U	590	1.0	500	590	180	
91-58-7	2-Chloronaphthalene	U	390	1.0	330	390	100	
92-52-4	1,1'-Biphenyl	U	390	1.0	330	390	87	
88-74-4	2-Nitroaniline	U	590	1.0	500	590	89	
131-11-3	Dimethyl Phthalate	U	390	1.0	330	390	93	
606-20-2	2,6-Dinitrotoluene	U	390	1.0	330	390	94	
208-96-8	Acenaphthylene	U	390	1.0	330	390	83	
99-09-2	3-Nitroaniline	~~U~~ UJ	590	1.0	500	590	110	CCH
83-32-9	Acenaphthene	U	390	1.0	330	390	77	
51-28-5	2,4-Dinitrophenol	~~U~~ UJ	1400	1.0	1200	1400	450	CCH
132-64-9	Dibenzofuran	U	390	1.0	330	390	94	
100-02-7	4-Nitrophenol	~~U~~ UJ	1400	1.0	1200	1400	370	CCH
121-14-2	2,4-Dinitrotoluene	U	390	1.0	330	390	100	
84-66-2	Diethylphthalate	U	390	1.0	330	390	95	
7005-72-3	4-Chlorophenyl-phenylether	U	390	1.0	330	390	93	
100-01-6	4-Nitroaniline	~~U~~ UJ	590	1.0	500	590	160	CCH
534-52-1	4,6-Dinitro-2-Methylphenol	U	1400	1.0	1200	1400	400	
86-30-6	N-Nitrosodiphenylamine	U	780	1.0	660	780	260	
101-55-3	4-Bromophenyl-phenylether	U	390	1.0	330	390	100	
1912-24-9	Atrazine	U	390	1.0	330	390	110	
87-86-5	Pentachlorophenol	U	980	1.0	820	980	280	
120-12-7	Anthracene	U	390	1.0	330	390	100	
86-74-8	Carbazole	U	590	1.0	500	590	130	

RW 4/14/09

KATAHDIN ANALYTICAL SERVICES
Report of Analytical Results

4

Client: CH2MHill
Project: TO-009 Lejeune
PO No:
Sample Date: 01/06/09
Received Date: 01/08/09
Extraction Date: 01/10/09
Analysis Date: 22-JAN-2009 22:34
Report Date: 01/28/2009
Matrix: SOIL
% Solids: 84.1

Lab ID: SC0067-7
Client ID: MR08-SS171-09A
SDG: TO9-28
Extracted by: CB
Extraction Method: SW846 3550
Analyst: JCG
Analysis Method: SW846 8270C
Lab Prep Batch: WG59706
Units: ug/Kgdrywt

CAS#	Compound	Flags	Results	DF	PQL	Adj.PQL	Adj.MDL	
84-74-2	Di-n-butylphthalate	U	390	1.0	330	390	120	
85-68-7	Butylbenzylphthalate	U	390	1.0	330	390	110	
91-94-1	3,3'-Dichlorobenzidine	~~U~~ UJ	590	1.0	500	590	140	CCH
218-01-9	Chrysene	U	390	1.0	330	390	110	
117-81-7	bis(2-Ethylhexyl)phthalate	J	280	1.0	330	390	120	
117-84-0	Di-n-octylphthalate	U	390	1.0	330	390	250	
367-12-4	2-Fluorophenol		71%					
13127-88-3	Phenol-D6		64%					
4165-60-0	Nitrobenzene-D5		71%					
321-60-8	2-Fluorobiphenyl		75%					
118-79-6	2,4,6-Tribromophenol		76%					
1718-51-0	Terphenyl-D14		95%					

RW
4/14/09

5

KATAHDIN ANALYTICAL SERVICES
Report of Analytical Results

Client: CH2MHill
Project: TO-009 Lejeune
PO No:
Sample Date: 01/06/09
Received Date: 01/08/09
Extraction Date: 01/10/09
Analysis Date: 22-JAN-2009 23:16
Report Date: 01/28/2009
Matrix: SOIL
% Solids: 83.4

Lab ID: SC0067-9
Client ID: MR08-IS171-8-9-09A
SDG: TO9-28
Extracted by: CB
Extraction Method: SW846 3550
Analyst: JCG
Analysis Method: SW846 8270C
Lab Prep Batch: WG59706
Units: ug/Kgdrywt

CAS#	Compound	Flags	Results	DF	PQL	Adj.PQL	Adj.MDL	
100-52-7	Benzaldehyde	~~U~~ UJ	600	1.0	500	600	140	ICB
108-95-2	Phenol	U	600	1.0	500	600	190	
111-44-4	Bis(2-Chloroethyl)ether	U	400	1.0	330	400	97	
95-57-8	2-Chlorophenol	U	600	1.0	500	600	200	
95-48-7	2-Methylphenol	U	720	1.0	600	720	240	
108-60-1	2,2'-Oxybis(1-chloropropane)	U	400	1.0	330	400	110	
98-86-2	Acetophenone	U	720	1.0	600	720	210	
621-64-7	N-Nitroso-di-n-propylamine	U	400	1.0	330	400	99	
65794-96-9	3&4-Methylphenol	U	720	1.0	600	720	220	
67-72-1	Hexachloroethane	U	400	1.0	330	400	120	
98-95-3	Nitrobenzene	U	400	1.0	330	400	110	
78-59-1	Isophorone	U	400	1.0	330	400	90	
88-75-5	2-Nitrophenol	U	720	1.0	600	720	200	
105-67-9	2,4-Dimethylphenol	U	600	1.0	500	600	200	
111-91-1	Bis(2-Chloroethoxy)methane	U	400	1.0	330	400	120	
120-83-2	2,4-Dichlorophenol	U	600	1.0	500	600	180	
106-47-8	4-Chloroaniline	U	600	1.0	500	600	140	
105-60-2	Caprolactam	U	600	1.0	500	600	170	
59-50-7	4-Chloro-3-Methylphenol	U	600	1.0	500	600	200	
88-06-2	2,4,6-Trichlorophenol	U	600	1.0	500	600	180	
95-95-4	2,4,5-Trichlorophenol	U	600	1.0	500	600	180	
91-58-7	2-Chloronaphthalene	U	400	1.0	330	400	100	
92-52-4	1,1'-Biphenyl	U	400	1.0	330	400	87	
88-74-4	2-Nitroaniline	U	600	1.0	500	600	90	
131-11-3	Dimethyl Phthalate	U	400	1.0	330	400	93	
606-20-2	2,6-Dinitrotoluene	U	400	1.0	330	400	95	
208-96-8	Acenaphthylene	U	400	1.0	330	400	84	
99-09-2	3-Nitroaniline	~~U~~ UJ	600	1.0	500	600	110	CCH
83-32-9	Acenaphthene	U	400	1.0	330	400	78	
51-28-5	2,4-Dinitrophenol	~~U~~ UJ	1400	1.0	1200	1400	450	CCH
132-64-9	Dibenzofuran	U	400	1.0	330	400	95	
100-02-7	4-Nitrophenol	~~U~~ UJ	1400	1.0	1200	1400	370	CCH
121-14-2	2,4-Dinitrotoluene	U	400	1.0	330	400	100	
84-66-2	Diethylphthalate	U	400	1.0	330	400	96	
7005-72-3	4-Chlorophenyl-phenylether	U	400	1.0	330	400	93	
100-01-6	4-Nitroaniline	~~U~~ UJ	600	1.0	500	600	160	CCH
534-52-1	4,6-Dinitro-2-Methylphenol	U	1400	1.0	1200	1400	400	
86-30-6	N-Nitrosodiphenylamine	U	790	1.0	660	790	260	
101-55-3	4-Bromophenyl-phenylether	U	400	1.0	330	400	100	
1912-24-9	Atrazine	U	400	1.0	330	400	110	
87-86-5	Pentachlorophenol	U	980	1.0	820	980	280	
120-12-7	Anthracene	U	400	1.0	330	400	100	
86-74-8	Carbazole	U	600	1.0	500	600	130	

lw 4/14/09

KATAHDIN ANALYTICAL SERVICES
Report of Analytical Results

5

Client: CH2MHill
Project: TO-009 Lejeune
PO No:
Sample Date: 01/06/09
Received Date: 01/08/09
Extraction Date: 01/10/09
Analysis Date: 22-JAN-2009 23:16
Report Date: 01/28/2009
Matrix: SOIL
% Solids: 83.4

Lab ID: SC0067-9
Client ID: MR08-IS171-8-9-09A
SDG: TO9-28
Extracted by: CB
Extraction Method: SW846 3550
Analyst: JCG
Analysis Method: SW846 8270C
Lab Prep Batch: WG59706
Units: ug/Kgdrywt

CAS#	Compound	Flags	Results	DF	PQL	Adj.PQL	Adj.MDL
84-74-2	Di-n-butylphthalate	U	400	1.0	330	400	120
85-68-7	Butylbenzylphthalate	U	400	1.0	330	400	110
91-94-1	3,3'-Dichlorobenzidine	~~U~~ UJ	600	1.0	500	600	140 CCH
218-01-9	Chrysene	U	400	1.0	330	400	110
117-81-7	bis(2-Ethylhexyl)phthalate	U	400	1.0	330	400	120
117-84-0	Di-n-octylphthalate	U	400	1.0	330	400	250
367-12-4	2-Fluorophenol		61%				
13127-88-3	Phenol-D6		55%				
4165-60-0	Nitrobenzene-D5		61%				
321-60-8	2-Fluorobiphenyl		62%				
118-79-6	2,4,6-Tribromophenol		63%				
1718-51-0	Terphenyl-D14		81%				

MW
4/14/09

6

KATAHDIN ANALYTICAL SERVICES
Report of Analytical Results

Client: CH2MHill
Project: TO-009 Lejeune
PO No:
Sample Date: 01/06/09
Received Date: 01/08/09
Extraction Date: 01/10/09
Analysis Date: 22-JAN-2009 23:58
Report Date: 01/28/2009
Matrix: SOIL
% Solids: 86.6

Lab ID: SC0067-11
Client ID: MR08-SS168-09A
SDG: TO9-28
Extracted by: CB
Extraction Method: SW846 3550
Analyst: JCG
Analysis Method: SW846 8270C
Lab Prep Batch: WG59706
Units: ug/Kgdrywt

CAS#	Compound	Flags	Results	DF	PQL	Adj.PQL	Adj.MDL	
100-52-7	Benzaldehyde	~~U~~ UJ	580	1.0	500	580	140	ICB
108-95-2	Phenol	U	580	1.0	500	580	180	
111-44-4	Bis(2-Chloroethyl)ether	U	380	1.0	330	380	93	
95-57-8	2-Chlorophenol	U	580	1.0	500	580	190	
95-48-7	2-Methylphenol	U	690	1.0	600	690	230	
108-60-1	2,2'-Oxybis(1-chloropropane)	U	380	1.0	330	380	100	
98-86-2	Acetophenone	U	690	1.0	600	690	200	
621-64-7	N-Nitroso-di-n-propylamine	U	380	1.0	330	380	96	
65794-96-9	3&4-Methylphenol	U	690	1.0	600	690	220	
67-72-1	Hexachloroethane	U	380	1.0	330	380	110	
98-95-3	Nitrobenzene	U	380	1.0	330	380	100	
78-59-1	Isophorone	U	380	1.0	330	380	86	
88-75-5	2-Nitrophenol	U	690	1.0	600	690	190	
105-67-9	2,4-Dimethylphenol	U	580	1.0	500	580	190	
111-91-1	Bis(2-Chloroethoxy)methane	U	380	1.0	330	380	110	
120-83-2	2,4-Dichlorophenol	U	580	1.0	500	580	170	
106-47-8	4-Chloroaniline	U	580	1.0	500	580	140	
105-60-2	Caprolactam	U	580	1.0	500	580	170	
59-50-7	4-Chloro-3-Methylphenol	U	580	1.0	500	580	190	
88-06-2	2,4,6-Trichlorophenol	U	580	1.0	500	580	180	
95-95-4	2,4,5-Trichlorophenol	U	580	1.0	500	580	180	
91-58-7	2-Chloronaphthalene	U	380	1.0	330	380	100	
92-52-4	1,1'-Biphenyl	U	380	1.0	330	380	84	
88-74-4	2-Nitroaniline	U	580	1.0	500	580	86	
131-11-3	Dimethyl Phthalate	U	380	1.0	330	380	90	
606-20-2	2,6-Dinitrotoluene	U	380	1.0	330	380	91	
208-96-8	Acenaphthylene	U	380	1.0	330	380	81	
99-09-2	3-Nitroaniline	~~U~~ UJ	580	1.0	500	580	110	CCH
83-32-9	Acenaphthene	U	380	1.0	330	380	75	
51-28-5	2,4-Dinitrophenol	~~U~~ UJ	1400	1.0	1200	1400	440	CCH
132-64-9	Dibenzofuran	U	380	1.0	330	380	91	
100-02-7	4-Nitrophenol	~~U~~ UJ	1400	1.0	1200	1400	360	CCH
121-14-2	2,4-Dinitrotoluene	U	380	1.0	330	380	98	
84-66-2	Diethylphthalate	U	380	1.0	330	380	92	
7005-72-3	4-Chlorophenyl-phenylether	U	380	1.0	330	380	90	
100-01-6	4-Nitroaniline	~~U~~ UJ	580	1.0	500	580	150	CCH
534-52-1	4,6-Dinitro-2-Methylphenol	U	1400	1.0	1200	1400	390	
86-30-6	N-Nitrosodiphenylamine	U	760	1.0	660	760	250	
101-55-3	4-Bromophenyl-phenylether	U	380	1.0	330	380	98	
1912-24-9	Atrazine	U	380	1.0	330	380	100	
87-86-5	Pentachlorophenol	U	950	1.0	820	950	270	
120-12-7	Anthracene	U	380	1.0	330	380	97	
86-74-8	Carbazole	U	580	1.0	500	580	130	

lcw 4/14/09

KATAHDIN ANALYTICAL SERVICES
Report of Analytical Results

6

Client: CH2MHill
Project: TO-009 Lejeune
PO No:
Sample Date: 01/06/09
Received Date: 01/08/09
Extraction Date: 01/10/09
Analysis Date: 22-JAN-2009 23:58
Report Date: 01/28/2009
Matrix: SOIL
% Solids: 86.6

Lab ID: SC0067-11
Client ID: MR08-SS168-09A
SDG: TO9-28
Extracted by: CB
Extraction Method: SW846 3550
Analyst: JCG
Analysis Method: SW846 8270C
Lab Prep Batch: WG59706
Units: ug/Kgdrywt

CAS#	Compound	Flags	Results	DF	PQL	Adj.PQL	Adj.MDL
84-74-2	Di-n-butylphthalate	U	380	1.0	330	380	120
85-68-7	Butylbenzylphthalate	U	380	1.0	330	380	110
91-94-1	3,3'-Dichlorobenzidine	~~J~~ UJ	580	1.0	500	580	130 CCH
218-01-9	Chrysene	J	140	1.0	330	380	110
117-81-7	bis(2-Ethylhexyl)phthalate	U	380	1.0	330	380	110
117-84-0	Di-n-octylphthalate	U	380	1.0	330	380	240
367-12-4	2-Fluorophenol		63%				
13127-88-3	Phenol-D6		60%				
4165-60-0	Nitrobenzene-D5		59%				
321-60-8	2-Fluorobiphenyl		66%				
118-79-6	2,4,6-Tribromophenol		74%				
1718-51-0	Terphenyl-D14		87%				

MW
4/14/09

7

KATAHDIN ANALYTICAL SERVICES
Report of Analytical Results

Client: CH2MHill
Project: TO-009 Lejeune
PO No:
Sample Date: 01/06/09
Received Date: 01/08/09
Extraction Date: 01/10/09
Analysis Date: 23-JAN-2009 00:40
Report Date: 01/28/2009
Matrix: SOIL
% Solids: 83.8

Lab ID: SC0067-13
Client ID: MR08-IS168-2-3-09A
SDG: TO9-28
Extracted by: CB
Extraction Method: SW846 3550
Analyst: JCG
Analysis Method: SW846 8270C
Lab Prep Batch: WG59706
Units: ug/Kgdrywt

CAS#	Compound	Flags	Results	DF	PQL	Adj.PQL	Adj.MDL	
100-52-7	Benzaldehyde	~~U~~ UJ	600	1.0	500	600	140	JCB
108-95-2	Phenol	U	600	1.0	500	600	190	
111-44-4	Bis(2-Chloroethyl)ether	U	390	1.0	330	390	97	
95-57-8	2-Chlorophenol	U	600	1.0	500	600	200	
95-48-7	2-Methylphenol	U	720	1.0	600	720	240	
108-60-1	2,2'-Oxybis(1-chloropropane)	U	390	1.0	330	390	110	
98-86-2	Acetophenone	U	720	1.0	600	720	210	
621-64-7	N-Nitroso-di-n-propylamine	U	390	1.0	330	390	99	
65794-96-9	3&4-Methylphenol	U	720	1.0	600	720	220	
67-72-1	Hexachloroethane	U	390	1.0	330	390	110	
98-95-3	Nitrobenzene	U	390	1.0	330	390	110	
78-59-1	Isophorone	U	390	1.0	330	390	89	
88-75-5	2-Nitrophenol	U	720	1.0	600	720	200	
105-67-9	2,4-Dimethylphenol	U	600	1.0	500	600	200	
111-91-1	Bis(2-Chloroethoxy)methane	U	390	1.0	330	390	110	
120-83-2	2,4-Dichlorophenol	U	600	1.0	500	600	180	
106-47-8	4-Chloroaniline	U	600	1.0	500	600	140	
105-60-2	Caprolactam	U	600	1.0	500	600	170	
59-50-7	4-Chloro-3-Methylphenol	U	600	1.0	500	600	200	
88-06-2	2,4,6-Trichlorophenol	U	600	1.0	500	600	180	
95-95-4	2,4,5-Trichlorophenol	U	600	1.0	500	600	180	
91-58-7	2-Chloronaphthalene	U	390	1.0	330	390	100	
92-52-4	1,1'-Biphenyl	U	390	1.0	330	390	87	
88-74-4	2-Nitroaniline	U	600	1.0	500	600	89	
131-11-3	Dimethyl Phthalate	U	390	1.0	330	390	93	
606-20-2	2,6-Dinitrotoluene	U	390	1.0	330	390	94	
208-96-8	Acenaphthylene	U	390	1.0	330	390	84	
99-09-2	3-Nitroaniline	~~U~~ UJ	600	1.0	500	600	110	CCH
83-32-9	Acenaphthene	U	390	1.0	330	390	78	
51-28-5	2,4-Dinitrophenol	~~U~~ UJ	1400	1.0	1200	1400	450	CCH
132-64-9	Dibenzofuran	U	390	1.0	330	390	94	
100-02-7	4-Nitrophenol	~~U~~ UJ	1400	1.0	1200	1400	370	CCH
121-14-2	2,4-Dinitrotoluene	U	390	1.0	330	390	100	
84-66-2	Diethylphthalate	U	390	1.0	330	390	95	
7005-72-3	4-Chlorophenyl-phenylether	U	390	1.0	330	390	93	
100-01-6	4-Nitroaniline	~~U~~ UJ	600	1.0	500	600	160	CCH
534-52-1	4,6-Dinitro-2-Methylphenol	U	1400	1.0	1200	1400	400	
86-30-6	N-Nitrosodiphenylamine	U	790	1.0	660	790	260	
101-55-3	4-Bromophenyl-phenylether	U	390	1.0	330	390	100	
1912-24-9	Atrazine	U	390	1.0	330	390	110	
87-86-5	Pentachlorophenol	U	980	1.0	820	980	280	
120-12-7	Anthracene	U	390	1.0	330	390	100	
86-74-8	Carbazole	U	600	1.0	500	600	130	

llw
4/14/09

KATAHDIN ANALYTICAL SERVICES
Report of Analytical Results

7

Client: CH2MHill
Project: TO-009 Lejeune
PO No:
Sample Date: 01/06/09
Received Date: 01/08/09
Extraction Date: 01/10/09
Analysis Date: 23-JAN-2009 00:40
Report Date: 01/28/2009
Matrix: SOIL
% Solids: 83.8

Lab ID: SC0067-13
Client ID: MR08-IS168-2-3-09A
SDG: TO9-28
Extracted by: CB
Extraction Method: SW846 3550
Analyst: JCG
Analysis Method: SW846 8270C
Lab Prep Batch: WG59706
Units: ug/Kgdrywt

CAS#	Compound	Flags	Results	DF	PQL	Adj.PQL	Adj.MDL	
84-74-2	Di-n-butylphthalate	U	390	1.0	330	390	120	
85-68-7	Butylbenzylphthalate	U	390	1.0	330	390	110	
91-94-1	3,3'-Dichlorobenzidine	~~U~~ UJ	600	1.0	500	600	140	CCH
218-01-9	Chrysene	U	390	1.0	330	390	110	
117-81-7	bis(2-Ethylhexyl)phthalate	U	390	1.0	330	390	120	
117-84-0	Di-n-octylphthalate	U	390	1.0	330	390	250	
367-12-4	2-Fluorophenol		58%					
13127-88-3	Phenol-D6		56%					
4165-60-0	Nitrobenzene-D5		57%					
321-60-8	2-Fluorobiphenyl		59%					
118-79-6	2,4,6-Tribromophenol		60%					
1718-51-0	Terphenyl-D14		86%					

lew
4/14/09

8

KATAHDIN ANALYTICAL SERVICES
Report of Analytical Results

Client: CH2MHill
Project: TO-009 Lejeune
PO No:
Sample Date: 01/06/09
Received Date: 01/08/09
Extraction Date: 01/10/09
Analysis Date: 23-JAN-2009 01:22
Report Date: 01/28/2009
Matrix: SOIL
% Solids: 87.5

Lab ID: SC0067-15
Client ID: MR08-SS151-09A
SDG: TO9-28
Extracted by: CB
Extraction Method: SW846 3550
Analyst: JCG
Analysis Method: SW846 8270C
Lab Prep Batch: WG59706
Units: ug/Kgdrywt

CAS#	Compound	Flags	Results	DF	PQL	Adj.PQL	Adj.MDL	
100-52-7	Benzaldehyde	~~U~~ UJ	570	1.0	500	570	140	ICB
108-95-2	Phenol	U	570	1.0	500	570	180	
111-44-4	Bis(2-Chloroethyl)ether	U	380	1.0	330	380	92	
95-57-8	2-Chlorophenol	U	570	1.0	500	570	190	
95-48-7	2-Methylphenol	U	680	1.0	600	680	230	
108-60-1	2,2'-Oxybis(1-chloropropane)	U	380	1.0	330	380	100	
98-86-2	Acetophenone	U	680	1.0	600	680	200	
621-64-7	N-Nitroso-di-n-propylamine	U	380	1.0	330	380	95	
65794-96-9	3&4-Methylphenol	U	680	1.0	600	680	210	
67-72-1	Hexachloroethane	U	380	1.0	330	380	110	
98-95-3	Nitrobenzene	U	380	1.0	330	380	100	
78-59-1	Isophorone	U	380	1.0	330	380	86	
88-75-5	2-Nitrophenol	U	680	1.0	600	680	190	
105-67-9	2,4-Dimethylphenol	U	570	1.0	500	570	190	
111-91-1	Bis(2-Chloroethoxy)methane	U	380	1.0	330	380	110	
120-83-2	2,4-Dichlorophenol	U	570	1.0	500	570	170	
106-47-8	4-Chloroaniline	U	570	1.0	500	570	140	
105-60-2	Caprolactam	U	570	1.0	500	570	160	
59-50-7	4-Chloro-3-Methylphenol	U	570	1.0	500	570	190	
88-06-2	2,4,6-Trichlorophenol	U	570	1.0	500	570	180	
95-95-4	2,4,5-Trichlorophenol	U	570	1.0	500	570	180	
91-58-7	2-Chloronaphthalene	U	380	1.0	330	380	99	
92-52-4	1,1'-Biphenyl	U	380	1.0	330	380	83	
88-74-4	2-Nitroaniline	U	570	1.0	500	570	86	
131-11-3	Dimethyl Phthalate	U	380	1.0	330	380	89	
606-20-2	2,6-Dinitrotoluene	U	380	1.0	330	380	90	
208-96-8	Acenaphthylene	U	380	1.0	330	380	80	
99-09-2	3-Nitroaniline	~~U~~ UJ	570	1.0	500	570	110	CCH
83-32-9	Acenaphthene	U	380	1.0	330	380	74	
51-28-5	2,4-Dinitrophenol	~~U~~ UJ	1400	1.0	1200	1400	430	CCH
132-64-9	Dibenzofuran	U	380	1.0	330	380	90	
100-02-7	4-Nitrophenol	~~U~~ UJ	1400	1.0	1200	1400	350	CCH
121-14-2	2,4-Dinitrotoluene	U	380	1.0	330	380	97	
84-66-2	Diethylphthalate	U	380	1.0	330	380	91	
7005-72-3	4-Chlorophenyl-phenylether	U	380	1.0	330	380	89	
100-01-6	4-Nitroaniline	~~U~~ UJ	570	1.0	500	570	150	CCH
534-52-1	4,6-Dinitro-2-Methylphenol	U	1400	1.0	1200	1400	380	
86-30-6	N-Nitrosodiphenylamine	U	750	1.0	660	750	250	
101-55-3	4-Bromophenyl-phenylether	U	380	1.0	330	380	97	
1912-24-9	Atrazine	U	380	1.0	330	380	100	
87-86-5	Pentachlorophenol	U	940	1.0	820	940	270	
120-12-7	Anthracene	U	380	1.0	330	380	96	
86-74-8	Carbazole	U	570	1.0	500	570	130	

JCW 4/14/09

8

KATAHDIN ANALYTICAL SERVICES
Report of Analytical Results

Client: CH2MHill
Project: TO-009 Lejeune
PO No:
Sample Date: 01/06/09
Received Date: 01/08/09
Extraction Date: 01/10/09
Analysis Date: 23-JAN-2009 01:22
Report Date: 01/28/2009
Matrix: SOIL
% Solids: 87.5

Lab ID: SC0067-15
Client ID: MR08-SS151-09A
SDG: TO9-28
Extracted by: CB
Extraction Method: SW846 3550
Analyst: JCG
Analysis Method: SW846 8270C
Lab Prep Batch: WG59706
Units: ug/Kgdrywt

CAS#	Compound	Flags	Results	DF	PQL	Adj.PQL	Adj.MDL	
84-74-2	Di-n-butylphthalate	U	380	1.0	330	380	120	
85-68-7	Butylbenzylphthalate	U	380	1.0	330	380	110	
91-94-1	3,3'-Dichlorobenzidine	~~J~~ UJ	570	1.0	500	570	130	CCH
218-01-9	Chrysene	U	380	1.0	330	380	110	
117-81-7	bis(2-Ethylhexyl)phthalate	J	280	1.0	330	380	110	
117-84-0	Di-n-octylphthalate	U	380	1.0	330	380	240	
367-12-4	2-Fluorophenol		70%					
13127-88-3	Phenol-D6		67%					
4165-60-0	Nitrobenzene-D5		70%					
321-60-8	2-Fluorobiphenyl		73%					
118-79-6	2,4,6-Tribromophenol		63%					
1718-51-0	Terphenyl-D14		91%					

lw 4/14/09

KATAHDIN ANALYTICAL SERVICES
Report of Analytical Results

Client: CH2MHill
Project: TO-009 Lejeune
PO No:
Sample Date: 01/06/09
Received Date: 01/08/09
Extraction Date: 01/10/09
Analysis Date: 23-JAN-2009 02:04
Report Date: 01/28/2009
Matrix: SOIL
% Solids: 82.8

Lab ID: SC0067-17
Client ID: MR08-IS151-4-5-09A
SDG: TO9-28
Extracted by: CB
Extraction Method: SW846 3550
Analyst: JCG
Analysis Method: SW846 8270C
Lab Prep Batch: WG59706
Units: ug/Kgdrywt

CAS#	Compound	Flags	Results	DF	PQL	Adj.PQL	Adj.MDL	
100-52-7	Benzaldehyde	~~U~~ UJ	600	1.0	500	600	140	ICB
108-95-2	Phenol	U	600	1.0	500	600	190	
111-44-4	Bis(2-Chloroethyl)ether	U	400	1.0	330	400	98	
95-57-8	2-Chlorophenol	U	600	1.0	500	600	200	
95-48-7	2-Methylphenol	U	720	1.0	600	720	240	
108-60-1	2,2'-Oxybis(1-chloropropane)	U	400	1.0	330	400	110	
98-86-2	Acetophenone	U	720	1.0	600	720	210	
621-64-7	N-Nitroso-di-n-propylamine	U	400	1.0	330	400	100	
65794-96-9	3&4-Methylphenol	U	720	1.0	600	720	220	
67-72-1	Hexachloroethane	U	400	1.0	330	400	120	
98-95-3	Nitrobenzene	U	400	1.0	330	400	110	
78-59-1	Isophorone	U	400	1.0	330	400	90	
88-75-5	2-Nitrophenol	U	720	1.0	600	720	200	
105-67-9	2,4-Dimethylphenol	U	600	1.0	500	600	200	
111-91-1	Bis(2-Chloroethoxy)methane	U	400	1.0	330	400	120	
120-83-2	2,4-Dichlorophenol	U	600	1.0	500	600	180	
106-47-8	4-Chloroaniline	U	600	1.0	500	600	140	
105-60-2	Caprolactam	U	600	1.0	500	600	170	
59-50-7	4-Chloro-3-Methylphenol	U	600	1.0	500	600	200	
88-06-2	2,4,6-Trichlorophenol	U	600	1.0	500	600	190	
95-95-4	2,4,5-Trichlorophenol	U	600	1.0	500	600	190	
91-58-7	2-Chloronaphthalene	U	400	1.0	330	400	100	
92-52-4	1,1'-Biphenyl	U	400	1.0	330	400	88	
88-74-4	2-Nitroaniline	U	600	1.0	500	600	90	
131-11-3	Dimethyl Phthalate	U	400	1.0	330	400	94	
606-20-2	2,6-Dinitrotoluene	U	400	1.0	330	400	95	
208-96-8	Acenaphthylene	U	400	1.0	330	400	84	
99-09-2	3-Nitroaniline	~~U~~ UJ	600	1.0	500	600	110	CCH
83-32-9	Acenaphthene	U	400	1.0	330	400	78	
51-28-5	2,4-Dinitrophenol	~~U~~ UJ	1400	1.0	1200	1400	460	CCH
132-64-9	Dibenzofuran	U	400	1.0	330	400	95	
100-02-7	4-Nitrophenol	~~U~~ UJ	1400	1.0	1200	1400	370	CCH
121-14-2	2,4-Dinitrotoluene	U	400	1.0	330	400	100	
84-66-2	Diethylphthalate	U	400	1.0	330	400	96	
7005-72-3	4-Chlorophenyl-phenylether	U	400	1.0	330	400	94	
100-01-6	4-Nitroaniline	~~U~~ UJ	600	1.0	500	600	160	CCH
534-52-1	4,6-Dinitro-2-Methylphenol	U	1400	1.0	1200	1400	410	
86-30-6	N-Nitrosodiphenylamine	U	800	1.0	660	800	260	
101-55-3	4-Bromophenyl-phenylether	U	400	1.0	330	400	100	
1912-24-9	Atrazine	U	400	1.0	330	400	110	
87-86-5	Pentachlorophenol	U	990	1.0	820	990	290	
120-12-7	Anthracene	U	400	1.0	330	400	100	
86-74-8	Carbazole	U	600	1.0	500	600	130	

lw 4/14/09

KATAHDIN ANALYTICAL SERVICES
Report of Analytical Results

Client: CH2MHill
Project: TO-009 Lejeune
PO No:
Sample Date: 01/06/09
Received Date: 01/08/09
Extraction Date: 01/10/09
Analysis Date: 23-JAN-2009 02:04
Report Date: 01/28/2009
Matrix: SOIL
% Solids: 82.8

Lab ID: SC0067-17
Client ID: MR08-IS151-4-5-09A
SDG: TO9-28
Extracted by: CB
Extraction Method: SW846 3550
Analyst: JCG
Analysis Method: SW846 8270C
Lab Prep Batch: WG59706
Units: ug/Kgdrywt

CAS#	Compound	Flags	Results	DF	PQL	Adj.PQL	Adj.MDL	
84-74-2	Di-n-butylphthalate	U	400	1.0	330	400	120	
85-68-7	Butylbenzylphthalate	U	400	1.0	330	400	110	
91-94-1	3,3'-Dichlorobenzidine	~~U~~ UJ	600	1.0	500	600	140	CCH
218-01-9	Chrysene	U	400	1.0	330	400	110	
117-81-7	bis(2-Ethylhexyl)phthalate	U	400	1.0	330	400	120	
117-84-0	Di-n-octylphthalate	U	400	1.0	330	400	250	
367-12-4	2-Fluorophenol		60%					
13127-88-3	Phenol-D6		52%					
4165-60-0	Nitrobenzene-D5		60%					
321-60-8	2-Fluorobiphenyl		62%					
118-79-6	2,4,6-Tribromophenol		50%					
1718-51-0	Terphenyl-D14		81%					

lw
4/14/09

KATAHDIN ANALYTICAL SERVICES
Report of Analytical Results

Client: CH2MHill
Project: TO-009 Lejeune
PO No:
Sample Date: 01/06/09
Received Date: 01/08/09
Extraction Date: 01/10/09
Analysis Date: 23-JAN-2009 02:46
Report Date: 01/28/2009
Matrix: SOIL
% Solids: 87.4

Lab ID: SC0067-19
Client ID: MR08-SS150-09A
SDG: TO9-28
Extracted by: CB
Extraction Method: SW846 3550
Analyst: JCG
Analysis Method: SW846 8270C
Lab Prep Batch: WG59706
Units: ug/Kgdrywt

CAS#	Compound	Flags	Results	DF	PQL	Adj.PQL	Adj.MDL	
100-52-7	Benzaldehyde	~~U~~ UJ	570	1.0	500	570	140	JeB
108-95-2	Phenol	U	570	1.0	500	570	180	
111-44-4	Bis(2-Chloroethyl)ether	U	380	1.0	330	380	93	
95-57-8	2-Chlorophenol	U	570	1.0	500	570	190	
95-48-7	2-Methylphenol	U	690	1.0	600	690	230	
108-60-1	2,2'-Oxybis(1-chloropropane)	U	380	1.0	330	380	100	
98-86-2	Acetophenone	U	690	1.0	600	690	200	
621-64-7	N-Nitroso-di-n-propylamine	U	380	1.0	330	380	95	
65794-96-9	3&4-Methylphenol	U	690	1.0	600	690	210	
67-72-1	Hexachloroethane	U	380	1.0	330	380	110	
98-95-3	Nitrobenzene	U	380	1.0	330	380	100	
78-59-1	Isophorone	U	380	1.0	330	380	86	
88-75-5	2-Nitrophenol	U	690	1.0	600	690	190	
105-67-9	2,4-Dimethylphenol	U	570	1.0	500	570	190	
111-91-1	Bis(2-Chloroethoxy)methane	U	380	1.0	330	380	110	
120-83-2	2,4-Dichlorophenol	U	570	1.0	500	570	170	
106-47-8	4-Chloroaniline	U	570	1.0	500	570	140	
105-60-2	Caprolactam	U	570	1.0	500	570	160	
59-50-7	4-Chloro-3-Methylphenol	U	570	1.0	500	570	190	
88-06-2	2,4,6-Trichlorophenol	U	570	1.0	500	570	180	
95-95-4	2,4,5-Trichlorophenol	U	570	1.0	500	570	180	
91-58-7	2-Chloronaphthalene	U	380	1.0	330	380	100	
92-52-4	1,1'-Biphenyl	U	380	1.0	330	380	84	
88-74-4	2-Nitroaniline	U	570	1.0	500	570	86	
131-11-3	Dimethyl Phthalate	U	380	1.0	330	380	89	
606-20-2	2,6-Dinitrotoluene	U	380	1.0	330	380	90	
208-96-8	Acenaphthylene	U	380	1.0	330	380	80	
99-09-2	3-Nitroaniline	~~U~~ UJ	570	1.0	500	570	110	CCH
83-32-9	Acenaphthene	U	380	1.0	330	380	74	
51-28-5	2,4-Dinitrophenol	~~U~~ UJ	1400	1.0	1200	1400	430	CCH
132-64-9	Dibenzofuran	U	380	1.0	330	380	90	
100-02-7	4-Nitrophenol	~~U~~ UJ	1400	1.0	1200	1400	350	CCH
121-14-2	2,4-Dinitrotoluene	U	380	1.0	330	380	97	
84-66-2	Diethylphthalate	U	380	1.0	330	380	92	
7005-72-3	4-Chlorophenyl-phenylether	U	380	1.0	330	380	89	
100-01-6	4-Nitroaniline	~~U~~ UJ	570	1.0	500	570	150	CCH
534-52-1	4,6-Dinitro-2-Methylphenol	U	1400	1.0	1200	1400	380	
86-30-6	N-Nitrosodiphenylamine	U	760	1.0	660	760	250	
101-55-3	4-Bromophenyl-phenylether	U	380	1.0	330	380	97	
1912-24-9	Atrazine	U	380	1.0	330	380	100	
87-86-5	Pentachlorophenol	U	940	1.0	820	940	270	
120-12-7	Anthracene	U	380	1.0	330	380	96	
86-74-8	Carbazole	U	570	1.0	500	570	130	

lw
4/14/09

KATAHDIN ANALYTICAL SERVICES
Report of Analytical Results

Client: CH2MHill
Project: TO-009 Lejeune
PO No:
Sample Date: 01/06/09
Received Date: 01/08/09
Extraction Date: 01/10/09
Analysis Date: 23-JAN-2009 02:46
Report Date: 01/28/2009
Matrix: SOIL
% Solids: 87.4

Lab ID: SC0067-19
Client ID: MR08-SS150-09A
SDG: TO9-28
Extracted by: CB
Extraction Method: SW846 3550
Analyst: JCG
Analysis Method: SW846 8270C
Lab Prep Batch: WG59706
Units: ug/Kgdrywt

CAS#	Compound	Flags	Results	DF	PQL	Adj.PQL	Adj.MDL	
84-74-2	Di-n-butylphthalate	U	380	1.0	330	380	120	
85-68-7	Butylbenzylphthalate	U	380	1.0	330	380	110	
91-94-1	3,3'-Dichlorobenzidine	~~U~~ UJ	570	1.0	500	570	130	CCH
218-01-9	Chrysene	U	380	1.0	330	380	110	
117-81-7	bis(2-Ethylhexyl)phthalate	U	380	1.0	330	380	110	
117-84-0	Di-n-octylphthalate	U	380	1.0	330	380	240	
367-12-4	2-Fluorophenol		69%					
13127-88-3	Phenol-D6		65%					
4165-60-0	Nitrobenzene-D5		71%					
321-60-8	2-Fluorobiphenyl		73%					
118-79-6	2,4,6-Tribromophenol		64%					
1718-51-0	Terphenyl-D14		87%					

MW
4/14/09

KATAHDIN ANALYTICAL SERVICES
Report of Analytical Results

Client: CH2MHill
Project: TO-009 Lejeune
PO No:
Sample Date: 01/06/09
Received Date: 01/08/09
Extraction Date: 01/10/09
Analysis Date: 23-JAN-2009 03:28
Report Date: 01/28/2009
Matrix: SOIL
% Solids: 84.2

Lab ID: SC0067-21
Client ID: MR08-IS150-2-3-09A
SDG: TO9-28
Extracted by: CB
Extraction Method: SW846 3550
Analyst: JCG
Analysis Method: SW846 8270C
Lab Prep Batch: WG59706
Units: ug/Kgdrywt

CAS#	Compound	Flags	Results	DF	PQL	Adj.PQL	Adj.MDL	
100-52-7	Benzaldehyde	~~U~~ UJ	590	1.0	500	590	140	ICB
108-95-2	Phenol	U	590	1.0	500	590	180	
111-44-4	Bis(2-Chloroethyl)ether	U	390	1.0	330	390	96	
95-57-8	2-Chlorophenol	U	590	1.0	500	590	190	
95-48-7	2-Methylphenol	U	710	1.0	600	710	240	
108-60-1	2,2'-Oxybis(1-chloropropane)	U	390	1.0	330	390	100	
98-86-2	Acetophenone	U	710	1.0	600	710	210	
621-64-7	N-Nitroso-di-n-propylamine	U	390	1.0	330	390	98	
65794-96-9	3&4-Methylphenol	U	710	1.0	600	710	220	
67-72-1	Hexachloroethane	U	390	1.0	330	390	110	
98-95-3	Nitrobenzene	U	390	1.0	330	390	110	
78-59-1	Isophorone	U	390	1.0	330	390	89	
88-75-5	2-Nitrophenol	U	710	1.0	600	710	200	
105-67-9	2,4-Dimethylphenol	U	590	1.0	500	590	200	
111-91-1	Bis(2-Chloroethoxy)methane	U	390	1.0	330	390	110	
120-83-2	2,4-Dichlorophenol	U	590	1.0	500	590	180	
106-47-8	4-Chloroaniline	U	590	1.0	500	590	140	
105-60-2	Caprolactam	U	590	1.0	500	590	170	
59-50-7	4-Chloro-3-Methylphenol	U	590	1.0	500	590	200	
88-06-2	2,4,6-Trichlorophenol	U	590	1.0	500	590	180	
95-95-4	2,4,5-Trichlorophenol	U	590	1.0	500	590	180	
91-58-7	2-Chloronaphthalene	U	390	1.0	330	390	100	
92-52-4	1,1'-Biphenyl	U	390	1.0	330	390	87	
88-74-4	2-Nitroaniline	U	590	1.0	500	590	89	
131-11-3	Dimethyl Phthalate	U	390	1.0	330	390	93	
606-20-2	2,6-Dinitrotoluene	U	390	1.0	330	390	94	
208-96-8	Acenaphthylene	U	390	1.0	330	390	83	
99-09-2	3-Nitroaniline	~~U~~ UJ	590	1.0	500	590	110	CCH
83-32-9	Acenaphthene	U	390	1.0	330	390	77	
51-28-5	2,4-Dinitrophenol	~~U~~ UJ	1400	1.0	1200	1400	450	CCH
132-64-9	Dibenzofuran	U	390	1.0	330	390	94	
100-02-7	4-Nitrophenol	~~U~~ UJ	1400	1.0	1200	1400	370	CCH
121-14-2	2,4-Dinitrotoluene	U	390	1.0	330	390	100	
84-66-2	Diethylphthalate	U	390	1.0	330	390	95	
7005-72-3	4-Chlorophenyl-phenylether	U	390	1.0	330	390	93	
100-01-6	4-Nitroaniline	~~U~~ UJ	590	1.0	500	590	160	CCH
534-52-1	4,6-Dinitro-2-Methylphenol	U	1400	1.0	1200	1400	400	
86-30-6	N-Nitrosodiphenylamine	U	780	1.0	660	780	260	
101-55-3	4-Bromophenyl-phenylether	U	390	1.0	330	390	100	
1912-24-9	Atrazine	U	390	1.0	330	390	110	
87-86-5	Pentachlorophenol	U	970	1.0	820	970	280	
120-12-7	Anthracene	U	390	1.0	330	390	100	
86-74-8	Carbazole	U	590	1.0	500	590	130	

MW
4/14/09

11

KATAHDIN ANALYTICAL SERVICES
Report of Analytical Results

Client: CH2MHill
Project: TO-009 Lejeune
PO No:
Sample Date: 01/06/09
Received Date: 01/08/09
Extraction Date: 01/10/09
Analysis Date: 23-JAN-2009 03:28
Report Date: 01/28/2009
Matrix: SOIL
% Solids: 84.2

Lab ID: SC0067-21
Client ID: MR08-IS150-2-3-09A
SDG: TO9-28
Extracted by: CB
Extraction Method: SW846 3550
Analyst: JCG
Analysis Method: SW846 8270C
Lab Prep Batch: WG59706
Units: ug/Kgdrywt

CAS#	Compound	Flags	Results	DF	PQL	Adj.PQL	Adj.MDL	
84-74-2	Di-n-butylphthalate	U	390	1.0	330	390	120	
85-68-7	Butylbenzylphthalate	U	390	1.0	330	390	110	
91-94-1	3,3'-Dichlorobenzidine	~~U~~ UJ	590	1.0	500	590	140	CCH
218-01-9	Chrysene	U	390	1.0	330	390	110	
117-81-7	bis(2-Ethylhexyl)phthalate	U	390	1.0	330	390	120	
117-84-0	Di-n-octylphthalate	U	390	1.0	330	390	250	
367-12-4	2-Fluorophenol		68%					
13127-88-3	Phenol-D6		65%					
4165-60-0	Nitrobenzene-D5		64%					
321-60-8	2-Fluorobiphenyl		73%					
118-79-6	2,4,6-Tribromophenol		84%					
1718-51-0	Terphenyl-D14		97%					

MW
4/14/09

KATAHDIN ANALYTICAL SERVICES
Report of Analytical Results

Client: CH2MHill
Project: TO-009 Lejeune
PO No:
Sample Date: 01/06/09
Received Date: 01/08/09
Extraction Date: 01/10/09
Analysis Date: 23-JAN-2009 04:10
Report Date: 01/28/2009
Matrix: SOIL
% Solids: 87.2

Lab ID: SC0067-23
Client ID: 08-IS141-2-3-09A
SDG: TO9-28
Extracted by: CB
Extraction Method: SW846 3550
Analyst: JCG
Analysis Method: SW846 8270C
Lab Prep Batch: WG59706
Units: ug/Kgdrywt

CAS#	Compound	Flags	Results	DF	PQL	Adj.PQL	Adj.MDL	
100-52-7	Benzaldehyde	~~U~~ UJ	570	1.0	500	570	140	ICB
108-95-2	Phenol	U	570	1.0	500	570	180	
111-44-4	Bis(2-Chloroethyl)ether	U	380	1.0	330	380	93	
95-57-8	2-Chlorophenol	U	570	1.0	500	570	190	
95-48-7	2-Methylphenol	U	690	1.0	600	690	230	
108-60-1	2,2'-Oxybis(1-chloropropane)	U	380	1.0	330	380	100	
98-86-2	Acetophenone	U	690	1.0	600	690	200	
621-64-7	N-Nitroso-di-n-propylamine	U	380	1.0	330	380	95	
65794-96-9	3&4-Methylphenol	U	690	1.0	600	690	210	
67-72-1	Hexachloroethane	U	380	1.0	330	380	110	
98-95-3	Nitrobenzene	U	380	1.0	330	380	100	
78-59-1	Isophorone	U	380	1.0	330	380	86	
88-75-5	2-Nitrophenol	U	690	1.0	600	690	190	
105-67-9	2,4-Dimethylphenol	U	570	1.0	500	570	190	
111-91-1	Bis(2-Chloroethoxy)methane	U	380	1.0	330	380	110	
120-83-2	2,4-Dichlorophenol	U	570	1.0	500	570	170	
106-47-8	4-Chloroaniline	U	570	1.0	500	570	140	
105-60-2	Caprolactam	U	570	1.0	500	570	160	
59-50-7	4-Chloro-3-Methylphenol	U	570	1.0	500	570	190	
88-06-2	2,4,6-Trichlorophenol	U	570	1.0	500	570	180	
95-95-4	2,4,5-Trichlorophenol	U	570	1.0	500	570	180	
91-58-7	2-Chloronaphthalene	U	380	1.0	330	380	100	
92-52-4	1,1'-Biphenyl	U	380	1.0	330	380	84	
88-74-4	2-Nitroaniline	U	570	1.0	500	570	86	
131-11-3	Dimethyl Phthalate	U	380	1.0	330	380	89	
606-20-2	2,6-Dinitrotoluene	U	380	1.0	330	380	91	
208-96-8	Acenaphthylene	U	380	1.0	330	380	80	
99-09-2	3-Nitroaniline	~~U~~ UJ	570	1.0	500	570	110	CCH
83-32-9	Acenaphthene	U	380	1.0	330	380	74	
51-28-5	2,4-Dinitrophenol	~~U~~ UJ	1400	1.0	1200	1400	430	CCH
132-64-9	Dibenzofuran	U	380	1.0	330	380	91	
100-02-7	4-Nitrophenol	~~U~~ UJ	1400	1.0	1200	1400	350	CCH
121-14-2	2,4-Dinitrotoluene	U	380	1.0	330	380	97	
84-66-2	Diethylphthalate	U	380	1.0	330	380	92	
7005-72-3	4-Chlorophenyl-phenylether	U	380	1.0	330	380	89	
100-01-6	4-Nitroaniline	~~U~~ UJ	570	1.0	500	570	150	CCH
534-52-1	4,6-Dinitro-2-Methylphenol	U	1400	1.0	1200	1400	390	
86-30-6	N-Nitrosodiphenylamine	U	760	1.0	660	760	250	
101-55-3	4-Bromophenyl-phenylether	U	380	1.0	330	380	97	
1912-24-9	Atrazine	U	380	1.0	330	380	100	
87-86-5	Pentachlorophenol	U	940	1.0	820	940	270	
120-12-7	Anthracene	U	380	1.0	330	380	96	
86-74-8	Carbazole	U	570	1.0	500	570	130	

QW 4/14/09

KATAHDIN ANALYTICAL SERVICES
Report of Analytical Results

Client: CH2MHill
Project: TO-009 Lejeune
PO No:
Sample Date: 01/06/09
Received Date: 01/08/09
Extraction Date: 01/10/09
Analysis Date: 23-JAN-2009 04:10
Report Date: 01/28/2009
Matrix: SOIL
% Solids: 87.2

Lab ID: SC0067-23
Client ID: 08-IS141-2-3-09A
SDG: TO9-28
Extracted by: CB
Extraction Method: SW846 3550
Analyst: JCG
Analysis Method: SW846 8270C
Lab Prep Batch: WG59706
Units: ug/Kgdrywt

CAS#	Compound	Flags	Results	DF	PQL	Adj.PQL	Adj.MDL	
84-74-2	Di-n-butylphthalate	U	380	1.0	330	380	120	
85-68-7	Butylbenzylphthalate	U	380	1.0	330	380	110	
91-94-1	3,3'-Dichlorobenzidine	~~U~~ UJ	570	1.0	500	570	130	CCH
218-01-9	Chrysene	U	380	1.0	330	380	110	
117-81-7	bis(2-Ethylhexyl)phthalate	J	200	1.0	330	380	110	
117-84-0	Di-n-octylphthalate	U	380	1.0	330	380	240	
367-12-4	2-Fluorophenol		62%					
13127-88-3	Phenol-D6		55%					
4165-60-0	Nitrobenzene-D5		62%					
321-60-8	2-Fluorobiphenyl		64%					
118-79-6	2,4,6-Tribromophenol		57%					
1718-51-0	Terphenyl-D14		89%					

lw
4/14/09

KATAHDIN ANALYTICAL SERVICES
Report of Analytical Results

Client: CH2MHill
Project: TO-009 Lejeune
PO No:
Sample Date: 01/06/09
Received Date: 01/08/09
Extraction Date: 01/10/09
Analysis Date: 23-JAN-2009 13:11
Report Date: 01/28/2009
Matrix: SOIL
% Solids: 91.6

Lab ID: SC0067-25
Client ID: MR08-SS140-09A
SDG: TO9-28
Extracted by: CB
Extraction Method: SW846 3550
Analyst: JCG
Analysis Method: SW846 8270C
Lab Prep Batch: WG59706
Units: ug/Kgdrywt

CAS#	Compound	Flags	Results	DF	PQL	Adj.PQL	Adj.MDL	
100-52-7	Benzaldehyde	~~U~~ UJ	550	1.0	500	550	130	ICB
108-95-2	Phenol	U	550	1.0	500	550	170	
111-44-4	Bis(2-Chloroethyl)ether	U	360	1.0	330	360	88	
95-57-8	2-Chlorophenol	U	550	1.0	500	550	180	
95-48-7	2-Methylphenol	U	660	1.0	600	660	220	
108-60-1	2,2'-Oxybis(1-chloropropane)	U	360	1.0	330	360	97	
98-86-2	Acetophenone	U	660	1.0	600	660	190	
621-64-7	N-Nitroso-di-n-propylamine	U	360	1.0	330	360	91	
65794-96-9	3&4-Methylphenol	U	660	1.0	600	660	200	
67-72-1	Hexachloroethane	U	360	1.0	330	360	100	
98-95-3	Nitrobenzene	U	360	1.0	330	360	99	
78-59-1	Isophorone	U	360	1.0	330	360	82	
88-75-5	2-Nitrophenol	U	660	1.0	600	660	180	
105-67-9	2,4-Dimethylphenol	U	550	1.0	500	550	180	
111-91-1	Bis(2-Chloroethoxy)methane	U	360	1.0	330	360	100	
120-83-2	2,4-Dichlorophenol	U	550	1.0	500	550	160	
106-47-8	4-Chloroaniline	U	550	1.0	500	550	130	
105-60-2	Caprolactam	~~U~~ UJ	550	1.0	500	550	160	CCH
59-50-7	4-Chloro-3-Methylphenol	U	550	1.0	500	550	180	
88-06-2	2,4,6-Trichlorophenol	U	550	1.0	500	550	170	
95-95-4	2,4,5-Trichlorophenol	U	550	1.0	500	550	170	
91-58-7	2-Chloronaphthalene	U	360	1.0	330	360	95	
92-52-4	1,1'-Biphenyl	U	360	1.0	330	360	80	
88-74-4	2-Nitroaniline	U	550	1.0	500	550	82	
131-11-3	Dimethyl Phthalate	U	360	1.0	330	360	85	
606-20-2	2,6-Dinitrotoluene	U	360	1.0	330	360	86	
208-96-8	Acenaphthylene	U	360	1.0	330	360	76	
99-09-2	3-Nitroaniline	~~U~~ UJ	550	1.0	500	550	100	CCH
83-32-9	Acenaphthene	U	360	1.0	330	360	71	
51-28-5	2,4-Dinitrophenol	~~U~~ UJ	1300	1.0	1200	1300	410	CCH
132-64-9	Dibenzofuran	U	360	1.0	330	360	86	
100-02-7	4-Nitrophenol	~~U~~ UJ	1300	1.0	1200	1300	340	CCH
121-14-2	2,4-Dinitrotoluene	U	360	1.0	330	360	93	
84-66-2	Diethylphthalate	U	360	1.0	330	360	87	
7005-72-3	4-Chlorophenyl-phenylether	U	360	1.0	330	360	85	
100-01-6	4-Nitroaniline	U	550	1.0	500	550	150	
534-52-1	4,6-Dinitro-2-Methylphenol	~~U~~ UJ	1300	1.0	1200	1300	370	CCH
86-30-6	N-Nitrosodiphenylamine	U	720	1.0	660	720	240	
101-55-3	4-Bromophenyl-phenylether	U	360	1.0	330	360	93	
1912-24-9	Atrazine	U	360	1.0	330	360	99	
87-86-5	Pentachlorophenol	U	900	1.0	820	900	260	
120-12-7	Anthracene	U	360	1.0	330	360	92	
86-74-8	Carbazole	U	550	1.0	500	550	120	

lw
4/14/09

KATAHDIN ANALYTICAL SERVICES
Report of Analytical Results

Client: CH2MHill
Project: TO-009 Lejeune
PO No:
Sample Date: 01/06/09
Received Date: 01/08/09
Extraction Date: 01/10/09
Analysis Date: 23-JAN-2009 13:11
Report Date: 01/28/2009
Matrix: SOIL
% Solids: 91.6

Lab ID: SC0067-25
Client ID: MR08-SS140-09A
SDG: TO9-28
Extracted by: CB
Extraction Method: SW846 3550
Analyst: JCG
Analysis Method: SW846 8270C
Lab Prep Batch: WG59706
Units: ug/Kgdrywt

CAS#	Compound	Flags	Results	DF	PQL	Adj.PQL	Adj.MDL
84-74-2	Di-n-butylphthalate	U	360	1.0	330	360	110
85-68-7	Butylbenzylphthalate	U	360	1.0	330	360	100
91-94-1	3,3'-Dichlorobenzidine	U	550	1.0	500	550	120
218-01-9	Chrysene	U	360	1.0	330	360	100
117-81-7	bis(2-Ethylhexyl)phthalate	U	360	1.0	330	360	110
117-84-0	Di-n-octylphthalate	U	360	1.0	330	360	230
367-12-4	2-Fluorophenol		62%				
13127-88-3	Phenol-D6		53%				
4165-60-0	Nitrobenzene-D5		62%				
321-60-8	2-Fluorobiphenyl		70%				
118-79-6	2,4,6-Tribromophenol		61%				
1718-51-0	Terphenyl-D14		91%				

4/14/09

KATAHDIN ANALYTICAL SERVICES
Report of Analytical Results

Client: CH2MHill
Project: TO-009 Lejeune
PO No:
Sample Date: 01/06/09
Received Date: 01/08/09
Extraction Date: 01/10/09
Analysis Date: 23-JAN-2009 13:53
Report Date: 01/28/2009
Matrix: SOIL
% Solids: 89.0

Lab ID: SC0067-27
Client ID: MR08-IS140-2-3-09A
SDG: TO9-28
Extracted by: CB
Extraction Method: SW846 3550
Analyst: JCG
Analysis Method: SW846 8270C
Lab Prep Batch: WG59706
Units: ug/Kgdrywt

CAS#	Compound	Flags	Results	DF	PQL	Adj.PQL	Adj.MDL	
100-52-7	Benzaldehyde	~~U~~ UJ	560	1.0	500	560	130	ICB
108-95-2	Phenol	U	560	1.0	500	560	180	
111-44-4	Bis(2-Chloroethyl)ether	U	370	1.0	330	370	91	
95-57-8	2-Chlorophenol	U	560	1.0	500	560	180	
95-48-7	2-Methylphenol	U	670	1.0	600	670	220	
108-60-1	2,2'-Oxybis(1-chloropropane)	U	370	1.0	330	370	100	
98-86-2	Acetophenone	U	670	1.0	600	670	200	
621-64-7	N-Nitroso-di-n-propylamine	U	370	1.0	330	370	93	
65794-96-9	3&4-Methylphenol	U	670	1.0	600	670	210	
67-72-1	Hexachloroethane	U	370	1.0	330	370	110	
98-95-3	Nitrobenzene	U	370	1.0	330	370	100	
78-59-1	Isophorone	U	370	1.0	330	370	84	
88-75-5	2-Nitrophenol	U	670	1.0	600	670	190	
105-67-9	2,4-Dimethylphenol	U	560	1.0	500	560	180	
111-91-1	Bis(2-Chloroethoxy)methane	U	370	1.0	330	370	110	
120-83-2	2,4-Dichlorophenol	U	560	1.0	500	560	170	
106-47-8	4-Chloroaniline	U	560	1.0	500	560	130	
105-60-2	Caprolactam	~~U~~ UJ	560	1.0	500	560	160	CCH
59-50-7	4-Chloro-3-Methylphenol	U	560	1.0	500	560	190	
88-06-2	2,4,6-Trichlorophenol	U	560	1.0	500	560	170	
95-95-4	2,4,5-Trichlorophenol	U	560	1.0	500	560	170	
91-58-7	2-Chloronaphthalene	U	370	1.0	330	370	98	
92-52-4	1,1'-Biphenyl	U	370	1.0	330	370	82	
88-74-4	2-Nitroaniline	U	560	1.0	500	560	84	
131-11-3	Dimethyl Phthalate	U	370	1.0	330	370	88	
606-20-2	2,6-Dinitrotoluene	U	370	1.0	330	370	89	
208-96-8	Acenaphthylene	U	370	1.0	330	370	79	
99-09-2	3-Nitroaniline	~~U~~ UJ	560	1.0	500	560	100	CCH
83-32-9	Acenaphthene	U	370	1.0	330	370	73	
51-28-5	2,4-Dinitrophenol	~~U~~ UJ	1300	1.0	1200	1300	420	CCH
132-64-9	Dibenzofuran	U	370	1.0	330	370	89	
100-02-7	4-Nitrophenol	~~U~~ UJ	1300	1.0	1200	1300	350	CCH
121-14-2	2,4-Dinitrotoluene	U	370	1.0	330	370	95	
84-66-2	Diethylphthalate	U	370	1.0	330	370	90	
7005-72-3	4-Chlorophenyl-phenylether	U	370	1.0	330	370	88	
100-01-6	4-Nitroaniline	U	560	1.0	500	560	150	
534-52-1	4,6-Dinitro-2-Methylphenol	~~U~~ UJ	1300	1.0	1200	1300	380	CCH
86-30-6	N-Nitrosodiphenylamine	U	740	1.0	660	740	250	
101-55-3	4-Bromophenyl-phenylether	U	370	1.0	330	370	95	
1912-24-9	Atrazine	U	370	1.0	330	370	100	
87-86-5	Pentachlorophenol	U	920	1.0	820	920	270	
120-12-7	Anthracene	U	370	1.0	330	370	94	
86-74-8	Carbazole	U	560	1.0	500	560	120	

MW 4/14/09

KATAHDIN ANALYTICAL SERVICES
Report of Analytical Results

Client: CH2MHill
Project: TO-009 Lejeune
PO No:
Sample Date: 01/06/09
Received Date: 01/08/09
Extraction Date: 01/10/09
Analysis Date: 23-JAN-2009 13:53
Report Date: 01/28/2009
Matrix: SOIL
% Solids: 89.0

Lab ID: SC0067-27
Client ID: MR08-IS140-2-3-09A
SDG: TO9-28
Extracted by: CB
Extraction Method: SW846 3550
Analyst: JCG
Analysis Method: SW846 8270C
Lab Prep Batch: WG59706
Units: ug/Kgdrywt

CAS#	Compound	Flags	Results	DF	PQL	Adj.PQL	Adj.MDL
84-74-2	Di-n-butylphthalate	U	370	1.0	330	370	110
85-68-7	Butylbenzylphthalate	U	370	1.0	330	370	100
91-94-1	3,3'-Dichlorobenzidine	U	560	1.0	500	560	130
218-01-9	Chrysene	U	370	1.0	330	370	110
117-81-7	bis(2-Ethylhexyl)phthalate	U	370	1.0	330	370	110
117-84-0	Di-n-octylphthalate	U	370	1.0	330	370	240
367-12-4	2-Fluorophenol		63%				
13127-88-3	Phenol-D6		58%				
4165-60-0	Nitrobenzene-D5		67%				
321-60-8	2-Fluorobiphenyl		67%				
118-79-6	2,4,6-Tribromophenol		50%				
1718-51-0	Terphenyl-D14		93%				

LW
4/14/09

15

KATAHDIN ANALYTICAL SERVICES
Report of Analytical Results

Client: CH2MHill
Project: TO-009 Lejeune
PO No:
Sample Date: 01/06/09
Received Date: 01/08/09
Extraction Date: 01/10/09
Analysis Date: 23-JAN-2009 14:35
Report Date: 01/28/2009
Matrix: SOIL
% Solids: 86.8

Lab ID: SC0067-33
Client ID: MR08-IS209-2-3-09A
SDG: TO9-28
Extracted by: CB
Extraction Method: SW846 3550
Analyst: JCG
Analysis Method: SW846 8270C
Lab Prep Batch: WG59706
Units: ug/Kgdrywt

CAS#	Compound	Flags	Results	DF	PQL	Adj.PQL	Adj.MDL	
100-52-7	Benzaldehyde	~~U~~ UJ	580	1.0	500	580	140	ICB
108-95-2	Phenol	U	580	1.0	500	580	180	
111-44-4	Bis(2-Chloroethyl)ether	U	380	1.0	330	380	93	
95-57-8	2-Chlorophenol	U	580	1.0	500	580	190	
95-48-7	2-Methylphenol	U	690	1.0	600	690	230	
108-60-1	2,2'-Oxybis(1-chloropropane)	U	380	1.0	330	380	100	
98-86-2	Acetophenone	U	690	1.0	600	690	200	
621-64-7	N-Nitroso-di-n-propylamine	U	380	1.0	330	380	96	
65794-96-9	3&4-Methylphenol	U	690	1.0	600	690	220	
67-72-1	Hexachloroethane	U	380	1.0	330	380	110	
98-95-3	Nitrobenzene	U	380	1.0	330	380	100	
78-59-1	Isophorone	U	380	1.0	330	380	86	
88-75-5	2-Nitrophenol	U	690	1.0	600	690	190	
105-67-9	2,4-Dimethylphenol	U	580	1.0	500	580	190	
111-91-1	Bis(2-Chloroethoxy)methane	U	380	1.0	330	380	110	
120-83-2	2,4-Dichlorophenol	U	580	1.0	500	580	170	
106-47-8	4-Chloroaniline	U	580	1.0	500	580	140	
105-60-2	Caprolactam	~~U~~ UJ	580	1.0	500	580	160	CCH
59-50-7	4-Chloro-3-Methylphenol	U	580	1.0	500	580	190	
88-06-2	2,4,6-Trichlorophenol	U	580	1.0	500	580	180	
95-95-4	2,4,5-Trichlorophenol	U	580	1.0	500	580	180	
91-58-7	2-Chloronaphthalene	U	380	1.0	330	380	100	
92-52-4	1,1'-Biphenyl	U	380	1.0	330	380	84	
88-74-4	2-Nitroaniline	U	580	1.0	500	580	86	
131-11-3	Dimethyl Phthalate	U	380	1.0	330	380	90	
606-20-2	2,6-Dinitrotoluene	U	380	1.0	330	380	91	
208-96-8	Acenaphthylene	U	380	1.0	330	380	81	
99-09-2	3-Nitroaniline	~~U~~ UJ	580	1.0	500	580	110	CCH
83-32-9	Acenaphthene	U	380	1.0	330	380	75	
51-28-5	2,4-Dinitrophenol	~~U~~ UJ	1400	1.0	1200	1400	430	CCH
132-64-9	Dibenzofuran	U	380	1.0	330	380	91	
100-02-7	4-Nitrophenol	~~U~~ UJ	1400	1.0	1200	1400	360	CCH
121-14-2	2,4-Dinitrotoluene	U	380	1.0	330	380	98	
84-66-2	Diethylphthalate	U	380	1.0	330	380	92	
7005-72-3	4-Chlorophenyl-phenylether	U	380	1.0	330	380	90	
100-01-6	4-Nitroaniline	U	580	1.0	500	580	150	
534-52-1	4,6-Dinitro-2-Methylphenol	~~U~~ UJ	1400	1.0	1200	1400	390	CCH
86-30-6	N-Nitrosodiphenylamine	U	760	1.0	660	760	250	
101-55-3	4-Bromophenyl-phenylether	U	380	1.0	330	380	98	
1912-24-9	Atrazine	U	380	1.0	330	380	100	
87-86-5	Pentachlorophenol	U	940	1.0	820	940	270	
120-12-7	Anthracene	U	380	1.0	330	380	97	
86-74-8	Carbazole	U	580	1.0	500	580	130	

MW 4/14/09

KATAHDIN ANALYTICAL SERVICES
Report of Analytical Results

Client: CH2MHill
Project: TO-009 Lejeune
PO No:
Sample Date: 01/06/09
Received Date: 01/08/09
Extraction Date: 01/10/09
Analysis Date: 23-JAN-2009 14:35
Report Date: 01/28/2009
Matrix: SOIL
% Solids: 86.8

Lab ID: SC0067-33
Client ID: MR08-IS209-2-3-09A
SDG: TO9-28
Extracted by: CB
Extraction Method: SW846 3550
Analyst: JCG
Analysis Method: SW846 8270C
Lab Prep Batch: WG59706
Units: ug/Kgdrywt

CAS#	Compound	Flags	Results	DF	PQL	Adj.PQL	Adj.MDL
84-74-2	Di-n-butylphthalate	U	380	1.0	330	380	120
85-68-7	Butylbenzylphthalate	U	380	1.0	330	380	110
91-94-1	3,3'-Dichlorobenzidine	U	580	1.0	500	580	130
218-01-9	Chrysene	U	380	1.0	330	380	110
117-81-7	bis(2-Ethylhexyl)phthalate	U	380	1.0	330	380	110
117-84-0	Di-n-octylphthalate	U	380	1.0	330	380	240
367-12-4	2-Fluorophenol		58%				
13127-88-3	Phenol-D6		51%				
4165-60-0	Nitrobenzene-D5		58%				
321-60-8	2-Fluorobiphenyl		65%				
118-79-6	2,4,6-Tribromophenol		44%				
1718-51-0	Terphenyl-D14		83%				

hw
4/14/09

16

KATAHDIN ANALYTICAL SERVICES
Report of Analytical Results

Client: CH2MHill
Project: TO-009 Lejeune
PO No:
Sample Date: 01/06/09
Received Date: 01/08/09
Extraction Date: 01/10/09
Analysis Date: 23-JAN-2009 15:18
Report Date: 01/28/2009
Matrix: SOIL
% Solids: 92.4

Lab ID: SC0067-35
Client ID: MR08-IS209D-2-3-09A
SDG: TO9-28
Extracted by: CB
Extraction Method: SW846 3550
Analyst: JCG
Analysis Method: SW846 8270C
Lab Prep Batch: WG59706
Units: ug/Kgdrywt

CAS#	Compound	Flags	Results	DF	PQL	Adj.PQL	Adj.MDL	
100-52-7	Benzaldehyde	~~U~~ UJ	540	1.0	500	540	130	ICB
108-95-2	Phenol	U	540	1.0	500	540	170	
111-44-4	Bis(2-Chloroethyl)ether	U	360	1.0	330	360	88	
95-57-8	2-Chlorophenol	U	540	1.0	500	540	180	
95-48-7	2-Methylphenol	U	650	1.0	600	650	220	
108-60-1	2,2'-Oxybis(1-chloropropane)	U	360	1.0	330	360	96	
98-86-2	Acetophenone	U	650	1.0	600	650	190	
621-64-7	N-Nitroso-di-n-propylamine	U	360	1.0	330	360	90	
65794-96-9	3&4-Methylphenol	U	650	1.0	600	650	200	
67-72-1	Hexachloroethane	U	360	1.0	330	360	100	
98-95-3	Nitrobenzene	U	360	1.0	330	360	98	
78-59-1	Isophorone	U	360	1.0	330	360	81	
88-75-5	2-Nitrophenol	U	650	1.0	600	650	180	
105-67-9	2,4-Dimethylphenol	U	540	1.0	500	540	180	
111-91-1	Bis(2-Chloroethoxy)methane	U	360	1.0	330	360	100	
120-83-2	2,4-Dichlorophenol	U	540	1.0	500	540	160	
106-47-8	4-Chloroaniline	U	540	1.0	500	540	130	
105-60-2	Caprolactam	~~U~~ UJ	540	1.0	500	540	160	CCH
59-50-7	4-Chloro-3-Methylphenol	U	540	1.0	500	540	180	
88-06-2	2,4,6-Trichlorophenol	U	540	1.0	500	540	170	
95-95-4	2,4,5-Trichlorophenol	U	540	1.0	500	540	170	
91-58-7	2-Chloronaphthalene	U	360	1.0	330	360	94	
92-52-4	1,1'-Biphenyl	U	360	1.0	330	360	79	
88-74-4	2-Nitroaniline	U	540	1.0	500	540	81	
131-11-3	Dimethyl Phthalate	U	360	1.0	330	360	84	
606-20-2	2,6-Dinitrotoluene	U	360	1.0	330	360	86	
208-96-8	Acenaphthylene	U	360	1.0	330	360	76	
99-09-2	3-Nitroaniline	~~U~~ UJ	540	1.0	500	540	100	CCH
83-32-9	Acenaphthene	U	360	1.0	330	360	70	
51-28-5	2,4-Dinitrophenol	~~U~~ UJ	1300	1.0	1200	1300	410	CCH
132-64-9	Dibenzofuran	U	360	1.0	330	360	86	
100-02-7	4-Nitrophenol	~~U~~ UJ	1300	1.0	1200	1300	330	CCH
121-14-2	2,4-Dinitrotoluene	U	360	1.0	330	360	92	
84-66-2	Diethylphthalate	U	360	1.0	330	360	87	
7005-72-3	4-Chlorophenyl-phenylether	U	360	1.0	330	360	84	
100-01-6	4-Nitroaniline	~~U~~	540	1.0	500	540	140	
534-52-1	4,6-Dinitro-2-Methylphenol	~~U~~ UJ	1300	1.0	1200	1300	360	CCH
86-30-6	N-Nitrosodiphenylamine	U	710	1.0	660	710	240	
101-55-3	4-Bromophenyl-phenylether	U	360	1.0	330	360	92	
1912-24-9	Atrazine	U	360	1.0	330	360	98	
87-86-5	Pentachlorophenol	U	890	1.0	820	890	260	
120-12-7	Anthracene	U	360	1.0	330	360	91	
86-74-8	Carbazole	U	540	1.0	500	540	120	

MW
4/14/09

KATAHDIN ANALYTICAL SERVICES
Report of Analytical Results

Client: CH2MHill
Project: TO-009 Lejeune
PO No:
Sample Date: 01/06/09
Received Date: 01/08/09
Extraction Date: 01/10/09
Analysis Date: 23-JAN-2009 15:18
Report Date: 01/28/2009
Matrix: SOIL
% Solids: 92.4

Lab ID: SC0067-35
Client ID: MR08-IS209D-2-3-09A
SDG: TO9-28
Extracted by: CB
Extraction Method: SW846 3550
Analyst: JCG
Analysis Method: SW846 8270C
Lab Prep Batch: WG59706
Units: ug/Kgdrywt

CAS#	Compound	Flags	Results	DF	PQL	Adj.PQL	Adj.MDL
84-74-2	Di-n-butylphthalate	U	360	1.0	330	360	110
85-68-7	Butylbenzylphthalate	U	360	1.0	330	360	100
91-94-1	3,3'-Dichlorobenzidine	U	540	1.0	500	540	120
218-01-9	Chrysene	U	360	1.0	330	360	100
117-81-7	bis(2-Ethylhexyl)phthalate	U	360	1.0	330	360	110
117-84-0	Di-n-octylphthalate	U	360	1.0	330	360	230
367-12-4	2-Fluorophenol		60%				
13127-88-3	Phenol-D6		57%				
4165-60-0	Nitrobenzene-D5		62%				
321-60-8	2-Fluorobiphenyl		63%				
118-79-6	2,4,6-Tribromophenol		51%				
1718-51-0	Terphenyl-D14		86%				

lw
4/14/09

KATAHDIN ANALYTICAL SERVICES
Report of Analytical Results

Client: CH2MHill
Project: TO-009 Lejeune
PO No:
Sample Date: 01/06/09
Received Date: 01/08/09
Extraction Date: 01/10/09
Analysis Date: 23-JAN-2009 16:00
Report Date: 01/28/2009
Matrix: SOIL
% Solids: 88.6

Lab ID: SC0067-37
Client ID: MR08-SS210-09A
SDG: TO9-28
Extracted by: CB
Extraction Method: SW846 3550
Analyst: JCG
Analysis Method: SW846 8270C
Lab Prep Batch: WG59706
Units: ug/Kgdrywt

CAS#	Compound	Flags	Results	DF	PQL	Adj.PQL	Adj.MDL	
100-52-7	Benzaldehyde	~~U~~ UJ	560	1.0	500	560	140	JCB
108-95-2	Phenol	U	560	1.0	500	560	180	
111-44-4	Bis(2-Chloroethyl)ether	U	370	1.0	330	370	91	
95-57-8	2-Chlorophenol	U	560	1.0	500	560	180	
95-48-7	2-Methylphenol	U	680	1.0	600	680	220	
108-60-1	2,2'-Oxybis(1-chloropropane)	U	370	1.0	330	370	100	
98-86-2	Acetophenone	U	680	1.0	600	680	200	
621-64-7	N-Nitroso-di-n-propylamine	U	370	1.0	330	370	94	
65794-96-9	3&4-Methylphenol	U	680	1.0	600	680	210	
67-72-1	Hexachloroethane	U	370	1.0	330	370	110	
98-95-3	Nitrobenzene	U	370	1.0	330	370	100	
78-59-1	Isophorone	U	370	1.0	330	370	85	
88-75-5	2-Nitrophenol	U	680	1.0	600	680	190	
105-67-9	2,4-Dimethylphenol	U	560	1.0	500	560	190	
111-91-1	Bis(2-Chloroethoxy)methane	U	370	1.0	330	370	110	
120-83-2	2,4-Dichlorophenol	U	560	1.0	500	560	170	
106-47-8	4-Chloroaniline	U	560	1.0	500	560	130	
105-60-2	Caprolactam	~~U~~ UJ	560	1.0	500	560	160	CCH
59-50-7	4-Chloro-3-Methylphenol	U	560	1.0	500	560	190	
88-06-2	2,4,6-Trichlorophenol	U	560	1.0	500	560	170	
95-95-4	2,4,5-Trichlorophenol	U	560	1.0	500	560	170	
91-58-7	2-Chloronaphthalene	U	370	1.0	330	370	98	
92-52-4	1,1'-Biphenyl	U	370	1.0	330	370	82	
88-74-4	2-Nitroaniline	U	560	1.0	500	560	85	
131-11-3	Dimethyl Phthalate	U	370	1.0	330	370	88	
606-20-2	2,6-Dinitrotoluene	U	370	1.0	330	370	89	
208-96-8	Acenaphthylene	U	370	1.0	330	370	79	
99-09-2	3-Nitroaniline	~~U~~ UJ	560	1.0	500	560	110	CCH
83-32-9	Acenaphthene	U	370	1.0	330	370	73	
51-28-5	2,4-Dinitrophenol	~~U~~ UJ	1400	1.0	1200	1400	420	CCH
132-64-9	Dibenzofuran	U	370	1.0	330	370	89	
100-02-7	4-Nitrophenol	~~U~~ UJ	1400	1.0	1200	1400	350	CCH
121-14-2	2,4-Dinitrotoluene	U	370	1.0	330	370	96	
84-66-2	Diethylphthalate	U	370	1.0	330	370	90	
7005-72-3	4-Chlorophenyl-phenylether	U	370	1.0	330	370	88	
100-01-6	4-Nitroaniline	U	560	1.0	500	560	150	
534-52-1	4,6-Dinitro-2-Methylphenol	~~U~~ UJ	1400	1.0	1200	1400	380	CCH
86-30-6	N-Nitrosodiphenylamine	U	740	1.0	660	740	250	
101-55-3	4-Bromophenyl-phenylether	U	370	1.0	330	370	96	
1912-24-9	Atrazine	U	370	1.0	330	370	100	
87-86-5	Pentachlorophenol	U	920	1.0	820	920	270	
120-12-7	Anthracene	U	370	1.0	330	370	95	
86-74-8	Carbazole	U	560	1.0	500	560	120	

LW
4/14/09

KATAHDIN ANALYTICAL SERVICES
Report of Analytical Results

Client: CH2MHill
Project: TO-009 Lejeune
PO No:
Sample Date: 01/06/09
Received Date: 01/08/09
Extraction Date: 01/10/09
Analysis Date: 23-JAN-2009 16:00
Report Date: 01/28/2009
Matrix: SOIL
% Solids: 88.6

Lab ID: SC0067-37
Client ID: MR08-SS210-09A
SDG: TO9-28
Extracted by: CB
Extraction Method: SW846 3550
Analyst: JCG
Analysis Method: SW846 8270C
Lab Prep Batch: WG59706
Units: ug/Kgdrywt

CAS#	Compound	Flags	Results	DF	PQL	Adj.PQL	Adj.MDL
84-74-2	Di-n-butylphthalate	U	370	1.0	330	370	110
85-68-7	Butylbenzylphthalate	U	370	1.0	330	370	100
91-94-1	3,3'-Dichlorobenzidine	U	560	1.0	500	560	130
218-01-9	Chrysene		690	1.0	330	370	110
117-81-7	bis(2-Ethylhexyl)phthalate	J	230	1.0	330	370	110
117-84-0	Di-n-octylphthalate	U	370	1.0	330	370	240
367-12-4	2-Fluorophenol		64%				
13127-88-3	Phenol-D6		53%				
4165-60-0	Nitrobenzene-D5		61%				
321-60-8	2-Fluorobiphenyl		78%				
118-79-6	2,4,6-Tribromophenol		70%				
1718-51-0	Terphenyl-D14		93%				

MW 4/14/09

KATAHDIN ANALYTICAL SERVICES
Report of Analytical Results

Client: CH2MHill
Project: TO-009 Lejeune
PO No:
Sample Date: 01/06/09
Received Date: 01/08/09
Extraction Date: 01/10/09
Analysis Date: 23-JAN-2009 16:42
Report Date: 01/28/2009
Matrix: SOIL
% Solids: 87.4

Lab ID: SC0067-39
Client ID: MR08-IS210-2-3-09A
SDG: TO9-28
Extracted by: CB
Extraction Method: SW846 3550
Analyst: JCG
Analysis Method: SW846 8270C
Lab Prep Batch: WG59706
Units: ug/Kgdrywt

CAS#	Compound	Flags	Results	DF	PQL	Adj.PQL	Adj.MDL	
100-52-7	Benzaldehyde	~~U~~ UJ	570	1.0	500	570	140	ICB
108-95-2	Phenol	U	570	1.0	500	570	180	
111-44-4	Bis(2-Chloroethyl)ether	U	380	1.0	330	380	93	
95-57-8	2-Chlorophenol	U	570	1.0	500	570	190	
95-48-7	2-Methylphenol	U	690	1.0	600	690	230	
108-60-1	2,2'-Oxybis(1-chloropropane)	U	380	1.0	330	380	100	
98-86-2	Acetophenone	U	690	1.0	600	690	200	
621-64-7	N-Nitroso-di-n-propylamine	U	380	1.0	330	380	95	
65794-96-9	3&4-Methylphenol	U	690	1.0	600	690	210	
67-72-1	Hexachloroethane	U	380	1.0	330	380	110	
98-95-3	Nitrobenzene	U	380	1.0	330	380	100	
78-59-1	Isophorone	U	380	1.0	330	380	86	
88-75-5	2-Nitrophenol	U	690	1.0	600	690	190	
105-67-9	2,4-Dimethylphenol	U	570	1.0	500	570	190	
111-91-1	Bis(2-Chloroethoxy)methane	U	380	1.0	330	380	110	
120-83-2	2,4-Dichlorophenol	U	570	1.0	500	570	170	
106-47-8	4-Chloroaniline	U	570	1.0	500	570	140	
105-60-2	Caprolactam	~~U~~ UJ	570	1.0	500	570	160	CCH
59-50-7	4-Chloro-3-Methylphenol	U	570	1.0	500	570	190	
88-06-2	2,4,6-Trichlorophenol	U	570	1.0	500	570	180	
95-95-4	2,4,5-Trichlorophenol	U	570	1.0	500	570	180	
91-58-7	2-Chloronaphthalene	U	380	1.0	330	380	99	
92-52-4	1,1'-Biphenyl	U	380	1.0	330	380	83	
88-74-4	2-Nitroaniline	U	570	1.0	500	570	86	
131-11-3	Dimethyl Phthalate	U	380	1.0	330	380	89	
606-20-2	2,6-Dinitrotoluene	U	380	1.0	330	380	90	
208-96-8	Acenaphthylene	U	380	1.0	330	380	80	
99-09-2	3-Nitroaniline	~~U~~ UJ	570	1.0	500	570	110	CCH
83-32-9	Acenaphthene	U	380	1.0	330	380	74	
51-28-5	2,4-Dinitrophenol	~~U~~ UJ	1400	1.0	1200	1400	430	CCH
132-64-9	Dibenzofuran	U	380	1.0	330	380	90	
100-02-7	4-Nitrophenol	~~U~~ UJ	1400	1.0	1200	1400	350	CCH
121-14-2	2,4-Dinitrotoluene	U	380	1.0	330	380	97	
84-66-2	Diethylphthalate	U	380	1.0	330	380	91	
7005-72-3	4-Chlorophenyl-phenylether	U	380	1.0	330	380	89	
100-01-6	4-Nitroaniline	U	570	1.0	500	570	150	
534-52-1	4,6-Dinitro-2-Methylphenol	~~U~~ UJ	1400	1.0	1200	1400	380	CCH
86-30-6	N-Nitrosodiphenylamine	U	750	1.0	660	750	250	
101-55-3	4-Bromophenyl-phenylether	U	380	1.0	330	380	97	
1912-24-9	Atrazine	U	380	1.0	330	380	100	
87-86-5	Pentachlorophenol	U	940	1.0	820	940	270	
120-12-7	Anthracene	U	380	1.0	330	380	96	
86-74-8	Carbazole	U	570	1.0	500	570	130	

MW
4/14/09

18

KATAHDIN ANALYTICAL SERVICES
Report of Analytical Results

Client: CH2MHill
Project: TO-009 Lejeune
PO No:
Sample Date: 01/06/09
Received Date: 01/08/09
Extraction Date: 01/10/09
Analysis Date: 23-JAN-2009 16:42
Report Date: 01/28/2009
Matrix: SOIL
% Solids: 87.4

Lab ID: SC0067-39
Client ID: MR08-IS210-2-3-09A
SDG: TO9-28
Extracted by: CB
Extraction Method: SW846 3550
Analyst: JCG
Analysis Method: SW846 8270C
Lab Prep Batch: WG59706
Units: ug/Kgdrywt

CAS#	Compound	Flags	Results	DF	PQL	Adj.PQL	Adj.MDL
84-74-2	Di-n-butylphthalate	U	380	1.0	330	380	120
85-68-7	Butylbenzylphthalate	U	380	1.0	330	380	110
91-94-1	3,3'-Dichlorobenzidine	U	570	1.0	500	570	130
218-01-9	Chrysene	J	200	1.0	330	380	110
117-81-7	bis(2-Ethylhexyl)phthalate	U	380	1.0	330	380	110
117-84-0	Di-n-octylphthalate	U	380	1.0	330	380	240
367-12-4	2-Fluorophenol		61%				
13127-88-3	Phenol-D6		57%				
4165-60-0	Nitrobenzene-D5		64%				
321-60-8	2-Fluorobiphenyl		66%				
118-79-6	2,4,6-Tribromophenol		73%				
1718-51-0	Terphenyl-D14		89%				

pw
4/14/09

ENVIRONMENTAL
Data Services, Inc.

POLYNUCLEAR AROMATIC COMPOUNDS BY 8270SIM

USEPA Region IV - Level IV Review

Site: MCB Camp Lejeune, TO-09 SDG #: TO9-29

Client: CH2M HILL, Inc., Virginia Beach, Virginia Date: April 15, 2009

Laboratory: Katahdin Analytical Services, Scarborough, Maine Reviewer: Nancy Weaver

EDS ID	Client Sample ID	Laboratory Sample ID	Matrix
1	MR08-SS225-09A	SC0101-2	Soil
1MS	MR08-SS225-09AMS	SC0101-2MS	Soil
1MSD	MR08-SS225-09MSD	SC0101-2MSD	Soil
2	MR08-SS226-09A	SC0101-4	Soil
2DL	MR08-SS226-09ADL	SC0101-4DL	Soil
3	MR08-IS226-2-3-09A	SC0101-6	Soil
4	MR08-SS233-09A	SC0101-8	Soil
5	MR08-IS233-5-6-09A	SC0101-10	Soil
6	MR08-SS234-09A	SC0101-12	Soil
7	MR08-IS234-5-6-09A	SC0101-14	Soil
8	MR08-SS249-09A	SC0101-16	Soil
8DL	MR08-SS249-09ADL	SC0101-16DL	Soil
9	MR08-SS249D-09A	SC0101-18	Soil
9DL	MR08-SS249D-09ADL	SC0101-18DL	Soil
10	MR08-IS249-5-6-09A	SC0101-20	Soil
11	MR08-IS249D-5-6-09A	SC0101-22	Soil
12	MR08-SS248-09A	SC0101-24	Soil
12DL	MR08-SS248-09ADL	SC0101-24DL	Soil
13	MR08-IS248-5-6-09A	SC0101-26	Soil
14	MR08-SS250-09A	SC0101-28	Soil
14DL	MR08-SS250-09ADL	SC0101-28DL	Soil
15	MR08-IS250-5-6-09A	SC0101-30	Soil
16	MR08-SS257-09A	SC0101-32	Soil
16DL	MR08-SS257-09ADL	SC0101-32DL	Soil
17	MR08-IS257-9-10-09A	SC0101-34	Soil
18	MR08-SS258-09A	SC0101-36	Soil
18DL	MR08-SS258-09ADL	SC0101-36DL	Soil
19	MR08-IS258-9-10-09A	SC0101-38	Soil
20	MR08-SS273-09A	SC0101-40	Soil

The USEPA "Contract Laboratory Program National Functional Guidelines for Organic Data Review," October 1999, and professional judgment were used in evaluating the data in this summary report.

Holding Times - All samples were extracted within 14 days for soil samples and analyzed within 40 days for all samples.

GC/MS Tuning - All of the DFTPP tunes in the initial and continuing calibrations met the percent relative abundance criteria.

Initial Calibration - The initial calibrations exhibited acceptable %RSD and mean RRF values.

Continuing Calibration - The continuing calibrations exhibited acceptable %D and RRF values except the following.

CCAL Date	Compound	%D/RRF	Qualifier	Affected Samples
01/27/09 (0743)	Hexachlorocyclopentadiene	35.85%	J/UJ	7-16
01/27/09 (1737)	Naphthalene	29.88%	J/UJ	2, 4, 17-20, 8DL, 9DL, 12DL, 14DL, 16DL
	Hexachlorobutadiene	45.05%	J/UJ	
	Hexachlorocyclopentadiene	48.23%	J/UJ	
01/28/09	Hexachlorobutadiene	26.24%	J/UJ	1, 2DL, 18DL

Surrogates - All samples exhibited acceptable surrogate recoveries.

MS/MSD - The MS/MSD sample exhibited acceptable %R and RPD values except the following.

MS/MSD Sample ID	Compound	MS/MSD %R/RPD	Qualifier
1	Pyrene	134%/Ok/Ok	J
	Hexachlorocyclopentadiene	Ok/25%/Ok	J/UJ

Laboratory Control Sample - The LCS samples exhibited acceptable %R values.

Internal Standard (IS) Area Performance - All internal standards met response and retention time (RT) criteria.

Method Blank - The method blanks were free of contamination.

Field, Equipment Blank - Field QC results are summarized below.

Blank ID	Compound	Conc. ug/L	Action Level ug/kg	Qualifier	Affected Samples
MR08-FB01011009	None - ND	-	-	-	-
MR08-EB01010709-SS	Phenanthrene	0.060	10	U	1

Field Duplicates - Field duplicate results are summarized below.

Compound	MR08-SS249-09A ug/kg	MR08-SS249D-09A ug/kg	RPD	Qualifier
Fluorene	6.2	6.2	0%	None
Phenanthrene	240	260	8%	None
Fluoranthene	1200	1200	0%	None
Pyrene	840	1000	17%	None
Benzo (a) anthracene	500	540	8%	None
Benzo (b) fluoranthene	840	920	9%	None
Benzo (k) fluoranthene	730	860	16%	None
Benzo (a) pyrene	640	790	21%	None
Indeno (1, 2, 3-cd) pyrene	510	740	37%	None
Dibenzo (a,h) anthracene	140	160	13%	None
Benzo (g,h,i) perylene	440	770	55%	None

Compound	MR08-IS249-5-6-09A ug/kg	MR08-IS249-5-6-09A ug/kg	RPD	Qualifier
Pyrene	11 U	2.9	NC	None

Compound Quantitation - Several samples exhibited high concentrations of target compounds and were flagged (E) by the laboratory. The laboratory diluted and reanalyzed samples. The reviewer replaced the original results with the dilution results. The original Form Is should be used for reporting purposes.

KATAHDIN ANALYTICAL SERVICES
Report of Analytical Results

Client: CH2MHill
Project: TO-009 Lejeune
PO No:
Sample Date: 01/07/09
Received Date: 01/09/09
Extraction Date: 01/12/09
Analysis Date: 28-JAN-2009 11:56
Report Date: 01/29/2009
Matrix: SOIL
% Solids: 96.0

Lab ID: SC0101-2RA
Client ID: MR08-SS225-09A
SDG: TO9-29
Extracted by: CB
Extraction Method: SW846 3550
Analyst: JLP
Analysis Method: SW846 M8270C
Lab Prep Batch: WG59732
Units: ug/Kgdrywt

CAS#	Compound	Flags		Results	DF	PQL	Adj.PQL	Adj.MDL	
91-20-3	Naphthalene	U		10	1.0	10	10	2.7	
91-57-6	2-Methylnaphthalene	U		10	1.0	10	10	2.3	
86-73-7	Fluorene	U		10	1.0	10	10	3.3	
85-01-8	Phenanthrene	~~J~~	10U	~~6.2~~	1.0	10	10	1.9	BL
206-44-0	Fluoranthene			17	1.0	10	10	1.9	
129-00-0	Pyrene		J	14	1.0	10	10	2.2	MSH
56-55-3	Benzo(a)anthracene	J		5.6	1.0	10	10	2.0	
205-99-2	Benzo(b)fluoranthene	U		10	1.0	10	10	2.5	
207-08-9	Benzo(k)fluoranthene	U		10	1.0	10	10	3.2	
50-32-8	Benzo(a)pyrene	J		8.0	1.0	10	10	3.4	
193-39-5	Indeno(1,2,3-cd)pyrene			15	1.0	10	10	2.0	
53-70-3	Dibenzo(a,h)anthracene	U		10	1.0	10	10	1.9	
191-24-2	Benzo(g,h,i)perylene			30	1.0	10	10	2.1	
118-74-1	Hexachlorobenzene	U		10	1.0	10	10	1.9	
87-68-3	Hexachlorobutadiene	~~U~~	UJ	10	1.0	10	10	2.4	CCH
77-47-4	Hexachlorocyclopentadiene	~~U~~	UJ	10	1.0	10	10	1.6	MSL
7297-45-2	2-Methylnaphthalene-D10			75%					
367-12-4	2,4-Dibromophenol			69%					
81103-79-9	Fluorene-d10			68%					
1718-51-1	Pyrene-D10			74%					

MW 4/15/09

2

KATAHDIN ANALYTICAL SERVICES
Report of Analytical Results

Client: CH2MHill
Project: TO-009 Lejeune
PO No:
Sample Date: 01/07/09
Received Date: 01/09/09
Extraction Date: 01/12/09
Analysis Date: 28-JAN-2009 00:22
Report Date: 01/29/2009
Matrix: SOIL
% Solids: 93.6

Lab ID: SC0101-4
Client ID: MR08-SS226-09A
SDG: TO9-29
Extracted by: CB
Extraction Method: SW846 3550
Analyst: JCG
Analysis Method: SW846 M8270C
Lab Prep Batch: WG59732
Units: ug/Kgdrywt

CAS#	Compound	Flags	Results	DF	PQL	Adj.PQL	Adj.MDL
91-20-3	Naphthalene	~~U~~ UJ	11	1.0	10	11	2.8 CCH
91-57-6	2-Methylnaphthalene	J	2.4	1.0	10	11	2.3
86-73-7	Fluorene		25	1.0	10	11	3.4
85-01-8	Phenanthrene	~~E~~ 1400	~~1300~~ 25	1.0	10	270 11	48 ~~1.9~~ R DL
206-44-0	Fluoranthene	~~E~~ 4200	~~3300~~	1.0	10	11	48 ~~1.9~~
129-00-0	Pyrene	~~E~~ 2600	~~15000~~	1.0	10	11	56 ~~2.2~~
56-55-3	Benzo(a)anthracene	~~E~~ 1700	~~1600~~	1.0	10	11	51 ~~2.0~~
205-99-2	Benzo(b)fluoranthene	~~E~~ 3600	~~2900~~	1.0	10	11	64 ~~2.6~~
207-08-9	Benzo(k)fluoranthene	~~E~~ 1800	~~2400~~	1.0	10	11	83 ~~3.3~~
50-32-8	Benzo(a)pyrene	~~E~~ 2000	~~1800~~	1.0	10	11	88 ~~3.5~~
193-39-5	Indeno(1,2,3-cd)pyrene	~~E~~ 2200	~~1400~~	1.0	10	11	51 ~~2.0~~
53-70-3	Dibenzo(a,h)anthracene	~~E~~ 850	~~500~~	1.0	10	11	48 ~~1.9~~
191-24-2	Benzo(g,h,i)perylene	~~E~~ 2000	~~1200~~	1.0	10	11	53 ~~2.1~~
118-74-1	Hexachlorobenzene	U	11	1.0	10	11	1.9
87-68-3	Hexachlorobutadiene	~~U~~ UJ	11	1.0	10	11	2.4 CCH
77-47-4	Hexachlorocyclopentadiene	~~U~~ UJ	11	1.0	10	11	1.6 CCH
7297-45-2	2-Methylnaphthalene-D10		92%				
367-12-4	2,4-Dibromophenol		96%				
81103-79-9	Fluorene-d10		92%				
1718-51-1	Pyrene-D10		104%				

lew 4/15/09

2DL

KATAHDIN ANALYTICAL SERVICES
Report of Analytical Results

Client: CH2MHill
Project: TO-009 Lejeune
PO No:
Sample Date: 01/07/09
Received Date: 01/09/09
Extraction Date: 01/12/09
Analysis Date: 28-JAN-2009 14:03
Report Date: 01/29/2009
Matrix: SOIL
% Solids: 93.6

Lab ID: SC0101-4DL2
Client ID: MR08-SS226-09A
SDG: TO9-29
Extracted by: CB
Extraction Method: SW846 3550
Analyst: JLP
Analysis Method: SW846 M8270C
Lab Prep Batch: WG59732
Units: ug/Kgdrywt

Use ORIGINAL

CAS#	Compound	Flags	Results	DF	PQL	Adj.PQL	Adj.MDL
91-20-3	Naphthalene	U	270	25	10	270	69
91-57-6	2-Methylnaphthalene	U	270	25	10	270	59
86-73-7	Fluorene	U	270	25	10	270	85
85-01-8	Phenanthrene		1400	25	10	270	48
206-44-0	Fluoranthene		4200	25	10	270	48
129-00-0	Pyrene		2600	25	10	270	56
56-55-3	Benzo(a)anthracene		1700	25	10	270	51
205-99-2	Benzo(b)fluoranthene		3600	25	10	270	64
207-08-9	Benzo(k)fluoranthene		1800	25	10	270	83
50-32-8	Benzo(a)pyrene		2000	25	10	270	88
193-39-5	Indeno(1,2,3-cd)pyrene		2200	25	10	270	51
53-70-3	Dibenzo(a,h)anthracene		850	25	10	270	48
191-24-2	Benzo(g,h,i)perylene		2000	25	10	270	53
118-74-1	Hexachlorobenzene	U	270	25	10	270	48
87-68-3	Hexachlorobutadiene	~~U~~ UJ	270	25	10	270	61 CCH
77-47-4	Hexachlorocyclopentadiene	U	270	25	10	270	40
7297-45-2	2-Methylnaphthalene-D10		D				
367-12-4	2,4-Dibromophenol		D				
81103-79-9	Fluorene-d10		D				
1718-51-1	Pyrene-D10		D				

R DL

LW
4/15/09

3

KATAHDIN ANALYTICAL SERVICES
Report of Analytical Results

Client: CH2MHill
Project: TO-009 Lejeune
PO No:
Sample Date: 01/07/09
Received Date: 01/09/09
Extraction Date: 01/12/09
Analysis Date: 27-JAN-2009 03:37
Report Date: 01/29/2009
Matrix: SOIL
% Solids: 94.0

Lab ID: SC0101-6
Client ID: MR08-IS226-2-3-09A
SDG: TO9-29
Extracted by: CB
Extraction Method: SW846 3550
Analyst: JCG
Analysis Method: SW846 M8270C
Lab Prep Batch: WG59732
Units: ug/Kgdrywt

CAS#	Compound	Flags	Results	DF	PQL	Adj.PQL	Adj.MDL
91-20-3	Naphthalene	U	11	1.0	10	11	2.8
91-57-6	2-Methylnaphthalene	U	11	1.0	10	11	2.3
86-73-7	Fluorene	U	11	1.0	10	11	3.4
85-01-8	Phenanthrene		12	1.0	10	11	1.9
206-44-0	Fluoranthene		39	1.0	10	11	1.9
129-00-0	Pyrene		28	1.0	10	11	2.2
56-55-3	Benzo(a)anthracene		16	1.0	10	11	2.0
205-99-2	Benzo(b)fluoranthene		38	1.0	10	11	2.6
207-08-9	Benzo(k)fluoranthene		21	1.0	10	11	3.3
50-32-8	Benzo(a)pyrene		21	1.0	10	11	3.5
193-39-5	Indeno(1,2,3-cd)pyrene		15	1.0	10	11	2.0
53-70-3	Dibenzo(a,h)anthracene	J	6.2	1.0	10	11	1.9
191-24-2	Benzo(g,h,i)perylene		14	1.0	10	11	2.1
118-74-1	Hexachlorobenzene	U	11	1.0	10	11	1.9
87-68-3	Hexachlorobutadiene	U	11	1.0	10	11	2.4
77-47-4	Hexachlorocyclopentadiene	U	11	1.0	10	11	1.6
7297-45-2	2-Methylnaphthalene-D10		59%				
367-12-4	2,4-Dibromophenol		82%				
81103-79-9	Fluorene-d10		79%				
1718-51-1	Pyrene-D10		76%				

lw
4/15/09

KATAHDIN ANALYTICAL SERVICES
Report of Analytical Results

Client: CH2MHill
Project: TO-009 Lejeune
PO No:
Sample Date: 01/07/09
Received Date: 01/09/09
Extraction Date: 01/12/09
Analysis Date: 27-JAN-2009 23:42
Report Date: 01/29/2009
Matrix: SOIL
% Solids: 97.8

Lab ID: SC0101-8
Client ID: MR08-SS233-09A
SDG: TO9-29
Extracted by: CB
Extraction Method: SW846 3550
Analyst: JCG
Analysis Method: SW846 M8270C
Lab Prep Batch: WG59732
Units: ug/Kgdrywt

CAS#	Compound	Flags	Results	DF	PQL	Adj.PQL	Adj.MDL	
91-20-3	Naphthalene	~~B~~ UJ	10	1.0	10	10	2.6	CCH
91-57-6	2-Methylnaphthalene	U	10	1.0	10	10	2.2	
86-73-7	Fluorene	J	5.4	1.0	10	10	3.3	
85-01-8	Phenanthrene		81	1.0	10	10	1.8	
206-44-0	Fluoranthene		93	1.0	10	10	1.8	
129-00-0	Pyrene		92	1.0	10	10	2.1	
56-55-3	Benzo(a)anthracene		21	1.0	10	10	1.9	
205-99-2	Benzo(b)fluoranthene	U	10	1.0	10	10	2.4	
207-08-9	Benzo(k)fluoranthene	U	10	1.0	10	10	3.2	
50-32-8	Benzo(a)pyrene		14	1.0	10	10	3.4	
193-39-5	Indeno(1,2,3-cd)pyrene	J	9.4	1.0	10	10	1.9	
53-70-3	Dibenzo(a,h)anthracene	U	10	1.0	10	10	1.8	
191-24-2	Benzo(g,h,i)perylene		10	1.0	10	10	2.0	
118-74-1	Hexachlorobenzene	U	10	1.0	10	10	1.8	
87-68-3	Hexachlorobutadiene	~~B~~ UJ	10	1.0	10	10	2.4	CCH
77-47-4	Hexachlorocyclopentadiene	~~B~~ UJ	10	1.0	10	10	1.5	CCH
7297-45-2	2-Methylnaphthalene-D10		83%					
367-12-4	2,4-Dibromophenol		79%					
81103-79-9	Fluorene-d10		81%					
1718-51-1	Pyrene-D10		101%					

MW 4/15/09

KATAHDIN ANALYTICAL SERVICES
Report of Analytical Results

Client: CH2MHill
Project: TO-009 Lejeune
PO No:
Sample Date: 01/07/09
Received Date: 01/09/09
Extraction Date: 01/12/09
Analysis Date: 27-JAN-2009 04:16
Report Date: 01/29/2009
Matrix: SOIL
% Solids: 92.8

Lab ID: SC0101-10
Client ID: MR08-IS233-5-6-09A
SDG: TO9-29
Extracted by: CB
Extraction Method: SW846 3550
Analyst: JCG
Analysis Method: SW846 M8270C
Lab Prep Batch: WG59732
Units: ug/Kgdrywt

CAS#	Compound	Flags	Results	DF	PQL	Adj.PQL	Adj.MDL
91-20-3	Naphthalene	U	11	1.0	10	11	2.8
91-57-6	2-Methylnaphthalene	U	11	1.0	10	11	2.4
86-73-7	Fluorene	U	11	1.0	10	11	3.4
85-01-8	Phenanthrene	U	11	1.0	10	11	1.9
206-44-0	Fluoranthene	U	11	1.0	10	11	1.9
129-00-0	Pyrene	J	2.5	1.0	10	11	2.3
56-55-3	Benzo(a)anthracene	U	11	1.0	10	11	2.0
205-99-2	Benzo(b)fluoranthene	U	11	1.0	10	11	2.6
207-08-9	Benzo(k)fluoranthene	U	11	1.0	10	11	3.3
50-32-8	Benzo(a)pyrene	U	11	1.0	10	11	3.6
193-39-5	Indeno(1,2,3-cd)pyrene	U	11	1.0	10	11	2.0
53-70-3	Dibenzo(a,h)anthracene	U	11	1.0	10	11	1.9
191-24-2	Benzo(g,h,i)perylene	U	11	1.0	10	11	2.2
118-74-1	Hexachlorobenzene	U	11	1.0	10	11	1.9
87-68-3	Hexachlorobutadiene	U	11	1.0	10	11	2.5
77-47-4	Hexachlorocyclopentadiene	U	11	1.0	10	11	1.6
7297-45-2	2-Methylnaphthalene-D10		60%				
367-12-4	2,4-Dibromophenol		87%				
81103-79-9	Fluorene-d10		81%				
1718-51-1	Pyrene-D10		87%				

JW 4/15/09

6

KATAHDIN ANALYTICAL SERVICES
Report of Analytical Results

Client: CH2MHill
Project: TO-009 Lejeune
PO No:
Sample Date: 01/07/09
Received Date: 01/09/09
Extraction Date: 01/12/09
Analysis Date: 27-JAN-2009 04:56
Report Date: 01/29/2009
Matrix: SOIL
% Solids: 96.3

Lab ID: SC0101-12
Client ID: MR08-SS234-09A
SDG: TO9-29
Extracted by: CB
Extraction Method: SW846 3550
Analyst: JCG
Analysis Method: SW846 M8270C
Lab Prep Batch: WG59732
Units: ug/Kgdrywt

CAS#	Compound	Flags	Results	DF	PQL	Adj.PQL	Adj.MDL
91-20-3	Naphthalene	U	10	1.0	10	10	2.7
91-57-6	2-Methylnaphthalene	U	10	1.0	10	10	2.3
86-73-7	Fluorene	U	10	1.0	10	10	3.3
85-01-8	Phenanthrene		100	1.0	10	10	1.9
206-44-0	Fluoranthene		160	1.0	10	10	1.9
129-00-0	Pyrene		120	1.0	10	10	2.2
56-55-3	Benzo(a)anthracene		44	1.0	10	10	2.0
205-99-2	Benzo(b)fluoranthene		55	1.0	10	10	2.5
207-08-9	Benzo(k)fluoranthene		35	1.0	10	10	3.2
50-32-8	Benzo(a)pyrene		25	1.0	10	10	3.4
193-39-5	Indeno(1,2,3-cd)pyrene		15	1.0	10	10	2.0
53-70-3	Dibenzo(a,h)anthracene	J	7.2	1.0	10	10	1.9
191-24-2	Benzo(g,h,i)perylene		12	1.0	10	10	2.1
118-74-1	Hexachlorobenzene	U	10	1.0	10	10	1.9
87-68-3	Hexachlorobutadiene	U	10	1.0	10	10	2.4
77-47-4	Hexachlorocyclopentadiene	U	10	1.0	10	10	1.6
7297-45-2	2-Methylnaphthalene-D10		60%				
367-12-4	2,4-Dibromophenol		78%				
81103-79-9	Fluorene-d10		87%				
1718-51-1	Pyrene-D10		93%				

RW
4/15/09

7

KATAHDIN ANALYTICAL SERVICES
Report of Analytical Results

Client: CH2MHill
Project: TO-009 Lejeune
PO No:
Sample Date: 01/07/09
Received Date: 01/09/09
Extraction Date: 01/12/09
Analysis Date: 27-JAN-2009 08:25
Report Date: 01/29/2009
Matrix: SOIL
% Solids: 93.7

Lab ID: SC0101-14
Client ID: MR08-IS234-5-6-09A
SDG: TO9-29
Extracted by: CB
Extraction Method: SW846 3550
Analyst: JLP
Analysis Method: SW846 M8270C
Lab Prep Batch: WG59732
Units: ug/Kgdrywt

CAS#	Compound	Flags	Results	DF	PQL	Adj.PQL	Adj.MDL
91-20-3	Naphthalene	U	11	1.0	10	11	2.8
91-57-6	2-Methylnaphthalene	U	11	1.0	10	11	2.3
86-73-7	Fluorene	U	11	1.0	10	11	3.4
85-01-8	Phenanthrene	J	2.9	1.0	10	11	1.9
206-44-0	Fluoranthene		18	1.0	10	11	1.9
129-00-0	Pyrene		14	1.0	10	11	2.2
56-55-3	Benzo(a)anthracene	J	4.2	1.0	10	11	2.0
205-99-2	Benzo(b)fluoranthene	J	5.3	1.0	10	11	2.6
207-08-9	Benzo(k)fluoranthene	J	3.7	1.0	10	11	3.3
50-32-8	Benzo(a)pyrene	U	11	1.0	10	11	3.5
193-39-5	Indeno(1,2,3-cd)pyrene	U	11	1.0	10	11	2.0
53-70-3	Dibenzo(a,h)anthracene	U	11	1.0	10	11	1.9
191-24-2	Benzo(g,h,i)perylene	U	11	1.0	10	11	2.1
118-74-1	Hexachlorobenzene	U	11	1.0	10	11	1.9
87-68-3	Hexachlorobutadiene	U	11	1.0	10	11	2.4
77-47-4	Hexachlorocyclopentadiene	~~U~~ UJ	11	1.0	10	11	1.6 CCH
7297-45-2	2-Methylnaphthalene-D10		52%				
367-12-4	2,4-Dibromophenol		71%				
81103-79-9	Fluorene-d10		67%				
1718-51-1	Pyrene-D10		71%				

lew
4/15/09

8

KATAHDIN ANALYTICAL SERVICES
Report of Analytical Results

Client: CH2MHill
Project: TO-009 Lejeune
PO No:
Sample Date: 01/07/09
Received Date: 01/09/09
Extraction Date: 01/12/09
Analysis Date: 27-JAN-2009 10:26
Report Date: 01/29/2009
Matrix: SOIL
% Solids: 87.8

Lab ID: SC0101-16
Client ID: MR08-SS249-09A
SDG: TO9-29
Extracted by: CB
Extraction Method: SW846 3550
Analyst: JLP
Analysis Method: SW846 M8270C
Lab Prep Batch: WG59732
Units: ug/Kgdrywt

CAS#	Compound	Flags	Results	DF	PQL	Adj.PQL	Adj.MDL
91-20-3	Naphthalene	U	11	1.0	10	11	3.0
91-57-6	2-Methylnaphthalene	U	11	1.0	10	11	2.5
86-73-7	Fluorene	J	6.2	1.0	10	11	3.6
85-01-8	Phenanthrene		240	1.0	10	11	2.0
206-44-0	Fluoranthene	~~E~~ 1200	~~900~~ 10	1.0	10 110	~~11~~ 20	~~2.4~~ R DL
129-00-0	Pyrene	~~E~~ 840	~~1600~~	1.0	10	~~11~~ 24	~~2.4~~
56-55-3	Benzo(a)anthracene	~~E~~ 500	~~480~~	1.0	10	~~11~~ 22	~~2.2~~
205-99-2	Benzo(b)fluoranthene	~~E~~ 840	~~950~~	1.0	10	~~11~~ 27	~~2.7~~
207-08-9	Benzo(k)fluoranthene	~~E~~ 730	~~590~~	1.0	10	~~11~~ 35	~~3.5~~
50-32-8	Benzo(a)pyrene	~~E~~ 640	~~560~~	1.0	10	~~11~~ 38	~~3.8~~
193-39-5	Indeno(1,2,3-cd)pyrene	~~E~~ 510	~~390~~	1.0	10	~~11~~ 22	~~2.2~~
53-70-3	Dibenzo(a,h)anthracene		140	1.0	10	11	2.0
191-24-2	Benzo(g,h,i)perylene	~~E~~ 440	~~370~~ 10	1.0	10 110	~~11~~ 23	~~2.3~~ R DL
118-74-1	Hexachlorobenzene	U	11	1.0	10	11	2.0
87-68-3	Hexachlorobutadiene	U	11	1.0	10	11	2.6
77-47-4	Hexachlorocyclopentadiene	~~U~~ UJ	11	1.0	10	11	1.7 CCH
7297-45-2	2-Methylnaphthalene-D10		61%				
367-12-4	2,4-Dibromophenol		78%				
81103-79-9	Fluorene-d10		84%				
1718-51-1	Pyrene-D10		86%				

lew 4/15/09

8DL

KATAHDIN ANALYTICAL SERVICES
Report of Analytical Results

Client: CH2MHill
Project: TO-009 Lejeune
PO No:
Sample Date: 01/07/09
Received Date: 01/09/09
Extraction Date: 01/12/09
Analysis Date: 27-JAN-2009 19:41
Report Date: 01/29/2009
Matrix: SOIL
% Solids: 87.8

Lab ID: SC0101-16DL
Client ID: MR08-SS249-09A
SDG: TO9-29
Extracted by: CB
Extraction Method: SW846 3550
Analyst: JCG
Analysis Method: SW846 M8270C
Lab Prep Batch: WG59732
Units: ug/Kgdrywt

Use original

CAS#	Compound	Flags	Results	DF	PQL	Adj.PQL	Adj.MDL
91-20-3	Naphthalene	~~U~~ UJ	110	10	10	110	30 CCH
91-57-6	2-Methylnaphthalene	U	110	10	10	110	25
86-73-7	Fluorene	U	110	10	10	110	36
85-01-8	Phenanthrene		350	10	10	110	20
206-44-0	Fluoranthene		1200	10	10	110	20
129-00-0	Pyrene		840	10	10	110	24
56-55-3	Benzo(a)anthracene		500	10	10	110	22
205-99-2	Benzo(b)fluoranthene		840	10	10	110	27
207-08-9	Benzo(k)fluoranthene		730	10	10	110	35
50-32-8	Benzo(a)pyrene		640	10	10	110	38
193-39-5	Indeno(1,2,3-cd)pyrene		510	10	10	110	22
53-70-3	Dibenzo(a,h)anthracene		170	10	10	110	20
191-24-2	Benzo(g,h,i)perylene		440	10	10	110	23
118-74-1	Hexachlorobenzene	U	110	10	10	110	20
87-68-3	Hexachlorobutadiene	~~U~~ UJ	110	10	10	110	26 CCH
77-47-4	Hexachlorocyclopentadiene	~~U~~ UJ	110	10	10	110	17 CCH
7297-45-2	2-Methylnaphthalene-D10		D				
367-12-4	2,4-Dibromophenol		D				
81103-79-9	Fluorene-d10		D				
1718-51-1	Pyrene-D10		D				

R DL

hw 4/15/09

9

KATAHDIN ANALYTICAL SERVICES
Report of Analytical Results

Client: CH2MHill
Project: TO-009 Lejeune
PO No:
Sample Date: 01/07/09
Received Date: 01/09/09
Extraction Date: 01/12/09
Analysis Date: 27-JAN-2009 11:06
Report Date: 01/29/2009
Matrix: SOIL
% Solids: 88.3

Lab ID: SC0101-18
Client ID: MR08-SS249D-09A
SDG: TO9-29
Extracted by: CB
Extraction Method: SW846 3550
Analyst: JLP
Analysis Method: SW846 M8270C
Lab Prep Batch: WG59732
Units: ug/Kgdrywt

CAS#	Compound	Flags	Results	DF	PQL	Adj.PQL	Adj.MDL
91-20-3	Naphthalene	U	11	1.0	10	11	2.9
91-57-6	2-Methylnaphthalene	U	11	1.0	10	11	2.5
86-73-7	Fluorene	J	6.2	1.0	10	11	3.6
85-01-8	Phenanthrene		260	1.0	10	11	2.0
206-44-0	Fluoranthene	~~E~~ 1200	~~1200~~ 12	1.0	10 140	~~11~~ 24	~~2.0~~
129-00-0	Pyrene	~~E~~ 1000	~~2500~~	1.0	10	~~11~~ 28	~~2.4~~
56-55-3	Benzo(a)anthracene	~~E~~ 540	~~560~~	1.0	10	~~11~~ 26	~~2.2~~
205-99-2	Benzo(b)fluoranthene	~~E~~ 920	~~1100~~	1.0	10	~~11~~ 33	~~2.7~~
207-08-9	Benzo(k)fluoranthene	~~E~~ 860	~~730~~	1.0	10	~~11~~ 42	~~3.5~~
50-32-8	Benzo(a)pyrene	~~E~~ 790	~~680~~	1.0	10	~~11~~ 45	~~3.7~~
193-39-5	Indeno(1,2,3-cd)pyrene	~~E~~ 740	~~520~~	1.0	10	~~11~~ 26	~~2.2~~
53-70-3	Dibenzo(a,h)anthracene		160	1.0	10	11	2.0
191-24-2	Benzo(g,h,i)perylene	E 770	~~480~~ 12	1.0	10 140	~~11~~ 27	~~2.3~~
118-74-1	Hexachlorobenzene	U	11	1.0	10	11	2.0
87-68-3	Hexachlorobutadiene	U	11	1.0	10	11	2.6
77-47-4	Hexachlorocyclopentadiene	~~U~~ UJ	11	1.0	10	11	1.7 CCH
7297-45-2	2-Methylnaphthalene-D10		64%				
367-12-4	2,4-Dibromophenol		84%				
81103-79-9	Fluorene-d10		84%				
1718-51-1	Pyrene-D10		90%				

RW
4/15/09

9DL

KATAHDIN ANALYTICAL SERVICES
Report of Analytical Results

Client: CH2MHill
Project: TO-009 Lejeune
PO No:
Sample Date: 01/07/09
Received Date: 01/09/09
Extraction Date: 01/12/09
Analysis Date: 27-JAN-2009 20:21
Report Date: 01/29/2009
Matrix: SOIL
% Solids: 88.3

Lab ID: SC0101-18DL
Client ID: MR08-SS249D-09A
SDG: TO9-29
Extracted by: CB
Extraction Method: SW846 3550
Analyst: JCG
Analysis Method: SW846 M8270C
Lab Prep Batch: WG59732
Units: ug/Kgdrywt

use original

R DL

CAS#	Compound	Flags	Results	DF	PQL	Adj.PQL	Adj.MDL
91-20-3	Naphthalene	~~U~~ UJ	140	12	10	140	35 CCH
91-57-6	2-Methylnaphthalene	U	140	12	10	140	30
86-73-7	Fluorene	U	140	12	10	140	43
85-01-8	Phenanthrene		340	12	10	140	24
206-44-0	Fluoranthene		1200	12	10	140	24
129-00-0	Pyrene		1000	12	10	140	28
56-55-3	Benzo(a)anthracene		540	12	10	140	26
205-99-2	Benzo(b)fluoranthene		920	12	10	140	33
207-08-9	Benzo(k)fluoranthene		860	12	10	140	42
50-32-8	Benzo(a)pyrene		790	12	10	140	45
193-39-5	Indeno(1,2,3-cd)pyrene		740	12	10	140	26
53-70-3	Dibenzo(a,h)anthracene		270	12	10	140	24
191-24-2	Benzo(g,h,i)perylene		770	12	10	140	27
118-74-1	Hexachlorobenzene	U	140	12	10	140	24
87-68-3	Hexachlorobutadiene	~~U~~ UJ	140	12	10	140	31 CCH
77-47-4	Hexachlorocyclopentadiene	~~U~~ UJ	140	12	10	140	20 CCH
7297-45-2	2-Methylnaphthalene-D10		D				
367-12-4	2,4-Dibromophenol		D				
81103-79-9	Fluorene-d10		D				
1718-51-1	Pyrene-D10		D				

MW 4/15/09

KATAHDIN ANALYTICAL SERVICES
Report of Analytical Results

Client: CH2MHill
Project: TO-009 Lejeune
PO No:
Sample Date: 01/07/09
Received Date: 01/09/09
Extraction Date: 01/12/09
Analysis Date: 27-JAN-2009 09:06
Report Date: 01/29/2009
Matrix: SOIL
% Solids: 90.4

Lab ID: SC0101-20
Client ID: MR08-IS249-5-6-09A
SDG: TO9-29
Extracted by: CB
Extraction Method: SW846 3550
Analyst: JLP
Analysis Method: SW846 M8270C
Lab Prep Batch: WG59732
Units: ug/Kgdrywt

CAS#	Compound	Flags	Results	DF	PQL	Adj.PQL	Adj.MDL	
91-20-3	Naphthalene	U	11	1.0	10	11	2.9	
91-57-6	2-Methylnaphthalene	U	11	1.0	10	11	2.4	
86-73-7	Fluorene	U	11	1.0	10	11	3.5	
85-01-8	Phenanthrene	U	11	1.0	10	11	2.0	
206-44-0	Fluoranthene	U	11	1.0	10	11	2.0	
129-00-0	Pyrene	U	11	1.0	10	11	2.3	
56-55-3	Benzo(a)anthracene	U	11	1.0	10	11	2.1	
205-99-2	Benzo(b)fluoranthene	U	11	1.0	10	11	2.6	
207-08-9	Benzo(k)fluoranthene	U	11	1.0	10	11	3.4	
50-32-8	Benzo(a)pyrene	U	11	1.0	10	11	3.6	
193-39-5	Indeno(1,2,3-cd)pyrene	U	11	1.0	10	11	2.1	
53-70-3	Dibenzo(a,h)anthracene	U	11	1.0	10	11	2.0	
191-24-2	Benzo(g,h,i)perylene	U	11	1.0	10	11	2.2	
118-74-1	Hexachlorobenzene	U	11	1.0	10	11	2.0	
87-68-3	Hexachlorobutadiene	U	11	1.0	10	11	2.5	
77-47-4	Hexachlorocyclopentadiene	~~U~~ UJ	11	1.0	10	11	1.6	CCH
7297-45-2	2-Methylnaphthalene-D10		51%					
367-12-4	2,4-Dibromophenol		71%					
81103-79-9	Fluorene-d10		68%					
1718-51-1	Pyrene-D10		65%					

MW 4/15/09

11

KATAHDIN ANALYTICAL SERVICES
Report of Analytical Results

Client: CH2MHill
Project: TO-009 Lejeune
PO No:
Sample Date: 01/07/09
Received Date: 01/09/09
Extraction Date: 01/12/09
Analysis Date: 27-JAN-2009 09:46
Report Date: 01/29/2009
Matrix: SOIL
% Solids: 89.9

Lab ID: SC0101-22
Client ID: MR08-IS249D-5-6-09A
SDG: TO9-29
Extracted by: CB
Extraction Method: SW846 3550
Analyst: JLP
Analysis Method: SW846 M8270C
Lab Prep Batch: WG59732
Units: ug/Kgdrywt

CAS#	Compound	Flags	Results	DF	PQL	Adj.PQL	Adj.MDL	
91-20-3	Naphthalene	U	11	1.0	10	11	2.9	
91-57-6	2-Methylnaphthalene	U	11	1.0	10	11	2.4	
86-73-7	Fluorene	U	11	1.0	10	11	3.6	
85-01-8	Phenanthrene	U	11	1.0	10	11	2.0	
206-44-0	Fluoranthene	U	11	1.0	10	11	2.0	
129-00-0	Pyrene	J	2.9	1.0	10	11	2.3	
56-55-3	Benzo(a)anthracene	U	11	1.0	10	11	2.1	
205-99-2	Benzo(b)fluoranthene	U	11	1.0	10	11	2.7	
207-08-9	Benzo(k)fluoranthene	U	11	1.0	10	11	3.4	
50-32-8	Benzo(a)pyrene	U	11	1.0	10	11	3.7	
193-39-5	Indeno(1,2,3-cd)pyrene	U	11	1.0	10	11	2.1	
53-70-3	Dibenzo(a,h)anthracene	U	11	1.0	10	11	2.0	
191-24-2	Benzo(g,h,i)perylene	U	11	1.0	10	11	2.2	
118-74-1	Hexachlorobenzene	U	11	1.0	10	11	2.0	
87-68-3	Hexachlorobutadiene	U	11	1.0	10	11	2.6	
77-47-4	Hexachlorocyclopentadiene	~~U~~ UJ	11	1.0	10	11	1.7	CCH
7297-45-2	2-Methylnaphthalene-D10		60%					
367-12-4	2,4-Dibromophenol		77%					
81103-79-9	Fluorene-d10		76%					
1718-51-1	Pyrene-D10		79%					

lw 4/15/09

KATAHDIN ANALYTICAL SERVICES
Report of Analytical Results

Client: CH2MHill
Project: TO-009 Lejeune
PO No:
Sample Date: 01/07/09
Received Date: 01/09/09
Extraction Date: 01/12/09
Analysis Date: 27-JAN-2009 15:07
Report Date: 01/29/2009
Matrix: SOIL
% Solids: 89.4

Lab ID: SC0101-24
Client ID: MR08-SS248-09A
SDG: TO9-29
Extracted by: CB
Extraction Method: SW846 3550
Analyst: JLP
Analysis Method: SW846 M8270C
Lab Prep Batch: WG59732
Units: ug/Kgdrywt

CAS#	Compound	Flags	Results	DF	PQL	Adj.PQL	Adj.MDL
91-20-3	Naphthalene	J	3.8	1.0	10	11	2.9
91-57-6	2-Methylnaphthalene	J	2.9	1.0	10	11	2.4
86-73-7	Fluorene	J	9.0	1.0	10	11	3.6
85-01-8	Phenanthrene		230	1.0	10	11	2.0
206-44-0	Fluoranthene	~~E~~ 970	~~770~~ 10	1.0	10 110	11 20	~~2.0~~ R DL
129-00-0	Pyrene	~~E~~ 780	~~1500~~	1.0	10	11 23	~~2.3~~
56-55-3	Benzo(a)anthracene	~~E~~ 430	~~450~~	1.0	10	11 21	~~2.1~~
205-99-2	Benzo(b)fluoranthene	~~E~~ 650	~~840~~	1.0	10	11 27	~~2.7~~
207-08-9	Benzo(k)fluoranthene	~~E~~ 640	~~560~~	1.0	10	11 35	~~3.5~~
50-32-8	Benzo(a)pyrene	~~E~~ 550	~~520~~	1.0	10	11 37	~~3.7~~
193-39-5	Indeno(1,2,3-cd)pyrene	~~E~~ 460	~~350~~	1.0	10	11 21	~~2.1~~
53-70-3	Dibenzo(a,h)anthracene		130	1.0	10	11	2.0
191-24-2	Benzo(g,h,i)perylene	~~E~~ 450	~~320~~ 10	1.0	10 110	~~11~~ 22	~~2.2~~ R DL
118-74-1	Hexachlorobenzene	U	11	1.0	10	11	2.0
87-68-3	Hexachlorobutadiene	U	11	1.0	10	11	2.6
77-47-4	Hexachlorocyclopentadiene	~~U~~ UJ	11	1.0	10	11	1.7 CCH
7297-45-2	2-Methylnaphthalene-D10		64%				
367-12-4	2,4-Dibromophenol		86%				
81103-79-9	Fluorene-d10		92%				
1718-51-1	Pyrene-D10		93%				

lew 4/15/09

12DL

KATAHDIN ANALYTICAL SERVICES
Report of Analytical Results

Client: CH2MHill
Project: TO-009 Lejeune
PO No:
Sample Date: 01/07/09
Received Date: 01/09/09
Extraction Date: 01/12/09
Analysis Date: 27-JAN-2009 21:01
Report Date: 01/29/2009
Matrix: SOIL
% Solids: 89.4

Lab ID: SC0101-24DL
Client ID: MR08-SS248-09A
SDG: TO9-29
Extracted by: CB
Extraction Method: SW846 3550
Analyst: JCG
Analysis Method: SW846 M8270C
Lab Prep Batch: WG59732
Units: ug/Kgdrywt

use original

R DL

CAS#	Compound	Flags	Results	DF	PQL	Adj.PQL	Adj.MDL	
91-20-3	Naphthalene	~~U~~ UJ	110	10	10	110	29	CCH
91-57-6	2-Methylnaphthalene	U	110	10	10	110	24	
86-73-7	Fluorene	U	110	10	10	110	36	
85-01-8	Phenanthrene		280	10	10	110	20	
206-44-0	Fluoranthene		970	10	10	110	20	
129-00-0	Pyrene		780	10	10	110	23	
56-55-3	Benzo(a)anthracene		430	10	10	110	21	
205-99-2	Benzo(b)fluoranthene		650	10	10	110	27	
207-08-9	Benzo(k)fluoranthene		640	10	10	110	35	
50-32-8	Benzo(a)pyrene		550	10	10	110	37	
193-39-5	Indeno(1,2,3-cd)pyrene		460	10	10	110	21	
53-70-3	Dibenzo(a,h)anthracene		170	10	10	110	20	
191-24-2	Benzo(g,h,i)perylene		450	10	10	110	22	
118-74-1	Hexachlorobenzene	U	110	10	10	110	20	
87-68-3	Hexachlorobutadiene	~~U~~ UJ	110	10	10	110	26	CCH
77-47-4	Hexachlorocyclopentadiene	~~U~~ UJ	110	10	10	110	17	CCH
7297-45-2	2-Methylnaphthalene-D10		D					
367-12-4	2,4-Dibromophenol		D					
81103-79-9	Fluorene-d10		D					
1718-51-1	Pyrene-D10		D					

lw
4/15/09

13

KATAHDIN ANALYTICAL SERVICES
Report of Analytical Results

Client: CH2MHill
Project: TO-009 Lejeune
PO No:
Sample Date: 01/07/09
Received Date: 01/09/09
Extraction Date: 01/12/09
Analysis Date: 27-JAN-2009 13:07
Report Date: 01/29/2009
Matrix: SOIL
% Solids: 87.9

Lab ID: SC0101-26
Client ID: MR08-IS248-5-6-09A
SDG: TO9-29
Extracted by: CB
Extraction Method: SW846 3550
Analyst: JLP
Analysis Method: SW846 M8270C
Lab Prep Batch: WG59732
Units: ug/Kgdrywt

CAS#	Compound	Flags	Results	DF	PQL	Adj.PQL	Adj.MDL
91-20-3	Naphthalene	U	11	1.0	10	11	3.0
91-57-6	2-Methylnaphthalene	U	11	1.0	10	11	2.5
86-73-7	Fluorene	U	11	1.0	10	11	3.6
85-01-8	Phenanthrene	U	11	1.0	10	11	2.0
206-44-0	Fluoranthene	U	11	1.0	10	11	2.0
129-00-0	Pyrene	U	11	1.0	10	11	2.4
56-55-3	Benzo(a)anthracene	U	11	1.0	10	11	2.2
205-99-2	Benzo(b)fluoranthene	U	11	1.0	10	11	2.7
207-08-9	Benzo(k)fluoranthene	U	11	1.0	10	11	3.5
50-32-8	Benzo(a)pyrene	U	11	1.0	10	11	3.8
193-39-5	Indeno(1,2,3-cd)pyrene	U	11	1.0	10	11	2.2
53-70-3	Dibenzo(a,h)anthracene	U	11	1.0	10	11	2.0
191-24-2	Benzo(g,h,i)perylene	U	11	1.0	10	11	2.3
118-74-1	Hexachlorobenzene	U	11	1.0	10	11	2.0
87-68-3	Hexachlorobutadiene	U	11	1.0	10	11	2.6
77-47-4	Hexachlorocyclopentadiene	~~U~~ UJ	11	1.0	10	11	1.7 CCH
7297-45-2	2-Methylnaphthalene-D10		67%				
367-12-4	2,4-Dibromophenol		86%				
81103-79-9	Fluorene-d10		83%				
1718-51-1	Pyrene-D10		89%				

lw 4/15/09

KATAHDIN ANALYTICAL SERVICES
Report of Analytical Results

Client: CH2MHill
Project: TO-009 Lejeune
PO No:
Sample Date: 01/07/09
Received Date: 01/09/09
Extraction Date: 01/12/09
Analysis Date: 27-JAN-2009 14:27
Report Date: 01/29/2009
Matrix: SOIL
% Solids: 90.1

Lab ID: SC0101-28
Client ID: MR08-SS250-09A
SDG: TO9-29
Extracted by: CB
Extraction Method: SW846 3550
Analyst: JLP
Analysis Method: SW846 M8270C
Lab Prep Batch: WG59732
Units: ug/Kgdrywt

CAS#	Compound	Flags	Results	DF	PQL	Adj.PQL	Adj.MDL	
91-20-3	Naphthalene	U	11	1.0	10	11	2.9	
91-57-6	2-Methylnaphthalene	U	11	1.0	10	11	2.4	
86-73-7	Fluorene	J	4.4	1.0	10	11	3.6	
85-01-8	Phenanthrene		200	1.0	10	11	2.0	
206-44-0	Fluoranthene	~~E~~ 960	~~720~~ 10	1.0	10	110	11 20	2.0 R DL
129-00-0	Pyrene	~~E~~ 630	~~1500~~	1.0	10		11 23	2.3
56-55-3	Benzo(a)anthracene	~~E~~ 340	~~360~~	1.0	10		11 21	2.1
205-99-2	Benzo(b)fluoranthene	~~E~~ 590	~~730~~	1.0	10		11 27	2.7
207-08-9	Benzo(k)fluoranthene	~~E~~ 560	~~510~~	1.0	10		11 34	3.4
50-32-8	Benzo(a)pyrene	~~E~~ 470	~~460~~	1.0	10		11 37	3.7
193-39-5	Indeno(1,2,3-cd)pyrene	~~E~~ 430	~~320~~	1.0	10		11 21	2.1
53-70-3	Dibenzo(a,h)anthracene		120	1.0	10		11	2.0
191-24-2	Benzo(g,h,i)perylene	~~E~~ 430	~~300~~ 10	1.0	10	110	~~11~~ 22	~~2.2~~ R DL
118-74-1	Hexachlorobenzene	U	11	1.0	10		11	2.0
87-68-3	Hexachlorobutadiene	U	11	1.0	10		11	2.6
77-47-4	Hexachlorocyclopentadiene	~~U~~ UJ	11	1.0	10		11	1.7 CCH
7297-45-2	2-Methylnaphthalene-D10		64%					
367-12-4	2,4-Dibromophenol		83%					
81103-79-9	Fluorene-d10		87%					
1718-51-1	Pyrene-D10		90%					

GW 4/15/09

14DL

KATAHDIN ANALYTICAL SERVICES
Report of Analytical Results

Client: CH2MHill
Project: TO-009 Lejeune
PO No:
Sample Date: 01/07/09
Received Date: 01/09/09
Extraction Date: 01/12/09
Analysis Date: 27-JAN-2009 21:41
Report Date: 01/29/2009
Matrix: SOIL
% Solids: 90.1

Lab ID: SC0101-28DL
Client ID: MR08-SS250-09A
SDG: TO9-29
Extracted by: CB
Extraction Method: SW846 3550
Analyst: JCG
Analysis Method: SW846 M8270C
Lab Prep Batch: WG59732
Units: ug/Kgdrywt

Use Original

CAS#	Compound	Flags	Results	DF	PQL	Adj.PQL	Adj.MDL	
91-20-3	Naphthalene	~~U~~ UJ	110	10	10	110	29	CCH
91-57-6	2-Methylnaphthalene	U	110	10	10	110	24	
86-73-7	Fluorene	U	110	10	10	110	36	
85-01-8	Phenanthrene		240	10	10	110	20	
206-44-0	Fluoranthene		960	10	10	110	20	
129-00-0	Pyrene		630	10	10	110	23	
56-55-3	Benzo(a)anthracene		340	10	10	110	21	
205-99-2	Benzo(b)fluoranthene		590	10	10	110	27	
207-08-9	Benzo(k)fluoranthene		560	10	10	110	34	
50-32-8	Benzo(a)pyrene		470	10	10	110	37	
193-39-5	Indeno(1,2,3-cd)pyrene		430	10	10	110	21	
53-70-3	Dibenzo(a,h)anthracene	J	100	10	10	110	20	
191-24-2	Benzo(g,h,i)perylene		430	10	10	110	22	
118-74-1	Hexachlorobenzene	U	110	10	10	110	20	
87-68-3	Hexachlorobutadiene	~~U~~ UJ	110	10	10	110	26	CCH
77-47-4	Hexachlorocyclopentadiene	~~U~~ UJ	110	10	10	110	17	CCH
7297-45-2	2-Methylnaphthalene-D10		D					
367-12-4	2,4-Dibromophenol		D					
81103-79-9	Fluorene-d10		D					
1718-51-1	Pyrene-D10		D					

R DL

fwc 4/15/09

KATAHDIN ANALYTICAL SERVICES
Report of Analytical Results

Client: CH2MHill
Project: TO-009 Lejeune
PO No:
Sample Date: 01/07/09
Received Date: 01/09/09
Extraction Date: 01/12/09
Analysis Date: 27-JAN-2009 13:47
Report Date: 01/29/2009
Matrix: SOIL
% Solids: 89.6

Lab ID: SC0101-30
Client ID: MR08-IS250-5-6-09A
SDG: TO9-29
Extracted by: CB
Extraction Method: SW846 3550
Analyst: JLP
Analysis Method: SW846 M8270C
Lab Prep Batch: WG59732
Units: ug/Kgdrywt

CAS#	Compound	Flags	Results	DF	PQL	Adj.PQL	Adj.MDL
91-20-3	Naphthalene	U	11	1.0	10	11	2.9
91-57-6	2-Methylnaphthalene	U	11	1.0	10	11	2.4
86-73-7	Fluorene	U	11	1.0	10	11	3.6
85-01-8	Phenanthrene	U	11	1.0	10	11	2.0
206-44-0	Fluoranthene	U	11	1.0	10	11	2.0
129-00-0	Pyrene	J	2.8	1.0	10	11	2.3
56-55-3	Benzo(a)anthracene	U	11	1.0	10	11	2.1
205-99-2	Benzo(b)fluoranthene	U	11	1.0	10	11	2.7
207-08-9	Benzo(k)fluoranthene	U	11	1.0	10	11	3.5
50-32-8	Benzo(a)pyrene	U	11	1.0	10	11	3.7
193-39-5	Indeno(1,2,3-cd)pyrene	U	11	1.0	10	11	2.1
53-70-3	Dibenzo(a,h)anthracene	U	11	1.0	10	11	2.0
191-24-2	Benzo(g,h,i)perylene	U	11	1.0	10	11	2.2
118-74-1	Hexachlorobenzene	U	11	1.0	10	11	2.0
87-68-3	Hexachlorobutadiene	U	11	1.0	10	11	2.6
77-47-4	Hexachlorocyclopentadiene	~~J~~ UJ	11	1.0	10	11	1.7 CCH
7297-45-2	2-Methylnaphthalene-D10		61%				
367-12-4	2,4-Dibromophenol		72%				
81103-79-9	Fluorene-d10		85%				
1718-51-1	Pyrene-D10		85%				

JEW 4/15/09

KATAHDIN ANALYTICAL SERVICES
Report of Analytical Results

Client: CH2MHill
Project: TO-009 Lejeune
PO No:
Sample Date: 01/07/09
Received Date: 01/09/09
Extraction Date: 01/12/09
Analysis Date: 27-JAN-2009 15:47
Report Date: 01/29/2009
Matrix: SOIL
% Solids: 92.1

Lab ID: SC0101-32
Client ID: MR08-SS257-09A
SDG: TO9-29
Extracted by: CB
Extraction Method: SW846 3550
Analyst: JLP
Analysis Method: SW846 M8270C
Lab Prep Batch: WG59732
Units: ug/Kgdrywt

CAS#	Compound	Flags	Results	DF	PQL	Adj.PQL	Adj.MDL
91-20-3	Naphthalene	U	11	1.0	10	11	2.8
91-57-6	2-Methylnaphthalene	J	6.0	1.0	10	11	2.4
86-73-7	Fluorene	J	4.4	1.0	10	11	3.5
85-01-8	Phenanthrene		96	1.0	10	11	2.0
206-44-0	Fluoranthene	~~E~~ 860	~~660~~ 10 ~~2.0~~		10	110 ~~11~~ 20	~~2.0~~ R DL
129-00-0	Pyrene	~~E~~ 1300	~~2000~~ 10 ~~1.0~~		10	110 ~~11~~ 23	~~2.3~~ R DL
56-55-3	Benzo(a)anthracene		180	1.0	10	11	2.1
205-99-2	Benzo(b)fluoranthene	~~E~~ 230	~~340~~ 10 ~~1.0~~		10	110 ~~11~~ 26	~~2.6~~ R DL
207-08-9	Benzo(k)fluoranthene		220	1.0	10	11	3.4
50-32-8	Benzo(a)pyrene		190	1.0	10	11	3.6
193-39-5	Indeno(1,2,3-cd)pyrene		87	1.0	10	11	2.1
53-70-3	Dibenzo(a,h)anthracene	U	11	1.0	10	11	2.0
191-24-2	Benzo(g,h,i)perylene		73	1.0	10	11	2.2
118-74-1	Hexachlorobenzene	U	11	1.0	10	11	2.0
87-68-3	Hexachlorobutadiene	U	11	1.0	10	11	2.5
77-47-4	Hexachlorocyclopentadiene	~~U~~ UJ	11	1.0	10	11	1.6 CCH
7297-45-2	2-Methylnaphthalene-D10		65%				
367-12-4	2,4-Dibromophenol		96%				
81103-79-9	Fluorene-d10		92%				
1718-51-1	Pyrene-D10		67%				

lew
4/15/09

16DL

KATAHDIN ANALYTICAL SERVICES
Report of Analytical Results

Client: CH2MHill
Project: TO-009 Lejeune
PO No:
Sample Date: 01/07/09
Received Date: 01/09/09
Extraction Date: 01/12/09
Analysis Date: 27-JAN-2009 22:21
Report Date: 01/29/2009
Matrix: SOIL
% Solids: 92.1

Lab ID: SC0101-32DL
Client ID: MR08-SS257-09A
SDG: TO9-29
Extracted by: CB
Extraction Method: SW846 3550
Analyst: JCG
Analysis Method: SW846 M8270C
Lab Prep Batch: WG59732
Units: ug/Kgdrywt

Use original

CAS#	Compound	Flags	Results	DF	PQL	Adj.PQL	Adj.MDL	
91-20-3	Naphthalene	~~U~~ UJ	110	10	10	110	28	CCH
91-57-6	2-Methylnaphthalene	U	110	10	10	110	24	
86-73-7	Fluorene	U	110	10	10	110	35	
85-01-8	Phenanthrene		120	10	10	110	20	
206-44-0	Fluoranthene		860	10	10	110	20	
129-00-0	Pyrene		1300	10	10	110	23	
56-55-3	Benzo(a)anthracene		270	10	10	110	21	
205-99-2	Benzo(b)fluoranthene		230	10	10	110	26	
207-08-9	Benzo(k)fluoranthene		280	10	10	110	34	
50-32-8	Benzo(a)pyrene		180	10	10	110	36	
193-39-5	Indeno(1,2,3-cd)pyrene	J	100	10	10	110	21	
53-70-3	Dibenzo(a,h)anthracene	U	110	10	10	110	20	
191-24-2	Benzo(g,h,i)perylene	J	71	10	10	110	22	
118-74-1	Hexachlorobenzene	U	110	10	10	110	20	
87-68-3	Hexachlorobutadiene	~~U~~ UJ	110	10	10	110	25	CCH
77-47-4	Hexachlorocyclopentadiene	~~U~~ UJ	110	10	10	110	16	CCH
7297-45-2	2-Methylnaphthalene-D10		D					
367-12-4	2,4-Dibromophenol		D					
81103-79-9	Fluorene-d10		D					
1718-51-1	Pyrene-D10		D					

RDL

lw 4/15/09

KATAHDIN ANALYTICAL SERVICES
Report of Analytical Results

Client: CH2MHill
Project: TO-009 Lejeune
PO No:
Sample Date: 01/07/09
Received Date: 01/09/09
Extraction Date: 01/12/09
Analysis Date: 27-JAN-2009 18:20
Report Date: 01/29/2009
Matrix: SOIL
% Solids: 87.8

Lab ID: SC0101-34
Client ID: MR08-IS257-9-10-09A
SDG: TO9-29
Extracted by: CB
Extraction Method: SW846 3550
Analyst: JCG
Analysis Method: SW846 M8270C
Lab Prep Batch: WG59732
Units: ug/Kgdrywt

CAS#	Compound	Flags	Results	DF	PQL	Adj.PQL	Adj.MDL	
91-20-3	Naphthalene	~~U~~ UJ	11	1.0	10	11	3.0	CCH
91-57-6	2-Methylnaphthalene	U	11	1.0	10	11	2.5	
86-73-7	Fluorene	U	11	1.0	10	11	3.6	
85-01-8	Phenanthrene	U	11	1.0	10	11	2.0	
206-44-0	Fluoranthene	U	11	1.0	10	11	2.0	
129-00-0	Pyrene	U	11	1.0	10	11	2.4	
56-55-3	Benzo(a)anthracene	U	11	1.0	10	11	2.2	
205-99-2	Benzo(b)fluoranthene	U	11	1.0	10	11	2.7	
207-08-9	Benzo(k)fluoranthene	U	11	1.0	10	11	3.5	
50-32-8	Benzo(a)pyrene	U	11	1.0	10	11	3.8	
193-39-5	Indeno(1,2,3-cd)pyrene	U	11	1.0	10	11	2.2	
53-70-3	Dibenzo(a,h)anthracene	U	11	1.0	10	11	2.0	
191-24-2	Benzo(g,h,i)perylene	U	11	1.0	10	11	2.3	
118-74-1	Hexachlorobenzene	U	11	1.0	10	11	2.0	
87-68-3	Hexachlorobutadiene	~~U~~ UJ	11	1.0	10	11	2.6	CCH
77-47-4	Hexachlorocyclopentadiene	~~U~~ UJ	11	1.0	10	11	1.7	CCH
7297-45-2	2-Methylnaphthalene-D10		92%					
367-12-4	2,4-Dibromophenol		93%					
81103-79-9	Fluorene-d10		87%					
1718-51-1	Pyrene-D10		76%					

lw 4/15/09

KATAHDIN ANALYTICAL SERVICES
Report of Analytical Results

Client: CH2MHill
Project: TO-009 Lejeune
PO No:
Sample Date: 01/07/09
Received Date: 01/09/09
Extraction Date: 01/12/09
Analysis Date: 28-JAN-2009 03:03
Report Date: 01/29/2009
Matrix: SOIL
% Solids: 95.0

Lab ID: SC0101-36
Client ID: MR08-SS258-09A
SDG: TO9-29
Extracted by: CB
Extraction Method: SW846 3550
Analyst: JCG
Analysis Method: SW846 M8270C
Lab Prep Batch: WG59732
Units: ug/Kgdrywt

CAS#	Compound	Flags	Results	DF	PQL	Adj.PQL	Adj.MDL
91-20-3	Naphthalene	~~J~~ J	2.8	1.0	10	10	2.7 CCH
91-57-6	2-Methylnaphthalene		12	1.0	10	10	2.3
86-73-7	Fluorene		27	1.0	10	10	3.4
85-01-8	Phenanthrene	~~B~~	580 ~~620~~ S	1.0	10	53 10 9.5	~~1.9~~ R DL
206-44-0	Fluoranthene	~~B~~	760 ~~740~~	1.0	10	10 9.5	~~1.9~~
129-00-0	Pyrene	~~B~~	450 ~~1000~~	1.0	10	10 11	~~2.2~~
56-55-3	Benzo(a)anthracene		200	1.0	10	10	2.0
205-99-2	Benzo(b)fluoranthene	U	10	1.0	10	10	2.5
207-08-9	Benzo(k)fluoranthene	U	10	1.0	10	10	3.3
50-32-8	Benzo(a)pyrene		110	1.0	10	10	3.5
193-39-5	Indeno(1,2,3-cd)pyrene		47	1.0	10	10	2.0
53-70-3	Dibenzo(a,h)anthracene	U	10	1.0	10	10	1.9
191-24-2	Benzo(g,h,i)perylene		42	1.0	10	10	2.1
118-74-1	Hexachlorobenzene	U	10	1.0	10	10	1.9
87-68-3	Hexachlorobutadiene	~~U~~ UJ	10	1.0	10	10	2.4 CCH
77-47-4	Hexachlorocyclopentadiene	~~U~~ UJ	10	1.0	10	10	1.6 CCH
7297-45-2	2-Methylnaphthalene-D10		89%				
367-12-4	2,4-Dibromophenol		79%				
81103-79-9	Fluorene-d10		74%				
1718-51-1	Pyrene-D10		91%				

JCW 4/15/09

18DL

KATAHDIN ANALYTICAL SERVICES
Report of Analytical Results

Client: CH2MHill
Project: TO-009 Lejeune
PO No:
Sample Date: 01/07/09
Received Date: 01/09/09
Extraction Date: 01/12/09
Analysis Date: 28-JAN-2009 14:43
Report Date: 01/29/2009
Matrix: SOIL
% Solids: 95.0

Lab ID: SC0101-36DL2
Client ID: MR08-SS258-09A
SDG: TO9-29
Extracted by: CB
Extraction Method: SW846 3550
Analyst: JLP
Analysis Method: SW846 M8270C
Lab Prep Batch: WG59732
Units: ug/Kgdrywt

use original

R DL

CAS#	Compound	Flags	Results	DF	PQL	Adj.PQL	Adj.MDL
91-20-3	Naphthalene	U	53	5.0	10	53	14
91-57-6	2-Methylnaphthalene	U	53	5.0	10	53	12
86-73-7	Fluorene	J	28	5.0	10	53	17
85-01-8	Phenanthrene		580	5.0	10	53	9.5
206-44-0	Fluoranthene		760	5.0	10	53	9.5
129-00-0	Pyrene		450	5.0	10	53	11
56-55-3	Benzo(a)anthracene		200	5.0	10	53	10
205-99-2	Benzo(b)fluoranthene		280	5.0	10	53	13
207-08-9	Benzo(k)fluoranthene		94	5.0	10	53	16
50-32-8	Benzo(a)pyrene		120	5.0	10	53	17
193-39-5	Indeno(1,2,3-cd)pyrene		59	5.0	10	53	10
53-70-3	Dibenzo(a,h)anthracene	U	53	5.0	10	53	9.5
191-24-2	Benzo(g,h,i)perylene	J	52	5.0	10	53	10
118-74-1	Hexachlorobenzene	U	53	5.0	10	53	9.5
87-68-3	Hexachlorobutadiene	~~U~~ UJ	53	5.0	10	53	12 CCH
77-47-4	Hexachlorocyclopentadiene	U	53	5.0	10	53	7.9
7297-45-2	2-Methylnaphthalene-D10		70%				
367-12-4	2,4-Dibromophenol		77%				
81103-79-9	Fluorene-d10		80%				
1718-51-1	Pyrene-D10		67%				

lw 4/15/09

KATAHDIN ANALYTICAL SERVICES
Report of Analytical Results

Client: CH2MHill
Project: TO-009 Lejeune
PO No:
Sample Date: 01/07/09
Received Date: 01/09/09
Extraction Date: 01/12/09
Analysis Date: 27-JAN-2009 19:01
Report Date: 01/29/2009
Matrix: SOIL
% Solids: 89.0

Lab ID: SC0101-38
Client ID: MR08-IS258-9-10-09A
SDG: TO9-29
Extracted by: CB
Extraction Method: SW846 3550
Analyst: JCG
Analysis Method: SW846 M8270C
Lab Prep Batch: WG59732
Units: ug/Kgdrywt

CAS#	Compound	Flags	Results	DF	PQL	Adj.PQL	Adj.MDL	
91-20-3	Naphthalene	~~U~~ UJ	11	1.0	10	11	2.9	CCH
91-57-6	2-Methylnaphthalene	U	11	1.0	10	11	2.5	
86-73-7	Fluorene	U	11	1.0	10	11	3.6	
85-01-8	Phenanthrene	J	2.8	1.0	10	11	2.0	
206-44-0	Fluoranthene	J	5.6	1.0	10	11	2.0	
129-00-0	Pyrene	J	3.7	1.0	10	11	2.4	
56-55-3	Benzo(a)anthracene	U	11	1.0	10	11	2.1	
205-99-2	Benzo(b)fluoranthene	U	11	1.0	10	11	2.7	
207-08-9	Benzo(k)fluoranthene	U	11	1.0	10	11	3.5	
50-32-8	Benzo(a)pyrene	U	11	1.0	10	11	3.7	
193-39-5	Indeno(1,2,3-cd)pyrene	U	11	1.0	10	11	2.1	
53-70-3	Dibenzo(a,h)anthracene	U	11	1.0	10	11	2.0	
191-24-2	Benzo(g,h,i)perylene	U	11	1.0	10	11	2.2	
118-74-1	Hexachlorobenzene	U	11	1.0	10	11	2.0	
87-68-3	Hexachlorobutadiene	~~U~~ UJ	11	1.0	10	11	2.6	CCH
77-47-4	Hexachlorocyclopentadiene	~~U~~ UJ	11	1.0	10	11	1.7	CCH
7297-45-2	2-Methylnaphthalene-D10		62%					
367-12-4	2,4-Dibromophenol		57%					
81103-79-9	Fluorene-d10		60%					
1718-51-1	Pyrene-D10		61%					

LW
4/15/09

KATAHDIN ANALYTICAL SERVICES
Report of Analytical Results

Client: CH2MHill
Project: TO-009 Lejeune
PO No:
Sample Date: 01/07/09
Received Date: 01/09/09
Extraction Date: 01/12/09
Analysis Date: 27-JAN-2009 23:01
Report Date: 01/29/2009
Matrix: SOIL
% Solids: 94.2

Lab ID: SC0101-40
Client ID: MR08-SS273-09A
SDG: TO9-29
Extracted by: CB
Extraction Method: SW846 3550
Analyst: JCG
Analysis Method: SW846 M8270C
Lab Prep Batch: WG59732
Units: ug/Kgdrywt

CAS#	Compound	Flags	Results	DF	PQL	Adj.PQL	Adj.MDL	
91-20-3	Naphthalene	~~U~~ UJ	11	1.0	10	11	2.8	CCH
91-57-6	2-Methylnaphthalene	J	2.9	1.0	10	11	2.3	
86-73-7	Fluorene	J	3.6	1.0	10	11	3.4	
85-01-8	Phenanthrene		49	1.0	10	11	1.9	
206-44-0	Fluoranthene		68	1.0	10	11	1.9	
129-00-0	Pyrene		55	1.0	10	11	2.2	
56-55-3	Benzo(a)anthracene		16	1.0	10	11	2.0	
205-99-2	Benzo(b)fluoranthene	U	11	1.0	10	11	2.5	
207-08-9	Benzo(k)fluoranthene	U	11	1.0	10	11	3.3	
50-32-8	Benzo(a)pyrene	U	11	1.0	10	11	3.5	
193-39-5	Indeno(1,2,3-cd)pyrene	J	5.7	1.0	10	11	2.0	
53-70-3	Dibenzo(a,h)anthracene	U	11	1.0	10	11	1.9	
191-24-2	Benzo(g,h,i)perylene	J	5.4	1.0	10	11	2.1	
118-74-1	Hexachlorobenzene	U	11	1.0	10	11	1.9	
87-68-3	Hexachlorobutadiene	~~U~~ UJ	11	1.0	10	11	2.4	CCH
77-47-4	Hexachlorocyclopentadiene	~~U~~ UJ	11	1.0	10	11	1.6	CCH
7297-45-2	2-Methylnaphthalene-D10		80%					
367-12-4	2,4-Dibromophenol		71%					
81103-79-9	Fluorene-d10		84%					
1718-51-1	Pyrene-D10		93%					

MW 4/15/09

ENVIRONMENTAL
Data Services, Inc.

SEMIVOLATILE ORGANIC COMPOUNDS

USEPA Region IV - Level IV Review

Site: MCB Camp Lejeune, TO-09 SDG #: TO9-29

Client: CH2M HILL, Inc., Virginia Beach, Virginia Date: April 15, 2009

Laboratory: Katahdin Analytical Services, Scarborough, Maine Reviewer: Nancy Weaver

EDS ID	Client Sample ID	Laboratory Sample ID	Matrix
1	MR08-SS225-09A	SC0101-1	Soil
1MS	MR08-SS225-09AMS	SC0101-1MS	Soil
1MSD	MR08-SS225-09MSD	SC0101-1MSD	Soil
2	MR08-SS226-09A	SC0101-3	Soil
3	MR08-IS226-2-3-09A	SC0101-5	Soil
4	MR08-SS233-09A	SC0101-7	Soil
5	MR08-IS233-5-6-09A	SC0101-9	Soil
6	MR08-SS234-09A	SC0101-11	Soil
7	MR08-IS234-5-6-09A	SC0101-13	Soil
8	MR08-SS249-09A	SC0101-15	Soil
9	MR08-SS249D-09A	SC0101-17	Soil
10	MR08-IS249-5-6-09A	SC0101-19	Soil
11	MR08-IS249D-5-6-09A	SC0101-21	Soil
12	MR08-SS248-09A	SC0101-23	Soil
13	MR08-IS248-5-6-09A	SC0101-25	Soil
14	MR08-SS250-09A	SC0101-27	Soil
15	MR08-IS250-5-6-09A	SC0101-29	Soil
16	MR08-SS257-09A	SC0101-31	Soil
17	MR08-IS257-9-10-09A	SC0101-33	Soil
18	MR08-SS258-09A	SC0101-35	Soil
19	MR08-IS258-9-10-09A	SC0101-37	Soil
20	MR08-SS273-09A	SC0101-39	Soil

The USEPA "Contract Laboratory Program National Functional Guidelines for Organic Data Review," October 1999, and professional judgement were used in evaluating the data in this summary report.

Holding Times - All samples were extracted within 14 days for soil samples and analyzed within 40 days for all samples.

GC/MS Tuning - All of the DFTPP tunes in the initial and continuing calibrations met the percent relative abundance criteria.

Initial Calibration - The initial calibrations exhibited acceptable %RSD and mean RRF values except the following.

ICAL Date	Compound	%RSD/RRF	Qualifier	Affected Samples
01/13/09	Benzaldehyde	44.95%	J/UJ	1-4, 6, 7, 8-14

Continuing Calibration - The continuing calibrations exhibited acceptable %D and RRF values except the following.

CCAL Date	Compound	%D/RRF	Qualifier	Affected Samples
01/23/09	Benzaldehyde	66.27%	None	Already qualified due to ICAL
01/25/09	Benzaldehyde	122.75%	None	Already qualified due to ICAL
	2, 2'-Oxybis (1-chloropropane)	33.95%	J/UJ	8-14
	Butylbenzylphthalate	35.13%	J/UJ	8-14
	Bis (2-Ethylhexyl)phthalate	36.43	J/UJ	8-14
	Di-n-octylphthalate	60.46	J/UJ	8-14
01/27/09 (1119)	4-Nitrophenol	25.55%	J/UJ	5, 15, 19, 20
01/27/09 (2037)	4-Nitrophenol	32.69%	J/UJ	16-18

Surrogates - All samples exhibited acceptable surrogate recoveries except the following.

Sample ID	Surrogate	%R	Qualifier
8	S6-Terphenyl-D14	136%	None for 1 out
12	S6-Terphenyl-D14	133%	None for 1 out
20	S5-2,4,6-Tribromophenol	33%	None for 1 out

MS/MSD - The MS/MSD sample exhibited acceptable %R and RPD values except the following.

MS/MSD Sample ID	Compound	MS/MSD %R/RPD	Qualifier
1	4-Chloroaniline	9%/Ok/Ok	J/R
	3-Nitroaniline	22%/19%/Ok	J/UJ
	3, 3'-Dichlorobenzidine	5%/7%/Ok	J/R

Laboratory Control Sample - The LCS samples exhibited acceptable %R values.

Internal Standard (IS) Area Performance - All internal standards met response and retention time (RT) criteria.

Method Blank - The method blanks were free of contamination.

Field, Equipment Blank - Field QC results are summarized below.

Blank ID	Compound	Conc. ug/L	Action Level ug/L	Qualifier	Affected Samples
MR08-FB01011009	None - ND	-	-	-	-
MR08-EB01010709-SS	None - ND	-	-	-	-

Field Duplicates - Field duplicate results are summarized below.

Compound	MR08-SS249-09A ug/kg	MR08-SS249D-09A ug/kg	RPD	Qualifier
Diethylphthalate	92	92	0%	None
Chrysene	740	800	8%	None
Bis(2-ethylhexyl)phthalate	290	420	37%	None

Compound	MR08-IS249-5-6-09A ug/kg	MR08-IS249-5-6-09A ug/kg	RPD	Qualifier
Diethylphthalate	89	90	1%	None
Bis(2-ethylhexyl)phthalate	150	370 U	NC	None

Tentatively Identified Compounds (TICs) - TICs were not reported.

Compound Quantitation - No discrepancies were identified.

KATAHDIN ANALYTICAL SERVICES
Report of Analytical Results

Client: CH2MHill
Project: TO-009 Lejeune
PO No:
Sample Date: 01/07/09
Received Date: 01/09/09
Extraction Date: 01/12/09
Analysis Date: 23-JAN-2009 19:48
Report Date: 01/29/2009
Matrix: SOIL
% Solids: 96.0

Lab ID: SC0101-1
Client ID: MR08-SS225-09A
SDG: TO9-29
Extracted by: CB
Extraction Method: SW846 3550
Analyst: JCG
Analysis Method: SW846 8270C
Lab Prep Batch: WG59731
Units: ug/Kgdrywt

CAS#	Compound	Flags	Results	DF	PQL	Adj.PQL	Adj.MDL	
100-52-7	Benzaldehyde	~~U~~ UJ	520	1.0	500	520	120	ICB
108-95-2	Phenol	U	520	1.0	500	520	160	
111-44-4	Bis(2-Chloroethyl)ether	U	340	1.0	330	340	84	
95-57-8	2-Chlorophenol	U	520	1.0	500	520	170	
95-48-7	2-Methylphenol	U	620	1.0	600	620	210	
108-60-1	2,2'-Oxybis(1-chloropropane)	U	340	1.0	330	340	93	
98-86-2	Acetophenone	U	620	1.0	600	620	180	
621-64-7	N-Nitroso-di-n-propylamine	U	340	1.0	330	340	86	
65794-96-9	3&4-Methylphenol	U	620	1.0	600	620	190	
67-72-1	Hexachloroethane	U	340	1.0	330	340	100	
98-95-3	Nitrobenzene	U	340	1.0	330	340	95	
78-59-1	Isophorone	U	340	1.0	330	340	78	
88-75-5	2-Nitrophenol	U	620	1.0	600	620	170	
105-67-9	2,4-Dimethylphenol	U	520	1.0	500	520	170	
111-91-1	Bis(2-Chloroethoxy)methane	U	340	1.0	330	340	100	
120-83-2	2,4-Dichlorophenol	U	520	1.0	500	520	160	
106-47-8	4-Chloroaniline	~~U~~ R	520	1.0	500	520	120	MSL
105-60-2	Caprolactam	U	520	1.0	500	520	150	
59-50-7	4-Chloro-3-Methylphenol	U	520	1.0	500	520	170	
88-06-2	2,4,6-Trichlorophenol	U	520	1.0	500	520	160	
95-95-4	2,4,5-Trichlorophenol	U	520	1.0	500	520	160	
91-58-7	2-Chloronaphthalene	U	340	1.0	330	340	91	
92-52-4	1,1'-Biphenyl	U	340	1.0	330	340	76	
88-74-4	2-Nitroaniline	U	520	1.0	500	520	78	
131-11-3	Dimethyl Phthalate	U	340	1.0	330	340	81	
606-20-2	2,6-Dinitrotoluene	U	340	1.0	330	340	82	
208-96-8	Acenaphthylene	U	340	1.0	330	340	73	
99-09-2	3-Nitroaniline	~~U~~ UJ	520	1.0	500	520	98	MSL
83-32-9	Acenaphthene	U	340	1.0	330	340	68	
51-28-5	2,4-Dinitrophenol	U	1200	1.0	1200	1200	390	
132-64-9	Dibenzofuran	U	340	1.0	330	340	82	
100-02-7	4-Nitrophenol	U	1200	1.0	1200	1200	320	
121-14-2	2,4-Dinitrotoluene	U	340	1.0	330	340	88	
84-66-2	Diethylphthalate	J	85	1.0	330	340	83	
7005-72-3	4-Chlorophenyl-phenylether	U	340	1.0	330	340	81	
100-01-6	4-Nitroaniline	U	520	1.0	500	520	140	
534-52-1	4,6-Dinitro-2-Methylphenol	U	1200	1.0	1200	1200	350	
86-30-6	N-Nitrosodiphenylamine	U	690	1.0	660	690	230	
101-55-3	4-Bromophenyl-phenylether	U	340	1.0	330	340	88	
1912-24-9	Atrazine	U	340	1.0	330	340	95	
87-86-5	Pentachlorophenol	U	850	1.0	820	850	250	
120-12-7	Anthracene	U	340	1.0	330	340	87	
86-74-8	Carbazole	U	520	1.0	500	520	120	

DW 4/15/09

KATAHDIN ANALYTICAL SERVICES
Report of Analytical Results

Client: CH2MHill
Project: TO-009 Lejeune
PO No:
Sample Date: 01/07/09
Received Date: 01/09/09
Extraction Date: 01/12/09
Analysis Date: 23-JAN-2009 19:48
Report Date: 01/29/2009
Matrix: SOIL
% Solids: 96.0

Lab ID: SC0101-1
Client ID: MR08-SS225-09A
SDG: TO9-29
Extracted by: CB
Extraction Method: SW846 3550
Analyst: JCG
Analysis Method: SW846 8270C
Lab Prep Batch: WG59731
Units: ug/Kgdrywt

CAS#	Compound	Flags	Results	DF	PQL	Adj.PQL	Adj.MDL	
84-74-2	Di-n-butylphthalate	U	340	1.0	330	340	100	
85-68-7	Butylbenzylphthalate	U	340	1.0	330	340	97	
91-94-1	3,3'-Dichlorobenzidine	~~U~~ R	520	1.0	500	520	120	MSL
218-01-9	Chrysene	U	340	1.0	330	340	99	
117-81-7	bis(2-Ethylhexyl)phthalate	J	190	1.0	330	340	100	
117-84-0	Di-n-octylphthalate	U	340	1.0	330	340	220	
367-12-4	2-Fluorophenol		65%					
13127-88-3	Phenol-D6		73%					
4165-60-0	Nitrobenzene-D5		68%					
321-60-8	2-Fluorobiphenyl		76%					
118-79-6	2,4,6-Tribromophenol		74%					
1718-51-0	Terphenyl-D14		104%					

MW
4/15/09

2

KATAHDIN ANALYTICAL SERVICES
Report of Analytical Results

Client: CH2MHill
Project: TO-009 Lejeune
PO No:
Sample Date: 01/07/09
Received Date: 01/09/09
Extraction Date: 01/12/09
Analysis Date: 23-JAN-2009 20:31
Report Date: 01/29/2009
Matrix: SOIL
% Solids: 93.6

Lab ID: SC0101-3
Client ID: MR08-SS226-09A
SDG: TO9-29
Extracted by: CB
Extraction Method: SW846 3550
Analyst: JCG
Analysis Method: SW846 8270C
Lab Prep Batch: WG59731
Units: ug/Kgdrywt

CAS#	Compound	Flags	Results	DF	PQL	Adj.PQL	Adj.MDL
100-52-7	Benzaldehyde	~~U~~ UJ	530	1.0	500	530	130 ICB
108-95-2	Phenol	U	530	1.0	500	530	170
111-44-4	Bis(2-Chloroethyl)ether	U	350	1.0	330	350	86
95-57-8	2-Chlorophenol	U	530	1.0	500	530	180
95-48-7	2-Methylphenol	U	640	1.0	600	640	210
108-60-1	2,2'-Oxybis(1-chloropropane)	U	350	1.0	330	350	95
98-86-2	Acetophenone	U	640	1.0	600	640	190
621-64-7	N-Nitroso-di-n-propylamine	U	350	1.0	330	350	89
65794-96-9	3&4-Methylphenol	U	640	1.0	600	640	200
67-72-1	Hexachloroethane	U	350	1.0	330	350	100
98-95-3	Nitrobenzene	U	350	1.0	330	350	97
78-59-1	Isophorone	U	350	1.0	330	350	80
88-75-5	2-Nitrophenol	U	640	1.0	600	640	180
105-67-9	2,4-Dimethylphenol	U	530	1.0	500	530	180
111-91-1	Bis(2-Chloroethoxy)methane	U	350	1.0	330	350	100
120-83-2	2,4-Dichlorophenol	U	530	1.0	500	530	160
106-47-8	4-Chloroaniline	U	530	1.0	500	530	130
105-60-2	Caprolactam	U	530	1.0	500	530	150
59-50-7	4-Chloro-3-Methylphenol	U	530	1.0	500	530	180
88-06-2	2,4,6-Trichlorophenol	U	530	1.0	500	530	160
95-95-4	2,4,5-Trichlorophenol	U	530	1.0	500	530	160
91-58-7	2-Chloronaphthalene	U	350	1.0	330	350	93
92-52-4	1,1'-Biphenyl	U	350	1.0	330	350	78
88-74-4	2-Nitroaniline	U	530	1.0	500	530	80
131-11-3	Dimethyl Phthalate	U	350	1.0	330	350	83
606-20-2	2,6-Dinitrotoluene	U	350	1.0	330	350	84
208-96-8	Acenaphthylene	J	75	1.0	330	350	75
99-09-2	3-Nitroaniline	U	530	1.0	500	530	100
83-32-9	Acenaphthene	U	350	1.0	330	350	69
51-28-5	2,4-Dinitrophenol	U	1300	1.0	1200	1300	400
132-64-9	Dibenzofuran	U	350	1.0	330	350	84
100-02-7	4-Nitrophenol	U	1300	1.0	1200	1300	330
121-14-2	2,4-Dinitrotoluene	U	350	1.0	330	350	91
84-66-2	Diethylphthalate	J	86	1.0	330	350	85
7005-72-3	4-Chlorophenyl-phenylether	U	350	1.0	330	350	83
100-01-6	4-Nitroaniline	U	530	1.0	500	530	140
534-52-1	4,6-Dinitro-2-Methylphenol	U	1300	1.0	1200	1300	360
86-30-6	N-Nitrosodiphenylamine	U	700	1.0	660	700	230
101-55-3	4-Bromophenyl-phenylether	U	350	1.0	330	350	91
1912-24-9	Atrazine	U	350	1.0	330	350	97
87-86-5	Pentachlorophenol	U	880	1.0	820	880	250
120-12-7	Anthracene	J	110	1.0	330	350	90
86-74-8	Carbazole	J	220	1.0	500	530	120

4/15/09

KATAHDIN ANALYTICAL SERVICES
Report of Analytical Results

Client: CH2MHill
Project: TO-009 Lejeune
PO No:
Sample Date: 01/07/09
Received Date: 01/09/09
Extraction Date: 01/12/09
Analysis Date: 23-JAN-2009 20:31
Report Date: 01/29/2009
Matrix: SOIL
% Solids: 93.6

Lab ID: SC0101-3
Client ID: MR08-SS226-09A
SDG: TO9-29
Extracted by: CB
Extraction Method: SW846 3550
Analyst: JCG
Analysis Method: SW846 8270C
Lab Prep Batch: WG59731
Units: ug/Kgdrywt

CAS#	Compound	Flags	Results	DF	PQL	Adj.PQL	Adj.MDL
84-74-2	Di-n-butylphthalate	U	350	1.0	330	350	110
85-68-7	Butylbenzylphthalate	U	350	1.0	330	350	99
91-94-1	3,3'-Dichlorobenzidine	U	530	1.0	500	530	120
218-01-9	Chrysene		2500	1.0	330	350	100
117-81-7	bis(2-Ethylhexyl)phthalate	J	180	1.0	330	350	100
117-84-0	Di-n-octylphthalate	U	350	1.0	330	350	220
367-12-4	2-Fluorophenol		76%				
13127-88-3	Phenol-D6		79%				
4165-60-0	Nitrobenzene-D5		77%				
321-60-8	2-Fluorobiphenyl		77%				
118-79-6	2,4,6-Tribromophenol		78%				
1718-51-0	Terphenyl-D14		99%				

RW
4/15/09

3

KATAHDIN ANALYTICAL SERVICES
Report of Analytical Results

Client: CH2MHill
Project: TO-009 Lejeune
PO No:
Sample Date: 01/07/09
Received Date: 01/09/09
Extraction Date: 01/12/09
Analysis Date: 23-JAN-2009 21:13
Report Date: 01/29/2009
Matrix: SOIL
% Solids: 94.0

Lab ID: SC0101-5
Client ID: MR08-IS226-2-3-09A
SDG: TO9-29
Extracted by: CB
Extraction Method: SW846 3550
Analyst: JCG
Analysis Method: SW846 8270C
Lab Prep Batch: WG59731
Units: ug/Kgdrywt

CAS#	Compound	Flags	Results	DF	PQL	Adj.PQL	Adj.MDL
100-52-7	Benzaldehyde	~~U~~ UJ	530	1.0	500	530	130 JCB
108-95-2	Phenol	U	530	1.0	500	530	170
111-44-4	Bis(2-Chloroethyl)ether	U	350	1.0	330	350	86
95-57-8	2-Chlorophenol	U	530	1.0	500	530	170
95-48-7	2-Methylphenol	U	640	1.0	600	640	210
108-60-1	2,2'-Oxybis(1-chloropropane)	U	350	1.0	330	350	95
98-86-2	Acetophenone	U	640	1.0	600	640	190
621-64-7	N-Nitroso-di-n-propylamine	U	350	1.0	330	350	88
65794-96-9	3&4-Methylphenol	U	640	1.0	600	640	200
67-72-1	Hexachloroethane	U	350	1.0	330	350	100
98-95-3	Nitrobenzene	U	350	1.0	330	350	97
78-59-1	Isophorone	U	350	1.0	330	350	80
88-75-5	2-Nitrophenol	U	640	1.0	600	640	180
105-67-9	2,4-Dimethylphenol	U	530	1.0	500	530	180
111-91-1	Bis(2-Chloroethoxy)methane	U	350	1.0	330	350	100
120-83-2	2,4-Dichlorophenol	U	530	1.0	500	530	160
106-47-8	4-Chloroaniline	U	530	1.0	500	530	130
105-60-2	Caprolactam	U	530	1.0	500	530	150
59-50-7	4-Chloro-3-Methylphenol	U	530	1.0	500	530	180
88-06-2	2,4,6-Trichlorophenol	U	530	1.0	500	530	160
95-95-4	2,4,5-Trichlorophenol	U	530	1.0	500	530	160
91-58-7	2-Chloronaphthalene	U	350	1.0	330	350	92
92-52-4	1,1'-Biphenyl	U	350	1.0	330	350	78
88-74-4	2-Nitroaniline	U	530	1.0	500	530	80
131-11-3	Dimethyl Phthalate	U	350	1.0	330	350	83
606-20-2	2,6-Dinitrotoluene	U	350	1.0	330	350	84
208-96-8	Acenaphthylene	U	350	1.0	330	350	74
99-09-2	3-Nitroaniline	U	530	1.0	500	530	100
83-32-9	Acenaphthene	U	350	1.0	330	350	69
51-28-5	2,4-Dinitrophenol	U	1300	1.0	1200	1300	400
132-64-9	Dibenzofuran	U	350	1.0	330	350	84
100-02-7	4-Nitrophenol	U	1300	1.0	1200	1300	330
121-14-2	2,4-Dinitrotoluene	U	350	1.0	330	350	90
84-66-2	Diethylphthalate	J	86	1.0	330	350	85
7005-72-3	4-Chlorophenyl-phenylether	U	350	1.0	330	350	83
100-01-6	4-Nitroaniline	U	530	1.0	500	530	140
534-52-1	4,6-Dinitro-2-Methylphenol	U	1300	1.0	1200	1300	360
86-30-6	N-Nitrosodiphenylamine	U	700	1.0	660	700	230
101-55-3	4-Bromophenyl-phenylether	U	350	1.0	330	350	90
1912-24-9	Atrazine	U	350	1.0	330	350	97
87-86-5	Pentachlorophenol	U	870	1.0	820	870	250
120-12-7	Anthracene	U	350	1.0	330	350	89
86-74-8	Carbazole	U	530	1.0	500	530	120

4/15/09

3

KATAHDIN ANALYTICAL SERVICES
Report of Analytical Results

Client: CH2MHill
Project: TO-009 Lejeune
PO No:
Sample Date: 01/07/09
Received Date: 01/09/09
Extraction Date: 01/12/09
Analysis Date: 23-JAN-2009 21:13
Report Date: 01/29/2009
Matrix: SOIL
% Solids: 94.0

Lab ID: SC0101-5
Client ID: MR08-IS226-2-3-09A
SDG: TO9-29
Extracted by: CB
Extraction Method: SW846 3550
Analyst: JCG
Analysis Method: SW846 8270C
Lab Prep Batch: WG59731
Units: ug/Kgdrywt

CAS#	Compound	Flags	Results	DF	PQL	Adj.PQL	Adj.MDL
84-74-2	Di-n-butylphthalate	U	350	1.0	330	350	110
85-68-7	Butylbenzylphthalate	U	350	1.0	330	350	99
91-94-1	3,3'-Dichlorobenzidine	U	530	1.0	500	530	120
218-01-9	Chrysene	U	350	1.0	330	350	100
117-81-7	bis(2-Ethylhexyl)phthalate	U	350	1.0	330	350	100
117-84-0	Di-n-octylphthalate	U	350	1.0	330	350	220
367-12-4	2-Fluorophenol		68%				
13127-88-3	Phenol-D6		71%				
4165-60-0	Nitrobenzene-D5		68%				
321-60-8	2-Fluorobiphenyl		66%				
118-79-6	2,4,6-Tribromophenol		61%				
1718-51-0	Terphenyl-D14		87%				

fw
4/15/09

4

KATAHDIN ANALYTICAL SERVICES
Report of Analytical Results

Client: CH2MHill
Project: TO-009 Lejeune
PO No:
Sample Date: 01/07/09
Received Date: 01/09/09
Extraction Date: 01/12/09
Analysis Date: 23-JAN-2009 21:55
Report Date: 01/29/2009
Matrix: SOIL
% Solids: 97.8

Lab ID: SC0101-7
Client ID: MR08-SS233-09A
SDG: TO9-29
Extracted by: CB
Extraction Method: SW846 3550
Analyst: JCG
Analysis Method: SW846 8270C
Lab Prep Batch: WG59731
Units: ug/Kgdrywt

CAS#	Compound	Flags	Results	DF	PQL	Adj.PQL	Adj.MDL
100-52-7	Benzaldehyde	~~J~~ UJ	510	1.0	500	510	120 ICB
108-95-2	Phenol	U	510	1.0	500	510	160
111-44-4	Bis(2-Chloroethyl)ether	U	340	1.0	330	340	83
95-57-8	2-Chlorophenol	U	510	1.0	500	510	170
95-48-7	2-Methylphenol	U	610	1.0	600	610	200
108-60-1	2,2'-Oxybis(1-chloropropane)	U	340	1.0	330	340	91
98-86-2	Acetophenone	U	610	1.0	600	610	180
621-64-7	N-Nitroso-di-n-propylamine	U	340	1.0	330	340	85
65794-96-9	3&4-Methylphenol	U	610	1.0	600	610	190
67-72-1	Hexachloroethane	U	340	1.0	330	340	98
98-95-3	Nitrobenzene	U	340	1.0	330	340	93
78-59-1	Isophorone	U	340	1.0	330	340	77
88-75-5	2-Nitrophenol	U	610	1.0	600	610	170
105-67-9	2,4-Dimethylphenol	U	510	1.0	500	510	170
111-91-1	Bis(2-Chloroethoxy)methane	U	340	1.0	330	340	98
120-83-2	2,4-Dichlorophenol	U	510	1.0	500	510	150
106-47-8	4-Chloroaniline	U	510	1.0	500	510	120
105-60-2	Caprolactam	U	510	1.0	500	510	150
59-50-7	4-Chloro-3-Methylphenol	U	510	1.0	500	510	170
88-06-2	2,4,6-Trichlorophenol	U	510	1.0	500	510	160
95-95-4	2,4,5-Trichlorophenol	U	510	1.0	500	510	160
91-58-7	2-Chloronaphthalene	U	340	1.0	330	340	89
92-52-4	1,1'-Biphenyl	U	340	1.0	330	340	75
88-74-4	2-Nitroaniline	U	510	1.0	500	510	77
131-11-3	Dimethyl Phthalate	U	340	1.0	330	340	80
606-20-2	2,6-Dinitrotoluene	U	340	1.0	330	340	81
208-96-8	Acenaphthylene	U	340	1.0	330	340	72
99-09-2	3-Nitroaniline	U	510	1.0	500	510	96
83-32-9	Acenaphthene	U	340	1.0	330	340	66
51-28-5	2,4-Dinitrophenol	U	1200	1.0	1200	1200	380
132-64-9	Dibenzofuran	U	340	1.0	330	340	81
100-02-7	4-Nitrophenol	U	1200	1.0	1200	1200	320
121-14-2	2,4-Dinitrotoluene	U	340	1.0	330	340	87
84-66-2	Diethylphthalate	J	83	1.0	330	340	82
7005-72-3	4-Chlorophenyl-phenylether	U	340	1.0	330	340	80
100-01-6	4-Nitroaniline	U	510	1.0	500	510	140
534-52-1	4,6-Dinitro-2-Methylphenol	U	1200	1.0	1200	1200	340
86-30-6	N-Nitrosodiphenylamine	U	670	1.0	660	670	220
101-55-3	4-Bromophenyl-phenylether	U	340	1.0	330	340	87
1912-24-9	Atrazine	U	340	1.0	330	340	93
87-86-5	Pentachlorophenol	U	840	1.0	820	840	240
120-12-7	Anthracene	U	340	1.0	330	340	86
86-74-8	Carbazole	U	510	1.0	500	510	110

lw 4/15/09

KATAHDIN ANALYTICAL SERVICES
Report of Analytical Results

Client: CH2MHill
Project: TO-009 Lejeune
PO No:
Sample Date: 01/07/09
Received Date: 01/09/09
Extraction Date: 01/12/09
Analysis Date: 23-JAN-2009 21:55
Report Date: 01/29/2009
Matrix: SOIL
% Solids: 97.8

Lab ID: SC0101-7
Client ID: MR08-SS233-09A
SDG: TO9-29
Extracted by: CB
Extraction Method: SW846 3550
Analyst: JCG
Analysis Method: SW846 8270C
Lab Prep Batch: WG59731
Units: ug/Kgdrywt

CAS#	Compound	Flags	Results	DF	PQL	Adj.PQL	Adj.MDL
84-74-2	Di-n-butylphthalate	U	340	1.0	330	340	100
85-68-7	Butylbenzylphthalate	U	340	1.0	330	340	95
91-94-1	3,3'-Dichlorobenzidine	U	510	1.0	500	510	120
218-01-9	Chrysene	U	340	1.0	330	340	97
117-81-7	bis(2-Ethylhexyl)phthalate	U	340	1.0	330	340	100
117-84-0	Di-n-octylphthalate	U	340	1.0	330	340	220
367-12-4	2-Fluorophenol		66%				
13127-88-3	Phenol-D6		73%				
4165-60-0	Nitrobenzene-D5		69%				
321-60-8	2-Fluorobiphenyl		72%				
118-79-6	2,4,6-Tribromophenol		68%				
1718-51-0	Terphenyl-D14		96%				

RW 4/15/09

5

KATAHDIN ANALYTICAL SERVICES
Report of Analytical Results

Client: CH2MHill
Project: TO-009 Lejeune
PO No:
Sample Date: 01/07/09
Received Date: 01/09/09
Extraction Date: 01/12/09
Analysis Date: 27-JAN-2009 14:09
Report Date: 01/29/2009
Matrix: SOIL
% Solids: 92.8

Lab ID: SC0101-9
Client ID: MR08-IS233-5-6-09A
SDG: TO9-29
Extracted by: CB
Extraction Method: SW846 3550
Analyst: JCG
Analysis Method: SW846 8270C
Lab Prep Batch: WG59731
Units: ug/Kgdrywt

CAS#	Compound	Flags	Results	DF	PQL	Adj.PQL	Adj.MDL
100-52-7	Benzaldehyde	U	540	1.0	500	540	130
108-95-2	Phenol	U	540	1.0	500	540	170
111-44-4	Bis(2-Chloroethyl)ether	U	360	1.0	330	360	87
95-57-8	2-Chlorophenol	U	540	1.0	500	540	180
95-48-7	2-Methylphenol	U	650	1.0	600	650	220
108-60-1	2,2'-Oxybis(1-chloropropane)	U	360	1.0	330	360	96
98-86-2	Acetophenone	U	650	1.0	600	650	190
621-64-7	N-Nitroso-di-n-propylamine	U	360	1.0	330	360	89
65794-96-9	3&4-Methylphenol	U	650	1.0	600	650	200
67-72-1	Hexachloroethane	U	360	1.0	330	360	100
98-95-3	Nitrobenzene	U	360	1.0	330	360	98
78-59-1	Isophorone	U	360	1.0	330	360	81
88-75-5	2-Nitrophenol	U	650	1.0	600	650	180
105-67-9	2,4-Dimethylphenol	U	540	1.0	500	540	180
111-91-1	Bis(2-Chloroethoxy)methane	U	360	1.0	330	360	100
120-83-2	2,4-Dichlorophenol	U	540	1.0	500	540	160
106-47-8	4-Chloroaniline	U	540	1.0	500	540	130
105-60-2	Caprolactam	U	540	1.0	500	540	160
59-50-7	4-Chloro-3-Methylphenol	U	540	1.0	500	540	180
88-06-2	2,4,6-Trichlorophenol	U	540	1.0	500	540	170
95-95-4	2,4,5-Trichlorophenol	U	540	1.0	500	540	170
91-58-7	2-Chloronaphthalene	U	360	1.0	330	360	94
92-52-4	1,1'-Biphenyl	U	360	1.0	330	360	79
88-74-4	2-Nitroaniline	U	540	1.0	500	540	81
131-11-3	Dimethyl Phthalate	U	360	1.0	330	360	84
606-20-2	2,6-Dinitrotoluene	U	360	1.0	330	360	85
208-96-8	Acenaphthylene	U	360	1.0	330	360	75
99-09-2	3-Nitroaniline	U	540	1.0	500	540	100
83-32-9	Acenaphthene	U	360	1.0	330	360	70
51-28-5	2,4-Dinitrophenol	U	1300	1.0	1200	1300	410
132-64-9	Dibenzofuran	U	360	1.0	330	360	85
100-02-7	4-Nitrophenol	~~U~~ UJ	1300	1.0	1200	1300	330 CCH
121-14-2	2,4-Dinitrotoluene	U	360	1.0	330	360	92
84-66-2	Diethylphthalate	U	360	1.0	330	360	86
7005-72-3	4-Chlorophenyl-phenylether	U	360	1.0	330	360	84
100-01-6	4-Nitroaniline	U	540	1.0	500	540	140
534-52-1	4,6-Dinitro-2-Methylphenol	U	1300	1.0	1200	1300	360
86-30-6	N-Nitrosodiphenylamine	U	710	1.0	660	710	240
101-55-3	4-Bromophenyl-phenylether	U	360	1.0	330	360	92
1912-24-9	Atrazine	U	360	1.0	330	360	98
87-86-5	Pentachlorophenol	U	880	1.0	820	880	260
120-12-7	Anthracene	U	360	1.0	330	360	90
86-74-8	Carbazole	U	540	1.0	500	540	120

4/15/09

5

KATAHDIN ANALYTICAL SERVICES
Report of Analytical Results

Client: CH2MHill
Project: TO-009 Lejeune
PO No:
Sample Date: 01/07/09
Received Date: 01/09/09
Extraction Date: 01/12/09
Analysis Date: 27-JAN-2009 14:09
Report Date: 01/29/2009
Matrix: SOIL
% Solids: 92.8

Lab ID: SC0101-9
Client ID: MR08-IS233-5-6-09A
SDG: TO9-29
Extracted by: CB
Extraction Method: SW846 3550
Analyst: JCG
Analysis Method: SW846 8270C
Lab Prep Batch: WG59731
Units: ug/Kgdrywt

CAS#	Compound	Flags	Results	DF	PQL	Adj.PQL	Adj.MDL
84-74-2	Di-n-butylphthalate	U	360	1.0	330	360	110
85-68-7	Butylbenzylphthalate	U	360	1.0	330	360	100
91-94-1	3,3'-Dichlorobenzidine	U	540	1.0	500	540	120
218-01-9	Chrysene	U	360	1.0	330	360	100
117-81-7	bis(2-Ethylhexyl)phthalate	U	360	1.0	330	360	100
117-84-0	Di-n-octylphthalate	U	360	1.0	330	360	230
367-12-4	2-Fluorophenol		70%				
13127-88-3	Phenol-D6		79%				
4165-60-0	Nitrobenzene-D5		66%				
321-60-8	2-Fluorobiphenyl		65%				
118-79-6	2,4,6-Tribromophenol		68%				
1718-51-0	Terphenyl-D14		89%				

lw
4/15/09

6

KATAHDIN ANALYTICAL SERVICES
Report of Analytical Results

Client: CH2MHill
Project: TO-009 Lejeune
PO No:
Sample Date: 01/07/09
Received Date: 01/09/09
Extraction Date: 01/12/09
Analysis Date: 23-JAN-2009 22:37
Report Date: 01/29/2009
Matrix: SOIL
% Solids: 96.3

Lab ID: SC0101-11
Client ID: MR08-SS234-09A
SDG: TO9-29
Extracted by: CB
Extraction Method: SW846 3550
Analyst: JCG
Analysis Method: SW846 8270C
Lab Prep Batch: WG59731
Units: ug/Kgdrywt

CAS#	Compound	Flags	Results	DF	PQL	Adj.PQL	Adj.MDL
100-52-7	Benzaldehyde	~~J~~ UJ	520	1.0	500	520	120 ICB
108-95-2	Phenol	U	520	1.0	500	520	160
111-44-4	Bis(2-Chloroethyl)ether	U	340	1.0	330	340	84
95-57-8	2-Chlorophenol	U	520	1.0	500	520	170
95-48-7	2-Methylphenol	U	620	1.0	600	620	210
108-60-1	2,2'-Oxybis(1-chloropropane)	U	340	1.0	330	340	92
98-86-2	Acetophenone	U	620	1.0	600	620	180
621-64-7	N-Nitroso-di-n-propylamine	U	340	1.0	330	340	86
65794-96-9	3&4-Methylphenol	U	620	1.0	600	620	190
67-72-1	Hexachloroethane	U	340	1.0	330	340	100
98-95-3	Nitrobenzene	U	340	1.0	330	340	94
78-59-1	Isophorone	U	340	1.0	330	340	78
88-75-5	2-Nitrophenol	U	620	1.0	600	620	170
105-67-9	2,4-Dimethylphenol	U	520	1.0	500	520	170
111-91-1	Bis(2-Chloroethoxy)methane	U	340	1.0	330	340	100
120-83-2	2,4-Dichlorophenol	U	520	1.0	500	520	160
106-47-8	4-Chloroaniline	U	520	1.0	500	520	120
105-60-2	Caprolactam	U	520	1.0	500	520	150
59-50-7	4-Chloro-3-Methylphenol	U	520	1.0	500	520	170
88-06-2	2,4,6-Trichlorophenol	U	520	1.0	500	520	160
95-95-4	2,4,5-Trichlorophenol	U	520	1.0	500	520	160
91-58-7	2-Chloronaphthalene	U	340	1.0	330	340	90
92-52-4	1,1'-Biphenyl	U	340	1.0	330	340	76
88-74-4	2-Nitroaniline	U	520	1.0	500	520	78
131-11-3	Dimethyl Phthalate	U	340	1.0	330	340	81
606-20-2	2,6-Dinitrotoluene	U	340	1.0	330	340	82
208-96-8	Acenaphthylene	U	340	1.0	330	340	73
99-09-2	3-Nitroaniline	U	520	1.0	500	520	98
83-32-9	Acenaphthene	U	340	1.0	330	340	68
51-28-5	2,4-Dinitrophenol	U	1200	1.0	1200	1200	390
132-64-9	Dibenzofuran	U	340	1.0	330	340	82
100-02-7	4-Nitrophenol	U	1200	1.0	1200	1200	320
121-14-2	2,4-Dinitrotoluene	U	340	1.0	330	340	88
84-66-2	Diethylphthalate	J	85	1.0	330	340	83
7005-72-3	4-Chlorophenyl-phenylether	U	340	1.0	330	340	81
100-01-6	4-Nitroaniline	U	520	1.0	500	520	140
534-52-1	4,6-Dinitro-2-Methylphenol	U	1200	1.0	1200	1200	350
86-30-6	N-Nitrosodiphenylamine	U	680	1.0	660	680	230
101-55-3	4-Bromophenyl-phenylether	U	340	1.0	330	340	88
1912-24-9	Atrazine	U	340	1.0	330	340	94
87-86-5	Pentachlorophenol	U	850	1.0	820	850	250
120-12-7	Anthracene	U	340	1.0	330	340	87
86-74-8	Carbazole	U	520	1.0	500	520	120

DW
4/15/09

6

KATAHDIN ANALYTICAL SERVICES
Report of Analytical Results

Client: CH2MHill
Project: TO-009 Lejeune
PO No:
Sample Date: 01/07/09
Received Date: 01/09/09
Extraction Date: 01/12/09
Analysis Date: 23-JAN-2009 22:37
Report Date: 01/29/2009
Matrix: SOIL
% Solids: 96.3

Lab ID: SC0101-11
Client ID: MR08-SS234-09A
SDG: TO9-29
Extracted by: CB
Extraction Method: SW846 3550
Analyst: JCG
Analysis Method: SW846 8270C
Lab Prep Batch: WG59731
Units: ug/Kgdrywt

CAS#	Compound	Flags	Results	DF	PQL	Adj.PQL	Adj.MDL
84-74-2	Di-n-butylphthalate	U	340	1.0	330	340	100
85-68-7	Butylbenzylphthalate	U	340	1.0	330	340	97
91-94-1	3,3'-Dichlorobenzidine	U	520	1.0	500	520	120
218-01-9	Chrysene	U	340	1.0	330	340	99
117-81-7	bis(2-Ethylhexyl)phthalate	J	250	1.0	330	340	100
117-84-0	Di-n-octylphthalate	U	340	1.0	330	340	220
367-12-4	2-Fluorophenol		55%				
13127-88-3	Phenol-D6		69%				
4165-60-0	Nitrobenzene-D5		69%				
321-60-8	2-Fluorobiphenyl		69%				
118-79-6	2,4,6-Tribromophenol		45%				
1718-51-0	Terphenyl-D14		92%				

MW
4/15/09

7

KATAHDIN ANALYTICAL SERVICES
Report of Analytical Results

Client: CH2MHill
Project: TO-009 Lejeune
PO No:
Sample Date: 01/07/09
Received Date: 01/09/09
Extraction Date: 01/12/09
Analysis Date: 23-JAN-2009 23:19
Report Date: 01/29/2009
Matrix: SOIL
% Solids: 93.7

Lab ID: SC0101-13
Client ID: MR08-IS234-5-6-09A
SDG: TO9-29
Extracted by: CB
Extraction Method: SW846 3550
Analyst: JCG
Analysis Method: SW846 8270C
Lab Prep Batch: WG59731
Units: ug/Kgdrywt

CAS#	Compound	Flags	Results	DF	PQL	Adj.PQL	Adj.MDL
100-52-7	Benzaldehyde	~~U~~ UJ	530	1.0	500	530	130 ICB
108-95-2	Phenol	U	530	1.0	500	530	170
111-44-4	Bis(2-Chloroethyl)ether	U	350	1.0	330	350	86
95-57-8	2-Chlorophenol	U	530	1.0	500	530	170
95-48-7	2-Methylphenol	U	640	1.0	600	640	210
108-60-1	2,2'-Oxybis(1-chloropropane)	U	350	1.0	330	350	95
98-86-2	Acetophenone	U	640	1.0	600	640	190
621-64-7	N-Nitroso-di-n-propylamine	U	350	1.0	330	350	88
65794-96-9	3&4-Methylphenol	U	640	1.0	600	640	200
67-72-1	Hexachloroethane	U	350	1.0	330	350	100
98-95-3	Nitrobenzene	U	350	1.0	330	350	97
78-59-1	Isophorone	U	350	1.0	330	350	80
88-75-5	2-Nitrophenol	U	640	1.0	600	640	180
105-67-9	2,4-Dimethylphenol	U	530	1.0	500	530	180
111-91-1	Bis(2-Chloroethoxy)methane	U	350	1.0	330	350	100
120-83-2	2,4-Dichlorophenol	U	530	1.0	500	530	160
106-47-8	4-Chloroaniline	U	530	1.0	500	530	130
105-60-2	Caprolactam	U	530	1.0	500	530	150
59-50-7	4-Chloro-3-Methylphenol	U	530	1.0	500	530	180
88-06-2	2,4,6-Trichlorophenol	U	530	1.0	500	530	160
95-95-4	2,4,5-Trichlorophenol	U	530	1.0	500	530	160
91-58-7	2-Chloronaphthalene	U	350	1.0	330	350	93
92-52-4	1,1'-Biphenyl	U	350	1.0	330	350	78
88-74-4	2-Nitroaniline	U	530	1.0	500	530	80
131-11-3	Dimethyl Phthalate	U	350	1.0	330	350	83
606-20-2	2,6-Dinitrotoluene	U	350	1.0	330	350	84
208-96-8	Acenaphthylene	U	350	1.0	330	350	75
99-09-2	3-Nitroaniline	U	530	1.0	500	530	100
83-32-9	Acenaphthene	U	350	1.0	330	350	69
51-28-5	2,4-Dinitrophenol	U	1300	1.0	1200	1300	400
132-64-9	Dibenzofuran	U	350	1.0	330	350	84
100-02-7	4-Nitrophenol	U	1300	1.0	1200	1300	330
121-14-2	2,4-Dinitrotoluene	U	350	1.0	330	350	91
84-66-2	Diethylphthalate	J	88	1.0	330	350	85
7005-72-3	4-Chlorophenyl-phenylether	U	350	1.0	330	350	83
100-01-6	4-Nitroaniline	U	530	1.0	500	530	140
534-52-1	4,6-Dinitro-2-Methylphenol	U	1300	1.0	1200	1300	360
86-30-6	N-Nitrosodiphenylamine	U	700	1.0	660	700	230
101-55-3	4-Bromophenyl-phenylether	U	350	1.0	330	350	91
1912-24-9	Atrazine	U	350	1.0	330	350	97
87-86-5	Pentachlorophenol	U	870	1.0	820	870	250
120-12-7	Anthracene	U	350	1.0	330	350	90
86-74-8	Carbazole	U	530	1.0	500	530	120

ewo 4/15/09

7

KATAHDIN ANALYTICAL SERVICES
Report of Analytical Results

Client: CH2MHill
Project: TO-009 Lejeune
PO No:
Sample Date: 01/07/09
Received Date: 01/09/09
Extraction Date: 01/12/09
Analysis Date: 23-JAN-2009 23:19
Report Date: 01/29/2009
Matrix: SOIL
% Solids: 93.7

Lab ID: SC0101-13
Client ID: MR08-IS234-5-6-09A
SDG: TO9-29
Extracted by: CB
Extraction Method: SW846 3550
Analyst: JCG
Analysis Method: SW846 8270C
Lab Prep Batch: WG59731
Units: ug/Kgdrywt

CAS#	Compound	Flags	Results	DF	PQL	Adj.PQL	Adj.MDL
84-74-2	Di-n-butylphthalate	U	350	1.0	330	350	110
85-68-7	Butylbenzylphthalate	U	350	1.0	330	350	99
91-94-1	3,3'-Dichlorobenzidine	U	530	1.0	500	530	120
218-01-9	Chrysene	U	350	1.0	330	350	100
117-81-7	bis(2-Ethylhexyl)phthalate	U	350	1.0	330	350	100
117-84-0	Di-n-octylphthalate	U	350	1.0	330	350	220
367-12-4	2-Fluorophenol		58%				
13127-88-3	Phenol-D6		70%				
4165-60-0	Nitrobenzene-D5		67%				
321-60-8	2-Fluorobiphenyl		66%				
118-79-6	2,4,6-Tribromophenol		50%				
1718-51-0	Terphenyl-D14		101%				

MW 4/15/09

8

KATAHDIN ANALYTICAL SERVICES
Report of Analytical Results

Client: CH2MHill
Project: TO-009 Lejeune
PO No:
Sample Date: 01/07/09
Received Date: 01/09/09
Extraction Date: 01/12/09
Analysis Date: 25-JAN-2009 19:37
Report Date: 01/29/2009
Matrix: SOIL
% Solids: 87.8

Lab ID: SC0101-15
Client ID: MR08-SS249-09A
SDG: TO9-29
Extracted by: CB
Extraction Method: SW846 3550
Analyst: EKC
Analysis Method: SW846 8270C
Lab Prep Batch: WG59731
Units: ug/Kgdrywt

CAS#	Compound	Flags	Results	DF	PQL	Adj.PQL	Adj.MDL	
100-52-7	Benzaldehyde	~~U~~ UJ	570	1.0	500	570	140	ICB
108-95-2	Phenol	U	570	1.0	500	570	180	
111-44-4	Bis(2-Chloroethyl)ether	U	380	1.0	330	380	92	
95-57-8	2-Chlorophenol	U	570	1.0	500	570	190	
95-48-7	2-Methylphenol	U	680	1.0	600	680	230	
108-60-1	2,2'-Oxybis(1-chloropropane)	~~U~~ UJ	380	1.0	330	380	100	CCH
98-86-2	Acetophenone	U	680	1.0	600	680	200	
621-64-7	N-Nitroso-di-n-propylamine	U	380	1.0	330	380	94	
65794-96-9	3&4-Methylphenol	U	680	1.0	600	680	210	
67-72-1	Hexachloroethane	U	380	1.0	330	380	110	
98-95-3	Nitrobenzene	U	380	1.0	330	380	100	
78-59-1	Isophorone	U	380	1.0	330	380	85	
88-75-5	2-Nitrophenol	U	680	1.0	600	680	190	
105-67-9	2,4-Dimethylphenol	U	570	1.0	500	570	190	
111-91-1	Bis(2-Chloroethoxy)methane	U	380	1.0	330	380	110	
120-83-2	2,4-Dichlorophenol	U	570	1.0	500	570	170	
106-47-8	4-Chloroaniline	U	570	1.0	500	570	140	
105-60-2	Caprolactam	U	570	1.0	500	570	160	
59-50-7	4-Chloro-3-Methylphenol	U	570	1.0	500	570	190	
88-06-2	2,4,6-Trichlorophenol	U	570	1.0	500	570	180	
95-95-4	2,4,5-Trichlorophenol	U	570	1.0	500	570	180	
91-58-7	2-Chloronaphthalene	U	380	1.0	330	380	99	
92-52-4	1,1'-Biphenyl	U	380	1.0	330	380	83	
88-74-4	2-Nitroaniline	U	570	1.0	500	570	85	
131-11-3	Dimethyl Phthalate	U	380	1.0	330	380	89	
606-20-2	2,6-Dinitrotoluene	U	380	1.0	330	380	90	
208-96-8	Acenaphthylene	U	380	1.0	330	380	80	
99-09-2	3-Nitroaniline	U	570	1.0	500	570	110	
83-32-9	Acenaphthene	U	380	1.0	330	380	74	
51-28-5	2,4-Dinitrophenol	U	1400	1.0	1200	1400	430	
132-64-9	Dibenzofuran	U	380	1.0	330	380	90	
100-02-7	4-Nitrophenol	U	1400	1.0	1200	1400	350	
121-14-2	2,4-Dinitrotoluene	U	380	1.0	330	380	97	
84-66-2	Diethylphthalate	J	92	1.0	330	380	91	
7005-72-3	4-Chlorophenyl-phenylether	U	380	1.0	330	380	89	
100-01-6	4-Nitroaniline	U	570	1.0	500	570	150	
534-52-1	4,6-Dinitro-2-Methylphenol	U	1400	1.0	1200	1400	380	
86-30-6	N-Nitrosodiphenylamine	U	750	1.0	660	750	250	
101-55-3	4-Bromophenyl-phenylether	U	380	1.0	330	380	97	
1912-24-9	Atrazine	U	380	1.0	330	380	100	
87-86-5	Pentachlorophenol	U	930	1.0	820	930	270	
120-12-7	Anthracene	U	380	1.0	330	380	96	
86-74-8	Carbazole	U	570	1.0	500	570	130	

lw
4/15/09

8

KATAHDIN ANALYTICAL SERVICES
Report of Analytical Results

Client: CH2MHill
Project: TO-009 Lejeune
PO No:
Sample Date: 01/07/09
Received Date: 01/09/09
Extraction Date: 01/12/09
Analysis Date: 25-JAN-2009 19:37
Report Date: 01/29/2009
Matrix: SOIL
% Solids: 87.8

Lab ID: SC0101-15
Client ID: MR08-SS249-09A
SDG: TO9-29
Extracted by: CB
Extraction Method: SW846 3550
Analyst: EKC
Analysis Method: SW846 8270C
Lab Prep Batch: WG59731
Units: ug/Kgdrywt

CAS#	Compound	Flags	Results	DF	PQL	Adj.PQL	Adj.MDL	
84-74-2	Di-n-butylphthalate	U	380	1.0	330	380	120	
85-68-7	Butylbenzylphthalate	~~U~~ UJ	380	1.0	330	380	100	CCH
91-94-1	3,3'-Dichlorobenzidine	U	570	1.0	500	570	130	
218-01-9	Chrysene		740	1.0	330	380	110	
117-81-7	bis(2-Ethylhexyl)phthalate	~~J~~ J	290	1.0	330	380	110	CCH
117-84-0	Di-n-octylphthalate	~~U~~ UJ	380	1.0	330	380	240	CCH
367-12-4	2-Fluorophenol		73%					
13127-88-3	Phenol-D6		81%					
4165-60-0	Nitrobenzene-D5		82%					
321-60-8	2-Fluorobiphenyl		84%					
118-79-6	2,4,6-Tribromophenol		78%					
1718-51-0	Terphenyl-D14		*136%					

MW 4/15/09

KATAHDIN ANALYTICAL SERVICES
Report of Analytical Results

Client: CH2MHill
Project: TO-009 Lejeune
PO No:
Sample Date: 01/07/09
Received Date: 01/09/09
Extraction Date: 01/12/09
Analysis Date: 25-JAN-2009 20:18
Report Date: 01/29/2009
Matrix: SOIL
% Solids: 88.3

Lab ID: SC0101-17
Client ID: MR08-SS249D-09A
SDG: TO9-29
Extracted by: CB
Extraction Method: SW846 3550
Analyst: EKC
Analysis Method: SW846 8270C
Lab Prep Batch: WG59731
Units: ug/Kgdrywt

CAS#	Compound	Flags	Results	DF	PQL	Adj.PQL	Adj.MDL	
100-52-7	Benzaldehyde	~~J~~ UJ	570	1.0	500	570	140	JCB
108-95-2	Phenol	U	570	1.0	500	570	180	
111-44-4	Bis(2-Chloroethyl)ether	U	370	1.0	330	370	92	
95-57-8	2-Chlorophenol	U	570	1.0	500	570	180	
95-48-7	2-Methylphenol	U	680	1.0	600	680	230	
108-60-1	2,2'-Oxybis(1-chloropropane)	~~J~~ UJ	370	1.0	330	370	100	CCH
98-86-2	Acetophenone	U	680	1.0	600	680	200	
621-64-7	N-Nitroso-di-n-propylamine	U	370	1.0	330	370	94	
65794-96-9	3&4-Methylphenol	U	680	1.0	600	680	210	
67-72-1	Hexachloroethane	U	370	1.0	330	370	110	
98-95-3	Nitrobenzene	U	370	1.0	330	370	100	
78-59-1	Isophorone	U	370	1.0	330	370	85	
88-75-5	2-Nitrophenol	U	680	1.0	600	680	190	
105-67-9	2,4-Dimethylphenol	U	570	1.0	500	570	190	
111-91-1	Bis(2-Chloroethoxy)methane	U	370	1.0	330	370	110	
120-83-2	2,4-Dichlorophenol	U	570	1.0	500	570	170	
106-47-8	4-Chloroaniline	U	570	1.0	500	570	130	
105-60-2	Caprolactam	U	570	1.0	500	570	160	
59-50-7	4-Chloro-3-Methylphenol	U	570	1.0	500	570	190	
88-06-2	2,4,6-Trichlorophenol	U	570	1.0	500	570	180	
95-95-4	2,4,5-Trichlorophenol	U	570	1.0	500	570	180	
91-58-7	2-Chloronaphthalene	U	370	1.0	330	370	98	
92-52-4	1,1'-Biphenyl	U	370	1.0	330	370	83	
88-74-4	2-Nitroaniline	U	570	1.0	500	570	85	
131-11-3	Dimethyl Phthalate	U	370	1.0	330	370	88	
606-20-2	2,6-Dinitrotoluene	U	370	1.0	330	370	89	
208-96-8	Acenaphthylene	U	370	1.0	330	370	79	
99-09-2	3-Nitroaniline	U	570	1.0	500	570	110	
83-32-9	Acenaphthene	U	370	1.0	330	370	74	
51-28-5	2,4-Dinitrophenol	U	1400	1.0	1200	1400	430	
132-64-9	Dibenzofuran	U	370	1.0	330	370	89	
100-02-7	4-Nitrophenol	U	1400	1.0	1200	1400	350	
121-14-2	2,4-Dinitrotoluene	U	370	1.0	330	370	96	
84-66-2	Diethylphthalate	J	92	1.0	330	370	90	
7005-72-3	4-Chlorophenyl-phenylether	U	370	1.0	330	370	88	
100-01-6	4-Nitroaniline	U	570	1.0	500	570	150	
534-52-1	4,6-Dinitro-2-Methylphenol	U	1400	1.0	1200	1400	380	
86-30-6	N-Nitrosodiphenylamine	U	750	1.0	660	750	250	
101-55-3	4-Bromophenyl-phenylether	U	370	1.0	330	370	96	
1912-24-9	Atrazine	U	370	1.0	330	370	100	
87-86-5	Pentachlorophenol	U	930	1.0	820	930	270	
120-12-7	Anthracene	U	370	1.0	330	370	95	
86-74-8	Carbazole	U	570	1.0	500	570	120	

lew 4/15/09

9

KATAHDIN ANALYTICAL SERVICES
Report of Analytical Results

Client: CH2MHill
Project: TO-009 Lejeune
PO No:
Sample Date: 01/07/09
Received Date: 01/09/09
Extraction Date: 01/12/09
Analysis Date: 25-JAN-2009 20:18
Report Date: 01/29/2009
Matrix: SOIL
% Solids: 88.3

Lab ID: SC0101-17
Client ID: MR08-SS249D-09A
SDG: TO9-29
Extracted by: CB
Extraction Method: SW846 3550
Analyst: EKC
Analysis Method: SW846 8270C
Lab Prep Batch: WG59731
Units: ug/Kgdrywt

CAS#	Compound	Flags	Results	DF	PQL	Adj.PQL	Adj.MDL	
84-74-2	Di-n-butylphthalate	U	370	1.0	330	370	110	
85-68-7	Butylbenzylphthalate	~~U~~ UJ	370	1.0	330	370	100	CCH
91-94-1	3,3'-Dichlorobenzidine	U	570	1.0	500	570	130	
218-01-9	Chrysene		800	1.0	330	370	110	
117-81-7	bis(2-Ethylhexyl)phthalate	J	420	1.0	330	370	110	CCH
117-84-0	Di-n-octylphthalate	~~U~~ UJ	370	1.0	330	370	240	CCH
367-12-4	2-Fluorophenol		66%					
13127-88-3	Phenol-D6		76%					
4165-60-0	Nitrobenzene-D5		75%					
321-60-8	2-Fluorobiphenyl		74%					
118-79-6	2,4,6-Tribromophenol		70%					
1718-51-0	Terphenyl-D14		115%					

MW 4/15/09

10

KATAHDIN ANALYTICAL SERVICES
Report of Analytical Results

Client: CH2MHill
Project: TO-009 Lejeune
PO No:
Sample Date: 01/07/09
Received Date: 01/09/09
Extraction Date: 01/12/09
Analysis Date: 25-JAN-2009 17:31
Report Date: 01/29/2009
Matrix: SOIL
% Solids: 90.4

Lab ID: SC0101-19
Client ID: MR08-IS249-5-6-09A
SDG: TO9-29
Extracted by: CB
Extraction Method: SW846 3550
Analyst: EKC
Analysis Method: SW846 8270C
Lab Prep Batch: WG59731
Units: ug/Kgdrywt

CAS#	Compound	Flags	Results	DF	PQL	Adj.PQL	Adj.MDL	
100-52-7	Benzaldehyde	~~U~~ UJ	550	1.0	500	550	130	JCB
108-95-2	Phenol	U	550	1.0	500	550	170	
111-44-4	Bis(2-Chloroethyl)ether	U	360	1.0	330	360	90	
95-57-8	2-Chlorophenol	U	550	1.0	500	550	180	
95-48-7	2-Methylphenol	U	660	1.0	600	660	220	
108-60-1	2,2'-Oxybis(1-chloropropane)	~~U~~ UJ	360	1.0	330	360	98	CCH
98-86-2	Acetophenone	U	660	1.0	600	660	200	
621-64-7	N-Nitroso-di-n-propylamine	U	360	1.0	330	360	92	
65794-96-9	3&4-Methylphenol	U	660	1.0	600	660	210	
67-72-1	Hexachloroethane	U	360	1.0	330	360	110	
98-95-3	Nitrobenzene	U	360	1.0	330	360	100	
78-59-1	Isophorone	U	360	1.0	330	360	83	
88-75-5	2-Nitrophenol	U	660	1.0	600	660	180	
105-67-9	2,4-Dimethylphenol	U	550	1.0	500	550	180	
111-91-1	Bis(2-Chloroethoxy)methane	U	360	1.0	330	360	110	
120-83-2	2,4-Dichlorophenol	U	550	1.0	500	550	160	
106-47-8	4-Chloroaniline	U	550	1.0	500	550	130	
105-60-2	Caprolactam	U	550	1.0	500	550	160	
59-50-7	4-Chloro-3-Methylphenol	U	550	1.0	500	550	180	
88-06-2	2,4,6-Trichlorophenol	U	550	1.0	500	550	170	
95-95-4	2,4,5-Trichlorophenol	U	550	1.0	500	550	170	
91-58-7	2-Chloronaphthalene	U	360	1.0	330	360	96	
92-52-4	1,1'-Biphenyl	U	360	1.0	330	360	81	
88-74-4	2-Nitroaniline	U	550	1.0	500	550	83	
131-11-3	Dimethyl Phthalate	U	360	1.0	330	360	86	
606-20-2	2,6-Dinitrotoluene	U	360	1.0	330	360	87	
208-96-8	Acenaphthylene	U	360	1.0	330	360	77	
99-09-2	3-Nitroaniline	U	550	1.0	500	550	100	
83-32-9	Acenaphthene	U	360	1.0	330	360	72	
51-28-5	2,4-Dinitrophenol	U	1300	1.0	1200	1300	420	
132-64-9	Dibenzofuran	U	360	1.0	330	360	87	
100-02-7	4-Nitrophenol	U	1300	1.0	1200	1300	340	
121-14-2	2,4-Dinitrotoluene	U	360	1.0	330	360	94	
84-66-2	Diethylphthalate	J	89	1.0	330	360	88	
7005-72-3	4-Chlorophenyl-phenylether	U	360	1.0	330	360	86	
100-01-6	4-Nitroaniline	U	550	1.0	500	550	150	
534-52-1	4,6-Dinitro-2-Methylphenol	U	1300	1.0	1200	1300	370	
86-30-6	N-Nitrosodiphenylamine	U	730	1.0	660	730	240	
101-55-3	4-Bromophenyl-phenylether	U	360	1.0	330	360	94	
1912-24-9	Atrazine	U	360	1.0	330	360	100	
87-86-5	Pentachlorophenol	U	910	1.0	820	910	260	
120-12-7	Anthracene	U	360	1.0	330	360	93	
86-74-8	Carbazole	U	550	1.0	500	550	120	

MW 4/15/09

10

KATAHDIN ANALYTICAL SERVICES
Report of Analytical Results

Client: CH2MHill
Project: TO-009 Lejeune
PO No:
Sample Date: 01/07/09
Received Date: 01/09/09
Extraction Date: 01/12/09
Analysis Date: 25-JAN-2009 17:31
Report Date: 01/29/2009
Matrix: SOIL
% Solids: 90.4

Lab ID: SC0101-19
Client ID: MR08-IS249-5-6-09A
SDG: TO9-29
Extracted by: CB
Extraction Method: SW846 3550
Analyst: EKC
Analysis Method: SW846 8270C
Lab Prep Batch: WG59731
Units: ug/Kgdrywt

CAS#	Compound	Flags	Results	DF	PQL	Adj.PQL	Adj.MDL	
84-74-2	Di-n-butylphthalate	U	360	1.0	330	360	110	
85-68-7	Butylbenzylphthalate	~~U~~ UJ	360	1.0	330	360	100	CCH
91-94-1	3,3'-Dichlorobenzidine	U	550	1.0	500	550	130	
218-01-9	Chrysene	U	360	1.0	330	360	100	
117-81-7	bis(2-Ethylhexyl)phthalate	~~J~~ J	150	1.0	330	360	110	CCH
117-84-0	Di-n-octylphthalate	~~U~~ UJ	360	1.0	330	360	230	CCH
367-12-4	2-Fluorophenol		58%					
13127-88-3	Phenol-D6		60%					
4165-60-0	Nitrobenzene-D5		63%					
321-60-8	2-Fluorobiphenyl		59%					
118-79-6	2,4,6-Tribromophenol		58%					
1718-51-0	Terphenyl-D14		90%					

KW 4/15/09

11

KATAHDIN ANALYTICAL SERVICES
Report of Analytical Results

Client: CH2MHill
Project: TO-009 Lejeune
PO No:
Sample Date: 01/07/09
Received Date: 01/09/09
Extraction Date: 01/12/09
Analysis Date: 25-JAN-2009 18:13
Report Date: 01/29/2009
Matrix: SOIL
% Solids: 89.9

Lab ID: SC0101-21
Client ID: MR08-IS249D-5-6-09A
SDG: TO9-29
Extracted by: CB
Extraction Method: SW846 3550
Analyst: EKC
Analysis Method: SW846 8270C
Lab Prep Batch: WG59731
Units: ug/Kgdrywt

CAS#	Compound	Flags	Results	DF	PQL	Adj.PQL	Adj.MDL	
100-52-7	Benzaldehyde	~~U~~ UJ	560	1.0	500	560	130	JCB
108-95-2	Phenol	U	560	1.0	500	560	170	
111-44-4	Bis(2-Chloroethyl)ether	U	370	1.0	330	370	90	
95-57-8	2-Chlorophenol	U	560	1.0	500	560	180	
95-48-7	2-Methylphenol	U	670	1.0	600	670	220	
108-60-1	2,2'-Oxybis(1-chloropropane)	~~U~~ UJ	370	1.0	330	370	99	CCH
98-86-2	Acetophenone	U	670	1.0	600	670	200	
621-64-7	N-Nitroso-di-n-propylamine	U	370	1.0	330	370	92	
65794-96-9	3&4-Methylphenol	U	670	1.0	600	670	210	
67-72-1	Hexachloroethane	U	370	1.0	330	370	110	
98-95-3	Nitrobenzene	U	370	1.0	330	370	100	
78-59-1	Isophorone	U	370	1.0	330	370	83	
88-75-5	2-Nitrophenol	U	670	1.0	600	670	180	
105-67-9	2,4-Dimethylphenol	U	560	1.0	500	560	180	
111-91-1	Bis(2-Chloroethoxy)methane	U	370	1.0	330	370	110	
120-83-2	2,4-Dichlorophenol	U	560	1.0	500	560	170	
106-47-8	4-Chloroaniline	U	560	1.0	500	560	130	
105-60-2	Caprolactam	U	560	1.0	500	560	160	
59-50-7	4-Chloro-3-Methylphenol	U	560	1.0	500	560	180	
88-06-2	2,4,6-Trichlorophenol	U	560	1.0	500	560	170	
95-95-4	2,4,5-Trichlorophenol	U	560	1.0	500	560	170	
91-58-7	2-Chloronaphthalene	U	370	1.0	330	370	97	
92-52-4	1,1'-Biphenyl	U	370	1.0	330	370	81	
88-74-4	2-Nitroaniline	U	560	1.0	500	560	83	
131-11-3	Dimethyl Phthalate	U	370	1.0	330	370	87	
606-20-2	2,6-Dinitrotoluene	U	370	1.0	330	370	88	
208-96-8	Acenaphthylene	U	370	1.0	330	370	78	
99-09-2	3-Nitroaniline	U	560	1.0	500	560	100	
83-32-9	Acenaphthene	U	370	1.0	330	370	72	
51-28-5	2,4-Dinitrophenol	U	1300	1.0	1200	1300	420	
132-64-9	Dibenzofuran	U	370	1.0	330	370	88	
100-02-7	4-Nitrophenol	U	1300	1.0	1200	1300	340	
121-14-2	2,4-Dinitrotoluene	U	370	1.0	330	370	94	
84-66-2	Diethylphthalate	J	90	1.0	330	370	89	
7005-72-3	4-Chlorophenyl-phenylether	U	370	1.0	330	370	87	
100-01-6	4-Nitroaniline	U	560	1.0	500	560	150	
534-52-1	4,6-Dinitro-2-Methylphenol	U	1300	1.0	1200	1300	380	
86-30-6	N-Nitrosodiphenylamine	U	730	1.0	660	730	240	
101-55-3	4-Bromophenyl-phenylether	U	370	1.0	330	370	94	
1912-24-9	Atrazine	U	370	1.0	330	370	100	
87-86-5	Pentachlorophenol	U	910	1.0	820	910	260	
120-12-7	Anthracene	U	370	1.0	330	370	93	
86-74-8	Carbazole	U	560	1.0	500	560	120	

Ler 4/15/09

11

KATAHDIN ANALYTICAL SERVICES
Report of Analytical Results

Client: CH2MHill
Project: TO-009 Lejeune
PO No:
Sample Date: 01/07/09
Received Date: 01/09/09
Extraction Date: 01/12/09
Analysis Date: 25-JAN-2009 18:13
Report Date: 01/29/2009
Matrix: SOIL
% Solids: 89.9

Lab ID: SC0101-21
Client ID: MR08-IS249D-5-6-09A
SDG: TO9-29
Extracted by: CB
Extraction Method: SW846 3550
Analyst: EKC
Analysis Method: SW846 8270C
Lab Prep Batch: WG59731
Units: ug/Kgdrywt

CAS#	Compound	Flags	Results	DF	PQL	Adj.PQL	Adj.MDL	
84-74-2	Di-n-butylphthalate	U	370	1.0	330	370	110	
85-68-7	Butylbenzylphthalate	~~U~~ UJ	370	1.0	330	370	100	CCH
91-94-1	3,3'-Dichlorobenzidine	U	560	1.0	500	560	130	
218-01-9	Chrysene	U	370	1.0	330	370	100	
117-81-7	bis(2-Ethylhexyl)phthalate	~~U~~ UJ	370	1.0	330	370	110	CCH
117-84-0	Di-n-octylphthalate	~~U~~ UJ	370	1.0	330	370	230	CCH
367-12-4	2-Fluorophenol		58%					
13127-88-3	Phenol-D6		64%					
4165-60-0	Nitrobenzene-D5		65%					
321-60-8	2-Fluorobiphenyl		63%					
118-79-6	2,4,6-Tribromophenol		60%					
1718-51-0	Terphenyl-D14		95%					

lw
4/15/09

12

KATAHDIN ANALYTICAL SERVICES
Report of Analytical Results

Client: CH2MHill
Project: TO-009 Lejeune
PO No:
Sample Date: 01/07/09
Received Date: 01/09/09
Extraction Date: 01/12/09
Analysis Date: 25-JAN-2009 21:00
Report Date: 01/29/2009
Matrix: SOIL
% Solids: 89.4

Lab ID: SC0101-23
Client ID: MR08-SS248-09A
SDG: TO9-29
Extracted by: CB
Extraction Method: SW846 3550
Analyst: EKC
Analysis Method: SW846 8270C
Lab Prep Batch: WG59731
Units: ug/Kgdrywt

CAS#	Compound	Flags	Results	DF	PQL	Adj.PQL	Adj.MDL	
100-52-7	Benzaldehyde	~~U~~ UJ	560	1.0	500	560	130	ICB
108-95-2	Phenol	U	560	1.0	500	560	170	
111-44-4	Bis(2-Chloroethyl)ether	U	370	1.0	330	370	90	
95-57-8	2-Chlorophenol	U	560	1.0	500	560	180	
95-48-7	2-Methylphenol	U	670	1.0	600	670	220	
108-60-1	2,2'-Oxybis(1-chloropropane)	~~U~~ UJ	370	1.0	330	370	100	CCH
98-86-2	Acetophenone	U	670	1.0	600	670	200	
621-64-7	N-Nitroso-di-n-propylamine	U	370	1.0	330	370	93	
65794-96-9	3&4-Methylphenol	U	670	1.0	600	670	210	
67-72-1	Hexachloroethane	U	370	1.0	330	370	110	
98-95-3	Nitrobenzene	U	370	1.0	330	370	100	
78-59-1	Isophorone	U	370	1.0	330	370	84	
88-75-5	2-Nitrophenol	U	670	1.0	600	670	190	
105-67-9	2,4-Dimethylphenol	U	560	1.0	500	560	180	
111-91-1	Bis(2-Chloroethoxy)methane	U	370	1.0	330	370	110	
120-83-2	2,4-Dichlorophenol	U	560	1.0	500	560	170	
106-47-8	4-Chloroaniline	U	560	1.0	500	560	130	
105-60-2	Caprolactam	U	560	1.0	500	560	160	
59-50-7	4-Chloro-3-Methylphenol	U	560	1.0	500	560	180	
88-06-2	2,4,6-Trichlorophenol	U	560	1.0	500	560	170	
95-95-4	2,4,5-Trichlorophenol	U	560	1.0	500	560	170	
91-58-7	2-Chloronaphthalene	U	370	1.0	330	370	97	
92-52-4	1,1'-Biphenyl	U	370	1.0	330	370	82	
88-74-4	2-Nitroaniline	U	560	1.0	500	560	84	
131-11-3	Dimethyl Phthalate	U	370	1.0	330	370	87	
606-20-2	2,6-Dinitrotoluene	U	370	1.0	330	370	88	
208-96-8	Acenaphthylene	U	370	1.0	330	370	78	
99-09-2	3-Nitroaniline	U	560	1.0	500	560	100	
83-32-9	Acenaphthene	U	370	1.0	330	370	73	
51-28-5	2,4-Dinitrophenol	U	1300	1.0	1200	1300	420	
132-64-9	Dibenzofuran	U	370	1.0	330	370	88	
100-02-7	4-Nitrophenol	U	1300	1.0	1200	1300	340	
121-14-2	2,4-Dinitrotoluene	U	370	1.0	330	370	95	
84-66-2	Diethylphthalate	J	90	1.0	330	370	89	
7005-72-3	4-Chlorophenyl-phenylether	U	370	1.0	330	370	87	
100-01-6	4-Nitroaniline	U	560	1.0	500	560	150	
534-52-1	4,6-Dinitro-2-Methylphenol	U	1300	1.0	1200	1300	380	
86-30-6	N-Nitrosodiphenylamine	U	740	1.0	660	740	240	
101-55-3	4-Bromophenyl-phenylether	U	370	1.0	330	370	95	
1912-24-9	Atrazine	U	370	1.0	330	370	100	
87-86-5	Pentachlorophenol	U	920	1.0	820	920	260	
120-12-7	Anthracene	U	370	1.0	330	370	94	
86-74-8	Carbazole	U	560	1.0	500	560	120	

fcw 4/15/09

12

KATAHDIN ANALYTICAL SERVICES
Report of Analytical Results

Client: CH2MHill
Project: TO-009 Lejeune
PO No:
Sample Date: 01/07/09
Received Date: 01/09/09
Extraction Date: 01/12/09
Analysis Date: 25-JAN-2009 21:00
Report Date: 01/29/2009
Matrix: SOIL
% Solids: 89.4

Lab ID: SC0101-23
Client ID: MR08-SS248-09A
SDG: TO9-29
Extracted by: CB
Extraction Method: SW846 3550
Analyst: EKC
Analysis Method: SW846 8270C
Lab Prep Batch: WG59731
Units: ug/Kgdrywt

CAS#	Compound	Flags	Results	DF	PQL	Adj.PQL	Adj.MDL	
84-74-2	Di-n-butylphthalate	U	370	1.0	330	370	110	
85-68-7	Butylbenzylphthalate	~~U~~ UJ	370	1.0	330	370	100	CCH
91-94-1	3,3'-Dichlorobenzidine	U	560	1.0	500	560	130	
218-01-9	Chrysene		590	1.0	330	370	110	
117-81-7	bis(2-Ethylhexyl)phthalate	~~J~~ J	310	1.0	330	370	110	CCH
117-84-0	Di-n-octylphthalate	~~U~~ UJ	370	1.0	330	370	240	CCH
367-12-4	2-Fluorophenol		66%					
13127-88-3	Phenol-D6		77%					
4165-60-0	Nitrobenzene-D5		78%					
321-60-8	2-Fluorobiphenyl		77%					
118-79-6	2,4,6-Tribromophenol		73%					
1718-51-0	Terphenyl-D14		*133%					

MW 4/15/09

KATAHDIN ANALYTICAL SERVICES
Report of Analytical Results

Client: CH2MHill
Project: TO-009 Lejeune
PO No:
Sample Date: 01/07/09
Received Date: 01/09/09
Extraction Date: 01/12/09
Analysis Date: 25-JAN-2009 18:55
Report Date: 01/29/2009
Matrix: SOIL
% Solids: 87.9

Lab ID: SC0101-25
Client ID: MR08-IS248-5-6-09A
SDG: TO9-29
Extracted by: CB
Extraction Method: SW846 3550
Analyst: EKC
Analysis Method: SW846 8270C
Lab Prep Batch: WG59731
Units: ug/Kgdrywt

CAS#	Compound	Flags	Results	DF	PQL	Adj.PQL	Adj.MDL	
100-52-7	Benzaldehyde	~~U~~ UJ	570	1.0	500	570	140	JCB
108-95-2	Phenol	U	570	1.0	500	570	180	
111-44-4	Bis(2-Chloroethyl)ether	U	380	1.0	330	380	92	
95-57-8	2-Chlorophenol	U	570	1.0	500	570	190	
95-48-7	2-Methylphenol	U	680	1.0	600	680	230	
108-60-1	2,2'-Oxybis(1-chloropropane)	~~U~~ UJ	380	1.0	330	380	100	CCH
98-86-2	Acetophenone	U	680	1.0	600	680	200	
621-64-7	N-Nitroso-di-n-propylamine	U	380	1.0	330	380	94	
65794-96-9	3&4-Methylphenol	U	680	1.0	600	680	210	
67-72-1	Hexachloroethane	U	380	1.0	330	380	110	
98-95-3	Nitrobenzene	U	380	1.0	330	380	100	
78-59-1	Isophorone	U	380	1.0	330	380	85	
88-75-5	2-Nitrophenol	U	680	1.0	600	680	190	
105-67-9	2,4-Dimethylphenol	U	570	1.0	500	570	190	
111-91-1	Bis(2-Chloroethoxy)methane	U	380	1.0	330	380	110	
120-83-2	2,4-Dichlorophenol	U	570	1.0	500	570	170	
106-47-8	4-Chloroaniline	U	570	1.0	500	570	140	
105-60-2	Caprolactam	U	570	1.0	500	570	160	
59-50-7	4-Chloro-3-Methylphenol	U	570	1.0	500	570	190	
88-06-2	2,4,6-Trichlorophenol	U	570	1.0	500	570	180	
95-95-4	2,4,5-Trichlorophenol	U	570	1.0	500	570	180	
91-58-7	2-Chloronaphthalene	U	380	1.0	330	380	99	
92-52-4	1,1'-Biphenyl	U	380	1.0	330	380	83	
88-74-4	2-Nitroaniline	U	570	1.0	500	570	85	
131-11-3	Dimethyl Phthalate	U	380	1.0	330	380	89	
606-20-2	2,6-Dinitrotoluene	U	380	1.0	330	380	90	
208-96-8	Acenaphthylene	U	380	1.0	330	380	80	
99-09-2	3-Nitroaniline	U	570	1.0	500	570	110	
83-32-9	Acenaphthene	U	380	1.0	330	380	74	
51-28-5	2,4-Dinitrophenol	U	1400	1.0	1200	1400	430	
132-64-9	Dibenzofuran	U	380	1.0	330	380	90	
100-02-7	4-Nitrophenol	U	1400	1.0	1200	1400	350	
121-14-2	2,4-Dinitrotoluene	U	380	1.0	330	380	97	
84-66-2	Diethylphthalate	J	91	1.0	330	380	91	
7005-72-3	4-Chlorophenyl-phenylether	U	380	1.0	330	380	89	
100-01-6	4-Nitroaniline	U	570	1.0	500	570	150	
534-52-1	4,6-Dinitro-2-Methylphenol	U	1400	1.0	1200	1400	380	
86-30-6	N-Nitrosodiphenylamine	U	750	1.0	660	750	250	
101-55-3	4-Bromophenyl-phenylether	U	380	1.0	330	380	97	
1912-24-9	Atrazine	U	380	1.0	330	380	100	
87-86-5	Pentachlorophenol	U	930	1.0	820	930	270	
120-12-7	Anthracene	U	380	1.0	330	380	96	
86-74-8	Carbazole	U	570	1.0	500	570	130	

bw
4/15/09

13

KATAHDIN ANALYTICAL SERVICES
Report of Analytical Results

Client: CH2MHill
Project: TO-009 Lejeune
PO No:
Sample Date: 01/07/09
Received Date: 01/09/09
Extraction Date: 01/12/09
Analysis Date: 25-JAN-2009 18:55
Report Date: 01/29/2009
Matrix: SOIL
% Solids: 87.9

Lab ID: SC0101-25
Client ID: MR08-IS248-5-6-09A
SDG: TO9-29
Extracted by: CB
Extraction Method: SW846 3550
Analyst: EKC
Analysis Method: SW846 8270C
Lab Prep Batch: WG59731
Units: ug/Kgdrywt

CAS#	Compound	Flags	Results	DF	PQL	Adj.PQL	Adj.MDL	
84-74-2	Di-n-butylphthalate	U	380	1.0	330	380	110	
85-68-7	Butylbenzylphthalate	~~U~~ UJ	380	1.0	330	380	100	CCH
91-94-1	3,3'-Dichlorobenzidine	U	570	1.0	500	570	130	
218-01-9	Chrysene	U	380	1.0	330	380	110	
117-81-7	bis(2-Ethylhexyl)phthalate	~~U~~ UJ	380	1.0	330	380	110	CCH
117-84-0	Di-n-octylphthalate	~~U~~ UJ	380	1.0	330	380	240	CCH
367-12-4	2-Fluorophenol		67%					
13127-88-3	Phenol-D6		72%					
4165-60-0	Nitrobenzene-D5		77%					
321-60-8	2-Fluorobiphenyl		80%					
118-79-6	2,4,6-Tribromophenol		66%					
1718-51-0	Terphenyl-D14		103%					

MW
4/15/09

KATAHDIN ANALYTICAL SERVICES
Report of Analytical Results

Client: CH2MHill
Project: TO-009 Lejeune
PO No:
Sample Date: 01/07/09
Received Date: 01/09/09
Extraction Date: 01/12/09
Analysis Date: 25-JAN-2009 21:42
Report Date: 01/29/2009
Matrix: SOIL
% Solids: 90.1

Lab ID: SC0101-27
Client ID: MR08-SS250-09A
SDG: TO9-29
Extracted by: CB
Extraction Method: SW846 3550
Analyst: EKC
Analysis Method: SW846 8270C
Lab Prep Batch: WG59731
Units: ug/Kgdrywt

CAS#	Compound	Flags	Results	DF	PQL	Adj.PQL	Adj.MDL
100-52-7	Benzaldehyde	~~J~~ UJ	550	1.0	500	550	130 ICB
108-95-2	Phenol	U	550	1.0	500	550	170
111-44-4	Bis(2-Chloroethyl)ether	U	370	1.0	330	370	90
95-57-8	2-Chlorophenol	U	550	1.0	500	550	180
95-48-7	2-Methylphenol	U	660	1.0	600	660	220
108-60-1	2,2'-Oxybis(1-chloropropane)	~~J~~ UJ	370	1.0	330	370	99 CCH
98-86-2	Acetophenone	U	660	1.0	600	660	200
621-64-7	N-Nitroso-di-n-propylamine	U	370	1.0	330	370	92
65794-96-9	3&4-Methylphenol	U	660	1.0	600	660	210
67-72-1	Hexachloroethane	U	370	1.0	330	370	110
98-95-3	Nitrobenzene	U	370	1.0	330	370	100
78-59-1	Isophorone	U	370	1.0	330	370	83
88-75-5	2-Nitrophenol	U	660	1.0	600	660	180
105-67-9	2,4-Dimethylphenol	U	550	1.0	500	550	180
111-91-1	Bis(2-Chloroethoxy)methane	U	370	1.0	330	370	110
120-83-2	2,4-Dichlorophenol	U	550	1.0	500	550	170
106-47-8	4-Chloroaniline	U	550	1.0	500	550	130
105-60-2	Caprolactam	U	550	1.0	500	550	160
59-50-7	4-Chloro-3-Methylphenol	U	550	1.0	500	550	180
88-06-2	2,4,6-Trichlorophenol	U	550	1.0	500	550	170
95-95-4	2,4,5-Trichlorophenol	U	550	1.0	500	550	170
91-58-7	2-Chloronaphthalene	U	370	1.0	330	370	96
92-52-4	1,1'-Biphenyl	U	370	1.0	330	370	81
88-74-4	2-Nitroaniline	U	550	1.0	500	550	83
131-11-3	Dimethyl Phthalate	U	370	1.0	330	370	86
606-20-2	2,6-Dinitrotoluene	U	370	1.0	330	370	88
208-96-8	Acenaphthylene	U	370	1.0	330	370	78
99-09-2	3-Nitroaniline	U	550	1.0	500	550	100
83-32-9	Acenaphthene	U	370	1.0	330	370	72
51-28-5	2,4-Dinitrophenol	U	1300	1.0	1200	1300	420
132-64-9	Dibenzofuran	U	370	1.0	330	370	88
100-02-7	4-Nitrophenol	U	1300	1.0	1200	1300	340
121-14-2	2,4-Dinitrotoluene	U	370	1.0	330	370	94
84-66-2	Diethylphthalate	J	90	1.0	330	370	89
7005-72-3	4-Chlorophenyl-phenylether	U	370	1.0	330	370	86
100-01-6	4-Nitroaniline	U	550	1.0	500	550	150
534-52-1	4,6-Dinitro-2-Methylphenol	U	1300	1.0	1200	1300	370
86-30-6	N-Nitrosodiphenylamine	U	730	1.0	660	730	240
101-55-3	4-Bromophenyl-phenylether	U	370	1.0	330	370	94
1912-24-9	Atrazine	U	370	1.0	330	370	100
87-86-5	Pentachlorophenol	U	910	1.0	820	910	260
120-12-7	Anthracene	U	370	1.0	330	370	93
86-74-8	Carbazole	U	550	1.0	500	550	120

QW
4/15/09

KATAHDIN ANALYTICAL SERVICES
Report of Analytical Results

Client: CH2MHill
Project: TO-009 Lejeune
PO No:
Sample Date: 01/07/09
Received Date: 01/09/09
Extraction Date: 01/12/09
Analysis Date: 25-JAN-2009 21:42
Report Date: 01/29/2009
Matrix: SOIL
% Solids: 90.1

Lab ID: SC0101-27
Client ID: MR08-SS250-09A
SDG: TO9-29
Extracted by: CB
Extraction Method: SW846 3550
Analyst: EKC
Analysis Method: SW846 8270C
Lab Prep Batch: WG59731
Units: ug/Kgdrywt

CAS#	Compound	Flags	Results	DF	PQL	Adj.PQL	Adj.MDL	
84-74-2	Di-n-butylphthalate	U	370	1.0	330	370	110	
85-68-7	Butylbenzylphthalate	~~U~~ UJ	370	1.0	330	370	100	CCH
91-94-1	3,3'-Dichlorobenzidine	U	550	1.0	500	550	130	
218-01-9	Chrysene		530	1.0	330	370	100	
117-81-7	bis(2-Ethylhexyl)phthalate	~~U~~ UJ	370	1.0	330	370	110	CCH
117-84-0	Di-n-octylphthalate	~~U~~ UJ	370	1.0	330	370	230	CCH
367-12-4	2-Fluorophenol		68%					
13127-88-3	Phenol-D6		75%					
4165-60-0	Nitrobenzene-D5		76%					
321-60-8	2-Fluorobiphenyl		77%					
118-79-6	2,4,6-Tribromophenol		73%					
1718-51-0	Terphenyl-D14		122%					

MW
4/15/09

KATAHDIN ANALYTICAL SERVICES
Report of Analytical Results

Client: CH2MHill
Project: TO-009 Lejeune
PO No:
Sample Date: 01/07/09
Received Date: 01/09/09
Extraction Date: 01/12/09
Analysis Date: 27-JAN-2009 12:02
Report Date: 01/29/2009
Matrix: SOIL
% Solids: 89.6

Lab ID: SC0101-29
Client ID: MR08-IS250-5-6-09A
SDG: TO9-29
Extracted by: CB
Extraction Method: SW846 3550
Analyst: JCG
Analysis Method: SW846 8270C
Lab Prep Batch: WG59731
Units: ug/Kgdrywt

CAS#	Compound	Flags	Results	DF	PQL	Adj.PQL	Adj.MDL	
100-52-7	Benzaldehyde	U	560	1.0	500	560	130	
108-95-2	Phenol	U	560	1.0	500	560	170	
111-44-4	Bis(2-Chloroethyl)ether	U	370	1.0	330	370	90	
95-57-8	2-Chlorophenol	U	560	1.0	500	560	180	
95-48-7	2-Methylphenol	U	670	1.0	600	670	220	
108-60-1	2,2'-Oxybis(1-chloropropane)	U	370	1.0	330	370	99	
98-86-2	Acetophenone	U	670	1.0	600	670	200	
621-64-7	N-Nitroso-di-n-propylamine	U	370	1.0	330	370	93	
65794-96-9	3&4-Methylphenol	U	670	1.0	600	670	210	
67-72-1	Hexachloroethane	U	370	1.0	330	370	110	
98-95-3	Nitrobenzene	U	370	1.0	330	370	100	
78-59-1	Isophorone	U	370	1.0	330	370	84	
88-75-5	2-Nitrophenol	U	670	1.0	600	670	190	
105-67-9	2,4-Dimethylphenol	U	560	1.0	500	560	180	
111-91-1	Bis(2-Chloroethoxy)methane	U	370	1.0	330	370	110	
120-83-2	2,4-Dichlorophenol	U	560	1.0	500	560	170	
106-47-8	4-Chloroaniline	U	560	1.0	500	560	130	
105-60-2	Caprolactam	U	560	1.0	500	560	160	
59-50-7	4-Chloro-3-Methylphenol	U	560	1.0	500	560	180	
88-06-2	2,4,6-Trichlorophenol	U	560	1.0	500	560	170	
95-95-4	2,4,5-Trichlorophenol	U	560	1.0	500	560	170	
91-58-7	2-Chloronaphthalene	U	370	1.0	330	370	97	
92-52-4	1,1'-Biphenyl	U	370	1.0	330	370	82	
88-74-4	2-Nitroaniline	U	560	1.0	500	560	84	
131-11-3	Dimethyl Phthalate	U	370	1.0	330	370	87	
606-20-2	2,6-Dinitrotoluene	U	370	1.0	330	370	88	
208-96-8	Acenaphthylene	U	370	1.0	330	370	78	
99-09-2	3-Nitroaniline	U	560	1.0	500	560	100	
83-32-9	Acenaphthene	U	370	1.0	330	370	72	
51-28-5	2,4-Dinitrophenol	U	1300	1.0	1200	1300	420	
132-64-9	Dibenzofuran	U	370	1.0	330	370	88	
100-02-7	4-Nitrophenol	~~U~~ UJ	1300	1.0	1200	1300	340	CCH
121-14-2	2,4-Dinitrotoluene	U	370	1.0	330	370	95	
84-66-2	Diethylphthalate	U	370	1.0	330	370	89	
7005-72-3	4-Chlorophenyl-phenylether	U	370	1.0	330	370	87	
100-01-6	4-Nitroaniline	U	560	1.0	500	560	150	
534-52-1	4,6-Dinitro-2-Methylphenol	U	1300	1.0	1200	1300	380	
86-30-6	N-Nitrosodiphenylamine	U	740	1.0	660	740	240	
101-55-3	4-Bromophenyl-phenylether	U	370	1.0	330	370	95	
1912-24-9	Atrazine	U	370	1.0	330	370	100	
87-86-5	Pentachlorophenol	U	920	1.0	820	920	260	
120-12-7	Anthracene	U	370	1.0	330	370	94	
86-74-8	Carbazole	U	560	1.0	500	560	120	

RW
4/15/09

KATAHDIN ANALYTICAL SERVICES
Report of Analytical Results

Client: CH2MHill
Project: TO-009 Lejeune
PO No:
Sample Date: 01/07/09
Received Date: 01/09/09
Extraction Date: 01/12/09
Analysis Date: 27-JAN-2009 12:02
Report Date: 01/29/2009
Matrix: SOIL
% Solids: 89.6

Lab ID: SC0101-29
Client ID: MR08-IS250-5-6-09A
SDG: TO9-29
Extracted by: CB
Extraction Method: SW846 3550
Analyst: JCG
Analysis Method: SW846 8270C
Lab Prep Batch: WG59731
Units: ug/Kgdrywt

CAS#	Compound	Flags	Results	DF	PQL	Adj.PQL	Adj.MDL
84-74-2	Di-n-butylphthalate	U	370	1.0	330	370	110
85-68-7	Butylbenzylphthalate	U	370	1.0	330	370	100
91-94-1	3,3'-Dichlorobenzidine	U	560	1.0	500	560	130
218-01-9	Chrysene	U	370	1.0	330	370	110
117-81-7	bis(2-Ethylhexyl)phthalate		950	1.0	330	370	110
117-84-0	Di-n-octylphthalate	U	370	1.0	330	370	240
367-12-4	2-Fluorophenol		55%				
13127-88-3	Phenol-D6		69%				
4165-60-0	Nitrobenzene-D5		66%				
321-60-8	2-Fluorobiphenyl		63%				
118-79-6	2,4,6-Tribromophenol		39%				
1718-51-0	Terphenyl-D14		80%				

MW 4/15/09

16

KATAHDIN ANALYTICAL SERVICES
Report of Analytical Results

Client: CH2MHill
Project: TO-009 Lejeune
PO No:
Sample Date: 01/07/09
Received Date: 01/09/09
Extraction Date: 01/12/09
Analysis Date: 28-JAN-2009 05:45
Report Date: 01/29/2009
Matrix: SOIL
% Solids: 92.1

Lab ID: SC0101-31
Client ID: MR08-SS257-09A
SDG: TO9-29
Extracted by: CB
Extraction Method: SW846 3550
Analyst: JCG
Analysis Method: SW846 8270C
Lab Prep Batch: WG59731
Units: ug/Kgdrywt

CAS#	Compound	Flags	Results	DF	PQL	Adj.PQL	Adj.MDL	
100-52-7	Benzaldehyde	U	540	1.0	500	540	130	
108-95-2	Phenol	U	540	1.0	500	540	170	
111-44-4	Bis(2-Chloroethyl)ether	U	360	1.0	330	360	88	
95-57-8	2-Chlorophenol	U	540	1.0	500	540	180	
95-48-7	2-Methylphenol	U	650	1.0	600	650	220	
108-60-1	2,2'-Oxybis(1-chloropropane)	U	360	1.0	330	360	97	
98-86-2	Acetophenone	U	650	1.0	600	650	190	
621-64-7	N-Nitroso-di-n-propylamine	U	360	1.0	330	360	90	
65794-96-9	3&4-Methylphenol	U	650	1.0	600	650	200	
67-72-1	Hexachloroethane	U	360	1.0	330	360	100	
98-95-3	Nitrobenzene	U	360	1.0	330	360	99	
78-59-1	Isophorone	U	360	1.0	330	360	81	
88-75-5	2-Nitrophenol	U	650	1.0	600	650	180	
105-67-9	2,4-Dimethylphenol	U	540	1.0	500	540	180	
111-91-1	Bis(2-Chloroethoxy)methane	U	360	1.0	330	360	100	
120-83-2	2,4-Dichlorophenol	U	540	1.0	500	540	160	
106-47-8	4-Chloroaniline	U	540	1.0	500	540	130	
105-60-2	Caprolactam	U	540	1.0	500	540	160	
59-50-7	4-Chloro-3-Methylphenol	U	540	1.0	500	540	180	
88-06-2	2,4,6-Trichlorophenol	U	540	1.0	500	540	170	
95-95-4	2,4,5-Trichlorophenol	U	540	1.0	500	540	170	
91-58-7	2-Chloronaphthalene	U	360	1.0	330	360	94	
92-52-4	1,1'-Biphenyl	U	360	1.0	330	360	79	
88-74-4	2-Nitroaniline	U	540	1.0	500	540	81	
131-11-3	Dimethyl Phthalate	U	360	1.0	330	360	85	
606-20-2	2,6-Dinitrotoluene	U	360	1.0	330	360	86	
208-96-8	Acenaphthylene	U	360	1.0	330	360	76	
99-09-2	3-Nitroaniline	U	540	1.0	500	540	100	
83-32-9	Acenaphthene	J	86	1.0	330	360	70	
51-28-5	2,4-Dinitrophenol	U	1300	1.0	1200	1300	410	
132-64-9	Dibenzofuran	U	360	1.0	330	360	86	
100-02-7	4-Nitrophenol	~~U~~ UJ	1300	1.0	1200	1300	340	CCH
121-14-2	2,4-Dinitrotoluene	U	360	1.0	330	360	92	
84-66-2	Diethylphthalate	U	360	1.0	330	360	87	
7005-72-3	4-Chlorophenyl-phenylether	U	360	1.0	330	360	85	
100-01-6	4-Nitroaniline	U	540	1.0	500	540	140	
534-52-1	4,6-Dinitro-2-Methylphenol	U	1300	1.0	1200	1300	360	
86-30-6	N-Nitrosodiphenylamine	U	720	1.0	660	720	240	
101-55-3	4-Bromophenyl-phenylether	U	360	1.0	330	360	92	
1912-24-9	Atrazine	U	360	1.0	330	360	99	
87-86-5	Pentachlorophenol	U	890	1.0	820	890	260	
120-12-7	Anthracene	U	360	1.0	330	360	91	
86-74-8	Carbazole	U	540	1.0	500	540	120	

lw 4/15/09

KATAHDIN ANALYTICAL SERVICES
Report of Analytical Results

Client: CH2MHill
Project: TO-009 Lejeune
PO No:
Sample Date: 01/07/09
Received Date: 01/09/09
Extraction Date: 01/12/09
Analysis Date: 28-JAN-2009 05:45
Report Date: 01/29/2009
Matrix: SOIL
% Solids: 92.1

Lab ID: SC0101-31
Client ID: MR08-SS257-09A
SDG: TO9-29
Extracted by: CB
Extraction Method: SW846 3550
Analyst: JCG
Analysis Method: SW846 8270C
Lab Prep Batch: WG59731
Units: ug/Kgdrywt

CAS#	Compound	Flags	Results	DF	PQL	Adj.PQL	Adj.MDL
84-74-2	Di-n-butylphthalate	U	360	1.0	330	360	110
85-68-7	Butylbenzylphthalate	U	360	1.0	330	360	100
91-94-1	3,3'-Dichlorobenzidine	U	540	1.0	500	540	120
218-01-9	Chrysene	J	280	1.0	330	360	100
117-81-7	bis(2-Ethylhexyl)phthalate	J	160	1.0	330	360	110
117-84-0	Di-n-octylphthalate	U	360	1.0	330	360	230
367-12-4	2-Fluorophenol		67%				
13127-88-3	Phenol-D6		81%				
4165-60-0	Nitrobenzene-D5		66%				
321-60-8	2-Fluorobiphenyl		73%				
118-79-6	2,4,6-Tribromophenol		54%				
1718-51-0	Terphenyl-D14		87%				

lw
4/15/09

KATAHDIN ANALYTICAL SERVICES
Report of Analytical Results

Client: CH2MHill
Project: TO-009 Lejeune
PO No:
Sample Date: 01/07/09
Received Date: 01/09/09
Extraction Date: 01/12/09
Analysis Date: 28-JAN-2009 05:03
Report Date: 01/29/2009
Matrix: SOIL
% Solids: 87.8

Lab ID: SC0101-33
Client ID: MR08-IS257-9-10-09A
SDG: TO9-29
Extracted by: CB
Extraction Method: SW846 3550
Analyst: JCG
Analysis Method: SW846 8270C
Lab Prep Batch: WG59731
Units: ug/Kgdrywt

CAS#	Compound	Flags	Results	DF	PQL	Adj.PQL	Adj.MDL	
100-52-7	Benzaldehyde	U	570	1.0	500	570	140	
108-95-2	Phenol	U	570	1.0	500	570	180	
111-44-4	Bis(2-Chloroethyl)ether	U	380	1.0	330	380	92	
95-57-8	2-Chlorophenol	U	570	1.0	500	570	190	
95-48-7	2-Methylphenol	U	680	1.0	600	680	230	
108-60-1	2,2'-Oxybis(1-chloropropane)	U	380	1.0	330	380	100	
98-86-2	Acetophenone	U	680	1.0	600	680	200	
621-64-7	N-Nitroso-di-n-propylamine	U	380	1.0	330	380	94	
65794-96-9	3&4-Methylphenol	U	680	1.0	600	680	210	
67-72-1	Hexachloroethane	U	380	1.0	330	380	110	
98-95-3	Nitrobenzene	U	380	1.0	330	380	100	
78-59-1	Isophorone	U	380	1.0	330	380	85	
88-75-5	2-Nitrophenol	U	680	1.0	600	680	190	
105-67-9	2,4-Dimethylphenol	U	570	1.0	500	570	190	
111-91-1	Bis(2-Chloroethoxy)methane	U	380	1.0	330	380	110	
120-83-2	2,4-Dichlorophenol	U	570	1.0	500	570	170	
106-47-8	4-Chloroaniline	U	570	1.0	500	570	140	
105-60-2	Caprolactam	U	570	1.0	500	570	160	
59-50-7	4-Chloro-3-Methylphenol	U	570	1.0	500	570	190	
88-06-2	2,4,6-Trichlorophenol	U	570	1.0	500	570	180	
95-95-4	2,4,5-Trichlorophenol	U	570	1.0	500	570	180	
91-58-7	2-Chloronaphthalene	U	380	1.0	330	380	99	
92-52-4	1,1'-Biphenyl	U	380	1.0	330	380	83	
88-74-4	2-Nitroaniline	U	570	1.0	500	570	85	
131-11-3	Dimethyl Phthalate	U	380	1.0	330	380	89	
606-20-2	2,6-Dinitrotoluene	U	380	1.0	330	380	90	
208-96-8	Acenaphthylene	U	380	1.0	330	380	80	
99-09-2	3-Nitroaniline	U	570	1.0	500	570	110	
83-32-9	Acenaphthene	U	380	1.0	330	380	74	
51-28-5	2,4-Dinitrophenol	U	1400	1.0	1200	1400	430	
132-64-9	Dibenzofuran	U	380	1.0	330	380	90	
100-02-7	4-Nitrophenol	~~U~~ UJ	1400	1.0	1200	1400	350	CCH
121-14-2	2,4-Dinitrotoluene	U	380	1.0	330	380	97	
84-66-2	Diethylphthalate	U	380	1.0	330	380	91	
7005-72-3	4-Chlorophenyl-phenylether	U	380	1.0	330	380	89	
100-01-6	4-Nitroaniline	U	570	1.0	500	570	150	
534-52-1	4,6-Dinitro-2-Methylphenol	U	1400	1.0	1200	1400	380	
86-30-6	N-Nitrosodiphenylamine	U	750	1.0	660	750	250	
101-55-3	4-Bromophenyl-phenylether	U	380	1.0	330	380	97	
1912-24-9	Atrazine	U	380	1.0	330	380	100	
87-86-5	Pentachlorophenol	U	930	1.0	820	930	270	
120-12-7	Anthracene	U	380	1.0	330	380	96	
86-74-8	Carbazole	U	570	1.0	500	570	130	

MW 4/15/09

KATAHDIN ANALYTICAL SERVICES
Report of Analytical Results

Client: CH2MHill
Project: TO-009 Lejeune
PO No:
Sample Date: 01/07/09
Received Date: 01/09/09
Extraction Date: 01/12/09
Analysis Date: 28-JAN-2009 05:03
Report Date: 01/29/2009
Matrix: SOIL
% Solids: 87.8

Lab ID: SC0101-33
Client ID: MR08-IS257-9-10-09A
SDG: TO9-29
Extracted by: CB
Extraction Method: SW846 3550
Analyst: JCG
Analysis Method: SW846 8270C
Lab Prep Batch: WG59731
Units: ug/Kgdrywt

CAS#	Compound	Flags	Results	DF	PQL	Adj.PQL	Adj.MDL
84-74-2	Di-n-butylphthalate	U	380	1.0	330	380	110
85-68-7	Butylbenzylphthalate	U	380	1.0	330	380	100
91-94-1	3,3'-Dichlorobenzidine	U	570	1.0	500	570	130
218-01-9	Chrysene	U	380	1.0	330	380	110
117-81-7	bis(2-Ethylhexyl)phthalate	U	380	1.0	330	380	110
117-84-0	Di-n-octylphthalate	U	380	1.0	330	380	240
367-12-4	2-Fluorophenol		59%				
13127-88-3	Phenol-D6		74%				
4165-60-0	Nitrobenzene-D5		69%				
321-60-8	2-Fluorobiphenyl		62%				
118-79-6	2,4,6-Tribromophenol		46%				
1718-51-0	Terphenyl-D14		73%				

RW
4/15/09

KATAHDIN ANALYTICAL SERVICES
Report of Analytical Results

Client: CH2MHill
Project: TO-009 Lejeune
PO No:
Sample Date: 01/07/09
Received Date: 01/09/09
Extraction Date: 01/12/09
Analysis Date: 28-JAN-2009 06:27
Report Date: 01/29/2009
Matrix: SOIL
% Solids: 95.0

Lab ID: SC0101-35
Client ID: MR08-SS258-09A
SDG: TO9-29
Extracted by: CB
Extraction Method: SW846 3550
Analyst: JCG
Analysis Method: SW846 8270C
Lab Prep Batch: WG59731
Units: ug/Kgdrywt

CAS#	Compound	Flags	Results	DF	PQL	Adj.PQL	Adj.MDL	
100-52-7	Benzaldehyde	U	530	1.0	500	530	130	
108-95-2	Phenol	U	530	1.0	500	530	160	
111-44-4	Bis(2-Chloroethyl)ether	U	350	1.0	330	350	85	
95-57-8	2-Chlorophenol	U	530	1.0	500	530	170	
95-48-7	2-Methylphenol	U	630	1.0	600	630	210	
108-60-1	2,2'-Oxybis(1-chloropropane)	U	350	1.0	330	350	94	
98-86-2	Acetophenone	U	630	1.0	600	630	190	
621-64-7	N-Nitroso-di-n-propylamine	U	350	1.0	330	350	87	
65794-96-9	3&4-Methylphenol	U	630	1.0	600	630	200	
67-72-1	Hexachloroethane	U	350	1.0	330	350	100	
98-95-3	Nitrobenzene	U	350	1.0	330	350	96	
78-59-1	Isophorone	U	350	1.0	330	350	79	
88-75-5	2-Nitrophenol	U	630	1.0	600	630	180	
105-67-9	2,4-Dimethylphenol	U	530	1.0	500	530	170	
111-91-1	Bis(2-Chloroethoxy)methane	U	350	1.0	330	350	100	
120-83-2	2,4-Dichlorophenol	U	530	1.0	500	530	160	
106-47-8	4-Chloroaniline	U	530	1.0	500	530	120	
105-60-2	Caprolactam	U	530	1.0	500	530	150	
59-50-7	4-Chloro-3-Methylphenol	U	530	1.0	500	530	170	
88-06-2	2,4,6-Trichlorophenol	U	530	1.0	500	530	160	
95-95-4	2,4,5-Trichlorophenol	U	530	1.0	500	530	160	
91-58-7	2-Chloronaphthalene	U	350	1.0	330	350	92	
92-52-4	1,1'-Biphenyl	J	79	1.0	330	350	77	
88-74-4	2-Nitroaniline	U	530	1.0	500	530	79	
131-11-3	Dimethyl Phthalate	U	350	1.0	330	350	82	
606-20-2	2,6-Dinitrotoluene	U	350	1.0	330	350	83	
208-96-8	Acenaphthylene	U	350	1.0	330	350	74	
99-09-2	3-Nitroaniline	U	530	1.0	500	530	99	
83-32-9	Acenaphthene	J	100	1.0	330	350	68	
51-28-5	2,4-Dinitrophenol	U	1300	1.0	1200	1300	400	
132-64-9	Dibenzofuran	U	350	1.0	330	350	83	
100-02-7	4-Nitrophenol	~~U~~ UJ	1300	1.0	1200	1300	320	CCH
121-14-2	2,4-Dinitrotoluene	U	350	1.0	330	350	89	
84-66-2	Diethylphthalate	U	350	1.0	330	350	84	
7005-72-3	4-Chlorophenyl-phenylether	U	350	1.0	330	350	82	
100-01-6	4-Nitroaniline	U	530	1.0	500	530	140	
534-52-1	4,6-Dinitro-2-Methylphenol	U	1300	1.0	1200	1300	350	
86-30-6	N-Nitrosodiphenylamine	U	690	1.0	660	690	230	
101-55-3	4-Bromophenyl-phenylether	U	350	1.0	330	350	89	
1912-24-9	Atrazine	U	350	1.0	330	350	96	
87-86-5	Pentachlorophenol	U	860	1.0	820	860	250	
120-12-7	Anthracene	U	350	1.0	330	350	88	
86-74-8	Carbazole	U	530	1.0	500	530	120	

lw
4/15/09

KATAHDIN ANALYTICAL SERVICES
Report of Analytical Results

Client: CH2MHill
Project: TO-009 Lejeune
PO No:
Sample Date: 01/07/09
Received Date: 01/09/09
Extraction Date: 01/12/09
Analysis Date: 28-JAN-2009 06:27
Report Date: 01/29/2009
Matrix: SOIL
% Solids: 95.0

Lab ID: SC0101-35
Client ID: MR08-SS258-09A
SDG: TO9-29
Extracted by: CB
Extraction Method: SW846 3550
Analyst: JCG
Analysis Method: SW846 8270C
Lab Prep Batch: WG59731
Units: ug/Kgdrywt

CAS#	Compound	Flags	Results	DF	PQL	Adj.PQL	Adj.MDL
84-74-2	Di-n-butylphthalate	U	350	1.0	330	350	110
85-68-7	Butylbenzylphthalate	U	350	1.0	330	350	98
91-94-1	3,3'-Dichlorobenzidine	U	530	1.0	500	530	120
218-01-9	Chrysene	J	210	1.0	330	350	100
117-81-7	bis(2-Ethylhexyl)phthalate	J	130	1.0	330	350	100
117-84-0	Di-n-octylphthalate	U	350	1.0	330	350	220
367-12-4	2-Fluorophenol		60%				
13127-88-3	Phenol-D6		72%				
4165-60-0	Nitrobenzene-D5		59%				
321-60-8	2-Fluorobiphenyl		64%				
118-79-6	2,4,6-Tribromophenol		41%				
1718-51-0	Terphenyl-D14		76%				

LW
4/15/09

KATAHDIN ANALYTICAL SERVICES
Report of Analytical Results

19

Client: CH2MHill
Project: TO-009 Lejeune
PO No:
Sample Date: 01/07/09
Received Date: 01/09/09
Extraction Date: 01/12/09
Analysis Date: 27-JAN-2009 14:51
Report Date: 01/29/2009
Matrix: SOIL
% Solids: 89.0

Lab ID: SC0101-37
Client ID: MR08-IS258-9-10-09A
SDG: TO9-29
Extracted by: CB
Extraction Method: SW846 3550
Analyst: JCG
Analysis Method: SW846 8270C
Lab Prep Batch: WG59731
Units: ug/Kgdrywt

CAS#	Compound	Flags	Results	DF	PQL	Adj.PQL	Adj.MDL	
100-52-7	Benzaldehyde	U	560	1.0	500	560	130	
108-95-2	Phenol	U	560	1.0	500	560	180	
111-44-4	Bis(2-Chloroethyl)ether	U	370	1.0	330	370	91	
95-57-8	2-Chlorophenol	U	560	1.0	500	560	180	
95-48-7	2-Methylphenol	U	670	1.0	600	670	220	
108-60-1	2,2'-Oxybis(1-chloropropane)	U	370	1.0	330	370	100	
98-86-2	Acetophenone	U	670	1.0	600	670	200	
621-64-7	N-Nitroso-di-n-propylamine	U	370	1.0	330	370	93	
65794-96-9	3&4-Methylphenol	U	670	1.0	600	670	210	
67-72-1	Hexachloroethane	U	370	1.0	330	370	110	
98-95-3	Nitrobenzene	U	370	1.0	330	370	100	
78-59-1	Isophorone	U	370	1.0	330	370	84	
88-75-5	2-Nitrophenol	U	670	1.0	600	670	190	
105-67-9	2,4-Dimethylphenol	U	560	1.0	500	560	180	
111-91-1	Bis(2-Chloroethoxy)methane	U	370	1.0	330	370	110	
120-83-2	2,4-Dichlorophenol	U	560	1.0	500	560	170	
106-47-8	4-Chloroaniline	U	560	1.0	500	560	130	
105-60-2	Caprolactam	U	560	1.0	500	560	160	
59-50-7	4-Chloro-3-Methylphenol	U	560	1.0	500	560	190	
88-06-2	2,4,6-Trichlorophenol	U	560	1.0	500	560	170	
95-95-4	2,4,5-Trichlorophenol	U	560	1.0	500	560	170	
91-58-7	2-Chloronaphthalene	U	370	1.0	330	370	98	
92-52-4	1,1'-Biphenyl	U	370	1.0	330	370	82	
88-74-4	2-Nitroaniline	U	560	1.0	500	560	84	
131-11-3	Dimethyl Phthalate	U	370	1.0	330	370	88	
606-20-2	2,6-Dinitrotoluene	U	370	1.0	330	370	89	
208-96-8	Acenaphthylene	U	370	1.0	330	370	79	
99-09-2	3-Nitroaniline	U	560	1.0	500	560	100	
83-32-9	Acenaphthene	U	370	1.0	330	370	73	
51-28-5	2,4-Dinitrophenol	U	1300	1.0	1200	1300	420	
132-64-9	Dibenzofuran	U	370	1.0	330	370	89	
100-02-7	4-Nitrophenol	~~U~~ UJ	1300	1.0	1200	1300	350	CCH
121-14-2	2,4-Dinitrotoluene	U	370	1.0	330	370	96	
84-66-2	Diethylphthalate	U	370	1.0	330	370	90	
7005-72-3	4-Chlorophenyl-phenylether	U	370	1.0	330	370	88	
100-01-6	4-Nitroaniline	U	560	1.0	500	560	150	
534-52-1	4,6-Dinitro-2-Methylphenol	U	1300	1.0	1200	1300	380	
86-30-6	N-Nitrosodiphenylamine	U	740	1.0	660	740	250	
101-55-3	4-Bromophenyl-phenylether	U	370	1.0	330	370	96	
1912-24-9	Atrazine	U	370	1.0	330	370	100	
87-86-5	Pentachlorophenol	U	920	1.0	820	920	270	
120-12-7	Anthracene	U	370	1.0	330	370	94	
86-74-8	Carbazole	U	560	1.0	500	560	120	

MW
4/15/09

KATAHDIN ANALYTICAL SERVICES
Report of Analytical Results

Client: CH2MHill
Project: TO-009 Lejeune
PO No:
Sample Date: 01/07/09
Received Date: 01/09/09
Extraction Date: 01/12/09
Analysis Date: 27-JAN-2009 14:51
Report Date: 01/29/2009
Matrix: SOIL
% Solids: 89.0

Lab ID: SC0101-37
Client ID: MR08-IS258-9-10-09A
SDG: TO9-29
Extracted by: CB
Extraction Method: SW846 3550
Analyst: JCG
Analysis Method: SW846 8270C
Lab Prep Batch: WG59731
Units: ug/Kgdrywt

CAS#	Compound	Flags	Results	DF	PQL	Adj.PQL	Adj.MDL
84-74-2	Di-n-butylphthalate	U	370	1.0	330	370	110
85-68-7	Butylbenzylphthalate	U	370	1.0	330	370	100
91-94-1	3,3'-Dichlorobenzidine	U	560	1.0	500	560	130
218-01-9	Chrysene	U	370	1.0	330	370	110
117-81-7	bis(2-Ethylhexyl)phthalate	U	370	1.0	330	370	110
117-84-0	Di-n-octylphthalate	U	370	1.0	330	370	240
367-12-4	2-Fluorophenol		52%				
13127-88-3	Phenol-D6		59%				
4165-60-0	Nitrobenzene-D5		50%				
321-60-8	2-Fluorobiphenyl		46%				
118-79-6	2,4,6-Tribromophenol		46%				
1718-51-0	Terphenyl-D14		74%				

MW 4/15/09

KATAHDIN ANALYTICAL SERVICES
Report of Analytical Results

Client: CH2MHill
Project: TO-009 Lejeune
PO No:
Sample Date: 01/07/09
Received Date: 01/09/09
Extraction Date: 01/12/09
Analysis Date: 27-JAN-2009 15:33
Report Date: 01/29/2009
Matrix: SOIL
% Solids: 94.2

Lab ID: SC0101-39
Client ID: MR08-SS273-09A
SDG: TO9-29
Extracted by: CB
Extraction Method: SW846 3550
Analyst: JCG
Analysis Method: SW846 8270C
Lab Prep Batch: WG59731
Units: ug/Kgdrywt

CAS#	Compound	Flags	Results	DF	PQL	Adj.PQL	Adj.MDL	
100-52-7	Benzaldehyde	U	530	1.0	500	530	130	
108-95-2	Phenol	U	530	1.0	500	530	160	
111-44-4	Bis(2-Chloroethyl)ether	U	350	1.0	330	350	86	
95-57-8	2-Chlorophenol	U	530	1.0	500	530	170	
95-48-7	2-Methylphenol	U	640	1.0	600	640	210	
108-60-1	2,2'-Oxybis(1-chloropropane)	U	350	1.0	330	350	94	
98-86-2	Acetophenone	U	640	1.0	600	640	190	
621-64-7	N-Nitroso-di-n-propylamine	U	350	1.0	330	350	88	
65794-96-9	3&4-Methylphenol	U	640	1.0	600	640	200	
67-72-1	Hexachloroethane	U	350	1.0	330	350	100	
98-95-3	Nitrobenzene	U	350	1.0	330	350	96	
78-59-1	Isophorone	U	350	1.0	330	350	80	
88-75-5	2-Nitrophenol	U	640	1.0	600	640	180	
105-67-9	2,4-Dimethylphenol	U	530	1.0	500	530	180	
111-91-1	Bis(2-Chloroethoxy)methane	U	350	1.0	330	350	100	
120-83-2	2,4-Dichlorophenol	U	530	1.0	500	530	160	
106-47-8	4-Chloroaniline	U	530	1.0	500	530	130	
105-60-2	Caprolactam	U	530	1.0	500	530	150	
59-50-7	4-Chloro-3-Methylphenol	U	530	1.0	500	530	180	
88-06-2	2,4,6-Trichlorophenol	U	530	1.0	500	530	160	
95-95-4	2,4,5-Trichlorophenol	U	530	1.0	500	530	160	
91-58-7	2-Chloronaphthalene	U	350	1.0	330	350	92	
92-52-4	1,1'-Biphenyl	U	350	1.0	330	350	77	
88-74-4	2-Nitroaniline	U	530	1.0	500	530	80	
131-11-3	Dimethyl Phthalate	U	350	1.0	330	350	83	
606-20-2	2,6-Dinitrotoluene	U	350	1.0	330	350	84	
208-96-8	Acenaphthylene	U	350	1.0	330	350	74	
99-09-2	3-Nitroaniline	U	530	1.0	500	530	100	
83-32-9	Acenaphthene	J	84	1.0	330	350	69	
51-28-5	2,4-Dinitrophenol	U	1300	1.0	1200	1300	400	
132-64-9	Dibenzofuran	U	350	1.0	330	350	84	
100-02-7	4-Nitrophenol	~~U~~ UJ	1300	1.0	1200	1300	330	CCH
121-14-2	2,4-Dinitrotoluene	U	350	1.0	330	350	90	
84-66-2	Diethylphthalate	U	350	1.0	330	350	85	
7005-72-3	4-Chlorophenyl-phenylether	U	350	1.0	330	350	83	
100-01-6	4-Nitroaniline	U	530	1.0	500	530	140	
534-52-1	4,6-Dinitro-2-Methylphenol	U	1300	1.0	1200	1300	360	
86-30-6	N-Nitrosodiphenylamine	U	700	1.0	660	700	230	
101-55-3	4-Bromophenyl-phenylether	U	350	1.0	330	350	90	
1912-24-9	Atrazine	U	350	1.0	330	350	96	
87-86-5	Pentachlorophenol	U	870	1.0	820	870	250	
120-12-7	Anthracene	U	350	1.0	330	350	89	
86-74-8	Carbazole	U	530	1.0	500	530	120	

RW 4/15/09

KATAHDIN ANALYTICAL SERVICES
Report of Analytical Results

Client: CH2MHill
Project: TO-009 Lejeune
PO No:
Sample Date: 01/07/09
Received Date: 01/09/09
Extraction Date: 01/12/09
Analysis Date: 27-JAN-2009 15:33
Report Date: 01/29/2009
Matrix: SOIL
% Solids: 94.2

Lab ID: SC0101-39
Client ID: MR08-SS273-09A
SDG: TO9-29
Extracted by: CB
Extraction Method: SW846 3550
Analyst: JCG
Analysis Method: SW846 8270C
Lab Prep Batch: WG59731
Units: ug/Kgdrywt

CAS#	Compound	Flags	Results	DF	PQL	Adj.PQL	Adj.MDL
84-74-2	Di-n-butylphthalate	U	350	1.0	330	350	110
85-68-7	Butylbenzylphthalate	U	350	1.0	330	350	99
91-94-1	3,3'-Dichlorobenzidine	U	530	1.0	500	530	120
218-01-9	Chrysene	U	350	1.0	330	350	100
117-81-7	bis(2-Ethylhexyl)phthalate	J	110	1.0	330	350	100
117-84-0	Di-n-octylphthalate	U	350	1.0	330	350	220
367-12-4	2-Fluorophenol		53%				
13127-88-3	Phenol-D6		72%				
4165-60-0	Nitrobenzene-D5		64%				
321-60-8	2-Fluorobiphenyl		61%				
118-79-6	2,4,6-Tribromophenol		* 33%				
1718-51-0	Terphenyl-D14		99%				

MW 4/15/09

ENVIRONMENTAL
Data Services, Inc.

POLYNUCLEAR AROMATIC COMPOUNDS BY 8270SIM

USEPA Region IV - Level IV Review

Site: MCB Camp Lejeune, TO-09 SDG #: TO9-30

Client: CH2M HILL, Inc., Virginia Beach, Virginia Date: April 15, 2009

Laboratory: Katahdin Analytical Services, Scarborough, Maine Reviewer: Nancy Weaver

EDS ID	Client Sample ID	Laboratory Sample ID	Matrix
1	MR08-IS225-2-3-09A	SC0102-2	Soil
1MS	MR08-IS225-2-3-09AMS	SC0102-2MS	Soil
1MSD	MR08-IS225-2-3-09AMSD	SC0102-2MSD	Soil
2	MR08-IS273-8-9-09A	SC0102-4	Soil
3	MR08-SS274-09A	SC0102-6	Soil
4	MR08-IS274-9-10-09A	SC0102-8	Soil
5	MR08-SS281-09A	SC0127-2	Soil
6	MR08-IS281-9-10-09A	SC0127-4	Soil
7	MR08-SS282-09A	SC0127-6	Soil
8	MR08-IS282-9-10-09A	SC0127-8	Soil
9	MR08-SS297-09A	SC0127-10	Soil
10	MR08-IS297-6-7-09A	SC0127-12	Soil
11	MR08-SS298-09A	SC0127-14	Soil
12	MR08-IS298-6-7-09A	SC0127-16	Soil
13	MR08-SS305-09A	SC0127-18	Soil
14	MR08-IS305-6-7-09A	SC0127-20	Soil
15	MR08-SS306-09A	SC0127-22	Soil
16	MR08-IS306-5-6-09A	SC0127-24	Soil
17	MR08-SS206-09A	SC0127-26	Soil
17DL	MR08-SS206-09ADL	SC0127-26DL	Soil
18	MR08-IS206-6-7-09A	SC0127-28	Soil
19	MR08-SS207-09A	SC0127-30	Soil
19DL	MR08-SS207-09ADL	SC0127-30DL	Soil
20	MR08-IS207-6-7-09A	SC0127-32	Soil

The USEPA "Contract Laboratory Program National Functional Guidelines for Organic Data Review," October 1999, and professional judgment were used in evaluating the data in this summary report.

Holding Times - All samples were extracted within 14 days for soil samples and analyzed within 40 days for all samples.

GC/MS Tuning - All of the DFTPP tunes in the initial and continuing calibrations met the percent relative abundance criteria.

Initial Calibration - The initial calibrations exhibited acceptable %RSD and mean RRF values.

Continuing Calibration - The continuing calibrations exhibited acceptable %D and RRF values except the following.

CCAL Date	Compound	%D/RRF	Qualifier	Affected Samples
01/22/09	Dibenzo (a, h) anthracene	31.45%	J/UJ	1-4, 20
	Hexachlorobenzene	26.56%	J/UJ	1-4, 20
01/24/09	2-Methylnaphthalene	28.62%	J/UJ	5, 7, 9, 11, 12, 14, 16, 18
	Fluoranthene	29.05%	J/UJ	5, 7, 9, 11, 12, 14, 16, 18
	Hexachlorocyclopentadiene	29.56%	J/UJ	5, 7, 9, 11, 12, 14, 16, 18
01/25/09	Benzo (b) fluoranthene	30.56%	J/UJ	13, 15

Surrogates - All samples exhibited acceptable surrogate recoveries.

MS/MSD - The MS/MSD sample exhibited acceptable %R and RPD values.

Laboratory Control Sample - The LCS samples exhibited acceptable %R values except the following.

LCS ID	Compound	%R	Qualifier	Affected Samples
WG59786-LCS	Naphthalene	107%	None	All ND

Internal Standard (IS) Area Performance - All internal standards met response and retention time (RT) criteria.

Method Blank - The method blanks were free of contamination.

Field, Equipment Blank - Field QC results are summarized below.

Blank ID	Compound	Conc. ug/L	Action Level ug/kg	Qualifier	Affected Samples
MR08-FB0101109	None - ND	-	-	-	-
MR08-EB01010709-SS	Phenanthrene	0.060	10	U	7, 15

Field Duplicates - Field duplicates samples were not analyzed.

Compound Quantitation - Several samples exhibited high concentrations of target compounds and were flagged (E) by the laboratory. The samples were diluted and reanalyzed and the dilution results for these compounds should be used for reporting.

KATAHDIN ANALYTICAL SERVICES
Report of Analytical Results

Client: CH2MHill
Project: TO-009 Lejeune
PO No:
Sample Date: 01/07/09
Received Date: 01/09/09
Extraction Date: 01/13/09
Analysis Date: 22-JAN-2009 13:58
Report Date: 01/30/2009
Matrix: SOIL
% Solids: 88.6

Lab ID: SC0102-2
Client ID: 08-IS225-2-3-09A
SDG: TO9-30
Extracted by: AC
Extraction Method: SW846 3550
Analyst: JLP
Analysis Method: SW846 M8270C
Lab Prep Batch: WG59751
Units: ug/Kgdrywt

CAS#	Compound	Flags	Results	DF	PQL	Adj.PQL	Adj.MDL	
91-20-3	Naphthalene	U	11	1.0	10	11	2.9	
91-57-6	2-Methylnaphthalene	U	11	1.0	10	11	2.5	
86-73-7	Fluorene	U	11	1.0	10	11	3.6	
85-01-8	Phenanthrene	U	11	1.0	10	11	2.0	
206-44-0	Fluoranthene	U	11	1.0	10	11	2.0	
129-00-0	Pyrene	U	11	1.0	10	11	2.4	
56-55-3	Benzo(a)anthracene	U	11	1.0	10	11	2.1	
205-99-2	Benzo(b)fluoranthene	U	11	1.0	10	11	2.7	
207-08-9	Benzo(k)fluoranthene	U	11	1.0	10	11	3.5	
50-32-8	Benzo(a)pyrene	U	11	1.0	10	11	3.7	
193-39-5	Indeno(1,2,3-cd)pyrene	U	11	1.0	10	11	2.1	
53-70-3	Dibenzo(a,h)anthracene	~~U~~ UJ	11	1.0	10	11	2.0	CCH
191-24-2	Benzo(g,h,i)perylene	U	11	1.0	10	11	2.2	
118-74-1	Hexachlorobenzene	~~U~~ UJ	11	1.0	10	11	2.0	CCH
87-68-3	Hexachlorobutadiene	U	11	1.0	10	11	2.6	
77-47-4	Hexachlorocyclopentadiene	U	11	1.0	10	11	1.7	
7297-45-2	2-Methylnaphthalene-D10		114%					
367-12-4	2,4-Dibromophenol		82%					
81103-79-9	Fluorene-d10		86%					
1718-51-1	Pyrene-D10		86%					

LW 4/15/09

2

KATAHDIN ANALYTICAL SERVICES
Report of Analytical Results

Client: CH2MHill
Project: TO-009 Lejeune
PO No:
Sample Date: 01/07/09
Received Date: 01/09/09
Extraction Date: 01/13/09
Analysis Date: 22-JAN-2009 14:38
Report Date: 01/30/2009
Matrix: SOIL
% Solids: 88.6

Lab ID: SC0102-4
Client ID: MR08-IS273-8-9-09A
SDG: TO9-30
Extracted by: AC
Extraction Method: SW846 3550
Analyst: JLP
Analysis Method: SW846 M8270C
Lab Prep Batch: WG59751
Units: ug/Kgdrywt

CAS#	Compound	Flags	Results	DF	PQL	Adj.PQL	Adj.MDL
91-20-3	Naphthalene	U	11	1.0	10	11	2.9
91-57-6	2-Methylnaphthalene	U	11	1.0	10	11	2.5
86-73-7	Fluorene	U	11	1.0	10	11	3.6
85-01-8	Phenanthrene	J	3.1	1.0	10	11	2.0
206-44-0	Fluoranthene	J	2.5	1.0	10	11	2.0
129-00-0	Pyrene	U	11	1.0	10	11	2.4
56-55-3	Benzo(a)anthracene	U	11	1.0	10	11	2.1
205-99-2	Benzo(b)fluoranthene	U	11	1.0	10	11	2.7
207-08-9	Benzo(k)fluoranthene	U	11	1.0	10	11	3.5
50-32-8	Benzo(a)pyrene	U	11	1.0	10	11	3.7
193-39-5	Indeno(1,2,3-cd)pyrene	U	11	1.0	10	11	2.1
53-70-3	Dibenzo(a,h)anthracene	~~U~~ UJ	11	1.0	10	11	2.0 CCH
191-24-2	Benzo(g,h,i)perylene	U	11	1.0	10	11	2.2
118-74-1	Hexachlorobenzene	~~U~~ UJ	11	1.0	10	11	2.0 CCH
87-68-3	Hexachlorobutadiene	U	11	1.0	10	11	2.6
77-47-4	Hexachlorocyclopentadiene	U	11	1.0	10	11	1.7
7297-45-2	2-Methylnaphthalene-D10		112%				
367-12-4	2,4-Dibromophenol		75%				
81103-79-9	Fluorene-d10		85%				
1718-51-1	Pyrene-D10		90%				

LW 01/15/09

3

KATAHDIN ANALYTICAL SERVICES
Report of Analytical Results

Client: CH2MHill
Project: TO-009 Lejeune
PO No:
Sample Date: 01/07/09
Received Date: 01/09/09
Extraction Date: 01/13/09
Analysis Date: 22-JAN-2009 15:58
Report Date: 01/30/2009
Matrix: SOIL
% Solids: 95.1

Lab ID: SC0102-6
Client ID: MR08-SS274-09A
SDG: TO9-30
Extracted by: AC
Extraction Method: SW846 3550
Analyst: JLP
Analysis Method: SW846 M8270C
Lab Prep Batch: WG59751
Units: ug/Kgdrywt

CAS#	Compound	Flags	Results	DF	PQL	Adj.PQL	Adj.MDL	
91-20-3	Naphthalene	U	10	1.0	10	10	2.7	
91-57-6	2-Methylnaphthalene	U	10	1.0	10	10	2.3	
86-73-7	Fluorene	U	10	1.0	10	10	3.4	
85-01-8	Phenanthrene		37	1.0	10	10	1.9	
206-44-0	Fluoranthene		89	1.0	10	10	1.9	
129-00-0	Pyrene		70	1.0	10	10	2.2	
56-55-3	Benzo(a)anthracene		38	1.0	10	10	2.0	
205-99-2	Benzo(b)fluoranthene		76	1.0	10	10	2.5	
207-08-9	Benzo(k)fluoranthene		70	1.0	10	10	3.2	
50-32-8	Benzo(a)pyrene		43	1.0	10	10	3.5	
193-39-5	Indeno(1,2,3-cd)pyrene		32	1.0	10	10	2.0	
53-70-3	Dibenzo(a,h)anthracene	~~J~~ UJ	10	1.0	10	10	1.9	CCH
191-24-2	Benzo(g,h,i)perylene		31	1.0	10	10	2.1	
118-74-1	Hexachlorobenzene	~~J~~ UJ	10	1.0	10	10	1.9	CCH
87-68-3	Hexachlorobutadiene	U	10	1.0	10	10	2.4	
77-47-4	Hexachlorocyclopentadiene	U	10	1.0	10	10	1.6	
7297-45-2	2-Methylnaphthalene-D10		109%					
367-12-4	2,4-Dibromophenol		69%					
81103-79-9	Fluorene-d10		96%					
1718-51-1	Pyrene-D10		91%					

LW 4/15/09

4

KATAHDIN ANALYTICAL SERVICES
Report of Analytical Results

Client: CH2MHill
Project: TO-009 Lejeune
PO No:
Sample Date: 01/07/09
Received Date: 01/09/09
Extraction Date: 01/13/09
Analysis Date: 22-JAN-2009 15:18
Report Date: 01/30/2009
Matrix: SOIL
% Solids: 93.7

Lab ID: SC0102-8
Client ID: MR08-IS274-9-10-09A
SDG: TO9-30
Extracted by: AC
Extraction Method: SW846 3550
Analyst: JLP
Analysis Method: SW846 M8270C
Lab Prep Batch: WG59751
Units: ug/Kgdrywt

CAS#	Compound	Flags	Results	DF	PQL	Adj.PQL	Adj.MDL	
91-20-3	Naphthalene	U	11	1.0	10	11	2.8	
91-57-6	2-Methylnaphthalene	U	11	1.0	10	11	2.3	
86-73-7	Fluorene	U	11	1.0	10	11	3.4	
85-01-8	Phenanthrene		15	1.0	10	11	1.9	
206-44-0	Fluoranthene		18	1.0	10	11	1.9	
129-00-0	Pyrene	J	10	1.0	10	11	2.2	
56-55-3	Benzo(a)anthracene	J	4.7	1.0	10	11	2.0	
205-99-2	Benzo(b)fluoranthene		14	1.0	10	11	2.6	
207-08-9	Benzo(k)fluoranthene	J	8.0	1.0	10	11	3.3	
50-32-8	Benzo(a)pyrene	J	6.8	1.0	10	11	3.5	
193-39-5	Indeno(1,2,3-cd)pyrene	J	5.3	1.0	10	11	2.0	
53-70-3	Dibenzo(a,h)anthracene	~~U~~ UJ	11	1.0	10	11	1.9	CCH
191-24-2	Benzo(g,h,i)perylene	J	6.6	1.0	10	11	2.1	
118-74-1	Hexachlorobenzene	~~U~~ UJ	11	1.0	10	11	1.9	CCH
87-68-3	Hexachlorobutadiene	U	11	1.0	10	11	2.4	
77-47-4	Hexachlorocyclopentadiene	U	11	1.0	10	11	1.6	
7297-45-2	2-Methylnaphthalene-D10		110%					
367-12-4	2,4-Dibromophenol		93%					
81103-79-9	Fluorene-d10		98%					
1718-51-1	Pyrene-D10		87%					

MW 4/15/09

5

KATAHDIN ANALYTICAL SERVICES
Report of Analytical Results

Client: CH2MHill
Project: TO-009 Lejeune
PO No:
Sample Date: 01/08/09
Received Date: 01/10/09
Extraction Date: 01/13/09
Analysis Date: 24-JAN-2009 21:19
Report Date: 01/30/2009
Matrix: SOIL
% Solids: 96.7

Lab ID: SC0127-2
Client ID: MR08-SS281-09A
SDG: TO9-30
Extracted by: AC
Extraction Method: SW846 3550
Analyst: JCG
Analysis Method: SW846 M8270C
Lab Prep Batch: WG59751
Units: ug/Kgdrywt

CAS#	Compound	Flags	Results	DF	PQL	Adj.PQL	Adj.MDL	
91-20-3	Naphthalene	U	10	1.0	10	10	2.7	
91-57-6	2-Methylnaphthalene	~~U~~ UJ	10	1.0	10	10	2.3	CCH
86-73-7	Fluorene	J	4.4	1.0	10	10	3.3	
85-01-8	Phenanthrene		40	1.0	10	10	1.9	
206-44-0	Fluoranthene	J	42	1.0	10	10	1.9	CCH
129-00-0	Pyrene		53	1.0	10	10	2.2	
56-55-3	Benzo(a)anthracene		15	1.0	10	10	2.0	
205-99-2	Benzo(b)fluoranthene	U	10	1.0	10	10	2.5	
207-08-9	Benzo(k)fluoranthene	U	10	1.0	10	10	3.2	
50-32-8	Benzo(a)pyrene	U	10	1.0	10	10	3.4	
193-39-5	Indeno(1,2,3-cd)pyrene		11	1.0	10	10	2.0	
53-70-3	Dibenzo(a,h)anthracene	U	10	1.0	10	10	1.9	
191-24-2	Benzo(g,h,i)perylene	J	9.9	1.0	10	10	2.1	
118-74-1	Hexachlorobenzene	U	10	1.0	10	10	1.9	
87-68-3	Hexachlorobutadiene	U	10	1.0	10	10	2.4	
77-47-4	Hexachlorocyclopentadiene	~~U~~ UJ	10	1.0	10	10	1.6	CCH
7297-45-2	2-Methylnaphthalene-D10		75%					
367-12-4	2,4-Dibromophenol		97%					
81103-79-9	Fluorene-d10		98%					
1718-51-1	Pyrene-D10		124%					

lw 4/15/09

6

KATAHDIN ANALYTICAL SERVICES
Report of Analytical Results

Client: CH2MHill
Project: TO-009 Lejeune
PO No:
Sample Date: 01/08/09
Received Date: 01/10/09
Extraction Date: 01/13/09
Analysis Date: 23-JAN-2009 21:38
Report Date: 01/30/2009
Matrix: SOIL
% Solids: 87.0

Lab ID: SC0127-4
Client ID: MR08-IS281-9-10-09A
SDG: TO9-30
Extracted by: AC
Extraction Method: SW846 3550
Analyst: JCG
Analysis Method: SW846 M8270C
Lab Prep Batch: WG59751
Units: ug/Kgdrywt

CAS#	Compound	Flags	Results	DF	PQL	Adj.PQL	Adj.MDL
91-20-3	Naphthalene	U	11	1.0	10	11	3.0
91-57-6	2-Methylnaphthalene	U	11	1.0	10	11	2.5
86-73-7	Fluorene	U	11	1.0	10	11	3.7
85-01-8	Phenanthrene	U	11	1.0	10	11	2.1
206-44-0	Fluoranthene	U	11	1.0	10	11	2.1
129-00-0	Pyrene	U	11	1.0	10	11	2.4
56-55-3	Benzo(a)anthracene	U	11	1.0	10	11	2.2
205-99-2	Benzo(b)fluoranthene	U	11	1.0	10	11	2.8
207-08-9	Benzo(k)fluoranthene	U	11	1.0	10	11	3.6
50-32-8	Benzo(a)pyrene	U	11	1.0	10	11	3.8
193-39-5	Indeno(1,2,3-cd)pyrene	U	11	1.0	10	11	2.2
53-70-3	Dibenzo(a,h)anthracene	U	11	1.0	10	11	2.1
191-24-2	Benzo(g,h,i)perylene	U	11	1.0	10	11	2.3
118-74-1	Hexachlorobenzene	U	11	1.0	10	11	2.1
87-68-3	Hexachlorobutadiene	U	11	1.0	10	11	2.6
77-47-4	Hexachlorocyclopentadiene	U	11	1.0	10	11	1.7
7297-45-2	2-Methylnaphthalene-D10		83%				
367-12-4	2,4-Dibromophenol		116%				
81103-79-9	Fluorene-d10		104%				
1718-51-1	Pyrene-D10		127%				

hw
4/15/09

7

KATAHDIN ANALYTICAL SERVICES
Report of Analytical Results

Client: CH2MHill
Project: TO-009 Lejeune
PO No:
Sample Date: 01/08/09
Received Date: 01/10/09
Extraction Date: 01/13/09
Analysis Date: 24-JAN-2009 19:19
Report Date: 01/30/2009
Matrix: SOIL
% Solids: 95.3

Lab ID: SC0127-6
Client ID: MR08-SS282-09A
SDG: T09-30
Extracted by: AC
Extraction Method: SW846 3550
Analyst: JCG
Analysis Method: SW846 M8270C
Lab Prep Batch: WG59751
Units: ug/Kgdrywt

CAS#	Compound	Flags	Results	DF	PQL	Adj.PQL	Adj.MDL	
91-20-3	Naphthalene	U	10	1.0	10	10	2.7	
91-57-6	2-Methylnaphthalene	~~U~~ UJ	10	1.0	10	10	2.3	CCH
86-73-7	Fluorene	J	4.0	1.0	10	10	3.4	
85-01-8	Phenanthrene	~~J~~ 10U	~~6.1~~	1.0	10	10	1.9	BL
206-44-0	Fluoranthene	J	13	1.0	10	10	1.9	CCH
129-00-0	Pyrene		16	1.0	10	10	2.2	
56-55-3	Benzo(a)anthracene	J	4.6	1.0	10	10	2.0	
205-99-2	Benzo(b)fluoranthene		13	1.0	10	10	2.5	
207-08-9	Benzo(k)fluoranthene		11	1.0	10	10	3.2	
50-32-8	Benzo(a)pyrene	J	6.9	1.0	10	10	3.5	
193-39-5	Indeno(1,2,3-cd)pyrene	J	9.0	1.0	10	10	2.0	
53-70-3	Dibenzo(a,h)anthracene	U	10	1.0	10	10	1.9	
191-24-2	Benzo(g,h,i)perylene	J	9.8	1.0	10	10	2.1	
118-74-1	Hexachlorobenzene	U	10	1.0	10	10	1.9	
87-68-3	Hexachlorobutadiene	U	10	1.0	10	10	2.4	
77-47-4	Hexachlorocyclopentadiene	~~U~~ UJ	10	1.0	10	10	1.6	CCH
7297-45-2	2-Methylnaphthalene-D10		66%					
367-12-4	2,4-Dibromophenol		87%					
81103-79-9	Fluorene-d10		94%					
1718-51-1	Pyrene-D10		117%					

MW 4/15/09

8

KATAHDIN ANALYTICAL SERVICES
Report of Analytical Results

Client: CH2MHill
Project: TO-009 Lejeune
PO No:
Sample Date: 01/08/09
Received Date: 01/10/09
Extraction Date: 01/13/09
Analysis Date: 23-JAN-2009 22:19
Report Date: 01/30/2009
Matrix: SOIL
% Solids: 87.8

Lab ID: SC0127-8
Client ID: MR08-IS282-9-10-09A
SDG: TO9-30
Extracted by: AC
Extraction Method: SW846 3550
Analyst: JCG
Analysis Method: SW846 M8270C
Lab Prep Batch: WG59751
Units: ug/Kgdrywt

CAS#	Compound	Flags	Results	DF	PQL	Adj.PQL	Adj.MDL
91-20-3	Naphthalene	U	11	1.0	10	11	3.0
91-57-6	2-Methylnaphthalene	U	11	1.0	10	11	2.5
86-73-7	Fluorene	U	11	1.0	10	11	3.6
85-01-8	Phenanthrene	U	11	1.0	10	11	2.0
206-44-0	Fluoranthene	U	11	1.0	10	11	2.0
129-00-0	Pyrene	U	11	1.0	10	11	2.4
56-55-3	Benzo(a)anthracene	U	11	1.0	10	11	2.2
205-99-2	Benzo(b)fluoranthene	U	11	1.0	10	11	2.7
207-08-9	Benzo(k)fluoranthene	U	11	1.0	10	11	3.5
50-32-8	Benzo(a)pyrene	U	11	1.0	10	11	3.8
193-39-5	Indeno(1,2,3-cd)pyrene	U	11	1.0	10	11	2.2
53-70-3	Dibenzo(a,h)anthracene	U	11	1.0	10	11	2.0
191-24-2	Benzo(g,h,i)perylene	U	11	1.0	10	11	2.3
118-74-1	Hexachlorobenzene	U	11	1.0	10	11	2.0
87-68-3	Hexachlorobutadiene	U	11	1.0	10	11	2.6
77-47-4	Hexachlorocyclopentadiene	U	11	1.0	10	11	1.7
7297-45-2	2-Methylnaphthalene-D10		79%				
367-12-4	2,4-Dibromophenol		97%				
81103-79-9	Fluorene-d10		90%				
1718-51-1	Pyrene-D10		126%				

LW
4/15/09

9

KATAHDIN ANALYTICAL SERVICES
Report of Analytical Results

Client: CH2MHill
Project: TO-009 Lejeune
PO No:
Sample Date: 01/08/09
Received Date: 01/10/09
Extraction Date: 01/13/09
Analysis Date: 24-JAN-2009 19:59
Report Date: 01/30/2009
Matrix: SOIL
% Solids: 90.2

Lab ID: SC0127-10
Client ID: MR08-SS297-09A
SDG: TO9-30
Extracted by: AC
Extraction Method: SW846 3550
Analyst: JCG
Analysis Method: SW846 M8270C
Lab Prep Batch: WG59751
Units: ug/Kgdrywt

CAS#	Compound	Flags		Results	DF	PQL	Adj.PQL	Adj.MDL	
91-20-3	Naphthalene	U		11	1.0	10	11	2.9	
91-57-6	2-Methylnaphthalene	~~U~~	UJ	11	1.0	10	11	2.4	CCH
86-73-7	Fluorene	U		11	1.0	10	11	3.5	
85-01-8	Phenanthrene	U		11	1.0	10	11	2.0	
206-44-0	Fluoranthene	~~U~~	J	5.2	1.0	10	11	2.0	CCH
129-00-0	Pyrene			15	1.0	10	11	2.3	
56-55-3	Benzo(a)anthracene	J		2.7	1.0	10	11	2.1	
205-99-2	Benzo(b)fluoranthene	U		11	1.0	10	11	2.7	
207-08-9	Benzo(k)fluoranthene	U		11	1.0	10	11	3.4	
50-32-8	Benzo(a)pyrene	U		11	1.0	10	11	3.6	
193-39-5	Indeno(1,2,3-cd)pyrene	U		11	1.0	10	11	2.1	
53-70-3	Dibenzo(a,h)anthracene	U		11	1.0	10	11	2.0	
191-24-2	Benzo(g,h,i)perylene	U		11	1.0	10	11	2.2	
118-74-1	Hexachlorobenzene	U		11	1.0	10	11	2.0	
87-68-3	Hexachlorobutadiene	U		11	1.0	10	11	2.6	
77-47-4	Hexachlorocyclopentadiene	~~U~~	UJ	11	1.0	10	11	1.7	CCH
7297-45-2	2-Methylnaphthalene-D10			73%					
367-12-4	2,4-Dibromophenol			88%					
81103-79-9	Fluorene-d10			96%					
1718-51-1	Pyrene-D10			127%					

MW 4/15/09

KATAHDIN ANALYTICAL SERVICES
Report of Analytical Results

Client: CH2MHill
Project: TO-009 Lejeune
PO No:
Sample Date: 01/08/09
Received Date: 01/10/09
Extraction Date: 01/13/09
Analysis Date: 23-JAN-2009 22:59
Report Date: 01/30/2009
Matrix: SOIL
% Solids: 88.1

Lab ID: SC0127-12
Client ID: MR08-IS297-6-7-09A
SDG: TO9-30
Extracted by: AC
Extraction Method: SW846 3550
Analyst: JCG
Analysis Method: SW846 M8270C
Lab Prep Batch: WG59751
Units: ug/Kgdrywt

CAS#	Compound	Flags	Results	DF	PQL	Adj.PQL	Adj.MDL
91-20-3	Naphthalene	U	11	1.0	10	11	3.0
91-57-6	2-Methylnaphthalene	U	11	1.0	10	11	2.5
86-73-7	Fluorene	U	11	1.0	10	11	3.6
85-01-8	Phenanthrene	U	11	1.0	10	11	2.0
206-44-0	Fluoranthene	U	11	1.0	10	11	2.0
129-00-0	Pyrene	U	11	1.0	10	11	2.4
56-55-3	Benzo(a)anthracene	U	11	1.0	10	11	2.2
205-99-2	Benzo(b)fluoranthene	U	11	1.0	10	11	2.7
207-08-9	Benzo(k)fluoranthene	U	11	1.0	10	11	3.5
50-32-8	Benzo(a)pyrene	U	11	1.0	10	11	3.7
193-39-5	Indeno(1,2,3-cd)pyrene	U	11	1.0	10	11	2.2
53-70-3	Dibenzo(a,h)anthracene	U	11	1.0	10	11	2.0
191-24-2	Benzo(g,h,i)perylene	U	11	1.0	10	11	2.3
118-74-1	Hexachlorobenzene	U	11	1.0	10	11	2.0
87-68-3	Hexachlorobutadiene	U	11	1.0	10	11	2.6
77-47-4	Hexachlorocyclopentadiene	U	11	1.0	10	11	1.7
7297-45-2	2-Methylnaphthalene-D10		83%				
367-12-4	2,4-Dibromophenol		96%				
81103-79-9	Fluorene-d10		90%				
1718-51-1	Pyrene-D10		117%				

MW 4/15/09

11

KATAHDIN ANALYTICAL SERVICES
Report of Analytical Results

Client: CH2MHill
Project: TO-009 Lejeune
PO No:
Sample Date: 01/08/09
Received Date: 01/10/09
Extraction Date: 01/13/09
Analysis Date: 24-JAN-2009 20:39
Report Date: 01/30/2009
Matrix: SOIL
% Solids: 89.5

Lab ID: SC0127-14
Client ID: MR08-SS298-09A
SDG: TO9-30
Extracted by: AC
Extraction Method: SW846 3550
Analyst: JCG
Analysis Method: SW846 M8270C
Lab Prep Batch: WG59751
Units: ug/Kgdrywt

CAS#	Compound	Flags	Results	DF	PQL	Adj.PQL	Adj.MDL	
91-20-3	Naphthalene	U	11	1.0	10	11	2.9	
91-57-6	2-Methylnaphthalene	~~U~~ UJ	11	1.0	10	11	2.4	CCH
86-73-7	Fluorene	U	11	1.0	10	11	3.6	
85-01-8	Phenanthrene	U	11	1.0	10	11	2.0	
206-44-0	Fluoranthene	~~J~~ J	6.6	1.0	10	11	2.0	CCH
129-00-0	Pyrene		11	1.0	10	11	2.3	
56-55-3	Benzo(a)anthracene	J	4.3	1.0	10	11	2.1	
205-99-2	Benzo(b)fluoranthene	U	11	1.0	10	11	2.7	
207-08-9	Benzo(k)fluoranthene	U	11	1.0	10	11	3.5	
50-32-8	Benzo(a)pyrene	U	11	1.0	10	11	3.7	
193-39-5	Indeno(1,2,3-cd)pyrene	U	11	1.0	10	11	2.1	
53-70-3	Dibenzo(a,h)anthracene	U	11	1.0	10	11	2.0	
191-24-2	Benzo(g,h,i)perylene		12	1.0	10	11	2.2	
118-74-1	Hexachlorobenzene	U	11	1.0	10	11	2.0	
87-68-3	Hexachlorobutadiene	U	11	1.0	10	11	2.6	
77-47-4	Hexachlorocyclopentadiene	~~U~~ UJ	11	1.0	10	11	1.7	CCH
7297-45-2	2-Methylnaphthalene-D10		77%					
367-12-4	2,4-Dibromophenol		101%					
81103-79-9	Fluorene-d10		93%					
1718-51-1	Pyrene-D10		117%					

lw
4/15/09

12

KATAHDIN ANALYTICAL SERVICES
Report of Analytical Results

Client: CH2MHill
Project: TO-009 Lejeune
PO No:
Sample Date: 01/08/09
Received Date: 01/10/09
Extraction Date: 01/13/09
Analysis Date: 24-JAN-2009 16:38
Report Date: 01/30/2009
Matrix: SOIL
% Solids: 91.7

Lab ID: SC0127-16
Client ID: MR08-IS298-6-7-09A
SDG: TO9-30
Extracted by: AC
Extraction Method: SW846 3550
Analyst: JCG
Analysis Method: SW846 M8270C
Lab Prep Batch: WG59751
Units: ug/Kgdrywt

CAS#	Compound	Flags	Results	DF	PQL	Adj.PQL	Adj.MDL	
91-20-3	Naphthalene	U	11	1.0	10	11	2.8	
91-57-6	2-Methylnaphthalene	~~U~~ UJ	11	1.0	10	11	2.4	CCH
86-73-7	Fluorene	U	11	1.0	10	11	3.5	
85-01-8	Phenanthrene	U	11	1.0	10	11	2.0	
206-44-0	Fluoranthene	~~U~~ UJ	11	1.0	10	11	2.0	CCH
129-00-0	Pyrene	U	11	1.0	10	11	2.3	
56-55-3	Benzo(a)anthracene	U	11	1.0	10	11	2.1	
205-99-2	Benzo(b)fluoranthene	U	11	1.0	10	11	2.6	
207-08-9	Benzo(k)fluoranthene	U	11	1.0	10	11	3.4	
50-32-8	Benzo(a)pyrene	U	11	1.0	10	11	3.6	
193-39-5	Indeno(1,2,3-cd)pyrene	U	11	1.0	10	11	2.1	
53-70-3	Dibenzo(a,h)anthracene	U	11	1.0	10	11	2.0	
191-24-2	Benzo(g,h,i)perylene	U	11	1.0	10	11	2.2	
118-74-1	Hexachlorobenzene	U	11	1.0	10	11	2.0	
87-68-3	Hexachlorobutadiene	U	11	1.0	10	11	2.5	
77-47-4	Hexachlorocyclopentadiene	~~U~~ UJ	11	1.0	10	11	1.6	CCH
7297-45-2	2-Methylnaphthalene-D10		67%					
367-12-4	2,4-Dibromophenol		87%					
81103-79-9	Fluorene-d10		86%					
1718-51-1	Pyrene-D10		114%					

LW
4/15/09

KATAHDIN ANALYTICAL SERVICES
Report of Analytical Results

Client: CH2MHill
Project: TO-009 Lejeune
PO No:
Sample Date: 01/08/09
Received Date: 01/10/09
Extraction Date: 01/13/09
Analysis Date: 25-JAN-2009 22:23
Report Date: 01/30/2009
Matrix: SOIL
% Solids: 92.6

Lab ID: SC0127-18
Client ID: MR08-SS305-09A
SDG: TO9-30
Extracted by: AC
Extraction Method: SW846 3550
Analyst: EKC
Analysis Method: SW846 M8270C
Lab Prep Batch: WG59751
Units: ug/Kgdrywt

CAS#	Compound	Flags	Results	DF	PQL	Adj.PQL	Adj.MDL
91-20-3	Naphthalene	U	11	1.0	10	11	2.8
91-57-6	2-Methylnaphthalene	U	11	1.0	10	11	2.4
86-73-7	Fluorene	U	11	1.0	10	11	3.4
85-01-8	Phenanthrene		38	1.0	10	11	1.9
206-44-0	Fluoranthene		41	1.0	10	11	1.9
129-00-0	Pyrene		46	1.0	10	11	2.3
56-55-3	Benzo(a)anthracene	J	5.8	1.0	10	11	2.0
205-99-2	Benzo(b)fluoranthene	~~J~~ UJ	11	1.0	10	11	2.6 CCH
207-08-9	Benzo(k)fluoranthene	U	11	1.0	10	11	3.3
50-32-8	Benzo(a)pyrene	U	11	1.0	10	11	3.6
193-39-5	Indeno(1,2,3-cd)pyrene	J	7.1	1.0	10	11	2.0
53-70-3	Dibenzo(a,h)anthracene	U	11	1.0	10	11	1.9
191-24-2	Benzo(g,h,i)perylene	J	8.6	1.0	10	11	2.2
118-74-1	Hexachlorobenzene	U	11	1.0	10	11	1.9
87-68-3	Hexachlorobutadiene	U	11	1.0	10	11	2.5
77-47-4	Hexachlorocyclopentadiene	U	11	1.0	10	11	1.6
7297-45-2	2-Methylnaphthalene-D10		72%				
367-12-4	2,4-Dibromophenol		86%				
81103-79-9	Fluorene-d10		81%				
1718-51-1	Pyrene-D10		88%				

lw 4/15/09

KATAHDIN ANALYTICAL SERVICES
Report of Analytical Results

Client: CH2MHill
Project: TO-009 Lejeune
PO No:
Sample Date: 01/08/09
Received Date: 01/10/09
Extraction Date: 01/13/09
Analysis Date: 24-JAN-2009 17:19
Report Date: 01/30/2009
Matrix: SOIL
% Solids: 93.7

Lab ID: SC0127-20
Client ID: MR08-IS305-6-7-09A
SDG: TO9-30
Extracted by: AC
Extraction Method: SW846 3550
Analyst: JCG
Analysis Method: SW846 M8270C
Lab Prep Batch: WG59751
Units: ug/Kgdrywt

CAS#	Compound	Flags	Results	DF	PQL	Adj.PQL	Adj.MDL	
91-20-3	Naphthalene	U	11	1.0	10	11	2.8	
91-57-6	2-Methylnaphthalene	~~U~~ UJ	11	1.0	10	11	2.3	CCH
86-73-7	Fluorene	U	11	1.0	10	11	3.4	
85-01-8	Phenanthrene	U	11	1.0	10	11	1.9	
206-44-0	Fluoranthene	~~U~~ UJ	11	1.0	10	11	1.9	CCH
129-00-0	Pyrene	U	11	1.0	10	11	2.2	
56-55-3	Benzo(a)anthracene	U	11	1.0	10	11	2.0	
205-99-2	Benzo(b)fluoranthene	U	11	1.0	10	11	2.6	
207-08-9	Benzo(k)fluoranthene	U	11	1.0	10	11	3.3	
50-32-8	Benzo(a)pyrene	U	11	1.0	10	11	3.5	
193-39-5	Indeno(1,2,3-cd)pyrene	U	11	1.0	10	11	2.0	
53-70-3	Dibenzo(a,h)anthracene	U	11	1.0	10	11	1.9	
191-24-2	Benzo(g,h,i)perylene	U	11	1.0	10	11	2.1	
118-74-1	Hexachlorobenzene	U	11	1.0	10	11	1.9	
87-68-3	Hexachlorobutadiene	U	11	1.0	10	11	2.4	
77-47-4	Hexachlorocyclopentadiene	~~U~~ UJ	11	1.0	10	11	1.6	CCH
7297-45-2	2-Methylnaphthalene-D10		71%					
367-12-4	2,4-Dibromophenol		91%					
81103-79-9	Fluorene-d10		90%					
1718-51-1	Pyrene-D10		134%					

LW
4/15/09

15

KATAHDIN ANALYTICAL SERVICES
Report of Analytical Results

Client: CH2MHill
Project: TO-009 Lejeune
PO No:
Sample Date: 01/08/09
Received Date: 01/10/09
Extraction Date: 01/13/09
Analysis Date: 25-JAN-2009 23:03
Report Date: 01/30/2009
Matrix: SOIL
% Solids: 92.5

Lab ID: SC0127-22
Client ID: MR08-SS306-09A
SDG: TO9-30
Extracted by: AC
Extraction Method: SW846 3550
Analyst: EKC
Analysis Method: SW846 M8270C
Lab Prep Batch: WG59751
Units: ug/Kgdrywt

CAS#	Compound	Flags	Results	DF	PQL	Adj.PQL	Adj.MDL	
91-20-3	Naphthalene	U	11	1.0	10	11	2.8	
91-57-6	2-Methylnaphthalene	U	11	1.0	10	11	2.4	
86-73-7	Fluorene	U	11	1.0	10	11	3.4	
85-01-8	Phenanthrene	~~J~~ 11u	~~3.1~~	1.0	10	11	1.9	BL
206-44-0	Fluoranthene		33	1.0	10	11	1.9	
129-00-0	Pyrene		38	1.0	10	11	2.3	
56-55-3	Benzo(a)anthracene	J	11	1.0	10	11	2.0	
205-99-2	Benzo(b)fluoranthene	~~U~~ uJ	11	1.0	10	11	2.6	CCH
207-08-9	Benzo(k)fluoranthene	U	11	1.0	10	11	3.4	
50-32-8	Benzo(a)pyrene	J	8.4	1.0	10	11	3.6	
193-39-5	Indeno(1,2,3-cd)pyrene	J	8.9	1.0	10	11	2.0	
53-70-3	Dibenzo(a,h)anthracene	U	11	1.0	10	11	1.9	
191-24-2	Benzo(g,h,i)perylene		12	1.0	10	11	2.2	
118-74-1	Hexachlorobenzene	U	11	1.0	10	11	1.9	
87-68-3	Hexachlorobutadiene	U	11	1.0	10	11	2.5	
77-47-4	Hexachlorocyclopentadiene	U	11	1.0	10	11	1.6	
7297-45-2	2-Methylnaphthalene-D10		69%					
367-12-4	2,4-Dibromophenol		88%					
81103-79-9	Fluorene-d10		83%					
1718-51-1	Pyrene-D10		94%					

MW 4/15/09

16

KATAHDIN ANALYTICAL SERVICES
Report of Analytical Results

Client: CH2MHill
Project: TO-009 Lejeune
PO No:
Sample Date: 01/08/09
Received Date: 01/10/09
Extraction Date: 01/13/09
Analysis Date: 24-JAN-2009 17:59
Report Date: 01/30/2009
Matrix: SOIL
% Solids: 86.2

Lab ID: SC0127-24
Client ID: MR08-IS306-5-6-09A
SDG: TO9-30
Extracted by: AC
Extraction Method: SW846 3550
Analyst: JCG
Analysis Method: SW846 M8270C
Lab Prep Batch: WG59751
Units: ug/Kgdrywt

CAS#	Compound	Flags	Results	DF	PQL	Adj.PQL	Adj.MDL	
91-20-3	Naphthalene	U	12	1.0	10	12	3.0	
91-57-6	2-Methylnaphthalene	~~U~~ UJ	12	1.0	10	12	2.6	CCH
86-73-7	Fluorene	U	12	1.0	10	12	3.7	
85-01-8	Phenanthrene	U	12	1.0	10	12	2.1	
206-44-0	Fluoranthene	~~U~~ UJ	12	1.0	10	12	2.1	CCH
129-00-0	Pyrene	U	12	1.0	10	12	2.4	
56-55-3	Benzo(a)anthracene	U	12	1.0	10	12	2.2	
205-99-2	Benzo(b)fluoranthene	U	12	1.0	10	12	2.8	
207-08-9	Benzo(k)fluoranthene	U	12	1.0	10	12	3.6	
50-32-8	Benzo(a)pyrene	U	12	1.0	10	12	3.8	
193-39-5	Indeno(1,2,3-cd)pyrene	U	12	1.0	10	12	2.2	
53-70-3	Dibenzo(a,h)anthracene	U	12	1.0	10	12	2.1	
191-24-2	Benzo(g,h,i)perylene	U	12	1.0	10	12	2.3	
118-74-1	Hexachlorobenzene	U	12	1.0	10	12	2.1	
87-68-3	Hexachlorobutadiene	U	12	1.0	10	12	2.7	
77-47-4	Hexachlorocyclopentadiene	~~U~~ UJ	12	1.0	10	12	1.7	CCH
7297-45-2	2-Methylnaphthalene-D10		68%					
367-12-4	2,4-Dibromophenol		83%					
81103-79-9	Fluorene-d10		82%					
1718-51-1	Pyrene-D10		127%					

lw 4/15/09

KATAHDIN ANALYTICAL SERVICES
Report of Analytical Results

Client: CH2MHill
Project: TO-009 Lejeune
PO No:
Sample Date: 01/08/09
Received Date: 01/10/09
Extraction Date: 01/13/09
Analysis Date: 25-JAN-2009 23:43
Report Date: 01/30/2009
Matrix: SOIL
% Solids: 87.4

Lab ID: SC0127-26
Client ID: MR08-SS206-09A
SDG: TO9-30
Extracted by: AC
Extraction Method: SW846 3550
Analyst: EKC
Analysis Method: SW846 M8270C
Lab Prep Batch: WG59751
Units: ug/Kgdrywt

CAS#	Compound	Flags	Results	DF	PQL	Adj.PQL	Adj.MDL		
91-20-3	Naphthalene	J	5.1	1.0	10	11	3.0		
91-57-6	2-Methylnaphthalene	J	6.0	1.0	10	11	2.5		
86-73-7	Fluorene		17	1.0	10	11	3.6		
85-01-8	Phenanthrene	~~E~~	550 ~~570~~	10 1.0	10	110 11	20 ~~2.0~~	R	DL
206-44-0	Fluoranthene	~~E~~	2600 ~~1700~~	1.0	10	11	20 2.0		
129-00-0	Pyrene	~~E~~	2500 ~~1500~~	1.0	10	11	24 2.4		
56-55-3	Benzo(a)anthracene	~~E~~	1000 ~~1000~~	1.0	10	11	22 2.2		
205-99-2	Benzo(b)fluoranthene	~~E~~	2100 ~~0.00~~	1.0	10	11	27 2.7	R	DL
207-08-9	Benzo(k)fluoranthene	~~E~~	1500 ~~1400~~	1.0	10	11	35 3.5	R	DL
50-32-8	Benzo(a)pyrene	~~E~~	1400 ~~1300~~	1.0	10	11	38 3.8		
193-39-5	Indeno(1,2,3-cd)pyrene	~~E~~	1300 ~~1400~~	1.0	10	11	22 2.2		
53-70-3	Dibenzo(a,h)anthracene	~~E~~	420 ~~500~~	1.0	10	11	20 2.0		
191-24-2	Benzo(g,h,i)perylene	~~E~~	1300 ~~1000~~	1.0	10	11	23 2.3		
118-74-1	Hexachlorobenzene	U	11	1.0	10	11	2.0		
87-68-3	Hexachlorobutadiene	U	11	1.0	10	11	2.6		
77-47-4	Hexachlorocyclopentadiene	U	11	1.0	10	11	1.7		
7297-45-2	2-Methylnaphthalene-D10		71%						
367-12-4	2,4-Dibromophenol		93%						
81103-79-9	Fluorene-d10		84%						
1718-51-1	Pyrene-D10		98%						

DW
4/15/09

17DL

KATAHDIN ANALYTICAL SERVICES
Report of Analytical Results

Client: CH2MHill
Project: TO-009 Lejeune
PO No:
Sample Date: 01/08/09
Received Date: 01/10/09
Extraction Date: 01/13/09
Analysis Date: 27-JAN-2009 00:18
Report Date: 01/30/2009
Matrix: SOIL
% Solids: 87.4

Lab ID: SC0127-26DL
Client ID: MR08-SS206-09A
SDG: TO9-30
Extracted by: AC
Extraction Method: SW846 3550
Analyst: JCG
Analysis Method: SW846 M8270C
Lab Prep Batch: WG59751
Units: ug/Kgdrywt

Use Original

CAS#	Compound	Flags	Results	DF	PQL	Adj.PQL	Adj.MDL
91-20-3	Naphthalene	U	110	10	10	110	30
91-57-6	2-Methylnaphthalene	U	110	10	10	110	25
86-73-7	Fluorene	U	110	10	10	110	36
85-01-8	Phenanthrene		550	10	10	110	20
206-44-0	Fluoranthene		2600	10	10	110	20
129-00-0	Pyrene		2500	10	10	110	24
56-55-3	Benzo(a)anthracene		1000	10	10	110	22
205-99-2	Benzo(b)fluoranthene		2100	10	10	110	27
207-08-9	Benzo(k)fluoranthene		1500	10	10	110	35
50-32-8	Benzo(a)pyrene		1400	10	10	110	38
193-39-5	Indeno(1,2,3-cd)pyrene		1300	10	10	110	22
53-70-3	Dibenzo(a,h)anthracene		420	10	10	110	20
191-24-2	Benzo(g,h,i)perylene		1300	10	10	110	23
118-74-1	Hexachlorobenzene	U	110	10	10	110	20
87-68-3	Hexachlorobutadiene	U	110	10	10	110	26
77-47-4	Hexachlorocyclopentadiene	U	110	10	10	110	17
7297-45-2	2-Methylnaphthalene-D10		D				
367-12-4	2,4-Dibromophenol		D				
81103-79-9	Fluorene-d10		D				
1718-51-1	Pyrene-D10		D				

R DL

lew 4/15/09

KATAHDIN ANALYTICAL SERVICES
Report of Analytical Results

Client: CH2MHill
Project: TO-009 Lejeune
PO No:
Sample Date: 01/08/09
Received Date: 01/10/09
Extraction Date: 01/13/09
Analysis Date: 24-JAN-2009 18:39
Report Date: 01/30/2009
Matrix: SOIL
% Solids: 89.4

Lab ID: SC0127-28
Client ID: MR08-IS206-6-7-09A
SDG: TO9-30
Extracted by: AC
Extraction Method: SW846 3550
Analyst: JCG
Analysis Method: SW846 M8270C
Lab Prep Batch: WG59751
Units: ug/Kgdrywt

CAS#	Compound	Flags	Results	DF	PQL	Adj.PQL	Adj.MDL	
91-20-3	Naphthalene	U	11	1.0	10	11	2.9	
91-57-6	2-Methylnaphthalene	~~U~~ UJ	11	1.0	10	11	2.4	CCH
86-73-7	Fluorene	U	11	1.0	10	11	3.6	
85-01-8	Phenanthrene	U	11	1.0	10	11	2.0	
206-44-0	Fluoranthene	~~U~~ J	3.6	1.0	10	11	2.0	CCH
129-00-0	Pyrene	J	5.1	1.0	10	11	2.3	
56-55-3	Benzo(a)anthracene	U	11	1.0	10	11	2.1	
205-99-2	Benzo(b)fluoranthene	U	11	1.0	10	11	2.7	
207-08-9	Benzo(k)fluoranthene	U	11	1.0	10	11	3.5	
50-32-8	Benzo(a)pyrene	U	11	1.0	10	11	3.7	
193-39-5	Indeno(1,2,3-cd)pyrene	U	11	1.0	10	11	2.1	
53-70-3	Dibenzo(a,h)anthracene	U	11	1.0	10	11	2.0	
191-24-2	Benzo(g,h,i)perylene	U	11	1.0	10	11	2.2	
118-74-1	Hexachlorobenzene	U	11	1.0	10	11	2.0	
87-68-3	Hexachlorobutadiene	U	11	1.0	10	11	2.6	
77-47-4	Hexachlorocyclopentadiene	~~U~~ UJ	11	1.0	10	11	1.7	CCH
7297-45-2	2-Methylnaphthalene-D10		71%					
367-12-4	2,4-Dibromophenol		81%					
81103-79-9	Fluorene-d10		81%					
1718-51-1	Pyrene-D10		160%					

lew
4/15/09

KATAHDIN ANALYTICAL SERVICES
Report of Analytical Results

Client: CH2MHill
Project: TO-009 Lejeune
PO No:
Sample Date: 01/08/09
Received Date: 01/10/09
Extraction Date: 01/13/09
Analysis Date: 26-JAN-2009 00:22
Report Date: 01/30/2009
Matrix: SOIL
% Solids: 89.2

Lab ID: SC0127-30
Client ID: MR08-SS207-09A
SDG: TO9-30
Extracted by: AC
Extraction Method: SW846 3550
Analyst: EKC
Analysis Method: SW846 M8270C
Lab Prep Batch: WG59751
Units: ug/Kgdrywt

CAS#	Compound	Flags	Results	DF	PQL	Adj.PQL	Adj.MDL
91-20-3	Naphthalene		22	1.0	10	11	2.9
91-57-6	2-Methylnaphthalene		13	1.0	10	11	2.5
86-73-7	Fluorene		64	1.0	10	11	3.6
85-01-8	Phenanthrene	E	1400 ~~1100~~	15 1.0	10	170 11	30 ~~2.0~~ R DL
206-44-0	Fluoranthene	E	4100 ~~1900~~	1.0	10	11	30 ~~2.0~~
129-00-0	Pyrene	E	3700 ~~2100~~	1.0	10	11	35 2.4
56-55-3	Benzo(a)anthracene	E	1800 ~~1500~~	1.0	10	11	32 ~~2.1~~
205-99-2	Benzo(b)fluoranthene	E	3500 ~~0.00~~	1.0	10	11	40 ~~2.7~~
207-08-9	Benzo(k)fluoranthene	E	1200 ~~900~~	1.0	10	11	52 ~~3.5~~
50-32-8	Benzo(a)pyrene	E	1900 ~~1600~~	1.0	10	11	55 ~~3.7~~
193-39-5	Indeno(1,2,3-cd)pyrene	E	1500 ~~1400~~	1.0	10	11	32 ~~2.1~~
53-70-3	Dibenzo(a,h)anthracene	E	520 ~~550~~	1.0	10	11	30 ~~2.0~~
191-24-2	Benzo(g,h,i)perylene	E	1500 ~~1000~~	1.0	10	11	34 ~~2.2~~
118-74-1	Hexachlorobenzene	U	11	1.0	10	11	2.0
87-68-3	Hexachlorobutadiene	U	11	1.0	10	11	2.6
77-47-4	Hexachlorocyclopentadiene	U	11	1.0	10	11	1.7
7297-45-2	2-Methylnaphthalene-D10		83%				
367-12-4	2,4-Dibromophenol		89%				
81103-79-9	Fluorene-d10		82%				
1718-51-1	Pyrene-D10		104%				

MW 4/15/09

10DL

KATAHDIN ANALYTICAL SERVICES
Report of Analytical Results

Client: CH2MHill
Project: TO-009 Lejeune
PO No:
Sample Date: 01/08/09
Received Date: 01/10/09
Extraction Date: 01/13/09
Analysis Date: 27-JAN-2009 00:58
Report Date: 01/30/2009
Matrix: SOIL
% Solids: 89.2

Lab ID: SC0127-30DL
Client ID: MR08-SS207-09A
SDG: TO9-30
Extracted by: AC
Extraction Method: SW846 3550
Analyst: JCG
Analysis Method: SW846 M8270C
Lab Prep Batch: WG59751
Units: ug/Kgdrywt

Use original

CAS#	Compound	Flags	Results	DF	PQL	Adj.PQL	Adj.MDL
91-20-3	Naphthalene	U	170	15	10	170	44
91-57-6	2-Methylnaphthalene	U	170	15	10	170	37
86-73-7	Fluorene	J	83	15	10	170	54
85-01-8	Phenanthrene		1400	15	10	170	30
206-44-0	Fluoranthene		4100	15	10	170	30
129-00-0	Pyrene		3700	15	10	170	35
56-55-3	Benzo(a)anthracene		1800	15	10	170	32
205-99-2	Benzo(b)fluoranthene		3500	15	10	170	40
207-08-9	Benzo(k)fluoranthene		1200	15	10	170	52
50-32-8	Benzo(a)pyrene		1900	15	10	170	55
193-39-5	Indeno(1,2,3-cd)pyrene		1500	15	10	170	32
53-70-3	Dibenzo(a,h)anthracene		520	15	10	170	30
191-24-2	Benzo(g,h,i)perylene		1500	15	10	170	34
118-74-1	Hexachlorobenzene	U	170	15	10	170	30
87-68-3	Hexachlorobutadiene	U	170	15	10	170	39
77-47-4	Hexachlorocyclopentadiene	U	170	15	10	170	25
7297-45-2	2-Methylnaphthalene-D10		D				
367-12-4	2,4-Dibromophenol		D				
81103-79-9	Fluorene-d10		D				
1718-51-1	Pyrene-D10		D				

R DL

Page 01 of 01 R1048.D

LW
4/15/09

KATAHDIN ANALYTICAL SERVICES
Report of Analytical Results

Client: CH2MHill
Project: TO-009 Lejeune
PO No:
Sample Date: 01/08/09
Received Date: 01/10/09
Extraction Date: 01/14/09
Analysis Date: 22-JAN-2009 13:18
Report Date: 01/30/2009
Matrix: SOIL
% Solids: 91.4

Lab ID: SC0127-32
Client ID: MR08-IS207-6-7-09A
SDG: TO9-30
Extracted by: AC
Extraction Method: SW846 3550
Analyst: JLP
Analysis Method: SW846 M8270C
Lab Prep Batch: WG59786
Units: ug/Kgdrywt

CAS#	Compound	Flags	Results	DF	PQL	Adj.PQL	Adj.MDL	
91-20-3	Naphthalene	U	11	1.0	10	11	2.8	
91-57-6	2-Methylnaphthalene	U	11	1.0	10	11	2.4	
86-73-7	Fluorene	U	11	1.0	10	11	3.5	
85-01-8	Phenanthrene	U	11	1.0	10	11	2.0	
206-44-0	Fluoranthene	J	2.6	1.0	10	11	2.0	
129-00-0	Pyrene	U	11	1.0	10	11	2.3	
56-55-3	Benzo(a)anthracene	J	2.3	1.0	10	11	2.1	
205-99-2	Benzo(b)fluoranthene	U	11	1.0	10	11	2.6	
207-08-9	Benzo(k)fluoranthene	U	11	1.0	10	11	3.4	
50-32-8	Benzo(a)pyrene	U	11	1.0	10	11	3.6	
193-39-5	Indeno(1,2,3-cd)pyrene	U	11	1.0	10	11	2.1	
53-70-3	Dibenzo(a,h)anthracene	~~U~~ UJ	11	1.0	10	11	2.0	CCH
191-24-2	Benzo(g,h,i)perylene	U	11	1.0	10	11	2.2	
118-74-1	Hexachlorobenzene	~~U~~ UJ	11	1.0	10	11	2.0	CCH
87-68-3	Hexachlorobutadiene	U	11	1.0	10	11	2.5	
77-47-4	Hexachlorocyclopentadiene	U	11	1.0	10	11	1.6	
7297-45-2	2-Methylnaphthalene-D10		100%					
367-12-4	2,4-Dibromophenol		75%					
81103-79-9	Fluorene-d10		76%					
1718-51-1	Pyrene-D10		76%					

pcw 4/15/09

ENVIRONMENTAL
Data Services, Inc.

SEMIVOLATILE ORGANIC COMPOUNDS

USEPA Region IV - Level IV Review

Site: MCB Camp Lejeune, TO-09 SDG #: TO9-30

Client: CH2M HILL, Inc., Virginia Beach, Virginia Date: April 15, 2009

Laboratory: Katahdin Analytical Services, Scarborough, Maine Reviewer: Nancy Weaver

EDS ID	Client Sample ID	Laboratory Sample ID	Matrix
1	MR08-IS225-2-3-09A	SC0102-1	Soil
1MS	MR08-IS225-2-3-09AMS	SC0102-1MS	Soil
1MSD	MR08-IS225-2-3-09AMSD	SC0102-1MSD	Soil
2	MR08-IS273-8-9-09A	SC0102-3	Soil
3	MR08-SS274-09A	SC0102-5	Soil
4	MR08-IS274-9-10-09A	SC0102-7	Soil
5	MR08-SS281-09A	SC0127-1	Soil
6	MR08-IS281-9-10-09A	SC0127-3	Soil
7	MR08-SS282-09A	SC0127-5	Soil
8	MR08-IS282-9-10-09A	SC0127-7	Soil
9	MR08-SS297-09A	SC0127-9	Soil
10	MR08-IS297-6-7-09A	SC0127-11	Soil
11	MR08-SS298-09A	SC0127-13	Soil
12	MR08-IS298-6-7-09A	SC0127-15	Soil
13	MR08-SS305-09A	SC0127-17	Soil
14	MR08-IS305-6-7-09A	SC0127-19	Soil
15	MR08-SS306-09A	SC0127-21	Soil
16	MR08-IS306-5-6-09A	SC0127-23	Soil
17	MR08-SS206-09A	SC0127-25	Soil
18	MR08-IS206-6-7-09A	SC0127-27	Soil
19	MR08-SS207-09A	SC0127-29	Soil
20	MR08-IS207-6-7-09A	SC0127-31	Soil

The USEPA "Contract Laboratory Program National Functional Guidelines for Organic Data Review," October 1999, and professional judgement were used in evaluating the data in this summary report.

Holding Times - All samples were extracted within 14 days for soil samples and analyzed within 40 days for all samples.

GC/MS Tuning - All of the DFTPP tunes in the initial and continuing calibrations met the percent relative abundance criteria.

Initial Calibration - The initial calibrations exhibited acceptable %RSD and mean RRF values except the following.

ICAL Date	Compound	%RSD/RRF	Qualifier	Affected Samples
01/12/09	Benzaldehyde	90.97%	J/UJ	20
01/13/09	Benzaldehyde	44.95%	J/UJ	All samples except 20

Continuing Calibration - The continuing calibrations exhibited acceptable %D and RRF values except the following.

CCAL Date	Compound	%D/RRF	Qualifier	Affected Samples
01/22/09 (0852)	Benzaldehyde	70.76%	None	Already qualified due to ICAL
	Di-n-octylphthalate	25.20%	J/UJ	1, 2, 4, 6, 8, 10, 12, 14, 16, 18
01/22/09 (1000)	Benzaldehyde	41.34%	None	Already qualified due to ICAL
	2, 4-Dinitrophenol	32.52%	J/UJ	20
	4-Nitrophenol	30.62%	J/UJ	20
	4-Nitroaniline	33.46%	J/UJ	20
	3, 3'-Dichlorobenzidine	33.35%	J/UJ	20
01/22/09 (1707)	Benzaldehyde	76.88%	None	Already qualified due to ICAL
	3, 3'-Dichlorobenzidine	25.06%	J/UJ	5, 7, 9
	Di-n-octylphthalate	52.30%	J/UJ	5, 7, 9
01/23/09	Benzaldehyde	66.27%	J/UJ	Already qualified due to ICAL

Surrogates - All samples exhibited acceptable surrogate recoveries except the following.

Sample ID	Surrogate	%R	Qualifier
3	S5-2, 4, 6-Tribromophenol	17%	None for 1 out
5	S6-Terphenyl-D14	148%	None for 1 out
9	S6-Terphenyl-D14	138%	None for 1 out

MS/MSD - The MS/MSD sample exhibited acceptable %R and RPD values except the following.

MS/MSD Sample ID	Compound	MS/MSD %R/RPD	Qualifier
1	Di-n-octylphthalate	144%/142%/Ok	None - All ND

Laboratory Control Sample - The LCS samples exhibited acceptable %R values except the following.

LCS ID	Compound	%R	Qualifier	Affected Samples
WG59785-LCS	Benzaldehyde	142%	None	Associated samples ND

Internal Standard (IS) Area Performance - All internal standards met response and retention time (RT) criteria.

Method Blank - The method blanks exhibited the following contamination.

Blank ID	Compound	Conc. ug/kg	Action Level ug/kg	Qualifier	Affected Samples
WG59750-BLANK	Diethylphthalate	88	880	U	1-4, 6, 7, 11, 13-15, 17-19

Field, Equipment Blank - Field QC results are summarized below.

Blank ID	Compound	Conc. ug/L	Action Level ug/L	Qualifier	Affected Samples
MR08-FB01011009	None - ND	-	-	-	-
MR08-EB01010809-SS	None - ND	-	-	-	-

Field Duplicates - No field duplicate samples were analyzed in this data package.

Tentatively Identified Compounds (TICs) - TICs were not reported.

Compound Quantitation - No discrepancies were identified

KATAHDIN ANALYTICAL SERVICES
Report of Analytical Results

Client: CH2MHill
Project: TO-009 Lejeune
PO No:
Sample Date: 01/07/09
Received Date: 01/09/09
Extraction Date: 01/13/09
Analysis Date: 22-JAN-2009 09:35
Report Date: 01/31/2009
Matrix: SOIL
% Solids: 88.6

Lab ID: SC0102-1
Client ID: 08-IS225-2-3-09A
SDG: TO9-30
Extracted by: AC
Extraction Method: SW846 3550
Analyst: JLP
Analysis Method: SW846 8270C
Lab Prep Batch: WG59750
Units: ug/Kgdrywt

CAS#	Compound	Flags	Results	DF	PQL	Adj.PQL	Adj.MDL
100-52-7	Benzaldehyde	~~J~~ UJ	560	1.0	500	560	140 JLB
108-95-2	Phenol	U	560	1.0	500	560	180
111-44-4	Bis(2-Chloroethyl)ether	U	370	1.0	330	370	91
95-57-8	2-Chlorophenol	U	560	1.0	500	560	180
95-48-7	2-Methylphenol	U	680	1.0	600	680	220
108-60-1	2,2'-Oxybis(1-chloropropane)	U	370	1.0	330	370	100
98-86-2	Acetophenone	U	680	1.0	600	680	200
621-64-7	N-Nitroso-di-n-propylamine	U	370	1.0	330	370	94
65794-96-9	3&4-Methylphenol	U	680	1.0	600	680	210
67-72-1	Hexachloroethane	U	370	1.0	330	370	110
98-95-3	Nitrobenzene	U	370	1.0	330	370	100
78-59-1	Isophorone	U	370	1.0	330	370	85
88-75-5	2-Nitrophenol	U	680	1.0	600	680	190
105-67-9	2,4-Dimethylphenol	U	560	1.0	500	560	190
111-91-1	Bis(2-Chloroethoxy)methane	U	370	1.0	330	370	110
120-83-2	2,4-Dichlorophenol	U	560	1.0	500	560	170
106-47-8	4-Chloroaniline	U	560	1.0	500	560	130
105-60-2	Caprolactam	U	560	1.0	500	560	160
59-50-7	4-Chloro-3-Methylphenol	U	560	1.0	500	560	190
88-06-2	2,4,6-Trichlorophenol	U	560	1.0	500	560	170
95-95-4	2,4,5-Trichlorophenol	U	560	1.0	500	560	170
91-58-7	2-Chloronaphthalene	U	370	1.0	330	370	98
92-52-4	1,1'-Biphenyl	U	370	1.0	330	370	82
88-74-4	2-Nitroaniline	U	560	1.0	500	560	85
131-11-3	Dimethyl Phthalate	U	370	1.0	330	370	88
606-20-2	2,6-Dinitrotoluene	U	370	1.0	330	370	89
208-96-8	Acenaphthylene	U	370	1.0	330	370	79
99-09-2	3-Nitroaniline	U	560	1.0	500	560	110
83-32-9	Acenaphthene	U	370	1.0	330	370	73
51-28-5	2,4-Dinitrophenol	U	1400	1.0	1200	1400	420
132-64-9	Dibenzofuran	U	370	1.0	330	370	89
100-02-7	4-Nitrophenol	U	1400	1.0	1200	1400	350
121-14-2	2,4-Dinitrotoluene	U	370	1.0	330	370	96
84-66-2	Diethylphthalate	~~JB~~ 370U	~~91~~	1.0	330	370	90 BL
7005-72-3	4-Chlorophenyl-phenylether	U	370	1.0	330	370	88
100-01-6	4-Nitroaniline	U	560	1.0	500	560	150
534-52-1	4,6-Dinitro-2-Methylphenol	U	1400	1.0	1200	1400	380
86-30-6	N-Nitrosodiphenylamine	U	740	1.0	660	740	250
101-55-3	4-Bromophenyl-phenylether	U	370	1.0	330	370	96
1912-24-9	Atrazine	U	370	1.0	330	370	100
87-86-5	Pentachlorophenol	U	920	1.0	820	920	270
120-12-7	Anthracene	U	370	1.0	330	370	95
86-74-8	Carbazole	U	560	1.0	500	560	120

LW 4/15/09

KATAHDIN ANALYTICAL SERVICES
Report of Analytical Results

Client: CH2MHill
Project: TO-009 Lejeune
PO No:
Sample Date: 01/07/09
Received Date: 01/09/09
Extraction Date: 01/13/09
Analysis Date: 22-JAN-2009 09:35
Report Date: 01/31/2009
Matrix: SOIL
% Solids: 88.6

Lab ID: SC0102-1
Client ID: 08-IS225-2-3-09A
SDG: TO9-30
Extracted by: AC
Extraction Method: SW846 3550
Analyst: JLP
Analysis Method: SW846 8270C
Lab Prep Batch: WG59750
Units: ug/Kgdrywt

CAS#	Compound	Flags	Results	DF	PQL	Adj.PQL	Adj.MDL	
84-74-2	Di-n-butylphthalate	U	370	1.0	330	370	110	
85-68-7	Butylbenzylphthalate	U	370	1.0	330	370	100	
91-94-1	3,3'-Dichlorobenzidine	U	560	1.0	500	560	130	
218-01-9	Chrysene	U	370	1.0	330	370	110	
117-81-7	bis(2-Ethylhexyl)phthalate	J	240	1.0	330	370	110	
117-84-0	Di-n-octylphthalate	~~U~~ UJ	370	1.0	330	370	240	CCH
367-12-4	2-Fluorophenol		66%					
13127-88-3	Phenol-D6		69%					
4165-60-0	Nitrobenzene-D5		67%					
321-60-8	2-Fluorobiphenyl		69%					
118-79-6	2,4,6-Tribromophenol		75%					
1718-51-0	Terphenyl-D14		90%					

MW
4/15/09

2

KATAHDIN ANALYTICAL SERVICES
Report of Analytical Results

Client: CH2MHill
Project: TO-009 Lejeune
PO No:
Sample Date: 01/07/09
Received Date: 01/09/09
Extraction Date: 01/13/09
Analysis Date: 22-JAN-2009 10:18
Report Date: 01/31/2009
Matrix: SOIL
% Solids: 88.6

Lab ID: SC0102-3
Client ID: MR08-IS273-8-9-09A
SDG: TO9-30
Extracted by: AC
Extraction Method: SW846 3550
Analyst: JLP
Analysis Method: SW846 8270C
Lab Prep Batch: WG59750
Units: ug/Kgdrywt

CAS#	Compound	Flags	Results	DF	PQL	Adj.PQL	Adj.MDL
100-52-7	Benzaldehyde	~~J~~ UJ	560	1.0	500	560	140 ICB
108-95-2	Phenol	U	560	1.0	500	560	180
111-44-4	Bis(2-Chloroethyl)ether	U	370	1.0	330	370	91
95-57-8	2-Chlorophenol	U	560	1.0	500	560	180
95-48-7	2-Methylphenol	U	680	1.0	600	680	220
108-60-1	2,2'-Oxybis(1-chloropropane)	U	370	1.0	330	370	100
98-86-2	Acetophenone	U	680	1.0	600	680	200
621-64-7	N-Nitroso-di-n-propylamine	U	370	1.0	330	370	94
65794-96-9	3&4-Methylphenol	U	680	1.0	600	680	210
67-72-1	Hexachloroethane	U	370	1.0	330	370	110
98-95-3	Nitrobenzene	U	370	1.0	330	370	100
78-59-1	Isophorone	U	370	1.0	330	370	84
88-75-5	2-Nitrophenol	U	680	1.0	600	680	190
105-67-9	2,4-Dimethylphenol	U	560	1.0	500	560	190
111-91-1	Bis(2-Chloroethoxy)methane	U	370	1.0	330	370	110
120-83-2	2,4-Dichlorophenol	U	560	1.0	500	560	170
106-47-8	4-Chloroaniline	U	560	1.0	500	560	130
105-60-2	Caprolactam	U	560	1.0	500	560	160
59-50-7	4-Chloro-3-Methylphenol	U	560	1.0	500	560	190
88-06-2	2,4,6-Trichlorophenol	U	560	1.0	500	560	170
95-95-4	2,4,5-Trichlorophenol	U	560	1.0	500	560	170
91-58-7	2-Chloronaphthalene	U	370	1.0	330	370	98
92-52-4	1,1'-Biphenyl	U	370	1.0	330	370	82
88-74-4	2-Nitroaniline	U	560	1.0	500	560	84
131-11-3	Dimethyl Phthalate	U	370	1.0	330	370	88
606-20-2	2,6-Dinitrotoluene	U	370	1.0	330	370	89
208-96-8	Acenaphthylene	U	370	1.0	330	370	79
99-09-2	3-Nitroaniline	U	560	1.0	500	560	110
83-32-9	Acenaphthene	U	370	1.0	330	370	73
51-28-5	2,4-Dinitrophenol	U	1400	1.0	1200	1400	420
132-64-9	Dibenzofuran	U	370	1.0	330	370	89
100-02-7	4-Nitrophenol	U	1400	1.0	1200	1400	350
121-14-2	2,4-Dinitrotoluene	U	370	1.0	330	370	96
84-66-2	Diethylphthalate	~~JB~~	370 ~~91~~	1.0	330	370	90 BL
7005-72-3	4-Chlorophenyl-phenylether	U	370	1.0	330	370	88
100-01-6	4-Nitroaniline	U	560	1.0	500	560	150
534-52-1	4,6-Dinitro-2-Methylphenol	U	1400	1.0	1200	1400	380
86-30-6	N-Nitrosodiphenylamine	U	740	1.0	660	740	250
101-55-3	4-Bromophenyl-phenylether	U	370	1.0	330	370	96
1912-24-9	Atrazine	U	370	1.0	330	370	100
87-86-5	Pentachlorophenol	U	920	1.0	820	920	270
120-12-7	Anthracene	U	370	1.0	330	370	95
86-74-8	Carbazole	U	560	1.0	500	560	120

NW
4/15/09

KATAHDIN ANALYTICAL SERVICES
Report of Analytical Results

2

Client: CH2MHill
Project: TO-009 Lejeune
PO No:
Sample Date: 01/07/09
Received Date: 01/09/09
Extraction Date: 01/13/09
Analysis Date: 22-JAN-2009 10:18
Report Date: 01/31/2009
Matrix: SOIL
% Solids: 88.6

Lab ID: SC0102-3
Client ID: MR08-IS273-8-9-09A
SDG: TO9-30
Extracted by: AC
Extraction Method: SW846 3550
Analyst: JLP
Analysis Method: SW846 8270C
Lab Prep Batch: WG59750
Units: ug/Kgdrywt

CAS#	Compound	Flags	Results	DF	PQL	Adj.PQL	Adj.MDL
84-74-2	Di-n-butylphthalate	U	370	1.0	330	370	110
85-68-7	Butylbenzylphthalate	U	370	1.0	330	370	100
91-94-1	3,3'-Dichlorobenzidine	U	560	1.0	500	560	130
218-01-9	Chrysene	U	370	1.0	330	370	110
117-81-7	bis(2-Ethylhexyl)phthalate	U	370	1.0	330	370	110
117-84-0	Di-n-octylphthalate	~~U~~ UJ	370	1.0	330	370	240 CCH
367-12-4	2-Fluorophenol		67%				
13127-88-3	Phenol-D6		73%				
4165-60-0	Nitrobenzene-D5		72%				
321-60-8	2-Fluorobiphenyl		71%				
118-79-6	2,4,6-Tribromophenol		64%				
1718-51-0	Terphenyl-D14		95%				

LW
4/15/09

3

KATAHDIN ANALYTICAL SERVICES
Report of Analytical Results

Client: CH2MHill
Project: TO-009 Lejeune
PO No:
Sample Date: 01/07/09
Received Date: 01/09/09
Extraction Date: 01/13/09
Analysis Date: 23-JAN-2009 15:30
Report Date: 01/31/2009
Matrix: SOIL
% Solids: 95.1

Lab ID: SC0102-5
Client ID: MR08-SS274-09A
SDG: TO9-30
Extracted by: AC
Extraction Method: SW846 3550
Analyst: JCG
Analysis Method: SW846 8270C
Lab Prep Batch: WG59750
Units: ug/Kgdrywt

CAS#	Compound	Flags	Results	DF	PQL	Adj.PQL	Adj.MDL
100-52-7	Benzaldehyde	~~U~~ UJ	520	1.0	500	520	130 JCB
108-95-2	Phenol	U	520	1.0	500	520	160
111-44-4	Bis(2-Chloroethyl)ether	U	350	1.0	330	350	85
95-57-8	2-Chlorophenol	U	520	1.0	500	520	170
95-48-7	2-Methylphenol	U	630	1.0	600	630	210
108-60-1	2,2'-Oxybis(1-chloropropane)	U	350	1.0	330	350	94
98-86-2	Acetophenone	U	630	1.0	600	630	190
621-64-7	N-Nitroso-di-n-propylamine	U	350	1.0	330	350	87
65794-96-9	3&4-Methylphenol	U	630	1.0	600	630	200
67-72-1	Hexachloroethane	U	350	1.0	330	350	100
98-95-3	Nitrobenzene	U	350	1.0	330	350	96
78-59-1	Isophorone	U	350	1.0	330	350	79
88-75-5	2-Nitrophenol	U	630	1.0	600	630	180
105-67-9	2,4-Dimethylphenol	U	520	1.0	500	520	170
111-91-1	Bis(2-Chloroethoxy)methane	U	350	1.0	330	350	100
120-83-2	2,4-Dichlorophenol	U	520	1.0	500	520	160
106-47-8	4-Chloroaniline	U	520	1.0	500	520	120
105-60-2	Caprolactam	U	520	1.0	500	520	150
59-50-7	4-Chloro-3-Methylphenol	U	520	1.0	500	520	170
88-06-2	2,4,6-Trichlorophenol	U	520	1.0	500	520	160
95-95-4	2,4,5-Trichlorophenol	U	520	1.0	500	520	160
91-58-7	2-Chloronaphthalene	U	350	1.0	330	350	91
92-52-4	1,1'-Biphenyl	U	350	1.0	330	350	77
88-74-4	2-Nitroaniline	U	520	1.0	500	520	79
131-11-3	Dimethyl Phthalate	U	350	1.0	330	350	82
606-20-2	2,6-Dinitrotoluene	U	350	1.0	330	350	83
208-96-8	Acenaphthylene	U	350	1.0	330	350	74
99-09-2	3-Nitroaniline	U	520	1.0	500	520	99
83-32-9	Acenaphthene	U	350	1.0	330	350	68
51-28-5	2,4-Dinitrophenol	U	1300	1.0	1200	1300	400
132-64-9	Dibenzofuran	U	350	1.0	330	350	83
100-02-7	4-Nitrophenol	U	1300	1.0	1200	1300	320
121-14-2	2,4-Dinitrotoluene	U	350	1.0	330	350	89
84-66-2	Diethylphthalate	~~JB~~	350U ~~86~~	1.0	330	350	84 BC
7005-72-3	4-Chlorophenyl-phenylether	U	350	1.0	330	350	82
100-01-6	4-Nitroaniline	U	520	1.0	500	520	140
534-52-1	4,6-Dinitro-2-Methylphenol	U	1300	1.0	1200	1300	350
86-30-6	N-Nitrosodiphenylamine	U	690	1.0	660	690	230
101-55-3	4-Bromophenyl-phenylether	U	350	1.0	330	350	89
1912-24-9	Atrazine	U	350	1.0	330	350	96
87-86-5	Pentachlorophenol	U	860	1.0	820	860	250
120-12-7	Anthracene	U	350	1.0	330	350	88
86-74-8	Carbazole	U	520	1.0	500	520	120

lew
4/15/09

KATAHDIN ANALYTICAL SERVICES
Report of Analytical Results

3

Client: CH2MHill
Project: TO-009 Lejeune
PO No:
Sample Date: 01/07/09
Received Date: 01/09/09
Extraction Date: 01/13/09
Analysis Date: 23-JAN-2009 15:30
Report Date: 01/31/2009
Matrix: SOIL
% Solids: 95.1

Lab ID: SC0102-5
Client ID: MR08-SS274-09A
SDG: TO9-30
Extracted by: AC
Extraction Method: SW846 3550
Analyst: JCG
Analysis Method: SW846 8270C
Lab Prep Batch: WG59750
Units: ug/Kgdrywt

CAS#	Compound	Flags	Results	DF	PQL	Adj.PQL	Adj.MDL
84-74-2	Di-n-butylphthalate	U	350	1.0	330	350	110
85-68-7	Butylbenzylphthalate	U	350	1.0	330	350	98
91-94-1	3,3'-Dichlorobenzidine	U	520	1.0	500	520	120
218-01-9	Chrysene	U	350	1.0	330	350	100
117-81-7	bis(2-Ethylhexyl)phthalate	U	350	1.0	330	350	100
117-84-0	Di-n-octylphthalate	U	350	1.0	330	350	220
367-12-4	2-Fluorophenol		42%				
13127-88-3	Phenol-D6		70%				
4165-60-0	Nitrobenzene-D5		79%				
321-60-8	2-Fluorobiphenyl		80%				
118-79-6	2,4,6-Tribromophenol		* 17%				
1718-51-0	Terphenyl-D14		105%				

lew 4/15/09

4

KATAHDIN ANALYTICAL SERVICES
Report of Analytical Results

Client: CH2MHill
Project: TO-009 Lejeune
PO No:
Sample Date: 01/07/09
Received Date: 01/09/09
Extraction Date: 01/13/09
Analysis Date: 22-JAN-2009 11:01
Report Date: 01/31/2009
Matrix: SOIL
% Solids: 93.7

Lab ID: SC0102-7
Client ID: MR08-IS274-9-10-09A
SDG: TO9-30
Extracted by: AC
Extraction Method: SW846 3550
Analyst: JLP
Analysis Method: SW846 8270C
Lab Prep Batch: WG59750
Units: ug/Kgdrywt

CAS#	Compound	Flags	Results	DF	PQL	Adj.PQL	Adj.MDL
100-52-7	Benzaldehyde	~~U~~ UJ	530	1.0	500	530	130 JCB
108-95-2	Phenol	U	530	1.0	500	530	170
111-44-4	Bis(2-Chloroethyl)ether	U	350	1.0	330	350	86
95-57-8	2-Chlorophenol	U	530	1.0	500	530	170
95-48-7	2-Methylphenol	U	640	1.0	600	640	210
108-60-1	2,2'-Oxybis(1-chloropropane)	U	350	1.0	330	350	95
98-86-2	Acetophenone	U	640	1.0	600	640	190
621-64-7	N-Nitroso-di-n-propylamine	U	350	1.0	330	350	88
65794-96-9	3&4-Methylphenol	U	640	1.0	600	640	200
67-72-1	Hexachloroethane	U	350	1.0	330	350	100
98-95-3	Nitrobenzene	U	350	1.0	330	350	97
78-59-1	Isophorone	U	350	1.0	330	350	80
88-75-5	2-Nitrophenol	U	640	1.0	600	640	180
105-67-9	2,4-Dimethylphenol	U	530	1.0	500	530	180
111-91-1	Bis(2-Chloroethoxy)methane	U	350	1.0	330	350	100
120-83-2	2,4-Dichlorophenol	U	530	1.0	500	530	160
106-47-8	4-Chloroaniline	U	530	1.0	500	530	130
105-60-2	Caprolactam	U	530	1.0	500	530	150
59-50-7	4-Chloro-3-Methylphenol	U	530	1.0	500	530	180
88-06-2	2,4,6-Trichlorophenol	U	530	1.0	500	530	160
95-95-4	2,4,5-Trichlorophenol	U	530	1.0	500	530	160
91-58-7	2-Chloronaphthalene	U	350	1.0	330	350	93
92-52-4	1,1'-Biphenyl	U	350	1.0	330	350	78
88-74-4	2-Nitroaniline	U	530	1.0	500	530	80
131-11-3	Dimethyl Phthalate	U	350	1.0	330	350	83
606-20-2	2,6-Dinitrotoluene	U	350	1.0	330	350	84
208-96-8	Acenaphthylene	U	350	1.0	330	350	75
99-09-2	3-Nitroaniline	U	530	1.0	500	530	100
83-32-9	Acenaphthene	U	350	1.0	330	350	69
51-28-5	2,4-Dinitrophenol	U	1300	1.0	1200	1300	400
132-64-9	Dibenzofuran	U	350	1.0	330	350	84
100-02-7	4-Nitrophenol	U	1300	1.0	1200	1300	330
121-14-2	2,4-Dinitrotoluene	U	350	1.0	330	350	91
84-66-2	Diethylphthalate	~~JB~~	350U ~~86~~	1.0	330	350	85 BL
7005-72-3	4-Chlorophenyl-phenylether	U	350	1.0	330	350	83
100-01-6	4-Nitroaniline	U	530	1.0	500	530	140
534-52-1	4,6-Dinitro-2-Methylphenol	U	1300	1.0	1200	1300	360
86-30-6	N-Nitrosodiphenylamine	U	700	1.0	660	700	230
101-55-3	4-Bromophenyl-phenylether	U	350	1.0	330	350	91
1912-24-9	Atrazine	U	350	1.0	330	350	97
87-86-5	Pentachlorophenol	U	870	1.0	820	870	250
120-12-7	Anthracene	U	350	1.0	330	350	90
86-74-8	Carbazole	U	530	1.0	500	530	120

Rw 4/15/09

4

KATAHDIN ANALYTICAL SERVICES
Report of Analytical Results

Client: CH2MHill
Project: TO-009 Lejeune
PO No:
Sample Date: 01/07/09
Received Date: 01/09/09
Extraction Date: 01/13/09
Analysis Date: 22-JAN-2009 11:01
Report Date: 01/31/2009
Matrix: SOIL
% Solids: 93.7

Lab ID: SC0102-7
Client ID: MR08-IS274-9-10-09A
SDG: TO9-30
Extracted by: AC
Extraction Method: SW846 3550
Analyst: JLP
Analysis Method: SW846 8270C
Lab Prep Batch: WG59750
Units: ug/Kgdrywt

CAS#	Compound	Flags	Results	DF	PQL	Adj.PQL	Adj.MDL	
84-74-2	Di-n-butylphthalate	U	350	1.0	330	350	110	
85-68-7	Butylbenzylphthalate	U	350	1.0	330	350	99	
91-94-1	3,3'-Dichlorobenzidine	U	530	1.0	500	530	120	
218-01-9	Chrysene	U	350	1.0	330	350	100	
117-81-7	bis(2-Ethylhexyl)phthalate	J	290	1.0	330	350	100	
117-84-0	Di-n-octylphthalate	~~J~~ UJ	350	1.0	330	350	220	CCU
367-12-4	2-Fluorophenol		63%					
13127-88-3	Phenol-D6		79%					
4165-60-0	Nitrobenzene-D5		81%					
321-60-8	2-Fluorobiphenyl		84%					
118-79-6	2,4,6-Tribromophenol		45%					
1718-51-0	Terphenyl-D14		116%					

lew
4/15/09

KATAHDIN ANALYTICAL SERVICES
Report of Analytical Results

Client: CH2MHill
Project: TO-009 Lejeune
PO No:
Sample Date: 01/08/09
Received Date: 01/10/09
Extraction Date: 01/13/09
Analysis Date: 23-JAN-2009 03:42
Report Date: 01/31/2009
Matrix: SOIL
% Solids: 96.7

Lab ID: SC0127-1
Client ID: MR08-SS281-09A
SDG: TO9-30
Extracted by: AC
Extraction Method: SW846 3550
Analyst: JCG
Analysis Method: SW846 8270C
Lab Prep Batch: WG59750
Units: ug/Kgdrywt

CAS#	Compound	Flags	Results	DF	PQL	Adj.PQL	Adj.MDL
100-52-7	Benzaldehyde	~~U~~ UJ	520	1.0	500	520	120 JeB
108-95-2	Phenol	U	520	1.0	500	520	160
111-44-4	Bis(2-Chloroethyl)ether	U	340	1.0	330	340	84
95-57-8	2-Chlorophenol	U	520	1.0	500	520	170
95-48-7	2-Methylphenol	U	620	1.0	600	620	210
108-60-1	2,2'-Oxybis(1-chloropropane)	U	340	1.0	330	340	92
98-86-2	Acetophenone	U	620	1.0	600	620	180
621-64-7	N-Nitroso-di-n-propylamine	U	340	1.0	330	340	86
65794-96-9	3&4-Methylphenol	U	620	1.0	600	620	190
67-72-1	Hexachloroethane	U	340	1.0	330	340	99
98-95-3	Nitrobenzene	U	340	1.0	330	340	94
78-59-1	Isophorone	U	340	1.0	330	340	78
88-75-5	2-Nitrophenol	U	620	1.0	600	620	170
105-67-9	2,4-Dimethylphenol	U	520	1.0	500	520	170
111-91-1	Bis(2-Chloroethoxy)methane	U	340	1.0	330	340	99
120-83-2	2,4-Dichlorophenol	U	520	1.0	500	520	160
106-47-8	4-Chloroaniline	U	520	1.0	500	520	120
105-60-2	Caprolactam	U	520	1.0	500	520	150
59-50-7	4-Chloro-3-Methylphenol	U	520	1.0	500	520	170
88-06-2	2,4,6-Trichlorophenol	U	520	1.0	500	520	160
95-95-4	2,4,5-Trichlorophenol	U	520	1.0	500	520	160
91-58-7	2-Chloronaphthalene	U	340	1.0	330	340	90
92-52-4	1,1'-Biphenyl	U	340	1.0	330	340	75
88-74-4	2-Nitroaniline	U	520	1.0	500	520	78
131-11-3	Dimethyl Phthalate	U	340	1.0	330	340	81
606-20-2	2,6-Dinitrotoluene	U	340	1.0	330	340	82
208-96-8	Acenaphthylene	U	340	1.0	330	340	72
99-09-2	3-Nitroaniline	U	520	1.0	500	520	97
83-32-9	Acenaphthene	U	340	1.0	330	340	67
51-28-5	2,4-Dinitrophenol	U	1200	1.0	1200	1200	390
132-64-9	Dibenzofuran	U	340	1.0	330	340	82
100-02-7	4-Nitrophenol	U	1200	1.0	1200	1200	320
121-14-2	2,4-Dinitrotoluene	U	340	1.0	330	340	88
84-66-2	Diethylphthalate	U	340	1.0	330	340	83
7005-72-3	4-Chlorophenyl-phenylether	U	340	1.0	330	340	81
100-01-6	4-Nitroaniline	U	520	1.0	500	520	140
534-52-1	4,6-Dinitro-2-Methylphenol	U	1200	1.0	1200	1200	350
86-30-6	N-Nitrosodiphenylamine	U	680	1.0	660	680	230
101-55-3	4-Bromophenyl-phenylether	U	340	1.0	330	340	88
1912-24-9	Atrazine	U	340	1.0	330	340	94
87-86-5	Pentachlorophenol	U	850	1.0	820	850	240
120-12-7	Anthracene	U	340	1.0	330	340	87
86-74-8	Carbazole	U	520	1.0	500	520	110

dew 4/15/09

5

KATAHDIN ANALYTICAL SERVICES
Report of Analytical Results

Client: CH2MHill
Project: TO-009 Lejeune
PO No:
Sample Date: 01/08/09
Received Date: 01/10/09
Extraction Date: 01/13/09
Analysis Date: 23-JAN-2009 03:42
Report Date: 01/31/2009
Matrix: SOIL
% Solids: 96.7

Lab ID: SC0127-1
Client ID: MR08-SS281-09A
SDG: TO9-30
Extracted by: AC
Extraction Method: SW846 3550
Analyst: JCG
Analysis Method: SW846 8270C
Lab Prep Batch: WG59750
Units: ug/Kgdrywt

CAS#	Compound	Flags	Results	DF	PQL	Adj.PQL	Adj.MDL	
84-74-2	Di-n-butylphthalate	U	340	1.0	330	340	100	
85-68-7	Butylbenzylphthalate	U	340	1.0	330	340	96	
91-94-1	3,3'-Dichlorobenzidine	~~U~~ UJ	520	1.0	500	520	120	CCH
218-01-9	Chrysene	U	340	1.0	330	340	98	
117-81-7	bis(2-Ethylhexyl)phthalate	J	110	1.0	330	340	100	
117-84-0	Di-n-octylphthalate	~~U~~ UJ	340	1.0	330	340	220	CCH
367-12-4	2-Fluorophenol		82%					
13127-88-3	Phenol-D6		90%					
4165-60-0	Nitrobenzene-D5		84%					
321-60-8	2-Fluorobiphenyl		89%					
118-79-6	2,4,6-Tribromophenol		88%					
1718-51-0	Terphenyl-D14		*148%					

JW 4/15/09

6

KATAHDIN ANALYTICAL SERVICES
Report of Analytical Results

Client: CH2MHill
Project: TO-009 Lejeune
PO No:
Sample Date: 01/08/09
Received Date: 01/10/09
Extraction Date: 01/13/09
Analysis Date: 22-JAN-2009 11:44
Report Date: 01/31/2009
Matrix: SOIL
% Solids: 87.0

Lab ID: SC0127-3
Client ID: MR08-IS281-9-10-09A
SDG: TO9-30
Extracted by: AC
Extraction Method: SW846 3550
Analyst: JLP
Analysis Method: SW846 8270C
Lab Prep Batch: WG59750
Units: ug/Kgdrywt

CAS#	Compound	Flags	Results	DF	PQL	Adj.PQL	Adj.MDL	
100-52-7	Benzaldehyde	~~U~~ uJ	570	1.0	500	570	140	JeB
108-95-2	Phenol	U	570	1.0	500	570	180	
111-44-4	Bis(2-Chloroethyl)ether	U	380	1.0	330	380	93	
95-57-8	2-Chlorophenol	U	570	1.0	500	570	190	
95-48-7	2-Methylphenol	U	690	1.0	600	690	230	
108-60-1	2,2'-Oxybis(1-chloropropane)	U	380	1.0	330	380	100	
98-86-2	Acetophenone	U	690	1.0	600	690	200	
621-64-7	N-Nitroso-di-n-propylamine	U	380	1.0	330	380	95	
65794-96-9	3&4-Methylphenol	U	690	1.0	600	690	210	
67-72-1	Hexachloroethane	U	380	1.0	330	380	110	
98-95-3	Nitrobenzene	U	380	1.0	330	380	100	
78-59-1	Isophorone	U	380	1.0	330	380	86	
88-75-5	2-Nitrophenol	U	690	1.0	600	690	190	
105-67-9	2,4-Dimethylphenol	U	570	1.0	500	570	190	
111-91-1	Bis(2-Chloroethoxy)methane	U	380	1.0	330	380	110	
120-83-2	2,4-Dichlorophenol	U	570	1.0	500	570	170	
106-47-8	4-Chloroaniline	U	570	1.0	500	570	140	
105-60-2	Caprolactam	U	570	1.0	500	570	160	
59-50-7	4-Chloro-3-Methylphenol	U	570	1.0	500	570	190	
88-06-2	2,4,6-Trichlorophenol	U	570	1.0	500	570	180	
95-95-4	2,4,5-Trichlorophenol	U	570	1.0	500	570	180	
91-58-7	2-Chloronaphthalene	U	380	1.0	330	380	100	
92-52-4	1,1'-Biphenyl	U	380	1.0	330	380	84	
88-74-4	2-Nitroaniline	U	570	1.0	500	570	86	
131-11-3	Dimethyl Phthalate	U	380	1.0	330	380	90	
606-20-2	2,6-Dinitrotoluene	U	380	1.0	330	380	91	
208-96-8	Acenaphthylene	U	380	1.0	330	380	80	
99-09-2	3-Nitroaniline	U	570	1.0	500	570	110	
83-32-9	Acenaphthene	U	380	1.0	330	380	75	
51-28-5	2,4-Dinitrophenol	U	1400	1.0	1200	1400	430	
132-64-9	Dibenzofuran	U	380	1.0	330	380	91	
100-02-7	4-Nitrophenol	U	1400	1.0	1200	1400	350	
121-14-2	2,4-Dinitrotoluene	U	380	1.0	330	380	98	
84-66-2	Diethylphthalate	~~JB~~	380u ~~94~~	1.0	330	380	92	BL
7005-72-3	4-Chlorophenyl-phenylether	U	380	1.0	330	380	90	
100-01-6	4-Nitroaniline	U	570	1.0	500	570	150	
534-52-1	4,6-Dinitro-2-Methylphenol	U	1400	1.0	1200	1400	390	
86-30-6	N-Nitrosodiphenylamine	U	760	1.0	660	760	250	
101-55-3	4-Bromophenyl-phenylether	U	380	1.0	330	380	98	
1912-24-9	Atrazine	U	380	1.0	330	380	100	
87-86-5	Pentachlorophenol	U	940	1.0	820	940	270	
120-12-7	Anthracene	U	380	1.0	330	380	96	
86-74-8	Carbazole	U	570	1.0	500	570	130	

lw 4/15/09

6

KATAHDIN ANALYTICAL SERVICES
Report of Analytical Results

Client: CH2MHill
Project: TO-009 Lejeune
PO No:
Sample Date: 01/08/09
Received Date: 01/10/09
Extraction Date: 01/13/09
Analysis Date: 22-JAN-2009 11:44
Report Date: 01/31/2009
Matrix: SOIL
% Solids: 87.0

Lab ID: SC0127-3
Client ID: MR08-IS281-9-10-09A
SDG: TO9-30
Extracted by: AC
Extraction Method: SW846 3550
Analyst: JLP
Analysis Method: SW846 8270C
Lab Prep Batch: WG59750
Units: ug/Kgdrywt

CAS#	Compound	Flags	Results	DF	PQL	Adj.PQL	Adj.MDL	
84-74-2	Di-n-butylphthalate	U	380	1.0	330	380	120	
85-68-7	Butylbenzylphthalate	U	380	1.0	330	380	110	
91-94-1	3,3'-Dichlorobenzidine	U	570	1.0	500	570	130	
218-01-9	Chrysene	U	380	1.0	330	380	110	
117-81-7	bis(2-Ethylhexyl)phthalate	U	380	1.0	330	380	110	
117-84-0	Di-n-octylphthalate	~~U~~ UJ	380	1.0	330	380	240	CCH
367-12-4	2-Fluorophenol		72%					
13127-88-3	Phenol-D6		80%					
4165-60-0	Nitrobenzene-D5		83%					
321-60-8	2-Fluorobiphenyl		82%					
118-79-6	2,4,6-Tribromophenol		75%					
1718-51-0	Terphenyl-D14		106%					

LW
4/15/09

7

KATAHDIN ANALYTICAL SERVICES
Report of Analytical Results

Client: CH2MHill
Project: TO-009 Lejeune
PO No:
Sample Date: 01/08/09
Received Date: 01/10/09
Extraction Date: 01/13/09
Analysis Date: 23-JAN-2009 01:36
Report Date: 01/31/2009
Matrix: SOIL
% Solids: 95.3

Lab ID: SC0127-5
Client ID: MR08-SS282-09A
SDG: TO9-30
Extracted by: AC
Extraction Method: SW846 3550
Analyst: JCG
Analysis Method: SW846 8270C
Lab Prep Batch: WG59750
Units: ug/Kgdrywt

CAS#	Compound	Flags	Results	DF	PQL	Adj.PQL	Adj.MDL
100-52-7	Benzaldehyde	~~U~~ UJ	520	1.0	500	520	120 ICB
108-95-2	Phenol	U	520	1.0	500	520	160
111-44-4	Bis(2-Chloroethyl)ether	U	350	1.0	330	350	85
95-57-8	2-Chlorophenol	U	520	1.0	500	520	170
95-48-7	2-Methylphenol	U	630	1.0	600	630	210
108-60-1	2,2'-Oxybis(1-chloropropane)	U	350	1.0	330	350	93
98-86-2	Acetophenone	U	630	1.0	600	630	190
621-64-7	N-Nitroso-di-n-propylamine	U	350	1.0	330	350	87
65794-96-9	3&4-Methylphenol	U	630	1.0	600	630	200
67-72-1	Hexachloroethane	U	350	1.0	330	350	100
98-95-3	Nitrobenzene	U	350	1.0	330	350	95
78-59-1	Isophorone	U	350	1.0	330	350	79
88-75-5	2-Nitrophenol	U	630	1.0	600	630	180
105-67-9	2,4-Dimethylphenol	U	520	1.0	500	520	170
111-91-1	Bis(2-Chloroethoxy)methane	U	350	1.0	330	350	100
120-83-2	2,4-Dichlorophenol	U	520	1.0	500	520	160
106-47-8	4-Chloroaniline	U	520	1.0	500	520	120
105-60-2	Caprolactam	U	520	1.0	500	520	150
59-50-7	4-Chloro-3-Methylphenol	U	520	1.0	500	520	170
88-06-2	2,4,6-Trichlorophenol	U	520	1.0	500	520	160
95-95-4	2,4,5-Trichlorophenol	U	520	1.0	500	520	160
91-58-7	2-Chloronaphthalene	U	350	1.0	330	350	91
92-52-4	1,1'-Biphenyl	U	350	1.0	330	350	77
88-74-4	2-Nitroaniline	U	520	1.0	500	520	79
131-11-3	Dimethyl Phthalate	U	350	1.0	330	350	82
606-20-2	2,6-Dinitrotoluene	U	350	1.0	330	350	83
208-96-8	Acenaphthylene	U	350	1.0	330	350	73
99-09-2	3-Nitroaniline	U	520	1.0	500	520	99
83-32-9	Acenaphthene	U	350	1.0	330	350	68
51-28-5	2,4-Dinitrophenol	U	1200	1.0	1200	1200	400
132-64-9	Dibenzofuran	U	350	1.0	330	350	83
100-02-7	4-Nitrophenol	U	1200	1.0	1200	1200	320
121-14-2	2,4-Dinitrotoluene	U	350	1.0	330	350	89
84-66-2	Diethylphthalate	~~JB~~ 350u	~~84~~	1.0	330	350	84 BL
7005-72-3	4-Chlorophenyl-phenylether	U	350	1.0	330	350	82
100-01-6	4-Nitroaniline	U	520	1.0	500	520	140
534-52-1	4,6-Dinitro-2-Methylphenol	U	1200	1.0	1200	1200	350
86-30-6	N-Nitrosodiphenylamine	U	690	1.0	660	690	230
101-55-3	4-Bromophenyl-phenylether	U	350	1.0	330	350	89
1912-24-9	Atrazine	U	350	1.0	330	350	95
87-86-5	Pentachlorophenol	U	860	1.0	820	860	250
120-12-7	Anthracene	U	350	1.0	330	350	88
86-74-8	Carbazole	U	520	1.0	500	520	120

MW 4/15/09

7

KATAHDIN ANALYTICAL SERVICES
Report of Analytical Results

Client: CH2MHill
Project: TO-009 Lejeune
PO No:
Sample Date: 01/08/09
Received Date: 01/10/09
Extraction Date: 01/13/09
Analysis Date: 23-JAN-2009 01:36
Report Date: 01/31/2009
Matrix: SOIL
% Solids: 95.3

Lab ID: SC0127-5
Client ID: MR08-SS282-09A
SDG: TO9-30
Extracted by: AC
Extraction Method: SW846 3550
Analyst: JCG
Analysis Method: SW846 8270C
Lab Prep Batch: WG59750
Units: ug/Kgdrywt

CAS#	Compound	Flags	Results	DF	PQL	Adj.PQL	Adj.MDL	
84-74-2	Di-n-butylphthalate	U	350	1.0	330	350	100	
85-68-7	Butylbenzylphthalate	U	350	1.0	330	350	98	
91-94-1	3,3'-Dichlorobenzidine	~~U~~ UJ	520	1.0	500	520	120	CCH
218-01-9	Chrysene	U	350	1.0	330	350	100	
117-81-7	bis(2-Ethylhexyl)phthalate	U	350	1.0	330	350	100	
117-84-0	Di-n-octylphthalate	~~U~~ UJ	350	1.0	330	350	220	CCH
367-12-4	2-Fluorophenol		72%					
13127-88-3	Phenol-D6		82%					
4165-60-0	Nitrobenzene-D5		80%					
321-60-8	2-Fluorobiphenyl		82%					
118-79-6	2,4,6-Tribromophenol		62%					
1718-51-0	Terphenyl-D14		120%					

MW
4/15/09

8

KATAHDIN ANALYTICAL SERVICES
Report of Analytical Results

Client: CH2MHill
Project: TO-009 Lejeune
PO No:
Sample Date: 01/08/09
Received Date: 01/10/09
Extraction Date: 01/13/09
Analysis Date: 22-JAN-2009 12:28
Report Date: 01/31/2009
Matrix: SOIL
% Solids: 87.8

Lab ID: SC0127-7
Client ID: MR08-IS282-9-10-09A
SDG: TO9-30
Extracted by: AC
Extraction Method: SW846 3550
Analyst: JLP
Analysis Method: SW846 8270C
Lab Prep Batch: WG59750
Units: ug/Kgdrywt

CAS#	Compound	Flags	Results	DF	PQL	Adj.PQL	Adj.MDL	
100-52-7	Benzaldehyde	~~U~~ UJ	570	1.0	500	570	140	ICB
108-95-2	Phenol	U	570	1.0	500	570	180	
111-44-4	Bis(2-Chloroethyl)ether	U	380	1.0	330	380	92	
95-57-8	2-Chlorophenol	U	570	1.0	500	570	190	
95-48-7	2-Methylphenol	U	680	1.0	600	680	230	
108-60-1	2,2'-Oxybis(1-chloropropane)	U	380	1.0	330	380	100	
98-86-2	Acetophenone	U	680	1.0	600	680	200	
621-64-7	N-Nitroso-di-n-propylamine	U	380	1.0	330	380	94	
65794-96-9	3&4-Methylphenol	U	680	1.0	600	680	210	
67-72-1	Hexachloroethane	U	380	1.0	330	380	110	
98-95-3	Nitrobenzene	U	380	1.0	330	380	100	
78-59-1	Isophorone	U	380	1.0	330	380	85	
88-75-5	2-Nitrophenol	U	680	1.0	600	680	190	
105-67-9	2,4-Dimethylphenol	U	570	1.0	500	570	190	
111-91-1	Bis(2-Chloroethoxy)methane	U	380	1.0	330	380	110	
120-83-2	2,4-Dichlorophenol	U	570	1.0	500	570	170	
106-47-8	4-Chloroaniline	U	570	1.0	500	570	140	
105-60-2	Caprolactam	U	570	1.0	500	570	160	
59-50-7	4-Chloro-3-Methylphenol	U	570	1.0	500	570	190	
88-06-2	2,4,6-Trichlorophenol	U	570	1.0	500	570	180	
95-95-4	2,4,5-Trichlorophenol	U	570	1.0	500	570	180	
91-58-7	2-Chloronaphthalene	U	380	1.0	330	380	99	
92-52-4	1,1'-Biphenyl	U	380	1.0	330	380	83	
88-74-4	2-Nitroaniline	U	570	1.0	500	570	85	
131-11-3	Dimethyl Phthalate	U	380	1.0	330	380	89	
606-20-2	2,6-Dinitrotoluene	U	380	1.0	330	380	90	
208-96-8	Acenaphthylene	U	380	1.0	330	380	80	
99-09-2	3-Nitroaniline	U	570	1.0	500	570	110	
83-32-9	Acenaphthene	U	380	1.0	330	380	74	
51-28-5	2,4-Dinitrophenol	U	1400	1.0	1200	1400	430	
132-64-9	Dibenzofuran	U	380	1.0	330	380	90	
100-02-7	4-Nitrophenol	U	1400	1.0	1200	1400	350	
121-14-2	2,4-Dinitrotoluene	U	380	1.0	330	380	97	
84-66-2	Diethylphthalate	U	380	1.0	330	380	91	
7005-72-3	4-Chlorophenyl-phenylether	U	380	1.0	330	380	89	
100-01-6	4-Nitroaniline	U	570	1.0	500	570	150	
534-52-1	4,6-Dinitro-2-Methylphenol	U	1400	1.0	1200	1400	380	
86-30-6	N-Nitrosodiphenylamine	U	750	1.0	660	750	250	
101-55-3	4-Bromophenyl-phenylether	U	380	1.0	330	380	97	
1912-24-9	Atrazine	U	380	1.0	330	380	100	
87-86-5	Pentachlorophenol	U	930	1.0	820	930	270	
120-12-7	Anthracene	U	380	1.0	330	380	96	
86-74-8	Carbazole	U	570	1.0	500	570	130	

QCW 4/15/09

8

KATAHDIN ANALYTICAL SERVICES
Report of Analytical Results

Client: CH2MHill
Project: TO-009 Lejeune
PO No:
Sample Date: 01/08/09
Received Date: 01/10/09
Extraction Date: 01/13/09
Analysis Date: 22-JAN-2009 12:28
Report Date: 01/31/2009
Matrix: SOIL
% Solids: 87.8

Lab ID: SC0127-7
Client ID: MR08-IS282-9-10-09A
SDG: TO9-30
Extracted by: AC
Extraction Method: SW846 3550
Analyst: JLP
Analysis Method: SW846 8270C
Lab Prep Batch: WG59750
Units: ug/Kgdrywt

CAS#	Compound	Flags	Results	DF	PQL	Adj.PQL	Adj.MDL	
84-74-2	Di-n-butylphthalate	U	380	1.0	330	380	120	
85-68-7	Butylbenzylphthalate	U	380	1.0	330	380	100	
91-94-1	3,3'-Dichlorobenzidine	U	570	1.0	500	570	130	
218-01-9	Chrysene	U	380	1.0	330	380	110	
117-81-7	bis(2-Ethylhexyl)phthalate	U	380	1.0	330	380	110	
117-84-0	Di-n-octylphthalate	~~J~~ UJ	380	1.0	330	380	240	CCU
367-12-4	2-Fluorophenol		75%					
13127-88-3	Phenol-D6		81%					
4165-60-0	Nitrobenzene-D5		81%					
321-60-8	2-Fluorobiphenyl		83%					
118-79-6	2,4,6-Tribromophenol		73%					
1718-51-0	Terphenyl-D14		108%					

LW
4/15/09

9

KATAHDIN ANALYTICAL SERVICES
Report of Analytical Results

Client: CH2MHill
Project: TO-009 Lejeune
PO No:
Sample Date: 01/08/09
Received Date: 01/10/09
Extraction Date: 01/13/09
Analysis Date: 23-JAN-2009 02:18
Report Date: 01/31/2009
Matrix: SOIL
% Solids: 90.2

Lab ID: SC0127-9
Client ID: MR08-SS297-09A
SDG: TO9-30
Extracted by: AC
Extraction Method: SW846 3550
Analyst: JCG
Analysis Method: SW846 8270C
Lab Prep Batch: WG59750
Units: ug/Kgdrywt

CAS#	Compound	Flags	Results	DF	PQL	Adj.PQL	Adj.MDL
100-52-7	Benzaldehyde	~~U~~ UJ	550	1.0	500	550	130 ICB
108-95-2	Phenol	U	550	1.0	500	550	170
111-44-4	Bis(2-Chloroethyl)ether	U	360	1.0	330	360	90
95-57-8	2-Chlorophenol	U	550	1.0	500	550	180
95-48-7	2-Methylphenol	U	660	1.0	600	660	220
108-60-1	2,2'-Oxybis(1-chloropropane)	U	360	1.0	330	360	99
98-86-2	Acetophenone	U	660	1.0	600	660	200
621-64-7	N-Nitroso-di-n-propylamine	U	360	1.0	330	360	92
65794-96-9	3&4-Methylphenol	U	660	1.0	600	660	210
67-72-1	Hexachloroethane	U	360	1.0	330	360	110
98-95-3	Nitrobenzene	U	360	1.0	330	360	100
78-59-1	Isophorone	U	360	1.0	330	360	83
88-75-5	2-Nitrophenol	U	660	1.0	600	660	180
105-67-9	2,4-Dimethylphenol	U	550	1.0	500	550	180
111-91-1	Bis(2-Chloroethoxy)methane	U	360	1.0	330	360	110
120-83-2	2,4-Dichlorophenol	U	550	1.0	500	550	170
106-47-8	4-Chloroaniline	U	550	1.0	500	550	130
105-60-2	Caprolactam	U	550	1.0	500	550	160
59-50-7	4-Chloro-3-Methylphenol	U	550	1.0	500	550	180
88-06-2	2,4,6-Trichlorophenol	U	550	1.0	500	550	170
95-95-4	2,4,5-Trichlorophenol	U	550	1.0	500	550	170
91-58-7	2-Chloronaphthalene	U	360	1.0	330	360	96
92-52-4	1,1'-Biphenyl	U	360	1.0	330	360	81
88-74-4	2-Nitroaniline	U	550	1.0	500	550	83
131-11-3	Dimethyl Phthalate	U	360	1.0	330	360	86
606-20-2	2,6-Dinitrotoluene	U	360	1.0	330	360	88
208-96-8	Acenaphthylene	U	360	1.0	330	360	78
99-09-2	3-Nitroaniline	U	550	1.0	500	550	100
83-32-9	Acenaphthene	U	360	1.0	330	360	72
51-28-5	2,4-Dinitrophenol	U	1300	1.0	1200	1300	420
132-64-9	Dibenzofuran	U	360	1.0	330	360	88
100-02-7	4-Nitrophenol	U	1300	1.0	1200	1300	340
121-14-2	2,4-Dinitrotoluene	U	360	1.0	330	360	94
84-66-2	Diethylphthalate	U	360	1.0	330	360	89
7005-72-3	4-Chlorophenyl-phenylether	U	360	1.0	330	360	86
100-01-6	4-Nitroaniline	U	550	1.0	500	550	150
534-52-1	4,6-Dinitro-2-Methylphenol	U	1300	1.0	1200	1300	370
86-30-6	N-Nitrosodiphenylamine	U	730	1.0	660	730	240
101-55-3	4-Bromophenyl-phenylether	U	360	1.0	330	360	94
1912-24-9	Atrazine	U	360	1.0	330	360	100
87-86-5	Pentachlorophenol	U	910	1.0	820	910	260
120-12-7	Anthracene	U	360	1.0	330	360	93
86-74-8	Carbazole	U	550	1.0	500	550	120

bw
4/15/09

KATAHDIN ANALYTICAL SERVICES
Report of Analytical Results

Client: CH2MHill
Project: TO-009 Lejeune
PO No:
Sample Date: 01/08/09
Received Date: 01/10/09
Extraction Date: 01/13/09
Analysis Date: 23-JAN-2009 02:18
Report Date: 01/31/2009
Matrix: SOIL
% Solids: 90.2

Lab ID: SC0127-9
Client ID: MR08-SS297-09A
SDG: TO9-30
Extracted by: AC
Extraction Method: SW846 3550
Analyst: JCG
Analysis Method: SW846 8270C
Lab Prep Batch: WG59750
Units: ug/Kgdrywt

CAS#	Compound	Flags	Results	DF	PQL	Adj.PQL	Adj.MDL	
84-74-2	Di-n-butylphthalate	U	360	1.0	330	360	110	
85-68-7	Butylbenzylphthalate	U	360	1.0	330	360	100	
91-94-1	3,3'-Dichlorobenzidine	~~U~~ UJ	550	1.0	500	550	130	CCH
218-01-9	Chrysene	U	360	1.0	330	360	100	
117-81-7	bis(2-Ethylhexyl)phthalate	J	200	1.0	330	360	110	
117-84-0	Di-n-octylphthalate	~~U~~ UJ	360	1.0	330	360	230	CCH
367-12-4	2-Fluorophenol		74%					
13127-88-3	Phenol-D6		80%					
4165-60-0	Nitrobenzene-D5		74%					
321-60-8	2-Fluorobiphenyl		83%					
118-79-6	2,4,6-Tribromophenol		86%					
1718-51-0	Terphenyl-D14		*138%					

KW
4/15/09

10

KATAHDIN ANALYTICAL SERVICES
Report of Analytical Results

Client: CH2MHill
Project: TO-009 Lejeune
PO No:
Sample Date: 01/08/09
Received Date: 01/10/09
Extraction Date: 01/13/09
Analysis Date: 22-JAN-2009 13:13
Report Date: 01/31/2009
Matrix: SOIL
% Solids: 88.1

Lab ID: SC0127-11
Client ID: MR08-IS297-6-7-09A
SDG: TO9-30
Extracted by: AC
Extraction Method: SW846 3550
Analyst: JLP
Analysis Method: SW846 8270C
Lab Prep Batch: WG59750
Units: ug/Kgdrywt

CAS#	Compound	Flags	Results	DF	PQL	Adj.PQL	Adj.MDL
100-52-7	Benzaldehyde	~~U~~ UJ	570	1.0	500	570	140 JCB
108-95-2	Phenol	U	570	1.0	500	570	180
111-44-4	Bis(2-Chloroethyl)ether	U	370	1.0	330	370	92
95-57-8	2-Chlorophenol	U	570	1.0	500	570	190
95-48-7	2-Methylphenol	U	680	1.0	600	680	230
108-60-1	2,2'-Oxybis(1-chloropropane)	U	370	1.0	330	370	100
98-86-2	Acetophenone	U	680	1.0	600	680	200
621-64-7	N-Nitroso-di-n-propylamine	U	370	1.0	330	370	94
65794-96-9	3&4-Methylphenol	U	680	1.0	600	680	210
67-72-1	Hexachloroethane	U	370	1.0	330	370	110
98-95-3	Nitrobenzene	U	370	1.0	330	370	100
78-59-1	Isophorone	U	370	1.0	330	370	85
88-75-5	2-Nitrophenol	U	680	1.0	600	680	190
105-67-9	2,4-Dimethylphenol	U	570	1.0	500	570	190
111-91-1	Bis(2-Chloroethoxy)methane	U	370	1.0	330	370	110
120-83-2	2,4-Dichlorophenol	U	570	1.0	500	570	170
106-47-8	4-Chloroaniline	U	570	1.0	500	570	140
105-60-2	Caprolactam	U	570	1.0	500	570	160
59-50-7	4-Chloro-3-Methylphenol	U	570	1.0	500	570	190
88-06-2	2,4,6-Trichlorophenol	U	570	1.0	500	570	180
95-95-4	2,4,5-Trichlorophenol	U	570	1.0	500	570	180
91-58-7	2-Chloronaphthalene	U	370	1.0	330	370	99
92-52-4	1,1'-Biphenyl	U	370	1.0	330	370	83
88-74-4	2-Nitroaniline	U	570	1.0	500	570	85
131-11-3	Dimethyl Phthalate	U	370	1.0	330	370	88
606-20-2	2,6-Dinitrotoluene	U	370	1.0	330	370	90
208-96-8	Acenaphthylene	U	370	1.0	330	370	79
99-09-2	3-Nitroaniline	U	570	1.0	500	570	110
83-32-9	Acenaphthene	U	370	1.0	330	370	74
51-28-5	2,4-Dinitrophenol	U	1400	1.0	1200	1400	430
132-64-9	Dibenzofuran	U	370	1.0	330	370	90
100-02-7	4-Nitrophenol	U	1400	1.0	1200	1400	350
121-14-2	2,4-Dinitrotoluene	U	370	1.0	330	370	96
84-66-2	Diethylphthalate	U	370	1.0	330	370	91
7005-72-3	4-Chlorophenyl-phenylether	U	370	1.0	330	370	88
100-01-6	4-Nitroaniline	U	570	1.0	500	570	150
534-52-1	4,6-Dinitro-2-Methylphenol	U	1400	1.0	1200	1400	380
86-30-6	N-Nitrosodiphenylamine	U	750	1.0	660	750	250
101-55-3	4-Bromophenyl-phenylether	U	370	1.0	330	370	96
1912-24-9	Atrazine	U	370	1.0	330	370	100
87-86-5	Pentachlorophenol	U	930	1.0	820	930	270
120-12-7	Anthracene	U	370	1.0	330	370	95
86-74-8	Carbazole	U	570	1.0	500	570	120

MW 4/15/09

KATAHDIN ANALYTICAL SERVICES
Report of Analytical Results

Client: CH2MHill
Project: TO-009 Lejeune
PO No:
Sample Date: 01/08/09
Received Date: 01/10/09
Extraction Date: 01/13/09
Analysis Date: 22-JAN-2009 13:13
Report Date: 01/31/2009
Matrix: SOIL
% Solids: 88.1

Lab ID: SC0127-11
Client ID: MR08-IS297-6-7-09A
SDG: TO9-30
Extracted by: AC
Extraction Method: SW846 3550
Analyst: JLP
Analysis Method: SW846 8270C
Lab Prep Batch: WG59750
Units: ug/Kgdrywt

CAS#	Compound	Flags	Results	DF	PQL	Adj.PQL	Adj.MDL	
84-74-2	Di-n-butylphthalate	U	370	1.0	330	370	110	
85-68-7	Butylbenzylphthalate	U	370	1.0	330	370	100	
91-94-1	3,3'-Dichlorobenzidine	U	570	1.0	500	570	130	
218-01-9	Chrysene	U	370	1.0	330	370	110	
117-81-7	bis(2-Ethylhexyl)phthalate	U	370	1.0	330	370	110	
117-84-0	Di-n-octylphthalate	~~U~~ UJ	370	1.0	330	370	240	CCH
367-12-4	2-Fluorophenol		74%					
13127-88-3	Phenol-D6		79%					
4165-60-0	Nitrobenzene-D5		78%					
321-60-8	2-Fluorobiphenyl		78%					
118-79-6	2,4,6-Tribromophenol		72%					
1718-51-0	Terphenyl-D14		100%					

lew
4/15/09

11

KATAHDIN ANALYTICAL SERVICES
Report of Analytical Results

Client: CH2MHill
Project: TO-009 Lejeune
PO No:
Sample Date: 01/08/09
Received Date: 01/10/09
Extraction Date: 01/13/09
Analysis Date: 23-JAN-2009 18:23
Report Date: 01/31/2009
Matrix: SOIL
% Solids: 89.5

Lab ID: SC0127-13RA
Client ID: MR08-SS298-09A
SDG: TO9-30
Extracted by: AC
Extraction Method: SW846 3550
Analyst: JCG
Analysis Method: SW846 8270C
Lab Prep Batch: WG59750
Units: ug/Kgdrywt

CAS#	Compound	Flags	Results	DF	PQL	Adj.PQL	Adj.MDL	
100-52-7	Benzaldehyde	~~U~~ UJ	560	1.0	500	560	130	ICB
108-95-2	Phenol	U	560	1.0	500	560	170	
111-44-4	Bis(2-Chloroethyl)ether	U	370	1.0	330	370	90	
95-57-8	2-Chlorophenol	U	560	1.0	500	560	180	
95-48-7	2-Methylphenol	U	670	1.0	600	670	220	
108-60-1	2,2'-Oxybis(1-chloropropane)	U	370	1.0	330	370	99	
98-86-2	Acetophenone	U	670	1.0	600	670	200	
621-64-7	N-Nitroso-di-n-propylamine	U	370	1.0	330	370	93	
65794-96-9	3&4-Methylphenol	U	670	1.0	600	670	210	
67-72-1	Hexachloroethane	U	370	1.0	330	370	110	
98-95-3	Nitrobenzene	U	370	1.0	330	370	100	
78-59-1	Isophorone	U	370	1.0	330	370	84	
88-75-5	2-Nitrophenol	U	670	1.0	600	670	190	
105-67-9	2,4-Dimethylphenol	U	560	1.0	500	560	180	
111-91-1	Bis(2-Chloroethoxy)methane	U	370	1.0	330	370	110	
120-83-2	2,4-Dichlorophenol	U	560	1.0	500	560	170	
106-47-8	4-Chloroaniline	U	560	1.0	500	560	130	
105-60-2	Caprolactam	U	560	1.0	500	560	160	
59-50-7	4-Chloro-3-Methylphenol	U	560	1.0	500	560	180	
88-06-2	2,4,6-Trichlorophenol	U	560	1.0	500	560	170	
95-95-4	2,4,5-Trichlorophenol	U	560	1.0	500	560	170	
91-58-7	2-Chloronaphthalene	U	370	1.0	330	370	97	
92-52-4	1,1'-Biphenyl	U	370	1.0	330	370	82	
88-74-4	2-Nitroaniline	U	560	1.0	500	560	84	
131-11-3	Dimethyl Phthalate	U	370	1.0	330	370	87	
606-20-2	2,6-Dinitrotoluene	U	370	1.0	330	370	88	
208-96-8	Acenaphthylene	U	370	1.0	330	370	78	
99-09-2	3-Nitroaniline	U	560	1.0	500	560	100	
83-32-9	Acenaphthene	U	370	1.0	330	370	73	
51-28-5	2,4-Dinitrophenol	U	1300	1.0	1200	1300	420	
132-64-9	Dibenzofuran	U	370	1.0	330	370	88	
100-02-7	4-Nitrophenol	U	1300	1.0	1200	1300	340	
121-14-2	2,4-Dinitrotoluene	U	370	1.0	330	370	95	
84-66-2	Diethylphthalate	~~JB~~ 310U	~~91~~	1.0	330	370	89	BL
7005-72-3	4-Chlorophenyl-phenylether	U	370	1.0	330	370	87	
100-01-6	4-Nitroaniline	U	560	1.0	500	560	150	
534-52-1	4,6-Dinitro-2-Methylphenol	U	1300	1.0	1200	1300	380	
86-30-6	N-Nitrosodiphenylamine	U	740	1.0	660	740	240	
101-55-3	4-Bromophenyl-phenylether	U	370	1.0	330	370	95	
1912-24-9	Atrazine	U	370	1.0	330	370	100	
87-86-5	Pentachlorophenol	U	920	1.0	820	920	260	
120-12-7	Anthracene	U	370	1.0	330	370	94	
86-74-8	Carbazole	U	560	1.0	500	560	120	

lw 4/15/09

KATAHDIN ANALYTICAL SERVICES
Report of Analytical Results

11

Client: CH2MHill
Project: TO-009 Lejeune
PO No:
Sample Date: 01/08/09
Received Date: 01/10/09
Extraction Date: 01/13/09
Analysis Date: 23-JAN-2009 18:23
Report Date: 01/31/2009
Matrix: SOIL
% Solids: 89.5

Lab ID: SC0127-13RA
Client ID: MR08-SS298-09A
SDG: TO9-30
Extracted by: AC
Extraction Method: SW846 3550
Analyst: JCG
Analysis Method: SW846 8270C
Lab Prep Batch: WG59750
Units: ug/Kgdrywt

CAS#	Compound	Flags	Results	DF	PQL	Adj.PQL	Adj.MDL
84-74-2	Di-n-butylphthalate	U	370	1.0	330	370	110
85-68-7	Butylbenzylphthalate	U	370	1.0	330	370	100
91-94-1	3,3'-Dichlorobenzidine	U	560	1.0	500	560	130
218-01-9	Chrysene	U	370	1.0	330	370	110
117-81-7	bis(2-Ethylhexyl)phthalate	J	300	1.0	330	370	110
117-84-0	Di-n-octylphthalate	U	370	1.0	330	370	240
367-12-4	2-Fluorophenol		77%				
13127-88-3	Phenol-D6		85%				
4165-60-0	Nitrobenzene-D5		78%				
321-60-8	2-Fluorobiphenyl		85%				
118-79-6	2,4,6-Tribromophenol		93%				
1718-51-0	Terphenyl-D14		110%				

lew
4/15/09

12

KATAHDIN ANALYTICAL SERVICES
Report of Analytical Results

Client: CH2MHill
Project: TO-009 Lejeune
PO No:
Sample Date: 01/08/09
Received Date: 01/10/09
Extraction Date: 01/13/09
Analysis Date: 22-JAN-2009 13:57
Report Date: 01/31/2009
Matrix: SOIL
% Solids: 91.7

Lab ID: SC0127-15
Client ID: MR08-IS298-6-7-09A
SDG: TO9-30
Extracted by: AC
Extraction Method: SW846 3550
Analyst: JLP
Analysis Method: SW846 8270C
Lab Prep Batch: WG59750
Units: ug/Kgdrywt

CAS#	Compound	Flags	Results	DF	PQL	Adj.PQL	Adj.MDL
100-52-7	Benzaldehyde	~~U~~ UJ	540	1.0	500	540	130 ICB
108-95-2	Phenol	U	540	1.0	500	540	170
111-44-4	Bis(2-Chloroethyl)ether	U	360	1.0	330	360	88
95-57-8	2-Chlorophenol	U	540	1.0	500	540	180
95-48-7	2-Methylphenol	U	650	1.0	600	650	220
108-60-1	2,2'-Oxybis(1-chloropropane)	U	360	1.0	330	360	97
98-86-2	Acetophenone	U	650	1.0	600	650	190
621-64-7	N-Nitroso-di-n-propylamine	U	360	1.0	330	360	90
65794-96-9	3&4-Methylphenol	U	650	1.0	600	650	200
67-72-1	Hexachloroethane	U	360	1.0	330	360	100
98-95-3	Nitrobenzene	U	360	1.0	330	360	99
78-59-1	Isophorone	U	360	1.0	330	360	82
88-75-5	2-Nitrophenol	U	650	1.0	600	650	180
105-67-9	2,4-Dimethylphenol	U	540	1.0	500	540	180
111-91-1	Bis(2-Chloroethoxy)methane	U	360	1.0	330	360	100
120-83-2	2,4-Dichlorophenol	U	540	1.0	500	540	160
106-47-8	4-Chloroaniline	U	540	1.0	500	540	130
105-60-2	Caprolactam	U	540	1.0	500	540	160
59-50-7	4-Chloro-3-Methylphenol	U	540	1.0	500	540	180
88-06-2	2,4,6-Trichlorophenol	U	540	1.0	500	540	170
95-95-4	2,4,5-Trichlorophenol	U	540	1.0	500	540	170
91-58-7	2-Chloronaphthalene	U	360	1.0	330	360	95
92-52-4	1,1'-Biphenyl	U	360	1.0	330	360	80
88-74-4	2-Nitroaniline	U	540	1.0	500	540	82
131-11-3	Dimethyl Phthalate	U	360	1.0	330	360	85
606-20-2	2,6-Dinitrotoluene	U	360	1.0	330	360	86
208-96-8	Acenaphthylene	U	360	1.0	330	360	76
99-09-2	3-Nitroaniline	U	540	1.0	500	540	100
83-32-9	Acenaphthene	U	360	1.0	330	360	71
51-28-5	2,4-Dinitrophenol	U	1300	1.0	1200	1300	410
132-64-9	Dibenzofuran	U	360	1.0	330	360	86
100-02-7	4-Nitrophenol	U	1300	1.0	1200	1300	340
121-14-2	2,4-Dinitrotoluene	U	360	1.0	330	360	93
84-66-2	Diethylphthalate	U	360	1.0	330	360	87
7005-72-3	4-Chlorophenyl-phenylether	U	360	1.0	330	360	85
100-01-6	4-Nitroaniline	U	540	1.0	500	540	150
534-52-1	4,6-Dinitro-2-Methylphenol	U	1300	1.0	1200	1300	370
86-30-6	N-Nitrosodiphenylamine	U	720	1.0	660	720	240
101-55-3	4-Bromophenyl-phenylether	U	360	1.0	330	360	93
1912-24-9	Atrazine	U	360	1.0	330	360	99
87-86-5	Pentachlorophenol	U	890	1.0	820	890	260
120-12-7	Anthracene	U	360	1.0	330	360	92
86-74-8	Carbazole	U	540	1.0	500	540	120

MW 4/15/09

12

KATAHDIN ANALYTICAL SERVICES
Report of Analytical Results

Client: CH2MHill
Project: TO-009 Lejeune
PO No:
Sample Date: 01/08/09
Received Date: 01/10/09
Extraction Date: 01/13/09
Analysis Date: 22-JAN-2009 13:57
Report Date: 01/31/2009
Matrix: SOIL
% Solids: 91.7

Lab ID: SC0127-15
Client ID: MR08-IS298-6-7-09A
SDG: TO9-30
Extracted by: AC
Extraction Method: SW846 3550
Analyst: JLP
Analysis Method: SW846 8270C
Lab Prep Batch: WG59750
Units: ug/Kgdrywt

CAS#	Compound	Flags	Results	DF	PQL	Adj.PQL	Adj.MDL	
84-74-2	Di-n-butylphthalate	U	360	1.0	330	360	110	
85-68-7	Butylbenzylphthalate	U	360	1.0	330	360	100	
91-94-1	3,3'-Dichlorobenzidine	U	540	1.0	500	540	120	
218-01-9	Chrysene	U	360	1.0	330	360	100	
117-81-7	bis(2-Ethylhexyl)phthalate	U	360	1.0	330	360	110	
117-84-0	Di-n-octylphthalate	~~U~~ UJ	360	1.0	330	360	230	CCH
367-12-4	2-Fluorophenol		73%					
13127-88-3	Phenol-D6		81%					
4165-60-0	Nitrobenzene-D5		78%					
321-60-8	2-Fluorobiphenyl		82%					
118-79-6	2,4,6-Tribromophenol		66%					
1718-51-0	Terphenyl-D14		98%					

hw
4/15/09

13

KATAHDIN ANALYTICAL SERVICES
Report of Analytical Results

Client: CH2MHill
Project: TO-009 Lejeune
PO No:
Sample Date: 01/08/09
Received Date: 01/10/09
Extraction Date: 01/13/09
Analysis Date: 23-JAN-2009 16:12
Report Date: 01/31/2009
Matrix: SOIL
% Solids: 92.6

Lab ID: SC0127-17
Client ID: MR08-SS305-09A
SDG: TO9-30
Extracted by: AC
Extraction Method: SW846 3550
Analyst: JCG
Analysis Method: SW846 8270C
Lab Prep Batch: WG59750
Units: ug/Kgdrywt

CAS#	Compound	Flags	Results	DF	PQL	Adj.PQL	Adj.MDL	
100-52-7	Benzaldehyde	~~J~~ UJ	540	1.0	500	540	130	JCB
108-95-2	Phenol	U	540	1.0	500	540	170	
111-44-4	Bis(2-Chloroethyl)ether	U	360	1.0	330	360	87	
95-57-8	2-Chlorophenol	U	540	1.0	500	540	180	
95-48-7	2-Methylphenol	U	650	1.0	600	650	220	
108-60-1	2,2'-Oxybis(1-chloropropane)	U	360	1.0	330	360	96	
98-86-2	Acetophenone	U	650	1.0	600	650	190	
621-64-7	N-Nitroso-di-n-propylamine	U	360	1.0	330	360	90	
65794-96-9	3&4-Methylphenol	U	650	1.0	600	650	200	
67-72-1	Hexachloroethane	U	360	1.0	330	360	100	
98-95-3	Nitrobenzene	U	360	1.0	330	360	98	
78-59-1	Isophorone	U	360	1.0	330	360	81	
88-75-5	2-Nitrophenol	U	650	1.0	600	650	180	
105-67-9	2,4-Dimethylphenol	U	540	1.0	500	540	180	
111-91-1	Bis(2-Chloroethoxy)methane	U	360	1.0	330	360	100	
120-83-2	2,4-Dichlorophenol	U	540	1.0	500	540	160	
106-47-8	4-Chloroaniline	U	540	1.0	500	540	130	
105-60-2	Caprolactam	U	540	1.0	500	540	160	
59-50-7	4-Chloro-3-Methylphenol	U	540	1.0	500	540	180	
88-06-2	2,4,6-Trichlorophenol	U	540	1.0	500	540	170	
95-95-4	2,4,5-Trichlorophenol	U	540	1.0	500	540	170	
91-58-7	2-Chloronaphthalene	U	360	1.0	330	360	94	
92-52-4	1,1'-Biphenyl	U	360	1.0	330	360	79	
88-74-4	2-Nitroaniline	U	540	1.0	500	540	81	
131-11-3	Dimethyl Phthalate	U	360	1.0	330	360	84	
606-20-2	2,6-Dinitrotoluene	U	360	1.0	330	360	85	
208-96-8	Acenaphthylene	U	360	1.0	330	360	76	
99-09-2	3-Nitroaniline	U	540	1.0	500	540	100	
83-32-9	Acenaphthene	U	360	1.0	330	360	70	
51-28-5	2,4-Dinitrophenol	U	1300	1.0	1200	1300	410	
132-64-9	Dibenzofuran	U	360	1.0	330	360	85	
100-02-7	4-Nitrophenol	U	1300	1.0	1200	1300	330	
121-14-2	2,4-Dinitrotoluene	U	360	1.0	330	360	92	
84-66-2	Diethylphthalate	~~JB~~	360u ~~88~~	1.0	330	360	86	BL
7005-72-3	4-Chlorophenyl-phenylether	U	360	1.0	330	360	84	
100-01-6	4-Nitroaniline	U	540	1.0	500	540	140	
534-52-1	4,6-Dinitro-2-Methylphenol	U	1300	1.0	1200	1300	360	
86-30-6	N-Nitrosodiphenylamine	U	710	1.0	660	710	240	
101-55-3	4-Bromophenyl-phenylether	U	360	1.0	330	360	92	
1912-24-9	Atrazine	U	360	1.0	330	360	98	
87-86-5	Pentachlorophenol	U	880	1.0	820	880	260	
120-12-7	Anthracene	U	360	1.0	330	360	91	
86-74-8	Carbazole	U	540	1.0	500	540	120	

LW
4/15/09

KATAHDIN ANALYTICAL SERVICES
Report of Analytical Results

13

Client: CH2MHill
Project: TO-009 Lejeune
PO No:
Sample Date: 01/08/09
Received Date: 01/10/09
Extraction Date: 01/13/09
Analysis Date: 23-JAN-2009 16:12
Report Date: 01/31/2009
Matrix: SOIL
% Solids: 92.6

Lab ID: SC0127-17
Client ID: MR08-SS305-09A
SDG: TO9-30
Extracted by: AC
Extraction Method: SW846 3550
Analyst: JCG
Analysis Method: SW846 8270C
Lab Prep Batch: WG59750
Units: ug/Kgdrywt

CAS#	Compound	Flags	Results	DF	PQL	Adj.PQL	Adj.MDL
84-74-2	Di-n-butylphthalate	U	360	1.0	330	360	110
85-68-7	Butylbenzylphthalate	U	360	1.0	330	360	100
91-94-1	3,3'-Dichlorobenzidine	U	540	1.0	500	540	120
218-01-9	Chrysene	U	360	1.0	330	360	100
117-81-7	bis(2-Ethylhexyl)phthalate	U	360	1.0	330	360	100
117-84-0	Di-n-octylphthalate	U	360	1.0	330	360	230
367-12-4	2-Fluorophenol		72%				
13127-88-3	Phenol-D6		78%				
4165-60-0	Nitrobenzene-D5		74%				
321-60-8	2-Fluorobiphenyl		76%				
118-79-6	2,4,6-Tribromophenol		78%				
1718-51-0	Terphenyl-D14		103%				

LW 4/15/09

KATAHDIN ANALYTICAL SERVICES
Report of Analytical Results

Client: CH2MHill
Project: TO-009 Lejeune
PO No:
Sample Date: 01/08/09
Received Date: 01/10/09
Extraction Date: 01/13/09
Analysis Date: 22-JAN-2009 14:39
Report Date: 01/31/2009
Matrix: SOIL
% Solids: 93.7

Lab ID: SC0127-19
Client ID: MR08-IS305-6-7-09A
SDG: TO9-30
Extracted by: AC
Extraction Method: SW846 3550
Analyst: JLP
Analysis Method: SW846 8270C
Lab Prep Batch: WG59750
Units: ug/Kgdrywt

CAS#	Compound	Flags	Results	DF	PQL	Adj.PQL	Adj.MDL	
100-52-7	Benzaldehyde	~~U~~ UJ	530	1.0	500	530	130	ICB
108-95-2	Phenol	U	530	1.0	500	530	170	
111-44-4	Bis(2-Chloroethyl)ether	U	350	1.0	330	350	86	
95-57-8	2-Chlorophenol	U	530	1.0	500	530	180	
95-48-7	2-Methylphenol	U	640	1.0	600	640	210	
108-60-1	2,2'-Oxybis(1-chloropropane)	U	350	1.0	330	350	95	
98-86-2	Acetophenone	U	640	1.0	600	640	190	
621-64-7	N-Nitroso-di-n-propylamine	U	350	1.0	330	350	88	
65794-96-9	3&4-Methylphenol	U	640	1.0	600	640	200	
67-72-1	Hexachloroethane	U	350	1.0	330	350	100	
98-95-3	Nitrobenzene	U	350	1.0	330	350	97	
78-59-1	Isophorone	U	350	1.0	330	350	80	
88-75-5	2-Nitrophenol	U	640	1.0	600	640	180	
105-67-9	2,4-Dimethylphenol	U	530	1.0	500	530	180	
111-91-1	Bis(2-Chloroethoxy)methane	U	350	1.0	330	350	100	
120-83-2	2,4-Dichlorophenol	U	530	1.0	500	530	160	
106-47-8	4-Chloroaniline	U	530	1.0	500	530	130	
105-60-2	Caprolactam	U	530	1.0	500	530	150	
59-50-7	4-Chloro-3-Methylphenol	U	530	1.0	500	530	180	
88-06-2	2,4,6-Trichlorophenol	U	530	1.0	500	530	160	
95-95-4	2,4,5-Trichlorophenol	U	530	1.0	500	530	160	
91-58-7	2-Chloronaphthalene	U	350	1.0	330	350	93	
92-52-4	1,1'-Biphenyl	U	350	1.0	330	350	78	
88-74-4	2-Nitroaniline	U	530	1.0	500	530	80	
131-11-3	Dimethyl Phthalate	U	350	1.0	330	350	83	
606-20-2	2,6-Dinitrotoluene	U	350	1.0	330	350	84	
208-96-8	Acenaphthylene	U	350	1.0	330	350	75	
99-09-2	3-Nitroaniline	U	530	1.0	500	530	100	
83-32-9	Acenaphthene	U	350	1.0	330	350	69	
51-28-5	2,4-Dinitrophenol	U	1300	1.0	1200	1300	400	
132-64-9	Dibenzofuran	U	350	1.0	330	350	84	
100-02-7	4-Nitrophenol	U	1300	1.0	1200	1300	330	
121-14-2	2,4-Dinitrotoluene	U	350	1.0	330	350	91	
84-66-2	Diethylphthalate	~~JB~~ 350U	~~80~~	1.0	330	350	85	BL
7005-72-3	4-Chlorophenyl-phenylether	U	350	1.0	330	350	83	
100-01-6	4-Nitroaniline	U	530	1.0	500	530	140	
534-52-1	4,6-Dinitro-2-Methylphenol	U	1300	1.0	1200	1300	360	
86-30-6	N-Nitrosodiphenylamine	U	700	1.0	660	700	230	
101-55-3	4-Bromophenyl-phenylether	U	350	1.0	330	350	91	
1912-24-9	Atrazine	U	350	1.0	330	350	97	
87-86-5	Pentachlorophenol	U	880	1.0	820	880	250	
120-12-7	Anthracene	U	350	1.0	330	350	90	
86-74-8	Carbazole	U	530	1.0	500	530	120	

lw 4/15/09

KATAHDIN ANALYTICAL SERVICES
Report of Analytical Results

Client: CH2MHill
Project: TO-009 Lejeune
PO No:
Sample Date: 01/08/09
Received Date: 01/10/09
Extraction Date: 01/13/09
Analysis Date: 22-JAN-2009 14:39
Report Date: 01/31/2009
Matrix: SOIL
% Solids: 93.7

Lab ID: SC0127-19
Client ID: MR08-IS305-6-7-09A
SDG: TO9-30
Extracted by: AC
Extraction Method: SW846 3550
Analyst: JLP
Analysis Method: SW846 8270C
Lab Prep Batch: WG59750
Units: ug/Kgdrywt

CAS#	Compound	Flags	Results	DF	PQL	Adj.PQL	Adj.MDL	
84-74-2	Di-n-butylphthalate	U	350	1.0	330	350	110	
85-68-7	Butylbenzylphthalate	U	350	1.0	330	350	99	
91-94-1	3,3'-Dichlorobenzidine	U	530	1.0	500	530	120	
218-01-9	Chrysene	U	350	1.0	330	350	100	
117-81-7	bis(2-Ethylhexyl)phthalate	U	350	1.0	330	350	100	
117-84-0	Di-n-octylphthalate	~~U~~ UJ	350	1.0	330	350	220	CCH
367-12-4	2-Fluorophenol		72%					
13127-88-3	Phenol-D6		77%					
4165-60-0	Nitrobenzene-D5		78%					
321-60-8	2-Fluorobiphenyl		80%					
118-79-6	2,4,6-Tribromophenol		66%					
1718-51-0	Terphenyl-D14		99%					

lw 4/15/09

15

KATAHDIN ANALYTICAL SERVICES
Report of Analytical Results

Client: CH2MHill
Project: TO-009 Lejeune
PO No:
Sample Date: 01/08/09
Received Date: 01/10/09
Extraction Date: 01/13/09
Analysis Date: 23-JAN-2009 16:54
Report Date: 01/31/2009
Matrix: SOIL
% Solids: 92.5

Lab ID: SC0127-21
Client ID: MR08-SS306-09A
SDG: T09-30
Extracted by: AC
Extraction Method: SW846 3550
Analyst: JCG
Analysis Method: SW846 8270C
Lab Prep Batch: WG59750
Units: ug/Kgdrywt

CAS#	Compound	Flags	Results	DF	PQL	Adj.PQL	Adj.MDL
100-52-7	Benzaldehyde	~~J~~ UJ	540	1.0	500	540	130 JCB
108-95-2	Phenol	U	540	1.0	500	540	170
111-44-4	Bis(2-Chloroethyl)ether	U	360	1.0	330	360	88
95-57-8	2-Chlorophenol	U	540	1.0	500	540	180
95-48-7	2-Methylphenol	U	650	1.0	600	650	220
108-60-1	2,2'-Oxybis(1-chloropropane)	U	360	1.0	330	360	96
98-86-2	Acetophenone	U	650	1.0	600	650	190
621-64-7	N-Nitroso-di-n-propylamine	U	360	1.0	330	360	90
65794-96-9	3&4-Methylphenol	U	650	1.0	600	650	200
67-72-1	Hexachloroethane	U	360	1.0	330	360	100
98-95-3	Nitrobenzene	U	360	1.0	330	360	98
78-59-1	Isophorone	U	360	1.0	330	360	81
88-75-5	2-Nitrophenol	U	650	1.0	600	650	180
105-67-9	2,4-Dimethylphenol	U	540	1.0	500	540	180
111-91-1	Bis(2-Chloroethoxy)methane	U	360	1.0	330	360	100
120-83-2	2,4-Dichlorophenol	U	540	1.0	500	540	160
106-47-8	4-Chloroaniline	U	540	1.0	500	540	130
105-60-2	Caprolactam	U	540	1.0	500	540	160
59-50-7	4-Chloro-3-Methylphenol	U	540	1.0	500	540	180
88-06-2	2,4,6-Trichlorophenol	U	540	1.0	500	540	170
95-95-4	2,4,5-Trichlorophenol	U	540	1.0	500	540	170
91-58-7	2-Chloronaphthalene	U	360	1.0	330	360	94
92-52-4	1,1'-Biphenyl	U	360	1.0	330	360	79
88-74-4	2-Nitroaniline	U	540	1.0	500	540	81
131-11-3	Dimethyl Phthalate	U	360	1.0	330	360	84
606-20-2	2,6-Dinitrotoluene	U	360	1.0	330	360	85
208-96-8	Acenaphthylene	U	360	1.0	330	360	76
99-09-2	3-Nitroaniline	U	540	1.0	500	540	100
83-32-9	Acenaphthene	U	360	1.0	330	360	70
51-28-5	2,4-Dinitrophenol	U	1300	1.0	1200	1300	410
132-64-9	Dibenzofuran	U	360	1.0	330	360	85
100-02-7	4-Nitrophenol	U	1300	1.0	1200	1300	330
121-14-2	2,4-Dinitrotoluene	U	360	1.0	330	360	92
84-66-2	Diethylphthalate	~~JB~~ 36ou	~~89~~	1.0	330	360	86 BL
7005-72-3	4-Chlorophenyl-phenylether	U	360	1.0	330	360	84
100-01-6	4-Nitroaniline	U	540	1.0	500	540	140
534-52-1	4,6-Dinitro-2-Methylphenol	U	1300	1.0	1200	1300	360
86-30-6	N-Nitrosodiphenylamine	U	710	1.0	660	710	240
101-55-3	4-Bromophenyl-phenylether	U	360	1.0	330	360	92
1912-24-9	Atrazine	U	360	1.0	330	360	98
87-86-5	Pentachlorophenol	U	890	1.0	820	890	260
120-12-7	Anthracene	U	360	1.0	330	360	91
86-74-8	Carbazole	U	540	1.0	500	540	120

LW 4/15/09

KATAHDIN ANALYTICAL SERVICES
Report of Analytical Results

Client: CH2MHill
Project: TO-009 Lejeune
PO No:
Sample Date: 01/08/09
Received Date: 01/10/09
Extraction Date: 01/13/09
Analysis Date: 23-JAN-2009 16:54
Report Date: 01/31/2009
Matrix: SOIL
% Solids: 92.5

Lab ID: SC0127-21
Client ID: MR08-SS306-09A
SDG: TO9-30
Extracted by: AC
Extraction Method: SW846 3550
Analyst: JCG
Analysis Method: SW846 8270C
Lab Prep Batch: WG59750
Units: ug/Kgdrywt

CAS#	Compound	Flags	Results	DF	PQL	Adj.PQL	Adj.MDL
84-74-2	Di-n-butylphthalate	U	360	1.0	330	360	110
85-68-7	Butylbenzylphthalate	U	360	1.0	330	360	100
91-94-1	3,3'-Dichlorobenzidine	U	540	1.0	500	540	120
218-01-9	Chrysene	U	360	1.0	330	360	100
117-81-7	bis(2-Ethylhexyl)phthalate	J	190	1.0	330	360	100
117-84-0	Di-n-octylphthalate	U	360	1.0	330	360	230
367-12-4	2-Fluorophenol		69%				
13127-88-3	Phenol-D6		74%				
4165-60-0	Nitrobenzene-D5		70%				
321-60-8	2-Fluorobiphenyl		74%				
118-79-6	2,4,6-Tribromophenol		79%				
1718-51-0	Terphenyl-D14		101%				

JW 4/15/09

16

KATAHDIN ANALYTICAL SERVICES
Report of Analytical Results

Client: CH2MHill
Project: TO-009 Lejeune
PO No:
Sample Date: 01/08/09
Received Date: 01/10/09
Extraction Date: 01/13/09
Analysis Date: 22-JAN-2009 15:22
Report Date: 01/31/2009
Matrix: SOIL
% Solids: 86.2

Lab ID: SC0127-23
Client ID: MR08-IS306-5-6-09A
SDG: TO9-30
Extracted by: AC
Extraction Method: SW846 3550
Analyst: JLP
Analysis Method: SW846 8270C
Lab Prep Batch: WG59750
Units: ug/Kgdrywt

CAS#	Compound	Flags	Results	DF	PQL	Adj.PQL	Adj.MDL
100-52-7	Benzaldehyde	~~U~~ UJ	580	1.0	500	580	140 ICB
108-95-2	Phenol	U	580	1.0	500	580	180
111-44-4	Bis(2-Chloroethyl)ether	U	380	1.0	330	380	94
95-57-8	2-Chlorophenol	U	580	1.0	500	580	190
95-48-7	2-Methylphenol	U	700	1.0	600	700	230
108-60-1	2,2'-Oxybis(1-chloropropane)	U	380	1.0	330	380	100
98-86-2	Acetophenone	U	700	1.0	600	700	210
621-64-7	N-Nitroso-di-n-propylamine	U	380	1.0	330	380	96
65794-96-9	3&4-Methylphenol	U	700	1.0	600	700	220
67-72-1	Hexachloroethane	U	380	1.0	330	380	110
98-95-3	Nitrobenzene	U	380	1.0	330	380	100
78-59-1	Isophorone	U	380	1.0	330	380	87
88-75-5	2-Nitrophenol	U	700	1.0	600	700	190
105-67-9	2,4-Dimethylphenol	U	580	1.0	500	580	190
111-91-1	Bis(2-Chloroethoxy)methane	U	380	1.0	330	380	110
120-83-2	2,4-Dichlorophenol	U	580	1.0	500	580	170
106-47-8	4-Chloroaniline	U	580	1.0	500	580	140
105-60-2	Caprolactam	U	580	1.0	500	580	170
59-50-7	4-Chloro-3-Methylphenol	U	580	1.0	500	580	190
88-06-2	2,4,6-Trichlorophenol	U	580	1.0	500	580	180
95-95-4	2,4,5-Trichlorophenol	U	580	1.0	500	580	180
91-58-7	2-Chloronaphthalene	U	380	1.0	330	380	100
92-52-4	1,1'-Biphenyl	U	380	1.0	330	380	85
88-74-4	2-Nitroaniline	U	580	1.0	500	580	87
131-11-3	Dimethyl Phthalate	U	380	1.0	330	380	90
606-20-2	2,6-Dinitrotoluene	U	380	1.0	330	380	92
208-96-8	Acenaphthylene	U	380	1.0	330	380	81
99-09-2	3-Nitroaniline	U	580	1.0	500	580	110
83-32-9	Acenaphthene	U	380	1.0	330	380	75
51-28-5	2,4-Dinitrophenol	U	1400	1.0	1200	1400	440
132-64-9	Dibenzofuran	U	380	1.0	330	380	92
100-02-7	4-Nitrophenol	U	1400	1.0	1200	1400	360
121-14-2	2,4-Dinitrotoluene	U	380	1.0	330	380	99
84-66-2	Diethylphthalate	U	380	1.0	330	380	93
7005-72-3	4-Chlorophenyl-phenylether	U	380	1.0	330	380	90
100-01-6	4-Nitroaniline	U	580	1.0	500	580	160
534-52-1	4,6-Dinitro-2-Methylphenol	U	1400	1.0	1200	1400	390
86-30-6	N-Nitrosodiphenylamine	U	760	1.0	660	760	250
101-55-3	4-Bromophenyl-phenylether	U	380	1.0	330	380	99
1912-24-9	Atrazine	U	380	1.0	330	380	100
87-86-5	Pentachlorophenol	U	950	1.0	820	950	280
120-12-7	Anthracene	U	380	1.0	330	380	97
86-74-8	Carbazole	U	580	1.0	500	580	130

4/15/09

KATAHDIN ANALYTICAL SERVICES
Report of Analytical Results

Client: CH2MHill
Project: TO-009 Lejeune
PO No:
Sample Date: 01/08/09
Received Date: 01/10/09
Extraction Date: 01/13/09
Analysis Date: 22-JAN-2009 15:22
Report Date: 01/31/2009
Matrix: SOIL
% Solids: 86.2

Lab ID: SC0127-23
Client ID: MR08-IS306-5-6-09A
SDG: TO9-30
Extracted by: AC
Extraction Method: SW846 3550
Analyst: JLP
Analysis Method: SW846 8270C
Lab Prep Batch: WG59750
Units: ug/Kgdrywt

CAS#	Compound	Flags	Results	DF	PQL	Adj.PQL	Adj.MDL
84-74-2	Di-n-butylphthalate	U	380	1.0	330	380	120
85-68-7	Butylbenzylphthalate	U	380	1.0	330	380	110
91-94-1	3,3'-Dichlorobenzidine	U	580	1.0	500	580	130
218-01-9	Chrysene	U	380	1.0	330	380	110
117-81-7	bis(2-Ethylhexyl)phthalate	U	380	1.0	330	380	110
117-84-0	Di-n-octylphthalate	~~U~~ UJ	380	1.0	330	380	240 CCH
367-12-4	2-Fluorophenol		71%				
13127-88-3	Phenol-D6		77%				
4165-60-0	Nitrobenzene-D5		74%				
321-60-8	2-Fluorobiphenyl		78%				
118-79-6	2,4,6-Tribromophenol		68%				
1718-51-0	Terphenyl-D14		99%				

LEW
4/15/09

17

KATAHDIN ANALYTICAL SERVICES
Report of Analytical Results

Client: CH2MHill
Project: TO-009 Lejeune
PO No:
Sample Date: 01/08/09
Received Date: 01/10/09
Extraction Date: 01/13/09
Analysis Date: 23-JAN-2009 17:40
Report Date: 01/31/2009
Matrix: SOIL
% Solids: 87.4

Lab ID: SC0127-25
Client ID: MR08-SS206-09A
SDG: TO9-30
Extracted by: AC
Extraction Method: SW846 3550
Analyst: JCG
Analysis Method: SW846 8270C
Lab Prep Batch: WG59750
Units: ug/Kgdrywt

CAS#	Compound	Flags	Results	DF	PQL	Adj.PQL	Adj.MDL
100-52-7	Benzaldehyde	~~U~~ UJ	570	1.0	500	570	140 ICB
108-95-2	Phenol	U	570	1.0	500	570	180
111-44-4	Bis(2-Chloroethyl)ether	U	380	1.0	330	380	93
95-57-8	2-Chlorophenol	U	570	1.0	500	570	190
95-48-7	2-Methylphenol	U	690	1.0	600	690	230
108-60-1	2,2'-Oxybis(1-chloropropane)	U	380	1.0	330	380	100
98-86-2	Acetophenone	U	690	1.0	600	690	200
621-64-7	N-Nitroso-di-n-propylamine	U	380	1.0	330	380	95
65794-96-9	3&4-Methylphenol	U	690	1.0	600	690	210
67-72-1	Hexachloroethane	U	380	1.0	330	380	110
98-95-3	Nitrobenzene	U	380	1.0	330	380	100
78-59-1	Isophorone	U	380	1.0	330	380	86
88-75-5	2-Nitrophenol	U	690	1.0	600	690	190
105-67-9	2,4-Dimethylphenol	U	570	1.0	500	570	190
111-91-1	Bis(2-Chloroethoxy)methane	U	380	1.0	330	380	110
120-83-2	2,4-Dichlorophenol	U	570	1.0	500	570	170
106-47-8	4-Chloroaniline	U	570	1.0	500	570	140
105-60-2	Caprolactam	U	570	1.0	500	570	160
59-50-7	4-Chloro-3-Methylphenol	U	570	1.0	500	570	190
88-06-2	2,4,6-Trichlorophenol	U	570	1.0	500	570	180
95-95-4	2,4,5-Trichlorophenol	U	570	1.0	500	570	180
91-58-7	2-Chloronaphthalene	U	380	1.0	330	380	99
92-52-4	1,1'-Biphenyl	U	380	1.0	330	380	83
88-74-4	2-Nitroaniline	U	570	1.0	500	570	86
131-11-3	Dimethyl Phthalate	U	380	1.0	330	380	89
606-20-2	2,6-Dinitrotoluene	U	380	1.0	330	380	90
208-96-8	Acenaphthylene	U	380	1.0	330	380	80
99-09-2	3-Nitroaniline	U	570	1.0	500	570	110
83-32-9	Acenaphthene	U	380	1.0	330	380	74
51-28-5	2,4-Dinitrophenol	U	1400	1.0	1200	1400	430
132-64-9	Dibenzofuran	U	380	1.0	330	380	90
100-02-7	4-Nitrophenol	U	1400	1.0	1200	1400	350
121-14-2	2,4-Dinitrotoluene	U	380	1.0	330	380	97
84-66-2	Diethylphthalate	~~JB~~ 380U	~~96~~	1.0	330	380	91 BL
7005-72-3	4-Chlorophenyl-phenylether	U	380	1.0	330	380	89
100-01-6	4-Nitroaniline	U	570	1.0	500	570	150
534-52-1	4,6-Dinitro-2-Methylphenol	U	1400	1.0	1200	1400	380
86-30-6	N-Nitrosodiphenylamine	U	750	1.0	660	750	250
101-55-3	4-Bromophenyl-phenylether	U	380	1.0	330	380	97
1912-24-9	Atrazine	U	380	1.0	330	380	100
87-86-5	Pentachlorophenol	U	940	1.0	820	940	270
120-12-7	Anthracene	U	380	1.0	330	380	96
86-74-8	Carbazole	U	570	1.0	500	570	130

MW 4/15/09

KATAHDIN ANALYTICAL SERVICES
Report of Analytical Results

Client: CH2MHill
Project: TO-009 Lejeune
PO No:
Sample Date: 01/08/09
Received Date: 01/10/09
Extraction Date: 01/13/09
Analysis Date: 23-JAN-2009 17:40
Report Date: 01/31/2009
Matrix: SOIL
% Solids: 87.4

Lab ID: SC0127-25
Client ID: MR08-SS206-09A
SDG: TO9-30
Extracted by: AC
Extraction Method: SW846 3550
Analyst: JCG
Analysis Method: SW846 8270C
Lab Prep Batch: WG59750
Units: ug/Kgdrywt

CAS#	Compound	Flags	Results	DF	PQL	Adj.PQL	Adj.MDL
84-74-2	Di-n-butylphthalate	U	380	1.0	330	380	120
85-68-7	Butylbenzylphthalate	U	380	1.0	330	380	110
91-94-1	3,3'-Dichlorobenzidine	U	570	1.0	500	570	130
218-01-9	Chrysene		1600	1.0	330	380	110
117-81-7	bis(2-Ethylhexyl)phthalate	J	270	1.0	330	380	110
117-84-0	Di-n-octylphthalate	U	380	1.0	330	380	240
367-12-4	2-Fluorophenol		68%				
13127-88-3	Phenol-D6		77%				
4165-60-0	Nitrobenzene-D5		73%				
321-60-8	2-Fluorobiphenyl		75%				
118-79-6	2,4,6-Tribromophenol		80%				
1718-51-0	Terphenyl-D14		99%				

lw 4/15/09

KATAHDIN ANALYTICAL SERVICES
Report of Analytical Results

Client: CH2MHill
Project: TO-009 Lejeune
PO No:
Sample Date: 01/08/09
Received Date: 01/10/09
Extraction Date: 01/13/09
Analysis Date: 22-JAN-2009 16:05
Report Date: 01/31/2009
Matrix: SOIL
% Solids: 89.4

Lab ID: SC0127-27
Client ID: MR08-IS206-6-7-09A
SDG: TO9-30
Extracted by: AC
Extraction Method: SW846 3550
Analyst: JLP
Analysis Method: SW846 8270C
Lab Prep Batch: WG59750
Units: ug/Kgdrywt

CAS#	Compound	Flags	Results	DF	PQL	Adj.PQL	Adj.MDL	
100-52-7	Benzaldehyde	~~J~~ UJ	560	1.0	500	560	130	JCB
108-95-2	Phenol	U	560	1.0	500	560	170	
111-44-4	Bis(2-Chloroethyl)ether	U	370	1.0	330	370	90	
95-57-8	2-Chlorophenol	U	560	1.0	500	560	180	
95-48-7	2-Methylphenol	U	670	1.0	600	670	220	
108-60-1	2,2'-Oxybis(1-chloropropane)	U	370	1.0	330	370	99	
98-86-2	Acetophenone	U	670	1.0	600	670	200	
621-64-7	N-Nitroso-di-n-propylamine	U	370	1.0	330	370	93	
65794-96-9	3&4-Methylphenol	U	670	1.0	600	670	210	
67-72-1	Hexachloroethane	U	370	1.0	330	370	110	
98-95-3	Nitrobenzene	U	370	1.0	330	370	100	
78-59-1	Isophorone	U	370	1.0	330	370	84	
88-75-5	2-Nitrophenol	U	670	1.0	600	670	190	
105-67-9	2,4-Dimethylphenol	U	560	1.0	500	560	180	
111-91-1	Bis(2-Chloroethoxy)methane	U	370	1.0	330	370	110	
120-83-2	2,4-Dichlorophenol	U	560	1.0	500	560	170	
106-47-8	4-Chloroaniline	U	560	1.0	500	560	130	
105-60-2	Caprolactam	U	560	1.0	500	560	160	
59-50-7	4-Chloro-3-Methylphenol	U	560	1.0	500	560	180	
88-06-2	2,4,6-Trichlorophenol	U	560	1.0	500	560	170	
95-95-4	2,4,5-Trichlorophenol	U	560	1.0	500	560	170	
91-58-7	2-Chloronaphthalene	U	370	1.0	330	370	97	
92-52-4	1,1'-Biphenyl	U	370	1.0	330	370	82	
88-74-4	2-Nitroaniline	U	560	1.0	500	560	84	
131-11-3	Dimethyl Phthalate	U	370	1.0	330	370	87	
606-20-2	2,6-Dinitrotoluene	U	370	1.0	330	370	88	
208-96-8	Acenaphthylene	U	370	1.0	330	370	78	
99-09-2	3-Nitroaniline	U	560	1.0	500	560	100	
83-32-9	Acenaphthene	U	370	1.0	330	370	73	
51-28-5	2,4-Dinitrophenol	U	1300	1.0	1200	1300	420	
132-64-9	Dibenzofuran	U	370	1.0	330	370	88	
100-02-7	4-Nitrophenol	U	1300	1.0	1200	1300	340	
121-14-2	2,4-Dinitrotoluene	U	370	1.0	330	370	95	
84-66-2	Diethylphthalate	~~JB~~	370U ~~90~~	1.0	330	370	89	BL
7005-72-3	4-Chlorophenyl-phenylether	U	370	1.0	330	370	87	
100-01-6	4-Nitroaniline	U	560	1.0	500	560	150	
534-52-1	4,6-Dinitro-2-Methylphenol	U	1300	1.0	1200	1300	380	
86-30-6	N-Nitrosodiphenylamine	U	740	1.0	660	740	240	
101-55-3	4-Bromophenyl-phenylether	U	370	1.0	330	370	95	
1912-24-9	Atrazine	U	370	1.0	330	370	100	
87-86-5	Pentachlorophenol	U	920	1.0	820	920	260	
120-12-7	Anthracene	U	370	1.0	330	370	94	
86-74-8	Carbazole	U	560	1.0	500	560	120	

LW 4/15/09

18

KATAHDIN ANALYTICAL SERVICES
Report of Analytical Results

Client: CH2MHill
Project: TO-009 Lejeune
PO No:
Sample Date: 01/08/09
Received Date: 01/10/09
Extraction Date: 01/13/09
Analysis Date: 22-JAN-2009 16:05
Report Date: 01/31/2009
Matrix: SOIL
% Solids: 89.4

Lab ID: SC0127-27
Client ID: MR08-IS206-6-7-09A
SDG: TO9-30
Extracted by: AC
Extraction Method: SW846 3550
Analyst: JLP
Analysis Method: SW846 8270C
Lab Prep Batch: WG59750
Units: ug/Kgdrywt

CAS#	Compound	Flags	Results	DF	PQL	Adj.PQL	Adj.MDL	
84-74-2	Di-n-butylphthalate	U	370	1.0	330	370	110	
85-68-7	Butylbenzylphthalate	U	370	1.0	330	370	100	
91-94-1	3,3'-Dichlorobenzidine	U	560	1.0	500	560	130	
218-01-9	Chrysene	U	370	1.0	330	370	110	
117-81-7	bis(2-Ethylhexyl)phthalate	U	370	1.0	330	370	110	
117-84-0	Di-n-octylphthalate	~~U~~ UJ	370	1.0	330	370	240	CCH
367-12-4	2-Fluorophenol		68%					
13127-88-3	Phenol-D6		74%					
4165-60-0	Nitrobenzene-D5		70%					
321-60-8	2-Fluorobiphenyl		72%					
118-79-6	2,4,6-Tribromophenol		70%					
1718-51-0	Terphenyl-D14		100%					

LW 4/15/09

19

KATAHDIN ANALYTICAL SERVICES
Report of Analytical Results

Client: CH2MHill
Project: TO-009 Lejeune
PO No:
Sample Date: 01/08/09
Received Date: 01/10/09
Extraction Date: 01/13/09
Analysis Date: 23-JAN-2009 19:06
Report Date: 01/31/2009
Matrix: SOIL
% Solids: 89.2

Lab ID: SC0127-29RA
Client ID: MR08-SS207-09A
SDG: TO9-30
Extracted by: AC
Extraction Method: SW846 3550
Analyst: JCG
Analysis Method: SW846 8270C
Lab Prep Batch: WG59750
Units: ug/Kgdrywt

CAS#	Compound	Flags	Results	DF	PQL	Adj.PQL	Adj.MDL
100-52-7	Benzaldehyde	~~J~~ UJ	560	1.0	500	560	130 ICB
108-95-2	Phenol	U	560	1.0	500	560	170
111-44-4	Bis(2-Chloroethyl)ether	U	370	1.0	330	370	91
95-57-8	2-Chlorophenol	U	560	1.0	500	560	180
95-48-7	2-Methylphenol	U	670	1.0	600	670	220
108-60-1	2,2'-Oxybis(1-chloropropane)	U	370	1.0	330	370	100
98-86-2	Acetophenone	U	670	1.0	600	670	200
621-64-7	N-Nitroso-di-n-propylamine	U	370	1.0	330	370	93
65794-96-9	3&4-Methylphenol	U	670	1.0	600	670	210
67-72-1	Hexachloroethane	U	370	1.0	330	370	110
98-95-3	Nitrobenzene	U	370	1.0	330	370	100
78-59-1	Isophorone	U	370	1.0	330	370	84
88-75-5	2-Nitrophenol	U	670	1.0	600	670	190
105-67-9	2,4-Dimethylphenol	U	560	1.0	500	560	180
111-91-1	Bis(2-Chloroethoxy)methane	U	370	1.0	330	370	110
120-83-2	2,4-Dichlorophenol	U	560	1.0	500	560	170
106-47-8	4-Chloroaniline	U	560	1.0	500	560	130
105-60-2	Caprolactam	U	560	1.0	500	560	160
59-50-7	4-Chloro-3-Methylphenol	U	560	1.0	500	560	190
88-06-2	2,4,6-Trichlorophenol	U	560	1.0	500	560	170
95-95-4	2,4,5-Trichlorophenol	U	560	1.0	500	560	170
91-58-7	2-Chloronaphthalene	U	370	1.0	330	370	98
92-52-4	1,1'-Biphenyl	U	370	1.0	330	370	82
88-74-4	2-Nitroaniline	U	560	1.0	500	560	84
131-11-3	Dimethyl Phthalate	U	370	1.0	330	370	87
606-20-2	2,6-Dinitrotoluene	U	370	1.0	330	370	88
208-96-8	Acenaphthylene	U	370	1.0	330	370	78
99-09-2	3-Nitroaniline	U	560	1.0	500	560	100
83-32-9	Acenaphthene	J	100	1.0	330	370	73
51-28-5	2,4-Dinitrophenol	U	1300	1.0	1200	1300	420
132-64-9	Dibenzofuran	U	370	1.0	330	370	88
100-02-7	4-Nitrophenol	U	1300	1.0	1200	1300	350
121-14-2	2,4-Dinitrotoluene	U	370	1.0	330	370	95
84-66-2	Diethylphthalate	~~JB~~	370U ~~91~~	1.0	330	370	90 BL
7005-72-3	4-Chlorophenyl-phenylether	U	370	1.0	330	370	87
100-01-6	4-Nitroaniline	U	560	1.0	500	560	150
534-52-1	4,6-Dinitro-2-Methylphenol	U	1300	1.0	1200	1300	380
86-30-6	N-Nitrosodiphenylamine	U	740	1.0	660	740	240
101-55-3	4-Bromophenyl-phenylether	U	370	1.0	330	370	95
1912-24-9	Atrazine	U	370	1.0	330	370	100
87-86-5	Pentachlorophenol	U	920	1.0	820	920	260
120-12-7	Anthracene	J	190	1.0	330	370	94
86-74-8	Carbazole	J	210	1.0	500	560	120

MW 4/15/09

KATAHDIN ANALYTICAL SERVICES
Report of Analytical Results

Client: CH2MHill
Project: TO-009 Lejeune
PO No:
Sample Date: 01/08/09
Received Date: 01/10/09
Extraction Date: 01/13/09
Analysis Date: 23-JAN-2009 19:06
Report Date: 01/31/2009
Matrix: SOIL
% Solids: 89.2

Lab ID: SC0127-29RA
Client ID: MR08-SS207-09A
SDG: TO9-30
Extracted by: AC
Extraction Method: SW846 3550
Analyst: JCG
Analysis Method: SW846 8270C
Lab Prep Batch: WG59750
Units: ug/Kgdrywt

CAS#	Compound	Flags	Results	DF	PQL	Adj.PQL	Adj.MDL
84-74-2	Di-n-butylphthalate	U	370	1.0	330	370	110
85-68-7	Butylbenzylphthalate	U	370	1.0	330	370	100
91-94-1	3,3'-Dichlorobenzidine	U	560	1.0	500	560	130
218-01-9	Chrysene		2100	1.0	330	370	110
117-81-7	bis(2-Ethylhexyl)phthalate		400	1.0	330	370	110
117-84-0	Di-n-octylphthalate	U	370	1.0	330	370	240
367-12-4	2-Fluorophenol		74%				
13127-88-3	Phenol-D6		82%				
4165-60-0	Nitrobenzene-D5		80%				
321-60-8	2-Fluorobiphenyl		88%				
118-79-6	2,4,6-Tribromophenol		81%				
1718-51-0	Terphenyl-D14		112%				

LW
4/15/09

KATAHDIN ANALYTICAL SERVICES
Report of Analytical Results

Client: CH2MHill
Project: TO-009 Lejeune
PO No:
Sample Date: 01/08/09
Received Date: 01/10/09
Extraction Date: 01/14/09
Analysis Date: 22-JAN-2009 10:43
Report Date: 01/31/2009
Matrix: SOIL
% Solids: 91.4

Lab ID: SC0127-31
Client ID: MR08-IS207-6-7-09A
SDG: TO9-30
Extracted by: AC
Extraction Method: SW846 3550
Analyst: JLP
Analysis Method: SW846 8270C
Lab Prep Batch: WG59785
Units: ug/Kgdrywt

CAS#	Compound	Flags	Results	DF	PQL	Adj.PQL	Adj.MDL	
100-52-7	Benzaldehyde	~~U~~ UJ	550	1.0	500	550	130	ICB
108-95-2	Phenol	U	550	1.0	500	550	170	
111-44-4	Bis(2-Chloroethyl)ether	U	360	1.0	330	360	89	
95-57-8	2-Chlorophenol	U	550	1.0	500	550	180	
95-48-7	2-Methylphenol	U	660	1.0	600	660	220	
108-60-1	2,2'-Oxybis(1-chloropropane)	U	360	1.0	330	360	97	
98-86-2	Acetophenone	U	660	1.0	600	660	190	
621-64-7	N-Nitroso-di-n-propylamine	U	360	1.0	330	360	91	
65794-96-9	3&4-Methylphenol	U	660	1.0	600	660	200	
67-72-1	Hexachloroethane	U	360	1.0	330	360	100	
98-95-3	Nitrobenzene	U	360	1.0	330	360	100	
78-59-1	Isophorone	U	360	1.0	330	360	82	
88-75-5	2-Nitrophenol	U	660	1.0	600	660	180	
105-67-9	2,4-Dimethylphenol	U	550	1.0	500	550	180	
111-91-1	Bis(2-Chloroethoxy)methane	U	360	1.0	330	360	100	
120-83-2	2,4-Dichlorophenol	U	550	1.0	500	550	160	
106-47-8	4-Chloroaniline	U	550	1.0	500	550	130	
105-60-2	Caprolactam	U	550	1.0	500	550	160	
59-50-7	4-Chloro-3-Methylphenol	U	550	1.0	500	550	180	
88-06-2	2,4,6-Trichlorophenol	U	550	1.0	500	550	170	
95-95-4	2,4,5-Trichlorophenol	U	550	1.0	500	550	170	
91-58-7	2-Chloronaphthalene	U	360	1.0	330	360	95	
92-52-4	1,1'-Biphenyl	U	360	1.0	330	360	80	
88-74-4	2-Nitroaniline	U	550	1.0	500	550	82	
131-11-3	Dimethyl Phthalate	U	360	1.0	330	360	85	
606-20-2	2,6-Dinitrotoluene	U	360	1.0	330	360	86	
208-96-8	Acenaphthylene	U	360	1.0	330	360	76	
99-09-2	3-Nitroaniline	U	550	1.0	500	550	100	
83-32-9	Acenaphthene	U	360	1.0	330	360	71	
51-28-5	2,4-Dinitrophenol	~~U~~ UJ	1300	1.0	1200	1300	410	CCH
132-64-9	Dibenzofuran	U	360	1.0	330	360	86	
100-02-7	4-Nitrophenol	~~U~~ UJ	1300	1.0	1200	1300	340	CCH
121-14-2	2,4-Dinitrotoluene	U	360	1.0	330	360	93	
84-66-2	Diethylphthalate	U	360	1.0	330	360	88	
7005-72-3	4-Chlorophenyl-phenylether	U	360	1.0	330	360	85	
100-01-6	4-Nitroaniline	~~U~~ UJ	550	1.0	500	550	150	CCH
534-52-1	4,6-Dinitro-2-Methylphenol	U	1300	1.0	1200	1300	370	
86-30-6	N-Nitrosodiphenylamine	U	720	1.0	660	720	240	
101-55-3	4-Bromophenyl-phenylether	U	360	1.0	330	360	93	
1912-24-9	Atrazine	U	360	1.0	330	360	100	
87-86-5	Pentachlorophenol	U	900	1.0	820	900	260	
120-12-7	Anthracene	U	360	1.0	330	360	92	
86-74-8	Carbazole	U	550	1.0	500	550	120	

MW 4/15/09

KATAHDIN ANALYTICAL SERVICES
Report of Analytical Results

20

Client: CH2MHill
Project: TO-009 Lejeune
PO No:
Sample Date: 01/08/09
Received Date: 01/10/09
Extraction Date: 01/14/09
Analysis Date: 22-JAN-2009 10:43
Report Date: 01/31/2009
Matrix: SOIL
% Solids: 91.4

Lab ID: SC0127-31
Client ID: MR08-IS207-6-7-09A
SDG: TO9-30
Extracted by: AC
Extraction Method: SW846 3550
Analyst: JLP
Analysis Method: SW846 8270C
Lab Prep Batch: WG59785
Units: ug/Kgdrywt

CAS#	Compound	Flags	Results	DF	PQL	Adj.PQL	Adj.MDL	
84-74-2	Di-n-butylphthalate	U	360	1.0	330	360	110	
85-68-7	Butylbenzylphthalate	U	360	1.0	330	360	100	
91-94-1	3,3'-Dichlorobenzidine	~~U~~ UJ	550	1.0	500	550	120	CCH
218-01-9	Chrysene	U	360	1.0	330	360	100	
117-81-7	bis(2-Ethylhexyl)phthalate	U	360	1.0	330	360	110	
117-84-0	Di-n-octylphthalate	U	360	1.0	330	360	230	
367-12-4	2-Fluorophenol		58%					
13127-88-3	Phenol-D6		58%					
4165-60-0	Nitrobenzene-D5		57%					
321-60-8	2-Fluorobiphenyl		63%					
118-79-6	2,4,6-Tribromophenol		54%					
1718-51-0	Terphenyl-D14		85%					

lwo 4/15/09

ENVIRONMENTAL
Data Services, Inc.

POLYNUCLEAR AROMATIC COMPOUNDS BY 8270SIM

USEPA Region IV - Level IV Review

Site: MCB Camp Lejeune, TO-09 SDG #: TO9-31

Client: CH2M HILL, Inc., Virginia Beach, Virginia Date: April 15, 2009

Laboratory: Katahdin Analytical Services, Scarborough, Maine Reviewer: Nancy Weaver

EDS ID	Client Sample ID	Laboratory Sample ID	Matrix
1	MR08-SS208-09A	SC0128-2	Soil
2	MR08-IS208-6-7-09A	SC0128-4	Soil
3	MR08-SS228-09A	SC0128-6	Soil
4	MR08-IS228-7-8-09A	SC0128-8	Soil
5	MR08-SS229-09A	SC0128-10	Soil
6	MR08-SS229D-09A	SC0128-12	Soil
7	MR08-IS229-6-7-09A	SC0128-14	Soil
8	MR08-IS229D-6-7-09A	SC0128-16	Soil
9	MR08-SS227-09A	SC0128-18	Soil
10	MR08-IS227-6-7-09A	SC0128-20	Soil
11	MR08-SS209-09A	SC0128-22	Soil
12	MR08-SS209D-09A	SC0128-24	Soil
13	MR08-SS180-09A	SC0145-2	Soil
14	MR08-IS180-6-7-09A	SC0145-4	Soil
15	MR08-SS182-09A	SC0145-6	Soil
16	MR08-IS182-8-9-09A	SC0145-8	Soil
17	MR08-SS183-09A	SC0145-10	Soil
17MS	MR08-SS183-09AMS	SC0145-10MS	Soil
17MSD	MR08-SS183-09AMSD	SC0145-10MSD	Soil
18	MR08-SS205-09A	SC0145-12	Soil
19	MR08-IS205-9-10-09A	SC0145-14	Soil
20	MR08-SS203-09A	SC0145-16	Soil

The USEPA "Contract Laboratory Program National Functional Guidelines for Organic Data Review," October 1999, and professional judgment were used in evaluating the data in this summary report.

Holding Times - All samples were extracted within 14 days for soil samples and analyzed within 40 days for all samples.

GC/MS Tuning - All of the DFTPP tunes in the initial and continuing calibrations met the percent relative abundance criteria.

Initial Calibration - The initial calibrations exhibited acceptable %RSD and mean RRF values.

Continuing Calibration - The continuing calibrations exhibited acceptable %D and RRF values except the following.

CCAL Date	Compound	%D/RRF	Qualifier	Affected Samples
01/28/09	Hexachlorobutadiene	26.24%	J/UJ	1-3, 5-12
01/29/09 (0927)	2-Methylnaphthalene	27.45%	J/UJ	4, 14, 16, 19, 20
	Hexachlorobutadiene	25.72%	J/UJ	4, 14, 16, 19, 20
01/29/09 (1751)	Pyrene	31.32%	J/UJ	13, 15, 17, 18
	Benzo (k) fluoranthene	25.65%	J/UJ	13, 15, 17, 18
	Hexachlorobenzene	28.16%	J/UJ	13, 15, 17, 18
	Hexachlorocyclopentadiene	26.69%	J/UJ	13, 15, 17, 18

Surrogates - All samples exhibited acceptable surrogate recoveries.

MS/MSD - The MS/MSD sample exhibited acceptable %R and RPD values.

Laboratory Control Sample - The LCS samples exhibited acceptable %R values except the following.

LCS ID	Compound	%R	Qualifier	Affected Samples
WG59786	Naphthalene	107%	None	All ND

Internal Standard (IS) Area Performance - All internal standards met response and retention time (RT) criteria.

Method Blank - The method blanks were free of contamination.

Field, Equipment Blank - Field QC results are summarized below.

Blank ID	Compound	Conc. ug/L	Action Level ug/kg	Qualifier	Affected Samples
MR08-FB01011009	None - ND	-	-	-	-
MR08-EB01010809-SS	None - ND	-	-	-	-
MR08-EB01010909-SS	None - ND	-	-	-	-
MR08-EB01010909-IS	None - ND	-	-	-	-

Field Duplicates - Field duplicate results are summarized below.

Compound	MR08-SS209-09A ug/kg	MR08-SS209D-09A ug/kg	RPD	Qualifier
Phenanthrene	43	37	15%	None
Fluoranthene	190	150	24%	None
Pyrene	180	100	57%	None
Benzo (a) anthracene	82	63	26%	None
Benzo (b) fluoranthene	170	170	0%	None
Benzo (k) fluoranthene	120	54	76%	None
Benzo (a) pyrene	91	76	18%	None
Indeno (1, 2, 3-cd) pyrene	97	75	26%	None
Dibenzo (a, h) anthracene	38	28	30%	None
Benzo (g, h, i) perylene	93	72	25%	None

Compound	MR08-SS229-09A ug/kg	MR08-SS229D-09A ug/kg	RPD	Qualifier
Phenanthrene	4.2	4.1	9%	None
Fluoranthene	8.5	6.5	27%	None
Pyrene	12	11	9%	None
Benzo (a) anthracene	6.1	6.4	5%	None
Benzo (a) pyrene	13	19	38%	None
Benzo (g, h, i) perylene	16	21	27%	None

Compound	MR08-IS229-6-7-09A ug/kg	MR08-IS229D-6-7-09A ug/kg	RPD	Qualifier
Fluoranthene	3.7	11 U	NC	-
Pyrene	4.8	11 U	NC	-

Compound Quantitation - No discrepancies were identified.

KATAHDIN ANALYTICAL SERVICES
Report of Analytical Results

Client: CH2MHill
Project: TO-009 Lejeune
PO No:
Sample Date: 01/08/09
Received Date: 01/10/09
Extraction Date: 01/14/09
Analysis Date: 28-JAN-2009 12:36
Report Date: 02/02/2009
Matrix: SOIL
% Solids: 90.7

Lab ID: SC0128-2
Client ID: MR08-SS208-09A
SDG: TO9-31
Extracted by: AC
Extraction Method: SW846 3550
Analyst: JLP
Analysis Method: SW846 M8270C
Lab Prep Batch: WG59786
Units: ug/Kgdrywt

CAS#	Compound	Flags	Results	DF	PQL	Adj.PQL	Adj.MDL	
91-20-3	Naphthalene	U	11	1.0	10	11	2.9	
91-57-6	2-Methylnaphthalene	U	11	1.0	10	11	2.4	
86-73-7	Fluorene	U	11	1.0	10	11	3.5	
85-01-8	Phenanthrene		14	1.0	10	11	2.0	
206-44-0	Fluoranthene		63	1.0	10	11	2.0	
129-00-0	Pyrene		43	1.0	10	11	2.3	
56-55-3	Benzo(a)anthracene		37	1.0	10	11	2.1	
205-99-2	Benzo(b)fluoranthene		75	1.0	10	11	2.6	
207-08-9	Benzo(k)fluoranthene		37	1.0	10	11	3.4	
50-32-8	Benzo(a)pyrene		37	1.0	10	11	3.6	
193-39-5	Indeno(1,2,3-cd)pyrene		35	1.0	10	11	2.1	
53-70-3	Dibenzo(a,h)anthracene		13	1.0	10	11	2.0	
191-24-2	Benzo(g,h,i)perylene		33	1.0	10	11	2.2	
118-74-1	Hexachlorobenzene	U	11	1.0	10	11	2.0	
87-68-3	Hexachlorobutadiene	~~U~~ UJ	11	1.0	10	11	2.5	CCH
77-47-4	Hexachlorocyclopentadiene	U	11	1.0	10	11	1.6	
7297-45-2	2-Methylnaphthalene-D10		79%					
367-12-4	2,4-Dibromophenol		77%					
81103-79-9	Fluorene-d10		81%					
1718-51-1	Pyrene-D10		82%					

LW 4/15/09

2

KATAHDIN ANALYTICAL SERVICES
Report of Analytical Results

Client: CH2MHill
Project: TO-009 Lejeune
PO No:
Sample Date: 01/08/09
Received Date: 01/10/09
Extraction Date: 01/14/09
Analysis Date: 28-JAN-2009 13:23
Report Date: 02/02/2009
Matrix: SOIL
% Solids: 89.0

Lab ID: SC0128-4
Client ID: MR08-IS208-6-7-09A
SDG: TO9-31
Extracted by: AC
Extraction Method: SW846 3550
Analyst: JLP
Analysis Method: SW846 M8270C
Lab Prep Batch: WG59786
Units: ug/Kgdrywt

CAS#	Compound	Flags	Results	DF	PQL	Adj.PQL	Adj.MDL	
91-20-3	Naphthalene	U	11	1.0	10	11	2.9	
91-57-6	2-Methylnaphthalene	U	11	1.0	10	11	2.5	
86-73-7	Fluorene	U	11	1.0	10	11	3.6	
85-01-8	Phenanthrene	U	11	1.0	10	11	2.0	
206-44-0	Fluoranthene	J	2.4	1.0	10	11	2.0	
129-00-0	Pyrene	J	3.1	1.0	10	11	2.4	
56-55-3	Benzo(a)anthracene	U	11	1.0	10	11	2.1	
205-99-2	Benzo(b)fluoranthene	J	2.8	1.0	10	11	2.7	
207-08-9	Benzo(k)fluoranthene	U	11	1.0	10	11	3.5	
50-32-8	Benzo(a)pyrene	U	11	1.0	10	11	3.7	
193-39-5	Indeno(1,2,3-cd)pyrene	U	11	1.0	10	11	2.1	
53-70-3	Dibenzo(a,h)anthracene	U	11	1.0	10	11	2.0	
191-24-2	Benzo(g,h,i)perylene	U	11	1.0	10	11	2.2	
118-74-1	Hexachlorobenzene	U	11	1.0	10	11	2.0	
87-68-3	Hexachlorobutadiene	~~U~~ UJ	11	1.0	10	11	2.6	CCH
77-47-4	Hexachlorocyclopentadiene	U	11	1.0	10	11	1.7	
7297-45-2	2-Methylnaphthalene-D10		62%					
367-12-4	2,4-Dibromophenol		78%					
81103-79-9	Fluorene-d10		74%					
1718-51-1	Pyrene-D10		58%					

lw 4/15/09

3

KATAHDIN ANALYTICAL SERVICES
Report of Analytical Results

Client: CH2MHill
Project: TO-009 Lejeune
PO No:
Sample Date: 01/08/09
Received Date: 01/10/09
Extraction Date: 01/14/09
Analysis Date: 28-JAN-2009 20:05
Report Date: 02/02/2009
Matrix: SOIL
% Solids: 92.4

Lab ID: SC0128-6
Client ID: MR08-SS228-09A
SDG: TO9-31
Extracted by: AC
Extraction Method: SW846 3550
Analyst: JLP
Analysis Method: SW846 M8270C
Lab Prep Batch: WG59786
Units: ug/Kgdrywt

CAS#	Compound	Flags	Results	DF	PQL	Adj.PQL	Adj.MDL	
91-20-3	Naphthalene	U	11	1.0	10	11	2.8	
91-57-6	2-Methylnaphthalene	U	11	1.0	10	11	2.4	
86-73-7	Fluorene	U	11	1.0	10	11	3.5	
85-01-8	Phenanthrene	U	11	1.0	10	11	1.9	
206-44-0	Fluoranthene	J	2.5	1.0	10	11	1.9	
129-00-0	Pyrene	J	4.5	1.0	10	11	2.3	
56-55-3	Benzo(a)anthracene	U	11	1.0	10	11	2.0	
205-99-2	Benzo(b)fluoranthene	U	11	1.0	10	11	2.6	
207-08-9	Benzo(k)fluoranthene	U	11	1.0	10	11	3.4	
50-32-8	Benzo(a)pyrene	J	5.7	1.0	10	11	3.6	
193-39-5	Indeno(1,2,3-cd)pyrene	J	2.2	1.0	10	11	2.0	
53-70-3	Dibenzo(a,h)anthracene	U	11	1.0	10	11	1.9	
191-24-2	Benzo(g,h,i)perylene	U	11	1.0	10	11	2.2	
118-74-1	Hexachlorobenzene	U	11	1.0	10	11	1.9	
87-68-3	Hexachlorobutadiene	~~U~~ UJ	11	1.0	10	11	2.5	CCH
77-47-4	Hexachlorocyclopentadiene	U	11	1.0	10	11	1.6	
7297-45-2	2-Methylnaphthalene-D10		57%					
367-12-4	2,4-Dibromophenol		68%					
81103-79-9	Fluorene-d10		76%					
1718-51-1	Pyrene-D10		75%					

MW 4/15/09

4

KATAHDIN ANALYTICAL SERVICES
Report of Analytical Results

Client: CH2MHill
Project: TO-009 Lejeune
PO No:
Sample Date: 01/08/09
Received Date: 01/10/09
Extraction Date: 01/14/09
Analysis Date: 29-JAN-2009 16:09
Report Date: 02/02/2009
Matrix: SOIL
% Solids: 91.5

Lab ID: SC0128-8
Client ID: MR08-IS228-7-8-09A
SDG: TO9-31
Extracted by: AC
Extraction Method: SW846 3550
Analyst: JLP
Analysis Method: SW846 M8270C
Lab Prep Batch: WG59786
Units: ug/Kgdrywt

CAS#	Compound	Flags	Results	DF	PQL	Adj.PQL	Adj.MDL	
91-20-3	Naphthalene	U	11	1.0	10	11	2.8	
91-57-6	2-Methylnaphthalene	~~U~~ UJ	11	1.0	10	11	2.4	CCH
86-73-7	Fluorene	U	11	1.0	10	11	3.5	
85-01-8	Phenanthrene	U	11	1.0	10	11	2.0	
206-44-0	Fluoranthene	U	11	1.0	10	11	2.0	
129-00-0	Pyrene	J	2.9	1.0	10	11	2.3	
56-55-3	Benzo(a)anthracene	U	11	1.0	10	11	2.1	
205-99-2	Benzo(b)fluoranthene	U	11	1.0	10	11	2.6	
207-08-9	Benzo(k)fluoranthene	U	11	1.0	10	11	3.4	
50-32-8	Benzo(a)pyrene	U	11	1.0	10	11	3.6	
193-39-5	Indeno(1,2,3-cd)pyrene	U	11	1.0	10	11	2.1	
53-70-3	Dibenzo(a,h)anthracene	U	11	1.0	10	11	2.0	
191-24-2	Benzo(g,h,i)perylene	U	11	1.0	10	11	2.2	
118-74-1	Hexachlorobenzene	U	11	1.0	10	11	2.0	
87-68-3	Hexachlorobutadiene	~~U~~ UJ	11	1.0	10	11	2.5	CCH
77-47-4	Hexachlorocyclopentadiene	U	11	1.0	10	11	1.6	
7297-45-2	2-Methylnaphthalene-D10		40%					
367-12-4	2,4-Dibromophenol		82%					
81103-79-9	Fluorene-d10		76%					
1718-51-1	Pyrene-D10		75%					

AW
4/15/09

KATAHDIN ANALYTICAL SERVICES
Report of Analytical Results

Client: CH2MHill
Project: TO-009 Lejeune
PO No:
Sample Date: 01/08/09
Received Date: 01/10/09
Extraction Date: 01/14/09
Analysis Date: 28-JAN-2009 20:46
Report Date: 02/02/2009
Matrix: SOIL
% Solids: 92.4

Lab ID: SC0128-10
Client ID: MR08-SS229-09A
SDG: TO9-31
Extracted by: AC
Extraction Method: SW846 3550
Analyst: JLP
Analysis Method: SW846 M8270C
Lab Prep Batch: WG59786
Units: ug/Kgdrywt

CAS#	Compound	Flags	Results	DF	PQL	Adj.PQL	Adj.MDL	
91-20-3	Naphthalene	U	11	1.0	10	11	2.8	
91-57-6	2-Methylnaphthalene	U	11	1.0	10	11	2.4	
86-73-7	Fluorene	U	11	1.0	10	11	3.5	
85-01-8	Phenanthrene	J	4.2	1.0	10	11	1.9	
206-44-0	Fluoranthene	J	8.5	1.0	10	11	1.9	
129-00-0	Pyrene		12	1.0	10	11	2.3	
56-55-3	Benzo(a)anthracene	J	6.1	1.0	10	11	2.0	
205-99-2	Benzo(b)fluoranthene	U	11	1.0	10	11	2.6	
207-08-9	Benzo(k)fluoranthene	U	11	1.0	10	11	3.4	
50-32-8	Benzo(a)pyrene		13	1.0	10	11	3.6	
193-39-5	Indeno(1,2,3-cd)pyrene	U	11	1.0	10	11	2.0	
53-70-3	Dibenzo(a,h)anthracene	U	11	1.0	10	11	1.9	
191-24-2	Benzo(g,h,i)perylene		16	1.0	10	11	2.2	
118-74-1	Hexachlorobenzene	U	11	1.0	10	11	1.9	
87-68-3	Hexachlorobutadiene	~~J~~ UJ	11	1.0	10	11	2.5	CCH
77-47-4	Hexachlorocyclopentadiene	U	11	1.0	10	11	1.6	
7297-45-2	2-Methylnaphthalene-D10		59%					
367-12-4	2,4-Dibromophenol		64%					
81103-79-9	Fluorene-d10		91%					
1718-51-1	Pyrene-D10		80%					

RW
4/15/09

6

KATAHDIN ANALYTICAL SERVICES
Report of Analytical Results

Client: CH2MHill
Project: TO-009 Lejeune
PO No:
Sample Date: 01/08/09
Received Date: 01/10/09
Extraction Date: 01/14/09
Analysis Date: 28-JAN-2009 21:26
Report Date: 02/02/2009
Matrix: SOIL
% Solids: 91.9

Lab ID: SC0128-12
Client ID: MR08-SS229D-09A
SDG: TO9-31
Extracted by: AC
Extraction Method: SW846 3550
Analyst: JLP
Analysis Method: SW846 M8270C
Lab Prep Batch: WG59786
Units: ug/Kgdrywt

CAS#	Compound	Flags	Results	DF	PQL	Adj.PQL	Adj.MDL
91-20-3	Naphthalene	U	11	1.0	10	11	2.8
91-57-6	2-Methylnaphthalene	J	4.4	1.0	10	11	2.4
86-73-7	Fluorene	U	11	1.0	10	11	3.5
85-01-8	Phenanthrene	J	4.1	1.0	10	11	2.0
206-44-0	Fluoranthene	J	6.5	1.0	10	11	2.0
129-00-0	Pyrene		11	1.0	10	11	2.3
56-55-3	Benzo(a)anthracene	J	6.4	1.0	10	11	2.1
205-99-2	Benzo(b)fluoranthene	U	11	1.0	10	11	2.6
207-08-9	Benzo(k)fluoranthene	U	11	1.0	10	11	3.4
50-32-8	Benzo(a)pyrene		19	1.0	10	11	3.6
193-39-5	Indeno(1,2,3-cd)pyrene	U	11	1.0	10	11	2.1
53-70-3	Dibenzo(a,h)anthracene	U	11	1.0	10	11	2.0
191-24-2	Benzo(g,h,i)perylene		21	1.0	10	11	2.2
118-74-1	Hexachlorobenzene	U	11	1.0	10	11	2.0
87-68-3	Hexachlorobutadiene	~~U~~ UJ	11	1.0	10	11	2.5 CCH
77-47-4	Hexachlorocyclopentadiene	U	11	1.0	10	11	1.6
7297-45-2	2-Methylnaphthalene-D10		83%				
367-12-4	2,4-Dibromophenol		83%				
81103-79-9	Fluorene-d10		95%				
1718-51-1	Pyrene-D10		82%				

lw
4/15/09

7

KATAHDIN ANALYTICAL SERVICES
Report of Analytical Results

Client: CH2MHill
Project: TO-009 Lejeune
PO No:
Sample Date: 01/08/09
Received Date: 01/10/09
Extraction Date: 01/14/09
Analysis Date: 28-JAN-2009 16:04
Report Date: 02/02/2009
Matrix: SOIL
% Solids: 86.8

Lab ID: SC0128-14
Client ID: MR08-IS229-6-7-09A
SDG: TO9-31
Extracted by: AC
Extraction Method: SW846 3550
Analyst: JLP
Analysis Method: SW846 M8270C
Lab Prep Batch: WG59786
Units: ug/Kgdrywt

CAS#	Compound	Flags	Results	DF	PQL	Adj.PQL	Adj.MDL	
91-20-3	Naphthalene	U	12	1.0	10	12	3.0	
91-57-6	2-Methylnaphthalene	U	12	1.0	10	12	2.5	
86-73-7	Fluorene	U	12	1.0	10	12	3.7	
85-01-8	Phenanthrene	U	12	1.0	10	12	2.1	
206-44-0	Fluoranthene	J	3.7	1.0	10	12	2.1	
129-00-0	Pyrene	J	4.8	1.0	10	12	2.4	
56-55-3	Benzo(a)anthracene	U	12	1.0	10	12	2.2	
205-99-2	Benzo(b)fluoranthene	U	12	1.0	10	12	2.8	
207-08-9	Benzo(k)fluoranthene	U	12	1.0	10	12	3.6	
50-32-8	Benzo(a)pyrene	U	12	1.0	10	12	3.8	
193-39-5	Indeno(1,2,3-cd)pyrene	U	12	1.0	10	12	2.2	
53-70-3	Dibenzo(a,h)anthracene	U	12	1.0	10	12	2.1	
191-24-2	Benzo(g,h,i)perylene	U	12	1.0	10	12	2.3	
118-74-1	Hexachlorobenzene	U	12	1.0	10	12	2.1	
87-68-3	Hexachlorobutadiene	~~U~~ UJ	12	1.0	10	12	2.6	CCH
77-47-4	Hexachlorocyclopentadiene	U	12	1.0	10	12	1.7	
7297-45-2	2-Methylnaphthalene-D10		62%					
367-12-4	2,4-Dibromophenol		91%					
81103-79-9	Fluorene-d10		84%					
1718-51-1	Pyrene-D10		72%					

fuw 4/15/09

8

KATAHDIN ANALYTICAL SERVICES
Report of Analytical Results

Client: CH2MHill
Project: TO-009 Lejeune
PO No:
Sample Date: 01/08/09
Received Date: 01/10/09
Extraction Date: 01/14/09
Analysis Date: 28-JAN-2009 17:24
Report Date: 02/02/2009
Matrix: SOIL
% Solids: 88.9

Lab ID: SC0128-16
Client ID: MR08-IS229D-6-7-09A
SDG: TO9-31
Extracted by: AC
Extraction Method: SW846 3550
Analyst: JLP
Analysis Method: SW846 M8270C
Lab Prep Batch: WG59786
Units: ug/Kgdrywt

CAS#	Compound	Flags	Results	DF	PQL	Adj.PQL	Adj.MDL
91-20-3	Naphthalene	U	11	1.0	10	11	2.9
91-57-6	2-Methylnaphthalene	U	11	1.0	10	11	2.5
86-73-7	Fluorene	U	11	1.0	10	11	3.6
85-01-8	Phenanthrene	U	11	1.0	10	11	2.0
206-44-0	Fluoranthene	U	11	1.0	10	11	2.0
129-00-0	Pyrene	U	11	1.0	10	11	2.4
56-55-3	Benzo(a)anthracene	U	11	1.0	10	11	2.1
205-99-2	Benzo(b)fluoranthene	U	11	1.0	10	11	2.7
207-08-9	Benzo(k)fluoranthene	U	11	1.0	10	11	3.5
50-32-8	Benzo(a)pyrene	U	11	1.0	10	11	3.7
193-39-5	Indeno(1,2,3-cd)pyrene	U	11	1.0	10	11	2.1
53-70-3	Dibenzo(a,h)anthracene	U	11	1.0	10	11	2.0
191-24-2	Benzo(g,h,i)perylene	U	11	1.0	10	11	2.2
118-74-1	Hexachlorobenzene	U	11	1.0	10	11	2.0
87-68-3	Hexachlorobutadiene	~~J~~ UJ	11	1.0	10	11	2.6 CLH
77-47-4	Hexachlorocyclopentadiene	U	11	1.0	10	11	1.7
7297-45-2	2-Methylnaphthalene-D10		58%				
367-12-4	2,4-Dibromophenol		85%				
81103-79-9	Fluorene-d10		84%				
1718-51-1	Pyrene-D10		89%				

lw
4/15/09

9

KATAHDIN ANALYTICAL SERVICES
Report of Analytical Results

Client: CH2MHill
Project: TO-009 Lejeune
PO No:
Sample Date: 01/08/09
Received Date: 01/10/09
Extraction Date: 01/14/09
Analysis Date: 28-JAN-2009 19:25
Report Date: 02/02/2009
Matrix: SOIL
% Solids: 87.5

Lab ID: SC0128-18
Client ID: MR08-SS227-09A
SDG: TO9-31
Extracted by: AC
Extraction Method: SW846 3550
Analyst: JLP
Analysis Method: SW846 M8270C
Lab Prep Batch: WG59786
Units: ug/Kgdrywt

CAS#	Compound	Flags	Results	DF	PQL	Adj.PQL	Adj.MDL	
91-20-3	Naphthalene	U	11	1.0	10	11	3.0	
91-57-6	2-Methylnaphthalene	U	11	1.0	10	11	2.5	
86-73-7	Fluorene	U	11	1.0	10	11	3.6	
85-01-8	Phenanthrene		63	1.0	10	11	2.0	
206-44-0	Fluoranthene		250	1.0	10	11	2.0	
129-00-0	Pyrene		200	1.0	10	11	2.4	
56-55-3	Benzo(a)anthracene		100	1.0	10	11	2.2	
205-99-2	Benzo(b)fluoranthene		180	1.0	10	11	2.7	
207-08-9	Benzo(k)fluoranthene		170	1.0	10	11	3.5	
50-32-8	Benzo(a)pyrene		120	1.0	10	11	3.8	
193-39-5	Indeno(1,2,3-cd)pyrene		100	1.0	10	11	2.2	
53-70-3	Dibenzo(a,h)anthracene		42	1.0	10	11	2.0	
191-24-2	Benzo(g,h,i)perylene		99	1.0	10	11	2.3	
118-74-1	Hexachlorobenzene	U	11	1.0	10	11	2.0	
87-68-3	Hexachlorobutadiene	~~U~~ UJ	11	1.0	10	11	2.6	CCH
77-47-4	Hexachlorocyclopentadiene	U	11	1.0	10	11	1.7	
7297-45-2	2-Methylnaphthalene-D10		58%					
367-12-4	2,4-Dibromophenol		82%					
81103-79-9	Fluorene-d10		76%					
1718-51-1	Pyrene-D10		74%					

LW
4/15/09

10

KATAHDIN ANALYTICAL SERVICES
Report of Analytical Results

Client: CH2MHill
Project: TO-009 Lejeune
PO No:
Sample Date: 01/08/09
Received Date: 01/10/09
Extraction Date: 01/14/09
Analysis Date: 28-JAN-2009 16:44
Report Date: 02/02/2009
Matrix: SOIL
% Solids: 84.5

Lab ID: SC0128-20
Client ID: MR08-IS227-6-7-09A
SDG: TO9-31
Extracted by: AC
Extraction Method: SW846 3550
Analyst: JLP
Analysis Method: SW846 M8270C
Lab Prep Batch: WG59786
Units: ug/Kgdrywt

CAS#	Compound	Flags	Results	DF	PQL	Adj.PQL	Adj.MDL
91-20-3	Naphthalene	U	12	1.0	10	12	3.1
91-57-6	2-Methylnaphthalene	U	12	1.0	10	12	2.6
86-73-7	Fluorene	U	12	1.0	10	12	3.8
85-01-8	Phenanthrene	U	12	1.0	10	12	2.1
206-44-0	Fluoranthene	U	12	1.0	10	12	2.1
129-00-0	Pyrene	U	12	1.0	10	12	2.5
56-55-3	Benzo(a)anthracene	U	12	1.0	10	12	2.2
205-99-2	Benzo(b)fluoranthene	U	12	1.0	10	12	2.8
207-08-9	Benzo(k)fluoranthene	U	12	1.0	10	12	3.7
50-32-8	Benzo(a)pyrene	U	12	1.0	10	12	3.9
193-39-5	Indeno(1,2,3-cd)pyrene	U	12	1.0	10	12	2.2
53-70-3	Dibenzo(a,h)anthracene	U	12	1.0	10	12	2.1
191-24-2	Benzo(g,h,i)perylene	U	12	1.0	10	12	2.4
118-74-1	Hexachlorobenzene	U	12	1.0	10	12	2.1
87-68-3	Hexachlorobutadiene	~~U~~ UJ	12	1.0	10	12	2.7 CCH
77-47-4	Hexachlorocyclopentadiene	U	12	1.0	10	12	1.8
7297-45-2	2-Methylnaphthalene-D10		58%				
367-12-4	2,4-Dibromophenol		74%				
81103-79-9	Fluorene-d10		79%				
1718-51-1	Pyrene-D10		66%				

lw 4/15/09

11

KATAHDIN ANALYTICAL SERVICES
Report of Analytical Results

Client: CH2MHill
Project: TO-009 Lejeune
PO No:
Sample Date: 01/08/09
Received Date: 01/10/09
Extraction Date: 01/14/09
Analysis Date: 28-JAN-2009 18:04
Report Date: 02/02/2009
Matrix: SOIL
% Solids: 88.8

Lab ID: SC0128-22
Client ID: MR08-SS209-09A
SDG: TO9-31
Extracted by: AC
Extraction Method: SW846 3550
Analyst: JLP
Analysis Method: SW846 M8270C
Lab Prep Batch: WG59786
Units: ug/Kgdrywt

CAS#	Compound	Flags	Results	DF	PQL	Adj.PQL	Adj.MDL
91-20-3	Naphthalene	U	11	1.0	10	11	2.9
91-57-6	2-Methylnaphthalene	U	11	1.0	10	11	2.5
86-73-7	Fluorene	U	11	1.0	10	11	3.6
85-01-8	Phenanthrene		43	1.0	10	11	2.0
206-44-0	Fluoranthene		190	1.0	10	11	2.0
129-00-0	Pyrene		180	1.0	10	11	2.4
56-55-3	Benzo(a)anthracene		82	1.0	10	11	2.1
205-99-2	Benzo(b)fluoranthene		170	1.0	10	11	2.7
207-08-9	Benzo(k)fluoranthene		120	1.0	10	11	3.5
50-32-8	Benzo(a)pyrene		91	1.0	10	11	3.7
193-39-5	Indeno(1,2,3-cd)pyrene		97	1.0	10	11	2.1
53-70-3	Dibenzo(a,h)anthracene		38	1.0	10	11	2.0
191-24-2	Benzo(g,h,i)perylene		93	1.0	10	11	2.2
118-74-1	Hexachlorobenzene	U	11	1.0	10	11	2.0
87-68-3	Hexachlorobutadiene	~~U~~ UJ	11	1.0	10	11	2.6 CCH
77-47-4	Hexachlorocyclopentadiene	U	11	1.0	10	11	1.7
7297-45-2	2-Methylnaphthalene-D10		63%				
367-12-4	2,4-Dibromophenol		75%				
81103-79-9	Fluorene-d10		86%				
1718-51-1	Pyrene-D10		88%				

JW 4/15/09

KATAHDIN ANALYTICAL SERVICES
Report of Analytical Results

Client: CH2MHill
Project: TO-009 Lejeune
PO No:
Sample Date: 01/08/09
Received Date: 01/10/09
Extraction Date: 01/14/09
Analysis Date: 28-JAN-2009 18:44
Report Date: 02/02/2009
Matrix: SOIL
% Solids: 90.8

Lab ID: SC0128-24
Client ID: MR08-SS209D-09A
SDG: TO9-31
Extracted by: AC
Extraction Method: SW846 3550
Analyst: JLP
Analysis Method: SW846 M8270C
Lab Prep Batch: WG59786
Units: ug/Kgdrywt

CAS#	Compound	Flags	Results	DF	PQL	Adj.PQL	Adj.MDL
91-20-3	Naphthalene	U	11	1.0	10	11	2.9
91-57-6	2-Methylnaphthalene	U	11	1.0	10	11	2.4
86-73-7	Fluorene	U	11	1.0	10	11	3.5
85-01-8	Phenanthrene		37	1.0	10	11	2.0
206-44-0	Fluoranthene		150	1.0	10	11	2.0
129-00-0	Pyrene		100	1.0	10	11	2.3
56-55-3	Benzo(a)anthracene		63	1.0	10	11	2.1
205-99-2	Benzo(b)fluoranthene		170	1.0	10	11	2.6
207-08-9	Benzo(k)fluoranthene		54	1.0	10	11	3.4
50-32-8	Benzo(a)pyrene		76	1.0	10	11	3.6
193-39-5	Indeno(1,2,3-cd)pyrene		75	1.0	10	11	2.1
53-70-3	Dibenzo(a,h)anthracene		28	1.0	10	11	2.0
191-24-2	Benzo(g,h,i)perylene		72	1.0	10	11	2.2
118-74-1	Hexachlorobenzene	U	11	1.0	10	11	2.0
87-68-3	Hexachlorobutadiene	~~U~~ UJ	11	1.0	10	11	2.5 CCH
77-47-4	Hexachlorocyclopentadiene	U	11	1.0	10	11	1.6
7297-45-2	2-Methylnaphthalene-D10		53%				
367-12-4	2,4-Dibromophenol		76%				
81103-79-9	Fluorene-d10		73%				
1718-51-1	Pyrene-D10		67%				

MW 4/15/09

KATAHDIN ANALYTICAL SERVICES
Report of Analytical Results

Client: CH2MHill
Project: TO-009 Lejeune
PO No:
Sample Date: 01/09/09
Received Date: 01/13/09
Extraction Date: 01/15/09
Analysis Date: 30-JAN-2009 03:53
Report Date: 02/02/2009
Matrix: SOIL
% Solids: 93.9

Lab ID: SC0145-2DL
Client ID: MR08-SS180-09A
SDG: TO9-31
Extracted by: AC
Extraction Method: SW846 3550
Analyst: JCG
Analysis Method: SW846 M8270C
Lab Prep Batch: WG59815
Units: ug/Kgdrywt

CAS#	Compound	Flags		Results	DF	PQL	Adj.PQL	Adj.MDL	
91-20-3	Naphthalene	U		32	3.0	10	32	8.3	
91-57-6	2-Methylnaphthalene	J		9.3	3.0	10	32	7.0	
86-73-7	Fluorene	J		20	3.0	10	32	10	
85-01-8	Phenanthrene			140	3.0	10	32	5.8	
206-44-0	Fluoranthene			110	3.0	10	32	5.8	
129-00-0	Pyrene		J	79	3.0	10	32	6.7	CCH
56-55-3	Benzo(a)anthracene	J		24	3.0	10	32	6.1	
205-99-2	Benzo(b)fluoranthene	U		32	3.0	10	32	7.7	
207-08-9	Benzo(k)fluoranthene	~~U~~	UJ	32	3.0	10	32	9.9	CCH
50-32-8	Benzo(a)pyrene	U		32	3.0	10	32	10	
193-39-5	Indeno(1,2,3-cd)pyrene	U		32	3.0	10	32	6.1	
53-70-3	Dibenzo(a,h)anthracene	U		32	3.0	10	32	5.8	
191-24-2	Benzo(g,h,i)perylene	U		32	3.0	10	32	6.4	
118-74-1	Hexachlorobenzene	~~U~~	UJ	32	3.0	10	32	5.8	CCH
87-68-3	Hexachlorobutadiene	U		32	3.0	10	32	7.4	
77-47-4	Hexachlorocyclopentadiene	~~U~~	UJ	32	3.0	10	32	4.8	CCH
7297-45-2	2-Methylnaphthalene-D10			85%					
367-12-4	2,4-Dibromophenol			120%					
81103-79-9	Fluorene-d10			91%					
1718-51-1	Pyrene-D10			105%					

RW 4/15/09

14

KATAHDIN ANALYTICAL SERVICES
Report of Analytical Results

Client: CH2MHill
Project: TO-009 Lejeune
PO No:
Sample Date: 01/09/09
Received Date: 01/13/09
Extraction Date: 01/15/09
Analysis Date: 29-JAN-2009 11:28
Report Date: 02/02/2009
Matrix: SOIL
% Solids: 91.2

Lab ID: SC0145-4
Client ID: MR08-IS180-6-7-09A
SDG: TO9-31
Extracted by: AC
Extraction Method: SW846 3550
Analyst: JLP
Analysis Method: SW846 M8270C
Lab Prep Batch: WG59815
Units: ug/Kgdrywt

CAS#	Compound	Flags	Results	DF	PQL	Adj.PQL	Adj.MDL	
91-20-3	Naphthalene	U	11	1.0	10	11	2.8	
91-57-6	2-Methylnaphthalene	~~U~~ UJ	11	1.0	10	11	2.4	CCH
86-73-7	Fluorene	U	11	1.0	10	11	3.5	
85-01-8	Phenanthrene	U	11	1.0	10	11	2.0	
206-44-0	Fluoranthene	U	11	1.0	10	11	2.0	
129-00-0	Pyrene	U	11	1.0	10	11	2.3	
56-55-3	Benzo(a)anthracene	U	11	1.0	10	11	2.1	
205-99-2	Benzo(b)fluoranthene	U	11	1.0	10	11	2.6	
207-08-9	Benzo(k)fluoranthene	U	11	1.0	10	11	3.4	
50-32-8	Benzo(a)pyrene	U	11	1.0	10	11	3.6	
193-39-5	Indeno(1,2,3-cd)pyrene	U	11	1.0	10	11	2.1	
53-70-3	Dibenzo(a,h)anthracene	U	11	1.0	10	11	2.0	
191-24-2	Benzo(g,h,i)perylene	U	11	1.0	10	11	2.2	
118-74-1	Hexachlorobenzene	U	11	1.0	10	11	2.0	
87-68-3	Hexachlorobutadiene	~~U~~ UJ	11	1.0	10	11	2.5	CCH
77-47-4	Hexachlorocyclopentadiene	U	11	1.0	10	11	1.6	
7297-45-2	2-Methylnaphthalene-D10		64%					
367-12-4	2,4-Dibromophenol		82%					
81103-79-9	Fluorene-d10		83%					
1718-51-1	Pyrene-D10		76%					

fcw 4/15/09

KATAHDIN ANALYTICAL SERVICES
Report of Analytical Results

Client: CH2MHill
Project: TO-009 Lejeune
PO No:
Sample Date: 01/09/09
Received Date: 01/13/09
Extraction Date: 01/15/09
Analysis Date: 30-JAN-2009 01:53
Report Date: 02/02/2009
Matrix: SOIL
% Solids: 85.4

Lab ID: SC0145-6
Client ID: MR08-SS182-09A
SDG: TO9-31
Extracted by: AC
Extraction Method: SW846 3550
Analyst: JCG
Analysis Method: SW846 M8270C
Lab Prep Batch: WG59815
Units: ug/Kgdrywt

CAS#	Compound	Flags	Results	DF	PQL	Adj.PQL	Adj.MDL	
91-20-3	Naphthalene	U	12	1.0	10	12	3.0	
91-57-6	2-Methylnaphthalene	U	12	1.0	10	12	2.6	
86-73-7	Fluorene	U	12	1.0	10	12	3.7	
85-01-8	Phenanthrene	J	3.9	1.0	10	12	2.1	
206-44-0	Fluoranthene	J	4.8	1.0	10	12	2.1	
129-00-0	Pyrene	~~J~~ J	9.1	1.0	10	12	2.4	CCH
56-55-3	Benzo(a)anthracene	U	12	1.0	10	12	2.2	
205-99-2	Benzo(b)fluoranthene	U	12	1.0	10	12	2.8	
207-08-9	Benzo(k)fluoranthene	~~U~~ UJ	12	1.0	10	12	3.6	CCH
50-32-8	Benzo(a)pyrene	U	12	1.0	10	12	3.9	
193-39-5	Indeno(1,2,3-cd)pyrene	U	12	1.0	10	12	2.2	
53-70-3	Dibenzo(a,h)anthracene	U	12	1.0	10	12	2.1	
191-24-2	Benzo(g,h,i)perylene	U	12	1.0	10	12	2.3	
118-74-1	Hexachlorobenzene	~~U~~ UJ	12	1.0	10	12	2.1	CCH
87-68-3	Hexachlorobutadiene	U	12	1.0	10	12	2.7	
77-47-4	Hexachlorocyclopentadiene	~~U~~ UJ	12	1.0	10	12	1.8	CCH
7297-45-2	2-Methylnaphthalene-D10		73%					
367-12-4	2,4-Dibromophenol		51%					
81103-79-9	Fluorene-d10		81%					
1718-51-1	Pyrene-D10		76%					

JCW 4/15/09

16

KATAHDIN ANALYTICAL SERVICES
Report of Analytical Results

Client: CH2MHill
Project: TO-009 Lejeune
PO No:
Sample Date: 01/09/09
Received Date: 01/13/09
Extraction Date: 01/15/09
Analysis Date: 29-JAN-2009 12:08
Report Date: 02/02/2009
Matrix: SOIL
% Solids: 87.4

Lab ID: SC0145-8
Client ID: MR08-IS182-8-9-09A
SDG: TO9-31
Extracted by: AC
Extraction Method: SW846 3550
Analyst: JLP
Analysis Method: SW846 M8270C
Lab Prep Batch: WG59815
Units: ug/Kgdrywt

CAS#	Compound	Flags	Results	DF	PQL	Adj.PQL	Adj.MDL	
91-20-3	Naphthalene	U	11	1.0	10	11	3.0	
91-57-6	2-Methylnaphthalene	~~U~~ UJ	11	1.0	10	11	2.5	CCH
86-73-7	Fluorene	U	11	1.0	10	11	3.6	
85-01-8	Phenanthrene	U	11	1.0	10	11	2.0	
206-44-0	Fluoranthene	U	11	1.0	10	11	2.0	
129-00-0	Pyrene	U	11	1.0	10	11	2.4	
56-55-3	Benzo(a)anthracene	U	11	1.0	10	11	2.2	
205-99-2	Benzo(b)fluoranthene	U	11	1.0	10	11	2.7	
207-08-9	Benzo(k)fluoranthene	U	11	1.0	10	11	3.5	
50-32-8	Benzo(a)pyrene	U	11	1.0	10	11	3.8	
193-39-5	Indeno(1,2,3-cd)pyrene	U	11	1.0	10	11	2.2	
53-70-3	Dibenzo(a,h)anthracene	U	11	1.0	10	11	2.0	
191-24-2	Benzo(g,h,i)perylene	U	11	1.0	10	11	2.3	
118-74-1	Hexachlorobenzene	U	11	1.0	10	11	2.0	
87-68-3	Hexachlorobutadiene	~~U~~ UJ	11	1.0	10	11	2.6	CCH
77-47-4	Hexachlorocyclopentadiene	U	11	1.0	10	11	1.7	
7297-45-2	2-Methylnaphthalene-D10		56%					
367-12-4	2,4-Dibromophenol		69%					
81103-79-9	Fluorene-d10		73%					
1718-51-1	Pyrene-D10		66%					

fw
4/5/09

17

KATAHDIN ANALYTICAL SERVICES
Report of Analytical Results

Client: CH2MHill
Project: TO-009 Lejeune
PO No:
Sample Date: 01/09/09
Received Date: 01/13/09
Extraction Date: 01/15/09
Analysis Date: 30-JAN-2009 02:33
Report Date: 02/02/2009
Matrix: SOIL
% Solids: 94.1

Lab ID: SC0145-10
Client ID: MR08-SS183-09A
SDG: TO9-31
Extracted by: AC
Extraction Method: SW846 3550
Analyst: JCG
Analysis Method: SW846 M8270C
Lab Prep Batch: WG59815
Units: ug/Kgdrywt

CAS#	Compound	Flags	Results	DF	PQL	Adj.PQL	Adj.MDL	
91-20-3	Naphthalene	U	11	1.0	10	11	2.8	
91-57-6	2-Methylnaphthalene	U	11	1.0	10	11	2.3	
86-73-7	Fluorene	U	11	1.0	10	11	3.4	
85-01-8	Phenanthrene		12	1.0	10	11	1.9	
206-44-0	Fluoranthene		38	1.0	10	11	1.9	
129-00-0	Pyrene	J	36	1.0	10	11	2.2	CCH
56-55-3	Benzo(a)anthracene		13	1.0	10	11	2.0	
205-99-2	Benzo(b)fluoranthene		30	1.0	10	11	2.6	
207-08-9	Benzo(k)fluoranthene	J	20	1.0	10	11	3.3	CCH
50-32-8	Benzo(a)pyrene		17	1.0	10	11	3.5	
193-39-5	Indeno(1,2,3-cd)pyrene		11	1.0	10	11	2.0	
53-70-3	Dibenzo(a,h)anthracene	U	11	1.0	10	11	1.9	
191-24-2	Benzo(g,h,i)perylene	J	11	1.0	10	11	2.1	
118-74-1	Hexachlorobenzene	~~U~~ UJ	11	1.0	10	11	1.9	CCH
87-68-3	Hexachlorobutadiene	U	11	1.0	10	11	2.4	
77-47-4	Hexachlorocyclopentadiene	~~U~~ UJ	11	1.0	10	11	1.6	CCH
7297-45-2	2-Methylnaphthalene-D10		76%					
367-12-4	2,4-Dibromophenol		88%					
81103-79-9	Fluorene-d10		84%					
1718-51-1	Pyrene-D10		91%					

LW
4/15/09

KATAHDIN ANALYTICAL SERVICES
Report of Analytical Results

Client: CH2MHill
Project: TO-009 Lejeune
PO No:
Sample Date: 01/09/09
Received Date: 01/13/09
Extraction Date: 01/15/09
Analysis Date: 30-JAN-2009 03:13
Report Date: 02/02/2009
Matrix: SOIL
% Solids: 90.0

Lab ID: SC0145-12
Client ID: MR08-SS205-09A
SDG: T09-31
Extracted by: AC
Extraction Method: SW846 3550
Analyst: JCG
Analysis Method: SW846 M8270C
Lab Prep Batch: WG59815
Units: ug/Kgdrywt

CAS#	Compound	Flags		Results	DF	PQL	Adj.PQL	Adj.MDL	
91-20-3	Naphthalene	U		11	1.0	10	11	2.9	
91-57-6	2-Methylnaphthalene	U		11	1.0	10	11	2.4	
86-73-7	Fluorene	U		11	1.0	10	11	3.6	
85-01-8	Phenanthrene			14	1.0	10	11	2.0	
206-44-0	Fluoranthene			90	1.0	10	11	2.0	
129-00-0	Pyrene		J	100	1.0	10	11	2.3	CCH
56-55-3	Benzo(a)anthracene			34	1.0	10	11	2.1	
205-99-2	Benzo(b)fluoranthene			58	1.0	10	11	2.7	
207-08-9	Benzo(k)fluoranthene		J	38	1.0	10	11	3.4	CCH
50-32-8	Benzo(a)pyrene			25	1.0	10	11	3.7	
193-39-5	Indeno(1,2,3-cd)pyrene			18	1.0	10	11	2.1	
53-70-3	Dibenzo(a,h)anthracene	U		11	1.0	10	11	2.0	
191-24-2	Benzo(g,h,i)perylene			16	1.0	10	11	2.2	
118-74-1	Hexachlorobenzene	~~U~~	UJ	11	1.0	10	11	2.0	CCH
87-68-3	Hexachlorobutadiene	U		11	1.0	10	11	2.6	
77-47-4	Hexachlorocyclopentadiene	~~U~~	UJ	11	1.0	10	11	1.7	CCH
7297-45-2	2-Methylnaphthalene-D10			80%					
367-12-4	2,4-Dibromophenol			93%					
81103-79-9	Fluorene-d10			95%					
1718-51-1	Pyrene-D10			99%					

JCW
4/15/09

KATAHDIN ANALYTICAL SERVICES
Report of Analytical Results

Client: CH2MHill
Project: TO-009 Lejeune
PO No:
Sample Date: 01/09/09
Received Date: 01/13/09
Extraction Date: 01/15/09
Analysis Date: 29-JAN-2009 12:48
Report Date: 02/02/2009
Matrix: SOIL
% Solids: 95.0

Lab ID: SC0145-14
Client ID: MR08-IS205-9-10-09A
SDG: TO9-31
Extracted by: AC
Extraction Method: SW846 3550
Analyst: JLP
Analysis Method: SW846 M8270C
Lab Prep Batch: WG59815
Units: ug/Kgdrywt

CAS#	Compound	Flags	Results	DF	PQL	Adj.PQL	Adj.MDL	
91-20-3	Naphthalene	U	10	1.0	10	10	2.7	
91-57-6	2-Methylnaphthalene	~~U~~ UJ	10	1.0	10	10	2.3	CCH
86-73-7	Fluorene	U	10	1.0	10	10	3.4	
85-01-8	Phenanthrene	U	10	1.0	10	10	1.9	
206-44-0	Fluoranthene	U	10	1.0	10	10	1.9	
129-00-0	Pyrene	U	10	1.0	10	10	2.2	
56-55-3	Benzo(a)anthracene	U	10	1.0	10	10	2.0	
205-99-2	Benzo(b)fluoranthene	U	10	1.0	10	10	2.5	
207-08-9	Benzo(k)fluoranthene	U	10	1.0	10	10	3.3	
50-32-8	Benzo(a)pyrene	U	10	1.0	10	10	3.5	
193-39-5	Indeno(1,2,3-cd)pyrene	U	10	1.0	10	10	2.0	
53-70-3	Dibenzo(a,h)anthracene	U	10	1.0	10	10	1.9	
191-24-2	Benzo(g,h,i)perylene	U	10	1.0	10	10	2.1	
118-74-1	Hexachlorobenzene	U	10	1.0	10	10	1.9	
87-68-3	Hexachlorobutadiene	~~U~~ UJ	10	1.0	10	10	2.4	CCH
77-47-4	Hexachlorocyclopentadiene	U	10	1.0	10	10	1.6	
7297-45-2	2-Methylnaphthalene-D10		64%					
367-12-4	2,4-Dibromophenol		78%					
81103-79-9	Fluorene-d10		83%					
1718-51-1	Pyrene-D10		75%					

fw 4/13/09

KATAHDIN ANALYTICAL SERVICES
Report of Analytical Results

Client: CH2MHill
Project: TO-009 Lejeune
PO No:
Sample Date: 01/09/09
Received Date: 01/13/09
Extraction Date: 01/15/09
Analysis Date: 29-JAN-2009 16:49
Report Date: 02/02/2009
Matrix: SOIL
% Solids: 75.7

Lab ID: SC0145-16
Client ID: MR08-SS203-09A
SDG: TO9-31
Extracted by: AC
Extraction Method: SW846 3550
Analyst: JLP
Analysis Method: SW846 M8270C
Lab Prep Batch: WG59815
Units: ug/Kgdrywt

CAS#	Compound	Flags	Results	DF	PQL	Adj.PQL	Adj.MDL	
91-20-3	Naphthalene	U	13	1.0	10	13	3.4	
91-57-6	2-Methylnaphthalene	~~J~~ UJ	13	1.0	10	13	2.9	CCH
86-73-7	Fluorene	U	13	1.0	10	13	4.2	
85-01-8	Phenanthrene		16	1.0	10	13	2.4	
206-44-0	Fluoranthene		65	1.0	10	13	2.4	
129-00-0	Pyrene		47	1.0	10	13	2.8	
56-55-3	Benzo(a)anthracene		32	1.0	10	13	2.5	
205-99-2	Benzo(b)fluoranthene		75	1.0	10	13	3.2	
207-08-9	Benzo(k)fluoranthene		36	1.0	10	13	4.1	
50-32-8	Benzo(a)pyrene		40	1.0	10	13	4.4	
193-39-5	Indeno(1,2,3-cd)pyrene		33	1.0	10	13	2.5	
53-70-3	Dibenzo(a,h)anthracene	J	12	1.0	10	13	2.4	
191-24-2	Benzo(g,h,i)perylene		32	1.0	10	13	2.6	
118-74-1	Hexachlorobenzene	U	13	1.0	10	13	2.4	
87-68-3	Hexachlorobutadiene	~~J~~ UJ	13	1.0	10	13	3.0	CCH
77-47-4	Hexachlorocyclopentadiene	U	13	1.0	10	13	2.0	
7297-45-2	2-Methylnaphthalene-D10		74%					
367-12-4	2,4-Dibromophenol		93%					
81103-79-9	Fluorene-d10		93%					
1718-51-1	Pyrene-D10		79%					

LW 4/15/09

ENVIRONMENTAL
Data Services, Inc.

SEMIVOLATILE ORGANIC COMPOUNDS

USEPA Region IV - Level IV Review

Site: MCB Camp Lejeune, TO-09 SDG #: TO9-31

Client: CH2M HILL, Inc., Virginia Beach, Virginia Date: April 15, 2009

Laboratory: Katahdin Analytical Services, Scarborough, Maine Reviewer: Nancy Weaver

EDS ID	Client Sample ID	Laboratory Sample ID	Matrix
1	MR08-SS208-09A	SC0128-1	Soil
2	MR08-IS208-6-7-09A	SC0128-3	Soil
3	MR08-SS228-09A	SC0128-5	Soil
4	MR08-IS228-7-8-09A	SC0128-7	Soil
4RE	MR08-IS228-7-8-09ARE	SC0128-7RE	Soil
5	MR08-SS229-09A	SC0128-9	Soil
5RE	MR08-SS229-09ARE	SC0128-9RE	Soil
6	MR08-SS229D-09A	SC0128-11	Soil
7	MR08-IS229-6-7-09A	SC0128-13	Soil
8	MR08-IS229D-6-7-09A	SC0128-15	Soil
9	MR08-SS227-09A	SC0128-17	Soil
10	MR08-IS227-6-7-09A	SC0128-19	Soil
11	MR08-SS209-09A	SC0128-21	Soil
12	MR08-SS209D-09A	SC0128-23	Soil
13	MR08-SS180-09A	SC0145-1	Soil
14	MR08-IS180-6-7-09A	SC0145-3	Soil
15	MR08-SS182-09A	SC0145-5	Soil
15RE	MR08-SS182-09ARE	SC0145-5RE	Soil
16	MR08-IS182-8-9-09A	SC0145-7	Soil
17	MR08-SS183-09A	SC0145-9	Soil
17MS	MR08-SS183-09AMS	SC0145-9MS	Soil
17MSD	MR08-SS183-09AMSD	SC0145-9MSD	Soil
18	MR08-SS205-09A	SC0145-11	Soil
19	MR08-IS205-9-10-09A	SC0145-13	Soil
20	MR08-SS203-09A	SC0145-15	Soil

The USEPA "Contract Laboratory Program National Functional Guidelines for Organic Data Review," October 1999, and professional judgement were used in evaluating the data in this summary report.

Holding Times - All samples were extracted within 14 days for soil samples and analyzed within 40 days for all samples except the following

Sample	Date Sampled	Date Extracted	# of Days	Qualifier
4RE	01/08/09	01/28/09	20	J/UJ
5RE	01/08/09	01/28/09	20	J/UJ
15RE	01/09/09	01/28/09	19	J/UJ

GC/MS Tuning - All of the DFTPP tunes in the initial and continuing calibrations met the percent relative abundance criteria.

Initial Calibration - The initial calibrations exhibited acceptable %RSD and mean RRF values.

Continuing Calibration - The continuing calibrations exhibited acceptable %D and RRF values except the following.

CCAL Date	Compound	%D/RRF	Qualifier	Affected Samples
01/26/09	4-Nitrophenol	26.91%	J/UJ	1-4, 13, 17-20
	4-Nitroaniline	39.56%	J/UJ	1-4, 13, 17-20
	Carbazole	34.77%	J/UJ	1-4, 13, 17-20
02/01/09	Benzaldehyde	29.78%	None	Already qualified due to HT

Surrogates - All samples exhibited acceptable surrogate recoveries except the following.

Sample ID	Surrogate	%R	Qualifier
3	S5-2, 4, 6-Tribromophenol	24%	None for 1 out
4	S1-2-Fluorophenol	19%	J/UJ - Acid compounds
	S2-Phenol-D6	33%	
	S3-Nitrobenzene-D5	19%	None for 1 out
5	S1-2-Fluorophenol	23%	J/UJ - Acid compounds
	S2-Phenol-D6	38%	
	S3-Nitrobenzene-D5	28%	None for 1 out
15	S1-2-Fluorophenol	18%	J/R - Acid compounds
	S5-2, 4, 6-Tribromophenol	3%	

MS/MSD - The MS/MSD sample exhibited acceptable %R and RPD values.

Laboratory Control Sample - The LCS samples exhibited acceptable %R values except the following.

LCS ID	Compound	%R	Qualifier	Affected Samples
WG59785-LCS	Benzaldehyde	142%	None	All ND
WG59814-2	Benzaldehyde	135%	None	All ND

Internal Standard (IS) Area Performance - All internal standards met response and retention time (RT) criteria.

Method Blank - The method blanks were free of contamination.

Field, Equipment Blank - Field QC results are summarized below.

Blank ID	Compound	Conc. ug/L	Action Level ug/kg	Qualifier	Affected Samples
MR08-FB01011009	None - ND	-	-	-	-
MR08-EB1010809-SS	None - ND	-	-	-	-
MR08-EB01010909-SS	None - ND	-	-	-	-
MR08-EB01010909-IS	None - ND	-	-	-	-

Field Duplicates - Field duplicate results are summarized below.

Compound	MR08-SS209-09A ug/kg	MR08-SS209D-09A ug/kg	RPD	Qualifier
None	ND	ND	-	-

Compound	MR08-SS229-09A ug/kg	MR08-SS229D-09A ug/kg	RPD	Qualifier
Bis(2-ethylhexyl)phthalate	170	160	6%	None

Compound	MR08-IS229-6-7-09A ug/kg	MR08-IS229D-6-7-09A ug/kg	RPD	Qualifier
None	ND	ND	-	-

Tentatively Identified Compounds (TICs) - TICs were not reported.

Compound Quantitation - Several samples were re-extracted outside of holding times due to surrogate percent recovery deficiencies. Refer to Form Is for which to use for reporting purposes.

KATAHDIN ANALYTICAL SERVICES
Report of Analytical Results

Client: CH2MHill
Project: TO-009 Lejeune
PO No:
Sample Date: 01/08/09
Received Date: 01/10/09
Extraction Date: 01/14/09
Analysis Date: 26-JAN-2009 14:33
Report Date: 02/02/2009
Matrix: SOIL
% Solids: 90.7

Lab ID: SC0128-1
Client ID: MR08-SS208-09A
SDG: TO9-31
Extracted by: AC
Extraction Method: SW846 3550
Analyst: JLP
Analysis Method: SW846 8270C
Lab Prep Batch: WG59785
Units: ug/Kgdrywt

CAS#	Compound	Flags	Results	DF	PQL	Adj.PQL	Adj.MDL	
100-52-7	Benzaldehyde	U	550	1.0	500	550	130	
108-95-2	Phenol	U	550	1.0	500	550	170	
111-44-4	Bis(2-Chloroethyl)ether	U	360	1.0	330	360	89	
95-57-8	2-Chlorophenol	U	550	1.0	500	550	180	
95-48-7	2-Methylphenol	U	660	1.0	600	660	220	
108-60-1	2,2'-Oxybis(1-chloropropane)	U	360	1.0	330	360	98	
98-86-2	Acetophenone	U	660	1.0	600	660	200	
621-64-7	N-Nitroso-di-n-propylamine	U	360	1.0	330	360	92	
65794-96-9	3&4-Methylphenol	U	660	1.0	600	660	210	
67-72-1	Hexachloroethane	U	360	1.0	330	360	100	
98-95-3	Nitrobenzene	U	360	1.0	330	360	100	
78-59-1	Isophorone	U	360	1.0	330	360	83	
88-75-5	2-Nitrophenol	U	660	1.0	600	660	180	
105-67-9	2,4-Dimethylphenol	U	550	1.0	500	550	180	
111-91-1	Bis(2-Chloroethoxy)methane	U	360	1.0	330	360	100	
120-83-2	2,4-Dichlorophenol	U	550	1.0	500	550	160	
106-47-8	4-Chloroaniline	U	550	1.0	500	550	130	
105-60-2	Caprolactam	U	550	1.0	500	550	160	
59-50-7	4-Chloro-3-Methylphenol	U	550	1.0	500	550	180	
88-06-2	2,4,6-Trichlorophenol	U	550	1.0	500	550	170	
95-95-4	2,4,5-Trichlorophenol	U	550	1.0	500	550	170	
91-58-7	2-Chloronaphthalene	U	360	1.0	330	360	96	
92-52-4	1,1'-Biphenyl	U	360	1.0	330	360	80	
88-74-4	2-Nitroaniline	U	550	1.0	500	550	83	
131-11-3	Dimethyl Phthalate	U	360	1.0	330	360	86	
606-20-2	2,6-Dinitrotoluene	U	360	1.0	330	360	87	
208-96-8	Acenaphthylene	U	360	1.0	330	360	77	
99-09-2	3-Nitroaniline	U	550	1.0	500	550	100	
83-32-9	Acenaphthene	U	360	1.0	330	360	72	
51-28-5	2,4-Dinitrophenol	U	1300	1.0	1200	1300	420	
132-64-9	Dibenzofuran	U	360	1.0	330	360	87	
100-02-7	4-Nitrophenol	~~U~~ UJ	1300	1.0	1200	1300	340	CCH
121-14-2	2,4-Dinitrotoluene	U	360	1.0	330	360	94	
84-66-2	Diethylphthalate	U	360	1.0	330	360	88	
7005-72-3	4-Chlorophenyl-phenylether	U	360	1.0	330	360	86	
100-01-6	4-Nitroaniline	~~U~~ UJ	550	1.0	500	550	150	CCH
534-52-1	4,6-Dinitro-2-Methylphenol	U	1300	1.0	1200	1300	370	
86-30-6	N-Nitrosodiphenylamine	U	730	1.0	660	730	240	
101-55-3	4-Bromophenyl-phenylether	U	360	1.0	330	360	94	
1912-24-9	Atrazine	U	360	1.0	330	360	100	
87-86-5	Pentachlorophenol	U	900	1.0	820	900	260	
120-12-7	Anthracene	U	360	1.0	330	360	93	
86-74-8	Carbazole	~~U~~ UJ	550	1.0	500	550	120	CCH

MW 4/15/09

KATAHDIN ANALYTICAL SERVICES
Report of Analytical Results

Client: CH2MHill
Project: TO-009 Lejeune
PO No:
Sample Date: 01/08/09
Received Date: 01/10/09
Extraction Date: 01/14/09
Analysis Date: 26-JAN-2009 14:33
Report Date: 02/02/2009
Matrix: SOIL
% Solids: 90.7

Lab ID: SC0128-1
Client ID: MR08-SS208-09A
SDG: TO9-31
Extracted by: AC
Extraction Method: SW846 3550
Analyst: JLP
Analysis Method: SW846 8270C
Lab Prep Batch: WG59785
Units: ug/Kgdrywt

CAS#	Compound	Flags	Results	DF	PQL	Adj.PQL	Adj.MDL
84-74-2	Di-n-butylphthalate	U	360	1.0	330	360	110
85-68-7	Butylbenzylphthalate	U	360	1.0	330	360	100
91-94-1	3,3'-Dichlorobenzidine	U	550	1.0	500	550	120
218-01-9	Chrysene	U	360	1.0	330	360	100
117-81-7	bis(2-Ethylhexyl)phthalate	U	360	1.0	330	360	110
117-84-0	Di-n-octylphthalate	U	360	1.0	330	360	230
367-12-4	2-Fluorophenol		53%				
13127-88-3	Phenol-D6		63%				
4165-60-0	Nitrobenzene-D5		61%				
321-60-8	2-Fluorobiphenyl		72%				
118-79-6	2,4,6-Tribromophenol		57%				
1718-51-0	Terphenyl-D14		98%				

lew
4/15/09

KATAHDIN ANALYTICAL SERVICES
Report of Analytical Results

2

Client: CH2MHill
Project: TO-009 Lejeune
PO No:
Sample Date: 01/08/09
Received Date: 01/10/09
Extraction Date: 01/14/09
Analysis Date: 26-JAN-2009 15:15
Report Date: 02/02/2009
Matrix: SOIL
% Solids: 89.0

Lab ID: SC0128-3
Client ID: MR08-IS208-6-7-09A
SDG: TO9-31
Extracted by: AC
Extraction Method: SW846 3550
Analyst: JLP
Analysis Method: SW846 8270C
Lab Prep Batch: WG59785
Units: ug/Kgdrywt

CAS#	Compound	Flags	Results	DF	PQL	Adj.PQL	Adj.MDL	
100-52-7	Benzaldehyde	U	560	1.0	500	560	130	
108-95-2	Phenol	U	560	1.0	500	560	180	
111-44-4	Bis(2-Chloroethyl)ether	U	370	1.0	330	370	91	
95-57-8	2-Chlorophenol	U	560	1.0	500	560	180	
95-48-7	2-Methylphenol	U	670	1.0	600	670	220	
108-60-1	2,2'-Oxybis(1-chloropropane)	U	370	1.0	330	370	100	
98-86-2	Acetophenone	U	670	1.0	600	670	200	
621-64-7	N-Nitroso-di-n-propylamine	U	370	1.0	330	370	93	
65794-96-9	3&4-Methylphenol	U	670	1.0	600	670	210	
67-72-1	Hexachloroethane	U	370	1.0	330	370	110	
98-95-3	Nitrobenzene	U	370	1.0	330	370	100	
78-59-1	Isophorone	U	370	1.0	330	370	84	
88-75-5	2-Nitrophenol	U	670	1.0	600	670	190	
105-67-9	2,4-Dimethylphenol	U	560	1.0	500	560	180	
111-91-1	Bis(2-Chloroethoxy)methane	U	370	1.0	330	370	110	
120-83-2	2,4-Dichlorophenol	U	560	1.0	500	560	170	
106-47-8	4-Chloroaniline	U	560	1.0	500	560	130	
105-60-2	Caprolactam	U	560	1.0	500	560	160	
59-50-7	4-Chloro-3-Methylphenol	U	560	1.0	500	560	190	
88-06-2	2,4,6-Trichlorophenol	U	560	1.0	500	560	170	
95-95-4	2,4,5-Trichlorophenol	U	560	1.0	500	560	170	
91-58-7	2-Chloronaphthalene	U	370	1.0	330	370	98	
92-52-4	1,1'-Biphenyl	U	370	1.0	330	370	82	
88-74-4	2-Nitroaniline	U	560	1.0	500	560	84	
131-11-3	Dimethyl Phthalate	U	370	1.0	330	370	88	
606-20-2	2,6-Dinitrotoluene	U	370	1.0	330	370	89	
208-96-8	Acenaphthylene	U	370	1.0	330	370	79	
99-09-2	3-Nitroaniline	U	560	1.0	500	560	100	
83-32-9	Acenaphthene	U	370	1.0	330	370	73	
51-28-5	2,4-Dinitrophenol	U	1300	1.0	1200	1300	420	
132-64-9	Dibenzofuran	U	370	1.0	330	370	89	
100-02-7	4-Nitrophenol	~~U~~ UJ	1300	1.0	1200	1300	350	CCH
121-14-2	2,4-Dinitrotoluene	U	370	1.0	330	370	96	
84-66-2	Diethylphthalate	U	370	1.0	330	370	90	
7005-72-3	4-Chlorophenyl-phenylether	U	370	1.0	330	370	88	
100-01-6	4-Nitroaniline	~~U~~ UJ	560	1.0	500	560	150	CCH
534-52-1	4,6-Dinitro-2-Methylphenol	U	1300	1.0	1200	1300	380	
86-30-6	N-Nitrosodiphenylamine	U	740	1.0	660	740	250	
101-55-3	4-Bromophenyl-phenylether	U	370	1.0	330	370	96	
1912-24-9	Atrazine	U	370	1.0	330	370	100	
87-86-5	Pentachlorophenol	U	920	1.0	820	920	270	
120-12-7	Anthracene	U	370	1.0	330	370	94	
86-74-8	Carbazole	~~U~~ UJ	560	1.0	500	560	120	CCH

MW
4/15/09

KATAHDIN ANALYTICAL SERVICES
Report of Analytical Results

2

Client: CH2MHill
Project: TO-009 Lejeune
PO No:
Sample Date: 01/08/09
Received Date: 01/10/09
Extraction Date: 01/14/09
Analysis Date: 26-JAN-2009 15:15
Report Date: 02/02/2009
Matrix: SOIL
% Solids: 89.0

Lab ID: SC0128-3
Client ID: MR08-IS208-6-7-09A
SDG: TO9-31
Extracted by: AC
Extraction Method: SW846 3550
Analyst: JLP
Analysis Method: SW846 8270C
Lab Prep Batch: WG59785
Units: ug/Kgdrywt

CAS#	Compound	Flags	Results	DF	PQL	Adj.PQL	Adj.MDL
84-74-2	Di-n-butylphthalate	U	370	1.0	330	370	110
85-68-7	Butylbenzylphthalate	U	370	1.0	330	370	100
91-94-1	3,3'-Dichlorobenzidine	U	560	1.0	500	560	130
218-01-9	Chrysene	U	370	1.0	330	370	110
117-81-7	bis(2-Ethylhexyl)phthalate	U	370	1.0	330	370	110
117-84-0	Di-n-octylphthalate	U	370	1.0	330	370	240
367-12-4	2-Fluorophenol		51%				
13127-88-3	Phenol-D6		66%				
4165-60-0	Nitrobenzene-D5		62%				
321-60-8	2-Fluorobiphenyl		66%				
118-79-6	2,4,6-Tribromophenol		37%				
1718-51-0	Terphenyl-D14		85%				

fcw
4/15/09

3

KATAHDIN ANALYTICAL SERVICES
Report of Analytical Results

Client: CH2MHill
Project: TO-009 Lejeune
PO No:
Sample Date: 01/08/09
Received Date: 01/10/09
Extraction Date: 01/14/09
Analysis Date: 26-JAN-2009 16:40
Report Date: 02/02/2009
Matrix: SOIL
% Solids: 92.4

Lab ID: SC0128-5
Client ID: MR08-SS228-09A
SDG: TO9-31
Extracted by: AC
Extraction Method: SW846 3550
Analyst: JLP
Analysis Method: SW846 8270C
Lab Prep Batch: WG59785
Units: ug/Kgdrywt

CAS#	Compound	Flags	Results	DF	PQL	Adj.PQL	Adj.MDL	
100-52-7	Benzaldehyde	U	540	1.0	500	540	130	
108-95-2	Phenol	U	540	1.0	500	540	170	
111-44-4	Bis(2-Chloroethyl)ether	U	360	1.0	330	360	88	
95-57-8	2-Chlorophenol	U	540	1.0	500	540	180	
95-48-7	2-Methylphenol	U	650	1.0	600	650	220	
108-60-1	2,2'-Oxybis(1-chloropropane)	U	360	1.0	330	360	96	
98-86-2	Acetophenone	U	650	1.0	600	650	190	
621-64-7	N-Nitroso-di-n-propylamine	U	360	1.0	330	360	90	
65794-96-9	3&4-Methylphenol	U	650	1.0	600	650	200	
67-72-1	Hexachloroethane	U	360	1.0	330	360	100	
98-95-3	Nitrobenzene	U	360	1.0	330	360	98	
78-59-1	Isophorone	U	360	1.0	330	360	81	
88-75-5	2-Nitrophenol	U	650	1.0	600	650	180	
105-67-9	2,4-Dimethylphenol	U	540	1.0	500	540	180	
111-91-1	Bis(2-Chloroethoxy)methane	U	360	1.0	330	360	100	
120-83-2	2,4-Dichlorophenol	U	540	1.0	500	540	160	
106-47-8	4-Chloroaniline	U	540	1.0	500	540	130	
105-60-2	Caprolactam	U	540	1.0	500	540	160	
59-50-7	4-Chloro-3-Methylphenol	U	540	1.0	500	540	180	
88-06-2	2,4,6-Trichlorophenol	U	540	1.0	500	540	170	
95-95-4	2,4,5-Trichlorophenol	U	540	1.0	500	540	170	
91-58-7	2-Chloronaphthalene	U	360	1.0	330	360	94	
92-52-4	1,1'-Biphenyl	U	360	1.0	330	360	79	
88-74-4	2-Nitroaniline	U	540	1.0	500	540	81	
131-11-3	Dimethyl Phthalate	U	360	1.0	330	360	84	
606-20-2	2,6-Dinitrotoluene	U	360	1.0	330	360	85	
208-96-8	Acenaphthylene	U	360	1.0	330	360	76	
99-09-2	3-Nitroaniline	U	540	1.0	500	540	100	
83-32-9	Acenaphthene	U	360	1.0	330	360	70	
51-28-5	2,4-Dinitrophenol	U	1300	1.0	1200	1300	410	
132-64-9	Dibenzofuran	U	360	1.0	330	360	85	
100-02-7	4-Nitrophenol	~~U~~ UJ	1300	1.0	1200	1300	330	CCH
121-14-2	2,4-Dinitrotoluene	U	360	1.0	330	360	92	
84-66-2	Diethylphthalate	U	360	1.0	330	360	86	
7005-72-3	4-Chlorophenyl-phenylether	U	360	1.0	330	360	84	
100-01-6	4-Nitroaniline	~~U~~ UJ	540	1.0	500	540	140	CCH
534-52-1	4,6-Dinitro-2-Methylphenol	U	1300	1.0	1200	1300	360	
86-30-6	N-Nitrosodiphenylamine	U	710	1.0	660	710	240	
101-55-3	4-Bromophenyl-phenylether	U	360	1.0	330	360	92	
1912-24-9	Atrazine	U	360	1.0	330	360	98	
87-86-5	Pentachlorophenol	U	890	1.0	820	890	260	
120-12-7	Anthracene	U	360	1.0	330	360	91	
86-74-8	Carbazole	~~U~~ UJ	540	1.0	500	540	120	CCH

MW 4/15/09

KATAHDIN ANALYTICAL SERVICES
Report of Analytical Results

3

Client: CH2MHill
Project: TO-009 Lejeune
PO No:
Sample Date: 01/08/09
Received Date: 01/10/09
Extraction Date: 01/14/09
Analysis Date: 26-JAN-2009 16:40
Report Date: 02/02/2009
Matrix: SOIL
% Solids: 92.4

Lab ID: SC0128-5
Client ID: MR08-SS228-09A
SDG: TO9-31
Extracted by: AC
Extraction Method: SW846 3550
Analyst: JLP
Analysis Method: SW846 8270C
Lab Prep Batch: WG59785
Units: ug/Kgdrywt

CAS#	Compound	Flags	Results	DF	PQL	Adj.PQL	Adj.MDL
84-74-2	Di-n-butylphthalate	U	360	1.0	330	360	110
85-68-7	Butylbenzylphthalate	U	360	1.0	330	360	100
91-94-1	3,3'-Dichlorobenzidine	U	540	1.0	500	540	120
218-01-9	Chrysene	U	360	1.0	330	360	100
117-81-7	bis(2-Ethylhexyl)phthalate	U	360	1.0	330	360	110
117-84-0	Di-n-octylphthalate	U	360	1.0	330	360	230
367-12-4	2-Fluorophenol		38%				
13127-88-3	Phenol-D6		44%				
4165-60-0	Nitrobenzene-D5		51%				
321-60-8	2-Fluorobiphenyl		53%				
118-79-6	2,4,6-Tribromophenol		* 24%				
1718-51-0	Terphenyl-D14		76%				

fw
4/15/09

4

KATAHDIN ANALYTICAL SERVICES
Report of Analytical Results

Client: CH2MHill
Project: TO-009 Lejeune
PO No:
Sample Date: 01/08/09
Received Date: 01/10/09
Extraction Date: 01/14/09
Analysis Date: 26-JAN-2009 15:58
Report Date: 02/02/2009
Matrix: SOIL
% Solids: 91.5

Lab ID: SC0128-7
Client ID: MR08-IS228-7-8-09A
SDG: TO9-31
Extracted by: AC
Extraction Method: SW846 3550
Analyst: JLP
Analysis Method: SW846 8270C
Lab Prep Batch: WG59785
Units: ug/Kgdrywt

CAS#	Compound	Flags	Results	DF	PQL	Adj.PQL	Adj.MDL	
100-52-7	Benzaldehyde	U	550	1.0	500	550	130	
108-95-2	Phenol	~~U~~ UJ	550	1.0	500	550	170	SSL
111-44-4	Bis(2-Chloroethyl)ether	U	360	1.0	330	360	88	
95-57-8	2-Chlorophenol	~~U~~ UJ	550	1.0	500	550	180	SSL
95-48-7	2-Methylphenol	~~U~~ UJ	660	1.0	600	660	220	SSL
108-60-1	2,2'-Oxybis(1-chloropropane)	U	360	1.0	330	360	97	
98-86-2	Acetophenone	U	660	1.0	600	660	190	
621-64-7	N-Nitroso-di-n-propylamine	U	360	1.0	330	360	91	
65794-96-9	3&4-Methylphenol	~~U~~ UJ	660	1.0	600	660	200	SSL
67-72-1	Hexachloroethane	U	360	1.0	330	360	100	
98-95-3	Nitrobenzene	U	360	1.0	330	360	99	
78-59-1	Isophorone	U	360	1.0	330	360	82	
88-75-5	2-Nitrophenol	~~U~~ UJ	660	1.0	600	660	180	SSL
105-67-9	2,4-Dimethylphenol	~~U~~ UJ	550	1.0	500	550	180	SSL
111-91-1	Bis(2-Chloroethoxy)methane	U	360	1.0	330	360	100	
120-83-2	2,4-Dichlorophenol	~~U~~ UJ	550	1.0	500	550	160	SSL
106-47-8	4-Chloroaniline	U	550	1.0	500	550	130	
105-60-2	Caprolactam	U	550	1.0	500	550	160	
59-50-7	4-Chloro-3-Methylphenol	~~U~~ UJ	550	1.0	500	550	180	SSL
88-06-2	2,4,6-Trichlorophenol	~~U~~	550	1.0	500	550	170	
95-95-4	2,4,5-Trichlorophenol	~~U~~	550	1.0	500	550	170	
91-58-7	2-Chloronaphthalene	U	360	1.0	330	360	95	
92-52-4	1,1'-Biphenyl	U	360	1.0	330	360	80	
88-74-4	2-Nitroaniline	U	550	1.0	500	550	82	
131-11-3	Dimethyl Phthalate	U	360	1.0	330	360	85	
606-20-2	2,6-Dinitrotoluene	U	360	1.0	330	360	86	
208-96-8	Acenaphthylene	U	360	1.0	330	360	76	
99-09-2	3-Nitroaniline	U	550	1.0	500	550	100	
83-32-9	Acenaphthene	U	360	1.0	330	360	71	
51-28-5	2,4-Dinitrophenol	~~U~~ UJ	1300	1.0	1200	1300	410	SSL
132-64-9	Dibenzofuran	U	360	1.0	330	360	86	
100-02-7	4-Nitrophenol	~~U~~ UJ	1300	1.0	1200	1300	340	SSL CCH
121-14-2	2,4-Dinitrotoluene	U	360	1.0	330	360	93	
84-66-2	Diethylphthalate	U	360	1.0	330	360	87	
7005-72-3	4-Chlorophenyl-phenylether	U	360	1.0	330	360	85	
100-01-6	4-Nitroaniline	~~U~~ UJ	550	1.0	500	550	150	CCH
534-52-1	4,6-Dinitro-2-Methylphenol	~~U~~ UJ	1300	1.0	1200	1300	370	SSL
86-30-6	N-Nitrosodiphenylamine	U	720	1.0	660	720	240	
101-55-3	4-Bromophenyl-phenylether	U	360	1.0	330	360	93	
1912-24-9	Atrazine	U	360	1.0	330	360	99	
87-86-5	Pentachlorophenol	~~U~~ UJ	900	1.0	820	900	260	SSL
120-12-7	Anthracene	U	360	1.0	330	360	92	
86-74-8	Carbazole	~~U~~ UJ	550	1.0	500	550	120	CCH

MW 4/15/09

KATAHDIN ANALYTICAL SERVICES
Report of Analytical Results

Client: CH2MHill
Project: TO-009 Lejeune
PO No:
Sample Date: 01/08/09
Received Date: 01/10/09
Extraction Date: 01/14/09
Analysis Date: 26-JAN-2009 15:58
Report Date: 02/02/2009
Matrix: SOIL
% Solids: 91.5

Lab ID: SC0128-7
Client ID: MR08-IS228-7-8-09A
SDG: TO9-31
Extracted by: AC
Extraction Method: SW846 3550
Analyst: JLP
Analysis Method: SW846 8270C
Lab Prep Batch: WG59785
Units: ug/Kgdrywt

CAS#	Compound	Flags	Results	DF	PQL	Adj.PQL	Adj.MDL
84-74-2	Di-n-butylphthalate	U	360	1.0	330	360	110
85-68-7	Butylbenzylphthalate	U	360	1.0	330	360	100
91-94-1	3,3'-Dichlorobenzidine	U	550	1.0	500	550	120
218-01-9	Chrysene	U	360	1.0	330	360	100
117-81-7	bis(2-Ethylhexyl)phthalate	U	360	1.0	330	360	110
117-84-0	Di-n-octylphthalate	U	360	1.0	330	360	230
367-12-4	2-Fluorophenol		* 19%				
13127-88-3	Phenol-D6		* 33%				
4165-60-0	Nitrobenzene-D5		* 19%				
321-60-8	2-Fluorobiphenyl		51%				
118-79-6	2,4,6-Tribromophenol		59%				
1718-51-0	Terphenyl-D14		88%				

Leo 4/15/09

4RE

KATAHDIN ANALYTICAL SERVICES
Report of Analytical Results

Client: CH2MHill
Project: TO-009 Lejeune
PO No:
Sample Date: 01/08/09
Received Date: 01/10/09
Extraction Date: 01/28/09
Analysis Date: 01-FEB-2009 21:47
Report Date: 02/02/2009
Matrix: SOIL
% Solids: 91.5

Lab ID: SC0128-7RE
Client ID: MR08-IS228-7-8-09A
SDG: TO9-31
Extracted by: AC
Extraction Method: SW846 3550
Analyst: JLP
Analysis Method: SW846 8270C
Lab Prep Batch: WG60254
Units: ug/Kgdrywt

Use orig, NAE

CAS#	Compound	Flags	Results	DF	PQL	Adj.PQL	Adj.MDL
100-52-7	Benzaldehyde	U UJ	550	1.0	500	550	130 HT
108-95-2	Phenol	U	550	1.0	500	550	170
111-44-4	Bis(2-Chloroethyl)ether	U	360	1.0	330	360	88
95-57-8	2-Chlorophenol	U	550	1.0	500	550	180
95-48-7	2-Methylphenol	U	660	1.0	600	660	220
108-60-1	2,2'-Oxybis(1-chloropropane)	U	360	1.0	330	360	97
98-86-2	Acetophenone	U	660	1.0	600	660	190
621-64-7	N-Nitroso-di-n-propylamine	U	360	1.0	330	360	91
65794-96-9	3&4-Methylphenol	U	660	1.0	600	660	200
67-72-1	Hexachloroethane	U	360	1.0	330	360	100
98-95-3	Nitrobenzene	U	360	1.0	330	360	99
78-59-1	Isophorone	U	360	1.0	330	360	82
88-75-5	2-Nitrophenol	U	660	1.0	600	660	180
105-67-9	2,4-Dimethylphenol	U	550	1.0	500	550	180
111-91-1	Bis(2-Chloroethoxy)methane	U	360	1.0	330	360	100
120-83-2	2,4-Dichlorophenol	U	550	1.0	500	550	160
106-47-8	4-Chloroaniline	U	550	1.0	500	550	130
105-60-2	Caprolactam	U	550	1.0	500	550	160
59-50-7	4-Chloro-3-Methylphenol	U	550	1.0	500	550	180
88-06-2	2,4,6-Trichlorophenol	U	550	1.0	500	550	170
95-95-4	2,4,5-Trichlorophenol	U	550	1.0	500	550	170
91-58-7	2-Chloronaphthalene	U	360	1.0	330	360	95
92-52-4	1,1'-Biphenyl	U	360	1.0	330	360	80
88-74-4	2-Nitroaniline	U	550	1.0	500	550	82
131-11-3	Dimethyl Phthalate	U	360	1.0	330	360	85
606-20-2	2,6-Dinitrotoluene	U	360	1.0	330	360	86
208-96-8	Acenaphthylene	U	360	1.0	330	360	76
99-09-2	3-Nitroaniline	U	550	1.0	500	550	100
83-32-9	Acenaphthene	U	360	1.0	330	360	71
51-28-5	2,4-Dinitrophenol	U	1300	1.0	1200	1300	410
132-64-9	Dibenzofuran	U	360	1.0	330	360	86
100-02-7	4-Nitrophenol	U	1300	1.0	1200	1300	340
121-14-2	2,4-Dinitrotoluene	U	360	1.0	330	360	93
84-66-2	Diethylphthalate	U	360	1.0	330	360	87
7005-72-3	4-Chlorophenyl-phenylether	U	360	1.0	330	360	85
100-01-6	4-Nitroaniline	U	550	1.0	500	550	150
534-52-1	4,6-Dinitro-2-Methylphenol	U	1300	1.0	1200	1300	370
86-30-6	N-Nitrosodiphenylamine	U	720	1.0	660	720	240
101-55-3	4-Bromophenyl-phenylether	U	360	1.0	330	360	93
1912-24-9	Atrazine	U	360	1.0	330	360	99
87-86-5	Pentachlorophenol	U	900	1.0	820	900	260
120-12-7	Anthracene	U	360	1.0	330	360	92
86-74-8	Carbazole	U	550	1.0	500	550	120

RRE

lw 4/15/09

KATAHDIN ANALYTICAL SERVICES
Report of Analytical Results

4RE

Client: CH2MHill
Project: TO-009 Lejeune
PO No:
Sample Date: 01/08/09
Received Date: 01/10/09
Extraction Date: 01/28/09
Analysis Date: 01-FEB-2009 21:47
Report Date: 02/02/2009
Matrix: SOIL
% Solids: 91.5

Lab ID: SC0128-7RE
Client ID: MR08-IS228-7-8-09A
SDG: TO9-31
Extracted by: AC
Extraction Method: SW846 3550
Analyst: JLP
Analysis Method: SW846 8270C
Lab Prep Batch: WG60254
Units: ug/Kgdrywt

Use original

CAS#	Compound	Flags	Results	DF	PQL	Adj.PQL	Adj.MDL
84-74-2	Di-n-butylphthalate	~~U~~ UJ	360	1.0	330	360	110
85-68-7	Butylbenzylphthalate	~~U~~	360	1.0	330	360	100
91-94-1	3,3'-Dichlorobenzidine	~~U~~	550	1.0	500	550	120
218-01-9	Chrysene	~~U~~	360	1.0	330	360	100
117-81-7	bis(2-Ethylhexyl)phthalate	~~U~~	360	1.0	330	360	110
117-84-0	Di-n-octylphthalate	~~U~~	360	1.0	330	360	230
367-12-4	2-Fluorophenol		70%				
13127-88-3	Phenol-D6		77%				
4165-60-0	Nitrobenzene-D5		69%				
321-60-8	2-Fluorobiphenyl		71%				
118-79-6	2,4,6-Tribromophenol		82%				
1718-51-0	Terphenyl-D14		79%				

HT

Page 02 of 02 U5222.D

RRE

lew 4/15/09

5

KATAHDIN ANALYTICAL SERVICES
Report of Analytical Results

Client: CH2MHill
Project: TO-009 Lejeune
PO No:
Sample Date: 01/08/09
Received Date: 01/10/09
Extraction Date: 01/14/09
Analysis Date: 26-JAN-2009 21:35
Report Date: 02/02/2009
Matrix: SOIL
% Solids: 92.4

Lab ID: SC0128-9
Client ID: MR08-SS229-09A
SDG: TO9-31
Extracted by: AC
Extraction Method: SW846 3550
Analyst: JCG
Analysis Method: SW846 8270C
Lab Prep Batch: WG59785
Units: ug/Kgdrywt

CAS#	Compound	Flags	Results	DF	PQL	Adj.PQL	Adj.MDL	
100-52-7	Benzaldehyde	U	540	1.0	500	540	130	
108-95-2	Phenol	~~U~~ UJ	540	1.0	500	540	170	SSL
111-44-4	Bis(2-Chloroethyl)ether	U	360	1.0	330	360	88	
95-57-8	2-Chlorophenol	~~U~~ UJ	540	1.0	500	540	180	SSL
95-48-7	2-Methylphenol	~~U~~ UJ	650	1.0	600	650	220	SSL
108-60-1	2,2'-Oxybis(1-chloropropane)	U	360	1.0	330	360	96	
98-86-2	Acetophenone	U	650	1.0	600	650	190	
621-64-7	N-Nitroso-di-n-propylamine	U	360	1.0	330	360	90	
65794-96-9	3&4-Methylphenol	~~U~~ UJ	650	1.0	600	650	200	SSL
67-72-1	Hexachloroethane	U	360	1.0	330	360	100	
98-95-3	Nitrobenzene	U	360	1.0	330	360	98	
78-59-1	Isophorone	U	360	1.0	330	360	81	
88-75-5	2-Nitrophenol	~~U~~ UJ	650	1.0	600	650	180	SSL
105-67-9	2,4-Dimethylphenol	~~U~~ UJ	540	1.0	500	540	180	SSL
111-91-1	Bis(2-Chloroethoxy)methane	U	360	1.0	330	360	100	
120-83-2	2,4-Dichlorophenol	~~U~~ UJ	540	1.0	500	540	160	SSL
106-47-8	4-Chloroaniline	U	540	1.0	500	540	130	
105-60-2	Caprolactam	U	540	1.0	500	540	160	
59-50-7	4-Chloro-3-Methylphenol	~~U~~ UJ	540	1.0	500	540	180	SSL
88-06-2	2,4,6-Trichlorophenol	U	540	1.0	500	540	170	↓
95-95-4	2,4,5-Trichlorophenol	U ↓	540	1.0	500	540	170	↓
91-58-7	2-Chloronaphthalene	U	360	1.0	330	360	94	
92-52-4	1,1'-Biphenyl	U	360	1.0	330	360	79	
88-74-4	2-Nitroaniline	U	540	1.0	500	540	81	
131-11-3	Dimethyl Phthalate	U	360	1.0	330	360	84	
606-20-2	2,6-Dinitrotoluene	U	360	1.0	330	360	86	
208-96-8	Acenaphthylene	U	360	1.0	330	360	76	
99-09-2	3-Nitroaniline	U	540	1.0	500	540	100	
83-32-9	Acenaphthene	U	360	1.0	330	360	70	
51-28-5	2,4-Dinitrophenol	~~U~~ UJ	1300	1.0	1200	1300	410	SSL
132-64-9	Dibenzofuran	U	360	1.0	330	360	86	
100-02-7	4-Nitrophenol	U	1300	1.0	1200	1300	330	
121-14-2	2,4-Dinitrotoluene	U	360	1.0	330	360	92	
84-66-2	Diethylphthalate	U	360	1.0	330	360	87	
7005-72-3	4-Chlorophenyl-phenylether	U	360	1.0	330	360	84	
100-01-6	4-Nitroaniline	U	540	1.0	500	540	140	
534-52-1	4,6-Dinitro-2-Methylphenol	~~U~~ UJ	1300	1.0	1200	1300	360	SSL
86-30-6	N-Nitrosodiphenylamine	U	710	1.0	660	710	240	
101-55-3	4-Bromophenyl-phenylether	U	360	1.0	330	360	92	
1912-24-9	Atrazine	U	360	1.0	330	360	98	
87-86-5	Pentachlorophenol	~~U~~ UJ	890	1.0	820	890	260	SSL
120-12-7	Anthracene	U	360	1.0	330	360	91	
86-74-8	Carbazole	U	540	1.0	500	540	120	

lew 4/15/09

KATAHDIN ANALYTICAL SERVICES
Report of Analytical Results

Client: CH2MHill
Project: TO-009 Lejeune
PO No:
Sample Date: 01/08/09
Received Date: 01/10/09
Extraction Date: 01/14/09
Analysis Date: 26-JAN-2009 21:35
Report Date: 02/02/2009
Matrix: SOIL
% Solids: 92.4

Lab ID: SC0128-9
Client ID: MR08-SS229-09A
SDG: TO9-31
Extracted by: AC
Extraction Method: SW846 3550
Analyst: JCG
Analysis Method: SW846 8270C
Lab Prep Batch: WG59785
Units: ug/Kgdrywt

CAS#	Compound	Flags	Results	DF	PQL	Adj.PQL	Adj.MDL
84-74-2	Di-n-butylphthalate	U	360	1.0	330	360	110
85-68-7	Butylbenzylphthalate	U	360	1.0	330	360	100
91-94-1	3,3'-Dichlorobenzidine	U	540	1.0	500	540	120
218-01-9	Chrysene	U	360	1.0	330	360	100
117-81-7	bis(2-Ethylhexyl)phthalate	J	170	1.0	330	360	110
117-84-0	Di-n-octylphthalate	U	360	1.0	330	360	230
367-12-4	2-Fluorophenol		* 23%				
13127-88-3	Phenol-D6		* 38%				
4165-60-0	Nitrobenzene-D5		* 28%				
321-60-8	2-Fluorobiphenyl		57%				
118-79-6	2,4,6-Tribromophenol		37%				
1718-51-0	Terphenyl-D14		89%				

JLW
4/15/09

5RE

KATAHDIN ANALYTICAL SERVICES
Report of Analytical Results

Client: CH2MHill
Project: TO-009 Lejeune
PO No:
Sample Date: 01/08/09
Received Date: 01/10/09
Extraction Date: 01/28/09
Analysis Date: 01-FEB-2009 22:29
Report Date: 02/02/2009
Matrix: SOIL
% Solids: 92.4

Lab ID: SC0128-9RE
Client ID: MR08-SS229-09A
SDG: TO9-31
Extracted by: AC
Extraction Method: SW846 3550
Analyst: JLP
Analysis Method: SW846 8270C
Lab Prep Batch: WG60254
Units: ug/Kgdrywt

Use original

CAS#	Compound	Flags	Results	DF	PQL	Adj.PQL	Adj.MDL
100-52-7	Benzaldehyde	U UJ	540	1.0	500	540	130 HT
108-95-2	Phenol	U	540	1.0	500	540	170
111-44-4	Bis(2-Chloroethyl)ether	U	360	1.0	330	360	88
95-57-8	2-Chlorophenol	U	540	1.0	500	540	180
95-48-7	2-Methylphenol	U	650	1.0	600	650	220
108-60-1	2,2'-Oxybis(1-chloropropane)	U	360	1.0	330	360	96
98-86-2	Acetophenone	U	650	1.0	600	650	190
621-64-7	N-Nitroso-di-n-propylamine	U	360	1.0	330	360	90
65794-96-9	3&4-Methylphenol	U	650	1.0	600	650	200
67-72-1	Hexachloroethane	U	360	1.0	330	360	100
98-95-3	Nitrobenzene	U	360	1.0	330	360	98
78-59-1	Isophorone	U	360	1.0	330	360	81
88-75-5	2-Nitrophenol	U	650	1.0	600	650	180
105-67-9	2,4-Dimethylphenol	U	540	1.0	500	540	180
111-91-1	Bis(2-Chloroethoxy)methane	U	360	1.0	330	360	100
120-83-2	2,4-Dichlorophenol	U	540	1.0	500	540	160
106-47-8	4-Chloroaniline	U	540	1.0	500	540	130
105-60-2	Caprolactam	U	540	1.0	500	540	160
59-50-7	4-Chloro-3-Methylphenol	U	540	1.0	500	540	180
88-06-2	2,4,6-Trichlorophenol	U	540	1.0	500	540	170
95-95-4	2,4,5-Trichlorophenol	U	540	1.0	500	540	170
91-58-7	2-Chloronaphthalene	U	360	1.0	330	360	94
92-52-4	1,1'-Biphenyl	U	360	1.0	330	360	79
88-74-4	2-Nitroaniline	U	540	1.0	500	540	81
131-11-3	Dimethyl Phthalate	U	360	1.0	330	360	84
606-20-2	2,6-Dinitrotoluene	U	360	1.0	330	360	86
208-96-8	Acenaphthylene	U	360	1.0	330	360	76
99-09-2	3-Nitroaniline	U	540	1.0	500	540	100
83-32-9	Acenaphthene	U	360	1.0	330	360	70
51-28-5	2,4-Dinitrophenol	U	1300	1.0	1200	1300	410
132-64-9	Dibenzofuran	U	360	1.0	330	360	86
100-02-7	4-Nitrophenol	U	1300	1.0	1200	1300	330
121-14-2	2,4-Dinitrotoluene	U	360	1.0	330	360	92
84-66-2	Diethylphthalate	U	360	1.0	330	360	87
7005-72-3	4-Chlorophenyl-phenylether	U	360	1.0	330	360	84
100-01-6	4-Nitroaniline	U	540	1.0	500	540	140
534-52-1	4,6-Dinitro-2-Methylphenol	U	1300	1.0	1200	1300	360
86-30-6	N-Nitrosodiphenylamine	U	710	1.0	660	710	240
101-55-3	4-Bromophenyl-phenylether	U	360	1.0	330	360	92
1912-24-9	Atrazine	U	360	1.0	330	360	98
87-86-5	Pentachlorophenol	U	890	1.0	820	890	260
120-12-7	Anthracene	U	360	1.0	330	360	91
86-74-8	Carbazole	U	540	1.0	500	540	120

R RE

lw 4/15/09

5RE

KATAHDIN ANALYTICAL SERVICES
Report of Analytical Results

Client: CH2MHill
Project: TO-009 Lejeune
PO No:
Sample Date: 01/08/09
Received Date: 01/10/09
Extraction Date: 01/28/09
Analysis Date: 01-FEB-2009 22:29
Report Date: 02/02/2009
Matrix: SOIL
% Solids: 92.4

Lab ID: SC0128-9RE
Client ID: MR08-SS229-09A
SDG: TO9-31
Extracted by: AC
Extraction Method: SW846 3550
Analyst: JLP
Analysis Method: SW846 8270C
Lab Prep Batch: WG60254
Units: ug/Kgdrywt

Use Original

CAS#	Compound	Flags	Results	DF	PQL	Adj.PQL	Adj.MDL	
84-74-2	Di-n-butylphthalate	~~U~~ UJ	360	1.0	330	360	110	HT
85-68-7	Butylbenzylphthalate	~~U~~	360	1.0	330	360	100	
91-94-1	3,3'-Dichlorobenzidine	~~U~~	540	1.0	500	540	120	
218-01-9	Chrysene	~~U~~	360	1.0	330	360	100	
117-81-7	bis(2-Ethylhexyl)phthalate	~~J~~ J	160	1.0	330	360	110	
117-84-0	Di-n-octylphthalate	~~U~~ UJ	360	1.0	330	360	230	
367-12-4	2-Fluorophenol		66%					
13127-88-3	Phenol-D6		72%					
4165-60-0	Nitrobenzene-D5		62%					
321-60-8	2-Fluorobiphenyl		69%					
118-79-6	2,4,6-Tribromophenol		67%					
1718-51-0	Terphenyl-D14		92%					

Page 02 of 02 U5223.D

RRE

MW 4/15/09

6

KATAHDIN ANALYTICAL SERVICES
Report of Analytical Results

Client: CH2MHill
Project: TO-009 Lejeune
PO No:
Sample Date: 01/08/09
Received Date: 01/10/09
Extraction Date: 01/14/09
Analysis Date: 26-JAN-2009 22:17
Report Date: 02/02/2009
Matrix: SOIL
% Solids: 91.9

Lab ID: SC0128-11
Client ID: MR08-SS229D-09A
SDG: TO9-31
Extracted by: AC
Extraction Method: SW846 3550
Analyst: JCG
Analysis Method: SW846 8270C
Lab Prep Batch: WG59785
Units: ug/Kgdrywt

CAS#	Compound	Flags	Results	DF	PQL	Adj.PQL	Adj.MDL
100-52-7	Benzaldehyde	U	540	1.0	500	540	130
108-95-2	Phenol	U	540	1.0	500	540	170
111-44-4	Bis(2-Chloroethyl)ether	U	360	1.0	330	360	88
95-57-8	2-Chlorophenol	U	540	1.0	500	540	180
95-48-7	2-Methylphenol	U	650	1.0	600	650	220
108-60-1	2,2'-Oxybis(1-chloropropane)	U	360	1.0	330	360	97
98-86-2	Acetophenone	U	650	1.0	600	650	190
621-64-7	N-Nitroso-di-n-propylamine	U	360	1.0	330	360	90
65794-96-9	3&4-Methylphenol	U	650	1.0	600	650	200
67-72-1	Hexachloroethane	U	360	1.0	330	360	100
98-95-3	Nitrobenzene	U	360	1.0	330	360	99
78-59-1	Isophorone	U	360	1.0	330	360	82
88-75-5	2-Nitrophenol	U	650	1.0	600	650	180
105-67-9	2,4-Dimethylphenol	U	540	1.0	500	540	180
111-91-1	Bis(2-Chloroethoxy)methane	U	360	1.0	330	360	100
120-83-2	2,4-Dichlorophenol	U	540	1.0	500	540	160
106-47-8	4-Chloroaniline	U	540	1.0	500	540	130
105-60-2	Caprolactam	U	540	1.0	500	540	160
59-50-7	4-Chloro-3-Methylphenol	U	540	1.0	500	540	180
88-06-2	2,4,6-Trichlorophenol	U	540	1.0	500	540	170
95-95-4	2,4,5-Trichlorophenol	U	540	1.0	500	540	170
91-58-7	2-Chloronaphthalene	U	360	1.0	330	360	95
92-52-4	1,1'-Biphenyl	U	360	1.0	330	360	79
88-74-4	2-Nitroaniline	U	540	1.0	500	540	82
131-11-3	Dimethyl Phthalate	U	360	1.0	330	360	85
606-20-2	2,6-Dinitrotoluene	U	360	1.0	330	360	86
208-96-8	Acenaphthylene	U	360	1.0	330	360	76
99-09-2	3-Nitroaniline	U	540	1.0	500	540	100
83-32-9	Acenaphthene	U	360	1.0	330	360	71
51-28-5	2,4-Dinitrophenol	U	1300	1.0	1200	1300	410
132-64-9	Dibenzofuran	U	360	1.0	330	360	86
100-02-7	4-Nitrophenol	U	1300	1.0	1200	1300	340
121-14-2	2,4-Dinitrotoluene	U	360	1.0	330	360	92
84-66-2	Diethylphthalate	U	360	1.0	330	360	87
7005-72-3	4-Chlorophenyl-phenylether	U	360	1.0	330	360	85
100-01-6	4-Nitroaniline	U	540	1.0	500	540	140
534-52-1	4,6-Dinitro-2-Methylphenol	U	1300	1.0	1200	1300	370
86-30-6	N-Nitrosodiphenylamine	U	720	1.0	660	720	240
101-55-3	4-Bromophenyl-phenylether	U	360	1.0	330	360	92
1912-24-9	Atrazine	U	360	1.0	330	360	99
87-86-5	Pentachlorophenol	U	890	1.0	820	890	260
120-12-7	Anthracene	U	360	1.0	330	360	91
86-74-8	Carbazole	U	540	1.0	500	540	120

lw 4/15/09

6

KATAHDIN ANALYTICAL SERVICES
Report of Analytical Results

Client: CH2MHill
Project: TO-009 Lejeune
PO No:
Sample Date: 01/08/09
Received Date: 01/10/09
Extraction Date: 01/14/09
Analysis Date: 26-JAN-2009 22:17
Report Date: 02/02/2009
Matrix: SOIL
% Solids: 91.9

Lab ID: SC0128-11
Client ID: MR08-SS229D-09A
SDG: TO9-31
Extracted by: AC
Extraction Method: SW846 3550
Analyst: JCG
Analysis Method: SW846 8270C
Lab Prep Batch: WG59785
Units: ug/Kgdrywt

CAS#	Compound	Flags	Results	DF	PQL	Adj.PQL	Adj.MDL
84-74-2	Di-n-butylphthalate	U	360	1.0	330	360	110
85-68-7	Butylbenzylphthalate	U	360	1.0	330	360	100
91-94-1	3,3'-Dichlorobenzidine	U	540	1.0	500	540	120
218-01-9	Chrysene	U	360	1.0	330	360	100
117-81-7	bis(2-Ethylhexyl)phthalate	J	140	1.0	330	360	110
117-84-0	Di-n-octylphthalate	U	360	1.0	330	360	230
367-12-4	2-Fluorophenol		68%				
13127-88-3	Phenol-D6		69%				
4165-60-0	Nitrobenzene-D5		68%				
321-60-8	2-Fluorobiphenyl		70%				
118-79-6	2,4,6-Tribromophenol		53%				
1718-51-0	Terphenyl-D14		106%				

MW 4/15/09

7

KATAHDIN ANALYTICAL SERVICES
Report of Analytical Results

Client: CH2MHill
Project: TO-009 Lejeune
PO No:
Sample Date: 01/08/09
Received Date: 01/10/09
Extraction Date: 01/14/09
Analysis Date: 26-JAN-2009 22:59
Report Date: 02/02/2009
Matrix: SOIL
% Solids: 86.8

Lab ID: SC0128-13
Client ID: MR08-IS229-6-7-09A
SDG: TO9-31
Extracted by: AC
Extraction Method: SW846 3550
Analyst: JCG
Analysis Method: SW846 8270C
Lab Prep Batch: WG59785
Units: ug/Kgdrywt

CAS#	Compound	Flags	Results	DF	PQL	Adj.PQL	Adj.MDL
100-52-7	Benzaldehyde	U	580	1.0	500	580	140
108-95-2	Phenol	U	580	1.0	500	580	180
111-44-4	Bis(2-Chloroethyl)ether	U	380	1.0	330	380	93
95-57-8	2-Chlorophenol	U	580	1.0	500	580	190
95-48-7	2-Methylphenol	U	690	1.0	600	690	230
108-60-1	2,2'-Oxybis(1-chloropropane)	U	380	1.0	330	380	100
98-86-2	Acetophenone	U	690	1.0	600	690	200
621-64-7	N-Nitroso-di-n-propylamine	U	380	1.0	330	380	96
65794-96-9	3&4-Methylphenol	U	690	1.0	600	690	220
67-72-1	Hexachloroethane	U	380	1.0	330	380	110
98-95-3	Nitrobenzene	U	380	1.0	330	380	100
78-59-1	Isophorone	U	380	1.0	330	380	86
88-75-5	2-Nitrophenol	U	690	1.0	600	690	190
105-67-9	2,4-Dimethylphenol	U	580	1.0	500	580	190
111-91-1	Bis(2-Chloroethoxy)methane	U	380	1.0	330	380	110
120-83-2	2,4-Dichlorophenol	U	580	1.0	500	580	170
106-47-8	4-Chloroaniline	U	580	1.0	500	580	140
105-60-2	Caprolactam	U	580	1.0	500	580	160
59-50-7	4-Chloro-3-Methylphenol	U	580	1.0	500	580	190
88-06-2	2,4,6-Trichlorophenol	U	580	1.0	500	580	180
95-95-4	2,4,5-Trichlorophenol	U	580	1.0	500	580	180
91-58-7	2-Chloronaphthalene	U	380	1.0	330	380	100
92-52-4	1,1'-Biphenyl	U	380	1.0	330	380	84
88-74-4	2-Nitroaniline	U	580	1.0	500	580	86
131-11-3	Dimethyl Phthalate	U	380	1.0	330	380	90
606-20-2	2,6-Dinitrotoluene	U	380	1.0	330	380	91
208-96-8	Acenaphthylene	U	380	1.0	330	380	81
99-09-2	3-Nitroaniline	U	580	1.0	500	580	110
83-32-9	Acenaphthene	U	380	1.0	330	380	75
51-28-5	2,4-Dinitrophenol	U	1400	1.0	1200	1400	430
132-64-9	Dibenzofuran	U	380	1.0	330	380	91
100-02-7	4-Nitrophenol	U	1400	1.0	1200	1400	360
121-14-2	2,4-Dinitrotoluene	U	380	1.0	330	380	98
84-66-2	Diethylphthalate	U	380	1.0	330	380	92
7005-72-3	4-Chlorophenyl-phenylether	U	380	1.0	330	380	90
100-01-6	4-Nitroaniline	U	580	1.0	500	580	150
534-52-1	4,6-Dinitro-2-Methylphenol	U	1400	1.0	1200	1400	390
86-30-6	N-Nitrosodiphenylamine	U	760	1.0	660	760	250
101-55-3	4-Bromophenyl-phenylether	U	380	1.0	330	380	98
1912-24-9	Atrazine	U	380	1.0	330	380	100
87-86-5	Pentachlorophenol	U	940	1.0	820	940	270
120-12-7	Anthracene	U	380	1.0	330	380	97
86-74-8	Carbazole	U	580	1.0	500	580	130

lw 4/15/09

KATAHDIN ANALYTICAL SERVICES
Report of Analytical Results

7

Client: CH2MHill
Project: TO-009 Lejeune
PO No:
Sample Date: 01/08/09
Received Date: 01/10/09
Extraction Date: 01/14/09
Analysis Date: 26-JAN-2009 22:59
Report Date: 02/02/2009
Matrix: SOIL
% Solids: 86.8

Lab ID: SC0128-13
Client ID: MR08-IS229-6-7-09A
SDG: TO9-31
Extracted by: AC
Extraction Method: SW846 3550
Analyst: JCG
Analysis Method: SW846 8270C
Lab Prep Batch: WG59785
Units: ug/Kgdrywt

CAS#	Compound	Flags	Results	DF	PQL	Adj.PQL	Adj.MDL
84-74-2	Di-n-butylphthalate	U	380	1.0	330	380	120
85-68-7	Butylbenzylphthalate	U	380	1.0	330	380	110
91-94-1	3,3'-Dichlorobenzidine	U	580	1.0	500	580	130
218-01-9	Chrysene	U	380	1.0	330	380	110
117-81-7	bis(2-Ethylhexyl)phthalate	U	380	1.0	330	380	110
117-84-0	Di-n-octylphthalate	U	380	1.0	330	380	240
367-12-4	2-Fluorophenol		65%				
13127-88-3	Phenol-D6		70%				
4165-60-0	Nitrobenzene-D5		63%				
321-60-8	2-Fluorobiphenyl		66%				
118-79-6	2,4,6-Tribromophenol		56%				
1718-51-0	Terphenyl-D14		88%				

lw 4/15/09

8

KATAHDIN ANALYTICAL SERVICES
Report of Analytical Results

Client: CH2MHill
Project: TO-009 Lejeune
PO No:
Sample Date: 01/08/09
Received Date: 01/10/09
Extraction Date: 01/14/09
Analysis Date: 26-JAN-2009 23:41
Report Date: 02/02/2009
Matrix: SOIL
% Solids: 88.9

Lab ID: SC0128-15
Client ID: MR08-IS229D-6-7-09A
SDG: TO9-31
Extracted by: AC
Extraction Method: SW846 3550
Analyst: JCG
Analysis Method: SW846 8270C
Lab Prep Batch: WG59785
Units: ug/Kgdrywt

CAS#	Compound	Flags	Results	DF	PQL	Adj.PQL	Adj.MDL
100-52-7	Benzaldehyde	U	560	1.0	500	560	130
108-95-2	Phenol	U	560	1.0	500	560	180
111-44-4	Bis(2-Chloroethyl)ether	U	370	1.0	330	370	91
95-57-8	2-Chlorophenol	U	560	1.0	500	560	180
95-48-7	2-Methylphenol	U	670	1.0	600	670	220
108-60-1	2,2'-Oxybis(1-chloropropane)	U	370	1.0	330	370	100
98-86-2	Acetophenone	U	670	1.0	600	670	200
621-64-7	N-Nitroso-di-n-propylamine	U	370	1.0	330	370	93
65794-96-9	3&4-Methylphenol	U	670	1.0	600	670	210
67-72-1	Hexachloroethane	U	370	1.0	330	370	110
98-95-3	Nitrobenzene	U	370	1.0	330	370	100
78-59-1	Isophorone	U	370	1.0	330	370	84
88-75-5	2-Nitrophenol	U	670	1.0	600	670	190
105-67-9	2,4-Dimethylphenol	U	560	1.0	500	560	180
111-91-1	Bis(2-Chloroethoxy)methane	U	370	1.0	330	370	110
120-83-2	2,4-Dichlorophenol	U	560	1.0	500	560	170
106-47-8	4-Chloroaniline	U	560	1.0	500	560	130
105-60-2	Caprolactam	U	560	1.0	500	560	160
59-50-7	4-Chloro-3-Methylphenol	U	560	1.0	500	560	190
88-06-2	2,4,6-Trichlorophenol	U	560	1.0	500	560	170
95-95-4	2,4,5-Trichlorophenol	U	560	1.0	500	560	170
91-58-7	2-Chloronaphthalene	U	370	1.0	330	370	98
92-52-4	1,1'-Biphenyl	U	370	1.0	330	370	82
88-74-4	2-Nitroaniline	U	560	1.0	500	560	84
131-11-3	Dimethyl Phthalate	U	370	1.0	330	370	88
606-20-2	2,6-Dinitrotoluene	U	370	1.0	330	370	89
208-96-8	Acenaphthylene	U	370	1.0	330	370	79
99-09-2	3-Nitroaniline	U	560	1.0	500	560	100
83-32-9	Acenaphthene	U	370	1.0	330	370	73
51-28-5	2,4-Dinitrophenol	U	1300	1.0	1200	1300	420
132-64-9	Dibenzofuran	U	370	1.0	330	370	89
100-02-7	4-Nitrophenol	U	1300	1.0	1200	1300	350
121-14-2	2,4-Dinitrotoluene	U	370	1.0	330	370	96
84-66-2	Diethylphthalate	U	370	1.0	330	370	90
7005-72-3	4-Chlorophenyl-phenylether	U	370	1.0	330	370	88
100-01-6	4-Nitroaniline	U	560	1.0	500	560	150
534-52-1	4,6-Dinitro-2-Methylphenol	U	1300	1.0	1200	1300	380
86-30-6	N-Nitrosodiphenylamine	U	740	1.0	660	740	250
101-55-3	4-Bromophenyl-phenylether	U	370	1.0	330	370	96
1912-24-9	Atrazine	U	370	1.0	330	370	100
87-86-5	Pentachlorophenol	U	920	1.0	820	920	270
120-12-7	Anthracene	U	370	1.0	330	370	94
86-74-8	Carbazole	U	560	1.0	500	560	120

lew
4/15/09

KATAHDIN ANALYTICAL SERVICES
Report of Analytical Results

8

Client: CH2MHill
Project: TO-009 Lejeune
PO No:
Sample Date: 01/08/09
Received Date: 01/10/09
Extraction Date: 01/14/09
Analysis Date: 26-JAN-2009 23:41
Report Date: 02/02/2009
Matrix: SOIL
% Solids: 88.9

Lab ID: SC0128-15
Client ID: MR08-IS229D-6-7-09A
SDG: TO9-31
Extracted by: AC
Extraction Method: SW846 3550
Analyst: JCG
Analysis Method: SW846 8270C
Lab Prep Batch: WG59785
Units: ug/Kgdrywt

CAS#	Compound	Flags	Results	DF	PQL	Adj.PQL	Adj.MDL
84-74-2	Di-n-butylphthalate	U	370	1.0	330	370	110
85-68-7	Butylbenzylphthalate	U	370	1.0	330	370	100
91-94-1	3,3'-Dichlorobenzidine	U	560	1.0	500	560	130
218-01-9	Chrysene	U	370	1.0	330	370	110
117-81-7	bis(2-Ethylhexyl)phthalate	U	370	1.0	330	370	110
117-84-0	Di-n-octylphthalate	U	370	1.0	330	370	240
367-12-4	2-Fluorophenol		49%				
13127-88-3	Phenol-D6		55%				
4165-60-0	Nitrobenzene-D5		54%				
321-60-8	2-Fluorobiphenyl		58%				
118-79-6	2,4,6-Tribromophenol		41%				
1718-51-0	Terphenyl-D14		90%				

MW
4/15/09

KATAHDIN ANALYTICAL SERVICES
Report of Analytical Results

Client: CH2MHill
Project: TO-009 Lejeune
PO No:
Sample Date: 01/08/09
Received Date: 01/10/09
Extraction Date: 01/14/09
Analysis Date: 27-JAN-2009 00:22
Report Date: 02/02/2009
Matrix: SOIL
% Solids: 87.5

Lab ID: SC0128-17
Client ID: MR08-SS227-09A
SDG: TO9-31
Extracted by: AC
Extraction Method: SW846 3550
Analyst: JCG
Analysis Method: SW846 8270C
Lab Prep Batch: WG59785
Units: ug/Kgdrywt

CAS#	Compound	Flags	Results	DF	PQL	Adj.PQL	Adj.MDL
100-52-7	Benzaldehyde	U	570	1.0	500	570	140
108-95-2	Phenol	U	570	1.0	500	570	180
111-44-4	Bis(2-Chloroethyl)ether	U	380	1.0	330	380	92
95-57-8	2-Chlorophenol	U	570	1.0	500	570	190
95-48-7	2-Methylphenol	U	680	1.0	600	680	230
108-60-1	2,2'-Oxybis(1-chloropropane)	U	380	1.0	330	380	100
98-86-2	Acetophenone	U	680	1.0	600	680	200
621-64-7	N-Nitroso-di-n-propylamine	U	380	1.0	330	380	95
65794-96-9	3&4-Methylphenol	U	680	1.0	600	680	210
67-72-1	Hexachloroethane	U	380	1.0	330	380	110
98-95-3	Nitrobenzene	U	380	1.0	330	380	100
78-59-1	Isophorone	U	380	1.0	330	380	86
88-75-5	2-Nitrophenol	U	680	1.0	600	680	190
105-67-9	2,4-Dimethylphenol	U	570	1.0	500	570	190
111-91-1	Bis(2-Chloroethoxy)methane	U	380	1.0	330	380	110
120-83-2	2,4-Dichlorophenol	U	570	1.0	500	570	170
106-47-8	4-Chloroaniline	U	570	1.0	500	570	140
105-60-2	Caprolactam	U	570	1.0	500	570	160
59-50-7	4-Chloro-3-Methylphenol	U	570	1.0	500	570	190
88-06-2	2,4,6-Trichlorophenol	U	570	1.0	500	570	180
95-95-4	2,4,5-Trichlorophenol	U	570	1.0	500	570	180
91-58-7	2-Chloronaphthalene	U	380	1.0	330	380	99
92-52-4	1,1'-Biphenyl	U	380	1.0	330	380	83
88-74-4	2-Nitroaniline	U	570	1.0	500	570	86
131-11-3	Dimethyl Phthalate	U	380	1.0	330	380	89
606-20-2	2,6-Dinitrotoluene	U	380	1.0	330	380	90
208-96-8	Acenaphthylene	U	380	1.0	330	380	80
99-09-2	3-Nitroaniline	U	570	1.0	500	570	110
83-32-9	Acenaphthene	U	380	1.0	330	380	74
51-28-5	2,4-Dinitrophenol	U	1400	1.0	1200	1400	430
132-64-9	Dibenzofuran	U	380	1.0	330	380	90
100-02-7	4-Nitrophenol	U	1400	1.0	1200	1400	350
121-14-2	2,4-Dinitrotoluene	U	380	1.0	330	380	97
84-66-2	Diethylphthalate	U	380	1.0	330	380	91
7005-72-3	4-Chlorophenyl-phenylether	U	380	1.0	330	380	89
100-01-6	4-Nitroaniline	U	570	1.0	500	570	150
534-52-1	4,6-Dinitro-2-Methylphenol	U	1400	1.0	1200	1400	380
86-30-6	N-Nitrosodiphenylamine	U	750	1.0	660	750	250
101-55-3	4-Bromophenyl-phenylether	U	380	1.0	330	380	97
1912-24-9	Atrazine	U	380	1.0	330	380	100
87-86-5	Pentachlorophenol	U	940	1.0	820	940	270
120-12-7	Anthracene	U	380	1.0	330	380	96
86-74-8	Carbazole	U	570	1.0	500	570	130

LW
4/15/09

KATAHDIN ANALYTICAL SERVICES
Report of Analytical Results

Client: CH2MHill
Project: TO-009 Lejeune
PO No:
Sample Date: 01/08/09
Received Date: 01/10/09
Extraction Date: 01/14/09
Analysis Date: 27-JAN-2009 00:22
Report Date: 02/02/2009
Matrix: SOIL
% Solids: 87.5

Lab ID: SC0128-17
Client ID: MR08-SS227-09A
SDG: TO9-31
Extracted by: AC
Extraction Method: SW846 3550
Analyst: JCG
Analysis Method: SW846 8270C
Lab Prep Batch: WG59785
Units: ug/Kgdrywt

CAS#	Compound	Flags	Results	DF	PQL	Adj.PQL	Adj.MDL
84-74-2	Di-n-butylphthalate	U	380	1.0	330	380	120
85-68-7	Butylbenzylphthalate	U	380	1.0	330	380	110
91-94-1	3,3'-Dichlorobenzidine	U	570	1.0	500	570	130
218-01-9	Chrysene	J	120	1.0	330	380	110
117-81-7	bis(2-Ethylhexyl)phthalate	J	180	1.0	330	380	110
117-84-0	Di-n-octylphthalate	U	380	1.0	330	380	240
367-12-4	2-Fluorophenol		52%				
13127-88-3	Phenol-D6		53%				
4165-60-0	Nitrobenzene-D5		46%				
321-60-8	2-Fluorobiphenyl		57%				
118-79-6	2,4,6-Tribromophenol		58%				
1718-51-0	Terphenyl-D14		85%				

lew 4/15/09

10

KATAHDIN ANALYTICAL SERVICES
Report of Analytical Results

Client: CH2MHill
Project: TO-009 Lejeune
PO No:
Sample Date: 01/08/09
Received Date: 01/10/09
Extraction Date: 01/14/09
Analysis Date: 27-JAN-2009 01:05
Report Date: 02/02/2009
Matrix: SOIL
% Solids: 84.5

Lab ID: SC0128-19
Client ID: MR08-IS227-6-7-09A
SDG: TO9-31
Extracted by: AC
Extraction Method: SW846 3550
Analyst: JCG
Analysis Method: SW846 8270C
Lab Prep Batch: WG59785
Units: ug/Kgdrywt

CAS#	Compound	Flags	Results	DF	PQL	Adj.PQL	Adj.MDL
100-52-7	Benzaldehyde	U	590	1.0	500	590	140
108-95-2	Phenol	U	590	1.0	500	590	180
111-44-4	Bis(2-Chloroethyl)ether	U	390	1.0	330	390	96
95-57-8	2-Chlorophenol	U	590	1.0	500	590	190
95-48-7	2-Methylphenol	U	710	1.0	600	710	240
108-60-1	2,2'-Oxybis(1-chloropropane)	U	390	1.0	330	390	100
98-86-2	Acetophenone	U	710	1.0	600	710	210
621-64-7	N-Nitroso-di-n-propylamine	U	390	1.0	330	390	98
65794-96-9	3&4-Methylphenol	U	710	1.0	600	710	220
67-72-1	Hexachloroethane	U	390	1.0	330	390	110
98-95-3	Nitrobenzene	U	390	1.0	330	390	110
78-59-1	Isophorone	U	390	1.0	330	390	89
88-75-5	2-Nitrophenol	U	710	1.0	600	710	200
105-67-9	2,4-Dimethylphenol	U	590	1.0	500	590	200
111-91-1	Bis(2-Chloroethoxy)methane	U	390	1.0	330	390	110
120-83-2	2,4-Dichlorophenol	U	590	1.0	500	590	180
106-47-8	4-Chloroaniline	U	590	1.0	500	590	140
105-60-2	Caprolactam	U	590	1.0	500	590	170
59-50-7	4-Chloro-3-Methylphenol	U	590	1.0	500	590	200
88-06-2	2,4,6-Trichlorophenol	U	590	1.0	500	590	180
95-95-4	2,4,5-Trichlorophenol	U	590	1.0	500	590	180
91-58-7	2-Chloronaphthalene	U	390	1.0	330	390	100
92-52-4	1,1'-Biphenyl	U	390	1.0	330	390	86
88-74-4	2-Nitroaniline	U	590	1.0	500	590	89
131-11-3	Dimethyl Phthalate	U	390	1.0	330	390	92
606-20-2	2,6-Dinitrotoluene	U	390	1.0	330	390	93
208-96-8	Acenaphthylene	U	390	1.0	330	390	83
99-09-2	3-Nitroaniline	U	590	1.0	500	590	110
83-32-9	Acenaphthene	U	390	1.0	330	390	77
51-28-5	2,4-Dinitrophenol	U	1400	1.0	1200	1400	440
132-64-9	Dibenzofuran	U	390	1.0	330	390	93
100-02-7	4-Nitrophenol	U	1400	1.0	1200	1400	360
121-14-2	2,4-Dinitrotoluene	U	390	1.0	330	390	100
84-66-2	Diethylphthalate	U	390	1.0	330	390	95
7005-72-3	4-Chlorophenyl-phenylether	U	390	1.0	330	390	92
100-01-6	4-Nitroaniline	U	590	1.0	500	590	160
534-52-1	4,6-Dinitro-2-Methylphenol	U	1400	1.0	1200	1400	400
86-30-6	N-Nitrosodiphenylamine	U	780	1.0	660	780	260
101-55-3	4-Bromophenyl-phenylether	U	390	1.0	330	390	100
1912-24-9	Atrazine	U	390	1.0	330	390	110
87-86-5	Pentachlorophenol	U	970	1.0	820	970	280
120-12-7	Anthracene	U	390	1.0	330	390	99
86-74-8	Carbazole	U	590	1.0	500	590	130

JW 4/15/09

KATAHDIN ANALYTICAL SERVICES
Report of Analytical Results

10

Client: CH2MHill
Project: TO-009 Lejeune
PO No:
Sample Date: 01/08/09
Received Date: 01/10/09
Extraction Date: 01/14/09
Analysis Date: 27-JAN-2009 01:05
Report Date: 02/02/2009
Matrix: SOIL
% Solids: 84.5

Lab ID: SC0128-19
Client ID: MR08-IS227-6-7-09A
SDG: TO9-31
Extracted by: AC
Extraction Method: SW846 3550
Analyst: JCG
Analysis Method: SW846 8270C
Lab Prep Batch: WG59785
Units: ug/Kgdrywt

CAS#	Compound	Flags	Results	DF	PQL	Adj.PQL	Adj.MDL
84-74-2	Di-n-butylphthalate	U	390	1.0	330	390	120
85-68-7	Butylbenzylphthalate	U	390	1.0	330	390	110
91-94-1	3,3'-Dichlorobenzidine	U	590	1.0	500	590	130
218-01-9	Chrysene	U	390	1.0	330	390	110
117-81-7	bis(2-Ethylhexyl)phthalate	U	390	1.0	330	390	120
117-84-0	Di-n-octylphthalate	U	390	1.0	330	390	250
367-12-4	2-Fluorophenol		61%				
13127-88-3	Phenol-D6		66%				
4165-60-0	Nitrobenzene-D5		59%				
321-60-8	2-Fluorobiphenyl		63%				
118-79-6	2,4,6-Tribromophenol		46%				
1718-51-0	Terphenyl-D14		78%				

MW 4/11 5/09

11

KATAHDIN ANALYTICAL SERVICES
Report of Analytical Results

Client: CH2MHill
Project: TO-009 Lejeune
PO No:
Sample Date: 01/08/09
Received Date: 01/10/09
Extraction Date: 01/14/09
Analysis Date: 27-JAN-2009 01:47
Report Date: 02/02/2009
Matrix: SOIL
% Solids: 88.8

Lab ID: SC0128-21
Client ID: MR08-SS209-09A
SDG: TO9-31
Extracted by: AC
Extraction Method: SW846 3550
Analyst: JCG
Analysis Method: SW846 8270C
Lab Prep Batch: WG59785
Units: ug/Kgdrywt

CAS#	Compound	Flags	Results	DF	PQL	Adj.PQL	Adj.MDL
100-52-7	Benzaldehyde	U	560	1.0	500	560	140
108-95-2	Phenol	U	560	1.0	500	560	180
111-44-4	Bis(2-Chloroethyl)ether	U	370	1.0	330	370	91
95-57-8	2-Chlorophenol	U	560	1.0	500	560	180
95-48-7	2-Methylphenol	U	680	1.0	600	680	220
108-60-1	2,2'-Oxybis(1-chloropropane)	U	370	1.0	330	370	100
98-86-2	Acetophenone	U	680	1.0	600	680	200
621-64-7	N-Nitroso-di-n-propylamine	U	370	1.0	330	370	93
65794-96-9	3&4-Methylphenol	U	680	1.0	600	680	210
67-72-1	Hexachloroethane	U	370	1.0	330	370	110
98-95-3	Nitrobenzene	U	370	1.0	330	370	100
78-59-1	Isophorone	U	370	1.0	330	370	84
88-75-5	2-Nitrophenol	U	680	1.0	600	680	190
105-67-9	2,4-Dimethylphenol	U	560	1.0	500	560	180
111-91-1	Bis(2-Chloroethoxy)methane	U	370	1.0	330	370	110
120-83-2	2,4-Dichlorophenol	U	560	1.0	500	560	170
106-47-8	4-Chloroaniline	U	560	1.0	500	560	130
105-60-2	Caprolactam	U	560	1.0	500	560	160
59-50-7	4-Chloro-3-Methylphenol	U	560	1.0	500	560	190
88-06-2	2,4,6-Trichlorophenol	U	560	1.0	500	560	170
95-95-4	2,4,5-Trichlorophenol	U	560	1.0	500	560	170
91-58-7	2-Chloronaphthalene	U	370	1.0	330	370	98
92-52-4	1,1'-Biphenyl	U	370	1.0	330	370	82
88-74-4	2-Nitroaniline	U	560	1.0	500	560	84
131-11-3	Dimethyl Phthalate	U	370	1.0	330	370	88
606-20-2	2,6-Dinitrotoluene	U	370	1.0	330	370	89
208-96-8	Acenaphthylene	U	370	1.0	330	370	79
99-09-2	3-Nitroaniline	U	560	1.0	500	560	100
83-32-9	Acenaphthene	U	370	1.0	330	370	73
51-28-5	2,4-Dinitrophenol	U	1400	1.0	1200	1400	420
132-64-9	Dibenzofuran	U	370	1.0	330	370	89
100-02-7	4-Nitrophenol	U	1400	1.0	1200	1400	350
121-14-2	2,4-Dinitrotoluene	U	370	1.0	330	370	96
84-66-2	Diethylphthalate	U	370	1.0	330	370	90
7005-72-3	4-Chlorophenyl-phenylether	U	370	1.0	330	370	88
100-01-6	4-Nitroaniline	U	560	1.0	500	560	150
534-52-1	4,6-Dinitro-2-Methylphenol	U	1400	1.0	1200	1400	380
86-30-6	N-Nitrosodiphenylamine	U	740	1.0	660	740	250
101-55-3	4-Bromophenyl-phenylether	U	370	1.0	330	370	96
1912-24-9	Atrazine	U	370	1.0	330	370	100
87-86-5	Pentachlorophenol	U	920	1.0	820	920	270
120-12-7	Anthracene	U	370	1.0	330	370	94
86-74-8	Carbazole	U	560	1.0	500	560	120

lew 4/15/09

KATAHDIN ANALYTICAL SERVICES
Report of Analytical Results

11

Client: CH2MHill
Project: TO-009 Lejeune
PO No:
Sample Date: 01/08/09
Received Date: 01/10/09
Extraction Date: 01/14/09
Analysis Date: 27-JAN-2009 01:47
Report Date: 02/02/2009
Matrix: SOIL
% Solids: 88.8

Lab ID: SC0128-21
Client ID: MR08-SS209-09A
SDG: TO9-31
Extracted by: AC
Extraction Method: SW846 3550
Analyst: JCG
Analysis Method: SW846 8270C
Lab Prep Batch: WG59785
Units: ug/Kgdrywt

CAS#	Compound	Flags	Results	DF	PQL	Adj.PQL	Adj.MDL
84-74-2	Di-n-butylphthalate	U	370	1.0	330	370	110
85-68-7	Butylbenzylphthalate	U	370	1.0	330	370	100
91-94-1	3,3'-Dichlorobenzidine	U	560	1.0	500	560	130
218-01-9	Chrysene	U	370	1.0	330	370	110
117-81-7	bis(2-Ethylhexyl)phthalate	U	370	1.0	330	370	110
117-84-0	Di-n-octylphthalate	U	370	1.0	330	370	240
367-12-4	2-Fluorophenol		56%				
13127-88-3	Phenol-D6		64%				
4165-60-0	Nitrobenzene-D5		63%				
321-60-8	2-Fluorobiphenyl		67%				
118-79-6	2,4,6-Tribromophenol		39%				
1718-51-0	Terphenyl-D14		86%				

Jw 4/15/09

KATAHDIN ANALYTICAL SERVICES
Report of Analytical Results

Client: CH2MHill
Project: TO-009 Lejeune
PO No:
Sample Date: 01/08/09
Received Date: 01/10/09
Extraction Date: 01/14/09
Analysis Date: 27-JAN-2009 02:29
Report Date: 02/02/2009
Matrix: SOIL
% Solids: 90.8

Lab ID: SC0128-23
Client ID: MR08-SS209D-09A
SDG: TO9-31
Extracted by: AC
Extraction Method: SW846 3550
Analyst: JCG
Analysis Method: SW846 8270C
Lab Prep Batch: WG59785
Units: ug/Kgdrywt

CAS#	Compound	Flags	Results	DF	PQL	Adj.PQL	Adj.MDL
100-52-7	Benzaldehyde	U	550	1.0	500	550	130
108-95-2	Phenol	U	550	1.0	500	550	170
111-44-4	Bis(2-Chloroethyl)ether	U	360	1.0	330	360	89
95-57-8	2-Chlorophenol	U	550	1.0	500	550	180
95-48-7	2-Methylphenol	U	660	1.0	600	660	220
108-60-1	2,2'-Oxybis(1-chloropropane)	U	360	1.0	330	360	98
98-86-2	Acetophenone	U	660	1.0	600	660	200
621-64-7	N-Nitroso-di-n-propylamine	U	360	1.0	330	360	91
65794-96-9	3&4-Methylphenol	U	660	1.0	600	660	200
67-72-1	Hexachloroethane	U	360	1.0	330	360	100
98-95-3	Nitrobenzene	U	360	1.0	330	360	100
78-59-1	Isophorone	U	360	1.0	330	360	82
88-75-5	2-Nitrophenol	U	660	1.0	600	660	180
105-67-9	2,4-Dimethylphenol	U	550	1.0	500	550	180
111-91-1	Bis(2-Chloroethoxy)methane	U	360	1.0	330	360	100
120-83-2	2,4-Dichlorophenol	U	550	1.0	500	550	160
106-47-8	4-Chloroaniline	U	550	1.0	500	550	130
105-60-2	Caprolactam	U	550	1.0	500	550	160
59-50-7	4-Chloro-3-Methylphenol	U	550	1.0	500	550	180
88-06-2	2,4,6-Trichlorophenol	U	550	1.0	500	550	170
95-95-4	2,4,5-Trichlorophenol	U	550	1.0	500	550	170
91-58-7	2-Chloronaphthalene	U	360	1.0	330	360	96
92-52-4	1,1'-Biphenyl	U	360	1.0	330	360	80
88-74-4	2-Nitroaniline	U	550	1.0	500	550	82
131-11-3	Dimethyl Phthalate	U	360	1.0	330	360	86
606-20-2	2,6-Dinitrotoluene	U	360	1.0	330	360	87
208-96-8	Acenaphthylene	U	360	1.0	330	360	77
99-09-2	3-Nitroaniline	U	550	1.0	500	550	100
83-32-9	Acenaphthene	U	360	1.0	330	360	72
51-28-5	2,4-Dinitrophenol	U	1300	1.0	1200	1300	420
132-64-9	Dibenzofuran	U	360	1.0	330	360	87
100-02-7	4-Nitrophenol	U	1300	1.0	1200	1300	340
121-14-2	2,4-Dinitrotoluene	U	360	1.0	330	360	94
84-66-2	Diethylphthalate	U	360	1.0	330	360	88
7005-72-3	4-Chlorophenyl-phenylether	U	360	1.0	330	360	86
100-01-6	4-Nitroaniline	U	550	1.0	500	550	150
534-52-1	4,6-Dinitro-2-Methylphenol	U	1300	1.0	1200	1300	370
86-30-6	N-Nitrosodiphenylamine	U	730	1.0	660	730	240
101-55-3	4-Bromophenyl-phenylether	U	360	1.0	330	360	94
1912-24-9	Atrazine	U	360	1.0	330	360	100
87-86-5	Pentachlorophenol	U	900	1.0	820	900	260
120-12-7	Anthracene	U	360	1.0	330	360	92
86-74-8	Carbazole	U	550	1.0	500	550	120

Qlw 4/15/09

KATAHDIN ANALYTICAL SERVICES
Report of Analytical Results

Client: CH2MHill
Project: TO-009 Lejeune
PO No:
Sample Date: 01/08/09
Received Date: 01/10/09
Extraction Date: 01/14/09
Analysis Date: 27-JAN-2009 02:29
Report Date: 02/02/2009
Matrix: SOIL
% Solids: 90.8

Lab ID: SC0128-23
Client ID: MR08-SS209D-09A
SDG: TO9-31
Extracted by: AC
Extraction Method: SW846 3550
Analyst: JCG
Analysis Method: SW846 8270C
Lab Prep Batch: WG59785
Units: ug/Kgdrywt

CAS#	Compound	Flags	Results	DF	PQL	Adj.PQL	Adj.MDL
84-74-2	Di-n-butylphthalate	U	360	1.0	330	360	110
85-68-7	Butylbenzylphthalate	U	360	1.0	330	360	100
91-94-1	3,3'-Dichlorobenzidine	U	550	1.0	500	550	120
218-01-9	Chrysene	U	360	1.0	330	360	100
117-81-7	bis(2-Ethylhexyl)phthalate	U	360	1.0	330	360	110
117-84-0	Di-n-octylphthalate	U	360	1.0	330	360	230
367-12-4	2-Fluorophenol		56%				
13127-88-3	Phenol-D6		54%				
4165-60-0	Nitrobenzene-D5		52%				
321-60-8	2-Fluorobiphenyl		55%				
118-79-6	2,4,6-Tribromophenol		53%				
1718-51-0	Terphenyl-D14		84%				

lw
4/15/09

13

KATAHDIN ANALYTICAL SERVICES
Report of Analytical Results

Client: CH2MHill
Project: TO-009 Lejeune
PO No:
Sample Date: 01/09/09
Received Date: 01/13/09
Extraction Date: 01/15/09
Analysis Date: 26-JAN-2009 13:08
Report Date: 02/02/2009
Matrix: SOIL
% Solids: 93.9

Lab ID: SC0145-1RA
Client ID: MR08-SS180-09A
SDG: TO9-31
Extracted by: AC
Extraction Method: SW846 3550
Analyst: JLP
Analysis Method: SW846 8270C
Lab Prep Batch: WG59814
Units: ug/Kgdrywt

CAS#	Compound	Flags	Results	DF	PQL	Adj.PQL	Adj.MDL	
100-52-7	Benzaldehyde	U	530	1.0	500	530	130	
108-95-2	Phenol	U	530	1.0	500	530	170	
111-44-4	Bis(2-Chloroethyl)ether	U	350	1.0	330	350	86	
95-57-8	2-Chlorophenol	U	530	1.0	500	530	170	
95-48-7	2-Methylphenol	U	640	1.0	600	640	210	
108-60-1	2,2'-Oxybis(1-chloropropane)	U	350	1.0	330	350	95	
98-86-2	Acetophenone	U	640	1.0	600	640	190	
621-64-7	N-Nitroso-di-n-propylamine	U	350	1.0	330	350	88	
65794-96-9	3&4-Methylphenol	U	640	1.0	600	640	200	
67-72-1	Hexachloroethane	U	350	1.0	330	350	100	
98-95-3	Nitrobenzene	U	350	1.0	330	350	97	
78-59-1	Isophorone	U	350	1.0	330	350	80	
88-75-5	2-Nitrophenol	U	640	1.0	600	640	180	
105-67-9	2,4-Dimethylphenol	U	530	1.0	500	530	180	
111-91-1	Bis(2-Chloroethoxy)methane	U	350	1.0	330	350	100	
120-83-2	2,4-Dichlorophenol	U	530	1.0	500	530	160	
106-47-8	4-Chloroaniline	U	530	1.0	500	530	130	
105-60-2	Caprolactam	U	530	1.0	500	530	150	
59-50-7	4-Chloro-3-Methylphenol	U	530	1.0	500	530	180	
88-06-2	2,4,6-Trichlorophenol	U	530	1.0	500	530	160	
95-95-4	2,4,5-Trichlorophenol	U	530	1.0	500	530	160	
91-58-7	2-Chloronaphthalene	U	350	1.0	330	350	93	
92-52-4	1,1'-Biphenyl	U	350	1.0	330	350	78	
88-74-4	2-Nitroaniline	U	530	1.0	500	530	80	
131-11-3	Dimethyl Phthalate	U	350	1.0	330	350	83	
606-20-2	2,6-Dinitrotoluene	U	350	1.0	330	350	84	
208-96-8	Acenaphthylene	U	350	1.0	330	350	74	
99-09-2	3-Nitroaniline	U	530	1.0	500	530	100	
83-32-9	Acenaphthene	U	350	1.0	330	350	69	
51-28-5	2,4-Dinitrophenol	U	1300	1.0	1200	1300	400	
132-64-9	Dibenzofuran	U	350	1.0	330	350	84	
100-02-7	4-Nitrophenol	~~U~~ UJ	1300	1.0	1200	1300	330	CCH
121-14-2	2,4-Dinitrotoluene	U	350	1.0	330	350	90	
84-66-2	Diethylphthalate	U	350	1.0	330	350	85	
7005-72-3	4-Chlorophenyl-phenylether	U	350	1.0	330	350	83	
100-01-6	4-Nitroaniline	~~U~~ UJ	530	1.0	500	530	140	CCH
534-52-1	4,6-Dinitro-2-Methylphenol	U	1300	1.0	1200	1300	360	
86-30-6	N-Nitrosodiphenylamine	U	700	1.0	660	700	230	
101-55-3	4-Bromophenyl-phenylether	U	350	1.0	330	350	90	
1912-24-9	Atrazine	U	350	1.0	330	350	97	
87-86-5	Pentachlorophenol	U	870	1.0	820	870	250	
120-12-7	Anthracene	U	350	1.0	330	350	89	
86-74-8	Carbazole	~~U~~ UJ	530	1.0	500	530	120	CCH

MW 4/15/09

KATAHDIN ANALYTICAL SERVICES
Report of Analytical Results

Client: CH2MHill
Project: TO-009 Lejeune
PO No:
Sample Date: 01/09/09
Received Date: 01/13/09
Extraction Date: 01/15/09
Analysis Date: 26-JAN-2009 13:08
Report Date: 02/02/2009
Matrix: SOIL
% Solids: 93.9

Lab ID: SC0145-1RA
Client ID: MR08-SS180-09A
SDG: TO9-31
Extracted by: AC
Extraction Method: SW846 3550
Analyst: JLP
Analysis Method: SW846 8270C
Lab Prep Batch: WG59814
Units: ug/Kgdrywt

CAS#	Compound	Flags	Results	DF	PQL	Adj.PQL	Adj.MDL
84-74-2	Di-n-butylphthalate	U	350	1.0	330	350	110
85-68-7	Butylbenzylphthalate	U	350	1.0	330	350	99
91-94-1	3,3'-Dichlorobenzidine	U	530	1.0	500	530	120
218-01-9	Chrysene	U	350	1.0	330	350	100
117-81-7	bis(2-Ethylhexyl)phthalate	J	230	1.0	330	350	100
117-84-0	Di-n-octylphthalate	U	350	1.0	330	350	220
367-12-4	2-Fluorophenol		68%				
13127-88-3	Phenol-D6		77%				
4165-60-0	Nitrobenzene-D5		61%				
321-60-8	2-Fluorobiphenyl		82%				
118-79-6	2,4,6-Tribromophenol		77%				
1718-51-0	Terphenyl-D14		90%				

lew
4/15/09

KATAHDIN ANALYTICAL SERVICES
Report of Analytical Results

Client: CH2MHill
Project: TO-009 Lejeune
PO No:
Sample Date: 01/09/09
Received Date: 01/13/09
Extraction Date: 01/15/09
Analysis Date: 25-JAN-2009 16:23
Report Date: 02/02/2009
Matrix: SOIL
% Solids: 91.2

Lab ID: SC0145-3
Client ID: MR08-IS180-6-7-09A
SDG: TO9-31
Extracted by: AC
Extraction Method: SW846 3550
Analyst: EKC
Analysis Method: SW846 8270C
Lab Prep Batch: WG59814
Units: ug/Kgdrywt

CAS#	Compound	Flags	Results	DF	PQL	Adj.PQL	Adj.MDL
100-52-7	Benzaldehyde	U	550	1.0	500	550	130
108-95-2	Phenol	U	550	1.0	500	550	170
111-44-4	Bis(2-Chloroethyl)ether	U	360	1.0	330	360	89
95-57-8	2-Chlorophenol	U	550	1.0	500	550	180
95-48-7	2-Methylphenol	U	660	1.0	600	660	220
108-60-1	2,2'-Oxybis(1-chloropropane)	U	360	1.0	330	360	98
98-86-2	Acetophenone	U	660	1.0	600	660	200
621-64-7	N-Nitroso-di-n-propylamine	U	360	1.0	330	360	91
65794-96-9	3&4-Methylphenol	U	660	1.0	600	660	200
67-72-1	Hexachloroethane	U	360	1.0	330	360	100
98-95-3	Nitrobenzene	U	360	1.0	330	360	100
78-59-1	Isophorone	U	360	1.0	330	360	82
88-75-5	2-Nitrophenol	U	660	1.0	600	660	180
105-67-9	2,4-Dimethylphenol	U	550	1.0	500	550	180
111-91-1	Bis(2-Chloroethoxy)methane	U	360	1.0	330	360	100
120-83-2	2,4-Dichlorophenol	U	550	1.0	500	550	160
106-47-8	4-Chloroaniline	U	550	1.0	500	550	130
105-60-2	Caprolactam	U	550	1.0	500	550	160
59-50-7	4-Chloro-3-Methylphenol	U	550	1.0	500	550	180
88-06-2	2,4,6-Trichlorophenol	U	550	1.0	500	550	170
95-95-4	2,4,5-Trichlorophenol	U	550	1.0	500	550	170
91-58-7	2-Chloronaphthalene	U	360	1.0	330	360	95
92-52-4	1,1'-Biphenyl	U	360	1.0	330	360	80
88-74-4	2-Nitroaniline	U	550	1.0	500	550	82
131-11-3	Dimethyl Phthalate	U	360	1.0	330	360	86
606-20-2	2,6-Dinitrotoluene	U	360	1.0	330	360	87
208-96-8	Acenaphthylene	U	360	1.0	330	360	77
99-09-2	3-Nitroaniline	U	550	1.0	500	550	100
83-32-9	Acenaphthene	U	360	1.0	330	360	71
51-28-5	2,4-Dinitrophenol	U	1300	1.0	1200	1300	410
132-64-9	Dibenzofuran	U	360	1.0	330	360	87
100-02-7	4-Nitrophenol	U	1300	1.0	1200	1300	340
121-14-2	2,4-Dinitrotoluene	U	360	1.0	330	360	93
84-66-2	Diethylphthalate	U	360	1.0	330	360	88
7005-72-3	4-Chlorophenyl-phenylether	U	360	1.0	330	360	86
100-01-6	4-Nitroaniline	U	550	1.0	500	550	150
534-52-1	4,6-Dinitro-2-Methylphenol	U	1300	1.0	1200	1300	370
86-30-6	N-Nitrosodiphenylamine	U	720	1.0	660	720	240
101-55-3	4-Bromophenyl-phenylether	U	360	1.0	330	360	93
1912-24-9	Atrazine	U	360	1.0	330	360	100
87-86-5	Pentachlorophenol	U	900	1.0	820	900	260
120-12-7	Anthracene	U	360	1.0	330	360	92
86-74-8	Carbazole	U	550	1.0	500	550	120

lw
4/15/09

KATAHDIN ANALYTICAL SERVICES
Report of Analytical Results

Client: CH2MHill
Project: TO-009 Lejeune
PO No:
Sample Date: 01/09/09
Received Date: 01/13/09
Extraction Date: 01/15/09
Analysis Date: 25-JAN-2009 16:23
Report Date: 02/02/2009
Matrix: SOIL
% Solids: 91.2

Lab ID: SC0145-3
Client ID: MR08-IS180-6-7-09A
SDG: TO9-31
Extracted by: AC
Extraction Method: SW846 3550
Analyst: EKC
Analysis Method: SW846 8270C
Lab Prep Batch: WG59814
Units: ug/Kgdrywt

CAS#	Compound	Flags	Results	DF	PQL	Adj.PQL	Adj.MDL
84-74-2	Di-n-butylphthalate	U	360	1.0	330	360	110
85-68-7	Butylbenzylphthalate	U	360	1.0	330	360	100
91-94-1	3,3'-Dichlorobenzidine	U	550	1.0	500	550	120
218-01-9	Chrysene	U	360	1.0	330	360	100
117-81-7	bis(2-Ethylhexyl)phthalate	U	360	1.0	330	360	110
117-84-0	Di-n-octylphthalate	U	360	1.0	330	360	230
367-12-4	2-Fluorophenol		73%				
13127-88-3	Phenol-D6		79%				
4165-60-0	Nitrobenzene-D5		70%				
321-60-8	2-Fluorobiphenyl		74%				
118-79-6	2,4,6-Tribromophenol		69%				
1718-51-0	Terphenyl-D14		97%				

RW
4/15/09

15

KATAHDIN ANALYTICAL SERVICES
Report of Analytical Results

Client: CH2MHill
Project: TO-009 Lejeune
PO No:
Sample Date: 01/09/09
Received Date: 01/13/09
Extraction Date: 01/15/09
Analysis Date: 25-JAN-2009 22:01
Report Date: 02/02/2009
Matrix: SOIL
% Solids: 85.4

Lab ID: SC0145-5
Client ID: MR08-SS182-09A
SDG: TO9-31
Extracted by: AC
Extraction Method: SW846 3550
Analyst: EKC
Analysis Method: SW846 8270C
Lab Prep Batch: WG59814
Units: ug/Kgdrywt

Use reanalysis

CAS#	Compound	Flags		Results	DF	PQL	Adj.PQL	Adj.MDL	
100-52-7	Benzaldehyde	U		580	1.0	500	580	140	
108-95-2	Phenol	~~U~~	R	580	1.0	500	580	180	SSL
111-44-4	Bis(2-Chloroethyl)ether	U		390	1.0	330	390	95	
95-57-8	2-Chlorophenol	~~U~~	R	580	1.0	500	580	190	SSL
95-48-7	2-Methylphenol	~~U~~	R	700	1.0	600	700	230	SSL
108-60-1	2,2'-Oxybis(1-chloropropane)	U		390	1.0	330	390	100	
98-86-2	Acetophenone	U		700	1.0	600	700	210	
621-64-7	N-Nitroso-di-n-propylamine	U		390	1.0	330	390	97	
65794-96-9	3&4-Methylphenol	~~U~~	R	700	1.0	600	700	220	SSL
67-72-1	Hexachloroethane	U		390	1.0	330	390	110	
98-95-3	Nitrobenzene	U		390	1.0	330	390	110	
78-59-1	Isophorone	U		390	1.0	330	390	88	
88-75-5	2-Nitrophenol	~~U~~	R	700	1.0	600	700	200	SSL
105-67-9	2,4-Dimethylphenol	~~U~~	R	580	1.0	500	580	190	SSL
111-91-1	Bis(2-Chloroethoxy)methane	U		390	1.0	330	390	110	
120-83-2	2,4-Dichlorophenol	~~U~~	R	580	1.0	500	580	180	SSL
106-47-8	4-Chloroaniline	U		580	1.0	500	580	140	
105-60-2	Caprolactam	U		580	1.0	500	580	170	
59-50-7	4-Chloro-3-Methylphenol	~~U~~	R	580	1.0	500	580	190	SSL
88-06-2	2,4,6-Trichlorophenol	~~U~~	↓	580	1.0	500	580	180	↓
95-95-4	2,4,5-Trichlorophenol	~~U~~	↓	580	1.0	500	580	180	↓
91-58-7	2-Chloronaphthalene	U		390	1.0	330	390	100	
92-52-4	1,1'-Biphenyl	U		390	1.0	330	390	85	
88-74-4	2-Nitroaniline	U		580	1.0	500	580	88	
131-11-3	Dimethyl Phthalate	U		390	1.0	330	390	91	
606-20-2	2,6-Dinitrotoluene	U		390	1.0	330	390	92	
208-96-8	Acenaphthylene	U		390	1.0	330	390	82	
99-09-2	3-Nitroaniline	U		580	1.0	500	580	110	
83-32-9	Acenaphthene	U		390	1.0	330	390	76	
51-28-5	2,4-Dinitrophenol	~~U~~	R	1400	1.0	1200	1400	440	SSL
132-64-9	Dibenzofuran	U		390	1.0	330	390	92	
100-02-7	4-Nitrophenol	~~U~~	R	1400	1.0	1200	1400	360	SSL
121-14-2	2,4-Dinitrotoluene	U		390	1.0	330	390	100	
84-66-2	Diethylphthalate	U		390	1.0	330	390	94	
7005-72-3	4-Chlorophenyl-phenylether	U		390	1.0	330	390	91	
100-01-6	4-Nitroaniline	U		580	1.0	500	580	160	
534-52-1	4,6-Dinitro-2-Methylphenol	~~U~~	R	1400	1.0	1200	1400	390	SSL
86-30-6	N-Nitrosodiphenylamine	U		770	1.0	660	770	260	
101-55-3	4-Bromophenyl-phenylether	U		390	1.0	330	390	100	
1912-24-9	Atrazine	U		390	1.0	330	390	110	
87-86-5	Pentachlorophenol	~~U~~	R	960	1.0	820	960	280	SSL
120-12-7	Anthracene	U		390	1.0	330	390	98	
86-74-8	Carbazole	U		580	1.0	500	580	130	

R RE

Les 4/15/09

15

KATAHDIN ANALYTICAL SERVICES
Report of Analytical Results

Client: CH2MHill
Project: TO-009 Lejeune
PO No:
Sample Date: 01/09/09
Received Date: 01/13/09
Extraction Date: 01/15/09
Analysis Date: 25-JAN-2009 22:01
Report Date: 02/02/2009
Matrix: SOIL
% Solids: 85.4

Lab ID: SC0145-5
Client ID: MR08-SS182-09A
SDG: TO9-31
Extracted by: AC
Extraction Method: SW846 3550
Analyst: EKC
Analysis Method: SW846 8270C
Lab Prep Batch: WG59814
Units: ug/Kgdrywt

Use reanalysis

CAS#	Compound	Flags	Results	DF	PQL	Adj.PQL	Adj.MDL
84-74-2	Di-n-butylphthalate	U	390	1.0	330	390	120
85-68-7	Butylbenzylphthalate	U	390	1.0	330	390	110
91-94-1	3,3'-Dichlorobenzidine	U	580	1.0	500	580	130
218-01-9	Chrysene	U	390	1.0	330	390	110
117-81-7	bis(2-Ethylhexyl)phthalate	U	390	1.0	330	390	110
117-84-0	Di-n-octylphthalate	U	390	1.0	330	390	250
367-12-4	2-Fluorophenol		* 18%				
13127-88-3	Phenol-D6		49%				
4165-60-0	Nitrobenzene-D5		57%				
321-60-8	2-Fluorobiphenyl		74%				
118-79-6	2,4,6-Tribromophenol		* 3%				
1718-51-0	Terphenyl-D14		100%				

RRE

MW 4/15/09

15RE

KATAHDIN ANALYTICAL SERVICES
Report of Analytical Results

Client: CH2MHill
Project: TO-009 Lejeune
PO No:
Sample Date: 01/09/09
Received Date: 01/13/09
Extraction Date: 01/28/09
Analysis Date: 01-FEB-2009 23:10
Report Date: 02/02/2009
Matrix: SOIL
% Solids: 85.4

Lab ID: SC0145-5RE
Client ID: MR08-SS182-09A
SDG: TO9-31
Extracted by: AC
Extraction Method: SW846 3550
Analyst: JLP
Analysis Method: SW846 8270C
Lab Prep Batch: WG60254
Units: ug/Kgdrywt

CAS#	Compound	Flags	Results	DF	PQL	Adj.PQL	Adj.MDL
100-52-7	Benzaldehyde	U UJ	580	1.0	500	580	140 HT
108-95-2	Phenol	U	580	1.0	500	580	180
111-44-4	Bis(2-Chloroethyl)ether	U	390	1.0	330	390	95
95-57-8	2-Chlorophenol	U	580	1.0	500	580	190
95-48-7	2-Methylphenol	U	700	1.0	600	700	230
108-60-1	2,2'-Oxybis(1-chloropropane)	U	390	1.0	330	390	100
98-86-2	Acetophenone	U	700	1.0	600	700	210
621-64-7	N-Nitroso-di-n-propylamine	U	390	1.0	330	390	97
65794-96-9	3&4-Methylphenol	U	700	1.0	600	700	220
67-72-1	Hexachloroethane	U	390	1.0	330	390	110
98-95-3	Nitrobenzene	U	390	1.0	330	390	110
78-59-1	Isophorone	U	390	1.0	330	390	88
88-75-5	2-Nitrophenol	U	700	1.0	600	700	200
105-67-9	2,4-Dimethylphenol	U	580	1.0	500	580	190
111-91-1	Bis(2-Chloroethoxy)methane	U	390	1.0	330	390	110
120-83-2	2,4-Dichlorophenol	U	580	1.0	500	580	180
106-47-8	4-Chloroaniline	U	580	1.0	500	580	140
105-60-2	Caprolactam	U	580	1.0	500	580	170
59-50-7	4-Chloro-3-Methylphenol	U	580	1.0	500	580	190
88-06-2	2,4,6-Trichlorophenol	U	580	1.0	500	580	180
95-95-4	2,4,5-Trichlorophenol	U	580	1.0	500	580	180
91-58-7	2-Chloronaphthalene	U	390	1.0	330	390	100
92-52-4	1,1'-Biphenyl	U	390	1.0	330	390	85
88-74-4	2-Nitroaniline	U	580	1.0	500	580	88
131-11-3	Dimethyl Phthalate	U	390	1.0	330	390	91
606-20-2	2,6-Dinitrotoluene	U	390	1.0	330	390	92
208-96-8	Acenaphthylene	U	390	1.0	330	390	82
99-09-2	3-Nitroaniline	U	580	1.0	500	580	110
83-32-9	Acenaphthene	U	390	1.0	330	390	76
51-28-5	2,4-Dinitrophenol	U	1400	1.0	1200	1400	440
132-64-9	Dibenzofuran	U	390	1.0	330	390	92
100-02-7	4-Nitrophenol	U	1400	1.0	1200	1400	360
121-14-2	2,4-Dinitrotoluene	U	390	1.0	330	390	100
84-66-2	Diethylphthalate	U	390	1.0	330	390	94
7005-72-3	4-Chlorophenyl-phenylether	U	390	1.0	330	390	91
100-01-6	4-Nitroaniline	U	580	1.0	500	580	160
534-52-1	4,6-Dinitro-2-Methylphenol	U	1400	1.0	1200	1400	390
86-30-6	N-Nitrosodiphenylamine	U	770	1.0	660	770	260
101-55-3	4-Bromophenyl-phenylether	U	390	1.0	330	390	100
1912-24-9	Atrazine	U	390	1.0	330	390	110
87-86-5	Pentachlorophenol	U	960	1.0	820	960	280
120-12-7	Anthracene	U	390	1.0	330	390	98
86-74-8	Carbazole	U	580	1.0	500	580	130

AW 4/15/09

1SRE

KATAHDIN ANALYTICAL SERVICES
Report of Analytical Results

Client: CH2MHill
Project: TO-009 Lejeune
PO No:
Sample Date: 01/09/09
Received Date: 01/13/09
Extraction Date: 01/28/09
Analysis Date: 01-FEB-2009 23:10
Report Date: 02/02/2009
Matrix: SOIL
% Solids: 85.4

Lab ID: SC0145-5RE
Client ID: MR08-SS182-09A
SDG: TO9-31
Extracted by: AC
Extraction Method: SW846 3550
Analyst: JLP
Analysis Method: SW846 8270C
Lab Prep Batch: WG60254
Units: ug/Kgdrywt

CAS#	Compound	Flags	Results	DF	PQL	Adj.PQL	Adj.MDL
84-74-2	Di-n-butylphthalate	U UJ	390	1.0	330	390	120 HT
85-68-7	Butylbenzylphthalate	U	390	1.0	330	390	110
91-94-1	3,3'-Dichlorobenzidine	U	580	1.0	500	580	130
218-01-9	Chrysene	U	390	1.0	330	390	110
117-81-7	bis(2-Ethylhexyl)phthalate	U	390	1.0	330	390	110
117-84-0	Di-n-octylphthalate	U	390	1.0	330	390	250
367-12-4	2-Fluorophenol		68%				
13127-88-3	Phenol-D6		75%				
4165-60-0	Nitrobenzene-D5		66%				
321-60-8	2-Fluorobiphenyl		68%				
118-79-6	2,4,6-Tribromophenol		66%				
1718-51-0	Terphenyl-D14		89%				

JLW
4/15/09

16

KATAHDIN ANALYTICAL SERVICES
Report of Analytical Results

Client: CH2MHill
Project: TO-009 Lejeune
PO No:
Sample Date: 01/09/09
Received Date: 01/13/09
Extraction Date: 01/15/09
Analysis Date: 25-JAN-2009 17:05
Report Date: 02/02/2009
Matrix: SOIL
% Solids: 87.4

Lab ID: SC0145-7
Client ID: MR08-IS182-8-9-09A
SDG: TO9-31
Extracted by: AC
Extraction Method: SW846 3550
Analyst: EKC
Analysis Method: SW846 8270C
Lab Prep Batch: WG59814
Units: ug/Kgdrywt

CAS#	Compound	Flags	Results	DF	PQL	Adj.PQL	Adj.MDL
100-52-7	Benzaldehyde	U	570	1.0	500	570	140
108-95-2	Phenol	U	570	1.0	500	570	180
111-44-4	Bis(2-Chloroethyl)ether	U	380	1.0	330	380	93
95-57-8	2-Chlorophenol	U	570	1.0	500	570	190
95-48-7	2-Methylphenol	U	690	1.0	600	690	230
108-60-1	2,2'-Oxybis(1-chloropropane)	U	380	1.0	330	380	100
98-86-2	Acetophenone	U	690	1.0	600	690	200
621-64-7	N-Nitroso-di-n-propylamine	U	380	1.0	330	380	95
65794-96-9	3&4-Methylphenol	U	690	1.0	600	690	210
67-72-1	Hexachloroethane	U	380	1.0	330	380	110
98-95-3	Nitrobenzene	U	380	1.0	330	380	100
78-59-1	Isophorone	U	380	1.0	330	380	86
88-75-5	2-Nitrophenol	U	690	1.0	600	690	190
105-67-9	2,4-Dimethylphenol	U	570	1.0	500	570	190
111-91-1	Bis(2-Chloroethoxy)methane	U	380	1.0	330	380	110
120-83-2	2,4-Dichlorophenol	U	570	1.0	500	570	170
106-47-8	4-Chloroaniline	U	570	1.0	500	570	140
105-60-2	Caprolactam	U	570	1.0	500	570	160
59-50-7	4-Chloro-3-Methylphenol	U	570	1.0	500	570	190
88-06-2	2,4,6-Trichlorophenol	U	570	1.0	500	570	180
95-95-4	2,4,5-Trichlorophenol	U	570	1.0	500	570	180
91-58-7	2-Chloronaphthalene	U	380	1.0	330	380	99
92-52-4	1,1'-Biphenyl	U	380	1.0	330	380	83
88-74-4	2-Nitroaniline	U	570	1.0	500	570	86
131-11-3	Dimethyl Phthalate	U	380	1.0	330	380	89
606-20-2	2,6-Dinitrotoluene	U	380	1.0	330	380	90
208-96-8	Acenaphthylene	U	380	1.0	330	380	80
99-09-2	3-Nitroaniline	U	570	1.0	500	570	110
83-32-9	Acenaphthene	U	380	1.0	330	380	74
51-28-5	2,4-Dinitrophenol	U	1400	1.0	1200	1400	430
132-64-9	Dibenzofuran	U	380	1.0	330	380	90
100-02-7	4-Nitrophenol	U	1400	1.0	1200	1400	350
121-14-2	2,4-Dinitrotoluene	U	380	1.0	330	380	97
84-66-2	Diethylphthalate	U	380	1.0	330	380	91
7005-72-3	4-Chlorophenyl-phenylether	U	380	1.0	330	380	89
100-01-6	4-Nitroaniline	U	570	1.0	500	570	150
534-52-1	4,6-Dinitro-2-Methylphenol	U	1400	1.0	1200	1400	380
86-30-6	N-Nitrosodiphenylamine	U	750	1.0	660	750	250
101-55-3	4-Bromophenyl-phenylether	U	380	1.0	330	380	97
1912-24-9	Atrazine	U	380	1.0	330	380	100
87-86-5	Pentachlorophenol	U	940	1.0	820	940	270
120-12-7	Anthracene	U	380	1.0	330	380	96
86-74-8	Carbazole	U	570	1.0	500	570	130

dw 4/15/09

KATAHDIN ANALYTICAL SERVICES
Report of Analytical Results

16

Client: CH2MHill
Project: TO-009 Lejeune
PO No:
Sample Date: 01/09/09
Received Date: 01/13/09
Extraction Date: 01/15/09
Analysis Date: 25-JAN-2009 17:05
Report Date: 02/02/2009
Matrix: SOIL
% Solids: 87.4

Lab ID: SC0145-7
Client ID: MR08-IS182-8-9-09A
SDG: TO9-31
Extracted by: AC
Extraction Method: SW846 3550
Analyst: EKC
Analysis Method: SW846 8270C
Lab Prep Batch: WG59814
Units: ug/Kgdrywt

CAS#	Compound	Flags	Results	DF	PQL	Adj.PQL	Adj.MDL
84-74-2	Di-n-butylphthalate	U	380	1.0	330	380	120
85-68-7	Butylbenzylphthalate	U	380	1.0	330	380	110
91-94-1	3,3'-Dichlorobenzidine	U	570	1.0	500	570	130
218-01-9	Chrysene	U	380	1.0	330	380	110
117-81-7	bis(2-Ethylhexyl)phthalate	U	380	1.0	330	380	110
117-84-0	Di-n-octylphthalate	U	380	1.0	330	380	240
367-12-4	2-Fluorophenol		70%				
13127-88-3	Phenol-D6		72%				
4165-60-0	Nitrobenzene-D5		66%				
321-60-8	2-Fluorobiphenyl		72%				
118-79-6	2,4,6-Tribromophenol		64%				
1718-51-0	Terphenyl-D14		87%				

MW
4/15/09

KATAHDIN ANALYTICAL SERVICES
Report of Analytical Results

Client: CH2MHill
Project: TO-009 Lejeune
PO No:
Sample Date: 01/09/09
Received Date: 01/13/09
Extraction Date: 01/15/09
Analysis Date: 26-JAN-2009 11:43
Report Date: 02/02/2009
Matrix: SOIL
% Solids: 94.1

Lab ID: SC0145-9
Client ID: MR08-SS183-09A
SDG: TO9-31
Extracted by: AC
Extraction Method: SW846 3550
Analyst: JLP
Analysis Method: SW846 8270C
Lab Prep Batch: WG59814
Units: ug/Kgdrywt

CAS#	Compound	Flags	Results	DF	PQL	Adj.PQL	Adj.MDL	
100-52-7	Benzaldehyde	U	530	1.0	500	530	130	
108-95-2	Phenol	U	530	1.0	500	530	160	
111-44-4	Bis(2-Chloroethyl)ether	U	350	1.0	330	350	86	
95-57-8	2-Chlorophenol	U	530	1.0	500	530	170	
95-48-7	2-Methylphenol	U	640	1.0	600	640	210	
108-60-1	2,2'-Oxybis(1-chloropropane)	U	350	1.0	330	350	95	
98-86-2	Acetophenone	U	640	1.0	600	640	190	
621-64-7	N-Nitroso-di-n-propylamine	U	350	1.0	330	350	88	
65794-96-9	3&4-Methylphenol	U	640	1.0	600	640	200	
67-72-1	Hexachloroethane	U	350	1.0	330	350	100	
98-95-3	Nitrobenzene	U	350	1.0	330	350	97	
78-59-1	Isophorone	U	350	1.0	330	350	80	
88-75-5	2-Nitrophenol	U	640	1.0	600	640	180	
105-67-9	2,4-Dimethylphenol	U	530	1.0	500	530	180	
111-91-1	Bis(2-Chloroethoxy)methane	U	350	1.0	330	350	100	
120-83-2	2,4-Dichlorophenol	U	530	1.0	500	530	160	
106-47-8	4-Chloroaniline	U	530	1.0	500	530	130	
105-60-2	Caprolactam	U	530	1.0	500	530	150	
59-50-7	4-Chloro-3-Methylphenol	U	530	1.0	500	530	180	
88-06-2	2,4,6-Trichlorophenol	U	530	1.0	500	530	160	
95-95-4	2,4,5-Trichlorophenol	U	530	1.0	500	530	160	
91-58-7	2-Chloronaphthalene	U	350	1.0	330	350	92	
92-52-4	1,1'-Biphenyl	U	350	1.0	330	350	78	
88-74-4	2-Nitroaniline	U	530	1.0	500	530	80	
131-11-3	Dimethyl Phthalate	U	350	1.0	330	350	83	
606-20-2	2,6-Dinitrotoluene	U	350	1.0	330	350	84	
208-96-8	Acenaphthylene	U	350	1.0	330	350	74	
99-09-2	3-Nitroaniline	U	530	1.0	500	530	100	
83-32-9	Acenaphthene	U	350	1.0	330	350	69	
51-28-5	2,4-Dinitrophenol	U	1300	1.0	1200	1300	400	
132-64-9	Dibenzofuran	U	350	1.0	330	350	84	
100-02-7	4-Nitrophenol	~~U~~ UJ	1300	1.0	1200	1300	330	CCH
121-14-2	2,4-Dinitrotoluene	U	350	1.0	330	350	90	
84-66-2	Diethylphthalate	U	350	1.0	330	350	85	
7005-72-3	4-Chlorophenyl-phenylether	U	350	1.0	330	350	83	
100-01-6	4-Nitroaniline	~~U~~ UJ	530	1.0	500	530	140	CCH
534-52-1	4,6-Dinitro-2-Methylphenol	U	1300	1.0	1200	1300	360	
86-30-6	N-Nitrosodiphenylamine	U	700	1.0	660	700	230	
101-55-3	4-Bromophenyl-phenylether	U	350	1.0	330	350	90	
1912-24-9	Atrazine	U	350	1.0	330	350	97	
87-86-5	Pentachlorophenol	U	870	1.0	820	870	250	
120-12-7	Anthracene	U	350	1.0	330	350	89	
86-74-8	Carbazole	~~U~~ UJ	530	1.0	500	530	120	CCH

MW 4/15/09

17

KATAHDIN ANALYTICAL SERVICES
Report of Analytical Results

Client: CH2MHill
Project: TO-009 Lejeune
PO No:
Sample Date: 01/09/09
Received Date: 01/13/09
Extraction Date: 01/15/09
Analysis Date: 26-JAN-2009 11:43
Report Date: 02/02/2009
Matrix: SOIL
% Solids: 94.1

Lab ID: SC0145-9
Client ID: MR08-SS183-09A
SDG: TO9-31
Extracted by: AC
Extraction Method: SW846 3550
Analyst: JLP
Analysis Method: SW846 8270C
Lab Prep Batch: WG59814
Units: ug/Kgdrywt

CAS#	Compound	Flags	Results	DF	PQL	Adj.PQL	Adj.MDL
84-74-2	Di-n-butylphthalate	U	350	1.0	330	350	110
85-68-7	Butylbenzylphthalate	U	350	1.0	330	350	99
91-94-1	3,3'-Dichlorobenzidine	U	530	1.0	500	530	120
218-01-9	Chrysene	U	350	1.0	330	350	100
117-81-7	bis(2-Ethylhexyl)phthalate	J	280	1.0	330	350	100
117-84-0	Di-n-octylphthalate	U	350	1.0	330	350	220
367-12-4	2-Fluorophenol		70%				
13127-88-3	Phenol-D6		69%				
4165-60-0	Nitrobenzene-D5		62%				
321-60-8	2-Fluorobiphenyl		68%				
118-79-6	2,4,6-Tribromophenol		74%				
1718-51-0	Terphenyl-D14		83%				

MW 4/5/09

KATAHDIN ANALYTICAL SERVICES
Report of Analytical Results

Client: CH2MHill
Project: TO-009 Lejeune
PO No:
Sample Date: 01/09/09
Received Date: 01/13/09
Extraction Date: 01/15/09
Analysis Date: 26-JAN-2009 12:26
Report Date: 02/02/2009
Matrix: SOIL
% Solids: 90.0

Lab ID: SC0145-11
Client ID: MR08-SS205-09A
SDG: TO9-31
Extracted by: AC
Extraction Method: SW846 3550
Analyst: JLP
Analysis Method: SW846 8270C
Lab Prep Batch: WG59814
Units: ug/Kgdrywt

CAS#	Compound	Flags	Results	DF	PQL	Adj.PQL	Adj.MDL	
100-52-7	Benzaldehyde	U	560	1.0	500	560	130	
108-95-2	Phenol	U	560	1.0	500	560	170	
111-44-4	Bis(2-Chloroethyl)ether	U	370	1.0	330	370	90	
95-57-8	2-Chlorophenol	U	560	1.0	500	560	180	
95-48-7	2-Methylphenol	U	670	1.0	600	670	220	
108-60-1	2,2'-Oxybis(1-chloropropane)	U	370	1.0	330	370	99	
98-86-2	Acetophenone	U	670	1.0	600	670	200	
621-64-7	N-Nitroso-di-n-propylamine	U	370	1.0	330	370	92	
65794-96-9	3&4-Methylphenol	U	670	1.0	600	670	210	
67-72-1	Hexachloroethane	U	370	1.0	330	370	110	
98-95-3	Nitrobenzene	U	370	1.0	330	370	100	
78-59-1	Isophorone	U	370	1.0	330	370	83	
88-75-5	2-Nitrophenol	U	670	1.0	600	670	180	
105-67-9	2,4-Dimethylphenol	U	560	1.0	500	560	180	
111-91-1	Bis(2-Chloroethoxy)methane	U	370	1.0	330	370	110	
120-83-2	2,4-Dichlorophenol	U	560	1.0	500	560	170	
106-47-8	4-Chloroaniline	U	560	1.0	500	560	130	
105-60-2	Caprolactam	U	560	1.0	500	560	160	
59-50-7	4-Chloro-3-Methylphenol	U	560	1.0	500	560	180	
88-06-2	2,4,6-Trichlorophenol	U	560	1.0	500	560	170	
95-95-4	2,4,5-Trichlorophenol	U	560	1.0	500	560	170	
91-58-7	2-Chloronaphthalene	U	370	1.0	330	370	97	
92-52-4	1,1'-Biphenyl	U	370	1.0	330	370	81	
88-74-4	2-Nitroaniline	U	560	1.0	500	560	83	
131-11-3	Dimethyl Phthalate	U	370	1.0	330	370	87	
606-20-2	2,6-Dinitrotoluene	U	370	1.0	330	370	88	
208-96-8	Acenaphthylene	U	370	1.0	330	370	78	
99-09-2	3-Nitroaniline	U	560	1.0	500	560	100	
83-32-9	Acenaphthene	U	370	1.0	330	370	72	
51-28-5	2,4-Dinitrophenol	U	1300	1.0	1200	1300	420	
132-64-9	Dibenzofuran	U	370	1.0	330	370	88	
100-02-7	4-Nitrophenol	~~U~~ UJ	1300	1.0	1200	1300	340	CCH
121-14-2	2,4-Dinitrotoluene	U	370	1.0	330	370	94	
84-66-2	Diethylphthalate	U	370	1.0	330	370	89	
7005-72-3	4-Chlorophenyl-phenylether	U	370	1.0	330	370	87	
100-01-6	4-Nitroaniline	~~U~~ UJ	560	1.0	500	560	150	CCH
534-52-1	4,6-Dinitro-2-Methylphenol	U	1300	1.0	1200	1300	370	
86-30-6	N-Nitrosodiphenylamine	U	730	1.0	660	730	240	
101-55-3	4-Bromophenyl-phenylether	U	370	1.0	330	370	94	
1912-24-9	Atrazine	U	370	1.0	330	370	100	
87-86-5	Pentachlorophenol	U	910	1.0	820	910	260	
120-12-7	Anthracene	U	370	1.0	330	370	93	
86-74-8	Carbazole	~~U~~ UJ	560	1.0	500	560	120	CCH

LW 4/15/09

KATAHDIN ANALYTICAL SERVICES
Report of Analytical Results

Client: CH2MHill
Project: TO-009 Lejeune
PO No:
Sample Date: 01/09/09
Received Date: 01/13/09
Extraction Date: 01/15/09
Analysis Date: 26-JAN-2009 12:26
Report Date: 02/02/2009
Matrix: SOIL
% Solids: 90.0

Lab ID: SC0145-11
Client ID: MR08-SS205-09A
SDG: TO9-31
Extracted by: AC
Extraction Method: SW846 3550
Analyst: JLP
Analysis Method: SW846 8270C
Lab Prep Batch: WG59814
Units: ug/Kgdrywt

CAS#	Compound	Flags	Results	DF	PQL	Adj.PQL	Adj.MDL
84-74-2	Di-n-butylphthalate	U	370	1.0	330	370	110
85-68-7	Butylbenzylphthalate	U	370	1.0	330	370	100
91-94-1	3,3'-Dichlorobenzidine	U	560	1.0	500	560	130
218-01-9	Chrysene	U	370	1.0	330	370	100
117-81-7	bis(2-Ethylhexyl)phthalate	J	120	1.0	330	370	110
117-84-0	Di-n-octylphthalate	U	370	1.0	330	370	230
367-12-4	2-Fluorophenol		75%				
13127-88-3	Phenol-D6		74%				
4165-60-0	Nitrobenzene-D5		67%				
321-60-8	2-Fluorobiphenyl		75%				
118-79-6	2,4,6-Tribromophenol		71%				
1718-51-0	Terphenyl-D14		94%				

few 4/15/09

KATAHDIN ANALYTICAL SERVICES
Report of Analytical Results

Client: CH2MHill
Project: TO-009 Lejeune
PO No:
Sample Date: 01/09/09
Received Date: 01/13/09
Extraction Date: 01/15/09
Analysis Date: 26-JAN-2009 10:19
Report Date: 02/02/2009
Matrix: SOIL
% Solids: 95.0

Lab ID: SC0145-13
Client ID: MR08-IS205-9-10-09A
SDG: TO9-31
Extracted by: AC
Extraction Method: SW846 3550
Analyst: JLP
Analysis Method: SW846 8270C
Lab Prep Batch: WG59814
Units: ug/Kgdrywt

CAS#	Compound	Flags	Results	DF	PQL	Adj.PQL	Adj.MDL	
100-52-7	Benzaldehyde	U	530	1.0	500	530	130	
108-95-2	Phenol	U	530	1.0	500	530	160	
111-44-4	Bis(2-Chloroethyl)ether	U	350	1.0	330	350	85	
95-57-8	2-Chlorophenol	U	530	1.0	500	530	170	
95-48-7	2-Methylphenol	U	630	1.0	600	630	210	
108-60-1	2,2'-Oxybis(1-chloropropane)	U	350	1.0	330	350	94	
98-86-2	Acetophenone	U	630	1.0	600	630	190	
621-64-7	N-Nitroso-di-n-propylamine	U	350	1.0	330	350	87	
65794-96-9	3&4-Methylphenol	U	630	1.0	600	630	200	
67-72-1	Hexachloroethane	U	350	1.0	330	350	100	
98-95-3	Nitrobenzene	U	350	1.0	330	350	96	
78-59-1	Isophorone	U	350	1.0	330	350	79	
88-75-5	2-Nitrophenol	U	630	1.0	600	630	180	
105-67-9	2,4-Dimethylphenol	U	530	1.0	500	530	170	
111-91-1	Bis(2-Chloroethoxy)methane	U	350	1.0	330	350	100	
120-83-2	2,4-Dichlorophenol	U	530	1.0	500	530	160	
106-47-8	4-Chloroaniline	U	530	1.0	500	530	120	
105-60-2	Caprolactam	U	530	1.0	500	530	150	
59-50-7	4-Chloro-3-Methylphenol	U	530	1.0	500	530	170	
88-06-2	2,4,6-Trichlorophenol	U	530	1.0	500	530	160	
95-95-4	2,4,5-Trichlorophenol	U	530	1.0	500	530	160	
91-58-7	2-Chloronaphthalene	U	350	1.0	330	350	92	
92-52-4	1,1'-Biphenyl	U	350	1.0	330	350	77	
88-74-4	2-Nitroaniline	U	530	1.0	500	530	79	
131-11-3	Dimethyl Phthalate	U	350	1.0	330	350	82	
606-20-2	2,6-Dinitrotoluene	U	350	1.0	330	350	83	
208-96-8	Acenaphthylene	U	350	1.0	330	350	74	
99-09-2	3-Nitroaniline	U	530	1.0	500	530	99	
83-32-9	Acenaphthene	U	350	1.0	330	350	68	
51-28-5	2,4-Dinitrophenol	U	1300	1.0	1200	1300	400	
132-64-9	Dibenzofuran	U	350	1.0	330	350	83	
100-02-7	4-Nitrophenol	~~U~~ UJ	1300	1.0	1200	1300	320	CCH
121-14-2	2,4-Dinitrotoluene	U	350	1.0	330	350	89	
84-66-2	Diethylphthalate	U	350	1.0	330	350	84	
7005-72-3	4-Chlorophenyl-phenylether	U	350	1.0	330	350	82	
100-01-6	4-Nitroaniline	~~U~~ UJ	530	1.0	500	530	140	CCH
534-52-1	4,6-Dinitro-2-Methylphenol	U	1300	1.0	1200	1300	350	
86-30-6	N-Nitrosodiphenylamine	U	690	1.0	660	690	230	
101-55-3	4-Bromophenyl-phenylether	U	350	1.0	330	350	89	
1912-24-9	Atrazine	U	350	1.0	330	350	96	
87-86-5	Pentachlorophenol	U	860	1.0	820	860	250	
120-12-7	Anthracene	U	350	1.0	330	350	88	
86-74-8	Carbazole	~~U~~ UJ	530	1.0	500	530	120	CCH

QCW 4/15/09

KATAHDIN ANALYTICAL SERVICES
Report of Analytical Results

Client: CH2MHill
Project: TO-009 Lejeune
PO No:
Sample Date: 01/09/09
Received Date: 01/13/09
Extraction Date: 01/15/09
Analysis Date: 26-JAN-2009 10:19
Report Date: 02/02/2009
Matrix: SOIL
% Solids: 95.0

Lab ID: SC0145-13
Client ID: MR08-IS205-9-10-09A
SDG: TO9-31
Extracted by: AC
Extraction Method: SW846 3550
Analyst: JLP
Analysis Method: SW846 8270C
Lab Prep Batch: WG59814
Units: ug/Kgdrywt

CAS#	Compound	Flags	Results	DF	PQL	Adj.PQL	Adj.MDL
84-74-2	Di-n-butylphthalate	U	350	1.0	330	350	110
85-68-7	Butylbenzylphthalate	U	350	1.0	330	350	98
91-94-1	3,3'-Dichlorobenzidine	U	530	1.0	500	530	120
218-01-9	Chrysene	U	350	1.0	330	350	100
117-81-7	bis(2-Ethylhexyl)phthalate	U	350	1.0	330	350	100
117-84-0	Di-n-octylphthalate	U	350	1.0	330	350	220
367-12-4	2-Fluorophenol		70%				
13127-88-3	Phenol-D6		71%				
4165-60-0	Nitrobenzene-D5		65%				
321-60-8	2-Fluorobiphenyl		73%				
118-79-6	2,4,6-Tribromophenol		59%				
1718-51-0	Terphenyl-D14		81%				

QW 4/15/09

KATAHDIN ANALYTICAL SERVICES
Report of Analytical Results

Client: CH2MHill
Project: TO-009 Lejeune
PO No:
Sample Date: 01/09/09
Received Date: 01/13/09
Extraction Date: 01/15/09
Analysis Date: 26-JAN-2009 11:01
Report Date: 02/02/2009
Matrix: SOIL
% Solids: 75.7

Lab ID: SC0145-15
Client ID: MR08-SS203-09A
SDG: TO9-31
Extracted by: AC
Extraction Method: SW846 3550
Analyst: JLP
Analysis Method: SW846 8270C
Lab Prep Batch: WG59814
Units: ug/Kgdrywt

CAS#	Compound	Flags	Results	DF	PQL	Adj.PQL	Adj.MDL	
100-52-7	Benzaldehyde	U	660	1.0	500	660	160	
108-95-2	Phenol	U	660	1.0	500	660	210	
111-44-4	Bis(2-Chloroethyl)ether	U	440	1.0	330	440	110	
95-57-8	2-Chlorophenol	U	660	1.0	500	660	220	
95-48-7	2-Methylphenol	U	790	1.0	600	790	260	
108-60-1	2,2'-Oxybis(1-chloropropane)	U	440	1.0	330	440	120	
98-86-2	Acetophenone	U	790	1.0	600	790	240	
621-64-7	N-Nitroso-di-n-propylamine	U	440	1.0	330	440	110	
65794-96-9	3&4-Methylphenol	U	790	1.0	600	790	250	
67-72-1	Hexachloroethane	U	440	1.0	330	440	130	
98-95-3	Nitrobenzene	U	440	1.0	330	440	120	
78-59-1	Isophorone	U	440	1.0	330	440	99	
88-75-5	2-Nitrophenol	U	790	1.0	600	790	220	
105-67-9	2,4-Dimethylphenol	U	660	1.0	500	660	220	
111-91-1	Bis(2-Chloroethoxy)methane	U	440	1.0	330	440	130	
120-83-2	2,4-Dichlorophenol	U	660	1.0	500	660	200	
106-47-8	4-Chloroaniline	U	660	1.0	500	660	160	
105-60-2	Caprolactam	U	660	1.0	500	660	190	
59-50-7	4-Chloro-3-Methylphenol	U	660	1.0	500	660	220	
88-06-2	2,4,6-Trichlorophenol	U	660	1.0	500	660	200	
95-95-4	2,4,5-Trichlorophenol	U	660	1.0	500	660	200	
91-58-7	2-Chloronaphthalene	U	440	1.0	330	440	110	
92-52-4	1,1'-Biphenyl	U	440	1.0	330	440	96	
88-74-4	2-Nitroaniline	U	660	1.0	500	660	99	
131-11-3	Dimethyl Phthalate	U	440	1.0	330	440	100	
606-20-2	2,6-Dinitrotoluene	U	440	1.0	330	440	100	
208-96-8	Acenaphthylene	U	440	1.0	330	440	92	
99-09-2	3-Nitroaniline	U	660	1.0	500	660	120	
83-32-9	Acenaphthene	U	440	1.0	330	440	86	
51-28-5	2,4-Dinitrophenol	U	1600	1.0	1200	1600	500	
132-64-9	Dibenzofuran	U	440	1.0	330	440	100	
100-02-7	4-Nitrophenol	~~U~~ UJ	1600	1.0	1200	1600	410	CCH
121-14-2	2,4-Dinitrotoluene	U	440	1.0	330	440	110	
84-66-2	Diethylphthalate	U	440	1.0	330	440	100	
7005-72-3	4-Chlorophenyl-phenylether	U	440	1.0	330	440	100	
100-01-6	4-Nitroaniline	~~U~~ UJ	660	1.0	500	660	180	CCH
534-52-1	4,6-Dinitro-2-Methylphenol	U	1600	1.0	1200	1600	440	
86-30-6	N-Nitrosodiphenylamine	U	870	1.0	660	870	290	
101-55-3	4-Bromophenyl-phenylether	U	440	1.0	330	440	110	
1912-24-9	Atrazine	U	440	1.0	330	440	120	
87-86-5	Pentachlorophenol	U	1100	1.0	820	1100	310	
120-12-7	Anthracene	U	440	1.0	330	440	110	
86-74-8	Carbazole	~~U~~ UJ	660	1.0	500	660	150	CCH

JW 4/15/09

KATAHDIN ANALYTICAL SERVICES
Report of Analytical Results

Client: CH2MHill
Project: TO-009 Lejeune
PO No:
Sample Date: 01/09/09
Received Date: 01/13/09
Extraction Date: 01/15/09
Analysis Date: 26-JAN-2009 11:01
Report Date: 02/02/2009
Matrix: SOIL
% Solids: 75.7

Lab ID: SC0145-15
Client ID: MR08-SS203-09A
SDG: TO9-31
Extracted by: AC
Extraction Method: SW846 3550
Analyst: JLP
Analysis Method: SW846 8270C
Lab Prep Batch: WG59814
Units: ug/Kgdrywt

CAS#	Compound	Flags	Results	DF	PQL	Adj.PQL	Adj.MDL
84-74-2	Di-n-butylphthalate	U	440	1.0	330	440	130
85-68-7	Butylbenzylphthalate	U	440	1.0	330	440	120
91-94-1	3,3'-Dichlorobenzidine	U	660	1.0	500	660	150
218-01-9	Chrysene	U	440	1.0	330	440	120
117-81-7	bis(2-Ethylhexyl)phthalate	J	220	1.0	330	440	130
117-84-0	Di-n-octylphthalate	U	440	1.0	330	440	280
367-12-4	2-Fluorophenol		77%				
13127-88-3	Phenol-D6		75%				
4165-60-0	Nitrobenzene-D5		64%				
321-60-8	2-Fluorobiphenyl		69%				
118-79-6	2,4,6-Tribromophenol		73%				
1718-51-0	Terphenyl-D14		80%				

MW 4/15/09

ENVIRONMENTAL
Data Services, Inc.

POLYNUCLEAR AROMATIC COMPOUNDS BY 8270SIM

USEPA Region IV - Level IV Review

Site: MCB Camp Lejeune, TO-09 SDG #: TO9-32

Client: CH2M HILL, Inc., Virginia Beach, Virginia Date: April 15, 2009

Laboratory: Katahdin Analytical Services, Scarborough, Maine Reviewer: Nancy Weaver

EDS ID	Client Sample ID	Laboratory Sample ID	Matrix
1	MR08-IS183-6-7-09A	SC0146-2	Soil
1MS	MR08-IS183-6-7-09AMS	SC0146-2MS	Soil
1MSD	MR08-IS183-6-7-09AMSD	SC0146-2MSD	Soil
2	MR08-IS203-6-7-09A	SC0146-4	Soil
3	MR08-SS184-09A	SC0146-6	Soil
4	MR08-IS184-8-9-09A	SC0146-8	Soil
5	MR08-SS255-09A	SC0146-10	Soil
6	MR08-IS255-6-7-09A	SC0146-12	Soil
7	MR08-SS276-09A	SC0146-14	Soil
8	MR08-IS276-6-7-09A	SC0146-16	Soil
9	MR08-SS254-09A	SC0146-18	Soil
10	MR08-IS254-3-4-09A	SC0146-20	Soil
11	MR08-SS277-09A	SC0146-22	Soil
12	MR08-IS277-3-4-09A	SC0146-24	Soil
13	MR08-SS278-09A	SC0146-26	Soil
14	MR08-IS278-6-7-09A	SC0146-28	Soil
15	MR08-SS280-09A	SC0146-30	Soil
15DL	MR08-SS280-09ADL	SC0146-30DL	Soil
16	MR08-IS280-7-8-09A	SC0146-32	Soil
17	MR08-SS275-09A	SC0146-34	Soil
18	MR08-IS275-3-4-09	SC0146-36	Soil
19	MR08-SS256-09A	SC0146-38	Soil
19DL	MR08-SS256-09ADL	SC0146-38DL	Soil
20	MR08-IS256-3-4-09A	SC0146-40	Soil

The USEPA "Contract Laboratory Program National Functional Guidelines for Organic Data Review," October 1999, and professional judgment were used in evaluating the data in this summary report.

Holding Times - All samples were extracted within 14 days for soil samples and analyzed within 40 days for all samples.

GC/MS Tuning - All of the DFTPP tunes in the initial and continuing calibrations met the percent relative abundance criteria.

Initial Calibration - The initial calibrations exhibited acceptable %RSD and mean RRF values.

Continuing Calibration - The continuing calibrations exhibited acceptable %D and RRF values except the following.

CCAL Date	Compound	%D/RRF	Qualifier	Affected Samples
01/29/09	2-Methylnaphthalene	27.45%	J/UJ	13-20
	Hexachlorobutadiene	25.72%	J/UJ	13-20
01/31/09	2-Methylnaphthalene	38.89%	J/UJ	11
	Fluoranthene	37.81%	J/UJ	11
	Hexachlorobutadiene	89.08%	J/UJ	11
	Hexachlorocyclopentadiene	177.93%	J/UJ	11

Surrogates - All samples exhibited acceptable surrogate recoveries.

MS/MSD - The MS/MSD sample exhibited acceptable %R and RPD values.

Laboratory Control Sample - The LCS samples exhibited acceptable %R values.

Internal Standard (IS) Area Performance - All internal standards met response and retention time (RT) criteria.

Method Blank - The method blanks were free of contamination.

Field, Equipment Blank - Field QC results are summarized below.

Blank ID	Compound	Conc. ug/L	Action Level ug/kg	Qualifier	Affected Samples
MR08-FB01011009	None - ND	-	-	-	-
MR08-EB01010909-SS	None - ND	-	-	-	-
MR08-EB01010909-IS	None - ND	-	-	-	-

Field Duplicates - Field duplicate samples were not included in this data package.

Compound Quantitation - Several samples exhibited high concentrations of target compounds and were flagged (E) by the laboratory. The samples were diluted and reanalyzed and the dilution results for these compounds should be used for reporting.

KATAHDIN ANALYTICAL SERVICES
Report of Analytical Results

Client: CH2MHill
Project: TO-009 Lejeune
PO No:
Sample Date: 01/09/09
Received Date: 01/13/09
Extraction Date: 01/15/09
Analysis Date: 30-JAN-2009 18:02
Report Date: 02/02/2009
Matrix: SOIL
% Solids: 97.2

Lab ID: SC0146-2
Client ID: 08-IS183-6-7-09A
SDG: TO9-32
Extracted by: AC
Extraction Method: SW846 3550
Analyst: JCG
Analysis Method: SW846 M8270C
Lab Prep Batch: WG59815
Units: ug/Kgdrywt

CAS#	Compound	Flags	Results	DF	PQL	Adj.PQL	Adj.MDL
91-20-3	Naphthalene	U	10	1.0	10	10	2.7
91-57-6	2-Methylnaphthalene	U	10	1.0	10	10	2.3
86-73-7	Fluorene	U	10	1.0	10	10	3.3
85-01-8	Phenanthrene	U	10	1.0	10	10	1.8
206-44-0	Fluoranthene	U	10	1.0	10	10	1.8
129-00-0	Pyrene	U	10	1.0	10	10	2.2
56-55-3	Benzo(a)anthracene	U	10	1.0	10	10	2.0
205-99-2	Benzo(b)fluoranthene	U	10	1.0	10	10	2.5
207-08-9	Benzo(k)fluoranthene	U	10	1.0	10	10	3.2
50-32-8	Benzo(a)pyrene	U	10	1.0	10	10	3.4
193-39-5	Indeno(1,2,3-cd)pyrene	U	10	1.0	10	10	2.0
53-70-3	Dibenzo(a,h)anthracene	U	10	1.0	10	10	1.8
191-24-2	Benzo(g,h,i)perylene	U	10	1.0	10	10	2.0
118-74-1	Hexachlorobenzene	U	10	1.0	10	10	1.8
87-68-3	Hexachlorobutadiene	U	10	1.0	10	10	2.4
77-47-4	Hexachlorocyclopentadiene	U	10	1.0	10	10	1.5
7297-45-2	2-Methylnaphthalene-D10		76%				
367-12-4	2,4-Dibromophenol		95%				
81103-79-9	Fluorene-d10		98%				
1718-51-1	Pyrene-D10		101%				

RW
4/15/09

2

KATAHDIN ANALYTICAL SERVICES
Report of Analytical Results

Client: CH2MHill
Project: TO-009 Lejeune
PO No:
Sample Date: 01/09/09
Received Date: 01/13/09
Extraction Date: 01/15/09
Analysis Date: 30-JAN-2009 18:42
Report Date: 02/02/2009
Matrix: SOIL
% Solids: 81.1

Lab ID: SC0146-4
Client ID: MR08-IS203-6-7-09A
SDG: TO9-32
Extracted by: AC
Extraction Method: SW846 3550
Analyst: JCG
Analysis Method: SW846 M8270C
Lab Prep Batch: WG59815
Units: ug/Kgdrywt

CAS#	Compound	Flags	Results	DF	PQL	Adj.PQL	Adj.MDL
91-20-3	Naphthalene	U	12	1.0	10	12	3.2
91-57-6	2-Methylnaphthalene	U	12	1.0	10	12	2.7
86-73-7	Fluorene	U	12	1.0	10	12	3.9
85-01-8	Phenanthrene	U	12	1.0	10	12	2.2
206-44-0	Fluoranthene	U	12	1.0	10	12	2.2
129-00-0	Pyrene	U	12	1.0	10	12	2.6
56-55-3	Benzo(a)anthracene	U	12	1.0	10	12	2.3
205-99-2	Benzo(b)fluoranthene	U	12	1.0	10	12	3.0
207-08-9	Benzo(k)fluoranthene	U	12	1.0	10	12	3.8
50-32-8	Benzo(a)pyrene	U	12	1.0	10	12	4.1
193-39-5	Indeno(1,2,3-cd)pyrene	U	12	1.0	10	12	2.3
53-70-3	Dibenzo(a,h)anthracene	U	12	1.0	10	12	2.2
191-24-2	Benzo(g,h,i)perylene	U	12	1.0	10	12	2.5
118-74-1	Hexachlorobenzene	U	12	1.0	10	12	2.2
87-68-3	Hexachlorobutadiene	U	12	1.0	10	12	2.8
77-47-4	Hexachlorocyclopentadiene	U	12	1.0	10	12	1.8
7297-45-2	2-Methylnaphthalene-D10		86%				
367-12-4	2,4-Dibromophenol		82%				
81103-79-9	Fluorene-d10		92%				
1718-51-1	Pyrene-D10		96%				

MW
4/15/09

3

KATAHDIN ANALYTICAL SERVICES
Report of Analytical Results

Client: CH2MHill
Project: TO-009 Lejeune
PO No:
Sample Date: 01/09/09
Received Date: 01/13/09
Extraction Date: 01/15/09
Analysis Date: 30-JAN-2009 23:24
Report Date: 02/02/2009
Matrix: SOIL
% Solids: 87.2

Lab ID: SC0146-6
Client ID: MR08-SS184-09A
SDG: TO9-32
Extracted by: AC
Extraction Method: SW846 3550
Analyst: JCG
Analysis Method: SW846 M8270C
Lab Prep Batch: WG59815
Units: ug/Kgdrywt

CAS#	Compound	Flags	Results	DF	PQL	Adj.PQL	Adj.MDL
91-20-3	Naphthalene	U	11	1.0	10	11	3.0
91-57-6	2-Methylnaphthalene	U	11	1.0	10	11	2.5
86-73-7	Fluorene	U	11	1.0	10	11	3.7
85-01-8	Phenanthrene		14	1.0	10	11	2.1
206-44-0	Fluoranthene		66	1.0	10	11	2.1
129-00-0	Pyrene		49	1.0	10	11	2.4
56-55-3	Benzo(a)anthracene		28	1.0	10	11	2.2
205-99-2	Benzo(b)fluoranthene		59	1.0	10	11	2.8
207-08-9	Benzo(k)fluoranthene		34	1.0	10	11	3.6
50-32-8	Benzo(a)pyrene		36	1.0	10	11	3.8
193-39-5	Indeno(1,2,3-cd)pyrene		24	1.0	10	11	2.2
53-70-3	Dibenzo(a,h)anthracene	J	7.6	1.0	10	11	2.1
191-24-2	Benzo(g,h,i)perylene		26	1.0	10	11	2.3
118-74-1	Hexachlorobenzene	U	11	1.0	10	11	2.1
87-68-3	Hexachlorobutadiene	U	11	1.0	10	11	2.6
77-47-4	Hexachlorocyclopentadiene	U	11	1.0	10	11	1.7
7297-45-2	2-Methylnaphthalene-D10		91%				
367-12-4	2,4-Dibromophenol		91%				
81103-79-9	Fluorene-d10		91%				
1718-51-1	Pyrene-D10		103%				

lw
4/15/09

KATAHDIN ANALYTICAL SERVICES
Report of Analytical Results

Client: CH2MHill
Project: TO-009 Lejeune
PO No:
Sample Date: 01/09/09
Received Date: 01/13/09
Extraction Date: 01/15/09
Analysis Date: 30-JAN-2009 19:23
Report Date: 02/02/2009
Matrix: SOIL
% Solids: 86.3

Lab ID: SC0146-8
Client ID: MR08-IS184-8-9-09A
SDG: TO9-32
Extracted by: AC
Extraction Method: SW846 3550
Analyst: JCG
Analysis Method: SW846 M8270C
Lab Prep Batch: WG59815
Units: ug/Kgdrywt

CAS#	Compound	Flags	Results	DF	PQL	Adj.PQL	Adj.MDL
91-20-3	Naphthalene	U	12	1.0	10	12	3.0
91-57-6	2-Methylnaphthalene	U	12	1.0	10	12	2.5
86-73-7	Fluorene	U	12	1.0	10	12	3.7
85-01-8	Phenanthrene	U	12	1.0	10	12	2.1
206-44-0	Fluoranthene	U	12	1.0	10	12	2.1
129-00-0	Pyrene	U	12	1.0	10	12	2.4
56-55-3	Benzo(a)anthracene	U	12	1.0	10	12	2.2
205-99-2	Benzo(b)fluoranthene	U	12	1.0	10	12	2.8
207-08-9	Benzo(k)fluoranthene	U	12	1.0	10	12	3.6
50-32-8	Benzo(a)pyrene	U	12	1.0	10	12	3.8
193-39-5	Indeno(1,2,3-cd)pyrene	U	12	1.0	10	12	2.2
53-70-3	Dibenzo(a,h)anthracene	U	12	1.0	10	12	2.1
191-24-2	Benzo(g,h,i)perylene	U	12	1.0	10	12	2.3
118-74-1	Hexachlorobenzene	U	12	1.0	10	12	2.1
87-68-3	Hexachlorobutadiene	U	12	1.0	10	12	2.7
77-47-4	Hexachlorocyclopentadiene	U	12	1.0	10	12	1.7
7297-45-2	2-Methylnaphthalene-D10		87%				
367-12-4	2,4-Dibromophenol		83%				
81103-79-9	Fluorene-d10		90%				
1718-51-1	Pyrene-D10		94%				

lw
4/15/09

KATAHDIN ANALYTICAL SERVICES
Report of Analytical Results

Client: CH2MHill
Project: TO-009 Lejeune
PO No:
Sample Date: 01/09/09
Received Date: 01/13/09
Extraction Date: 01/15/09
Analysis Date: 31-JAN-2009 02:45
Report Date: 02/02/2009
Matrix: SOIL
% Solids: 94.4

Lab ID: SC0146-10
Client ID: MR08-SS255-09A
SDG: TO9-32
Extracted by: AC
Extraction Method: SW846 3550
Analyst: JCG
Analysis Method: SW846 M8270C
Lab Prep Batch: WG59815
Units: ug/Kgdrywt

CAS#	Compound	Flags	Results	DF	PQL	Adj.PQL	Adj.MDL
91-20-3	Naphthalene	U	10	1.0	10	10	2.8
91-57-6	2-Methylnaphthalene	U	10	1.0	10	10	2.3
86-73-7	Fluorene	J	9.4	1.0	10	10	3.4
85-01-8	Phenanthrene		160	1.0	10	10	1.9
206-44-0	Fluoranthene		180	1.0	10	10	1.9
129-00-0	Pyrene		130	1.0	10	10	2.2
56-55-3	Benzo(a)anthracene		33	1.0	10	10	2.0
205-99-2	Benzo(b)fluoranthene		30	1.0	10	10	2.5
207-08-9	Benzo(k)fluoranthene		18	1.0	10	10	3.3
50-32-8	Benzo(a)pyrene		37	1.0	10	10	3.5
193-39-5	Indeno(1,2,3-cd)pyrene		18	1.0	10	10	2.0
53-70-3	Dibenzo(a,h)anthracene	U	10	1.0	10	10	1.9
191-24-2	Benzo(g,h,i)perylene		51	1.0	10	10	2.1
118-74-1	Hexachlorobenzene	U	10	1.0	10	10	1.9
87-68-3	Hexachlorobutadiene	U	10	1.0	10	10	2.4
77-47-4	Hexachlorocyclopentadiene	U	10	1.0	10	10	1.6
7297-45-2	2-Methylnaphthalene-D10		125%				
367-12-4	2,4-Dibromophenol		115%				
81103-79-9	Fluorene-d10		113%				
1718-51-1	Pyrene-D10		134%				

LW
4/15/09

6

KATAHDIN ANALYTICAL SERVICES
Report of Analytical Results

Client: CH2MHill
Project: TO-009 Lejeune
PO No:
Sample Date: 01/09/09
Received Date: 01/13/09
Extraction Date: 01/15/09
Analysis Date: 30-JAN-2009 20:03
Report Date: 02/02/2009
Matrix: SOIL
% Solids: 80.1

Lab ID: SC0146-12
Client ID: MR08-IS255-6-7-09A
SDG: TO9-32
Extracted by: AC
Extraction Method: SW846 3550
Analyst: JCG
Analysis Method: SW846 M8270C
Lab Prep Batch: WG59815
Units: ug/Kgdrywt

CAS#	Compound	Flags	Results	DF	PQL	Adj.PQL	Adj.MDL
91-20-3	Naphthalene	U	12	1.0	10	12	3.2
91-57-6	2-Methylnaphthalene	U	12	1.0	10	12	2.7
86-73-7	Fluorene	U	12	1.0	10	12	4.0
85-01-8	Phenanthrene	U	12	1.0	10	12	2.2
206-44-0	Fluoranthene	U	12	1.0	10	12	2.2
129-00-0	Pyrene	U	12	1.0	10	12	2.6
56-55-3	Benzo(a)anthracene	U	12	1.0	10	12	2.4
205-99-2	Benzo(b)fluoranthene	U	12	1.0	10	12	3.0
207-08-9	Benzo(k)fluoranthene	U	12	1.0	10	12	3.9
50-32-8	Benzo(a)pyrene	U	12	1.0	10	12	4.1
193-39-5	Indeno(1,2,3-cd)pyrene	U	12	1.0	10	12	2.4
53-70-3	Dibenzo(a,h)anthracene	U	12	1.0	10	12	2.2
191-24-2	Benzo(g,h,i)perylene	U	12	1.0	10	12	2.5
118-74-1	Hexachlorobenzene	U	12	1.0	10	12	2.2
87-68-3	Hexachlorobutadiene	U	12	1.0	10	12	2.9
77-47-4	Hexachlorocyclopentadiene	U	12	1.0	10	12	1.9
7297-45-2	2-Methylnaphthalene-D10		96%				
367-12-4	2,4-Dibromophenol		88%				
81103-79-9	Fluorene-d10		92%				
1718-51-1	Pyrene-D10		103%				

lew
4/15/09

7

KATAHDIN ANALYTICAL SERVICES
Report of Analytical Results

Client: CH2MHill
Project: TO-009 Lejeune
PO No:
Sample Date: 01/09/09
Received Date: 01/13/09
Extraction Date: 01/15/09
Analysis Date: 31-JAN-2009 02:05
Report Date: 02/02/2009
Matrix: SOIL
% Solids: 91.4

Lab ID: SC0146-14
Client ID: MR08-SS276-09A
SDG: TO9-32
Extracted by: AC
Extraction Method: SW846 3550
Analyst: JCG
Analysis Method: SW846 M8270C
Lab Prep Batch: WG59815
Units: ug/Kgdrywt

CAS#	Compound	Flags	Results	DF	PQL	Adj.PQL	Adj.MDL
91-20-3	Naphthalene	U	11	1.0	10	11	2.8
91-57-6	2-Methylnaphthalene	U	11	1.0	10	11	2.4
86-73-7	Fluorene	U	11	1.0	10	11	3.5
85-01-8	Phenanthrene		27	1.0	10	11	2.0
206-44-0	Fluoranthene		33	1.0	10	11	2.0
129-00-0	Pyrene		26	1.0	10	11	2.3
56-55-3	Benzo(a)anthracene		11	1.0	10	11	2.1
205-99-2	Benzo(b)fluoranthene		16	1.0	10	11	2.6
207-08-9	Benzo(k)fluoranthene	J	8.6	1.0	10	11	3.4
50-32-8	Benzo(a)pyrene		21	1.0	10	11	3.6
193-39-5	Indeno(1,2,3-cd)pyrene	J	9.1	1.0	10	11	2.1
53-70-3	Dibenzo(a,h)anthracene	U	11	1.0	10	11	2.0
191-24-2	Benzo(g,h,i)perylene		25	1.0	10	11	2.2
118-74-1	Hexachlorobenzene	U	11	1.0	10	11	2.0
87-68-3	Hexachlorobutadiene	U	11	1.0	10	11	2.5
77-47-4	Hexachlorocyclopentadiene	U	11	1.0	10	11	1.6
7297-45-2	2-Methylnaphthalene-D10		107%				
367-12-4	2,4-Dibromophenol		104%				
81103-79-9	Fluorene-d10		108%				
1718-51-1	Pyrene-D10		104%				

DW
4/15/09

8

KATAHDIN ANALYTICAL SERVICES
Report of Analytical Results

Client: CH2MHill
Project: TO-009 Lejeune
PO No:
Sample Date: 01/09/09
Received Date: 01/13/09
Extraction Date: 01/15/09
Analysis Date: 30-JAN-2009 20:43
Report Date: 02/02/2009
Matrix: SOIL
% Solids: 87.4

Lab ID: SC0146-16
Client ID: MR08-IS276-6-7-09A
SDG: TO9-32
Extracted by: AC
Extraction Method: SW846 3550
Analyst: JCG
Analysis Method: SW846 M8270C
Lab Prep Batch: WG59815
Units: ug/Kgdrywt

CAS#	Compound	Flags	Results	DF	PQL	Adj.PQL	Adj.MDL
91-20-3	Naphthalene	U	11	1.0	10	11	3.0
91-57-6	2-Methylnaphthalene	U	11	1.0	10	11	2.5
86-73-7	Fluorene	U	11	1.0	10	11	3.6
85-01-8	Phenanthrene	U	11	1.0	10	11	2.0
206-44-0	Fluoranthene	U	11	1.0	10	11	2.0
129-00-0	Pyrene	U	11	1.0	10	11	2.4
56-55-3	Benzo(a)anthracene	U	11	1.0	10	11	2.2
205-99-2	Benzo(b)fluoranthene	U	11	1.0	10	11	2.7
207-08-9	Benzo(k)fluoranthene	U	11	1.0	10	11	3.5
50-32-8	Benzo(a)pyrene	U	11	1.0	10	11	3.8
193-39-5	Indeno(1,2,3-cd)pyrene	U	11	1.0	10	11	2.2
53-70-3	Dibenzo(a,h)anthracene	U	11	1.0	10	11	2.0
191-24-2	Benzo(g,h,i)perylene	U	11	1.0	10	11	2.3
118-74-1	Hexachlorobenzene	U	11	1.0	10	11	2.0
87-68-3	Hexachlorobutadiene	U	11	1.0	10	11	2.6
77-47-4	Hexachlorocyclopentadiene	U	11	1.0	10	11	1.7
7297-45-2	2-Methylnaphthalene-D10		94%				
367-12-4	2,4-Dibromophenol		98%				
81103-79-9	Fluorene-d10		95%				
1718-51-1	Pyrene-D10		97%				

lw
4/15/09

KATAHDIN ANALYTICAL SERVICES
Report of Analytical Results

Client: CH2MHill
Project: TO-009 Lejeune
PO No:
Sample Date: 01/09/09
Received Date: 01/13/09
Extraction Date: 01/15/09
Analysis Date: 30-JAN-2009 22:44
Report Date: 02/02/2009
Matrix: SOIL
% Solids: 86.5

Lab ID: SC0146-18
Client ID: MR08-SS254-09A
SDG: TO9-32
Extracted by: AC
Extraction Method: SW846 3550
Analyst: JCG
Analysis Method: SW846 M8270C
Lab Prep Batch: WG59815
Units: ug/Kgdrywt

CAS#	Compound	Flags	Results	DF	PQL	Adj.PQL	Adj.MDL
91-20-3	Naphthalene	U	12	1.0	10	12	3.0
91-57-6	2-Methylnaphthalene	U	12	1.0	10	12	2.5
86-73-7	Fluorene	U	12	1.0	10	12	3.7
85-01-8	Phenanthrene	J	8.8	1.0	10	12	2.1
206-44-0	Fluoranthene		34	1.0	10	12	2.1
129-00-0	Pyrene		23	1.0	10	12	2.4
56-55-3	Benzo(a)anthracene		14	1.0	10	12	2.2
205-99-2	Benzo(b)fluoranthene		24	1.0	10	12	2.8
207-08-9	Benzo(k)fluoranthene		16	1.0	10	12	3.6
50-32-8	Benzo(a)pyrene		14	1.0	10	12	3.8
193-39-5	Indeno(1,2,3-cd)pyrene	J	8.4	1.0	10	12	2.2
53-70-3	Dibenzo(a,h)anthracene	U	12	1.0	10	12	2.1
191-24-2	Benzo(g,h,i)perylene	J	8.4	1.0	10	12	2.3
118-74-1	Hexachlorobenzene	U	12	1.0	10	12	2.1
87-68-3	Hexachlorobutadiene	U	12	1.0	10	12	2.6
77-47-4	Hexachlorocyclopentadiene	U	12	1.0	10	12	1.7
7297-45-2	2-Methylnaphthalene-D10		84%				
367-12-4	2,4-Dibromophenol		87%				
81103-79-9	Fluorene-d10		92%				
1718-51-1	Pyrene-D10		89%				

LW
4/15/09

KATAHDIN ANALYTICAL SERVICES
Report of Analytical Results

Client: CH2MHill
Project: TO-009 Lejeune
PO No:
Sample Date: 01/09/09
Received Date: 01/13/09
Extraction Date: 01/15/09
Analysis Date: 30-JAN-2009 21:24
Report Date: 02/02/2009
Matrix: SOIL
% Solids: 88.6

Lab ID: SC0146-20
Client ID: MR08-IS254-3-4-09A
SDG: TO9-32
Extracted by: AC
Extraction Method: SW846 3550
Analyst: JCG
Analysis Method: SW846 M8270C
Lab Prep Batch: WG59815
Units: ug/Kgdrywt

CAS#	Compound	Flags	Results	DF	PQL	Adj.PQL	Adj.MDL
91-20-3	Naphthalene	U	11	1.0	10	11	2.9
91-57-6	2-Methylnaphthalene	U	11	1.0	10	11	2.5
86-73-7	Fluorene	U	11	1.0	10	11	3.6
85-01-8	Phenanthrene	U	11	1.0	10	11	2.0
206-44-0	Fluoranthene	U	11	1.0	10	11	2.0
129-00-0	Pyrene	U	11	1.0	10	11	2.4
56-55-3	Benzo(a)anthracene	U	11	1.0	10	11	2.1
205-99-2	Benzo(b)fluoranthene	U	11	1.0	10	11	2.7
207-08-9	Benzo(k)fluoranthene	U	11	1.0	10	11	3.5
50-32-8	Benzo(a)pyrene	U	11	1.0	10	11	3.7
193-39-5	Indeno(1,2,3-cd)pyrene	U	11	1.0	10	11	2.1
53-70-3	Dibenzo(a,h)anthracene	U	11	1.0	10	11	2.0
191-24-2	Benzo(g,h,i)perylene	U	11	1.0	10	11	2.2
118-74-1	Hexachlorobenzene	U	11	1.0	10	11	2.0
87-68-3	Hexachlorobutadiene	U	11	1.0	10	11	2.6
77-47-4	Hexachlorocyclopentadiene	U	11	1.0	10	11	1.7
7297-45-2	2-Methylnaphthalene-D10		100%				
367-12-4	2,4-Dibromophenol		102%				
81103-79-9	Fluorene-d10		96%				
1718-51-1	Pyrene-D10		109%				

LW
4/15/09

11

KATAHDIN ANALYTICAL SERVICES
Report of Analytical Results

Client: CH2MHill
Project: TO-009 Lejeune
PO No:
Sample Date: 01/09/09
Received Date: 01/13/09
Extraction Date: 01/15/09
Analysis Date: 31-JAN-2009 17:23
Report Date: 02/02/2009
Matrix: SOIL
% Solids: 90.6

Lab ID: SC0146-22RA
Client ID: MR08-SS277-09A
SDG: TO9-32
Extracted by: AC
Extraction Method: SW846 3550
Analyst: JCG
Analysis Method: SW846 M8270C
Lab Prep Batch: WG59815
Units: ug/Kgdrywt

CAS#	Compound	Flags		Results	DF	PQL	Adj.PQL	Adj.MDL	
91-20-3	Naphthalene	U		11	1.0	10	11	2.9	
91-57-6	2-Methylnaphthalene	~~U~~	UJ	11	1.0	10	11	2.4	CCH
86-73-7	Fluorene	U		11	1.0	10	11	3.5	
85-01-8	Phenanthrene	J		8.2	1.0	10	11	2.0	
206-44-0	Fluoranthene		J	41	1.0	10	11	2.0	CCH
129-00-0	Pyrene			34	1.0	10	11	2.3	
56-55-3	Benzo(a)anthracene			16	1.0	10	11	2.1	
205-99-2	Benzo(b)fluoranthene	U		11	1.0	10	11	2.6	
207-08-9	Benzo(k)fluoranthene	U		11	1.0	10	11	3.4	
50-32-8	Benzo(a)pyrene			18	1.0	10	11	3.6	
193-39-5	Indeno(1,2,3-cd)pyrene			11	1.0	10	11	2.1	
53-70-3	Dibenzo(a,h)anthracene	U		11	1.0	10	11	2.0	
191-24-2	Benzo(g,h,i)perylene			23	1.0	10	11	2.2	
118-74-1	Hexachlorobenzene	U		11	1.0	10	11	2.0	
87-68-3	Hexachlorobutadiene	~~U~~	UJ	11	1.0	10	11	2.5	CCH
77-47-4	Hexachlorocyclopentadiene	~~U~~	UJ	11	1.0	10	11	1.6	CCH
7297-45-2	2-Methylnaphthalene-D10			91%					
367-12-4	2,4-Dibromophenol			100%					
81103-79-9	Fluorene-d10			90%					
1718-51-1	Pyrene-D10			102%					

lw
4/15/09

KATAHDIN ANALYTICAL SERVICES
Report of Analytical Results

Client: CH2MHill
Project: TO-009 Lejeune
PO No:
Sample Date: 01/09/09
Received Date: 01/13/09
Extraction Date: 01/15/09
Analysis Date: 30-JAN-2009 22:04
Report Date: 02/02/2009
Matrix: SOIL
% Solids: 88.1

Lab ID: SC0146-24
Client ID: MR08-IS277-3-4-09A
SDG: TO9-32
Extracted by: AC
Extraction Method: SW846 3550
Analyst: JCG
Analysis Method: SW846 M8270C
Lab Prep Batch: WG59815
Units: ug/Kgdrywt

CAS#	Compound	Flags	Results	DF	PQL	Adj.PQL	Adj.MDL
91-20-3	Naphthalene	U	11	1.0	10	11	3.0
91-57-6	2-Methylnaphthalene	U	11	1.0	10	11	2.5
86-73-7	Fluorene	U	11	1.0	10	11	3.6
85-01-8	Phenanthrene	U	11	1.0	10	11	2.0
206-44-0	Fluoranthene	J	3.0	1.0	10	11	2.0
129-00-0	Pyrene	U	11	1.0	10	11	2.4
56-55-3	Benzo(a)anthracene	U	11	1.0	10	11	2.2
205-99-2	Benzo(b)fluoranthene	U	11	1.0	10	11	2.7
207-08-9	Benzo(k)fluoranthene	U	11	1.0	10	11	3.5
50-32-8	Benzo(a)pyrene	U	11	1.0	10	11	3.7
193-39-5	Indeno(1,2,3-cd)pyrene	U	11	1.0	10	11	2.2
53-70-3	Dibenzo(a,h)anthracene	U	11	1.0	10	11	2.0
191-24-2	Benzo(g,h,i)perylene	U	11	1.0	10	11	2.3
118-74-1	Hexachlorobenzene	U	11	1.0	10	11	2.0
87-68-3	Hexachlorobutadiene	U	11	1.0	10	11	2.6
77-47-4	Hexachlorocyclopentadiene	U	11	1.0	10	11	1.7
7297-45-2	2-Methylnaphthalene-D10		82%				
367-12-4	2,4-Dibromophenol		71%				
81103-79-9	Fluorene-d10		86%				
1718-51-1	Pyrene-D10		90%				

MW
4/15/09

KATAHDIN ANALYTICAL SERVICES
Report of Analytical Results

Client: CH2MHill
Project: TO-009 Lejeune
PO No:
Sample Date: 01/09/09
Received Date: 01/13/09
Extraction Date: 01/15/09
Analysis Date: 29-JAN-2009 23:13
Report Date: 02/02/2009
Matrix: SOIL
% Solids: 84.9

Lab ID: SC0146-26
Client ID: MR08-SS278-09A
SDG: TO9-32
Extracted by: AC
Extraction Method: SW846 3550
Analyst: JCG
Analysis Method: SW846 M8270C
Lab Prep Batch: WG59836
Units: ug/Kgdrywt

CAS#	Compound	Flags	Results	DF	PQL	Adj.PQL	Adj.MDL	
91-20-3	Naphthalene	U	12	1.0	10	12	3.1	
91-57-6	2-Methylnaphthalene	~~U~~ UJ	12	1.0	10	12	2.6	CCH
86-73-7	Fluorene	U	12	1.0	10	12	3.8	
85-01-8	Phenanthrene		37	1.0	10	12	2.1	
206-44-0	Fluoranthene		140	1.0	10	12	2.1	
129-00-0	Pyrene		120	1.0	10	12	2.5	
56-55-3	Benzo(a)anthracene		67	1.0	10	12	2.2	
205-99-2	Benzo(b)fluoranthene		160	1.0	10	12	2.8	
207-08-9	Benzo(k)fluoranthene		66	1.0	10	12	3.6	
50-32-8	Benzo(a)pyrene		78	1.0	10	12	3.9	
193-39-5	Indeno(1,2,3-cd)pyrene		54	1.0	10	12	2.2	
53-70-3	Dibenzo(a,h)anthracene		21	1.0	10	12	2.1	
191-24-2	Benzo(g,h,i)perylene		50	1.0	10	12	2.4	
118-74-1	Hexachlorobenzene	U	12	1.0	10	12	2.1	
87-68-3	Hexachlorobutadiene	~~U~~ UJ	12	1.0	10	12	2.7	CCH
77-47-4	Hexachlorocyclopentadiene	U	12	1.0	10	12	1.8	
7297-45-2	2-Methylnaphthalene-D10		72%					
367-12-4	2,4-Dibromophenol		81%					
81103-79-9	Fluorene-d10		82%					
1718-51-1	Pyrene-D10		78%					

RW
4/15/09

14

KATAHDIN ANALYTICAL SERVICES
Report of Analytical Results

Client: CH2MHill
Project: TO-009 Lejeune
PO No:
Sample Date: 01/09/09
Received Date: 01/13/09
Extraction Date: 01/15/09
Analysis Date: 29-JAN-2009 19:12
Report Date: 02/02/2009
Matrix: SOIL
% Solids: 89.2

Lab ID: SC0146-28
Client ID: MR08-IS278-6-7-09A
SDG: TO9-32
Extracted by: AC
Extraction Method: SW846 3550
Analyst: JCG
Analysis Method: SW846 M8270C
Lab Prep Batch: WG59836
Units: ug/Kgdrywt

CAS#	Compound	Flags	Results	DF	PQL	Adj.PQL	Adj.MDL	
91-20-3	Naphthalene	U	11	1.0	10	11	2.9	
91-57-6	2-Methylnaphthalene	~~U~~ UJ	11	1.0	10	11	2.5	CCH
86-73-7	Fluorene	U	11	1.0	10	11	3.6	
85-01-8	Phenanthrene	U	11	1.0	10	11	2.0	
206-44-0	Fluoranthene	U	11	1.0	10	11	2.0	
129-00-0	Pyrene	U	11	1.0	10	11	2.4	
56-55-3	Benzo(a)anthracene	U	11	1.0	10	11	2.1	
205-99-2	Benzo(b)fluoranthene	U	11	1.0	10	11	2.7	
207-08-9	Benzo(k)fluoranthene	U	11	1.0	10	11	3.5	
50-32-8	Benzo(a)pyrene	U	11	1.0	10	11	3.7	
193-39-5	Indeno(1,2,3-cd)pyrene	U	11	1.0	10	11	2.1	
53-70-3	Dibenzo(a,h)anthracene	U	11	1.0	10	11	2.0	
191-24-2	Benzo(g,h,i)perylene	U	11	1.0	10	11	2.2	
118-74-1	Hexachlorobenzene	U	11	1.0	10	11	2.0	
87-68-3	Hexachlorobutadiene	~~U~~ UJ	11	1.0	10	11	2.6	CCH
77-47-4	Hexachlorocyclopentadiene	U	11	1.0	10	11	1.7	
7297-45-2	2-Methylnaphthalene-D10		71%					
367-12-4	2,4-Dibromophenol		84%					
81103-79-9	Fluorene-d10		88%					
1718-51-1	Pyrene-D10		74%					

kw
4/15/09

KATAHDIN ANALYTICAL SERVICES
Report of Analytical Results

Client: CH2MHill
Project: TO-009 Lejeune
PO No:
Sample Date: 01/10/09
Received Date: 01/13/09
Extraction Date: 01/15/09
Analysis Date: 29-JAN-2009 21:53
Report Date: 02/02/2009
Matrix: SOIL
% Solids: 92.2

Lab ID: SC0146-30
Client ID: MR08-SS280-09A
SDG: TO9-32
Extracted by: AC
Extraction Method: SW846 3550
Analyst: JCG
Analysis Method: SW846 M8270C
Lab Prep Batch: WG59836
Units: ug/Kgdrywt

CAS#	Compound	Flags	Results	DF	PQL	Adj.PQL	Adj.MDL	
91-20-3	Naphthalene	U	11	1.0	10	11	2.8	
91-57-6	2-Methylnaphthalene	~~U~~ UJ	11	1.0	10	11	2.4	CCH
86-73-7	Fluorene	U	11	1.0	10	11	3.5	
85-01-8	Phenanthrene		85	1.0	10	11	2.0	
206-44-0	Fluoranthene	~~E~~	490 ~~390~~	2.1.0	10	22 ~~11~~	3.9 ~~2.0~~	R DL
129-00-0	Pyrene	~~E~~	360 ~~330~~	2.1.0	10	22 ~~11~~	4.6 ~~2.3~~	R DL
56-55-3	Benzo(a)anthracene		170	1.0	10	11	2.1	
205-99-2	Benzo(b)fluoranthene	~~E~~	380 ~~310~~	2.1.0	10	22 ~~11~~	5.2 ~~2.6~~	R DL
207-08-9	Benzo(k)fluoranthene		220	1.0	10	11	3.4	
50-32-8	Benzo(a)pyrene		190	1.0	10	11	3.6	
193-39-5	Indeno(1,2,3-cd)pyrene		130	1.0	10	11	2.1	
53-70-3	Dibenzo(a,h)anthracene		41	1.0	10	11	2.0	
191-24-2	Benzo(g,h,i)perylene		120	1.0	10	11	2.2	
118-74-1	Hexachlorobenzene	U	11	1.0	10	11	2.0	
87-68-3	Hexachlorobutadiene	~~U~~ UJ	11	1.0	10	11	2.5	CCH
77-47-4	Hexachlorocyclopentadiene	U	11	1.0	10	11	1.6	
7297-45-2	2-Methylnaphthalene-D10		79%					
367-12-4	2,4-Dibromophenol		81%					
81103-79-9	Fluorene-d10		88%					
1718-51-1	Pyrene-D10		69%					

lw
4/15/09

15DL

KATAHDIN ANALYTICAL SERVICES
Report of Analytical Results

Client: CH2MHill
Project: TO-009 Lejeune
PO No:
Sample Date: 01/10/09
Received Date: 01/13/09
Extraction Date: 01/15/09
Analysis Date: 31-JAN-2009 00:04
Report Date: 02/02/2009
Matrix: SOIL
% Solids: 92.2

Lab ID: SC0146-30DL
Client ID: MR08-SS280-09A
SDG: TO9-32
Extracted by: AC
Extraction Method: SW846 3550
Analyst: JCG
Analysis Method: SW846 M8270C
Lab Prep Batch: WG59836
Units: ug/Kgdrywt

Use original

CAS#	Compound	Flags	Results	DF	PQL	Adj.PQL	Adj.MDL
91-20-3	Naphthalene	U	22	2.0	10	22	5.6
91-57-6	2-Methylnaphthalene	U	22	2.0	10	22	4.8
86-73-7	Fluorene	U	22	2.0	10	22	6.9
85-01-8	Phenanthrene		90	2.0	10	22	3.9
206-44-0	Fluoranthene		490	2.0	10	22	3.9
129-00-0	Pyrene		360	2.0	10	22	4.6
56-55-3	Benzo(a)anthracene		210	2.0	10	22	4.1
205-99-2	Benzo(b)fluoranthene		380	2.0	10	22	5.2
207-08-9	Benzo(k)fluoranthene		180	2.0	10	22	6.7
50-32-8	Benzo(a)pyrene		220	2.0	10	22	7.2
193-39-5	Indeno(1,2,3-cd)pyrene		130	2.0	10	22	4.1
53-70-3	Dibenzo(a,h)anthracene		55	2.0	10	22	3.9
191-24-2	Benzo(g,h,i)perylene		130	2.0	10	22	4.3
118-74-1	Hexachlorobenzene	U	22	2.0	10	22	3.9
87-68-3	Hexachlorobutadiene	U	22	2.0	10	22	5.0
77-47-4	Hexachlorocyclopentadiene	U	22	2.0	10	22	3.2
7297-45-2	2-Methylnaphthalene-D10		86%				
367-12-4	2,4-Dibromophenol		86%				
81103-79-9	Fluorene-d10		98%				
1718-51-1	Pyrene-D10		101%				

R DL

RW 4/15/09

16

KATAHDIN ANALYTICAL SERVICES
Report of Analytical Results

Client: CH2MHill
Project: TO-009 Lejeune
PO No:
Sample Date: 01/10/09
Received Date: 01/13/09
Extraction Date: 01/15/09
Analysis Date: 29-JAN-2009 19:52
Report Date: 02/02/2009
Matrix: SOIL
% Solids: 92.4

Lab ID: SC0146-32
Client ID: MR08-IS280-7-8-09A
SDG: TO9-32
Extracted by: AC
Extraction Method: SW846 3550
Analyst: JCG
Analysis Method: SW846 M8270C
Lab Prep Batch: WG59836
Units: ug/Kgdrywt

CAS#	Compound	Flags	Results	DF	PQL	Adj.PQL	Adj.MDL	
91-20-3	Naphthalene	U	11	1.0	10	11	2.8	
91-57-6	2-Methylnaphthalene	~~U~~ UJ	11	1.0	10	11	2.4	CCH
86-73-7	Fluorene	U	11	1.0	10	11	3.5	
85-01-8	Phenanthrene	U	11	1.0	10	11	1.9	
206-44-0	Fluoranthene	J	5.7	1.0	10	11	1.9	
129-00-0	Pyrene	J	4.8	1.0	10	11	2.3	
56-55-3	Benzo(a)anthracene	J	2.1	1.0	10	11	2.0	
205-99-2	Benzo(b)fluoranthene	J	4.4	1.0	10	11	2.6	
207-08-9	Benzo(k)fluoranthene	U	11	1.0	10	11	3.4	
50-32-8	Benzo(a)pyrene	U	11	1.0	10	11	3.6	
193-39-5	Indeno(1,2,3-cd)pyrene	U	11	1.0	10	11	2.0	
53-70-3	Dibenzo(a,h)anthracene	U	11	1.0	10	11	1.9	
191-24-2	Benzo(g,h,i)perylene	U	11	1.0	10	11	2.2	
118-74-1	Hexachlorobenzene	U	11	1.0	10	11	1.9	
87-68-3	Hexachlorobutadiene	~~U~~ UJ	11	1.0	10	11	2.5	CCH
77-47-4	Hexachlorocyclopentadiene	U	11	1.0	10	11	1.6	
7297-45-2	2-Methylnaphthalene-D10		67%					
367-12-4	2,4-Dibromophenol		84%					
81103-79-9	Fluorene-d10		80%					
1718-51-1	Pyrene-D10		68%					

MW
4/15/09

17

KATAHDIN ANALYTICAL SERVICES
Report of Analytical Results

Client: CH2MHill
Project: TO-009 Lejeune
PO No:
Sample Date: 01/10/09
Received Date: 01/13/09
Extraction Date: 01/15/09
Analysis Date: 29-JAN-2009 22:33
Report Date: 02/02/2009
Matrix: SOIL
% Solids: 89.1

Lab ID: SC0146-34
Client ID: MR08-SS275-09A
SDG: TO9-32
Extracted by: AC
Extraction Method: SW846 3550
Analyst: JCG
Analysis Method: SW846 M8270C
Lab Prep Batch: WG59836
Units: ug/Kgdrywt

CAS#	Compound	Flags	Results	DF	PQL	Adj.PQL	Adj.MDL	
91-20-3	Naphthalene	U	11	1.0	10	11	2.9	
91-57-6	2-Methylnaphthalene	~~U~~ UJ	11	1.0	10	11	2.5	CCH
86-73-7	Fluorene	U	11	1.0	10	11	3.6	
85-01-8	Phenanthrene	J	4.1	1.0	10	11	2.0	
206-44-0	Fluoranthene		12	1.0	10	11	2.0	
129-00-0	Pyrene	J	9.6	1.0	10	11	2.4	
56-55-3	Benzo(a)anthracene	J	5.9	1.0	10	11	2.1	
205-99-2	Benzo(b)fluoranthene	J	9.8	1.0	10	11	2.7	
207-08-9	Benzo(k)fluoranthene	J	6.7	1.0	10	11	3.5	
50-32-8	Benzo(a)pyrene	J	6.1	1.0	10	11	3.7	
193-39-5	Indeno(1,2,3-cd)pyrene	J	4.4	1.0	10	11	2.1	
53-70-3	Dibenzo(a,h)anthracene	U	11	1.0	10	11	2.0	
191-24-2	Benzo(g,h,i)perylene	J	3.8	1.0	10	11	2.2	
118-74-1	Hexachlorobenzene	U	11	1.0	10	11	2.0	
87-68-3	Hexachlorobutadiene	~~U~~ UJ	11	1.0	10	11	2.6	CCH
77-47-4	Hexachlorocyclopentadiene	U	11	1.0	10	11	1.7	
7297-45-2	2-Methylnaphthalene-D10		73%					
367-12-4	2,4-Dibromophenol		83%					
81103-79-9	Fluorene-d10		86%					
1718-51-1	Pyrene-D10		75%					

fw
4/15/09

KATAHDIN ANALYTICAL SERVICES
Report of Analytical Results

Client: CH2MHill
Project: TO-009 Lejeune
PO No:
Sample Date: 01/10/09
Received Date: 01/13/09
Extraction Date: 01/15/09
Analysis Date: 29-JAN-2009 20:33
Report Date: 02/02/2009
Matrix: SOIL
% Solids: 88.2

Lab ID: SC0146-36
Client ID: MR08-IS275-3-4-09A
SDG: TO9-32
Extracted by: AC
Extraction Method: SW846 3550
Analyst: JCG
Analysis Method: SW846 M8270C
Lab Prep Batch: WG59836
Units: ug/Kgdrywt

CAS#	Compound	Flags	Results	DF	PQL	Adj.PQL	Adj.MDL	
91-20-3	Naphthalene	U	11	1.0	10	11	2.9	
91-57-6	2-Methylnaphthalene	~~U~~ UJ	11	1.0	10	11	2.5	CCH
86-73-7	Fluorene	U	11	1.0	10	11	3.6	
85-01-8	Phenanthrene	U	11	1.0	10	11	2.0	
206-44-0	Fluoranthene	U	11	1.0	10	11	2.0	
129-00-0	Pyrene	U	11	1.0	10	11	2.4	
56-55-3	Benzo(a)anthracene	U	11	1.0	10	11	2.2	
205-99-2	Benzo(b)fluoranthene	U	11	1.0	10	11	2.7	
207-08-9	Benzo(k)fluoranthene	U	11	1.0	10	11	3.5	
50-32-8	Benzo(a)pyrene	U	11	1.0	10	11	3.7	
193-39-5	Indeno(1,2,3-cd)pyrene	U	11	1.0	10	11	2.2	
53-70-3	Dibenzo(a,h)anthracene	U	11	1.0	10	11	2.0	
191-24-2	Benzo(g,h,i)perylene	U	11	1.0	10	11	2.3	
118-74-1	Hexachlorobenzene	U	11	1.0	10	11	2.0	
87-68-3	Hexachlorobutadiene	~~U~~ UJ	11	1.0	10	11	2.6	CCH
77-47-4	Hexachlorocyclopentadiene	U	11	1.0	10	11	1.7	
7297-45-2	2-Methylnaphthalene-D10		72%					
367-12-4	2,4-Dibromophenol		82%					
81103-79-9	Fluorene-d10		87%					
1718-51-1	Pyrene-D10		74%					

lw
4/15/09

19

KATAHDIN ANALYTICAL SERVICES
Report of Analytical Results

Client: CH2MHill
Project: TO-009 Lejeune
PO No:
Sample Date: 01/10/09
Received Date: 01/13/09
Extraction Date: 01/15/09
Analysis Date: 29-JAN-2009 23:53
Report Date: 02/02/2009
Matrix: SOIL
% Solids: 89.9

Lab ID: SC0146-38
Client ID: MR08-SS256-09A
SDG: TO9-32
Extracted by: AC
Extraction Method: SW846 3550
Analyst: JCG
Analysis Method: SW846 M8270C
Lab Prep Batch: WG59836
Units: ug/Kgdrywt

CAS#	Compound	Flags	Results	DF	PQL	Adj.PQL	Adj.MDL
91-20-3	Naphthalene		15	1.0	10	11	2.9
91-57-6	2-Methylnaphthalene	~~J~~ J	7.2	1.0	10	11	2.4 CCH
86-73-7	Fluorene		42	1.0	10	11	3.6
85-01-8	Phenanthrene	~~E~~ 420	~~420~~ 3	1.0	10	33 ~~11~~ 6.0	~~2.0~~ R DL
206-44-0	Fluoranthene	~~E~~ 520	~~460~~	1.0	10	~~11~~ 6.0	~~2.0~~
129-00-0	Pyrene	~~E~~ 360	~~400~~	1.0	10	~~11~~ 7.0	~~2.3~~
56-55-3	Benzo(a)anthracene		200	1.0	10	11	2.1
205-99-2	Benzo(b)fluoranthene		250	1.0	10	11	2.7
207-08-9	Benzo(k)fluoranthene		98	1.0	10	11	3.4
50-32-8	Benzo(a)pyrene		150	1.0	10	11	3.7
193-39-5	Indeno(1,2,3-cd)pyrene		71	1.0	10	11	2.1
53-70-3	Dibenzo(a,h)anthracene		23	1.0	10	11	2.0
191-24-2	Benzo(g,h,i)perylene		60	1.0	10	11	2.2
118-74-1	Hexachlorobenzene	U	11	1.0	10	11	2.0
87-68-3	Hexachlorobutadiene	~~U~~ UJ	11	1.0	10	11	2.6 CCH
77-47-4	Hexachlorocyclopentadiene	U	11	1.0	10	11	1.7
7297-45-2	2-Methylnaphthalene-D10		78%				
367-12-4	2,4-Dibromophenol		91%				
81103-79-9	Fluorene-d10		92%				
1718-51-1	Pyrene-D10		78%				

LW
4/15/09

19DL

KATAHDIN ANALYTICAL SERVICES
Report of Analytical Results

Client: CH2MHill
Project: TO-009 Lejeune
PO No:
Sample Date: 01/10/09
Received Date: 01/13/09
Extraction Date: 01/15/09
Analysis Date: 31-JAN-2009 00:45
Report Date: 02/02/2009
Matrix: SOIL
% Solids: 89.9

Lab ID: SC0146-38DL
Client ID: MR08-SS256-09A
SDG: TO9-32
Extracted by: AC
Extraction Method: SW846 3550
Analyst: JCG
Analysis Method: SW846 M8270C
Lab Prep Batch: WG59836
Units: ug/Kgdrywt

use original

CAS#	Compound	Flags	Results	DF	PQL	Adj.PQL	Adj.MDL
91-20-3	Naphthalene	J	18	3.0	10	33	8.7
91-57-6	2-Methylnaphthalene	J	8.9	3.0	10	33	7.3
86-73-7	Fluorene		43	3.0	10	33	11
85-01-8	Phenanthrene		420	3.0	10	33	6.0
206-44-0	Fluoranthene		520	3.0	10	33	6.0
129-00-0	Pyrene		360	3.0	10	33	7.0
56-55-3	Benzo(a)anthracene		210	3.0	10	33	6.3
205-99-2	Benzo(b)fluoranthene		190	3.0	10	33	8.0
207-08-9	Benzo(k)fluoranthene		130	3.0	10	33	10
50-32-8	Benzo(a)pyrene		160	3.0	10	33	11
193-39-5	Indeno(1,2,3-cd)pyrene		73	3.0	10	33	6.3
53-70-3	Dibenzo(a,h)anthracene		36	3.0	10	33	6.0
191-24-2	Benzo(g,h,i)perylene		73	3.0	10	33	6.7
118-74-1	Hexachlorobenzene	U	33	3.0	10	33	6.0
87-68-3	Hexachlorobutadiene	U	33	3.0	10	33	7.7
77-47-4	Hexachlorocyclopentadiene	U	33	3.0	10	33	5.0
7297-45-2	2-Methylnaphthalene-D10		88%				
367-12-4	2,4-Dibromophenol		129%				
81103-79-9	Fluorene-d10		97%				
1718-51-1	Pyrene-D10		100%				

R DL

lw 4/15/09

20

KATAHDIN ANALYTICAL SERVICES
Report of Analytical Results

Client: CH2MHill
Project: TO-009 Lejeune
PO No:
Sample Date: 01/10/09
Received Date: 01/13/09
Extraction Date: 01/15/09
Analysis Date: 29-JAN-2009 21:13
Report Date: 02/02/2009
Matrix: SOIL
% Solids: 86.7

Lab ID: SC0146-40
Client ID: MR08-IS256-3-4-09A
SDG: TO9-32
Extracted by: AC
Extraction Method: SW846 3550
Analyst: JCG
Analysis Method: SW846 M8270C
Lab Prep Batch: WG59836
Units: ug/Kgdrywt

CAS#	Compound	Flags	Results	DF	PQL	Adj.PQL	Adj.MDL
91-20-3	Naphthalene	U	12	1.0	10	12	3.0
91-57-6	2-Methylnaphthalene	~~U~~ UJ	12	1.0	10	12	2.5 CCH
86-73-7	Fluorene	U	12	1.0	10	12	3.7
85-01-8	Phenanthrene	U	12	1.0	10	12	2.1
206-44-0	Fluoranthene	U	12	1.0	10	12	2.1
129-00-0	Pyrene	U	12	1.0	10	12	2.4
56-55-3	Benzo(a)anthracene	U	12	1.0	10	12	2.2
205-99-2	Benzo(b)fluoranthene	U	12	1.0	10	12	2.8
207-08-9	Benzo(k)fluoranthene	U	12	1.0	10	12	3.6
50-32-8	Benzo(a)pyrene	U	12	1.0	10	12	3.8
193-39-5	Indeno(1,2,3-cd)pyrene	U	12	1.0	10	12	2.2
53-70-3	Dibenzo(a,h)anthracene	U	12	1.0	10	12	2.1
191-24-2	Benzo(g,h,i)perylene	U	12	1.0	10	12	2.3
118-74-1	Hexachlorobenzene	U	12	1.0	10	12	2.1
87-68-3	Hexachlorobutadiene	~~U~~ UJ	12	1.0	10	12	2.6 CCH
77-47-4	Hexachlorocyclopentadiene	U	12	1.0	10	12	1.7
7297-45-2	2-Methylnaphthalene-D10		75%				
367-12-4	2,4-Dibromophenol		88%				
81103-79-9	Fluorene-d10		83%				
1718-51-1	Pyrene-D10		77%				

LW
4/15/09

ENVIRONMENTAL
Data Services, Inc.

SEMIVOLATILE ORGANIC COMPOUNDS
USEPA Region IV - Level IV Review

Site: MCB Camp Lejeune, TO-09 SDG #: TO9-32

Client: CH2M HILL, Inc., Virginia Beach, Virginia Date: April 15, 2009

Laboratory: Katahdin Analytical Services, Scarborough, Maine Reviewer: Nancy Weaver

EDS ID	Client Sample ID	Laboratory Sample ID	Matrix
1	MR08-IS183-6-7-09A	SC0146-1	Soil
1MS	MR08-IS183-6-7-09AMS	SC0146-1MS	Soil
1MSD	MR08-IS183-6-7-09AMSD	SC0146-1MSD	Soil
2	MR08-IS203-6-7-09A	SC0146-3	Soil
3	MR08-SS184-09A	SC0146-5	Soil
4	MR08-IS184-8-9-09A	SC0146-7	Soil
5	MR08-SS255-09A	SC0146-9	Soil
6	MR08-IS255-6-7-09A	SC0146-11	Soil
7	MR08-SS276-09A	SC0146-13	Soil
8	MR08-IS276-6-7-09A	SC0146-15	Soil
9	MR08-SS254-09A	SC0146-17	Soil
10	MR08-IS254-3-4-09A	SC0146-19	Soil
11	MR08-SS277-09A	SC0146-21	Soil
12	MR08-IS277-3-4-09A	SC0146-23	Soil
13	MR08-SS278-09A	SC0146-25	Soil
14	MR08-IS278-6-7-09A	SC0146-27	Soil
15	MR08-SS280-09A	SC0146-29	Soil
16	MR08-IS280-7-8-09A	SC0146-31	Soil
17	MR08-SS275-09A	SC0146-33	Soil
18	MR08-IS275-3-4-09	SC0146-35	Soil
19	MR08-SS256-09A	SC0146-37	Soil
20	MR08-IS256-3-4-09A	SC0146-39	Soil

The USEPA "Contract Laboratory Program National Functional Guidelines for Organic Data Review," October 1999, and professional judgement were used in evaluating the data in this summary report.

Holding Times - All samples were extracted within 14 days for soil samples and analyzed within 40 days for all samples.

GC/MS Tuning - All of the DFTPP tunes in the initial and continuing calibrations met the percent relative abundance criteria.

Initial Calibration - The initial calibrations exhibited acceptable %RSD and mean RRF values except the following.

ICAL Date	Compound	%RSD/RRF	Qualifier	Affected Samples
01/12/09	Benzaldehyde	90.97%	J/UJ	1-13, 16, 18, 20

Continuing Calibration - The continuing calibrations exhibited acceptable %D and RRF values except the following.

CCAL Date	Compound	%D/RRF	Qualifier	Affected Samples
01/23/09	Benzaldehyde	41.53%	None	Already qualified due to ICAL
	Caprolactam	26.12%	J/UJ	1, 2, 4, 6, 8, 10-12
	3-Nitroaniline	32.30%	J/UJ	1, 2, 4, 6, 8, 10-12
	2,4-Dinitrophenol	40.19%	J/UJ	1, 2, 4, 6, 8, 10-12
	4-Nitrophenol	50.33%	J/UJ	1, 2, 4, 6, 8, 10-12
	4,6-Dinitro-2-methylphenol	31.04%	J/UJ	1, 2, 4, 6, 8, 10-12
01/24/09	Benzaldehyde	294.48%	None	Already qualified due to ICAL
	2,4-Dinitrophenol	39.98%	J/UJ	3, 5, 7, 9, 13, 16, 18, 20
	4,6-Dinitro-2-methylphenol	25.62%	J/UJ	3, 5, 7, 9, 13, 16, 18, 20
	Pentachlorophenol	29.28%	J/UJ	3, 5, 7, 9, 13, 16, 18, 20

Surrogates - All samples exhibited acceptable surrogate recoveries.

MS/MSD - The MS/MSD sample exhibited acceptable %R and RPD values except the following.

MS/MSD Sample ID	Compound	MS/MSD %R/RPD	Qualifier
1	Benzaldehyde	266%/264%/Ok	None - All ND

Laboratory Control Sample - The LCS samples exhibited acceptable %R values except the following.

LCS ID	Compound	%R	Qualifier	Affected Samples
WG59814-LCS	Benzaldehyde	135%	None	All associated ND

Internal Standard (IS) Area Performance - All internal standards met response and retention time (RT) criteria.

Method Blank - The method blanks were free of contamination.

Field, Equipment Blank - Field QC results are summarized below.

Blank ID	Compound	Conc. ug/L	Action Level ug/L	Qualifier	Affected Samples
M08-FB01011009	None - ND	-	-	-	-
MR08-EB01010909-IS	None - ND	-	-	-	-
MR08-EB01010909-SS	None - ND	-	-	-	-

Field Duplicates - Field duplicate samples were not included in this data package.

Tentatively Identified Compounds (TICs) - TICs were not reported.

Compound Quantitation - No discrepancies were identified.

KATAHDIN ANALYTICAL SERVICES
Report of Analytical Results

Client: CH2MHill
Project: TO-009 Lejeune
PO No:
Sample Date: 01/09/09
Received Date: 01/13/09
Extraction Date: 01/15/09
Analysis Date: 23-JAN-2009 17:25
Report Date: 02/02/2009
Matrix: SOIL
% Solids: 97.2

Lab ID: SC0146-1
Client ID: 08-IS183-6-7-09A
SDG: TO9-32
Extracted by: AC
Extraction Method: SW846 3550
Analyst: JCG
Analysis Method: SW846 8270C
Lab Prep Batch: WG59814
Units: ug/Kgdrywt

CAS#	Compound	Flags	Results	DF	PQL	Adj.PQL	Adj.MDL	
100-52-7	Benzaldehyde	~~U~~ UJ	510	1.0	500	510	120	ICB
108-95-2	Phenol	U	510	1.0	500	510	160	
111-44-4	Bis(2-Chloroethyl)ether	U	340	1.0	330	340	83	
95-57-8	2-Chlorophenol	U	510	1.0	500	510	170	
95-48-7	2-Methylphenol	U	620	1.0	600	620	200	
108-60-1	2,2'-Oxybis(1-chloropropane)	U	340	1.0	330	340	92	
98-86-2	Acetophenone	U	620	1.0	600	620	180	
621-64-7	N-Nitroso-di-n-propylamine	U	340	1.0	330	340	85	
65794-96-9	3&4-Methylphenol	U	620	1.0	600	620	190	
67-72-1	Hexachloroethane	U	340	1.0	330	340	99	
98-95-3	Nitrobenzene	U	340	1.0	330	340	94	
78-59-1	Isophorone	U	340	1.0	330	340	77	
88-75-5	2-Nitrophenol	U	620	1.0	600	620	170	
105-67-9	2,4-Dimethylphenol	U	510	1.0	500	510	170	
111-91-1	Bis(2-Chloroethoxy)methane	U	340	1.0	330	340	99	
120-83-2	2,4-Dichlorophenol	U	510	1.0	500	510	150	
106-47-8	4-Chloroaniline	U	510	1.0	500	510	120	
105-60-2	Caprolactam	~~U~~ UJ	510	1.0	500	510	150	CCH
59-50-7	4-Chloro-3-Methylphenol	U	510	1.0	500	510	170	
88-06-2	2,4,6-Trichlorophenol	U	510	1.0	500	510	160	
95-95-4	2,4,5-Trichlorophenol	U	510	1.0	500	510	160	
91-58-7	2-Chloronaphthalene	U	340	1.0	330	340	90	
92-52-4	1,1'-Biphenyl	U	340	1.0	330	340	75	
88-74-4	2-Nitroaniline	U	510	1.0	500	510	77	
131-11-3	Dimethyl Phthalate	U	340	1.0	330	340	80	
606-20-2	2,6-Dinitrotoluene	U	340	1.0	330	340	81	
208-96-8	Acenaphthylene	U	340	1.0	330	340	72	
99-09-2	3-Nitroaniline	~~U~~ UJ	510	1.0	500	510	97	CCH
83-32-9	Acenaphthene	U	340	1.0	330	340	67	
51-28-5	2,4-Dinitrophenol	~~U~~ UJ	1200	1.0	1200	1200	390	CCH
132-64-9	Dibenzofuran	U	340	1.0	330	340	81	
100-02-7	4-Nitrophenol	~~U~~ UJ	1200	1.0	1200	1200	320	CCH
121-14-2	2,4-Dinitrotoluene	U	340	1.0	330	340	87	
84-66-2	Diethylphthalate	U	340	1.0	330	340	82	
7005-72-3	4-Chlorophenyl-phenylether	U	340	1.0	330	340	80	
100-01-6	4-Nitroaniline	U	510	1.0	500	510	140	
534-52-1	4,6-Dinitro-2-Methylphenol	~~U~~ UJ	1200	1.0	1200	1200	350	CCH
86-30-6	N-Nitrosodiphenylamine	U	680	1.0	660	680	220	
101-55-3	4-Bromophenyl-phenylether	U	340	1.0	330	340	87	
1912-24-9	Atrazine	U	340	1.0	330	340	94	
87-86-5	Pentachlorophenol	U	840	1.0	820	840	240	
120-12-7	Anthracene	U	340	1.0	330	340	86	
86-74-8	Carbazole	U	510	1.0	500	510	110	

LW 4/15/09

KATAHDIN ANALYTICAL SERVICES
Report of Analytical Results

Client: CH2MHill
Project: TO-009 Lejeune
PO No:
Sample Date: 01/09/09
Received Date: 01/13/09
Extraction Date: 01/15/09
Analysis Date: 23-JAN-2009 17:25
Report Date: 02/02/2009
Matrix: SOIL
% Solids: 97.2

Lab ID: SC0146-1
Client ID: 08-IS183-6-7-09A
SDG: TO9-32
Extracted by: AC
Extraction Method: SW846 3550
Analyst: JCG
Analysis Method: SW846 8270C
Lab Prep Batch: WG59814
Units: ug/Kgdrywt

CAS#	Compound	Flags	Results	DF	PQL	Adj.PQL	Adj.MDL
84-74-2	Di-n-butylphthalate	U	340	1.0	330	340	100
85-68-7	Butylbenzylphthalate	U	340	1.0	330	340	96
91-94-1	3,3'-Dichlorobenzidine	U	510	1.0	500	510	120
218-01-9	Chrysene	U	340	1.0	330	340	98
117-81-7	bis(2-Ethylhexyl)phthalate	U	340	1.0	330	340	100
117-84-0	Di-n-octylphthalate	U	340	1.0	330	340	220
367-12-4	2-Fluorophenol		62%				
13127-88-3	Phenol-D6		58%				
4165-60-0	Nitrobenzene-D5		57%				
321-60-8	2-Fluorobiphenyl		70%				
118-79-6	2,4,6-Tribromophenol		63%				
1718-51-0	Terphenyl-D14		98%				

LW
2/15/09

2

KATAHDIN ANALYTICAL SERVICES
Report of Analytical Results

Client: CH2MHill
Project: TO-009 Lejeune
PO No:
Sample Date: 01/09/09
Received Date: 01/13/09
Extraction Date: 01/15/09
Analysis Date: 23-JAN-2009 18:09
Report Date: 02/02/2009
Matrix: SOIL
% Solids: 81.1

Lab ID: SC0146-3
Client ID: MR08-IS203-6-7-09A
SDG: TO9-32
Extracted by: AC
Extraction Method: SW846 3550
Analyst: JCG
Analysis Method: SW846 8270C
Lab Prep Batch: WG59814
Units: ug/Kgdrywt

CAS#	Compound	Flags	Results	DF	PQL	Adj.PQL	Adj.MDL	
100-52-7	Benzaldehyde	~~U~~ UJ	620	1.0	500	620	150	JCB
108-95-2	Phenol	U	620	1.0	500	620	190	
111-44-4	Bis(2-Chloroethyl)ether	U	410	1.0	330	410	100	
95-57-8	2-Chlorophenol	U	620	1.0	500	620	200	
95-48-7	2-Methylphenol	U	740	1.0	600	740	250	
108-60-1	2,2'-Oxybis(1-chloropropane)	U	410	1.0	330	410	110	
98-86-2	Acetophenone	U	740	1.0	600	740	220	
621-64-7	N-Nitroso-di-n-propylamine	U	410	1.0	330	410	100	
65794-96-9	3&4-Methylphenol	U	740	1.0	600	740	230	
67-72-1	Hexachloroethane	U	410	1.0	330	410	120	
98-95-3	Nitrobenzene	U	410	1.0	330	410	110	
78-59-1	Isophorone	U	410	1.0	330	410	92	
88-75-5	2-Nitrophenol	U	740	1.0	600	740	200	
105-67-9	2,4-Dimethylphenol	U	620	1.0	500	620	200	
111-91-1	Bis(2-Chloroethoxy)methane	U	410	1.0	330	410	120	
120-83-2	2,4-Dichlorophenol	U	620	1.0	500	620	180	
106-47-8	4-Chloroaniline	U	620	1.0	500	620	150	
105-60-2	Caprolactam	~~U~~ UJ	620	1.0	500	620	180	CCH
59-50-7	4-Chloro-3-Methylphenol	U	620	1.0	500	620	200	
88-06-2	2,4,6-Trichlorophenol	U	620	1.0	500	620	190	
95-95-4	2,4,5-Trichlorophenol	U	620	1.0	500	620	190	
91-58-7	2-Chloronaphthalene	U	410	1.0	330	410	110	
92-52-4	1,1'-Biphenyl	U	410	1.0	330	410	90	
88-74-4	2-Nitroaniline	U	620	1.0	500	620	92	
131-11-3	Dimethyl Phthalate	U	410	1.0	330	410	96	
606-20-2	2,6-Dinitrotoluene	U	410	1.0	330	410	97	
208-96-8	Acenaphthylene	U	410	1.0	330	410	86	
99-09-2	3-Nitroaniline	~~U~~ UJ	620	1.0	500	620	120	CCH
83-32-9	Acenaphthene	U	410	1.0	330	410	80	
51-28-5	2,4-Dinitrophenol	~~U~~ UJ	1500	1.0	1200	1500	460	CCH
132-64-9	Dibenzofuran	U	410	1.0	330	410	97	
100-02-7	4-Nitrophenol	~~U~~ UJ	1500	1.0	1200	1500	380	CCH
121-14-2	2,4-Dinitrotoluene	U	410	1.0	330	410	100	
84-66-2	Diethylphthalate	U	410	1.0	330	410	99	
7005-72-3	4-Chlorophenyl-phenylether	U	410	1.0	330	410	96	
100-01-6	4-Nitroaniline	U	620	1.0	500	620	160	
534-52-1	4,6-Dinitro-2-Methylphenol	~~U~~ UJ	1500	1.0	1200	1500	420	CCH
86-30-6	N-Nitrosodiphenylamine	U	810	1.0	660	810	270	
101-55-3	4-Bromophenyl-phenylether	U	410	1.0	330	410	100	
1912-24-9	Atrazine	U	410	1.0	330	410	110	
87-86-5	Pentachlorophenol	U	1000	1.0	820	1000	290	
120-12-7	Anthracene	U	410	1.0	330	410	100	
86-74-8	Carbazole	U	620	1.0	500	620	140	

lw 4/15/09

KATAHDIN ANALYTICAL SERVICES
Report of Analytical Results

Client: CH2MHill
Project: TO-009 Lejeune
PO No:
Sample Date: 01/09/09
Received Date: 01/13/09
Extraction Date: 01/15/09
Analysis Date: 23-JAN-2009 18:09
Report Date: 02/02/2009
Matrix: SOIL
% Solids: 81.1

Lab ID: SC0146-3
Client ID: MR08-IS203-6-7-09A
SDG: TO9-32
Extracted by: AC
Extraction Method: SW846 3550
Analyst: JCG
Analysis Method: SW846 8270C
Lab Prep Batch: WG59814
Units: ug/Kgdrywt

CAS#	Compound	Flags	Results	DF	PQL	Adj.PQL	Adj.MDL
84-74-2	Di-n-butylphthalate	U	410	1.0	330	410	120
85-68-7	Butylbenzylphthalate	U	410	1.0	330	410	110
91-94-1	3,3'-Dichlorobenzidine	U	620	1.0	500	620	140
218-01-9	Chrysene	U	410	1.0	330	410	120
117-81-7	bis(2-Ethylhexyl)phthalate	U	410	1.0	330	410	120
117-84-0	Di-n-octylphthalate	U	410	1.0	330	410	260
367-12-4	2-Fluorophenol		68%				
13127-88-3	Phenol-D6		67%				
4165-60-0	Nitrobenzene-D5		63%				
321-60-8	2-Fluorobiphenyl		73%				
118-79-6	2,4,6-Tribromophenol		63%				
1718-51-0	Terphenyl-D14		96%				

lw
4/15/09

3

KATAHDIN ANALYTICAL SERVICES
Report of Analytical Results

Client: CH2MHill
Project: TO-009 Lejeune
PO No:
Sample Date: 01/09/09
Received Date: 01/13/09
Extraction Date: 01/15/09
Analysis Date: 24-JAN-2009 18:54
Report Date: 02/02/2009
Matrix: SOIL
% Solids: 87.2

Lab ID: SC0146-5
Client ID: MR08-SS184-09A
SDG: TO9-32
Extracted by: AC
Extraction Method: SW846 3550
Analyst: JCG
Analysis Method: SW846 8270C
Lab Prep Batch: WG59814
Units: ug/Kgdrywt

CAS#	Compound	Flags	Results	DF	PQL	Adj.PQL	Adj.MDL	
100-52-7	Benzaldehyde	~~U~~ UJ	570	1.0	500	570	140	ICB
108-95-2	Phenol	U	570	1.0	500	570	180	
111-44-4	Bis(2-Chloroethyl)ether	U	380	1.0	330	380	93	
95-57-8	2-Chlorophenol	U	570	1.0	500	570	190	
95-48-7	2-Methylphenol	U	690	1.0	600	690	230	
108-60-1	2,2'-Oxybis(1-chloropropane)	U	380	1.0	330	380	100	
98-86-2	Acetophenone	U	690	1.0	600	690	200	
621-64-7	N-Nitroso-di-n-propylamine	U	380	1.0	330	380	95	
65794-96-9	3&4-Methylphenol	U	690	1.0	600	690	210	
67-72-1	Hexachloroethane	U	380	1.0	330	380	110	
98-95-3	Nitrobenzene	U	380	1.0	330	380	100	
78-59-1	Isophorone	U	380	1.0	330	380	86	
88-75-5	2-Nitrophenol	U	690	1.0	600	690	190	
105-67-9	2,4-Dimethylphenol	U	570	1.0	500	570	190	
111-91-1	Bis(2-Chloroethoxy)methane	U	380	1.0	330	380	110	
120-83-2	2,4-Dichlorophenol	U	570	1.0	500	570	170	
106-47-8	4-Chloroaniline	U	570	1.0	500	570	140	
105-60-2	Caprolactam	U	570	1.0	500	570	160	
59-50-7	4-Chloro-3-Methylphenol	U	570	1.0	500	570	190	
88-06-2	2,4,6-Trichlorophenol	U	570	1.0	500	570	180	
95-95-4	2,4,5-Trichlorophenol	U	570	1.0	500	570	180	
91-58-7	2-Chloronaphthalene	U	380	1.0	330	380	100	
92-52-4	1,1'-Biphenyl	U	380	1.0	330	380	84	
88-74-4	2-Nitroaniline	U	570	1.0	500	570	86	
131-11-3	Dimethyl Phthalate	U	380	1.0	330	380	89	
606-20-2	2,6-Dinitrotoluene	U	380	1.0	330	380	90	
208-96-8	Acenaphthylene	U	380	1.0	330	380	80	
99-09-2	3-Nitroaniline	U	570	1.0	500	570	110	
83-32-9	Acenaphthene	U	380	1.0	330	380	74	
51-28-5	2,4-Dinitrophenol	~~U~~ UJ	1400	1.0	1200	1400	430	CCH
132-64-9	Dibenzofuran	U	380	1.0	330	380	90	
100-02-7	4-Nitrophenol	U	1400	1.0	1200	1400	350	
121-14-2	2,4-Dinitrotoluene	U	380	1.0	330	380	97	
84-66-2	Diethylphthalate	U	380	1.0	330	380	92	
7005-72-3	4-Chlorophenyl-phenylether	U	380	1.0	330	380	89	
100-01-6	4-Nitroaniline	U	570	1.0	500	570	150	
534-52-1	4,6-Dinitro-2-Methylphenol	~~U~~ UJ	1400	1.0	1200	1400	390	CCH
86-30-6	N-Nitrosodiphenylamine	U	760	1.0	660	760	250	
101-55-3	4-Bromophenyl-phenylether	U	380	1.0	330	380	97	
1912-24-9	Atrazine	U	380	1.0	330	380	100	
87-86-5	Pentachlorophenol	~~U~~ UJ	940	1.0	820	940	270	CCH
120-12-7	Anthracene	U	380	1.0	330	380	96	
86-74-8	Carbazole	U	570	1.0	500	570	130	

lew 4/15/09

KATAHDIN ANALYTICAL SERVICES
Report of Analytical Results

Client: CH2MHill
Project: TO-009 Lejeune
PO No:
Sample Date: 01/09/09
Received Date: 01/13/09
Extraction Date: 01/15/09
Analysis Date: 24-JAN-2009 18:54
Report Date: 02/02/2009
Matrix: SOIL
% Solids: 87.2

Lab ID: SC0146-5
Client ID: MR08-SS184-09A
SDG: TO9-32
Extracted by: AC
Extraction Method: SW846 3550
Analyst: JCG
Analysis Method: SW846 8270C
Lab Prep Batch: WG59814
Units: ug/Kgdrywt

CAS#	Compound	Flags	Results	DF	PQL	Adj.PQL	Adj.MDL
84-74-2	Di-n-butylphthalate	U	380	1.0	330	380	120
85-68-7	Butylbenzylphthalate	U	380	1.0	330	380	110
91-94-1	3,3'-Dichlorobenzidine	U	570	1.0	500	570	130
218-01-9	Chrysene	U	380	1.0	330	380	110
117-81-7	bis(2-Ethylhexyl)phthalate	J	220	1.0	330	380	110
117-84-0	Di-n-octylphthalate	U	380	1.0	330	380	240
367-12-4	2-Fluorophenol		70%				
13127-88-3	Phenol-D6		61%				
4165-60-0	Nitrobenzene-D5		67%				
321-60-8	2-Fluorobiphenyl		73%				
118-79-6	2,4,6-Tribromophenol		73%				
1718-51-0	Terphenyl-D14		97%				

LW
4/15/09

4

KATAHDIN ANALYTICAL SERVICES
Report of Analytical Results

Client: CH2MHill
Project: TO-009 Lejeune
PO No:
Sample Date: 01/09/09
Received Date: 01/13/09
Extraction Date: 01/15/09
Analysis Date: 23-JAN-2009 18:54
Report Date: 02/02/2009
Matrix: SOIL
% Solids: 86.3

Lab ID: SC0146-7
Client ID: MR08-IS184-8-9-09A
SDG: TO9-32
Extracted by: AC
Extraction Method: SW846 3550
Analyst: JCG
Analysis Method: SW846 8270C
Lab Prep Batch: WG59814
Units: ug/Kgdrywt

CAS#	Compound	Flags	Results	DF	PQL	Adj.PQL	Adj.MDL	
100-52-7	Benzaldehyde	~~U~~ UJ	580	1.0	500	580	140	JCB
108-95-2	Phenol	U	580	1.0	500	580	180	
111-44-4	Bis(2-Chloroethyl)ether	U	380	1.0	330	380	94	
95-57-8	2-Chlorophenol	U	580	1.0	500	580	190	
95-48-7	2-Methylphenol	U	700	1.0	600	700	230	
108-60-1	2,2'-Oxybis(1-chloropropane)	U	380	1.0	330	380	100	
98-86-2	Acetophenone	U	700	1.0	600	700	210	
621-64-7	N-Nitroso-di-n-propylamine	U	380	1.0	330	380	96	
65794-96-9	3&4-Methylphenol	U	700	1.0	600	700	220	
67-72-1	Hexachloroethane	U	380	1.0	330	380	110	
98-95-3	Nitrobenzene	U	380	1.0	330	380	100	
78-59-1	Isophorone	U	380	1.0	330	380	87	
88-75-5	2-Nitrophenol	U	700	1.0	600	700	190	
105-67-9	2,4-Dimethylphenol	U	580	1.0	500	580	190	
111-91-1	Bis(2-Chloroethoxy)methane	U	380	1.0	330	380	110	
120-83-2	2,4-Dichlorophenol	U	580	1.0	500	580	170	
106-47-8	4-Chloroaniline	U	580	1.0	500	580	140	
105-60-2	Caprolactam	~~U~~ UJ	580	1.0	500	580	170	CCH
59-50-7	4-Chloro-3-Methylphenol	U	580	1.0	500	580	190	
88-06-2	2,4,6-Trichlorophenol	U	580	1.0	500	580	180	
95-95-4	2,4,5-Trichlorophenol	U	580	1.0	500	580	180	
91-58-7	2-Chloronaphthalene	U	380	1.0	330	380	100	
92-52-4	1,1'-Biphenyl	U	380	1.0	330	380	84	
88-74-4	2-Nitroaniline	U	580	1.0	500	580	87	
131-11-3	Dimethyl Phthalate	U	380	1.0	330	380	90	
606-20-2	2,6-Dinitrotoluene	U	380	1.0	330	380	92	
208-96-8	Acenaphthylene	U	380	1.0	330	380	81	
99-09-2	3-Nitroaniline	~~U~~ UJ	580	1.0	500	580	110	CCH
83-32-9	Acenaphthene	U	380	1.0	330	380	75	
51-28-5	2,4-Dinitrophenol	~~U~~ UJ	1400	1.0	1200	1400	440	CCH
132-64-9	Dibenzofuran	U	380	1.0	330	380	92	
100-02-7	4-Nitrophenol	~~U~~ UJ	1400	1.0	1200	1400	360	CCH
121-14-2	2,4-Dinitrotoluene	U	380	1.0	330	380	98	
84-66-2	Diethylphthalate	U	380	1.0	330	380	93	
7005-72-3	4-Chlorophenyl-phenylether	U	380	1.0	330	380	90	
100-01-6	4-Nitroaniline	U	580	1.0	500	580	160	
534-52-1	4,6-Dinitro-2-Methylphenol	~~U~~ UJ	1400	1.0	1200	1400	390	CCH
86-30-6	N-Nitrosodiphenylamine	U	760	1.0	660	760	250	
101-55-3	4-Bromophenyl-phenylether	U	380	1.0	330	380	98	
1912-24-9	Atrazine	U	380	1.0	330	380	100	
87-86-5	Pentachlorophenol	U	950	1.0	820	950	270	
120-12-7	Anthracene	U	380	1.0	330	380	97	
86-74-8	Carbazole	U	580	1.0	500	580	130	

RW
4/15/09

4

KATAHDIN ANALYTICAL SERVICES
Report of Analytical Results

Client: CH2MHill
Project: TO-009 Lejeune
PO No:
Sample Date: 01/09/09
Received Date: 01/13/09
Extraction Date: 01/15/09
Analysis Date: 23-JAN-2009 18:54
Report Date: 02/02/2009
Matrix: SOIL
% Solids: 86.3

Lab ID: SC0146-7
Client ID: MR08-IS184-8-9-09A
SDG: TO9-32
Extracted by: AC
Extraction Method: SW846 3550
Analyst: JCG
Analysis Method: SW846 8270C
Lab Prep Batch: WG59814
Units: ug/Kgdrywt

CAS#	Compound	Flags	Results	DF	PQL	Adj.PQL	Adj.MDL
84-74-2	Di-n-butylphthalate	U	380	1.0	330	380	120
85-68-7	Butylbenzylphthalate	U	380	1.0	330	380	110
91-94-1	3,3'-Dichlorobenzidine	U	580	1.0	500	580	130
218-01-9	Chrysene	U	380	1.0	330	380	110
117-81-7	bis(2-Ethylhexyl)phthalate	U	380	1.0	330	380	110
117-84-0	Di-n-octylphthalate	U	380	1.0	330	380	240
367-12-4	2-Fluorophenol		60%				
13127-88-3	Phenol-D6		56%				
4165-60-0	Nitrobenzene-D5		58%				
321-60-8	2-Fluorobiphenyl		59%				
118-79-6	2,4,6-Tribromophenol		48%				
1718-51-0	Terphenyl-D14		78%				

JCW
4/15/09

5

KATAHDIN ANALYTICAL SERVICES
Report of Analytical Results

Client: CH2MHill
Project: TO-009 Lejeune
PO No:
Sample Date: 01/09/09
Received Date: 01/13/09
Extraction Date: 01/15/09
Analysis Date: 24-JAN-2009 21:00
Report Date: 02/02/2009
Matrix: SOIL
% Solids: 94.4

Lab ID: SC0146-9
Client ID: MR08-SS255-09A
SDG: TO9-32
Extracted by: AC
Extraction Method: SW846 3550
Analyst: JCG
Analysis Method: SW846 8270C
Lab Prep Batch: WG59814
Units: ug/Kgdrywt

CAS#	Compound	Flags	Results	DF	PQL	Adj.PQL	Adj.MDL	
100-52-7	Benzaldehyde	~~U~~ UJ	530	1.0	500	530	130	ICB
108-95-2	Phenol	U	530	1.0	500	530	160	
111-44-4	Bis(2-Chloroethyl)ether	U	350	1.0	330	350	86	
95-57-8	2-Chlorophenol	U	530	1.0	500	530	170	
95-48-7	2-Methylphenol	U	640	1.0	600	640	210	
108-60-1	2,2'-Oxybis(1-chloropropane)	U	350	1.0	330	350	94	
98-86-2	Acetophenone	U	640	1.0	600	640	190	
621-64-7	N-Nitroso-di-n-propylamine	U	350	1.0	330	350	88	
65794-96-9	3&4-Methylphenol	U	640	1.0	600	640	200	
67-72-1	Hexachloroethane	U	350	1.0	330	350	100	
98-95-3	Nitrobenzene	U	350	1.0	330	350	96	
78-59-1	Isophorone	U	350	1.0	330	350	79	
88-75-5	2-Nitrophenol	U	640	1.0	600	640	180	
105-67-9	2,4-Dimethylphenol	U	530	1.0	500	530	170	
111-91-1	Bis(2-Chloroethoxy)methane	U	350	1.0	330	350	100	
120-83-2	2,4-Dichlorophenol	U	530	1.0	500	530	160	
106-47-8	4-Chloroaniline	U	530	1.0	500	530	130	
105-60-2	Caprolactam	U	530	1.0	500	530	150	
59-50-7	4-Chloro-3-Methylphenol	U	530	1.0	500	530	180	
88-06-2	2,4,6-Trichlorophenol	U	530	1.0	500	530	160	
95-95-4	2,4,5-Trichlorophenol	U	530	1.0	500	530	160	
91-58-7	2-Chloronaphthalene	U	350	1.0	330	350	92	
92-52-4	1,1'-Biphenyl	U	350	1.0	330	350	77	
88-74-4	2-Nitroaniline	U	530	1.0	500	530	79	
131-11-3	Dimethyl Phthalate	U	350	1.0	330	350	83	
606-20-2	2,6-Dinitrotoluene	U	350	1.0	330	350	84	
208-96-8	Acenaphthylene	U	350	1.0	330	350	74	
99-09-2	3-Nitroaniline	U	530	1.0	500	530	100	
83-32-9	Acenaphthene	U	350	1.0	330	350	69	
51-28-5	2,4-Dinitrophenol	~~U~~ UJ	1300	1.0	1200	1300	400	CCH
132-64-9	Dibenzofuran	U	350	1.0	330	350	84	
100-02-7	4-Nitrophenol	U	1300	1.0	1200	1300	330	
121-14-2	2,4-Dinitrotoluene	U	350	1.0	330	350	90	
84-66-2	Diethylphthalate	U	350	1.0	330	350	85	
7005-72-3	4-Chlorophenyl-phenylether	U	350	1.0	330	350	83	
100-01-6	4-Nitroaniline	U	530	1.0	500	530	140	
534-52-1	4,6-Dinitro-2-Methylphenol	~~U~~ UJ	1300	1.0	1200	1300	360	CCH
86-30-6	N-Nitrosodiphenylamine	U	700	1.0	660	700	230	
101-55-3	4-Bromophenyl-phenylether	U	350	1.0	330	350	90	
1912-24-9	Atrazine	U	350	1.0	330	350	96	
87-86-5	Pentachlorophenol	~~U~~ UJ	870	1.0	820	870	250	CCH
120-12-7	Anthracene	U	350	1.0	330	350	89	
86-74-8	Carbazole	U	530	1.0	500	530	120	

LW
4/15/09

5

KATAHDIN ANALYTICAL SERVICES
Report of Analytical Results

Client: CH2MHill
Project: TO-009 Lejeune
PO No:
Sample Date: 01/09/09
Received Date: 01/13/09
Extraction Date: 01/15/09
Analysis Date: 24-JAN-2009 21:00
Report Date: 02/02/2009
Matrix: SOIL
% Solids: 94.4

Lab ID: SC0146-9
Client ID: MR08-SS255-09A
SDG: TO9-32
Extracted by: AC
Extraction Method: SW846 3550
Analyst: JCG
Analysis Method: SW846 8270C
Lab Prep Batch: WG59814
Units: ug/Kgdrywt

CAS#	Compound	Flags	Results	DF	PQL	Adj.PQL	Adj.MDL
84-74-2	Di-n-butylphthalate	U	350	1.0	330	350	110
85-68-7	Butylbenzylphthalate	U	350	1.0	330	350	98
91-94-1	3,3'-Dichlorobenzidine	U	530	1.0	500	530	120
218-01-9	Chrysene	U	350	1.0	330	350	100
117-81-7	bis(2-Ethylhexyl)phthalate	J	130	1.0	330	350	100
117-84-0	Di-n-octylphthalate	U	350	1.0	330	350	220
367-12-4	2-Fluorophenol		75%				
13127-88-3	Phenol-D6		77%				
4165-60-0	Nitrobenzene-D5		76%				
321-60-8	2-Fluorobiphenyl		93%				
118-79-6	2,4,6-Tribromophenol		80%				
1718-51-0	Terphenyl-D14		104%				

hw
4/15/09

6

KATAHDIN ANALYTICAL SERVICES
Report of Analytical Results

Client: CH2MHill
Project: TO-009 Lejeune
PO No:
Sample Date: 01/09/09
Received Date: 01/13/09
Extraction Date: 01/15/09
Analysis Date: 23-JAN-2009 19:38
Report Date: 02/02/2009
Matrix: SOIL
% Solids: 80.1

Lab ID: SC0146-11
Client ID: MR08-IS255-6-7-09A
SDG: TO9-32
Extracted by: AC
Extraction Method: SW846 3550
Analyst: JCG
Analysis Method: SW846 8270C
Lab Prep Batch: WG59814
Units: ug/Kgdrywt

CAS#	Compound	Flags	Results	DF	PQL	Adj.PQL	Adj.MDL	
100-52-7	Benzaldehyde	~~U~~ UJ	620	1.0	500	620	150	JCB
108-95-2	Phenol	U	620	1.0	500	620	190	
111-44-4	Bis(2-Chloroethyl)ether	U	410	1.0	330	410	100	
95-57-8	2-Chlorophenol	U	620	1.0	500	620	200	
95-48-7	2-Methylphenol	U	750	1.0	600	750	250	
108-60-1	2,2'-Oxybis(1-chloropropane)	U	410	1.0	330	410	110	
98-86-2	Acetophenone	U	750	1.0	600	750	220	
621-64-7	N-Nitroso-di-n-propylamine	U	410	1.0	330	410	100	
65794-96-9	3&4-Methylphenol	U	750	1.0	600	750	230	
67-72-1	Hexachloroethane	U	410	1.0	330	410	120	
98-95-3	Nitrobenzene	U	410	1.0	330	410	110	
78-59-1	Isophorone	U	410	1.0	330	410	94	
88-75-5	2-Nitrophenol	U	750	1.0	600	750	210	
105-67-9	2,4-Dimethylphenol	U	620	1.0	500	620	200	
111-91-1	Bis(2-Chloroethoxy)methane	U	410	1.0	330	410	120	
120-83-2	2,4-Dichlorophenol	U	620	1.0	500	620	190	
106-47-8	4-Chloroaniline	U	620	1.0	500	620	150	
105-60-2	Caprolactam	~~U~~ UJ	620	1.0	500	620	180	CCH
59-50-7	4-Chloro-3-Methylphenol	U	620	1.0	500	620	210	
88-06-2	2,4,6-Trichlorophenol	U	620	1.0	500	620	190	
95-95-4	2,4,5-Trichlorophenol	U	620	1.0	500	620	190	
91-58-7	2-Chloronaphthalene	U	410	1.0	330	410	110	
92-52-4	1,1'-Biphenyl	U	410	1.0	330	410	91	
88-74-4	2-Nitroaniline	U	620	1.0	500	620	94	
131-11-3	Dimethyl Phthalate	U	410	1.0	330	410	97	
606-20-2	2,6-Dinitrotoluene	U	410	1.0	330	410	98	
208-96-8	Acenaphthylene	U	410	1.0	330	410	87	
99-09-2	3-Nitroaniline	~~U~~ UJ	620	1.0	500	620	120	CCH
83-32-9	Acenaphthene	U	410	1.0	330	410	81	
51-28-5	2,4-Dinitrophenol	~~U~~ UJ	1500	1.0	1200	1500	470	CCH
132-64-9	Dibenzofuran	U	410	1.0	330	410	98	
100-02-7	4-Nitrophenol	~~U~~ UJ	1500	1.0	1200	1500	380	CCH
121-14-2	2,4-Dinitrotoluene	U	410	1.0	330	410	110	
84-66-2	Diethylphthalate	U	410	1.0	330	410	100	
7005-72-3	4-Chlorophenyl-phenylether	U	410	1.0	330	410	97	
100-01-6	4-Nitroaniline	U	620	1.0	500	620	170	
534-52-1	4,6-Dinitro-2-Methylphenol	~~U~~ UJ	1500	1.0	1200	1500	420	CCH
86-30-6	N-Nitrosodiphenylamine	U	820	1.0	660	820	270	
101-55-3	4-Bromophenyl-phenylether	U	410	1.0	330	410	110	
1912-24-9	Atrazine	U	410	1.0	330	410	110	
87-86-5	Pentachlorophenol	U	1000	1.0	820	1000	300	
120-12-7	Anthracene	U	410	1.0	330	410	100	
86-74-8	Carbazole	U	620	1.0	500	620	140	

LW
4/15/09

6

KATAHDIN ANALYTICAL SERVICES
Report of Analytical Results

Client: CH2MHill
Project: TO-009 Lejeune
PO No:
Sample Date: 01/09/09
Received Date: 01/13/09
Extraction Date: 01/15/09
Analysis Date: 23-JAN-2009 19:38
Report Date: 02/02/2009
Matrix: SOIL
% Solids: 80.1

Lab ID: SC0146-11
Client ID: MR08-IS255-6-7-09A
SDG: TO9-32
Extracted by: AC
Extraction Method: SW846 3550
Analyst: JCG
Analysis Method: SW846 8270C
Lab Prep Batch: WG59814
Units: ug/Kgdrywt

CAS#	Compound	Flags	Results	DF	PQL	Adj.PQL	Adj.MDL
84-74-2	Di-n-butylphthalate	U	410	1.0	330	410	130
85-68-7	Butylbenzylphthalate	U	410	1.0	330	410	120
91-94-1	3,3'-Dichlorobenzidine	U	620	1.0	500	620	140
218-01-9	Chrysene	U	410	1.0	330	410	120
117-81-7	bis(2-Ethylhexyl)phthalate	U	410	1.0	330	410	120
117-84-0	Di-n-octylphthalate	U	410	1.0	330	410	260
367-12-4	2-Fluorophenol		72%				
13127-88-3	Phenol-D6		62%				
4165-60-0	Nitrobenzene-D5		67%				
321-60-8	2-Fluorobiphenyl		73%				
118-79-6	2,4,6-Tribromophenol		52%				
1718-51-0	Terphenyl-D14		91%				

fwd
4/15/09

7

KATAHDIN ANALYTICAL SERVICES
Report of Analytical Results

Client: CH2MHill
Project: TO-009 Lejeune
PO No:
Sample Date: 01/09/09
Received Date: 01/13/09
Extraction Date: 01/15/09
Analysis Date: 24-JAN-2009 21:42
Report Date: 02/02/2009
Matrix: SOIL
% Solids: 91.4

Lab ID: SC0146-13
Client ID: MR08-SS276-09A
SDG: TO9-32
Extracted by: AC
Extraction Method: SW846 3550
Analyst: JCG
Analysis Method: SW846 8270C
Lab Prep Batch: WG59814
Units: ug/Kgdrywt

CAS#	Compound	Flags	Results	DF	PQL	Adj.PQL	Adj.MDL	
100-52-7	Benzaldehyde	~~U~~ UJ	550	1.0	500	550	130	JCB
108-95-2	Phenol	U	550	1.0	500	550	170	
111-44-4	Bis(2-Chloroethyl)ether	U	360	1.0	330	360	88	
95-57-8	2-Chlorophenol	U	550	1.0	500	550	180	
95-48-7	2-Methylphenol	U	660	1.0	600	660	220	
108-60-1	2,2'-Oxybis(1-chloropropane)	U	360	1.0	330	360	97	
98-86-2	Acetophenone	U	660	1.0	600	660	190	
621-64-7	N-Nitroso-di-n-propylamine	U	360	1.0	330	360	91	
65794-96-9	3&4-Methylphenol	U	660	1.0	600	660	200	
67-72-1	Hexachloroethane	U	360	1.0	330	360	100	
98-95-3	Nitrobenzene	U	360	1.0	330	360	100	
78-59-1	Isophorone	U	360	1.0	330	360	82	
88-75-5	2-Nitrophenol	U	660	1.0	600	660	180	
105-67-9	2,4-Dimethylphenol	U	550	1.0	500	550	180	
111-91-1	Bis(2-Chloroethoxy)methane	U	360	1.0	330	360	100	
120-83-2	2,4-Dichlorophenol	U	550	1.0	500	550	160	
106-47-8	4-Chloroaniline	U	550	1.0	500	550	130	
105-60-2	Caprolactam	U	550	1.0	500	550	160	
59-50-7	4-Chloro-3-Methylphenol	U	550	1.0	500	550	180	
88-06-2	2,4,6-Trichlorophenol	U	550	1.0	500	550	170	
95-95-4	2,4,5-Trichlorophenol	U	550	1.0	500	550	170	
91-58-7	2-Chloronaphthalene	U	360	1.0	330	360	95	
92-52-4	1,1'-Biphenyl	U	360	1.0	330	360	80	
88-74-4	2-Nitroaniline	U	550	1.0	500	550	82	
131-11-3	Dimethyl Phthalate	U	360	1.0	330	360	85	
606-20-2	2,6-Dinitrotoluene	U	360	1.0	330	360	86	
208-96-8	Acenaphthylene	U	360	1.0	330	360	76	
99-09-2	3-Nitroaniline	U	550	1.0	500	550	100	
83-32-9	Acenaphthene	U	360	1.0	330	360	71	
51-28-5	2,4-Dinitrophenol	~~U~~ UJ	1300	1.0	1200	1300	410	CCH
132-64-9	Dibenzofuran	U	360	1.0	330	360	86	
100-02-7	4-Nitrophenol	U	1300	1.0	1200	1300	340	
121-14-2	2,4-Dinitrotoluene	U	360	1.0	330	360	93	
84-66-2	Diethylphthalate	U	360	1.0	330	360	88	
7005-72-3	4-Chlorophenyl-phenylether	U	360	1.0	330	360	85	
100-01-6	4-Nitroaniline	U	550	1.0	500	550	150	
534-52-1	4,6-Dinitro-2-Methylphenol	~~U~~ UJ	1300	1.0	1200	1300	370	CCH
86-30-6	N-Nitrosodiphenylamine	U	720	1.0	660	720	240	
101-55-3	4-Bromophenyl-phenylether	U	360	1.0	330	360	93	
1912-24-9	Atrazine	U	360	1.0	330	360	100	
87-86-5	Pentachlorophenol	~~U~~ UJ	900	1.0	820	900	260	CCH
120-12-7	Anthracene	U	360	1.0	330	360	92	
86-74-8	Carbazole	U	550	1.0	500	550	120	

QW
4/15/09

7

KATAHDIN ANALYTICAL SERVICES
Report of Analytical Results

Client: CH2MHill
Project: TO-009 Lejeune
PO No:
Sample Date: 01/09/09
Received Date: 01/13/09
Extraction Date: 01/15/09
Analysis Date: 24-JAN-2009 21:42
Report Date: 02/02/2009
Matrix: SOIL
% Solids: 91.4

Lab ID: SC0146-13
Client ID: MR08-SS276-09A
SDG: TO9-32
Extracted by: AC
Extraction Method: SW846 3550
Analyst: JCG
Analysis Method: SW846 8270C
Lab Prep Batch: WG59814
Units: ug/Kgdrywt

CAS#	Compound	Flags	Results	DF	PQL	Adj.PQL	Adj.MDL
84-74-2	Di-n-butylphthalate	U	360	1.0	330	360	110
85-68-7	Butylbenzylphthalate	U	360	1.0	330	360	100
91-94-1	3,3'-Dichlorobenzidine	U	550	1.0	500	550	120
218-01-9	Chrysene	U	360	1.0	330	360	100
117-81-7	bis(2-Ethylhexyl)phthalate	U	360	1.0	330	360	110
117-84-0	Di-n-octylphthalate	U	360	1.0	330	360	230
367-12-4	2-Fluorophenol		68%				
13127-88-3	Phenol-D6		59%				
4165-60-0	Nitrobenzene-D5		72%				
321-60-8	2-Fluorobiphenyl		79%				
118-79-6	2,4,6-Tribromophenol		75%				
1718-51-0	Terphenyl-D14		103%				

MW
4/15/09

8

KATAHDIN ANALYTICAL SERVICES
Report of Analytical Results

Client: CH2MHill
Project: TO-009 Lejeune
PO No:
Sample Date: 01/09/09
Received Date: 01/13/09
Extraction Date: 01/15/09
Analysis Date: 23-JAN-2009 20:21
Report Date: 02/02/2009
Matrix: SOIL
% Solids: 87.4

Lab ID: SC0146-15
Client ID: MR08-IS276-6-7-09A
SDG: TO9-32
Extracted by: AC
Extraction Method: SW846 3550
Analyst: JCG
Analysis Method: SW846 8270C
Lab Prep Batch: WG59814
Units: ug/Kgdrywt

CAS#	Compound	Flags	Results	DF	PQL	Adj.PQL	Adj.MDL	
100-52-7	Benzaldehyde	~~U~~ UJ	570	1.0	500	570	140	JCB
108-95-2	Phenol	U	570	1.0	500	570	180	
111-44-4	Bis(2-Chloroethyl)ether	U	380	1.0	330	380	93	
95-57-8	2-Chlorophenol	U	570	1.0	500	570	190	
95-48-7	2-Methylphenol	U	690	1.0	600	690	230	
108-60-1	2,2'-Oxybis(1-chloropropane)	U	380	1.0	330	380	100	
98-86-2	Acetophenone	U	690	1.0	600	690	200	
621-64-7	N-Nitroso-di-n-propylamine	U	380	1.0	330	380	95	
65794-96-9	3&4-Methylphenol	U	690	1.0	600	690	210	
67-72-1	Hexachloroethane	U	380	1.0	330	380	110	
98-95-3	Nitrobenzene	U	380	1.0	330	380	100	
78-59-1	Isophorone	U	380	1.0	330	380	86	
88-75-5	2-Nitrophenol	U	690	1.0	600	690	190	
105-67-9	2,4-Dimethylphenol	U	570	1.0	500	570	190	
111-91-1	Bis(2-Chloroethoxy)methane	U	380	1.0	330	380	110	
120-83-2	2,4-Dichlorophenol	U	570	1.0	500	570	170	
106-47-8	4-Chloroaniline	U	570	1.0	500	570	140	
105-60-2	Caprolactam	~~U~~ UJ	570	1.0	500	570	160	CCH
59-50-7	4-Chloro-3-Methylphenol	U	570	1.0	500	570	190	
88-06-2	2,4,6-Trichlorophenol	U	570	1.0	500	570	180	
95-95-4	2,4,5-Trichlorophenol	U	570	1.0	500	570	180	
91-58-7	2-Chloronaphthalene	U	380	1.0	330	380	99	
92-52-4	1,1'-Biphenyl	U	380	1.0	330	380	83	
88-74-4	2-Nitroaniline	U	570	1.0	500	570	86	
131-11-3	Dimethyl Phthalate	U	380	1.0	330	380	89	
606-20-2	2,6-Dinitrotoluene	U	380	1.0	330	380	90	
208-96-8	Acenaphthylene	U	380	1.0	330	380	80	
99-09-2	3-Nitroaniline	~~U~~ UJ	570	1.0	500	570	110	CCH
83-32-9	Acenaphthene	U	380	1.0	330	380	74	
51-28-5	2,4-Dinitrophenol	~~U~~ UJ	1400	1.0	1200	1400	430	CCH
132-64-9	Dibenzofuran	U	380	1.0	330	380	90	
100-02-7	4-Nitrophenol	~~U~~ UJ	1400	1.0	1200	1400	350	CCH
121-14-2	2,4-Dinitrotoluene	U	380	1.0	330	380	97	
84-66-2	Diethylphthalate	U	380	1.0	330	380	91	
7005-72-3	4-Chlorophenyl-phenylether	U	380	1.0	330	380	89	
100-01-6	4-Nitroaniline	U	570	1.0	500	570	150	
534-52-1	4,6-Dinitro-2-Methylphenol	~~U~~ UJ	1400	1.0	1200	1400	380	CCH
86-30-6	N-Nitrosodiphenylamine	U	750	1.0	660	750	250	
101-55-3	4-Bromophenyl-phenylether	U	380	1.0	330	380	97	
1912-24-9	Atrazine	U	380	1.0	330	380	100	
87-86-5	Pentachlorophenol	U	940	1.0	820	940	270	
120-12-7	Anthracene	U	380	1.0	330	380	96	
86-74-8	Carbazole	U	570	1.0	500	570	130	

fiW
4/15/09

KATAHDIN ANALYTICAL SERVICES
Report of Analytical Results

Client: CH2MHill
Project: TO-009 Lejeune
PO No:
Sample Date: 01/09/09
Received Date: 01/13/09
Extraction Date: 01/15/09
Analysis Date: 23-JAN-2009 20:21
Report Date: 02/02/2009
Matrix: SOIL
% Solids: 87.4

Lab ID: SC0146-15
Client ID: MR08-IS276-6-7-09A
SDG: TO9-32
Extracted by: AC
Extraction Method: SW846 3550
Analyst: JCG
Analysis Method: SW846 8270C
Lab Prep Batch: WG59814
Units: ug/Kgdrywt

CAS#	Compound	Flags	Results	DF	PQL	Adj.PQL	Adj.MDL
84-74-2	Di-n-butylphthalate	U	380	1.0	330	380	120
85-68-7	Butylbenzylphthalate	U	380	1.0	330	380	110
91-94-1	3,3'-Dichlorobenzidine	U	570	1.0	500	570	130
218-01-9	Chrysene	U	380	1.0	330	380	110
117-81-7	bis(2-Ethylhexyl)phthalate	U	380	1.0	330	380	110
117-84-0	Di-n-octylphthalate	U	380	1.0	330	380	240
367-12-4	2-Fluorophenol		72%				
13127-88-3	Phenol-D6		68%				
4165-60-0	Nitrobenzene-D5		67%				
321-60-8	2-Fluorobiphenyl		77%				
118-79-6	2,4,6-Tribromophenol		60%				
1718-51-0	Terphenyl-D14		94%				

LW
4/15/09

9

KATAHDIN ANALYTICAL SERVICES
Report of Analytical Results

Client: CH2MHill
Project: TO-009 Lejeune
PO No:
Sample Date: 01/09/09
Received Date: 01/13/09
Extraction Date: 01/15/09
Analysis Date: 24-JAN-2009 19:36
Report Date: 02/02/2009
Matrix: SOIL
% Solids: 86.5

Lab ID: SC0146-17
Client ID: MR08-SS254-09A
SDG: TO9-32
Extracted by: AC
Extraction Method: SW846 3550
Analyst: JCG
Analysis Method: SW846 8270C
Lab Prep Batch: WG59814
Units: ug/Kgdrywt

CAS#	Compound	Flags	Results	DF	PQL	Adj.PQL	Adj.MDL	
100-52-7	Benzaldehyde	~~U~~ UJ	580	1.0	500	580	140	JCB
108-95-2	Phenol	U	580	1.0	500	580	180	
111-44-4	Bis(2-Chloroethyl)ether	U	380	1.0	330	380	94	
95-57-8	2-Chlorophenol	U	580	1.0	500	580	190	
95-48-7	2-Methylphenol	U	690	1.0	600	690	230	
108-60-1	2,2'-Oxybis(1-chloropropane)	U	380	1.0	330	380	100	
98-86-2	Acetophenone	U	690	1.0	600	690	200	
621-64-7	N-Nitroso-di-n-propylamine	U	380	1.0	330	380	96	
65794-96-9	3&4-Methylphenol	U	690	1.0	600	690	220	
67-72-1	Hexachloroethane	U	380	1.0	330	380	110	
98-95-3	Nitrobenzene	U	380	1.0	330	380	100	
78-59-1	Isophorone	U	380	1.0	330	380	87	
88-75-5	2-Nitrophenol	U	690	1.0	600	690	190	
105-67-9	2,4-Dimethylphenol	U	580	1.0	500	580	190	
111-91-1	Bis(2-Chloroethoxy)methane	U	380	1.0	330	380	110	
120-83-2	2,4-Dichlorophenol	U	580	1.0	500	580	170	
106-47-8	4-Chloroaniline	U	580	1.0	500	580	140	
105-60-2	Caprolactam	U	580	1.0	500	580	170	
59-50-7	4-Chloro-3-Methylphenol	U	580	1.0	500	580	190	
88-06-2	2,4,6-Trichlorophenol	U	580	1.0	500	580	180	
95-95-4	2,4,5-Trichlorophenol	U	580	1.0	500	580	180	
91-58-7	2-Chloronaphthalene	U	380	1.0	330	380	100	
92-52-4	1,1'-Biphenyl	U	380	1.0	330	380	84	
88-74-4	2-Nitroaniline	U	580	1.0	500	580	87	
131-11-3	Dimethyl Phthalate	U	380	1.0	330	380	90	
606-20-2	2,6-Dinitrotoluene	U	380	1.0	330	380	91	
208-96-8	Acenaphthylene	U	380	1.0	330	380	81	
99-09-2	3-Nitroaniline	U	580	1.0	500	580	110	
83-32-9	Acenaphthene	U	380	1.0	330	380	75	
51-28-5	2,4-Dinitrophenol	~~U~~ UJ	1400	1.0	1200	1400	440	CCH
132-64-9	Dibenzofuran	U	380	1.0	330	380	91	
100-02-7	4-Nitrophenol	U	1400	1.0	1200	1400	360	
121-14-2	2,4-Dinitrotoluene	U	380	1.0	330	380	98	
84-66-2	Diethylphthalate	U	380	1.0	330	380	92	
7005-72-3	4-Chlorophenyl-phenylether	U	380	1.0	330	380	90	
100-01-6	4-Nitroaniline	U	580	1.0	500	580	150	
534-52-1	4,6-Dinitro-2-Methylphenol	~~U~~ UJ	1400	1.0	1200	1400	390	CCH
86-30-6	N-Nitrosodiphenylamine	U	760	1.0	660	760	250	
101-55-3	4-Bromophenyl-phenylether	U	380	1.0	330	380	98	
1912-24-9	Atrazine	U	380	1.0	330	380	100	
87-86-5	Pentachlorophenol	~~U~~ UJ	950	1.0	820	950	270	CCH
120-12-7	Anthracene	U	380	1.0	330	380	97	
86-74-8	Carbazole	U	580	1.0	500	580	130	

lw 4/15/09

9

KATAHDIN ANALYTICAL SERVICES
Report of Analytical Results

Client: CH2MHill
Project: TO-009 Lejeune
PO No:
Sample Date: 01/09/09
Received Date: 01/13/09
Extraction Date: 01/15/09
Analysis Date: 24-JAN-2009 19:36
Report Date: 02/02/2009
Matrix: SOIL
% Solids: 86.5

Lab ID: SC0146-17
Client ID: MR08-SS254-09A
SDG: TO9-32
Extracted by: AC
Extraction Method: SW846 3550
Analyst: JCG
Analysis Method: SW846 8270C
Lab Prep Batch: WG59814
Units: ug/Kgdrywt

CAS#	Compound	Flags	Results	DF	PQL	Adj.PQL	Adj.MDL
84-74-2	Di-n-butylphthalate	U	380	1.0	330	380	120
85-68-7	Butylbenzylphthalate	U	380	1.0	330	380	110
91-94-1	3,3'-Dichlorobenzidine	U	580	1.0	500	580	130
218-01-9	Chrysene	U	380	1.0	330	380	110
117-81-7	bis(2-Ethylhexyl)phthalate	U	380	1.0	330	380	110
117-84-0	Di-n-octylphthalate	U	380	1.0	330	380	240
367-12-4	2-Fluorophenol		64%				
13127-88-3	Phenol-D6		51%				
4165-60-0	Nitrobenzene-D5		67%				
321-60-8	2-Fluorobiphenyl		74%				
118-79-6	2,4,6-Tribromophenol		68%				
1718-51-0	Terphenyl-D14		96%				

LW
4/15/09

10

KATAHDIN ANALYTICAL SERVICES
Report of Analytical Results

Client: CH2MHill
Project: TO-009 Lejeune
PO No:
Sample Date: 01/09/09
Received Date: 01/13/09
Extraction Date: 01/15/09
Analysis Date: 23-JAN-2009 21:03
Report Date: 02/02/2009
Matrix: SOIL
% Solids: 88.6

Lab ID: SC0146-19
Client ID: MR08-IS254-3-4-09A
SDG: TO9-32
Extracted by: AC
Extraction Method: SW846 3550
Analyst: JCG
Analysis Method: SW846 8270C
Lab Prep Batch: WG59814
Units: ug/Kgdrywt

CAS#	Compound	Flags	Results	DF	PQL	Adj.PQL	Adj.MDL	
100-52-7	Benzaldehyde	~~U~~ UJ	560	1.0	500	560	140	JCB
108-95-2	Phenol	U	560	1.0	500	560	180	
111-44-4	Bis(2-Chloroethyl)ether	U	370	1.0	330	370	91	
95-57-8	2-Chlorophenol	U	560	1.0	500	560	180	
95-48-7	2-Methylphenol	U	680	1.0	600	680	220	
108-60-1	2,2'-Oxybis(1-chloropropane)	U	370	1.0	330	370	100	
98-86-2	Acetophenone	U	680	1.0	600	680	200	
621-64-7	N-Nitroso-di-n-propylamine	U	370	1.0	330	370	94	
65794-96-9	3&4-Methylphenol	U	680	1.0	600	680	210	
67-72-1	Hexachloroethane	U	370	1.0	330	370	110	
98-95-3	Nitrobenzene	U	370	1.0	330	370	100	
78-59-1	Isophorone	U	370	1.0	330	370	85	
88-75-5	2-Nitrophenol	U	680	1.0	600	680	190	
105-67-9	2,4-Dimethylphenol	U	560	1.0	500	560	190	
111-91-1	Bis(2-Chloroethoxy)methane	U	370	1.0	330	370	110	
120-83-2	2,4-Dichlorophenol	U	560	1.0	500	560	170	
106-47-8	4-Chloroaniline	U	560	1.0	500	560	130	
105-60-2	Caprolactam	~~U~~ UJ	560	1.0	500	560	160	CCH
59-50-7	4-Chloro-3-Methylphenol	U	560	1.0	500	560	190	
88-06-2	2,4,6-Trichlorophenol	U	560	1.0	500	560	170	
95-95-4	2,4,5-Trichlorophenol	U	560	1.0	500	560	170	
91-58-7	2-Chloronaphthalene	U	370	1.0	330	370	98	
92-52-4	1,1'-Biphenyl	U	370	1.0	330	370	82	
88-74-4	2-Nitroaniline	U	560	1.0	500	560	85	
131-11-3	Dimethyl Phthalate	U	370	1.0	330	370	88	
606-20-2	2,6-Dinitrotoluene	U	370	1.0	330	370	89	
208-96-8	Acenaphthylene	U	370	1.0	330	370	79	
99-09-2	3-Nitroaniline	~~U~~ UJ	560	1.0	500	560	110	CCH
83-32-9	Acenaphthene	U	370	1.0	330	370	73	
51-28-5	2,4-Dinitrophenol	~~U~~ UJ	1400	1.0	1200	1400	420	CCH
132-64-9	Dibenzofuran	U	370	1.0	330	370	89	
100-02-7	4-Nitrophenol	~~U~~ UJ	1400	1.0	1200	1400	350	CCH
121-14-2	2,4-Dinitrotoluene	U	370	1.0	330	370	96	
84-66-2	Diethylphthalate	U	370	1.0	330	370	90	
7005-72-3	4-Chlorophenyl-phenylether	U	370	1.0	330	370	88	
100-01-6	4-Nitroaniline	U	560	1.0	500	560	150	
534-52-1	4,6-Dinitro-2-Methylphenol	~~U~~ UJ	1400	1.0	1200	1400	380	CCH
86-30-6	N-Nitrosodiphenylamine	U	740	1.0	660	740	250	
101-55-3	4-Bromophenyl-phenylether	U	370	1.0	330	370	96	
1912-24-9	Atrazine	U	370	1.0	330	370	100	
87-86-5	Pentachlorophenol	U	920	1.0	820	920	270	
120-12-7	Anthracene	U	370	1.0	330	370	95	
86-74-8	Carbazole	U	560	1.0	500	560	120	

lw
4/15/09

10

KATAHDIN ANALYTICAL SERVICES
Report of Analytical Results

Client: CH2MHill
Project: TO-009 Lejeune
PO No:
Sample Date: 01/09/09
Received Date: 01/13/09
Extraction Date: 01/15/09
Analysis Date: 23-JAN-2009 21:03
Report Date: 02/02/2009
Matrix: SOIL
% Solids: 88.6

Lab ID: SC0146-19
Client ID: MR08-IS254-3-4-09A
SDG: TO9-32
Extracted by: AC
Extraction Method: SW846 3550
Analyst: JCG
Analysis Method: SW846 8270C
Lab Prep Batch: WG59814
Units: ug/Kgdrywt

CAS#	Compound	Flags	Results	DF	PQL	Adj.PQL	Adj.MDL
84-74-2	Di-n-butylphthalate	U	370	1.0	330	370	110
85-68-7	Butylbenzylphthalate	U	370	1.0	330	370	100
91-94-1	3,3'-Dichlorobenzidine	U	560	1.0	500	560	130
218-01-9	Chrysene	U	370	1.0	330	370	110
117-81-7	bis(2-Ethylhexyl)phthalate		610	1.0	330	370	110
117-84-0	Di-n-octylphthalate	U	370	1.0	330	370	240
367-12-4	2-Fluorophenol		68%				
13127-88-3	Phenol-D6		63%				
4165-60-0	Nitrobenzene-D5		66%				
321-60-8	2-Fluorobiphenyl		71%				
118-79-6	2,4,6-Tribromophenol		61%				
1718-51-0	Terphenyl-D14		95%				

MW
4/15/09

KATAHDIN ANALYTICAL SERVICES
Report of Analytical Results

Client: CH2MHill
Project: TO-009 Lejeune
PO No:
Sample Date: 01/09/09
Received Date: 01/13/09
Extraction Date: 01/15/09
Analysis Date: 23-JAN-2009 22:28
Report Date: 02/02/2009
Matrix: SOIL
% Solids: 90.6

Lab ID: SC0146-21
Client ID: MR08-SS277-09A
SDG: TO9-32
Extracted by: AC
Extraction Method: SW846 3550
Analyst: JCG
Analysis Method: SW846 8270C
Lab Prep Batch: WG59814
Units: ug/Kgdrywt

CAS#	Compound	Flags	Results	DF	PQL	Adj.PQL	Adj.MDL	
100-52-7	Benzaldehyde	~~U~~ UJ	550	1.0	500	550	130	JCB
108-95-2	Phenol	U	550	1.0	500	550	170	
111-44-4	Bis(2-Chloroethyl)ether	U	360	1.0	330	360	89	
95-57-8	2-Chlorophenol	U	550	1.0	500	550	180	
95-48-7	2-Methylphenol	U	660	1.0	600	660	220	
108-60-1	2,2'-Oxybis(1-chloropropane)	U	360	1.0	330	360	98	
98-86-2	Acetophenone	U	660	1.0	600	660	200	
621-64-7	N-Nitroso-di-n-propylamine	U	360	1.0	330	360	92	
65794-96-9	3&4-Methylphenol	U	660	1.0	600	660	210	
67-72-1	Hexachloroethane	U	360	1.0	330	360	100	
98-95-3	Nitrobenzene	U	360	1.0	330	360	100	
78-59-1	Isophorone	U	360	1.0	330	360	83	
88-75-5	2-Nitrophenol	U	660	1.0	600	660	180	
105-67-9	2,4-Dimethylphenol	U	550	1.0	500	550	180	
111-91-1	Bis(2-Chloroethoxy)methane	U	360	1.0	330	360	100	
120-83-2	2,4-Dichlorophenol	U	550	1.0	500	550	160	
106-47-8	4-Chloroaniline	U	550	1.0	500	550	130	
105-60-2	Caprolactam	~~U~~ UJ	550	1.0	500	550	160	CCH
59-50-7	4-Chloro-3-Methylphenol	U	550	1.0	500	550	180	
88-06-2	2,4,6-Trichlorophenol	U	550	1.0	500	550	170	
95-95-4	2,4,5-Trichlorophenol	U	550	1.0	500	550	170	
91-58-7	2-Chloronaphthalene	U	360	1.0	330	360	96	
92-52-4	1,1'-Biphenyl	U	360	1.0	330	360	80	
88-74-4	2-Nitroaniline	U	550	1.0	500	550	83	
131-11-3	Dimethyl Phthalate	U	360	1.0	330	360	86	
606-20-2	2,6-Dinitrotoluene	U	360	1.0	330	360	87	
208-96-8	Acenaphthylene	U	360	1.0	330	360	77	
99-09-2	3-Nitroaniline	~~U~~ UJ	550	1.0	500	550	100	CCH
83-32-9	Acenaphthene	U	360	1.0	330	360	72	
51-28-5	2,4-Dinitrophenol	~~U~~ UJ	1300	1.0	1200	1300	420	CCH
132-64-9	Dibenzofuran	U	360	1.0	330	360	87	
100-02-7	4-Nitrophenol	~~U~~ UJ	1300	1.0	1200	1300	340	CCH
121-14-2	2,4-Dinitrotoluene	U	360	1.0	330	360	94	
84-66-2	Diethylphthalate	U	360	1.0	330	360	88	
7005-72-3	4-Chlorophenyl-phenylether	U	360	1.0	330	360	86	
100-01-6	4-Nitroaniline	U	550	1.0	500	550	150	
534-52-1	4,6-Dinitro-2-Methylphenol	~~U~~ UJ	1300	1.0	1200	1300	370	CCH
86-30-6	N-Nitrosodiphenylamine	U	730	1.0	660	730	240	
101-55-3	4-Bromophenyl-phenylether	U	360	1.0	330	360	94	
1912-24-9	Atrazine	U	360	1.0	330	360	100	
87-86-5	Pentachlorophenol	U	900	1.0	820	900	260	
120-12-7	Anthracene	U	360	1.0	330	360	93	
86-74-8	Carbazole	U	550	1.0	500	550	120	

4/15/09

11

KATAHDIN ANALYTICAL SERVICES
Report of Analytical Results

Client: CH2MHill
Project: TO-009 Lejeune
PO No:
Sample Date: 01/09/09
Received Date: 01/13/09
Extraction Date: 01/15/09
Analysis Date: 23-JAN-2009 22:28
Report Date: 02/02/2009
Matrix: SOIL
% Solids: 90.6

Lab ID: SC0146-21
Client ID: MR08-SS277-09A
SDG: TO9-32
Extracted by: AC
Extraction Method: SW846 3550
Analyst: JCG
Analysis Method: SW846 8270C
Lab Prep Batch: WG59814
Units: ug/Kgdrywt

CAS#	Compound	Flags	Results	DF	PQL	Adj.PQL	Adj.MDL
84-74-2	Di-n-butylphthalate	U	360	1.0	330	360	110
85-68-7	Butylbenzylphthalate	U	360	1.0	330	360	100
91-94-1	3,3'-Dichlorobenzidine	U	550	1.0	500	550	120
218-01-9	Chrysene	U	360	1.0	330	360	100
117-81-7	bis(2-Ethylhexyl)phthalate	J	120	1.0	330	360	110
117-84-0	Di-n-octylphthalate	U	360	1.0	330	360	230
367-12-4	2-Fluorophenol		52%				
13127-88-3	Phenol-D6		50%				
4165-60-0	Nitrobenzene-D5		51%				
321-60-8	2-Fluorobiphenyl		61%				
118-79-6	2,4,6-Tribromophenol		62%				
1718-51-0	Terphenyl-D14		87%				

lw 4/15/09

KATAHDIN ANALYTICAL SERVICES
Report of Analytical Results

Client: CH2MHill
Project: TO-009 Lejeune
PO No:
Sample Date: 01/09/09
Received Date: 01/13/09
Extraction Date: 01/15/09
Analysis Date: 23-JAN-2009 21:46
Report Date: 02/02/2009
Matrix: SOIL
% Solids: 88.1

Lab ID: SC0146-23
Client ID: MR08-IS277-3-4-09A
SDG: TO9-32
Extracted by: AC
Extraction Method: SW846 3550
Analyst: JCG
Analysis Method: SW846 8270C
Lab Prep Batch: WG59814
Units: ug/Kgdrywt

CAS#	Compound	Flags	Results	DF	PQL	Adj.PQL	Adj.MDL	
100-52-7	Benzaldehyde	~~U~~ UJ	570	1.0	500	570	140	JCB
108-95-2	Phenol	U	570	1.0	500	570	180	
111-44-4	Bis(2-Chloroethyl)ether	U	370	1.0	330	370	92	
95-57-8	2-Chlorophenol	U	570	1.0	500	570	190	
95-48-7	2-Methylphenol	U	680	1.0	600	680	230	
108-60-1	2,2'-Oxybis(1-chloropropane)	U	370	1.0	330	370	100	
98-86-2	Acetophenone	U	680	1.0	600	680	200	
621-64-7	N-Nitroso-di-n-propylamine	U	370	1.0	330	370	94	
65794-96-9	3&4-Methylphenol	U	680	1.0	600	680	210	
67-72-1	Hexachloroethane	U	370	1.0	330	370	110	
98-95-3	Nitrobenzene	U	370	1.0	330	370	100	
78-59-1	Isophorone	U	370	1.0	330	370	85	
88-75-5	2-Nitrophenol	U	680	1.0	600	680	190	
105-67-9	2,4-Dimethylphenol	U	570	1.0	500	570	190	
111-91-1	Bis(2-Chloroethoxy)methane	U	370	1.0	330	370	110	
120-83-2	2,4-Dichlorophenol	U	570	1.0	500	570	170	
106-47-8	4-Chloroaniline	U	570	1.0	500	570	140	
105-60-2	Caprolactam	~~U~~ UJ	570	1.0	500	570	160	CCH
59-50-7	4-Chloro-3-Methylphenol	U	570	1.0	500	570	190	
88-06-2	2,4,6-Trichlorophenol	U	570	1.0	500	570	180	
95-95-4	2,4,5-Trichlorophenol	U	570	1.0	500	570	180	
91-58-7	2-Chloronaphthalene	U	370	1.0	330	370	99	
92-52-4	1,1'-Biphenyl	U	370	1.0	330	370	83	
88-74-4	2-Nitroaniline	U	570	1.0	500	570	85	
131-11-3	Dimethyl Phthalate	U	370	1.0	330	370	88	
606-20-2	2,6-Dinitrotoluene	U	370	1.0	330	370	90	
208-96-8	Acenaphthylene	U	370	1.0	330	370	79	
99-09-2	3-Nitroaniline	~~U~~ UJ	570	1.0	500	570	110	CCH
83-32-9	Acenaphthene	U	370	1.0	330	370	74	
51-28-5	2,4-Dinitrophenol	~~U~~ UJ	1400	1.0	1200	1400	430	CCH
132-64-9	Dibenzofuran	U	370	1.0	330	370	90	
100-02-7	4-Nitrophenol	~~U~~ UJ	1400	1.0	1200	1400	350	CCH
121-14-2	2,4-Dinitrotoluene	U	370	1.0	330	370	96	
84-66-2	Diethylphthalate	U	370	1.0	330	370	91	
7005-72-3	4-Chlorophenyl-phenylether	U	370	1.0	330	370	88	
100-01-6	4-Nitroaniline	U	570	1.0	500	570	150	
534-52-1	4,6-Dinitro-2-Methylphenol	~~U~~ UJ	1400	1.0	1200	1400	380	CCH
86-30-6	N-Nitrosodiphenylamine	U	750	1.0	660	750	250	
101-55-3	4-Bromophenyl-phenylether	U	370	1.0	330	370	96	
1912-24-9	Atrazine	U	370	1.0	330	370	100	
87-86-5	Pentachlorophenol	U	930	1.0	820	930	270	
120-12-7	Anthracene	U	370	1.0	330	370	95	
86-74-8	Carbazole	U	570	1.0	500	570	130	

LW 4/15/09

KATAHDIN ANALYTICAL SERVICES
Report of Analytical Results

Client: CH2MHill
Project: TO-009 Lejeune
PO No:
Sample Date: 01/09/09
Received Date: 01/13/09
Extraction Date: 01/15/09
Analysis Date: 23-JAN-2009 21:46
Report Date: 02/02/2009
Matrix: SOIL
% Solids: 88.1

Lab ID: SC0146-23
Client ID: MR08-IS277-3-4-09A
SDG: TO9-32
Extracted by: AC
Extraction Method: SW846 3550
Analyst: JCG
Analysis Method: SW846 8270C
Lab Prep Batch: WG59814
Units: ug/Kgdrywt

CAS#	Compound	Flags	Results	DF	PQL	Adj.PQL	Adj.MDL
84-74-2	Di-n-butylphthalate	U	370	1.0	330	370	110
85-68-7	Butylbenzylphthalate	U	370	1.0	330	370	100
91-94-1	3,3'-Dichlorobenzidine	U	570	1.0	500	570	130
218-01-9	Chrysene	U	370	1.0	330	370	110
117-81-7	bis(2-Ethylhexyl)phthalate	J	120	1.0	330	370	110
117-84-0	Di-n-octylphthalate	U	370	1.0	330	370	240
367-12-4	2-Fluorophenol		71%				
13127-88-3	Phenol-D6		69%				
4165-60-0	Nitrobenzene-D5		68%				
321-60-8	2-Fluorobiphenyl		74%				
118-79-6	2,4,6-Tribromophenol		57%				
1718-51-0	Terphenyl-D14		104%				

LW 4/15/09

13

KATAHDIN ANALYTICAL SERVICES
Report of Analytical Results

Client: CH2MHill
Project: TO-009 Lejeune
PO No:
Sample Date: 01/09/09
Received Date: 01/13/09
Extraction Date: 01/15/09
Analysis Date: 24-JAN-2009 20:18
Report Date: 02/02/2009
Matrix: SOIL
% Solids: 84.9

Lab ID: SC0146-25
Client ID: MR08-SS278-09A
SDG: TO9-32
Extracted by: AC
Extraction Method: SW846 3550
Analyst: JCG
Analysis Method: SW846 8270C
Lab Prep Batch: WG59835
Units: ug/Kgdrywt

CAS#	Compound	Flags	Results	DF	PQL	Adj.PQL	Adj.MDL	
100-52-7	Benzaldehyde	~~U~~ UJ	590	1.0	500	590	140	ICB
108-95-2	Phenol	U	590	1.0	500	590	180	
111-44-4	Bis(2-Chloroethyl)ether	U	390	1.0	330	390	95	
95-57-8	2-Chlorophenol	U	590	1.0	500	590	190	
95-48-7	2-Methylphenol	U	710	1.0	600	710	240	
108-60-1	2,2'-Oxybis(1-chloropropane)	U	390	1.0	330	390	100	
98-86-2	Acetophenone	U	710	1.0	600	710	210	
621-64-7	N-Nitroso-di-n-propylamine	U	390	1.0	330	390	98	
65794-96-9	3&4-Methylphenol	U	710	1.0	600	710	220	
67-72-1	Hexachloroethane	U	390	1.0	330	390	110	
98-95-3	Nitrobenzene	U	390	1.0	330	390	110	
78-59-1	Isophorone	U	390	1.0	330	390	88	
88-75-5	2-Nitrophenol	U	710	1.0	600	710	200	
105-67-9	2,4-Dimethylphenol	U	590	1.0	500	590	190	
111-91-1	Bis(2-Chloroethoxy)methane	U	390	1.0	330	390	110	
120-83-2	2,4-Dichlorophenol	U	590	1.0	500	590	180	
106-47-8	4-Chloroaniline	U	590	1.0	500	590	140	
105-60-2	Caprolactam	U	590	1.0	500	590	170	
59-50-7	4-Chloro-3-Methylphenol	U	590	1.0	500	590	200	
88-06-2	2,4,6-Trichlorophenol	U	590	1.0	500	590	180	
95-95-4	2,4,5-Trichlorophenol	U	590	1.0	500	590	180	
91-58-7	2-Chloronaphthalene	U	390	1.0	330	390	100	
92-52-4	1,1'-Biphenyl	U	390	1.0	330	390	86	
88-74-4	2-Nitroaniline	U	590	1.0	500	590	88	
131-11-3	Dimethyl Phthalate	U	390	1.0	330	390	92	
606-20-2	2,6-Dinitrotoluene	U	390	1.0	330	390	93	
208-96-8	Acenaphthylene	U	390	1.0	330	390	82	
99-09-2	3-Nitroaniline	U	590	1.0	500	590	110	
83-32-9	Acenaphthene	U	390	1.0	330	390	76	
51-28-5	2,4-Dinitrophenol	~~U~~ UJ	1400	1.0	1200	1400	440	CCH
132-64-9	Dibenzofuran	U	390	1.0	330	390	93	
100-02-7	4-Nitrophenol	U	1400	1.0	1200	1400	360	
121-14-2	2,4-Dinitrotoluene	U	390	1.0	330	390	100	
84-66-2	Diethylphthalate	U	390	1.0	330	390	94	
7005-72-3	4-Chlorophenyl-phenylether	U	390	1.0	330	390	92	
100-01-6	4-Nitroaniline	U	590	1.0	500	590	160	
534-52-1	4,6-Dinitro-2-Methylphenol	~~U~~ UJ	1400	1.0	1200	1400	400	CCH
86-30-6	N-Nitrosodiphenylamine	U	780	1.0	660	780	260	
101-55-3	4-Bromophenyl-phenylether	U	390	1.0	330	390	100	
1912-24-9	Atrazine	U	390	1.0	330	390	110	
87-86-5	Pentachlorophenol	~~U~~ UJ	960	1.0	820	960	280	CCH
120-12-7	Anthracene	U	390	1.0	330	390	99	
86-74-8	Carbazole	U	590	1.0	500	590	130	

hw
4/15/09

KATAHDIN ANALYTICAL SERVICES
Report of Analytical Results

Client: CH2MHill
Project: TO-009 Lejeune
PO No:
Sample Date: 01/09/09
Received Date: 01/13/09
Extraction Date: 01/15/09
Analysis Date: 24-JAN-2009 20:18
Report Date: 02/02/2009
Matrix: SOIL
% Solids: 84.9

Lab ID: SC0146-25
Client ID: MR08-SS278-09A
SDG: TO9-32
Extracted by: AC
Extraction Method: SW846 3550
Analyst: JCG
Analysis Method: SW846 8270C
Lab Prep Batch: WG59835
Units: ug/Kgdrywt

CAS#	Compound	Flags	Results	DF	PQL	Adj.PQL	Adj.MDL
84-74-2	Di-n-butylphthalate	U	390	1.0	330	390	120
85-68-7	Butylbenzylphthalate	U	390	1.0	330	390	110
91-94-1	3,3'-Dichlorobenzidine	U	590	1.0	500	590	130
218-01-9	Chrysene	U	390	1.0	330	390	110
117-81-7	bis(2-Ethylhexyl)phthalate	J	130	1.0	330	390	120
117-84-0	Di-n-octylphthalate	U	390	1.0	330	390	250
367-12-4	2-Fluorophenol		57%				
13127-88-3	Phenol-D6		53%				
4165-60-0	Nitrobenzene-D5		58%				
321-60-8	2-Fluorobiphenyl		66%				
118-79-6	2,4,6-Tribromophenol		64%				
1718-51-0	Terphenyl-D14		97%				

lcW
4/15/09

KATAHDIN ANALYTICAL SERVICES
Report of Analytical Results

Client: CH2MHill
Project: TO-009 Lejeune
PO No:
Sample Date: 01/09/09
Received Date: 01/13/09
Extraction Date: 01/15/09
Analysis Date: 25-JAN-2009 17:48
Report Date: 02/02/2009
Matrix: SOIL
% Solids: 89.2

Lab ID: SC0146-27
Client ID: MR08-IS278-6-7-09A
SDG: TO9-32
Extracted by: AC
Extraction Method: SW846 3550
Analyst: EKC
Analysis Method: SW846 8270C
Lab Prep Batch: WG59835
Units: ug/Kgdrywt

CAS#	Compound	Flags	Results	DF	PQL	Adj.PQL	Adj.MDL
100-52-7	Benzaldehyde	U	560	1.0	500	560	130
108-95-2	Phenol	U	560	1.0	500	560	170
111-44-4	Bis(2-Chloroethyl)ether	U	370	1.0	330	370	91
95-57-8	2-Chlorophenol	U	560	1.0	500	560	180
95-48-7	2-Methylphenol	U	670	1.0	600	670	220
108-60-1	2,2'-Oxybis(1-chloropropane)	U	370	1.0	330	370	100
98-86-2	Acetophenone	U	670	1.0	600	670	200
621-64-7	N-Nitroso-di-n-propylamine	U	370	1.0	330	370	93
65794-96-9	3&4-Methylphenol	U	670	1.0	600	670	210
67-72-1	Hexachloroethane	U	370	1.0	330	370	110
98-95-3	Nitrobenzene	U	370	1.0	330	370	100
78-59-1	Isophorone	U	370	1.0	330	370	84
88-75-5	2-Nitrophenol	U	670	1.0	600	670	190
105-67-9	2,4-Dimethylphenol	U	560	1.0	500	560	180
111-91-1	Bis(2-Chloroethoxy)methane	U	370	1.0	330	370	110
120-83-2	2,4-Dichlorophenol	U	560	1.0	500	560	170
106-47-8	4-Chloroaniline	U	560	1.0	500	560	130
105-60-2	Caprolactam	U	560	1.0	500	560	160
59-50-7	4-Chloro-3-Methylphenol	U	560	1.0	500	560	190
88-06-2	2,4,6-Trichlorophenol	U	560	1.0	500	560	170
95-95-4	2,4,5-Trichlorophenol	U	560	1.0	500	560	170
91-58-7	2-Chloronaphthalene	U	370	1.0	330	370	98
92-52-4	1,1'-Biphenyl	U	370	1.0	330	370	82
88-74-4	2-Nitroaniline	U	560	1.0	500	560	84
131-11-3	Dimethyl Phthalate	U	370	1.0	330	370	87
606-20-2	2,6-Dinitrotoluene	U	370	1.0	330	370	89
208-96-8	Acenaphthylene	U	370	1.0	330	370	78
99-09-2	3-Nitroaniline	U	560	1.0	500	560	100
83-32-9	Acenaphthene	U	370	1.0	330	370	73
51-28-5	2,4-Dinitrophenol	U	1300	1.0	1200	1300	420
132-64-9	Dibenzofuran	U	370	1.0	330	370	89
100-02-7	4-Nitrophenol	U	1300	1.0	1200	1300	350
121-14-2	2,4-Dinitrotoluene	U	370	1.0	330	370	95
84-66-2	Diethylphthalate	U	370	1.0	330	370	90
7005-72-3	4-Chlorophenyl-phenylether	U	370	1.0	330	370	87
100-01-6	4-Nitroaniline	U	560	1.0	500	560	150
534-52-1	4,6-Dinitro-2-Methylphenol	U	1300	1.0	1200	1300	380
86-30-6	N-Nitrosodiphenylamine	U	740	1.0	660	740	240
101-55-3	4-Bromophenyl-phenylether	U	370	1.0	330	370	95
1912-24-9	Atrazine	U	370	1.0	330	370	100
87-86-5	Pentachlorophenol	U	920	1.0	820	920	260
120-12-7	Anthracene	U	370	1.0	330	370	94
86-74-8	Carbazole	U	560	1.0	500	560	120

LW 4/15/09

KATAHDIN ANALYTICAL SERVICES
Report of Analytical Results

Client: CH2MHill
Project: TO-009 Lejeune
PO No:
Sample Date: 01/09/09
Received Date: 01/13/09
Extraction Date: 01/15/09
Analysis Date: 25-JAN-2009 17:48
Report Date: 02/02/2009
Matrix: SOIL
% Solids: 89.2

Lab ID: SC0146-27
Client ID: MR08-IS278-6-7-09A
SDG: TO9-32
Extracted by: AC
Extraction Method: SW846 3550
Analyst: EKC
Analysis Method: SW846 8270C
Lab Prep Batch: WG59835
Units: ug/Kgdrywt

CAS#	Compound	Flags	Results	DF	PQL	Adj.PQL	Adj.MDL
84-74-2	Di-n-butylphthalate	U	370	1.0	330	370	110
85-68-7	Butylbenzylphthalate	U	370	1.0	330	370	100
91-94-1	3,3'-Dichlorobenzidine	U	560	1.0	500	560	130
218-01-9	Chrysene	U	370	1.0	330	370	110
117-81-7	bis(2-Ethylhexyl)phthalate	U	370	1.0	330	370	110
117-84-0	Di-n-octylphthalate	U	370	1.0	330	370	240
367-12-4	2-Fluorophenol		81%				
13127-88-3	Phenol-D6		83%				
4165-60-0	Nitrobenzene-D5		74%				
321-60-8	2-Fluorobiphenyl		80%				
118-79-6	2,4,6-Tribromophenol		64%				
1718-51-0	Terphenyl-D14		98%				

lw
4/15/09

KATAHDIN ANALYTICAL SERVICES
Report of Analytical Results

Client: CH2MHill
Project: TO-009 Lejeune
PO No:
Sample Date: 01/10/09
Received Date: 01/13/09
Extraction Date: 01/15/09
Analysis Date: 25-JAN-2009 18:31
Report Date: 02/02/2009
Matrix: SOIL
% Solids: 92.2

Lab ID: SC0146-29
Client ID: MR08-SS280-09A
SDG: TO9-32
Extracted by: AC
Extraction Method: SW846 3550
Analyst: EKC
Analysis Method: SW846 8270C
Lab Prep Batch: WG59835
Units: ug/Kgdrywt

CAS#	Compound	Flags	Results	DF	PQL	Adj.PQL	Adj.MDL
100-52-7	Benzaldehyde	U	540	1.0	500	540	130
108-95-2	Phenol	U	540	1.0	500	540	170
111-44-4	Bis(2-Chloroethyl)ether	U	360	1.0	330	360	88
95-57-8	2-Chlorophenol	U	540	1.0	500	540	180
95-48-7	2-Methylphenol	U	650	1.0	600	650	220
108-60-1	2,2'-Oxybis(1-chloropropane)	U	360	1.0	330	360	96
98-86-2	Acetophenone	U	650	1.0	600	650	190
621-64-7	N-Nitroso-di-n-propylamine	U	360	1.0	330	360	90
65794-96-9	3&4-Methylphenol	U	650	1.0	600	650	200
67-72-1	Hexachloroethane	U	360	1.0	330	360	100
98-95-3	Nitrobenzene	U	360	1.0	330	360	99
78-59-1	Isophorone	U	360	1.0	330	360	81
88-75-5	2-Nitrophenol	U	650	1.0	600	650	180
105-67-9	2,4-Dimethylphenol	U	540	1.0	500	540	180
111-91-1	Bis(2-Chloroethoxy)methane	U	360	1.0	330	360	100
120-83-2	2,4-Dichlorophenol	U	540	1.0	500	540	160
106-47-8	4-Chloroaniline	U	540	1.0	500	540	130
105-60-2	Caprolactam	U	540	1.0	500	540	160
59-50-7	4-Chloro-3-Methylphenol	U	540	1.0	500	540	180
88-06-2	2,4,6-Trichlorophenol	U	540	1.0	500	540	170
95-95-4	2,4,5-Trichlorophenol	U	540	1.0	500	540	170
91-58-7	2-Chloronaphthalene	U	360	1.0	330	360	94
92-52-4	1,1'-Biphenyl	U	360	1.0	330	360	79
88-74-4	2-Nitroaniline	U	540	1.0	500	540	81
131-11-3	Dimethyl Phthalate	U	360	1.0	330	360	85
606-20-2	2,6-Dinitrotoluene	U	360	1.0	330	360	86
208-96-8	Acenaphthylene	U	360	1.0	330	360	76
99-09-2	3-Nitroaniline	U	540	1.0	500	540	100
83-32-9	Acenaphthene	U	360	1.0	330	360	70
51-28-5	2,4-Dinitrophenol	U	1300	1.0	1200	1300	410
132-64-9	Dibenzofuran	U	360	1.0	330	360	86
100-02-7	4-Nitrophenol	U	1300	1.0	1200	1300	340
121-14-2	2,4-Dinitrotoluene	U	360	1.0	330	360	92
84-66-2	Diethylphthalate	U	360	1.0	330	360	87
7005-72-3	4-Chlorophenyl-phenylether	U	360	1.0	330	360	85
100-01-6	4-Nitroaniline	U	540	1.0	500	540	140
534-52-1	4,6-Dinitro-2-Methylphenol	U	1300	1.0	1200	1300	360
86-30-6	N-Nitrosodiphenylamine	U	720	1.0	660	720	240
101-55-3	4-Bromophenyl-phenylether	U	360	1.0	330	360	92
1912-24-9	Atrazine	U	360	1.0	330	360	99
87-86-5	Pentachlorophenol	U	890	1.0	820	890	260
120-12-7	Anthracene	U	360	1.0	330	360	91
86-74-8	Carbazole	U	540	1.0	500	540	120

MW 4/15/09

KATAHDIN ANALYTICAL SERVICES
Report of Analytical Results

Client: CH2MHill
Project: TO-009 Lejeune
PO No:
Sample Date: 01/10/09
Received Date: 01/13/09
Extraction Date: 01/15/09
Analysis Date: 25-JAN-2009 18:31
Report Date: 02/02/2009
Matrix: SOIL
% Solids: 92.2

Lab ID: SC0146-29
Client ID: MR08-SS280-09A
SDG: TO9-32
Extracted by: AC
Extraction Method: SW846 3550
Analyst: EKC
Analysis Method: SW846 8270C
Lab Prep Batch: WG59835
Units: ug/Kgdrywt

CAS#	Compound	Flags	Results	DF	PQL	Adj.PQL	Adj.MDL
84-74-2	Di-n-butylphthalate	U	360	1.0	330	360	110
85-68-7	Butylbenzylphthalate	U	360	1.0	330	360	100
91-94-1	3,3'-Dichlorobenzidine	U	540	1.0	500	540	120
218-01-9	Chrysene	J	240	1.0	330	360	100
117-81-7	bis(2-Ethylhexyl)phthalate	J	130	1.0	330	360	110
117-84-0	Di-n-octylphthalate	U	360	1.0	330	360	230
367-12-4	2-Fluorophenol		81%				
13127-88-3	Phenol-D6		78%				
4165-60-0	Nitrobenzene-D5		74%				
321-60-8	2-Fluorobiphenyl		80%				
118-79-6	2,4,6-Tribromophenol		83%				
1718-51-0	Terphenyl-D14		90%				

LW
4/15/09

KATAHDIN ANALYTICAL SERVICES
Report of Analytical Results

Client: CH2MHill
Project: TO-009 Lejeune
PO No:
Sample Date: 01/10/09
Received Date: 01/13/09
Extraction Date: 01/15/09
Analysis Date: 24-JAN-2009 13:58
Report Date: 02/02/2009
Matrix: SOIL
% Solids: 92.4

Lab ID: SC0146-31
Client ID: MR08-IS280-7-8-09A
SDG: TO9-32
Extracted by: AC
Extraction Method: SW846 3550
Analyst: JCG
Analysis Method: SW846 8270C
Lab Prep Batch: WG59835
Units: ug/Kgdrywt

CAS#	Compound	Flags	Results	DF	PQL	Adj.PQL	Adj.MDL	
100-52-7	Benzaldehyde	~~U~~ UJ	540	1.0	500	540	130	ICB
108-95-2	Phenol	U	540	1.0	500	540	170	
111-44-4	Bis(2-Chloroethyl)ether	U	360	1.0	330	360	88	
95-57-8	2-Chlorophenol	U	540	1.0	500	540	180	
95-48-7	2-Methylphenol	U	650	1.0	600	650	220	
108-60-1	2,2'-Oxybis(1-chloropropane)	U	360	1.0	330	360	96	
98-86-2	Acetophenone	U	650	1.0	600	650	190	
621-64-7	N-Nitroso-di-n-propylamine	U	360	1.0	330	360	90	
65794-96-9	3&4-Methylphenol	U	650	1.0	600	650	200	
67-72-1	Hexachloroethane	U	360	1.0	330	360	100	
98-95-3	Nitrobenzene	U	360	1.0	330	360	98	
78-59-1	Isophorone	U	360	1.0	330	360	81	
88-75-5	2-Nitrophenol	U	650	1.0	600	650	180	
105-67-9	2,4-Dimethylphenol	U	540	1.0	500	540	180	
111-91-1	Bis(2-Chloroethoxy)methane	U	360	1.0	330	360	100	
120-83-2	2,4-Dichlorophenol	U	540	1.0	500	540	160	
106-47-8	4-Chloroaniline	U	540	1.0	500	540	130	
105-60-2	Caprolactam	U	540	1.0	500	540	160	
59-50-7	4-Chloro-3-Methylphenol	U	540	1.0	500	540	180	
88-06-2	2,4,6-Trichlorophenol	U	540	1.0	500	540	170	
95-95-4	2,4,5-Trichlorophenol	U	540	1.0	500	540	170	
91-58-7	2-Chloronaphthalene	U	360	1.0	330	360	94	
92-52-4	1,1'-Biphenyl	U	360	1.0	330	360	79	
88-74-4	2-Nitroaniline	U	540	1.0	500	540	81	
131-11-3	Dimethyl Phthalate	U	360	1.0	330	360	84	
606-20-2	2,6-Dinitrotoluene	U	360	1.0	330	360	85	
208-96-8	Acenaphthylene	U	360	1.0	330	360	76	
99-09-2	3-Nitroaniline	U	540	1.0	500	540	100	
83-32-9	Acenaphthene	U	360	1.0	330	360	70	
51-28-5	2,4-Dinitrophenol	~~U~~ UJ	1300	1.0	1200	1300	410	CCH
132-64-9	Dibenzofuran	U	360	1.0	330	360	85	
100-02-7	4-Nitrophenol	U	1300	1.0	1200	1300	330	
121-14-2	2,4-Dinitrotoluene	U	360	1.0	330	360	92	
84-66-2	Diethylphthalate	U	360	1.0	330	360	86	
7005-72-3	4-Chlorophenyl-phenylether	U	360	1.0	330	360	84	
100-01-6	4-Nitroaniline	U	540	1.0	500	540	140	
534-52-1	4,6-Dinitro-2-Methylphenol	~~U~~ UJ	1300	1.0	1200	1300	360	CCH
86-30-6	N-Nitrosodiphenylamine	U	710	1.0	660	710	240	
101-55-3	4-Bromophenyl-phenylether	U	360	1.0	330	360	92	
1912-24-9	Atrazine	U	360	1.0	330	360	98	
87-86-5	Pentachlorophenol	~~U~~ UJ	890	1.0	820	890	260	CCH
120-12-7	Anthracene	U	360	1.0	330	360	91	
86-74-8	Carbazole	U	540	1.0	500	540	120	

lew 4/15/09

KATAHDIN ANALYTICAL SERVICES
Report of Analytical Results

Client: CH2MHill
Project: TO-009 Lejeune
PO No:
Sample Date: 01/10/09
Received Date: 01/13/09
Extraction Date: 01/15/09
Analysis Date: 24-JAN-2009 13:58
Report Date: 02/02/2009
Matrix: SOIL
% Solids: 92.4

Lab ID: SC0146-31
Client ID: MR08-IS280-7-8-09A
SDG: TO9-32
Extracted by: AC
Extraction Method: SW846 3550
Analyst: JCG
Analysis Method: SW846 8270C
Lab Prep Batch: WG59835
Units: ug/Kgdrywt

CAS#	Compound	Flags	Results	DF	PQL	Adj.PQL	Adj.MDL
84-74-2	Di-n-butylphthalate	U	360	1.0	330	360	110
85-68-7	Butylbenzylphthalate	U	360	1.0	330	360	100
91-94-1	3,3'-Dichlorobenzidine	U	540	1.0	500	540	120
218-01-9	Chrysene	U	360	1.0	330	360	100
117-81-7	bis(2-Ethylhexyl)phthalate		520	1.0	330	360	110
117-84-0	Di-n-octylphthalate	U	360	1.0	330	360	230
367-12-4	2-Fluorophenol		62%				
13127-88-3	Phenol-D6		56%				
4165-60-0	Nitrobenzene-D5		62%				
321-60-8	2-Fluorobiphenyl		71%				
118-79-6	2,4,6-Tribromophenol		43%				
1718-51-0	Terphenyl-D14		96%				

MW 4/15/09

KATAHDIN ANALYTICAL SERVICES
Report of Analytical Results

Client: CH2MHill
Project: TO-009 Lejeune
PO No:
Sample Date: 01/10/09
Received Date: 01/13/09
Extraction Date: 01/15/09
Analysis Date: 25-JAN-2009 19:13
Report Date: 02/02/2009
Matrix: SOIL
% Solids: 89.1

Lab ID: SC0146-33
Client ID: MR08-SS275-09A
SDG: TO9-32
Extracted by: AC
Extraction Method: SW846 3550
Analyst: EKC
Analysis Method: SW846 8270C
Lab Prep Batch: WG59835
Units: ug/Kgdrywt

CAS#	Compound	Flags	Results	DF	PQL	Adj.PQL	Adj.MDL
100-52-7	Benzaldehyde	U	560	1.0	500	560	130
108-95-2	Phenol	U	560	1.0	500	560	180
111-44-4	Bis(2-Chloroethyl)ether	U	370	1.0	330	370	91
95-57-8	2-Chlorophenol	U	560	1.0	500	560	180
95-48-7	2-Methylphenol	U	670	1.0	600	670	220
108-60-1	2,2'-Oxybis(1-chloropropane)	U	370	1.0	330	370	100
98-86-2	Acetophenone	U	670	1.0	600	670	200
621-64-7	N-Nitroso-di-n-propylamine	U	370	1.0	330	370	93
65794-96-9	3&4-Methylphenol	U	670	1.0	600	670	210
67-72-1	Hexachloroethane	U	370	1.0	330	370	110
98-95-3	Nitrobenzene	U	370	1.0	330	370	100
78-59-1	Isophorone	U	370	1.0	330	370	84
88-75-5	2-Nitrophenol	U	670	1.0	600	670	190
105-67-9	2,4-Dimethylphenol	U	560	1.0	500	560	180
111-91-1	Bis(2-Chloroethoxy)methane	U	370	1.0	330	370	110
120-83-2	2,4-Dichlorophenol	U	560	1.0	500	560	170
106-47-8	4-Chloroaniline	U	560	1.0	500	560	130
105-60-2	Caprolactam	U	560	1.0	500	560	160
59-50-7	4-Chloro-3-Methylphenol	U	560	1.0	500	560	190
88-06-2	2,4,6-Trichlorophenol	U	560	1.0	500	560	170
95-95-4	2,4,5-Trichlorophenol	U	560	1.0	500	560	170
91-58-7	2-Chloronaphthalene	U	370	1.0	330	370	98
92-52-4	1,1'-Biphenyl	U	370	1.0	330	370	82
88-74-4	2-Nitroaniline	U	560	1.0	500	560	84
131-11-3	Dimethyl Phthalate	U	370	1.0	330	370	88
606-20-2	2,6-Dinitrotoluene	U	370	1.0	330	370	89
208-96-8	Acenaphthylene	U	370	1.0	330	370	78
99-09-2	3-Nitroaniline	U	560	1.0	500	560	100
83-32-9	Acenaphthene	U	370	1.0	330	370	73
51-28-5	2,4-Dinitrophenol	U	1300	1.0	1200	1300	420
132-64-9	Dibenzofuran	U	370	1.0	330	370	89
100-02-7	4-Nitrophenol	U	1300	1.0	1200	1300	350
121-14-2	2,4-Dinitrotoluene	U	370	1.0	330	370	95
84-66-2	Diethylphthalate	U	370	1.0	330	370	90
7005-72-3	4-Chlorophenyl-phenylether	U	370	1.0	330	370	88
100-01-6	4-Nitroaniline	U	560	1.0	500	560	150
534-52-1	4,6-Dinitro-2-Methylphenol	U	1300	1.0	1200	1300	380
86-30-6	N-Nitrosodiphenylamine	U	740	1.0	660	740	240
101-55-3	4-Bromophenyl-phenylether	U	370	1.0	330	370	95
1912-24-9	Atrazine	U	370	1.0	330	370	100
87-86-5	Pentachlorophenol	U	920	1.0	820	920	270
120-12-7	Anthracene	U	370	1.0	330	370	94
86-74-8	Carbazole	U	560	1.0	500	560	120

lw 4/15/09

KATAHDIN ANALYTICAL SERVICES
Report of Analytical Results

Client: CH2MHill
Project: TO-009 Lejeune
PO No:
Sample Date: 01/10/09
Received Date: 01/13/09
Extraction Date: 01/15/09
Analysis Date: 25-JAN-2009 19:13
Report Date: 02/02/2009
Matrix: SOIL
% Solids: 89.1

Lab ID: SC0146-33
Client ID: MR08-SS275-09A
SDG: TO9-32
Extracted by: AC
Extraction Method: SW846 3550
Analyst: EKC
Analysis Method: SW846 8270C
Lab Prep Batch: WG59835
Units: ug/Kgdrywt

CAS#	Compound	Flags	Results	DF	PQL	Adj.PQL	Adj.MDL
84-74-2	Di-n-butylphthalate	U	370	1.0	330	370	110
85-68-7	Butylbenzylphthalate	U	370	1.0	330	370	100
91-94-1	3,3'-Dichlorobenzidine	U	560	1.0	500	560	130
218-01-9	Chrysene	U	370	1.0	330	370	110
117-81-7	bis(2-Ethylhexyl)phthalate	U	370	1.0	330	370	110
117-84-0	Di-n-octylphthalate	U	370	1.0	330	370	240
367-12-4	2-Fluorophenol		77%				
13127-88-3	Phenol-D6		72%				
4165-60-0	Nitrobenzene-D5		70%				
321-60-8	2-Fluorobiphenyl		75%				
118-79-6	2,4,6-Tribromophenol		83%				
1718-51-0	Terphenyl-D14		91%				

lw 4/15/09

KATAHDIN ANALYTICAL SERVICES
Report of Analytical Results

Client: CH2MHill
Project: TO-009 Lejeune
PO No:
Sample Date: 01/10/09
Received Date: 01/13/09
Extraction Date: 01/15/09
Analysis Date: 24-JAN-2009 14:40
Report Date: 02/02/2009
Matrix: SOIL
% Solids: 88.2

Lab ID: SC0146-35
Client ID: MR08-IS275-3-4-09A
SDG: TO9-32
Extracted by: AC
Extraction Method: SW846 3550
Analyst: JCG
Analysis Method: SW846 8270C
Lab Prep Batch: WG59835
Units: ug/Kgdrywt

CAS#	Compound	Flags	Results	DF	PQL	Adj.PQL	Adj.MDL	
100-52-7	Benzaldehyde	~~U~~ UJ	570	1.0	500	570	140	JCB
108-95-2	Phenol	U	570	1.0	500	570	180	
111-44-4	Bis(2-Chloroethyl)ether	U	370	1.0	330	370	92	
95-57-8	2-Chlorophenol	U	570	1.0	500	570	180	
95-48-7	2-Methylphenol	U	680	1.0	600	680	230	
108-60-1	2,2'-Oxybis(1-chloropropane)	U	370	1.0	330	370	100	
98-86-2	Acetophenone	U	680	1.0	600	680	200	
621-64-7	N-Nitroso-di-n-propylamine	U	370	1.0	330	370	94	
65794-96-9	3&4-Methylphenol	U	680	1.0	600	680	210	
67-72-1	Hexachloroethane	U	370	1.0	330	370	110	
98-95-3	Nitrobenzene	U	370	1.0	330	370	100	
78-59-1	Isophorone	U	370	1.0	330	370	85	
88-75-5	2-Nitrophenol	U	680	1.0	600	680	190	
105-67-9	2,4-Dimethylphenol	U	570	1.0	500	570	190	
111-91-1	Bis(2-Chloroethoxy)methane	U	370	1.0	330	370	110	
120-83-2	2,4-Dichlorophenol	U	570	1.0	500	570	170	
106-47-8	4-Chloroaniline	U	570	1.0	500	570	130	
105-60-2	Caprolactam	U	570	1.0	500	570	160	
59-50-7	4-Chloro-3-Methylphenol	U	570	1.0	500	570	190	
88-06-2	2,4,6-Trichlorophenol	U	570	1.0	500	570	180	
95-95-4	2,4,5-Trichlorophenol	U	570	1.0	500	570	180	
91-58-7	2-Chloronaphthalene	U	370	1.0	330	370	99	
92-52-4	1,1'-Biphenyl	U	370	1.0	330	370	83	
88-74-4	2-Nitroaniline	U	570	1.0	500	570	85	
131-11-3	Dimethyl Phthalate	U	370	1.0	330	370	88	
606-20-2	2,6-Dinitrotoluene	U	370	1.0	330	370	90	
208-96-8	Acenaphthylene	U	370	1.0	330	370	79	
99-09-2	3-Nitroaniline	U	570	1.0	500	570	110	
83-32-9	Acenaphthene	U	370	1.0	330	370	74	
51-28-5	2,4-Dinitrophenol	~~U~~ UJ	1400	1.0	1200	1400	430	CCH
132-64-9	Dibenzofuran	U	370	1.0	330	370	90	
100-02-7	4-Nitrophenol	U	1400	1.0	1200	1400	350	
121-14-2	2,4-Dinitrotoluene	U	370	1.0	330	370	96	
84-66-2	Diethylphthalate	U	370	1.0	330	370	91	
7005-72-3	4-Chlorophenyl-phenylether	U	370	1.0	330	370	88	
100-01-6	4-Nitroaniline	U	570	1.0	500	570	150	
534-52-1	4,6-Dinitro-2-Methylphenol	~~U~~ UJ	1400	1.0	1200	1400	380	CCH
86-30-6	N-Nitrosodiphenylamine	U	750	1.0	660	750	250	
101-55-3	4-Bromophenyl-phenylether	U	370	1.0	330	370	96	
1912-24-9	Atrazine	U	370	1.0	330	370	100	
87-86-5	Pentachlorophenol	~~U~~ UJ	930	1.0	820	930	270	CCH
120-12-7	Anthracene	U	370	1.0	330	370	95	
86-74-8	Carbazole	U	570	1.0	500	570	120	

LW 4/15/09

KATAHDIN ANALYTICAL SERVICES
Report of Analytical Results

Client: CH2MHill
Project: TO-009 Lejeune
PO No:
Sample Date: 01/10/09
Received Date: 01/13/09
Extraction Date: 01/15/09
Analysis Date: 24-JAN-2009 14:40
Report Date: 02/02/2009
Matrix: SOIL
% Solids: 88.2

Lab ID: SC0146-35
Client ID: MR08-IS275-3-4-09A
SDG: TO9-32
Extracted by: AC
Extraction Method: SW846 3550
Analyst: JCG
Analysis Method: SW846 8270C
Lab Prep Batch: WG59835
Units: ug/Kgdrywt

CAS#	Compound	Flags	Results	DF	PQL	Adj.PQL	Adj.MDL
84-74-2	Di-n-butylphthalate	U	370	1.0	330	370	110
85-68-7	Butylbenzylphthalate	U	370	1.0	330	370	100
91-94-1	3,3'-Dichlorobenzidine	U	570	1.0	500	570	130
218-01-9	Chrysene	U	370	1.0	330	370	110
117-81-7	bis(2-Ethylhexyl)phthalate	J	130	1.0	330	370	110
117-84-0	Di-n-octylphthalate	U	370	1.0	330	370	240
367-12-4	2-Fluorophenol		69%				
13127-88-3	Phenol-D6		64%				
4165-60-0	Nitrobenzene-D5		76%				
321-60-8	2-Fluorobiphenyl		75%				
118-79-6	2,4,6-Tribromophenol		56%				
1718-51-0	Terphenyl-D14		104%				

MW
4/15/09

KATAHDIN ANALYTICAL SERVICES
Report of Analytical Results

Client: CH2MHill
Project: TO-009 Lejeune
PO No:
Sample Date: 01/10/09
Received Date: 01/13/09
Extraction Date: 01/15/09
Analysis Date: 25-JAN-2009 19:55
Report Date: 02/02/2009
Matrix: SOIL
% Solids: 89.9

Lab ID: SC0146-37
Client ID: MR08-SS256-09A
SDG: TO9-32
Extracted by: AC
Extraction Method: SW846 3550
Analyst: EKC
Analysis Method: SW846 8270C
Lab Prep Batch: WG59835
Units: ug/Kgdrywt

CAS#	Compound	Flags	Results	DF	PQL	Adj.PQL	Adj.MDL
100-52-7	Benzaldehyde	U	560	1.0	500	560	130
108-95-2	Phenol	U	560	1.0	500	560	170
111-44-4	Bis(2-Chloroethyl)ether	U	370	1.0	330	370	90
95-57-8	2-Chlorophenol	U	560	1.0	500	560	180
95-48-7	2-Methylphenol	U	670	1.0	600	670	220
108-60-1	2,2'-Oxybis(1-chloropropane)	U	370	1.0	330	370	99
98-86-2	Acetophenone	U	670	1.0	600	670	200
621-64-7	N-Nitroso-di-n-propylamine	U	370	1.0	330	370	92
65794-96-9	3&4-Methylphenol	U	670	1.0	600	670	210
67-72-1	Hexachloroethane	U	370	1.0	330	370	110
98-95-3	Nitrobenzene	U	370	1.0	330	370	100
78-59-1	Isophorone	U	370	1.0	330	370	83
88-75-5	2-Nitrophenol	U	670	1.0	600	670	180
105-67-9	2,4-Dimethylphenol	U	560	1.0	500	560	180
111-91-1	Bis(2-Chloroethoxy)methane	U	370	1.0	330	370	110
120-83-2	2,4-Dichlorophenol	U	560	1.0	500	560	170
106-47-8	4-Chloroaniline	U	560	1.0	500	560	130
105-60-2	Caprolactam	U	560	1.0	500	560	160
59-50-7	4-Chloro-3-Methylphenol	U	560	1.0	500	560	180
88-06-2	2,4,6-Trichlorophenol	U	560	1.0	500	560	170
95-95-4	2,4,5-Trichlorophenol	U	560	1.0	500	560	170
91-58-7	2-Chloronaphthalene	U	370	1.0	330	370	97
92-52-4	1,1'-Biphenyl	U	370	1.0	330	370	81
88-74-4	2-Nitroaniline	U	560	1.0	500	560	83
131-11-3	Dimethyl Phthalate	U	370	1.0	330	370	87
606-20-2	2,6-Dinitrotoluene	U	370	1.0	330	370	88
208-96-8	Acenaphthylene	U	370	1.0	330	370	78
99-09-2	3-Nitroaniline	U	560	1.0	500	560	100
83-32-9	Acenaphthene	U	370	1.0	330	370	72
51-28-5	2,4-Dinitrophenol	U	1300	1.0	1200	1300	420
132-64-9	Dibenzofuran	U	370	1.0	330	370	88
100-02-7	4-Nitrophenol	U	1300	1.0	1200	1300	340
121-14-2	2,4-Dinitrotoluene	U	370	1.0	330	370	94
84-66-2	Diethylphthalate	U	370	1.0	330	370	89
7005-72-3	4-Chlorophenyl-phenylether	U	370	1.0	330	370	87
100-01-6	4-Nitroaniline	U	560	1.0	500	560	150
534-52-1	4,6-Dinitro-2-Methylphenol	U	1300	1.0	1200	1300	370
86-30-6	N-Nitrosodiphenylamine	U	730	1.0	660	730	240
101-55-3	4-Bromophenyl-phenylether	U	370	1.0	330	370	94
1912-24-9	Atrazine	U	370	1.0	330	370	100
87-86-5	Pentachlorophenol	U	910	1.0	820	910	260
120-12-7	Anthracene	U	370	1.0	330	370	93
86-74-8	Carbazole	U	560	1.0	500	560	120

hw 4/15/09

KATAHDIN ANALYTICAL SERVICES
Report of Analytical Results

Client: CH2MHill
Project: TO-009 Lejeune
PO No:
Sample Date: 01/10/09
Received Date: 01/13/09
Extraction Date: 01/15/09
Analysis Date: 25-JAN-2009 19:55
Report Date: 02/02/2009
Matrix: SOIL
% Solids: 89.9

Lab ID: SC0146-37
Client ID: MR08-SS256-09A
SDG: TO9-32
Extracted by: AC
Extraction Method: SW846 3550
Analyst: EKC
Analysis Method: SW846 8270C
Lab Prep Batch: WG59835
Units: ug/Kgdrywt

CAS#	Compound	Flags	Results	DF	PQL	Adj.PQL	Adj.MDL
84-74-2	Di-n-butylphthalate	U	370	1.0	330	370	110
85-68-7	Butylbenzylphthalate	U	370	1.0	330	370	100
91-94-1	3,3'-Dichlorobenzidine	U	560	1.0	500	560	130
218-01-9	Chrysene	J	180	1.0	330	370	100
117-81-7	bis(2-Ethylhexyl)phthalate	J	210	1.0	330	370	110
117-84-0	Di-n-octylphthalate	U	370	1.0	330	370	230
367-12-4	2-Fluorophenol		71%				
13127-88-3	Phenol-D6		73%				
4165-60-0	Nitrobenzene-D5		62%				
321-60-8	2-Fluorobiphenyl		71%				
118-79-6	2,4,6-Tribromophenol		84%				
1718-51-0	Terphenyl-D14		95%				

MW
4/15/09

KATAHDIN ANALYTICAL SERVICES
Report of Analytical Results

Client: CH2MHill
Project: TO-009 Lejeune
PO No:
Sample Date: 01/10/09
Received Date: 01/13/09
Extraction Date: 01/15/09
Analysis Date: 24-JAN-2009 15:23
Report Date: 02/02/2009
Matrix: SOIL
% Solids: 86.7

Lab ID: SC0146-39
Client ID: MR08-IS256-3-4-09A
SDG: TO9-32
Extracted by: AC
Extraction Method: SW846 3550
Analyst: JCG
Analysis Method: SW846 8270C
Lab Prep Batch: WG59835
Units: ug/Kgdrywt

CAS#	Compound	Flags	Results	DF	PQL	Adj.PQL	Adj.MDL	
100-52-7	Benzaldehyde	~~U~~ UJ	580	1.0	500	580	140	JCB
108-95-2	Phenol	U	580	1.0	500	580	180	
111-44-4	Bis(2-Chloroethyl)ether	U	380	1.0	330	380	93	
95-57-8	2-Chlorophenol	U	580	1.0	500	580	190	
95-48-7	2-Methylphenol	U	690	1.0	600	690	230	
108-60-1	2,2'-Oxybis(1-chloropropane)	U	380	1.0	330	380	100	
98-86-2	Acetophenone	U	690	1.0	600	690	200	
621-64-7	N-Nitroso-di-n-propylamine	U	380	1.0	330	380	96	
65794-96-9	3&4-Methylphenol	U	690	1.0	600	690	220	
67-72-1	Hexachloroethane	U	380	1.0	330	380	110	
98-95-3	Nitrobenzene	U	380	1.0	330	380	100	
78-59-1	Isophorone	U	380	1.0	330	380	86	
88-75-5	2-Nitrophenol	U	690	1.0	600	690	190	
105-67-9	2,4-Dimethylphenol	U	580	1.0	500	580	190	
111-91-1	Bis(2-Chloroethoxy)methane	U	380	1.0	330	380	110	
120-83-2	2,4-Dichlorophenol	U	580	1.0	500	580	170	
106-47-8	4-Chloroaniline	U	580	1.0	500	580	140	
105-60-2	Caprolactam	U	580	1.0	500	580	170	
59-50-7	4-Chloro-3-Methylphenol	U	580	1.0	500	580	190	
88-06-2	2,4,6-Trichlorophenol	U	580	1.0	500	580	180	
95-95-4	2,4,5-Trichlorophenol	U	580	1.0	500	580	180	
91-58-7	2-Chloronaphthalene	U	380	1.0	330	380	100	
92-52-4	1,1'-Biphenyl	U	380	1.0	330	380	84	
88-74-4	2-Nitroaniline	U	580	1.0	500	580	86	
131-11-3	Dimethyl Phthalate	U	380	1.0	330	380	90	
606-20-2	2,6-Dinitrotoluene	U	380	1.0	330	380	91	
208-96-8	Acenaphthylene	U	380	1.0	330	380	81	
99-09-2	3-Nitroaniline	U	580	1.0	500	580	110	
83-32-9	Acenaphthene	U	380	1.0	330	380	75	
51-28-5	2,4-Dinitrophenol	~~U~~ UJ	1400	1.0	1200	1400	430	CCH
132-64-9	Dibenzofuran	U	380	1.0	330	380	91	
100-02-7	4-Nitrophenol	U	1400	1.0	1200	1400	360	
121-14-2	2,4-Dinitrotoluene	U	380	1.0	330	380	98	
84-66-2	Diethylphthalate	U	380	1.0	330	380	92	
7005-72-3	4-Chlorophenyl-phenylether	U	380	1.0	330	380	90	
100-01-6	4-Nitroaniline	U	580	1.0	500	580	150	
534-52-1	4,6-Dinitro-2-Methylphenol	~~U~~ UJ	1400	1.0	1200	1400	390	CCH
86-30-6	N-Nitrosodiphenylamine	U	760	1.0	660	760	250	
101-55-3	4-Bromophenyl-phenylether	U	380	1.0	330	380	98	
1912-24-9	Atrazine	U	380	1.0	330	380	100	
87-86-5	Pentachlorophenol	~~U~~ UJ	950	1.0	820	950	270	CCH
120-12-7	Anthracene	U	380	1.0	330	380	97	
86-74-8	Carbazole	U	580	1.0	500	580	130	

lw 4/15/09

KATAHDIN ANALYTICAL SERVICES
Report of Analytical Results

Client: CH2MHill
Project: TO-009 Lejeune
PO No:
Sample Date: 01/10/09
Received Date: 01/13/09
Extraction Date: 01/15/09
Analysis Date: 24-JAN-2009 15:23
Report Date: 02/02/2009
Matrix: SOIL
% Solids: 86.7

Lab ID: SC0146-39
Client ID: MR08-IS256-3-4-09A
SDG: TO9-32
Extracted by: AC
Extraction Method: SW846 3550
Analyst: JCG
Analysis Method: SW846 8270C
Lab Prep Batch: WG59835
Units: ug/Kgdrywt

CAS#	Compound	Flags	Results	DF	PQL	Adj.PQL	Adj.MDL
84-74-2	Di-n-butylphthalate	U	380	1.0	330	380	120
85-68-7	Butylbenzylphthalate	U	380	1.0	330	380	110
91-94-1	3,3'-Dichlorobenzidine	U	580	1.0	500	580	130
218-01-9	Chrysene	U	380	1.0	330	380	110
117-81-7	bis(2-Ethylhexyl)phthalate	U	380	1.0	330	380	110
117-84-0	Di-n-octylphthalate	U	380	1.0	330	380	240
367-12-4	2-Fluorophenol		63%				
13127-88-3	Phenol-D6		56%				
4165-60-0	Nitrobenzene-D5		65%				
321-60-8	2-Fluorobiphenyl		70%				
118-79-6	2,4,6-Tribromophenol		39%				
1718-51-0	Terphenyl-D14		100%				

MW
4/15/09

ENVIRONMENTAL
Data Services, Inc.

POLYNUCLEAR AROMATIC COMPOUNDS BY 8270SIM

USEPA Region IV - Level IV Review

Site: MCB Camp Lejeune, TO-09 SDG #: TO9-33

Client: CH2M HILL, Inc., Virginia Beach, Virginia Date: April 15, 2009

Laboratory: Katahdin Analytical Services, Scarborough, Maine Reviewer: Nancy Weaver

EDS ID	Client Sample ID	Laboratory Sample ID	Matrix
1	MR08-SS204-09A	SC0147-2	Soil
1MS	MR08-SS204-09AMS	SC0147-2MS	Soil
1MSD	MR08-SS204-09AMSD	SC0147-2MSD	Soil
2	MR08-SS251-09A	SC0147-4	Soil
2DL	MR08-SS251-09ADL	SC0147-4DL	Soil
3	MR08-IS251-8-9-09A	SC0147-6	Soil
4	MR08-SS232-09A	SC0147-8	Soil
5	MR08-IS232-5-6-09A	SC0147-10	Soil
6	MR08-SS252-09A	SC0147-12	Soil
7	MR08-IS252-6-7-09A	SC0147-14	Soil
8	MR08-SS253-09A	SC0147-16	Soil
9	MR08-IS253-6-7-09A	SC0147-18	Soil
9RE	MR08-IS253-6-7-09ARE	SC0147-18RE	Soil
10	MR08-SS231-09A	SC0147-20	Soil
11	MR08-IS231-8-9-09A	SC0147-22	Soil
12	MR08-SS230-09A	SC0147-24	Soil
13	MR08-IS230-8-9-09A	SC0147-26	Soil
14	MR08-SS259-09A	SC0147-28	Soil
14DL	MR08-SS259-09ADL	SC0147-28DL	Soil
15	MR08-SS259D-09A	SC0147-30	Soil
15DL	MR08-SS259D-09ADL	SC0147-30DL	Soil
16	MR08-IS259-5-6-09A	SC0147-32	Soil
17	MR08-IS259D-5-6-09A	SC0147-34	Soil
18	MR08-SS272-09A	SC0147-36	Soil
18DL	MR08-SS272-09ADL	SC0147-36DL	Soil
19	MR08-IS272-8-9-09A	SC0147-38	Soil
20	MR08-SS283-09A	SC0147-40	Soil

The USEPA "Contract Laboratory Program National Functional Guidelines for Organic Data Review," October 1999, and professional judgment were used in evaluating the data in this summary report.

Holding Times - All samples were extracted within 14 days for soil samples and analyzed within 40 days for all samples except the following.

Sample	Date Sampled	Date Extracted	# of Days	Qualifier
9RE	01/10/09	02/05/09	26	J/UJ

GC/MS Tuning - All of the DFTPP tunes in the initial and continuing calibrations met the percent relative abundance criteria.

Initial Calibration - The initial calibrations exhibited acceptable %RSD and mean RRF values.

Continuing Calibration - The continuing calibrations exhibited acceptable %D and RRF values except the following.

CCAL Date	Compound	%D/RRF	Qualifier	Affected Samples
01/31/09	2-Methylnaphthalene	38.89%	J/UJ	1, 2, 4-7, 11, 12
	Fluoranthene	37.81%	J/UJ	1, 4-7, 11, 12
	Hexachlorobutadiene	89.08%	J/UJ	1, 2, 4-7, 11, 12
	Hexachlorocyclopentadiene	177.93%	J/UJ	1, 2, 4-7, 11, 12
02/02/09 1928	Benzo (a) anthracene	28.60%	J/UJ	14DL, 15DL
	Benzo (k) fluoranthene	32.16%	J/UJ	14DL, 15DL
02/02/09 0838	Hexachlorobutadiene	72.76%	J/UJ	2DL, 3, 8, 10
	Hexachlorocyclopentadiene	177.88%	J/UJ	2DL, 3, 8, 10

Surrogates - All samples exhibited acceptable surrogate recoveries except the following.

Sample ID	Surrogate	%R	Qualifier
6	S1-2-Methylnaphthalene-d10	132%	None for 1 out
9*	All surrogates	0%	J/R

* - Lab inadvertently did not spike

MS/MSD - The MS/MSD sample exhibited acceptable %R and RPD values except the following.

MS/MSD Sample ID	Compound	MS/MSD %R/RPD	Qualifier
1	2-Methylnaphthalene	189%/171%/Ok	None -ND
	Pyrene	Ok/150%/Ok	J

Laboratory Control Sample - The LCS samples exhibited acceptable %R values.

Internal Standard (IS) Area Performance - All internal standards met response and retention time (RT) criteria.

Method Blank - The method blanks exhibited the following contamination.

Blank ID	Compound	Conc. ug/kg	Action Level ug/kg	Qualifier	Affected Samples
WG60481-BLANK	Fluoranthene	5.5	27.5	U	9RE

Field, Equipment Blank - Field QC results are summarized below.

Blank ID	Compound	Conc. ug/L	Action Level ug/kg	Qualifier	Affected Samples
MR08-EB01010909-SS	None - ND	-	-	-	-
MR08-FB01011009	None - ND	-	-	-	-

Field Duplicates - Field duplicate results are summarized below.

Compound	MR08-SS259-09A ug/kg	MR08-SS259D-09A ug/kg	RPD	Qualifier
Naphthalene	3.7	10	92%	None
2-Methylnaphthalene	2.6	15	141%	None
Fluorene	10	4.8	70%	None
Phenanthrene	170	140	19%	None
Fluoranthene	530	600	12%	None
Pyrene	390	460	16%	None
Benzo (a) anthracene	180	220	20%	None
Benzo (b) fluoranthene	380	490	25%	None
Benzo (k) fluoranthene	160	240	40%	None
Benzo (a) pyrene	200	280	33%	None
Indeno (1,2,3-cd) pyrene	140	210	40%	None
Dibenzo (a,h) anthracene	57	81	35%	None
Benzo (g,h,i) perylene	140	210	40%	None

Compound	MR08-IS259-5-6-09A ug/kg	MR08-IS259D-5-6-09A ug/kg	RPD	Qualifier
None	ND	ND	-	-

Compound Quantitation - Several samples exhibited high concentrations of target compounds and were flagged (E) by the laboratory. The samples were diluted and reanalyzed and the dilution results for these compounds should be used for reporting.

KATAHDIN ANALYTICAL SERVICES
Report of Analytical Results

Client: CH2MHill
Project: TO-009 Lejeune
PO No:
Sample Date: 01/09/09
Received Date: 01/13/09
Extraction Date: 01/15/09
Analysis Date: 31-JAN-2009 21:24
Report Date: 02/10/2009
Matrix: SOIL
% Solids: 95.6

Lab ID: SC0147-2
Client ID: MR08-SS204-09A
SDG: TO9-33
Extracted by: AC
Extraction Method: SW846 3550
Analyst: JCG
Analysis Method: SW846 M8270C
Lab Prep Batch: WG59836
Units: ug/Kgdrywt

CAS#	Compound	Flags	Results	DF	PQL	Adj.PQL	Adj.MDL	
91-20-3	Naphthalene	U	10	1.0	10	10	2.7	
91-57-6	2-Methylnaphthalene	~~U~~ UJ	10	1.0	10	10	2.3	CCH
86-73-7	Fluorene	U	10	1.0	10	10	3.3	
85-01-8	Phenanthrene	J	4.0	1.0	10	10	1.9	
206-44-0	Fluoranthene	~~J~~ J	8.4	1.0	10	10	1.9	CCH
129-00-0	Pyrene	~~J~~ J	9.7	1.0	10	10	2.2	MSH
56-55-3	Benzo(a)anthracene	J	4.2	1.0	10	10	2.0	
205-99-2	Benzo(b)fluoranthene	U	10	1.0	10	10	2.5	
207-08-9	Benzo(k)fluoranthene	U	10	1.0	10	10	3.2	
50-32-8	Benzo(a)pyrene	U	10	1.0	10	10	3.4	
193-39-5	Indeno(1,2,3-cd)pyrene	J	8.1	1.0	10	10	2.0	
53-70-3	Dibenzo(a,h)anthracene	U	10	1.0	10	10	1.9	
191-24-2	Benzo(g,h,i)perylene	J	7.4	1.0	10	10	2.1	
118-74-1	Hexachlorobenzene	U	10	1.0	10	10	1.9	
87-68-3	Hexachlorobutadiene	~~U~~ UJ	10	1.0	10	10	2.4	CCH
77-47-4	Hexachlorocyclopentadiene	~~U~~ UJ	10	1.0	10	10	1.6	CCH
7297-45-2	2-Methylnaphthalene-D10		104%					
367-12-4	2,4-Dibromophenol		104%					
81103-79-9	Fluorene-d10		89%					
1718-51-1	Pyrene-D10		95%					

LW
4/15/09

2

KATAHDIN ANALYTICAL SERVICES
Report of Analytical Results

Client: CH2MHill
Project: TO-009 Lejeune
PO No:
Sample Date: 01/10/09
Received Date: 01/13/09
Extraction Date: 01/15/09
Analysis Date: 31-JAN-2009 18:43
Report Date: 02/10/2009
Matrix: SOIL
% Solids: 87.3

Lab ID: SC0147-4
Client ID: MR08-SS251-09A
SDG: TO9-33
Extracted by: AC
Extraction Method: SW846 3550
Analyst: JCG
Analysis Method: SW846 M8270C
Lab Prep Batch: WG59836
Units: ug/Kgdrywt

CAS#	Compound	Flags	Results	DF	PQL	Adj.PQL	Adj.MDL
91-20-3	Naphthalene	U	11	1.0	10	11	3.0
91-57-6	2-Methylnaphthalene	~~U~~ UJ	11	1.0	10	11	2.5 CCH
86-73-7	Fluorene	U	11	1.0	10	11	3.7
85-01-8	Phenanthrene		81	1.0	10	11	2.1
206-44-0	Fluoranthene	~~E~~	370 ~~360~~	21.0	10	23 ~~11~~	4.1 ~~2.1~~ R DL
129-00-0	Pyrene	~~E~~	280 ~~330~~	21.0	10	23 ~~11~~	4.8 ~~2.4~~ R DL
56-55-3	Benzo(a)anthracene		170	1.0	10	11	2.2
205-99-2	Benzo(b)fluoranthene	~~E~~	290 ~~250~~	21.0	10	23 ~~11~~	5.5 ~~2.7~~ R DL
207-08-9	Benzo(k)fluoranthene		160	1.0	10	11	3.6
50-32-8	Benzo(a)pyrene		190	1.0	10	11	3.8
193-39-5	Indeno(1,2,3-cd)pyrene		110	1.0	10	11	2.2
53-70-3	Dibenzo(a,h)anthracene		39	1.0	10	11	2.1
191-24-2	Benzo(g,h,i)perylene		110	1.0	10	11	2.3
118-74-1	Hexachlorobenzene	U	11	1.0	10	11	2.1
87-68-3	Hexachlorobutadiene	~~U~~ UJ	11	1.0	10	11	2.6 CCH
77-47-4	Hexachlorocyclopentadiene	~~U~~ UJ	11	1.0	10	11	1.7 CCH
7297-45-2	2-Methylnaphthalene-D10		110%				
367-12-4	2,4-Dibromophenol		114%				
81103-79-9	Fluorene-d10		103%				
1718-51-1	Pyrene-D10		133%				

RW 4/15/09

2DL

KATAHDIN ANALYTICAL SERVICES
Report of Analytical Results

Client: CH2MHill
Project: TO-009 Lejeune
PO No:
Sample Date: 01/10/09
Received Date: 01/13/09
Extraction Date: 01/15/09
Analysis Date: 02-FEB-2009 09:19
Report Date: 02/10/2009
Matrix: SOIL
% Solids: 87.3

Lab ID: SC0147-4DL
Client ID: MR08-SS251-09A
SDG: TO9-33
Extracted by: AC
Extraction Method: SW846 3550
Analyst: JLP
Analysis Method: SW846 M8270C
Lab Prep Batch: WG59836
Units: ug/Kgdrywt

use original

RDL

CAS#	Compound	Flags	Results	DF	PQL	Adj.PQL	Adj.MDL
91-20-3	Naphthalene	U	23	2.0	10	23	6.0
91-57-6	2-Methylnaphthalene	U	23	2.0	10	23	5.0
86-73-7	Fluorene	U	23	2.0	10	23	7.3
85-01-8	Phenanthrene		78	2.0	10	23	4.1
206-44-0	Fluoranthene		370	2.0	10	23	4.1
129-00-0	Pyrene		280	2.0	10	23	4.8
56-55-3	Benzo(a)anthracene		150	2.0	10	23	4.4
205-99-2	Benzo(b)fluoranthene		290	2.0	10	23	5.5
207-08-9	Benzo(k)fluoranthene		160	2.0	10	23	7.1
50-32-8	Benzo(a)pyrene		180	2.0	10	23	7.6
193-39-5	Indeno(1,2,3-cd)pyrene		120	2.0	10	23	4.4
53-70-3	Dibenzo(a,h)anthracene		44	2.0	10	23	4.1
191-24-2	Benzo(g,h,i)perylene		120	2.0	10	23	4.6
118-74-1	Hexachlorobenzene	U	23	2.0	10	23	4.1
87-68-3	Hexachlorobutadiene	~~U~~ UJ	23	2.0	10	23	5.3 CCH
77-47-4	Hexachlorocyclopentadiene	~~U~~ UJ	23	2.0	10	23	3.4 CCH
7297-45-2	2-Methylnaphthalene-D10		72%				
367-12-4	2,4-Dibromophenol		89%				
81103-79-9	Fluorene-d10		100%				
1718-51-1	Pyrene-D10		110%				

RW
4/15/09

3

KATAHDIN ANALYTICAL SERVICES
Report of Analytical Results

Client: CH2MHill
Project: TO-009 Lejeune
PO No:
Sample Date: 01/10/09
Received Date: 01/13/09
Extraction Date: 01/15/09
Analysis Date: 02-FEB-2009 09:59
Report Date: 02/10/2009
Matrix: SOIL
% Solids: 85.1

Lab ID: SC0147-6RA
Client ID: MR08-IS251-8-9-09A
SDG: TO9-33
Extracted by: AC
Extraction Method: SW846 3550
Analyst: JLP
Analysis Method: SW846 M8270C
Lab Prep Batch: WG59836
Units: ug/Kgdrywt

CAS#	Compound	Flags	Results	DF	PQL	Adj.PQL	Adj.MDL	
91-20-3	Naphthalene	U	12	1.0	10	12	3.0	
91-57-6	2-Methylnaphthalene	U	12	1.0	10	12	2.6	
86-73-7	Fluorene	U	12	1.0	10	12	3.8	
85-01-8	Phenanthrene	U	12	1.0	10	12	2.1	
206-44-0	Fluoranthene	U	12	1.0	10	12	2.1	
129-00-0	Pyrene	U	12	1.0	10	12	2.5	
56-55-3	Benzo(a)anthracene	U	12	1.0	10	12	2.2	
205-99-2	Benzo(b)fluoranthene	U	12	1.0	10	12	2.8	
207-08-9	Benzo(k)fluoranthene	U	12	1.0	10	12	3.6	
50-32-8	Benzo(a)pyrene	U	12	1.0	10	12	3.9	
193-39-5	Indeno(1,2,3-cd)pyrene	U	12	1.0	10	12	2.2	
53-70-3	Dibenzo(a,h)anthracene	U	12	1.0	10	12	2.1	
191-24-2	Benzo(g,h,i)perylene	U	12	1.0	10	12	2.4	
118-74-1	Hexachlorobenzene	U	12	1.0	10	12	2.1	
87-68-3	Hexachlorobutadiene	~~U~~ UJ	12	1.0	10	12	2.7	CCH
77-47-4	Hexachlorocyclopentadiene	~~U~~ UJ	12	1.0	10	12	1.8	CCH
7297-45-2	2-Methylnaphthalene-D10		68%					
367-12-4	2,4-Dibromophenol		81%					
81103-79-9	Fluorene-d10		85%					
1718-51-1	Pyrene-D10		98%					

lw
4/15/09

4

KATAHDIN ANALYTICAL SERVICES
Report of Analytical Results

Client: CH2MHill
Project: TO-009 Lejeune
PO No:
Sample Date: 01/10/09
Received Date: 01/13/09
Extraction Date: 01/15/09
Analysis Date: 31-JAN-2009 19:23
Report Date: 02/10/2009
Matrix: SOIL
% Solids: 86.9

Lab ID: SC0147-8
Client ID: MR08-SS232-09A
SDG: TO9-33
Extracted by: AC
Extraction Method: SW846 3550
Analyst: JCG
Analysis Method: SW846 M8270C
Lab Prep Batch: WG59836
Units: ug/Kgdrywt

CAS#	Compound	Flags	Results	DF	PQL	Adj.PQL	Adj.MDL	
91-20-3	Naphthalene	U	12	1.0	10	12	3.0	
91-57-6	2-Methylnaphthalene	~~U~~ UJ	12	1.0	10	12	2.5	CCH
86-73-7	Fluorene	U	12	1.0	10	12	3.7	
85-01-8	Phenanthrene	J	8.3	1.0	10	12	2.1	
206-44-0	Fluoranthene	J	15	1.0	10	12	2.1	CCH
129-00-0	Pyrene		13	1.0	10	12	2.4	
56-55-3	Benzo(a)anthracene	J	6.3	1.0	10	12	2.2	
205-99-2	Benzo(b)fluoranthene	U	12	1.0	10	12	2.8	
207-08-9	Benzo(k)fluoranthene	U	12	1.0	10	12	3.6	
50-32-8	Benzo(a)pyrene	J	7.8	1.0	10	12	3.8	
193-39-5	Indeno(1,2,3-cd)pyrene	J	4.5	1.0	10	12	2.2	
53-70-3	Dibenzo(a,h)anthracene	U	12	1.0	10	12	2.1	
191-24-2	Benzo(g,h,i)perylene	J	4.8	1.0	10	12	2.3	
118-74-1	Hexachlorobenzene	U	12	1.0	10	12	2.1	
87-68-3	Hexachlorobutadiene	~~U~~ UJ	12	1.0	10	12	2.6	CCH
77-47-4	Hexachlorocyclopentadiene	~~U~~ UJ	12	1.0	10	12	1.7	CCH
7297-45-2	2-Methylnaphthalene-D10		117%					
367-12-4	2,4-Dibromophenol		93%					
81103-79-9	Fluorene-d10		96%					
1718-51-1	Pyrene-D10		108%					

LW
4/15/09

KATAHDIN ANALYTICAL SERVICES
Report of Analytical Results

Client: CH2MHill
Project: TO-009 Lejeune
PO No:
Sample Date: 01/10/09
Received Date: 01/13/09
Extraction Date: 01/15/09
Analysis Date: 31-JAN-2009 14:42
Report Date: 02/10/2009
Matrix: SOIL
% Solids: 93.1

Lab ID: SC0147-10
Client ID: MR08-IS232-5-6-09A
SDG: TO9-33
Extracted by: AC
Extraction Method: SW846 3550
Analyst: JCG
Analysis Method: SW846 M8270C
Lab Prep Batch: WG59836
Units: ug/Kgdrywt

CAS#	Compound	Flags		Results	DF	PQL	Adj.PQL	Adj.MDL	
91-20-3	Naphthalene	U		11	1.0	10	11	2.8	
91-57-6	2-Methylnaphthalene	~~U~~	UJ	11	1.0	10	11	2.4	CCH
86-73-7	Fluorene	U		11	1.0	10	11	3.4	
85-01-8	Phenanthrene	U		11	1.0	10	11	1.9	
206-44-0	Fluoranthene	~~U~~	UJ	11	1.0	10	11	1.9	CCH
129-00-0	Pyrene	U		11	1.0	10	11	2.2	
56-55-3	Benzo(a)anthracene	U		11	1.0	10	11	2.0	
205-99-2	Benzo(b)fluoranthene	U		11	1.0	10	11	2.6	
207-08-9	Benzo(k)fluoranthene	U		11	1.0	10	11	3.3	
50-32-8	Benzo(a)pyrene	U		11	1.0	10	11	3.5	
193-39-5	Indeno(1,2,3-cd)pyrene	U		11	1.0	10	11	2.0	
53-70-3	Dibenzo(a,h)anthracene	U		11	1.0	10	11	1.9	
191-24-2	Benzo(g,h,i)perylene	U		11	1.0	10	11	2.1	
118-74-1	Hexachlorobenzene	U		11	1.0	10	11	1.9	
87-68-3	Hexachlorobutadiene	~~U~~	UJ	11	1.0	10	11	2.5	CCH
77-47-4	Hexachlorocyclopentadiene	~~U~~	UJ	11	1.0	10	11	1.6	CCH
7297-45-2	2-Methylnaphthalene-D10			92%					
367-12-4	2,4-Dibromophenol			104%					
81103-79-9	Fluorene-d10			92%					
1718-51-1	Pyrene-D10			126%					

KW 4/15/09

6

KATAHDIN ANALYTICAL SERVICES
Report of Analytical Results

Client: CH2MHill
Project: TO-009 Lejeune
PO No:
Sample Date: 01/10/09
Received Date: 01/13/09
Extraction Date: 01/15/09
Analysis Date: 31-JAN-2009 16:42
Report Date: 02/10/2009
Matrix: SOIL
% Solids: 90.8

Lab ID: SC0147-12
Client ID: MR08-SS252-09A
SDG: TO9-33
Extracted by: AC
Extraction Method: SW846 3550
Analyst: JCG
Analysis Method: SW846 M8270C
Lab Prep Batch: WG59836
Units: ug/Kgdrywt

CAS#	Compound	Flags	Results	DF	PQL	Adj.PQL	Adj.MDL	
91-20-3	Naphthalene		17	1.0	10	11	2.9	
91-57-6	2-Methylnaphthalene	J	57	1.0	10	11	2.4	CCH
86-73-7	Fluorene	J	4.4	1.0	10	11	3.5	
85-01-8	Phenanthrene		150	1.0	10	11	2.0	
206-44-0	Fluoranthene	J	250	1.0	10	11	2.0	CCH
129-00-0	Pyrene		150	1.0	10	11	2.3	
56-55-3	Benzo(a)anthracene		67	1.0	10	11	2.1	
205-99-2	Benzo(b)fluoranthene		110	1.0	10	11	2.6	
207-08-9	Benzo(k)fluoranthene		58	1.0	10	11	3.4	
50-32-8	Benzo(a)pyrene		61	1.0	10	11	3.6	
193-39-5	Indeno(1,2,3-cd)pyrene		35	1.0	10	11	2.1	
53-70-3	Dibenzo(a,h)anthracene		17	1.0	10	11	2.0	
191-24-2	Benzo(g,h,i)perylene		36	1.0	10	11	2.2	
118-74-1	Hexachlorobenzene	U	11	1.0	10	11	2.0	
87-68-3	Hexachlorobutadiene	~~U~~ UJ	11	1.0	10	11	2.5	CCH
77-47-4	Hexachlorocyclopentadiene	~~U~~ UJ	11	1.0	10	11	1.6	CCH
7297-45-2	2-Methylnaphthalene-D10		*132%					
367-12-4	2,4-Dibromophenol		99%					
81103-79-9	Fluorene-d10		102%					
1718-51-1	Pyrene-D10		101%					

kw
4/15/09

7

KATAHDIN ANALYTICAL SERVICES
Report of Analytical Results

Client: CH2MHill
Project: TO-009 Lejeune
PO No:
Sample Date: 01/10/09
Received Date: 01/13/09
Extraction Date: 01/15/09
Analysis Date: 31-JAN-2009 15:22
Report Date: 02/10/2009
Matrix: SOIL
% Solids: 87.5

Lab ID: SC0147-14
Client ID: MR08-IS252-6-7-09A
SDG: TO9-33
Extracted by: AC
Extraction Method: SW846 3550
Analyst: JCG
Analysis Method: SW846 M8270C
Lab Prep Batch: WG59836
Units: ug/Kgdrywt

CAS#	Compound	Flags	Results	DF	PQL	Adj.PQL	Adj.MDL	
91-20-3	Naphthalene	U	11	1.0	10	11	3.0	
91-57-6	2-Methylnaphthalene	~~U~~ UJ	11	1.0	10	11	2.5	CCH
86-73-7	Fluorene	U	11	1.0	10	11	3.6	
85-01-8	Phenanthrene	U	11	1.0	10	11	2.0	
206-44-0	Fluoranthene	~~U~~ UJ	11	1.0	10	11	2.0	CCH
129-00-0	Pyrene	U	11	1.0	10	11	2.4	
56-55-3	Benzo(a)anthracene	U	11	1.0	10	11	2.2	
205-99-2	Benzo(b)fluoranthene	U	11	1.0	10	11	2.7	
207-08-9	Benzo(k)fluoranthene	U	11	1.0	10	11	3.5	
50-32-8	Benzo(a)pyrene	U	11	1.0	10	11	3.8	
193-39-5	Indeno(1,2,3-cd)pyrene	U	11	1.0	10	11	2.2	
53-70-3	Dibenzo(a,h)anthracene	U	11	1.0	10	11	2.0	
191-24-2	Benzo(g,h,i)perylene	U	11	1.0	10	11	2.3	
118-74-1	Hexachlorobenzene	U	11	1.0	10	11	2.0	
87-68-3	Hexachlorobutadiene	~~U~~ UJ	11	1.0	10	11	2.6	CCH
77-47-4	Hexachlorocyclopentadiene	~~U~~ UJ	11	1.0	10	11	1.7	CCH
7297-45-2	2-Methylnaphthalene-D10		115%					
367-12-4	2,4-Dibromophenol		109%					
81103-79-9	Fluorene-d10		94%					
1718-51-1	Pyrene-D10		131%					

LW
4/15/09

8

KATAHDIN ANALYTICAL SERVICES
Report of Analytical Results

Client: CH2MHill
Project: TO-009 Lejeune
PO No:
Sample Date: 01/10/09
Received Date: 01/13/09
Extraction Date: 01/15/09
Analysis Date: 02-FEB-2009 10:39
Report Date: 02/10/2009
Matrix: SOIL
% Solids: 90.5

Lab ID: SC0147-16RA
Client ID: MR08-SS253-09A
SDG: TO9-33
Extracted by: AC
Extraction Method: SW846 3550
Analyst: JLP
Analysis Method: SW846 M8270C
Lab Prep Batch: WG59836
Units: ug/Kgdrywt

CAS#	Compound	Flags		Results	DF	PQL	Adj.PQL	Adj.MDL	
91-20-3	Naphthalene	U		11	1.0	10	11	2.9	
91-57-6	2-Methylnaphthalene	U		11	1.0	10	11	2.4	
86-73-7	Fluorene	U		11	1.0	10	11	3.5	
85-01-8	Phenanthrene			76	1.0	10	11	2.0	
206-44-0	Fluoranthene			220	1.0	10	11	2.0	
129-00-0	Pyrene			170	1.0	10	11	2.3	
56-55-3	Benzo(a)anthracene			82	1.0	10	11	2.1	
205-99-2	Benzo(b)fluoranthene			130	1.0	10	11	2.6	
207-08-9	Benzo(k)fluoranthene			87	1.0	10	11	3.4	
50-32-8	Benzo(a)pyrene			83	1.0	10	11	3.6	
193-39-5	Indeno(1,2,3-cd)pyrene			50	1.0	10	11	2.1	
53-70-3	Dibenzo(a,h)anthracene			18	1.0	10	11	2.0	
191-24-2	Benzo(g,h,i)perylene			52	1.0	10	11	2.2	
118-74-1	Hexachlorobenzene	U		11	1.0	10	11	2.0	
87-68-3	Hexachlorobutadiene	~~U~~	UJ	11	1.0	10	11	2.5	CCH
77-47-4	Hexachlorocyclopentadiene	~~U~~	UJ	11	1.0	10	11	1.6	CCH
7297-45-2	2-Methylnaphthalene-D10			79%					
367-12-4	2,4-Dibromophenol			89%					
81103-79-9	Fluorene-d10			89%					
1718-51-1	Pyrene-D10			116%					

LW
4/15/09

9

KATAHDIN ANALYTICAL SERVICES
Report of Analytical Results

Client: CH2MHill
Project: TO-009 Lejeune
PO No:
Sample Date: 01/10/09
Received Date: 01/13/09
Extraction Date: 01/15/09
Analysis Date: 31-JAN-2009 16:02
Report Date: 02/10/2009
Matrix: SOIL
% Solids: 88.8

Lab ID: SC0147-18
Client ID: MR08-IS253-6-7-09A
SDG: TO9-33
Extracted by: AC
Extraction Method: SW846 3550
Analyst: JCG
Analysis Method: SW846 M8270C
Lab Prep Batch: WG59836
Units: ug/Kgdrywt

Use reanalysis

CAS#	Compound	Flags	Results	DF	PQL	Adj.PQL	Adj.MDL
91-20-3	Naphthalene	U R	11	1.0	10	11	2.9 SL
91-57-6	2-Methylnaphthalene	U	11	1.0	10	11	2.5
86-73-7	Fluorene	U	11	1.0	10	11	3.6
85-01-8	Phenanthrene	U	11	1.0	10	11	2.0
206-44-0	Fluoranthene	U	11	1.0	10	11	2.0
129-00-0	Pyrene	U	11	1.0	10	11	2.4
56-55-3	Benzo(a)anthracene	U	11	1.0	10	11	2.1
205-99-2	Benzo(b)fluoranthene	U	11	1.0	10	11	2.7
207-08-9	Benzo(k)fluoranthene	U	11	1.0	10	11	3.5
50-32-8	Benzo(a)pyrene	U	11	1.0	10	11	3.7
193-39-5	Indeno(1,2,3-cd)pyrene	U	11	1.0	10	11	2.1
53-70-3	Dibenzo(a,h)anthracene	U	11	1.0	10	11	2.0
191-24-2	Benzo(g,h,i)perylene	U	11	1.0	10	11	2.2
118-74-1	Hexachlorobenzene	U	11	1.0	10	11	2.0
87-68-3	Hexachlorobutadiene	U	11	1.0	10	11	2.6
77-47-4	Hexachlorocyclopentadiene	U	11	1.0	10	11	1.7
7297-45-2	2-Methylnaphthalene-D10		* 0%				
367-12-4	2,4-Dibromophenol		* 0%				
81103-79-9	Fluorene-d10		* 0%				
1718-51-1	Pyrene-D10		* 0%				

hw 4/15/09

9RE

KATAHDIN ANALYTICAL SERVICES
Report of Analytical Results

Client: CH2MHill
Project: TO-009 Lejeune
PO No:
Sample Date: 01/10/09
Received Date: 01/13/09
Extraction Date: 02/05/09
Analysis Date: 09-FEB-2009 22:25
Report Date: 02/10/2009
Matrix: SOIL
% Solids: 88.8

Lab ID: SC0147-18RE
Client ID: MR08-IS253-6-7-09A
SDG: TO9-33
Extracted by: CB
Extraction Method: SW846 3550
Analyst: JCG
Analysis Method: SW846 M8270C
Lab Prep Batch: WG60481
Units: ug/Kgdrywt

CAS#	Compound	Flags	Results	DF	PQL	Adj.PQL	Adj.MDL
91-20-3	Naphthalene	U UJ	11	1.0	10	11	2.9 HT
91-57-6	2-Methylnaphthalene	U	11	1.0	10	11	2.5
86-73-7	Fluorene	U	11	1.0	10	11	3.6
85-01-8	Phenanthrene	U	11	1.0	10	11	2.0
206-44-0	Fluoranthene	~~JB~~ 11UJ	~~6.5~~	1.0	10	11	2.0 BL HT
129-00-0	Pyrene	U UJ	11	1.0	10	11	2.4 HT
56-55-3	Benzo(a)anthracene	U	11	1.0	10	11	2.1
205-99-2	Benzo(b)fluoranthene	U	11	1.0	10	11	2.7
207-08-9	Benzo(k)fluoranthene	U	11	1.0	10	11	3.5
50-32-8	Benzo(a)pyrene	U	11	1.0	10	11	3.7
193-39-5	Indeno(1,2,3-cd)pyrene	U	11	1.0	10	11	2.1
53-70-3	Dibenzo(a,h)anthracene	U	11	1.0	10	11	2.0
191-24-2	Benzo(g,h,i)perylene	U	11	1.0	10	11	2.2
118-74-1	Hexachlorobenzene	U	11	1.0	10	11	2.0
87-68-3	Hexachlorobutadiene	U	11	1.0	10	11	2.6
77-47-4	Hexachlorocyclopentadiene	U	11	1.0	10	11	1.7
7297-45-2	2-Methylnaphthalene-D10		71%				
367-12-4	2,4-Dibromophenol		90%				
81103-79-9	Fluorene-d10		76%				
1718-51-1	Pyrene-D10		123%				

hw
4/15/09

KATAHDIN ANALYTICAL SERVICES
Report of Analytical Results

Client: CH2MHill
Project: TO-009 Lejeune
PO No:
Sample Date: 01/10/09
Received Date: 01/13/09
Extraction Date: 01/15/09
Analysis Date: 02-FEB-2009 11:19
Report Date: 02/10/2009
Matrix: SOIL
% Solids: 93.9

Lab ID: SC0147-20RA
Client ID: MR08-SS231-09A
SDG: TO9-33
Extracted by: AC
Extraction Method: SW846 3550
Analyst: JLP
Analysis Method: SW846 M8270C
Lab Prep Batch: WG59836
Units: ug/Kgdrywt

CAS#	Compound	Flags	Results	DF	PQL	Adj.PQL	Adj.MDL	
91-20-3	Naphthalene	U	11	1.0	10	11	2.8	
91-57-6	2-Methylnaphthalene	U	11	1.0	10	11	2.3	
86-73-7	Fluorene	U	11	1.0	10	11	3.4	
85-01-8	Phenanthrene	J	2.3	1.0	10	11	1.9	
206-44-0	Fluoranthene		12	1.0	10	11	1.9	
129-00-0	Pyrene		13	1.0	10	11	2.2	
56-55-3	Benzo(a)anthracene	J	4.1	1.0	10	11	2.0	
205-99-2	Benzo(b)fluoranthene		13	1.0	10	11	2.6	
207-08-9	Benzo(k)fluoranthene	J	5.7	1.0	10	11	3.3	
50-32-8	Benzo(a)pyrene		14	1.0	10	11	3.5	
193-39-5	Indeno(1,2,3-cd)pyrene	J	9.7	1.0	10	11	2.0	
53-70-3	Dibenzo(a,h)anthracene	J	4.6	1.0	10	11	1.9	
191-24-2	Benzo(g,h,i)perylene		32	1.0	10	11	2.1	
118-74-1	Hexachlorobenzene	U	11	1.0	10	11	1.9	
87-68-3	Hexachlorobutadiene	~~J~~ UJ	11	1.0	10	11	2.4	CCH
77-47-4	Hexachlorocyclopentadiene	~~J~~ UJ	11	1.0	10	11	1.6	CCH
7297-45-2	2-Methylnaphthalene-D10		75%					
367-12-4	2,4-Dibromophenol		106%					
81103-79-9	Fluorene-d10		88%					
1718-51-1	Pyrene-D10		98%					

lw 4/15/09

11

KATAHDIN ANALYTICAL SERVICES
Report of Analytical Results

Client: CH2MHill
Project: TO-009 Lejeune
PO No:
Sample Date: 01/10/09
Received Date: 01/13/09
Extraction Date: 01/15/09
Analysis Date: 31-JAN-2009 18:03
Report Date: 02/10/2009
Matrix: SOIL
% Solids: 93.2

Lab ID: SC0147-22
Client ID: MR08-IS231-8-9-09A
SDG: TO9-33
Extracted by: AC
Extraction Method: SW846 3550
Analyst: JCG
Analysis Method: SW846 M8270C
Lab Prep Batch: WG59836
Units: ug/Kgdrywt

CAS#	Compound	Flags	Results	DF	PQL	Adj.PQL	Adj.MDL	
91-20-3	Naphthalene	U	11	1.0	10	11	2.8	
91-57-6	2-Methylnaphthalene	~~U~~ UJ	11	1.0	10	11	2.4	CCH
86-73-7	Fluorene	U	11	1.0	10	11	3.4	
85-01-8	Phenanthrene		11	1.0	10	11	1.9	
206-44-0	Fluoranthene	J	63	1.0	10	11	1.9	CCH
129-00-0	Pyrene		51	1.0	10	11	2.2	
56-55-3	Benzo(a)anthracene		24	1.0	10	11	2.0	
205-99-2	Benzo(b)fluoranthene		62	1.0	10	11	2.6	
207-08-9	Benzo(k)fluoranthene		37	1.0	10	11	3.3	
50-32-8	Benzo(a)pyrene		38	1.0	10	11	3.5	
193-39-5	Indeno(1,2,3-cd)pyrene		25	1.0	10	11	2.0	
53-70-3	Dibenzo(a,h)anthracene	J	7.6	1.0	10	11	1.9	
191-24-2	Benzo(g,h,i)perylene		32	1.0	10	11	2.1	
118-74-1	Hexachlorobenzene	U	11	1.0	10	11	1.9	
87-68-3	Hexachlorobutadiene	~~U~~ UJ	11	1.0	10	11	2.5	CCH
77-47-4	Hexachlorocyclopentadiene	~~U~~ UJ	11	1.0	10	11	1.6	CCH
7297-45-2	2-Methylnaphthalene-D10		111%					
367-12-4	2,4-Dibromophenol		114%					
81103-79-9	Fluorene-d10		104%					
1718-51-1	Pyrene-D10		113%					

KW 4/15/09

KATAHDIN ANALYTICAL SERVICES
Report of Analytical Results

Client: CH2MHill
Project: TO-009 Lejeune
PO No:
Sample Date: 01/10/09
Received Date: 01/13/09
Extraction Date: 01/15/09
Analysis Date: 31-JAN-2009 23:24
Report Date: 02/10/2009
Matrix: SOIL
% Solids: 92.1

Lab ID: SC0147-24
Client ID: MR08-SS230-09A
SDG: TO9-33
Extracted by: AC
Extraction Method: SW846 3550
Analyst: JCG
Analysis Method: SW846 M8270C
Lab Prep Batch: WG59836
Units: ug/Kgdrywt

CAS#	Compound	Flags		Results	DF	PQL	Adj.PQL	Adj.MDL	
91-20-3	Naphthalene	U		11	1.0	10	11	2.8	
91-57-6	2-Methylnaphthalene	~~U~~	UJ	11	1.0	10	11	2.4	CCH
86-73-7	Fluorene	U		11	1.0	10	11	3.5	
85-01-8	Phenanthrene	U		11	1.0	10	11	2.0	
206-44-0	Fluoranthene	~~J~~	J	2.2	1.0	10	11	2.0	CCH
129-00-0	Pyrene			11	1.0	10	11	2.3	
56-55-3	Benzo(a)anthracene	J		7.1	1.0	10	11	2.1	
205-99-2	Benzo(b)fluoranthene	U		11	1.0	10	11	2.6	
207-08-9	Benzo(k)fluoranthene	U		11	1.0	10	11	3.4	
50-32-8	Benzo(a)pyrene			19	1.0	10	11	3.6	
193-39-5	Indeno(1,2,3-cd)pyrene	U		11	1.0	10	11	2.1	
53-70-3	Dibenzo(a,h)anthracene	U		11	1.0	10	11	2.0	
191-24-2	Benzo(g,h,i)perylene			22	1.0	10	11	2.2	
118-74-1	Hexachlorobenzene	U		11	1.0	10	11	2.0	
87-68-3	Hexachlorobutadiene	~~U~~	UJ	11	1.0	10	11	2.5	CCH
77-47-4	Hexachlorocyclopentadiene	~~U~~	UJ	11	1.0	10	11	1.6	CCH
7297-45-2	2-Methylnaphthalene-D10			102%					
367-12-4	2,4-Dibromophenol			116%					
81103-79-9	Fluorene-d10			92%					
1718-51-1	Pyrene-D10			92%					

LEW
4/15/09

KATAHDIN ANALYTICAL SERVICES
Report of Analytical Results

Client: CH2MHill
Project: TO-009 Lejeune
PO No:
Sample Date: 01/10/09
Received Date: 01/13/09
Extraction Date: 01/16/09
Analysis Date: 31-JAN-2009 10:10
Report Date: 02/10/2009
Matrix: SOIL
% Solids: 87.2

Lab ID: SC0147-26
Client ID: MR08-IS230-8-9-09A
SDG: TO9-33
Extracted by: CB
Extraction Method: SW846 3550
Analyst: JCG
Analysis Method: SW846 M8270C
Lab Prep Batch: WG59868
Units: ug/Kgdrywt

CAS#	Compound	Flags	Results	DF	PQL	Adj.PQL	Adj.MDL
91-20-3	Naphthalene	U	11	1.0	10	11	3.0
91-57-6	2-Methylnaphthalene	U	11	1.0	10	11	2.5
86-73-7	Fluorene	U	11	1.0	10	11	3.7
85-01-8	Phenanthrene	U	11	1.0	10	11	2.1
206-44-0	Fluoranthene	J	3.0	1.0	10	11	2.1
129-00-0	Pyrene	U	11	1.0	10	11	2.4
56-55-3	Benzo(a)anthracene	U	11	1.0	10	11	2.2
205-99-2	Benzo(b)fluoranthene	U	11	1.0	10	11	2.8
207-08-9	Benzo(k)fluoranthene	U	11	1.0	10	11	3.6
50-32-8	Benzo(a)pyrene	U	11	1.0	10	11	3.8
193-39-5	Indeno(1,2,3-cd)pyrene	U	11	1.0	10	11	2.2
53-70-3	Dibenzo(a,h)anthracene	U	11	1.0	10	11	2.1
191-24-2	Benzo(g,h,i)perylene	U	11	1.0	10	11	2.3
118-74-1	Hexachlorobenzene	U	11	1.0	10	11	2.1
87-68-3	Hexachlorobutadiene	U	11	1.0	10	11	2.6
77-47-4	Hexachlorocyclopentadiene	U	11	1.0	10	11	1.7
7297-45-2	2-Methylnaphthalene-D10		77%				
367-12-4	2,4-Dibromophenol		80%				
81103-79-9	Fluorene-d10		85%				
1718-51-1	Pyrene-D10		86%				

MW
4/15/09

14

KATAHDIN ANALYTICAL SERVICES
Report of Analytical Results

Client: CH2MHill
Project: TO-009 Lejeune
PO No:
Sample Date: 01/10/09
Received Date: 01/13/09
Extraction Date: 01/16/09
Analysis Date: 31-JAN-2009 18:26
Report Date: 02/10/2009
Matrix: SOIL
% Solids: 91.8

Lab ID: SC0147-28
Client ID: MR08-SS259-09A
SDG: TO9-33
Extracted by: CB
Extraction Method: SW846 3550
Analyst: JCG
Analysis Method: SW846 M8270C
Lab Prep Batch: WG59868
Units: ug/Kgdrywt

CAS#	Compound	Flags	Results	DF	PQL	Adj.PQL	Adj.MDL
91-20-3	Naphthalene	J	3.7	1.0	10	11	2.8
91-57-6	2-Methylnaphthalene	J	2.6	1.0	10	11	2.4
86-73-7	Fluorene	J	10	1.0	10	11	3.5
85-01-8	Phenanthrene		170	1.0	10	11	2.0
206-44-0	Fluoranthene	~~E~~	530 ~~340~~ Z	1.0	10	22 ~~11~~	3.9 ~~2.0~~ R DL
129-00-0	Pyrene	~~E~~	390 ~~320~~ Z	1.0	10	22 ~~11~~	4.6 ~~2.3~~ R DL
56-55-3	Benzo(a)anthracene		180	1.0	10	11	2.1
205-99-2	Benzo(b)fluoranthene	~~E~~	380 ~~320~~ Z	1.0	10	22 ~~11~~	5.2 ~~2.6~~ R DL
207-08-9	Benzo(k)fluoranthene		160	1.0	10	11	3.4
50-32-8	Benzo(a)pyrene		200	1.0	10	11	3.6
193-39-5	Indeno(1,2,3-cd)pyrene		140	1.0	10	11	2.1
53-70-3	Dibenzo(a,h)anthracene		57	1.0	10	11	2.0
191-24-2	Benzo(g,h,i)perylene		140	1.0	10	11	2.2
118-74-1	Hexachlorobenzene	U	11	1.0	10	11	2.0
87-68-3	Hexachlorobutadiene	U	11	1.0	10	11	2.5
77-47-4	Hexachlorocyclopentadiene	U	11	1.0	10	11	1.6
7297-45-2	2-Methylnaphthalene-D10		78%				
367-12-4	2,4-Dibromophenol		90%				
81103-79-9	Fluorene-d10		89%				
1718-51-1	Pyrene-D10		94%				

hW
4/15/09

14DL

KATAHDIN ANALYTICAL SERVICES
Report of Analytical Results

Client: CH2MHill
Project: TO-009 Lejeune
PO No:
Sample Date: 01/10/09
Received Date: 01/13/09
Extraction Date: 01/16/09
Analysis Date: 02-FEB-2009 22:58
Report Date: 02/10/2009
Matrix: SOIL
% Solids: 91.8

Lab ID: SC0147-28DL
Client ID: MR08-SS259-09A
SDG: TO9-33
Extracted by: CB
Extraction Method: SW846 3550
Analyst: JCG
Analysis Method: SW846 M8270C
Lab Prep Batch: WG59868
Units: ug/Kgdrywt

use original

R DL

CAS#	Compound	Flags	Results	DF	PQL	Adj.PQL	Adj.MDL
91-20-3	Naphthalene	U	22	2.0	10	22	5.7
91-57-6	2-Methylnaphthalene	U	22	2.0	10	22	4.8
86-73-7	Fluorene	J	14	2.0	10	22	7.0
85-01-8	Phenanthrene		230	2.0	10	22	3.9
206-44-0	Fluoranthene		530	2.0	10	22	3.9
129-00-0	Pyrene		390	2.0	10	22	4.6
56-55-3	Benzo(a)anthracene	J	240	2.0	10	22	4.1 CCH
205-99-2	Benzo(b)fluoranthene		380	2.0	10	22	5.2
207-08-9	Benzo(k)fluoranthene	J	270	2.0	10	22	6.8 CCH
50-32-8	Benzo(a)pyrene		290	2.0	10	22	7.2
193-39-5	Indeno(1,2,3-cd)pyrene		180	2.0	10	22	4.1
53-70-3	Dibenzo(a,h)anthracene		69	2.0	10	22	3.9
191-24-2	Benzo(g,h,i)perylene		190	2.0	10	22	4.4
118-74-1	Hexachlorobenzene	U	22	2.0	10	22	3.9
87-68-3	Hexachlorobutadiene	U	22	2.0	10	22	5.0
77-47-4	Hexachlorocyclopentadiene	U	22	2.0	10	22	3.3
7297-45-2	2-Methylnaphthalene-D10		97%				
367-12-4	2,4-Dibromophenol		104%				
81103-79-9	Fluorene-d10		120%				
1718-51-1	Pyrene-D10		120%				

hw
4/15/09

KATAHDIN ANALYTICAL SERVICES
Report of Analytical Results

Client: CH2MHill
Project: TO-009 Lejeune
PO No:
Sample Date: 01/10/09
Received Date: 01/13/09
Extraction Date: 01/15/09
Analysis Date: 31-JAN-2009 19:06
Report Date: 02/10/2009
Matrix: SOIL
% Solids: 91.7

Lab ID: SC0147-30
Client ID: MR08-SS259D-09A
SDG: TO9-33
Extracted by: GN
Extraction Method: SW846 3540
Analyst: JCG
Analysis Method: SW846 M8270C
Lab Prep Batch: WG59825
Units: ug/Kgdrywt

CAS#	Compound	Flags	Results	DF	PQL	Adj.PQL	Adj.MDL
91-20-3	Naphthalene	J	10	1.0	10	11	2.8
91-57-6	2-Methylnaphthalene		15	1.0	10	11	2.4
86-73-7	Fluorene	J	4.8	1.0	10	11	3.5
85-01-8	Phenanthrene		140	1.0	10	11	2.0
206-44-0	Fluoranthene	~~E~~	600 ~~350~~	3 ~~1.0~~	10	33 ~~11~~	5.9 ~~2.0~~ R DL
129-00-0	Pyrene	~~E~~	460 ~~110~~	3 ~~1.0~~	10	33 ~~11~~	6.9 ~~2.3~~ R DL
56-55-3	Benzo(a)anthracene		220	1.0	10	11	2.1
205-99-2	Benzo(b)fluoranthene	~~E~~	490 ~~470~~	3 ~~1.0~~	10	33 ~~11~~	7.8 ~~2.6~~ R DL
207-08-9	Benzo(k)fluoranthene		240	1.0	10	11	3.4
50-32-8	Benzo(a)pyrene		280	1.0	10	11	3.6
193-39-5	Indeno(1,2,3-cd)pyrene		210	1.0	10	11	2.1
53-70-3	Dibenzo(a,h)anthracene		81	1.0	10	11	2.0
191-24-2	Benzo(g,h,i)perylene		210	1.0	10	11	2.2
118-74-1	Hexachlorobenzene	U	11	1.0	10	11	2.0
87-68-3	Hexachlorobutadiene	U	11	1.0	10	11	2.5
77-47-4	Hexachlorocyclopentadiene	U	11	1.0	10	11	1.6
7297-45-2	2-Methylnaphthalene-D10		84%				
367-12-4	2,4-Dibromophenol		102%				
81103-79-9	Fluorene-d10		102%				
1718-51-1	Pyrene-D10		114%				

MW 4/15/09

15DL

KATAHDIN ANALYTICAL SERVICES
Report of Analytical Results

Client: CH2MHill
Project: TO-009 Lejeune
PO No:
Sample Date: 01/10/09
Received Date: 01/13/09
Extraction Date: 01/15/09
Analysis Date: 02-FEB-2009 23:39
Report Date: 02/10/2009
Matrix: SOIL
% Solids: 91.7

Lab ID: SC0147-30DL
Client ID: MR08-SS259D-09A
SDG: TO9-33
Extracted by: GN
Extraction Method: SW846 3540
Analyst: JCG
Analysis Method: SW846 M8270C
Lab Prep Batch: WG59825
Units: ug/Kgdrywt

use original

CAS#	Compound	Flags	Results	DF	PQL	Adj.PQL	Adj.MDL
91-20-3	Naphthalene	J	11	3.0	10	33	8.5
91-57-6	2-Methylnaphthalene	J	16	3.0	10	33	7.2
86-73-7	Fluorene	U	33	3.0	10	33	10
85-01-8	Phenanthrene		240	3.0	10	33	5.9
206-44-0	Fluoranthene		600	3.0	10	33	5.9
129-00-0	Pyrene		460	3.0	10	33	6.9
56-55-3	Benzo(a)anthracene	J	270	3.0	10	33	6.2 CCH
205-99-2	Benzo(b)fluoranthene		490	3.0	10	33	7.8
207-08-9	Benzo(k)fluoranthene	J	360	3.0	10	33	10 CCH
50-32-8	Benzo(a)pyrene		360	3.0	10	33	11
193-39-5	Indeno(1,2,3-cd)pyrene		250	3.0	10	33	6.2
53-70-3	Dibenzo(a,h)anthracene		91	3.0	10	33	5.9
191-24-2	Benzo(g,h,i)perylene		260	3.0	10	33	6.5
118-74-1	Hexachlorobenzene	U	33	3.0	10	33	5.9
87-68-3	Hexachlorobutadiene	U	33	3.0	10	33	7.5
77-47-4	Hexachlorocyclopentadiene	U	33	3.0	10	33	4.9
7297-45-2	2-Methylnaphthalene-D10		99%				
367-12-4	2,4-Dibromophenol		109%				
81103-79-9	Fluorene-d10		128%				
1718-51-1	Pyrene-D10		127%				

R DL

MW
4/15/09

KATAHDIN ANALYTICAL SERVICES
Report of Analytical Results

Client: CH2MHill
Project: TO-009 Lejeune
PO No:
Sample Date: 01/10/09
Received Date: 01/13/09
Extraction Date: 01/15/09
Analysis Date: 31-JAN-2009 11:32
Report Date: 02/10/2009
Matrix: SOIL
% Solids: 90.1

Lab ID: SC0147-32
Client ID: MR08-IS259-5-6-09A
SDG: TO9-33
Extracted by: GN
Extraction Method: SW846 3540
Analyst: JCG
Analysis Method: SW846 M8270C
Lab Prep Batch: WG59825
Units: ug/Kgdrywt

CAS#	Compound	Flags	Results	DF	PQL	Adj.PQL	Adj.MDL
91-20-3	Naphthalene	U	11	1.0	10	11	2.9
91-57-6	2-Methylnaphthalene	U	11	1.0	10	11	2.4
86-73-7	Fluorene	U	11	1.0	10	11	3.6
85-01-8	Phenanthrene	U	11	1.0	10	11	2.0
206-44-0	Fluoranthene	U	11	1.0	10	11	2.0
129-00-0	Pyrene	U	11	1.0	10	11	2.3
56-55-3	Benzo(a)anthracene	U	11	1.0	10	11	2.1
205-99-2	Benzo(b)fluoranthene	U	11	1.0	10	11	2.7
207-08-9	Benzo(k)fluoranthene	U	11	1.0	10	11	3.4
50-32-8	Benzo(a)pyrene	U	11	1.0	10	11	3.7
193-39-5	Indeno(1,2,3-cd)pyrene	U	11	1.0	10	11	2.1
53-70-3	Dibenzo(a,h)anthracene	U	11	1.0	10	11	2.0
191-24-2	Benzo(g,h,i)perylene	U	11	1.0	10	11	2.2
118-74-1	Hexachlorobenzene	U	11	1.0	10	11	2.0
87-68-3	Hexachlorobutadiene	U	11	1.0	10	11	2.6
77-47-4	Hexachlorocyclopentadiene	U	11	1.0	10	11	1.7
7297-45-2	2-Methylnaphthalene-D10		81%				
367-12-4	2,4-Dibromophenol		84%				
81103-79-9	Fluorene-d10		92%				
1718-51-1	Pyrene-D10		96%				

NW
4/15/09

KATAHDIN ANALYTICAL SERVICES
Report of Analytical Results

Client: CH2MHill
Project: TO-009 Lejeune
PO No:
Sample Date: 01/10/09
Received Date: 01/13/09
Extraction Date: 01/15/09
Analysis Date: 31-JAN-2009 12:14
Report Date: 02/10/2009
Matrix: SOIL
% Solids: 92.7

Lab ID: SC0147-34
Client ID: MR08-IS259D-5-6-09A
SDG: TO9-33
Extracted by: GN
Extraction Method: SW846 3540
Analyst: JCG
Analysis Method: SW846 M8270C
Lab Prep Batch: WG59825
Units: ug/Kgdrywt

CAS#	Compound	Flags	Results	DF	PQL	Adj.PQL	Adj.MDL
91-20-3	Naphthalene	U	11	1.0	10	11	2.8
91-57-6	2-Methylnaphthalene	U	11	1.0	10	11	2.4
86-73-7	Fluorene	U	11	1.0	10	11	3.4
85-01-8	Phenanthrene	U	11	1.0	10	11	1.9
206-44-0	Fluoranthene	U	11	1.0	10	11	1.9
129-00-0	Pyrene	U	11	1.0	10	11	2.3
56-55-3	Benzo(a)anthracene	U	11	1.0	10	11	2.0
205-99-2	Benzo(b)fluoranthene	U	11	1.0	10	11	2.6
207-08-9	Benzo(k)fluoranthene	U	11	1.0	10	11	3.3
50-32-8	Benzo(a)pyrene	U	11	1.0	10	11	3.6
193-39-5	Indeno(1,2,3-cd)pyrene	U	11	1.0	10	11	2.0
53-70-3	Dibenzo(a,h)anthracene	U	11	1.0	10	11	1.9
191-24-2	Benzo(g,h,i)perylene	U	11	1.0	10	11	2.2
118-74-1	Hexachlorobenzene	U	11	1.0	10	11	1.9
87-68-3	Hexachlorobutadiene	U	11	1.0	10	11	2.5
77-47-4	Hexachlorocyclopentadiene	U	11	1.0	10	11	1.6
7297-45-2	2-Methylnaphthalene-D10		75%				
367-12-4	2,4-Dibromophenol		76%				
81103-79-9	Fluorene-d10		87%				
1718-51-1	Pyrene-D10		97%				

lw
4/15/09

KATAHDIN ANALYTICAL SERVICES
Report of Analytical Results

Client: CH2MHill
Project: TO-009 Lejeune
PO No:
Sample Date: 01/10/09
Received Date: 01/13/09
Extraction Date: 01/15/09
Analysis Date: 31-JAN-2009 19:48
Report Date: 02/10/2009
Matrix: SOIL
% Solids: 93.4

Lab ID: SC0147-36
Client ID: MR08-SS272-09A
SDG: TO9-33
Extracted by: GN
Extraction Method: SW846 3540
Analyst: JCG
Analysis Method: SW846 M8270C
Lab Prep Batch: WG59825
Units: ug/Kgdrywt

CAS#	Compound	Flags	Results	DF	PQL	Adj.PQL	Adj.MDL
91-20-3	Naphthalene		56	1.0	10	11	2.8
91-57-6	2-Methylnaphthalene		41	1.0	10	11	2.4
86-73-7	Fluorene		130	1.0	10	11	3.4
85-01-8	Phenanthrene	~~E~~	1500 ~~1600~~	15 1.0	10	160 ~~11~~ 29	~~1.9~~ R DL
206-44-0	Fluoranthene	~~E~~	2600 ~~2000~~	1.0	10	~~11~~ 29	~~1.9~~
129-00-0	Pyrene	~~E~~	1900 ~~1600~~	1.0	10	~~11~~ 34	~~2.2~~
56-55-3	Benzo(a)anthracene	~~E~~	1400 ~~1200~~	1.0	10	~~11~~ 30	~~2.0~~
205-99-2	Benzo(b)fluoranthene	~~E~~	1500 ~~1200~~	1.0	10	~~11~~ 38	~~2.6~~
207-08-9	Benzo(k)fluoranthene	~~E~~	850 ~~950~~	1.0	10	~~11~~ 50	~~3.3~~
50-32-8	Benzo(a)pyrene	~~E~~	1100 ~~990~~	1.0	10	~~11~~ 53	~~3.5~~
193-39-5	Indeno(1,2,3-cd)pyrene	~~E~~	600 ~~590~~	1.0	10	~~11~~ 30	~~2.0~~
53-70-3	Dibenzo(a,h)anthracene		250	1.0	10	11	1.9
191-24-2	Benzo(g,h,i)perylene	~~E~~	690 ~~530~~	15 1.0	10	160 ~~11~~ 32	~~2.1~~ R DL
118-74-1	Hexachlorobenzene	U	11	1.0	10	11	1.9
87-68-3	Hexachlorobutadiene	U	11	1.0	10	11	2.5
77-47-4	Hexachlorocyclopentadiene	U	11	1.0	10	11	1.6
7297-45-2	2-Methylnaphthalene-D10		81%				
367-12-4	2,4-Dibromophenol		106%				
81103-79-9	Fluorene-d10		103%				
1718-51-1	Pyrene-D10		113%				

MW
4/15/09

18DL

KATAHDIN ANALYTICAL SERVICES
Report of Analytical Results

Client: CH2MHill
Project: TO-009 Lejeune
PO No:
Sample Date: 01/10/09
Received Date: 01/13/09
Extraction Date: 01/15/09
Analysis Date: 03-FEB-2009 17:50
Report Date: 02/10/2009
Matrix: SOIL
% Solids: 93.4

Lab ID: SC0147-36DL2
Client ID: MR08-SS272-09A
SDG: TO9-33
Extracted by: GN
Extraction Method: SW846 3540
Analyst: JCG
Analysis Method: SW846 M8270C
Lab Prep Batch: WG59825
Units: ug/Kgdrywt

use original

CAS#	Compound	Flags	Results	DF	PQL	Adj.PQL	Adj.MDL
91-20-3	Naphthalene	J	54	15	10	160	42
91-57-6	2-Methylnaphthalene	U	160	15	10	160	35
86-73-7	Fluorene	J	130	15	10	160	51
85-01-8	Phenanthrene		1500	15	10	160	29
206-44-0	Fluoranthene		2600	15	10	160	29
129-00-0	Pyrene		1900	15	10	160	34
56-55-3	Benzo(a)anthracene		1400	15	10	160	30
205-99-2	Benzo(b)fluoranthene		1500	15	10	160	38
207-08-9	Benzo(k)fluoranthene		850	15	10	160	50
50-32-8	Benzo(a)pyrene		1100	15	10	160	53
193-39-5	Indeno(1,2,3-cd)pyrene		600	15	10	160	30
53-70-3	Dibenzo(a,h)anthracene		210	15	10	160	29
191-24-2	Benzo(g,h,i)perylene		690	15	10	160	32
118-74-1	Hexachlorobenzene	U	160	15	10	160	29
87-68-3	Hexachlorobutadiene	U	160	15	10	160	37
77-47-4	Hexachlorocyclopentadiene	U	160	15	10	160	24
7297-45-2	2-Methylnaphthalene-D10		D				
367-12-4	2,4-Dibromophenol		D				
81103-79-9	Fluorene-d10		D				
1718-51-1	Pyrene-D10		D				

R DL

lw 4/15/09

KATAHDIN ANALYTICAL SERVICES
Report of Analytical Results

Client: CH2MHill
Project: TO-009 Lejeune
PO No:
Sample Date: 01/10/09
Received Date: 01/13/09
Extraction Date: 01/15/09
Analysis Date: 31-JAN-2009 12:55
Report Date: 02/10/2009
Matrix: SOIL
% Solids: 92.2

Lab ID: SC0147-38
Client ID: MR08-IS272-8-9-09A
SDG: TO9-33
Extracted by: GN
Extraction Method: SW846 3540
Analyst: JCG
Analysis Method: SW846 M8270C
Lab Prep Batch: WG59825
Units: ug/Kgdrywt

CAS#	Compound	Flags	Results	DF	PQL	Adj.PQL	Adj.MDL
91-20-3	Naphthalene	U	11	1.0	10	11	2.8
91-57-6	2-Methylnaphthalene	U	11	1.0	10	11	2.4
86-73-7	Fluorene	U	11	1.0	10	11	3.5
85-01-8	Phenanthrene		20	1.0	10	11	2.0
206-44-0	Fluoranthene		25	1.0	10	11	2.0
129-00-0	Pyrene		15	1.0	10	11	2.3
56-55-3	Benzo(a)anthracene	J	7.4	1.0	10	11	2.1
205-99-2	Benzo(b)fluoranthene	J	9.0	1.0	10	11	2.6
207-08-9	Benzo(k)fluoranthene	J	9.2	1.0	10	11	3.4
50-32-8	Benzo(a)pyrene	J	8.6	1.0	10	11	3.6
193-39-5	Indeno(1,2,3-cd)pyrene	J	6.8	1.0	10	11	2.1
53-70-3	Dibenzo(a,h)anthracene	J	3.1	1.0	10	11	2.0
191-24-2	Benzo(g,h,i)perylene	J	7.7	1.0	10	11	2.2
118-74-1	Hexachlorobenzene	U	11	1.0	10	11	2.0
87-68-3	Hexachlorobutadiene	U	11	1.0	10	11	2.5
77-47-4	Hexachlorocyclopentadiene	U	11	1.0	10	11	1.6
7297-45-2	2-Methylnaphthalene-D10		91%				
367-12-4	2,4-Dibromophenol		94%				
81103-79-9	Fluorene-d10		108%				
1718-51-1	Pyrene-D10		100%				

MW
4/15/09

KATAHDIN ANALYTICAL SERVICES
Report of Analytical Results

Client: CH2MHill
Project: TO-009 Lejeune
PO No:
Sample Date: 01/10/09
Received Date: 01/13/09
Extraction Date: 01/15/09
Analysis Date: 31-JAN-2009 20:29
Report Date: 02/10/2009
Matrix: SOIL
% Solids: 90.6

Lab ID: SC0147-40
Client ID: MR08-SS283-09A
SDG: TO9-33
Extracted by: GN
Extraction Method: SW846 3540
Analyst: JCG
Analysis Method: SW846 M8270C
Lab Prep Batch: WG59825
Units: ug/Kgdrywt

CAS#	Compound	Flags	Results	DF	PQL	Adj.PQL	Adj.MDL
91-20-3	Naphthalene	J	10	1.0	10	11	2.9
91-57-6	2-Methylnaphthalene		13	1.0	10	11	2.4
86-73-7	Fluorene	U	11	1.0	10	11	3.5
85-01-8	Phenanthrene		44	1.0	10	11	2.0
206-44-0	Fluoranthene		94	1.0	10	11	2.0
129-00-0	Pyrene		96	1.0	10	11	2.3
56-55-3	Benzo(a)anthracene		55	1.0	10	11	2.1
205-99-2	Benzo(b)fluoranthene		110	1.0	10	11	2.6
207-08-9	Benzo(k)fluoranthene		82	1.0	10	11	3.4
50-32-8	Benzo(a)pyrene		74	1.0	10	11	3.6
193-39-5	Indeno(1,2,3-cd)pyrene		51	1.0	10	11	2.1
53-70-3	Dibenzo(a,h)anthracene		18	1.0	10	11	2.0
191-24-2	Benzo(g,h,i)perylene		82	1.0	10	11	2.2
118-74-1	Hexachlorobenzene	U	11	1.0	10	11	2.0
87-68-3	Hexachlorobutadiene	U	11	1.0	10	11	2.5
77-47-4	Hexachlorocyclopentadiene	U	11	1.0	10	11	1.6
7297-45-2	2-Methylnaphthalene-D10		78%				
367-12-4	2,4-Dibromophenol		94%				
81103-79-9	Fluorene-d10		90%				
1718-51-1	Pyrene-D10		86%				

lew
4/15/09

ENVIRONMENTAL
Data Services, Inc.

SEMIVOLATILE ORGANIC COMPOUNDS
USEPA Region IV - Level IV Review

Site: MCB Camp Lejeune, TO-09 SDG #: TO9-33

Client: CH2M HILL, Inc., Virginia Beach, Virginia Date: April 15, 2009

Laboratory: Katahdin Analytical Services, Scarborough, Maine Reviewer: Nancy Weaver

EDS ID	Client Sample ID	Laboratory Sample ID	Matrix
1	MR08-SS204-09A	SC0147-1	Soil
1MS	MR08-SS204-09AMS	SC0147-1MS	Soil
1MSD	MR08-SS204-09AMSD	SC0147-1MSD	Soil
2	MR08-SS251-09A	SC0147-3	Soil
3	MR08-IS251-8-9-09A	SC0147-5	Soil
4	MR08-SS232-09A	SC0147-7	Soil
5	MR08-IS232-5-6-09A	SC0147-9	Soil
6	MR08-SS252-09A	SC0147-11	Soil
7	MR08-IS252-6-7-09A	SC0147-13	Soil
8	MR08-SS253-09A	SC0147-15	Soil
9	MR08-IS253-6-7-09A	SC0147-17	Soil
10	MR08-SS231-09A	SC0147-19	Soil
11	MR08-IS231-8-9-09A	SC0147-21	Soil
12	MR08-SS230-09A	SC0147-23	Soil
13	MR08-IS230-8-9-09A	SC0147-25	Soil
14	MR08-SS259-09A	SC0147-27	Soil
15	MR08-SS259D-09A	SC0147-29	Soil
16	MR08-IS259-5-6-09A	SC0147-31	Soil
17	MR08-IS259D-5-6-09A	SC0147-33	Soil
18	MR08-SS272-09A	SC0147-35	Soil
19	MR08-IS272-8-9-09A	SC0147-37	Soil
20	MR08-SS283-09A	SC0147-39	Soil
20RE	MR08-SS283-09ARE	SC0147-39RE	Soil

The USEPA "Contract Laboratory Program National Functional Guidelines for Organic Data Review," October 1999, and professional judgement were used in evaluating the data in this summary report.

Holding Times - All samples were extracted within 14 days for soil samples and analyzed within 40 days for all samples.

GC/MS Tuning - All of the DFTPP tunes in the initial and continuing calibrations met the percent relative abundance criteria.

Initial Calibration - The initial calibrations exhibited acceptable %RSD and mean RRF values except the following.

ICAL Date	Compound	%RSD/RRF	Qualifier	Affected Samples
01/12/09	Benzaldehyde	90.97%	J/UJ	4, 5, 7, 9

Continuing Calibration - The continuing calibrations exhibited acceptable %D and RRF values except the following.

CCAL Date	Compound	%D/RRF	Qualifier	Affected Samples
01/24/09	Benzaldehyde	294.48%	None	Already qualified due to ICAL
	2,4-Dinitrophenol	39.98%	J/UJ	4, 5, 7, 9
	4,6-Dinitro-2-methylphenol	25.62%	J/UJ	4, 5, 7, 9
	Pentachlorophenol	29.28%	J/UJ	4, 5, 7, 9
01/27/09	2,4-Dinitrophenol	27.04%	J/UJ	13
	4-Nitrophenol	28.52%	J/UJ	13
01/28/09	2,4-Dinitrophenol	27.23%	J/UJ	10, 14

Surrogates - All samples exhibited acceptable surrogate recoveries except the following.

MS/MSD - The MS/MSD sample exhibited acceptable %R and RPD values.

Laboratory Control Sample - The LCS samples exhibited acceptable %R values except the following.

LCS ID	Compound	%R	Qualifier	Affected Samples
WG59867-LCS	Acetophenone	52%	J/UJ	13, 14

Internal Standard (IS) Area Performance - All internal standards met response and retention time (RT) criteria except the following.

Sample ID	Internal Standard	Area Count	Qualifier
20	IS5-Chrysene-d12	Low	J/UJ - All associated
	IS6-Perylene-d12	Low	J/UJ - All associated
20RE*	IS6-Perylene-d12	Low	J/UJ - All associated

* This sample should be used for reporting purposes.

Method Blank - The method blanks were free of contamination.

Field, Equipment Blank - Field QC results are summarized below.

Blank ID	Compound	Conc. ug/L	Action Level ug/L	Qualifier	Affected Samples
MR08-FB01011009	None - ND	-	-	-	-
MR08-EB01011009-SS	None - ND	-	-	-	-

Field Duplicates - Field duplicate results are summarized below.

Compound	MR08-SS259-09A ug/kg	MR08-SS259D-09A ug/kg	RPD	Qualifier
Chrysene	190	260	31%	None
bis (2-Ethylhexyl) phthalate	360 U	120	NC	None

Compound	MR08-IS259-5-6-09A ug/kg	MR08-IS259D-5-6-09A ug/kg	RPD	Qualifier
None	ND	ND	-	-

Tentatively Identified Compounds (TICs) - TICs were not reported.

Compound Quantitation - No discrepancies were identified.

KATAHDIN ANALYTICAL SERVICES
Report of Analytical Results

Client: CH2MHill
Project: TO-009 Lejeune
PO No:
Sample Date: 01/09/09
Received Date: 01/13/09
Extraction Date: 01/15/09
Analysis Date: 27-JAN-2009 10:42
Report Date: 02/03/2009
Matrix: SOIL
% Solids: 95.6

Lab ID: SC0147-1
Client ID: MR08-SS204-09A
SDG: TO9-33
Extracted by: AC
Extraction Method: SW846 3550
Analyst: JLP
Analysis Method: SW846 8270C
Lab Prep Batch: WG59835
Units: ug/Kgdrywt

CAS#	Compound	Flags	Results	DF	PQL	Adj.PQL	Adj.MDL
100-52-7	Benzaldehyde	U	520	1.0	500	520	120
108-95-2	Phenol	U	520	1.0	500	520	160
111-44-4	Bis(2-Chloroethyl)ether	U	340	1.0	330	340	85
95-57-8	2-Chlorophenol	U	520	1.0	500	520	170
95-48-7	2-Methylphenol	U	630	1.0	600	630	210
108-60-1	2,2'-Oxybis(1-chloropropane)	U	340	1.0	330	340	93
98-86-2	Acetophenone	U	630	1.0	600	630	190
621-64-7	N-Nitroso-di-n-propylamine	U	340	1.0	330	340	87
65794-96-9	3&4-Methylphenol	U	630	1.0	600	630	200
67-72-1	Hexachloroethane	U	340	1.0	330	340	100
98-95-3	Nitrobenzene	U	340	1.0	330	340	95
78-59-1	Isophorone	U	340	1.0	330	340	78
88-75-5	2-Nitrophenol	U	630	1.0	600	630	170
105-67-9	2,4-Dimethylphenol	U	520	1.0	500	520	170
111-91-1	Bis(2-Chloroethoxy)methane	U	340	1.0	330	340	100
120-83-2	2,4-Dichlorophenol	U	520	1.0	500	520	160
106-47-8	4-Chloroaniline	U	520	1.0	500	520	120
105-60-2	Caprolactam	U	520	1.0	500	520	150
59-50-7	4-Chloro-3-Methylphenol	U	520	1.0	500	520	170
88-06-2	2,4,6-Trichlorophenol	U	520	1.0	500	520	160
95-95-4	2,4,5-Trichlorophenol	U	520	1.0	500	520	160
91-58-7	2-Chloronaphthalene	U	340	1.0	330	340	91
92-52-4	1,1'-Biphenyl	U	340	1.0	330	340	76
88-74-4	2-Nitroaniline	U	520	1.0	500	520	78
131-11-3	Dimethyl Phthalate	U	340	1.0	330	340	82
606-20-2	2,6-Dinitrotoluene	U	340	1.0	330	340	83
208-96-8	Acenaphthylene	U	340	1.0	330	340	73
99-09-2	3-Nitroaniline	U	520	1.0	500	520	98
83-32-9	Acenaphthene	U	340	1.0	330	340	68
51-28-5	2,4-Dinitrophenol	U	1200	1.0	1200	1200	390
132-64-9	Dibenzofuran	U	340	1.0	330	340	83
100-02-7	4-Nitrophenol	U	1200	1.0	1200	1200	320
121-14-2	2,4-Dinitrotoluene	U	340	1.0	330	340	89
84-66-2	Diethylphthalate	U	340	1.0	330	340	84
7005-72-3	4-Chlorophenyl-phenylether	U	340	1.0	330	340	82
100-01-6	4-Nitroaniline	U	520	1.0	500	520	140
534-52-1	4,6-Dinitro-2-Methylphenol	U	1200	1.0	1200	1200	350
86-30-6	N-Nitrosodiphenylamine	U	690	1.0	660	690	230
101-55-3	4-Bromophenyl-phenylether	U	340	1.0	330	340	89
1912-24-9	Atrazine	U	340	1.0	330	340	95
87-86-5	Pentachlorophenol	U	860	1.0	820	860	250
120-12-7	Anthracene	U	340	1.0	330	340	88
86-74-8	Carbazole	U	520	1.0	500	520	120

lw
4/15/09

KATAHDIN ANALYTICAL SERVICES
Report of Analytical Results

Client: CH2MHill
Project: TO-009 Lejeune
PO No:
Sample Date: 01/09/09
Received Date: 01/13/09
Extraction Date: 01/15/09
Analysis Date: 27-JAN-2009 10:42
Report Date: 02/03/2009
Matrix: SOIL
% Solids: 95.6

Lab ID: SC0147-1
Client ID: MR08-SS204-09A
SDG: TO9-33
Extracted by: AC
Extraction Method: SW846 3550
Analyst: JLP
Analysis Method: SW846 8270C
Lab Prep Batch: WG59835
Units: ug/Kgdrywt

CAS#	Compound	Flags	Results	DF	PQL	Adj.PQL	Adj.MDL
84-74-2	Di-n-butylphthalate	U	340	1.0	330	340	100
85-68-7	Butylbenzylphthalate	U	340	1.0	330	340	97
91-94-1	3,3'-Dichlorobenzidine	U	520	1.0	500	520	120
218-01-9	Chrysene	U	340	1.0	330	340	99
117-81-7	bis(2-Ethylhexyl)phthalate	J	210	1.0	330	340	100
117-84-0	Di-n-octylphthalate	U	340	1.0	330	340	220
367-12-4	2-Fluorophenol		69%				
13127-88-3	Phenol-D6		65%				
4165-60-0	Nitrobenzene-D5		60%				
321-60-8	2-Fluorobiphenyl		66%				
118-79-6	2,4,6-Tribromophenol		58%				
1718-51-0	Terphenyl-D14		93%				

QW
4/15/09

2

KATAHDIN ANALYTICAL SERVICES
Report of Analytical Results

Client: CH2MHill
Project: TO-009 Lejeune
PO No:
Sample Date: 01/10/09
Received Date: 01/13/09
Extraction Date: 01/15/09
Analysis Date: 27-JAN-2009 11:24
Report Date: 02/03/2009
Matrix: SOIL
% Solids: 87.3

Lab ID: SC0147-3
Client ID: MR08-SS251-09A
SDG: TO9-33
Extracted by: AC
Extraction Method: SW846 3550
Analyst: JLP
Analysis Method: SW846 8270C
Lab Prep Batch: WG59835
Units: ug/Kgdrywt

CAS#	Compound	Flags	Results	DF	PQL	Adj.PQL	Adj.MDL
100-52-7	Benzaldehyde	U	570	1.0	500	570	140
108-95-2	Phenol	U	570	1.0	500	570	180
111-44-4	Bis(2-Chloroethyl)ether	U	380	1.0	330	380	93
95-57-8	2-Chlorophenol	U	570	1.0	500	570	190
95-48-7	2-Methylphenol	U	690	1.0	600	690	230
108-60-1	2,2'-Oxybis(1-chloropropane)	U	380	1.0	330	380	100
98-86-2	Acetophenone	U	690	1.0	600	690	200
621-64-7	N-Nitroso-di-n-propylamine	U	380	1.0	330	380	95
65794-96-9	3&4-Methylphenol	U	690	1.0	600	690	210
67-72-1	Hexachloroethane	U	380	1.0	330	380	110
98-95-3	Nitrobenzene	U	380	1.0	330	380	100
78-59-1	Isophorone	U	380	1.0	330	380	86
88-75-5	2-Nitrophenol	U	690	1.0	600	690	190
105-67-9	2,4-Dimethylphenol	U	570	1.0	500	570	190
111-91-1	Bis(2-Chloroethoxy)methane	U	380	1.0	330	380	110
120-83-2	2,4-Dichlorophenol	U	570	1.0	500	570	170
106-47-8	4-Chloroaniline	U	570	1.0	500	570	140
105-60-2	Caprolactam	U	570	1.0	500	570	160
59-50-7	4-Chloro-3-Methylphenol	U	570	1.0	500	570	190
88-06-2	2,4,6-Trichlorophenol	U	570	1.0	500	570	180
95-95-4	2,4,5-Trichlorophenol	U	570	1.0	500	570	180
91-58-7	2-Chloronaphthalene	U	380	1.0	330	380	100
92-52-4	1,1'-Biphenyl	U	380	1.0	330	380	84
88-74-4	2-Nitroaniline	U	570	1.0	500	570	86
131-11-3	Dimethyl Phthalate	U	380	1.0	330	380	89
606-20-2	2,6-Dinitrotoluene	U	380	1.0	330	380	90
208-96-8	Acenaphthylene	U	380	1.0	330	380	80
99-09-2	3-Nitroaniline	U	570	1.0	500	570	110
83-32-9	Acenaphthene	U	380	1.0	330	380	74
51-28-5	2,4-Dinitrophenol	U	1400	1.0	1200	1400	430
132-64-9	Dibenzofuran	U	380	1.0	330	380	90
100-02-7	4-Nitrophenol	U	1400	1.0	1200	1400	350
121-14-2	2,4-Dinitrotoluene	U	380	1.0	330	380	97
84-66-2	Diethylphthalate	U	380	1.0	330	380	92
7005-72-3	4-Chlorophenyl-phenylether	U	380	1.0	330	380	89
100-01-6	4-Nitroaniline	U	570	1.0	500	570	150
534-52-1	4,6-Dinitro-2-Methylphenol	U	1400	1.0	1200	1400	380
86-30-6	N-Nitrosodiphenylamine	U	760	1.0	660	760	250
101-55-3	4-Bromophenyl-phenylether	U	380	1.0	330	380	97
1912-24-9	Atrazine	U	380	1.0	330	380	100
87-86-5	Pentachlorophenol	U	940	1.0	820	940	270
120-12-7	Anthracene	U	380	1.0	330	380	96
86-74-8	Carbazole	U	570	1.0	500	570	130

QW 4/15/09

2

KATAHDIN ANALYTICAL SERVICES
Report of Analytical Results

Client: CH2MHill
Project: TO-009 Lejeune
PO No:
Sample Date: 01/10/09
Received Date: 01/13/09
Extraction Date: 01/15/09
Analysis Date: 27-JAN-2009 11:24
Report Date: 02/03/2009
Matrix: SOIL
% Solids: 87.3

Lab ID: SC0147-3
Client ID: MR08-SS251-09A
SDG: TO9-33
Extracted by: AC
Extraction Method: SW846 3550
Analyst: JLP
Analysis Method: SW846 8270C
Lab Prep Batch: WG59835
Units: ug/Kgdrywt

CAS#	Compound	Flags	Results	DF	PQL	Adj.PQL	Adj.MDL
84-74-2	Di-n-butylphthalate	U	380	1.0	330	380	120
85-68-7	Butylbenzylphthalate	U	380	1.0	330	380	110
91-94-1	3,3'-Dichlorobenzidine	U	570	1.0	500	570	130
218-01-9	Chrysene	J	150	1.0	330	380	110
117-81-7	bis(2-Ethylhexyl)phthalate	J	140	1.0	330	380	110
117-84-0	Di-n-octylphthalate	U	380	1.0	330	380	240
367-12-4	2-Fluorophenol		60%				
13127-88-3	Phenol-D6		59%				
4165-60-0	Nitrobenzene-D5		51%				
321-60-8	2-Fluorobiphenyl		63%				
118-79-6	2,4,6-Tribromophenol		64%				
1718-51-0	Terphenyl-D14		94%				

lw
4/15/09

3

KATAHDIN ANALYTICAL SERVICES
Report of Analytical Results

Client: CH2MHill
Project: TO-009 Lejeune
PO No:
Sample Date: 01/10/09
Received Date: 01/13/09
Extraction Date: 01/15/09
Analysis Date: 27-JAN-2009 09:17
Report Date: 02/03/2009
Matrix: SOIL
% Solids: 85.1

Lab ID: SC0147-5
Client ID: MR08-IS251-8-9-09A
SDG: TO9-33
Extracted by: AC
Extraction Method: SW846 3550
Analyst: JLP
Analysis Method: SW846 8270C
Lab Prep Batch: WG59835
Units: ug/Kgdrywt

CAS#	Compound	Flags	Results	DF	PQL	Adj.PQL	Adj.MDL
100-52-7	Benzaldehyde	U	590	1.0	500	590	140
108-95-2	Phenol	U	590	1.0	500	590	180
111-44-4	Bis(2-Chloroethyl)ether	U	390	1.0	330	390	95
95-57-8	2-Chlorophenol	U	590	1.0	500	590	190
95-48-7	2-Methylphenol	U	700	1.0	600	700	240
108-60-1	2,2'-Oxybis(1-chloropropane)	U	390	1.0	330	390	100
98-86-2	Acetophenone	U	700	1.0	600	700	210
621-64-7	N-Nitroso-di-n-propylamine	U	390	1.0	330	390	98
65794-96-9	3&4-Methylphenol	U	700	1.0	600	700	220
67-72-1	Hexachloroethane	U	390	1.0	330	390	110
98-95-3	Nitrobenzene	U	390	1.0	330	390	110
78-59-1	Isophorone	U	390	1.0	330	390	88
88-75-5	2-Nitrophenol	U	700	1.0	600	700	200
105-67-9	2,4-Dimethylphenol	U	590	1.0	500	590	190
111-91-1	Bis(2-Chloroethoxy)methane	U	390	1.0	330	390	110
120-83-2	2,4-Dichlorophenol	U	590	1.0	500	590	180
106-47-8	4-Chloroaniline	U	590	1.0	500	590	140
105-60-2	Caprolactam	U	590	1.0	500	590	170
59-50-7	4-Chloro-3-Methylphenol	U	590	1.0	500	590	200
88-06-2	2,4,6-Trichlorophenol	U	590	1.0	500	590	180
95-95-4	2,4,5-Trichlorophenol	U	590	1.0	500	590	180
91-58-7	2-Chloronaphthalene	U	390	1.0	330	390	100
92-52-4	1,1'-Biphenyl	U	390	1.0	330	390	86
88-74-4	2-Nitroaniline	U	590	1.0	500	590	88
131-11-3	Dimethyl Phthalate	U	390	1.0	330	390	92
606-20-2	2,6-Dinitrotoluene	U	390	1.0	330	390	93
208-96-8	Acenaphthylene	U	390	1.0	330	390	82
99-09-2	3-Nitroaniline	U	590	1.0	500	590	110
83-32-9	Acenaphthene	U	390	1.0	330	390	76
51-28-5	2,4-Dinitrophenol	U	1400	1.0	1200	1400	440
132-64-9	Dibenzofuran	U	390	1.0	330	390	93
100-02-7	4-Nitrophenol	U	1400	1.0	1200	1400	360
121-14-2	2,4-Dinitrotoluene	U	390	1.0	330	390	100
84-66-2	Diethylphthalate	U	390	1.0	330	390	94
7005-72-3	4-Chlorophenyl-phenylether	U	390	1.0	330	390	92
100-01-6	4-Nitroaniline	U	590	1.0	500	590	160
534-52-1	4,6-Dinitro-2-Methylphenol	U	1400	1.0	1200	1400	400
86-30-6	N-Nitrosodiphenylamine	U	780	1.0	660	780	260
101-55-3	4-Bromophenyl-phenylether	U	390	1.0	330	390	100
1912-24-9	Atrazine	U	390	1.0	330	390	110
87-86-5	Pentachlorophenol	U	960	1.0	820	960	280
120-12-7	Anthracene	U	390	1.0	330	390	99
86-74-8	Carbazole	U	590	1.0	500	590	130

MW
4/15/09

KATAHDIN ANALYTICAL SERVICES
Report of Analytical Results

Client: CH2MHill
Project: TO-009 Lejeune
PO No:
Sample Date: 01/10/09
Received Date: 01/13/09
Extraction Date: 01/15/09
Analysis Date: 27-JAN-2009 09:17
Report Date: 02/03/2009
Matrix: SOIL
% Solids: 85.1

Lab ID: SC0147-5
Client ID: MR08-IS251-8-9-09A
SDG: TO9-33
Extracted by: AC
Extraction Method: SW846 3550
Analyst: JLP
Analysis Method: SW846 8270C
Lab Prep Batch: WG59835
Units: ug/Kgdrywt

CAS#	Compound	Flags	Results	DF	PQL	Adj.PQL	Adj.MDL
84-74-2	Di-n-butylphthalate	U	390	1.0	330	390	120
85-68-7	Butylbenzylphthalate	U	390	1.0	330	390	110
91-94-1	3,3'-Dichlorobenzidine	U	590	1.0	500	590	130
218-01-9	Chrysene	U	390	1.0	330	390	110
117-81-7	bis(2-Ethylhexyl)phthalate	U	390	1.0	330	390	120
117-84-0	Di-n-octylphthalate	U	390	1.0	330	390	250
367-12-4	2-Fluorophenol		67%				
13127-88-3	Phenol-D6		67%				
4165-60-0	Nitrobenzene-D5		61%				
321-60-8	2-Fluorobiphenyl		66%				
118-79-6	2,4,6-Tribromophenol		60%				
1718-51-0	Terphenyl-D14		84%				

JW
4/15/09

4

KATAHDIN ANALYTICAL SERVICES
Report of Analytical Results

Client: CH2MHill
Project: TO-009 Lejeune
PO No:
Sample Date: 01/10/09
Received Date: 01/13/09
Extraction Date: 01/15/09
Analysis Date: 24-JAN-2009 16:05
Report Date: 02/03/2009
Matrix: SOIL
% Solids: 86.9

Lab ID: SC0147-7
Client ID: MR08-SS232-09A
SDG: TO9-33
Extracted by: AC
Extraction Method: SW846 3550
Analyst: JCG
Analysis Method: SW846 8270C
Lab Prep Batch: WG59835
Units: ug/Kgdrywt

CAS#	Compound	Flags	Results	DF	PQL	Adj.PQL	Adj.MDL	
100-52-7	Benzaldehyde	~~U~~ UJ	580	1.0	500	580	140	JCB
108-95-2	Phenol	U	580	1.0	500	580	180	
111-44-4	Bis(2-Chloroethyl)ether	U	380	1.0	330	380	93	
95-57-8	2-Chlorophenol	U	580	1.0	500	580	190	
95-48-7	2-Methylphenol	U	690	1.0	600	690	230	
108-60-1	2,2'-Oxybis(1-chloropropane)	U	380	1.0	330	380	100	
98-86-2	Acetophenone	U	690	1.0	600	690	200	
621-64-7	N-Nitroso-di-n-propylamine	U	380	1.0	330	380	96	
65794-96-9	3&4-Methylphenol	U	690	1.0	600	690	220	
67-72-1	Hexachloroethane	U	380	1.0	330	380	110	
98-95-3	Nitrobenzene	U	380	1.0	330	380	100	
78-59-1	Isophorone	U	380	1.0	330	380	86	
88-75-5	2-Nitrophenol	U	690	1.0	600	690	190	
105-67-9	2,4-Dimethylphenol	U	580	1.0	500	580	190	
111-91-1	Bis(2-Chloroethoxy)methane	U	380	1.0	330	380	110	
120-83-2	2,4-Dichlorophenol	U	580	1.0	500	580	170	
106-47-8	4-Chloroaniline	U	580	1.0	500	580	140	
105-60-2	Caprolactam	U	580	1.0	500	580	160	
59-50-7	4-Chloro-3-Methylphenol	U	580	1.0	500	580	190	
88-06-2	2,4,6-Trichlorophenol	U	580	1.0	500	580	180	
95-95-4	2,4,5-Trichlorophenol	U	580	1.0	500	580	180	
91-58-7	2-Chloronaphthalene	U	380	1.0	330	380	100	
92-52-4	1,1'-Biphenyl	U	380	1.0	330	380	84	
88-74-4	2-Nitroaniline	U	580	1.0	500	580	86	
131-11-3	Dimethyl Phthalate	U	380	1.0	330	380	90	
606-20-2	2,6-Dinitrotoluene	U	380	1.0	330	380	91	
208-96-8	Acenaphthylene	U	380	1.0	330	380	80	
99-09-2	3-Nitroaniline	U	580	1.0	500	580	110	
83-32-9	Acenaphthene	U	380	1.0	330	380	75	
51-28-5	2,4-Dinitrophenol	~~U~~ UJ	1400	1.0	1200	1400	430	CCH
132-64-9	Dibenzofuran	U	380	1.0	330	380	91	
100-02-7	4-Nitrophenol	U	1400	1.0	1200	1400	360	
121-14-2	2,4-Dinitrotoluene	U	380	1.0	330	380	98	
84-66-2	Diethylphthalate	U	380	1.0	330	380	92	
7005-72-3	4-Chlorophenyl-phenylether	U	380	1.0	330	380	90	
100-01-6	4-Nitroaniline	U	580	1.0	500	580	150	
534-52-1	4,6-Dinitro-2-Methylphenol	~~U~~ UJ	1400	1.0	1200	1400	390	CCH
86-30-6	N-Nitrosodiphenylamine	U	760	1.0	660	760	250	
101-55-3	4-Bromophenyl-phenylether	U	380	1.0	330	380	98	
1912-24-9	Atrazine	U	380	1.0	330	380	100	
87-86-5	Pentachlorophenol	~~U~~ UJ	940	1.0	820	940	270	CCH
120-12-7	Anthracene	U	380	1.0	330	380	97	
86-74-8	Carbazole	U	580	1.0	500	580	130	

MW
4/15/09

KATAHDIN ANALYTICAL SERVICES
Report of Analytical Results

Client: CH2MHill
Project: TO-009 Lejeune
PO No:
Sample Date: 01/10/09
Received Date: 01/13/09
Extraction Date: 01/15/09
Analysis Date: 24-JAN-2009 16:05
Report Date: 02/03/2009
Matrix: SOIL
% Solids: 86.9

Lab ID: SC0147-7
Client ID: MR08-SS232-09A
SDG: TO9-33
Extracted by: AC
Extraction Method: SW846 3550
Analyst: JCG
Analysis Method: SW846 8270C
Lab Prep Batch: WG59835
Units: ug/Kgdrywt

CAS#	Compound	Flags	Results	DF	PQL	Adj.PQL	Adj.MDL
84-74-2	Di-n-butylphthalate	U	380	1.0	330	380	120
85-68-7	Butylbenzylphthalate	U	380	1.0	330	380	110
91-94-1	3,3'-Dichlorobenzidine	U	580	1.0	500	580	130
218-01-9	Chrysene	U	380	1.0	330	380	110
117-81-7	bis(2-Ethylhexyl)phthalate	U	380	1.0	330	380	110
117-84-0	Di-n-octylphthalate	U	380	1.0	330	380	240
367-12-4	2-Fluorophenol		63%				
13127-88-3	Phenol-D6		52%				
4165-60-0	Nitrobenzene-D5		64%				
321-60-8	2-Fluorobiphenyl		65%				
118-79-6	2,4,6-Tribromophenol		44%				
1718-51-0	Terphenyl-D14		100%				

kw
4/15/09

KATAHDIN ANALYTICAL SERVICES
Report of Analytical Results

Client: CH2MHill
Project: TO-009 Lejeune
PO No:
Sample Date: 01/10/09
Received Date: 01/13/09
Extraction Date: 01/15/09
Analysis Date: 24-JAN-2009 16:48
Report Date: 02/03/2009
Matrix: SOIL
% Solids: 93.1

Lab ID: SC0147-9
Client ID: MR08-IS232-5-6-09A
SDG: TO9-33
Extracted by: AC
Extraction Method: SW846 3550
Analyst: JCG
Analysis Method: SW846 8270C
Lab Prep Batch: WG59835
Units: ug/Kgdrywt

CAS#	Compound	Flags	Results	DF	PQL	Adj.PQL	Adj.MDL	
100-52-7	Benzaldehyde	~~U~~ UJ	540	1.0	500	540	130	JCB
108-95-2	Phenol	U	540	1.0	500	540	170	
111-44-4	Bis(2-Chloroethyl)ether	U	350	1.0	330	350	87	
95-57-8	2-Chlorophenol	U	540	1.0	500	540	180	
95-48-7	2-Methylphenol	U	640	1.0	600	640	210	
108-60-1	2,2'-Oxybis(1-chloropropane)	U	350	1.0	330	350	96	
98-86-2	Acetophenone	U	640	1.0	600	640	190	
621-64-7	N-Nitroso-di-n-propylamine	U	350	1.0	330	350	89	
65794-96-9	3&4-Methylphenol	U	640	1.0	600	640	200	
67-72-1	Hexachloroethane	U	350	1.0	330	350	100	
98-95-3	Nitrobenzene	U	350	1.0	330	350	98	
78-59-1	Isophorone	U	350	1.0	330	350	80	
88-75-5	2-Nitrophenol	U	640	1.0	600	640	180	
105-67-9	2,4-Dimethylphenol	U	540	1.0	500	540	180	
111-91-1	Bis(2-Chloroethoxy)methane	U	350	1.0	330	350	100	
120-83-2	2,4-Dichlorophenol	U	540	1.0	500	540	160	
106-47-8	4-Chloroaniline	U	540	1.0	500	540	130	
105-60-2	Caprolactam	U	540	1.0	500	540	150	
59-50-7	4-Chloro-3-Methylphenol	U	540	1.0	500	540	180	
88-06-2	2,4,6-Trichlorophenol	U	540	1.0	500	540	170	
95-95-4	2,4,5-Trichlorophenol	U	540	1.0	500	540	170	
91-58-7	2-Chloronaphthalene	U	350	1.0	330	350	93	
92-52-4	1,1'-Biphenyl	U	350	1.0	330	350	78	
88-74-4	2-Nitroaniline	U	540	1.0	500	540	80	
131-11-3	Dimethyl Phthalate	U	350	1.0	330	350	84	
606-20-2	2,6-Dinitrotoluene	U	350	1.0	330	350	85	
208-96-8	Acenaphthylene	U	350	1.0	330	350	75	
99-09-2	3-Nitroaniline	U	540	1.0	500	540	100	
83-32-9	Acenaphthene	U	350	1.0	330	350	70	
51-28-5	2,4-Dinitrophenol	~~U~~ UJ	1300	1.0	1200	1300	400	CCH
132-64-9	Dibenzofuran	U	350	1.0	330	350	85	
100-02-7	4-Nitrophenol	U	1300	1.0	1200	1300	330	
121-14-2	2,4-Dinitrotoluene	U	350	1.0	330	350	91	
84-66-2	Diethylphthalate	U	350	1.0	330	350	86	
7005-72-3	4-Chlorophenyl-phenylether	U	350	1.0	330	350	84	
100-01-6	4-Nitroaniline	U	540	1.0	500	540	140	
534-52-1	4,6-Dinitro-2-Methylphenol	~~U~~ UJ	1300	1.0	1200	1300	360	CCH
86-30-6	N-Nitrosodiphenylamine	U	710	1.0	660	710	240	
101-55-3	4-Bromophenyl-phenylether	U	350	1.0	330	350	91	
1912-24-9	Atrazine	U	350	1.0	330	350	98	
87-86-5	Pentachlorophenol	~~U~~ UJ	880	1.0	820	880	250	CCH
120-12-7	Anthracene	U	350	1.0	330	350	90	
86-74-8	Carbazole	U	540	1.0	500	540	120	

fwd
4/15/09

KATAHDIN ANALYTICAL SERVICES
Report of Analytical Results

Client: CH2MHill
Project: TO-009 Lejeune
PO No:
Sample Date: 01/10/09
Received Date: 01/13/09
Extraction Date: 01/15/09
Analysis Date: 24-JAN-2009 16:48
Report Date: 02/03/2009
Matrix: SOIL
% Solids: 93.1

Lab ID: SC0147-9
Client ID: MR08-IS232-5-6-09A
SDG: TO9-33
Extracted by: AC
Extraction Method: SW846 3550
Analyst: JCG
Analysis Method: SW846 8270C
Lab Prep Batch: WG59835
Units: ug/Kgdrywt

CAS#	Compound	Flags	Results	DF	PQL	Adj.PQL	Adj.MDL
84-74-2	Di-n-butylphthalate	U	350	1.0	330	350	110
85-68-7	Butylbenzylphthalate	U	350	1.0	330	350	100
91-94-1	3,3'-Dichlorobenzidine	U	540	1.0	500	540	120
218-01-9	Chrysene	U	350	1.0	330	350	100
117-81-7	bis(2-Ethylhexyl)phthalate	U	350	1.0	330	350	100
117-84-0	Di-n-octylphthalate	U	350	1.0	330	350	230
367-12-4	2-Fluorophenol		55%				
13127-88-3	Phenol-D6		49%				
4165-60-0	Nitrobenzene-D5		52%				
321-60-8	2-Fluorobiphenyl		64%				
118-79-6	2,4,6-Tribromophenol		42%				
1718-51-0	Terphenyl-D14		104%				

MW
4/15/09

6

KATAHDIN ANALYTICAL SERVICES
Report of Analytical Results

Client: CH2MHill
Project: TO-009 Lejeune
PO No:
Sample Date: 01/10/09
Received Date: 01/13/09
Extraction Date: 01/15/09
Analysis Date: 27-JAN-2009 10:00
Report Date: 02/03/2009
Matrix: SOIL
% Solids: 90.8

Lab ID: SC0147-11
Client ID: MR08-SS252-09A
SDG: TO9-33
Extracted by: AC
Extraction Method: SW846 3550
Analyst: JLP
Analysis Method: SW846 8270C
Lab Prep Batch: WG59835
Units: ug/Kgdrywt

CAS#	Compound	Flags	Results	DF	PQL	Adj.PQL	Adj.MDL
100-52-7	Benzaldehyde	U	550	1.0	500	550	130
108-95-2	Phenol	U	550	1.0	500	550	170
111-44-4	Bis(2-Chloroethyl)ether	U	360	1.0	330	360	89
95-57-8	2-Chlorophenol	U	550	1.0	500	550	180
95-48-7	2-Methylphenol	U	660	1.0	600	660	220
108-60-1	2,2'-Oxybis(1-chloropropane)	U	360	1.0	330	360	98
98-86-2	Acetophenone	U	660	1.0	600	660	200
621-64-7	N-Nitroso-di-n-propylamine	U	360	1.0	330	360	91
65794-96-9	3&4-Methylphenol	U	660	1.0	600	660	200
67-72-1	Hexachloroethane	U	360	1.0	330	360	100
98-95-3	Nitrobenzene	U	360	1.0	330	360	100
78-59-1	Isophorone	U	360	1.0	330	360	83
88-75-5	2-Nitrophenol	U	660	1.0	600	660	180
105-67-9	2,4-Dimethylphenol	U	550	1.0	500	550	180
111-91-1	Bis(2-Chloroethoxy)methane	U	360	1.0	330	360	100
120-83-2	2,4-Dichlorophenol	U	550	1.0	500	550	160
106-47-8	4-Chloroaniline	U	550	1.0	500	550	130
105-60-2	Caprolactam	U	550	1.0	500	550	160
59-50-7	4-Chloro-3-Methylphenol	U	550	1.0	500	550	180
88-06-2	2,4,6-Trichlorophenol	U	550	1.0	500	550	170
95-95-4	2,4,5-Trichlorophenol	U	550	1.0	500	550	170
91-58-7	2-Chloronaphthalene	U	360	1.0	330	360	96
92-52-4	1,1'-Biphenyl	U	360	1.0	330	360	80
88-74-4	2-Nitroaniline	U	550	1.0	500	550	83
131-11-3	Dimethyl Phthalate	U	360	1.0	330	360	86
606-20-2	2,6-Dinitrotoluene	U	360	1.0	330	360	87
208-96-8	Acenaphthylene	U	360	1.0	330	360	77
99-09-2	3-Nitroaniline	U	550	1.0	500	550	100
83-32-9	Acenaphthene	U	360	1.0	330	360	72
51-28-5	2,4-Dinitrophenol	U	1300	1.0	1200	1300	420
132-64-9	Dibenzofuran	U	360	1.0	330	360	87
100-02-7	4-Nitrophenol	U	1300	1.0	1200	1300	340
121-14-2	2,4-Dinitrotoluene	U	360	1.0	330	360	94
84-66-2	Diethylphthalate	U	360	1.0	330	360	88
7005-72-3	4-Chlorophenyl-phenylether	U	360	1.0	330	360	86
100-01-6	4-Nitroaniline	U	550	1.0	500	550	150
534-52-1	4,6-Dinitro-2-Methylphenol	U	1300	1.0	1200	1300	370
86-30-6	N-Nitrosodiphenylamine	U	730	1.0	660	730	240
101-55-3	4-Bromophenyl-phenylether	U	360	1.0	330	360	94
1912-24-9	Atrazine	U	360	1.0	330	360	100
87-86-5	Pentachlorophenol	U	900	1.0	820	900	260
120-12-7	Anthracene	U	360	1.0	330	360	92
86-74-8	Carbazole	U	550	1.0	500	550	120

MW
4/15/09

6

KATAHDIN ANALYTICAL SERVICES
Report of Analytical Results

Client: CH2MHill
Project: TO-009 Lejeune
PO No:
Sample Date: 01/10/09
Received Date: 01/13/09
Extraction Date: 01/15/09
Analysis Date: 27-JAN-2009 10:00
Report Date: 02/03/2009
Matrix: SOIL
% Solids: 90.8

Lab ID: SC0147-11
Client ID: MR08-SS252-09A
SDG: TO9-33
Extracted by: AC
Extraction Method: SW846 3550
Analyst: JLP
Analysis Method: SW846 8270C
Lab Prep Batch: WG59835
Units: ug/Kgdrywt

CAS#	Compound	Flags	Results	DF	PQL	Adj.PQL	Adj.MDL
84-74-2	Di-n-butylphthalate	U	360	1.0	330	360	110
85-68-7	Butylbenzylphthalate	U	360	1.0	330	360	100
91-94-1	3,3'-Dichlorobenzidine	U	550	1.0	500	550	120
218-01-9	Chrysene	U	360	1.0	330	360	100
117-81-7	bis(2-Ethylhexyl)phthalate	J	120	1.0	330	360	110
117-84-0	Di-n-octylphthalate	U	360	1.0	330	360	230
367-12-4	2-Fluorophenol		76%				
13127-88-3	Phenol-D6		75%				
4165-60-0	Nitrobenzene-D5		66%				
321-60-8	2-Fluorobiphenyl		71%				
118-79-6	2,4,6-Tribromophenol		70%				
1718-51-0	Terphenyl-D14		84%				

MW
4/15/09

7

KATAHDIN ANALYTICAL SERVICES
Report of Analytical Results

Client: CH2MHill
Project: TO-009 Lejeune
PO No:
Sample Date: 01/10/09
Received Date: 01/13/09
Extraction Date: 01/15/09
Analysis Date: 24-JAN-2009 17:30
Report Date: 02/03/2009
Matrix: SOIL
% Solids: 87.5

Lab ID: SC0147-13
Client ID: MR08-IS252-6-7-09A
SDG: TO9-33
Extracted by: AC
Extraction Method: SW846 3550
Analyst: JCG
Analysis Method: SW846 8270C
Lab Prep Batch: WG59835
Units: ug/Kgdrywt

CAS#	Compound	Flags	Results	DF	PQL	Adj.PQL	Adj.MDL	
100-52-7	Benzaldehyde	~~U~~ UJ	570	1.0	500	570	140	ICB
108-95-2	Phenol	U	570	1.0	500	570	180	
111-44-4	Bis(2-Chloroethyl)ether	U	380	1.0	330	380	92	
95-57-8	2-Chlorophenol	U	570	1.0	500	570	190	
95-48-7	2-Methylphenol	U	680	1.0	600	680	230	
108-60-1	2,2'-Oxybis(1-chloropropane)	U	380	1.0	330	380	100	
98-86-2	Acetophenone	U	680	1.0	600	680	200	
621-64-7	N-Nitroso-di-n-propylamine	U	380	1.0	330	380	95	
65794-96-9	3&4-Methylphenol	U	680	1.0	600	680	210	
67-72-1	Hexachloroethane	U	380	1.0	330	380	110	
98-95-3	Nitrobenzene	U	380	1.0	330	380	100	
78-59-1	Isophorone	U	380	1.0	330	380	86	
88-75-5	2-Nitrophenol	U	680	1.0	600	680	190	
105-67-9	2,4-Dimethylphenol	U	570	1.0	500	570	190	
111-91-1	Bis(2-Chloroethoxy)methane	U	380	1.0	330	380	110	
120-83-2	2,4-Dichlorophenol	U	570	1.0	500	570	170	
106-47-8	4-Chloroaniline	U	570	1.0	500	570	140	
105-60-2	Caprolactam	U	570	1.0	500	570	160	
59-50-7	4-Chloro-3-Methylphenol	U	570	1.0	500	570	190	
88-06-2	2,4,6-Trichlorophenol	U	570	1.0	500	570	180	
95-95-4	2,4,5-Trichlorophenol	U	570	1.0	500	570	180	
91-58-7	2-Chloronaphthalene	U	380	1.0	330	380	99	
92-52-4	1,1'-Biphenyl	U	380	1.0	330	380	83	
88-74-4	2-Nitroaniline	U	570	1.0	500	570	86	
131-11-3	Dimethyl Phthalate	U	380	1.0	330	380	89	
606-20-2	2,6-Dinitrotoluene	U	380	1.0	330	380	90	
208-96-8	Acenaphthylene	U	380	1.0	330	380	80	
99-09-2	3-Nitroaniline	U	570	1.0	500	570	110	
83-32-9	Acenaphthene	U	380	1.0	330	380	74	
51-28-5	2,4-Dinitrophenol	~~U~~ UJ	1400	1.0	1200	1400	430	CCH
132-64-9	Dibenzofuran	U	380	1.0	330	380	90	
100-02-7	4-Nitrophenol	U	1400	1.0	1200	1400	350	
121-14-2	2,4-Dinitrotoluene	U	380	1.0	330	380	97	
84-66-2	Diethylphthalate	U	380	1.0	330	380	91	
7005-72-3	4-Chlorophenyl-phenylether	U	380	1.0	330	380	89	
100-01-6	4-Nitroaniline	U	570	1.0	500	570	150	
534-52-1	4,6-Dinitro-2-Methylphenol	~~U~~ UJ	1400	1.0	1200	1400	380	CCH
86-30-6	N-Nitrosodiphenylamine	U	750	1.0	660	750	250	
101-55-3	4-Bromophenyl-phenylether	U	380	1.0	330	380	97	
1912-24-9	Atrazine	U	380	1.0	330	380	100	
87-86-5	Pentachlorophenol	~~U~~ UJ	940	1.0	820	940	270	CCH
120-12-7	Anthracene	U	380	1.0	330	380	96	
86-74-8	Carbazole	U	570	1.0	500	570	130	

MW
4/15/09

7

KATAHDIN ANALYTICAL SERVICES
Report of Analytical Results

Client: CH2MHill
Project: TO-009 Lejeune
PO No:
Sample Date: 01/10/09
Received Date: 01/13/09
Extraction Date: 01/15/09
Analysis Date: 24-JAN-2009 17:30
Report Date: 02/03/2009
Matrix: SOIL
% Solids: 87.5

Lab ID: SC0147-13
Client ID: MR08-IS252-6-7-09A
SDG: TO9-33
Extracted by: AC
Extraction Method: SW846 3550
Analyst: JCG
Analysis Method: SW846 8270C
Lab Prep Batch: WG59835
Units: ug/Kgdrywt

CAS#	Compound	Flags	Results	DF	PQL	Adj.PQL	Adj.MDL
84-74-2	Di-n-butylphthalate	U	380	1.0	330	380	120
85-68-7	Butylbenzylphthalate	U	380	1.0	330	380	110
91-94-1	3,3'-Dichlorobenzidine	U	570	1.0	500	570	130
218-01-9	Chrysene	U	380	1.0	330	380	110
117-81-7	bis(2-Ethylhexyl)phthalate	J	140	1.0	330	380	110
117-84-0	Di-n-octylphthalate	U	380	1.0	330	380	240
367-12-4	2-Fluorophenol		75%				
13127-88-3	Phenol-D6		66%				
4165-60-0	Nitrobenzene-D5		77%				
321-60-8	2-Fluorobiphenyl		80%				
118-79-6	2,4,6-Tribromophenol		64%				
1718-51-0	Terphenyl-D14		112%				

MS 4/15/09

8

KATAHDIN ANALYTICAL SERVICES
Report of Analytical Results

Client: CH2MHill
Project: TO-009 Lejeune
PO No:
Sample Date: 01/10/09
Received Date: 01/13/09
Extraction Date: 01/15/09
Analysis Date: 27-JAN-2009 12:07
Report Date: 02/03/2009
Matrix: SOIL
% Solids: 90.5

Lab ID: SC0147-15
Client ID: MR08-SS253-09A
SDG: TO9-33
Extracted by: AC
Extraction Method: SW846 3550
Analyst: JLP
Analysis Method: SW846 8270C
Lab Prep Batch: WG59835
Units: ug/Kgdrywt

CAS#	Compound	Flags	Results	DF	PQL	Adj.PQL	Adj.MDL
100-52-7	Benzaldehyde	U	550	1.0	500	550	130
108-95-2	Phenol	U	550	1.0	500	550	170
111-44-4	Bis(2-Chloroethyl)ether	U	360	1.0	330	360	89
95-57-8	2-Chlorophenol	U	550	1.0	500	550	180
95-48-7	2-Methylphenol	U	660	1.0	600	660	220
108-60-1	2,2'-Oxybis(1-chloropropane)	U	360	1.0	330	360	98
98-86-2	Acetophenone	U	660	1.0	600	660	200
621-64-7	N-Nitroso-di-n-propylamine	U	360	1.0	330	360	92
65794-96-9	3&4-Methylphenol	U	660	1.0	600	660	210
67-72-1	Hexachloroethane	U	360	1.0	330	360	110
98-95-3	Nitrobenzene	U	360	1.0	330	360	100
78-59-1	Isophorone	U	360	1.0	330	360	83
88-75-5	2-Nitrophenol	U	660	1.0	600	660	180
105-67-9	2,4-Dimethylphenol	U	550	1.0	500	550	180
111-91-1	Bis(2-Chloroethoxy)methane	U	360	1.0	330	360	110
120-83-2	2,4-Dichlorophenol	U	550	1.0	500	550	160
106-47-8	4-Chloroaniline	U	550	1.0	500	550	130
105-60-2	Caprolactam	U	550	1.0	500	550	160
59-50-7	4-Chloro-3-Methylphenol	U	550	1.0	500	550	180
88-06-2	2,4,6-Trichlorophenol	U	550	1.0	500	550	170
95-95-4	2,4,5-Trichlorophenol	U	550	1.0	500	550	170
91-58-7	2-Chloronaphthalene	U	360	1.0	330	360	96
92-52-4	1,1'-Biphenyl	U	360	1.0	330	360	81
88-74-4	2-Nitroaniline	U	550	1.0	500	550	83
131-11-3	Dimethyl Phthalate	U	360	1.0	330	360	86
606-20-2	2,6-Dinitrotoluene	U	360	1.0	330	360	87
208-96-8	Acenaphthylene	U	360	1.0	330	360	77
99-09-2	3-Nitroaniline	U	550	1.0	500	550	100
83-32-9	Acenaphthene	U	360	1.0	330	360	72
51-28-5	2,4-Dinitrophenol	U	1300	1.0	1200	1300	420
132-64-9	Dibenzofuran	U	360	1.0	330	360	87
100-02-7	4-Nitrophenol	U	1300	1.0	1200	1300	340
121-14-2	2,4-Dinitrotoluene	U	360	1.0	330	360	94
84-66-2	Diethylphthalate	U	360	1.0	330	360	88
7005-72-3	4-Chlorophenyl-phenylether	U	360	1.0	330	360	86
100-01-6	4-Nitroaniline	U	550	1.0	500	550	150
534-52-1	4,6-Dinitro-2-Methylphenol	U	1300	1.0	1200	1300	370
86-30-6	N-Nitrosodiphenylamine	U	730	1.0	660	730	240
101-55-3	4-Bromophenyl-phenylether	U	360	1.0	330	360	94
1912-24-9	Atrazine	U	360	1.0	330	360	100
87-86-5	Pentachlorophenol	U	900	1.0	820	900	260
120-12-7	Anthracene	U	360	1.0	330	360	93
86-74-8	Carbazole	U	550	1.0	500	550	120

lw
4/15/09

KATAHDIN ANALYTICAL SERVICES
Report of Analytical Results

Client: CH2MHill
Project: TO-009 Lejeune
PO No:
Sample Date: 01/10/09
Received Date: 01/13/09
Extraction Date: 01/15/09
Analysis Date: 27-JAN-2009 12:07
Report Date: 02/03/2009
Matrix: SOIL
% Solids: 90.5

Lab ID: SC0147-15
Client ID: MR08-SS253-09A
SDG: TO9-33
Extracted by: AC
Extraction Method: SW846 3550
Analyst: JLP
Analysis Method: SW846 8270C
Lab Prep Batch: WG59835
Units: ug/Kgdrywt

CAS#	Compound	Flags	Results	DF	PQL	Adj.PQL	Adj.MDL
84-74-2	Di-n-butylphthalate	U	360	1.0	330	360	110
85-68-7	Butylbenzylphthalate	U	360	1.0	330	360	100
91-94-1	3,3'-Dichlorobenzidine	U	550	1.0	500	550	120
218-01-9	Chrysene	U	360	1.0	330	360	100
117-81-7	bis(2-Ethylhexyl)phthalate		540	1.0	330	360	110
117-84-0	Di-n-octylphthalate	U	360	1.0	330	360	230
367-12-4	2-Fluorophenol		67%				
13127-88-3	Phenol-D6		65%				
4165-60-0	Nitrobenzene-D5		58%				
321-60-8	2-Fluorobiphenyl		68%				
118-79-6	2,4,6-Tribromophenol		64%				
1718-51-0	Terphenyl-D14		106%				

MW
4/15/09

KATAHDIN ANALYTICAL SERVICES
Report of Analytical Results

Client: CH2MHill
Project: TO-009 Lejeune
PO No:
Sample Date: 01/10/09
Received Date: 01/13/09
Extraction Date: 01/15/09
Analysis Date: 24-JAN-2009 18:12
Report Date: 02/03/2009
Matrix: SOIL
% Solids: 88.8

Lab ID: SC0147-17
Client ID: MR08-IS253-6-7-09A
SDG: TO9-33
Extracted by: AC
Extraction Method: SW846 3550
Analyst: JCG
Analysis Method: SW846 8270C
Lab Prep Batch: WG59835
Units: ug/Kgdrywt

CAS#	Compound	Flags	Results	DF	PQL	Adj.PQL	Adj.MDL	
100-52-7	Benzaldehyde	~~U~~ UJ	560	1.0	500	560	140	JCB
108-95-2	Phenol	U	560	1.0	500	560	180	
111-44-4	Bis(2-Chloroethyl)ether	U	370	1.0	330	370	91	
95-57-8	2-Chlorophenol	U	560	1.0	500	560	180	
95-48-7	2-Methylphenol	U	680	1.0	600	680	220	
108-60-1	2,2'-Oxybis(1-chloropropane)	U	370	1.0	330	370	100	
98-86-2	Acetophenone	U	680	1.0	600	680	200	
621-64-7	N-Nitroso-di-n-propylamine	U	370	1.0	330	370	93	
65794-96-9	3&4-Methylphenol	U	680	1.0	600	680	210	
67-72-1	Hexachloroethane	U	370	1.0	330	370	110	
98-95-3	Nitrobenzene	U	370	1.0	330	370	100	
78-59-1	Isophorone	U	370	1.0	330	370	84	
88-75-5	2-Nitrophenol	U	680	1.0	600	680	190	
105-67-9	2,4-Dimethylphenol	U	560	1.0	500	560	180	
111-91-1	Bis(2-Chloroethoxy)methane	U	370	1.0	330	370	110	
120-83-2	2,4-Dichlorophenol	U	560	1.0	500	560	170	
106-47-8	4-Chloroaniline	U	560	1.0	500	560	130	
105-60-2	Caprolactam	U	560	1.0	500	560	160	
59-50-7	4-Chloro-3-Methylphenol	U	560	1.0	500	560	190	
88-06-2	2,4,6-Trichlorophenol	U	560	1.0	500	560	170	
95-95-4	2,4,5-Trichlorophenol	U	560	1.0	500	560	170	
91-58-7	2-Chloronaphthalene	U	370	1.0	330	370	98	
92-52-4	1,1'-Biphenyl	U	370	1.0	330	370	82	
88-74-4	2-Nitroaniline	U	560	1.0	500	560	84	
131-11-3	Dimethyl Phthalate	U	370	1.0	330	370	88	
606-20-2	2,6-Dinitrotoluene	U	370	1.0	330	370	89	
208-96-8	Acenaphthylene	U	370	1.0	330	370	79	
99-09-2	3-Nitroaniline	U	560	1.0	500	560	100	
83-32-9	Acenaphthene	U	370	1.0	330	370	73	
51-28-5	2,4-Dinitrophenol	~~U~~ UJ	1400	1.0	1200	1400	420	CCH
132-64-9	Dibenzofuran	U	370	1.0	330	370	89	
100-02-7	4-Nitrophenol	U	1400	1.0	1200	1400	350	
121-14-2	2,4-Dinitrotoluene	U	370	1.0	330	370	96	
84-66-2	Diethylphthalate	U	370	1.0	330	370	90	
7005-72-3	4-Chlorophenyl-phenylether	U	370	1.0	330	370	88	
100-01-6	4-Nitroaniline	U	560	1.0	500	560	150	
534-52-1	4,6-Dinitro-2-Methylphenol	~~U~~ UJ	1400	1.0	1200	1400	380	CCH
86-30-6	N-Nitrosodiphenylamine	U	740	1.0	660	740	250	
101-55-3	4-Bromophenyl-phenylether	U	370	1.0	330	370	96	
1912-24-9	Atrazine	U	370	1.0	330	370	100	
87-86-5	Pentachlorophenol	~~U~~ UJ	920	1.0	820	920	270	CCH
120-12-7	Anthracene	U	370	1.0	330	370	95	
86-74-8	Carbazole	U	560	1.0	500	560	120	

9/15/09

KATAHDIN ANALYTICAL SERVICES
Report of Analytical Results

Client: CH2MHill
Project: TO-009 Lejeune
PO No:
Sample Date: 01/10/09
Received Date: 01/13/09
Extraction Date: 01/15/09
Analysis Date: 24-JAN-2009 18:12
Report Date: 02/03/2009
Matrix: SOIL
% Solids: 88.8

Lab ID: SC0147-17
Client ID: MR08-IS253-6-7-09A
SDG: TO9-33
Extracted by: AC
Extraction Method: SW846 3550
Analyst: JCG
Analysis Method: SW846 8270C
Lab Prep Batch: WG59835
Units: ug/Kgdrywt

CAS#	Compound	Flags	Results	DF	PQL	Adj.PQL	Adj.MDL
84-74-2	Di-n-butylphthalate	U	370	1.0	330	370	110
85-68-7	Butylbenzylphthalate	U	370	1.0	330	370	100
91-94-1	3,3'-Dichlorobenzidine	U	560	1.0	500	560	130
218-01-9	Chrysene	U	370	1.0	330	370	110
117-81-7	bis(2-Ethylhexyl)phthalate	U	370	1.0	330	370	110
117-84-0	Di-n-octylphthalate	U	370	1.0	330	370	240
367-12-4	2-Fluorophenol		70%				
13127-88-3	Phenol-D6		64%				
4165-60-0	Nitrobenzene-D5		69%				
321-60-8	2-Fluorobiphenyl		74%				
118-79-6	2,4,6-Tribromophenol		54%				
1718-51-0	Terphenyl-D14		106%				

fw
4/15/09

KATAHDIN ANALYTICAL SERVICES
Report of Analytical Results

Client: CH2MHill
Project: TO-009 Lejeune
PO No:
Sample Date: 01/10/09
Received Date: 01/13/09
Extraction Date: 01/15/09
Analysis Date: 28-JAN-2009 20:54
Report Date: 02/03/2009
Matrix: SOIL
% Solids: 93.9

Lab ID: SC0147-19RA
Client ID: MR08-SS231-09A
SDG: TO9-33
Extracted by: AC
Extraction Method: SW846 3550
Analyst: JLP
Analysis Method: SW846 8270C
Lab Prep Batch: WG59835
Units: ug/Kgdrywt

CAS#	Compound	Flags	Results	DF	PQL	Adj.PQL	Adj.MDL
100-52-7	Benzaldehyde	U	530	1.0	500	530	130
108-95-2	Phenol	U	530	1.0	500	530	170
111-44-4	Bis(2-Chloroethyl)ether	U	350	1.0	330	350	86
95-57-8	2-Chlorophenol	U	530	1.0	500	530	170
95-48-7	2-Methylphenol	U	640	1.0	600	640	210
108-60-1	2,2'-Oxybis(1-chloropropane)	U	350	1.0	330	350	95
98-86-2	Acetophenone	U	640	1.0	600	640	190
621-64-7	N-Nitroso-di-n-propylamine	U	350	1.0	330	350	88
65794-96-9	3&4-Methylphenol	U	640	1.0	600	640	200
67-72-1	Hexachloroethane	U	350	1.0	330	350	100
98-95-3	Nitrobenzene	U	350	1.0	330	350	97
78-59-1	Isophorone	U	350	1.0	330	350	80
88-75-5	2-Nitrophenol	U	640	1.0	600	640	180
105-67-9	2,4-Dimethylphenol	U	530	1.0	500	530	180
111-91-1	Bis(2-Chloroethoxy)methane	U	350	1.0	330	350	100
120-83-2	2,4-Dichlorophenol	U	530	1.0	500	530	160
106-47-8	4-Chloroaniline	U	530	1.0	500	530	130
105-60-2	Caprolactam	U	530	1.0	500	530	150
59-50-7	4-Chloro-3-Methylphenol	U	530	1.0	500	530	180
88-06-2	2,4,6-Trichlorophenol	U	530	1.0	500	530	160
95-95-4	2,4,5-Trichlorophenol	U	530	1.0	500	530	160
91-58-7	2-Chloronaphthalene	U	350	1.0	330	350	93
92-52-4	1,1'-Biphenyl	U	350	1.0	330	350	78
88-74-4	2-Nitroaniline	U	530	1.0	500	530	80
131-11-3	Dimethyl Phthalate	U	350	1.0	330	350	83
606-20-2	2,6-Dinitrotoluene	U	350	1.0	330	350	84
208-96-8	Acenaphthylene	U	350	1.0	330	350	74
99-09-2	3-Nitroaniline	U	530	1.0	500	530	100
83-32-9	Acenaphthene	U	350	1.0	330	350	69
51-28-5	2,4-Dinitrophenol	~~U~~ UJ	1300	1.0	1200	1300	400 CCH
132-64-9	Dibenzofuran	U	350	1.0	330	350	84
100-02-7	4-Nitrophenol	U	1300	1.0	1200	1300	330
121-14-2	2,4-Dinitrotoluene	U	350	1.0	330	350	90
84-66-2	Diethylphthalate	U	350	1.0	330	350	85
7005-72-3	4-Chlorophenyl-phenylether	U	350	1.0	330	350	83
100-01-6	4-Nitroaniline	U	530	1.0	500	530	140
534-52-1	4,6-Dinitro-2-Methylphenol	U	1300	1.0	1200	1300	360
86-30-6	N-Nitrosodiphenylamine	U	700	1.0	660	700	230
101-55-3	4-Bromophenyl-phenylether	U	350	1.0	330	350	90
1912-24-9	Atrazine	U	350	1.0	330	350	97
87-86-5	Pentachlorophenol	U	870	1.0	820	870	250
120-12-7	Anthracene	U	350	1.0	330	350	89
86-74-8	Carbazole	U	530	1.0	500	530	120

fwd
4/15/09

10

KATAHDIN ANALYTICAL SERVICES
Report of Analytical Results

Client: CH2MHill
Project: TO-009 Lejeune
PO No:
Sample Date: 01/10/09
Received Date: 01/13/09
Extraction Date: 01/15/09
Analysis Date: 28-JAN-2009 20:54
Report Date: 02/03/2009
Matrix: SOIL
% Solids: 93.9

Lab ID: SC0147-19RA
Client ID: MR08-SS231-09A
SDG: TO9-33
Extracted by: AC
Extraction Method: SW846 3550
Analyst: JLP
Analysis Method: SW846 8270C
Lab Prep Batch: WG59835
Units: ug/Kgdrywt

CAS#	Compound	Flags	Results	DF	PQL	Adj.PQL	Adj.MDL
84-74-2	Di-n-butylphthalate	U	350	1.0	330	350	110
85-68-7	Butylbenzylphthalate	U	350	1.0	330	350	99
91-94-1	3,3'-Dichlorobenzidine	U	530	1.0	500	530	120
218-01-9	Chrysene	U	350	1.0	330	350	100
117-81-7	bis(2-Ethylhexyl)phthalate	J	130	1.0	330	350	100
117-84-0	Di-n-octylphthalate	U	350	1.0	330	350	220
367-12-4	2-Fluorophenol		72%				
13127-88-3	Phenol-D6		71%				
4165-60-0	Nitrobenzene-D5		68%				
321-60-8	2-Fluorobiphenyl		74%				
118-79-6	2,4,6-Tribromophenol		77%				
1718-51-0	Terphenyl-D14		85%				

LW
4/15/09

11

KATAHDIN ANALYTICAL SERVICES
Report of Analytical Results

Client: CH2MHill
Project: TO-009 Lejeune
PO No:
Sample Date: 01/10/09
Received Date: 01/13/09
Extraction Date: 01/15/09
Analysis Date: 27-JAN-2009 12:49
Report Date: 02/03/2009
Matrix: SOIL
% Solids: 93.2

Lab ID: SC0147-21
Client ID: MR08-IS231-8-9-09A
SDG: TO9-33
Extracted by: AC
Extraction Method: SW846 3550
Analyst: JLP
Analysis Method: SW846 8270C
Lab Prep Batch: WG59835
Units: ug/Kgdrywt

CAS#	Compound	Flags	Results	DF	PQL	Adj.PQL	Adj.MDL
100-52-7	Benzaldehyde	U	540	1.0	500	540	130
108-95-2	Phenol	U	540	1.0	500	540	170
111-44-4	Bis(2-Chloroethyl)ether	U	350	1.0	330	350	87
95-57-8	2-Chlorophenol	U	540	1.0	500	540	180
95-48-7	2-Methylphenol	U	640	1.0	600	640	210
108-60-1	2,2'-Oxybis(1-chloropropane)	U	350	1.0	330	350	95
98-86-2	Acetophenone	U	640	1.0	600	640	190
621-64-7	N-Nitroso-di-n-propylamine	U	350	1.0	330	350	89
65794-96-9	3&4-Methylphenol	U	640	1.0	600	640	200
67-72-1	Hexachloroethane	U	350	1.0	330	350	100
98-95-3	Nitrobenzene	U	350	1.0	330	350	98
78-59-1	Isophorone	U	350	1.0	330	350	80
88-75-5	2-Nitrophenol	U	640	1.0	600	640	180
105-67-9	2,4-Dimethylphenol	U	540	1.0	500	540	180
111-91-1	Bis(2-Chloroethoxy)methane	U	350	1.0	330	350	100
120-83-2	2,4-Dichlorophenol	U	540	1.0	500	540	160
106-47-8	4-Chloroaniline	U	540	1.0	500	540	130
105-60-2	Caprolactam	U	540	1.0	500	540	150
59-50-7	4-Chloro-3-Methylphenol	U	540	1.0	500	540	180
88-06-2	2,4,6-Trichlorophenol	U	540	1.0	500	540	170
95-95-4	2,4,5-Trichlorophenol	U	540	1.0	500	540	170
91-58-7	2-Chloronaphthalene	U	350	1.0	330	350	93
92-52-4	1,1'-Biphenyl	U	350	1.0	330	350	78
88-74-4	2-Nitroaniline	U	540	1.0	500	540	80
131-11-3	Dimethyl Phthalate	U	350	1.0	330	350	84
606-20-2	2,6-Dinitrotoluene	U	350	1.0	330	350	85
208-96-8	Acenaphthylene	U	350	1.0	330	350	75
99-09-2	3-Nitroaniline	U	540	1.0	500	540	100
83-32-9	Acenaphthene	U	350	1.0	330	350	70
51-28-5	2,4-Dinitrophenol	U	1300	1.0	1200	1300	400
132-64-9	Dibenzofuran	U	350	1.0	330	350	85
100-02-7	4-Nitrophenol	U	1300	1.0	1200	1300	330
121-14-2	2,4-Dinitrotoluene	U	350	1.0	330	350	91
84-66-2	Diethylphthalate	U	350	1.0	330	350	86
7005-72-3	4-Chlorophenyl-phenylether	U	350	1.0	330	350	84
100-01-6	4-Nitroaniline	U	540	1.0	500	540	140
534-52-1	4,6-Dinitro-2-Methylphenol	U	1300	1.0	1200	1300	360
86-30-6	N-Nitrosodiphenylamine	U	710	1.0	660	710	230
101-55-3	4-Bromophenyl-phenylether	U	350	1.0	330	350	91
1912-24-9	Atrazine	U	350	1.0	330	350	98
87-86-5	Pentachlorophenol	U	880	1.0	820	880	250
120-12-7	Anthracene	U	350	1.0	330	350	90
86-74-8	Carbazole	U	540	1.0	500	540	120

MW
4/15/09

11

KATAHDIN ANALYTICAL SERVICES
Report of Analytical Results

Client: CH2MHill
Project: TO-009 Lejeune
PO No:
Sample Date: 01/10/09
Received Date: 01/13/09
Extraction Date: 01/15/09
Analysis Date: 27-JAN-2009 12:49
Report Date: 02/03/2009
Matrix: SOIL
% Solids: 93.2

Lab ID: SC0147-21
Client ID: MR08-IS231-8-9-09A
SDG: TO9-33
Extracted by: AC
Extraction Method: SW846 3550
Analyst: JLP
Analysis Method: SW846 8270C
Lab Prep Batch: WG59835
Units: ug/Kgdrywt

CAS#	Compound	Flags	Results	DF	PQL	Adj.PQL	Adj.MDL
84-74-2	Di-n-butylphthalate	U	350	1.0	330	350	110
85-68-7	Butylbenzylphthalate	U	350	1.0	330	350	100
91-94-1	3,3'-Dichlorobenzidine	U	540	1.0	500	540	120
218-01-9	Chrysene	U	350	1.0	330	350	100
117-81-7	bis(2-Ethylhexyl)phthalate		1400	1.0	330	350	100
117-84-0	Di-n-octylphthalate	U	350	1.0	330	350	230
367-12-4	2-Fluorophenol		69%				
13127-88-3	Phenol-D6		70%				
4165-60-0	Nitrobenzene-D5		63%				
321-60-8	2-Fluorobiphenyl		70%				
118-79-6	2,4,6-Tribromophenol		69%				
1718-51-0	Terphenyl-D14		112%				

MW
4/15/09

KATAHDIN ANALYTICAL SERVICES
Report of Analytical Results

Client: CH2MHill
Project: TO-009 Lejeune
PO No:
Sample Date: 01/10/09
Received Date: 01/13/09
Extraction Date: 01/15/09
Analysis Date: 27-JAN-2009 14:56
Report Date: 02/03/2009
Matrix: SOIL
% Solids: 92.1

Lab ID: SC0147-23
Client ID: MR08-SS230-09A
SDG: TO9-33
Extracted by: AC
Extraction Method: SW846 3550
Analyst: JLP
Analysis Method: SW846 8270C
Lab Prep Batch: WG59835
Units: ug/Kgdrywt

CAS#	Compound	Flags	Results	DF	PQL	Adj.PQL	Adj.MDL
100-52-7	Benzaldehyde	U	540	1.0	500	540	130
108-95-2	Phenol	U	540	1.0	500	540	170
111-44-4	Bis(2-Chloroethyl)ether	U	360	1.0	330	360	88
95-57-8	2-Chlorophenol	U	540	1.0	500	540	180
95-48-7	2-Methylphenol	U	650	1.0	600	650	220
108-60-1	2,2'-Oxybis(1-chloropropane)	U	360	1.0	330	360	96
98-86-2	Acetophenone	U	650	1.0	600	650	190
621-64-7	N-Nitroso-di-n-propylamine	U	360	1.0	330	360	90
65794-96-9	3&4-Methylphenol	U	650	1.0	600	650	200
67-72-1	Hexachloroethane	U	360	1.0	330	360	100
98-95-3	Nitrobenzene	U	360	1.0	330	360	99
78-59-1	Isophorone	U	360	1.0	330	360	81
88-75-5	2-Nitrophenol	U	650	1.0	600	650	180
105-67-9	2,4-Dimethylphenol	U	540	1.0	500	540	180
111-91-1	Bis(2-Chloroethoxy)methane	U	360	1.0	330	360	100
120-83-2	2,4-Dichlorophenol	U	540	1.0	500	540	160
106-47-8	4-Chloroaniline	U	540	1.0	500	540	130
105-60-2	Caprolactam	U	540	1.0	500	540	160
59-50-7	4-Chloro-3-Methylphenol	U	540	1.0	500	540	180
88-06-2	2,4,6-Trichlorophenol	U	540	1.0	500	540	170
95-95-4	2,4,5-Trichlorophenol	U	540	1.0	500	540	170
91-58-7	2-Chloronaphthalene	U	360	1.0	330	360	94
92-52-4	1,1'-Biphenyl	U	360	1.0	330	360	79
88-74-4	2-Nitroaniline	U	540	1.0	500	540	81
131-11-3	Dimethyl Phthalate	U	360	1.0	330	360	85
606-20-2	2,6-Dinitrotoluene	U	360	1.0	330	360	86
208-96-8	Acenaphthylene	U	360	1.0	330	360	76
99-09-2	3-Nitroaniline	U	540	1.0	500	540	100
83-32-9	Acenaphthene	U	360	1.0	330	360	70
51-28-5	2,4-Dinitrophenol	U	1300	1.0	1200	1300	410
132-64-9	Dibenzofuran	U	360	1.0	330	360	86
100-02-7	4-Nitrophenol	U	1300	1.0	1200	1300	340
121-14-2	2,4-Dinitrotoluene	U	360	1.0	330	360	92
84-66-2	Diethylphthalate	U	360	1.0	330	360	87
7005-72-3	4-Chlorophenyl-phenylether	U	360	1.0	330	360	85
100-01-6	4-Nitroaniline	U	540	1.0	500	540	140
534-52-1	4,6-Dinitro-2-Methylphenol	U	1300	1.0	1200	1300	360
86-30-6	N-Nitrosodiphenylamine	U	720	1.0	660	720	240
101-55-3	4-Bromophenyl-phenylether	U	360	1.0	330	360	92
1912-24-9	Atrazine	U	360	1.0	330	360	99
87-86-5	Pentachlorophenol	U	890	1.0	820	890	260
120-12-7	Anthracene	U	360	1.0	330	360	91
86-74-8	Carbazole	U	540	1.0	500	540	120

MW 4/15/09

KATAHDIN ANALYTICAL SERVICES
Report of Analytical Results

Client: CH2MHill
Project: TO-009 Lejeune
PO No:
Sample Date: 01/10/09
Received Date: 01/13/09
Extraction Date: 01/15/09
Analysis Date: 27-JAN-2009 14:56
Report Date: 02/03/2009
Matrix: SOIL
% Solids: 92.1

Lab ID: SC0147-23
Client ID: MR08-SS230-09A
SDG: TO9-33
Extracted by: AC
Extraction Method: SW846 3550
Analyst: JLP
Analysis Method: SW846 8270C
Lab Prep Batch: WG59835
Units: ug/Kgdrywt

CAS#	Compound	Flags	Results	DF	PQL	Adj.PQL	Adj.MDL
84-74-2	Di-n-butylphthalate	U	360	1.0	330	360	110
85-68-7	Butylbenzylphthalate	U	360	1.0	330	360	100
91-94-1	3,3'-Dichlorobenzidine	U	540	1.0	500	540	120
218-01-9	Chrysene	U	360	1.0	330	360	100
117-81-7	bis(2-Ethylhexyl)phthalate		1200	1.0	330	360	110
117-84-0	Di-n-octylphthalate	U	360	1.0	330	360	230
367-12-4	2-Fluorophenol		69%				
13127-88-3	Phenol-D6		67%				
4165-60-0	Nitrobenzene-D5		59%				
321-60-8	2-Fluorobiphenyl		73%				
118-79-6	2,4,6-Tribromophenol		72%				
1718-51-0	Terphenyl-D14		106%				

lw
4/15/09

KATAHDIN ANALYTICAL SERVICES
Report of Analytical Results

Client: CH2MHill
Project: TO-009 Lejeune
PO No:
Sample Date: 01/10/09
Received Date: 01/13/09
Extraction Date: 01/16/09
Analysis Date: 27-JAN-2009 22:41
Report Date: 02/03/2009
Matrix: SOIL
% Solids: 87.2

Lab ID: SC0147-25
Client ID: MR08-IS230-8-9-09A
SDG: TO9-33
Extracted by: CB
Extraction Method: SW846 3550
Analyst: JCG
Analysis Method: SW846 8270C
Lab Prep Batch: WG59867
Units: ug/Kgdrywt

CAS#	Compound	Flags	Results	DF	PQL	Adj.PQL	Adj.MDL	
100-52-7	Benzaldehyde	U	570	1.0	500	570	140	
108-95-2	Phenol	U	570	1.0	500	570	180	
111-44-4	Bis(2-Chloroethyl)ether	U	380	1.0	330	380	93	
95-57-8	2-Chlorophenol	U	570	1.0	500	570	190	
95-48-7	2-Methylphenol	U	690	1.0	600	690	230	
108-60-1	2,2'-Oxybis(1-chloropropane)	U	380	1.0	330	380	100	
98-86-2	Acetophenone	~~U~~ UJ	690	1.0	600	690	200	BSL
621-64-7	N-Nitroso-di-n-propylamine	U	380	1.0	330	380	95	
65794-96-9	3&4-Methylphenol	U	690	1.0	600	690	210	
67-72-1	Hexachloroethane	U	380	1.0	330	380	110	
98-95-3	Nitrobenzene	U	380	1.0	330	380	100	
78-59-1	Isophorone	U	380	1.0	330	380	86	
88-75-5	2-Nitrophenol	U	690	1.0	600	690	190	
105-67-9	2,4-Dimethylphenol	U	570	1.0	500	570	190	
111-91-1	Bis(2-Chloroethoxy)methane	U	380	1.0	330	380	110	
120-83-2	2,4-Dichlorophenol	U	570	1.0	500	570	170	
106-47-8	4-Chloroaniline	U	570	1.0	500	570	140	
105-60-2	Caprolactam	U	570	1.0	500	570	160	
59-50-7	4-Chloro-3-Methylphenol	U	570	1.0	500	570	190	
88-06-2	2,4,6-Trichlorophenol	U	570	1.0	500	570	180	
95-95-4	2,4,5-Trichlorophenol	U	570	1.0	500	570	180	
91-58-7	2-Chloronaphthalene	U	380	1.0	330	380	100	
92-52-4	1,1'-Biphenyl	U	380	1.0	330	380	84	
88-74-4	2-Nitroaniline	U	570	1.0	500	570	86	
131-11-3	Dimethyl Phthalate	U	380	1.0	330	380	89	
606-20-2	2,6-Dinitrotoluene	U	380	1.0	330	380	91	
208-96-8	Acenaphthylene	U	380	1.0	330	380	80	
99-09-2	3-Nitroaniline	U	570	1.0	500	570	110	
83-32-9	Acenaphthene	U	380	1.0	330	380	74	
51-28-5	2,4-Dinitrophenol	~~U~~ UJ	1400	1.0	1200	1400	430	CCH
132-64-9	Dibenzofuran	U	380	1.0	330	380	91	
100-02-7	4-Nitrophenol	~~U~~ UJ	1400	1.0	1200	1400	350	CCH
121-14-2	2,4-Dinitrotoluene	U	380	1.0	330	380	98	
84-66-2	Diethylphthalate	U	380	1.0	330	380	92	
7005-72-3	4-Chlorophenyl-phenylether	U	380	1.0	330	380	89	
100-01-6	4-Nitroaniline	U	570	1.0	500	570	150	
534-52-1	4,6-Dinitro-2-Methylphenol	U	1400	1.0	1200	1400	390	
86-30-6	N-Nitrosodiphenylamine	U	760	1.0	660	760	250	
101-55-3	4-Bromophenyl-phenylether	U	380	1.0	330	380	98	
1912-24-9	Atrazine	U	380	1.0	330	380	100	
87-86-5	Pentachlorophenol	U	940	1.0	820	940	270	
120-12-7	Anthracene	U	380	1.0	330	380	96	
86-74-8	Carbazole	U	570	1.0	500	570	130	

kw 4/15/09

KATAHDIN ANALYTICAL SERVICES
Report of Analytical Results

Client: CH2MHill
Project: TO-009 Lejeune
PO No:
Sample Date: 01/10/09
Received Date: 01/13/09
Extraction Date: 01/16/09
Analysis Date: 27-JAN-2009 22:41
Report Date: 02/03/2009
Matrix: SOIL
% Solids: 87.2

Lab ID: SC0147-25
Client ID: MR08-IS230-8-9-09A
SDG: TO9-33
Extracted by: CB
Extraction Method: SW846 3550
Analyst: JCG
Analysis Method: SW846 8270C
Lab Prep Batch: WG59867
Units: ug/Kgdrywt

CAS#	Compound	Flags	Results	DF	PQL	Adj.PQL	Adj.MDL
84-74-2	Di-n-butylphthalate	U	380	1.0	330	380	120
85-68-7	Butylbenzylphthalate	U	380	1.0	330	380	110
91-94-1	3,3'-Dichlorobenzidine	U	570	1.0	500	570	130
218-01-9	Chrysene	U	380	1.0	330	380	110
117-81-7	bis(2-Ethylhexyl)phthalate	U	380	1.0	330	380	110
117-84-0	Di-n-octylphthalate	U	380	1.0	330	380	240
367-12-4	2-Fluorophenol		65%				
13127-88-3	Phenol-D6		61%				
4165-60-0	Nitrobenzene-D5		62%				
321-60-8	2-Fluorobiphenyl		65%				
118-79-6	2,4,6-Tribromophenol		53%				
1718-51-0	Terphenyl-D14		73%				

QW 4/15/09

KATAHDIN ANALYTICAL SERVICES
Report of Analytical Results

Client: CH2MHill
Project: TO-009 Lejeune
PO No:
Sample Date: 01/10/09
Received Date: 01/13/09
Extraction Date: 01/16/09
Analysis Date: 28-JAN-2009 18:04
Report Date: 02/03/2009
Matrix: SOIL
% Solids: 91.8

Lab ID: SC0147-27RA
Client ID: MR08-SS259-09A
SDG: TO9-33
Extracted by: CB
Extraction Method: SW846 3550
Analyst: JLP
Analysis Method: SW846 8270C
Lab Prep Batch: WG59867
Units: ug/Kgdrywt

CAS#	Compound	Flags	Results	DF	PQL	Adj.PQL	Adj.MDL	
100-52-7	Benzaldehyde	U	540	1.0	500	540	130	
108-95-2	Phenol	U	540	1.0	500	540	170	
111-44-4	Bis(2-Chloroethyl)ether	U	360	1.0	330	360	88	
95-57-8	2-Chlorophenol	U	540	1.0	500	540	180	
95-48-7	2-Methylphenol	U	650	1.0	600	650	220	
108-60-1	2,2'-Oxybis(1-chloropropane)	U	360	1.0	330	360	97	
98-86-2	Acetophenone	~~U~~ UJ	650	1.0	600	650	190	BSL
621-64-7	N-Nitroso-di-n-propylamine	U	360	1.0	330	360	90	
65794-96-9	3&4-Methylphenol	U	650	1.0	600	650	200	
67-72-1	Hexachloroethane	U	360	1.0	330	360	100	
98-95-3	Nitrobenzene	U	360	1.0	330	360	99	
78-59-1	Isophorone	U	360	1.0	330	360	82	
88-75-5	2-Nitrophenol	U	650	1.0	600	650	180	
105-67-9	2,4-Dimethylphenol	U	540	1.0	500	540	180	
111-91-1	Bis(2-Chloroethoxy)methane	U	360	1.0	330	360	100	
120-83-2	2,4-Dichlorophenol	U	540	1.0	500	540	160	
106-47-8	4-Chloroaniline	U	540	1.0	500	540	130	
105-60-2	Caprolactam	U	540	1.0	500	540	160	
59-50-7	4-Chloro-3-Methylphenol	U	540	1.0	500	540	180	
88-06-2	2,4,6-Trichlorophenol	U	540	1.0	500	540	170	
95-95-4	2,4,5-Trichlorophenol	U	540	1.0	500	540	170	
91-58-7	2-Chloronaphthalene	U	360	1.0	330	360	95	
92-52-4	1,1'-Biphenyl	U	360	1.0	330	360	80	
88-74-4	2-Nitroaniline	U	540	1.0	500	540	82	
131-11-3	Dimethyl Phthalate	U	360	1.0	330	360	85	
606-20-2	2,6-Dinitrotoluene	U	360	1.0	330	360	86	
208-96-8	Acenaphthylene	U	360	1.0	330	360	76	
99-09-2	3-Nitroaniline	U	540	1.0	500	540	100	
83-32-9	Acenaphthene	U	360	1.0	330	360	71	
51-28-5	2,4-Dinitrophenol	~~U~~ UJ	1300	1.0	1200	1300	410	CCH
132-64-9	Dibenzofuran	U	360	1.0	330	360	86	
100-02-7	4-Nitrophenol	U	1300	1.0	1200	1300	340	
121-14-2	2,4-Dinitrotoluene	U	360	1.0	330	360	92	
84-66-2	Diethylphthalate	U	360	1.0	330	360	87	
7005-72-3	4-Chlorophenyl-phenylether	U	360	1.0	330	360	85	
100-01-6	4-Nitroaniline	U	540	1.0	500	540	140	
534-52-1	4,6-Dinitro-2-Methylphenol	U	1300	1.0	1200	1300	370	
86-30-6	N-Nitrosodiphenylamine	U	720	1.0	660	720	240	
101-55-3	4-Bromophenyl-phenylether	U	360	1.0	330	360	92	
1912-24-9	Atrazine	U	360	1.0	330	360	99	
87-86-5	Pentachlorophenol	U	890	1.0	820	890	260	
120-12-7	Anthracene	U	360	1.0	330	360	91	
86-74-8	Carbazole	U	540	1.0	500	540	120	

lw
4/15/09

KATAHDIN ANALYTICAL SERVICES
Report of Analytical Results

Client: CH2MHill
Project: TO-009 Lejeune
PO No:
Sample Date: 01/10/09
Received Date: 01/13/09
Extraction Date: 01/16/09
Analysis Date: 28-JAN-2009 18:04
Report Date: 02/03/2009
Matrix: SOIL
% Solids: 91.8

Lab ID: SC0147-27RA
Client ID: MR08-SS259-09A
SDG: TO9-33
Extracted by: CB
Extraction Method: SW846 3550
Analyst: JLP
Analysis Method: SW846 8270C
Lab Prep Batch: WG59867
Units: ug/Kgdrywt

CAS#	Compound	Flags	Results	DF	PQL	Adj.PQL	Adj.MDL
84-74-2	Di-n-butylphthalate	U	360	1.0	330	360	110
85-68-7	Butylbenzylphthalate	U	360	1.0	330	360	100
91-94-1	3,3'-Dichlorobenzidine	U	540	1.0	500	540	120
218-01-9	Chrysene	J	190	1.0	330	360	100
117-81-7	bis(2-Ethylhexyl)phthalate	U	360	1.0	330	360	110
117-84-0	Di-n-octylphthalate	U	360	1.0	330	360	230
367-12-4	2-Fluorophenol		70%				
13127-88-3	Phenol-D6		69%				
4165-60-0	Nitrobenzene-D5		64%				
321-60-8	2-Fluorobiphenyl		69%				
118-79-6	2,4,6-Tribromophenol		69%				
1718-51-0	Terphenyl-D14		77%				

MW
4/15/09

KATAHDIN ANALYTICAL SERVICES
Report of Analytical Results

Client: CH2MHill
Project: TO-009 Lejeune
PO No:
Sample Date: 01/10/09
Received Date: 01/13/09
Extraction Date: 01/15/09
Analysis Date: 27-JAN-2009 05:17
Report Date: 02/03/2009
Matrix: SOIL
% Solids: 91.7

Lab ID: SC0147-29
Client ID: MR08-SS259D-09A
SDG: TO9-33
Extracted by: GN
Extraction Method: SW846 3540
Analyst: JCG
Analysis Method: SW846 8270C
Lab Prep Batch: WG59817
Units: ug/Kgdrywt

CAS#	Compound	Flags	Results	DF	PQL	Adj.PQL	Adj.MDL
100-52-7	Benzaldehyde	U	540	1.0	500	540	130
108-95-2	Phenol	U	540	1.0	500	540	170
111-44-4	Bis(2-Chloroethyl)ether	U	360	1.0	330	360	88
95-57-8	2-Chlorophenol	U	540	1.0	500	540	180
95-48-7	2-Methylphenol	U	650	1.0	600	650	220
108-60-1	2,2'-Oxybis(1-chloropropane)	U	360	1.0	330	360	97
98-86-2	Acetophenone	U	650	1.0	600	650	190
621-64-7	N-Nitroso-di-n-propylamine	U	360	1.0	330	360	90
65794-96-9	3&4-Methylphenol	U	650	1.0	600	650	200
67-72-1	Hexachloroethane	U	360	1.0	330	360	100
98-95-3	Nitrobenzene	U	360	1.0	330	360	99
78-59-1	Isophorone	U	360	1.0	330	360	82
88-75-5	2-Nitrophenol	U	650	1.0	600	650	180
105-67-9	2,4-Dimethylphenol	U	540	1.0	500	540	180
111-91-1	Bis(2-Chloroethoxy)methane	U	360	1.0	330	360	100
120-83-2	2,4-Dichlorophenol	U	540	1.0	500	540	160
106-47-8	4-Chloroaniline	U	540	1.0	500	540	130
105-60-2	Caprolactam	U	540	1.0	500	540	160
59-50-7	4-Chloro-3-Methylphenol	U	540	1.0	500	540	180
88-06-2	2,4,6-Trichlorophenol	U	540	1.0	500	540	170
95-95-4	2,4,5-Trichlorophenol	U	540	1.0	500	540	170
91-58-7	2-Chloronaphthalene	U	360	1.0	330	360	95
92-52-4	1,1'-Biphenyl	U	360	1.0	330	360	80
88-74-4	2-Nitroaniline	U	540	1.0	500	540	82
131-11-3	Dimethyl Phthalate	U	360	1.0	330	360	85
606-20-2	2,6-Dinitrotoluene	U	360	1.0	330	360	86
208-96-8	Acenaphthylene	U	360	1.0	330	360	76
99-09-2	3-Nitroaniline	U	540	1.0	500	540	100
83-32-9	Acenaphthene	U	360	1.0	330	360	71
51-28-5	2,4-Dinitrophenol	U	1300	1.0	1200	1300	410
132-64-9	Dibenzofuran	U	360	1.0	330	360	86
100-02-7	4-Nitrophenol	U	1300	1.0	1200	1300	340
121-14-2	2,4-Dinitrotoluene	U	360	1.0	330	360	93
84-66-2	Diethylphthalate	U	360	1.0	330	360	87
7005-72-3	4-Chlorophenyl-phenylether	U	360	1.0	330	360	85
100-01-6	4-Nitroaniline	U	540	1.0	500	540	150
534-52-1	4,6-Dinitro-2-Methylphenol	U	1300	1.0	1200	1300	370
86-30-6	N-Nitrosodiphenylamine	U	720	1.0	660	720	240
101-55-3	4-Bromophenyl-phenylether	U	360	1.0	330	360	93
1912-24-9	Atrazine	U	360	1.0	330	360	99
87-86-5	Pentachlorophenol	U	890	1.0	820	890	260
120-12-7	Anthracene	U	360	1.0	330	360	92
86-74-8	Carbazole	U	540	1.0	500	540	120

JCW 4/15/09

KATAHDIN ANALYTICAL SERVICES
Report of Analytical Results

Client: CH2MHill
Project: TO-009 Lejeune
PO No:
Sample Date: 01/10/09
Received Date: 01/13/09
Extraction Date: 01/15/09
Analysis Date: 27-JAN-2009 05:17
Report Date: 02/03/2009
Matrix: SOIL
% Solids: 91.7

Lab ID: SC0147-29
Client ID: MR08-SS259D-09A
SDG: TO9-33
Extracted by: GN
Extraction Method: SW846 3540
Analyst: JCG
Analysis Method: SW846 8270C
Lab Prep Batch: WG59817
Units: ug/Kgdrywt

CAS#	Compound	Flags	Results	DF	PQL	Adj.PQL	Adj.MDL
84-74-2	Di-n-butylphthalate	U	360	1.0	330	360	110
85-68-7	Butylbenzylphthalate	U	360	1.0	330	360	100
91-94-1	3,3'-Dichlorobenzidine	U	540	1.0	500	540	120
218-01-9	Chrysene	J	260	1.0	330	360	100
117-81-7	bis(2-Ethylhexyl)phthalate	J	120	1.0	330	360	110
117-84-0	Di-n-octylphthalate	U	360	1.0	330	360	230
367-12-4	2-Fluorophenol		64%				
13127-88-3	Phenol-D6		70%				
4165-60-0	Nitrobenzene-D5		57%				
321-60-8	2-Fluorobiphenyl		77%				
118-79-6	2,4,6-Tribromophenol		80%				
1718-51-0	Terphenyl-D14		112%				

lw
4/15/09

KATAHDIN ANALYTICAL SERVICES
Report of Analytical Results

Client: CH2MHill
Project: TO-009 Lejeune
PO No:
Sample Date: 01/10/09
Received Date: 01/13/09
Extraction Date: 01/15/09
Analysis Date: 27-JAN-2009 03:11
Report Date: 02/03/2009
Matrix: SOIL
% Solids: 90.1

Lab ID: SC0147-31
Client ID: MR08-IS259-5-6-09A
SDG: TO9-33
Extracted by: GN
Extraction Method: SW846 3540
Analyst: JCG
Analysis Method: SW846 8270C
Lab Prep Batch: WG59817
Units: ug/Kgdrywt

CAS#	Compound	Flags	Results	DF	PQL	Adj.PQL	Adj.MDL
100-52-7	Benzaldehyde	U	550	1.0	500	550	130
108-95-2	Phenol	U	550	1.0	500	550	170
111-44-4	Bis(2-Chloroethyl)ether	U	370	1.0	330	370	90
95-57-8	2-Chlorophenol	U	550	1.0	500	550	180
95-48-7	2-Methylphenol	U	660	1.0	600	660	220
108-60-1	2,2'-Oxybis(1-chloropropane)	U	370	1.0	330	370	99
98-86-2	Acetophenone	U	660	1.0	600	660	200
621-64-7	N-Nitroso-di-n-propylamine	U	370	1.0	330	370	92
65794-96-9	3&4-Methylphenol	U	660	1.0	600	660	210
67-72-1	Hexachloroethane	U	370	1.0	330	370	110
98-95-3	Nitrobenzene	U	370	1.0	330	370	100
78-59-1	Isophorone	U	370	1.0	330	370	83
88-75-5	2-Nitrophenol	U	660	1.0	600	660	180
105-67-9	2,4-Dimethylphenol	U	550	1.0	500	550	180
111-91-1	Bis(2-Chloroethoxy)methane	U	370	1.0	330	370	110
120-83-2	2,4-Dichlorophenol	U	550	1.0	500	550	170
106-47-8	4-Chloroaniline	U	550	1.0	500	550	130
105-60-2	Caprolactam	U	550	1.0	500	550	160
59-50-7	4-Chloro-3-Methylphenol	U	550	1.0	500	550	180
88-06-2	2,4,6-Trichlorophenol	U	550	1.0	500	550	170
95-95-4	2,4,5-Trichlorophenol	U	550	1.0	500	550	170
91-58-7	2-Chloronaphthalene	U	370	1.0	330	370	96
92-52-4	1,1'-Biphenyl	U	370	1.0	330	370	81
88-74-4	2-Nitroaniline	U	550	1.0	500	550	83
131-11-3	Dimethyl Phthalate	U	370	1.0	330	370	86
606-20-2	2,6-Dinitrotoluene	U	370	1.0	330	370	88
208-96-8	Acenaphthylene	U	370	1.0	330	370	78
99-09-2	3-Nitroaniline	U	550	1.0	500	550	100
83-32-9	Acenaphthene	U	370	1.0	330	370	72
51-28-5	2,4-Dinitrophenol	U	1300	1.0	1200	1300	420
132-64-9	Dibenzofuran	U	370	1.0	330	370	88
100-02-7	4-Nitrophenol	U	1300	1.0	1200	1300	340
121-14-2	2,4-Dinitrotoluene	U	370	1.0	330	370	94
84-66-2	Diethylphthalate	U	370	1.0	330	370	89
7005-72-3	4-Chlorophenyl-phenylether	U	370	1.0	330	370	86
100-01-6	4-Nitroaniline	U	550	1.0	500	550	150
534-52-1	4,6-Dinitro-2-Methylphenol	U	1300	1.0	1200	1300	370
86-30-6	N-Nitrosodiphenylamine	U	730	1.0	660	730	240
101-55-3	4-Bromophenyl-phenylether	U	370	1.0	330	370	94
1912-24-9	Atrazine	U	370	1.0	330	370	100
87-86-5	Pentachlorophenol	U	910	1.0	820	910	260
120-12-7	Anthracene	U	370	1.0	330	370	93
86-74-8	Carbazole	U	550	1.0	500	550	120

LW
4/15/09

KATAHDIN ANALYTICAL SERVICES
Report of Analytical Results

Client: CH2MHill
Project: TO-009 Lejeune
PO No:
Sample Date: 01/10/09
Received Date: 01/13/09
Extraction Date: 01/15/09
Analysis Date: 27-JAN-2009 03:11
Report Date: 02/03/2009
Matrix: SOIL
% Solids: 90.1

Lab ID: SC0147-31
Client ID: MR08-IS259-5-6-09A
SDG: TO9-33
Extracted by: GN
Extraction Method: SW846 3540
Analyst: JCG
Analysis Method: SW846 8270C
Lab Prep Batch: WG59817
Units: ug/Kgdrywt

CAS#	Compound	Flags	Results	DF	PQL	Adj.PQL	Adj.MDL
84-74-2	Di-n-butylphthalate	U	370	1.0	330	370	110
85-68-7	Butylbenzylphthalate	U	370	1.0	330	370	100
91-94-1	3,3'-Dichlorobenzidine	U	550	1.0	500	550	130
218-01-9	Chrysene	U	370	1.0	330	370	100
117-81-7	bis(2-Ethylhexyl)phthalate	U	370	1.0	330	370	110
117-84-0	Di-n-octylphthalate	U	370	1.0	330	370	230
367-12-4	2-Fluorophenol		77%				
13127-88-3	Phenol-D6		74%				
4165-60-0	Nitrobenzene-D5		72%				
321-60-8	2-Fluorobiphenyl		73%				
118-79-6	2,4,6-Tribromophenol		64%				
1718-51-0	Terphenyl-D14		89%				

JW
4/15/09

KATAHDIN ANALYTICAL SERVICES
Report of Analytical Results

Client: CH2MHill
Project: TO-009 Lejeune
PO No:
Sample Date: 01/10/09
Received Date: 01/13/09
Extraction Date: 01/15/09
Analysis Date: 27-JAN-2009 03:53
Report Date: 02/03/2009
Matrix: SOIL
% Solids: 92.7

Lab ID: SC0147-33
Client ID: MR08-IS259D-5-6-09A
SDG: T09-33
Extracted by: GN
Extraction Method: SW846 3540
Analyst: JCG
Analysis Method: SW846 8270C
Lab Prep Batch: WG59817
Units: ug/Kgdrywt

CAS#	Compound	Flags	Results	DF	PQL	Adj.PQL	Adj.MDL
100-52-7	Benzaldehyde	U	540	1.0	500	540	130
108-95-2	Phenol	U	540	1.0	500	540	170
111-44-4	Bis(2-Chloroethyl)ether	U	360	1.0	330	360	87
95-57-8	2-Chlorophenol	U	540	1.0	500	540	180
95-48-7	2-Methylphenol	U	650	1.0	600	650	220
108-60-1	2,2'-Oxybis(1-chloropropane)	U	360	1.0	330	360	96
98-86-2	Acetophenone	U	650	1.0	600	650	190
621-64-7	N-Nitroso-di-n-propylamine	U	360	1.0	330	360	90
65794-96-9	3&4-Methylphenol	U	650	1.0	600	650	200
67-72-1	Hexachloroethane	U	360	1.0	330	360	100
98-95-3	Nitrobenzene	U	360	1.0	330	360	98
78-59-1	Isophorone	U	360	1.0	330	360	81
88-75-5	2-Nitrophenol	U	650	1.0	600	650	180
105-67-9	2,4-Dimethylphenol	U	540	1.0	500	540	180
111-91-1	Bis(2-Chloroethoxy)methane	U	360	1.0	330	360	100
120-83-2	2,4-Dichlorophenol	U	540	1.0	500	540	160
106-47-8	4-Chloroaniline	U	540	1.0	500	540	130
105-60-2	Caprolactam	U	540	1.0	500	540	160
59-50-7	4-Chloro-3-Methylphenol	U	540	1.0	500	540	180
88-06-2	2,4,6-Trichlorophenol	U	540	1.0	500	540	170
95-95-4	2,4,5-Trichlorophenol	U	540	1.0	500	540	170
91-58-7	2-Chloronaphthalene	U	360	1.0	330	360	94
92-52-4	1,1'-Biphenyl	U	360	1.0	330	360	79
88-74-4	2-Nitroaniline	U	540	1.0	500	540	81
131-11-3	Dimethyl Phthalate	U	360	1.0	330	360	84
606-20-2	2,6-Dinitrotoluene	U	360	1.0	330	360	85
208-96-8	Acenaphthylene	U	360	1.0	330	360	76
99-09-2	3-Nitroaniline	U	540	1.0	500	540	100
83-32-9	Acenaphthene	U	360	1.0	330	360	70
51-28-5	2,4-Dinitrophenol	U	1300	1.0	1200	1300	410
132-64-9	Dibenzofuran	U	360	1.0	330	360	85
100-02-7	4-Nitrophenol	U	1300	1.0	1200	1300	330
121-14-2	2,4-Dinitrotoluene	U	360	1.0	330	360	92
84-66-2	Diethylphthalate	U	360	1.0	330	360	86
7005-72-3	4-Chlorophenyl-phenylether	U	360	1.0	330	360	84
100-01-6	4-Nitroaniline	U	540	1.0	500	540	140
534-52-1	4,6-Dinitro-2-Methylphenol	U	1300	1.0	1200	1300	360
86-30-6	N-Nitrosodiphenylamine	U	710	1.0	660	710	240
101-55-3	4-Bromophenyl-phenylether	U	360	1.0	330	360	92
1912-24-9	Atrazine	U	360	1.0	330	360	98
87-86-5	Pentachlorophenol	U	880	1.0	820	880	260
120-12-7	Anthracene	U	360	1.0	330	360	91
86-74-8	Carbazole	U	540	1.0	500	540	120

RW 4/15/09

KATAHDIN ANALYTICAL SERVICES
Report of Analytical Results

Client: CH2MHill
Project: TO-009 Lejeune
PO No:
Sample Date: 01/10/09
Received Date: 01/13/09
Extraction Date: 01/15/09
Analysis Date: 27-JAN-2009 03:53
Report Date: 02/03/2009
Matrix: SOIL
% Solids: 92.7

Lab ID: SC0147-33
Client ID: MR08-IS259D-5-6-09A
SDG: TO9-33
Extracted by: GN
Extraction Method: SW846 3540
Analyst: JCG
Analysis Method: SW846 8270C
Lab Prep Batch: WG59817
Units: ug/Kgdrywt

CAS#	Compound	Flags	Results	DF	PQL	Adj.PQL	Adj.MDL
84-74-2	Di-n-butylphthalate	U	360	1.0	330	360	110
85-68-7	Butylbenzylphthalate	U	360	1.0	330	360	100
91-94-1	3,3'-Dichlorobenzidine	U	540	1.0	500	540	120
218-01-9	Chrysene	U	360	1.0	330	360	100
117-81-7	bis(2-Ethylhexyl)phthalate	U	360	1.0	330	360	100
117-84-0	Di-n-octylphthalate	U	360	1.0	330	360	230
367-12-4	2-Fluorophenol		64%				
13127-88-3	Phenol-D6		67%				
4165-60-0	Nitrobenzene-D5		62%				
321-60-8	2-Fluorobiphenyl		66%				
118-79-6	2,4,6-Tribromophenol		59%				
1718-51-0	Terphenyl-D14		97%				

RW
4/15/09

KATAHDIN ANALYTICAL SERVICES
Report of Analytical Results

Client: CH2MHill
Project: TO-009 Lejeune
PO No:
Sample Date: 01/10/09
Received Date: 01/13/09
Extraction Date: 01/15/09
Analysis Date: 27-JAN-2009 05:59
Report Date: 02/03/2009
Matrix: SOIL
% Solids: 93.4

Lab ID: SC0147-35
Client ID: MR08-SS272-09A
SDG: TO9-33
Extracted by: GN
Extraction Method: SW846 3540
Analyst: JCG
Analysis Method: SW846 8270C
Lab Prep Batch: WG59817
Units: ug/Kgdrywt

CAS#	Compound	Flags	Results	DF	PQL	Adj.PQL	Adj.MDL
100-52-7	Benzaldehyde	U	540	1.0	500	540	130
108-95-2	Phenol	U	540	1.0	500	540	170
111-44-4	Bis(2-Chloroethyl)ether	U	350	1.0	330	350	87
95-57-8	2-Chlorophenol	U	540	1.0	500	540	180
95-48-7	2-Methylphenol	U	640	1.0	600	640	210
108-60-1	2,2'-Oxybis(1-chloropropane)	U	350	1.0	330	350	95
98-86-2	Acetophenone	U	640	1.0	600	640	190
621-64-7	N-Nitroso-di-n-propylamine	U	350	1.0	330	350	89
65794-96-9	3&4-Methylphenol	U	640	1.0	600	640	200
67-72-1	Hexachloroethane	U	350	1.0	330	350	100
98-95-3	Nitrobenzene	U	350	1.0	330	350	97
78-59-1	Isophorone	U	350	1.0	330	350	80
88-75-5	2-Nitrophenol	U	640	1.0	600	640	180
105-67-9	2,4-Dimethylphenol	U	540	1.0	500	540	180
111-91-1	Bis(2-Chloroethoxy)methane	U	350	1.0	330	350	100
120-83-2	2,4-Dichlorophenol	U	540	1.0	500	540	160
106-47-8	4-Chloroaniline	U	540	1.0	500	540	130
105-60-2	Caprolactam	U	540	1.0	500	540	150
59-50-7	4-Chloro-3-Methylphenol	U	540	1.0	500	540	180
88-06-2	2,4,6-Trichlorophenol	U	540	1.0	500	540	160
95-95-4	2,4,5-Trichlorophenol	U	540	1.0	500	540	160
91-58-7	2-Chloronaphthalene	U	350	1.0	330	350	93
92-52-4	1,1'-Biphenyl	U	350	1.0	330	350	78
88-74-4	2-Nitroaniline	U	540	1.0	500	540	80
131-11-3	Dimethyl Phthalate	U	350	1.0	330	350	83
606-20-2	2,6-Dinitrotoluene	U	350	1.0	330	350	84
208-96-8	Acenaphthylene	U	350	1.0	330	350	75
99-09-2	3-Nitroaniline	U	540	1.0	500	540	100
83-32-9	Acenaphthene	J	160	1.0	330	350	70
51-28-5	2,4-Dinitrophenol	U	1300	1.0	1200	1300	400
132-64-9	Dibenzofuran	U	350	1.0	330	350	84
100-02-7	4-Nitrophenol	U	1300	1.0	1200	1300	330
121-14-2	2,4-Dinitrotoluene	U	350	1.0	330	350	91
84-66-2	Diethylphthalate	U	350	1.0	330	350	86
7005-72-3	4-Chlorophenyl-phenylether	U	350	1.0	330	350	83
100-01-6	4-Nitroaniline	U	540	1.0	500	540	140
534-52-1	4,6-Dinitro-2-Methylphenol	U	1300	1.0	1200	1300	360
86-30-6	N-Nitrosodiphenylamine	U	710	1.0	660	710	230
101-55-3	4-Bromophenyl-phenylether	U	350	1.0	330	350	91
1912-24-9	Atrazine	U	350	1.0	330	350	97
87-86-5	Pentachlorophenol	U	880	1.0	820	880	250
120-12-7	Anthracene	J	260	1.0	330	350	90
86-74-8	Carbazole	J	160	1.0	500	540	120

hw 4/15/09

KATAHDIN ANALYTICAL SERVICES
Report of Analytical Results

Client: CH2MHill
Project: TO-009 Lejeune
PO No:
Sample Date: 01/10/09
Received Date: 01/13/09
Extraction Date: 01/15/09
Analysis Date: 27-JAN-2009 05:59
Report Date: 02/03/2009
Matrix: SOIL
% Solids: 93.4

Lab ID: SC0147-35
Client ID: MR08-SS272-09A
SDG: TO9-33
Extracted by: GN
Extraction Method: SW846 3540
Analyst: JCG
Analysis Method: SW846 8270C
Lab Prep Batch: WG59817
Units: ug/Kgdrywt

CAS#	Compound	Flags	Results	DF	PQL	Adj.PQL	Adj.MDL
84-74-2	Di-n-butylphthalate	U	350	1.0	330	350	110
85-68-7	Butylbenzylphthalate	U	350	1.0	330	350	100
91-94-1	3,3'-Dichlorobenzidine	U	540	1.0	500	540	120
218-01-9	Chrysene		1000	1.0	330	350	100
117-81-7	bis(2-Ethylhexyl)phthalate	U	350	1.0	330	350	100
117-84-0	Di-n-octylphthalate	U	350	1.0	330	350	220
367-12-4	2-Fluorophenol		60%				
13127-88-3	Phenol-D6		67%				
4165-60-0	Nitrobenzene-D5		54%				
321-60-8	2-Fluorobiphenyl		70%				
118-79-6	2,4,6-Tribromophenol		77%				
1718-51-0	Terphenyl-D14		116%				

LW
4/15/09

KATAHDIN ANALYTICAL SERVICES
Report of Analytical Results

Client: CH2MHill
Project: TO-009 Lejeune
PO No:
Sample Date: 01/10/09
Received Date: 01/13/09
Extraction Date: 01/15/09
Analysis Date: 27-JAN-2009 04:35
Report Date: 02/03/2009
Matrix: SOIL
% Solids: 92.2

Lab ID: SC0147-37
Client ID: MR08-IS272-8-9-09A
SDG: TO9-33
Extracted by: GN
Extraction Method: SW846 3540
Analyst: JCG
Analysis Method: SW846 8270C
Lab Prep Batch: WG59817
Units: ug/Kgdrywt

CAS#	Compound	Flags	Results	DF	PQL	Adj.PQL	Adj.MDL
100-52-7	Benzaldehyde	U	540	1.0	500	540	130
108-95-2	Phenol	U	540	1.0	500	540	170
111-44-4	Bis(2-Chloroethyl)ether	U	360	1.0	330	360	88
95-57-8	2-Chlorophenol	U	540	1.0	500	540	180
95-48-7	2-Methylphenol	U	650	1.0	600	650	220
108-60-1	2,2'-Oxybis(1-chloropropane)	U	360	1.0	330	360	96
98-86-2	Acetophenone	U	650	1.0	600	650	190
621-64-7	N-Nitroso-di-n-propylamine	U	360	1.0	330	360	90
65794-96-9	3&4-Methylphenol	U	650	1.0	600	650	200
67-72-1	Hexachloroethane	U	360	1.0	330	360	100
98-95-3	Nitrobenzene	U	360	1.0	330	360	99
78-59-1	Isophorone	U	360	1.0	330	360	81
88-75-5	2-Nitrophenol	U	650	1.0	600	650	180
105-67-9	2,4-Dimethylphenol	U	540	1.0	500	540	180
111-91-1	Bis(2-Chloroethoxy)methane	U	360	1.0	330	360	100
120-83-2	2,4-Dichlorophenol	U	540	1.0	500	540	160
106-47-8	4-Chloroaniline	U	540	1.0	500	540	130
105-60-2	Caprolactam	U	540	1.0	500	540	160
59-50-7	4-Chloro-3-Methylphenol	U	540	1.0	500	540	180
88-06-2	2,4,6-Trichlorophenol	U	540	1.0	500	540	170
95-95-4	2,4,5-Trichlorophenol	U	540	1.0	500	540	170
91-58-7	2-Chloronaphthalene	U	360	1.0	330	360	94
92-52-4	1,1'-Biphenyl	U	360	1.0	330	360	79
88-74-4	2-Nitroaniline	U	540	1.0	500	540	81
131-11-3	Dimethyl Phthalate	U	360	1.0	330	360	85
606-20-2	2,6-Dinitrotoluene	U	360	1.0	330	360	86
208-96-8	Acenaphthylene	U	360	1.0	330	360	76
99-09-2	3-Nitroaniline	U	540	1.0	500	540	100
83-32-9	Acenaphthene	U	360	1.0	330	360	70
51-28-5	2,4-Dinitrophenol	U	1300	1.0	1200	1300	410
132-64-9	Dibenzofuran	U	360	1.0	330	360	86
100-02-7	4-Nitrophenol	U	1300	1.0	1200	1300	340
121-14-2	2,4-Dinitrotoluene	U	360	1.0	330	360	92
84-66-2	Diethylphthalate	U	360	1.0	330	360	87
7005-72-3	4-Chlorophenyl-phenylether	U	360	1.0	330	360	85
100-01-6	4-Nitroaniline	U	540	1.0	500	540	140
534-52-1	4,6-Dinitro-2-Methylphenol	U	1300	1.0	1200	1300	360
86-30-6	N-Nitrosodiphenylamine	U	720	1.0	660	720	240
101-55-3	4-Bromophenyl-phenylether	U	360	1.0	330	360	92
1912-24-9	Atrazine	U	360	1.0	330	360	99
87-86-5	Pentachlorophenol	U	890	1.0	820	890	260
120-12-7	Anthracene	U	360	1.0	330	360	91
86-74-8	Carbazole	U	540	1.0	500	540	120

LW
4/15/09

KATAHDIN ANALYTICAL SERVICES
Report of Analytical Results

Client: CH2MHill
Project: TO-009 Lejeune
PO No:
Sample Date: 01/10/09
Received Date: 01/13/09
Extraction Date: 01/15/09
Analysis Date: 27-JAN-2009 04:35
Report Date: 02/03/2009
Matrix: SOIL
% Solids: 92.2

Lab ID: SC0147-37
Client ID: MR08-IS272-8-9-09A
SDG: TO9-33
Extracted by: GN
Extraction Method: SW846 3540
Analyst: JCG
Analysis Method: SW846 8270C
Lab Prep Batch: WG59817
Units: ug/Kgdrywt

CAS#	Compound	Flags	Results	DF	PQL	Adj.PQL	Adj.MDL
84-74-2	Di-n-butylphthalate	U	360	1.0	330	360	110
85-68-7	Butylbenzylphthalate	U	360	1.0	330	360	100
91-94-1	3,3'-Dichlorobenzidine	U	540	1.0	500	540	120
218-01-9	Chrysene	U	360	1.0	330	360	100
117-81-7	bis(2-Ethylhexyl)phthalate		470	1.0	330	360	110
117-84-0	Di-n-octylphthalate	U	360	1.0	330	360	230
367-12-4	2-Fluorophenol		76%				
13127-88-3	Phenol-D6		77%				
4165-60-0	Nitrobenzene-D5		70%				
321-60-8	2-Fluorobiphenyl		75%				
118-79-6	2,4,6-Tribromophenol		74%				
1718-51-0	Terphenyl-D14		93%				

Rew
4/15/09

20

KATAHDIN ANALYTICAL SERVICES
Report of Analytical Results

Client: CH2MHill
Project: TO-009 Lejeune
PO No:
Sample Date: 01/10/09
Received Date: 01/13/09
Extraction Date: 01/15/09
Analysis Date: 27-JAN-2009 06:41
Report Date: 02/03/2009
Matrix: SOIL
% Solids: 90.6

Lab ID: SC0147-39
Client ID: MR08-SS283-09A
SDG: TO9-33
Extracted by: GN
Extraction Method: SW846 3540
Analyst: JCG
Analysis Method: SW846 8270C
Lab Prep Batch: WG59817
Units: ug/Kgdrywt

Use reanalysis

RE

CAS#	Compound	Flags	Results	DF	PQL	Adj.PQL	Adj.MDL
100-52-7	Benzaldehyde	U	550	1.0	500	550	130
108-95-2	Phenol	U	550	1.0	500	550	170
111-44-4	Bis(2-Chloroethyl)ether	U	360	1.0	330	360	89
95-57-8	2-Chlorophenol	U	550	1.0	500	550	180
95-48-7	2-Methylphenol	U	660	1.0	600	660	220
108-60-1	2,2'-Oxybis(1-chloropropane)	U	360	1.0	330	360	98
98-86-2	Acetophenone	U	660	1.0	600	660	200
621-64-7	N-Nitroso-di-n-propylamine	U	360	1.0	330	360	92
65794-96-9	3&4-Methylphenol	U	660	1.0	600	660	210
67-72-1	Hexachloroethane	U	360	1.0	330	360	100
98-95-3	Nitrobenzene	U	360	1.0	330	360	100
78-59-1	Isophorone	U	360	1.0	330	360	83
88-75-5	2-Nitrophenol	U	660	1.0	600	660	180
105-67-9	2,4-Dimethylphenol	U	550	1.0	500	550	180
111-91-1	Bis(2-Chloroethoxy)methane	U	360	1.0	330	360	100
120-83-2	2,4-Dichlorophenol	U	550	1.0	500	550	160
106-47-8	4-Chloroaniline	U	550	1.0	500	550	130
105-60-2	Caprolactam	U	550	1.0	500	550	160
59-50-7	4-Chloro-3-Methylphenol	U	550	1.0	500	550	180
88-06-2	2,4,6-Trichlorophenol	U	550	1.0	500	550	170
95-95-4	2,4,5-Trichlorophenol	U	550	1.0	500	550	170
91-58-7	2-Chloronaphthalene	U	360	1.0	330	360	96
92-52-4	1,1'-Biphenyl	U	360	1.0	330	360	80
88-74-4	2-Nitroaniline	U	550	1.0	500	550	83
131-11-3	Dimethyl Phthalate	U	360	1.0	330	360	86
606-20-2	2,6-Dinitrotoluene	U	360	1.0	330	360	87
208-96-8	Acenaphthylene	U	360	1.0	330	360	77
99-09-2	3-Nitroaniline	U	550	1.0	500	550	100
83-32-9	Acenaphthene	U	360	1.0	330	360	72
51-28-5	2,4-Dinitrophenol	U	1300	1.0	1200	1300	420
132-64-9	Dibenzofuran	U	360	1.0	330	360	87
100-02-7	4-Nitrophenol	U	1300	1.0	1200	1300	340
121-14-2	2,4-Dinitrotoluene	U	360	1.0	330	360	94
84-66-2	Diethylphthalate	U	360	1.0	330	360	88
7005-72-3	4-Chlorophenyl-phenylether	U	360	1.0	330	360	86
100-01-6	4-Nitroaniline	U	550	1.0	500	550	150
534-52-1	4,6-Dinitro-2-Methylphenol	U	1300	1.0	1200	1300	370
86-30-6	N-Nitrosodiphenylamine	U	730	1.0	660	730	240
101-55-3	4-Bromophenyl-phenylether	U	360	1.0	330	360	94
1912-24-9	Atrazine	U	360	1.0	330	360	100
87-86-5	Pentachlorophenol	U	900	1.0	820	900	260
120-12-7	Anthracene	U	360	1.0	330	360	93
86-74-8	Carbazole	U	550	1.0	500	550	120

lw 4/15/09

KATAHDIN ANALYTICAL SERVICES
Report of Analytical Results

Client: CH2MHill
Project: TO-009 Lejeune
PO No:
Sample Date: 01/10/09
Received Date: 01/13/09
Extraction Date: 01/15/09
Analysis Date: 27-JAN-2009 06:41
Report Date: 02/03/2009
Matrix: SOIL
% Solids: 90.6

Lab ID: SC0147-39
Client ID: MR08-SS283-09A
SDG: TO9-33
Extracted by: GN
Extraction Method: SW846 3540
Analyst: JCG
Analysis Method: SW846 8270C
Lab Prep Batch: WG59817
Units: ug/Kgdrywt

Use reanalysis

CAS#	Compound	Flags	Results	DF	PQL	Adj.PQL	Adj.MDL
84-74-2	Di-n-butylphthalate	U	360	1.0	330	360	110
85-68-7	Butylbenzylphthalate	~~U~~ UJ	360	1.0	330	360	100
91-94-1	3,3'-Dichlorobenzidine	~~U~~ UJ	550	1.0	500	550	120
218-01-9	Chrysene	~~U~~ UJ	360	1.0	330	360	100
117-81-7	bis(2-Ethylhexyl)phthalate	~~U~~	360	1.0	330	360	110
117-84-0	Di-n-octylphthalate	~~U~~	360	1.0	330	360	230
367-12-4	2-Fluorophenol		61%				
13127-88-3	Phenol-D6		67%				
4165-60-0	Nitrobenzene-D5		58%				
321-60-8	2-Fluorobiphenyl		75%				
118-79-6	2,4,6-Tribromophenol		66%				
1718-51-0	Terphenyl-D14		110%				

ISL

Page 02 of 02 G4223.D

R RE

MW 4/15/09

20RE

KATAHDIN ANALYTICAL SERVICES
Report of Analytical Results

Client: CH2MHill
Project: TO-009 Lejeune
PO No:
Sample Date: 01/10/09
Received Date: 01/13/09
Extraction Date: 01/15/09
Analysis Date: 27-JAN-2009 15:39
Report Date: 02/03/2009
Matrix: SOIL
% Solids: 90.6

Lab ID: SC0147-39RA
Client ID: MR08-SS283-09A
SDG: TO9-33
Extracted by: GN
Extraction Method: SW846 3540
Analyst: JLP
Analysis Method: SW846 8270C
Lab Prep Batch: WG59817
Units: ug/Kgdrywt

CAS#	Compound	Flags	Results	DF	PQL	Adj.PQL	Adj.MDL
100-52-7	Benzaldehyde	U	550	1.0	500	550	130
108-95-2	Phenol	U	550	1.0	500	550	170
111-44-4	Bis(2-Chloroethyl)ether	U	360	1.0	330	360	89
95-57-8	2-Chlorophenol	U	550	1.0	500	550	180
95-48-7	2-Methylphenol	U	660	1.0	600	660	220
108-60-1	2,2'-Oxybis(1-chloropropane)	U	360	1.0	330	360	98
98-86-2	Acetophenone	U	660	1.0	600	660	200
621-64-7	N-Nitroso-di-n-propylamine	U	360	1.0	330	360	92
65794-96-9	3&4-Methylphenol	U	660	1.0	600	660	210
67-72-1	Hexachloroethane	U	360	1.0	330	360	100
98-95-3	Nitrobenzene	U	360	1.0	330	360	100
78-59-1	Isophorone	U	360	1.0	330	360	83
88-75-5	2-Nitrophenol	U	660	1.0	600	660	180
105-67-9	2,4-Dimethylphenol	U	550	1.0	500	550	180
111-91-1	Bis(2-Chloroethoxy)methane	U	360	1.0	330	360	100
120-83-2	2,4-Dichlorophenol	U	550	1.0	500	550	160
106-47-8	4-Chloroaniline	U	550	1.0	500	550	130
105-60-2	Caprolactam	U	550	1.0	500	550	160
59-50-7	4-Chloro-3-Methylphenol	U	550	1.0	500	550	180
88-06-2	2,4,6-Trichlorophenol	U	550	1.0	500	550	170
95-95-4	2,4,5-Trichlorophenol	U	550	1.0	500	550	170
91-58-7	2-Chloronaphthalene	U	360	1.0	330	360	96
92-52-4	1,1'-Biphenyl	U	360	1.0	330	360	80
88-74-4	2-Nitroaniline	U	550	1.0	500	550	83
131-11-3	Dimethyl Phthalate	U	360	1.0	330	360	86
606-20-2	2,6-Dinitrotoluene	U	360	1.0	330	360	87
208-96-8	Acenaphthylene	U	360	1.0	330	360	77
99-09-2	3-Nitroaniline	U	550	1.0	500	550	100
83-32-9	Acenaphthene	U	360	1.0	330	360	72
51-28-5	2,4-Dinitrophenol	U	1300	1.0	1200	1300	420
132-64-9	Dibenzofuran	U	360	1.0	330	360	87
100-02-7	4-Nitrophenol	U	1300	1.0	1200	1300	340
121-14-2	2,4-Dinitrotoluene	U	360	1.0	330	360	94
84-66-2	Diethylphthalate	U	360	1.0	330	360	88
7005-72-3	4-Chlorophenyl-phenylether	U	360	1.0	330	360	86
100-01-6	4-Nitroaniline	U	550	1.0	500	550	150
534-52-1	4,6-Dinitro-2-Methylphenol	U	1300	1.0	1200	1300	370
86-30-6	N-Nitrosodiphenylamine	U	730	1.0	660	730	240
101-55-3	4-Bromophenyl-phenylether	U	360	1.0	330	360	94
1912-24-9	Atrazine	U	360	1.0	330	360	100
87-86-5	Pentachlorophenol	U	900	1.0	820	900	260
120-12-7	Anthracene	U	360	1.0	330	360	93
86-74-8	Carbazole	U	550	1.0	500	550	120

MW 2/15/09

ZORE

KATAHDIN ANALYTICAL SERVICES
Report of Analytical Results

Client: CH2MHill
Project: TO-009 Lejeune
PO No:
Sample Date: 01/10/09
Received Date: 01/13/09
Extraction Date: 01/15/09
Analysis Date: 27-JAN-2009 15:39
Report Date: 02/03/2009
Matrix: SOIL
% Solids: 90.6

Lab ID: SC0147-39RA
Client ID: MR08-SS283-09A
SDG: TO9-33
Extracted by: GN
Extraction Method: SW846 3540
Analyst: JLP
Analysis Method: SW846 8270C
Lab Prep Batch: WG59817
Units: ug/Kgdrywt

CAS#	Compound	Flags	Results	DF	PQL	Adj.PQL	Adj.MDL	
84-74-2	Di-n-butylphthalate	U	360	1.0	330	360	110	
85-68-7	Butylbenzylphthalate	U	360	1.0	330	360	100	
91-94-1	3,3'-Dichlorobenzidine	U	550	1.0	500	550	120	
218-01-9	Chrysene	U	360	1.0	330	360	100	
117-81-7	bis(2-Ethylhexyl)phthalate	U	360	1.0	330	360	110	
117-84-0	Di-n-octylphthalate	~~U~~ UJ	360	1.0	330	360	230	JSL
367-12-4	2-Fluorophenol		56%					
13127-88-3	Phenol-D6		61%					
4165-60-0	Nitrobenzene-D5		52%					
321-60-8	2-Fluorobiphenyl		71%					
118-79-6	2,4,6-Tribromophenol		59%					
1718-51-0	Terphenyl-D14		99%					

LW 4/15/09

ENVIRONMENTAL
Data Services, Inc.

POLYNUCLEAR AROMATIC COMPOUNDS BY 8270SIM

USEPA Region IV - Level IV Review

Site: MCB Camp Lejeune, TO-09 SDG #: TO9-34

Client: CH2M HILL, Inc., Virginia Beach, Virginia Date: April 16, 2009

Laboratory: Katahdin Analytical Services, Scarborough, Maine Reviewer: Nancy Weaver

EDS ID	Client Sample ID	Laboratory Sample ID	Matrix
1	MR08-IS204-6-7-09A	SC0148-2	Soil
1MS	MR08-IS204-6-7-09AMS	SC0148-2MS	Soil
1MSD	MR08-IS204-6-7-09AMSD	SC0148-2MSD	Soil
2	MR08-IS283-6-7-09A	SC0148-4	Soil
3	MR08-SS170-09A	SC0148-6	Soil
4	MR08-IS170-6-7-09A	SC0148-8	Soil
5	MR08-SS169-09A	SC0148-10	Soil
6	MR08-IS169-7-8-09A	SC0148-12	Soil
7	MR08-SS169D-09A	SC0148-14	Soil
8	MR08-IS169D-7-8-09A	SC0148-16	Soil
9	MR08-SS193-09A	SC0148-18	Soil
10	MR08-IS193-6-7-09A	SC0148-20	Soil
11	MR08-SS194-09A	SC0148-22	Soil
12	MR08-IS194-8-9-09A	SC0148-24	Soil
13	MR08-SS217-09A	SC0148-26	Soil
14	MR08-IS217-8-9-09A	SC0148-28	Soil
15	MR08-SS218-09A	SC0148-30	Soil
16	MR08-IS218-7-8-09A	SC0148-32	Soil
17	MR08-SS241-09A	SC0148-34	Soil
18	MR08-IS241-8-9-09A	SC0148-36	Soil
19	MR08-SS242-09A	SC0148-38	Soil
20	MR08-IS242-6-7-09A	SC0148-40	Soil

The USEPA "Contract Laboratory Program National Functional Guidelines for Organic Data Review," October 1999, and professional judgment were used in evaluating the data in this summary report.

Holding Times - All samples were extracted within 14 days for soil samples and analyzed within 40 days for all samples.

GC/MS Tuning - All of the DFTPP tunes in the initial and continuing calibrations met the percent relative abundance criteria.

Initial Calibration - The initial calibrations exhibited acceptable %RSD and mean RRF values.

Continuing Calibration - The continuing calibrations exhibited acceptable %D and RRF values.

Surrogates - All samples exhibited acceptable surrogate recoveries.

MS/MSD - The MS/MSD sample exhibited acceptable %R and RPD values.

Laboratory Control Sample - The LCS samples exhibited acceptable %R values.

Internal Standard (IS) Area Performance - All internal standards met response and retention time (RT) criteria.

Method Blank - The method blanks were free of contamination.

Field, Equipment Blank - Field QC results are summarized below.

Blank ID	Compound	Conc. ug/L	Action Level ug/kg	Qualifier	Affected Samples
MR08-FB01011009	None - ND	-	-	-	-
MR08-EB01011109-SS	None - ND	-	-	-	-

Field Duplicates - Field duplicate results are summarized below.

Compound	MR08-SS169-09A ug/kg	MR08-SS169D-09A ug/kg	RPD	Qualifier
Naphthalene	3.3	11 U	NC	None
2-Methylnaphthalene	4.8	11 U	NC	None
Phenanthrene	31	24	25%	None
Fluoranthene	61	77	23%	None
Pyrene	54	57	5%	None
Benzo (a) anthracene	27	34	23%	None
Benzo (b) fluoranthene	44	52	17%	None
Benzo (k) fluoranthene	39	39	0%	None
Benzo (a) pyrene	34	37	8%	None
Indeno (1, 2, 3-cd) pyrene	23	22	4%	None
Dibenzo (a, h) anthracene	9.1	9.2	1%	None
Benzo (g, h, i) perylene	24	24	0%	None

Compound	MR08-IS169-7-8-09A ug/kg	MR08-IS169D-7-8-09A ug/kg	RPD	Qualifier
None	ND	ND	-	-

Compound Quantitation - No discrepancies were identified.

KATAHDIN ANALYTICAL SERVICES
Report of Analytical Results

Client: CH2MHill
Project: TO-009 Lejeune
PO No:
Sample Date: 01/09/09
Received Date: 01/13/09
Extraction Date: 01/15/09
Analysis Date: 29-JAN-2009 23:29
Report Date: 02/03/2009
Matrix: SOIL
% Solids: 88.0

Lab ID: SC0148-2
Client ID: 08-IS204-6-7-09A
SDG: TO9-34
Extracted by: GN
Extraction Method: SW846 3550
Analyst: JCG
Analysis Method: SW846 M8270C
Lab Prep Batch: WG59825
Units: ug/Kgdrywt

CAS#	Compound	Flags	Results	DF	PQL	Adj.PQL	Adj.MDL
91-20-3	Naphthalene	U	11	1.0	10	11	3.0
91-57-6	2-Methylnaphthalene	U	11	1.0	10	11	2.5
86-73-7	Fluorene	U	11	1.0	10	11	3.6
85-01-8	Phenanthrene	U	11	1.0	10	11	2.0
206-44-0	Fluoranthene	U	11	1.0	10	11	2.0
129-00-0	Pyrene	U	11	1.0	10	11	2.4
56-55-3	Benzo(a)anthracene	U	11	1.0	10	11	2.2
205-99-2	Benzo(b)fluoranthene	U	11	1.0	10	11	2.7
207-08-9	Benzo(k)fluoranthene	U	11	1.0	10	11	3.5
50-32-8	Benzo(a)pyrene	U	11	1.0	10	11	3.7
193-39-5	Indeno(1,2,3-cd)pyrene	U	11	1.0	10	11	2.2
53-70-3	Dibenzo(a,h)anthracene	U	11	1.0	10	11	2.0
191-24-2	Benzo(g,h,i)perylene	U	11	1.0	10	11	2.3
118-74-1	Hexachlorobenzene	U	11	1.0	10	11	2.0
87-68-3	Hexachlorobutadiene	U	11	1.0	10	11	2.6
77-47-4	Hexachlorocyclopentadiene	U	11	1.0	10	11	1.7
7297-45-2	2-Methylnaphthalene-D10		74%				
367-12-4	2,4-Dibromophenol		84%				
81103-79-9	Fluorene-d10		94%				
1718-51-1	Pyrene-D10		98%				

LW
4/16/09

KATAHDIN ANALYTICAL SERVICES
Report of Analytical Results

Client: CH2MHill
Project: TO-009 Lejeune
PO No:
Sample Date: 01/10/09
Received Date: 01/13/09
Extraction Date: 01/15/09
Analysis Date: 30-JAN-2009 00:10
Report Date: 02/03/2009
Matrix: SOIL
% Solids: 94.6

Lab ID: SC0148-4
Client ID: MR08-IS283-6-7-09A
SDG: TO9-34
Extracted by: GN
Extraction Method: SW846 3550
Analyst: JCG
Analysis Method: SW846 M8270C
Lab Prep Batch: WG59825
Units: ug/Kgdrywt

CAS#	Compound	Flags	Results	DF	PQL	Adj.PQL	Adj.MDL
91-20-3	Naphthalene	U	10	1.0	10	10	2.7
91-57-6	2-Methylnaphthalene	U	10	1.0	10	10	2.3
86-73-7	Fluorene	U	10	1.0	10	10	3.4
85-01-8	Phenanthrene	U	10	1.0	10	10	1.9
206-44-0	Fluoranthene	U	10	1.0	10	10	1.9
129-00-0	Pyrene	U	10	1.0	10	10	2.2
56-55-3	Benzo(a)anthracene	U	10	1.0	10	10	2.0
205-99-2	Benzo(b)fluoranthene	U	10	1.0	10	10	2.5
207-08-9	Benzo(k)fluoranthene	U	10	1.0	10	10	3.3
50-32-8	Benzo(a)pyrene	U	10	1.0	10	10	3.5
193-39-5	Indeno(1,2,3-cd)pyrene	U	10	1.0	10	10	2.0
53-70-3	Dibenzo(a,h)anthracene	U	10	1.0	10	10	1.9
191-24-2	Benzo(g,h,i)perylene	U	10	1.0	10	10	2.1
118-74-1	Hexachlorobenzene	U	10	1.0	10	10	1.9
87-68-3	Hexachlorobutadiene	U	10	1.0	10	10	2.4
77-47-4	Hexachlorocyclopentadiene	U	10	1.0	10	10	1.6
7297-45-2	2-Methylnaphthalene-D10		81%				
367-12-4	2,4-Dibromophenol		83%				
81103-79-9	Fluorene-d10		94%				
1718-51-1	Pyrene-D10		93%				

hw
4/16/09

KATAHDIN ANALYTICAL SERVICES
Report of Analytical Results

Client: CH2MHill
Project: TO-009 Lejeune
PO No:
Sample Date: 01/11/09
Received Date: 01/13/09
Extraction Date: 01/15/09
Analysis Date: 30-JAN-2009 04:17
Report Date: 02/03/2009
Matrix: SOIL
% Solids: 91.8

Lab ID: SC0148-6
Client ID: MR08-SS170-09A
SDG: TO9-34
Extracted by: GN
Extraction Method: SW846 3550
Analyst: JCG
Analysis Method: SW846 M8270C
Lab Prep Batch: WG59825
Units: ug/Kgdrywt

CAS#	Compound	Flags	Results	DF	PQL	Adj.PQL	Adj.MDL
91-20-3	Naphthalene	U	11	1.0	10	11	2.8
91-57-6	2-Methylnaphthalene	J	3.7	1.0	10	11	2.4
86-73-7	Fluorene	U	11	1.0	10	11	3.5
85-01-8	Phenanthrene		36	1.0	10	11	2.0
206-44-0	Fluoranthene		69	1.0	10	11	2.0
129-00-0	Pyrene		55	1.0	10	11	2.3
56-55-3	Benzo(a)anthracene		36	1.0	10	11	2.1
205-99-2	Benzo(b)fluoranthene		44	1.0	10	11	2.6
207-08-9	Benzo(k)fluoranthene		36	1.0	10	11	3.4
50-32-8	Benzo(a)pyrene		35	1.0	10	11	3.6
193-39-5	Indeno(1,2,3-cd)pyrene		22	1.0	10	11	2.1
53-70-3	Dibenzo(a,h)anthracene	J	9.4	1.0	10	11	2.0
191-24-2	Benzo(g,h,i)perylene		24	1.0	10	11	2.2
118-74-1	Hexachlorobenzene	U	11	1.0	10	11	2.0
87-68-3	Hexachlorobutadiene	U	11	1.0	10	11	2.5
77-47-4	Hexachlorocyclopentadiene	U	11	1.0	10	11	1.6
7297-45-2	2-Methylnaphthalene-D10		74%				
367-12-4	2,4-Dibromophenol		100%				
81103-79-9	Fluorene-d10		102%				
1718-51-1	Pyrene-D10		95%				

hw 4/16/09

KATAHDIN ANALYTICAL SERVICES
Report of Analytical Results

Client: CH2MHill
Project: TO-009 Lejeune
PO No:
Sample Date: 01/11/09
Received Date: 01/13/09
Extraction Date: 01/15/09
Analysis Date: 30-JAN-2009 00:52
Report Date: 02/03/2009
Matrix: SOIL
% Solids: 86.7

Lab ID: SC0148-8
Client ID: MR08-IS170-6-7-09A
SDG: TO9-34
Extracted by: GN
Extraction Method: SW846 3550
Analyst: JCG
Analysis Method: SW846 M8270C
Lab Prep Batch: WG59825
Units: ug/Kgdrywt

CAS#	Compound	Flags	Results	DF	PQL	Adj.PQL	Adj.MDL
91-20-3	Naphthalene		14	1.0	10	12	3.0
91-57-6	2-Methylnaphthalene	J	4.0	1.0	10	12	2.5
86-73-7	Fluorene	U	12	1.0	10	12	3.7
85-01-8	Phenanthrene		18	1.0	10	12	2.1
206-44-0	Fluoranthene		18	1.0	10	12	2.1
129-00-0	Pyrene		12	1.0	10	12	2.4
56-55-3	Benzo(a)anthracene	J	6.9	1.0	10	12	2.2
205-99-2	Benzo(b)fluoranthene	J	7.6	1.0	10	12	2.8
207-08-9	Benzo(k)fluoranthene	J	7.0	1.0	10	12	3.6
50-32-8	Benzo(a)pyrene	J	6.2	1.0	10	12	3.8
193-39-5	Indeno(1,2,3-cd)pyrene	J	4.8	1.0	10	12	2.2
53-70-3	Dibenzo(a,h)anthracene	J	2.3	1.0	10	12	2.1
191-24-2	Benzo(g,h,i)perylene	J	5.6	1.0	10	12	2.3
118-74-1	Hexachlorobenzene	U	12	1.0	10	12	2.1
87-68-3	Hexachlorobutadiene	U	12	1.0	10	12	2.6
77-47-4	Hexachlorocyclopentadiene	U	12	1.0	10	12	1.7
7297-45-2	2-Methylnaphthalene-D10		80%				
367-12-4	2,4-Dibromophenol		90%				
81103-79-9	Fluorene-d10		100%				
1718-51-1	Pyrene-D10		93%				

lw
4/16/09

KATAHDIN ANALYTICAL SERVICES
Report of Analytical Results

Client: CH2MHill
Project: TO-009 Lejeune
PO No:
Sample Date: 01/11/09
Received Date: 01/13/09
Extraction Date: 01/15/09
Analysis Date: 30-JAN-2009 04:58
Report Date: 02/03/2009
Matrix: SOIL
% Solids: 92.6

Lab ID: SC0148-10
Client ID: MR08-SS169-09A
SDG: TO9-34
Extracted by: GN
Extraction Method: SW846 3550
Analyst: JCG
Analysis Method: SW846 M8270C
Lab Prep Batch: WG59825
Units: ug/Kgdrywt

CAS#	Compound	Flags	Results	DF	PQL	Adj.PQL	Adj.MDL
91-20-3	Naphthalene	J	3.3	1.0	10	11	2.8
91-57-6	2-Methylnaphthalene	J	4.8	1.0	10	11	2.4
86-73-7	Fluorene	U	11	1.0	10	11	3.4
85-01-8	Phenanthrene		31	1.0	10	11	1.9
206-44-0	Fluoranthene		61	1.0	10	11	1.9
129-00-0	Pyrene		54	1.0	10	11	2.3
56-55-3	Benzo(a)anthracene		27	1.0	10	11	2.0
205-99-2	Benzo(b)fluoranthene		44	1.0	10	11	2.6
207-08-9	Benzo(k)fluoranthene		39	1.0	10	11	3.3
50-32-8	Benzo(a)pyrene		34	1.0	10	11	3.6
193-39-5	Indeno(1,2,3-cd)pyrene		23	1.0	10	11	2.0
53-70-3	Dibenzo(a,h)anthracene	J	9.1	1.0	10	11	1.9
191-24-2	Benzo(g,h,i)perylene		24	1.0	10	11	2.2
118-74-1	Hexachlorobenzene	U	11	1.0	10	11	1.9
87-68-3	Hexachlorobutadiene	U	11	1.0	10	11	2.5
77-47-4	Hexachlorocyclopentadiene	U	11	1.0	10	11	1.6
7297-45-2	2-Methylnaphthalene-D10		64%				
367-12-4	2,4-Dibromophenol		99%				
81103-79-9	Fluorene-d10		98%				
1718-51-1	Pyrene-D10		92%				

lw 4/16/09

6

KATAHDIN ANALYTICAL SERVICES
Report of Analytical Results

Client: CH2MHill
Project: TO-009 Lejeune
PO No:
Sample Date: 01/11/09
Received Date: 01/13/09
Extraction Date: 01/16/09
Analysis Date: 29-JAN-2009 20:45
Report Date: 02/03/2009
Matrix: SOIL
% Solids: 84.8

Lab ID: SC0148-12
Client ID: MR08-IS169-7-8-09A
SDG: TO9-34
Extracted by: CB
Extraction Method: SW846 3550
Analyst: JCG
Analysis Method: SW846 M8270C
Lab Prep Batch: WG59868
Units: ug/Kgdrywt

CAS#	Compound	Flags	Results	DF	PQL	Adj.PQL	Adj.MDL
91-20-3	Naphthalene	U	12	1.0	10	12	3.1
91-57-6	2-Methylnaphthalene	U	12	1.0	10	12	2.6
86-73-7	Fluorene	U	12	1.0	10	12	3.8
85-01-8	Phenanthrene	U	12	1.0	10	12	2.1
206-44-0	Fluoranthene	U	12	1.0	10	12	2.1
129-00-0	Pyrene	U	12	1.0	10	12	2.5
56-55-3	Benzo(a)anthracene	U	12	1.0	10	12	2.2
205-99-2	Benzo(b)fluoranthene	U	12	1.0	10	12	2.8
207-08-9	Benzo(k)fluoranthene	U	12	1.0	10	12	3.6
50-32-8	Benzo(a)pyrene	U	12	1.0	10	12	3.9
193-39-5	Indeno(1,2,3-cd)pyrene	U	12	1.0	10	12	2.2
53-70-3	Dibenzo(a,h)anthracene	U	12	1.0	10	12	2.1
191-24-2	Benzo(g,h,i)perylene	U	12	1.0	10	12	2.4
118-74-1	Hexachlorobenzene	U	12	1.0	10	12	2.1
87-68-3	Hexachlorobutadiene	U	12	1.0	10	12	2.7
77-47-4	Hexachlorocyclopentadiene	U	12	1.0	10	12	1.8
7297-45-2	2-Methylnaphthalene-D10		62%				
367-12-4	2,4-Dibromophenol		76%				
81103-79-9	Fluorene-d10		82%				
1718-51-1	Pyrene-D10		86%				

lw 4/16/09

7

KATAHDIN ANALYTICAL SERVICES
Report of Analytical Results

Client: CH2MHill
Project: TO-009 Lejeune
PO No:
Sample Date: 01/11/09
Received Date: 01/13/09
Extraction Date: 01/16/09
Analysis Date: 30-JAN-2009 03:36
Report Date: 02/03/2009
Matrix: SOIL
% Solids: 92.7

Lab ID: SC0148-14
Client ID: MR08-SS169D-09A
SDG: TO9-34
Extracted by: CB
Extraction Method: SW846 3550
Analyst: JCG
Analysis Method: SW846 M8270C
Lab Prep Batch: WG59868
Units: ug/Kgdrywt

CAS#	Compound	Flags	Results	DF	PQL	Adj.PQL	Adj.MDL
91-20-3	Naphthalene	U	11	1.0	10	11	2.8
91-57-6	2-Methylnaphthalene	U	11	1.0	10	11	2.4
86-73-7	Fluorene	U	11	1.0	10	11	3.4
85-01-8	Phenanthrene		24	1.0	10	11	1.9
206-44-0	Fluoranthene		77	1.0	10	11	1.9
129-00-0	Pyrene		57	1.0	10	11	2.3
56-55-3	Benzo(a)anthracene		34	1.0	10	11	2.0
205-99-2	Benzo(b)fluoranthene		52	1.0	10	11	2.6
207-08-9	Benzo(k)fluoranthene		39	1.0	10	11	3.3
50-32-8	Benzo(a)pyrene		37	1.0	10	11	3.6
193-39-5	Indeno(1,2,3-cd)pyrene		22	1.0	10	11	2.0
53-70-3	Dibenzo(a,h)anthracene	J	9.2	1.0	10	11	1.9
191-24-2	Benzo(g,h,i)perylene		24	1.0	10	11	2.2
118-74-1	Hexachlorobenzene	U	11	1.0	10	11	1.9
87-68-3	Hexachlorobutadiene	U	11	1.0	10	11	2.5
77-47-4	Hexachlorocyclopentadiene	U	11	1.0	10	11	1.6
7297-45-2	2-Methylnaphthalene-D10		70%				
367-12-4	2,4-Dibromophenol		97%				
81103-79-9	Fluorene-d10		99%				
1718-51-1	Pyrene-D10		91%				

lw 4/16/09

KATAHDIN ANALYTICAL SERVICES
Report of Analytical Results

Client: CH2MHill
Project: TO-009 Lejeune
PO No:
Sample Date: 01/11/09
Received Date: 01/13/09
Extraction Date: 01/16/09
Analysis Date: 29-JAN-2009 21:26
Report Date: 02/03/2009
Matrix: SOIL
% Solids: 84.7

Lab ID: SC0148-16
Client ID: MR08-IS169D-7-8-09A
SDG: TO9-34
Extracted by: CB
Extraction Method: SW846 3550
Analyst: JCG
Analysis Method: SW846 M8270C
Lab Prep Batch: WG59868
Units: ug/Kgdrywt

CAS#	Compound	Flags	Results	DF	PQL	Adj.PQL	Adj.MDL
91-20-3	Naphthalene	U	12	1.0	10	12	3.1
91-57-6	2-Methylnaphthalene	U	12	1.0	10	12	2.6
86-73-7	Fluorene	U	12	1.0	10	12	3.8
85-01-8	Phenanthrene	U	12	1.0	10	12	2.1
206-44-0	Fluoranthene	U	12	1.0	10	12	2.1
129-00-0	Pyrene	U	12	1.0	10	12	2.5
56-55-3	Benzo(a)anthracene	U	12	1.0	10	12	2.2
205-99-2	Benzo(b)fluoranthene	U	12	1.0	10	12	2.8
207-08-9	Benzo(k)fluoranthene	U	12	1.0	10	12	3.6
50-32-8	Benzo(a)pyrene	U	12	1.0	10	12	3.9
193-39-5	Indeno(1,2,3-cd)pyrene	U	12	1.0	10	12	2.2
53-70-3	Dibenzo(a,h)anthracene	U	12	1.0	10	12	2.1
191-24-2	Benzo(g,h,i)perylene	U	12	1.0	10	12	2.4
118-74-1	Hexachlorobenzene	U	12	1.0	10	12	2.1
87-68-3	Hexachlorobutadiene	U	12	1.0	10	12	2.7
77-47-4	Hexachlorocyclopentadiene	U	12	1.0	10	12	1.8
7297-45-2	2-Methylnaphthalene-D10		70%				
367-12-4	2,4-Dibromophenol		84%				
81103-79-9	Fluorene-d10		89%				
1718-51-1	Pyrene-D10		91%				

lw 4/16/09

KATAHDIN ANALYTICAL SERVICES
Report of Analytical Results

Client: CH2MHill
Project: TO-009 Lejeune
PO No:
Sample Date: 01/11/09
Received Date: 01/13/09
Extraction Date: 01/16/09
Analysis Date: 30-JAN-2009 01:33
Report Date: 02/03/2009
Matrix: SOIL
% Solids: 91.4

Lab ID: SC0148-18
Client ID: MR08-SS193-09A
SDG: TO9-34
Extracted by: CB
Extraction Method: SW846 3550
Analyst: JCG
Analysis Method: SW846 M8270C
Lab Prep Batch: WG59868
Units: ug/Kgdrywt

CAS#	Compound	Flags	Results	DF	PQL	Adj.PQL	Adj.MDL
91-20-3	Naphthalene	U	11	1.0	10	11	2.8
91-57-6	2-Methylnaphthalene	U	11	1.0	10	11	2.4
86-73-7	Fluorene	U	11	1.0	10	11	3.5
85-01-8	Phenanthrene		21	1.0	10	11	2.0
206-44-0	Fluoranthene		59	1.0	10	11	2.0
129-00-0	Pyrene		50	1.0	10	11	2.3
56-55-3	Benzo(a)anthracene		28	1.0	10	11	2.1
205-99-2	Benzo(b)fluoranthene		49	1.0	10	11	2.6
207-08-9	Benzo(k)fluoranthene		35	1.0	10	11	3.4
50-32-8	Benzo(a)pyrene		35	1.0	10	11	3.6
193-39-5	Indeno(1,2,3-cd)pyrene		26	1.0	10	11	2.1
53-70-3	Dibenzo(a,h)anthracene	J	9.9	1.0	10	11	2.0
191-24-2	Benzo(g,h,i)perylene		32	1.0	10	11	2.2
118-74-1	Hexachlorobenzene	U	11	1.0	10	11	2.0
87-68-3	Hexachlorobutadiene	U	11	1.0	10	11	2.5
77-47-4	Hexachlorocyclopentadiene	U	11	1.0	10	11	1.6
7297-45-2	2-Methylnaphthalene-D10		81%				
367-12-4	2,4-Dibromophenol		101%				
81103-79-9	Fluorene-d10		105%				
1718-51-1	Pyrene-D10		105%				

hw
4/16/09

KATAHDIN ANALYTICAL SERVICES
Report of Analytical Results

Client: CH2MHill
Project: TO-009 Lejeune
PO No:
Sample Date: 01/11/09
Received Date: 01/13/09
Extraction Date: 01/16/09
Analysis Date: 29-JAN-2009 22:07
Report Date: 02/03/2009
Matrix: SOIL
% Solids: 82.4

Lab ID: SC0148-20
Client ID: MR08-IS193-6-7-09A
SDG: TO9-34
Extracted by: CB
Extraction Method: SW846 3550
Analyst: JCG
Analysis Method: SW846 M8270C
Lab Prep Batch: WG59868
Units: ug/Kgdrywt

CAS#	Compound	Flags	Results	DF	PQL	Adj.PQL	Adj.MDL
91-20-3	Naphthalene	U	12	1.0	10	12	3.2
91-57-6	2-Methylnaphthalene	U	12	1.0	10	12	2.7
86-73-7	Fluorene	U	12	1.0	10	12	3.9
85-01-8	Phenanthrene	U	12	1.0	10	12	2.2
206-44-0	Fluoranthene	U	12	1.0	10	12	2.2
129-00-0	Pyrene	U	12	1.0	10	12	2.5
56-55-3	Benzo(a)anthracene	U	12	1.0	10	12	2.3
205-99-2	Benzo(b)fluoranthene	U	12	1.0	10	12	2.9
207-08-9	Benzo(k)fluoranthene	U	12	1.0	10	12	3.8
50-32-8	Benzo(a)pyrene	U	12	1.0	10	12	4.0
193-39-5	Indeno(1,2,3-cd)pyrene	U	12	1.0	10	12	2.3
53-70-3	Dibenzo(a,h)anthracene	U	12	1.0	10	12	2.2
191-24-2	Benzo(g,h,i)perylene	U	12	1.0	10	12	2.4
118-74-1	Hexachlorobenzene	U	12	1.0	10	12	2.2
87-68-3	Hexachlorobutadiene	U	12	1.0	10	12	2.8
77-47-4	Hexachlorocyclopentadiene	U	12	1.0	10	12	1.8
7297-45-2	2-Methylnaphthalene-D10		65%				
367-12-4	2,4-Dibromophenol		82%				
81103-79-9	Fluorene-d10		88%				
1718-51-1	Pyrene-D10		86%				

lw 4/16/09

11

KATAHDIN ANALYTICAL SERVICES
Report of Analytical Results

Client: CH2MHill
Project: TO-009 Lejeune
PO No:
Sample Date: 01/11/09
Received Date: 01/13/09
Extraction Date: 01/16/09
Analysis Date: 30-JAN-2009 02:14
Report Date: 02/03/2009
Matrix: SOIL
% Solids: 92.4

Lab ID: SC0148-22
Client ID: MR08-SS194-09A
SDG: TO9-34
Extracted by: CB
Extraction Method: SW846 3550
Analyst: JCG
Analysis Method: SW846 M8270C
Lab Prep Batch: WG59868
Units: ug/Kgdrywt

CAS#	Compound	Flags	Results	DF	PQL	Adj.PQL	Adj.MDL
91-20-3	Naphthalene	U	11	1.0	10	11	2.8
91-57-6	2-Methylnaphthalene	U	11	1.0	10	11	2.4
86-73-7	Fluorene	U	11	1.0	10	11	3.5
85-01-8	Phenanthrene	J	10	1.0	10	11	1.9
206-44-0	Fluoranthene		35	1.0	10	11	1.9
129-00-0	Pyrene		28	1.0	10	11	2.3
56-55-3	Benzo(a)anthracene		19	1.0	10	11	2.0
205-99-2	Benzo(b)fluoranthene		37	1.0	10	11	2.6
207-08-9	Benzo(k)fluoranthene		26	1.0	10	11	3.4
50-32-8	Benzo(a)pyrene		25	1.0	10	11	3.6
193-39-5	Indeno(1,2,3-cd)pyrene		19	1.0	10	11	2.0
53-70-3	Dibenzo(a,h)anthracene	J	7.2	1.0	10	11	1.9
191-24-2	Benzo(g,h,i)perylene		22	1.0	10	11	2.2
118-74-1	Hexachlorobenzene	U	11	1.0	10	11	1.9
87-68-3	Hexachlorobutadiene	U	11	1.0	10	11	2.5
77-47-4	Hexachlorocyclopentadiene	U	11	1.0	10	11	1.6
7297-45-2	2-Methylnaphthalene-D10		71%				
367-12-4	2,4-Dibromophenol		99%				
81103-79-9	Fluorene-d10		100%				
1718-51-1	Pyrene-D10		99%				

LW
4/16/09

KATAHDIN ANALYTICAL SERVICES
Report of Analytical Results

Client: CH2MHill
Project: TO-009 Lejeune
PO No:
Sample Date: 01/11/09
Received Date: 01/13/09
Extraction Date: 01/16/09
Analysis Date: 29-JAN-2009 22:48
Report Date: 02/03/2009
Matrix: SOIL
% Solids: 90.3

Lab ID: SC0148-24
Client ID: MR08-IS194-8-9-09A
SDG: TO9-34
Extracted by: CB
Extraction Method: SW846 3550
Analyst: JCG
Analysis Method: SW846 M8270C
Lab Prep Batch: WG59868
Units: ug/Kgdrywt

CAS#	Compound	Flags	Results	DF	PQL	Adj.PQL	Adj.MDL
91-20-3	Naphthalene	U	11	1.0	10	11	2.9
91-57-6	2-Methylnaphthalene	U	11	1.0	10	11	2.4
86-73-7	Fluorene	U	11	1.0	10	11	3.5
85-01-8	Phenanthrene	U	11	1.0	10	11	2.0
206-44-0	Fluoranthene	U	11	1.0	10	11	2.0
129-00-0	Pyrene	U	11	1.0	10	11	2.3
56-55-3	Benzo(a)anthracene	U	11	1.0	10	11	2.1
205-99-2	Benzo(b)fluoranthene	U	11	1.0	10	11	2.6
207-08-9	Benzo(k)fluoranthene	U	11	1.0	10	11	3.4
50-32-8	Benzo(a)pyrene	U	11	1.0	10	11	3.6
193-39-5	Indeno(1,2,3-cd)pyrene	U	11	1.0	10	11	2.1
53-70-3	Dibenzo(a,h)anthracene	U	11	1.0	10	11	2.0
191-24-2	Benzo(g,h,i)perylene	U	11	1.0	10	11	2.2
118-74-1	Hexachlorobenzene	U	11	1.0	10	11	2.0
87-68-3	Hexachlorobutadiene	U	11	1.0	10	11	2.5
77-47-4	Hexachlorocyclopentadiene	U	11	1.0	10	11	1.7
7297-45-2	2-Methylnaphthalene-D10		68%				
367-12-4	2,4-Dibromophenol		81%				
81103-79-9	Fluorene-d10		87%				
1718-51-1	Pyrene-D10		90%				

lw
4/16/09

KATAHDIN ANALYTICAL SERVICES
Report of Analytical Results

Client: CH2MHill
Project: TO-009 Lejeune
PO No:
Sample Date: 01/11/09
Received Date: 01/13/09
Extraction Date: 01/16/09
Analysis Date: 30-JAN-2009 02:55
Report Date: 02/03/2009
Matrix: SOIL
% Solids: 90.0

Lab ID: SC0148-26
Client ID: MR08-SS217-09A
SDG: TO9-34
Extracted by: CB
Extraction Method: SW846 3550
Analyst: JCG
Analysis Method: SW846 M8270C
Lab Prep Batch: WG59868
Units: ug/Kgdrywt

CAS#	Compound	Flags	Results	DF	PQL	Adj.PQL	Adj.MDL
91-20-3	Naphthalene	U	11	1.0	10	11	2.9
91-57-6	2-Methylnaphthalene	U	11	1.0	10	11	2.4
86-73-7	Fluorene	U	11	1.0	10	11	3.6
85-01-8	Phenanthrene		24	1.0	10	11	2.0
206-44-0	Fluoranthene		85	1.0	10	11	2.0
129-00-0	Pyrene		64	1.0	10	11	2.3
56-55-3	Benzo(a)anthracene		38	1.0	10	11	2.1
205-99-2	Benzo(b)fluoranthene		68	1.0	10	11	2.7
207-08-9	Benzo(k)fluoranthene		44	1.0	10	11	3.4
50-32-8	Benzo(a)pyrene		47	1.0	10	11	3.7
193-39-5	Indeno(1,2,3-cd)pyrene		33	1.0	10	11	2.1
53-70-3	Dibenzo(a,h)anthracene		12	1.0	10	11	2.0
191-24-2	Benzo(g,h,i)perylene		37	1.0	10	11	2.2
118-74-1	Hexachlorobenzene	U	11	1.0	10	11	2.0
87-68-3	Hexachlorobutadiene	U	11	1.0	10	11	2.6
77-47-4	Hexachlorocyclopentadiene	U	11	1.0	10	11	1.7
7297-45-2	2-Methylnaphthalene-D10		68%				
367-12-4	2,4-Dibromophenol		99%				
81103-79-9	Fluorene-d10		96%				
1718-51-1	Pyrene-D10		94%				

RW 4/16/09

KATAHDIN ANALYTICAL SERVICES
Report of Analytical Results

Client: CH2MHill
Project: TO-009 Lejeune
PO No:
Sample Date: 01/11/09
Received Date: 01/13/09
Extraction Date: 01/19/09
Analysis Date: 30-JAN-2009 21:32
Report Date: 02/03/2009
Matrix: SOIL
% Solids: 88.2

Lab ID: SC0148-28
Client ID: MR08-IS217-8-9-09A
SDG: TO9-34
Extracted by: AC
Extraction Method: SW846 3550
Analyst: JCG
Analysis Method: SW846 M8270C
Lab Prep Batch: WG59940
Units: ug/Kgdrywt

CAS#	Compound	Flags	Results	DF	PQL	Adj.PQL	Adj.MDL
91-20-3	Naphthalene	U	11	1.0	10	11	2.9
91-57-6	2-Methylnaphthalene	U	11	1.0	10	11	2.5
86-73-7	Fluorene	U	11	1.0	10	11	3.6
85-01-8	Phenanthrene	U	11	1.0	10	11	2.0
206-44-0	Fluoranthene	U	11	1.0	10	11	2.0
129-00-0	Pyrene	U	11	1.0	10	11	2.4
56-55-3	Benzo(a)anthracene	U	11	1.0	10	11	2.2
205-99-2	Benzo(b)fluoranthene	U	11	1.0	10	11	2.7
207-08-9	Benzo(k)fluoranthene	U	11	1.0	10	11	3.5
50-32-8	Benzo(a)pyrene	U	11	1.0	10	11	3.7
193-39-5	Indeno(1,2,3-cd)pyrene	U	11	1.0	10	11	2.2
53-70-3	Dibenzo(a,h)anthracene	U	11	1.0	10	11	2.0
191-24-2	Benzo(g,h,i)perylene	U	11	1.0	10	11	2.3
118-74-1	Hexachlorobenzene	U	11	1.0	10	11	2.0
87-68-3	Hexachlorobutadiene	U	11	1.0	10	11	2.6
77-47-4	Hexachlorocyclopentadiene	U	11	1.0	10	11	1.7
7297-45-2	2-Methylnaphthalene-D10		79%				
367-12-4	2,4-Dibromophenol		85%				
81103-79-9	Fluorene-d10		88%				
1718-51-1	Pyrene-D10		90%				

lw
4/16/09

15

KATAHDIN ANALYTICAL SERVICES
Report of Analytical Results

Client: CH2MHill
Project: TO-009 Lejeune
PO No:
Sample Date: 01/11/09
Received Date: 01/13/09
Extraction Date: 01/19/09
Analysis Date: 31-JAN-2009 16:22
Report Date: 02/03/2009
Matrix: SOIL
% Solids: 93.3

Lab ID: SC0148-30
Client ID: MR08-SS218-09A
SDG: TO9-34
Extracted by: AC
Extraction Method: SW846 3550
Analyst: JCG
Analysis Method: SW846 M8270C
Lab Prep Batch: WG59940
Units: ug/Kgdrywt

CAS#	Compound	Flags	Results	DF	PQL	Adj.PQL	Adj.MDL
91-20-3	Naphthalene	U	11	1.0	10	11	2.8
91-57-6	2-Methylnaphthalene	U	11	1.0	10	11	2.4
86-73-7	Fluorene	U	11	1.0	10	11	3.4
85-01-8	Phenanthrene		58	1.0	10	11	1.9
206-44-0	Fluoranthene		97	1.0	10	11	1.9
129-00-0	Pyrene		72	1.0	10	11	2.2
56-55-3	Benzo(a)anthracene		43	1.0	10	11	2.0
205-99-2	Benzo(b)fluoranthene		62	1.0	10	11	2.6
207-08-9	Benzo(k)fluoranthene		38	1.0	10	11	3.3
50-32-8	Benzo(a)pyrene		45	1.0	10	11	3.5
193-39-5	Indeno(1,2,3-cd)pyrene		30	1.0	10	11	2.0
53-70-3	Dibenzo(a,h)anthracene	J	10	1.0	10	11	1.9
191-24-2	Benzo(g,h,i)perylene		32	1.0	10	11	2.1
118-74-1	Hexachlorobenzene	U	11	1.0	10	11	1.9
87-68-3	Hexachlorobutadiene	U	11	1.0	10	11	2.5
77-47-4	Hexachlorocyclopentadiene	U	11	1.0	10	11	1.6
7297-45-2	2-Methylnaphthalene-D10		88%				
367-12-4	2,4-Dibromophenol		97%				
81103-79-9	Fluorene-d10		102%				
1718-51-1	Pyrene-D10		97%				

CW
4/16/09

KATAHDIN ANALYTICAL SERVICES
Report of Analytical Results

Client: CH2MHill
Project: TO-009 Lejeune
PO No:
Sample Date: 01/11/09
Received Date: 01/13/09
Extraction Date: 01/19/09
Analysis Date: 30-JAN-2009 22:13
Report Date: 02/03/2009
Matrix: SOIL
% Solids: 94.4

Lab ID: SC0148-32
Client ID: MR08-IS218-7-8-09A
SDG: TO9-34
Extracted by: AC
Extraction Method: SW846 3550
Analyst: JCG
Analysis Method: SW846 M8270C
Lab Prep Batch: WG59940
Units: ug/Kgdrywt

CAS#	Compound	Flags	Results	DF	PQL	Adj.PQL	Adj.MDL
91-20-3	Naphthalene	U	10	1.0	10	10	2.8
91-57-6	2-Methylnaphthalene	U	10	1.0	10	10	2.3
86-73-7	Fluorene	U	10	1.0	10	10	3.4
85-01-8	Phenanthrene	U	10	1.0	10	10	1.9
206-44-0	Fluoranthene	U	10	1.0	10	10	1.9
129-00-0	Pyrene	U	10	1.0	10	10	2.2
56-55-3	Benzo(a)anthracene	U	10	1.0	10	10	2.0
205-99-2	Benzo(b)fluoranthene	U	10	1.0	10	10	2.5
207-08-9	Benzo(k)fluoranthene	U	10	1.0	10	10	3.3
50-32-8	Benzo(a)pyrene	U	10	1.0	10	10	3.5
193-39-5	Indeno(1,2,3-cd)pyrene	U	10	1.0	10	10	2.0
53-70-3	Dibenzo(a,h)anthracene	U	10	1.0	10	10	1.9
191-24-2	Benzo(g,h,i)perylene	U	10	1.0	10	10	2.1
118-74-1	Hexachlorobenzene	U	10	1.0	10	10	1.9
87-68-3	Hexachlorobutadiene	U	10	1.0	10	10	2.4
77-47-4	Hexachlorocyclopentadiene	U	10	1.0	10	10	1.6
7297-45-2	2-Methylnaphthalene-D10		84%				
367-12-4	2,4-Dibromophenol		89%				
81103-79-9	Fluorene-d10		92%				
1718-51-1	Pyrene-D10		96%				

lw 4/16/09

KATAHDIN ANALYTICAL SERVICES
Report of Analytical Results

Client: CH2MHill
Project: TO-009 Lejeune
PO No:
Sample Date: 01/11/09
Received Date: 01/13/09
Extraction Date: 01/19/09
Analysis Date: 31-JAN-2009 17:44
Report Date: 02/03/2009
Matrix: SOIL
% Solids: 84.8

Lab ID: SC0148-34
Client ID: MR08-SS241-09A
SDG: TO9-34
Extracted by: AC
Extraction Method: SW846 3550
Analyst: JCG
Analysis Method: SW846 M8270C
Lab Prep Batch: WG59940
Units: ug/Kgdrywt

CAS#	Compound	Flags	Results	DF	PQL	Adj.PQL	Adj.MDL
91-20-3	Naphthalene	U	12	1.0	10	12	3.1
91-57-6	2-Methylnaphthalene	U	12	1.0	10	12	2.6
86-73-7	Fluorene	J	5.2	1.0	10	12	3.8
85-01-8	Phenanthrene		100	1.0	10	12	2.1
206-44-0	Fluoranthene		230	1.0	10	12	2.1
129-00-0	Pyrene		200	1.0	10	12	2.5
56-55-3	Benzo(a)anthracene		120	1.0	10	12	2.2
205-99-2	Benzo(b)fluoranthene		250	1.0	10	12	2.8
207-08-9	Benzo(k)fluoranthene		61	1.0	10	12	3.6
50-32-8	Benzo(a)pyrene		130	1.0	10	12	3.9
193-39-5	Indeno(1,2,3-cd)pyrene		87	1.0	10	12	2.2
53-70-3	Dibenzo(a,h)anthracene		37	1.0	10	12	2.1
191-24-2	Benzo(g,h,i)perylene		89	1.0	10	12	2.4
118-74-1	Hexachlorobenzene	U	12	1.0	10	12	2.1
87-68-3	Hexachlorobutadiene	U	12	1.0	10	12	2.7
77-47-4	Hexachlorocyclopentadiene	U	12	1.0	10	12	1.8
7297-45-2	2-Methylnaphthalene-D10		85%				
367-12-4	2,4-Dibromophenol		91%				
81103-79-9	Fluorene-d10		96%				
1718-51-1	Pyrene-D10		104%				

lw
4/16/09

KATAHDIN ANALYTICAL SERVICES
Report of Analytical Results

Client: CH2MHill
Project: TO-009 Lejeune
PO No:
Sample Date: 01/11/09
Received Date: 01/13/09
Extraction Date: 01/19/09
Analysis Date: 30-JAN-2009 22:54
Report Date: 02/03/2009
Matrix: SOIL
% Solids: 90.8

Lab ID: SC0148-36
Client ID: MR08-IS241-8-9-09A
SDG: TO9-34
Extracted by: AC
Extraction Method: SW846 3550
Analyst: JCG
Analysis Method: SW846 M8270C
Lab Prep Batch: WG59940
Units: ug/Kgdrywt

CAS#	Compound	Flags	Results	DF	PQL	Adj.PQL	Adj.MDL
91-20-3	Naphthalene	U	11	1.0	10	11	2.9
91-57-6	2-Methylnaphthalene	U	11	1.0	10	11	2.4
86-73-7	Fluorene	U	11	1.0	10	11	3.5
85-01-8	Phenanthrene	U	11	1.0	10	11	2.0
206-44-0	Fluoranthene	U	11	1.0	10	11	2.0
129-00-0	Pyrene	U	11	1.0	10	11	2.3
56-55-3	Benzo(a)anthracene	U	11	1.0	10	11	2.1
205-99-2	Benzo(b)fluoranthene	U	11	1.0	10	11	2.6
207-08-9	Benzo(k)fluoranthene	U	11	1.0	10	11	3.4
50-32-8	Benzo(a)pyrene	U	11	1.0	10	11	3.6
193-39-5	Indeno(1,2,3-cd)pyrene	U	11	1.0	10	11	2.1
53-70-3	Dibenzo(a,h)anthracene	U	11	1.0	10	11	2.0
191-24-2	Benzo(g,h,i)perylene	U	11	1.0	10	11	2.2
118-74-1	Hexachlorobenzene	U	11	1.0	10	11	2.0
87-68-3	Hexachlorobutadiene	U	11	1.0	10	11	2.5
77-47-4	Hexachlorocyclopentadiene	U	11	1.0	10	11	1.6
7297-45-2	2-Methylnaphthalene-D10		68%				
367-12-4	2,4-Dibromophenol		78%				
81103-79-9	Fluorene-d10		82%				
1718-51-1	Pyrene-D10		84%				

MW 4/16/09

KATAHDIN ANALYTICAL SERVICES
Report of Analytical Results

Client: CH2MHill
Project: TO-009 Lejeune
PO No:
Sample Date: 01/11/09
Received Date: 01/13/09
Extraction Date: 01/19/09
Analysis Date: 31-JAN-2009 17:03
Report Date: 02/03/2009
Matrix: SOIL
% Solids: 88.5

Lab ID: SC0148-38
Client ID: MR08-SS242-09A
SDG: TO9-34
Extracted by: AC
Extraction Method: SW846 3550
Analyst: JCG
Analysis Method: SW846 M8270C
Lab Prep Batch: WG59940
Units: ug/Kgdrywt

CAS#	Compound	Flags	Results	DF	PQL	Adj.PQL	Adj.MDL
91-20-3	Naphthalene	U	11	1.0	10	11	2.9
91-57-6	2-Methylnaphthalene	U	11	1.0	10	11	2.5
86-73-7	Fluorene	U	11	1.0	10	11	3.6
85-01-8	Phenanthrene		35	1.0	10	11	2.0
206-44-0	Fluoranthene		85	1.0	10	11	2.0
129-00-0	Pyrene		70	1.0	10	11	2.4
56-55-3	Benzo(a)anthracene		39	1.0	10	11	2.1
205-99-2	Benzo(b)fluoranthene		62	1.0	10	11	2.7
207-08-9	Benzo(k)fluoranthene		34	1.0	10	11	3.5
50-32-8	Benzo(a)pyrene		43	1.0	10	11	3.7
193-39-5	Indeno(1,2,3-cd)pyrene		30	1.0	10	11	2.1
53-70-3	Dibenzo(a,h)anthracene	J	11	1.0	10	11	2.0
191-24-2	Benzo(g,h,i)perylene		33	1.0	10	11	2.3
118-74-1	Hexachlorobenzene	U	11	1.0	10	11	2.0
87-68-3	Hexachlorobutadiene	U	11	1.0	10	11	2.6
77-47-4	Hexachlorocyclopentadiene	U	11	1.0	10	11	1.7
7297-45-2	2-Methylnaphthalene-D10		84%				
367-12-4	2,4-Dibromophenol		99%				
81103-79-9	Fluorene-d10		101%				
1718-51-1	Pyrene-D10		99%				

lw
4/16/09

KATAHDIN ANALYTICAL SERVICES
Report of Analytical Results

Client: CH2MHill
Project: TO-009 Lejeune
PO No:
Sample Date: 01/11/09
Received Date: 01/13/09
Extraction Date: 01/19/09
Analysis Date: 31-JAN-2009 10:51
Report Date: 02/03/2009
Matrix: SOIL
% Solids: 90.3

Lab ID: SC0148-40
Client ID: MR08-IS242-6-7-09A
SDG: TO9-34
Extracted by: AC
Extraction Method: SW846 3550
Analyst: JCG
Analysis Method: SW846 M8270C
Lab Prep Batch: WG59940
Units: ug/Kgdrywt

CAS#	Compound	Flags	Results	DF	PQL	Adj.PQL	Adj.MDL
91-20-3	Naphthalene	U	11	1.0	10	11	2.9
91-57-6	2-Methylnaphthalene	U	11	1.0	10	11	2.4
86-73-7	Fluorene	U	11	1.0	10	11	3.5
85-01-8	Phenanthrene	U	11	1.0	10	11	2.0
206-44-0	Fluoranthene	U	11	1.0	10	11	2.0
129-00-0	Pyrene	U	11	1.0	10	11	2.3
56-55-3	Benzo(a)anthracene	U	11	1.0	10	11	2.1
205-99-2	Benzo(b)fluoranthene	U	11	1.0	10	11	2.6
207-08-9	Benzo(k)fluoranthene	U	11	1.0	10	11	3.4
50-32-8	Benzo(a)pyrene	U	11	1.0	10	11	3.6
193-39-5	Indeno(1,2,3-cd)pyrene	U	11	1.0	10	11	2.1
53-70-3	Dibenzo(a,h)anthracene	U	11	1.0	10	11	2.0
191-24-2	Benzo(g,h,i)perylene	U	11	1.0	10	11	2.2
118-74-1	Hexachlorobenzene	U	11	1.0	10	11	2.0
87-68-3	Hexachlorobutadiene	U	11	1.0	10	11	2.5
77-47-4	Hexachlorocyclopentadiene	U	11	1.0	10	11	1.7
7297-45-2	2-Methylnaphthalene-D10		84%				
367-12-4	2,4-Dibromophenol		90%				
81103-79-9	Fluorene-d10		96%				
1718-51-1	Pyrene-D10		97%				

lw
4/16/09

ENVIRONMENTAL
Data Services, Inc.

SEMIVOLATILE ORGANIC COMPOUNDS
USEPA Region IV - Level IV Review

Site: MCB Camp Lejeune, TO-09 SDG #: TO9-34

Client: CH2M HILL, Inc., Virginia Beach, Virginia Date: April 16, 2009

Laboratory: Katahdin Analytical Services, Scarborough, Maine Reviewer: Nancy Weaver

EDS ID	Client Sample ID	Laboratory Sample ID	Matrix
1	MR08-IS204-6-7-09A	SC0148-1	Soil
1MS	MR08-IS204-6-7-09AMS	SC0148-1MS	Soil
1MSD	MR08-IS204-6-7-09AMSD	SC0148-1MSD	Soil
2	MR08-IS283-6-7-09A	SC0148-3	Soil
3	MR08-SS170-09A	SC0148-5	Soil
4	MR08-IS170-6-7-09A	SC0148-7	Soil
5	MR08-SS169-09A	SC0148-9	Soil
6	MR08-IS169-7-8-09A	SC0148-11	Soil
7	MR08-SS169D-09A	SC0148-13	Soil
8	MR08-IS169D-7-8-09A	SC0148-15	Soil
9	MR08-SS193-09A	SC0148-17	Soil
10	MR08-IS193-6-7-09A	SC0148-19	Soil
11	MR08-SS194-09A	SC0148-21	Soil
12	MR08-IS194-8-9-09A	SC0148-23	Soil
13	MR08-SS217-09A	SC0148-25	Soil
14	MR08-IS217-8-9-09A	SC0148-27	Soil
15	MR08-SS218-09A	SC0148-29	Soil
16	MR08-IS218-7-8-09A	SC0148-31	Soil
17	MR08-SS241-09A	SC0148-33	Soil
18	MR08-IS241-8-9-09A	SC0148-35	Soil
19	MR08-SS242-09A	SC0148-37	Soil
20	MR08-IS242-6-7-09A	SC0148-39	Soil

The USEPA "Contract Laboratory Program National Functional Guidelines for Organic Data Review," October 1999, and professional judgement were used in evaluating the data in this summary report.

Holding Times - All samples were extracted within 14 days for soil samples and analyzed within 40 days for all samples.

GC/MS Tuning - All of the DFTPP tunes in the initial and continuing calibrations met the percent relative abundance criteria.

Initial Calibration - The initial calibrations exhibited acceptable %RSD and mean RRF values except the following.

Continuing Calibration - The continuing calibrations exhibited acceptable %D and RRF values except the following.

CCAL Date	Compound	%D/RRF	Qualifier	Affected Samples
01/27/09	2, 4-Dinitrophenol	27.04%	J/UJ	14-16, 18-20
	4-Nitrophenol	28.52%	J/UJ	14-16, 18-20
01/28/09	2, 4-Dinitrophenol	27.23%	J/UJ	2-5, 17
01/29/09	2, 4-Dinitrophenol	25.06%	J/UJ	1, 6, 8-13
	4-Nitrophenol	30.47%	J/UJ	1, 6, 8-13

Surrogates - All samples exhibited acceptable surrogate recoveries.

MS/MSD - The MS/MSD sample exhibited acceptable %R and RPD values except the following.

MS/MSD Sample ID	Compound	MS/MSD %R/RPD	Qualifier
1	Dimethylphthalate	Ok/114%/Ok	None - All ND

Laboratory Control Sample - The LCS samples exhibited acceptable %R values.

Internal Standard (IS) Area Performance - All internal standards met response and retention time (RT) criteria.

Method Blank - The method blanks were free of contamination.

Field, Equipment Blank - Field QC results are summarized below.

Blank ID	Compound	Conc. ug/L	Action Level ug/kg	Qualifier	Affected Samples
MR08-FB01011009	None - ND	-	-	-	-
MR08-EB01011109-SS	Di-n-butylphthalate	1	333	None	All ND

Field Duplicates - Field duplicate results are summarized below.

Compound	MR08-SS169-09A ug/kg	MR08-SS169D-09A ug/kg	RPD	Qualifier
bis (2-Ethylhexyl) phthalate	170	140	19%	None

Compound	MR08-IS169D-7-8-09A ug/kg	MR08-IS169D-7-8-09A ug/kg	RPD	Qualifier
bis (2-Ethylhexyl) phthalate	120	150	22%	None

Tentatively Identified Compounds (TICs) - TICs were not reported.

Compound Quantitation - No discrepancies were identified.

KATAHDIN ANALYTICAL SERVICES
Report of Analytical Results

Client: CH2MHill
Project: TO-009 Lejeune
PO No:
Sample Date: 01/09/09
Received Date: 01/13/09
Extraction Date: 01/15/09
Analysis Date: 29-JAN-2009 13:46
Report Date: 02/03/2009
Matrix: SOIL
% Solids: 88.0

Lab ID: SC0148-1RA
Client ID: 08-IS204-6-7-09A
SDG: TO9-34
Extracted by: GN
Extraction Method: SW846 3540
Analyst: JLP
Analysis Method: SW846 8270C
Lab Prep Batch: WG59817
Units: ug/Kgdrywt

CAS#	Compound	Flags	Results	DF	PQL	Adj.PQL	Adj.MDL	
100-52-7	Benzaldehyde	U	570	1.0	500	570	140	
108-95-2	Phenol	U	570	1.0	500	570	180	
111-44-4	Bis(2-Chloroethyl)ether	U	370	1.0	330	370	92	
95-57-8	2-Chlorophenol	U	570	1.0	500	570	190	
95-48-7	2-Methylphenol	U	680	1.0	600	680	230	
108-60-1	2,2'-Oxybis(1-chloropropane)	U	370	1.0	330	370	100	
98-86-2	Acetophenone	U	680	1.0	600	680	200	
621-64-7	N-Nitroso-di-n-propylamine	U	370	1.0	330	370	94	
65794-96-9	3&4-Methylphenol	U	680	1.0	600	680	210	
67-72-1	Hexachloroethane	U	370	1.0	330	370	110	
98-95-3	Nitrobenzene	U	370	1.0	330	370	100	
78-59-1	Isophorone	U	370	1.0	330	370	85	
88-75-5	2-Nitrophenol	U	680	1.0	600	680	190	
105-67-9	2,4-Dimethylphenol	U	570	1.0	500	570	190	
111-91-1	Bis(2-Chloroethoxy)methane	U	370	1.0	330	370	110	
120-83-2	2,4-Dichlorophenol	U	570	1.0	500	570	170	
106-47-8	4-Chloroaniline	U	570	1.0	500	570	140	
105-60-2	Caprolactam	U	570	1.0	500	570	160	
59-50-7	4-Chloro-3-Methylphenol	U	570	1.0	500	570	190	
88-06-2	2,4,6-Trichlorophenol	U	570	1.0	500	570	180	
95-95-4	2,4,5-Trichlorophenol	U	570	1.0	500	570	180	
91-58-7	2-Chloronaphthalene	U	370	1.0	330	370	99	
92-52-4	1,1'-Biphenyl	U	370	1.0	330	370	83	
88-74-4	2-Nitroaniline	U	570	1.0	500	570	85	
131-11-3	Dimethyl Phthalate	U	370	1.0	330	370	89	
606-20-2	2,6-Dinitrotoluene	U	370	1.0	330	370	90	
208-96-8	Acenaphthylene	U	370	1.0	330	370	80	
99-09-2	3-Nitroaniline	U	570	1.0	500	570	110	
83-32-9	Acenaphthene	U	370	1.0	330	370	74	
51-28-5	2,4-Dinitrophenol	~~U~~ UJ	1400	1.0	1200	1400	430	CCH
132-64-9	Dibenzofuran	U	370	1.0	330	370	90	
100-02-7	4-Nitrophenol	~~U~~ UJ	1400	1.0	1200	1400	350	CCH
121-14-2	2,4-Dinitrotoluene	U	370	1.0	330	370	96	
84-66-2	Diethylphthalate	U	370	1.0	330	370	91	
7005-72-3	4-Chlorophenyl-phenylether	U	370	1.0	330	370	89	
100-01-6	4-Nitroaniline	U	570	1.0	500	570	150	
534-52-1	4,6-Dinitro-2-Methylphenol	U	1400	1.0	1200	1400	380	
86-30-6	N-Nitrosodiphenylamine	U	750	1.0	660	750	250	
101-55-3	4-Bromophenyl-phenylether	U	370	1.0	330	370	96	
1912-24-9	Atrazine	U	370	1.0	330	370	100	
87-86-5	Pentachlorophenol	U	930	1.0	820	930	270	
120-12-7	Anthracene	U	370	1.0	330	370	95	
86-74-8	Carbazole	U	570	1.0	500	570	130	

MW
4/16/09

KATAHDIN ANALYTICAL SERVICES
Report of Analytical Results

Client: CH2MHill
Project: TO-009 Lejeune
PO No:
Sample Date: 01/09/09
Received Date: 01/13/09
Extraction Date: 01/15/09
Analysis Date: 29-JAN-2009 13:46
Report Date: 02/03/2009
Matrix: SOIL
% Solids: 88.0

Lab ID: SC0148-1RA
Client ID: 08-IS204-6-7-09A
SDG: TO9-34
Extracted by: GN
Extraction Method: SW846 3540
Analyst: JLP
Analysis Method: SW846 8270C
Lab Prep Batch: WG59817
Units: ug/Kgdrywt

CAS#	Compound	Flags	Results	DF	PQL	Adj.PQL	Adj.MDL
84-74-2	Di-n-butylphthalate	U	370	1.0	330	370	110
85-68-7	Butylbenzylphthalate	U	370	1.0	330	370	100
91-94-1	3,3'-Dichlorobenzidine	U	570	1.0	500	570	130
218-01-9	Chrysene	U	370	1.0	330	370	110
117-81-7	bis(2-Ethylhexyl)phthalate	U	370	1.0	330	370	110
117-84-0	Di-n-octylphthalate	U	370	1.0	330	370	240
367-12-4	2-Fluorophenol		74%				
13127-88-3	Phenol-D6		81%				
4165-60-0	Nitrobenzene-D5		71%				
321-60-8	2-Fluorobiphenyl		70%				
118-79-6	2,4,6-Tribromophenol		69%				
1718-51-0	Terphenyl-D14		103%				

RW
4/16/09

2

KATAHDIN ANALYTICAL SERVICES
Report of Analytical Results

Client: CH2MHill
Project: TO-009 Lejeune
PO No:
Sample Date: 01/10/09
Received Date: 01/13/09
Extraction Date: 01/15/09
Analysis Date: 28-JAN-2009 15:55
Report Date: 02/03/2009
Matrix: SOIL
% Solids: 94.6

Lab ID: SC0148-3
Client ID: MR08-IS283-6-7-09A
SDG: TO9-34
Extracted by: GN
Extraction Method: SW846 3540
Analyst: JLP
Analysis Method: SW846 8270C
Lab Prep Batch: WG59817
Units: ug/Kgdrywt

CAS#	Compound	Flags	Results	DF	PQL	Adj.PQL	Adj.MDL	
100-52-7	Benzaldehyde	U	530	1.0	500	530	130	
108-95-2	Phenol	U	530	1.0	500	530	160	
111-44-4	Bis(2-Chloroethyl)ether	U	350	1.0	330	350	86	
95-57-8	2-Chlorophenol	U	530	1.0	500	530	170	
95-48-7	2-Methylphenol	U	630	1.0	600	630	210	
108-60-1	2,2'-Oxybis(1-chloropropane)	U	350	1.0	330	350	94	
98-86-2	Acetophenone	U	630	1.0	600	630	190	
621-64-7	N-Nitroso-di-n-propylamine	U	350	1.0	330	350	88	
65794-96-9	3&4-Methylphenol	U	630	1.0	600	630	200	
67-72-1	Hexachloroethane	U	350	1.0	330	350	100	
98-95-3	Nitrobenzene	U	350	1.0	330	350	96	
78-59-1	Isophorone	U	350	1.0	330	350	79	
88-75-5	2-Nitrophenol	U	630	1.0	600	630	180	
105-67-9	2,4-Dimethylphenol	U	530	1.0	500	530	170	
111-91-1	Bis(2-Chloroethoxy)methane	U	350	1.0	330	350	100	
120-83-2	2,4-Dichlorophenol	U	530	1.0	500	530	160	
106-47-8	4-Chloroaniline	U	530	1.0	500	530	120	
105-60-2	Caprolactam	U	530	1.0	500	530	150	
59-50-7	4-Chloro-3-Methylphenol	U	530	1.0	500	530	180	
88-06-2	2,4,6-Trichlorophenol	U	530	1.0	500	530	160	
95-95-4	2,4,5-Trichlorophenol	U	530	1.0	500	530	160	
91-58-7	2-Chloronaphthalene	U	350	1.0	330	350	92	
92-52-4	1,1'-Biphenyl	U	350	1.0	330	350	77	
88-74-4	2-Nitroaniline	U	530	1.0	500	530	79	
131-11-3	Dimethyl Phthalate	U	350	1.0	330	350	82	
606-20-2	2,6-Dinitrotoluene	U	350	1.0	330	350	83	
208-96-8	Acenaphthylene	U	350	1.0	330	350	74	
99-09-2	3-Nitroaniline	U	530	1.0	500	530	99	
83-32-9	Acenaphthene	U	350	1.0	330	350	69	
51-28-5	2,4-Dinitrophenol	~~U~~ UJ	1300	1.0	1200	1300	400	CCH
132-64-9	Dibenzofuran	U	350	1.0	330	350	83	
100-02-7	4-Nitrophenol	U	1300	1.0	1200	1300	330	
121-14-2	2,4-Dinitrotoluene	U	350	1.0	330	350	90	
84-66-2	Diethylphthalate	U	350	1.0	330	350	84	
7005-72-3	4-Chlorophenyl-phenylether	U	350	1.0	330	350	82	
100-01-6	4-Nitroaniline	U	530	1.0	500	530	140	
534-52-1	4,6-Dinitro-2-Methylphenol	U	1300	1.0	1200	1300	360	
86-30-6	N-Nitrosodiphenylamine	U	700	1.0	660	700	230	
101-55-3	4-Bromophenyl-phenylether	U	350	1.0	330	350	90	
1912-24-9	Atrazine	U	350	1.0	330	350	96	
87-86-5	Pentachlorophenol	U	870	1.0	820	870	250	
120-12-7	Anthracene	U	350	1.0	330	350	89	
86-74-8	Carbazole	U	530	1.0	500	530	120	

LW 4/16/09

KATAHDIN ANALYTICAL SERVICES
Report of Analytical Results

Client: CH2MHill
Project: TO-009 Lejeune
PO No:
Sample Date: 01/10/09
Received Date: 01/13/09
Extraction Date: 01/15/09
Analysis Date: 28-JAN-2009 15:55
Report Date: 02/03/2009
Matrix: SOIL
% Solids: 94.6

Lab ID: SC0148-3
Client ID: MR08-IS283-6-7-09A
SDG: TO9-34
Extracted by: GN
Extraction Method: SW846 3540
Analyst: JLP
Analysis Method: SW846 8270C
Lab Prep Batch: WG59817
Units: ug/Kgdrywt

CAS#	Compound	Flags	Results	DF	PQL	Adj.PQL	Adj.MDL
84-74-2	Di-n-butylphthalate	U	350	1.0	330	350	110
85-68-7	Butylbenzylphthalate	U	350	1.0	330	350	98
91-94-1	3,3'-Dichlorobenzidine	U	530	1.0	500	530	120
218-01-9	Chrysene	U	350	1.0	330	350	100
117-81-7	bis(2-Ethylhexyl)phthalate	U	350	1.0	330	350	100
117-84-0	Di-n-octylphthalate	U	350	1.0	330	350	220
367-12-4	2-Fluorophenol		78%				
13127-88-3	Phenol-D6		72%				
4165-60-0	Nitrobenzene-D5		71%				
321-60-8	2-Fluorobiphenyl		72%				
118-79-6	2,4,6-Tribromophenol		54%				
1718-51-0	Terphenyl-D14		77%				

LW
4/16/09

3

KATAHDIN ANALYTICAL SERVICES
Report of Analytical Results

Client: CH2MHill
Project: TO-009 Lejeune
PO No:
Sample Date: 01/11/09
Received Date: 01/13/09
Extraction Date: 01/15/09
Analysis Date: 28-JAN-2009 19:29
Report Date: 02/03/2009
Matrix: SOIL
% Solids: 91.8

Lab ID: SC0148-5
Client ID: MR08-SS170-09A
SDG: TO9-34
Extracted by: GN
Extraction Method: SW846 3540
Analyst: JLP
Analysis Method: SW846 8270C
Lab Prep Batch: WG59817
Units: ug/Kgdrywt

CAS#	Compound	Flags	Results	DF	PQL	Adj.PQL	Adj.MDL
100-52-7	Benzaldehyde	U	540	1.0	500	540	130
108-95-2	Phenol	U	540	1.0	500	540	170
111-44-4	Bis(2-Chloroethyl)ether	U	360	1.0	330	360	88
95-57-8	2-Chlorophenol	U	540	1.0	500	540	180
95-48-7	2-Methylphenol	U	650	1.0	600	650	220
108-60-1	2,2'-Oxybis(1-chloropropane)	U	360	1.0	330	360	97
98-86-2	Acetophenone	U	650	1.0	600	650	190
621-64-7	N-Nitroso-di-n-propylamine	U	360	1.0	330	360	90
65794-96-9	3&4-Methylphenol	U	650	1.0	600	650	200
67-72-1	Hexachloroethane	U	360	1.0	330	360	100
98-95-3	Nitrobenzene	U	360	1.0	330	360	99
78-59-1	Isophorone	U	360	1.0	330	360	82
88-75-5	2-Nitrophenol	U	650	1.0	600	650	180
105-67-9	2,4-Dimethylphenol	U	540	1.0	500	540	180
111-91-1	Bis(2-Chloroethoxy)methane	U	360	1.0	330	360	100
120-83-2	2,4-Dichlorophenol	U	540	1.0	500	540	160
106-47-8	4-Chloroaniline	U	540	1.0	500	540	130
105-60-2	Caprolactam	U	540	1.0	500	540	160
59-50-7	4-Chloro-3-Methylphenol	U	540	1.0	500	540	180
88-06-2	2,4,6-Trichlorophenol	U	540	1.0	500	540	170
95-95-4	2,4,5-Trichlorophenol	U	540	1.0	500	540	170
91-58-7	2-Chloronaphthalene	U	360	1.0	330	360	95
92-52-4	1,1'-Biphenyl	U	360	1.0	330	360	80
88-74-4	2-Nitroaniline	U	540	1.0	500	540	82
131-11-3	Dimethyl Phthalate	U	360	1.0	330	360	85
606-20-2	2,6-Dinitrotoluene	U	360	1.0	330	360	86
208-96-8	Acenaphthylene	U	360	1.0	330	360	76
99-09-2	3-Nitroaniline	U	540	1.0	500	540	100
83-32-9	Acenaphthene	U	360	1.0	330	360	71
51-28-5	2,4-Dinitrophenol	~~U~~ UJ	1300	1.0	1200	1300	410 CCH
132-64-9	Dibenzofuran	U	360	1.0	330	360	86
100-02-7	4-Nitrophenol	U	1300	1.0	1200	1300	340
121-14-2	2,4-Dinitrotoluene	U	360	1.0	330	360	93
84-66-2	Diethylphthalate	U	360	1.0	330	360	87
7005-72-3	4-Chlorophenyl-phenylether	U	360	1.0	330	360	85
100-01-6	4-Nitroaniline	U	540	1.0	500	540	140
534-52-1	4,6-Dinitro-2-Methylphenol	U	1300	1.0	1200	1300	370
86-30-6	N-Nitrosodiphenylamine	U	720	1.0	660	720	240
101-55-3	4-Bromophenyl-phenylether	U	360	1.0	330	360	93
1912-24-9	Atrazine	U	360	1.0	330	360	99
87-86-5	Pentachlorophenol	U	890	1.0	820	890	260
120-12-7	Anthracene	U	360	1.0	330	360	92
86-74-8	Carbazole	U	540	1.0	500	540	120

MW 4/16/09

KATAHDIN ANALYTICAL SERVICES
Report of Analytical Results

Client: CH2MHill
Project: TO-009 Lejeune
PO No:
Sample Date: 01/11/09
Received Date: 01/13/09
Extraction Date: 01/15/09
Analysis Date: 28-JAN-2009 19:29
Report Date: 02/03/2009
Matrix: SOIL
% Solids: 91.8

Lab ID: SC0148-5
Client ID: MR08-SS170-09A
SDG: TO9-34
Extracted by: GN
Extraction Method: SW846 3540
Analyst: JLP
Analysis Method: SW846 8270C
Lab Prep Batch: WG59817
Units: ug/Kgdrywt

CAS#	Compound	Flags	Results	DF	PQL	Adj.PQL	Adj.MDL
84-74-2	Di-n-butylphthalate	U	360	1.0	330	360	110
85-68-7	Butylbenzylphthalate	U	360	1.0	330	360	100
91-94-1	3,3'-Dichlorobenzidine	U	540	1.0	500	540	120
218-01-9	Chrysene	U	360	1.0	330	360	100
117-81-7	bis(2-Ethylhexyl)phthalate	J	170	1.0	330	360	110
117-84-0	Di-n-octylphthalate	U	360	1.0	330	360	230
367-12-4	2-Fluorophenol		61%				
13127-88-3	Phenol-D6		66%				
4165-60-0	Nitrobenzene-D5		61%				
321-60-8	2-Fluorobiphenyl		72%				
118-79-6	2,4,6-Tribromophenol		79%				
1718-51-0	Terphenyl-D14		82%				

lw
4/16/09

4

KATAHDIN ANALYTICAL SERVICES
Report of Analytical Results

Client: CH2MHill
Project: TO-009 Lejeune
PO No:
Sample Date: 01/11/09
Received Date: 01/13/09
Extraction Date: 01/15/09
Analysis Date: 28-JAN-2009 16:38
Report Date: 02/03/2009
Matrix: SOIL
% Solids: 86.7

Lab ID: SC0148-7
Client ID: MR08-IS170-6-7-09A
SDG: TO9-34
Extracted by: GN
Extraction Method: SW846 3540
Analyst: JLP
Analysis Method: SW846 8270C
Lab Prep Batch: WG59817
Units: ug/Kgdrywt

CAS#	Compound	Flags	Results	DF	PQL	Adj.PQL	Adj.MDL	
100-52-7	Benzaldehyde	U	580	1.0	500	580	140	
108-95-2	Phenol	U	580	1.0	500	580	180	
111-44-4	Bis(2-Chloroethyl)ether	U	380	1.0	330	380	93	
95-57-8	2-Chlorophenol	U	580	1.0	500	580	190	
95-48-7	2-Methylphenol	U	690	1.0	600	690	230	
108-60-1	2,2'-Oxybis(1-chloropropane)	U	380	1.0	330	380	100	
98-86-2	Acetophenone	U	690	1.0	600	690	200	
621-64-7	N-Nitroso-di-n-propylamine	U	380	1.0	330	380	96	
65794-96-9	3&4-Methylphenol	U	690	1.0	600	690	220	
67-72-1	Hexachloroethane	U	380	1.0	330	380	110	
98-95-3	Nitrobenzene	U	380	1.0	330	380	100	
78-59-1	Isophorone	U	380	1.0	330	380	86	
88-75-5	2-Nitrophenol	U	690	1.0	600	690	190	
105-67-9	2,4-Dimethylphenol	U	580	1.0	500	580	190	
111-91-1	Bis(2-Chloroethoxy)methane	U	380	1.0	330	380	110	
120-83-2	2,4-Dichlorophenol	U	580	1.0	500	580	170	
106-47-8	4-Chloroaniline	U	580	1.0	500	580	140	
105-60-2	Caprolactam	U	580	1.0	500	580	170	
59-50-7	4-Chloro-3-Methylphenol	U	580	1.0	500	580	190	
88-06-2	2,4,6-Trichlorophenol	U	580	1.0	500	580	180	
95-95-4	2,4,5-Trichlorophenol	U	580	1.0	500	580	180	
91-58-7	2-Chloronaphthalene	U	380	1.0	330	380	100	
92-52-4	1,1'-Biphenyl	U	380	1.0	330	380	84	
88-74-4	2-Nitroaniline	U	580	1.0	500	580	86	
131-11-3	Dimethyl Phthalate	U	380	1.0	330	380	90	
606-20-2	2,6-Dinitrotoluene	U	380	1.0	330	380	91	
208-96-8	Acenaphthylene	U	380	1.0	330	380	81	
99-09-2	3-Nitroaniline	U	580	1.0	500	580	110	
83-32-9	Acenaphthene	U	380	1.0	330	380	75	
51-28-5	2,4-Dinitrophenol	~~U~~ UJ	1400	1.0	1200	1400	430	CCH
132-64-9	Dibenzofuran	U	380	1.0	330	380	91	
100-02-7	4-Nitrophenol	U	1400	1.0	1200	1400	360	
121-14-2	2,4-Dinitrotoluene	U	380	1.0	330	380	98	
84-66-2	Diethylphthalate	U	380	1.0	330	380	92	
7005-72-3	4-Chlorophenyl-phenylether	U	380	1.0	330	380	90	
100-01-6	4-Nitroaniline	U	580	1.0	500	580	150	
534-52-1	4,6-Dinitro-2-Methylphenol	U	1400	1.0	1200	1400	390	
86-30-6	N-Nitrosodiphenylamine	U	760	1.0	660	760	250	
101-55-3	4-Bromophenyl-phenylether	U	380	1.0	330	380	98	
1912-24-9	Atrazine	U	380	1.0	330	380	100	
87-86-5	Pentachlorophenol	U	940	1.0	820	940	270	
120-12-7	Anthracene	U	380	1.0	330	380	97	
86-74-8	Carbazole	U	580	1.0	500	580	130	

LW 4/16/09

KATAHDIN ANALYTICAL SERVICES
Report of Analytical Results

Client: CH2MHill
Project: TO-009 Lejeune
PO No:
Sample Date: 01/11/09
Received Date: 01/13/09
Extraction Date: 01/15/09
Analysis Date: 28-JAN-2009 16:38
Report Date: 02/03/2009
Matrix: SOIL
% Solids: 86.7

Lab ID: SC0148-7
Client ID: MR08-IS170-6-7-09A
SDG: TO9-34
Extracted by: GN
Extraction Method: SW846 3540
Analyst: JLP
Analysis Method: SW846 8270C
Lab Prep Batch: WG59817
Units: ug/Kgdrywt

CAS#	Compound	Flags	Results	DF	PQL	Adj.PQL	Adj.MDL
84-74-2	Di-n-butylphthalate	U	380	1.0	330	380	120
85-68-7	Butylbenzylphthalate	U	380	1.0	330	380	110
91-94-1	3,3'-Dichlorobenzidine	U	580	1.0	500	580	130
218-01-9	Chrysene	U	380	1.0	330	380	110
117-81-7	bis(2-Ethylhexyl)phthalate	U	380	1.0	330	380	110
117-84-0	Di-n-octylphthalate	U	380	1.0	330	380	240
367-12-4	2-Fluorophenol		73%				
13127-88-3	Phenol-D6		75%				
4165-60-0	Nitrobenzene-D5		70%				
321-60-8	2-Fluorobiphenyl		73%				
118-79-6	2,4,6-Tribromophenol		62%				
1718-51-0	Terphenyl-D14		80%				

lw 4/16/09

KATAHDIN ANALYTICAL SERVICES
Report of Analytical Results

Client: CH2MHill
Project: TO-009 Lejeune
PO No:
Sample Date: 01/11/09
Received Date: 01/13/09
Extraction Date: 01/15/09
Analysis Date: 28-JAN-2009 20:11
Report Date: 02/03/2009
Matrix: SOIL
% Solids: 92.6

Lab ID: SC0148-9
Client ID: MR08-SS169-09A
SDG: TO9-34
Extracted by: GN
Extraction Method: SW846 3540
Analyst: JLP
Analysis Method: SW846 8270C
Lab Prep Batch: WG59817
Units: ug/Kgdrywt

CAS#	Compound	Flags	Results	DF	PQL	Adj.PQL	Adj.MDL	
100-52-7	Benzaldehyde	U	540	1.0	500	540	130	
108-95-2	Phenol	U	540	1.0	500	540	170	
111-44-4	Bis(2-Chloroethyl)ether	U	360	1.0	330	360	87	
95-57-8	2-Chlorophenol	U	540	1.0	500	540	180	
95-48-7	2-Methylphenol	U	650	1.0	600	650	220	
108-60-1	2,2'-Oxybis(1-chloropropane)	U	360	1.0	330	360	96	
98-86-2	Acetophenone	U	650	1.0	600	650	190	
621-64-7	N-Nitroso-di-n-propylamine	U	360	1.0	330	360	90	
65794-96-9	3&4-Methylphenol	U	650	1.0	600	650	200	
67-72-1	Hexachloroethane	U	360	1.0	330	360	100	
98-95-3	Nitrobenzene	U	360	1.0	330	360	98	
78-59-1	Isophorone	U	360	1.0	330	360	81	
88-75-5	2-Nitrophenol	U	650	1.0	600	650	180	
105-67-9	2,4-Dimethylphenol	U	540	1.0	500	540	180	
111-91-1	Bis(2-Chloroethoxy)methane	U	360	1.0	330	360	100	
120-83-2	2,4-Dichlorophenol	U	540	1.0	500	540	160	
106-47-8	4-Chloroaniline	U	540	1.0	500	540	130	
105-60-2	Caprolactam	U	540	1.0	500	540	160	
59-50-7	4-Chloro-3-Methylphenol	U	540	1.0	500	540	180	
88-06-2	2,4,6-Trichlorophenol	U	540	1.0	500	540	170	
95-95-4	2,4,5-Trichlorophenol	U	540	1.0	500	540	170	
91-58-7	2-Chloronaphthalene	U	360	1.0	330	360	94	
92-52-4	1,1'-Biphenyl	U	360	1.0	330	360	79	
88-74-4	2-Nitroaniline	U	540	1.0	500	540	81	
131-11-3	Dimethyl Phthalate	U	360	1.0	330	360	84	
606-20-2	2,6-Dinitrotoluene	U	360	1.0	330	360	85	
208-96-8	Acenaphthylene	U	360	1.0	330	360	76	
99-09-2	3-Nitroaniline	U	540	1.0	500	540	100	
83-32-9	Acenaphthene	U	360	1.0	330	360	70	
51-28-5	2,4-Dinitrophenol	~~U~~ UJ	1300	1.0	1200	1300	410	CCH
132-64-9	Dibenzofuran	U	360	1.0	330	360	85	
100-02-7	4-Nitrophenol	U	1300	1.0	1200	1300	330	
121-14-2	2,4-Dinitrotoluene	U	360	1.0	330	360	92	
84-66-2	Diethylphthalate	U	360	1.0	330	360	86	
7005-72-3	4-Chlorophenyl-phenylether	U	360	1.0	330	360	84	
100-01-6	4-Nitroaniline	U	540	1.0	500	540	140	
534-52-1	4,6-Dinitro-2-Methylphenol	U	1300	1.0	1200	1300	360	
86-30-6	N-Nitrosodiphenylamine	U	710	1.0	660	710	240	
101-55-3	4-Bromophenyl-phenylether	U	360	1.0	330	360	92	
1912-24-9	Atrazine	U	360	1.0	330	360	98	
87-86-5	Pentachlorophenol	U	880	1.0	820	880	260	
120-12-7	Anthracene	U	360	1.0	330	360	91	
86-74-8	Carbazole	U	540	1.0	500	540	120	

MW 4/16/09

KATAHDIN ANALYTICAL SERVICES
Report of Analytical Results

Client: CH2MHill
Project: TO-009 Lejeune
PO No:
Sample Date: 01/11/09
Received Date: 01/13/09
Extraction Date: 01/15/09
Analysis Date: 28-JAN-2009 20:11
Report Date: 02/03/2009
Matrix: SOIL
% Solids: 92.6

Lab ID: SC0148-9
Client ID: MR08-SS169-09A
SDG: TO9-34
Extracted by: GN
Extraction Method: SW846 3540
Analyst: JLP
Analysis Method: SW846 8270C
Lab Prep Batch: WG59817
Units: ug/Kgdrywt

CAS#	Compound	Flags	Results	DF	PQL	Adj.PQL	Adj.MDL
84-74-2	Di-n-butylphthalate	U	360	1.0	330	360	110
85-68-7	Butylbenzylphthalate	U	360	1.0	330	360	100
91-94-1	3,3'-Dichlorobenzidine	U	540	1.0	500	540	120
218-01-9	Chrysene	U	360	1.0	330	360	100
117-81-7	bis(2-Ethylhexyl)phthalate	J	170	1.0	330	360	100
117-84-0	Di-n-octylphthalate	U	360	1.0	330	360	230
367-12-4	2-Fluorophenol		54%				
13127-88-3	Phenol-D6		58%				
4165-60-0	Nitrobenzene-D5		48%				
321-60-8	2-Fluorobiphenyl		62%				
118-79-6	2,4,6-Tribromophenol		75%				
1718-51-0	Terphenyl-D14		82%				

RW 4/16/09

6

KATAHDIN ANALYTICAL SERVICES
Report of Analytical Results

Client: CH2MHill
Project: TO-009 Lejeune
PO No:
Sample Date: 01/11/09
Received Date: 01/13/09
Extraction Date: 01/16/09
Analysis Date: 29-JAN-2009 09:31
Report Date: 02/03/2009
Matrix: SOIL
% Solids: 84.8

Lab ID: SC0148-11
Client ID: MR08-IS169-7-8-09A
SDG: TO9-34
Extracted by: CB
Extraction Method: SW846 3550
Analyst: JLP
Analysis Method: SW846 8270C
Lab Prep Batch: WG59867
Units: ug/Kgdrywt

CAS#	Compound	Flags	Results	DF	PQL	Adj.PQL	Adj.MDL	
100-52-7	Benzaldehyde	U	590	1.0	500	590	140	
108-95-2	Phenol	U	590	1.0	500	590	180	
111-44-4	Bis(2-Chloroethyl)ether	U	390	1.0	330	390	95	
95-57-8	2-Chlorophenol	U	590	1.0	500	590	190	
95-48-7	2-Methylphenol	U	710	1.0	600	710	240	
108-60-1	2,2'-Oxybis(1-chloropropane)	U	390	1.0	330	390	100	
98-86-2	Acetophenone	U	710	1.0	600	710	210	
621-64-7	N-Nitroso-di-n-propylamine	U	390	1.0	330	390	98	
65794-96-9	3&4-Methylphenol	U	710	1.0	600	710	220	
67-72-1	Hexachloroethane	U	390	1.0	330	390	110	
98-95-3	Nitrobenzene	U	390	1.0	330	390	110	
78-59-1	Isophorone	U	390	1.0	330	390	88	
88-75-5	2-Nitrophenol	U	710	1.0	600	710	200	
105-67-9	2,4-Dimethylphenol	U	590	1.0	500	590	190	
111-91-1	Bis(2-Chloroethoxy)methane	U	390	1.0	330	390	110	
120-83-2	2,4-Dichlorophenol	U	590	1.0	500	590	180	
106-47-8	4-Chloroaniline	U	590	1.0	500	590	140	
105-60-2	Caprolactam	U	590	1.0	500	590	170	
59-50-7	4-Chloro-3-Methylphenol	U	590	1.0	500	590	200	
88-06-2	2,4,6-Trichlorophenol	U	590	1.0	500	590	180	
95-95-4	2,4,5-Trichlorophenol	U	590	1.0	500	590	180	
91-58-7	2-Chloronaphthalene	U	390	1.0	330	390	100	
92-52-4	1,1'-Biphenyl	U	390	1.0	330	390	86	
88-74-4	2-Nitroaniline	U	590	1.0	500	590	88	
131-11-3	Dimethyl Phthalate	U	390	1.0	330	390	92	
606-20-2	2,6-Dinitrotoluene	U	390	1.0	330	390	93	
208-96-8	Acenaphthylene	U	390	1.0	330	390	82	
99-09-2	3-Nitroaniline	U	590	1.0	500	590	110	
83-32-9	Acenaphthene	U	390	1.0	330	390	77	
51-28-5	2,4-Dinitrophenol	~~U~~ UJ	1400	1.0	1200	1400	440	CCH
132-64-9	Dibenzofuran	U	390	1.0	330	390	93	
100-02-7	4-Nitrophenol	~~U~~ UJ	1400	1.0	1200	1400	360	CCH
121-14-2	2,4-Dinitrotoluene	U	390	1.0	330	390	100	
84-66-2	Diethylphthalate	U	390	1.0	330	390	94	
7005-72-3	4-Chlorophenyl-phenylether	U	390	1.0	330	390	92	
100-01-6	4-Nitroaniline	U	590	1.0	500	590	160	
534-52-1	4,6-Dinitro-2-Methylphenol	U	1400	1.0	1200	1400	400	
86-30-6	N-Nitrosodiphenylamine	U	780	1.0	660	780	260	
101-55-3	4-Bromophenyl-phenylether	U	390	1.0	330	390	100	
1912-24-9	Atrazine	U	390	1.0	330	390	110	
87-86-5	Pentachlorophenol	U	970	1.0	820	970	280	
120-12-7	Anthracene	U	390	1.0	330	390	99	
86-74-8	Carbazole	U	590	1.0	500	590	130	

CCH
4/16/09

6

KATAHDIN ANALYTICAL SERVICES
Report of Analytical Results

Client: CH2MHill
Project: TO-009 Lejeune
PO No:
Sample Date: 01/11/09
Received Date: 01/13/09
Extraction Date: 01/16/09
Analysis Date: 29-JAN-2009 09:31
Report Date: 02/03/2009
Matrix: SOIL
% Solids: 84.8

Lab ID: SC0148-11
Client ID: MR08-IS169-7-8-09A
SDG: TO9-34
Extracted by: CB
Extraction Method: SW846 3550
Analyst: JLP
Analysis Method: SW846 8270C
Lab Prep Batch: WG59867
Units: ug/Kgdrywt

CAS#	Compound	Flags	Results	DF	PQL	Adj.PQL	Adj.MDL
84-74-2	Di-n-butylphthalate	U	390	1.0	330	390	120
85-68-7	Butylbenzylphthalate	U	390	1.0	330	390	110
91-94-1	3,3'-Dichlorobenzidine	U	590	1.0	500	590	130
218-01-9	Chrysene	U	390	1.0	330	390	110
117-81-7	bis(2-Ethylhexyl)phthalate	J	120	1.0	330	390	120
117-84-0	Di-n-octylphthalate	U	390	1.0	330	390	250
367-12-4	2-Fluorophenol		56%				
13127-88-3	Phenol-D6		64%				
4165-60-0	Nitrobenzene-D5		53%				
321-60-8	2-Fluorobiphenyl		52%				
118-79-6	2,4,6-Tribromophenol		62%				
1718-51-0	Terphenyl-D14		81%				

lw
4/16/09

7

KATAHDIN ANALYTICAL SERVICES
Report of Analytical Results

Client: CH2MHill
Project: TO-009 Lejeune
PO No:
Sample Date: 01/11/09
Received Date: 01/13/09
Extraction Date: 01/16/09
Analysis Date: 30-JAN-2009 05:26
Report Date: 02/03/2009
Matrix: SOIL
% Solids: 92.7

Lab ID: SC0148-13
Client ID: MR08-SS169D-09A
SDG: TO9-34
Extracted by: CB
Extraction Method: SW846 3550
Analyst: JCG
Analysis Method: SW846 8270C
Lab Prep Batch: WG59867
Units: ug/Kgdrywt

CAS#	Compound	Flags	Results	DF	PQL	Adj.PQL	Adj.MDL
100-52-7	Benzaldehyde	U	540	1.0	500	540	130
108-95-2	Phenol	U	540	1.0	500	540	170
111-44-4	Bis(2-Chloroethyl)ether	U	360	1.0	330	360	87
95-57-8	2-Chlorophenol	U	540	1.0	500	540	180
95-48-7	2-Methylphenol	U	650	1.0	600	650	220
108-60-1	2,2'-Oxybis(1-chloropropane)	U	360	1.0	330	360	96
98-86-2	Acetophenone	U	650	1.0	600	650	190
621-64-7	N-Nitroso-di-n-propylamine	U	360	1.0	330	360	90
65794-96-9	3&4-Methylphenol	U	650	1.0	600	650	200
67-72-1	Hexachloroethane	U	360	1.0	330	360	100
98-95-3	Nitrobenzene	U	360	1.0	330	360	98
78-59-1	Isophorone	U	360	1.0	330	360	81
88-75-5	2-Nitrophenol	U	650	1.0	600	650	180
105-67-9	2,4-Dimethylphenol	U	540	1.0	500	540	180
111-91-1	Bis(2-Chloroethoxy)methane	U	360	1.0	330	360	100
120-83-2	2,4-Dichlorophenol	U	540	1.0	500	540	160
106-47-8	4-Chloroaniline	U	540	1.0	500	540	130
105-60-2	Caprolactam	U	540	1.0	500	540	160
59-50-7	4-Chloro-3-Methylphenol	U	540	1.0	500	540	180
88-06-2	2,4,6-Trichlorophenol	U	540	1.0	500	540	170
95-95-4	2,4,5-Trichlorophenol	U	540	1.0	500	540	170
91-58-7	2-Chloronaphthalene	U	360	1.0	330	360	94
92-52-4	1,1'-Biphenyl	U	360	1.0	330	360	79
88-74-4	2-Nitroaniline	U	540	1.0	500	540	81
131-11-3	Dimethyl Phthalate	U	360	1.0	330	360	84
606-20-2	2,6-Dinitrotoluene	U	360	1.0	330	360	85
208-96-8	Acenaphthylene	U	360	1.0	330	360	76
99-09-2	3-Nitroaniline	U	540	1.0	500	540	100
83-32-9	Acenaphthene	U	360	1.0	330	360	70
51-28-5	2,4-Dinitrophenol	U	1300	1.0	1200	1300	410
132-64-9	Dibenzofuran	U	360	1.0	330	360	85
100-02-7	4-Nitrophenol	U	1300	1.0	1200	1300	330
121-14-2	2,4-Dinitrotoluene	U	360	1.0	330	360	92
84-66-2	Diethylphthalate	U	360	1.0	330	360	86
7005-72-3	4-Chlorophenyl-phenylether	U	360	1.0	330	360	84
100-01-6	4-Nitroaniline	U	540	1.0	500	540	140
534-52-1	4,6-Dinitro-2-Methylphenol	U	1300	1.0	1200	1300	360
86-30-6	N-Nitrosodiphenylamine	U	710	1.0	660	710	240
101-55-3	4-Bromophenyl-phenylether	U	360	1.0	330	360	92
1912-24-9	Atrazine	U	360	1.0	330	360	98
87-86-5	Pentachlorophenol	U	880	1.0	820	880	260
120-12-7	Anthracene	U	360	1.0	330	360	91
86-74-8	Carbazole	U	540	1.0	500	540	120

RWD
4/16/09

KATAHDIN ANALYTICAL SERVICES
Report of Analytical Results

Client: CH2MHill
Project: TO-009 Lejeune
PO No:
Sample Date: 01/11/09
Received Date: 01/13/09
Extraction Date: 01/16/09
Analysis Date: 30-JAN-2009 05:26
Report Date: 02/03/2009
Matrix: SOIL
% Solids: 92.7

Lab ID: SC0148-13
Client ID: MR08-SS169D-09A
SDG: TO9-34
Extracted by: CB
Extraction Method: SW846 3550
Analyst: JCG
Analysis Method: SW846 8270C
Lab Prep Batch: WG59867
Units: ug/Kgdrywt

CAS#	Compound	Flags	Results	DF	PQL	Adj.PQL	Adj.MDL
84-74-2	Di-n-butylphthalate	U	360	1.0	330	360	110
85-68-7	Butylbenzylphthalate	U	360	1.0	330	360	100
91-94-1	3,3'-Dichlorobenzidine	U	540	1.0	500	540	120
218-01-9	Chrysene	U	360	1.0	330	360	100
117-81-7	bis(2-Ethylhexyl)phthalate	J	140	1.0	330	360	100
117-84-0	Di-n-octylphthalate	U	360	1.0	330	360	230
367-12-4	2-Fluorophenol		62%				
13127-88-3	Phenol-D6		76%				
4165-60-0	Nitrobenzene-D5		60%				
321-60-8	2-Fluorobiphenyl		66%				
118-79-6	2,4,6-Tribromophenol		78%				
1718-51-0	Terphenyl-D14		87%				

lw 4/16/09

8

KATAHDIN ANALYTICAL SERVICES
Report of Analytical Results

Client: CH2MHill
Project: TO-009 Lejeune
PO No:
Sample Date: 01/11/09
Received Date: 01/13/09
Extraction Date: 01/16/09
Analysis Date: 29-JAN-2009 10:14
Report Date: 02/03/2009
Matrix: SOIL
% Solids: 84.7

Lab ID: SC0148-15
Client ID: MR08-IS169D-7-8-09A
SDG: TO9-34
Extracted by: CB
Extraction Method: SW846 3550
Analyst: JLP
Analysis Method: SW846 8270C
Lab Prep Batch: WG59867
Units: ug/Kgdrywt

CAS#	Compound	Flags	Results	DF	PQL	Adj.PQL	Adj.MDL	
100-52-7	Benzaldehyde	U	590	1.0	500	590	140	
108-95-2	Phenol	U	590	1.0	500	590	180	
111-44-4	Bis(2-Chloroethyl)ether	U	390	1.0	330	390	96	
95-57-8	2-Chlorophenol	U	590	1.0	500	590	190	
95-48-7	2-Methylphenol	U	710	1.0	600	710	240	
108-60-1	2,2'-Oxybis(1-chloropropane)	U	390	1.0	330	390	100	
98-86-2	Acetophenone	U	710	1.0	600	710	210	
621-64-7	N-Nitroso-di-n-propylamine	U	390	1.0	330	390	98	
65794-96-9	3&4-Methylphenol	U	710	1.0	600	710	220	
67-72-1	Hexachloroethane	U	390	1.0	330	390	110	
98-95-3	Nitrobenzene	U	390	1.0	330	390	110	
78-59-1	Isophorone	U	390	1.0	330	390	88	
88-75-5	2-Nitrophenol	U	710	1.0	600	710	200	
105-67-9	2,4-Dimethylphenol	U	590	1.0	500	590	190	
111-91-1	Bis(2-Chloroethoxy)methane	U	390	1.0	330	390	110	
120-83-2	2,4-Dichlorophenol	U	590	1.0	500	590	180	
106-47-8	4-Chloroaniline	U	590	1.0	500	590	140	
105-60-2	Caprolactam	U	590	1.0	500	590	170	
59-50-7	4-Chloro-3-Methylphenol	U	590	1.0	500	590	200	
88-06-2	2,4,6-Trichlorophenol	U	590	1.0	500	590	180	
95-95-4	2,4,5-Trichlorophenol	U	590	1.0	500	590	180	
91-58-7	2-Chloronaphthalene	U	390	1.0	330	390	100	
92-52-4	1,1'-Biphenyl	U	390	1.0	330	390	86	
88-74-4	2-Nitroaniline	U	590	1.0	500	590	88	
131-11-3	Dimethyl Phthalate	U	390	1.0	330	390	92	
606-20-2	2,6-Dinitrotoluene	U	390	1.0	330	390	93	
208-96-8	Acenaphthylene	U	390	1.0	330	390	83	
99-09-2	3-Nitroaniline	U	590	1.0	500	590	110	
83-32-9	Acenaphthene	U	390	1.0	330	390	77	
51-28-5	2,4-Dinitrophenol	~~U~~ UJ	1400	1.0	1200	1400	440	CCH
132-64-9	Dibenzofuran	U	390	1.0	330	390	93	
100-02-7	4-Nitrophenol	~~U~~ UJ	1400	1.0	1200	1400	360	CCH
121-14-2	2,4-Dinitrotoluene	U	390	1.0	330	390	100	
84-66-2	Diethylphthalate	U	390	1.0	330	390	94	
7005-72-3	4-Chlorophenyl-phenylether	U	390	1.0	330	390	92	
100-01-6	4-Nitroaniline	U	590	1.0	500	590	160	
534-52-1	4,6-Dinitro-2-Methylphenol	U	1400	1.0	1200	1400	400	
86-30-6	N-Nitrosodiphenylamine	U	780	1.0	660	780	260	
101-55-3	4-Bromophenyl-phenylether	U	390	1.0	330	390	100	
1912-24-9	Atrazine	U	390	1.0	330	390	110	
87-86-5	Pentachlorophenol	U	970	1.0	820	970	280	
120-12-7	Anthracene	U	390	1.0	330	390	99	
86-74-8	Carbazole	U	590	1.0	500	590	130	

LW 4/16/09

KATAHDIN ANALYTICAL SERVICES
Report of Analytical Results

Client: CH2MHill
Project: TO-009 Lejeune
PO No:
Sample Date: 01/11/09
Received Date: 01/13/09
Extraction Date: 01/16/09
Analysis Date: 29-JAN-2009 10:14
Report Date: 02/03/2009
Matrix: SOIL
% Solids: 84.7

Lab ID: SC0148-15
Client ID: MR08-IS169D-7-8-09A
SDG: TO9-34
Extracted by: CB
Extraction Method: SW846 3550
Analyst: JLP
Analysis Method: SW846 8270C
Lab Prep Batch: WG59867
Units: ug/Kgdrywt

CAS#	Compound	Flags	Results	DF	PQL	Adj.PQL	Adj.MDL
84-74-2	Di-n-butylphthalate	U	390	1.0	330	390	120
85-68-7	Butylbenzylphthalate	U	390	1.0	330	390	110
91-94-1	3,3'-Dichlorobenzidine	U	590	1.0	500	590	130
218-01-9	Chrysene	U	390	1.0	330	390	110
117-81-7	bis(2-Ethylhexyl)phthalate	J	150	1.0	330	390	120
117-84-0	Di-n-octylphthalate	U	390	1.0	330	390	250
367-12-4	2-Fluorophenol		66%				
13127-88-3	Phenol-D6		75%				
4165-60-0	Nitrobenzene-D5		61%				
321-60-8	2-Fluorobiphenyl		67%				
118-79-6	2,4,6-Tribromophenol		71%				
1718-51-0	Terphenyl-D14		87%				

LW 4/16/09

KATAHDIN ANALYTICAL SERVICES
Report of Analytical Results

Client: CH2MHill
Project: TO-009 Lejeune
PO No:
Sample Date: 01/11/09
Received Date: 01/13/09
Extraction Date: 01/16/09
Analysis Date: 29-JAN-2009 15:53
Report Date: 02/03/2009
Matrix: SOIL
% Solids: 91.4

Lab ID: SC0148-17
Client ID: MR08-SS193-09A
SDG: TO9-34
Extracted by: CB
Extraction Method: SW846 3550
Analyst: JLP
Analysis Method: SW846 8270C
Lab Prep Batch: WG59867
Units: ug/Kgdrywt

CAS#	Compound	Flags	Results	DF	PQL	Adj.PQL	Adj.MDL	
100-52-7	Benzaldehyde	U	550	1.0	500	550	130	
108-95-2	Phenol	U	550	1.0	500	550	170	
111-44-4	Bis(2-Chloroethyl)ether	U	360	1.0	330	360	89	
95-57-8	2-Chlorophenol	U	550	1.0	500	550	180	
95-48-7	2-Methylphenol	U	660	1.0	600	660	220	
108-60-1	2,2'-Oxybis(1-chloropropane)	U	360	1.0	330	360	97	
98-86-2	Acetophenone	U	660	1.0	600	660	190	
621-64-7	N-Nitroso-di-n-propylamine	U	360	1.0	330	360	91	
65794-96-9	3&4-Methylphenol	U	660	1.0	600	660	200	
67-72-1	Hexachloroethane	U	360	1.0	330	360	100	
98-95-3	Nitrobenzene	U	360	1.0	330	360	100	
78-59-1	Isophorone	U	360	1.0	330	360	82	
88-75-5	2-Nitrophenol	U	660	1.0	600	660	180	
105-67-9	2,4-Dimethylphenol	U	550	1.0	500	550	180	
111-91-1	Bis(2-Chloroethoxy)methane	U	360	1.0	330	360	100	
120-83-2	2,4-Dichlorophenol	U	550	1.0	500	550	160	
106-47-8	4-Chloroaniline	U	550	1.0	500	550	130	
105-60-2	Caprolactam	U	550	1.0	500	550	160	
59-50-7	4-Chloro-3-Methylphenol	U	550	1.0	500	550	180	
88-06-2	2,4,6-Trichlorophenol	U	550	1.0	500	550	170	
95-95-4	2,4,5-Trichlorophenol	U	550	1.0	500	550	170	
91-58-7	2-Chloronaphthalene	U	360	1.0	330	360	95	
92-52-4	1,1'-Biphenyl	U	360	1.0	330	360	80	
88-74-4	2-Nitroaniline	U	550	1.0	500	550	82	
131-11-3	Dimethyl Phthalate	U	360	1.0	330	360	85	
606-20-2	2,6-Dinitrotoluene	U	360	1.0	330	360	86	
208-96-8	Acenaphthylene	U	360	1.0	330	360	77	
99-09-2	3-Nitroaniline	U	550	1.0	500	550	100	
83-32-9	Acenaphthene	U	360	1.0	330	360	71	
51-28-5	2,4-Dinitrophenol	~~U~~ UJ	1300	1.0	1200	1300	410	CCH
132-64-9	Dibenzofuran	U	360	1.0	330	360	86	
100-02-7	4-Nitrophenol	~~U~~ UJ	1300	1.0	1200	1300	340	CCH
121-14-2	2,4-Dinitrotoluene	U	360	1.0	330	360	93	
84-66-2	Diethylphthalate	U	360	1.0	330	360	88	
7005-72-3	4-Chlorophenyl-phenylether	U	360	1.0	330	360	85	
100-01-6	4-Nitroaniline	U	550	1.0	500	550	150	
534-52-1	4,6-Dinitro-2-Methylphenol	U	1300	1.0	1200	1300	370	
86-30-6	N-Nitrosodiphenylamine	U	720	1.0	660	720	240	
101-55-3	4-Bromophenyl-phenylether	U	360	1.0	330	360	93	
1912-24-9	Atrazine	U	360	1.0	330	360	100	
87-86-5	Pentachlorophenol	U	900	1.0	820	900	260	
120-12-7	Anthracene	U	360	1.0	330	360	92	
86-74-8	Carbazole	U	550	1.0	500	550	120	

lw 4/16/09

KATAHDIN ANALYTICAL SERVICES
Report of Analytical Results

Client: CH2MHill
Project: TO-009 Lejeune
PO No:
Sample Date: 01/11/09
Received Date: 01/13/09
Extraction Date: 01/16/09
Analysis Date: 29-JAN-2009 15:53
Report Date: 02/03/2009
Matrix: SOIL
% Solids: 91.4

Lab ID: SC0148-17
Client ID: MR08-SS193-09A
SDG: TO9-34
Extracted by: CB
Extraction Method: SW846 3550
Analyst: JLP
Analysis Method: SW846 8270C
Lab Prep Batch: WG59867
Units: ug/Kgdrywt

CAS#	Compound	Flags	Results	DF	PQL	Adj.PQL	Adj.MDL
84-74-2	Di-n-butylphthalate	U	360	1.0	330	360	110
85-68-7	Butylbenzylphthalate	U	360	1.0	330	360	100
91-94-1	3,3'-Dichlorobenzidine	U	550	1.0	500	550	120
218-01-9	Chrysene	U	360	1.0	330	360	100
117-81-7	bis(2-Ethylhexyl)phthalate		1000	1.0	330	360	110
117-84-0	Di-n-octylphthalate	U	360	1.0	330	360	230
367-12-4	2-Fluorophenol		74%				
13127-88-3	Phenol-D6		88%				
4165-60-0	Nitrobenzene-D5		73%				
321-60-8	2-Fluorobiphenyl		70%				
118-79-6	2,4,6-Tribromophenol		76%				
1718-51-0	Terphenyl-D14		93%				

lw
4/16/09

KATAHDIN ANALYTICAL SERVICES
Report of Analytical Results

Client: CH2MHill
Project: TO-009 Lejeune
PO No:
Sample Date: 01/11/09
Received Date: 01/13/09
Extraction Date: 01/16/09
Analysis Date: 29-JAN-2009 10:56
Report Date: 02/03/2009
Matrix: SOIL
% Solids: 82.4

Lab ID: SC0148-19
Client ID: MR08-IS193-6-7-09A
SDG: TO9-34
Extracted by: CB
Extraction Method: SW846 3550
Analyst: JLP
Analysis Method: SW846 8270C
Lab Prep Batch: WG59867
Units: ug/Kgdrywt

CAS#	Compound	Flags	Results	DF	PQL	Adj.PQL	Adj.MDL	
100-52-7	Benzaldehyde	U	610	1.0	500	610	140	
108-95-2	Phenol	U	610	1.0	500	610	190	
111-44-4	Bis(2-Chloroethyl)ether	U	400	1.0	330	400	98	
95-57-8	2-Chlorophenol	U	610	1.0	500	610	200	
95-48-7	2-Methylphenol	U	730	1.0	600	730	240	
108-60-1	2,2'-Oxybis(1-chloropropane)	U	400	1.0	330	400	110	
98-86-2	Acetophenone	U	730	1.0	600	730	220	
621-64-7	N-Nitroso-di-n-propylamine	U	400	1.0	330	400	100	
65794-96-9	3&4-Methylphenol	U	730	1.0	600	730	230	
67-72-1	Hexachloroethane	U	400	1.0	330	400	120	
98-95-3	Nitrobenzene	U	400	1.0	330	400	110	
78-59-1	Isophorone	U	400	1.0	330	400	91	
88-75-5	2-Nitrophenol	U	730	1.0	600	730	200	
105-67-9	2,4-Dimethylphenol	U	610	1.0	500	610	200	
111-91-1	Bis(2-Chloroethoxy)methane	U	400	1.0	330	400	120	
120-83-2	2,4-Dichlorophenol	U	610	1.0	500	610	180	
106-47-8	4-Chloroaniline	U	610	1.0	500	610	140	
105-60-2	Caprolactam	U	610	1.0	500	610	170	
59-50-7	4-Chloro-3-Methylphenol	U	610	1.0	500	610	200	
88-06-2	2,4,6-Trichlorophenol	U	610	1.0	500	610	190	
95-95-4	2,4,5-Trichlorophenol	U	610	1.0	500	610	190	
91-58-7	2-Chloronaphthalene	U	400	1.0	330	400	100	
92-52-4	1,1'-Biphenyl	U	400	1.0	330	400	88	
88-74-4	2-Nitroaniline	U	610	1.0	500	610	91	
131-11-3	Dimethyl Phthalate	U	400	1.0	330	400	94	
606-20-2	2,6-Dinitrotoluene	U	400	1.0	330	400	96	
208-96-8	Acenaphthylene	U	400	1.0	330	400	85	
99-09-2	3-Nitroaniline	U	610	1.0	500	610	110	
83-32-9	Acenaphthene	U	400	1.0	330	400	79	
51-28-5	2,4-Dinitrophenol	~~U~~ UJ	1400	1.0	1200	1400	460	CCH
132-64-9	Dibenzofuran	U	400	1.0	330	400	96	
100-02-7	4-Nitrophenol	~~U~~ UJ	1400	1.0	1200	1400	370	CCH
121-14-2	2,4-Dinitrotoluene	U	400	1.0	330	400	100	
84-66-2	Diethylphthalate	U	400	1.0	330	400	97	
7005-72-3	4-Chlorophenyl-phenylether	U	400	1.0	330	400	94	
100-01-6	4-Nitroaniline	U	610	1.0	500	610	160	
534-52-1	4,6-Dinitro-2-Methylphenol	U	1400	1.0	1200	1400	410	
86-30-6	N-Nitrosodiphenylamine	U	800	1.0	660	800	260	
101-55-3	4-Bromophenyl-phenylether	U	400	1.0	330	400	100	
1912-24-9	Atrazine	U	400	1.0	330	400	110	
87-86-5	Pentachlorophenol	U	990	1.0	820	990	290	
120-12-7	Anthracene	U	400	1.0	330	400	100	
86-74-8	Carbazole	U	610	1.0	500	610	130	

DW 4/16/09

KATAHDIN ANALYTICAL SERVICES
Report of Analytical Results

Client: CH2MHill
Project: TO-009 Lejeune
PO No:
Sample Date: 01/11/09
Received Date: 01/13/09
Extraction Date: 01/16/09
Analysis Date: 29-JAN-2009 10:56
Report Date: 02/03/2009
Matrix: SOIL
% Solids: 82.4

Lab ID: SC0148-19
Client ID: MR08-IS193-6-7-09A
SDG: TO9-34
Extracted by: CB
Extraction Method: SW846 3550
Analyst: JLP
Analysis Method: SW846 8270C
Lab Prep Batch: WG59867
Units: ug/Kgdrywt

CAS#	Compound	Flags	Results	DF	PQL	Adj.PQL	Adj.MDL
84-74-2	Di-n-butylphthalate	U	400	1.0	330	400	120
85-68-7	Butylbenzylphthalate	U	400	1.0	330	400	110
91-94-1	3,3'-Dichlorobenzidine	U	610	1.0	500	610	140
218-01-9	Chrysene	U	400	1.0	330	400	120
117-81-7	bis(2-Ethylhexyl)phthalate	J	120	1.0	330	400	120
117-84-0	Di-n-octylphthalate	U	400	1.0	330	400	260
367-12-4	2-Fluorophenol		62%				
13127-88-3	Phenol-D6		73%				
4165-60-0	Nitrobenzene-D5		62%				
321-60-8	2-Fluorobiphenyl		63%				
118-79-6	2,4,6-Tribromophenol		67%				
1718-51-0	Terphenyl-D14		84%				

RW
4/16/09

11

KATAHDIN ANALYTICAL SERVICES
Report of Analytical Results

Client: CH2MHill
Project: TO-009 Lejeune
PO No:
Sample Date: 01/11/09
Received Date: 01/13/09
Extraction Date: 01/16/09
Analysis Date: 29-JAN-2009 12:21
Report Date: 02/03/2009
Matrix: SOIL
% Solids: 92.4

Lab ID: SC0148-21
Client ID: MR08-SS194-09A
SDG: TO9-34
Extracted by: CB
Extraction Method: SW846 3550
Analyst: JLP
Analysis Method: SW846 8270C
Lab Prep Batch: WG59867
Units: ug/Kgdrywt

CAS#	Compound	Flags	Results	DF	PQL	Adj.PQL	Adj.MDL	
100-52-7	Benzaldehyde	U	540	1.0	500	540	130	
108-95-2	Phenol	U	540	1.0	500	540	170	
111-44-4	Bis(2-Chloroethyl)ether	U	360	1.0	330	360	88	
95-57-8	2-Chlorophenol	U	540	1.0	500	540	180	
95-48-7	2-Methylphenol	U	650	1.0	600	650	220	
108-60-1	2,2'-Oxybis(1-chloropropane)	U	360	1.0	330	360	96	
98-86-2	Acetophenone	U	650	1.0	600	650	190	
621-64-7	N-Nitroso-di-n-propylamine	U	360	1.0	330	360	90	
65794-96-9	3&4-Methylphenol	U	650	1.0	600	650	200	
67-72-1	Hexachloroethane	U	360	1.0	330	360	100	
98-95-3	Nitrobenzene	U	360	1.0	330	360	98	
78-59-1	Isophorone	U	360	1.0	330	360	81	
88-75-5	2-Nitrophenol	U	650	1.0	600	650	180	
105-67-9	2,4-Dimethylphenol	U	540	1.0	500	540	180	
111-91-1	Bis(2-Chloroethoxy)methane	U	360	1.0	330	360	100	
120-83-2	2,4-Dichlorophenol	U	540	1.0	500	540	160	
106-47-8	4-Chloroaniline	U	540	1.0	500	540	130	
105-60-2	Caprolactam	U	540	1.0	500	540	160	
59-50-7	4-Chloro-3-Methylphenol	U	540	1.0	500	540	180	
88-06-2	2,4,6-Trichlorophenol	U	540	1.0	500	540	170	
95-95-4	2,4,5-Trichlorophenol	U	540	1.0	500	540	170	
91-58-7	2-Chloronaphthalene	U	360	1.0	330	360	94	
92-52-4	1,1'-Biphenyl	U	360	1.0	330	360	79	
88-74-4	2-Nitroaniline	U	540	1.0	500	540	81	
131-11-3	Dimethyl Phthalate	U	360	1.0	330	360	84	
606-20-2	2,6-Dinitrotoluene	U	360	1.0	330	360	85	
208-96-8	Acenaphthylene	U	360	1.0	330	360	76	
99-09-2	3-Nitroaniline	U	540	1.0	500	540	100	
83-32-9	Acenaphthene	U	360	1.0	330	360	70	
51-28-5	2,4-Dinitrophenol	~~J~~ UJ	1300	1.0	1200	1300	410	CCH
132-64-9	Dibenzofuran	U	360	1.0	330	360	85	
100-02-7	4-Nitrophenol	~~J~~ UJ	1300	1.0	1200	1300	330	CCH
121-14-2	2,4-Dinitrotoluene	U	360	1.0	330	360	92	
84-66-2	Diethylphthalate	U	360	1.0	330	360	86	
7005-72-3	4-Chlorophenyl-phenylether	U	360	1.0	330	360	84	
100-01-6	4-Nitroaniline	U	540	1.0	500	540	140	
534-52-1	4,6-Dinitro-2-Methylphenol	U	1300	1.0	1200	1300	360	
86-30-6	N-Nitrosodiphenylamine	U	710	1.0	660	710	240	
101-55-3	4-Bromophenyl-phenylether	U	360	1.0	330	360	92	
1912-24-9	Atrazine	U	360	1.0	330	360	98	
87-86-5	Pentachlorophenol	U	890	1.0	820	890	260	
120-12-7	Anthracene	U	360	1.0	330	360	91	
86-74-8	Carbazole	U	540	1.0	500	540	120	

LW 4/16/09

11

KATAHDIN ANALYTICAL SERVICES
Report of Analytical Results

Client: CH2MHill
Project: TO-009 Lejeune
PO No:
Sample Date: 01/11/09
Received Date: 01/13/09
Extraction Date: 01/16/09
Analysis Date: 29-JAN-2009 12:21
Report Date: 02/03/2009
Matrix: SOIL
% Solids: 92.4

Lab ID: SC0148-21
Client ID: MR08-SS194-09A
SDG: TO9-34
Extracted by: CB
Extraction Method: SW846 3550
Analyst: JLP
Analysis Method: SW846 8270C
Lab Prep Batch: WG59867
Units: ug/Kgdrywt

CAS#	Compound	Flags	Results	DF	PQL	Adj.PQL	Adj.MDL
84-74-2	Di-n-butylphthalate	U	360	1.0	330	360	110
85-68-7	Butylbenzylphthalate	U	360	1.0	330	360	100
91-94-1	3,3'-Dichlorobenzidine	U	540	1.0	500	540	120
218-01-9	Chrysene	U	360	1.0	330	360	100
117-81-7	bis(2-Ethylhexyl)phthalate		1100	1.0	330	360	100
117-84-0	Di-n-octylphthalate	U	360	1.0	330	360	230
367-12-4	2-Fluorophenol		62%				
13127-88-3	Phenol-D6		75%				
4165-60-0	Nitrobenzene-D5		65%				
321-60-8	2-Fluorobiphenyl		65%				
118-79-6	2,4,6-Tribromophenol		82%				
1718-51-0	Terphenyl-D14		93%				

JLW 4/16/09

KATAHDIN ANALYTICAL SERVICES
Report of Analytical Results

Client: CH2MHill
Project: TO-009 Lejeune
PO No:
Sample Date: 01/11/09
Received Date: 01/13/09
Extraction Date: 01/16/09
Analysis Date: 29-JAN-2009 11:39
Report Date: 02/03/2009
Matrix: SOIL
% Solids: 90.3

Lab ID: SC0148-23
Client ID: MR08-IS194-8-9-09A
SDG: TO9-34
Extracted by: CB
Extraction Method: SW846 3550
Analyst: JLP
Analysis Method: SW846 8270C
Lab Prep Batch: WG59867
Units: ug/Kgdrywt

CAS#	Compound	Flags	Results	DF	PQL	Adj.PQL	Adj.MDL	
100-52-7	Benzaldehyde	U	550	1.0	500	550	130	
108-95-2	Phenol	U	550	1.0	500	550	170	
111-44-4	Bis(2-Chloroethyl)ether	U	360	1.0	330	360	90	
95-57-8	2-Chlorophenol	U	550	1.0	500	550	180	
95-48-7	2-Methylphenol	U	660	1.0	600	660	220	
108-60-1	2,2'-Oxybis(1-chloropropane)	U	360	1.0	330	360	98	
98-86-2	Acetophenone	U	660	1.0	600	660	200	
621-64-7	N-Nitroso-di-n-propylamine	U	360	1.0	330	360	92	
65794-96-9	3&4-Methylphenol	U	660	1.0	600	660	210	
67-72-1	Hexachloroethane	U	360	1.0	330	360	110	
98-95-3	Nitrobenzene	U	360	1.0	330	360	100	
78-59-1	Isophorone	U	360	1.0	330	360	83	
88-75-5	2-Nitrophenol	U	660	1.0	600	660	180	
105-67-9	2,4-Dimethylphenol	U	550	1.0	500	550	180	
111-91-1	Bis(2-Chloroethoxy)methane	U	360	1.0	330	360	110	
120-83-2	2,4-Dichlorophenol	U	550	1.0	500	550	170	
106-47-8	4-Chloroaniline	U	550	1.0	500	550	130	
105-60-2	Caprolactam	U	550	1.0	500	550	160	
59-50-7	4-Chloro-3-Methylphenol	U	550	1.0	500	550	180	
88-06-2	2,4,6-Trichlorophenol	U	550	1.0	500	550	170	
95-95-4	2,4,5-Trichlorophenol	U	550	1.0	500	550	170	
91-58-7	2-Chloronaphthalene	U	360	1.0	330	360	96	
92-52-4	1,1'-Biphenyl	U	360	1.0	330	360	81	
88-74-4	2-Nitroaniline	U	550	1.0	500	550	83	
131-11-3	Dimethyl Phthalate	U	360	1.0	330	360	86	
606-20-2	2,6-Dinitrotoluene	U	360	1.0	330	360	87	
208-96-8	Acenaphthylene	U	360	1.0	330	360	77	
99-09-2	3-Nitroaniline	U	550	1.0	500	550	100	
83-32-9	Acenaphthene	U	360	1.0	330	360	72	
51-28-5	2,4-Dinitrophenol	~~U~~ UJ	1300	1.0	1200	1300	420	CCH
132-64-9	Dibenzofuran	U	360	1.0	330	360	87	
100-02-7	4-Nitrophenol	~~U~~ UJ	1300	1.0	1200	1300	340	CCH
121-14-2	2,4-Dinitrotoluene	U	360	1.0	330	360	94	
84-66-2	Diethylphthalate	U	360	1.0	330	360	88	
7005-72-3	4-Chlorophenyl-phenylether	U	360	1.0	330	360	86	
100-01-6	4-Nitroaniline	U	550	1.0	500	550	150	
534-52-1	4,6-Dinitro-2-Methylphenol	U	1300	1.0	1200	1300	370	
86-30-6	N-Nitrosodiphenylamine	U	730	1.0	660	730	240	
101-55-3	4-Bromophenyl-phenylether	U	360	1.0	330	360	94	
1912-24-9	Atrazine	U	360	1.0	330	360	100	
87-86-5	Pentachlorophenol	U	910	1.0	820	910	260	
120-12-7	Anthracene	U	360	1.0	330	360	93	
86-74-8	Carbazole	U	550	1.0	500	550	120	

CW 4/16/09

KATAHDIN ANALYTICAL SERVICES
Report of Analytical Results

Client: CH2MHill
Project: TO-009 Lejeune
PO No:
Sample Date: 01/11/09
Received Date: 01/13/09
Extraction Date: 01/16/09
Analysis Date: 29-JAN-2009 11:39
Report Date: 02/03/2009
Matrix: SOIL
% Solids: 90.3

Lab ID: SC0148-23
Client ID: MR08-IS194-8-9-09A
SDG: TO9-34
Extracted by: CB
Extraction Method: SW846 3550
Analyst: JLP
Analysis Method: SW846 8270C
Lab Prep Batch: WG59867
Units: ug/Kgdrywt

CAS#	Compound	Flags	Results	DF	PQL	Adj.PQL	Adj.MDL
84-74-2	Di-n-butylphthalate	U	360	1.0	330	360	110
85-68-7	Butylbenzylphthalate	U	360	1.0	330	360	100
91-94-1	3,3'-Dichlorobenzidine	U	550	1.0	500	550	130
218-01-9	Chrysene	U	360	1.0	330	360	100
117-81-7	bis(2-Ethylhexyl)phthalate	J	110	1.0	330	360	110
117-84-0	Di-n-octylphthalate	U	360	1.0	330	360	230
367-12-4	2-Fluorophenol		67%				
13127-88-3	Phenol-D6		76%				
4165-60-0	Nitrobenzene-D5		63%				
321-60-8	2-Fluorobiphenyl		63%				
118-79-6	2,4,6-Tribromophenol		68%				
1718-51-0	Terphenyl-D14		90%				

lw
4/16/09

KATAHDIN ANALYTICAL SERVICES
Report of Analytical Results

Client: CH2MHill
Project: TO-009 Lejeune
PO No:
Sample Date: 01/11/09
Received Date: 01/13/09
Extraction Date: 01/16/09
Analysis Date: 29-JAN-2009 16:36
Report Date: 02/03/2009
Matrix: SOIL
% Solids: 90.0

Lab ID: SC0148-25
Client ID: MR08-SS217-09A
SDG: TO9-34
Extracted by: CB
Extraction Method: SW846 3550
Analyst: JLP
Analysis Method: SW846 8270C
Lab Prep Batch: WG59867
Units: ug/Kgdrywt

CAS#	Compound	Flags	Results	DF	PQL	Adj.PQL	Adj.MDL	
100-52-7	Benzaldehyde	U	560	1.0	500	560	130	
108-95-2	Phenol	U	560	1.0	500	560	170	
111-44-4	Bis(2-Chloroethyl)ether	U	370	1.0	330	370	90	
95-57-8	2-Chlorophenol	U	560	1.0	500	560	180	
95-48-7	2-Methylphenol	U	670	1.0	600	670	220	
108-60-1	2,2'-Oxybis(1-chloropropane)	U	370	1.0	330	370	99	
98-86-2	Acetophenone	U	670	1.0	600	670	200	
621-64-7	N-Nitroso-di-n-propylamine	U	370	1.0	330	370	92	
65794-96-9	3&4-Methylphenol	U	670	1.0	600	670	210	
67-72-1	Hexachloroethane	U	370	1.0	330	370	110	
98-95-3	Nitrobenzene	U	370	1.0	330	370	100	
78-59-1	Isophorone	U	370	1.0	330	370	83	
88-75-5	2-Nitrophenol	U	670	1.0	600	670	180	
105-67-9	2,4-Dimethylphenol	U	560	1.0	500	560	180	
111-91-1	Bis(2-Chloroethoxy)methane	U	370	1.0	330	370	110	
120-83-2	2,4-Dichlorophenol	U	560	1.0	500	560	170	
106-47-8	4-Chloroaniline	U	560	1.0	500	560	130	
105-60-2	Caprolactam	U	560	1.0	500	560	160	
59-50-7	4-Chloro-3-Methylphenol	U	560	1.0	500	560	180	
88-06-2	2,4,6-Trichlorophenol	U	560	1.0	500	560	170	
95-95-4	2,4,5-Trichlorophenol	U	560	1.0	500	560	170	
91-58-7	2-Chloronaphthalene	U	370	1.0	330	370	97	
92-52-4	1,1'-Biphenyl	U	370	1.0	330	370	81	
88-74-4	2-Nitroaniline	U	560	1.0	500	560	83	
131-11-3	Dimethyl Phthalate	U	370	1.0	330	370	87	
606-20-2	2,6-Dinitrotoluene	U	370	1.0	330	370	88	
208-96-8	Acenaphthylene	U	370	1.0	330	370	78	
99-09-2	3-Nitroaniline	U	560	1.0	500	560	100	
83-32-9	Acenaphthene	U	370	1.0	330	370	72	
51-28-5	2,4-Dinitrophenol	~~U~~ UJ	1300	1.0	1200	1300	420	CCH
132-64-9	Dibenzofuran	U	370	1.0	330	370	88	
100-02-7	4-Nitrophenol	~~U~~ UJ	1300	1.0	1200	1300	340	CCH
121-14-2	2,4-Dinitrotoluene	U	370	1.0	330	370	94	
84-66-2	Diethylphthalate	U	370	1.0	330	370	89	
7005-72-3	4-Chlorophenyl-phenylether	U	370	1.0	330	370	87	
100-01-6	4-Nitroaniline	U	560	1.0	500	560	150	
534-52-1	4,6-Dinitro-2-Methylphenol	U	1300	1.0	1200	1300	370	
86-30-6	N-Nitrosodiphenylamine	U	730	1.0	660	730	240	
101-55-3	4-Bromophenyl-phenylether	U	370	1.0	330	370	94	
1912-24-9	Atrazine	U	370	1.0	330	370	100	
87-86-5	Pentachlorophenol	U	910	1.0	820	910	260	
120-12-7	Anthracene	U	370	1.0	330	370	93	
86-74-8	Carbazole	U	560	1.0	500	560	120	

lw 4/16/09

KATAHDIN ANALYTICAL SERVICES
Report of Analytical Results

Client: CH2MHill
Project: TO-009 Lejeune
PO No:
Sample Date: 01/11/09
Received Date: 01/13/09
Extraction Date: 01/16/09
Analysis Date: 29-JAN-2009 16:36
Report Date: 02/03/2009
Matrix: SOIL
% Solids: 90.0

Lab ID: SC0148-25
Client ID: MR08-SS217-09A
SDG: TO9-34
Extracted by: CB
Extraction Method: SW846 3550
Analyst: JLP
Analysis Method: SW846 8270C
Lab Prep Batch: WG59867
Units: ug/Kgdrywt

CAS#	Compound	Flags	Results	DF	PQL	Adj.PQL	Adj.MDL
84-74-2	Di-n-butylphthalate	U	370	1.0	330	370	110
85-68-7	Butylbenzylphthalate	U	370	1.0	330	370	100
91-94-1	3,3'-Dichlorobenzidine	U	560	1.0	500	560	130
218-01-9	Chrysene	U	370	1.0	330	370	100
117-81-7	bis(2-Ethylhexyl)phthalate	J	180	1.0	330	370	110
117-84-0	Di-n-octylphthalate	U	370	1.0	330	370	230
367-12-4	2-Fluorophenol		64%				
13127-88-3	Phenol-D6		78%				
4165-60-0	Nitrobenzene-D5		64%				
321-60-8	2-Fluorobiphenyl		71%				
118-79-6	2,4,6-Tribromophenol		86%				
1718-51-0	Terphenyl-D14		94%				

fw 4/16/09

KATAHDIN ANALYTICAL SERVICES
Report of Analytical Results

Client: CH2MHill
Project: TO-009 Lejeune
PO No:
Sample Date: 01/11/09
Received Date: 01/13/09
Extraction Date: 01/19/09
Analysis Date: 27-JAN-2009 23:23
Report Date: 02/06/2009
Matrix: SOIL
% Solids: 88.2

Lab ID: SC0148-27
Client ID: MR08-IS217-8-9-09A
SDG: TO9-34
Extracted by: AC
Extraction Method: SW846 3550
Analyst: JCG
Analysis Method: SW846 8270C
Lab Prep Batch: WG59937
Units: ug/Kgdrywt

CAS#	Compound	Flags	Results	DF	PQL	Adj.PQL	Adj.MDL	
100-52-7	Benzaldehyde	U	570	1.0	500	570	140	
108-95-2	Phenol	U	570	1.0	500	570	180	
111-44-4	Bis(2-Chloroethyl)ether	U	370	1.0	330	370	92	
95-57-8	2-Chlorophenol	U	570	1.0	500	570	180	
95-48-7	2-Methylphenol	U	680	1.0	600	680	230	
108-60-1	2,2'-Oxybis(1-chloropropane)	U	370	1.0	330	370	100	
98-86-2	Acetophenone	U	680	1.0	600	680	200	
621-64-7	N-Nitroso-di-n-propylamine	U	370	1.0	330	370	94	
65794-96-9	3&4-Methylphenol	U	680	1.0	600	680	210	
67-72-1	Hexachloroethane	U	370	1.0	330	370	110	
98-95-3	Nitrobenzene	U	370	1.0	330	370	100	
78-59-1	Isophorone	U	370	1.0	330	370	85	
88-75-5	2-Nitrophenol	U	680	1.0	600	680	190	
105-67-9	2,4-Dimethylphenol	U	570	1.0	500	570	190	
111-91-1	Bis(2-Chloroethoxy)methane	U	370	1.0	330	370	110	
120-83-2	2,4-Dichlorophenol	U	570	1.0	500	570	170	
106-47-8	4-Chloroaniline	U	570	1.0	500	570	130	
105-60-2	Caprolactam	U	570	1.0	500	570	160	
59-50-7	4-Chloro-3-Methylphenol	U	570	1.0	500	570	190	
88-06-2	2,4,6-Trichlorophenol	U	570	1.0	500	570	180	
95-95-4	2,4,5-Trichlorophenol	U	570	1.0	500	570	180	
91-58-7	2-Chloronaphthalene	U	370	1.0	330	370	98	
92-52-4	1,1'-Biphenyl	U	370	1.0	330	370	83	
88-74-4	2-Nitroaniline	U	570	1.0	500	570	85	
131-11-3	Dimethyl Phthalate	U	370	1.0	330	370	88	
606-20-2	2,6-Dinitrotoluene	U	370	1.0	330	370	90	
208-96-8	Acenaphthylene	U	370	1.0	330	370	79	
99-09-2	3-Nitroaniline	U	570	1.0	500	570	110	
83-32-9	Acenaphthene	U	370	1.0	330	370	74	
51-28-5	2,4-Dinitrophenol	~~U~~ UJ	1400	1.0	1200	1400	430	CCH
132-64-9	Dibenzofuran	U	370	1.0	330	370	90	
100-02-7	4-Nitrophenol	~~U~~ UJ	1400	1.0	1200	1400	350	CCH
121-14-2	2,4-Dinitrotoluene	U	370	1.0	330	370	96	
84-66-2	Diethylphthalate	U	370	1.0	330	370	91	
7005-72-3	4-Chlorophenyl-phenylether	U	370	1.0	330	370	88	
100-01-6	4-Nitroaniline	U	570	1.0	500	570	150	
534-52-1	4,6-Dinitro-2-Methylphenol	U	1400	1.0	1200	1400	380	
86-30-6	N-Nitrosodiphenylamine	U	750	1.0	660	750	250	
101-55-3	4-Bromophenyl-phenylether	U	370	1.0	330	370	96	
1912-24-9	Atrazine	U	370	1.0	330	370	100	
87-86-5	Pentachlorophenol	U	930	1.0	820	930	270	
120-12-7	Anthracene	U	370	1.0	330	370	95	
86-74-8	Carbazole	U	570	1.0	500	570	120	

RW 4/16/09

KATAHDIN ANALYTICAL SERVICES
Report of Analytical Results

Client: CH2MHill
Project: TO-009 Lejeune
PO No:
Sample Date: 01/11/09
Received Date: 01/13/09
Extraction Date: 01/19/09
Analysis Date: 27-JAN-2009 23:23
Report Date: 02/06/2009
Matrix: SOIL
% Solids: 88.2

Lab ID: SC0148-27
Client ID: MR08-IS217-8-9-09A
SDG: TO9-34
Extracted by: AC
Extraction Method: SW846 3550
Analyst: JCG
Analysis Method: SW846 8270C
Lab Prep Batch: WG59937
Units: ug/Kgdrywt

CAS#	Compound	Flags	Results	DF	PQL	Adj.PQL	Adj.MDL
84-74-2	Di-n-butylphthalate	U	370	1.0	330	370	110
85-68-7	Butylbenzylphthalate	U	370	1.0	330	370	100
91-94-1	3,3'-Dichlorobenzidine	U	570	1.0	500	570	130
218-01-9	Chrysene	U	370	1.0	330	370	110
117-81-7	bis(2-Ethylhexyl)phthalate	U	370	1.0	330	370	110
117-84-0	Di-n-octylphthalate	U	370	1.0	330	370	240
367-12-4	2-Fluorophenol		68%				
13127-88-3	Phenol-D6		63%				
4165-60-0	Nitrobenzene-D5		62%				
321-60-8	2-Fluorobiphenyl		64%				
118-79-6	2,4,6-Tribromophenol		60%				
1718-51-0	Terphenyl-D14		76%				

lew
4/16/09

KATAHDIN ANALYTICAL SERVICES
Report of Analytical Results

Client: CH2MHill
Project: TO-009 Lejeune
PO No:
Sample Date: 01/11/09
Received Date: 01/13/09
Extraction Date: 01/19/09
Analysis Date: 28-JAN-2009 05:02
Report Date: 02/06/2009
Matrix: SOIL
% Solids: 93.3

Lab ID: SC0148-29
Client ID: MR08-SS218-09A
SDG: TO9-34
Extracted by: AC
Extraction Method: SW846 3550
Analyst: JCG
Analysis Method: SW846 8270C
Lab Prep Batch: WG59937
Units: ug/Kgdrywt

CAS#	Compound	Flags	Results	DF	PQL	Adj.PQL	Adj.MDL	
100-52-7	Benzaldehyde	U	540	1.0	500	540	130	
108-95-2	Phenol	U	540	1.0	500	540	170	
111-44-4	Bis(2-Chloroethyl)ether	U	350	1.0	330	350	87	
95-57-8	2-Chlorophenol	U	540	1.0	500	540	180	
95-48-7	2-Methylphenol	U	640	1.0	600	640	210	
108-60-1	2,2'-Oxybis(1-chloropropane)	U	350	1.0	330	350	95	
98-86-2	Acetophenone	U	640	1.0	600	640	190	
621-64-7	N-Nitroso-di-n-propylamine	U	350	1.0	330	350	89	
65794-96-9	3&4-Methylphenol	U	640	1.0	600	640	200	
67-72-1	Hexachloroethane	U	350	1.0	330	350	100	
98-95-3	Nitrobenzene	U	350	1.0	330	350	98	
78-59-1	Isophorone	U	350	1.0	330	350	80	
88-75-5	2-Nitrophenol	U	640	1.0	600	640	180	
105-67-9	2,4-Dimethylphenol	U	540	1.0	500	540	180	
111-91-1	Bis(2-Chloroethoxy)methane	U	350	1.0	330	350	100	
120-83-2	2,4-Dichlorophenol	U	540	1.0	500	540	160	
106-47-8	4-Chloroaniline	U	540	1.0	500	540	130	
105-60-2	Caprolactam	U	540	1.0	500	540	150	
59-50-7	4-Chloro-3-Methylphenol	U	540	1.0	500	540	180	
88-06-2	2,4,6-Trichlorophenol	U	540	1.0	500	540	170	
95-95-4	2,4,5-Trichlorophenol	U	540	1.0	500	540	170	
91-58-7	2-Chloronaphthalene	U	350	1.0	330	350	93	
92-52-4	1,1'-Biphenyl	U	350	1.0	330	350	78	
88-74-4	2-Nitroaniline	U	540	1.0	500	540	80	
131-11-3	Dimethyl Phthalate	U	350	1.0	330	350	84	
606-20-2	2,6-Dinitrotoluene	U	350	1.0	330	350	85	
208-96-8	Acenaphthylene	U	350	1.0	330	350	75	
99-09-2	3-Nitroaniline	U	540	1.0	500	540	100	
83-32-9	Acenaphthene	U	350	1.0	330	350	70	
51-28-5	2,4-Dinitrophenol	~~U~~ UJ	1300	1.0	1200	1300	400	CCH
132-64-9	Dibenzofuran	U	350	1.0	330	350	85	
100-02-7	4-Nitrophenol	~~U~~ UJ	1300	1.0	1200	1300	330	CCH
121-14-2	2,4-Dinitrotoluene	U	350	1.0	330	350	91	
84-66-2	Diethylphthalate	U	350	1.0	330	350	86	
7005-72-3	4-Chlorophenyl-phenylether	U	350	1.0	330	350	84	
100-01-6	4-Nitroaniline	U	540	1.0	500	540	140	
534-52-1	4,6-Dinitro-2-Methylphenol	U	1300	1.0	1200	1300	360	
86-30-6	N-Nitrosodiphenylamine	U	710	1.0	660	710	230	
101-55-3	4-Bromophenyl-phenylether	U	350	1.0	330	350	91	
1912-24-9	Atrazine	U	350	1.0	330	350	98	
87-86-5	Pentachlorophenol	U	880	1.0	820	880	250	
120-12-7	Anthracene	U	350	1.0	330	350	90	
86-74-8	Carbazole	U	540	1.0	500	540	120	

lW 4/16/09

KATAHDIN ANALYTICAL SERVICES
Report of Analytical Results

Client: CH2MHill
Project: TO-009 Lejeune
PO No:
Sample Date: 01/11/09
Received Date: 01/13/09
Extraction Date: 01/19/09
Analysis Date: 28-JAN-2009 05:02
Report Date: 02/06/2009
Matrix: SOIL
% Solids: 93.3

Lab ID: SC0148-29
Client ID: MR08-SS218-09A
SDG: TO9-34
Extracted by: AC
Extraction Method: SW846 3550
Analyst: JCG
Analysis Method: SW846 8270C
Lab Prep Batch: WG59937
Units: ug/Kgdrywt

CAS#	Compound	Flags	Results	DF	PQL	Adj.PQL	Adj.MDL
84-74-2	Di-n-butylphthalate	U	350	1.0	330	350	110
85-68-7	Butylbenzylphthalate	U	350	1.0	330	350	100
91-94-1	3,3'-Dichlorobenzidine	U	540	1.0	500	540	120
218-01-9	Chrysene	U	350	1.0	330	350	100
117-81-7	bis(2-Ethylhexyl)phthalate		420	1.0	330	350	100
117-84-0	Di-n-octylphthalate	U	350	1.0	330	350	230
367-12-4	2-Fluorophenol		72%				
13127-88-3	Phenol-D6		70%				
4165-60-0	Nitrobenzene-D5		64%				
321-60-8	2-Fluorobiphenyl		71%				
118-79-6	2,4,6-Tribromophenol		66%				
1718-51-0	Terphenyl-D14		98%				

lw
4/16/09

KATAHDIN ANALYTICAL SERVICES
Report of Analytical Results

Client: CH2MHill
Project: TO-009 Lejeune
PO No:
Sample Date: 01/11/09
Received Date: 01/13/09
Extraction Date: 01/19/09
Analysis Date: 28-JAN-2009 00:05
Report Date: 02/06/2009
Matrix: SOIL
% Solids: 94.4

Lab ID: SC0148-31
Client ID: MR08-IS218-7-8-09A
SDG: TO9-34
Extracted by: AC
Extraction Method: SW846 3550
Analyst: JCG
Analysis Method: SW846 8270C
Lab Prep Batch: WG59937
Units: ug/Kgdrywt

CAS#	Compound	Flags	Results	DF	PQL	Adj.PQL	Adj.MDL	
100-52-7	Benzaldehyde	U	530	1.0	500	530	130	
108-95-2	Phenol	U	530	1.0	500	530	160	
111-44-4	Bis(2-Chloroethyl)ether	U	350	1.0	330	350	86	
95-57-8	2-Chlorophenol	U	530	1.0	500	530	170	
95-48-7	2-Methylphenol	U	640	1.0	600	640	210	
108-60-1	2,2'-Oxybis(1-chloropropane)	U	350	1.0	330	350	94	
98-86-2	Acetophenone	U	640	1.0	600	640	190	
621-64-7	N-Nitroso-di-n-propylamine	U	350	1.0	330	350	88	
65794-96-9	3&4-Methylphenol	U	640	1.0	600	640	200	
67-72-1	Hexachloroethane	U	350	1.0	330	350	100	
98-95-3	Nitrobenzene	U	350	1.0	330	350	96	
78-59-1	Isophorone	U	350	1.0	330	350	79	
88-75-5	2-Nitrophenol	U	640	1.0	600	640	180	
105-67-9	2,4-Dimethylphenol	U	530	1.0	500	530	170	
111-91-1	Bis(2-Chloroethoxy)methane	U	350	1.0	330	350	100	
120-83-2	2,4-Dichlorophenol	U	530	1.0	500	530	160	
106-47-8	4-Chloroaniline	U	530	1.0	500	530	130	
105-60-2	Caprolactam	U	530	1.0	500	530	150	
59-50-7	4-Chloro-3-Methylphenol	U	530	1.0	500	530	180	
88-06-2	2,4,6-Trichlorophenol	U	530	1.0	500	530	160	
95-95-4	2,4,5-Trichlorophenol	U	530	1.0	500	530	160	
91-58-7	2-Chloronaphthalene	U	350	1.0	330	350	92	
92-52-4	1,1'-Biphenyl	U	350	1.0	330	350	77	
88-74-4	2-Nitroaniline	U	530	1.0	500	530	79	
131-11-3	Dimethyl Phthalate	U	350	1.0	330	350	83	
606-20-2	2,6-Dinitrotoluene	U	350	1.0	330	350	84	
208-96-8	Acenaphthylene	U	350	1.0	330	350	74	
99-09-2	3-Nitroaniline	U	530	1.0	500	530	100	
83-32-9	Acenaphthene	U	350	1.0	330	350	69	
51-28-5	2,4-Dinitrophenol	~~U~~ UJ	1300	1.0	1200	1300	400	CCH
132-64-9	Dibenzofuran	U	350	1.0	330	350	84	
100-02-7	4-Nitrophenol	~~U~~ UJ	1300	1.0	1200	1300	330	CCH
121-14-2	2,4-Dinitrotoluene	U	350	1.0	330	350	90	
84-66-2	Diethylphthalate	U	350	1.0	330	350	85	
7005-72-3	4-Chlorophenyl-phenylether	U	350	1.0	330	350	83	
100-01-6	4-Nitroaniline	U	530	1.0	500	530	140	
534-52-1	4,6-Dinitro-2-Methylphenol	U	1300	1.0	1200	1300	360	
86-30-6	N-Nitrosodiphenylamine	U	700	1.0	660	700	230	
101-55-3	4-Bromophenyl-phenylether	U	350	1.0	330	350	90	
1912-24-9	Atrazine	U	350	1.0	330	350	96	
87-86-5	Pentachlorophenol	U	870	1.0	820	870	250	
120-12-7	Anthracene	U	350	1.0	330	350	89	
86-74-8	Carbazole	U	530	1.0	500	530	120	

ewl
4/16/09

KATAHDIN ANALYTICAL SERVICES
Report of Analytical Results

Client: CH2MHill
Project: TO-009 Lejeune
PO No:
Sample Date: 01/11/09
Received Date: 01/13/09
Extraction Date: 01/19/09
Analysis Date: 28-JAN-2009 00:05
Report Date: 02/06/2009
Matrix: SOIL
% Solids: 94.4

Lab ID: SC0148-31
Client ID: MR08-IS218-7-8-09A
SDG: TO9-34
Extracted by: AC
Extraction Method: SW846 3550
Analyst: JCG
Analysis Method: SW846 8270C
Lab Prep Batch: WG59937
Units: ug/Kgdrywt

CAS#	Compound	Flags	Results	DF	PQL	Adj.PQL	Adj.MDL
84-74-2	Di-n-butylphthalate	U	350	1.0	330	350	110
85-68-7	Butylbenzylphthalate	U	350	1.0	330	350	98
91-94-1	3,3'-Dichlorobenzidine	U	530	1.0	500	530	120
218-01-9	Chrysene	U	350	1.0	330	350	100
117-81-7	bis(2-Ethylhexyl)phthalate	U	350	1.0	330	350	100
117-84-0	Di-n-octylphthalate	U	350	1.0	330	350	220
367-12-4	2-Fluorophenol		74%				
13127-88-3	Phenol-D6		72%				
4165-60-0	Nitrobenzene-D5		67%				
321-60-8	2-Fluorobiphenyl		70%				
118-79-6	2,4,6-Tribromophenol		62%				
1718-51-0	Terphenyl-D14		84%				

MW 4/16/09

17

KATAHDIN ANALYTICAL SERVICES
Report of Analytical Results

Client: CH2MHill
Project: TO-009 Lejeune
PO No:
Sample Date: 01/11/09
Received Date: 01/13/09
Extraction Date: 01/19/09
Analysis Date: 28-JAN-2009 18:46
Report Date: 02/06/2009
Matrix: SOIL
% Solids: 84.8

Lab ID: SC0148-33RA
Client ID: MR08-SS241-09A
SDG: TO9-34
Extracted by: AC
Extraction Method: SW846 3550
Analyst: JLP
Analysis Method: SW846 8270C
Lab Prep Batch: WG59937
Units: ug/Kgdrywt

CAS#	Compound	Flags	Results	DF	PQL	Adj.PQL	Adj.MDL	
100-52-7	Benzaldehyde	U	590	1.0	500	590	140	
108-95-2	Phenol	U	590	1.0	500	590	180	
111-44-4	Bis(2-Chloroethyl)ether	U	390	1.0	330	390	95	
95-57-8	2-Chlorophenol	U	590	1.0	500	590	190	
95-48-7	2-Methylphenol	U	710	1.0	600	710	240	
108-60-1	2,2'-Oxybis(1-chloropropane)	U	390	1.0	330	390	100	
98-86-2	Acetophenone	U	710	1.0	600	710	210	
621-64-7	N-Nitroso-di-n-propylamine	U	390	1.0	330	390	98	
65794-96-9	3&4-Methylphenol	U	710	1.0	600	710	220	
67-72-1	Hexachloroethane	U	390	1.0	330	390	110	
98-95-3	Nitrobenzene	U	390	1.0	330	390	110	
78-59-1	Isophorone	U	390	1.0	330	390	88	
88-75-5	2-Nitrophenol	U	710	1.0	600	710	200	
105-67-9	2,4-Dimethylphenol	U	590	1.0	500	590	190	
111-91-1	Bis(2-Chloroethoxy)methane	U	390	1.0	330	390	110	
120-83-2	2,4-Dichlorophenol	U	590	1.0	500	590	180	
106-47-8	4-Chloroaniline	U	590	1.0	500	590	140	
105-60-2	Caprolactam	U	590	1.0	500	590	170	
59-50-7	4-Chloro-3-Methylphenol	U	590	1.0	500	590	200	
88-06-2	2,4,6-Trichlorophenol	U	590	1.0	500	590	180	
95-95-4	2,4,5-Trichlorophenol	U	590	1.0	500	590	180	
91-58-7	2-Chloronaphthalene	U	390	1.0	330	390	100	
92-52-4	1,1'-Biphenyl	U	390	1.0	330	390	86	
88-74-4	2-Nitroaniline	U	590	1.0	500	590	88	
131-11-3	Dimethyl Phthalate	U	390	1.0	330	390	92	
606-20-2	2,6-Dinitrotoluene	U	390	1.0	330	390	93	
208-96-8	Acenaphthylene	U	390	1.0	330	390	82	
99-09-2	3-Nitroaniline	U	590	1.0	500	590	110	
83-32-9	Acenaphthene	U	390	1.0	330	390	77	
51-28-5	2,4-Dinitrophenol	~~U~~ UJ	1400	1.0	1200	1400	440	CCH
132-64-9	Dibenzofuran	U	390	1.0	330	390	93	
100-02-7	4-Nitrophenol	U	1400	1.0	1200	1400	360	
121-14-2	2,4-Dinitrotoluene	U	390	1.0	330	390	100	
84-66-2	Diethylphthalate	U	390	1.0	330	390	94	
7005-72-3	4-Chlorophenyl-phenylether	U	390	1.0	330	390	92	
100-01-6	4-Nitroaniline	U	590	1.0	500	590	160	
534-52-1	4,6-Dinitro-2-Methylphenol	U	1400	1.0	1200	1400	400	
86-30-6	N-Nitrosodiphenylamine	U	780	1.0	660	780	260	
101-55-3	4-Bromophenyl-phenylether	U	390	1.0	330	390	100	
1912-24-9	Atrazine	U	390	1.0	330	390	110	
87-86-5	Pentachlorophenol	U	970	1.0	820	970	280	
120-12-7	Anthracene	U	390	1.0	330	390	99	
86-74-8	Carbazole	U	590	1.0	500	590	130	

RW
4/30/09

KATAHDIN ANALYTICAL SERVICES
Report of Analytical Results

Client: CH2MHill
Project: TO-009 Lejeune
PO No:
Sample Date: 01/11/09
Received Date: 01/13/09
Extraction Date: 01/19/09
Analysis Date: 28-JAN-2009 18:46
Report Date: 02/06/2009
Matrix: SOIL
% Solids: 84.8

Lab ID: SC0148-33RA
Client ID: MR08-SS241-09A
SDG: TO9-34
Extracted by: AC
Extraction Method: SW846 3550
Analyst: JLP
Analysis Method: SW846 8270C
Lab Prep Batch: WG59937
Units: ug/Kgdrywt

CAS#	Compound	Flags	Results	DF	PQL	Adj.PQL	Adj.MDL
84-74-2	Di-n-butylphthalate	U	390	1.0	330	390	120
85-68-7	Butylbenzylphthalate	U	390	1.0	330	390	110
91-94-1	3,3'-Dichlorobenzidine	U	590	1.0	500	590	130
218-01-9	Chrysene	J	120	1.0	330	390	110
117-81-7	bis(2-Ethylhexyl)phthalate		500	1.0	330	390	120
117-84-0	Di-n-octylphthalate	U	390	1.0	330	390	250
367-12-4	2-Fluorophenol		75%				
13127-88-3	Phenol-D6		76%				
4165-60-0	Nitrobenzene-D5		63%				
321-60-8	2-Fluorobiphenyl		73%				
118-79-6	2,4,6-Tribromophenol		77%				
1718-51-0	Terphenyl-D14		83%				

MW 4/16/09

KATAHDIN ANALYTICAL SERVICES
Report of Analytical Results

Client: CH2MHill
Project: TO-009 Lejeune
PO No:
Sample Date: 01/11/09
Received Date: 01/13/09
Extraction Date: 01/19/09
Analysis Date: 28-JAN-2009 00:47
Report Date: 02/06/2009
Matrix: SOIL
% Solids: 90.8

Lab ID: SC0148-35
Client ID: MR08-IS241-8-9-09A
SDG: TO9-34
Extracted by: AC
Extraction Method: SW846 3550
Analyst: JCG
Analysis Method: SW846 8270C
Lab Prep Batch: WG59937
Units: ug/Kgdrywt

CAS#	Compound	Flags	Results	DF	PQL	Adj.PQL	Adj.MDL	
100-52-7	Benzaldehyde	U	550	1.0	500	550	130	
108-95-2	Phenol	U	550	1.0	500	550	170	
111-44-4	Bis(2-Chloroethyl)ether	U	360	1.0	330	360	89	
95-57-8	2-Chlorophenol	U	550	1.0	500	550	180	
95-48-7	2-Methylphenol	U	660	1.0	600	660	220	
108-60-1	2,2'-Oxybis(1-chloropropane)	U	360	1.0	330	360	98	
98-86-2	Acetophenone	U	660	1.0	600	660	200	
621-64-7	N-Nitroso-di-n-propylamine	U	360	1.0	330	360	91	
65794-96-9	3&4-Methylphenol	U	660	1.0	600	660	210	
67-72-1	Hexachloroethane	U	360	1.0	330	360	100	
98-95-3	Nitrobenzene	U	360	1.0	330	360	100	
78-59-1	Isophorone	U	360	1.0	330	360	83	
88-75-5	2-Nitrophenol	U	660	1.0	600	660	180	
105-67-9	2,4-Dimethylphenol	U	550	1.0	500	550	180	
111-91-1	Bis(2-Chloroethoxy)methane	U	360	1.0	330	360	100	
120-83-2	2,4-Dichlorophenol	U	550	1.0	500	550	160	
106-47-8	4-Chloroaniline	U	550	1.0	500	550	130	
105-60-2	Caprolactam	U	550	1.0	500	550	160	
59-50-7	4-Chloro-3-Methylphenol	U	550	1.0	500	550	180	
88-06-2	2,4,6-Trichlorophenol	U	550	1.0	500	550	170	
95-95-4	2,4,5-Trichlorophenol	U	550	1.0	500	550	170	
91-58-7	2-Chloronaphthalene	U	360	1.0	330	360	96	
92-52-4	1,1'-Biphenyl	U	360	1.0	330	360	80	
88-74-4	2-Nitroaniline	U	550	1.0	500	550	83	
131-11-3	Dimethyl Phthalate	U	360	1.0	330	360	86	
606-20-2	2,6-Dinitrotoluene	U	360	1.0	330	360	87	
208-96-8	Acenaphthylene	U	360	1.0	330	360	77	
99-09-2	3-Nitroaniline	U	550	1.0	500	550	100	
83-32-9	Acenaphthene	U	360	1.0	330	360	72	
51-28-5	2,4-Dinitrophenol	~~U~~ UJ	1300	1.0	1200	1300	420	CCH
132-64-9	Dibenzofuran	U	360	1.0	330	360	87	
100-02-7	4-Nitrophenol	~~U~~ UJ	1300	1.0	1200	1300	340	CCH
121-14-2	2,4-Dinitrotoluene	U	360	1.0	330	360	94	
84-66-2	Diethylphthalate	U	360	1.0	330	360	88	
7005-72-3	4-Chlorophenyl-phenylether	U	360	1.0	330	360	86	
100-01-6	4-Nitroaniline	U	550	1.0	500	550	150	
534-52-1	4,6-Dinitro-2-Methylphenol	U	1300	1.0	1200	1300	370	
86-30-6	N-Nitrosodiphenylamine	U	730	1.0	660	730	240	
101-55-3	4-Bromophenyl-phenylether	U	360	1.0	330	360	94	
1912-24-9	Atrazine	U	360	1.0	330	360	100	
87-86-5	Pentachlorophenol	U	900	1.0	820	900	260	
120-12-7	Anthracene	U	360	1.0	330	360	92	
86-74-8	Carbazole	U	550	1.0	500	550	120	

fcw
4/16/09

KATAHDIN ANALYTICAL SERVICES
Report of Analytical Results

Client: CH2MHill
Project: TO-009 Lejeune
PO No:
Sample Date: 01/11/09
Received Date: 01/13/09
Extraction Date: 01/19/09
Analysis Date: 28-JAN-2009 00:47
Report Date: 02/06/2009
Matrix: SOIL
% Solids: 90.8

Lab ID: SC0148-35
Client ID: MR08-IS241-8-9-09A
SDG: TO9-34
Extracted by: AC
Extraction Method: SW846 3550
Analyst: JCG
Analysis Method: SW846 8270C
Lab Prep Batch: WG59937
Units: ug/Kgdrywt

CAS#	Compound	Flags	Results	DF	PQL	Adj.PQL	Adj.MDL
84-74-2	Di-n-butylphthalate	U	360	1.0	330	360	110
85-68-7	Butylbenzylphthalate	U	360	1.0	330	360	100
91-94-1	3,3'-Dichlorobenzidine	U	550	1.0	500	550	120
218-01-9	Chrysene	U	360	1.0	330	360	100
117-81-7	bis(2-Ethylhexyl)phthalate	J	220	1.0	330	360	110
117-84-0	Di-n-octylphthalate	U	360	1.0	330	360	230
367-12-4	2-Fluorophenol		65%				
13127-88-3	Phenol-D6		62%				
4165-60-0	Nitrobenzene-D5		58%				
321-60-8	2-Fluorobiphenyl		62%				
118-79-6	2,4,6-Tribromophenol		56%				
1718-51-0	Terphenyl-D14		74%				

LW
4/16/09

KATAHDIN ANALYTICAL SERVICES
Report of Analytical Results

Client: CH2MHill
Project: TO-009 Lejeune
PO No:
Sample Date: 01/11/09
Received Date: 01/13/09
Extraction Date: 01/19/09
Analysis Date: 28-JAN-2009 04:19
Report Date: 02/06/2009
Matrix: SOIL
% Solids: 88.5

Lab ID: SC0148-37
Client ID: MR08-SS242-09A
SDG: TO9-34
Extracted by: AC
Extraction Method: SW846 3550
Analyst: JCG
Analysis Method: SW846 8270C
Lab Prep Batch: WG59937
Units: ug/Kgdrywt

CAS#	Compound	Flags	Results	DF	PQL	Adj.PQL	Adj.MDL	
100-52-7	Benzaldehyde	U	560	1.0	500	560	140	
108-95-2	Phenol	U	560	1.0	500	560	180	
111-44-4	Bis(2-Chloroethyl)ether	U	370	1.0	330	370	92	
95-57-8	2-Chlorophenol	U	560	1.0	500	560	180	
95-48-7	2-Methylphenol	U	680	1.0	600	680	230	
108-60-1	2,2'-Oxybis(1-chloropropane)	U	370	1.0	330	370	100	
98-86-2	Acetophenone	U	680	1.0	600	680	200	
621-64-7	N-Nitroso-di-n-propylamine	U	370	1.0	330	370	94	
65794-96-9	3&4-Methylphenol	U	680	1.0	600	680	210	
67-72-1	Hexachloroethane	U	370	1.0	330	370	110	
98-95-3	Nitrobenzene	U	370	1.0	330	370	100	
78-59-1	Isophorone	U	370	1.0	330	370	85	
88-75-5	2-Nitrophenol	U	680	1.0	600	680	190	
105-67-9	2,4-Dimethylphenol	U	560	1.0	500	560	190	
111-91-1	Bis(2-Chloroethoxy)methane	U	370	1.0	330	370	110	
120-83-2	2,4-Dichlorophenol	U	560	1.0	500	560	170	
106-47-8	4-Chloroaniline	U	560	1.0	500	560	130	
105-60-2	Caprolactam	U	560	1.0	500	560	160	
59-50-7	4-Chloro-3-Methylphenol	U	560	1.0	500	560	190	
88-06-2	2,4,6-Trichlorophenol	U	560	1.0	500	560	180	
95-95-4	2,4,5-Trichlorophenol	U	560	1.0	500	560	180	
91-58-7	2-Chloronaphthalene	U	370	1.0	330	370	98	
92-52-4	1,1'-Biphenyl	U	370	1.0	330	370	82	
88-74-4	2-Nitroaniline	U	560	1.0	500	560	85	
131-11-3	Dimethyl Phthalate	U	370	1.0	330	370	88	
606-20-2	2,6-Dinitrotoluene	U	370	1.0	330	370	89	
208-96-8	Acenaphthylene	U	370	1.0	330	370	79	
99-09-2	3-Nitroaniline	U	560	1.0	500	560	110	
83-32-9	Acenaphthene	U	370	1.0	330	370	73	
51-28-5	2,4-Dinitrophenol	~~U~~ UJ	1400	1.0	1200	1400	430	CCH
132-64-9	Dibenzofuran	U	370	1.0	330	370	89	
100-02-7	4-Nitrophenol	~~U~~ UJ	1400	1.0	1200	1400	350	CCH
121-14-2	2,4-Dinitrotoluene	U	370	1.0	330	370	96	
84-66-2	Diethylphthalate	U	370	1.0	330	370	90	
7005-72-3	4-Chlorophenyl-phenylether	U	370	1.0	330	370	88	
100-01-6	4-Nitroaniline	U	560	1.0	500	560	150	
534-52-1	4,6-Dinitro-2-Methylphenol	U	1400	1.0	1200	1400	380	
86-30-6	N-Nitrosodiphenylamine	U	740	1.0	660	740	250	
101-55-3	4-Bromophenyl-phenylether	U	370	1.0	330	370	96	
1912-24-9	Atrazine	U	370	1.0	330	370	100	
87-86-5	Pentachlorophenol	U	930	1.0	820	930	270	
120-12-7	Anthracene	U	370	1.0	330	370	95	
86-74-8	Carbazole	U	560	1.0	500	560	120	

lw
4/16/09

KATAHDIN ANALYTICAL SERVICES
Report of Analytical Results

Client: CH2MHill
Project: TO-009 Lejeune
PO No:
Sample Date: 01/11/09
Received Date: 01/13/09
Extraction Date: 01/19/09
Analysis Date: 28-JAN-2009 04:19
Report Date: 02/06/2009
Matrix: SOIL
% Solids: 88.5

Lab ID: SC0148-37
Client ID: MR08-SS242-09A
SDG: TO9-34
Extracted by: AC
Extraction Method: SW846 3550
Analyst: JCG
Analysis Method: SW846 8270C
Lab Prep Batch: WG59937
Units: ug/Kgdrywt

CAS#	Compound	Flags	Results	DF	PQL	Adj.PQL	Adj.MDL
84-74-2	Di-n-butylphthalate	U	370	1.0	330	370	110
85-68-7	Butylbenzylphthalate	U	370	1.0	330	370	100
91-94-1	3,3'-Dichlorobenzidine	U	560	1.0	500	560	130
218-01-9	Chrysene	U	370	1.0	330	370	110
117-81-7	bis(2-Ethylhexyl)phthalate	J	180	1.0	330	370	110
117-84-0	Di-n-octylphthalate	U	370	1.0	330	370	240
367-12-4	2-Fluorophenol		71%				
13127-88-3	Phenol-D6		69%				
4165-60-0	Nitrobenzene-D5		63%				
321-60-8	2-Fluorobiphenyl		69%				
118-79-6	2,4,6-Tribromophenol		66%				
1718-51-0	Terphenyl-D14		97%				

MW 4/16/09

KATAHDIN ANALYTICAL SERVICES
Report of Analytical Results

Client: CH2MHill
Project: TO-009 Lejeune
PO No:
Sample Date: 01/11/09
Received Date: 01/13/09
Extraction Date: 01/19/09
Analysis Date: 28-JAN-2009 01:30
Report Date: 02/06/2009
Matrix: SOIL
% Solids: 90.3

Lab ID: SC0148-39
Client ID: MR08-IS242-6-7-09A
SDG: TO9-34
Extracted by: AC
Extraction Method: SW846 3550
Analyst: JCG
Analysis Method: SW846 8270C
Lab Prep Batch: WG59937
Units: ug/Kgdrywt

CAS#	Compound	Flags	Results	DF	PQL	Adj.PQL	Adj.MDL	
100-52-7	Benzaldehyde	U	550	1.0	500	550	130	
108-95-2	Phenol	U	550	1.0	500	550	170	
111-44-4	Bis(2-Chloroethyl)ether	U	360	1.0	330	360	90	
95-57-8	2-Chlorophenol	U	550	1.0	500	550	180	
95-48-7	2-Methylphenol	U	660	1.0	600	660	220	
108-60-1	2,2'-Oxybis(1-chloropropane)	U	360	1.0	330	360	98	
98-86-2	Acetophenone	U	660	1.0	600	660	200	
621-64-7	N-Nitroso-di-n-propylamine	U	360	1.0	330	360	92	
65794-96-9	3&4-Methylphenol	U	660	1.0	600	660	210	
67-72-1	Hexachloroethane	U	360	1.0	330	360	110	
98-95-3	Nitrobenzene	U	360	1.0	330	360	100	
78-59-1	Isophorone	U	360	1.0	330	360	83	
88-75-5	2-Nitrophenol	U	660	1.0	600	660	180	
105-67-9	2,4-Dimethylphenol	U	550	1.0	500	550	180	
111-91-1	Bis(2-Chloroethoxy)methane	U	360	1.0	330	360	110	
120-83-2	2,4-Dichlorophenol	U	550	1.0	500	550	170	
106-47-8	4-Chloroaniline	U	550	1.0	500	550	130	
105-60-2	Caprolactam	U	550	1.0	500	550	160	
59-50-7	4-Chloro-3-Methylphenol	U	550	1.0	500	550	180	
88-06-2	2,4,6-Trichlorophenol	U	550	1.0	500	550	170	
95-95-4	2,4,5-Trichlorophenol	U	550	1.0	500	550	170	
91-58-7	2-Chloronaphthalene	U	360	1.0	330	360	96	
92-52-4	1,1'-Biphenyl	U	360	1.0	330	360	81	
88-74-4	2-Nitroaniline	U	550	1.0	500	550	83	
131-11-3	Dimethyl Phthalate	U	360	1.0	330	360	86	
606-20-2	2,6-Dinitrotoluene	U	360	1.0	330	360	88	
208-96-8	Acenaphthylene	U	360	1.0	330	360	78	
99-09-2	3-Nitroaniline	U	550	1.0	500	550	100	
83-32-9	Acenaphthene	U	360	1.0	330	360	72	
51-28-5	2,4-Dinitrophenol	~~U~~ UJ	1300	1.0	1200	1300	420	CCH
132-64-9	Dibenzofuran	U	360	1.0	330	360	88	
100-02-7	4-Nitrophenol	~~U~~ UJ	1300	1.0	1200	1300	340	CCH
121-14-2	2,4-Dinitrotoluene	U	360	1.0	330	360	94	
84-66-2	Diethylphthalate	U	360	1.0	330	360	89	
7005-72-3	4-Chlorophenyl-phenylether	U	360	1.0	330	360	86	
100-01-6	4-Nitroaniline	U	550	1.0	500	550	150	
534-52-1	4,6-Dinitro-2-Methylphenol	U	1300	1.0	1200	1300	370	
86-30-6	N-Nitrosodiphenylamine	U	730	1.0	660	730	240	
101-55-3	4-Bromophenyl-phenylether	U	360	1.0	330	360	94	
1912-24-9	Atrazine	U	360	1.0	330	360	100	
87-86-5	Pentachlorophenol	U	910	1.0	820	910	260	
120-12-7	Anthracene	U	360	1.0	330	360	93	
86-74-8	Carbazole	U	550	1.0	500	550	120	

lw 4/14/09

KATAHDIN ANALYTICAL SERVICES
Report of Analytical Results

Client: CH2MHill
Project: TO-009 Lejeune
PO No:
Sample Date: 01/11/09
Received Date: 01/13/09
Extraction Date: 01/19/09
Analysis Date: 28-JAN-2009 01:30
Report Date: 02/06/2009
Matrix: SOIL
% Solids: 90.3

Lab ID: SC0148-39
Client ID: MR08-IS242-6-7-09A
SDG: TO9-34
Extracted by: AC
Extraction Method: SW846 3550
Analyst: JCG
Analysis Method: SW846 8270C
Lab Prep Batch: WG59937
Units: ug/Kgdrywt

CAS#	Compound	Flags	Results	DF	PQL	Adj.PQL	Adj.MDL
84-74-2	Di-n-butylphthalate	U	360	1.0	330	360	110
85-68-7	Butylbenzylphthalate	U	360	1.0	330	360	100
91-94-1	3,3'-Dichlorobenzidine	U	550	1.0	500	550	130
218-01-9	Chrysene	U	360	1.0	330	360	100
117-81-7	bis(2-Ethylhexyl)phthalate	U	360	1.0	330	360	110
117-84-0	Di-n-octylphthalate	U	360	1.0	330	360	230
367-12-4	2-Fluorophenol		73%				
13127-88-3	Phenol-D6		73%				
4165-60-0	Nitrobenzene-D5		67%				
321-60-8	2-Fluorobiphenyl		70%				
118-79-6	2,4,6-Tribromophenol		58%				
1718-51-0	Terphenyl-D14		81%				

RW
4/16/09

ENVIRONMENTAL
Data Services, Inc.

POLYNUCLEAR AROMATIC COMPOUNDS BY 8270SIM

USEPA Region IV - Level IV Review

Site: MCB Camp Lejeune, TO-09 SDG #: TO9-35

Client: CH2M HILL, Inc., Virginia Beach, Virginia Date: April 16, 2009

Laboratory: Katahdin Analytical Services, Scarborough, Maine Reviewer: Nancy Weaver

EDS ID	Client Sample ID	Laboratory Sample ID	Matrix
1	MR08-SS265-09A	SC0149-2	Soil
2	MR08-IS265-3-4-09A	SC0149-4	Soil
3	MR08-SS266-09A	SC0149-6	Soil
4	MR08-IS266-5-6-09A	SC0149-8	Soil
5	MR08-SS289-09A	SC0149-10	Soil
6	MR08-SS289D-09A	SC0149-12	Soil
7	MR08-IS289-2-3-09A	SC0149-14	Soil
7DL	MR08-IS289-2-3-09ADL	SC0149-14DL	Soil
8	MR08-IS289D-2-3-09A	SC0149-16	Soil
9	MR08-SS290-09A	SC0149-18	Soil
10	MR08-IS290-4-5-09A	SC0149-20	Soil
11	MR08-SS313-09A	SC0149-22	Soil
12	MR08-IS313-5-6-09A	SC0149-24	Soil
13	MR08-SS291-09A	SC0176-2	Soil
14	MR08-IS291-8-9-09A	SC0176-4	Soil
15	MR08-SS292-09A	SC0176-6	Soil
16	MR08-IS292-5-6-09A	SC0176-8	Soil
17	MR08-SS293-09A	SC0176-10	Soil
18	MR08-IS293-2-3-09A	SC0176-12	Soil
19	MR08-SS294-09A	SC0176-14	Soil
20	MR08-IS294-8-9-09A	SC0176-16	Soil

The USEPA "Contract Laboratory Program National Functional Guidelines for Organic Data Review," October 1999, and professional judgment were used in evaluating the data in this summary report.

Holding Times - All samples were extracted within 14 days for soil samples and analyzed within 40 days for all samples.

GC/MS Tuning - All of the DFTPP tunes in the initial and continuing calibrations met the percent relative abundance criteria.

Initial Calibration - The initial calibrations exhibited acceptable %RSD and mean RRF values.

Continuing Calibration - The continuing calibrations exhibited acceptable %D and RRF values except the following.

CCAL Date	Compound	%D/RRF	Qualifier	Affected Samples
02/02/09 (0754)	Fluorene	26.16%	J/UJ	5, 7, 10, 12, 14-16, 18
	Phenanthrene	27.28%	J/UJ	5, 7, 10, 12, 14-16, 18
	Pyrene	29.98%	J/UJ	5, 7, 10, 12, 14-16, 18
	Benzo (a) anthracene	26.47%	J/UJ	5, 7, 10, 12, 14-16, 18
	Benzo (k) fluoranthene	32.03%	J/UJ	5, 7, 10, 12, 14-16, 18
	Benzo (a) pyrene	25.44%	J/UJ	5, 7, 10, 12, 14-16, 18
	Indeno (1, 2, 3-cd) pyrene	28.26%	J/UJ	5, 7, 10, 12, 14-16, 18
	Dibenzo (a, h) anthracene	29.98%	J/UJ	5, 7, 10, 12, 14-16, 18
	Benzo (g, h, i) perylene	27.40%	J/UJ	5, 7, 10, 12, 14-16, 18
	Hexachlorocyclopentadiene	53.89%	J/UJ	5, 7, 10, 12, 14-16, 18
02/02/09 (1928)	Benzo (a) anthracene	28.60%	J/UJ	6, 7DL. 8, 9, 11, 13, 17, 19, 20
	Benzo (k) fluoranthene	32.16%	J/UJ	

Surrogates - All samples exhibited acceptable surrogate recoveries

MS/MSD - A MS/MSD sample was not analyzed.

Laboratory Control Sample - The LCS samples exhibited acceptable %R values except the following.

LCS ID	Compound	%R	Qualifier	Affected Samples
WG59949-LCS	Benzo (k) fluoranthene	119%	None	See CCAL
	Benzo (a) pyrene	110%	J	17
	Benzo (g, h, i) pyrene	116%	J	17, 19

Internal Standard (IS) Area Performance - All internal standards met response and retention time (RT) criteria.

Method Blank - The method blanks were free of contamination.

Field, Equipment Blank - Field QC results are summarized below.

Blank ID	Compound	Conc. ug/L	Action Level ug/kg	Qualifier	Affected Samples
MR08-FB01011009	None - ND	-	-	-	-
MR08-EB01011109-SS	None - ND				

Field Duplicates - Field duplicate results are summarized below.

Compound	MR08-SS289-09A ug/kg	MR08-SS289D-09A ug/kg	RPD	Qualifier
Phenanthrene	13	12	8%	None
Fluoranthene	57	74	26%	None
Pyrene	44	66	40%	None
Benzo (a) anthracene	28	40	35%	None
Benzo (b) fluoranthene	48	54	12%	None
Benzo (k) fluoranthene	35	50	35%	None
Benzo (a) pyrene	40	44	10%	None
Indeno (1, 2, 3-cd) pyrene	40	27	39%	None
Dibenzo (a, h) anthracene	12	11	9%	None
Benzo (g, h, i) perylene	39	26	40%	None

Compound	MR08-IS289-2-3-09A ug/kg	MR08-IS289D-2-3-09A ug/kg	RPD	Qualifier
Naphthalene	46	12 U	NC	None
2-Methylnaphthalene	8.7	12 U	NC	None
Fluorene	23	12 U	NC	None
Phenanthrene	170	12 U	NC	None
Fluoranthene	400	2.7	197%	None
Pyrene	230	12 U	NC	None
Benzo (a) anthracene	200	12 U	NC	None
Benzo (b) fluoranthene	260	12 U	NC	None
Benzo (k) fluoranthene	160	12 U	NC	None
Benzo (a) pyrene	200	12 U	NC	None
Indeno (1, 2, 3-cd) pyrene	130	12 U	NC	None
Dibenzo (a, h) anthracene	58	12 U	NC	None
Benzo (g, h, i) perylene	120	12 U	NC	None

Compound Quantitation - One sample exhibited a high concentration of fluoranthene and was flagged (E) by the laboratory. The sample was diluted and reanalyzed and the dilution result for fluoranthene should be used for reporting.

KATAHDIN ANALYTICAL SERVICES
Report of Analytical Results

Client: CH2MHill
Project: TO-009 Lejeune
PO No:
Sample Date: 01/11/09
Received Date: 01/13/09
Extraction Date: 01/19/09
Analysis Date: 31-JAN-2009 13:36
Report Date: 02/04/2009
Matrix: SOIL
% Solids: 90.0

Lab ID: SC0149-2
Client ID: MR08-SS265-09A
SDG: TO9-35
Extracted by: AC
Extraction Method: SW846 3550
Analyst: JCG
Analysis Method: SW846 M8270C
Lab Prep Batch: WG59940
Units: ug/Kgdrywt

CAS#	Compound	Flags	Results	DF	PQL	Adj.PQL	Adj.MDL
91-20-3	Naphthalene	U	11	1.0	10	11	2.9
91-57-6	2-Methylnaphthalene	U	11	1.0	10	11	2.4
86-73-7	Fluorene	U	11	1.0	10	11	3.6
85-01-8	Phenanthrene	U	11	1.0	10	11	2.0
206-44-0	Fluoranthene	J	4.4	1.0	10	11	2.0
129-00-0	Pyrene	J	4.1	1.0	10	11	2.3
56-55-3	Benzo(a)anthracene	U	11	1.0	10	11	2.1
205-99-2	Benzo(b)fluoranthene	U	11	1.0	10	11	2.7
207-08-9	Benzo(k)fluoranthene	U	11	1.0	10	11	3.4
50-32-8	Benzo(a)pyrene	U	11	1.0	10	11	3.7
193-39-5	Indeno(1,2,3-cd)pyrene	J	2.3	1.0	10	11	2.1
53-70-3	Dibenzo(a,h)anthracene	U	11	1.0	10	11	2.0
191-24-2	Benzo(g,h,i)perylene	J	2.6	1.0	10	11	2.2
118-74-1	Hexachlorobenzene	U	11	1.0	10	11	2.0
87-68-3	Hexachlorobutadiene	U	11	1.0	10	11	2.6
77-47-4	Hexachlorocyclopentadiene	U	11	1.0	10	11	1.7
7297-45-2	2-Methylnaphthalene-D10		81%				
367-12-4	2,4-Dibromophenol		96%				
81103-79-9	Fluorene-d10		101%				
1718-51-1	Pyrene-D10		102%				

lw
4/16/09

2

KATAHDIN ANALYTICAL SERVICES
Report of Analytical Results

Client: CH2MHill
Project: TO-009 Lejeune
PO No:
Sample Date: 01/11/09
Received Date: 01/13/09
Extraction Date: 01/19/09
Analysis Date: 31-JAN-2009 14:18
Report Date: 02/04/2009
Matrix: SOIL
% Solids: 84.0

Lab ID: SC0149-4
Client ID: MR08-IS265-3-4-09A
SDG: TO9-35
Extracted by: AC
Extraction Method: SW846 3550
Analyst: JCG
Analysis Method: SW846 M8270C
Lab Prep Batch: WG59940
Units: ug/Kgdrywt

CAS#	Compound	Flags	Results	DF	PQL	Adj.PQL	Adj.MDL
91-20-3	Naphthalene	U	12	1.0	10	12	3.1
91-57-6	2-Methylnaphthalene	U	12	1.0	10	12	2.6
86-73-7	Fluorene	U	12	1.0	10	12	3.8
85-01-8	Phenanthrene	U	12	1.0	10	12	2.1
206-44-0	Fluoranthene	J	7.7	1.0	10	12	2.1
129-00-0	Pyrene	J	6.9	1.0	10	12	2.5
56-55-3	Benzo(a)anthracene	J	5.0	1.0	10	12	2.3
205-99-2	Benzo(b)fluoranthene	J	6.9	1.0	10	12	2.8
207-08-9	Benzo(k)fluoranthene	J	5.8	1.0	10	12	3.7
50-32-8	Benzo(a)pyrene	J	5.7	1.0	10	12	3.9
193-39-5	Indeno(1,2,3-cd)pyrene	J	4.5	1.0	10	12	2.3
53-70-3	Dibenzo(a,h)anthracene	U	12	1.0	10	12	2.1
191-24-2	Benzo(g,h,i)perylene	J	4.3	1.0	10	12	2.4
118-74-1	Hexachlorobenzene	U	12	1.0	10	12	2.1
87-68-3	Hexachlorobutadiene	U	12	1.0	10	12	2.7
77-47-4	Hexachlorocyclopentadiene	U	12	1.0	10	12	1.8
7297-45-2	2-Methylnaphthalene-D10		73%				
367-12-4	2,4-Dibromophenol		86%				
81103-79-9	Fluorene-d10		89%				
1718-51-1	Pyrene-D10		84%				

liw
4/16/09

KATAHDIN ANALYTICAL SERVICES
Report of Analytical Results

Client: CH2MHill
Project: TO-009 Lejeune
PO No:
Sample Date: 01/11/09
Received Date: 01/13/09
Extraction Date: 01/19/09
Analysis Date: 31-JAN-2009 14:59
Report Date: 02/07/2009
Matrix: SOIL
% Solids: 88.7

Lab ID: SC0149-6
Client ID: MR08-SS266-09A
SDG: TO9-35
Extracted by: AC
Extraction Method: SW846 3550
Analyst: JCG
Analysis Method: SW846 M8270C
Lab Prep Batch: WG59940
Units: ug/Kgdrywt

CAS#	Compound	Flags	Results	DF	PQL	Adj.PQL	Adj.MDL
91-20-3	Naphthalene	U	11	1.0	10	11	2.9
91-57-6	2-Methylnaphthalene	U	11	1.0	10	11	2.5
86-73-7	Fluorene	U	11	1.0	10	11	3.6
85-01-8	Phenanthrene		86	1.0	10	11	2.0
206-44-0	Fluoranthene		180	1.0	10	11	2.0
129-00-0	Pyrene		140	1.0	10	11	2.4
56-55-3	Benzo(a)anthracene		92	1.0	10	11	2.1
205-99-2	Benzo(b)fluoranthene		120	1.0	10	11	2.7
207-08-9	Benzo(k)fluoranthene		64	1.0	10	11	3.5
50-32-8	Benzo(a)pyrene		80	1.0	10	11	3.7
193-39-5	Indeno(1,2,3-cd)pyrene		49	1.0	10	11	2.1
53-70-3	Dibenzo(a,h)anthracene		22	1.0	10	11	2.0
191-24-2	Benzo(g,h,i)perylene		49	1.0	10	11	2.2
118-74-1	Hexachlorobenzene	U	11	1.0	10	11	2.0
87-68-3	Hexachlorobutadiene	U	11	1.0	10	11	2.6
77-47-4	Hexachlorocyclopentadiene	U	11	1.0	10	11	1.7
7297-45-2	2-Methylnaphthalene-D10		80%				
367-12-4	2,4-Dibromophenol		98%				
81103-79-9	Fluorene-d10		101%				
1718-51-1	Pyrene-D10		104%				

4/16/09

KATAHDIN ANALYTICAL SERVICES
Report of Analytical Results

Client: CH2MHill
Project: TO-009 Lejeune
PO No:
Sample Date: 01/11/09
Received Date: 01/13/09
Extraction Date: 01/19/09
Analysis Date: 31-JAN-2009 15:40
Report Date: 02/04/2009
Matrix: SOIL
% Solids: 85.1

Lab ID: SC0149-8
Client ID: MR08-IS266-5-6-09A
SDG: TO9-35
Extracted by: AC
Extraction Method: SW846 3550
Analyst: JCG
Analysis Method: SW846 M8270C
Lab Prep Batch: WG59940
Units: ug/Kgdrywt

CAS#	Compound	Flags	Results	DF	PQL	Adj.PQL	Adj.MDL
91-20-3	Naphthalene	U	12	1.0	10	12	3.0
91-57-6	2-Methylnaphthalene	U	12	1.0	10	12	2.6
86-73-7	Fluorene	U	12	1.0	10	12	3.8
85-01-8	Phenanthrene	U	12	1.0	10	12	2.1
206-44-0	Fluoranthene	U	12	1.0	10	12	2.1
129-00-0	Pyrene	U	12	1.0	10	12	2.5
56-55-3	Benzo(a)anthracene	U	12	1.0	10	12	2.2
205-99-2	Benzo(b)fluoranthene	U	12	1.0	10	12	2.8
207-08-9	Benzo(k)fluoranthene	U	12	1.0	10	12	3.6
50-32-8	Benzo(a)pyrene	U	12	1.0	10	12	3.9
193-39-5	Indeno(1,2,3-cd)pyrene	U	12	1.0	10	12	2.2
53-70-3	Dibenzo(a,h)anthracene	U	12	1.0	10	12	2.1
191-24-2	Benzo(g,h,i)perylene	U	12	1.0	10	12	2.4
118-74-1	Hexachlorobenzene	U	12	1.0	10	12	2.1
87-68-3	Hexachlorobutadiene	U	12	1.0	10	12	2.7
77-47-4	Hexachlorocyclopentadiene	U	12	1.0	10	12	1.8
7297-45-2	2-Methylnaphthalene-D10		82%				
367-12-4	2,4-Dibromophenol		73%				
81103-79-9	Fluorene-d10		88%				
1718-51-1	Pyrene-D10		89%				

kw
4/16/09

5

KATAHDIN ANALYTICAL SERVICES
Report of Analytical Results

Client: CH2MHill
Project: TO-009 Lejeune
PO No:
Sample Date: 01/11/09
Received Date: 01/13/09
Extraction Date: 01/19/09
Analysis Date: 02-FEB-2009 14:49
Report Date: 02/04/2009
Matrix: SOIL
% Solids: 90.0

Lab ID: SC0149-10
Client ID: MR08-SS289-09A
SDG: TO9-35
Extracted by: AC
Extraction Method: SW846 3550
Analyst: JLP
Analysis Method: SW846 M8270C
Lab Prep Batch: WG59940
Units: ug/Kgdrywt

CAS#	Compound	Flags		Results	DF	PQL	Adj.PQL	Adj.MDL	
91-20-3	Naphthalene	U		11	1.0	10	11	2.9	
91-57-6	2-Methylnaphthalene	U		11	1.0	10	11	2.4	
86-73-7	Fluorene	~~U~~	UJ	11	1.0	10	11	3.6	CCH
85-01-8	Phenanthrene		J	13	1.0	10	11	2.0	CCH
206-44-0	Fluoranthene			57	1.0	10	11	2.0	
129-00-0	Pyrene		J	44	1.0	10	11	2.3	CCH
56-55-3	Benzo(a)anthracene		J	28	1.0	10	11	2.1	CCH
205-99-2	Benzo(b)fluoranthene			48	1.0	10	11	2.7	
207-08-9	Benzo(k)fluoranthene		J	35	1.0	10	11	3.4	CCH
50-32-8	Benzo(a)pyrene			40	1.0	10	11	3.7	
193-39-5	Indeno(1,2,3-cd)pyrene			33	1.0	10	11	2.1	
53-70-3	Dibenzo(a,h)anthracene			12	1.0	10	11	2.0	
191-24-2	Benzo(g,h,i)perylene			39	1.0	10	11	2.2	
118-74-1	Hexachlorobenzene	U		11	1.0	10	11	2.0	
87-68-3	Hexachlorobutadiene	U		11	1.0	10	11	2.6	
77-47-4	Hexachlorocyclopentadiene	~~U~~	UJ	11	1.0	10	11	1.7	CCH
7297-45-2	2-Methylnaphthalene-D10			85%					
367-12-4	2,4-Dibromophenol			101%					
81103-79-9	Fluorene-d10			103%					
1718-51-1	Pyrene-D10			92%					

LW
4/16/09

6

KATAHDIN ANALYTICAL SERVICES
Report of Analytical Results

Client: CH2MHill
Project: TO-009 Lejeune
PO No:
Sample Date: 01/11/09
Received Date: 01/13/09
Extraction Date: 01/19/09
Analysis Date: 03-FEB-2009 03:05
Report Date: 02/04/2009
Matrix: SOIL
% Solids: 88.4

Lab ID: SC0149-12RA
Client ID: MR08-SS289D-09A
SDG: TO9-35
Extracted by: AC
Extraction Method: SW846 3550
Analyst: JCG
Analysis Method: SW846 M8270C
Lab Prep Batch: WG59940
Units: ug/Kgdrywt

CAS#	Compound	Flags	Results	DF	PQL	Adj.PQL	Adj.MDL	
91-20-3	Naphthalene	U	11	1.0	10	11	2.9	
91-57-6	2-Methylnaphthalene	U	11	1.0	10	11	2.5	
86-73-7	Fluorene	U	11	1.0	10	11	3.6	
85-01-8	Phenanthrene		12	1.0	10	11	2.0	
206-44-0	Fluoranthene		74	1.0	10	11	2.0	
129-00-0	Pyrene		66	1.0	10	11	2.4	
56-55-3	Benzo(a)anthracene	J	40	1.0	10	11	2.1	CCH
205-99-2	Benzo(b)fluoranthene		54	1.0	10	11	2.7	
207-08-9	Benzo(k)fluoranthene	J	50	1.0	10	11	3.5	CCH
50-32-8	Benzo(a)pyrene		44	1.0	10	11	3.7	
193-39-5	Indeno(1,2,3-cd)pyrene		27	1.0	10	11	2.1	
53-70-3	Dibenzo(a,h)anthracene	J	11	1.0	10	11	2.0	
191-24-2	Benzo(g,h,i)perylene		26	1.0	10	11	2.3	
118-74-1	Hexachlorobenzene	U	11	1.0	10	11	2.0	
87-68-3	Hexachlorobutadiene	U	11	1.0	10	11	2.6	
77-47-4	Hexachlorocyclopentadiene	U	11	1.0	10	11	1.7	
7297-45-2	2-Methylnaphthalene-D10		97%					
367-12-4	2,4-Dibromophenol		112%					
81103-79-9	Fluorene-d10		126%					
1718-51-1	Pyrene-D10		126%					

MW
4/16/09

7

KATAHDIN ANALYTICAL SERVICES
Report of Analytical Results

Client: CH2MHill
Project: TO-009 Lejeune
PO No:
Sample Date: 01/11/09
Received Date: 01/13/09
Extraction Date: 01/19/09
Analysis Date: 02-FEB-2009 16:11
Report Date: 02/04/2009
Matrix: SOIL
% Solids: 77.5

Lab ID: SC0149-14
Client ID: MR08-IS289-2-3-09A
SDG: TO9-35
Extracted by: AC
Extraction Method: SW846 3550
Analyst: JLP
Analysis Method: SW846 M8270C
Lab Prep Batch: WG59940
Units: ug/Kgdrywt

CAS#	Compound	Flags		Results	DF	PQL	Adj.PQL	Adj.MDL	
91-20-3	Naphthalene			46	1.0	10	13	3.4	
91-57-6	2-Methylnaphthalene	J		8.7	1.0	10	13	2.8	
86-73-7	Fluorene		J	23	1.0	10	13	4.1	CCH
85-01-8	Phenanthrene		J	170	1.0	10	13	2.3	CCH
206-44-0	Fluoranthene	~~E~~	400	~~370~~ 2	~~1.0~~	10	26 ~~13~~	4.6 ~~2.3~~	R DL
129-00-0	Pyrene		J	230	1.0	10	13	2.7	CCH
56-55-3	Benzo(a)anthracene		J	200	1.0	10	13	2.4	CCH
205-99-2	Benzo(b)fluoranthene			260	1.0	10	13	3.1	
207-08-9	Benzo(k)fluoranthene		J	160	1.0	10	13	4.0	CCH
50-32-8	Benzo(a)pyrene			200	1.0	10	13	4.2	
193-39-5	Indeno(1,2,3-cd)pyrene			130	1.0	10	13	2.4	
53-70-3	Dibenzo(a,h)anthracene			58	1.0	10	13	2.3	
191-24-2	Benzo(g,h,i)perylene			120	1.0	10	13	2.6	
118-74-1	Hexachlorobenzene	U		13	1.0	10	13	2.3	
87-68-3	Hexachlorobutadiene	U		13	1.0	10	13	3.0	
77-47-4	Hexachlorocyclopentadiene	~~U~~	UJ	13	1.0	10	13	1.9	CCH
7297-45-2	2-Methylnaphthalene-D10			72%					
367-12-4	2,4-Dibromophenol			86%					
81103-79-9	Fluorene-d10			82%					
1718-51-1	Pyrene-D10			79%					

MW 4/16/09

7DL

KATAHDIN ANALYTICAL SERVICES
Report of Analytical Results

Client: CH2MHill
Project: TO-009 Lejeune
PO No:
Sample Date: 01/11/09
Received Date: 01/13/09
Extraction Date: 01/19/09
Analysis Date: 03-FEB-2009 01:02
Report Date: 02/04/2009
Matrix: SOIL
% Solids: 77.5

Lab ID: SC0149-14DL
Client ID: MR08-IS289-2-3-09A
SDG: TO9-35
Extracted by: AC
Extraction Method: SW846 3550
Analyst: JCG
Analysis Method: SW846 M8270C
Lab Prep Batch: WG59940
Units: ug/Kgdrywt

use original

R DL

CAS#	Compound	Flags	Results	DF	PQL	Adj.PQL	Adj.MDL	
91-20-3	Naphthalene		48	2.0	10	26	6.7	
91-57-6	2-Methylnaphthalene	J	8.0	2.0	10	26	5.7	
86-73-7	Fluorene		28	2.0	10	26	8.2	
85-01-8	Phenanthrene		180	2.0	10	26	4.6	
206-44-0	Fluoranthene		400	2.0	10	26	4.6	
129-00-0	Pyrene		340	2.0	10	26	5.4	
56-55-3	Benzo(a)anthracene	J	230	2.0	10	26	4.9	CCH
205-99-2	Benzo(b)fluoranthene		270	2.0	10	26	6.2	
207-08-9	Benzo(k)fluoranthene	J	230	2.0	10	26	8.0	CCH
50-32-8	Benzo(a)pyrene		240	2.0	10	26	8.5	
193-39-5	Indeno(1,2,3-cd)pyrene		130	2.0	10	26	4.9	
53-70-3	Dibenzo(a,h)anthracene		62	2.0	10	26	4.6	
191-24-2	Benzo(g,h,i)perylene		120	2.0	10	26	5.2	
118-74-1	Hexachlorobenzene	U	26	2.0	10	26	4.6	
87-68-3	Hexachlorobutadiene	U	26	2.0	10	26	5.9	
77-47-4	Hexachlorocyclopentadiene	U	26	2.0	10	26	3.9	
7297-45-2	2-Methylnaphthalene-D10		76%					
367-12-4	2,4-Dibromophenol		82%					
81103-79-9	Fluorene-d10		101%					
1718-51-1	Pyrene-D10		107%					

lw
4/16/09

KATAHDIN ANALYTICAL SERVICES
Report of Analytical Results

Client: CH2MHill
Project: TO-009 Lejeune
PO No:
Sample Date: 01/11/09
Received Date: 01/13/09
Extraction Date: 01/19/09
Analysis Date: 02-FEB-2009 21:35
Report Date: 02/04/2009
Matrix: SOIL
% Solids: 81.5

Lab ID: SC0149-16
Client ID: MR08-IS289D-2-3-09A
SDG: TO9-35
Extracted by: AC
Extraction Method: SW846 3550
Analyst: JCG
Analysis Method: SW846 M8270C
Lab Prep Batch: WG59940
Units: ug/Kgdrywt

CAS#	Compound	Flags	Results	DF	PQL	Adj.PQL	Adj.MDL
91-20-3	Naphthalene	U	12	1.0	10	12	3.2
91-57-6	2-Methylnaphthalene	U	12	1.0	10	12	2.7
86-73-7	Fluorene	U	12	1.0	10	12	3.9
85-01-8	Phenanthrene	U	12	1.0	10	12	2.2
206-44-0	Fluoranthene	J	2.7	1.0	10	12	2.2
129-00-0	Pyrene	U	12	1.0	10	12	2.6
56-55-3	Benzo(a)anthracene	~~U~~ UJ	12	1.0	10	12	2.3 CCH
205-99-2	Benzo(b)fluoranthene	U	12	1.0	10	12	2.9
207-08-9	Benzo(k)fluoranthene	~~U~~ UJ	12	1.0	10	12	3.8 CCH
50-32-8	Benzo(a)pyrene	U	12	1.0	10	12	4.0
193-39-5	Indeno(1,2,3-cd)pyrene	U	12	1.0	10	12	2.3
53-70-3	Dibenzo(a,h)anthracene	U	12	1.0	10	12	2.2
191-24-2	Benzo(g,h,i)perylene	U	12	1.0	10	12	2.4
118-74-1	Hexachlorobenzene	U	12	1.0	10	12	2.2
87-68-3	Hexachlorobutadiene	U	12	1.0	10	12	2.8
77-47-4	Hexachlorocyclopentadiene	U	12	1.0	10	12	1.8
7297-45-2	2-Methylnaphthalene-D10		77%				
367-12-4	2,4-Dibromophenol		89%				
81103-79-9	Fluorene-d10		98%				
1718-51-1	Pyrene-D10		94%				

MW
4/16/09

9

KATAHDIN ANALYTICAL SERVICES
Report of Analytical Results

Client: CH2MHill
Project: TO-009 Lejeune
PO No:
Sample Date: 01/11/09
Received Date: 01/13/09
Extraction Date: 01/19/09
Analysis Date: 03-FEB-2009 04:28
Report Date: 02/07/2009
Matrix: SOIL
% Solids: 92.4

Lab ID: SC0149-18
Client ID: MR08-SS290-09A
SDG: TO9-35
Extracted by: AC
Extraction Method: SW846 3550
Analyst: JCG
Analysis Method: SW846 M8270C
Lab Prep Batch: WG59940
Units: ug/Kgdrywt

CAS#	Compound	Flags	Results	DF	PQL	Adj.PQL	Adj.MDL
91-20-3	Naphthalene	U	11	1.0	10	11	2.8
91-57-6	2-Methylnaphthalene	U	11	1.0	10	11	2.4
86-73-7	Fluorene	U	11	1.0	10	11	3.5
85-01-8	Phenanthrene		22	1.0	10	11	1.9
206-44-0	Fluoranthene		47	1.0	10	11	1.9
129-00-0	Pyrene		42	1.0	10	11	2.3
56-55-3	Benzo(a)anthracene	J	21	1.0	10	11	2.0 CCH
205-99-2	Benzo(b)fluoranthene		47	1.0	10	11	2.6
207-08-9	Benzo(k)fluoranthene	J	26	1.0	10	11	3.4 CCH
50-32-8	Benzo(a)pyrene		30	1.0	10	11	3.6
193-39-5	Indeno(1,2,3-cd)pyrene		21	1.0	10	11	2.0
53-70-3	Dibenzo(a,h)anthracene	J	8.1	1.0	10	11	1.9
191-24-2	Benzo(g,h,i)perylene		23	1.0	10	11	2.2
118-74-1	Hexachlorobenzene	U	11	1.0	10	11	1.9
87-68-3	Hexachlorobutadiene	U	11	1.0	10	11	2.5
77-47-4	Hexachlorocyclopentadiene	U	11	1.0	10	11	1.6
7297-45-2	2-Methylnaphthalene-D10		93%				
367-12-4	2,4-Dibromophenol		106%				
81103-79-9	Fluorene-d10		124%				
1718-51-1	Pyrene-D10		129%				

lw
4/16/09

10

KATAHDIN ANALYTICAL SERVICES
Report of Analytical Results

Client: CH2MHill
Project: TO-009 Lejeune
PO No:
Sample Date: 01/11/09
Received Date: 01/13/09
Extraction Date: 01/19/09
Analysis Date: 02-FEB-2009 13:26
Report Date: 02/04/2009
Matrix: SOIL
% Solids: 87.3

Lab ID: SC0149-20
Client ID: MR08-IS290-4-5-09A
SDG: TO9-35
Extracted by: AC
Extraction Method: SW846 3550
Analyst: JLP
Analysis Method: SW846 M8270C
Lab Prep Batch: WG59940
Units: ug/Kgdrywt

CAS#	Compound	Flags		Results	DF	PQL	Adj.PQL	Adj.MDL	
91-20-3	Naphthalene	U		11	1.0	10	11	3.0	
91-57-6	2-Methylnaphthalene	U		11	1.0	10	11	2.5	
86-73-7	Fluorene	~~U~~	UJ	11	1.0	10	11	3.7	CCH
85-01-8	Phenanthrene	~~U~~	UJ	11	1.0	10	11	2.1	CCH
206-44-0	Fluoranthene	U		11	1.0	10	11	2.1	
129-00-0	Pyrene	~~U~~	UJ	11	1.0	10	11	2.4	CCH
56-55-3	Benzo(a)anthracene	~~U~~	UJ	11	1.0	10	11	2.2	CCH
205-99-2	Benzo(b)fluoranthene	U		11	1.0	10	11	2.7	
207-08-9	Benzo(k)fluoranthene	~~U~~	UJ	11	1.0	10	11	3.6	CCH
50-32-8	Benzo(a)pyrene	U		11	1.0	10	11	3.8	
193-39-5	Indeno(1,2,3-cd)pyrene	U		11	1.0	10	11	2.2	
53-70-3	Dibenzo(a,h)anthracene	U		11	1.0	10	11	2.1	
191-24-2	Benzo(g,h,i)perylene	U		11	1.0	10	11	2.3	
118-74-1	Hexachlorobenzene	U		11	1.0	10	11	2.1	
87-68-3	Hexachlorobutadiene	U		11	1.0	10	11	2.6	
77-47-4	Hexachlorocyclopentadiene	~~U~~	UJ	11	1.0	10	11	1.7	CCH
7297-45-2	2-Methylnaphthalene-D10			98%					
367-12-4	2,4-Dibromophenol			110%					
81103-79-9	Fluorene-d10			117%					
1718-51-1	Pyrene-D10			119%					

LW
4/16/09

11

KATAHDIN ANALYTICAL SERVICES
Report of Analytical Results

Client: CH2MHill
Project: TO-009 Lejeune
PO No:
Sample Date: 01/11/09
Received Date: 01/13/09
Extraction Date: 01/19/09
Analysis Date: 02-FEB-2009 22:16
Report Date: 02/04/2009
Matrix: SOIL
% Solids: 91.0

Lab ID: SC0149-22
Client ID: MR08-SS313-09A
SDG: TO9-35
Extracted by: AC
Extraction Method: SW846 3550
Analyst: JCG
Analysis Method: SW846 M8270C
Lab Prep Batch: WG59940
Units: ug/Kgdrywt

CAS#	Compound	Flags	Results	DF	PQL	Adj.PQL	Adj.MDL
91-20-3	Naphthalene	U	11	1.0	10	11	2.8
91-57-6	2-Methylnaphthalene	U	11	1.0	10	11	2.4
86-73-7	Fluorene	U	11	1.0	10	11	3.5
85-01-8	Phenanthrene	U	11	1.0	10	11	2.0
206-44-0	Fluoranthene	U	11	1.0	10	11	2.0
129-00-0	Pyrene	U	11	1.0	10	11	2.3
56-55-3	Benzo(a)anthracene	~~U~~ UJ	11	1.0	10	11	2.1 CCH
205-99-2	Benzo(b)fluoranthene	U	11	1.0	10	11	2.6
207-08-9	Benzo(k)fluoranthene	~~U~~ UJ	11	1.0	10	11	3.4 CCH
50-32-8	Benzo(a)pyrene	U	11	1.0	10	11	3.6
193-39-5	Indeno(1,2,3-cd)pyrene	U	11	1.0	10	11	2.1
53-70-3	Dibenzo(a,h)anthracene	U	11	1.0	10	11	2.0
191-24-2	Benzo(g,h,i)perylene	U	11	1.0	10	11	2.2
118-74-1	Hexachlorobenzene	U	11	1.0	10	11	2.0
87-68-3	Hexachlorobutadiene	U	11	1.0	10	11	2.5
77-47-4	Hexachlorocyclopentadiene	U	11	1.0	10	11	1.6
7297-45-2	2-Methylnaphthalene-D10		86%				
367-12-4	2,4-Dibromophenol		94%				
81103-79-9	Fluorene-d10		112%				
1718-51-1	Pyrene-D10		104%				

4/16/09

KATAHDIN ANALYTICAL SERVICES
Report of Analytical Results

Client: CH2MHill
Project: TO-009 Lejeune
PO No:
Sample Date: 01/11/09
Received Date: 01/13/09
Extraction Date: 01/19/09
Analysis Date: 02-FEB-2009 14:07
Report Date: 02/04/2009
Matrix: SOIL
% Solids: 84.2

Lab ID: SC0149-24
Client ID: MR08-IS313-5-6-09A
SDG: TO9-35
Extracted by: AC
Extraction Method: SW846 3550
Analyst: JLP
Analysis Method: SW846 M8270C
Lab Prep Batch: WG59940
Units: ug/Kgdrywt

CAS#	Compound	Flags	Results	DF	PQL	Adj.PQL	Adj.MDL	
91-20-3	Naphthalene	U	12	1.0	10	12	3.1	
91-57-6	2-Methylnaphthalene	U	12	1.0	10	12	2.6	
86-73-7	Fluorene	~~U~~ UJ	12	1.0	10	12	3.8	CCH
85-01-8	Phenanthrene	~~U~~ UJ	12	1.0	10	12	2.1	CCH
206-44-0	Fluoranthene	U	12	1.0	10	12	2.1	
129-00-0	Pyrene	~~U~~ UJ	12	1.0	10	12	2.5	CCH
56-55-3	Benzo(a)anthracene	~~U~~ UJ	12	1.0	10	12	2.2	CCH
205-99-2	Benzo(b)fluoranthene	U	12	1.0	10	12	2.8	
207-08-9	Benzo(k)fluoranthene	~~U~~ UJ	12	1.0	10	12	3.7	CCH
50-32-8	Benzo(a)pyrene	U	12	1.0	10	12	3.9	
193-39-5	Indeno(1,2,3-cd)pyrene	U	12	1.0	10	12	2.2	
53-70-3	Dibenzo(a,h)anthracene	U	12	1.0	10	12	2.1	
191-24-2	Benzo(g,h,i)perylene	U	12	1.0	10	12	2.4	
118-74-1	Hexachlorobenzene	U	12	1.0	10	12	2.1	
87-68-3	Hexachlorobutadiene	U	12	1.0	10	12	2.7	
77-47-4	Hexachlorocyclopentadiene	~~U~~ UJ	12	1.0	10	12	1.8	CCH
7297-45-2	2-Methylnaphthalene-D10		75%					
367-12-4	2,4-Dibromophenol		85%					
81103-79-9	Fluorene-d10		94%					
1718-51-1	Pyrene-D10		100%					

lw
4/16/09

KATAHDIN ANALYTICAL SERVICES
Report of Analytical Results

Client: CH2MHill
Project: TO-009 Lejeune
PO No:
Sample Date: 01/12/09
Received Date: 01/14/09
Extraction Date: 01/19/09
Analysis Date: 03-FEB-2009 02:24
Report Date: 02/04/2009
Matrix: SOIL
% Solids: 88.8

Lab ID: SC0176-2
Client ID: MR08-SS291-09A
SDG: TO9-35
Extracted by: AC
Extraction Method: SW846 3550
Analyst: JCG
Analysis Method: SW846 M8270C
Lab Prep Batch: WG59940
Units: ug/Kgdrywt

CAS#	Compound	Flags	Results	DF	PQL	Adj.PQL	Adj.MDL	
91-20-3	Naphthalene	U	11	1.0	10	11	2.9	
91-57-6	2-Methylnaphthalene	U	11	1.0	10	11	2.5	
86-73-7	Fluorene	U	11	1.0	10	11	3.6	
85-01-8	Phenanthrene		14	1.0	10	11	2.0	
206-44-0	Fluoranthene		58	1.0	10	11	2.0	
129-00-0	Pyrene		48	1.0	10	11	2.4	
56-55-3	Benzo(a)anthracene	J	24	1.0	10	11	2.1	CCH
205-99-2	Benzo(b)fluoranthene		43	1.0	10	11	2.7	
207-08-9	Benzo(k)fluoranthene	J	37	1.0	10	11	3.5	CCH
50-32-8	Benzo(a)pyrene		24	1.0	10	11	3.7	
193-39-5	Indeno(1,2,3-cd)pyrene		16	1.0	10	11	2.1	
53-70-3	Dibenzo(a,h)anthracene	J	7.5	1.0	10	11	2.0	
191-24-2	Benzo(g,h,i)perylene		15	1.0	10	11	2.2	
118-74-1	Hexachlorobenzene	U	11	1.0	10	11	2.0	
87-68-3	Hexachlorobutadiene	U	11	1.0	10	11	2.6	
77-47-4	Hexachlorocyclopentadiene	U	11	1.0	10	11	1.7	
7297-45-2	2-Methylnaphthalene-D10		91%					
367-12-4	2,4-Dibromophenol		110%					
81103-79-9	Fluorene-d10		118%					
1718-51-1	Pyrene-D10		114%					

MW 4/16/09

KATAHDIN ANALYTICAL SERVICES
Report of Analytical Results

Client: CH2MHill
Project: TO-009 Lejeune
PO No:
Sample Date: 01/12/09
Received Date: 01/14/09
Extraction Date: 01/19/09
Analysis Date: 02-FEB-2009 10:40
Report Date: 02/04/2009
Matrix: SOIL
% Solids: 87.2

Lab ID: SC0176-4
Client ID: MR08-IS291-8-9-09A
SDG: TO9-35
Extracted by: AC
Extraction Method: SW846 3550
Analyst: JLP
Analysis Method: SW846 M8270C
Lab Prep Batch: WG59949
Units: ug/Kgdrywt

CAS#	Compound	Flags		Results	DF	PQL	Adj.PQL	Adj.MDL	
91-20-3	Naphthalene	U		11	1.0	10	11	3.0	
91-57-6	2-Methylnaphthalene	U		11	1.0	10	11	2.5	
86-73-7	Fluorene	~~U~~	UJ	11	1.0	10	11	3.7	CCH
85-01-8	Phenanthrene	~~U~~	UJ	11	1.0	10	11	2.1	CCH
206-44-0	Fluoranthene	U		11	1.0	10	11	2.1	
129-00-0	Pyrene	~~U~~	UJ	11	1.0	10	11	2.4	CCH
56-55-3	Benzo(a)anthracene	~~U~~	UJ	11	1.0	10	11	2.2	CCH
205-99-2	Benzo(b)fluoranthene	U		11	1.0	10	11	2.8	
207-08-9	Benzo(k)fluoranthene	~~U~~	UJ	11	1.0	10	11	3.6	CCH
50-32-8	Benzo(a)pyrene	U		11	1.0	10	11	3.8	
193-39-5	Indeno(1,2,3-cd)pyrene	U		11	1.0	10	11	2.2	
53-70-3	Dibenzo(a,h)anthracene	U		11	1.0	10	11	2.1	
191-24-2	Benzo(g,h,i)perylene	U		11	1.0	10	11	2.3	
118-74-1	Hexachlorobenzene	U		11	1.0	10	11	2.1	
87-68-3	Hexachlorobutadiene	U		11	1.0	10	11	2.6	
77-47-4	Hexachlorocyclopentadiene	~~U~~	UJ	11	1.0	10	11	1.7	CCH
7297-45-2	2-Methylnaphthalene-D10			87%					
367-12-4	2,4-Dibromophenol			93%					
81103-79-9	Fluorene-d10			105%					
1718-51-1	Pyrene-D10			128%					

lw 4/16/09

KATAHDIN ANALYTICAL SERVICES
Report of Analytical Results

Client: CH2MHill
Project: TO-009 Lejeune
PO No:
Sample Date: 01/12/09
Received Date: 01/14/09
Extraction Date: 01/19/09
Analysis Date: 02-FEB-2009 11:22
Report Date: 02/04/2009
Matrix: SOIL
% Solids: 90.9

Lab ID: SC0176-6
Client ID: MR08-SS292-09A
SDG: TO9-35
Extracted by: AC
Extraction Method: SW846 3550
Analyst: JLP
Analysis Method: SW846 M8270C
Lab Prep Batch: WG59949
Units: ug/Kgdrywt

CAS#	Compound	Flags	Results	DF	PQL	Adj.PQL	Adj.MDL	
91-20-3	Naphthalene	U	11	1.0	10	11	2.8	
91-57-6	2-Methylnaphthalene	U	11	1.0	10	11	2.4	
86-73-7	Fluorene	~~U~~ UJ	11	1.0	10	11	3.5	CCH
85-01-8	Phenanthrene	~~J~~ J	3.8	1.0	10	11	2.0	CCH
206-44-0	Fluoranthene		12	1.0	10	11	2.0	
129-00-0	Pyrene	~~J~~ J	8.3	1.0	10	11	2.3	CCH
56-55-3	Benzo(a)anthracene	~~J~~ J	5.9	1.0	10	11	2.1	CCH
205-99-2	Benzo(b)fluoranthene		14	1.0	10	11	2.6	
207-08-9	Benzo(k)fluoranthene	~~J~~ J	7.0	1.0	10	11	3.4	~~BSH~~ CCH
50-32-8	Benzo(a)pyrene	~~J~~ J	8.8	1.0	10	11	3.6	~~BSH~~
193-39-5	Indeno(1,2,3-cd)pyrene	~~J~~ J	7.5	1.0	10	11	2.1	
53-70-3	Dibenzo(a,h)anthracene	~~J~~ J	3.2	1.0	10	11	2.0	
191-24-2	Benzo(g,h,i)perylene	~~J~~ J	8.3	1.0	10	11	2.2	~~BSH~~
118-74-1	Hexachlorobenzene	U	11	1.0	10	11	2.0	
87-68-3	Hexachlorobutadiene	U	11	1.0	10	11	2.5	
77-47-4	Hexachlorocyclopentadiene	~~U~~ UJ	11	1.0	10	11	1.6	CCH
7297-45-2	2-Methylnaphthalene-D10		96%					
367-12-4	2,4-Dibromophenol		110%					
81103-79-9	Fluorene-d10		117%					
1718-51-1	Pyrene-D10		98%					

LW
4/16/09

16

KATAHDIN ANALYTICAL SERVICES
Report of Analytical Results

Client: CH2MHill
Project: TO-009 Lejeune
PO No:
Sample Date: 01/12/09
Received Date: 01/14/09
Extraction Date: 01/19/09
Analysis Date: 02-FEB-2009 12:03
Report Date: 02/04/2009
Matrix: SOIL
% Solids: 87.3

Lab ID: SC0176-8
Client ID: MR08-IS292-5-6-09A
SDG: TO9-35
Extracted by: AC
Extraction Method: SW846 3550
Analyst: JLP
Analysis Method: SW846 M8270C
Lab Prep Batch: WG59949
Units: ug/Kgdrywt

CAS#	Compound	Flags	Results	DF	PQL	Adj.PQL	Adj.MDL	
91-20-3	Naphthalene	U	11	1.0	10	11	3.0	
91-57-6	2-Methylnaphthalene	U	11	1.0	10	11	2.5	
86-73-7	Fluorene	~~U~~ UJ	11	1.0	10	11	3.7	CCH
85-01-8	Phenanthrene	~~U~~ UJ	11	1.0	10	11	2.1	CCH
206-44-0	Fluoranthene	U	11	1.0	10	11	2.1	
129-00-0	Pyrene	~~U~~ UJ	11	1.0	10	11	2.4	CCH
56-55-3	Benzo(a)anthracene	~~U~~ UJ	11	1.0	10	11	2.2	CCH
205-99-2	Benzo(b)fluoranthene	U	11	1.0	10	11	2.7	
207-08-9	Benzo(k)fluoranthene	~~U~~ UJ	11	1.0	10	11	3.6	CCH
50-32-8	Benzo(a)pyrene	U	11	1.0	10	11	3.8	
193-39-5	Indeno(1,2,3-cd)pyrene	U	11	1.0	10	11	2.2	
53-70-3	Dibenzo(a,h)anthracene	U	11	1.0	10	11	2.1	
191-24-2	Benzo(g,h,i)perylene	U	11	1.0	10	11	2.3	
118-74-1	Hexachlorobenzene	U	11	1.0	10	11	2.1	
87-68-3	Hexachlorobutadiene	U	11	1.0	10	11	2.6	
77-47-4	Hexachlorocyclopentadiene	~~U~~ UJ	11	1.0	10	11	1.7	CCH
7297-45-2	2-Methylnaphthalene-D10		93%					
367-12-4	2,4-Dibromophenol		111%					
81103-79-9	Fluorene-d10		118%					
1718-51-1	Pyrene-D10		111%					

lcw 4/16/09

KATAHDIN ANALYTICAL SERVICES
Report of Analytical Results

Client: CH2MHill
Project: TO-009 Lejeune
PO No:
Sample Date: 01/12/09
Received Date: 01/14/09
Extraction Date: 01/19/09
Analysis Date: 03-FEB-2009 05:09
Report Date: 02/04/2009
Matrix: SOIL
% Solids: 83.7

Lab ID: SC0176-10
Client ID: MR08-SS293-09A
SDG: TO9-35
Extracted by: AC
Extraction Method: SW846 3550
Analyst: JCG
Analysis Method: SW846 M8270C
Lab Prep Batch: WG59949
Units: ug/Kgdrywt

CAS#	Compound	Flags	Results	DF	PQL	Adj.PQL	Adj.MDL	
91-20-3	Naphthalene	U	12	1.0	10	12	3.1	
91-57-6	2-Methylnaphthalene	U	12	1.0	10	12	2.6	
86-73-7	Fluorene	U	12	1.0	10	12	3.8	
85-01-8	Phenanthrene		28	1.0	10	12	2.2	
206-44-0	Fluoranthene		62	1.0	10	12	2.2	
129-00-0	Pyrene		58	1.0	10	12	2.5	
56-55-3	Benzo(a)anthracene	J	28	1.0	10	12	2.3	CCH
205-99-2	Benzo(b)fluoranthene		68	1.0	10	12	2.9	
207-08-9	Benzo(k)fluoranthene	J	32	1.0	10	12	3.7	~~BSH~~ CCH
50-32-8	Benzo(a)pyrene	J	41	1.0	10	12	3.9	BSH
193-39-5	Indeno(1,2,3-cd)pyrene		28	1.0	10	12	2.3	
53-70-3	Dibenzo(a,h)anthracene	J	9.7	1.0	10	12	2.2	
191-24-2	Benzo(g,h,i)perylene	J	29	1.0	10	12	2.4	BSH
118-74-1	Hexachlorobenzene	U	12	1.0	10	12	2.2	
87-68-3	Hexachlorobutadiene	U	12	1.0	10	12	2.7	
77-47-4	Hexachlorocyclopentadiene	U	12	1.0	10	12	1.8	
7297-45-2	2-Methylnaphthalene-D10		78%					
367-12-4	2,4-Dibromophenol		106%					
81103-79-9	Fluorene-d10		118%					
1718-51-1	Pyrene-D10		123%					

kw
4/16/09

KATAHDIN ANALYTICAL SERVICES
Report of Analytical Results

Client: CH2MHill
Project: TO-009 Lejeune
PO No:
Sample Date: 01/12/09
Received Date: 01/14/09
Extraction Date: 01/19/09
Analysis Date: 02-FEB-2009 12:45
Report Date: 02/04/2009
Matrix: SOIL
% Solids: 89.4

Lab ID: SC0176-12
Client ID: MR08-IS293-2-3-09A
SDG: TO9-35
Extracted by: AC
Extraction Method: SW846 3550
Analyst: JLP
Analysis Method: SW846 M8270C
Lab Prep Batch: WG59949
Units: ug/Kgdrywt

CAS#	Compound	Flags		Results	DF	PQL	Adj.PQL	Adj.MDL	
91-20-3	Naphthalene	U		11	1.0	10	11	2.9	
91-57-6	2-Methylnaphthalene	U		11	1.0	10	11	2.5	
86-73-7	Fluorene	~~U~~	UJ	11	1.0	10	11	3.6	CCH
85-01-8	Phenanthrene	~~U~~	UJ	11	1.0	10	11	2.0	CCH
206-44-0	Fluoranthene	U		11	1.0	10	11	2.0	
129-00-0	Pyrene	~~U~~	UJ	11	1.0	10	11	2.3	CCH
56-55-3	Benzo(a)anthracene	~~U~~	UJ	11	1.0	10	11	2.1	CCH
205-99-2	Benzo(b)fluoranthene	U		11	1.0	10	11	2.7	
207-08-9	Benzo(k)fluoranthene	U	UJ	11	1.0	10	11	3.5	CCH
50-32-8	Benzo(a)pyrene	U		11	1.0	10	11	3.7	
193-39-5	Indeno(1,2,3-cd)pyrene	U		11	1.0	10	11	2.1	
53-70-3	Dibenzo(a,h)anthracene	U		11	1.0	10	11	2.0	
191-24-2	Benzo(g,h,i)perylene	U		11	1.0	10	11	2.2	
118-74-1	Hexachlorobenzene	U		11	1.0	10	11	2.0	
87-68-3	Hexachlorobutadiene	U		11	1.0	10	11	2.6	
77-47-4	Hexachlorocyclopentadiene	~~U~~	UJ	11	1.0	10	11	1.7	CCH
7297-45-2	2-Methylnaphthalene-D10			86%					
367-12-4	2,4-Dibromophenol			95%					
81103-79-9	Fluorene-d10			103%					
1718-51-1	Pyrene-D10			103%					

LW
4/16/09

19

KATAHDIN ANALYTICAL SERVICES
Report of Analytical Results

Client: CH2MHill
Project: TO-009 Lejeune
PO No:
Sample Date: 01/12/09
Received Date: 01/14/09
Extraction Date: 01/19/09
Analysis Date: 03-FEB-2009 01:43
Report Date: 02/04/2009
Matrix: SOIL
% Solids: 93.3

Lab ID: SC0176-14
Client ID: MR08-SS294-09A
SDG: TO9-35
Extracted by: AC
Extraction Method: SW846 3550
Analyst: JCG
Analysis Method: SW846 M8270C
Lab Prep Batch: WG59949
Units: ug/Kgdrywt

CAS#	Compound	Flags	Results	DF	PQL	Adj.PQL	Adj.MDL
91-20-3	Naphthalene	U	11	1.0	10	11	2.8
91-57-6	2-Methylnaphthalene	U	11	1.0	10	11	2.4
86-73-7	Fluorene	U	11	1.0	10	11	3.4
85-01-8	Phenanthrene	U	11	1.0	10	11	1.9
206-44-0	Fluoranthene	J	3.8	1.0	10	11	1.9
129-00-0	Pyrene	J	5.2	1.0	10	11	2.2
56-55-3	Benzo(a)anthracene	~~U~~ UJ	11	1.0	10	11	2.0 CCH
205-99-2	Benzo(b)fluoranthene	U	11	1.0	10	11	2.6
207-08-9	Benzo(k)fluoranthene	~~U~~ UJ	11	1.0	10	11	3.3 CCH
50-32-8	Benzo(a)pyrene	U	11	1.0	10	11	3.5
193-39-5	Indeno(1,2,3-cd)pyrene	U	11	1.0	10	11	2.0
53-70-3	Dibenzo(a,h)anthracene	U	11	1.0	10	11	1.9
191-24-2	Benzo(g,h,i)perylene	~~J~~ J	2.2	1.0	10	11	2.1 BSH
118-74-1	Hexachlorobenzene	U	11	1.0	10	11	1.9
87-68-3	Hexachlorobutadiene	U	11	1.0	10	11	2.5
77-47-4	Hexachlorocyclopentadiene	U	11	1.0	10	11	1.6
7297-45-2	2-Methylnaphthalene-D10		95%				
367-12-4	2,4-Dibromophenol		110%				
81103-79-9	Fluorene-d10		117%				
1718-51-1	Pyrene-D10		130%				

LW
4/16/09

20

KATAHDIN ANALYTICAL SERVICES
Report of Analytical Results

Client: CH2MHill
Project: TO-009 Lejeune
PO No:
Sample Date: 01/12/09
Received Date: 01/14/09
Extraction Date: 01/19/09
Analysis Date: 02-FEB-2009 20:12
Report Date: 02/04/2009
Matrix: SOIL
% Solids: 91.8

Lab ID: SC0176-16
Client ID: MR08-IS294-8-9-09A
SDG: TO9-35
Extracted by: AC
Extraction Method: SW846 3550
Analyst: JCG
Analysis Method: SW846 M8270C
Lab Prep Batch: WG59949
Units: ug/Kgdrywt

CAS#	Compound	Flags		Results	DF	PQL	Adj.PQL	Adj.MDL	
91-20-3	Naphthalene	U		11	1.0	10	11	2.8	
91-57-6	2-Methylnaphthalene	U		11	1.0	10	11	2.4	
86-73-7	Fluorene	U		11	1.0	10	11	3.5	
85-01-8	Phenanthrene	U		11	1.0	10	11	2.0	
206-44-0	Fluoranthene	U		11	1.0	10	11	2.0	
129-00-0	Pyrene	U		11	1.0	10	11	2.3	
56-55-3	Benzo(a)anthracene	~~U~~	UJ	11	1.0	10	11	2.1	CCH
205-99-2	Benzo(b)fluoranthene	U		11	1.0	10	11	2.6	
207-08-9	Benzo(k)fluoranthene	~~U~~	UJ	11	1.0	10	11	3.4	CCH
50-32-8	Benzo(a)pyrene	U		11	1.0	10	11	3.6	
193-39-5	Indeno(1,2,3-cd)pyrene	U		11	1.0	10	11	2.1	
53-70-3	Dibenzo(a,h)anthracene	U		11	1.0	10	11	2.0	
191-24-2	Benzo(g,h,i)perylene	U		11	1.0	10	11	2.2	
118-74-1	Hexachlorobenzene	U		11	1.0	10	11	2.0	
87-68-3	Hexachlorobutadiene	U		11	1.0	10	11	2.5	
77-47-4	Hexachlorocyclopentadiene	U		11	1.0	10	11	1.6	
7297-45-2	2-Methylnaphthalene-D10			80%					
367-12-4	2,4-Dibromophenol			84%					
81103-79-9	Fluorene-d10			100%					
1718-51-1	Pyrene-D10			96%					

MW
4/16/09

ENVIRONMENTAL
Data Services, Inc.

SEMIVOLATILE ORGANIC COMPOUNDS

USEPA Region IV - Level IV Review

Site: MCB Camp Lejeune, TO-09 SDG #: TO9-35

Client: CH2M HILL, Inc., Virginia Beach, Virginia Date: April 16, 2009

Laboratory: Katahdin Analytical Services, Scarborough, Maine Reviewer: Nancy Weaver

EDS ID	Client Sample ID	Laboratory Sample ID	Matrix
1	MR08-SS265-09A	SC0149-1	Soil
2	MR08-IS265-3-4-09A	SC0149-3	Soil
3	MR08-SS266-09A	SC0149-5	Soil
4	MR08-IS266-5-6-09A	SC0149-7	Soil
5	MR08-SS289-09A	SC0149-9	Soil
6	MR08-SS289D-09A	SC0149-11	Soil
7	MR08-IS289-2-3-09A	SC0149-13	Soil
8	MR08-IS289D-2-3-09A	SC0149-15	Soil
9	MR08-SS290-09A	SC0149-17	Soil
10	MR08-IS290-4-5-09A	SC0149-19	Soil
11	MR08-SS313-09A	SC0149-21	Soil
12	MR08-IS313-5-6-09A	SC0149-23	Soil
13	MR08-SS291-09A	SC0176-1	Soil
14	MR08-IS291-8-9-09A	SC0176-3	Soil
15	MR08-SS292-09A	SC0176-5	Soil
16	MR08-IS292-5-6-09A	SC0176-7	Soil
17	MR08-SS293-09A	SC0176-9	Soil
18	MR08-IS293-2-3-09A	SC0176-11	Soil
19	MR08-SS294-09A	SC0176-13	Soil
20	MR08-IS294-8-9-09A	SC0176-15	Soil

The USEPA "Contract Laboratory Program National Functional Guidelines for Organic Data Review," October 1999, and professional judgement were used in evaluating the data in this summary report.

Holding Times - All samples were extracted within 14 days for soil samples and analyzed within 40 days for all samples.

GC/MS Tuning - All of the DFTPP tunes in the initial and continuing calibrations met the percent relative abundance criteria.

Initial Calibration - The initial calibrations exhibited acceptable %RSD and mean RRF values.

Continuing Calibration - The continuing calibrations exhibited acceptable %D and RRF values.

Surrogates - All samples exhibited acceptable surrogate recoveries except the following.

Sample ID	Surrogate	%R	Qualifier
4	S2-Phenol-d6	108%	None for 1 out
5	S2-Phenol-d6	108%	None - All ND
	S5-2,4,6-Tribromophenol	134%	

MS/MSD - A MS/MSD sample was not analyzed.

Laboratory Control Sample - The LCS samples exhibited acceptable %R values.

Internal Standard (IS) Area Performance - All internal standards met response and retention time (RT) criteria.

Method Blank - The method blanks exhibited the following contamination.

Blank ID	Compound	Conc. ug/kg	Action Level ug/kg	Qualifier	Affected Samples
WG59948-BLANK	Diethylphthalate	82	820	None	All ND

Field, Equipment Blank - Field QC results are summarized below.

Blank ID	Compound	Conc. ug/L	Action Level ug/L	Qualifier	Affected Samples
MR08-FB01011009	None - ND	-	-	-	-
MR08-EB01011109-SS	None - ND	-	-	-	-

Field Duplicates - Field duplicate results are summarized below.

Compound	MR08-SS289-09A ug/kg	MR08-SS289D-09A ug/kg	RPD	Qualifier
bis(2-Ethylhexyl)phthalate	210	240	13%	None

Compound	MR08-IS289-2-3-09A ug/kg	MR08-IS289D-2-3-09A ug/kg	RPD	Qualifier
Chrysene	200	400 U	NC	None
Acenaphthene	120	400 U	NC	None

Tentatively Identified Compounds (TICs) - TICs were not reported.

Compound Quantitation - No discrepancies were identified.

KATAHDIN ANALYTICAL SERVICES
Report of Analytical Results

Client: CH2MHill
Project: TO-009 Lejeune
PO No:
Sample Date: 01/11/09
Received Date: 01/13/09
Extraction Date: 01/19/09
Analysis Date: 04-FEB-2009 21:06
Report Date: 02/05/2009
Matrix: SOIL
% Solids: 90.0

Lab ID: SC0149-1
Client ID: MR08-SS265-09A
SDG: TO9-35
Extracted by: AC
Extraction Method: SW846 3550
Analyst: JCG
Analysis Method: SW846 8270C
Lab Prep Batch: WG59937
Units: ug/Kgdrywt

CAS#	Compound	Flags	Results	DF	PQL	Adj.PQL	Adj.MDL
100-52-7	Benzaldehyde	U	560	1.0	500	560	130
108-95-2	Phenol	U	560	1.0	500	560	170
111-44-4	Bis(2-Chloroethyl)ether	U	370	1.0	330	370	90
95-57-8	2-Chlorophenol	U	560	1.0	500	560	180
95-48-7	2-Methylphenol	U	670	1.0	600	670	220
108-60-1	2,2'-Oxybis(1-chloropropane)	U	370	1.0	330	370	99
98-86-2	Acetophenone	U	670	1.0	600	670	200
621-64-7	N-Nitroso-di-n-propylamine	U	370	1.0	330	370	92
65794-96-9	3&4-Methylphenol	U	670	1.0	600	670	210
67-72-1	Hexachloroethane	U	370	1.0	330	370	110
98-95-3	Nitrobenzene	U	370	1.0	330	370	100
78-59-1	Isophorone	U	370	1.0	330	370	83
88-75-5	2-Nitrophenol	U	670	1.0	600	670	180
105-67-9	2,4-Dimethylphenol	U	560	1.0	500	560	180
111-91-1	Bis(2-Chloroethoxy)methane	U	370	1.0	330	370	110
120-83-2	2,4-Dichlorophenol	U	560	1.0	500	560	170
106-47-8	4-Chloroaniline	U	560	1.0	500	560	130
105-60-2	Caprolactam	U	560	1.0	500	560	160
59-50-7	4-Chloro-3-Methylphenol	U	560	1.0	500	560	180
88-06-2	2,4,6-Trichlorophenol	U	560	1.0	500	560	170
95-95-4	2,4,5-Trichlorophenol	U	560	1.0	500	560	170
91-58-7	2-Chloronaphthalene	U	370	1.0	330	370	97
92-52-4	1,1'-Biphenyl	U	370	1.0	330	370	81
88-74-4	2-Nitroaniline	U	560	1.0	500	560	83
131-11-3	Dimethyl Phthalate	U	370	1.0	330	370	87
606-20-2	2,6-Dinitrotoluene	U	370	1.0	330	370	88
208-96-8	Acenaphthylene	U	370	1.0	330	370	78
99-09-2	3-Nitroaniline	U	560	1.0	500	560	100
83-32-9	Acenaphthene	U	370	1.0	330	370	72
51-28-5	2,4-Dinitrophenol	U	1300	1.0	1200	1300	420
132-64-9	Dibenzofuran	U	370	1.0	330	370	88
100-02-7	4-Nitrophenol	U	1300	1.0	1200	1300	340
121-14-2	2,4-Dinitrotoluene	U	370	1.0	330	370	94
84-66-2	Diethylphthalate	U	370	1.0	330	370	89
7005-72-3	4-Chlorophenyl-phenylether	U	370	1.0	330	370	87
100-01-6	4-Nitroaniline	U	560	1.0	500	560	150
534-52-1	4,6-Dinitro-2-Methylphenol	U	1300	1.0	1200	1300	370
86-30-6	N-Nitrosodiphenylamine	U	730	1.0	660	730	240
101-55-3	4-Bromophenyl-phenylether	U	370	1.0	330	370	94
1912-24-9	Atrazine	U	370	1.0	330	370	100
87-86-5	Pentachlorophenol	U	910	1.0	820	910	260
120-12-7	Anthracene	U	370	1.0	330	370	93
86-74-8	Carbazole	U	560	1.0	500	560	120

MW
4/16/09

KATAHDIN ANALYTICAL SERVICES
Report of Analytical Results

Client: CH2MHill
Project: TO-009 Lejeune
PO No:
Sample Date: 01/11/09
Received Date: 01/13/09
Extraction Date: 01/19/09
Analysis Date: 04-FEB-2009 21:06
Report Date: 02/05/2009
Matrix: SOIL
% Solids: 90.0

Lab ID: SC0149-1
Client ID: MR08-SS265-09A
SDG: TO9-35
Extracted by: AC
Extraction Method: SW846 3550
Analyst: JCG
Analysis Method: SW846 8270C
Lab Prep Batch: WG59937
Units: ug/Kgdrywt

CAS#	Compound	Flags	Results	DF	PQL	Adj.PQL	Adj.MDL
84-74-2	Di-n-butylphthalate	U	370	1.0	330	370	110
85-68-7	Butylbenzylphthalate	U	370	1.0	330	370	100
91-94-1	3,3'-Dichlorobenzidine	U	560	1.0	500	560	130
218-01-9	Chrysene	U	370	1.0	330	370	100
117-81-7	bis(2-Ethylhexyl)phthalate	U	370	1.0	330	370	110
117-84-0	Di-n-octylphthalate	U	370	1.0	330	370	230
367-12-4	2-Fluorophenol		68%				
13127-88-3	Phenol-D6		75%				
4165-60-0	Nitrobenzene-D5		68%				
321-60-8	2-Fluorobiphenyl		68%				
118-79-6	2,4,6-Tribromophenol		75%				
1718-51-0	Terphenyl-D14		82%				

WJ
4/16/09

2

KATAHDIN ANALYTICAL SERVICES
Report of Analytical Results

Client: CH2MHill
Project: TO-009 Lejeune
PO No:
Sample Date: 01/11/09
Received Date: 01/13/09
Extraction Date: 01/19/09
Analysis Date: 29-JAN-2009 23:52
Report Date: 02/05/2009
Matrix: SOIL
% Solids: 84.0

Lab ID: SC0149-3
Client ID: MR08-IS265-3-4-09A
SDG: TO9-35
Extracted by: AC
Extraction Method: SW846 3550
Analyst: JCG
Analysis Method: SW846 8270C
Lab Prep Batch: WG59937
Units: ug/Kgdrywt

CAS#	Compound	Flags	Results	DF	PQL	Adj.PQL	Adj.MDL
100-52-7	Benzaldehyde	U	600	1.0	500	600	140
108-95-2	Phenol	U	600	1.0	500	600	180
111-44-4	Bis(2-Chloroethyl)ether	U	390	1.0	330	390	96
95-57-8	2-Chlorophenol	U	600	1.0	500	600	200
95-48-7	2-Methylphenol	U	710	1.0	600	710	240
108-60-1	2,2'-Oxybis(1-chloropropane)	U	390	1.0	330	390	100
98-86-2	Acetophenone	U	710	1.0	600	710	210
621-64-7	N-Nitroso-di-n-propylamine	U	390	1.0	330	390	99
65794-96-9	3&4-Methylphenol	U	710	1.0	600	710	220
67-72-1	Hexachloroethane	U	390	1.0	330	390	110
98-95-3	Nitrobenzene	U	390	1.0	330	390	110
78-59-1	Isophorone	U	390	1.0	330	390	89
88-75-5	2-Nitrophenol	U	710	1.0	600	710	200
105-67-9	2,4-Dimethylphenol	U	600	1.0	500	600	200
111-91-1	Bis(2-Chloroethoxy)methane	U	390	1.0	330	390	110
120-83-2	2,4-Dichlorophenol	U	600	1.0	500	600	180
106-47-8	4-Chloroaniline	U	600	1.0	500	600	140
105-60-2	Caprolactam	U	600	1.0	500	600	170
59-50-7	4-Chloro-3-Methylphenol	U	600	1.0	500	600	200
88-06-2	2,4,6-Trichlorophenol	U	600	1.0	500	600	180
95-95-4	2,4,5-Trichlorophenol	U	600	1.0	500	600	180
91-58-7	2-Chloronaphthalene	U	390	1.0	330	390	100
92-52-4	1,1'-Biphenyl	U	390	1.0	330	390	87
88-74-4	2-Nitroaniline	U	600	1.0	500	600	89
131-11-3	Dimethyl Phthalate	U	390	1.0	330	390	93
606-20-2	2,6-Dinitrotoluene	U	390	1.0	330	390	94
208-96-8	Acenaphthylene	U	390	1.0	330	390	83
99-09-2	3-Nitroaniline	U	600	1.0	500	600	110
83-32-9	Acenaphthene	U	390	1.0	330	390	77
51-28-5	2,4-Dinitrophenol	U	1400	1.0	1200	1400	450
132-64-9	Dibenzofuran	U	390	1.0	330	390	94
100-02-7	4-Nitrophenol	U	1400	1.0	1200	1400	370
121-14-2	2,4-Dinitrotoluene	U	390	1.0	330	390	100
84-66-2	Diethylphthalate	U	390	1.0	330	390	95
7005-72-3	4-Chlorophenyl-phenylether	U	390	1.0	330	390	93
100-01-6	4-Nitroaniline	U	600	1.0	500	600	160
534-52-1	4,6-Dinitro-2-Methylphenol	U	1400	1.0	1200	1400	400
86-30-6	N-Nitrosodiphenylamine	U	780	1.0	660	780	260
101-55-3	4-Bromophenyl-phenylether	U	390	1.0	330	390	100
1912-24-9	Atrazine	U	390	1.0	330	390	110
87-86-5	Pentachlorophenol	U	980	1.0	820	980	280
120-12-7	Anthracene	U	390	1.0	330	390	100
86-74-8	Carbazole	U	600	1.0	500	600	130

ccw 4/16/09

KATAHDIN ANALYTICAL SERVICES
Report of Analytical Results

Client: CH2MHill
Project: TO-009 Lejeune
PO No:
Sample Date: 01/11/09
Received Date: 01/13/09
Extraction Date: 01/19/09
Analysis Date: 29-JAN-2009 23:52
Report Date: 02/05/2009
Matrix: SOIL
% Solids: 84.0

Lab ID: SC0149-3
Client ID: MR08-IS265-3-4-09A
SDG: TO9-35
Extracted by: AC
Extraction Method: SW846 3550
Analyst: JCG
Analysis Method: SW846 8270C
Lab Prep Batch: WG59937
Units: ug/Kgdrywt

CAS#	Compound	Flags	Results	DF	PQL	Adj.PQL	Adj.MDL
84-74-2	Di-n-butylphthalate	U	390	1.0	330	390	120
85-68-7	Butylbenzylphthalate	U	390	1.0	330	390	110
91-94-1	3,3'-Dichlorobenzidine	U	600	1.0	500	600	140
218-01-9	Chrysene	U	390	1.0	330	390	110
117-81-7	bis(2-Ethylhexyl)phthalate	U	390	1.0	330	390	120
117-84-0	Di-n-octylphthalate	U	390	1.0	330	390	250
367-12-4	2-Fluorophenol		67%				
13127-88-3	Phenol-D6		76%				
4165-60-0	Nitrobenzene-D5		64%				
321-60-8	2-Fluorobiphenyl		65%				
118-79-6	2,4,6-Tribromophenol		73%				
1718-51-0	Terphenyl-D14		90%				

DW 4/16/09

3

KATAHDIN ANALYTICAL SERVICES
Report of Analytical Results

Client: CH2MHill
Project: TO-009 Lejeune
PO No:
Sample Date: 01/11/09
Received Date: 01/13/09
Extraction Date: 01/19/09
Analysis Date: 04-FEB-2009 21:48
Report Date: 02/05/2009
Matrix: SOIL
% Solids: 88.7

Lab ID: SC0149-5
Client ID: MR08-SS266-09A
SDG: TO9-35
Extracted by: AC
Extraction Method: SW846 3550
Analyst: JCG
Analysis Method: SW846 8270C
Lab Prep Batch: WG59937
Units: ug/Kgdrywt

CAS#	Compound	Flags	Results	DF	PQL	Adj.PQL	Adj.MDL
100-52-7	Benzaldehyde	U	560	1.0	500	560	140
108-95-2	Phenol	U	560	1.0	500	560	180
111-44-4	Bis(2-Chloroethyl)ether	U	370	1.0	330	370	91
95-57-8	2-Chlorophenol	U	560	1.0	500	560	180
95-48-7	2-Methylphenol	U	680	1.0	600	680	220
108-60-1	2,2'-Oxybis(1-chloropropane)	U	370	1.0	330	370	100
98-86-2	Acetophenone	U	680	1.0	600	680	200
621-64-7	N-Nitroso-di-n-propylamine	U	370	1.0	330	370	94
65794-96-9	3&4-Methylphenol	U	680	1.0	600	680	210
67-72-1	Hexachloroethane	U	370	1.0	330	370	110
98-95-3	Nitrobenzene	U	370	1.0	330	370	100
78-59-1	Isophorone	U	370	1.0	330	370	84
88-75-5	2-Nitrophenol	U	680	1.0	600	680	190
105-67-9	2,4-Dimethylphenol	U	560	1.0	500	560	190
111-91-1	Bis(2-Chloroethoxy)methane	U	370	1.0	330	370	110
120-83-2	2,4-Dichlorophenol	U	560	1.0	500	560	170
106-47-8	4-Chloroaniline	U	560	1.0	500	560	130
105-60-2	Caprolactam	U	560	1.0	500	560	160
59-50-7	4-Chloro-3-Methylphenol	U	560	1.0	500	560	190
88-06-2	2,4,6-Trichlorophenol	U	560	1.0	500	560	170
95-95-4	2,4,5-Trichlorophenol	U	560	1.0	500	560	170
91-58-7	2-Chloronaphthalene	U	370	1.0	330	370	98
92-52-4	1,1'-Biphenyl	U	370	1.0	330	370	82
88-74-4	2-Nitroaniline	U	560	1.0	500	560	84
131-11-3	Dimethyl Phthalate	U	370	1.0	330	370	88
606-20-2	2,6-Dinitrotoluene	U	370	1.0	330	370	89
208-96-8	Acenaphthylene	U	370	1.0	330	370	79
99-09-2	3-Nitroaniline	U	560	1.0	500	560	110
83-32-9	Acenaphthene	J	89	1.0	330	370	73
51-28-5	2,4-Dinitrophenol	U	1400	1.0	1200	1400	420
132-64-9	Dibenzofuran	U	370	1.0	330	370	89
100-02-7	4-Nitrophenol	U	1400	1.0	1200	1400	350
121-14-2	2,4-Dinitrotoluene	U	370	1.0	330	370	96
84-66-2	Diethylphthalate	U	370	1.0	330	370	90
7005-72-3	4-Chlorophenyl-phenylether	U	370	1.0	330	370	88
100-01-6	4-Nitroaniline	U	560	1.0	500	560	150
534-52-1	4,6-Dinitro-2-Methylphenol	U	1400	1.0	1200	1400	380
86-30-6	N-Nitrosodiphenylamine	U	740	1.0	660	740	250
101-55-3	4-Bromophenyl-phenylether	U	370	1.0	330	370	96
1912-24-9	Atrazine	U	370	1.0	330	370	100
87-86-5	Pentachlorophenol	U	920	1.0	820	920	270
120-12-7	Anthracene	U	370	1.0	330	370	95
86-74-8	Carbazole	U	560	1.0	500	560	120

MW 4/16/09

3

KATAHDIN ANALYTICAL SERVICES
Report of Analytical Results

Client: CH2MHill
Project: TO-009 Lejeune
PO No:
Sample Date: 01/11/09
Received Date: 01/13/09
Extraction Date: 01/19/09
Analysis Date: 04-FEB-2009 21:48
Report Date: 02/05/2009
Matrix: SOIL
% Solids: 88.7

Lab ID: SC0149-5
Client ID: MR08-SS266-09A
SDG: TO9-35
Extracted by: AC
Extraction Method: SW846 3550
Analyst: JCG
Analysis Method: SW846 8270C
Lab Prep Batch: WG59937
Units: ug/Kgdrywt

CAS#	Compound	Flags	Results	DF	PQL	Adj.PQL	Adj.MDL
84-74-2	Di-n-butylphthalate	U	370	1.0	330	370	110
85-68-7	Butylbenzylphthalate	U	370	1.0	330	370	100
91-94-1	3,3'-Dichlorobenzidine	U	560	1.0	500	560	130
218-01-9	Chrysene	U	370	1.0	330	370	110
117-81-7	bis(2-Ethylhexyl)phthalate	J	160	1.0	330	370	110
117-84-0	Di-n-octylphthalate	U	370	1.0	330	370	240
367-12-4	2-Fluorophenol		58%				
13127-88-3	Phenol-D6		67%				
4165-60-0	Nitrobenzene-D5		64%				
321-60-8	2-Fluorobiphenyl		71%				
118-79-6	2,4,6-Tribromophenol		93%				
1718-51-0	Terphenyl-D14		69%				

MW 4/16/09

4

KATAHDIN ANALYTICAL SERVICES
Report of Analytical Results

Client: CH2MHill
Project: TO-009 Lejeune
PO No:
Sample Date: 01/11/09
Received Date: 01/13/09
Extraction Date: 01/19/09
Analysis Date: 04-FEB-2009 22:30
Report Date: 02/05/2009
Matrix: SOIL
% Solids: 85.1

Lab ID: SC0149-7
Client ID: MR08-IS266-5-6-09A
SDG: TO9-35
Extracted by: AC
Extraction Method: SW846 3550
Analyst: JCG
Analysis Method: SW846 8270C
Lab Prep Batch: WG59937
Units: ug/Kgdrywt

CAS#	Compound	Flags	Results	DF	PQL	Adj.PQL	Adj.MDL
100-52-7	Benzaldehyde	U	590	1.0	500	590	140
108-95-2	Phenol	U	590	1.0	500	590	180
111-44-4	Bis(2-Chloroethyl)ether	U	390	1.0	330	390	95
95-57-8	2-Chlorophenol	U	590	1.0	500	590	190
95-48-7	2-Methylphenol	U	700	1.0	600	700	240
108-60-1	2,2'-Oxybis(1-chloropropane)	U	390	1.0	330	390	100
98-86-2	Acetophenone	U	700	1.0	600	700	210
621-64-7	N-Nitroso-di-n-propylamine	U	390	1.0	330	390	98
65794-96-9	3&4-Methylphenol	U	700	1.0	600	700	220
67-72-1	Hexachloroethane	U	390	1.0	330	390	110
98-95-3	Nitrobenzene	U	390	1.0	330	390	110
78-59-1	Isophorone	U	390	1.0	330	390	88
88-75-5	2-Nitrophenol	U	700	1.0	600	700	200
105-67-9	2,4-Dimethylphenol	U	590	1.0	500	590	190
111-91-1	Bis(2-Chloroethoxy)methane	U	390	1.0	330	390	110
120-83-2	2,4-Dichlorophenol	U	590	1.0	500	590	180
106-47-8	4-Chloroaniline	U	590	1.0	500	590	140
105-60-2	Caprolactam	U	590	1.0	500	590	170
59-50-7	4-Chloro-3-Methylphenol	U	590	1.0	500	590	200
88-06-2	2,4,6-Trichlorophenol	U	590	1.0	500	590	180
95-95-4	2,4,5-Trichlorophenol	U	590	1.0	500	590	180
91-58-7	2-Chloronaphthalene	U	390	1.0	330	390	100
92-52-4	1,1'-Biphenyl	U	390	1.0	330	390	86
88-74-4	2-Nitroaniline	U	590	1.0	500	590	88
131-11-3	Dimethyl Phthalate	U	390	1.0	330	390	92
606-20-2	2,6-Dinitrotoluene	U	390	1.0	330	390	93
208-96-8	Acenaphthylene	U	390	1.0	330	390	82
99-09-2	3-Nitroaniline	U	590	1.0	500	590	110
83-32-9	Acenaphthene	U	390	1.0	330	390	76
51-28-5	2,4-Dinitrophenol	U	1400	1.0	1200	1400	440
132-64-9	Dibenzofuran	U	390	1.0	330	390	93
100-02-7	4-Nitrophenol	U	1400	1.0	1200	1400	360
121-14-2	2,4-Dinitrotoluene	U	390	1.0	330	390	100
84-66-2	Diethylphthalate	U	390	1.0	330	390	94
7005-72-3	4-Chlorophenyl-phenylether	U	390	1.0	330	390	92
100-01-6	4-Nitroaniline	U	590	1.0	500	590	160
534-52-1	4,6-Dinitro-2-Methylphenol	U	1400	1.0	1200	1400	400
86-30-6	N-Nitrosodiphenylamine	U	780	1.0	660	780	260
101-55-3	4-Bromophenyl-phenylether	U	390	1.0	330	390	100
1912-24-9	Atrazine	U	390	1.0	330	390	110
87-86-5	Pentachlorophenol	U	960	1.0	820	960	280
120-12-7	Anthracene	U	390	1.0	330	390	99
86-74-8	Carbazole	U	590	1.0	500	590	130

JW 4/16/09

KATAHDIN ANALYTICAL SERVICES
Report of Analytical Results

Client: CH2MHill
Project: TO-009 Lejeune
PO No:
Sample Date: 01/11/09
Received Date: 01/13/09
Extraction Date: 01/19/09
Analysis Date: 04-FEB-2009 22:30
Report Date: 02/05/2009
Matrix: SOIL
% Solids: 85.1

Lab ID: SC0149-7
Client ID: MR08-IS266-5-6-09A
SDG: TO9-35
Extracted by: AC
Extraction Method: SW846 3550
Analyst: JCG
Analysis Method: SW846 8270C
Lab Prep Batch: WG59937
Units: ug/Kgdrywt

CAS#	Compound	Flags	Results	DF	PQL	Adj.PQL	Adj.MDL
84-74-2	Di-n-butylphthalate	U	390	1.0	330	390	120
85-68-7	Butylbenzylphthalate	U	390	1.0	330	390	110
91-94-1	3,3'-Dichlorobenzidine	U	590	1.0	500	590	130
218-01-9	Chrysene	U	390	1.0	330	390	110
117-81-7	bis(2-Ethylhexyl)phthalate	U	390	1.0	330	390	120
117-84-0	Di-n-octylphthalate	U	390	1.0	330	390	250
367-12-4	2-Fluorophenol		101%				
13127-88-3	Phenol-D6		*108%				
4165-60-0	Nitrobenzene-D5		100%				
321-60-8	2-Fluorobiphenyl		104%				
118-79-6	2,4,6-Tribromophenol		102%				
1718-51-0	Terphenyl-D14		104%				

MW 4/6/09

KATAHDIN ANALYTICAL SERVICES
Report of Analytical Results

Client: CH2MHill
Project: TO-009 Lejeune
PO No:
Sample Date: 01/11/09
Received Date: 01/13/09
Extraction Date: 01/19/09
Analysis Date: 04-FEB-2009 23:12
Report Date: 02/05/2009
Matrix: SOIL
% Solids: 90.0

Lab ID: SC0149-9
Client ID: MR08-SS289-09A
SDG: TO9-35
Extracted by: AC
Extraction Method: SW846 3550
Analyst: JCG
Analysis Method: SW846 8270C
Lab Prep Batch: WG59937
Units: ug/Kgdrywt

CAS#	Compound	Flags	Results	DF	PQL	Adj.PQL	Adj.MDL
100-52-7	Benzaldehyde	U	560	1.0	500	560	130
108-95-2	Phenol	U	560	1.0	500	560	170
111-44-4	Bis(2-Chloroethyl)ether	U	370	1.0	330	370	90
95-57-8	2-Chlorophenol	U	560	1.0	500	560	180
95-48-7	2-Methylphenol	U	670	1.0	600	670	220
108-60-1	2,2'-Oxybis(1-chloropropane)	U	370	1.0	330	370	99
98-86-2	Acetophenone	U	670	1.0	600	670	200
621-64-7	N-Nitroso-di-n-propylamine	U	370	1.0	330	370	92
65794-96-9	3&4-Methylphenol	U	670	1.0	600	670	210
67-72-1	Hexachloroethane	U	370	1.0	330	370	110
98-95-3	Nitrobenzene	U	370	1.0	330	370	100
78-59-1	Isophorone	U	370	1.0	330	370	83
88-75-5	2-Nitrophenol	U	670	1.0	600	670	180
105-67-9	2,4-Dimethylphenol	U	560	1.0	500	560	180
111-91-1	Bis(2-Chloroethoxy)methane	U	370	1.0	330	370	110
120-83-2	2,4-Dichlorophenol	U	560	1.0	500	560	170
106-47-8	4-Chloroaniline	U	560	1.0	500	560	130
105-60-2	Caprolactam	U	560	1.0	500	560	160
59-50-7	4-Chloro-3-Methylphenol	U	560	1.0	500	560	180
88-06-2	2,4,6-Trichlorophenol	U	560	1.0	500	560	170
95-95-4	2,4,5-Trichlorophenol	U	560	1.0	500	560	170
91-58-7	2-Chloronaphthalene	U	370	1.0	330	370	97
92-52-4	1,1'-Biphenyl	U	370	1.0	330	370	81
88-74-4	2-Nitroaniline	U	560	1.0	500	560	83
131-11-3	Dimethyl Phthalate	U	370	1.0	330	370	87
606-20-2	2,6-Dinitrotoluene	U	370	1.0	330	370	88
208-96-8	Acenaphthylene	U	370	1.0	330	370	78
99-09-2	3-Nitroaniline	U	560	1.0	500	560	100
83-32-9	Acenaphthene	U	370	1.0	330	370	72
51-28-5	2,4-Dinitrophenol	U	1300	1.0	1200	1300	420
132-64-9	Dibenzofuran	U	370	1.0	330	370	88
100-02-7	4-Nitrophenol	U	1300	1.0	1200	1300	340
121-14-2	2,4-Dinitrotoluene	U	370	1.0	330	370	94
84-66-2	Diethylphthalate	U	370	1.0	330	370	89
7005-72-3	4-Chlorophenyl-phenylether	U	370	1.0	330	370	87
100-01-6	4-Nitroaniline	U	560	1.0	500	560	150
534-52-1	4,6-Dinitro-2-Methylphenol	U	1300	1.0	1200	1300	370
86-30-6	N-Nitrosodiphenylamine	U	730	1.0	660	730	240
101-55-3	4-Bromophenyl-phenylether	U	370	1.0	330	370	94
1912-24-9	Atrazine	U	370	1.0	330	370	100
87-86-5	Pentachlorophenol	U	910	1.0	820	910	260
120-12-7	Anthracene	U	370	1.0	330	370	93
86-74-8	Carbazole	U	560	1.0	500	560	120

lw
4/16/09

KATAHDIN ANALYTICAL SERVICES
Report of Analytical Results

Client: CH2MHill
Project: TO-009 Lejeune
PO No:
Sample Date: 01/11/09
Received Date: 01/13/09
Extraction Date: 01/19/09
Analysis Date: 04-FEB-2009 23:12
Report Date: 02/05/2009
Matrix: SOIL
% Solids: 90.0

Lab ID: SC0149-9
Client ID: MR08-SS289-09A
SDG: TO9-35
Extracted by: AC
Extraction Method: SW846 3550
Analyst: JCG
Analysis Method: SW846 8270C
Lab Prep Batch: WG59937
Units: ug/Kgdrywt

CAS#	Compound	Flags	Results	DF	PQL	Adj.PQL	Adj.MDL
84-74-2	Di-n-butylphthalate	U	370	1.0	330	370	110
85-68-7	Butylbenzylphthalate	U	370	1.0	330	370	100
91-94-1	3,3'-Dichlorobenzidine	U	560	1.0	500	560	130
218-01-9	Chrysene	U	370	1.0	330	370	100
117-81-7	bis(2-Ethylhexyl)phthalate	J	210	1.0	330	370	110
117-84-0	Di-n-octylphthalate	U	370	1.0	330	370	230
367-12-4	2-Fluorophenol		98%				
13127-88-3	Phenol-D6		*108%				
4165-60-0	Nitrobenzene-D5		92%				
321-60-8	2-Fluorobiphenyl		104%				
118-79-6	2,4,6-Tribromophenol		*134%				
1718-51-0	Terphenyl-D14		108%				

lw
4/16/09

6

KATAHDIN ANALYTICAL SERVICES
Report of Analytical Results

Client: CH2MHill
Project: TO-009 Lejeune
PO No:
Sample Date: 01/11/09
Received Date: 01/13/09
Extraction Date: 01/19/09
Analysis Date: 04-FEB-2009 23:54
Report Date: 02/05/2009
Matrix: SOIL
% Solids: 88.4

Lab ID: SC0149-11
Client ID: MR08-SS289D-09A
SDG: TO9-35
Extracted by: AC
Extraction Method: SW846 3550
Analyst: JCG
Analysis Method: SW846 8270C
Lab Prep Batch: WG59937
Units: ug/Kgdrywt

CAS#	Compound	Flags	Results	DF	PQL	Adj.PQL	Adj.MDL
100-52-7	Benzaldehyde	U	560	1.0	500	560	140
108-95-2	Phenol	U	560	1.0	500	560	180
111-44-4	Bis(2-Chloroethyl)ether	U	370	1.0	330	370	92
95-57-8	2-Chlorophenol	U	560	1.0	500	560	180
95-48-7	2-Methylphenol	U	680	1.0	600	680	230
108-60-1	2,2'-Oxybis(1-chloropropane)	U	370	1.0	330	370	100
98-86-2	Acetophenone	U	680	1.0	600	680	200
621-64-7	N-Nitroso-di-n-propylamine	U	370	1.0	330	370	94
65794-96-9	3&4-Methylphenol	U	680	1.0	600	680	210
67-72-1	Hexachloroethane	U	370	1.0	330	370	110
98-95-3	Nitrobenzene	U	370	1.0	330	370	100
78-59-1	Isophorone	U	370	1.0	330	370	85
88-75-5	2-Nitrophenol	U	680	1.0	600	680	190
105-67-9	2,4-Dimethylphenol	U	560	1.0	500	560	190
111-91-1	Bis(2-Chloroethoxy)methane	U	370	1.0	330	370	110
120-83-2	2,4-Dichlorophenol	U	560	1.0	500	560	170
106-47-8	4-Chloroaniline	U	560	1.0	500	560	130
105-60-2	Caprolactam	U	560	1.0	500	560	160
59-50-7	4-Chloro-3-Methylphenol	U	560	1.0	500	560	190
88-06-2	2,4,6-Trichlorophenol	U	560	1.0	500	560	180
95-95-4	2,4,5-Trichlorophenol	U	560	1.0	500	560	180
91-58-7	2-Chloronaphthalene	U	370	1.0	330	370	98
92-52-4	1,1'-Biphenyl	U	370	1.0	330	370	82
88-74-4	2-Nitroaniline	U	560	1.0	500	560	85
131-11-3	Dimethyl Phthalate	U	370	1.0	330	370	88
606-20-2	2,6-Dinitrotoluene	U	370	1.0	330	370	89
208-96-8	Acenaphthylene	U	370	1.0	330	370	79
99-09-2	3-Nitroaniline	U	560	1.0	500	560	110
83-32-9	Acenaphthene	U	370	1.0	330	370	74
51-28-5	2,4-Dinitrophenol	U	1400	1.0	1200	1400	430
132-64-9	Dibenzofuran	U	370	1.0	330	370	89
100-02-7	4-Nitrophenol	U	1400	1.0	1200	1400	350
121-14-2	2,4-Dinitrotoluene	U	370	1.0	330	370	96
84-66-2	Diethylphthalate	U	370	1.0	330	370	90
7005-72-3	4-Chlorophenyl-phenylether	U	370	1.0	330	370	88
100-01-6	4-Nitroaniline	U	560	1.0	500	560	150
534-52-1	4,6-Dinitro-2-Methylphenol	U	1400	1.0	1200	1400	380
86-30-6	N-Nitrosodiphenylamine	U	750	1.0	660	750	250
101-55-3	4-Bromophenyl-phenylether	U	370	1.0	330	370	96
1912-24-9	Atrazine	U	370	1.0	330	370	100
87-86-5	Pentachlorophenol	U	930	1.0	820	930	270
120-12-7	Anthracene	U	370	1.0	330	370	95
86-74-8	Carbazole	U	560	1.0	500	560	120

LW
4/16/09

KATAHDIN ANALYTICAL SERVICES
Report of Analytical Results

6

Client: CH2MHill
Project: TO-009 Lejeune
PO No:
Sample Date: 01/11/09
Received Date: 01/13/09
Extraction Date: 01/19/09
Analysis Date: 04-FEB-2009 23:54
Report Date: 02/05/2009
Matrix: SOIL
% Solids: 88.4

Lab ID: SC0149-11
Client ID: MR08-SS289D-09A
SDG: TO9-35
Extracted by: AC
Extraction Method: SW846 3550
Analyst: JCG
Analysis Method: SW846 8270C
Lab Prep Batch: WG59937
Units: ug/Kgdrywt

CAS#	Compound	Flags	Results	DF	PQL	Adj.PQL	Adj.MDL
84-74-2	Di-n-butylphthalate	U	370	1.0	330	370	110
85-68-7	Butylbenzylphthalate	U	370	1.0	330	370	100
91-94-1	3,3'-Dichlorobenzidine	U	560	1.0	500	560	130
218-01-9	Chrysene	U	370	1.0	330	370	110
117-81-7	bis(2-Ethylhexyl)phthalate	J	240	1.0	330	370	110
117-84-0	Di-n-octylphthalate	U	370	1.0	330	370	240
367-12-4	2-Fluorophenol		52%				
13127-88-3	Phenol-D6		57%				
4165-60-0	Nitrobenzene-D5		52%				
321-60-8	2-Fluorobiphenyl		60%				
118-79-6	2,4,6-Tribromophenol		69%				
1718-51-0	Terphenyl-D14		58%				

AW
4/16/09

7

KATAHDIN ANALYTICAL SERVICES
Report of Analytical Results

Client: CH2MHill
Project: TO-009 Lejeune
PO No:
Sample Date: 01/11/09
Received Date: 01/13/09
Extraction Date: 01/19/09
Analysis Date: 05-FEB-2009 00:35
Report Date: 02/05/2009
Matrix: SOIL
% Solids: 77.5

Lab ID: SC0149-13
Client ID: MR08-IS289-2-3-09A
SDG: TO9-35
Extracted by: AC
Extraction Method: SW846 3550
Analyst: JCG
Analysis Method: SW846 8270C
Lab Prep Batch: WG59937
Units: ug/Kgdrywt

CAS#	Compound	Flags	Results	DF	PQL	Adj.PQL	Adj.MDL
100-52-7	Benzaldehyde	U	640	1.0	500	640	150
108-95-2	Phenol	U	640	1.0	500	640	200
111-44-4	Bis(2-Chloroethyl)ether	U	420	1.0	330	420	100
95-57-8	2-Chlorophenol	U	640	1.0	500	640	210
95-48-7	2-Methylphenol	U	770	1.0	600	770	260
108-60-1	2,2'-Oxybis(1-chloropropane)	U	420	1.0	330	420	110
98-86-2	Acetophenone	U	770	1.0	600	770	230
621-64-7	N-Nitroso-di-n-propylamine	U	420	1.0	330	420	110
65794-96-9	3&4-Methylphenol	U	770	1.0	600	770	240
67-72-1	Hexachloroethane	U	420	1.0	330	420	120
98-95-3	Nitrobenzene	U	420	1.0	330	420	120
78-59-1	Isophorone	U	420	1.0	330	420	97
88-75-5	2-Nitrophenol	U	770	1.0	600	770	220
105-67-9	2,4-Dimethylphenol	U	640	1.0	500	640	210
111-91-1	Bis(2-Chloroethoxy)methane	U	420	1.0	330	420	120
120-83-2	2,4-Dichlorophenol	U	640	1.0	500	640	190
106-47-8	4-Chloroaniline	U	640	1.0	500	640	150
105-60-2	Caprolactam	U	640	1.0	500	640	180
59-50-7	4-Chloro-3-Methylphenol	U	640	1.0	500	640	210
88-06-2	2,4,6-Trichlorophenol	U	640	1.0	500	640	200
95-95-4	2,4,5-Trichlorophenol	U	640	1.0	500	640	200
91-58-7	2-Chloronaphthalene	U	420	1.0	330	420	110
92-52-4	1,1'-Biphenyl	U	420	1.0	330	420	94
88-74-4	2-Nitroaniline	U	640	1.0	500	640	97
131-11-3	Dimethyl Phthalate	U	420	1.0	330	420	100
606-20-2	2,6-Dinitrotoluene	U	420	1.0	330	420	100
208-96-8	Acenaphthylene	U	420	1.0	330	420	90
99-09-2	3-Nitroaniline	U	640	1.0	500	640	120
83-32-9	Acenaphthene	J	120	1.0	330	420	84
51-28-5	2,4-Dinitrophenol	U	1500	1.0	1200	1500	490
132-64-9	Dibenzofuran	U	420	1.0	330	420	100
100-02-7	4-Nitrophenol	U	1500	1.0	1200	1500	400
121-14-2	2,4-Dinitrotoluene	U	420	1.0	330	420	110
84-66-2	Diethylphthalate	U	420	1.0	330	420	100
7005-72-3	4-Chlorophenyl-phenylether	U	420	1.0	330	420	100
100-01-6	4-Nitroaniline	U	640	1.0	500	640	170
534-52-1	4,6-Dinitro-2-Methylphenol	U	1500	1.0	1200	1500	430
86-30-6	N-Nitrosodiphenylamine	U	850	1.0	660	850	280
101-55-3	4-Bromophenyl-phenylether	U	420	1.0	330	420	110
1912-24-9	Atrazine	U	420	1.0	330	420	120
87-86-5	Pentachlorophenol	U	1000	1.0	820	1000	300
120-12-7	Anthracene	U	420	1.0	330	420	110
86-74-8	Carbazole	U	640	1.0	500	640	140

lw
4/16/09

7

KATAHDIN ANALYTICAL SERVICES
Report of Analytical Results

Client: CH2MHill
Project: TO-009 Lejeune
PO No:
Sample Date: 01/11/09
Received Date: 01/13/09
Extraction Date: 01/19/09
Analysis Date: 05-FEB-2009 00:35
Report Date: 02/05/2009
Matrix: SOIL
% Solids: 77.5

Lab ID: SC0149-13
Client ID: MR08-IS289-2-3-09A
SDG: TO9-35
Extracted by: AC
Extraction Method: SW846 3550
Analyst: JCG
Analysis Method: SW846 8270C
Lab Prep Batch: WG59937
Units: ug/Kgdrywt

CAS#	Compound	Flags	Results	DF	PQL	Adj.PQL	Adj.MDL
84-74-2	Di-n-butylphthalate	U	420	1.0	330	420	130
85-68-7	Butylbenzylphthalate	U	420	1.0	330	420	120
91-94-1	3,3'-Dichlorobenzidine	U	640	1.0	500	640	150
218-01-9	Chrysene	J	200	1.0	330	420	120
117-81-7	bis(2-Ethylhexyl)phthalate	U	420	1.0	330	420	130
117-84-0	Di-n-octylphthalate	U	420	1.0	330	420	270
367-12-4	2-Fluorophenol		86%				
13127-88-3	Phenol-D6		92%				
4165-60-0	Nitrobenzene-D5		82%				
321-60-8	2-Fluorobiphenyl		88%				
118-79-6	2,4,6-Tribromophenol		86%				
1718-51-0	Terphenyl-D14		106%				

lw 4/16/09

KATAHDIN ANALYTICAL SERVICES
Report of Analytical Results

8

Client: CH2MHill
Project: TO-009 Lejeune
PO No:
Sample Date: 01/11/09
Received Date: 01/13/09
Extraction Date: 01/19/09
Analysis Date: 05-FEB-2009 01:17
Report Date: 02/05/2009
Matrix: SOIL
% Solids: 81.5

Lab ID: SC0149-15
Client ID: MR08-IS289D-2-3-09A
SDG: TO9-35
Extracted by: AC
Extraction Method: SW846 3550
Analyst: JCG
Analysis Method: SW846 8270C
Lab Prep Batch: WG59937
Units: ug/Kgdrywt

CAS#	Compound	Flags	Results	DF	PQL	Adj.PQL	Adj.MDL
100-52-7	Benzaldehyde	U	610	1.0	500	610	150
108-95-2	Phenol	U	610	1.0	500	610	190
111-44-4	Bis(2-Chloroethyl)ether	U	400	1.0	330	400	99
95-57-8	2-Chlorophenol	U	610	1.0	500	610	200
95-48-7	2-Methylphenol	U	740	1.0	600	740	240
108-60-1	2,2'-Oxybis(1-chloropropane)	U	400	1.0	330	400	110
98-86-2	Acetophenone	U	740	1.0	600	740	220
621-64-7	N-Nitroso-di-n-propylamine	U	400	1.0	330	400	100
65794-96-9	3&4-Methylphenol	U	740	1.0	600	740	230
67-72-1	Hexachloroethane	U	400	1.0	330	400	120
98-95-3	Nitrobenzene	U	400	1.0	330	400	110
78-59-1	Isophorone	U	400	1.0	330	400	92
88-75-5	2-Nitrophenol	U	740	1.0	600	740	200
105-67-9	2,4-Dimethylphenol	U	610	1.0	500	610	200
111-91-1	Bis(2-Chloroethoxy)methane	U	400	1.0	330	400	120
120-83-2	2,4-Dichlorophenol	U	610	1.0	500	610	180
106-47-8	4-Chloroaniline	U	610	1.0	500	610	140
105-60-2	Caprolactam	U	610	1.0	500	610	180
59-50-7	4-Chloro-3-Methylphenol	U	610	1.0	500	610	200
88-06-2	2,4,6-Trichlorophenol	U	610	1.0	500	610	190
95-95-4	2,4,5-Trichlorophenol	U	610	1.0	500	610	190
91-58-7	2-Chloronaphthalene	U	400	1.0	330	400	110
92-52-4	1,1'-Biphenyl	U	400	1.0	330	400	90
88-74-4	2-Nitroaniline	U	610	1.0	500	610	92
131-11-3	Dimethyl Phthalate	U	400	1.0	330	400	96
606-20-2	2,6-Dinitrotoluene	U	400	1.0	330	400	97
208-96-8	Acenaphthylene	U	400	1.0	330	400	86
99-09-2	3-Nitroaniline	U	610	1.0	500	610	120
83-32-9	Acenaphthene	U	400	1.0	330	400	80
51-28-5	2,4-Dinitrophenol	U	1500	1.0	1200	1500	460
132-64-9	Dibenzofuran	U	400	1.0	330	400	97
100-02-7	4-Nitrophenol	U	1500	1.0	1200	1500	380
121-14-2	2,4-Dinitrotoluene	U	400	1.0	330	400	100
84-66-2	Diethylphthalate	U	400	1.0	330	400	98
7005-72-3	4-Chlorophenyl-phenylether	U	400	1.0	330	400	96
100-01-6	4-Nitroaniline	U	610	1.0	500	610	160
534-52-1	4,6-Dinitro-2-Methylphenol	U	1500	1.0	1200	1500	410
86-30-6	N-Nitrosodiphenylamine	U	810	1.0	660	810	270
101-55-3	4-Bromophenyl-phenylether	U	400	1.0	330	400	100
1912-24-9	Atrazine	U	400	1.0	330	400	110
87-86-5	Pentachlorophenol	U	1000	1.0	820	1000	290
120-12-7	Anthracene	U	400	1.0	330	400	100
86-74-8	Carbazole	U	610	1.0	500	610	140

Ow
4/16/09

KATAHDIN ANALYTICAL SERVICES
Report of Analytical Results

Client: CH2MHill
Project: TO-009 Lejeune
PO No:
Sample Date: 01/11/09
Received Date: 01/13/09
Extraction Date: 01/19/09
Analysis Date: 05-FEB-2009 01:17
Report Date: 02/05/2009
Matrix: SOIL
% Solids: 81.5

Lab ID: SC0149-15
Client ID: MR08-IS289D-2-3-09A
SDG: TO9-35
Extracted by: AC
Extraction Method: SW846 3550
Analyst: JCG
Analysis Method: SW846 8270C
Lab Prep Batch: WG59937
Units: ug/Kgdrywt

CAS#	Compound	Flags	Results	DF	PQL	Adj.PQL	Adj.MDL
84-74-2	Di-n-butylphthalate	U	400	1.0	330	400	120
85-68-7	Butylbenzylphthalate	U	400	1.0	330	400	110
91-94-1	3,3'-Dichlorobenzidine	U	610	1.0	500	610	140
218-01-9	Chrysene	U	400	1.0	330	400	120
117-81-7	bis(2-Ethylhexyl)phthalate	U	400	1.0	330	400	120
117-84-0	Di-n-octylphthalate	U	400	1.0	330	400	260
367-12-4	2-Fluorophenol		64%				
13127-88-3	Phenol-D6		70%				
4165-60-0	Nitrobenzene-D5		62%				
321-60-8	2-Fluorobiphenyl		64%				
118-79-6	2,4,6-Tribromophenol		73%				
1718-51-0	Terphenyl-D14		75%				

RW 4/16/09

9

KATAHDIN ANALYTICAL SERVICES
Report of Analytical Results

Client: CH2MHill
Project: TO-009 Lejeune
PO No:
Sample Date: 01/11/09
Received Date: 01/13/09
Extraction Date: 01/19/09
Analysis Date: 29-JAN-2009 21:05
Report Date: 02/05/2009
Matrix: SOIL
% Solids: 92.4

Lab ID: SC0149-17
Client ID: MR08-SS290-09A
SDG: TO9-35
Extracted by: AC
Extraction Method: SW846 3550
Analyst: JCG
Analysis Method: SW846 8270C
Lab Prep Batch: WG59937
Units: ug/Kgdrywt

CAS#	Compound	Flags	Results	DF	PQL	Adj.PQL	Adj.MDL
100-52-7	Benzaldehyde	U	540	1.0	500	540	130
108-95-2	Phenol	U	540	1.0	500	540	170
111-44-4	Bis(2-Chloroethyl)ether	U	360	1.0	330	360	88
95-57-8	2-Chlorophenol	U	540	1.0	500	540	180
95-48-7	2-Methylphenol	U	650	1.0	600	650	220
108-60-1	2,2'-Oxybis(1-chloropropane)	U	360	1.0	330	360	96
98-86-2	Acetophenone	U	650	1.0	600	650	190
621-64-7	N-Nitroso-di-n-propylamine	U	360	1.0	330	360	90
65794-96-9	3&4-Methylphenol	U	650	1.0	600	650	200
67-72-1	Hexachloroethane	U	360	1.0	330	360	100
98-95-3	Nitrobenzene	U	360	1.0	330	360	98
78-59-1	Isophorone	U	360	1.0	330	360	81
88-75-5	2-Nitrophenol	U	650	1.0	600	650	180
105-67-9	2,4-Dimethylphenol	U	540	1.0	500	540	180
111-91-1	Bis(2-Chloroethoxy)methane	U	360	1.0	330	360	100
120-83-2	2,4-Dichlorophenol	U	540	1.0	500	540	160
106-47-8	4-Chloroaniline	U	540	1.0	500	540	130
105-60-2	Caprolactam	U	540	1.0	500	540	160
59-50-7	4-Chloro-3-Methylphenol	U	540	1.0	500	540	180
88-06-2	2,4,6-Trichlorophenol	U	540	1.0	500	540	170
95-95-4	2,4,5-Trichlorophenol	U	540	1.0	500	540	170
91-58-7	2-Chloronaphthalene	U	360	1.0	330	360	94
92-52-4	1,1'-Biphenyl	U	360	1.0	330	360	79
88-74-4	2-Nitroaniline	U	540	1.0	500	540	81
131-11-3	Dimethyl Phthalate	U	360	1.0	330	360	84
606-20-2	2,6-Dinitrotoluene	U	360	1.0	330	360	85
208-96-8	Acenaphthylene	U	360	1.0	330	360	76
99-09-2	3-Nitroaniline	U	540	1.0	500	540	100
83-32-9	Acenaphthene	U	360	1.0	330	360	70
51-28-5	2,4-Dinitrophenol	U	1300	1.0	1200	1300	410
132-64-9	Dibenzofuran	U	360	1.0	330	360	85
100-02-7	4-Nitrophenol	U	1300	1.0	1200	1300	330
121-14-2	2,4-Dinitrotoluene	U	360	1.0	330	360	92
84-66-2	Diethylphthalate	U	360	1.0	330	360	86
7005-72-3	4-Chlorophenyl-phenylether	U	360	1.0	330	360	84
100-01-6	4-Nitroaniline	U	540	1.0	500	540	140
534-52-1	4,6-Dinitro-2-Methylphenol	U	1300	1.0	1200	1300	360
86-30-6	N-Nitrosodiphenylamine	U	710	1.0	660	710	240
101-55-3	4-Bromophenyl-phenylether	U	360	1.0	330	360	92
1912-24-9	Atrazine	U	360	1.0	330	360	98
87-86-5	Pentachlorophenol	U	890	1.0	820	890	260
120-12-7	Anthracene	U	360	1.0	330	360	91
86-74-8	Carbazole	U	540	1.0	500	540	120

LW 4/16/09

KATAHDIN ANALYTICAL SERVICES
Report of Analytical Results

Client: CH2MHill
Project: TO-009 Lejeune
PO No:
Sample Date: 01/11/09
Received Date: 01/13/09
Extraction Date: 01/19/09
Analysis Date: 29-JAN-2009 21:05
Report Date: 02/05/2009
Matrix: SOIL
% Solids: 92.4

Lab ID: SC0149-17
Client ID: MR08-SS290-09A
SDG: TO9-35
Extracted by: AC
Extraction Method: SW846 3550
Analyst: JCG
Analysis Method: SW846 8270C
Lab Prep Batch: WG59937
Units: ug/Kgdrywt

CAS#	Compound	Flags	Results	DF	PQL	Adj.PQL	Adj.MDL
84-74-2	Di-n-butylphthalate	U	360	1.0	330	360	110
85-68-7	Butylbenzylphthalate	U	360	1.0	330	360	100
91-94-1	3,3'-Dichlorobenzidine	U	540	1.0	500	540	120
218-01-9	Chrysene	U	360	1.0	330	360	100
117-81-7	bis(2-Ethylhexyl)phthalate	J	130	1.0	330	360	110
117-84-0	Di-n-octylphthalate	U	360	1.0	330	360	230
367-12-4	2-Fluorophenol		74%				
13127-88-3	Phenol-D6		83%				
4165-60-0	Nitrobenzene-D5		71%				
321-60-8	2-Fluorobiphenyl		79%				
118-79-6	2,4,6-Tribromophenol		92%				
1718-51-0	Terphenyl-D14		96%				

MW 4/16/09

10

KATAHDIN ANALYTICAL SERVICES
Report of Analytical Results

Client: CH2MHill
Project: TO-009 Lejeune
PO No:
Sample Date: 01/11/09
Received Date: 01/13/09
Extraction Date: 01/19/09
Analysis Date: 29-JAN-2009 21:47
Report Date: 02/05/2009
Matrix: SOIL
% Solids: 87.3

Lab ID: SC0149-19
Client ID: MR08-IS290-4-5-09A
SDG: TO9-35
Extracted by: AC
Extraction Method: SW846 3550
Analyst: JCG
Analysis Method: SW846 8270C
Lab Prep Batch: WG59937
Units: ug/Kgdrywt

CAS#	Compound	Flags	Results	DF	PQL	Adj.PQL	Adj.MDL
100-52-7	Benzaldehyde	U	570	1.0	500	570	140
108-95-2	Phenol	U	570	1.0	500	570	180
111-44-4	Bis(2-Chloroethyl)ether	U	380	1.0	330	380	93
95-57-8	2-Chlorophenol	U	570	1.0	500	570	190
95-48-7	2-Methylphenol	U	690	1.0	600	690	230
108-60-1	2,2'-Oxybis(1-chloropropane)	U	380	1.0	330	380	100
98-86-2	Acetophenone	U	690	1.0	600	690	200
621-64-7	N-Nitroso-di-n-propylamine	U	380	1.0	330	380	95
65794-96-9	3&4-Methylphenol	U	690	1.0	600	690	210
67-72-1	Hexachloroethane	U	380	1.0	330	380	110
98-95-3	Nitrobenzene	U	380	1.0	330	380	100
78-59-1	Isophorone	U	380	1.0	330	380	86
88-75-5	2-Nitrophenol	U	690	1.0	600	690	190
105-67-9	2,4-Dimethylphenol	U	570	1.0	500	570	190
111-91-1	Bis(2-Chloroethoxy)methane	U	380	1.0	330	380	110
120-83-2	2,4-Dichlorophenol	U	570	1.0	500	570	170
106-47-8	4-Chloroaniline	U	570	1.0	500	570	140
105-60-2	Caprolactam	U	570	1.0	500	570	160
59-50-7	4-Chloro-3-Methylphenol	U	570	1.0	500	570	190
88-06-2	2,4,6-Trichlorophenol	U	570	1.0	500	570	180
95-95-4	2,4,5-Trichlorophenol	U	570	1.0	500	570	180
91-58-7	2-Chloronaphthalene	U	380	1.0	330	380	100
92-52-4	1,1'-Biphenyl	U	380	1.0	330	380	84
88-74-4	2-Nitroaniline	U	570	1.0	500	570	86
131-11-3	Dimethyl Phthalate	U	380	1.0	330	380	89
606-20-2	2,6-Dinitrotoluene	U	380	1.0	330	380	90
208-96-8	Acenaphthylene	U	380	1.0	330	380	80
99-09-2	3-Nitroaniline	U	570	1.0	500	570	110
83-32-9	Acenaphthene	U	380	1.0	330	380	74
51-28-5	2,4-Dinitrophenol	U	1400	1.0	1200	1400	430
132-64-9	Dibenzofuran	U	380	1.0	330	380	90
100-02-7	4-Nitrophenol	U	1400	1.0	1200	1400	350
121-14-2	2,4-Dinitrotoluene	U	380	1.0	330	380	97
84-66-2	Diethylphthalate	U	380	1.0	330	380	92
7005-72-3	4-Chlorophenyl-phenylether	U	380	1.0	330	380	89
100-01-6	4-Nitroaniline	U	570	1.0	500	570	150
534-52-1	4,6-Dinitro-2-Methylphenol	U	1400	1.0	1200	1400	390
86-30-6	N-Nitrosodiphenylamine	U	760	1.0	660	760	250
101-55-3	4-Bromophenyl-phenylether	U	380	1.0	330	380	97
1912-24-9	Atrazine	U	380	1.0	330	380	100
87-86-5	Pentachlorophenol	U	940	1.0	820	940	270
120-12-7	Anthracene	U	380	1.0	330	380	96
86-74-8	Carbazole	U	570	1.0	500	570	130

MW 4/16/09

KATAHDIN ANALYTICAL SERVICES
Report of Analytical Results

Client: CH2MHill
Project: TO-009 Lejeune
PO No:
Sample Date: 01/11/09
Received Date: 01/13/09
Extraction Date: 01/19/09
Analysis Date: 29-JAN-2009 21:47
Report Date: 02/05/2009
Matrix: SOIL
% Solids: 87.3

Lab ID: SC0149-19
Client ID: MR08-IS290-4-5-09A
SDG: TO9-35
Extracted by: AC
Extraction Method: SW846 3550
Analyst: JCG
Analysis Method: SW846 8270C
Lab Prep Batch: WG59937
Units: ug/Kgdrywt

CAS#	Compound	Flags	Results	DF	PQL	Adj.PQL	Adj.MDL
84-74-2	Di-n-butylphthalate	U	380	1.0	330	380	120
85-68-7	Butylbenzylphthalate	U	380	1.0	330	380	110
91-94-1	3,3'-Dichlorobenzidine	U	570	1.0	500	570	130
218-01-9	Chrysene	U	380	1.0	330	380	110
117-81-7	bis(2-Ethylhexyl)phthalate	U	380	1.0	330	380	110
117-84-0	Di-n-octylphthalate	U	380	1.0	330	380	240
367-12-4	2-Fluorophenol		74%				
13127-88-3	Phenol-D6		82%				
4165-60-0	Nitrobenzene-D5		73%				
321-60-8	2-Fluorobiphenyl		71%				
118-79-6	2,4,6-Tribromophenol		82%				
1718-51-0	Terphenyl-D14		87%				

lew
4/16/09

11

KATAHDIN ANALYTICAL SERVICES
Report of Analytical Results

Client: CH2MHill
Project: TO-009 Lejeune
PO No:
Sample Date: 01/11/09
Received Date: 01/13/09
Extraction Date: 01/19/09
Analysis Date: 29-JAN-2009 22:29
Report Date: 02/05/2009
Matrix: SOIL
% Solids: 91.0

Lab ID: SC0149-21
Client ID: MR08-SS313-09A
SDG: TO9-35
Extracted by: AC
Extraction Method: SW846 3550
Analyst: JCG
Analysis Method: SW846 8270C
Lab Prep Batch: WG59937
Units: ug/Kgdrywt

CAS#	Compound	Flags	Results	DF	PQL	Adj.PQL	Adj.MDL
100-52-7	Benzaldehyde	U	550	1.0	500	550	130
108-95-2	Phenol	U	550	1.0	500	550	170
111-44-4	Bis(2-Chloroethyl)ether	U	360	1.0	330	360	89
95-57-8	2-Chlorophenol	U	550	1.0	500	550	180
95-48-7	2-Methylphenol	U	660	1.0	600	660	220
108-60-1	2,2'-Oxybis(1-chloropropane)	U	360	1.0	330	360	98
98-86-2	Acetophenone	U	660	1.0	600	660	200
621-64-7	N-Nitroso-di-n-propylamine	U	360	1.0	330	360	91
65794-96-9	3&4-Methylphenol	U	660	1.0	600	660	200
67-72-1	Hexachloroethane	U	360	1.0	330	360	100
98-95-3	Nitrobenzene	U	360	1.0	330	360	100
78-59-1	Isophorone	U	360	1.0	330	360	82
88-75-5	2-Nitrophenol	U	660	1.0	600	660	180
105-67-9	2,4-Dimethylphenol	U	550	1.0	500	550	180
111-91-1	Bis(2-Chloroethoxy)methane	U	360	1.0	330	360	100
120-83-2	2,4-Dichlorophenol	U	550	1.0	500	550	160
106-47-8	4-Chloroaniline	U	550	1.0	500	550	130
105-60-2	Caprolactam	U	550	1.0	500	550	160
59-50-7	4-Chloro-3-Methylphenol	U	550	1.0	500	550	180
88-06-2	2,4,6-Trichlorophenol	U	550	1.0	500	550	170
95-95-4	2,4,5-Trichlorophenol	U	550	1.0	500	550	170
91-58-7	2-Chloronaphthalene	U	360	1.0	330	360	96
92-52-4	1,1'-Biphenyl	U	360	1.0	330	360	80
88-74-4	2-Nitroaniline	U	550	1.0	500	550	82
131-11-3	Dimethyl Phthalate	U	360	1.0	330	360	86
606-20-2	2,6-Dinitrotoluene	U	360	1.0	330	360	87
208-96-8	Acenaphthylene	U	360	1.0	330	360	77
99-09-2	3-Nitroaniline	U	550	1.0	500	550	100
83-32-9	Acenaphthene	U	360	1.0	330	360	71
51-28-5	2,4-Dinitrophenol	U	1300	1.0	1200	1300	410
132-64-9	Dibenzofuran	U	360	1.0	330	360	87
100-02-7	4-Nitrophenol	U	1300	1.0	1200	1300	340
121-14-2	2,4-Dinitrotoluene	U	360	1.0	330	360	93
84-66-2	Diethylphthalate	U	360	1.0	330	360	88
7005-72-3	4-Chlorophenyl-phenylether	U	360	1.0	330	360	86
100-01-6	4-Nitroaniline	U	550	1.0	500	550	150
534-52-1	4,6-Dinitro-2-Methylphenol	U	1300	1.0	1200	1300	370
86-30-6	N-Nitrosodiphenylamine	U	720	1.0	660	720	240
101-55-3	4-Bromophenyl-phenylether	U	360	1.0	330	360	93
1912-24-9	Atrazine	U	360	1.0	330	360	100
87-86-5	Pentachlorophenol	U	900	1.0	820	900	260
120-12-7	Anthracene	U	360	1.0	330	360	92
86-74-8	Carbazole	U	550	1.0	500	550	120

bes
4/16/09

KATAHDIN ANALYTICAL SERVICES
Report of Analytical Results

11

Client: CH2MHill
Project: TO-009 Lejeune
PO No:
Sample Date: 01/11/09
Received Date: 01/13/09
Extraction Date: 01/19/09
Analysis Date: 29-JAN-2009 22:29
Report Date: 02/05/2009
Matrix: SOIL
% Solids: 91.0

Lab ID: SC0149-21
Client ID: MR08-SS313-09A
SDG: TO9-35
Extracted by: AC
Extraction Method: SW846 3550
Analyst: JCG
Analysis Method: SW846 8270C
Lab Prep Batch: WG59937
Units: ug/Kgdrywt

CAS#	Compound	Flags	Results	DF	PQL	Adj.PQL	Adj.MDL
84-74-2	Di-n-butylphthalate	U	360	1.0	330	360	110
85-68-7	Butylbenzylphthalate	U	360	1.0	330	360	100
91-94-1	3,3'-Dichlorobenzidine	U	550	1.0	500	550	120
218-01-9	Chrysene	U	360	1.0	330	360	100
117-81-7	bis(2-Ethylhexyl)phthalate	J	110	1.0	330	360	110
117-84-0	Di-n-octylphthalate	U	360	1.0	330	360	230
367-12-4	2-Fluorophenol		67%				
13127-88-3	Phenol-D6		74%				
4165-60-0	Nitrobenzene-D5		66%				
321-60-8	2-Fluorobiphenyl		64%				
118-79-6	2,4,6-Tribromophenol		76%				
1718-51-0	Terphenyl-D14		85%				

LW
4/16/09

KATAHDIN ANALYTICAL SERVICES
Report of Analytical Results

Client: CH2MHill
Project: TO-009 Lejeune
PO No:
Sample Date: 01/11/09
Received Date: 01/13/09
Extraction Date: 01/19/09
Analysis Date: 29-JAN-2009 23:10
Report Date: 02/05/2009
Matrix: SOIL
% Solids: 84.2

Lab ID: SC0149-23
Client ID: MR08-IS313-5-6-09A
SDG: TO9-35
Extracted by: AC
Extraction Method: SW846 3550
Analyst: JCG
Analysis Method: SW846 8270C
Lab Prep Batch: WG59937
Units: ug/Kgdrywt

CAS#	Compound	Flags	Results	DF	PQL	Adj.PQL	Adj.MDL
100-52-7	Benzaldehyde	U	590	1.0	500	590	140
108-95-2	Phenol	U	590	1.0	500	590	180
111-44-4	Bis(2-Chloroethyl)ether	U	390	1.0	330	390	96
95-57-8	2-Chlorophenol	U	590	1.0	500	590	190
95-48-7	2-Methylphenol	U	710	1.0	600	710	240
108-60-1	2,2'-Oxybis(1-chloropropane)	U	390	1.0	330	390	100
98-86-2	Acetophenone	U	710	1.0	600	710	210
621-64-7	N-Nitroso-di-n-propylamine	U	390	1.0	330	390	98
65794-96-9	3&4-Methylphenol	U	710	1.0	600	710	220
67-72-1	Hexachloroethane	U	390	1.0	330	390	110
98-95-3	Nitrobenzene	U	390	1.0	330	390	110
78-59-1	Isophorone	U	390	1.0	330	390	89
88-75-5	2-Nitrophenol	U	710	1.0	600	710	200
105-67-9	2,4-Dimethylphenol	U	590	1.0	500	590	200
111-91-1	Bis(2-Chloroethoxy)methane	U	390	1.0	330	390	110
120-83-2	2,4-Dichlorophenol	U	590	1.0	500	590	180
106-47-8	4-Chloroaniline	U	590	1.0	500	590	140
105-60-2	Caprolactam	U	590	1.0	500	590	170
59-50-7	4-Chloro-3-Methylphenol	U	590	1.0	500	590	200
88-06-2	2,4,6-Trichlorophenol	U	590	1.0	500	590	180
95-95-4	2,4,5-Trichlorophenol	U	590	1.0	500	590	180
91-58-7	2-Chloronaphthalene	U	390	1.0	330	390	100
92-52-4	1,1'-Biphenyl	U	390	1.0	330	390	87
88-74-4	2-Nitroaniline	U	590	1.0	500	590	89
131-11-3	Dimethyl Phthalate	U	390	1.0	330	390	93
606-20-2	2,6-Dinitrotoluene	U	390	1.0	330	390	94
208-96-8	Acenaphthylene	U	390	1.0	330	390	83
99-09-2	3-Nitroaniline	U	590	1.0	500	590	110
83-32-9	Acenaphthene	U	390	1.0	330	390	77
51-28-5	2,4-Dinitrophenol	U	1400	1.0	1200	1400	450
132-64-9	Dibenzofuran	U	390	1.0	330	390	94
100-02-7	4-Nitrophenol	U	1400	1.0	1200	1400	370
121-14-2	2,4-Dinitrotoluene	U	390	1.0	330	390	100
84-66-2	Diethylphthalate	U	390	1.0	330	390	95
7005-72-3	4-Chlorophenyl-phenylether	U	390	1.0	330	390	93
100-01-6	4-Nitroaniline	U	590	1.0	500	590	160
534-52-1	4,6-Dinitro-2-Methylphenol	U	1400	1.0	1200	1400	400
86-30-6	N-Nitrosodiphenylamine	U	780	1.0	660	780	260
101-55-3	4-Bromophenyl-phenylether	U	390	1.0	330	390	100
1912-24-9	Atrazine	U	390	1.0	330	390	110
87-86-5	Pentachlorophenol	U	970	1.0	820	970	280
120-12-7	Anthracene	U	390	1.0	330	390	100
86-74-8	Carbazole	U	590	1.0	500	590	130

lw 4/16/09

KATAHDIN ANALYTICAL SERVICES
Report of Analytical Results

Client: CH2MHill
Project: TO-009 Lejeune
PO No:
Sample Date: 01/11/09
Received Date: 01/13/09
Extraction Date: 01/19/09
Analysis Date: 29-JAN-2009 23:10
Report Date: 02/05/2009
Matrix: SOIL
% Solids: 84.2

Lab ID: SC0149-23
Client ID: MR08-IS313-5-6-09A
SDG: TO9-35
Extracted by: AC
Extraction Method: SW846 3550
Analyst: JCG
Analysis Method: SW846 8270C
Lab Prep Batch: WG59937
Units: ug/Kgdrywt

CAS#	Compound	Flags	Results	DF	PQL	Adj.PQL	Adj.MDL
84-74-2	Di-n-butylphthalate	U	390	1.0	330	390	120
85-68-7	Butylbenzylphthalate	U	390	1.0	330	390	110
91-94-1	3,3'-Dichlorobenzidine	U	590	1.0	500	590	140
218-01-9	Chrysene	U	390	1.0	330	390	110
117-81-7	bis(2-Ethylhexyl)phthalate	J	130	1.0	330	390	120
117-84-0	Di-n-octylphthalate	U	390	1.0	330	390	250
367-12-4	2-Fluorophenol		65%				
13127-88-3	Phenol-D6		72%				
4165-60-0	Nitrobenzene-D5		63%				
321-60-8	2-Fluorobiphenyl		61%				
118-79-6	2,4,6-Tribromophenol		69%				
1718-51-0	Terphenyl-D14		89%				

LW 4/16/09

KATAHDIN ANALYTICAL SERVICES
Report of Analytical Results

Client: CH2MHill
Project: TO-009 Lejeune
PO No:
Sample Date: 01/12/09
Received Date: 01/14/09
Extraction Date: 01/19/09
Analysis Date: 30-JAN-2009 00:34
Report Date: 02/05/2009
Matrix: SOIL
% Solids: 88.8

Lab ID: SC0176-1
Client ID: MR08-SS291-09A
SDG: TO9-35
Extracted by: AC
Extraction Method: SW846 3550
Analyst: JCG
Analysis Method: SW846 8270C
Lab Prep Batch: WG59937
Units: ug/Kgdrywt

CAS#	Compound	Flags	Results	DF	PQL	Adj.PQL	Adj.MDL
100-52-7	Benzaldehyde	U	560	1.0	500	560	140
108-95-2	Phenol	U	560	1.0	500	560	180
111-44-4	Bis(2-Chloroethyl)ether	U	370	1.0	330	370	91
95-57-8	2-Chlorophenol	U	560	1.0	500	560	180
95-48-7	2-Methylphenol	U	680	1.0	600	680	220
108-60-1	2,2'-Oxybis(1-chloropropane)	U	370	1.0	330	370	100
98-86-2	Acetophenone	U	680	1.0	600	680	200
621-64-7	N-Nitroso-di-n-propylamine	U	370	1.0	330	370	93
65794-96-9	3&4-Methylphenol	U	680	1.0	600	680	210
67-72-1	Hexachloroethane	U	370	1.0	330	370	110
98-95-3	Nitrobenzene	U	370	1.0	330	370	100
78-59-1	Isophorone	U	370	1.0	330	370	84
88-75-5	2-Nitrophenol	U	680	1.0	600	680	190
105-67-9	2,4-Dimethylphenol	U	560	1.0	500	560	180
111-91-1	Bis(2-Chloroethoxy)methane	U	370	1.0	330	370	110
120-83-2	2,4-Dichlorophenol	U	560	1.0	500	560	170
106-47-8	4-Chloroaniline	U	560	1.0	500	560	130
105-60-2	Caprolactam	U	560	1.0	500	560	160
59-50-7	4-Chloro-3-Methylphenol	U	560	1.0	500	560	190
88-06-2	2,4,6-Trichlorophenol	U	560	1.0	500	560	170
95-95-4	2,4,5-Trichlorophenol	U	560	1.0	500	560	170
91-58-7	2-Chloronaphthalene	U	370	1.0	330	370	98
92-52-4	1,1'-Biphenyl	U	370	1.0	330	370	82
88-74-4	2-Nitroaniline	U	560	1.0	500	560	84
131-11-3	Dimethyl Phthalate	U	370	1.0	330	370	88
606-20-2	2,6-Dinitrotoluene	U	370	1.0	330	370	89
208-96-8	Acenaphthylene	U	370	1.0	330	370	79
99-09-2	3-Nitroaniline	U	560	1.0	500	560	100
83-32-9	Acenaphthene	U	370	1.0	330	370	73
51-28-5	2,4-Dinitrophenol	U	1400	1.0	1200	1400	420
132-64-9	Dibenzofuran	U	370	1.0	330	370	89
100-02-7	4-Nitrophenol	U	1400	1.0	1200	1400	350
121-14-2	2,4-Dinitrotoluene	U	370	1.0	330	370	96
84-66-2	Diethylphthalate	U	370	1.0	330	370	90
7005-72-3	4-Chlorophenyl-phenylether	U	370	1.0	330	370	88
100-01-6	4-Nitroaniline	U	560	1.0	500	560	150
534-52-1	4,6-Dinitro-2-Methylphenol	U	1400	1.0	1200	1400	380
86-30-6	N-Nitrosodiphenylamine	U	740	1.0	660	740	250
101-55-3	4-Bromophenyl-phenylether	U	370	1.0	330	370	96
1912-24-9	Atrazine	U	370	1.0	330	370	100
87-86-5	Pentachlorophenol	U	920	1.0	820	920	270
120-12-7	Anthracene	U	370	1.0	330	370	94
86-74-8	Carbazole	U	560	1.0	500	560	120

lcw 4/16/09

KATAHDIN ANALYTICAL SERVICES
Report of Analytical Results

Client: CH2MHill
Project: TO-009 Lejeune
PO No:
Sample Date: 01/12/09
Received Date: 01/14/09
Extraction Date: 01/19/09
Analysis Date: 30-JAN-2009 00:34
Report Date: 02/05/2009
Matrix: SOIL
% Solids: 88.8

Lab ID: SC0176-1
Client ID: MR08-SS291-09A
SDG: TO9-35
Extracted by: AC
Extraction Method: SW846 3550
Analyst: JCG
Analysis Method: SW846 8270C
Lab Prep Batch: WG59937
Units: ug/Kgdrywt

CAS#	Compound	Flags	Results	DF	PQL	Adj.PQL	Adj.MDL
84-74-2	Di-n-butylphthalate	U	370	1.0	330	370	110
85-68-7	Butylbenzylphthalate	U	370	1.0	330	370	100
91-94-1	3,3'-Dichlorobenzidine	U	560	1.0	500	560	130
218-01-9	Chrysene	U	370	1.0	330	370	110
117-81-7	bis(2-Ethylhexyl)phthalate	J	350	1.0	330	370	110
117-84-0	Di-n-octylphthalate	U	370	1.0	330	370	240
367-12-4	2-Fluorophenol		67%				
13127-88-3	Phenol-D6		77%				
4165-60-0	Nitrobenzene-D5		68%				
321-60-8	2-Fluorobiphenyl		63%				
118-79-6	2,4,6-Tribromophenol		84%				
1718-51-0	Terphenyl-D14		96%				

lcW
4/16/09

KATAHDIN ANALYTICAL SERVICES
Report of Analytical Results

Client: CH2MHill
Project: TO-009 Lejeune
PO No:
Sample Date: 01/12/09
Received Date: 01/14/09
Extraction Date: 01/19/09
Analysis Date: 28-JAN-2009 10:33
Report Date: 02/05/2009
Matrix: SOIL
% Solids: 87.2

Lab ID: SC0176-3
Client ID: MR08-IS291-8-9-09A
SDG: TO9-35
Extracted by: AC
Extraction Method: SW846 3550
Analyst: JLP
Analysis Method: SW846 8270C
Lab Prep Batch: WG59948
Units: ug/Kgdrywt

CAS#	Compound	Flags	Results	DF	PQL	Adj.PQL	Adj.MDL
100-52-7	Benzaldehyde	U	570	1.0	500	570	140
108-95-2	Phenol	U	570	1.0	500	570	180
111-44-4	Bis(2-Chloroethyl)ether	U	380	1.0	330	380	93
95-57-8	2-Chlorophenol	U	570	1.0	500	570	190
95-48-7	2-Methylphenol	U	690	1.0	600	690	230
108-60-1	2,2'-Oxybis(1-chloropropane)	U	380	1.0	330	380	100
98-86-2	Acetophenone	U	690	1.0	600	690	200
621-64-7	N-Nitroso-di-n-propylamine	U	380	1.0	330	380	95
65794-96-9	3&4-Methylphenol	U	690	1.0	600	690	210
67-72-1	Hexachloroethane	U	380	1.0	330	380	110
98-95-3	Nitrobenzene	U	380	1.0	330	380	100
78-59-1	Isophorone	U	380	1.0	330	380	86
88-75-5	2-Nitrophenol	U	690	1.0	600	690	190
105-67-9	2,4-Dimethylphenol	U	570	1.0	500	570	190
111-91-1	Bis(2-Chloroethoxy)methane	U	380	1.0	330	380	110
120-83-2	2,4-Dichlorophenol	U	570	1.0	500	570	170
106-47-8	4-Chloroaniline	U	570	1.0	500	570	140
105-60-2	Caprolactam	U	570	1.0	500	570	160
59-50-7	4-Chloro-3-Methylphenol	U	570	1.0	500	570	190
88-06-2	2,4,6-Trichlorophenol	U	570	1.0	500	570	180
95-95-4	2,4,5-Trichlorophenol	U	570	1.0	500	570	180
91-58-7	2-Chloronaphthalene	U	380	1.0	330	380	100
92-52-4	1,1'-Biphenyl	U	380	1.0	330	380	84
88-74-4	2-Nitroaniline	U	570	1.0	500	570	86
131-11-3	Dimethyl Phthalate	U	380	1.0	330	380	89
606-20-2	2,6-Dinitrotoluene	U	380	1.0	330	380	91
208-96-8	Acenaphthylene	U	380	1.0	330	380	80
99-09-2	3-Nitroaniline	U	570	1.0	500	570	110
83-32-9	Acenaphthene	U	380	1.0	330	380	74
51-28-5	2,4-Dinitrophenol	U	1400	1.0	1200	1400	430
132-64-9	Dibenzofuran	U	380	1.0	330	380	91
100-02-7	4-Nitrophenol	U	1400	1.0	1200	1400	350
121-14-2	2,4-Dinitrotoluene	U	380	1.0	330	380	98
84-66-2	Diethylphthalate	U	380	1.0	330	380	92
7005-72-3	4-Chlorophenyl-phenylether	U	380	1.0	330	380	89
100-01-6	4-Nitroaniline	U	570	1.0	500	570	150
534-52-1	4,6-Dinitro-2-Methylphenol	U	1400	1.0	1200	1400	390
86-30-6	N-Nitrosodiphenylamine	U	760	1.0	660	760	250
101-55-3	4-Bromophenyl-phenylether	U	380	1.0	330	380	98
1912-24-9	Atrazine	U	380	1.0	330	380	100
87-86-5	Pentachlorophenol	U	940	1.0	820	940	270
120-12-7	Anthracene	U	380	1.0	330	380	96
86-74-8	Carbazole	U	570	1.0	500	570	130

lw 4/16/09

KATAHDIN ANALYTICAL SERVICES
Report of Analytical Results

Client: CH2MHill
Project: TO-009 Lejeune
PO No:
Sample Date: 01/12/09
Received Date: 01/14/09
Extraction Date: 01/19/09
Analysis Date: 28-JAN-2009 10:33
Report Date: 02/05/2009
Matrix: SOIL
% Solids: 87.2

Lab ID: SC0176-3
Client ID: MR08-IS291-8-9-09A
SDG: TO9-35
Extracted by: AC
Extraction Method: SW846 3550
Analyst: JLP
Analysis Method: SW846 8270C
Lab Prep Batch: WG59948
Units: ug/Kgdrywt

CAS#	Compound	Flags	Results	DF	PQL	Adj.PQL	Adj.MDL
84-74-2	Di-n-butylphthalate	U	380	1.0	330	380	120
85-68-7	Butylbenzylphthalate	U	380	1.0	330	380	110
91-94-1	3,3'-Dichlorobenzidine	U	570	1.0	500	570	130
218-01-9	Chrysene	U	380	1.0	330	380	110
117-81-7	bis(2-Ethylhexyl)phthalate	J	340	1.0	330	380	110
117-84-0	Di-n-octylphthalate	U	380	1.0	330	380	240
367-12-4	2-Fluorophenol		62%				
13127-88-3	Phenol-D6		69%				
4165-60-0	Nitrobenzene-D5		62%				
321-60-8	2-Fluorobiphenyl		59%				
118-79-6	2,4,6-Tribromophenol		66%				
1718-51-0	Terphenyl-D14		72%				

LW
4/16/09

KATAHDIN ANALYTICAL SERVICES
Report of Analytical Results

Client: CH2MHill
Project: TO-009 Lejeune
PO No:
Sample Date: 01/12/09
Received Date: 01/14/09
Extraction Date: 01/19/09
Analysis Date: 28-JAN-2009 11:15
Report Date: 02/05/2009
Matrix: SOIL
% Solids: 90.9

Lab ID: SC0176-5
Client ID: MR08-SS292-09A
SDG: TO9-35
Extracted by: AC
Extraction Method: SW846 3550
Analyst: JLP
Analysis Method: SW846 8270C
Lab Prep Batch: WG59948
Units: ug/Kgdrywt

CAS#	Compound	Flags	Results	DF	PQL	Adj.PQL	Adj.MDL
100-52-7	Benzaldehyde	U	550	1.0	500	550	130
108-95-2	Phenol	U	550	1.0	500	550	170
111-44-4	Bis(2-Chloroethyl)ether	U	360	1.0	330	360	89
95-57-8	2-Chlorophenol	U	550	1.0	500	550	180
95-48-7	2-Methylphenol	U	660	1.0	600	660	220
108-60-1	2,2'-Oxybis(1-chloropropane)	U	360	1.0	330	360	98
98-86-2	Acetophenone	U	660	1.0	600	660	200
621-64-7	N-Nitroso-di-n-propylamine	U	360	1.0	330	360	91
65794-96-9	3&4-Methylphenol	U	660	1.0	600	660	200
67-72-1	Hexachloroethane	U	360	1.0	330	360	100
98-95-3	Nitrobenzene	U	360	1.0	330	360	100
78-59-1	Isophorone	U	360	1.0	330	360	82
88-75-5	2-Nitrophenol	U	660	1.0	600	660	180
105-67-9	2,4-Dimethylphenol	U	550	1.0	500	550	180
111-91-1	Bis(2-Chloroethoxy)methane	U	360	1.0	330	360	100
120-83-2	2,4-Dichlorophenol	U	550	1.0	500	550	160
106-47-8	4-Chloroaniline	U	550	1.0	500	550	130
105-60-2	Caprolactam	U	550	1.0	500	550	160
59-50-7	4-Chloro-3-Methylphenol	U	550	1.0	500	550	180
88-06-2	2,4,6-Trichlorophenol	U	550	1.0	500	550	170
95-95-4	2,4,5-Trichlorophenol	U	550	1.0	500	550	170
91-58-7	2-Chloronaphthalene	U	360	1.0	330	360	96
92-52-4	1,1'-Biphenyl	U	360	1.0	330	360	80
88-74-4	2-Nitroaniline	U	550	1.0	500	550	82
131-11-3	Dimethyl Phthalate	U	360	1.0	330	360	86
606-20-2	2,6-Dinitrotoluene	U	360	1.0	330	360	87
208-96-8	Acenaphthylene	U	360	1.0	330	360	77
99-09-2	3-Nitroaniline	U	550	1.0	500	550	100
83-32-9	Acenaphthene	U	360	1.0	330	360	71
51-28-5	2,4-Dinitrophenol	U	1300	1.0	1200	1300	410
132-64-9	Dibenzofuran	U	360	1.0	330	360	87
100-02-7	4-Nitrophenol	U	1300	1.0	1200	1300	340
121-14-2	2,4-Dinitrotoluene	U	360	1.0	330	360	93
84-66-2	Diethylphthalate	U	360	1.0	330	360	88
7005-72-3	4-Chlorophenyl-phenylether	U	360	1.0	330	360	86
100-01-6	4-Nitroaniline	U	550	1.0	500	550	150
534-52-1	4,6-Dinitro-2-Methylphenol	U	1300	1.0	1200	1300	370
86-30-6	N-Nitrosodiphenylamine	U	720	1.0	660	720	240
101-55-3	4-Bromophenyl-phenylether	U	360	1.0	330	360	93
1912-24-9	Atrazine	U	360	1.0	330	360	100
87-86-5	Pentachlorophenol	U	900	1.0	820	900	260
120-12-7	Anthracene	U	360	1.0	330	360	92
86-74-8	Carbazole	U	550	1.0	500	550	120

hW 4/16/09

KATAHDIN ANALYTICAL SERVICES
Report of Analytical Results

Client: CH2MHill
Project: TO-009 Lejeune
PO No:
Sample Date: 01/12/09
Received Date: 01/14/09
Extraction Date: 01/19/09
Analysis Date: 28-JAN-2009 11:15
Report Date: 02/05/2009
Matrix: SOIL
% Solids: 90.9

Lab ID: SC0176-5
Client ID: MR08-SS292-09A
SDG: TO9-35
Extracted by: AC
Extraction Method: SW846 3550
Analyst: JLP
Analysis Method: SW846 8270C
Lab Prep Batch: WG59948
Units: ug/Kgdrywt

CAS#	Compound	Flags	Results	DF	PQL	Adj.PQL	Adj.MDL
84-74-2	Di-n-butylphthalate	U	360	1.0	330	360	110
85-68-7	Butylbenzylphthalate	U	360	1.0	330	360	100
91-94-1	3,3'-Dichlorobenzidine	U	550	1.0	500	550	120
218-01-9	Chrysene	U	360	1.0	330	360	100
117-81-7	bis(2-Ethylhexyl)phthalate	U	360	1.0	330	360	110
117-84-0	Di-n-octylphthalate	U	360	1.0	330	360	230
367-12-4	2-Fluorophenol		63%				
13127-88-3	Phenol-D6		70%				
4165-60-0	Nitrobenzene-D5		61%				
321-60-8	2-Fluorobiphenyl		59%				
118-79-6	2,4,6-Tribromophenol		74%				
1718-51-0	Terphenyl-D14		83%				

lew
4/16/09

KATAHDIN ANALYTICAL SERVICES
Report of Analytical Results

Client: CH2MHill
Project: TO-009 Lejeune
PO No:
Sample Date: 01/12/09
Received Date: 01/14/09
Extraction Date: 01/19/09
Analysis Date: 28-JAN-2009 11:58
Report Date: 02/05/2009
Matrix: SOIL
% Solids: 87.3

Lab ID: SC0176-7
Client ID: MR08-IS292-5-6-09A
SDG: TO9-35
Extracted by: AC
Extraction Method: SW846 3550
Analyst: JLP
Analysis Method: SW846 8270C
Lab Prep Batch: WG59948
Units: ug/Kgdrywt

CAS#	Compound	Flags	Results	DF	PQL	Adj.PQL	Adj.MDL
100-52-7	Benzaldehyde	U	570	1.0	500	570	140
108-95-2	Phenol	U	570	1.0	500	570	180
111-44-4	Bis(2-Chloroethyl)ether	U	380	1.0	330	380	93
95-57-8	2-Chlorophenol	U	570	1.0	500	570	190
95-48-7	2-Methylphenol	U	690	1.0	600	690	230
108-60-1	2,2'-Oxybis(1-chloropropane)	U	380	1.0	330	380	100
98-86-2	Acetophenone	U	690	1.0	600	690	200
621-64-7	N-Nitroso-di-n-propylamine	U	380	1.0	330	380	95
65794-96-9	3&4-Methylphenol	U	690	1.0	600	690	210
67-72-1	Hexachloroethane	U	380	1.0	330	380	110
98-95-3	Nitrobenzene	U	380	1.0	330	380	100
78-59-1	Isophorone	U	380	1.0	330	380	86
88-75-5	2-Nitrophenol	U	690	1.0	600	690	190
105-67-9	2,4-Dimethylphenol	U	570	1.0	500	570	190
111-91-1	Bis(2-Chloroethoxy)methane	U	380	1.0	330	380	110
120-83-2	2,4-Dichlorophenol	U	570	1.0	500	570	170
106-47-8	4-Chloroaniline	U	570	1.0	500	570	140
105-60-2	Caprolactam	U	570	1.0	500	570	160
59-50-7	4-Chloro-3-Methylphenol	U	570	1.0	500	570	190
88-06-2	2,4,6-Trichlorophenol	U	570	1.0	500	570	180
95-95-4	2,4,5-Trichlorophenol	U	570	1.0	500	570	180
91-58-7	2-Chloronaphthalene	U	380	1.0	330	380	100
92-52-4	1,1'-Biphenyl	U	380	1.0	330	380	84
88-74-4	2-Nitroaniline	U	570	1.0	500	570	86
131-11-3	Dimethyl Phthalate	U	380	1.0	330	380	89
606-20-2	2,6-Dinitrotoluene	U	380	1.0	330	380	90
208-96-8	Acenaphthylene	U	380	1.0	330	380	80
99-09-2	3-Nitroaniline	U	570	1.0	500	570	110
83-32-9	Acenaphthene	U	380	1.0	330	380	74
51-28-5	2,4-Dinitrophenol	U	1400	1.0	1200	1400	430
132-64-9	Dibenzofuran	U	380	1.0	330	380	90
100-02-7	4-Nitrophenol	U	1400	1.0	1200	1400	350
121-14-2	2,4-Dinitrotoluene	U	380	1.0	330	380	97
84-66-2	Diethylphthalate	U	380	1.0	330	380	92
7005-72-3	4-Chlorophenyl-phenylether	U	380	1.0	330	380	89
100-01-6	4-Nitroaniline	U	570	1.0	500	570	150
534-52-1	4,6-Dinitro-2-Methylphenol	U	1400	1.0	1200	1400	390
86-30-6	N-Nitrosodiphenylamine	U	760	1.0	660	760	250
101-55-3	4-Bromophenyl-phenylether	U	380	1.0	330	380	97
1912-24-9	Atrazine	U	380	1.0	330	380	100
87-86-5	Pentachlorophenol	U	940	1.0	820	940	270
120-12-7	Anthracene	U	380	1.0	330	380	96
86-74-8	Carbazole	U	570	1.0	500	570	130

lw 4/16/09

KATAHDIN ANALYTICAL SERVICES
Report of Analytical Results

16

Client: CH2MHill
Project: TO-009 Lejeune
PO No:
Sample Date: 01/12/09
Received Date: 01/14/09
Extraction Date: 01/19/09
Analysis Date: 28-JAN-2009 11:58
Report Date: 02/05/2009
Matrix: SOIL
% Solids: 87.3

Lab ID: SC0176-7
Client ID: MR08-IS292-5-6-09A
SDG: TO9-35
Extracted by: AC
Extraction Method: SW846 3550
Analyst: JLP
Analysis Method: SW846 8270C
Lab Prep Batch: WG59948
Units: ug/Kgdrywt

CAS#	Compound	Flags	Results	DF	PQL	Adj.PQL	Adj.MDL
84-74-2	Di-n-butylphthalate	U	380	1.0	330	380	120
85-68-7	Butylbenzylphthalate	U	380	1.0	330	380	110
91-94-1	3,3'-Dichlorobenzidine	U	570	1.0	500	570	130
218-01-9	Chrysene	U	380	1.0	330	380	110
117-81-7	bis(2-Ethylhexyl)phthalate	J	120	1.0	330	380	110
117-84-0	Di-n-octylphthalate	U	380	1.0	330	380	240
367-12-4	2-Fluorophenol		69%				
13127-88-3	Phenol-D6		76%				
4165-60-0	Nitrobenzene-D5		64%				
321-60-8	2-Fluorobiphenyl		66%				
118-79-6	2,4,6-Tribromophenol		80%				
1718-51-0	Terphenyl-D14		83%				

lew
4/16/09

KATAHDIN ANALYTICAL SERVICES
Report of Analytical Results

Client: CH2MHill
Project: TO-009 Lejeune
PO No:
Sample Date: 01/12/09
Received Date: 01/14/09
Extraction Date: 01/19/09
Analysis Date: 28-JAN-2009 21:08
Report Date: 02/05/2009
Matrix: SOIL
% Solids: 83.7

Lab ID: SC0176-9
Client ID: MR08-SS293-09A
SDG: TO9-35
Extracted by: AC
Extraction Method: SW846 3550
Analyst: JLP
Analysis Method: SW846 8270C
Lab Prep Batch: WG59948
Units: ug/Kgdrywt

CAS#	Compound	Flags	Results	DF	PQL	Adj.PQL	Adj.MDL
100-52-7	Benzaldehyde	U	600	1.0	500	600	140
108-95-2	Phenol	U	600	1.0	500	600	190
111-44-4	Bis(2-Chloroethyl)ether	U	390	1.0	330	390	97
95-57-8	2-Chlorophenol	U	600	1.0	500	600	200
95-48-7	2-Methylphenol	U	720	1.0	600	720	240
108-60-1	2,2'-Oxybis(1-chloropropane)	U	390	1.0	330	390	110
98-86-2	Acetophenone	U	720	1.0	600	720	210
621-64-7	N-Nitroso-di-n-propylamine	U	390	1.0	330	390	99
65794-96-9	3&4-Methylphenol	U	720	1.0	600	720	220
67-72-1	Hexachloroethane	U	390	1.0	330	390	110
98-95-3	Nitrobenzene	U	390	1.0	330	390	110
78-59-1	Isophorone	U	390	1.0	330	390	90
88-75-5	2-Nitrophenol	U	720	1.0	600	720	200
105-67-9	2,4-Dimethylphenol	U	600	1.0	500	600	200
111-91-1	Bis(2-Chloroethoxy)methane	U	390	1.0	330	390	110
120-83-2	2,4-Dichlorophenol	U	600	1.0	500	600	180
106-47-8	4-Chloroaniline	U	600	1.0	500	600	140
105-60-2	Caprolactam	U	600	1.0	500	600	170
59-50-7	4-Chloro-3-Methylphenol	U	600	1.0	500	600	200
88-06-2	2,4,6-Trichlorophenol	U	600	1.0	500	600	180
95-95-4	2,4,5-Trichlorophenol	U	600	1.0	500	600	180
91-58-7	2-Chloronaphthalene	U	390	1.0	330	390	100
92-52-4	1,1'-Biphenyl	U	390	1.0	330	390	87
88-74-4	2-Nitroaniline	U	600	1.0	500	600	90
131-11-3	Dimethyl Phthalate	U	390	1.0	330	390	93
606-20-2	2,6-Dinitrotoluene	U	390	1.0	330	390	94
208-96-8	Acenaphthylene	U	390	1.0	330	390	84
99-09-2	3-Nitroaniline	U	600	1.0	500	600	110
83-32-9	Acenaphthene	U	390	1.0	330	390	78
51-28-5	2,4-Dinitrophenol	U	1400	1.0	1200	1400	450
132-64-9	Dibenzofuran	U	390	1.0	330	390	94
100-02-7	4-Nitrophenol	U	1400	1.0	1200	1400	370
121-14-2	2,4-Dinitrotoluene	U	390	1.0	330	390	100
84-66-2	Diethylphthalate	U	390	1.0	330	390	96
7005-72-3	4-Chlorophenyl-phenylether	U	390	1.0	330	390	93
100-01-6	4-Nitroaniline	U	600	1.0	500	600	160
534-52-1	4,6-Dinitro-2-Methylphenol	U	1400	1.0	1200	1400	400
86-30-6	N-Nitrosodiphenylamine	U	790	1.0	660	790	260
101-55-3	4-Bromophenyl-phenylether	U	390	1.0	330	390	100
1912-24-9	Atrazine	U	390	1.0	330	390	110
87-86-5	Pentachlorophenol	U	980	1.0	820	980	280
120-12-7	Anthracene	U	390	1.0	330	390	100
86-74-8	Carbazole	U	600	1.0	500	600	130

RW
4/16/09

KATAHDIN ANALYTICAL SERVICES
Report of Analytical Results

Client: CH2MHill
Project: TO-009 Lejeune
PO No:
Sample Date: 01/12/09
Received Date: 01/14/09
Extraction Date: 01/19/09
Analysis Date: 28-JAN-2009 21:08
Report Date: 02/05/2009
Matrix: SOIL
% Solids: 83.7

Lab ID: SC0176-9
Client ID: MR08-SS293-09A
SDG: TO9-35
Extracted by: AC
Extraction Method: SW846 3550
Analyst: JLP
Analysis Method: SW846 8270C
Lab Prep Batch: WG59948
Units: ug/Kgdrywt

CAS#	Compound	Flags	Results	DF	PQL	Adj.PQL	Adj.MDL
84-74-2	Di-n-butylphthalate	U	390	1.0	330	390	120
85-68-7	Butylbenzylphthalate	U	390	1.0	330	390	110
91-94-1	3,3'-Dichlorobenzidine	U	600	1.0	500	600	140
218-01-9	Chrysene	U	390	1.0	330	390	110
117-81-7	bis(2-Ethylhexyl)phthalate	J	280	1.0	330	390	120
117-84-0	Di-n-octylphthalate	U	390	1.0	330	390	250
367-12-4	2-Fluorophenol		59%				
13127-88-3	Phenol-D6		67%				
4165-60-0	Nitrobenzene-D5		56%				
321-60-8	2-Fluorobiphenyl		58%				
118-79-6	2,4,6-Tribromophenol		90%				
1718-51-0	Terphenyl-D14		81%				

lw
4/16/09

KATAHDIN ANALYTICAL SERVICES
Report of Analytical Results

Client: CH2MHill
Project: TO-009 Lejeune
PO No:
Sample Date: 01/12/09
Received Date: 01/14/09
Extraction Date: 01/19/09
Analysis Date: 28-JAN-2009 12:40
Report Date: 02/05/2009
Matrix: SOIL
% Solids: 89.4

Lab ID: SC0176-11
Client ID: MR08-IS293-2-3-09A
SDG: TO9-35
Extracted by: AC
Extraction Method: SW846 3550
Analyst: JLP
Analysis Method: SW846 8270C
Lab Prep Batch: WG59948
Units: ug/Kgdrywt

CAS#	Compound	Flags	Results	DF	PQL	Adj.PQL	Adj.MDL
100-52-7	Benzaldehyde	U	560	1.0	500	560	130
108-95-2	Phenol	U	560	1.0	500	560	170
111-44-4	Bis(2-Chloroethyl)ether	U	370	1.0	330	370	90
95-57-8	2-Chlorophenol	U	560	1.0	500	560	180
95-48-7	2-Methylphenol	U	670	1.0	600	670	220
108-60-1	2,2'-Oxybis(1-chloropropane)	U	370	1.0	330	370	100
98-86-2	Acetophenone	U	670	1.0	600	670	200
621-64-7	N-Nitroso-di-n-propylamine	U	370	1.0	330	370	93
65794-96-9	3&4-Methylphenol	U	670	1.0	600	670	210
67-72-1	Hexachloroethane	U	370	1.0	330	370	110
98-95-3	Nitrobenzene	U	370	1.0	330	370	100
78-59-1	Isophorone	U	370	1.0	330	370	84
88-75-5	2-Nitrophenol	U	670	1.0	600	670	190
105-67-9	2,4-Dimethylphenol	U	560	1.0	500	560	180
111-91-1	Bis(2-Chloroethoxy)methane	U	370	1.0	330	370	110
120-83-2	2,4-Dichlorophenol	U	560	1.0	500	560	170
106-47-8	4-Chloroaniline	U	560	1.0	500	560	130
105-60-2	Caprolactam	U	560	1.0	500	560	160
59-50-7	4-Chloro-3-Methylphenol	U	560	1.0	500	560	180
88-06-2	2,4,6-Trichlorophenol	U	560	1.0	500	560	170
95-95-4	2,4,5-Trichlorophenol	U	560	1.0	500	560	170
91-58-7	2-Chloronaphthalene	U	370	1.0	330	370	97
92-52-4	1,1'-Biphenyl	U	370	1.0	330	370	82
88-74-4	2-Nitroaniline	U	560	1.0	500	560	84
131-11-3	Dimethyl Phthalate	U	370	1.0	330	370	87
606-20-2	2,6-Dinitrotoluene	U	370	1.0	330	370	88
208-96-8	Acenaphthylene	U	370	1.0	330	370	78
99-09-2	3-Nitroaniline	U	560	1.0	500	560	100
83-32-9	Acenaphthene	U	370	1.0	330	370	73
51-28-5	2,4-Dinitrophenol	U	1300	1.0	1200	1300	420
132-64-9	Dibenzofuran	U	370	1.0	330	370	88
100-02-7	4-Nitrophenol	U	1300	1.0	1200	1300	340
121-14-2	2,4-Dinitrotoluene	U	370	1.0	330	370	95
84-66-2	Diethylphthalate	U	370	1.0	330	370	89
7005-72-3	4-Chlorophenyl-phenylether	U	370	1.0	330	370	87
100-01-6	4-Nitroaniline	U	560	1.0	500	560	150
534-52-1	4,6-Dinitro-2-Methylphenol	U	1300	1.0	1200	1300	380
86-30-6	N-Nitrosodiphenylamine	U	740	1.0	660	740	240
101-55-3	4-Bromophenyl-phenylether	U	370	1.0	330	370	95
1912-24-9	Atrazine	U	370	1.0	330	370	100
87-86-5	Pentachlorophenol	U	920	1.0	820	920	260
120-12-7	Anthracene	U	370	1.0	330	370	94
86-74-8	Carbazole	U	560	1.0	500	560	120

lw
4/16/09

KATAHDIN ANALYTICAL SERVICES
Report of Analytical Results

18

Client: CH2MHill
Project: TO-009 Lejeune
PO No:
Sample Date: 01/12/09
Received Date: 01/14/09
Extraction Date: 01/19/09
Analysis Date: 28-JAN-2009 12:40
Report Date: 02/05/2009
Matrix: SOIL
% Solids: 89.4

Lab ID: SC0176-11
Client ID: MR08-IS293-2-3-09A
SDG: TO9-35
Extracted by: AC
Extraction Method: SW846 3550
Analyst: JLP
Analysis Method: SW846 8270C
Lab Prep Batch: WG59948
Units: ug/Kgdrywt

CAS#	Compound	Flags	Results	DF	PQL	Adj.PQL	Adj.MDL
84-74-2	Di-n-butylphthalate	U	370	1.0	330	370	110
85-68-7	Butylbenzylphthalate	U	370	1.0	330	370	100
91-94-1	3,3'-Dichlorobenzidine	U	560	1.0	500	560	130
218-01-9	Chrysene	U	370	1.0	330	370	110
117-81-7	bis(2-Ethylhexyl)phthalate	J	120	1.0	330	370	110
117-84-0	Di-n-octylphthalate	U	370	1.0	330	370	240
367-12-4	2-Fluorophenol		67%				
13127-88-3	Phenol-D6		72%				
4165-60-0	Nitrobenzene-D5		66%				
321-60-8	2-Fluorobiphenyl		64%				
118-79-6	2,4,6-Tribromophenol		75%				
1718-51-0	Terphenyl-D14		77%				

lw
4/16/09

KATAHDIN ANALYTICAL SERVICES
Report of Analytical Results

Client: CH2MHill
Project: TO-009 Lejeune
PO No:
Sample Date: 01/12/09
Received Date: 01/14/09
Extraction Date: 01/19/09
Analysis Date: 28-JAN-2009 15:30
Report Date: 02/05/2009
Matrix: SOIL
% Solids: 93.3

Lab ID: SC0176-13
Client ID: MR08-SS294-09A
SDG: TO9-35
Extracted by: AC
Extraction Method: SW846 3550
Analyst: JLP
Analysis Method: SW846 8270C
Lab Prep Batch: WG59948
Units: ug/Kgdrywt

CAS#	Compound	Flags	Results	DF	PQL	Adj.PQL	Adj.MDL
100-52-7	Benzaldehyde	U	540	1.0	500	540	130
108-95-2	Phenol	U	540	1.0	500	540	170
111-44-4	Bis(2-Chloroethyl)ether	U	350	1.0	330	350	87
95-57-8	2-Chlorophenol	U	540	1.0	500	540	180
95-48-7	2-Methylphenol	U	640	1.0	600	640	210
108-60-1	2,2'-Oxybis(1-chloropropane)	U	350	1.0	330	350	95
98-86-2	Acetophenone	U	640	1.0	600	640	190
621-64-7	N-Nitroso-di-n-propylamine	U	350	1.0	330	350	89
65794-96-9	3&4-Methylphenol	U	640	1.0	600	640	200
67-72-1	Hexachloroethane	U	350	1.0	330	350	100
98-95-3	Nitrobenzene	U	350	1.0	330	350	97
78-59-1	Isophorone	U	350	1.0	330	350	80
88-75-5	2-Nitrophenol	U	640	1.0	600	640	180
105-67-9	2,4-Dimethylphenol	U	540	1.0	500	540	180
111-91-1	Bis(2-Chloroethoxy)methane	U	350	1.0	330	350	100
120-83-2	2,4-Dichlorophenol	U	540	1.0	500	540	160
106-47-8	4-Chloroaniline	U	540	1.0	500	540	130
105-60-2	Caprolactam	U	540	1.0	500	540	150
59-50-7	4-Chloro-3-Methylphenol	U	540	1.0	500	540	180
88-06-2	2,4,6-Trichlorophenol	U	540	1.0	500	540	170
95-95-4	2,4,5-Trichlorophenol	U	540	1.0	500	540	170
91-58-7	2-Chloronaphthalene	U	350	1.0	330	350	93
92-52-4	1,1'-Biphenyl	U	350	1.0	330	350	78
88-74-4	2-Nitroaniline	U	540	1.0	500	540	80
131-11-3	Dimethyl Phthalate	U	350	1.0	330	350	84
606-20-2	2,6-Dinitrotoluene	U	350	1.0	330	350	85
208-96-8	Acenaphthylene	U	350	1.0	330	350	75
99-09-2	3-Nitroaniline	U	540	1.0	500	540	100
83-32-9	Acenaphthene	U	350	1.0	330	350	70
51-28-5	2,4-Dinitrophenol	U	1300	1.0	1200	1300	400
132-64-9	Dibenzofuran	U	350	1.0	330	350	85
100-02-7	4-Nitrophenol	U	1300	1.0	1200	1300	330
121-14-2	2,4-Dinitrotoluene	U	350	1.0	330	350	91
84-66-2	Diethylphthalate	U	350	1.0	330	350	86
7005-72-3	4-Chlorophenyl-phenylether	U	350	1.0	330	350	84
100-01-6	4-Nitroaniline	U	540	1.0	500	540	140
534-52-1	4,6-Dinitro-2-Methylphenol	U	1300	1.0	1200	1300	360
86-30-6	N-Nitrosodiphenylamine	U	710	1.0	660	710	230
101-55-3	4-Bromophenyl-phenylether	U	350	1.0	330	350	91
1912-24-9	Atrazine	U	350	1.0	330	350	97
87-86-5	Pentachlorophenol	U	880	1.0	820	880	250
120-12-7	Anthracene	U	350	1.0	330	350	90
86-74-8	Carbazole	U	540	1.0	500	540	120

MW 4/16/09

KATAHDIN ANALYTICAL SERVICES
Report of Analytical Results

Client: CH2MHill
Project: TO-009 Lejeune
PO No:
Sample Date: 01/12/09
Received Date: 01/14/09
Extraction Date: 01/19/09
Analysis Date: 28-JAN-2009 15:30
Report Date: 02/05/2009
Matrix: SOIL
% Solids: 93.3

Lab ID: SC0176-13
Client ID: MR08-SS294-09A
SDG: TO9-35
Extracted by: AC
Extraction Method: SW846 3550
Analyst: JLP
Analysis Method: SW846 8270C
Lab Prep Batch: WG59948
Units: ug/Kgdrywt

CAS#	Compound	Flags	Results	DF	PQL	Adj.PQL	Adj.MDL
84-74-2	Di-n-butylphthalate	U	350	1.0	330	350	110
85-68-7	Butylbenzylphthalate	U	350	1.0	330	350	100
91-94-1	3,3'-Dichlorobenzidine	U	540	1.0	500	540	120
218-01-9	Chrysene	U	350	1.0	330	350	100
117-81-7	bis(2-Ethylhexyl)phthalate	J	220	1.0	330	350	100
117-84-0	Di-n-octylphthalate	U	350	1.0	330	350	230
367-12-4	2-Fluorophenol		71%				
13127-88-3	Phenol-D6		79%				
4165-60-0	Nitrobenzene-D5		71%				
321-60-8	2-Fluorobiphenyl		65%				
118-79-6	2,4,6-Tribromophenol		91%				
1718-51-0	Terphenyl-D14		84%				

RW 4/16/09

20

KATAHDIN ANALYTICAL SERVICES
Report of Analytical Results

Client: CH2MHill
Project: TO-009 Lejeune
PO No:
Sample Date: 01/12/09
Received Date: 01/14/09
Extraction Date: 01/19/09
Analysis Date: 28-JAN-2009 13:22
Report Date: 02/05/2009
Matrix: SOIL
% Solids: 91.8

Lab ID: SC0176-15
Client ID: MR08-IS294-8-9-09A
SDG: TO9-35
Extracted by: AC
Extraction Method: SW846 3550
Analyst: JLP
Analysis Method: SW846 8270C
Lab Prep Batch: WG59948
Units: ug/Kgdrywt

CAS#	Compound	Flags	Results	DF	PQL	Adj.PQL	Adj.MDL
100-52-7	Benzaldehyde	U	540	1.0	500	540	130
108-95-2	Phenol	U	540	1.0	500	540	170
111-44-4	Bis(2-Chloroethyl)ether	U	360	1.0	330	360	88
95-57-8	2-Chlorophenol	U	540	1.0	500	540	180
95-48-7	2-Methylphenol	U	650	1.0	600	650	220
108-60-1	2,2'-Oxybis(1-chloropropane)	U	360	1.0	330	360	97
98-86-2	Acetophenone	U	650	1.0	600	650	190
621-64-7	N-Nitroso-di-n-propylamine	U	360	1.0	330	360	90
65794-96-9	3&4-Methylphenol	U	650	1.0	600	650	200
67-72-1	Hexachloroethane	U	360	1.0	330	360	100
98-95-3	Nitrobenzene	U	360	1.0	330	360	99
78-59-1	Isophorone	U	360	1.0	330	360	82
88-75-5	2-Nitrophenol	U	650	1.0	600	650	180
105-67-9	2,4-Dimethylphenol	U	540	1.0	500	540	180
111-91-1	Bis(2-Chloroethoxy)methane	U	360	1.0	330	360	100
120-83-2	2,4-Dichlorophenol	U	540	1.0	500	540	160
106-47-8	4-Chloroaniline	U	540	1.0	500	540	130
105-60-2	Caprolactam	U	540	1.0	500	540	160
59-50-7	4-Chloro-3-Methylphenol	U	540	1.0	500	540	180
88-06-2	2,4,6-Trichlorophenol	U	540	1.0	500	540	170
95-95-4	2,4,5-Trichlorophenol	U	540	1.0	500	540	170
91-58-7	2-Chloronaphthalene	U	360	1.0	330	360	95
92-52-4	1,1'-Biphenyl	U	360	1.0	330	360	79
88-74-4	2-Nitroaniline	U	540	1.0	500	540	82
131-11-3	Dimethyl Phthalate	U	360	1.0	330	360	85
606-20-2	2,6-Dinitrotoluene	U	360	1.0	330	360	86
208-96-8	Acenaphthylene	U	360	1.0	330	360	76
99-09-2	3-Nitroaniline	U	540	1.0	500	540	100
83-32-9	Acenaphthene	U	360	1.0	330	360	71
51-28-5	2,4-Dinitrophenol	U	1300	1.0	1200	1300	410
132-64-9	Dibenzofuran	U	360	1.0	330	360	86
100-02-7	4-Nitrophenol	U	1300	1.0	1200	1300	340
121-14-2	2,4-Dinitrotoluene	U	360	1.0	330	360	92
84-66-2	Diethylphthalate	U	360	1.0	330	360	87
7005-72-3	4-Chlorophenyl-phenylether	U	360	1.0	330	360	85
100-01-6	4-Nitroaniline	U	540	1.0	500	540	140
534-52-1	4,6-Dinitro-2-Methylphenol	U	1300	1.0	1200	1300	370
86-30-6	N-Nitrosodiphenylamine	U	720	1.0	660	720	240
101-55-3	4-Bromophenyl-phenylether	U	360	1.0	330	360	92
1912-24-9	Atrazine	U	360	1.0	330	360	99
87-86-5	Pentachlorophenol	U	890	1.0	820	890	260
120-12-7	Anthracene	U	360	1.0	330	360	91
86-74-8	Carbazole	U	540	1.0	500	540	120

lw
4/16/09

KATAHDIN ANALYTICAL SERVICES
Report of Analytical Results

20

Client: CH2MHill
Project: TO-009 Lejeune
PO No:
Sample Date: 01/12/09
Received Date: 01/14/09
Extraction Date: 01/19/09
Analysis Date: 28-JAN-2009 13:22
Report Date: 02/05/2009
Matrix: SOIL
% Solids: 91.8

Lab ID: SC0176-15
Client ID: MR08-IS294-8-9-09A
SDG: TO9-35
Extracted by: AC
Extraction Method: SW846 3550
Analyst: JLP
Analysis Method: SW846 8270C
Lab Prep Batch: WG59948
Units: ug/Kgdrywt

CAS#	Compound	Flags	Results	DF	PQL	Adj.PQL	Adj.MDL
84-74-2	Di-n-butylphthalate	U	360	1.0	330	360	110
85-68-7	Butylbenzylphthalate	U	360	1.0	330	360	100
91-94-1	3,3'-Dichlorobenzidine	U	540	1.0	500	540	120
218-01-9	Chrysene	U	360	1.0	330	360	100
117-81-7	bis(2-Ethylhexyl)phthalate		440	1.0	330	360	110
117-84-0	Di-n-octylphthalate	U	360	1.0	330	360	230
367-12-4	2-Fluorophenol		62%				
13127-88-3	Phenol-D6		66%				
4165-60-0	Nitrobenzene-D5		61%				
321-60-8	2-Fluorobiphenyl		60%				
118-79-6	2,4,6-Tribromophenol		74%				
1718-51-0	Terphenyl-D14		77%				

LW
4/16/09

ENVIRONMENTAL
Data Services, Inc.

POLYNUCLEAR AROMATIC COMPOUNDS BY 8270SIM

USEPA Region IV - Level IV Review

Site: MCB Camp Lejeune, TO-09 SDG #: TO9-36

Client: CH2M HILL, Inc., Virginia Beach, Virginia Date: April 16, 2009

Laboratory: Katahdin Analytical Services, Scarborough, Maine Reviewer: Nancy Weaver

EDS ID	Client Sample ID	Laboratory Sample ID	Matrix
1	MR08-SS295-09A	SC0177-2	Soil
2	MR08-IS295-2-3-09A	SC0177-4	Soil
3	MR08-SS296-09A	SC0177-6	Soil
3DL	MR08-SS296-09ADL	SC0177-6DL	Soil
4	MR08-IS296-5-6-09A	SC0177-8	Soil
5	MR08-SS300-09A	SC0177-10	Soil
6	MR08-IS300-8-9-09A	SC0177-12	Soil
7	MR08-SS301-09A	SC0177-14	Soil
7DL	MR08-SS301-09ADL	SC0177-14DL	Soil
8	MR08-IS301-7-8-09A	SC0177-16	Soil
9	MR08-SS302-09A	SC0177-18	Soil
10	MR08-IS302-8-9-09A	SC0177-20	Soil
11	MR08-SS303-09A	SC0177-22	Soil
12	MR08-IS303-6-7-09A	SC0177-24	Soil
13	MR08-SS299-09A	SC0209-2	Soil
14	MR08-SS299D-09A	SC0209-4	Soil
15	MR08-IS299-6-7-09A	SC0209-6	Soil
16	MR08-IS299D-6-7-09A	SC0209-8	Soil
17	MR08-SS304-09A	SC0209-10	Soil
17DL	MR08-SS304-09ADL	SC0209-10DL	Soil
18	MR08-IS304-6-7-09A	SC0209-12	Soil
19	MR08-SS312-09A	SC0209-14	Soil
20	MR08-SS308-09A	SC0209-16	Soil
20MD	MR08-SS308-09AMS	SC0209-16MS	Soil
20MSD	MR08-SS308-09AMSD	SC0209-16MSD	Soil

The USEPA "Contract Laboratory Program National Functional Guidelines for Organic Data Review," October 1999, and professional judgment were used in evaluating the data in this summary report.

Holding Times - All samples were extracted within 14 days for soil samples and analyzed within 40 days for all samples.

GC/MS Tuning - All of the DFTPP tunes in the initial and continuing calibrations met the percent relative abundance criteria.

Initial Calibration - The initial calibrations exhibited acceptable %RSD and mean RRF values.

Continuing Calibration - The continuing calibrations exhibited acceptable %D and RRF values except the following.

CCAL Date	Compound	%D/RRF	Qualifier	Affected Samples
02/02/09 (1741)	Fluoranthene	38.87%	J/UJ	13-16, 19, 20
	Benzo (k) fluoranthene	31.42%	J/UJ	13-17, 19, 20
	Hexachlorocyclopentadiene	111.91%	J/UJ	13-17, 19, 20
02/02/09 (1928)	Benzo (a) anthracene	28.60%	J/UJ	1, 2
	Benzo (k) fluoranthene	32.16%	J/UJ	1, 2
02/04/09	Benzo (a) anthracene	67.74%	J/UJ	3DL, 7DL

Surrogates - All samples exhibited acceptable surrogate recoveries.

MS/MSD - The MS/MSD sample exhibited acceptable %R and RPD values except the following.

MS/MSD Sample ID	Compound	MS/MSD %R/RPD	Qualifier
20	Fluoranthene	156%/Ok/Ok	None - See CCAL

Laboratory Control Sample - The LCS samples exhibited acceptable %R values except the following.

LCS ID	Compound	%R	Qualifier	Affected Samples
WG59947-LCS	Benzo (k) fluoranthene	119%	J	1, 3, 3DL, 5, 7, 7DL, 9, 11
	Benzo (a) pyrene	110%	J	1, 3, 3DL, 5, 7DL, 9, 11
	Benzo (g,h,i) perylene	116%	J	1, 3, 3DL, 5, 7, 7DL, 9, 11, 12
WG59996-2-LCS	Fluoranthene	164%	J	13-15, 17DL

Internal Standard (IS) Area Performance - All internal standards met response and retention time (RT) criteria.

Method Blank - The method blanks were free of contamination.

Field, Equipment Blank - Field QC results are summarized below.

Blank ID	Compound	Conc. ug/L	Action Level ug/kg	Qualifier	Affected Samples
MR08-FB01011009	None - ND	-	-	-	-
MR08-EB01011209-SS	None - ND	-	-	-	-

Field Duplicates - Field duplicate results are summarized below.

Compound	MR08-SS299-09A ug/kg	MR08-SS299D-09A ug/kg	RPD	Qualifier
2-Methylnaphthalene	3.4	11 U	NC	None
Phenanthrene	26	23	12%	None
Fluoranthene	76	120	45%	None
Pyrene	57	85	39%	None
Benzo (a) anthracene	29	50	53%	None
Benzo (b) fluoranthene	12 U	100	NC	None
Benzo (k) fluoranthene	12 U	63	NC	None
Benzo (a) pyrene	38	64	51%	None
Indeno (1,2,3-cd) pyrene	24	42	55%	None
Dibenzo (a, h) anthracene	12 U	16	NC	None
Benzo (g,h,i) perylene	21	45	73%	None

Compound	MR08-IS299-6-7-09A ug/kg	MR08-IS299D-6-7-09A ug/kg	RPD	Qualifier
None	ND	ND	-	-

Compound Quantitation - Several samples exhibited high concentrations of target compounds and were flagged (E) by the laboratory. The samples were diluted and reanalyzed and the dilution results for these compound should be used for reporting.

KATAHDIN ANALYTICAL SERVICES
Report of Analytical Results

Client: CH2MHill
Project: TO-009 Lejeune
PO No:
Sample Date: 01/12/09
Received Date: 01/14/09
Extraction Date: 01/19/09
Analysis Date: 03-FEB-2009 03:46
Report Date: 02/06/2009
Matrix: SOIL
% Solids: 91.2

Lab ID: SC0177-2
Client ID: MR08-SS295-09A
SDG: TO9-36
Extracted by: AC
Extraction Method: SW846 3550
Analyst: JCG
Analysis Method: SW846 M8270C
Lab Prep Batch: WG59949
Units: ug/Kgdrywt

CAS#	Compound	Flags		Results	DF	PQL	Adj.PQL	Adj.MDL	
91-20-3	Naphthalene	U		11	1.0	10	11	2.8	
91-57-6	2-Methylnaphthalene	U		11	1.0	10	11	2.4	
86-73-7	Fluorene	U		11	1.0	10	11	3.5	
85-01-8	Phenanthrene	J		8.9	1.0	10	11	2.0	
206-44-0	Fluoranthene			21	1.0	10	11	2.0	
129-00-0	Pyrene			18	1.0	10	11	2.3	
56-55-3	Benzo(a)anthracene	~~J~~	J	8.0	1.0	10	11	2.1	CCH
205-99-2	Benzo(b)fluoranthene			19	1.0	10	11	2.6	
207-08-9	Benzo(k)fluoranthene		J	12	1.0	10	11	3.4	~~BSH~~ CCH
50-32-8	Benzo(a)pyrene		J	12	1.0	10	11	3.6	BSH
193-39-5	Indeno(1,2,3-cd)pyrene	J		9.2	1.0	10	11	2.1	
53-70-3	Dibenzo(a,h)anthracene	J		3.5	1.0	10	11	2.0	
191-24-2	Benzo(g,h,i)perylene	~~J~~	J	10	1.0	10	11	2.2	BSH
118-74-1	Hexachlorobenzene	U		11	1.0	10	11	2.0	
87-68-3	Hexachlorobutadiene	U		11	1.0	10	11	2.5	
77-47-4	Hexachlorocyclopentadiene	U		11	1.0	10	11	1.6	
7297-45-2	2-Methylnaphthalene-D10			89%					
367-12-4	2,4-Dibromophenol			102%					
81103-79-9	Fluorene-d10			117%					
1718-51-1	Pyrene-D10			122%					

lw 4/16/09

2

KATAHDIN ANALYTICAL SERVICES
Report of Analytical Results

Client: CH2MHill
Project: TO-009 Lejeune
PO No:
Sample Date: 01/12/09
Received Date: 01/14/09
Extraction Date: 01/19/09
Analysis Date: 02-FEB-2009 20:53
Report Date: 02/06/2009
Matrix: SOIL
% Solids: 89.6

Lab ID: SC0177-4
Client ID: MR08-IS295-2-3-09A
SDG: TO9-36
Extracted by: AC
Extraction Method: SW846 3550
Analyst: JCG
Analysis Method: SW846 M8270C
Lab Prep Batch: WG59949
Units: ug/Kgdrywt

CAS#	Compound	Flags		Results	DF	PQL	Adj.PQL	Adj.MDL	
91-20-3	Naphthalene	U		11	1.0	10	11	2.9	
91-57-6	2-Methylnaphthalene	U		11	1.0	10	11	2.4	
86-73-7	Fluorene	U		11	1.0	10	11	3.6	
85-01-8	Phenanthrene	U		11	1.0	10	11	2.0	
206-44-0	Fluoranthene	U		11	1.0	10	11	2.0	
129-00-0	Pyrene	U		11	1.0	10	11	2.3	
56-55-3	Benzo(a)anthracene	~~U~~	UJ	11	1.0	10	11	2.1	CCH
205-99-2	Benzo(b)fluoranthene	U		11	1.0	10	11	2.7	
207-08-9	Benzo(k)fluoranthene	~~U~~	UJ	11	1.0	10	11	3.4	CCH
50-32-8	Benzo(a)pyrene	U		11	1.0	10	11	3.7	
193-39-5	Indeno(1,2,3-cd)pyrene	U		11	1.0	10	11	2.1	
53-70-3	Dibenzo(a,h)anthracene	U		11	1.0	10	11	2.0	
191-24-2	Benzo(g,h,i)perylene	U		11	1.0	10	11	2.2	
118-74-1	Hexachlorobenzene	U		11	1.0	10	11	2.0	
87-68-3	Hexachlorobutadiene	U		11	1.0	10	11	2.6	
77-47-4	Hexachlorocyclopentadiene	U		11	1.0	10	11	1.7	
7297-45-2	2-Methylnaphthalene-D10			82%					
367-12-4	2,4-Dibromophenol			85%					
81103-79-9	Fluorene-d10			103%					
1718-51-1	Pyrene-D10			98%					

AW 4/16/09

3

KATAHDIN ANALYTICAL SERVICES
Report of Analytical Results

Client: CH2MHill
Project: TO-009 Lejeune
PO No:
Sample Date: 01/12/09
Received Date: 01/14/09
Extraction Date: 01/19/09
Analysis Date: 04-FEB-2009 02:49
Report Date: 02/06/2009
Matrix: SOIL
% Solids: 92.4

Lab ID: SC0177-6
Client ID: MR08-SS296-09A
SDG: TO9-36
Extracted by: AC
Extraction Method: SW846 3550
Analyst: JCG
Analysis Method: SW846 M8270C
Lab Prep Batch: WG59949
Units: ug/Kgdrywt

CAS#	Compound	Flags	Results	DF	PQL	Adj.PQL	Adj.MDL	
91-20-3	Naphthalene	U	11	1.0	10	11	2.8	
91-57-6	2-Methylnaphthalene	J	4.1	1.0	10	11	2.4	
86-73-7	Fluorene	U	11	1.0	10	11	3.5	
85-01-8	Phenanthrene		85	1.0	10	11	1.9	
206-44-0	Fluoranthene	~~E~~	390 ~~310~~	2~~1~~.0	10	22 ~~11~~	3.9 ~~1.9~~	R DL
129-00-0	Pyrene		260	1.0	10	11	2.3	
56-55-3	Benzo(a)anthracene		160	1.0	10	11	2.0	
205-99-2	Benzo(b)fluoranthene	~~E~~	270 ~~320~~	2~~1~~.0	10	22 ~~11~~	5.2 ~~2.6~~	R DL
207-08-9	Benzo(k)fluoranthene	J	160	1.0	10	11	3.4	BSH
50-32-8	Benzo(a)pyrene	J	190	1.0	10	11	3.6	BSH
193-39-5	Indeno(1,2,3-cd)pyrene		140	1.0	10	11	2.0	
53-70-3	Dibenzo(a,h)anthracene		54	1.0	10	11	1.9	
191-24-2	Benzo(g,h,i)perylene	J	140	1.0	10	11	2.2	BSH
118-74-1	Hexachlorobenzene	U	11	1.0	10	11	1.9	
87-68-3	Hexachlorobutadiene	U	11	1.0	10	11	2.5	
77-47-4	Hexachlorocyclopentadiene	U	11	1.0	10	11	1.6	
7297-45-2	2-Methylnaphthalene-D10		78%					
367-12-4	2,4-Dibromophenol		88%					
81103-79-9	Fluorene-d10		86%					
1718-51-1	Pyrene-D10		102%					

JCW
4/16/09

3DL

KATAHDIN ANALYTICAL SERVICES
Report of Analytical Results

Client: CH2MHill
Project: TO-009 Lejeune
PO No:
Sample Date: 01/12/09
Received Date: 01/14/09
Extraction Date: 01/19/09
Analysis Date: 04-FEB-2009 13:24
Report Date: 02/06/2009
Matrix: SOIL
% Solids: 92.4

Lab ID: SC0177-6DL
Client ID: MR08-SS296-09A
SDG: TO9-36
Extracted by: AC
Extraction Method: SW846 3550
Analyst: JLP
Analysis Method: SW846 M8270C
Lab Prep Batch: WG59949
Units: ug/Kgdrywt

Use original

R DL

CAS#	Compound	Flags	Results	DF	PQL	Adj.PQL	Adj.MDL	
91-20-3	Naphthalene	U	22	2.0	10	22	5.6	
91-57-6	2-Methylnaphthalene	U	22	2.0	10	22	4.8	
86-73-7	Fluorene	U	22	2.0	10	22	6.9	
85-01-8	Phenanthrene		91	2.0	10	22	3.9	
206-44-0	Fluoranthene		390	2.0	10	22	3.9	
129-00-0	Pyrene		240	2.0	10	22	4.5	
56-55-3	Benzo(a)anthracene	J	270	2.0	10	22	4.1	CCH
205-99-2	Benzo(b)fluoranthene		270	2.0	10	22	5.2	
207-08-9	Benzo(k)fluoranthene	J	180	2.0	10	22	6.7	BSH
50-32-8	Benzo(a)pyrene	J	190	2.0	10	22	7.1	BSH
193-39-5	Indeno(1,2,3-cd)pyrene		150	2.0	10	22	4.1	
53-70-3	Dibenzo(a,h)anthracene		58	2.0	10	22	3.9	
191-24-2	Benzo(g,h,i)perylene	J	150	2.0	10	22	4.3	BSH
118-74-1	Hexachlorobenzene	U	22	2.0	10	22	3.9	
87-68-3	Hexachlorobutadiene	U	22	2.0	10	22	5.0	
77-47-4	Hexachlorocyclopentadiene	U	22	2.0	10	22	3.2	
7297-45-2	2-Methylnaphthalene-D10		81%					
367-12-4	2,4-Dibromophenol		96%					
81103-79-9	Fluorene-d10		90%					
1718-51-1	Pyrene-D10		95%					

lw 4/16/09

4

KATAHDIN ANALYTICAL SERVICES
Report of Analytical Results

Client: CH2MHill
Project: TO-009 Lejeune
PO No:
Sample Date: 01/12/09
Received Date: 01/14/09
Extraction Date: 01/19/09
Analysis Date: 03-FEB-2009 18:32
Report Date: 02/06/2009
Matrix: SOIL
% Solids: 90.5

Lab ID: SC0177-8
Client ID: MR08-IS296-5-6-09A
SDG: TO9-36
Extracted by: AC
Extraction Method: SW846 3550
Analyst: JCG
Analysis Method: SW846 M8270C
Lab Prep Batch: WG59949
Units: ug/Kgdrywt

CAS#	Compound	Flags	Results	DF	PQL	Adj.PQL	Adj.MDL
91-20-3	Naphthalene	U	11	1.0	10	11	2.9
91-57-6	2-Methylnaphthalene	U	11	1.0	10	11	2.4
86-73-7	Fluorene	U	11	1.0	10	11	3.5
85-01-8	Phenanthrene	U	11	1.0	10	11	2.0
206-44-0	Fluoranthene	U	11	1.0	10	11	2.0
129-00-0	Pyrene	U	11	1.0	10	11	2.3
56-55-3	Benzo(a)anthracene	U	11	1.0	10	11	2.1
205-99-2	Benzo(b)fluoranthene	U	11	1.0	10	11	2.6
207-08-9	Benzo(k)fluoranthene	U	11	1.0	10	11	3.4
50-32-8	Benzo(a)pyrene	U	11	1.0	10	11	3.6
193-39-5	Indeno(1,2,3-cd)pyrene	U	11	1.0	10	11	2.1
53-70-3	Dibenzo(a,h)anthracene	U	11	1.0	10	11	2.0
191-24-2	Benzo(g,h,i)perylene	U	11	1.0	10	11	2.2
118-74-1	Hexachlorobenzene	U	11	1.0	10	11	2.0
87-68-3	Hexachlorobutadiene	U	11	1.0	10	11	2.5
77-47-4	Hexachlorocyclopentadiene	U	11	1.0	10	11	1.6
7297-45-2	2-Methylnaphthalene-D10		77%				
367-12-4	2,4-Dibromophenol		78%				
81103-79-9	Fluorene-d10		78%				
1718-51-1	Pyrene-D10		92%				

lew 4/16/09

5

KATAHDIN ANALYTICAL SERVICES
Report of Analytical Results

Client: CH2MHill
Project: TO-009 Lejeune
PO No:
Sample Date: 01/12/09
Received Date: 01/14/09
Extraction Date: 01/19/09
Analysis Date: 04-FEB-2009 01:27
Report Date: 02/06/2009
Matrix: SOIL
% Solids: 93.5

Lab ID: SC0177-10
Client ID: MR08-SS300-09A
SDG: TO9-36
Extracted by: AC
Extraction Method: SW846 3550
Analyst: JCG
Analysis Method: SW846 M8270C
Lab Prep Batch: WG59949
Units: ug/Kgdrywt

CAS#	Compound	Flags	Results	DF	PQL	Adj.PQL	Adj.MDL	
91-20-3	Naphthalene	U	11	1.0	10	11	2.8	
91-57-6	2-Methylnaphthalene	U	11	1.0	10	11	2.4	
86-73-7	Fluorene	J	4.9	1.0	10	11	3.4	
85-01-8	Phenanthrene		56	1.0	10	11	1.9	
206-44-0	Fluoranthene		80	1.0	10	11	1.9	
129-00-0	Pyrene		64	1.0	10	11	2.2	
56-55-3	Benzo(a)anthracene		28	1.0	10	11	2.0	
205-99-2	Benzo(b)fluoranthene		17	1.0	10	11	2.6	
207-08-9	Benzo(k)fluoranthene	~~J~~ J	9.4	1.0	10	11	3.3	BSH
50-32-8	Benzo(a)pyrene	J	18	1.0	10	11	3.5	BSH
193-39-5	Indeno(1,2,3-cd)pyrene	J	8.8	1.0	10	11	2.0	
53-70-3	Dibenzo(a,h)anthracene	U	11	1.0	10	11	1.9	
191-24-2	Benzo(g,h,i)perylene	J	20	1.0	10	11	2.1	BSH
118-74-1	Hexachlorobenzene	U	11	1.0	10	11	1.9	
87-68-3	Hexachlorobutadiene	U	11	1.0	10	11	2.5	
77-47-4	Hexachlorocyclopentadiene	U	11	1.0	10	11	1.6	
7297-45-2	2-Methylnaphthalene-D10		80%					
367-12-4	2,4-Dibromophenol		93%					
81103-79-9	Fluorene-d10		90%					
1718-51-1	Pyrene-D10		86%					

JW 4/16/09

KATAHDIN ANALYTICAL SERVICES
Report of Analytical Results

6

Client: CH2MHill
Project: TO-009 Lejeune
PO No:
Sample Date: 01/12/09
Received Date: 01/14/09
Extraction Date: 01/19/09
Analysis Date: 03-FEB-2009 19:14
Report Date: 02/06/2009
Matrix: SOIL
% Solids: 88.5

Lab ID: SC0177-12
Client ID: MR08-IS300-8-9-09A
SDG: TO9-36
Extracted by: AC
Extraction Method: SW846 3550
Analyst: JCG
Analysis Method: SW846 M8270C
Lab Prep Batch: WG59949
Units: ug/Kgdrywt

CAS#	Compound	Flags	Results	DF	PQL	Adj.PQL	Adj.MDL
91-20-3	Naphthalene	U	11	1.0	10	11	2.9
91-57-6	2-Methylnaphthalene	U	11	1.0	10	11	2.5
86-73-7	Fluorene	U	11	1.0	10	11	3.6
85-01-8	Phenanthrene	U	11	1.0	10	11	2.0
206-44-0	Fluoranthene	U	11	1.0	10	11	2.0
129-00-0	Pyrene	U	11	1.0	10	11	2.4
56-55-3	Benzo(a)anthracene	U	11	1.0	10	11	2.1
205-99-2	Benzo(b)fluoranthene	U	11	1.0	10	11	2.7
207-08-9	Benzo(k)fluoranthene	U	11	1.0	10	11	3.5
50-32-8	Benzo(a)pyrene	U	11	1.0	10	11	3.7
193-39-5	Indeno(1,2,3-cd)pyrene	U	11	1.0	10	11	2.1
53-70-3	Dibenzo(a,h)anthracene	U	11	1.0	10	11	2.0
191-24-2	Benzo(g,h,i)perylene	U	11	1.0	10	11	2.2
118-74-1	Hexachlorobenzene	U	11	1.0	10	11	2.0
87-68-3	Hexachlorobutadiene	U	11	1.0	10	11	2.6
77-47-4	Hexachlorocyclopentadiene	U	11	1.0	10	11	1.7
7297-45-2	2-Methylnaphthalene-D10		79%				
367-12-4	2,4-Dibromophenol		80%				
81103-79-9	Fluorene-d10		83%				
1718-51-1	Pyrene-D10		93%				

lw 4/16/09

7

KATAHDIN ANALYTICAL SERVICES
Report of Analytical Results

Client: CH2MHill
Project: TO-009 Lejeune
PO No:
Sample Date: 01/12/09
Received Date: 01/14/09
Extraction Date: 01/19/09
Analysis Date: 04-FEB-2009 04:12
Report Date: 02/06/2009
Matrix: SOIL
% Solids: 96.2

Lab ID: SC0177-14
Client ID: MR08-SS301-09A
SDG: TO9-36
Extracted by: AC
Extraction Method: SW846 3550
Analyst: JCG
Analysis Method: SW846 M8270C
Lab Prep Batch: WG59949
Units: ug/Kgdrywt

CAS#	Compound	Flags	Results	DF	PQL	Adj.PQL	Adj.MDL
91-20-3	Naphthalene	U	10	1.0	10	10	2.7
91-57-6	2-Methylnaphthalene	J	2.5	1.0	10	10	2.3
86-73-7	Fluorene		28	1.0	10	10	3.3
85-01-8	Phenanthrene	~~E~~ 660	~~680~~	~~1.0~~ 8.0	10 83	~~10~~ 15	~~1.9~~ R DL
206-44-0	Fluoranthene	~~E~~ 1400	~~1100~~	~~1.0~~	10	~~10~~ 15	~~1.9~~
129-00-0	Pyrene	~~E~~ 1000	~~680~~	~~1.0~~	10	~~10~~ 17	~~2.2~~
56-55-3	Benzo(a)anthracene	~~E~~ 700J	~~490~~ CCH	~~1.0~~	10	~~10~~ 16	~~2.0~~
205-99-2	Benzo(b)fluoranthene	~~E~~ 520	~~720~~	~~1.0~~	10	~~10~~ 20	~~2.5~~
207-08-9	Benzo(k)fluoranthene	J	200	1.0	10	10	3.2 BSH
50-32-8	Benzo(a)pyrene	~~E~~ 370J	~~310~~ BSH	~~1.0~~ 8.0	10 83	~~10~~ 27	~~3.4~~ R DL
193-39-5	Indeno(1,2,3-cd)pyrene		170	1.0	10	10	2.0
53-70-3	Dibenzo(a,h)anthracene		100	1.0	10	10	1.9
191-24-2	Benzo(g,h,i)perylene	J	180	1.0	10	10	2.1 BSH
118-74-1	Hexachlorobenzene	U	10	1.0	10	10	1.9
87-68-3	Hexachlorobutadiene	U	10	1.0	10	10	2.4
77-47-4	Hexachlorocyclopentadiene	U	10	1.0	10	10	1.6
7297-45-2	2-Methylnaphthalene-D10		88%				
367-12-4	2,4-Dibromophenol		95%				
81103-79-9	Fluorene-d10		90%				
1718-51-1	Pyrene-D10		73%				

lw 4/16/09

7DL

KATAHDIN ANALYTICAL SERVICES
Report of Analytical Results

Client: CH2MHill
Project: TO-009 Lejeune
PO No:
Sample Date: 01/12/09
Received Date: 01/14/09
Extraction Date: 01/19/09
Analysis Date: 04-FEB-2009 14:06
Report Date: 02/06/2009
Matrix: SOIL
% Solids: 96.2

Lab ID: SC0177-14DL
Client ID: MR08-SS301-09A
SDG: TO9-36
Extracted by: AC
Extraction Method: SW846 3550
Analyst: JLP
Analysis Method: SW846 M8270C
Lab Prep Batch: WG59949
Units: ug/Kgdrywt

use original

R DL

CAS#	Compound	Flags	Results	DF	PQL	Adj.PQL	Adj.MDL	
91-20-3	Naphthalene	U	83	8.0	10	83	22	
91-57-6	2-Methylnaphthalene	U	83	8.0	10	83	18	
86-73-7	Fluorene	J	35	8.0	10	83	27	
85-01-8	Phenanthrene		660	8.0	10	83	15	
206-44-0	Fluoranthene		1400	8.0	10	83	15	
129-00-0	Pyrene		1000	8.0	10	83	17	
56-55-3	Benzo(a)anthracene	J	700	8.0	10	83	16	CCH
205-99-2	Benzo(b)fluoranthene		520	8.0	10	83	20	
207-08-9	Benzo(k)fluoranthene	J	400	8.0	10	83	26	BSH
50-32-8	Benzo(a)pyrene	J	370	8.0	10	83	27	BSH
193-39-5	Indeno(1,2,3-cd)pyrene		240	8.0	10	83	16	
53-70-3	Dibenzo(a,h)anthracene		110	8.0	10	83	15	
191-24-2	Benzo(g,h,i)perylene	J	270	8.0	10	83	17	BSH
118-74-1	Hexachlorobenzene	U	83	8.0	10	83	15	
87-68-3	Hexachlorobutadiene	U	83	8.0	10	83	19	
77-47-4	Hexachlorocyclopentadiene	U	83	8.0	10	83	12	
7297-45-2	2-Methylnaphthalene-D10		96%					
367-12-4	2,4-Dibromophenol		85%					
81103-79-9	Fluorene-d10		96%					
1718-51-1	Pyrene-D10		93%					

MW 4/16/09

8

KATAHDIN ANALYTICAL SERVICES
Report of Analytical Results

Client: CH2MHill
Project: TO-009 Lejeune
PO No:
Sample Date: 01/12/09
Received Date: 01/14/09
Extraction Date: 01/19/09
Analysis Date: 03-FEB-2009 19:56
Report Date: 02/06/2009
Matrix: SOIL
% Solids: 93.9

Lab ID: SC0177-16
Client ID: MR08-IS301-7-8-09A
SDG: TO9-36
Extracted by: AC
Extraction Method: SW846 3550
Analyst: JCG
Analysis Method: SW846 M8270C
Lab Prep Batch: WG59949
Units: ug/Kgdrywt

CAS#	Compound	Flags	Results	DF	PQL	Adj.PQL	Adj.MDL
91-20-3	Naphthalene	U	11	1.0	10	11	2.8
91-57-6	2-Methylnaphthalene	U	11	1.0	10	11	2.3
86-73-7	Fluorene	U	11	1.0	10	11	3.4
85-01-8	Phenanthrene	U	11	1.0	10	11	1.9
206-44-0	Fluoranthene	J	4.0	1.0	10	11	1.9
129-00-0	Pyrene	J	2.9	1.0	10	11	2.2
56-55-3	Benzo(a)anthracene	U	11	1.0	10	11	2.0
205-99-2	Benzo(b)fluoranthene	U	11	1.0	10	11	2.6
207-08-9	Benzo(k)fluoranthene	U	11	1.0	10	11	3.3
50-32-8	Benzo(a)pyrene	U	11	1.0	10	11	3.5
193-39-5	Indeno(1,2,3-cd)pyrene	U	11	1.0	10	11	2.0
53-70-3	Dibenzo(a,h)anthracene	U	11	1.0	10	11	1.9
191-24-2	Benzo(g,h,i)perylene	U	11	1.0	10	11	2.1
118-74-1	Hexachlorobenzene	U	11	1.0	10	11	1.9
87-68-3	Hexachlorobutadiene	U	11	1.0	10	11	2.4
77-47-4	Hexachlorocyclopentadiene	U	11	1.0	10	11	1.6
7297-45-2	2-Methylnaphthalene-D10		70%				
367-12-4	2,4-Dibromophenol		72%				
81103-79-9	Fluorene-d10		75%				
1718-51-1	Pyrene-D10		91%				

lcW
4/16/09

KATAHDIN ANALYTICAL SERVICES
Report of Analytical Results

Client: CH2MHill
Project: TO-009 Lejeune
PO No:
Sample Date: 01/12/09
Received Date: 01/14/09
Extraction Date: 01/19/09
Analysis Date: 04-FEB-2009 03:31
Report Date: 02/06/2009
Matrix: SOIL
% Solids: 95.0

Lab ID: SC0177-18
Client ID: MR08-SS302-09A
SDG: TO9-36
Extracted by: AC
Extraction Method: SW846 3550
Analyst: JCG
Analysis Method: SW846 M8270C
Lab Prep Batch: WG59949
Units: ug/Kgdrywt

CAS#	Compound	Flags	Results	DF	PQL	Adj.PQL	Adj.MDL	
91-20-3	Naphthalene	U	10	1.0	10	10	2.7	
91-57-6	2-Methylnaphthalene	U	10	1.0	10	10	2.3	
86-73-7	Fluorene	U	10	1.0	10	10	3.4	
85-01-8	Phenanthrene		72	1.0	10	10	1.9	
206-44-0	Fluoranthene		270	1.0	10	10	1.9	
129-00-0	Pyrene		170	1.0	10	10	2.2	
56-55-3	Benzo(a)anthracene		74	1.0	10	10	2.0	
205-99-2	Benzo(b)fluoranthene		200	1.0	10	10	2.5	
207-08-9	Benzo(k)fluoranthene	J	75	1.0	10	10	3.3	BSH
50-32-8	Benzo(a)pyrene	J	86	1.0	10	10	3.5	BSH
193-39-5	Indeno(1,2,3-cd)pyrene		70	1.0	10	10	2.0	
53-70-3	Dibenzo(a,h)anthracene		32	1.0	10	10	1.9	
191-24-2	Benzo(g,h,i)perylene	J	80	1.0	10	10	2.1	BSH
118-74-1	Hexachlorobenzene	J	3.9	1.0	10	10	1.9	
87-68-3	Hexachlorobutadiene	U	10	1.0	10	10	2.4	
77-47-4	Hexachlorocyclopentadiene	U	10	1.0	10	10	1.6	
7297-45-2	2-Methylnaphthalene-D10		82%					
367-12-4	2,4-Dibromophenol		95%					
81103-79-9	Fluorene-d10		89%					
1718-51-1	Pyrene-D10		80%					

lw 4/16/09

10

KATAHDIN ANALYTICAL SERVICES
Report of Analytical Results

Client: CH2MHill
Project: TO-009 Lejeune
PO No:
Sample Date: 01/12/09
Received Date: 01/14/09
Extraction Date: 01/19/09
Analysis Date: 03-FEB-2009 20:38
Report Date: 02/06/2009
Matrix: SOIL
% Solids: 87.8

Lab ID: SC0177-20
Client ID: MR08-IS302-8-9-09A
SDG: TO9-36
Extracted by: AC
Extraction Method: SW846 3550
Analyst: JCG
Analysis Method: SW846 M8270C
Lab Prep Batch: WG59949
Units: ug/Kgdrywt

CAS#	Compound	Flags	Results	DF	PQL	Adj.PQL	Adj.MDL
91-20-3	Naphthalene	U	11	1.0	10	11	3.0
91-57-6	2-Methylnaphthalene	U	11	1.0	10	11	2.5
86-73-7	Fluorene	U	11	1.0	10	11	3.6
85-01-8	Phenanthrene	U	11	1.0	10	11	2.0
206-44-0	Fluoranthene	U	11	1.0	10	11	2.0
129-00-0	Pyrene	U	11	1.0	10	11	2.4
56-55-3	Benzo(a)anthracene	U	11	1.0	10	11	2.2
205-99-2	Benzo(b)fluoranthene	U	11	1.0	10	11	2.7
207-08-9	Benzo(k)fluoranthene	U	11	1.0	10	11	3.5
50-32-8	Benzo(a)pyrene	U	11	1.0	10	11	3.8
193-39-5	Indeno(1,2,3-cd)pyrene	U	11	1.0	10	11	2.2
53-70-3	Dibenzo(a,h)anthracene	U	11	1.0	10	11	2.0
191-24-2	Benzo(g,h,i)perylene	U	11	1.0	10	11	2.3
118-74-1	Hexachlorobenzene	U	11	1.0	10	11	2.0
87-68-3	Hexachlorobutadiene	U	11	1.0	10	11	2.6
77-47-4	Hexachlorocyclopentadiene	U	11	1.0	10	11	1.7
7297-45-2	2-Methylnaphthalene-D10		72%				
367-12-4	2,4-Dibromophenol		67%				
81103-79-9	Fluorene-d10		75%				
1718-51-1	Pyrene-D10		88%				

WW
4/16/09

11

KATAHDIN ANALYTICAL SERVICES
Report of Analytical Results

Client: CH2MHill
Project: TO-009 Lejeune
PO No:
Sample Date: 01/12/09
Received Date: 01/14/09
Extraction Date: 01/19/09
Analysis Date: 04-FEB-2009 02:08
Report Date: 02/06/2009
Matrix: SOIL
% Solids: 87.7

Lab ID: SC0177-22
Client ID: MR08-SS303-09A
SDG: TO9-36
Extracted by: AC
Extraction Method: SW846 3550
Analyst: JCG
Analysis Method: SW846 M8270C
Lab Prep Batch: WG59949
Units: ug/Kgdrywt

CAS#	Compound	Flags	Results	DF	PQL	Adj.PQL	Adj.MDL	
91-20-3	Naphthalene	U	11	1.0	10	11	3.0	
91-57-6	2-Methylnaphthalene	U	11	1.0	10	11	2.5	
86-73-7	Fluorene	U	11	1.0	10	11	3.6	
85-01-8	Phenanthrene		16	1.0	10	11	2.0	
206-44-0	Fluoranthene		41	1.0	10	11	2.0	
129-00-0	Pyrene		40	1.0	10	11	2.4	
56-55-3	Benzo(a)anthracene		18	1.0	10	11	2.2	
205-99-2	Benzo(b)fluoranthene		14	1.0	10	11	2.7	
207-08-9	Benzo(k)fluoranthene	~~U~~ J	8.1	1.0	10	11	3.5	BSH
50-32-8	Benzo(a)pyrene	~~U~~ J	10	1.0	10	11	3.8	BSH
193-39-5	Indeno(1,2,3-cd)pyrene	J	6.1	1.0	10	11	2.2	
53-70-3	Dibenzo(a,h)anthracene	U	11	1.0	10	11	2.0	
191-24-2	Benzo(g,h,i)perylene	~~U~~ J	11	1.0	10	11	2.3	BSH
118-74-1	Hexachlorobenzene	U	11	1.0	10	11	2.0	
87-68-3	Hexachlorobutadiene	U	11	1.0	10	11	2.6	
77-47-4	Hexachlorocyclopentadiene	U	11	1.0	10	11	1.7	
7297-45-2	2-Methylnaphthalene-D10		79%					
367-12-4	2,4-Dibromophenol		96%					
81103-79-9	Fluorene-d10		90%					
1718-51-1	Pyrene-D10		92%					

lew
4/16/09

KATAHDIN ANALYTICAL SERVICES
Report of Analytical Results

Client: CH2MHill
Project: TO-009 Lejeune
PO No:
Sample Date: 01/12/09
Received Date: 01/14/09
Extraction Date: 01/19/09
Analysis Date: 03-FEB-2009 21:19
Report Date: 02/06/2009
Matrix: SOIL
% Solids: 90.8

Lab ID: SC0177-24
Client ID: MR08-IS303-6-7-09A
SDG: TO9-36
Extracted by: AC
Extraction Method: SW846 3550
Analyst: JCG
Analysis Method: SW846 M8270C
Lab Prep Batch: WG59949
Units: ug/Kgdrywt

CAS#	Compound	Flags	Results	DF	PQL	Adj.PQL	Adj.MDL	
91-20-3	Naphthalene	U	11	1.0	10	11	2.9	
91-57-6	2-Methylnaphthalene	U	11	1.0	10	11	2.4	
86-73-7	Fluorene	U	11	1.0	10	11	3.5	
85-01-8	Phenanthrene	J	2.5	1.0	10	11	2.0	
206-44-0	Fluoranthene	J	6.9	1.0	10	11	2.0	
129-00-0	Pyrene	J	5.5	1.0	10	11	2.3	
56-55-3	Benzo(a)anthracene	J	2.4	1.0	10	11	2.1	
205-99-2	Benzo(b)fluoranthene	J	3.1	1.0	10	11	2.6	
207-08-9	Benzo(k)fluoranthene	U	11	1.0	10	11	3.4	
50-32-8	Benzo(a)pyrene	U	11	1.0	10	11	3.6	
193-39-5	Indeno(1,2,3-cd)pyrene	J	2.5	1.0	10	11	2.1	
53-70-3	Dibenzo(a,h)anthracene	U	11	1.0	10	11	2.0	
191-24-2	Benzo(g,h,i)perylene	~~J~~ J	3.3	1.0	10	11	2.2	BSH
118-74-1	Hexachlorobenzene	U	11	1.0	10	11	2.0	
87-68-3	Hexachlorobutadiene	U	11	1.0	10	11	2.5	
77-47-4	Hexachlorocyclopentadiene	U	11	1.0	10	11	1.6	
7297-45-2	2-Methylnaphthalene-D10		80%					
367-12-4	2,4-Dibromophenol		83%					
81103-79-9	Fluorene-d10		84%					
1718-51-1	Pyrene-D10		93%					

lcw
4/16/09

13

KATAHDIN ANALYTICAL SERVICES
Report of Analytical Results

Client: CH2MHill
Project: TO-009 Lejeune
PO No:
Sample Date: 01/13/09
Received Date: 01/15/09
Extraction Date: 01/20/09
Analysis Date: 03-FEB-2009 04:26
Report Date: 02/06/2009
Matrix: SOIL
% Solids: 84.7

Lab ID: SC0209-2
Client ID: MR08-SS299-09A
SDG: TO9-36
Extracted by: AC
Extraction Method: SW846 3550
Analyst: JCG
Analysis Method: SW846 M8270C
Lab Prep Batch: WG59996
Units: ug/Kgdrywt

CAS#	Compound	Flags		Results	DF	PQL	Adj.PQL	Adj.MDL	
91-20-3	Naphthalene	U		12	1.0	10	12	3.1	
91-57-6	2-Methylnaphthalene	J		3.4	1.0	10	12	2.6	
86-73-7	Fluorene	U		12	1.0	10	12	3.8	
85-01-8	Phenanthrene			26	1.0	10	12	2.1	
206-44-0	Fluoranthene		J	76	1.0	10	12	2.1	~~BSH~~ CCH
129-00-0	Pyrene			57	1.0	10	12	2.5	
56-55-3	Benzo(a)anthracene			29	1.0	10	12	2.2	
205-99-2	Benzo(b)fluoranthene	U		12	1.0	10	12	2.8	
207-08-9	Benzo(k)fluoranthene	~~U~~	UJ	12	1.0	10	12	3.7	CCH
50-32-8	Benzo(a)pyrene			38	1.0	10	12	3.9	
193-39-5	Indeno(1,2,3-cd)pyrene			24	1.0	10	12	2.2	
53-70-3	Dibenzo(a,h)anthracene	U		12	1.0	10	12	2.1	
191-24-2	Benzo(g,h,i)perylene			21	1.0	10	12	2.4	
118-74-1	Hexachlorobenzene	U		12	1.0	10	12	2.1	
87-68-3	Hexachlorobutadiene	U		12	1.0	10	12	2.7	
77-47-4	Hexachlorocyclopentadiene	~~U~~	UJ	12	1.0	10	12	1.8	CCH
7297-45-2	2-Methylnaphthalene-D10			112%					
367-12-4	2,4-Dibromophenol			100%					
81103-79-9	Fluorene-d10			96%					
1718-51-1	Pyrene-D10			96%					

lw
4/16/09

14

KATAHDIN ANALYTICAL SERVICES
Report of Analytical Results

Client: CH2MHill
Project: TO-009 Lejeune
PO No:
Sample Date: 01/13/09
Received Date: 01/15/09
Extraction Date: 01/20/09
Analysis Date: 03-FEB-2009 05:06
Report Date: 02/06/2009
Matrix: SOIL
% Solids: 91.7

Lab ID: SC0209-4
Client ID: MR08-SS299D-09A
SDG: TO9-36
Extracted by: AC
Extraction Method: SW846 3550
Analyst: JCG
Analysis Method: SW846 M8270C
Lab Prep Batch: WG59996
Units: ug/Kgdrywt

CAS#	Compound	Flags	Results	DF	PQL	Adj.PQL	Adj.MDL	
91-20-3	Naphthalene	U	11	1.0	10	11	2.8	
91-57-6	2-Methylnaphthalene	U	11	1.0	10	11	2.4	
86-73-7	Fluorene	U	11	1.0	10	11	3.5	
85-01-8	Phenanthrene		23	1.0	10	11	2.0	
206-44-0	Fluoranthene	J	120	1.0	10	11	2.0	BSA CCH
129-00-0	Pyrene		85	1.0	10	11	2.3	
56-55-3	Benzo(a)anthracene		50	1.0	10	11	2.1	
205-99-2	Benzo(b)fluoranthene		100	1.0	10	11	2.6	
207-08-9	Benzo(k)fluoranthene	J	63	1.0	10	11	3.4	CCH
50-32-8	Benzo(a)pyrene		64	1.0	10	11	3.6	
193-39-5	Indeno(1,2,3-cd)pyrene		42	1.0	10	11	2.1	
53-70-3	Dibenzo(a,h)anthracene		16	1.0	10	11	2.0	
191-24-2	Benzo(g,h,i)perylene		45	1.0	10	11	2.2	
118-74-1	Hexachlorobenzene	U	11	1.0	10	11	2.0	
87-68-3	Hexachlorobutadiene	U	11	1.0	10	11	2.5	
77-47-4	Hexachlorocyclopentadiene	~~U~~ UJ	11	1.0	10	11	1.6	CCH
7297-45-2	2-Methylnaphthalene-D10		121%					
367-12-4	2,4-Dibromophenol		114%					
81103-79-9	Fluorene-d10		95%					
1718-51-1	Pyrene-D10		96%					

LW 4/16/09

15

KATAHDIN ANALYTICAL SERVICES
Report of Analytical Results

Client: CH2MHill
Project: TO-009 Lejeune
PO No:
Sample Date: 01/13/09
Received Date: 01/15/09
Extraction Date: 01/20/09
Analysis Date: 02-FEB-2009 21:42
Report Date: 02/06/2009
Matrix: SOIL
% Solids: 88.8

Lab ID: SC0209-6
Client ID: MR08-IS299-6-7-09A
SDG: TO9-36
Extracted by: AC
Extraction Method: SW846 3550
Analyst: JCG
Analysis Method: SW846 M8270C
Lab Prep Batch: WG59996
Units: ug/Kgdrywt

CAS#	Compound	Flags	Results	DF	PQL	Adj.PQL	Adj.MDL	
91-20-3	Naphthalene	U	11	1.0	10	11	2.9	
91-57-6	2-Methylnaphthalene	U	11	1.0	10	11	2.5	
86-73-7	Fluorene	U	11	1.0	10	11	3.6	
85-01-8	Phenanthrene	U	11	1.0	10	11	2.0	
206-44-0	Fluoranthene	~~U~~ J	2.6	1.0	10	11	2.0	~~BSH~~ CCH
129-00-0	Pyrene	U	11	1.0	10	11	2.4	
56-55-3	Benzo(a)anthracene	U	11	1.0	10	11	2.1	
205-99-2	Benzo(b)fluoranthene	U	11	1.0	10	11	2.7	
207-08-9	Benzo(k)fluoranthene	~~U~~ UJ	11	1.0	10	11	3.5	CCH
50-32-8	Benzo(a)pyrene	U	11	1.0	10	11	3.7	
193-39-5	Indeno(1,2,3-cd)pyrene	U	11	1.0	10	11	2.1	
53-70-3	Dibenzo(a,h)anthracene	U	11	1.0	10	11	2.0	
191-24-2	Benzo(g,h,i)perylene	U	11	1.0	10	11	2.2	
118-74-1	Hexachlorobenzene	U	11	1.0	10	11	2.0	
87-68-3	Hexachlorobutadiene	U	11	1.0	10	11	2.6	
77-47-4	Hexachlorocyclopentadiene	~~U~~ UJ	11	1.0	10	11	1.7	CCH
7297-45-2	2-Methylnaphthalene-D10		100%					
367-12-4	2,4-Dibromophenol		94%					
81103-79-9	Fluorene-d10		91%					
1718-51-1	Pyrene-D10		100%					

lw
4/16/09

16

KATAHDIN ANALYTICAL SERVICES
Report of Analytical Results

Client: CH2MHill
Project: TO-009 Lejeune
PO No:
Sample Date: 01/13/09
Received Date: 01/15/09
Extraction Date: 01/20/09
Analysis Date: 02-FEB-2009 22:23
Report Date: 02/06/2009
Matrix: SOIL
% Solids: 89.1

Lab ID: SC0209-8
Client ID: MR08-IS299D-6-7-09A
SDG: TO9-36
Extracted by: AC
Extraction Method: SW846 3550
Analyst: JCG
Analysis Method: SW846 M8270C
Lab Prep Batch: WG59996
Units: ug/Kgdrywt

CAS#	Compound	Flags	Results	DF	PQL	Adj.PQL	Adj.MDL	
91-20-3	Naphthalene	U	11	1.0	10	11	2.9	
91-57-6	2-Methylnaphthalene	U	11	1.0	10	11	2.5	
86-73-7	Fluorene	U	11	1.0	10	11	3.6	
85-01-8	Phenanthrene	U	11	1.0	10	11	2.0	
206-44-0	Fluoranthene	~~U~~ UJ	11	1.0	10	11	2.0	CCH
129-00-0	Pyrene	U	11	1.0	10	11	2.4	
56-55-3	Benzo(a)anthracene	U	11	1.0	10	11	2.1	
205-99-2	Benzo(b)fluoranthene	U	11	1.0	10	11	2.7	
207-08-9	Benzo(k)fluoranthene	~~U~~ UJ	11	1.0	10	11	3.5	CCH
50-32-8	Benzo(a)pyrene	U	11	1.0	10	11	3.7	
193-39-5	Indeno(1,2,3-cd)pyrene	U	11	1.0	10	11	2.1	
53-70-3	Dibenzo(a,h)anthracene	U	11	1.0	10	11	2.0	
191-24-2	Benzo(g,h,i)perylene	U	11	1.0	10	11	2.2	
118-74-1	Hexachlorobenzene	U	11	1.0	10	11	2.0	
87-68-3	Hexachlorobutadiene	U	11	1.0	10	11	2.6	
77-47-4	Hexachlorocyclopentadiene	~~U~~ UJ	11	1.0	10	11	1.7	CCH
7297-45-2	2-Methylnaphthalene-D10		97%					
367-12-4	2,4-Dibromophenol		83%					
81103-79-9	Fluorene-d10		86%					
1718-51-1	Pyrene-D10		96%					

lew
4/16/09

KATAHDIN ANALYTICAL SERVICES
Report of Analytical Results

Client: CH2MHill
Project: TO-009 Lejeune
PO No:
Sample Date: 01/13/09
Received Date: 01/15/09
Extraction Date: 01/20/09
Analysis Date: 03-FEB-2009 03:45
Report Date: 02/06/2009
Matrix: SOIL
% Solids: 93.9

Lab ID: SC0209-10
Client ID: MR08-SS304-09A
SDG: TO9-36
Extracted by: AC
Extraction Method: SW846 3550
Analyst: JCG
Analysis Method: SW846 M8270C
Lab Prep Batch: WG59996
Units: ug/Kgdrywt

CAS#	Compound	Flags	Results	DF	PQL	Adj.PQL	Adj.MDL
91-20-3	Naphthalene	U	11	1.0	10	11	2.8
91-57-6	2-Methylnaphthalene	U	11	1.0	10	11	2.3
86-73-7	Fluorene	U	11	1.0	10	11	3.4
85-01-8	Phenanthrene		55	1.0	10	11	1.9
206-44-0	Fluoranthene	~~E~~ 270J	~~340~~ BSH ~~1.0~~ 2		10 21	~~11~~ 3.8	~~1.9~~ R DL
129-00-0	Pyrene		230	1.0	10	11	2.2
56-55-3	Benzo(a)anthracene		140	1.0	10	11	2.0
205-99-2	Benzo(b)fluoranthene	~~E~~ 270	~~290~~	~~1.0~~ 2	10 21	~~11~~ 5.1	~~2.6~~ R DL
207-08-9	Benzo(k)fluoranthene	J	130	1.0	10	11	3.3 CCH
50-32-8	Benzo(a)pyrene		150	1.0	10	11	3.5
193-39-5	Indeno(1,2,3-cd)pyrene		98	1.0	10	11	2.0
53-70-3	Dibenzo(a,h)anthracene		34	1.0	10	11	1.9
191-24-2	Benzo(g,h,i)perylene		99	1.0	10	11	2.1
118-74-1	Hexachlorobenzene	U	11	1.0	10	11	1.9
87-68-3	Hexachlorobutadiene	U	11	1.0	10	11	2.4
77-47-4	Hexachlorocyclopentadiene	~~U~~ UJ	11	1.0	10	11	1.6 CCH
7297-45-2	2-Methylnaphthalene-D10		93%				
367-12-4	2,4-Dibromophenol		102%				
81103-79-9	Fluorene-d10		89%				
1718-51-1	Pyrene-D10		92%				

Jw 4/16/09

170L

KATAHDIN ANALYTICAL SERVICES
Report of Analytical Results

Client: CH2MHill
Project: TO-009 Lejeune
PO No:
Sample Date: 01/13/09
Received Date: 01/15/09
Extraction Date: 01/20/09
Analysis Date: 03-FEB-2009 17:44
Report Date: 02/06/2009
Matrix: SOIL
% Solids: 93.9

Lab ID: SC0209-10DL
Client ID: MR08-SS304-09A
SDG: TO9-36
Extracted by: AC
Extraction Method: SW846 3550
Analyst: JCG
Analysis Method: SW846 M8270C
Lab Prep Batch: WG59996
Units: ug/Kgdrywt

use original

CAS#	Compound	Flags	Results	DF	PQL	Adj.PQL	Adj.MDL
91-20-3	Naphthalene	U	21	2.0	10	21	5.5
91-57-6	2-Methylnaphthalene	J	13	2.0	10	21	4.7
86-73-7	Fluorene	U	21	2.0	10	21	6.8
85-01-8	Phenanthrene		46	2.0	10	21	3.8
206-44-0	Fluoranthene	J	270	2.0	10	21	3.8 BSH
129-00-0	Pyrene		210	2.0	10	21	4.5
56-55-3	Benzo(a)anthracene		130	2.0	10	21	4.0
205-99-2	Benzo(b)fluoranthene		270	2.0	10	21	5.1
207-08-9	Benzo(k)fluoranthene		140	2.0	10	21	6.6
50-32-8	Benzo(a)pyrene		160	2.0	10	21	7.0
193-39-5	Indeno(1,2,3-cd)pyrene		130	2.0	10	21	4.0
53-70-3	Dibenzo(a,h)anthracene		50	2.0	10	21	3.8
191-24-2	Benzo(g,h,i)perylene		130	2.0	10	21	4.2
118-74-1	Hexachlorobenzene	U	21	2.0	10	21	3.8
87-68-3	Hexachlorobutadiene	U	21	2.0	10	21	4.9
77-47-4	Hexachlorocyclopentadiene	U	21	2.0	10	21	3.2
7297-45-2	2-Methylnaphthalene-D10		90%				
367-12-4	2,4-Dibromophenol		82%				
81103-79-9	Fluorene-d10		85%				
1718-51-1	Pyrene-D10		87%				

R DL

LCW
4/16/09

KATAHDIN ANALYTICAL SERVICES
Report of Analytical Results

Client: CH2MHill
Project: TO-009 Lejeune
PO No:
Sample Date: 01/13/09
Received Date: 01/15/09
Extraction Date: 01/21/09
Analysis Date: 03-FEB-2009 00:24
Report Date: 02/06/2009
Matrix: SOIL
% Solids: 89.9

Lab ID: SC0209-12
Client ID: MR08-IS304-6-7-09A
SDG: TO9-36
Extracted by: AC
Extraction Method: SW846 3550
Analyst: JCG
Analysis Method: SW846 M8270C
Lab Prep Batch: WG60037
Units: ug/Kgdrywt

CAS#	Compound	Flags	Results	DF	PQL	Adj.PQL	Adj.MDL
91-20-3	Naphthalene	U	11	1.0	10	11	2.9
91-57-6	2-Methylnaphthalene	U	11	1.0	10	11	2.4
86-73-7	Fluorene	U	11	1.0	10	11	3.6
85-01-8	Phenanthrene	U	11	1.0	10	11	2.0
206-44-0	Fluoranthene	U	11	1.0	10	11	2.0
129-00-0	Pyrene	U	11	1.0	10	11	2.3
56-55-3	Benzo(a)anthracene	U	11	1.0	10	11	2.1
205-99-2	Benzo(b)fluoranthene	U	11	1.0	10	11	2.7
207-08-9	Benzo(k)fluoranthene	U	11	1.0	10	11	3.4
50-32-8	Benzo(a)pyrene	U	11	1.0	10	11	3.7
193-39-5	Indeno(1,2,3-cd)pyrene	U	11	1.0	10	11	2.1
53-70-3	Dibenzo(a,h)anthracene	U	11	1.0	10	11	2.0
191-24-2	Benzo(g,h,i)perylene	U	11	1.0	10	11	2.2
118-74-1	Hexachlorobenzene	U	11	1.0	10	11	2.0
87-68-3	Hexachlorobutadiene	U	11	1.0	10	11	2.6
77-47-4	Hexachlorocyclopentadiene	U	11	1.0	10	11	1.7
7297-45-2	2-Methylnaphthalene-D10		101%				
367-12-4	2,4-Dibromophenol		99%				
81103-79-9	Fluorene-d10		91%				
1718-51-1	Pyrene-D10		98%				

lw
4/16/09

KATAHDIN ANALYTICAL SERVICES
Report of Analytical Results

Client: CH2MHill
Project: TO-009 Lejeune
PO No:
Sample Date: 01/13/09
Received Date: 01/15/09
Extraction Date: 01/21/09
Analysis Date: 03-FEB-2009 01:45
Report Date: 02/06/2009
Matrix: SOIL
% Solids: 88.3

Lab ID: SC0209-14
Client ID: MR08-SS312-09A
SDG: T09-36
Extracted by: AC
Extraction Method: SW846 3550
Analyst: JCG
Analysis Method: SW846 M8270C
Lab Prep Batch: WG60037
Units: ug/Kgdrywt

CAS#	Compound	Flags	Results	DF	PQL	Adj.PQL	Adj.MDL	
91-20-3	Naphthalene	U	11	1.0	10	11	2.9	
91-57-6	2-Methylnaphthalene	U	11	1.0	10	11	2.5	
86-73-7	Fluorene	U	11	1.0	10	11	3.6	
85-01-8	Phenanthrene	J	2.9	1.0	10	11	2.0	
206-44-0	Fluoranthene	~~U~~ J	11	1.0	10	11	2.0	CCH
129-00-0	Pyrene	J	7.8	1.0	10	11	2.4	
56-55-3	Benzo(a)anthracene	J	3.2	1.0	10	11	2.2	
205-99-2	Benzo(b)fluoranthene	U	11	1.0	10	11	2.7	
207-08-9	Benzo(k)fluoranthene	~~U~~ UJ	11	1.0	10	11	3.5	CCH
50-32-8	Benzo(a)pyrene	J	4.1	1.0	10	11	3.7	
193-39-5	Indeno(1,2,3-cd)pyrene	J	2.5	1.0	10	11	2.2	
53-70-3	Dibenzo(a,h)anthracene	U	11	1.0	10	11	2.0	
191-24-2	Benzo(g,h,i)perylene	J	2.8	1.0	10	11	2.3	
118-74-1	Hexachlorobenzene	U	11	1.0	10	11	2.0	
87-68-3	Hexachlorobutadiene	U	11	1.0	10	11	2.6	
77-47-4	Hexachlorocyclopentadiene	~~U~~ UJ	11	1.0	10	11	1.7	CCH
7297-45-2	2-Methylnaphthalene-D10		111%					
367-12-4	2,4-Dibromophenol		101%					
81103-79-9	Fluorene-d10		101%					
1718-51-1	Pyrene-D10		108%					

lew
4/16/09

20

KATAHDIN ANALYTICAL SERVICES
Report of Analytical Results

Client: CH2MHill
Project: TO-009 Lejeune
PO No:
Sample Date: 01/13/09
Received Date: 01/15/09
Extraction Date: 01/21/09
Analysis Date: 03-FEB-2009 01:04
Report Date: 02/06/2009
Matrix: SOIL
% Solids: 89.0

Lab ID: SC0209-16
Client ID: MR08-SS308-09A
SDG: TO9-36
Extracted by: AC
Extraction Method: SW846 3550
Analyst: JCG
Analysis Method: SW846 M8270C
Lab Prep Batch: WG60037
Units: ug/Kgdrywt

CAS#	Compound	Flags	Results	DF	PQL	Adj.PQL	Adj.MDL	
91-20-3	Naphthalene	U	11	1.0	10	11	2.9	
91-57-6	2-Methylnaphthalene	U	11	1.0	10	11	2.5	
86-73-7	Fluorene	U	11	1.0	10	11	3.6	
85-01-8	Phenanthrene	J	4.5	1.0	10	11	2.0	
206-44-0	Fluoranthene	J	17	1.0	10	11	2.0	~~MSH~~ CCH
129-00-0	Pyrene	J	11	1.0	10	11	2.4	
56-55-3	Benzo(a)anthracene	J	5.3	1.0	10	11	2.1	
205-99-2	Benzo(b)fluoranthene	J	9.0	1.0	10	11	2.7	
207-08-9	Benzo(k)fluoranthene	~~J~~ J	7.8	1.0	10	11	3.5	CCH
50-32-8	Benzo(a)pyrene	J	6.5	1.0	10	11	3.7	
193-39-5	Indeno(1,2,3-cd)pyrene	J	5.2	1.0	10	11	2.1	
53-70-3	Dibenzo(a,h)anthracene	U	11	1.0	10	11	2.0	
191-24-2	Benzo(g,h,i)perylene	J	4.9	1.0	10	11	2.2	
118-74-1	Hexachlorobenzene	U	11	1.0	10	11	2.0	
87-68-3	Hexachlorobutadiene	U	11	1.0	10	11	2.6	
77-47-4	Hexachlorocyclopentadiene	~~U~~ UJ	11	1.0	10	11	1.7	CCH
7297-45-2	2-Methylnaphthalene-D10		94%					
367-12-4	2,4-Dibromophenol		93%					
81103-79-9	Fluorene-d10		85%					
1718-51-1	Pyrene-D10		101%					

lew
4/16/09

ENVIRONMENTAL
Data Services, Inc.

SEMIVOLATILE ORGANIC COMPOUNDS
USEPA Region IV - Level IV Review

Site: MCB Camp Lejeune, TO-09 SDG #: TO9-36

Client: CH2M HILL, Inc., Virginia Beach, Virginia Date: April 16, 2009

Laboratory: Katahdin Analytical Services, Scarborough, Maine Reviewer: Nancy Weaver

EDS ID	Client Sample ID	Laboratory Sample ID	Matrix
1	MR08-SS295-09A	SC0177-1	Soil
2	MR08-IS295-2-3-09A	SC0177-3	Soil
3	MR08-SS296-09A	SC0177-5	Soil
4	MR08-IS296-5-6-09A	SC0177-7	Soil
5	MR08-SS300-09A	SC0177-9	Soil
6	MR08-IS300-8-9-09A	SC0177-11	Soil
7	MR08-SS301-09A	SC0177-13	Soil
8	MR08-IS301-7-8-09A	SC0177-15	Soil
9	MR08-SS302-09A	SC0177-17	Soil
10	MR08-IS302-8-9-09A	SC0177-19	Soil
11	MR08-SS303-09A	SC0177-21	Soil
12	MR08-IS303-6-7-09A	SC0177-23	Soil
13	MR08-SS299-09A	SC0209-1	Soil
14	MR08-SS299D-09A	SC0209-3	Soil
15	MR08-IS299-6-7-09A	SC0209-5	Soil
16	MR08-IS299D-6-7-09A	SC0209-7	Soil
17	MR08-SS304-09A	SC0209-9	Soil
18	MR08-IS304-6-7-09A	SC0209-11	Soil
19	MR08-SS312-09A	SC0209-13	Soil
20	MR08-SS308-09A	SC0209-15	Soil
20MD	MR08-SS308-09AMS	SC209-15MS	Soil
20MSD	MR08-SS308-09AMSD	SC209-15MSD	Soil

The USEPA "Contract Laboratory Program National Functional Guidelines for Organic Data Review," October 1999, and professional judgement were used in evaluating the data in this summary report.

Holding Times - All samples were extracted within 14 days for soil samples and analyzed within 40 days for all samples.

GC/MS Tuning - All of the DFTPP tunes in the initial and continuing calibrations met the percent relative abundance criteria.

Initial Calibration - The initial calibrations exhibited acceptable %RSD and mean RRF values except the following.

Continuing Calibration - The continuing calibrations exhibited acceptable %D and RRF values except the following.

CCAL Date	Compound	%D/RRF	Qualifier	Affected Samples
01/31/09	Benzaldehyde	29.70%	J/UJ	1-8, 10, 12-17
02/01/09	Benzaldehyde	29.78%	J/UJ	9, 11, 18, 19
02/02/09	Benzaldehyde	33.53%	J/UJ	20

Surrogates - All samples exhibited acceptable surrogate recoveries.

MS/MSD - The MS/MSD sample exhibited acceptable %R and RPD values.

Laboratory Control Sample - The LCS samples exhibited acceptable %R values.

Internal Standard (IS) Area Performance - All internal standards met response and retention time (RT) criteria.

Method Blank - The method blanks exhibited the following contamination.

Blank ID	Compound	Conc. ug/kg	Action Level ug/kg	Qualifier	Affected Samples
WG59991-BLANK	Diethylphthalate	80	800	None	All ND
WG59948-BLANK	Diethylphthalate	82	820	None	All ND

Field, Equipment Blank - Field QC results are summarized below.

Blank ID	Compound	Conc. ug/L	Action Level ug/L	Qualifier	Affected Samples
MR08-FB01011009	None - ND	-	-	-	-
MR08-EB01011209-SS	None - ND	-	-	-	-

Field Duplicates - Field duplicate results are summarized below

Compound	MR08-SS299-09A ug/kg	MR08-SS299D-09A ug/kg	RPD	Qualifier
bis (2-Ethylhexyl) phthalate	410	270	41%	None

Compound	MR08-IS299-6-7-09A ug/kg	MR08-IS299D-6-7-09A ug/kg	RPD	Qualifier
None	ND	ND	-	-

Tentatively Identified Compounds (TICs) - TICs were not reported.

Compound Quantitation - No discrepancies were identified.

KATAHDIN ANALYTICAL SERVICES
Report of Analytical Results

1

Client: CH2MHill
Project: TO-009 Lejeune
PO No:
Sample Date: 01/12/09
Received Date: 01/14/09
Extraction Date: 01/19/09
Analysis Date: 31-JAN-2009 16:04
Report Date: 02/06/2009
Matrix: SOIL
% Solids: 91.2

Lab ID: SC0177-1
Client ID: MR08-SS295-09A
SDG: TO9-36
Extracted by: AC
Extraction Method: SW846 3550
Analyst: JCG
Analysis Method: SW846 8270C
Lab Prep Batch: WG59948
Units: ug/Kgdrywt

CAS#	Compound	Flags	Results	DF	PQL	Adj.PQL	Adj.MDL
100-52-7	Benzaldehyde	~~U~~ UJ	550	1.0	500	550	130 CCH
108-95-2	Phenol	U	550	1.0	500	550	170
111-44-4	Bis(2-Chloroethyl)ether	U	360	1.0	330	360	89
95-57-8	2-Chlorophenol	U	550	1.0	500	550	180
95-48-7	2-Methylphenol	U	660	1.0	600	660	220
108-60-1	2,2'-Oxybis(1-chloropropane)	U	360	1.0	330	360	98
98-86-2	Acetophenone	U	660	1.0	600	660	200
621-64-7	N-Nitroso-di-n-propylamine	U	360	1.0	330	360	91
65794-96-9	3&4-Methylphenol	U	660	1.0	600	660	200
67-72-1	Hexachloroethane	U	360	1.0	330	360	100
98-95-3	Nitrobenzene	U	360	1.0	330	360	100
78-59-1	Isophorone	U	360	1.0	330	360	82
88-75-5	2-Nitrophenol	U	660	1.0	600	660	180
105-67-9	2,4-Dimethylphenol	U	550	1.0	500	550	180
111-91-1	Bis(2-Chloroethoxy)methane	U	360	1.0	330	360	100
120-83-2	2,4-Dichlorophenol	U	550	1.0	500	550	160
106-47-8	4-Chloroaniline	U	550	1.0	500	550	130
105-60-2	Caprolactam	U	550	1.0	500	550	160
59-50-7	4-Chloro-3-Methylphenol	U	550	1.0	500	550	180
88-06-2	2,4,6-Trichlorophenol	U	550	1.0	500	550	170
95-95-4	2,4,5-Trichlorophenol	U	550	1.0	500	550	170
91-58-7	2-Chloronaphthalene	U	360	1.0	330	360	95
92-52-4	1,1'-Biphenyl	U	360	1.0	330	360	80
88-74-4	2-Nitroaniline	U	550	1.0	500	550	82
131-11-3	Dimethyl Phthalate	U	360	1.0	330	360	86
606-20-2	2,6-Dinitrotoluene	U	360	1.0	330	360	87
208-96-8	Acenaphthylene	U	360	1.0	330	360	77
99-09-2	3-Nitroaniline	U	550	1.0	500	550	100
83-32-9	Acenaphthene	U	360	1.0	330	360	71
51-28-5	2,4-Dinitrophenol	U	1300	1.0	1200	1300	410
132-64-9	Dibenzofuran	U	360	1.0	330	360	87
100-02-7	4-Nitrophenol	U	1300	1.0	1200	1300	340
121-14-2	2,4-Dinitrotoluene	U	360	1.0	330	360	93
84-66-2	Diethylphthalate	U	360	1.0	330	360	88
7005-72-3	4-Chlorophenyl-phenylether	U	360	1.0	330	360	86
100-01-6	4-Nitroaniline	U	550	1.0	500	550	150
534-52-1	4,6-Dinitro-2-Methylphenol	U	1300	1.0	1200	1300	370
86-30-6	N-Nitrosodiphenylamine	U	720	1.0	660	720	240
101-55-3	4-Bromophenyl-phenylether	U	360	1.0	330	360	93
1912-24-9	Atrazine	U	360	1.0	330	360	100
87-86-5	Pentachlorophenol	U	900	1.0	820	900	260
120-12-7	Anthracene	U	360	1.0	330	360	92
86-74-8	Carbazole	U	550	1.0	500	550	120

RW
4/16/09

KATAHDIN ANALYTICAL SERVICES
Report of Analytical Results

Client: CH2MHill
Project: TO-009 Lejeune
PO No:
Sample Date: 01/12/09
Received Date: 01/14/09
Extraction Date: 01/19/09
Analysis Date: 31-JAN-2009 16:04
Report Date: 02/06/2009
Matrix: SOIL
% Solids: 91.2

Lab ID: SC0177-1
Client ID: MR08-SS295-09A
SDG: TO9-36
Extracted by: AC
Extraction Method: SW846 3550
Analyst: JCG
Analysis Method: SW846 8270C
Lab Prep Batch: WG59948
Units: ug/Kgdrywt

CAS#	Compound	Flags	Results	DF	PQL	Adj.PQL	Adj.MDL
84-74-2	Di-n-butylphthalate	U	360	1.0	330	360	110
85-68-7	Butylbenzylphthalate	U	360	1.0	330	360	100
91-94-1	3,3'-Dichlorobenzidine	U	550	1.0	500	550	120
218-01-9	Chrysene	U	360	1.0	330	360	100
117-81-7	bis(2-Ethylhexyl)phthalate	J	210	1.0	330	360	110
117-84-0	Di-n-octylphthalate	U	360	1.0	330	360	230
367-12-4	2-Fluorophenol		80%				
13127-88-3	Phenol-D6		88%				
4165-60-0	Nitrobenzene-D5		77%				
321-60-8	2-Fluorobiphenyl		76%				
118-79-6	2,4,6-Tribromophenol		99%				
1718-51-0	Terphenyl-D14		104%				

RW
4/16/09

KATAHDIN ANALYTICAL SERVICES
Report of Analytical Results

2

Client: CH2MHill
Project: TO-009 Lejeune
PO No:
Sample Date: 01/12/09
Received Date: 01/14/09
Extraction Date: 01/19/09
Analysis Date: 31-JAN-2009 16:46
Report Date: 02/06/2009
Matrix: SOIL
% Solids: 89.6

Lab ID: SC0177-3
Client ID: MR08-IS295-2-3-09A
SDG: TO9-36
Extracted by: AC
Extraction Method: SW846 3550
Analyst: JCG
Analysis Method: SW846 8270C
Lab Prep Batch: WG59948
Units: ug/Kgdrywt

CAS#	Compound	Flags	Results	DF	PQL	Adj.PQL	Adj.MDL
100-52-7	Benzaldehyde	~~U~~ UJ	560	1.0	500	560	130 CCH
108-95-2	Phenol	U	560	1.0	500	560	170
111-44-4	Bis(2-Chloroethyl)ether	U	370	1.0	330	370	90
95-57-8	2-Chlorophenol	U	560	1.0	500	560	180
95-48-7	2-Methylphenol	U	670	1.0	600	670	220
108-60-1	2,2'-Oxybis(1-chloropropane)	U	370	1.0	330	370	99
98-86-2	Acetophenone	U	670	1.0	600	670	200
621-64-7	N-Nitroso-di-n-propylamine	U	370	1.0	330	370	93
65794-96-9	3&4-Methylphenol	U	670	1.0	600	670	210
67-72-1	Hexachloroethane	U	370	1.0	330	370	110
98-95-3	Nitrobenzene	U	370	1.0	330	370	100
78-59-1	Isophorone	U	370	1.0	330	370	84
88-75-5	2-Nitrophenol	U	670	1.0	600	670	190
105-67-9	2,4-Dimethylphenol	U	560	1.0	500	560	180
111-91-1	Bis(2-Chloroethoxy)methane	U	370	1.0	330	370	110
120-83-2	2,4-Dichlorophenol	U	560	1.0	500	560	170
106-47-8	4-Chloroaniline	U	560	1.0	500	560	130
105-60-2	Caprolactam	U	560	1.0	500	560	160
59-50-7	4-Chloro-3-Methylphenol	U	560	1.0	500	560	180
88-06-2	2,4,6-Trichlorophenol	U	560	1.0	500	560	170
95-95-4	2,4,5-Trichlorophenol	U	560	1.0	500	560	170
91-58-7	2-Chloronaphthalene	U	370	1.0	330	370	97
92-52-4	1,1'-Biphenyl	U	370	1.0	330	370	81
88-74-4	2-Nitroaniline	U	560	1.0	500	560	84
131-11-3	Dimethyl Phthalate	U	370	1.0	330	370	87
606-20-2	2,6-Dinitrotoluene	U	370	1.0	330	370	88
208-96-8	Acenaphthylene	U	370	1.0	330	370	78
99-09-2	3-Nitroaniline	U	560	1.0	500	560	100
83-32-9	Acenaphthene	U	370	1.0	330	370	72
51-28-5	2,4-Dinitrophenol	U	1300	1.0	1200	1300	420
132-64-9	Dibenzofuran	U	370	1.0	330	370	88
100-02-7	4-Nitrophenol	U	1300	1.0	1200	1300	340
121-14-2	2,4-Dinitrotoluene	U	370	1.0	330	370	95
84-66-2	Diethylphthalate	U	370	1.0	330	370	89
7005-72-3	4-Chlorophenyl-phenylether	U	370	1.0	330	370	87
100-01-6	4-Nitroaniline	U	560	1.0	500	560	150
534-52-1	4,6-Dinitro-2-Methylphenol	U	1300	1.0	1200	1300	380
86-30-6	N-Nitrosodiphenylamine	U	740	1.0	660	740	240
101-55-3	4-Bromophenyl-phenylether	U	370	1.0	330	370	95
1912-24-9	Atrazine	U	370	1.0	330	370	100
87-86-5	Pentachlorophenol	U	910	1.0	820	910	260
120-12-7	Anthracene	U	370	1.0	330	370	94
86-74-8	Carbazole	U	560	1.0	500	560	120

fuw 4/16/09

2

KATAHDIN ANALYTICAL SERVICES
Report of Analytical Results

Client: CH2MHill
Project: TO-009 Lejeune
PO No:
Sample Date: 01/12/09
Received Date: 01/14/09
Extraction Date: 01/19/09
Analysis Date: 31-JAN-2009 16:46
Report Date: 02/06/2009
Matrix: SOIL
% Solids: 89.6

Lab ID: SC0177-3
Client ID: MR08-IS295-2-3-09A
SDG: TO9-36
Extracted by: AC
Extraction Method: SW846 3550
Analyst: JCG
Analysis Method: SW846 8270C
Lab Prep Batch: WG59948
Units: ug/Kgdrywt

CAS#	Compound	Flags	Results	DF	PQL	Adj.PQL	Adj.MDL
84-74-2	Di-n-butylphthalate	U	370	1.0	330	370	110
85-68-7	Butylbenzylphthalate	U	370	1.0	330	370	100
91-94-1	3,3'-Dichlorobenzidine	U	560	1.0	500	560	130
218-01-9	Chrysene	U	370	1.0	330	370	100
117-81-7	bis(2-Ethylhexyl)phthalate	U	370	1.0	330	370	110
117-84-0	Di-n-octylphthalate	U	370	1.0	330	370	240
367-12-4	2-Fluorophenol		70%				
13127-88-3	Phenol-D6		78%				
4165-60-0	Nitrobenzene-D5		65%				
321-60-8	2-Fluorobiphenyl		64%				
118-79-6	2,4,6-Tribromophenol		85%				
1718-51-0	Terphenyl-D14		97%				

AW
4/16/09

KATAHDIN ANALYTICAL SERVICES
Report of Analytical Results

3

Client: CH2MHill
Project: TO-009 Lejeune
PO No:
Sample Date: 01/12/09
Received Date: 01/14/09
Extraction Date: 01/19/09
Analysis Date: 31-JAN-2009 17:29
Report Date: 02/06/2009
Matrix: SOIL
% Solids: 92.4

Lab ID: SC0177-5
Client ID: MR08-SS296-09A
SDG: TO9-36
Extracted by: AC
Extraction Method: SW846 3550
Analyst: JCG
Analysis Method: SW846 8270C
Lab Prep Batch: WG59948
Units: ug/Kgdrywt

CAS#	Compound	Flags	Results	DF	PQL	Adj.PQL	Adj.MDL	
100-52-7	Benzaldehyde	~~U~~ UJ	540	1.0	500	540	130	CEH
108-95-2	Phenol	U	540	1.0	500	540	170	
111-44-4	Bis(2-Chloroethyl)ether	U	360	1.0	330	360	88	
95-57-8	2-Chlorophenol	U	540	1.0	500	540	180	
95-48-7	2-Methylphenol	U	650	1.0	600	650	220	
108-60-1	2,2'-Oxybis(1-chloropropane)	U	360	1.0	330	360	96	
98-86-2	Acetophenone	U	650	1.0	600	650	190	
621-64-7	N-Nitroso-di-n-propylamine	U	360	1.0	330	360	90	
65794-96-9	3&4-Methylphenol	U	650	1.0	600	650	200	
67-72-1	Hexachloroethane	U	360	1.0	330	360	100	
98-95-3	Nitrobenzene	U	360	1.0	330	360	98	
78-59-1	Isophorone	U	360	1.0	330	360	81	
88-75-5	2-Nitrophenol	U	650	1.0	600	650	180	
105-67-9	2,4-Dimethylphenol	U	540	1.0	500	540	180	
111-91-1	Bis(2-Chloroethoxy)methane	U	360	1.0	330	360	100	
120-83-2	2,4-Dichlorophenol	U	540	1.0	500	540	160	
106-47-8	4-Chloroaniline	U	540	1.0	500	540	130	
105-60-2	Caprolactam	U	540	1.0	500	540	160	
59-50-7	4-Chloro-3-Methylphenol	U	540	1.0	500	540	180	
88-06-2	2,4,6-Trichlorophenol	U	540	1.0	500	540	170	
95-95-4	2,4,5-Trichlorophenol	U	540	1.0	500	540	170	
91-58-7	2-Chloronaphthalene	U	360	1.0	330	360	94	
92-52-4	1,1'-Biphenyl	U	360	1.0	330	360	79	
88-74-4	2-Nitroaniline	U	540	1.0	500	540	81	
131-11-3	Dimethyl Phthalate	U	360	1.0	330	360	84	
606-20-2	2,6-Dinitrotoluene	U	360	1.0	330	360	85	
208-96-8	Acenaphthylene	U	360	1.0	330	360	76	
99-09-2	3-Nitroaniline	U	540	1.0	500	540	100	
83-32-9	Acenaphthene	J	86	1.0	330	360	70	
51-28-5	2,4-Dinitrophenol	U	1300	1.0	1200	1300	410	
132-64-9	Dibenzofuran	U	360	1.0	330	360	85	
100-02-7	4-Nitrophenol	U	1300	1.0	1200	1300	330	
121-14-2	2,4-Dinitrotoluene	U	360	1.0	330	360	92	
84-66-2	Diethylphthalate	U	360	1.0	330	360	86	
7005-72-3	4-Chlorophenyl-phenylether	U	360	1.0	330	360	84	
100-01-6	4-Nitroaniline	U	540	1.0	500	540	140	
534-52-1	4,6-Dinitro-2-Methylphenol	U	1300	1.0	1200	1300	360	
86-30-6	N-Nitrosodiphenylamine	U	710	1.0	660	710	240	
101-55-3	4-Bromophenyl-phenylether	U	360	1.0	330	360	92	
1912-24-9	Atrazine	U	360	1.0	330	360	98	
87-86-5	Pentachlorophenol	U	890	1.0	820	890	260	
120-12-7	Anthracene	U	360	1.0	330	360	91	
86-74-8	Carbazole	U	540	1.0	500	540	120	

lew
4/16/09

KATAHDIN ANALYTICAL SERVICES
Report of Analytical Results

Client: CH2MHill
Project: TO-009 Lejeune
PO No:
Sample Date: 01/12/09
Received Date: 01/14/09
Extraction Date: 01/19/09
Analysis Date: 31-JAN-2009 17:29
Report Date: 02/06/2009
Matrix: SOIL
% Solids: 92.4

Lab ID: SC0177-5
Client ID: MR08-SS296-09A
SDG: TO9-36
Extracted by: AC
Extraction Method: SW846 3550
Analyst: JCG
Analysis Method: SW846 8270C
Lab Prep Batch: WG59948
Units: ug/Kgdrywt

CAS#	Compound	Flags	Results	DF	PQL	Adj.PQL	Adj.MDL
84-74-2	Di-n-butylphthalate	U	360	1.0	330	360	110
85-68-7	Butylbenzylphthalate	U	360	1.0	330	360	100
91-94-1	3,3'-Dichlorobenzidine	U	540	1.0	500	540	120
218-01-9	Chrysene	J	170	1.0	330	360	100
117-81-7	bis(2-Ethylhexyl)phthalate	J	140	1.0	330	360	110
117-84-0	Di-n-octylphthalate	U	360	1.0	330	360	230
367-12-4	2-Fluorophenol		69%				
13127-88-3	Phenol-D6		81%				
4165-60-0	Nitrobenzene-D5		64%				
321-60-8	2-Fluorobiphenyl		70%				
118-79-6	2,4,6-Tribromophenol		75%				
1718-51-0	Terphenyl-D14		84%				

lw
4/16/09

4

KATAHDIN ANALYTICAL SERVICES
Report of Analytical Results

Client: CH2MHill
Project: TO-009 Lejeune
PO No:
Sample Date: 01/12/09
Received Date: 01/14/09
Extraction Date: 01/19/09
Analysis Date: 31-JAN-2009 18:11
Report Date: 02/06/2009
Matrix: SOIL
% Solids: 90.5

Lab ID: SC0177-7
Client ID: MR08-IS296-5-6-09A
SDG: TO9-36
Extracted by: AC
Extraction Method: SW846 3550
Analyst: JCG
Analysis Method: SW846 8270C
Lab Prep Batch: WG59948
Units: ug/Kgdrywt

CAS#	Compound	Flags	Results	DF	PQL	Adj.PQL	Adj.MDL
100-52-7	Benzaldehyde	~~U~~ UJ	550	1.0	500	550	130 CLH
108-95-2	Phenol	U	550	1.0	500	550	170
111-44-4	Bis(2-Chloroethyl)ether	U	360	1.0	330	360	89
95-57-8	2-Chlorophenol	U	550	1.0	500	550	180
95-48-7	2-Methylphenol	U	660	1.0	600	660	220
108-60-1	2,2'-Oxybis(1-chloropropane)	U	360	1.0	330	360	98
98-86-2	Acetophenone	U	660	1.0	600	660	200
621-64-7	N-Nitroso-di-n-propylamine	U	360	1.0	330	360	92
65794-96-9	3&4-Methylphenol	U	660	1.0	600	660	210
67-72-1	Hexachloroethane	U	360	1.0	330	360	110
98-95-3	Nitrobenzene	U	360	1.0	330	360	100
78-59-1	Isophorone	U	360	1.0	330	360	83
88-75-5	2-Nitrophenol	U	660	1.0	600	660	180
105-67-9	2,4-Dimethylphenol	U	550	1.0	500	550	180
111-91-1	Bis(2-Chloroethoxy)methane	U	360	1.0	330	360	110
120-83-2	2,4-Dichlorophenol	U	550	1.0	500	550	160
106-47-8	4-Chloroaniline	U	550	1.0	500	550	130
105-60-2	Caprolactam	U	550	1.0	500	550	160
59-50-7	4-Chloro-3-Methylphenol	U	550	1.0	500	550	180
88-06-2	2,4,6-Trichlorophenol	U	550	1.0	500	550	170
95-95-4	2,4,5-Trichlorophenol	U	550	1.0	500	550	170
91-58-7	2-Chloronaphthalene	U	360	1.0	330	360	96
92-52-4	1,1'-Biphenyl	U	360	1.0	330	360	81
88-74-4	2-Nitroaniline	U	550	1.0	500	550	83
131-11-3	Dimethyl Phthalate	U	360	1.0	330	360	86
606-20-2	2,6-Dinitrotoluene	U	360	1.0	330	360	87
208-96-8	Acenaphthylene	U	360	1.0	330	360	77
99-09-2	3-Nitroaniline	U	550	1.0	500	550	100
83-32-9	Acenaphthene	U	360	1.0	330	360	72
51-28-5	2,4-Dinitrophenol	U	1300	1.0	1200	1300	420
132-64-9	Dibenzofuran	U	360	1.0	330	360	87
100-02-7	4-Nitrophenol	U	1300	1.0	1200	1300	340
121-14-2	2,4-Dinitrotoluene	U	360	1.0	330	360	94
84-66-2	Diethylphthalate	U	360	1.0	330	360	88
7005-72-3	4-Chlorophenyl-phenylether	U	360	1.0	330	360	86
100-01-6	4-Nitroaniline	U	550	1.0	500	550	150
534-52-1	4,6-Dinitro-2-Methylphenol	U	1300	1.0	1200	1300	370
86-30-6	N-Nitrosodiphenylamine	U	730	1.0	660	730	240
101-55-3	4-Bromophenyl-phenylether	U	360	1.0	330	360	94
1912-24-9	Atrazine	U	360	1.0	330	360	100
87-86-5	Pentachlorophenol	U	900	1.0	820	900	260
120-12-7	Anthracene	U	360	1.0	330	360	93
86-74-8	Carbazole	U	550	1.0	500	550	120

lw 4/14/09

4

KATAHDIN ANALYTICAL SERVICES
Report of Analytical Results

Client: CH2MHill
Project: TO-009 Lejeune
PO No:
Sample Date: 01/12/09
Received Date: 01/14/09
Extraction Date: 01/19/09
Analysis Date: 31-JAN-2009 18:11
Report Date: 02/06/2009
Matrix: SOIL
% Solids: 90.5

Lab ID: SC0177-7
Client ID: MR08-IS296-5-6-09A
SDG: TO9-36
Extracted by: AC
Extraction Method: SW846 3550
Analyst: JCG
Analysis Method: SW846 8270C
Lab Prep Batch: WG59948
Units: ug/Kgdrywt

CAS#	Compound	Flags	Results	DF	PQL	Adj.PQL	Adj.MDL
84-74-2	Di-n-butylphthalate	U	360	1.0	330	360	110
85-68-7	Butylbenzylphthalate	U	360	1.0	330	360	100
91-94-1	3,3'-Dichlorobenzidine	U	550	1.0	500	550	120
218-01-9	Chrysene	U	360	1.0	330	360	100
117-81-7	bis(2-Ethylhexyl)phthalate	J	120	1.0	330	360	110
117-84-0	Di-n-octylphthalate	U	360	1.0	330	360	230
367-12-4	2-Fluorophenol		74%				
13127-88-3	Phenol-D6		82%				
4165-60-0	Nitrobenzene-D5		68%				
321-60-8	2-Fluorobiphenyl		62%				
118-79-6	2,4,6-Tribromophenol		68%				
1718-51-0	Terphenyl-D14		100%				

lw
4/16/09

5

KATAHDIN ANALYTICAL SERVICES
Report of Analytical Results

Client: CH2MHill
Project: TO-009 Lejeune
PO No:
Sample Date: 01/12/09
Received Date: 01/14/09
Extraction Date: 01/19/09
Analysis Date: 31-JAN-2009 20:16
Report Date: 02/06/2009
Matrix: SOIL
% Solids: 93.5

Lab ID: SC0177-9
Client ID: MR08-SS300-09A
SDG: TO9-36
Extracted by: AC
Extraction Method: SW846 3550
Analyst: JCG
Analysis Method: SW846 8270C
Lab Prep Batch: WG59948
Units: ug/Kgdrywt

CAS#	Compound	Flags	Results	DF	PQL	Adj.PQL	Adj.MDL
100-52-7	Benzaldehyde	~~U~~ UJ	530	1.0	500	530	130 CCH
108-95-2	Phenol	U	530	1.0	500	530	170
111-44-4	Bis(2-Chloroethyl)ether	U	350	1.0	330	350	87
95-57-8	2-Chlorophenol	U	530	1.0	500	530	180
95-48-7	2-Methylphenol	U	640	1.0	600	640	210
108-60-1	2,2'-Oxybis(1-chloropropane)	U	350	1.0	330	350	95
98-86-2	Acetophenone	U	640	1.0	600	640	190
621-64-7	N-Nitroso-di-n-propylamine	U	350	1.0	330	350	89
65794-96-9	3&4-Methylphenol	U	640	1.0	600	640	200
67-72-1	Hexachloroethane	U	350	1.0	330	350	100
98-95-3	Nitrobenzene	U	350	1.0	330	350	97
78-59-1	Isophorone	U	350	1.0	330	350	80
88-75-5	2-Nitrophenol	U	640	1.0	600	640	180
105-67-9	2,4-Dimethylphenol	U	530	1.0	500	530	180
111-91-1	Bis(2-Chloroethoxy)methane	U	350	1.0	330	350	100
120-83-2	2,4-Dichlorophenol	U	530	1.0	500	530	160
106-47-8	4-Chloroaniline	U	530	1.0	500	530	130
105-60-2	Caprolactam	U	530	1.0	500	530	150
59-50-7	4-Chloro-3-Methylphenol	U	530	1.0	500	530	180
88-06-2	2,4,6-Trichlorophenol	U	530	1.0	500	530	160
95-95-4	2,4,5-Trichlorophenol	U	530	1.0	500	530	160
91-58-7	2-Chloronaphthalene	U	350	1.0	330	350	93
92-52-4	1,1'-Biphenyl	U	350	1.0	330	350	78
88-74-4	2-Nitroaniline	U	530	1.0	500	530	80
131-11-3	Dimethyl Phthalate	U	350	1.0	330	350	83
606-20-2	2,6-Dinitrotoluene	U	350	1.0	330	350	84
208-96-8	Acenaphthylene	U	350	1.0	330	350	75
99-09-2	3-Nitroaniline	U	530	1.0	500	530	100
83-32-9	Acenaphthene	J	86	1.0	330	350	70
51-28-5	2,4-Dinitrophenol	U	1300	1.0	1200	1300	400
132-64-9	Dibenzofuran	U	350	1.0	330	350	84
100-02-7	4-Nitrophenol	U	1300	1.0	1200	1300	330
121-14-2	2,4-Dinitrotoluene	U	350	1.0	330	350	91
84-66-2	Diethylphthalate	U	350	1.0	330	350	86
7005-72-3	4-Chlorophenyl-phenylether	U	350	1.0	330	350	83
100-01-6	4-Nitroaniline	U	530	1.0	500	530	140
534-52-1	4,6-Dinitro-2-Methylphenol	U	1300	1.0	1200	1300	360
86-30-6	N-Nitrosodiphenylamine	U	700	1.0	660	700	230
101-55-3	4-Bromophenyl-phenylether	U	350	1.0	330	350	91
1912-24-9	Atrazine	U	350	1.0	330	350	97
87-86-5	Pentachlorophenol	U	880	1.0	820	880	250
120-12-7	Anthracene	U	350	1.0	330	350	90
86-74-8	Carbazole	U	530	1.0	500	530	120

RW 4/16/09

5

KATAHDIN ANALYTICAL SERVICES
Report of Analytical Results

Client: CH2MHill
Project: TO-009 Lejeune
PO No:
Sample Date: 01/12/09
Received Date: 01/14/09
Extraction Date: 01/19/09
Analysis Date: 31-JAN-2009 20:16
Report Date: 02/06/2009
Matrix: SOIL
% Solids: 93.5

Lab ID: SC0177-9
Client ID: MR08-SS300-09A
SDG: TO9-36
Extracted by: AC
Extraction Method: SW846 3550
Analyst: JCG
Analysis Method: SW846 8270C
Lab Prep Batch: WG59948
Units: ug/Kgdrywt

CAS#	Compound	Flags	Results	DF	PQL	Adj.PQL	Adj.MDL
84-74-2	Di-n-butylphthalate	U	350	1.0	330	350	110
85-68-7	Butylbenzylphthalate	U	350	1.0	330	350	99
91-94-1	3,3'-Dichlorobenzidine	U	530	1.0	500	530	120
218-01-9	Chrysene	U	350	1.0	330	350	100
117-81-7	bis(2-Ethylhexyl)phthalate	J	200	1.0	330	350	100
117-84-0	Di-n-octylphthalate	U	350	1.0	330	350	220
367-12-4	2-Fluorophenol		74%				
13127-88-3	Phenol-D6		84%				
4165-60-0	Nitrobenzene-D5		68%				
321-60-8	2-Fluorobiphenyl		75%				
118-79-6	2,4,6-Tribromophenol		69%				
1718-51-0	Terphenyl-D14		83%				

lw 4/16/09

KATAHDIN ANALYTICAL SERVICES
Report of Analytical Results

6

Client: CH2MHill
Project: TO-009 Lejeune
PO No:
Sample Date: 01/12/09
Received Date: 01/14/09
Extraction Date: 01/19/09
Analysis Date: 31-JAN-2009 18:52
Report Date: 02/06/2009
Matrix: SOIL
% Solids: 88.5

Lab ID: SC0177-11
Client ID: MR08-IS300-8-9-09A
SDG: TO9-36
Extracted by: AC
Extraction Method: SW846 3550
Analyst: JCG
Analysis Method: SW846 8270C
Lab Prep Batch: WG59948
Units: ug/Kgdrywt

CAS#	Compound	Flags	Results	DF	PQL	Adj.PQL	Adj.MDL
100-52-7	Benzaldehyde	~~U~~ UJ	560	1.0	500	560	140 CCH
108-95-2	Phenol	U	560	1.0	500	560	180
111-44-4	Bis(2-Chloroethyl)ether	U	370	1.0	330	370	92
95-57-8	2-Chlorophenol	U	560	1.0	500	560	180
95-48-7	2-Methylphenol	U	680	1.0	600	680	220
108-60-1	2,2'-Oxybis(1-chloropropane)	U	370	1.0	330	370	100
98-86-2	Acetophenone	U	680	1.0	600	680	200
621-64-7	N-Nitroso-di-n-propylamine	U	370	1.0	330	370	94
65794-96-9	3&4-Methylphenol	U	680	1.0	600	680	210
67-72-1	Hexachloroethane	U	370	1.0	330	370	110
98-95-3	Nitrobenzene	U	370	1.0	330	370	100
78-59-1	Isophorone	U	370	1.0	330	370	85
88-75-5	2-Nitrophenol	U	680	1.0	600	680	190
105-67-9	2,4-Dimethylphenol	U	560	1.0	500	560	190
111-91-1	Bis(2-Chloroethoxy)methane	U	370	1.0	330	370	110
120-83-2	2,4-Dichlorophenol	U	560	1.0	500	560	170
106-47-8	4-Chloroaniline	U	560	1.0	500	560	130
105-60-2	Caprolactam	U	560	1.0	500	560	160
59-50-7	4-Chloro-3-Methylphenol	U	560	1.0	500	560	190
88-06-2	2,4,6-Trichlorophenol	U	560	1.0	500	560	180
95-95-4	2,4,5-Trichlorophenol	U	560	1.0	500	560	180
91-58-7	2-Chloronaphthalene	U	370	1.0	330	370	98
92-52-4	1,1'-Biphenyl	U	370	1.0	330	370	82
88-74-4	2-Nitroaniline	U	560	1.0	500	560	85
131-11-3	Dimethyl Phthalate	U	370	1.0	330	370	88
606-20-2	2,6-Dinitrotoluene	U	370	1.0	330	370	89
208-96-8	Acenaphthylene	U	370	1.0	330	370	79
99-09-2	3-Nitroaniline	U	560	1.0	500	560	110
83-32-9	Acenaphthene	U	370	1.0	330	370	73
51-28-5	2,4-Dinitrophenol	U	1400	1.0	1200	1400	420
132-64-9	Dibenzofuran	U	370	1.0	330	370	89
100-02-7	4-Nitrophenol	U	1400	1.0	1200	1400	350
121-14-2	2,4-Dinitrotoluene	U	370	1.0	330	370	96
84-66-2	Diethylphthalate	U	370	1.0	330	370	90
7005-72-3	4-Chlorophenyl-phenylether	U	370	1.0	330	370	88
100-01-6	4-Nitroaniline	U	560	1.0	500	560	150
534-52-1	4,6-Dinitro-2-Methylphenol	U	1400	1.0	1200	1400	380
86-30-6	N-Nitrosodiphenylamine	U	740	1.0	660	740	250
101-55-3	4-Bromophenyl-phenylether	U	370	1.0	330	370	96
1912-24-9	Atrazine	U	370	1.0	330	370	100
87-86-5	Pentachlorophenol	U	930	1.0	820	930	270
120-12-7	Anthracene	U	370	1.0	330	370	95
86-74-8	Carbazole	U	560	1.0	500	560	120

lw 4/16/09

6

KATAHDIN ANALYTICAL SERVICES
Report of Analytical Results

Client: CH2MHill
Project: TO-009 Lejeune
PO No:
Sample Date: 01/12/09
Received Date: 01/14/09
Extraction Date: 01/19/09
Analysis Date: 31-JAN-2009 18:52
Report Date: 02/06/2009
Matrix: SOIL
% Solids: 88.5

Lab ID: SC0177-11
Client ID: MR08-IS300-8-9-09A
SDG: TO9-36
Extracted by: AC
Extraction Method: SW846 3550
Analyst: JCG
Analysis Method: SW846 8270C
Lab Prep Batch: WG59948
Units: ug/Kgdrywt

CAS#	Compound	Flags	Results	DF	PQL	Adj.PQL	Adj.MDL
84-74-2	Di-n-butylphthalate	U	370	1.0	330	370	110
85-68-7	Butylbenzylphthalate	U	370	1.0	330	370	100
91-94-1	3,3'-Dichlorobenzidine	U	560	1.0	500	560	130
218-01-9	Chrysene	U	370	1.0	330	370	110
117-81-7	bis(2-Ethylhexyl)phthalate	U	370	1.0	330	370	110
117-84-0	Di-n-octylphthalate	U	370	1.0	330	370	240
367-12-4	2-Fluorophenol		74%				
13127-88-3	Phenol-D6		82%				
4165-60-0	Nitrobenzene-D5		72%				
321-60-8	2-Fluorobiphenyl		68%				
118-79-6	2,4,6-Tribromophenol		69%				
1718-51-0	Terphenyl-D14		93%				

JCW 4/16/09

7

KATAHDIN ANALYTICAL SERVICES
Report of Analytical Results

Client: CH2MHill
Project: TO-009 Lejeune
PO No:
Sample Date: 01/12/09
Received Date: 01/14/09
Extraction Date: 01/19/09
Analysis Date: 31-JAN-2009 19:34
Report Date: 02/06/2009
Matrix: SOIL
% Solids: 96.2

Lab ID: SC0177-13
Client ID: MR08-SS301-09A
SDG: TO9-36
Extracted by: AC
Extraction Method: SW846 3550
Analyst: JCG
Analysis Method: SW846 8270C
Lab Prep Batch: WG59948
Units: ug/Kgdrywt

CAS#	Compound	Flags	Results	DF	PQL	Adj.PQL	Adj.MDL
100-52-7	Benzaldehyde	~~U~~ UJ	520	1.0	500	520	120 CEH
108-95-2	Phenol	U	520	1.0	500	520	160
111-44-4	Bis(2-Chloroethyl)ether	U	340	1.0	330	340	84
95-57-8	2-Chlorophenol	U	520	1.0	500	520	170
95-48-7	2-Methylphenol	U	620	1.0	600	620	210
108-60-1	2,2'-Oxybis(1-chloropropane)	U	340	1.0	330	340	92
98-86-2	Acetophenone	U	620	1.0	600	620	180
621-64-7	N-Nitroso-di-n-propylamine	U	340	1.0	330	340	86
65794-96-9	3&4-Methylphenol	U	620	1.0	600	620	190
67-72-1	Hexachloroethane	U	340	1.0	330	340	100
98-95-3	Nitrobenzene	U	340	1.0	330	340	94
78-59-1	Isophorone	U	340	1.0	330	340	78
88-75-5	2-Nitrophenol	U	620	1.0	600	620	170
105-67-9	2,4-Dimethylphenol	U	520	1.0	500	520	170
111-91-1	Bis(2-Chloroethoxy)methane	U	340	1.0	330	340	100
120-83-2	2,4-Dichlorophenol	U	520	1.0	500	520	160
106-47-8	4-Chloroaniline	U	520	1.0	500	520	120
105-60-2	Caprolactam	U	520	1.0	500	520	150
59-50-7	4-Chloro-3-Methylphenol	U	520	1.0	500	520	170
88-06-2	2,4,6-Trichlorophenol	U	520	1.0	500	520	160
95-95-4	2,4,5-Trichlorophenol	U	520	1.0	500	520	160
91-58-7	2-Chloronaphthalene	U	340	1.0	330	340	90
92-52-4	1,1'-Biphenyl	U	340	1.0	330	340	76
88-74-4	2-Nitroaniline	U	520	1.0	500	520	78
131-11-3	Dimethyl Phthalate	U	340	1.0	330	340	81
606-20-2	2,6-Dinitrotoluene	U	340	1.0	330	340	82
208-96-8	Acenaphthylene	U	340	1.0	330	340	73
99-09-2	3-Nitroaniline	U	520	1.0	500	520	98
83-32-9	Acenaphthene	J	100	1.0	330	340	68
51-28-5	2,4-Dinitrophenol	U	1200	1.0	1200	1200	390
132-64-9	Dibenzofuran	U	340	1.0	330	340	82
100-02-7	4-Nitrophenol	U	1200	1.0	1200	1200	320
121-14-2	2,4-Dinitrotoluene	U	340	1.0	330	340	88
84-66-2	Diethylphthalate	U	340	1.0	330	340	83
7005-72-3	4-Chlorophenyl-phenylether	U	340	1.0	330	340	81
100-01-6	4-Nitroaniline	U	520	1.0	500	520	140
534-52-1	4,6-Dinitro-2-Methylphenol	U	1200	1.0	1200	1200	350
86-30-6	N-Nitrosodiphenylamine	U	680	1.0	660	680	230
101-55-3	4-Bromophenyl-phenylether	U	340	1.0	330	340	88
1912-24-9	Atrazine	U	340	1.0	330	340	94
87-86-5	Pentachlorophenol	U	850	1.0	820	850	250
120-12-7	Anthracene	U	340	1.0	330	340	87
86-74-8	Carbazole	U	520	1.0	500	520	120

RW 4/16/09

7

KATAHDIN ANALYTICAL SERVICES
Report of Analytical Results

Client: CH2MHill
Project: TO-009 Lejeune
PO No:
Sample Date: 01/12/09
Received Date: 01/14/09
Extraction Date: 01/19/09
Analysis Date: 31-JAN-2009 19:34
Report Date: 02/06/2009
Matrix: SOIL
% Solids: 96.2

Lab ID: SC0177-13
Client ID: MR08-SS301-09A
SDG: TO9-36
Extracted by: AC
Extraction Method: SW846 3550
Analyst: JCG
Analysis Method: SW846 8270C
Lab Prep Batch: WG59948
Units: ug/Kgdrywt

CAS#	Compound	Flags	Results	DF	PQL	Adj.PQL	Adj.MDL
84-74-2	Di-n-butylphthalate	U	340	1.0	330	340	100
85-68-7	Butylbenzylphthalate	U	340	1.0	330	340	97
91-94-1	3,3'-Dichlorobenzidine	U	520	1.0	500	520	120
218-01-9	Chrysene		510	1.0	330	340	99
117-81-7	bis(2-Ethylhexyl)phthalate		790	1.0	330	340	100
117-84-0	Di-n-octylphthalate	U	340	1.0	330	340	220
367-12-4	2-Fluorophenol		73%				
13127-88-3	Phenol-D6		89%				
4165-60-0	Nitrobenzene-D5		68%				
321-60-8	2-Fluorobiphenyl		92%				
118-79-6	2,4,6-Tribromophenol		71%				
1718-51-0	Terphenyl-D14		90%				

RW 4/16/09

8

KATAHDIN ANALYTICAL SERVICES
Report of Analytical Results

Client: CH2MHill
Project: TO-009 Lejeune
PO No:
Sample Date: 01/12/09
Received Date: 01/14/09
Extraction Date: 01/19/09
Analysis Date: 31-JAN-2009 20:58
Report Date: 02/06/2009
Matrix: SOIL
% Solids: 93.9

Lab ID: SC0177-15
Client ID: MR08-IS301-7-8-09A
SDG: TO9-36
Extracted by: AC
Extraction Method: SW846 3550
Analyst: JCG
Analysis Method: SW846 8270C
Lab Prep Batch: WG59948
Units: ug/Kgdrywt

CAS#	Compound	Flags	Results	DF	PQL	Adj.PQL	Adj.MDL
100-52-7	Benzaldehyde	~~U~~ UJ	530	1.0	500	530	130 CCH
108-95-2	Phenol	U	530	1.0	500	530	170
111-44-4	Bis(2-Chloroethyl)ether	U	350	1.0	330	350	86
95-57-8	2-Chlorophenol	U	530	1.0	500	530	170
95-48-7	2-Methylphenol	U	640	1.0	600	640	210
108-60-1	2,2'-Oxybis(1-chloropropane)	U	350	1.0	330	350	95
98-86-2	Acetophenone	U	640	1.0	600	640	190
621-64-7	N-Nitroso-di-n-propylamine	U	350	1.0	330	350	88
65794-96-9	3&4-Methylphenol	U	640	1.0	600	640	200
67-72-1	Hexachloroethane	U	350	1.0	330	350	100
98-95-3	Nitrobenzene	U	350	1.0	330	350	97
78-59-1	Isophorone	U	350	1.0	330	350	80
88-75-5	2-Nitrophenol	U	640	1.0	600	640	180
105-67-9	2,4-Dimethylphenol	U	530	1.0	500	530	180
111-91-1	Bis(2-Chloroethoxy)methane	U	350	1.0	330	350	100
120-83-2	2,4-Dichlorophenol	U	530	1.0	500	530	160
106-47-8	4-Chloroaniline	U	530	1.0	500	530	130
105-60-2	Caprolactam	U	530	1.0	500	530	150
59-50-7	4-Chloro-3-Methylphenol	U	530	1.0	500	530	180
88-06-2	2,4,6-Trichlorophenol	U	530	1.0	500	530	160
95-95-4	2,4,5-Trichlorophenol	U	530	1.0	500	530	160
91-58-7	2-Chloronaphthalene	U	350	1.0	330	350	93
92-52-4	1,1'-Biphenyl	U	350	1.0	330	350	78
88-74-4	2-Nitroaniline	U	530	1.0	500	530	80
131-11-3	Dimethyl Phthalate	U	350	1.0	330	350	83
606-20-2	2,6-Dinitrotoluene	U	350	1.0	330	350	84
208-96-8	Acenaphthylene	U	350	1.0	330	350	74
99-09-2	3-Nitroaniline	U	530	1.0	500	530	100
83-32-9	Acenaphthene	U	350	1.0	330	350	69
51-28-5	2,4-Dinitrophenol	U	1300	1.0	1200	1300	400
132-64-9	Dibenzofuran	U	350	1.0	330	350	84
100-02-7	4-Nitrophenol	U	1300	1.0	1200	1300	330
121-14-2	2,4-Dinitrotoluene	U	350	1.0	330	350	90
84-66-2	Diethylphthalate	U	350	1.0	330	350	85
7005-72-3	4-Chlorophenyl-phenylether	U	350	1.0	330	350	83
100-01-6	4-Nitroaniline	U	530	1.0	500	530	140
534-52-1	4,6-Dinitro-2-Methylphenol	U	1300	1.0	1200	1300	360
86-30-6	N-Nitrosodiphenylamine	U	700	1.0	660	700	230
101-55-3	4-Bromophenyl-phenylether	U	350	1.0	330	350	90
1912-24-9	Atrazine	U	350	1.0	330	350	97
87-86-5	Pentachlorophenol	U	870	1.0	820	870	250
120-12-7	Anthracene	U	350	1.0	330	350	89
86-74-8	Carbazole	U	530	1.0	500	530	120

lew
4/16/09

8

KATAHDIN ANALYTICAL SERVICES
Report of Analytical Results

Client: CH2MHill
Project: TO-009 Lejeune
PO No:
Sample Date: 01/12/09
Received Date: 01/14/09
Extraction Date: 01/19/09
Analysis Date: 31-JAN-2009 20:58
Report Date: 02/06/2009
Matrix: SOIL
% Solids: 93.9

Lab ID: SC0177-15
Client ID: MR08-IS301-7-8-09A
SDG: TO9-36
Extracted by: AC
Extraction Method: SW846 3550
Analyst: JCG
Analysis Method: SW846 8270C
Lab Prep Batch: WG59948
Units: ug/Kgdrywt

CAS#	Compound	Flags	Results	DF	PQL	Adj.PQL	Adj.MDL
84-74-2	Di-n-butylphthalate	U	350	1.0	330	350	110
85-68-7	Butylbenzylphthalate	U	350	1.0	330	350	99
91-94-1	3,3'-Dichlorobenzidine	U	530	1.0	500	530	120
218-01-9	Chrysene	U	350	1.0	330	350	100
117-81-7	bis(2-Ethylhexyl)phthalate	U	350	1.0	330	350	100
117-84-0	Di-n-octylphthalate	U	350	1.0	330	350	220
367-12-4	2-Fluorophenol		69%				
13127-88-3	Phenol-D6		79%				
4165-60-0	Nitrobenzene-D5		66%				
321-60-8	2-Fluorobiphenyl		66%				
118-79-6	2,4,6-Tribromophenol		53%				
1718-51-0	Terphenyl-D14		87%				

lw 4/16/09

9

KATAHDIN ANALYTICAL SERVICES
Report of Analytical Results

Client: CH2MHill
Project: TO-009 Lejeune
PO No:
Sample Date: 01/12/09
Received Date: 01/14/09
Extraction Date: 01/19/09
Analysis Date: 02-FEB-2009 03:20
Report Date: 02/06/2009
Matrix: SOIL
% Solids: 95.0

Lab ID: SC0177-17
Client ID: MR08-SS302-09A
SDG: TO9-36
Extracted by: AC
Extraction Method: SW846 3550
Analyst: JLP
Analysis Method: SW846 8270C
Lab Prep Batch: WG59948
Units: ug/Kgdrywt

CAS#	Compound	Flags	Results	DF	PQL	Adj.PQL	Adj.MDL
100-52-7	Benzaldehyde	~~U~~ UJ	530	1.0	500	530	130 CCH
108-95-2	Phenol	U	530	1.0	500	530	160
111-44-4	Bis(2-Chloroethyl)ether	U	350	1.0	330	350	85
95-57-8	2-Chlorophenol	U	530	1.0	500	530	170
95-48-7	2-Methylphenol	U	630	1.0	600	630	210
108-60-1	2,2'-Oxybis(1-chloropropane)	U	350	1.0	330	350	94
98-86-2	Acetophenone	U	630	1.0	600	630	190
621-64-7	N-Nitroso-di-n-propylamine	U	350	1.0	330	350	87
65794-96-9	3&4-Methylphenol	U	630	1.0	600	630	200
67-72-1	Hexachloroethane	U	350	1.0	330	350	100
98-95-3	Nitrobenzene	U	350	1.0	330	350	96
78-59-1	Isophorone	U	350	1.0	330	350	79
88-75-5	2-Nitrophenol	U	630	1.0	600	630	180
105-67-9	2,4-Dimethylphenol	U	530	1.0	500	530	170
111-91-1	Bis(2-Chloroethoxy)methane	U	350	1.0	330	350	100
120-83-2	2,4-Dichlorophenol	U	530	1.0	500	530	160
106-47-8	4-Chloroaniline	U	530	1.0	500	530	120
105-60-2	Caprolactam	U	530	1.0	500	530	150
59-50-7	4-Chloro-3-Methylphenol	U	530	1.0	500	530	170
88-06-2	2,4,6-Trichlorophenol	U	530	1.0	500	530	160
95-95-4	2,4,5-Trichlorophenol	U	530	1.0	500	530	160
91-58-7	2-Chloronaphthalene	U	350	1.0	330	350	92
92-52-4	1,1'-Biphenyl	U	350	1.0	330	350	77
88-74-4	2-Nitroaniline	U	530	1.0	500	530	79
131-11-3	Dimethyl Phthalate	U	350	1.0	330	350	82
606-20-2	2,6-Dinitrotoluene	U	350	1.0	330	350	83
208-96-8	Acenaphthylene	U	350	1.0	330	350	74
99-09-2	3-Nitroaniline	U	530	1.0	500	530	99
83-32-9	Acenaphthene	U	350	1.0	330	350	68
51-28-5	2,4-Dinitrophenol	U	1300	1.0	1200	1300	400
132-64-9	Dibenzofuran	U	350	1.0	330	350	83
100-02-7	4-Nitrophenol	U	1300	1.0	1200	1300	320
121-14-2	2,4-Dinitrotoluene	U	350	1.0	330	350	89
84-66-2	Diethylphthalate	U	350	1.0	330	350	84
7005-72-3	4-Chlorophenyl-phenylether	U	350	1.0	330	350	82
100-01-6	4-Nitroaniline	U	530	1.0	500	530	140
534-52-1	4,6-Dinitro-2-Methylphenol	U	1300	1.0	1200	1300	350
86-30-6	N-Nitrosodiphenylamine	U	690	1.0	660	690	230
101-55-3	4-Bromophenyl-phenylether	U	350	1.0	330	350	89
1912-24-9	Atrazine	U	350	1.0	330	350	96
87-86-5	Pentachlorophenol	U	860	1.0	820	860	250
120-12-7	Anthracene	U	350	1.0	330	350	88
86-74-8	Carbazole	U	530	1.0	500	530	120

LW 4/16/09

KATAHDIN ANALYTICAL SERVICES
Report of Analytical Results

Client: CH2MHill
Project: TO-009 Lejeune
PO No:
Sample Date: 01/12/09
Received Date: 01/14/09
Extraction Date: 01/19/09
Analysis Date: 02-FEB-2009 03:20
Report Date: 02/06/2009
Matrix: SOIL
% Solids: 95.0

Lab ID: SC0177-17
Client ID: MR08-SS302-09A
SDG: TO9-36
Extracted by: AC
Extraction Method: SW846 3550
Analyst: JLP
Analysis Method: SW846 8270C
Lab Prep Batch: WG59948
Units: ug/Kgdrywt

CAS#	Compound	Flags	Results	DF	PQL	Adj.PQL	Adj.MDL
84-74-2	Di-n-butylphthalate	U	350	1.0	330	350	110
85-68-7	Butylbenzylphthalate	U	350	1.0	330	350	98
91-94-1	3,3'-Dichlorobenzidine	U	530	1.0	500	530	120
218-01-9	Chrysene	J	100	1.0	330	350	100
117-81-7	bis(2-Ethylhexyl)phthalate		630	1.0	330	350	100
117-84-0	Di-n-octylphthalate	U	350	1.0	330	350	220
367-12-4	2-Fluorophenol		62%				
13127-88-3	Phenol-D6		70%				
4165-60-0	Nitrobenzene-D5		55%				
321-60-8	2-Fluorobiphenyl		63%				
118-79-6	2,4,6-Tribromophenol		80%				
1718-51-0	Terphenyl-D14		80%				

lw
4/16/09

10

KATAHDIN ANALYTICAL SERVICES
Report of Analytical Results

Client: CH2MHill
Project: TO-009 Lejeune
PO No:
Sample Date: 01/12/09
Received Date: 01/14/09
Extraction Date: 01/19/09
Analysis Date: 31-JAN-2009 21:40
Report Date: 02/06/2009
Matrix: SOIL
% Solids: 87.8

Lab ID: SC0177-19
Client ID: MR08-IS302-8-9-09A
SDG: TO9-36
Extracted by: AC
Extraction Method: SW846 3550
Analyst: JCG
Analysis Method: SW846 8270C
Lab Prep Batch: WG59948
Units: ug/Kgdrywt

CAS#	Compound	Flags	Results	DF	PQL	Adj.PQL	Adj.MDL
100-52-7	Benzaldehyde	~~U~~ UJ	570	1.0	500	570	140 CCH
108-95-2	Phenol	U	570	1.0	500	570	180
111-44-4	Bis(2-Chloroethyl)ether	U	380	1.0	330	380	92
95-57-8	2-Chlorophenol	U	570	1.0	500	570	190
95-48-7	2-Methylphenol	U	680	1.0	600	680	230
108-60-1	2,2'-Oxybis(1-chloropropane)	U	380	1.0	330	380	100
98-86-2	Acetophenone	U	680	1.0	600	680	200
621-64-7	N-Nitroso-di-n-propylamine	U	380	1.0	330	380	94
65794-96-9	3&4-Methylphenol	U	680	1.0	600	680	210
67-72-1	Hexachloroethane	U	380	1.0	330	380	110
98-95-3	Nitrobenzene	U	380	1.0	330	380	100
78-59-1	Isophorone	U	380	1.0	330	380	85
88-75-5	2-Nitrophenol	U	680	1.0	600	680	190
105-67-9	2,4-Dimethylphenol	U	570	1.0	500	570	190
111-91-1	Bis(2-Chloroethoxy)methane	U	380	1.0	330	380	110
120-83-2	2,4-Dichlorophenol	U	570	1.0	500	570	170
106-47-8	4-Chloroaniline	U	570	1.0	500	570	140
105-60-2	Caprolactam	U	570	1.0	500	570	160
59-50-7	4-Chloro-3-Methylphenol	U	570	1.0	500	570	190
88-06-2	2,4,6-Trichlorophenol	U	570	1.0	500	570	180
95-95-4	2,4,5-Trichlorophenol	U	570	1.0	500	570	180
91-58-7	2-Chloronaphthalene	U	380	1.0	330	380	99
92-52-4	1,1'-Biphenyl	U	380	1.0	330	380	83
88-74-4	2-Nitroaniline	U	570	1.0	500	570	85
131-11-3	Dimethyl Phthalate	U	380	1.0	330	380	89
606-20-2	2,6-Dinitrotoluene	U	380	1.0	330	380	90
208-96-8	Acenaphthylene	U	380	1.0	330	380	80
99-09-2	3-Nitroaniline	U	570	1.0	500	570	110
83-32-9	Acenaphthene	U	380	1.0	330	380	74
51-28-5	2,4-Dinitrophenol	U	1400	1.0	1200	1400	430
132-64-9	Dibenzofuran	U	380	1.0	330	380	90
100-02-7	4-Nitrophenol	U	1400	1.0	1200	1400	350
121-14-2	2,4-Dinitrotoluene	U	380	1.0	330	380	97
84-66-2	Diethylphthalate	U	380	1.0	330	380	91
7005-72-3	4-Chlorophenyl-phenylether	U	380	1.0	330	380	89
100-01-6	4-Nitroaniline	U	570	1.0	500	570	150
534-52-1	4,6-Dinitro-2-Methylphenol	U	1400	1.0	1200	1400	380
86-30-6	N-Nitrosodiphenylamine	U	750	1.0	660	750	250
101-55-3	4-Bromophenyl-phenylether	U	380	1.0	330	380	97
1912-24-9	Atrazine	U	380	1.0	330	380	100
87-86-5	Pentachlorophenol	U	930	1.0	820	930	270
120-12-7	Anthracene	U	380	1.0	330	380	96
86-74-8	Carbazole	U	570	1.0	500	570	130

AW 4/16/09

KATAHDIN ANALYTICAL SERVICES
Report of Analytical Results

10

Client: CH2MHill
Project: TO-009 Lejeune
PO No:
Sample Date: 01/12/09
Received Date: 01/14/09
Extraction Date: 01/19/09
Analysis Date: 31-JAN-2009 21:40
Report Date: 02/06/2009
Matrix: SOIL
% Solids: 87.8

Lab ID: SC0177-19
Client ID: MR08-IS302-8-9-09A
SDG: TO9-36
Extracted by: AC
Extraction Method: SW846 3550
Analyst: JCG
Analysis Method: SW846 8270C
Lab Prep Batch: WG59948
Units: ug/Kgdrywt

CAS#	Compound	Flags	Results	DF	PQL	Adj.PQL	Adj.MDL
84-74-2	Di-n-butylphthalate	U	380	1.0	330	380	110
85-68-7	Butylbenzylphthalate	U	380	1.0	330	380	100
91-94-1	3,3'-Dichlorobenzidine	U	570	1.0	500	570	130
218-01-9	Chrysene	U	380	1.0	330	380	110
117-81-7	bis(2-Ethylhexyl)phthalate	U	380	1.0	330	380	110
117-84-0	Di-n-octylphthalate	U	380	1.0	330	380	240
367-12-4	2-Fluorophenol		70%				
13127-88-3	Phenol-D6		81%				
4165-60-0	Nitrobenzene-D5		67%				
321-60-8	2-Fluorobiphenyl		69%				
118-79-6	2,4,6-Tribromophenol		48%				
1718-51-0	Terphenyl-D14		92%				

lw
4/16/09

11

KATAHDIN ANALYTICAL SERVICES
Report of Analytical Results

Client: CH2MHill
Project: TO-009 Lejeune
PO No:
Sample Date: 01/12/09
Received Date: 01/14/09
Extraction Date: 01/19/09
Analysis Date: 02-FEB-2009 02:39
Report Date: 02/06/2009
Matrix: SOIL
% Solids: 87.7

Lab ID: SC0177-21
Client ID: MR08-SS303-09A
SDG: TO9-36
Extracted by: AC
Extraction Method: SW846 3550
Analyst: JLP
Analysis Method: SW846 8270C
Lab Prep Batch: WG59948
Units: ug/Kgdrywt

CAS#	Compound	Flags	Results	DF	PQL	Adj.PQL	Adj.MDL
100-52-7	Benzaldehyde	~~U~~ UJ	570	1.0	500	570	140 CCH
108-95-2	Phenol	U	570	1.0	500	570	180
111-44-4	Bis(2-Chloroethyl)ether	U	380	1.0	330	380	92
95-57-8	2-Chlorophenol	U	570	1.0	500	570	190
95-48-7	2-Methylphenol	U	680	1.0	600	680	230
108-60-1	2,2'-Oxybis(1-chloropropane)	U	380	1.0	330	380	100
98-86-2	Acetophenone	U	680	1.0	600	680	200
621-64-7	N-Nitroso-di-n-propylamine	U	380	1.0	330	380	95
65794-96-9	3&4-Methylphenol	U	680	1.0	600	680	210
67-72-1	Hexachloroethane	U	380	1.0	330	380	110
98-95-3	Nitrobenzene	U	380	1.0	330	380	100
78-59-1	Isophorone	U	380	1.0	330	380	86
88-75-5	2-Nitrophenol	U	680	1.0	600	680	190
105-67-9	2,4-Dimethylphenol	U	570	1.0	500	570	190
111-91-1	Bis(2-Chloroethoxy)methane	U	380	1.0	330	380	110
120-83-2	2,4-Dichlorophenol	U	570	1.0	500	570	170
106-47-8	4-Chloroaniline	U	570	1.0	500	570	140
105-60-2	Caprolactam	U	570	1.0	500	570	160
59-50-7	4-Chloro-3-Methylphenol	U	570	1.0	500	570	190
88-06-2	2,4,6-Trichlorophenol	U	570	1.0	500	570	180
95-95-4	2,4,5-Trichlorophenol	U	570	1.0	500	570	180
91-58-7	2-Chloronaphthalene	U	380	1.0	330	380	99
92-52-4	1,1'-Biphenyl	U	380	1.0	330	380	83
88-74-4	2-Nitroaniline	U	570	1.0	500	570	86
131-11-3	Dimethyl Phthalate	U	380	1.0	330	380	89
606-20-2	2,6-Dinitrotoluene	U	380	1.0	330	380	90
208-96-8	Acenaphthylene	U	380	1.0	330	380	80
99-09-2	3-Nitroaniline	U	570	1.0	500	570	110
83-32-9	Acenaphthene	U	380	1.0	330	380	74
51-28-5	2,4-Dinitrophenol	U	1400	1.0	1200	1400	430
132-64-9	Dibenzofuran	U	380	1.0	330	380	90
100-02-7	4-Nitrophenol	U	1400	1.0	1200	1400	350
121-14-2	2,4-Dinitrotoluene	U	380	1.0	330	380	97
84-66-2	Diethylphthalate	U	380	1.0	330	380	91
7005-72-3	4-Chlorophenyl-phenylether	U	380	1.0	330	380	89
100-01-6	4-Nitroaniline	U	570	1.0	500	570	150
534-52-1	4,6-Dinitro-2-Methylphenol	U	1400	1.0	1200	1400	380
86-30-6	N-Nitrosodiphenylamine	U	750	1.0	660	750	250
101-55-3	4-Bromophenyl-phenylether	U	380	1.0	330	380	97
1912-24-9	Atrazine	U	380	1.0	330	380	100
87-86-5	Pentachlorophenol	U	940	1.0	820	940	270
120-12-7	Anthracene	U	380	1.0	330	380	96
86-74-8	Carbazole	U	570	1.0	500	570	130

MW
4/16/09

KATAHDIN ANALYTICAL SERVICES
Report of Analytical Results

11

Client: CH2MHill
Project: TO-009 Lejeune
PO No:
Sample Date: 01/12/09
Received Date: 01/14/09
Extraction Date: 01/19/09
Analysis Date: 02-FEB-2009 02:39
Report Date: 02/06/2009
Matrix: SOIL
% Solids: 87.7

Lab ID: SC0177-21
Client ID: MR08-SS303-09A
SDG: TO9-36
Extracted by: AC
Extraction Method: SW846 3550
Analyst: JLP
Analysis Method: SW846 8270C
Lab Prep Batch: WG59948
Units: ug/Kgdrywt

CAS#	Compound	Flags	Results	DF	PQL	Adj.PQL	Adj.MDL
84-74-2	Di-n-butylphthalate	U	380	1.0	330	380	120
85-68-7	Butylbenzylphthalate	U	380	1.0	330	380	110
91-94-1	3,3'-Dichlorobenzidine	U	570	1.0	500	570	130
218-01-9	Chrysene	U	380	1.0	330	380	110
117-81-7	bis(2-Ethylhexyl)phthalate	U	380	1.0	330	380	110
117-84-0	Di-n-octylphthalate	U	380	1.0	330	380	240
367-12-4	2-Fluorophenol		71%				
13127-88-3	Phenol-D6		80%				
4165-60-0	Nitrobenzene-D5		63%				
321-60-8	2-Fluorobiphenyl		73%				
118-79-6	2,4,6-Tribromophenol		100%				
1718-51-0	Terphenyl-D14		96%				

lw
4/16/09

12

KATAHDIN ANALYTICAL SERVICES
Report of Analytical Results

Client: CH2MHill
Project: TO-009 Lejeune
PO No:
Sample Date: 01/12/09
Received Date: 01/14/09
Extraction Date: 01/19/09
Analysis Date: 31-JAN-2009 22:21
Report Date: 02/06/2009
Matrix: SOIL
% Solids: 90.8

Lab ID: SC0177-23
Client ID: MR08-IS303-6-7-09A
SDG: TO9-36
Extracted by: AC
Extraction Method: SW846 3550
Analyst: JCG
Analysis Method: SW846 8270C
Lab Prep Batch: WG59948
Units: ug/Kgdrywt

CAS#	Compound	Flags	Results	DF	PQL	Adj.PQL	Adj.MDL
100-52-7	Benzaldehyde	~~U~~ UJ	550	1.0	500	550	130 CCH
108-95-2	Phenol	U	550	1.0	500	550	170
111-44-4	Bis(2-Chloroethyl)ether	U	360	1.0	330	360	89
95-57-8	2-Chlorophenol	U	550	1.0	500	550	180
95-48-7	2-Methylphenol	U	660	1.0	600	660	220
108-60-1	2,2'-Oxybis(1-chloropropane)	U	360	1.0	330	360	98
98-86-2	Acetophenone	U	660	1.0	600	660	200
621-64-7	N-Nitroso-di-n-propylamine	U	360	1.0	330	360	91
65794-96-9	3&4-Methylphenol	U	660	1.0	600	660	200
67-72-1	Hexachloroethane	U	360	1.0	330	360	100
98-95-3	Nitrobenzene	U	360	1.0	330	360	100
78-59-1	Isophorone	U	360	1.0	330	360	82
88-75-5	2-Nitrophenol	U	660	1.0	600	660	180
105-67-9	2,4-Dimethylphenol	U	550	1.0	500	550	180
111-91-1	Bis(2-Chloroethoxy)methane	U	360	1.0	330	360	100
120-83-2	2,4-Dichlorophenol	U	550	1.0	500	550	160
106-47-8	4-Chloroaniline	U	550	1.0	500	550	130
105-60-2	Caprolactam	U	550	1.0	500	550	160
59-50-7	4-Chloro-3-Methylphenol	U	550	1.0	500	550	180
88-06-2	2,4,6-Trichlorophenol	U	550	1.0	500	550	170
95-95-4	2,4,5-Trichlorophenol	U	550	1.0	500	550	170
91-58-7	2-Chloronaphthalene	U	360	1.0	330	360	96
92-52-4	1,1'-Biphenyl	U	360	1.0	330	360	80
88-74-4	2-Nitroaniline	U	550	1.0	500	550	82
131-11-3	Dimethyl Phthalate	U	360	1.0	330	360	86
606-20-2	2,6-Dinitrotoluene	U	360	1.0	330	360	87
208-96-8	Acenaphthylene	U	360	1.0	330	360	77
99-09-2	3-Nitroaniline	U	550	1.0	500	550	100
83-32-9	Acenaphthene	U	360	1.0	330	360	72
51-28-5	2,4-Dinitrophenol	U	1300	1.0	1200	1300	420
132-64-9	Dibenzofuran	U	360	1.0	330	360	87
100-02-7	4-Nitrophenol	U	1300	1.0	1200	1300	340
121-14-2	2,4-Dinitrotoluene	U	360	1.0	330	360	94
84-66-2	Diethylphthalate	U	360	1.0	330	360	88
7005-72-3	4-Chlorophenyl-phenylether	U	360	1.0	330	360	86
100-01-6	4-Nitroaniline	U	550	1.0	500	550	150
534-52-1	4,6-Dinitro-2-Methylphenol	U	1300	1.0	1200	1300	370
86-30-6	N-Nitrosodiphenylamine	U	730	1.0	660	730	240
101-55-3	4-Bromophenyl-phenylether	U	360	1.0	330	360	94
1912-24-9	Atrazine	U	360	1.0	330	360	100
87-86-5	Pentachlorophenol	U	900	1.0	820	900	260
120-12-7	Anthracene	U	360	1.0	330	360	92
86-74-8	Carbazole	U	550	1.0	500	550	120

lw 4/16/09

KATAHDIN ANALYTICAL SERVICES
Report of Analytical Results

Client: CH2MHill
Project: TO-009 Lejeune
PO No:
Sample Date: 01/12/09
Received Date: 01/14/09
Extraction Date: 01/19/09
Analysis Date: 31-JAN-2009 22:21
Report Date: 02/06/2009
Matrix: SOIL
% Solids: 90.8

Lab ID: SC0177-23
Client ID: MR08-IS303-6-7-09A
SDG: TO9-36
Extracted by: AC
Extraction Method: SW846 3550
Analyst: JCG
Analysis Method: SW846 8270C
Lab Prep Batch: WG59948
Units: ug/Kgdrywt

CAS#	Compound	Flags	Results	DF	PQL	Adj.PQL	Adj.MDL
84-74-2	Di-n-butylphthalate	U	360	1.0	330	360	110
85-68-7	Butylbenzylphthalate	U	360	1.0	330	360	100
91-94-1	3,3'-Dichlorobenzidine	U	550	1.0	500	550	120
218-01-9	Chrysene	U	360	1.0	330	360	100
117-81-7	bis(2-Ethylhexyl)phthalate	U	360	1.0	330	360	110
117-84-0	Di-n-octylphthalate	U	360	1.0	330	360	230
367-12-4	2-Fluorophenol		76%				
13127-88-3	Phenol-D6		86%				
4165-60-0	Nitrobenzene-D5		67%				
321-60-8	2-Fluorobiphenyl		68%				
118-79-6	2,4,6-Tribromophenol		66%				
1718-51-0	Terphenyl-D14		83%				

RW
4/16/09

13

KATAHDIN ANALYTICAL SERVICES
Report of Analytical Results

Client: CH2MHill
Project: TO-009 Lejeune
PO No:
Sample Date: 01/13/09
Received Date: 01/15/09
Extraction Date: 01/20/09
Analysis Date: 31-JAN-2009 14:39
Report Date: 02/06/2009
Matrix: SOIL
% Solids: 84.7

Lab ID: SC0209-1
Client ID: MR08-SS299-09A
SDG: TO9-36
Extracted by: AC
Extraction Method: SW846 3550
Analyst: JCG
Analysis Method: SW846 8270C
Lab Prep Batch: WG59991
Units: ug/Kgdrywt

CAS#	Compound	Flags	Results	DF	PQL	Adj.PQL	Adj.MDL
100-52-7	Benzaldehyde	~~U~~ UJ	590	1.0	500	590	140 CCH
108-95-2	Phenol	U	590	1.0	500	590	180
111-44-4	Bis(2-Chloroethyl)ether	U	390	1.0	330	390	96
95-57-8	2-Chlorophenol	U	590	1.0	500	590	190
95-48-7	2-Methylphenol	U	710	1.0	600	710	240
108-60-1	2,2'-Oxybis(1-chloropropane)	U	390	1.0	330	390	100
98-86-2	Acetophenone	U	710	1.0	600	710	210
621-64-7	N-Nitroso-di-n-propylamine	U	390	1.0	330	390	98
65794-96-9	3&4-Methylphenol	U	710	1.0	600	710	220
67-72-1	Hexachloroethane	U	390	1.0	330	390	110
98-95-3	Nitrobenzene	U	390	1.0	330	390	110
78-59-1	Isophorone	U	390	1.0	330	390	88
88-75-5	2-Nitrophenol	U	710	1.0	600	710	200
105-67-9	2,4-Dimethylphenol	U	590	1.0	500	590	190
111-91-1	Bis(2-Chloroethoxy)methane	U	390	1.0	330	390	110
120-83-2	2,4-Dichlorophenol	U	590	1.0	500	590	180
106-47-8	4-Chloroaniline	U	590	1.0	500	590	140
105-60-2	Caprolactam	U	590	1.0	500	590	170
59-50-7	4-Chloro-3-Methylphenol	U	590	1.0	500	590	200
88-06-2	2,4,6-Trichlorophenol	U	590	1.0	500	590	180
95-95-4	2,4,5-Trichlorophenol	U	590	1.0	500	590	180
91-58-7	2-Chloronaphthalene	U	390	1.0	330	390	100
92-52-4	1,1'-Biphenyl	U	390	1.0	330	390	86
88-74-4	2-Nitroaniline	U	590	1.0	500	590	88
131-11-3	Dimethyl Phthalate	U	390	1.0	330	390	92
606-20-2	2,6-Dinitrotoluene	U	390	1.0	330	390	93
208-96-8	Acenaphthylene	U	390	1.0	330	390	83
99-09-2	3-Nitroaniline	U	590	1.0	500	590	110
83-32-9	Acenaphthene	U	390	1.0	330	390	77
51-28-5	2,4-Dinitrophenol	U	1400	1.0	1200	1400	440
132-64-9	Dibenzofuran	U	390	1.0	330	390	93
100-02-7	4-Nitrophenol	U	1400	1.0	1200	1400	360
121-14-2	2,4-Dinitrotoluene	U	390	1.0	330	390	100
84-66-2	Diethylphthalate	U	390	1.0	330	390	94
7005-72-3	4-Chlorophenyl-phenylether	U	390	1.0	330	390	92
100-01-6	4-Nitroaniline	U	590	1.0	500	590	160
534-52-1	4,6-Dinitro-2-Methylphenol	U	1400	1.0	1200	1400	400
86-30-6	N-Nitrosodiphenylamine	U	780	1.0	660	780	260
101-55-3	4-Bromophenyl-phenylether	U	390	1.0	330	390	100
1912-24-9	Atrazine	U	390	1.0	330	390	110
87-86-5	Pentachlorophenol	U	970	1.0	820	970	280
120-12-7	Anthracene	U	390	1.0	330	390	99
86-74-8	Carbazole	U	590	1.0	500	590	130

lew 4/16/09

KATAHDIN ANALYTICAL SERVICES
Report of Analytical Results

Client: CH2MHill
Project: TO-009 Lejeune
PO No:
Sample Date: 01/13/09
Received Date: 01/15/09
Extraction Date: 01/20/09
Analysis Date: 31-JAN-2009 14:39
Report Date: 02/06/2009
Matrix: SOIL
% Solids: 84.7

Lab ID: SC0209-1
Client ID: MR08-SS299-09A
SDG: TO9-36
Extracted by: AC
Extraction Method: SW846 3550
Analyst: JCG
Analysis Method: SW846 8270C
Lab Prep Batch: WG59991
Units: ug/Kgdrywt

CAS#	Compound	Flags	Results	DF	PQL	Adj.PQL	Adj.MDL
84-74-2	Di-n-butylphthalate	U	390	1.0	330	390	120
85-68-7	Butylbenzylphthalate	U	390	1.0	330	390	110
91-94-1	3,3'-Dichlorobenzidine	U	590	1.0	500	590	130
218-01-9	Chrysene	U	390	1.0	330	390	110
117-81-7	bis(2-Ethylhexyl)phthalate		410	1.0	330	390	120
117-84-0	Di-n-octylphthalate	U	390	1.0	330	390	250
367-12-4	2-Fluorophenol		80%				
13127-88-3	Phenol-D6		90%				
4165-60-0	Nitrobenzene-D5		76%				
321-60-8	2-Fluorobiphenyl		78%				
118-79-6	2,4,6-Tribromophenol		80%				
1718-51-0	Terphenyl-D14		99%				

lw 4/16/09

KATAHDIN ANALYTICAL SERVICES
Report of Analytical Results

14

Client: CH2MHill
Project: TO-009 Lejeune
PO No:
Sample Date: 01/13/09
Received Date: 01/15/09
Extraction Date: 01/20/09
Analysis Date: 31-JAN-2009 13:57
Report Date: 02/06/2009
Matrix: SOIL
% Solids: 91.7

Lab ID: SC0209-3
Client ID: MR08-SS299D-09A
SDG: TO9-36
Extracted by: AC
Extraction Method: SW846 3550
Analyst: JCG
Analysis Method: SW846 8270C
Lab Prep Batch: WG59991
Units: ug/Kgdrywt

CAS#	Compound	Flags	Results	DF	PQL	Adj.PQL	Adj.MDL
100-52-7	Benzaldehyde	~~U~~ UJ	540	1.0	500	540	130 CEH
108-95-2	Phenol	U	540	1.0	500	540	170
111-44-4	Bis(2-Chloroethyl)ether	U	360	1.0	330	360	88
95-57-8	2-Chlorophenol	U	540	1.0	500	540	180
95-48-7	2-Methylphenol	U	650	1.0	600	650	220
108-60-1	2,2'-Oxybis(1-chloropropane)	U	360	1.0	330	360	97
98-86-2	Acetophenone	U	650	1.0	600	650	190
621-64-7	N-Nitroso-di-n-propylamine	U	360	1.0	330	360	90
65794-96-9	3&4-Methylphenol	U	650	1.0	600	650	200
67-72-1	Hexachloroethane	U	360	1.0	330	360	100
98-95-3	Nitrobenzene	U	360	1.0	330	360	99
78-59-1	Isophorone	U	360	1.0	330	360	82
88-75-5	2-Nitrophenol	U	650	1.0	600	650	180
105-67-9	2,4-Dimethylphenol	U	540	1.0	500	540	180
111-91-1	Bis(2-Chloroethoxy)methane	U	360	1.0	330	360	100
120-83-2	2,4-Dichlorophenol	U	540	1.0	500	540	160
106-47-8	4-Chloroaniline	U	540	1.0	500	540	130
105-60-2	Caprolactam	U	540	1.0	500	540	160
59-50-7	4-Chloro-3-Methylphenol	U	540	1.0	500	540	180
88-06-2	2,4,6-Trichlorophenol	U	540	1.0	500	540	170
95-95-4	2,4,5-Trichlorophenol	U	540	1.0	500	540	170
91-58-7	2-Chloronaphthalene	U	360	1.0	330	360	95
92-52-4	1,1'-Biphenyl	U	360	1.0	330	360	80
88-74-4	2-Nitroaniline	U	540	1.0	500	540	82
131-11-3	Dimethyl Phthalate	U	360	1.0	330	360	85
606-20-2	2,6-Dinitrotoluene	U	360	1.0	330	360	86
208-96-8	Acenaphthylene	U	360	1.0	330	360	76
99-09-2	3-Nitroaniline	U	540	1.0	500	540	100
83-32-9	Acenaphthene	U	360	1.0	330	360	71
51-28-5	2,4-Dinitrophenol	U	1300	1.0	1200	1300	410
132-64-9	Dibenzofuran	U	360	1.0	330	360	86
100-02-7	4-Nitrophenol	U	1300	1.0	1200	1300	340
121-14-2	2,4-Dinitrotoluene	U	360	1.0	330	360	93
84-66-2	Diethylphthalate	U	360	1.0	330	360	87
7005-72-3	4-Chlorophenyl-phenylether	U	360	1.0	330	360	85
100-01-6	4-Nitroaniline	U	540	1.0	500	540	150
534-52-1	4,6-Dinitro-2-Methylphenol	U	1300	1.0	1200	1300	370
86-30-6	N-Nitrosodiphenylamine	U	720	1.0	660	720	240
101-55-3	4-Bromophenyl-phenylether	U	360	1.0	330	360	93
1912-24-9	Atrazine	U	360	1.0	330	360	99
87-86-5	Pentachlorophenol	U	890	1.0	820	890	260
120-12-7	Anthracene	U	360	1.0	330	360	92
86-74-8	Carbazole	U	540	1.0	500	540	120

lw 4/16/09

KATAHDIN ANALYTICAL SERVICES
Report of Analytical Results

14

Client: CH2MHill
Project: TO-009 Lejeune
PO No:
Sample Date: 01/13/09
Received Date: 01/15/09
Extraction Date: 01/20/09
Analysis Date: 31-JAN-2009 13:57
Report Date: 02/06/2009
Matrix: SOIL
% Solids: 91.7

Lab ID: SC0209-3
Client ID: MR08-SS299D-09A
SDG: TO9-36
Extracted by: AC
Extraction Method: SW846 3550
Analyst: JCG
Analysis Method: SW846 8270C
Lab Prep Batch: WG59991
Units: ug/Kgdrywt

CAS#	Compound	Flags	Results	DF	PQL	Adj.PQL	Adj.MDL
84-74-2	Di-n-butylphthalate	U	360	1.0	330	360	110
85-68-7	Butylbenzylphthalate	U	360	1.0	330	360	100
91-94-1	3,3'-Dichlorobenzidine	U	540	1.0	500	540	120
218-01-9	Chrysene	U	360	1.0	330	360	100
117-81-7	bis(2-Ethylhexyl)phthalate	J	270	1.0	330	360	110
117-84-0	Di-n-octylphthalate	U	360	1.0	330	360	230
367-12-4	2-Fluorophenol		76%				
13127-88-3	Phenol-D6		85%				
4165-60-0	Nitrobenzene-D5		73%				
321-60-8	2-Fluorobiphenyl		77%				
118-79-6	2,4,6-Tribromophenol		85%				
1718-51-0	Terphenyl-D14		99%				

MW
4/16/09

KATAHDIN ANALYTICAL SERVICES
Report of Analytical Results

Client: CH2MHill
Project: TO-009 Lejeune
PO No:
Sample Date: 01/13/09
Received Date: 01/15/09
Extraction Date: 01/20/09
Analysis Date: 31-JAN-2009 12:32
Report Date: 02/06/2009
Matrix: SOIL
% Solids: 88.8

Lab ID: SC0209-5
Client ID: MR08-IS299-6-7-09A
SDG: TO9-36
Extracted by: AC
Extraction Method: SW846 3550
Analyst: JCG
Analysis Method: SW846 8270C
Lab Prep Batch: WG59991
Units: ug/Kgdrywt

CAS#	Compound	Flags	Results	DF	PQL	Adj.PQL	Adj.MDL
100-52-7	Benzaldehyde	~~J~~ UJ	560	1.0	500	560	140 CCH
108-95-2	Phenol	U	560	1.0	500	560	180
111-44-4	Bis(2-Chloroethyl)ether	U	370	1.0	330	370	91
95-57-8	2-Chlorophenol	U	560	1.0	500	560	180
95-48-7	2-Methylphenol	U	680	1.0	600	680	220
108-60-1	2,2'-Oxybis(1-chloropropane)	U	370	1.0	330	370	100
98-86-2	Acetophenone	U	680	1.0	600	680	200
621-64-7	N-Nitroso-di-n-propylamine	U	370	1.0	330	370	93
65794-96-9	3&4-Methylphenol	U	680	1.0	600	680	210
67-72-1	Hexachloroethane	U	370	1.0	330	370	110
98-95-3	Nitrobenzene	U	370	1.0	330	370	100
78-59-1	Isophorone	U	370	1.0	330	370	84
88-75-5	2-Nitrophenol	U	680	1.0	600	680	190
105-67-9	2,4-Dimethylphenol	U	560	1.0	500	560	180
111-91-1	Bis(2-Chloroethoxy)methane	U	370	1.0	330	370	110
120-83-2	2,4-Dichlorophenol	U	560	1.0	500	560	170
106-47-8	4-Chloroaniline	U	560	1.0	500	560	130
105-60-2	Caprolactam	U	560	1.0	500	560	160
59-50-7	4-Chloro-3-Methylphenol	U	560	1.0	500	560	190
88-06-2	2,4,6-Trichlorophenol	U	560	1.0	500	560	170
95-95-4	2,4,5-Trichlorophenol	U	560	1.0	500	560	170
91-58-7	2-Chloronaphthalene	U	370	1.0	330	370	98
92-52-4	1,1'-Biphenyl	U	370	1.0	330	370	82
88-74-4	2-Nitroaniline	U	560	1.0	500	560	84
131-11-3	Dimethyl Phthalate	U	370	1.0	330	370	88
606-20-2	2,6-Dinitrotoluene	U	370	1.0	330	370	89
208-96-8	Acenaphthylene	U	370	1.0	330	370	79
99-09-2	3-Nitroaniline	U	560	1.0	500	560	100
83-32-9	Acenaphthene	J	89	1.0	330	370	73
51-28-5	2,4-Dinitrophenol	U	1400	1.0	1200	1400	420
132-64-9	Dibenzofuran	U	370	1.0	330	370	89
100-02-7	4-Nitrophenol	U	1400	1.0	1200	1400	350
121-14-2	2,4-Dinitrotoluene	U	370	1.0	330	370	96
84-66-2	Diethylphthalate	U	370	1.0	330	370	90
7005-72-3	4-Chlorophenyl-phenylether	U	370	1.0	330	370	88
100-01-6	4-Nitroaniline	U	560	1.0	500	560	150
534-52-1	4,6-Dinitro-2-Methylphenol	U	1400	1.0	1200	1400	380
86-30-6	N-Nitrosodiphenylamine	U	740	1.0	660	740	250
101-55-3	4-Bromophenyl-phenylether	U	370	1.0	330	370	96
1912-24-9	Atrazine	U	370	1.0	330	370	100
87-86-5	Pentachlorophenol	U	920	1.0	820	920	270
120-12-7	Anthracene	U	370	1.0	330	370	95
86-74-8	Carbazole	U	560	1.0	500	560	120

lew
4/16/09

15

KATAHDIN ANALYTICAL SERVICES
Report of Analytical Results

Client: CH2MHill
Project: TO-009 Lejeune
PO No:
Sample Date: 01/13/09
Received Date: 01/15/09
Extraction Date: 01/20/09
Analysis Date: 31-JAN-2009 12:32
Report Date: 02/06/2009
Matrix: SOIL
% Solids: 88.8

Lab ID: SC0209-5
Client ID: MR08-IS299-6-7-09A
SDG: TO9-36
Extracted by: AC
Extraction Method: SW846 3550
Analyst: JCG
Analysis Method: SW846 8270C
Lab Prep Batch: WG59991
Units: ug/Kgdrywt

CAS#	Compound	Flags	Results	DF	PQL	Adj.PQL	Adj.MDL
84-74-2	Di-n-butylphthalate	U	370	1.0	330	370	110
85-68-7	Butylbenzylphthalate	U	370	1.0	330	370	100
91-94-1	3,3'-Dichlorobenzidine	U	560	1.0	500	560	130
218-01-9	Chrysene	U	370	1.0	330	370	110
117-81-7	bis(2-Ethylhexyl)phthalate	U	370	1.0	330	370	110
117-84-0	Di-n-octylphthalate	U	370	1.0	330	370	240
367-12-4	2-Fluorophenol		72%				
13127-88-3	Phenol-D6		76%				
4165-60-0	Nitrobenzene-D5		72%				
321-60-8	2-Fluorobiphenyl		69%				
118-79-6	2,4,6-Tribromophenol		86%				
1718-51-0	Terphenyl-D14		84%				

MW
4/16/09

16

KATAHDIN ANALYTICAL SERVICES
Report of Analytical Results

Client: CH2MHill
Project: TO-009 Lejeune
PO No:
Sample Date: 01/13/09
Received Date: 01/15/09
Extraction Date: 01/20/09
Analysis Date: 31-JAN-2009 13:14
Report Date: 02/06/2009
Matrix: SOIL
% Solids: 89.1

Lab ID: SC0209-7
Client ID: MR08-IS299D-6-7-09A
SDG: TO9-36
Extracted by: AC
Extraction Method: SW846 3550
Analyst: JCG
Analysis Method: SW846 8270C
Lab Prep Batch: WG59991
Units: ug/Kgdrywt

CAS#	Compound	Flags	Results	DF	PQL	Adj.PQL	Adj.MDL
100-52-7	Benzaldehyde	~~U~~ UJ	560	1.0	500	560	130 CCM
108-95-2	Phenol	U	560	1.0	500	560	180
111-44-4	Bis(2-Chloroethyl)ether	U	370	1.0	330	370	91
95-57-8	2-Chlorophenol	U	560	1.0	500	560	180
95-48-7	2-Methylphenol	U	670	1.0	600	670	220
108-60-1	2,2'-Oxybis(1-chloropropane)	U	370	1.0	330	370	100
98-86-2	Acetophenone	U	670	1.0	600	670	200
621-64-7	N-Nitroso-di-n-propylamine	U	370	1.0	330	370	93
65794-96-9	3&4-Methylphenol	U	670	1.0	600	670	210
67-72-1	Hexachloroethane	U	370	1.0	330	370	110
98-95-3	Nitrobenzene	U	370	1.0	330	370	100
78-59-1	Isophorone	U	370	1.0	330	370	84
88-75-5	2-Nitrophenol	U	670	1.0	600	670	190
105-67-9	2,4-Dimethylphenol	U	560	1.0	500	560	180
111-91-1	Bis(2-Chloroethoxy)methane	U	370	1.0	330	370	110
120-83-2	2,4-Dichlorophenol	U	560	1.0	500	560	170
106-47-8	4-Chloroaniline	U	560	1.0	500	560	130
105-60-2	Caprolactam	U	560	1.0	500	560	160
59-50-7	4-Chloro-3-Methylphenol	U	560	1.0	500	560	190
88-06-2	2,4,6-Trichlorophenol	U	560	1.0	500	560	170
95-95-4	2,4,5-Trichlorophenol	U	560	1.0	500	560	170
91-58-7	2-Chloronaphthalene	U	370	1.0	330	370	98
92-52-4	1,1'-Biphenyl	U	370	1.0	330	370	82
88-74-4	2-Nitroaniline	U	560	1.0	500	560	84
131-11-3	Dimethyl Phthalate	U	370	1.0	330	370	88
606-20-2	2,6-Dinitrotoluene	U	370	1.0	330	370	89
208-96-8	Acenaphthylene	U	370	1.0	330	370	78
99-09-2	3-Nitroaniline	U	560	1.0	500	560	100
83-32-9	Acenaphthene	U	370	1.0	330	370	73
51-28-5	2,4-Dinitrophenol	U	1300	1.0	1200	1300	420
132-64-9	Dibenzofuran	U	370	1.0	330	370	89
100-02-7	4-Nitrophenol	U	1300	1.0	1200	1300	350
121-14-2	2,4-Dinitrotoluene	U	370	1.0	330	370	95
84-66-2	Diethylphthalate	U	370	1.0	330	370	90
7005-72-3	4-Chlorophenyl-phenylether	U	370	1.0	330	370	88
100-01-6	4-Nitroaniline	U	560	1.0	500	560	150
534-52-1	4,6-Dinitro-2-Methylphenol	U	1300	1.0	1200	1300	380
86-30-6	N-Nitrosodiphenylamine	U	740	1.0	660	740	240
101-55-3	4-Bromophenyl-phenylether	U	370	1.0	330	370	95
1912-24-9	Atrazine	U	370	1.0	330	370	100
87-86-5	Pentachlorophenol	U	920	1.0	820	920	260
120-12-7	Anthracene	U	370	1.0	330	370	94
86-74-8	Carbazole	U	560	1.0	500	560	120

LW 4/16/09

16

KATAHDIN ANALYTICAL SERVICES
Report of Analytical Results

Client: CH2MHill
Project: TO-009 Lejeune
PO No:
Sample Date: 01/13/09
Received Date: 01/15/09
Extraction Date: 01/20/09
Analysis Date: 31-JAN-2009 13:14
Report Date: 02/06/2009
Matrix: SOIL
% Solids: 89.1

Lab ID: SC0209-7
Client ID: MR08-IS299D-6-7-09A
SDG: TO9-36
Extracted by: AC
Extraction Method: SW846 3550
Analyst: JCG
Analysis Method: SW846 8270C
Lab Prep Batch: WG59991
Units: ug/Kgdrywt

CAS#	Compound	Flags	Results	DF	PQL	Adj.PQL	Adj.MDL
84-74-2	Di-n-butylphthalate	U	370	1.0	330	370	110
85-68-7	Butylbenzylphthalate	U	370	1.0	330	370	100
91-94-1	3,3'-Dichlorobenzidine	U	560	1.0	500	560	130
218-01-9	Chrysene	U	370	1.0	330	370	110
117-81-7	bis(2-Ethylhexyl)phthalate	U	370	1.0	330	370	110
117-84-0	Di-n-octylphthalate	U	370	1.0	330	370	240
367-12-4	2-Fluorophenol		72%				
13127-88-3	Phenol-D6		76%				
4165-60-0	Nitrobenzene-D5		69%				
321-60-8	2-Fluorobiphenyl		68%				
118-79-6	2,4,6-Tribromophenol		93%				
1718-51-0	Terphenyl-D14		82%				

MW 4/16/09

17

KATAHDIN ANALYTICAL SERVICES
Report of Analytical Results

Client: CH2MHill
Project: TO-009 Lejeune
PO No:
Sample Date: 01/13/09
Received Date: 01/15/09
Extraction Date: 01/20/09
Analysis Date: 31-JAN-2009 15:22
Report Date: 02/06/2009
Matrix: SOIL
% Solids: 93.9

Lab ID: SC0209-9
Client ID: MR08-SS304-09A
SDG: TO9-36
Extracted by: AC
Extraction Method: SW846 3550
Analyst: JCG
Analysis Method: SW846 8270C
Lab Prep Batch: WG59991
Units: ug/Kgdrywt

CAS#	Compound	Flags	Results	DF	PQL	Adj.PQL	Adj.MDL
100-52-7	Benzaldehyde	~~U~~ WS	530	1.0	500	530	130 CCH
108-95-2	Phenol	U	530	1.0	500	530	170
111-44-4	Bis(2-Chloroethyl)ether	U	350	1.0	330	350	86
95-57-8	2-Chlorophenol	U	530	1.0	500	530	170
95-48-7	2-Methylphenol	U	640	1.0	600	640	210
108-60-1	2,2'-Oxybis(1-chloropropane)	U	350	1.0	330	350	95
98-86-2	Acetophenone	U	640	1.0	600	640	190
621-64-7	N-Nitroso-di-n-propylamine	U	350	1.0	330	350	88
65794-96-9	3&4-Methylphenol	U	640	1.0	600	640	200
67-72-1	Hexachloroethane	U	350	1.0	330	350	100
98-95-3	Nitrobenzene	U	350	1.0	330	350	97
78-59-1	Isophorone	U	350	1.0	330	350	80
88-75-5	2-Nitrophenol	U	640	1.0	600	640	180
105-67-9	2,4-Dimethylphenol	U	530	1.0	500	530	180
111-91-1	Bis(2-Chloroethoxy)methane	U	350	1.0	330	350	100
120-83-2	2,4-Dichlorophenol	U	530	1.0	500	530	160
106-47-8	4-Chloroaniline	U	530	1.0	500	530	130
105-60-2	Caprolactam	U	530	1.0	500	530	150
59-50-7	4-Chloro-3-Methylphenol	U	530	1.0	500	530	180
88-06-2	2,4,6-Trichlorophenol	U	530	1.0	500	530	160
95-95-4	2,4,5-Trichlorophenol	U	530	1.0	500	530	160
91-58-7	2-Chloronaphthalene	U	350	1.0	330	350	93
92-52-4	1,1'-Biphenyl	U	350	1.0	330	350	78
88-74-4	2-Nitroaniline	U	530	1.0	500	530	80
131-11-3	Dimethyl Phthalate	U	350	1.0	330	350	83
606-20-2	2,6-Dinitrotoluene	U	350	1.0	330	350	84
208-96-8	Acenaphthylene	U	350	1.0	330	350	74
99-09-2	3-Nitroaniline	U	530	1.0	500	530	100
83-32-9	Acenaphthene	U	350	1.0	330	350	69
51-28-5	2,4-Dinitrophenol	U	1300	1.0	1200	1300	400
132-64-9	Dibenzofuran	U	350	1.0	330	350	84
100-02-7	4-Nitrophenol	U	1300	1.0	1200	1300	330
121-14-2	2,4-Dinitrotoluene	U	350	1.0	330	350	90
84-66-2	Diethylphthalate	U	350	1.0	330	350	85
7005-72-3	4-Chlorophenyl-phenylether	U	350	1.0	330	350	83
100-01-6	4-Nitroaniline	U	530	1.0	500	530	140
534-52-1	4,6-Dinitro-2-Methylphenol	U	1300	1.0	1200	1300	360
86-30-6	N-Nitrosodiphenylamine	U	700	1.0	660	700	230
101-55-3	4-Bromophenyl-phenylether	U	350	1.0	330	350	90
1912-24-9	Atrazine	U	350	1.0	330	350	97
87-86-5	Pentachlorophenol	U	870	1.0	820	870	250
120-12-7	Anthracene	U	350	1.0	330	350	89
86-74-8	Carbazole	U	530	1.0	500	530	120

lew 4/16/09

KATAHDIN ANALYTICAL SERVICES
Report of Analytical Results

Client: CH2MHill
Project: TO-009 Lejeune
PO No:
Sample Date: 01/13/09
Received Date: 01/15/09
Extraction Date: 01/20/09
Analysis Date: 31-JAN-2009 15:22
Report Date: 02/06/2009
Matrix: SOIL
% Solids: 93.9

Lab ID: SC0209-9
Client ID: MR08-SS304-09A
SDG: TO9-36
Extracted by: AC
Extraction Method: SW846 3550
Analyst: JCG
Analysis Method: SW846 8270C
Lab Prep Batch: WG59991
Units: ug/Kgdrywt

CAS#	Compound	Flags	Results	DF	PQL	Adj.PQL	Adj.MDL
84-74-2	Di-n-butylphthalate	U	350	1.0	330	350	110
85-68-7	Butylbenzylphthalate	U	350	1.0	330	350	99
91-94-1	3,3'-Dichlorobenzidine	U	530	1.0	500	530	120
218-01-9	Chrysene	J	140	1.0	330	350	100
117-81-7	bis(2-Ethylhexyl)phthalate	J	170	1.0	330	350	100
117-84-0	Di-n-octylphthalate	U	350	1.0	330	350	220
367-12-4	2-Fluorophenol		72%				
13127-88-3	Phenol-D6		80%				
4165-60-0	Nitrobenzene-D5		68%				
321-60-8	2-Fluorobiphenyl		72%				
118-79-6	2,4,6-Tribromophenol		78%				
1718-51-0	Terphenyl-D14		89%				

MW
4/16/09

KATAHDIN ANALYTICAL SERVICES
Report of Analytical Results

Client: CH2MHill
Project: TO-009 Lejeune
PO No:
Sample Date: 01/13/09
Received Date: 01/15/09
Extraction Date: 01/21/09
Analysis Date: 01-FEB-2009 20:23
Report Date: 02/06/2009
Matrix: SOIL
% Solids: 89.9

Lab ID: SC0209-11
Client ID: MR08-IS304-6-7-09A
SDG: TO9-36
Extracted by: AC
Extraction Method: SW846 3550
Analyst: JLP
Analysis Method: SW846 8270C
Lab Prep Batch: WG60036
Units: ug/Kgdrywt

CAS#	Compound	Flags	Results	DF	PQL	Adj.PQL	Adj.MDL
100-52-7	Benzaldehyde	~~U~~ UJ	560	1.0	500	560	130 CCH
108-95-2	Phenol	U	560	1.0	500	560	170
111-44-4	Bis(2-Chloroethyl)ether	U	370	1.0	330	370	90
95-57-8	2-Chlorophenol	U	560	1.0	500	560	180
95-48-7	2-Methylphenol	U	670	1.0	600	670	220
108-60-1	2,2'-Oxybis(1-chloropropane)	U	370	1.0	330	370	99
98-86-2	Acetophenone	U	670	1.0	600	670	200
621-64-7	N-Nitroso-di-n-propylamine	U	370	1.0	330	370	92
65794-96-9	3&4-Methylphenol	U	670	1.0	600	670	210
67-72-1	Hexachloroethane	U	370	1.0	330	370	110
98-95-3	Nitrobenzene	U	370	1.0	330	370	100
78-59-1	Isophorone	U	370	1.0	330	370	83
88-75-5	2-Nitrophenol	U	670	1.0	600	670	180
105-67-9	2,4-Dimethylphenol	U	560	1.0	500	560	180
111-91-1	Bis(2-Chloroethoxy)methane	U	370	1.0	330	370	110
120-83-2	2,4-Dichlorophenol	U	560	1.0	500	560	170
106-47-8	4-Chloroaniline	U	560	1.0	500	560	130
105-60-2	Caprolactam	U	560	1.0	500	560	160
59-50-7	4-Chloro-3-Methylphenol	U	560	1.0	500	560	180
88-06-2	2,4,6-Trichlorophenol	U	560	1.0	500	560	170
95-95-4	2,4,5-Trichlorophenol	U	560	1.0	500	560	170
91-58-7	2-Chloronaphthalene	U	370	1.0	330	370	97
92-52-4	1,1'-Biphenyl	U	370	1.0	330	370	81
88-74-4	2-Nitroaniline	U	560	1.0	500	560	83
131-11-3	Dimethyl Phthalate	U	370	1.0	330	370	87
606-20-2	2,6-Dinitrotoluene	U	370	1.0	330	370	88
208-96-8	Acenaphthylene	U	370	1.0	330	370	78
99-09-2	3-Nitroaniline	U	560	1.0	500	560	100
83-32-9	Acenaphthene	U	370	1.0	330	370	72
51-28-5	2,4-Dinitrophenol	U	1300	1.0	1200	1300	420
132-64-9	Dibenzofuran	U	370	1.0	330	370	88
100-02-7	4-Nitrophenol	U	1300	1.0	1200	1300	340
121-14-2	2,4-Dinitrotoluene	U	370	1.0	330	370	94
84-66-2	Diethylphthalate	U	370	1.0	330	370	89
7005-72-3	4-Chlorophenyl-phenylether	U	370	1.0	330	370	87
100-01-6	4-Nitroaniline	U	560	1.0	500	560	150
534-52-1	4,6-Dinitro-2-Methylphenol	U	1300	1.0	1200	1300	370
86-30-6	N-Nitrosodiphenylamine	U	730	1.0	660	730	240
101-55-3	4-Bromophenyl-phenylether	U	370	1.0	330	370	94
1912-24-9	Atrazine	U	370	1.0	330	370	100
87-86-5	Pentachlorophenol	U	910	1.0	820	910	260
120-12-7	Anthracene	U	370	1.0	330	370	93
86-74-8	Carbazole	U	560	1.0	500	560	120

JLS 4/16/09

KATAHDIN ANALYTICAL SERVICES
Report of Analytical Results

Client: CH2MHill
Project: TO-009 Lejeune
PO No:
Sample Date: 01/13/09
Received Date: 01/15/09
Extraction Date: 01/21/09
Analysis Date: 01-FEB-2009 20:23
Report Date: 02/06/2009
Matrix: SOIL
% Solids: 89.9

Lab ID: SC0209-11
Client ID: MR08-IS304-6-7-09A
SDG: TO9-36
Extracted by: AC
Extraction Method: SW846 3550
Analyst: JLP
Analysis Method: SW846 8270C
Lab Prep Batch: WG60036
Units: ug/Kgdrywt

CAS#	Compound	Flags	Results	DF	PQL	Adj.PQL	Adj.MDL
84-74-2	Di-n-butylphthalate	U	370	1.0	330	370	110
85-68-7	Butylbenzylphthalate	U	370	1.0	330	370	100
91-94-1	3,3'-Dichlorobenzidine	U	560	1.0	500	560	130
218-01-9	Chrysene	U	370	1.0	330	370	100
117-81-7	bis(2-Ethylhexyl)phthalate	U	370	1.0	330	370	110
117-84-0	Di-n-octylphthalate	U	370	1.0	330	370	230
367-12-4	2-Fluorophenol		72%				
13127-88-3	Phenol-D6		76%				
4165-60-0	Nitrobenzene-D5		66%				
321-60-8	2-Fluorobiphenyl		64%				
118-79-6	2,4,6-Tribromophenol		76%				
1718-51-0	Terphenyl-D14		75%				

lcw 4/16/09

19

KATAHDIN ANALYTICAL SERVICES
Report of Analytical Results

Client: CH2MHill
Project: TO-009 Lejeune
PO No:
Sample Date: 01/13/09
Received Date: 01/15/09
Extraction Date: 01/21/09
Analysis Date: 01-FEB-2009 23:52
Report Date: 02/06/2009
Matrix: SOIL
% Solids: 88.3

Lab ID: SC0209-13
Client ID: MR08-SS312-09A
SDG: TO9-36
Extracted by: AC
Extraction Method: SW846 3550
Analyst: JLP
Analysis Method: SW846 8270C
Lab Prep Batch: WG60036
Units: ug/Kgdrywt

CAS#	Compound	Flags	Results	DF	PQL	Adj.PQL	Adj.MDL
100-52-7	Benzaldehyde	~~U~~ UJ	570	1.0	500	570	140 CCH
108-95-2	Phenol	U	570	1.0	500	570	180
111-44-4	Bis(2-Chloroethyl)ether	U	370	1.0	330	370	92
95-57-8	2-Chlorophenol	U	570	1.0	500	570	180
95-48-7	2-Methylphenol	U	680	1.0	600	680	230
108-60-1	2,2'-Oxybis(1-chloropropane)	U	370	1.0	330	370	100
98-86-2	Acetophenone	U	680	1.0	600	680	200
621-64-7	N-Nitroso-di-n-propylamine	U	370	1.0	330	370	94
65794-96-9	3&4-Methylphenol	U	680	1.0	600	680	210
67-72-1	Hexachloroethane	U	370	1.0	330	370	110
98-95-3	Nitrobenzene	U	370	1.0	330	370	100
78-59-1	Isophorone	U	370	1.0	330	370	85
88-75-5	2-Nitrophenol	U	680	1.0	600	680	190
105-67-9	2,4-Dimethylphenol	U	570	1.0	500	570	190
111-91-1	Bis(2-Chloroethoxy)methane	U	370	1.0	330	370	110
120-83-2	2,4-Dichlorophenol	U	570	1.0	500	570	170
106-47-8	4-Chloroaniline	U	570	1.0	500	570	130
105-60-2	Caprolactam	U	570	1.0	500	570	160
59-50-7	4-Chloro-3-Methylphenol	U	570	1.0	500	570	190
88-06-2	2,4,6-Trichlorophenol	U	570	1.0	500	570	180
95-95-4	2,4,5-Trichlorophenol	U	570	1.0	500	570	180
91-58-7	2-Chloronaphthalene	U	370	1.0	330	370	98
92-52-4	1,1'-Biphenyl	U	370	1.0	330	370	83
88-74-4	2-Nitroaniline	U	570	1.0	500	570	85
131-11-3	Dimethyl Phthalate	U	370	1.0	330	370	88
606-20-2	2,6-Dinitrotoluene	U	370	1.0	330	370	89
208-96-8	Acenaphthylene	U	370	1.0	330	370	79
99-09-2	3-Nitroaniline	U	570	1.0	500	570	110
83-32-9	Acenaphthene	U	370	1.0	330	370	74
51-28-5	2,4-Dinitrophenol	U	1400	1.0	1200	1400	430
132-64-9	Dibenzofuran	U	370	1.0	330	370	89
100-02-7	4-Nitrophenol	U	1400	1.0	1200	1400	350
121-14-2	2,4-Dinitrotoluene	U	370	1.0	330	370	96
84-66-2	Diethylphthalate	U	370	1.0	330	370	90
7005-72-3	4-Chlorophenyl-phenylether	U	370	1.0	330	370	88
100-01-6	4-Nitroaniline	U	570	1.0	500	570	150
534-52-1	4,6-Dinitro-2-Methylphenol	U	1400	1.0	1200	1400	380
86-30-6	N-Nitrosodiphenylamine	U	750	1.0	660	750	250
101-55-3	4-Bromophenyl-phenylether	U	370	1.0	330	370	96
1912-24-9	Atrazine	U	370	1.0	330	370	100
87-86-5	Pentachlorophenol	U	930	1.0	820	930	270
120-12-7	Anthracene	U	370	1.0	330	370	95
86-74-8	Carbazole	U	570	1.0	500	570	120

MW
4/16/09

KATAHDIN ANALYTICAL SERVICES
Report of Analytical Results

Client: CH2MHill
Project: TO-009 Lejeune
PO No:
Sample Date: 01/13/09
Received Date: 01/15/09
Extraction Date: 01/21/09
Analysis Date: 01-FEB-2009 23:52
Report Date: 02/06/2009
Matrix: SOIL
% Solids: 88.3

Lab ID: SC0209-13
Client ID: MR08-SS312-09A
SDG: TO9-36
Extracted by: AC
Extraction Method: SW846 3550
Analyst: JLP
Analysis Method: SW846 8270C
Lab Prep Batch: WG60036
Units: ug/Kgdrywt

CAS#	Compound	Flags	Results	DF	PQL	Adj.PQL	Adj.MDL
84-74-2	Di-n-butylphthalate	U	370	1.0	330	370	110
85-68-7	Butylbenzylphthalate	U	370	1.0	330	370	100
91-94-1	3,3'-Dichlorobenzidine	U	570	1.0	500	570	130
218-01-9	Chrysene	U	370	1.0	330	370	110
117-81-7	bis(2-Ethylhexyl)phthalate	U	370	1.0	330	370	110
117-84-0	Di-n-octylphthalate	U	370	1.0	330	370	240
367-12-4	2-Fluorophenol		71%				
13127-88-3	Phenol-D6		77%				
4165-60-0	Nitrobenzene-D5		68%				
321-60-8	2-Fluorobiphenyl		66%				
118-79-6	2,4,6-Tribromophenol		93%				
1718-51-0	Terphenyl-D14		94%				

lew 4/16/09

20

KATAHDIN ANALYTICAL SERVICES
Report of Analytical Results

Client: CH2MHill
Project: TO-009 Lejeune
PO No:
Sample Date: 01/13/09
Received Date: 01/15/09
Extraction Date: 01/21/09
Analysis Date: 02-FEB-2009 11:59
Report Date: 02/06/2009
Matrix: SOIL
% Solids: 89.0

Lab ID: SC0209-15
Client ID: MR08-SS308-09A
SDG: TO9-36
Extracted by: AC
Extraction Method: SW846 3550
Analyst: JLP
Analysis Method: SW846 8270C
Lab Prep Batch: WG60036
Units: ug/Kgdrywt

CAS#	Compound	Flags	Results	DF	PQL	Adj.PQL	Adj.MDL
100-52-7	Benzaldehyde	~~U~~ UJ	560	1.0	500	560	130 CCH
108-95-2	Phenol	U	560	1.0	500	560	180
111-44-4	Bis(2-Chloroethyl)ether	U	370	1.0	330	370	91
95-57-8	2-Chlorophenol	U	560	1.0	500	560	180
95-48-7	2-Methylphenol	U	670	1.0	600	670	220
108-60-1	2,2'-Oxybis(1-chloropropane)	U	370	1.0	330	370	100
98-86-2	Acetophenone	U	670	1.0	600	670	200
621-64-7	N-Nitroso-di-n-propylamine	U	370	1.0	330	370	93
65794-96-9	3&4-Methylphenol	U	670	1.0	600	670	210
67-72-1	Hexachloroethane	U	370	1.0	330	370	110
98-95-3	Nitrobenzene	U	370	1.0	330	370	100
78-59-1	Isophorone	U	370	1.0	330	370	84
88-75-5	2-Nitrophenol	U	670	1.0	600	670	190
105-67-9	2,4-Dimethylphenol	U	560	1.0	500	560	180
111-91-1	Bis(2-Chloroethoxy)methane	U	370	1.0	330	370	110
120-83-2	2,4-Dichlorophenol	U	560	1.0	500	560	170
106-47-8	4-Chloroaniline	U	560	1.0	500	560	130
105-60-2	Caprolactam	U	560	1.0	500	560	160
59-50-7	4-Chloro-3-Methylphenol	U	560	1.0	500	560	190
88-06-2	2,4,6-Trichlorophenol	U	560	1.0	500	560	170
95-95-4	2,4,5-Trichlorophenol	U	560	1.0	500	560	170
91-58-7	2-Chloronaphthalene	U	370	1.0	330	370	98
92-52-4	1,1'-Biphenyl	U	370	1.0	330	370	82
88-74-4	2-Nitroaniline	U	560	1.0	500	560	84
131-11-3	Dimethyl Phthalate	U	370	1.0	330	370	88
606-20-2	2,6-Dinitrotoluene	U	370	1.0	330	370	89
208-96-8	Acenaphthylene	U	370	1.0	330	370	79
99-09-2	3-Nitroaniline	U	560	1.0	500	560	100
83-32-9	Acenaphthene	U	370	1.0	330	370	73
51-28-5	2,4-Dinitrophenol	U	1300	1.0	1200	1300	420
132-64-9	Dibenzofuran	U	370	1.0	330	370	89
100-02-7	4-Nitrophenol	U	1300	1.0	1200	1300	350
121-14-2	2,4-Dinitrotoluene	U	370	1.0	330	370	95
84-66-2	Diethylphthalate	U	370	1.0	330	370	90
7005-72-3	4-Chlorophenyl-phenylether	U	370	1.0	330	370	88
100-01-6	4-Nitroaniline	U	560	1.0	500	560	150
534-52-1	4,6-Dinitro-2-Methylphenol	U	1300	1.0	1200	1300	380
86-30-6	N-Nitrosodiphenylamine	U	740	1.0	660	740	240
101-55-3	4-Bromophenyl-phenylether	U	370	1.0	330	370	95
1912-24-9	Atrazine	U	370	1.0	330	370	100
87-86-5	Pentachlorophenol	U	920	1.0	820	920	270
120-12-7	Anthracene	U	370	1.0	330	370	94
86-74-8	Carbazole	U	560	1.0	500	560	120

LW 4/16/09

KATAHDIN ANALYTICAL SERVICES
Report of Analytical Results

20

Client: CH2MHill
Project: TO-009 Lejeune
PO No:
Sample Date: 01/13/09
Received Date: 01/15/09
Extraction Date: 01/21/09
Analysis Date: 02-FEB-2009 11:59
Report Date: 02/06/2009
Matrix: SOIL
% Solids: 89.0

Lab ID: SC0209-15
Client ID: MR08-SS308-09A
SDG: TO9-36
Extracted by: AC
Extraction Method: SW846 3550
Analyst: JLP
Analysis Method: SW846 8270C
Lab Prep Batch: WG60036
Units: ug/Kgdrywt

CAS#	Compound	Flags	Results	DF	PQL	Adj.PQL	Adj.MDL
84-74-2	Di-n-butylphthalate	U	370	1.0	330	370	110
85-68-7	Butylbenzylphthalate	U	370	1.0	330	370	100
91-94-1	3,3'-Dichlorobenzidine	U	560	1.0	500	560	130
218-01-9	Chrysene	U	370	1.0	330	370	110
117-81-7	bis(2-Ethylhexyl)phthalate		380	1.0	330	370	110
117-84-0	Di-n-octylphthalate	U	370	1.0	330	370	240
367-12-4	2-Fluorophenol		71%				
13127-88-3	Phenol-D6		82%				
4165-60-0	Nitrobenzene-D5		57%				
321-60-8	2-Fluorobiphenyl		70%				
118-79-6	2,4,6-Tribromophenol		96%				
1718-51-0	Terphenyl-D14		92%				

lew
4/16/09

ENVIRONMENTAL
Data Services, Inc.

POLYNUCLEAR AROMATIC COMPOUNDS BY 8270SIM

USEPA Region IV - Level IV Review

Site: MCB Camp Lejeune, TO-09 SDG #: TO9-37

Client: CH2M HILL, Inc., Virginia Beach, Virginia Date: April 16, 2009

Laboratory: Katahdin Analytical Services, Scarborough, Maine Reviewer: Nancy Weaver

EDS ID	Client Sample ID	Laboratory Sample ID	Matrix
1	MR08-IS312-5-6-09A	SC0210-2	Soil
2	MR08-SS311-09A	SC0210-4	Soil
3	MR08-IS311-8-9-09A	SC0210-6	Soil
4	MR08-IS308-9-10-09A	SC0210-8	Soil
4MS	MR08-IS308-9-10-09AMS	SC0210-8MS	Soil
4MSD	MR08-IS308-9-10-09AMSD	SC0210-8MSD	Soil
5	MR08-SS309-09A	SC0210-10	Soil
6	MR08-SS309D-09A	SC0210-12	Soil
7	MR08-IS309-6-7-09A	SC0210-14	Soil
8	MR08-IS309D-6-7-09A	SC0210-16	Soil
9	MR08-SS310-09A	SC0210-18	Soil
10	MR08-IS310-9-10-09A	SC0210-20	Soil
11	MR08-SS307-09A	SC0210-22	Soil
12	MR08-IS307-6-7-09A	SC0210-24	Soil
13	MR08-SS284-09A	SC0210-26	Soil
14	MR08-IS284-6-7-09A	SC0210-28	Soil
15	MR08-SS285-09A	SC0210-30	Soil
16	MR08-IS285-8-9-09A	SC0210-32	Soil
17	MR08-SS286-09A	SC0210-34	Soil
18	MR08-IS286-6-7-09A	SC0210-36	Soil
19	MR08-SS287-09A	SC0210-38	Soil
20	MR08-IS287-5-6-09A	SC0210-40	Soil

The USEPA "Contract Laboratory Program National Functional Guidelines for Organic Data Review," October 1999, and professional judgment were used in evaluating the data in this summary report.

Holding Times - All samples were extracted within 14 days for soil samples and analyzed within 40 days for all samples.

GC/MS Tuning - All of the DFTPP tunes in the initial and continuing calibrations met the percent relative abundance criteria.

Initial Calibration - The initial calibrations exhibited acceptable %RSD and mean RRF values.

Continuing Calibration - The continuing calibrations exhibited acceptable %D and RRF values except the following.

CCAL Date	Compound	%D/RRF	Qualifier	Affected Samples
02/04/09 (0801)	2-Methylnaphthalene	25.46%	J/UJ	2, 3, 11-16, 18, 20
02/04/09 (1756)	Fluoranthene	27.88%	J/UJ	17, 19
	Indeno (1,2,3-cd) pyrene	25.28%	J/UJ	17, 19
	Benzo (g,h,i) perylene	27.68%	J/UJ	17, 19
	Hexachlorobutadiene	67.30%	J/UJ	17, 19
	Hexachlorocyclopentadiene	66.86%	J/UJ	17, 19

Surrogates - All samples exhibited acceptable surrogate recoveries.

MS/MSD - The MS/MSD sample exhibited acceptable %R and RPD values.

Laboratory Control Sample - The LCS samples exhibited acceptable %R values.

LCS ID	Compound	%R	Qualifier	Affected Samples
WG59996-2	Fluoranthene	164%	J	2, 5, 6, 9, 11

Internal Standard (IS) Area Performance - All internal standards met response and retention time (RT) criteria.

Method Blank - The method blanks were free of contamination.

Field, Equipment Blank - Field QC results are summarized below.

Blank ID	Compound	Conc. ug/L	Action Level ug/kg	Qualifier	Affected Samples
MR08-FB01011009	None - ND	-	-	-	-
MR08-EB01011309-SS	Phenanthrene	0.63	10.5	U	2, 9, 13, 15
	Pyrene	0.079	13.2	U	5, 6

Field Duplicates - Field duplicate results are summarized below.

Compound	MR08-SS309-09A ug/kg	MR08-SS309D-09A ug/kg	RPD	Qualifier
Fluoranthene	2.9	3.1	7%	None
Benzo(a)anthracene	12 U	2.9	NC	None

Compound	MR08-IS309-6-7-09A ug/kg	MR08-IS309D-6-7-09A ug/kg	RPD	Qualifier
None	ND	ND	-	-

Compound Quantitation - No discrepancies were identified.

KATAHDIN ANALYTICAL SERVICES
Report of Analytical Results

Client: CH2MHill
Project: TO-009 Lejeune
PO No:
Sample Date: 01/13/09
Received Date: 01/15/09
Extraction Date: 01/20/09
Analysis Date: 03-FEB-2009 18:24
Report Date: 02/08/2009
Matrix: SOIL
% Solids: 94.2

Lab ID: SC0210-2
Client ID: MR08-IS312-5-6-09A
SDG: TO9-37
Extracted by: AC
Extraction Method: SW846 3550
Analyst: JCG
Analysis Method: SW846 M8270C
Lab Prep Batch: WG59996
Units: ug/Kgdrywt

CAS#	Compound	Flags	Results	DF	PQL	Adj.PQL	Adj.MDL
91-20-3	Naphthalene	U	11	1.0	10	11	2.8
91-57-6	2-Methylnaphthalene	U	11	1.0	10	11	2.3
86-73-7	Fluorene	U	11	1.0	10	11	3.4
85-01-8	Phenanthrene	U	11	1.0	10	11	1.9
206-44-0	Fluoranthene	U	11	1.0	10	11	1.9
129-00-0	Pyrene	U	11	1.0	10	11	2.2
56-55-3	Benzo(a)anthracene	U	11	1.0	10	11	2.0
205-99-2	Benzo(b)fluoranthene	U	11	1.0	10	11	2.5
207-08-9	Benzo(k)fluoranthene	U	11	1.0	10	11	3.3
50-32-8	Benzo(a)pyrene	U	11	1.0	10	11	3.5
193-39-5	Indeno(1,2,3-cd)pyrene	U	11	1.0	10	11	2.0
53-70-3	Dibenzo(a,h)anthracene	U	11	1.0	10	11	1.9
191-24-2	Benzo(g,h,i)perylene	U	11	1.0	10	11	2.1
118-74-1	Hexachlorobenzene	U	11	1.0	10	11	1.9
87-68-3	Hexachlorobutadiene	U	11	1.0	10	11	2.4
77-47-4	Hexachlorocyclopentadiene	U	11	1.0	10	11	1.6
7297-45-2	2-Methylnaphthalene-D10		86%				
367-12-4	2,4-Dibromophenol		89%				
81103-79-9	Fluorene-d10		72%				
1718-51-1	Pyrene-D10		79%				

MW
4/16/09

2

KATAHDIN ANALYTICAL SERVICES
Report of Analytical Results

Client: CH2MHill
Project: TO-009 Lejeune
PO No:
Sample Date: 01/13/09
Received Date: 01/15/09
Extraction Date: 01/20/09
Analysis Date: 04-FEB-2009 16:02
Report Date: 02/08/2009
Matrix: SOIL
% Solids: 90.4

Lab ID: SC0210-4RA
Client ID: MR08-SS311-09A
SDG: TO9-37
Extracted by: AC
Extraction Method: SW846 3550
Analyst: JLP
Analysis Method: SW846 M8270C
Lab Prep Batch: WG59996
Units: ug/Kgdrywt

CAS#	Compound	Flags	Results	DF	PQL	Adj.PQL	Adj.MDL
91-20-3	Naphthalene	U	11	1.0	10	11	2.9
91-57-6	2-Methylnaphthalene	~~J~~ UJ	11	1.0	10	11	2.4 CCH
86-73-7	Fluorene	U	11	1.0	10	11	3.5
85-01-8	Phenanthrene	~~J~~ 114	~~4.8~~	1.0	10	11	2.0 BL
206-44-0	Fluoranthene	J	20	1.0	10	11	2.0 BSH
129-00-0	Pyrene		14	1.0	10	11	2.3
56-55-3	Benzo(a)anthracene	J	7.4	1.0	10	11	2.1
205-99-2	Benzo(b)fluoranthene		13	1.0	10	11	2.6
207-08-9	Benzo(k)fluoranthene	J	11	1.0	10	11	3.4
50-32-8	Benzo(a)pyrene	J	9.1	1.0	10	11	3.6
193-39-5	Indeno(1,2,3-cd)pyrene	J	5.1	1.0	10	11	2.1
53-70-3	Dibenzo(a,h)anthracene	U	11	1.0	10	11	2.0
191-24-2	Benzo(g,h,i)perylene	J	4.8	1.0	10	11	2.2
118-74-1	Hexachlorobenzene	U	11	1.0	10	11	2.0
87-68-3	Hexachlorobutadiene	U	11	1.0	10	11	2.5
77-47-4	Hexachlorocyclopentadiene	U	11	1.0	10	11	1.6
7297-45-2	2-Methylnaphthalene-D10		92%				
367-12-4	2,4-Dibromophenol		110%				
81103-79-9	Fluorene-d10		87%				
1718-51-1	Pyrene-D10		91%				

lw 4/16/09

3

KATAHDIN ANALYTICAL SERVICES
Report of Analytical Results

Client: CH2MHill
Project: TO-009 Lejeune
PO No:
Sample Date: 01/13/09
Received Date: 01/15/09
Extraction Date: 01/20/09
Analysis Date: 04-FEB-2009 14:01
Report Date: 02/08/2009
Matrix: SOIL
% Solids: 85.2

Lab ID: SC0210-6RA
Client ID: MR08-IS311-8-9-09A
SDG: TO9-37
Extracted by: AC
Extraction Method: SW846 3550
Analyst: JLP
Analysis Method: SW846 M8270C
Lab Prep Batch: WG59996
Units: ug/Kgdrywt

CAS#	Compound	Flags	Results	DF	PQL	Adj.PQL	Adj.MDL
91-20-3	Naphthalene	U	12	1.0	10	12	3.0
91-57-6	2-Methylnaphthalene	~~U~~ UJ	12	1.0	10	12	2.6 CCH
86-73-7	Fluorene	U	12	1.0	10	12	3.8
85-01-8	Phenanthrene	U	12	1.0	10	12	2.1
206-44-0	Fluoranthene	U	12	1.0	10	12	2.1
129-00-0	Pyrene	U	12	1.0	10	12	2.5
56-55-3	Benzo(a)anthracene	U	12	1.0	10	12	2.2
205-99-2	Benzo(b)fluoranthene	U	12	1.0	10	12	2.8
207-08-9	Benzo(k)fluoranthene	U	12	1.0	10	12	3.6
50-32-8	Benzo(a)pyrene	U	12	1.0	10	12	3.9
193-39-5	Indeno(1,2,3-cd)pyrene	U	12	1.0	10	12	2.2
53-70-3	Dibenzo(a,h)anthracene	U	12	1.0	10	12	2.1
191-24-2	Benzo(g,h,i)perylene	U	12	1.0	10	12	2.3
118-74-1	Hexachlorobenzene	U	12	1.0	10	12	2.1
87-68-3	Hexachlorobutadiene	U	12	1.0	10	12	2.7
77-47-4	Hexachlorocyclopentadiene	U	12	1.0	10	12	1.8
7297-45-2	2-Methylnaphthalene-D10		101%				
367-12-4	2,4-Dibromophenol		100%				
81103-79-9	Fluorene-d10		83%				
1718-51-1	Pyrene-D10		82%				

lew
4/16/09

4

KATAHDIN ANALYTICAL SERVICES
Report of Analytical Results

Client: CH2MHill
Project: TO-009 Lejeune
PO No:
Sample Date: 01/13/09
Received Date: 01/15/09
Extraction Date: 01/20/09
Analysis Date: 03-FEB-2009 20:25
Report Date: 02/08/2009
Matrix: SOIL
% Solids: 92.9

Lab ID: SC0210-8
Client ID: 8-IS308-9-10-09A
SDG: TO9-37
Extracted by: AC
Extraction Method: SW846 3550
Analyst: JCG
Analysis Method: SW846 M8270C
Lab Prep Batch: WG59996
Units: ug/Kgdrywt

CAS#	Compound	Flags	Results	DF	PQL	Adj.PQL	Adj.MDL
91-20-3	Naphthalene	U	11	1.0	10	11	2.8
91-57-6	2-Methylnaphthalene	U	11	1.0	10	11	2.4
86-73-7	Fluorene	U	11	1.0	10	11	3.4
85-01-8	Phenanthrene	U	11	1.0	10	11	1.9
206-44-0	Fluoranthene	U	11	1.0	10	11	1.9
129-00-0	Pyrene	U	11	1.0	10	11	2.2
56-55-3	Benzo(a)anthracene	U	11	1.0	10	11	2.0
205-99-2	Benzo(b)fluoranthene	U	11	1.0	10	11	2.6
207-08-9	Benzo(k)fluoranthene	U	11	1.0	10	11	3.3
50-32-8	Benzo(a)pyrene	U	11	1.0	10	11	3.6
193-39-5	Indeno(1,2,3-cd)pyrene	U	11	1.0	10	11	2.0
53-70-3	Dibenzo(a,h)anthracene	U	11	1.0	10	11	1.9
191-24-2	Benzo(g,h,i)perylene	U	11	1.0	10	11	2.2
118-74-1	Hexachlorobenzene	U	11	1.0	10	11	1.9
87-68-3	Hexachlorobutadiene	U	11	1.0	10	11	2.5
77-47-4	Hexachlorocyclopentadiene	U	11	1.0	10	11	1.6
7297-45-2	2-Methylnaphthalene-D10		93%				
367-12-4	2,4-Dibromophenol		98%				
81103-79-9	Fluorene-d10		81%				
1718-51-1	Pyrene-D10		92%				

lew
4/16/09

5

KATAHDIN ANALYTICAL SERVICES
Report of Analytical Results

Client: CH2MHill
Project: TO-009 Lejeune
PO No:
Sample Date: 01/13/09
Received Date: 01/15/09
Extraction Date: 01/20/09
Analysis Date: 03-FEB-2009 21:05
Report Date: 02/08/2009
Matrix: SOIL
% Solids: 85.6

Lab ID: SC0210-10
Client ID: MR08-SS309-09A
SDG: TO9-37
Extracted by: AC
Extraction Method: SW846 3550
Analyst: JCG
Analysis Method: SW846 M8270C
Lab Prep Batch: WG59996
Units: ug/Kgdrywt

CAS#	Compound	Flags	Results	DF	PQL	Adj.PQL	Adj.MDL	
91-20-3	Naphthalene	U	12	1.0	10	12	3.0	
91-57-6	2-Methylnaphthalene	U	12	1.0	10	12	2.6	
86-73-7	Fluorene	U	12	1.0	10	12	3.7	
85-01-8	Phenanthrene	U	12	1.0	10	12	2.1	
206-44-0	Fluoranthene	~~J~~ J	2.9	1.0	10	12	2.1	BSH
129-00-0	Pyrene	~~J~~ 124	~~2.6~~	1.0	10	12	2.4	BL
56-55-3	Benzo(a)anthracene	U	12	1.0	10	12	2.2	
205-99-2	Benzo(b)fluoranthene	U	12	1.0	10	12	2.8	
207-08-9	Benzo(k)fluoranthene	U	12	1.0	10	12	3.6	
50-32-8	Benzo(a)pyrene	U	12	1.0	10	12	3.8	
193-39-5	Indeno(1,2,3-cd)pyrene	U	12	1.0	10	12	2.2	
53-70-3	Dibenzo(a,h)anthracene	U	12	1.0	10	12	2.1	
191-24-2	Benzo(g,h,i)perylene	U	12	1.0	10	12	2.3	
118-74-1	Hexachlorobenzene	U	12	1.0	10	12	2.1	
87-68-3	Hexachlorobutadiene	U	12	1.0	10	12	2.7	
77-47-4	Hexachlorocyclopentadiene	U	12	1.0	10	12	1.8	
7297-45-2	2-Methylnaphthalene-D10		84%					
367-12-4	2,4-Dibromophenol		85%					
81103-79-9	Fluorene-d10		75%					
1718-51-1	Pyrene-D10		77%					

lew
4/14/09

6

KATAHDIN ANALYTICAL SERVICES
Report of Analytical Results

Client: CH2MHill
Project: TO-009 Lejeune
PO No:
Sample Date: 01/13/09
Received Date: 01/15/09
Extraction Date: 01/20/09
Analysis Date: 03-FEB-2009 21:45
Report Date: 02/08/2009
Matrix: SOIL
% Solids: 83.9

Lab ID: SC0210-12
Client ID: MR08-SS309D-09A
SDG: TO9-37
Extracted by: AC
Extraction Method: SW846 3550
Analyst: JCG
Analysis Method: SW846 M8270C
Lab Prep Batch: WG59996
Units: ug/Kgdrywt

CAS#	Compound	Flags	Results	DF	PQL	Adj.PQL	Adj.MDL	
91-20-3	Naphthalene	U	12	1.0	10	12	3.1	
91-57-6	2-Methylnaphthalene	U	12	1.0	10	12	2.6	
86-73-7	Fluorene	U	12	1.0	10	12	3.8	
85-01-8	Phenanthrene	U	12	1.0	10	12	2.1	
206-44-0	Fluoranthene	~~U~~ J	3.1	1.0	10	12	2.1	BSH
129-00-0	Pyrene	~~U~~ 12U	~~2.9~~	1.0	10	12	2.5	BL
56-55-3	Benzo(a)anthracene	J	2.9	1.0	10	12	2.3	
205-99-2	Benzo(b)fluoranthene	U	12	1.0	10	12	2.9	
207-08-9	Benzo(k)fluoranthene	U	12	1.0	10	12	3.7	
50-32-8	Benzo(a)pyrene	U	12	1.0	10	12	3.9	
193-39-5	Indeno(1,2,3-cd)pyrene	U	12	1.0	10	12	2.3	
53-70-3	Dibenzo(a,h)anthracene	U	12	1.0	10	12	2.1	
191-24-2	Benzo(g,h,i)perylene	U	12	1.0	10	12	2.4	
118-74-1	Hexachlorobenzene	U	12	1.0	10	12	2.1	
87-68-3	Hexachlorobutadiene	U	12	1.0	10	12	2.7	
77-47-4	Hexachlorocyclopentadiene	U	12	1.0	10	12	1.8	
7297-45-2	2-Methylnaphthalene-D10		94%					
367-12-4	2,4-Dibromophenol		110%					
81103-79-9	Fluorene-d10		85%					
1718-51-1	Pyrene-D10		88%					

lew
4/16/09

7

KATAHDIN ANALYTICAL SERVICES
Report of Analytical Results

Client: CH2MHill
Project: TO-009 Lejeune
PO No:
Sample Date: 01/13/09
Received Date: 01/15/09
Extraction Date: 01/20/09
Analysis Date: 03-FEB-2009 22:25
Report Date: 02/08/2009
Matrix: SOIL
% Solids: 84.0

Lab ID: SC0210-14
Client ID: MR08-IS309-6-7-09A
SDG: TO9-37
Extracted by: AC
Extraction Method: SW846 3550
Analyst: JCG
Analysis Method: SW846 M8270C
Lab Prep Batch: WG59996
Units: ug/Kgdrywt

CAS#	Compound	Flags	Results	DF	PQL	Adj.PQL	Adj.MDL
91-20-3	Naphthalene	U	12	1.0	10	12	3.1
91-57-6	2-Methylnaphthalene	U	12	1.0	10	12	2.6
86-73-7	Fluorene	U	12	1.0	10	12	3.8
85-01-8	Phenanthrene	U	12	1.0	10	12	2.1
206-44-0	Fluoranthene	U	12	1.0	10	12	2.1
129-00-0	Pyrene	U	12	1.0	10	12	2.5
56-55-3	Benzo(a)anthracene	U	12	1.0	10	12	2.3
205-99-2	Benzo(b)fluoranthene	U	12	1.0	10	12	2.8
207-08-9	Benzo(k)fluoranthene	U	12	1.0	10	12	3.7
50-32-8	Benzo(a)pyrene	U	12	1.0	10	12	3.9
193-39-5	Indeno(1,2,3-cd)pyrene	U	12	1.0	10	12	2.3
53-70-3	Dibenzo(a,h)anthracene	U	12	1.0	10	12	2.1
191-24-2	Benzo(g,h,i)perylene	U	12	1.0	10	12	2.4
118-74-1	Hexachlorobenzene	U	12	1.0	10	12	2.1
87-68-3	Hexachlorobutadiene	U	12	1.0	10	12	2.7
77-47-4	Hexachlorocyclopentadiene	U	12	1.0	10	12	1.8
7297-45-2	2-Methylnaphthalene-D10		92%				
367-12-4	2,4-Dibromophenol		94%				
81103-79-9	Fluorene-d10		76%				
1718-51-1	Pyrene-D10		81%				

MW 4/16/09

8

KATAHDIN ANALYTICAL SERVICES
Report of Analytical Results

Client: CH2MHill
Project: TO-009 Lejeune
PO No:
Sample Date: 01/13/09
Received Date: 01/15/09
Extraction Date: 01/20/09
Analysis Date: 03-FEB-2009 23:05
Report Date: 02/08/2009
Matrix: SOIL
% Solids: 86.3

Lab ID: SC0210-16
Client ID: MR08-IS309D-6-7-09A
SDG: TO9-37
Extracted by: AC
Extraction Method: SW846 3550
Analyst: JCG
Analysis Method: SW846 M8270C
Lab Prep Batch: WG59996
Units: ug/Kgdrywt

CAS#	Compound	Flags	Results	DF	PQL	Adj.PQL	Adj.MDL
91-20-3	Naphthalene	U	12	1.0	10	12	3.0
91-57-6	2-Methylnaphthalene	U	12	1.0	10	12	2.5
86-73-7	Fluorene	U	12	1.0	10	12	3.7
85-01-8	Phenanthrene	U	12	1.0	10	12	2.1
206-44-0	Fluoranthene	U	12	1.0	10	12	2.1
129-00-0	Pyrene	U	12	1.0	10	12	2.4
56-55-3	Benzo(a)anthracene	U	12	1.0	10	12	2.2
205-99-2	Benzo(b)fluoranthene	U	12	1.0	10	12	2.8
207-08-9	Benzo(k)fluoranthene	U	12	1.0	10	12	3.6
50-32-8	Benzo(a)pyrene	U	12	1.0	10	12	3.8
193-39-5	Indeno(1,2,3-cd)pyrene	U	12	1.0	10	12	2.2
53-70-3	Dibenzo(a,h)anthracene	U	12	1.0	10	12	2.1
191-24-2	Benzo(g,h,i)perylene	U	12	1.0	10	12	2.3
118-74-1	Hexachlorobenzene	U	12	1.0	10	12	2.1
87-68-3	Hexachlorobutadiene	U	12	1.0	10	12	2.7
77-47-4	Hexachlorocyclopentadiene	U	12	1.0	10	12	1.7
7297-45-2	2-Methylnaphthalene-D10		83%				
367-12-4	2,4-Dibromophenol		93%				
81103-79-9	Fluorene-d10		78%				
1718-51-1	Pyrene-D10		83%				

fw
4/14/09

9

KATAHDIN ANALYTICAL SERVICES
Report of Analytical Results

Client: CH2MHill
Project: TO-009 Lejeune
PO No:
Sample Date: 01/13/09
Received Date: 01/15/09
Extraction Date: 01/20/09
Analysis Date: 03-FEB-2009 23:46
Report Date: 02/08/2009
Matrix: SOIL
% Solids: 86.9

Lab ID: SC0210-18
Client ID: MR08-SS310-09A
SDG: TO9-37
Extracted by: AC
Extraction Method: SW846 3550
Analyst: JCG
Analysis Method: SW846 M8270C
Lab Prep Batch: WG59996
Units: ug/Kgdrywt

CAS#	Compound	Flags	Results	DF	PQL	Adj.PQL	Adj.MDL	
91-20-3	Naphthalene	U	12	1.0	10	12	3.0	
91-57-6	2-Methylnaphthalene	U	12	1.0	10	12	2.5	
86-73-7	Fluorene	U	12	1.0	10	12	3.7	
85-01-8	Phenanthrene	~~J~~ 12U	~~8.4~~	1.0	10	12	2.1	BL
206-44-0	Fluoranthene	J	28	1.0	10	12	2.1	BSH
129-00-0	Pyrene		20	1.0	10	12	2.4	
56-55-3	Benzo(a)anthracene		14	1.0	10	12	2.2	
205-99-2	Benzo(b)fluoranthene		21	1.0	10	12	2.8	
207-08-9	Benzo(k)fluoranthene		15	1.0	10	12	3.6	
50-32-8	Benzo(a)pyrene		15	1.0	10	12	3.8	
193-39-5	Indeno(1,2,3-cd)pyrene	J	10	1.0	10	12	2.2	
53-70-3	Dibenzo(a,h)anthracene	J	3.5	1.0	10	12	2.1	
191-24-2	Benzo(g,h,i)perylene	J	9.6	1.0	10	12	2.3	
118-74-1	Hexachlorobenzene	U	12	1.0	10	12	2.1	
87-68-3	Hexachlorobutadiene	U	12	1.0	10	12	2.6	
77-47-4	Hexachlorocyclopentadiene	U	12	1.0	10	12	1.7	
7297-45-2	2-Methylnaphthalene-D10		100%					
367-12-4	2,4-Dibromophenol		100%					
81103-79-9	Fluorene-d10		89%					
1718-51-1	Pyrene-D10		86%					

MW
4/16/09

10

KATAHDIN ANALYTICAL SERVICES
Report of Analytical Results

Client: CH2MHill
Project: TO-009 Lejeune
PO No:
Sample Date: 01/13/09
Received Date: 01/15/09
Extraction Date: 01/20/09
Analysis Date: 04-FEB-2009 00:26
Report Date: 02/08/2009
Matrix: SOIL
% Solids: 84.2

Lab ID: SC0210-20
Client ID: MR08-IS310-9-10-09A
SDG: TO9-37
Extracted by: AC
Extraction Method: SW846 3550
Analyst: JCG
Analysis Method: SW846 M8270C
Lab Prep Batch: WG59996
Units: ug/Kgdrywt

CAS#	Compound	Flags	Results	DF	PQL	Adj.PQL	Adj.MDL
91-20-3	Naphthalene	U	12	1.0	10	12	3.1
91-57-6	2-Methylnaphthalene	U	12	1.0	10	12	2.6
86-73-7	Fluorene	U	12	1.0	10	12	3.8
85-01-8	Phenanthrene	U	12	1.0	10	12	2.1
206-44-0	Fluoranthene	U	12	1.0	10	12	2.1
129-00-0	Pyrene	U	12	1.0	10	12	2.5
56-55-3	Benzo(a)anthracene	U	12	1.0	10	12	2.2
205-99-2	Benzo(b)fluoranthene	U	12	1.0	10	12	2.8
207-08-9	Benzo(k)fluoranthene	U	12	1.0	10	12	3.7
50-32-8	Benzo(a)pyrene	U	12	1.0	10	12	3.9
193-39-5	Indeno(1,2,3-cd)pyrene	U	12	1.0	10	12	2.2
53-70-3	Dibenzo(a,h)anthracene	U	12	1.0	10	12	2.1
191-24-2	Benzo(g,h,i)perylene	U	12	1.0	10	12	2.4
118-74-1	Hexachlorobenzene	U	12	1.0	10	12	2.1
87-68-3	Hexachlorobutadiene	U	12	1.0	10	12	2.7
77-47-4	Hexachlorocyclopentadiene	U	12	1.0	10	12	1.8
7297-45-2	2-Methylnaphthalene-D10		100%				
367-12-4	2,4-Dibromophenol		103%				
81103-79-9	Fluorene-d10		85%				
1718-51-1	Pyrene-D10		92%				

MW
4/16/09

11

KATAHDIN ANALYTICAL SERVICES
Report of Analytical Results

Client: CH2MHill
Project: TO-009 Lejeune
PO No:
Sample Date: 01/13/09
Received Date: 01/15/09
Extraction Date: 01/20/09
Analysis Date: 04-FEB-2009 12:01
Report Date: 02/08/2009
Matrix: SOIL
% Solids: 87.7

Lab ID: SC0210-22
Client ID: MR08-SS307-09A
SDG: T09-37
Extracted by: AC
Extraction Method: SW846 3550
Analyst: JLP
Analysis Method: SW846 M8270C
Lab Prep Batch: WG59996
Units: ug/Kgdrywt

CAS#	Compound	Flags	Results	DF	PQL	Adj.PQL	Adj.MDL
91-20-3	Naphthalene	J	5.4	1.0	10	11	3.0
91-57-6	2-Methylnaphthalene	J	14	1.0	10	11	2.5 CCM
86-73-7	Fluorene	U	11	1.0	10	11	3.6
85-01-8	Phenanthrene		45	1.0	10	11	2.0
206-44-0	Fluoranthene	J	250	1.0	10	11	2.0 BSM
129-00-0	Pyrene		160	1.0	10	11	2.4
56-55-3	Benzo(a)anthracene		120	1.0	10	11	2.2
205-99-2	Benzo(b)fluoranthene		240	1.0	10	11	2.7
207-08-9	Benzo(k)fluoranthene		170	1.0	10	11	3.5
50-32-8	Benzo(a)pyrene		150	1.0	10	11	3.8
193-39-5	Indeno(1,2,3-cd)pyrene		110	1.0	10	11	2.2
53-70-3	Dibenzo(a,h)anthracene		40	1.0	10	11	2.0
191-24-2	Benzo(g,h,i)perylene		110	1.0	10	11	2.3
118-74-1	Hexachlorobenzene	U	11	1.0	10	11	2.0
87-68-3	Hexachlorobutadiene	U	11	1.0	10	11	2.6
77-47-4	Hexachlorocyclopentadiene	U	11	1.0	10	11	1.7
7297-45-2	2-Methylnaphthalene-D10		102%				
367-12-4	2,4-Dibromophenol		106%				
81103-79-9	Fluorene-d10		89%				
1718-51-1	Pyrene-D10		81%				

MW
4/14/09

12

KATAHDIN ANALYTICAL SERVICES
Report of Analytical Results

Client: CH2MHill
Project: TO-009 Lejeune
PO No:
Sample Date: 01/13/09
Received Date: 01/15/09
Extraction Date: 01/21/09
Analysis Date: 04-FEB-2009 08:41
Report Date: 02/08/2009
Matrix: SOIL
% Solids: 87.3

Lab ID: SC0210-24
Client ID: MR08-IS307-6-7-09A
SDG: TO9-37
Extracted by: AC
Extraction Method: SW846 3550
Analyst: JLP
Analysis Method: SW846 M8270C
Lab Prep Batch: WG60037
Units: ug/Kgdrywt

CAS#	Compound	Flags	Results	DF	PQL	Adj.PQL	Adj.MDL
91-20-3	Naphthalene	U	11	1.0	10	11	3.0
91-57-6	2-Methylnaphthalene	~~U~~ UJ	11	1.0	10	11	2.5 CCH
86-73-7	Fluorene	U	11	1.0	10	11	3.7
85-01-8	Phenanthrene	U	11	1.0	10	11	2.1
206-44-0	Fluoranthene	U	11	1.0	10	11	2.1
129-00-0	Pyrene	U	11	1.0	10	11	2.4
56-55-3	Benzo(a)anthracene	U	11	1.0	10	11	2.2
205-99-2	Benzo(b)fluoranthene	U	11	1.0	10	11	2.7
207-08-9	Benzo(k)fluoranthene	U	11	1.0	10	11	3.6
50-32-8	Benzo(a)pyrene	U	11	1.0	10	11	3.8
193-39-5	Indeno(1,2,3-cd)pyrene	U	11	1.0	10	11	2.2
53-70-3	Dibenzo(a,h)anthracene	U	11	1.0	10	11	2.1
191-24-2	Benzo(g,h,i)perylene	U	11	1.0	10	11	2.3
118-74-1	Hexachlorobenzene	U	11	1.0	10	11	2.1
87-68-3	Hexachlorobutadiene	U	11	1.0	10	11	2.6
77-47-4	Hexachlorocyclopentadiene	U	11	1.0	10	11	1.7
7297-45-2	2-Methylnaphthalene-D10		86%				
367-12-4	2,4-Dibromophenol		87%				
81103-79-9	Fluorene-d10		75%				
1718-51-1	Pyrene-D10		78%				

lew
4/16/09

13

KATAHDIN ANALYTICAL SERVICES
Report of Analytical Results

Client: CH2MHill
Project: TO-009 Lejeune
PO No:
Sample Date: 01/13/09
Received Date: 01/15/09
Extraction Date: 01/21/09
Analysis Date: 04-FEB-2009 09:21
Report Date: 02/08/2009
Matrix: SOIL
% Solids: 84.2

Lab ID: SC0210-26
Client ID: MR08-SS284-09A
SDG: TO9-37
Extracted by: AC
Extraction Method: SW846 3550
Analyst: JLP
Analysis Method: SW846 M8270C
Lab Prep Batch: WG60037
Units: ug/Kgdrywt

CAS#	Compound	Flags	Results	DF	PQL	Adj.PQL	Adj.MDL
91-20-3	Naphthalene	U	12	1.0	10	12	3.1
91-57-6	2-Methylnaphthalene	~~U~~ J	7.6	1.0	10	12	2.6 CCH
86-73-7	Fluorene	U	12	1.0	10	12	3.8
85-01-8	Phenanthrene	~~U~~ 124	~~8.4~~	1.0	10	12	2.1 BL
206-44-0	Fluoranthene		46	1.0	10	12	2.1
129-00-0	Pyrene		36	1.0	10	12	2.5
56-55-3	Benzo(a)anthracene		22	1.0	10	12	2.2
205-99-2	Benzo(b)fluoranthene		44	1.0	10	12	2.8
207-08-9	Benzo(k)fluoranthene		27	1.0	10	12	3.7
50-32-8	Benzo(a)pyrene		29	1.0	10	12	3.9
193-39-5	Indeno(1,2,3-cd)pyrene		21	1.0	10	12	2.2
53-70-3	Dibenzo(a,h)anthracene	J	6.4	1.0	10	12	2.1
191-24-2	Benzo(g,h,i)perylene		20	1.0	10	12	2.4
118-74-1	Hexachlorobenzene	U	12	1.0	10	12	2.1
87-68-3	Hexachlorobutadiene	U	12	1.0	10	12	2.7
77-47-4	Hexachlorocyclopentadiene	U	12	1.0	10	12	1.8
7297-45-2	2-Methylnaphthalene-D10		69%				
367-12-4	2,4-Dibromophenol		66%				
81103-79-9	Fluorene-d10		67%				
1718-51-1	Pyrene-D10		78%				

MW 4/16/09

14

KATAHDIN ANALYTICAL SERVICES
Report of Analytical Results

Client: CH2MHill
Project: TO-009 Lejeune
PO No:
Sample Date: 01/13/09
Received Date: 01/15/09
Extraction Date: 01/21/09
Analysis Date: 04-FEB-2009 10:01
Report Date: 02/08/2009
Matrix: SOIL
% Solids: 90.0

Lab ID: SC0210-28
Client ID: MR08-IS284-6-7-09A
SDG: TO9-37
Extracted by: AC
Extraction Method: SW846 3550
Analyst: JLP
Analysis Method: SW846 M8270C
Lab Prep Batch: WG60037
Units: ug/Kgdrywt

CAS#	Compound	Flags	Results	DF	PQL	Adj.PQL	Adj.MDL
91-20-3	Naphthalene	U	11	1.0	10	11	2.9
91-57-6	2-Methylnaphthalene	~~U~~ UJ	11	1.0	10	11	2.4 CCH
86-73-7	Fluorene	U	11	1.0	10	11	3.6
85-01-8	Phenanthrene	U	11	1.0	10	11	2.0
206-44-0	Fluoranthene	U	11	1.0	10	11	2.0
129-00-0	Pyrene	U	11	1.0	10	11	2.3
56-55-3	Benzo(a)anthracene	U	11	1.0	10	11	2.1
205-99-2	Benzo(b)fluoranthene	U	11	1.0	10	11	2.7
207-08-9	Benzo(k)fluoranthene	U	11	1.0	10	11	3.4
50-32-8	Benzo(a)pyrene	U	11	1.0	10	11	3.7
193-39-5	Indeno(1,2,3-cd)pyrene	U	11	1.0	10	11	2.1
53-70-3	Dibenzo(a,h)anthracene	U	11	1.0	10	11	2.0
191-24-2	Benzo(g,h,i)perylene	U	11	1.0	10	11	2.2
118-74-1	Hexachlorobenzene	U	11	1.0	10	11	2.0
87-68-3	Hexachlorobutadiene	U	11	1.0	10	11	2.6
77-47-4	Hexachlorocyclopentadiene	U	11	1.0	10	11	1.7
7297-45-2	2-Methylnaphthalene-D10		82%				
367-12-4	2,4-Dibromophenol		86%				
81103-79-9	Fluorene-d10		75%				
1718-51-1	Pyrene-D10		82%				

lcw 4/16/09

KATAHDIN ANALYTICAL SERVICES
Report of Analytical Results

Client: CH2MHill
Project: TO-009 Lejeune
PO No:
Sample Date: 01/13/09
Received Date: 01/15/09
Extraction Date: 01/21/09
Analysis Date: 04-FEB-2009 10:41
Report Date: 02/08/2009
Matrix: SOIL
% Solids: 82.2

Lab ID: SC0210-30
Client ID: MR08-SS285-09A
SDG: T09-37
Extracted by: AC
Extraction Method: SW846 3550
Analyst: JLP
Analysis Method: SW846 M8270C
Lab Prep Batch: WG60037
Units: ug/Kgdrywt

CAS#	Compound	Flags	Results	DF	PQL	Adj.PQL	Adj.MDL
91-20-3	Naphthalene	U	12	1.0	10	12	3.2
91-57-6	2-Methylnaphthalene	~~U~~ J	7.6	1.0	10	12	2.7 CCH
86-73-7	Fluorene	U	12	1.0	10	12	3.9
85-01-8	Phenanthrene	~~J~~ 12U	~~4.4~~	1.0	10	12	2.2 BL
206-44-0	Fluoranthene		19	1.0	10	12	2.2
129-00-0	Pyrene		15	1.0	10	12	2.6
56-55-3	Benzo(a)anthracene	J	12	1.0	10	12	2.3
205-99-2	Benzo(b)fluoranthene		42	1.0	10	12	2.9
207-08-9	Benzo(k)fluoranthene		24	1.0	10	12	3.8
50-32-8	Benzo(a)pyrene		23	1.0	10	12	4.0
193-39-5	Indeno(1,2,3-cd)pyrene		15	1.0	10	12	2.3
53-70-3	Dibenzo(a,h)anthracene	J	5.0	1.0	10	12	2.2
191-24-2	Benzo(g,h,i)perylene		14	1.0	10	12	2.4
118-74-1	Hexachlorobenzene	U	12	1.0	10	12	2.2
87-68-3	Hexachlorobutadiene	U	12	1.0	10	12	2.8
77-47-4	Hexachlorocyclopentadiene	U	12	1.0	10	12	1.8
7297-45-2	2-Methylnaphthalene-D10		69%				
367-12-4	2,4-Dibromophenol		84%				
81103-79-9	Fluorene-d10		70%				
1718-51-1	Pyrene-D10		73%				

lew
4/16/09

16

KATAHDIN ANALYTICAL SERVICES
Report of Analytical Results

Client: CH2MHill
Project: TO-009 Lejeune
PO No:
Sample Date: 01/13/09
Received Date: 01/15/09
Extraction Date: 01/21/09
Analysis Date: 04-FEB-2009 11:21
Report Date: 02/08/2009
Matrix: SOIL
% Solids: 93.2

Lab ID: SC0210-32
Client ID: MR08-IS285-8-9-09A
SDG: TO9-37
Extracted by: AC
Extraction Method: SW846 3550
Analyst: JLP
Analysis Method: SW846 M8270C
Lab Prep Batch: WG60037
Units: ug/Kgdrywt

CAS#	Compound	Flags	Results	DF	PQL	Adj.PQL	Adj.MDL
91-20-3	Naphthalene	U	11	1.0	10	11	2.8
91-57-6	2-Methylnaphthalene	~~U~~ UJ	11	1.0	10	11	2.4 CCH
86-73-7	Fluorene	U	11	1.0	10	11	3.4
85-01-8	Phenanthrene	U	11	1.0	10	11	1.9
206-44-0	Fluoranthene	U	11	1.0	10	11	1.9
129-00-0	Pyrene	U	11	1.0	10	11	2.2
56-55-3	Benzo(a)anthracene	U	11	1.0	10	11	2.0
205-99-2	Benzo(b)fluoranthene	U	11	1.0	10	11	2.6
207-08-9	Benzo(k)fluoranthene	U	11	1.0	10	11	3.3
50-32-8	Benzo(a)pyrene	U	11	1.0	10	11	3.5
193-39-5	Indeno(1,2,3-cd)pyrene	U	11	1.0	10	11	2.0
53-70-3	Dibenzo(a,h)anthracene	U	11	1.0	10	11	1.9
191-24-2	Benzo(g,h,i)perylene	U	11	1.0	10	11	2.1
118-74-1	Hexachlorobenzene	U	11	1.0	10	11	1.9
87-68-3	Hexachlorobutadiene	U	11	1.0	10	11	2.5
77-47-4	Hexachlorocyclopentadiene	U	11	1.0	10	11	1.6
7297-45-2	2-Methylnaphthalene-D10		81%				
367-12-4	2,4-Dibromophenol		85%				
81103-79-9	Fluorene-d10		79%				
1718-51-1	Pyrene-D10		90%				

JW
4/16/09

17

KATAHDIN ANALYTICAL SERVICES
Report of Analytical Results

Client: CH2MHill
Project: TO-009 Lejeune
PO No:
Sample Date: 01/14/09
Received Date: 01/15/09
Extraction Date: 01/21/09
Analysis Date: 05-FEB-2009 04:00
Report Date: 02/08/2009
Matrix: SOIL
% Solids: 86.4

Lab ID: SC0210-34
Client ID: MR08-SS286-09A
SDG: TO9-37
Extracted by: AC
Extraction Method: SW846 3550
Analyst: JCG
Analysis Method: SW846 M8270C
Lab Prep Batch: WG60037
Units: ug/Kgdrywt

CAS#	Compound	Flags		Results	DF	PQL	Adj.PQL	Adj.MDL	
91-20-3	Naphthalene	U		12	1.0	10	12	3.0	
91-57-6	2-Methylnaphthalene	U		12	1.0	10	12	2.5	
86-73-7	Fluorene	U		12	1.0	10	12	3.7	
85-01-8	Phenanthrene			15	1.0	10	12	2.1	
206-44-0	Fluoranthene		J	66	1.0	10	12	2.1	CCH
129-00-0	Pyrene			43	1.0	10	12	2.4	
56-55-3	Benzo(a)anthracene			29	1.0	10	12	2.2	
205-99-2	Benzo(b)fluoranthene			48	1.0	10	12	2.8	
207-08-9	Benzo(k)fluoranthene			31	1.0	10	12	3.6	
50-32-8	Benzo(a)pyrene			34	1.0	10	12	3.8	
193-39-5	Indeno(1,2,3-cd)pyrene		J	16	1.0	10	12	2.2	CCH
53-70-3	Dibenzo(a,h)anthracene	J		7.1	1.0	10	12	2.1	
191-24-2	Benzo(g,h,i)perylene		J	15	1.0	10	12	2.3	CCH
118-74-1	Hexachlorobenzene	U		12	1.0	10	12	2.1	
87-68-3	Hexachlorobutadiene	~~U~~	UJ	12	1.0	10	12	2.7	CCH
77-47-4	Hexachlorocyclopentadiene	~~U~~	UJ	12	1.0	10	12	1.7	CCH
7297-45-2	2-Methylnaphthalene-D10			114%					
367-12-4	2,4-Dibromophenol			95%					
81103-79-9	Fluorene-d10			81%					
1718-51-1	Pyrene-D10			84%					

lw
4/16/09

18

KATAHDIN ANALYTICAL SERVICES
Report of Analytical Results

Client: CH2MHill
Project: TO-009 Lejeune
PO No:
Sample Date: 01/14/09
Received Date: 01/15/09
Extraction Date: 01/21/09
Analysis Date: 04-FEB-2009 14:42
Report Date: 02/08/2009
Matrix: SOIL
% Solids: 90.8

Lab ID: SC0210-36
Client ID: MR08-IS286-6-7-09A
SDG: TO9-37
Extracted by: AC
Extraction Method: SW846 3550
Analyst: JLP
Analysis Method: SW846 M8270C
Lab Prep Batch: WG60037
Units: ug/Kgdrywt

CAS#	Compound	Flags	Results	DF	PQL	Adj.PQL	Adj.MDL
91-20-3	Naphthalene	U	11	1.0	10	11	2.9
91-57-6	2-Methylnaphthalene	~~U~~ UJ	11	1.0	10	11	2.4 CCH
86-73-7	Fluorene	U	11	1.0	10	11	3.5
85-01-8	Phenanthrene	U	11	1.0	10	11	2.0
206-44-0	Fluoranthene	U	11	1.0	10	11	2.0
129-00-0	Pyrene	U	11	1.0	10	11	2.3
56-55-3	Benzo(a)anthracene	U	11	1.0	10	11	2.1
205-99-2	Benzo(b)fluoranthene	U	11	1.0	10	11	2.6
207-08-9	Benzo(k)fluoranthene	U	11	1.0	10	11	3.4
50-32-8	Benzo(a)pyrene	U	11	1.0	10	11	3.6
193-39-5	Indeno(1,2,3-cd)pyrene	U	11	1.0	10	11	2.1
53-70-3	Dibenzo(a,h)anthracene	U	11	1.0	10	11	2.0
191-24-2	Benzo(g,h,i)perylene	U	11	1.0	10	11	2.2
118-74-1	Hexachlorobenzene	U	11	1.0	10	11	2.0
87-68-3	Hexachlorobutadiene	U	11	1.0	10	11	2.5
77-47-4	Hexachlorocyclopentadiene	U	11	1.0	10	11	1.6
7297-45-2	2-Methylnaphthalene-D10		104%				
367-12-4	2,4-Dibromophenol		76%				
81103-79-9	Fluorene-d10		85%				
1718-51-1	Pyrene-D10		84%				

lcw
4/16/09

KATAHDIN ANALYTICAL SERVICES
Report of Analytical Results

Client: CH2MHill
Project: TO-009 Lejeune
PO No:
Sample Date: 01/14/09
Received Date: 01/15/09
Extraction Date: 01/21/09
Analysis Date: 05-FEB-2009 04:40
Report Date: 02/08/2009
Matrix: SOIL
% Solids: 82.8

Lab ID: SC0210-38
Client ID: MR08-SS287-09A
SDG: TO9-37
Extracted by: AC
Extraction Method: SW846 3550
Analyst: JCG
Analysis Method: SW846 M8270C
Lab Prep Batch: WG60037
Units: ug/Kgdrywt

CAS#	Compound	Flags		Results	DF	PQL	Adj.PQL	Adj.MDL	
91-20-3	Naphthalene	U		12	1.0	10	12	3.1	
91-57-6	2-Methylnaphthalene	J		8.1	1.0	10	12	2.6	
86-73-7	Fluorene	U		12	1.0	10	12	3.9	
85-01-8	Phenanthrene	J		11	1.0	10	12	2.2	
206-44-0	Fluoranthene		J	53	1.0	10	12	2.2	CCH
129-00-0	Pyrene			32	1.0	10	12	2.5	
56-55-3	Benzo(a)anthracene			22	1.0	10	12	2.3	
205-99-2	Benzo(b)fluoranthene			32	1.0	10	12	2.9	
207-08-9	Benzo(k)fluoranthene			23	1.0	10	12	3.7	
50-32-8	Benzo(a)pyrene			24	1.0	10	12	4.0	
193-39-5	Indeno(1,2,3-cd)pyrene	~~J~~	J	11	1.0	10	12	2.3	CCH
53-70-3	Dibenzo(a,h)anthracene	U		12	1.0	10	12	2.2	
191-24-2	Benzo(g,h,i)perylene	~~J~~	J	10	1.0	10	12	2.4	CCH
118-74-1	Hexachlorobenzene	U		12	1.0	10	12	2.2	
87-68-3	Hexachlorobutadiene	~~U~~	UJ	12	1.0	10	12	2.8	CCH
77-47-4	Hexachlorocyclopentadiene	~~U~~	UJ	12	1.0	10	12	1.8	CCH
7297-45-2	2-Methylnaphthalene-D10			120%					
367-12-4	2,4-Dibromophenol			102%					
81103-79-9	Fluorene-d10			85%					
1718-51-1	Pyrene-D10			92%					

MW
4/16/09

20

KATAHDIN ANALYTICAL SERVICES
Report of Analytical Results

Client: CH2MHill
Project: TO-009 Lejeune
PO No:
Sample Date: 01/14/09
Received Date: 01/15/09
Extraction Date: 01/21/09
Analysis Date: 04-FEB-2009 15:22
Report Date: 02/08/2009
Matrix: SOIL
% Solids: 86.9

Lab ID: SC0210-40
Client ID: MR08-IS287-5-6-09A
SDG: TO9-37
Extracted by: AC
Extraction Method: SW846 3550
Analyst: JLP
Analysis Method: SW846 M8270C
Lab Prep Batch: WG60037
Units: ug/Kgdrywt

CAS#	Compound	Flags	Results	DF	PQL	Adj.PQL	Adj.MDL
91-20-3	Naphthalene	U	12	1.0	10	12	3.0
91-57-6	2-Methylnaphthalene	~~U~~ UJ	12	1.0	10	12	2.5 CEY
86-73-7	Fluorene	U	12	1.0	10	12	3.7
85-01-8	Phenanthrene	U	12	1.0	10	12	2.1
206-44-0	Fluoranthene	U	12	1.0	10	12	2.1
129-00-0	Pyrene	U	12	1.0	10	12	2.4
56-55-3	Benzo(a)anthracene	U	12	1.0	10	12	2.2
205-99-2	Benzo(b)fluoranthene	U	12	1.0	10	12	2.8
207-08-9	Benzo(k)fluoranthene	U	12	1.0	10	12	3.6
50-32-8	Benzo(a)pyrene	U	12	1.0	10	12	3.8
193-39-5	Indeno(1,2,3-cd)pyrene	U	12	1.0	10	12	2.2
53-70-3	Dibenzo(a,h)anthracene	U	12	1.0	10	12	2.1
191-24-2	Benzo(g,h,i)perylene	U	12	1.0	10	12	2.3
118-74-1	Hexachlorobenzene	U	12	1.0	10	12	2.1
87-68-3	Hexachlorobutadiene	U	12	1.0	10	12	2.6
77-47-4	Hexachlorocyclopentadiene	U	12	1.0	10	12	1.7
7297-45-2	2-Methylnaphthalene-D10		90%				
367-12-4	2,4-Dibromophenol		83%				
81103-79-9	Fluorene-d10		78%				
1718-51-1	Pyrene-D10		83%				

lew 4/16/09

ENVIRONMENTAL
Data Services, Inc.

SEMIVOLATILE ORGANIC COMPOUNDS

USEPA Region IV - Level IV Review

Site: MCB Camp Lejeune, TO-09 SDG #: TO9-37

Client: CH2M HILL, Inc., Virginia Beach, Virginia Date: April 16, 2009

Laboratory: Katahdin Analytical Services, Scarborough, Maine Reviewer: Nancy Weaver

EDS ID	Client Sample ID	Laboratory Sample ID	Matrix
1	MR08-IS312-5-6-09A	SC0210-1	Soil
2	MR08-SS311-09A	SC0210-3	Soil
3	MR08-IS311-8-9-09A	SC0210-5	Soil
4	MR08-IS308-9-10-09A	SC0210-7	Soil
4MS	MR08-IS308-9-10-09AMS	SC0210-7MS	Soil
4MSD	MR08-IS308-9-10-09AMSD	SC0210-7MSD	Soil
5	MR08-SS309-09A	SC0210-9	Soil
6	MR08-SS309D-09A	SC0210-11	Soil
7	MR08-IS309-6-7-09A	SC0210-13	Soil
8	MR08-IS309D-6-7-09A	SC0210-15	Soil
9	MR08-SS310-09A	SC0210-17	Soil
10	MR08-IS310-9-10-09A	SC0210-19	Soil
11	MR08-SS307-09A	SC0210-21	Soil
12	MR08-IS307-6-7-09A	SC0210-23	Soil
13	MR08-SS284-09A	SC0210-25	Soil
14	MR08-IS284-6-7-09A	SC0210-27	Soil
15	MR08-SS285-09A	SC0210-29	Soil
16	MR08-IS285-8-9-09A	SC0210-31	Soil
17	MR08-SS286-09A	SC0210-33	Soil
18	MR08-IS286-6-7-09A	SC0210-35	Soil
19	MR08-SS287-09A	SC0210-37	Soil
20	MR08-IS287-5-6-09A	SC0210-39	Soil

The USEPA "Contract Laboratory Program National Functional Guidelines for Organic Data Review," October 1999, and professional judgement were used in evaluating the data in this summary report.

Holding Times - All samples were extracted within 14 days for soil samples and analyzed within 40 days for all samples.

GC/MS Tuning - All of the DFTPP tunes in the initial and continuing calibrations met the percent relative abundance criteria.

Initial Calibration - The initial calibrations exhibited acceptable %RSD and mean RRF values.

Continuing Calibration - The continuing calibrations exhibited acceptable %D and RRF values except the following.

CCAL Date	Compound	%D/RRF	Qualifier	Affected Samples
01/27/09	2,4-Dinitrophenol	27.04%	J/UJ	13, 15, 17
	4-Nitrophenol	28.52%	J/UJ	13, 15, 17
01/28/09	2,4-Dinitrophenol	27.23%	J/UJ	12, 14, 16, 18-20

Surrogates - All samples exhibited acceptable surrogate recoveries.

MS/MSD - The MS/MSD sample exhibited acceptable %R and RPD values.

Laboratory Control Sample - The LCS samples exhibited acceptable %R values.

Internal Standard (IS) Area Performance - All internal standards met response and retention time (RT) criteria.

Method Blank - The method blanks exhibited the following contamination.

Blank ID	Compound	Conc. ug/kg	Action Level ug/kg	Qualifier	Affected Samples
WG59991-BLANK	Diethylphthalate	80	800	None	All ND

Field, Equipment Blank - Field QC results are summarized below.

Blank ID	Compound	Conc. ug/L	Action Level ug/L	Qualifier	Affected Samples
MR08-FB01011009	None - ND	-	-	-	-
MR08-EB01011309-SS	Bis(2-ethylhexyl)phthalate	3	1000	U	5, 6, 9, 11

Field Duplicates - Field duplicate results are summarized below.

Compound	MR08-SS309-09A ug/kg	MR08-SS309D-09A ug/kg	RPD	Qualifier
None	ND	ND	-	-

Compound	MR08-IS309-6-7-09A ug/kg	MR08-IS309D-6-7-09A ug/kg	RPD	Qualifier
Bis(2-ethylhexyl)phthalate	390 U	150	NC	None

Tentatively Identified Compounds (TICs) - TICs were not reported.

Compound Quantitation - No discrepancies were identified.

KATAHDIN ANALYTICAL SERVICES
Report of Analytical Results

Client: CH2MHill
Project: TO-009 Lejeune
PO No:
Sample Date: 01/13/09
Received Date: 01/15/09
Extraction Date: 01/20/09
Analysis Date: 30-JAN-2009 02:39
Report Date: 02/07/2009
Matrix: SOIL
% Solids: 94.2

Lab ID: SC0210-1
Client ID: MR08-IS312-5-6-09A
SDG: TO9-37
Extracted by: AC
Extraction Method: SW846 3550
Analyst: JCG
Analysis Method: SW846 8270C
Lab Prep Batch: WG59991
Units: ug/Kgdrywt

CAS#	Compound	Flags	Results	DF	PQL	Adj.PQL	Adj.MDL
100-52-7	Benzaldehyde	U	530	1.0	500	530	130
108-95-2	Phenol	U	530	1.0	500	530	160
111-44-4	Bis(2-Chloroethyl)ether	U	350	1.0	330	350	86
95-57-8	2-Chlorophenol	U	530	1.0	500	530	170
95-48-7	2-Methylphenol	U	640	1.0	600	640	210
108-60-1	2,2'-Oxybis(1-chloropropane)	U	350	1.0	330	350	94
98-86-2	Acetophenone	U	640	1.0	600	640	190
621-64-7	N-Nitroso-di-n-propylamine	U	350	1.0	330	350	88
65794-96-9	3&4-Methylphenol	U	640	1.0	600	640	200
67-72-1	Hexachloroethane	U	350	1.0	330	350	100
98-95-3	Nitrobenzene	U	350	1.0	330	350	97
78-59-1	Isophorone	U	350	1.0	330	350	80
88-75-5	2-Nitrophenol	U	640	1.0	600	640	180
105-67-9	2,4-Dimethylphenol	U	530	1.0	500	530	180
111-91-1	Bis(2-Chloroethoxy)methane	U	350	1.0	330	350	100
120-83-2	2,4-Dichlorophenol	U	530	1.0	500	530	160
106-47-8	4-Chloroaniline	U	530	1.0	500	530	130
105-60-2	Caprolactam	U	530	1.0	500	530	150
59-50-7	4-Chloro-3-Methylphenol	U	530	1.0	500	530	180
88-06-2	2,4,6-Trichlorophenol	U	530	1.0	500	530	160
95-95-4	2,4,5-Trichlorophenol	U	530	1.0	500	530	160
91-58-7	2-Chloronaphthalene	U	350	1.0	330	350	92
92-52-4	1,1'-Biphenyl	U	350	1.0	330	350	78
88-74-4	2-Nitroaniline	U	530	1.0	500	530	80
131-11-3	Dimethyl Phthalate	U	350	1.0	330	350	83
606-20-2	2,6-Dinitrotoluene	U	350	1.0	330	350	84
208-96-8	Acenaphthylene	U	350	1.0	330	350	74
99-09-2	3-Nitroaniline	U	530	1.0	500	530	100
83-32-9	Acenaphthene	U	350	1.0	330	350	69
51-28-5	2,4-Dinitrophenol	U	1300	1.0	1200	1300	400
132-64-9	Dibenzofuran	U	350	1.0	330	350	84
100-02-7	4-Nitrophenol	U	1300	1.0	1200	1300	330
121-14-2	2,4-Dinitrotoluene	U	350	1.0	330	350	90
84-66-2	Diethylphthalate	U	350	1.0	330	350	85
7005-72-3	4-Chlorophenyl-phenylether	U	350	1.0	330	350	83
100-01-6	4-Nitroaniline	U	530	1.0	500	530	140
534-52-1	4,6-Dinitro-2-Methylphenol	U	1300	1.0	1200	1300	360
86-30-6	N-Nitrosodiphenylamine	U	700	1.0	660	700	230
101-55-3	4-Bromophenyl-phenylether	U	350	1.0	330	350	90
1912-24-9	Atrazine	U	350	1.0	330	350	97
87-86-5	Pentachlorophenol	U	870	1.0	820	870	250
120-12-7	Anthracene	U	350	1.0	330	350	89
86-74-8	Carbazole	U	530	1.0	500	530	120

RW 4/16/09

KATAHDIN ANALYTICAL SERVICES
Report of Analytical Results

Client: CH2MHill
Project: TO-009 Lejeune
PO No:
Sample Date: 01/13/09
Received Date: 01/15/09
Extraction Date: 01/20/09
Analysis Date: 30-JAN-2009 02:39
Report Date: 02/07/2009
Matrix: SOIL
% Solids: 94.2

Lab ID: SC0210-1
Client ID: MR08-IS312-5-6-09A
SDG: TO9-37
Extracted by: AC
Extraction Method: SW846 3550
Analyst: JCG
Analysis Method: SW846 8270C
Lab Prep Batch: WG59991
Units: ug/Kgdrywt

CAS#	Compound	Flags	Results	DF	PQL	Adj.PQL	Adj.MDL
84-74-2	Di-n-butylphthalate	U	350	1.0	330	350	110
85-68-7	Butylbenzylphthalate	U	350	1.0	330	350	99
91-94-1	3,3'-Dichlorobenzidine	U	530	1.0	500	530	120
218-01-9	Chrysene	U	350	1.0	330	350	100
117-81-7	bis(2-Ethylhexyl)phthalate	U	350	1.0	330	350	100
117-84-0	Di-n-octylphthalate	U	350	1.0	330	350	220
367-12-4	2-Fluorophenol		67%				
13127-88-3	Phenol-D6		75%				
4165-60-0	Nitrobenzene-D5		68%				
321-60-8	2-Fluorobiphenyl		66%				
118-79-6	2,4,6-Tribromophenol		70%				
1718-51-0	Terphenyl-D14		90%				

DW
4/16/09

2

KATAHDIN ANALYTICAL SERVICES
Report of Analytical Results

Client: CH2MHill
Project: TO-009 Lejeune
PO No:
Sample Date: 01/13/09
Received Date: 01/15/09
Extraction Date: 01/20/09
Analysis Date: 30-JAN-2009 03:21
Report Date: 02/07/2009
Matrix: SOIL
% Solids: 90.4

Lab ID: SC0210-3
Client ID: MR08-SS311-09A
SDG: TO9-37
Extracted by: AC
Extraction Method: SW846 3550
Analyst: JCG
Analysis Method: SW846 8270C
Lab Prep Batch: WG59991
Units: ug/Kgdrywt

CAS#	Compound	Flags	Results	DF	PQL	Adj.PQL	Adj.MDL
100-52-7	Benzaldehyde	U	550	1.0	500	550	130
108-95-2	Phenol	U	550	1.0	500	550	170
111-44-4	Bis(2-Chloroethyl)ether	U	360	1.0	330	360	90
95-57-8	2-Chlorophenol	U	550	1.0	500	550	180
95-48-7	2-Methylphenol	U	660	1.0	600	660	220
108-60-1	2,2'-Oxybis(1-chloropropane)	U	360	1.0	330	360	98
98-86-2	Acetophenone	U	660	1.0	600	660	200
621-64-7	N-Nitroso-di-n-propylamine	U	360	1.0	330	360	92
65794-96-9	3&4-Methylphenol	U	660	1.0	600	660	210
67-72-1	Hexachloroethane	U	360	1.0	330	360	110
98-95-3	Nitrobenzene	U	360	1.0	330	360	100
78-59-1	Isophorone	U	360	1.0	330	360	83
88-75-5	2-Nitrophenol	U	660	1.0	600	660	180
105-67-9	2,4-Dimethylphenol	U	550	1.0	500	550	180
111-91-1	Bis(2-Chloroethoxy)methane	U	360	1.0	330	360	110
120-83-2	2,4-Dichlorophenol	U	550	1.0	500	550	160
106-47-8	4-Chloroaniline	U	550	1.0	500	550	130
105-60-2	Caprolactam	U	550	1.0	500	550	160
59-50-7	4-Chloro-3-Methylphenol	U	550	1.0	500	550	180
88-06-2	2,4,6-Trichlorophenol	U	550	1.0	500	550	170
95-95-4	2,4,5-Trichlorophenol	U	550	1.0	500	550	170
91-58-7	2-Chloronaphthalene	U	360	1.0	330	360	96
92-52-4	1,1'-Biphenyl	U	360	1.0	330	360	81
88-74-4	2-Nitroaniline	U	550	1.0	500	550	83
131-11-3	Dimethyl Phthalate	U	360	1.0	330	360	86
606-20-2	2,6-Dinitrotoluene	U	360	1.0	330	360	87
208-96-8	Acenaphthylene	U	360	1.0	330	360	77
99-09-2	3-Nitroaniline	U	550	1.0	500	550	100
83-32-9	Acenaphthene	U	360	1.0	330	360	72
51-28-5	2,4-Dinitrophenol	U	1300	1.0	1200	1300	420
132-64-9	Dibenzofuran	U	360	1.0	330	360	87
100-02-7	4-Nitrophenol	U	1300	1.0	1200	1300	340
121-14-2	2,4-Dinitrotoluene	U	360	1.0	330	360	94
84-66-2	Diethylphthalate	U	360	1.0	330	360	88
7005-72-3	4-Chlorophenyl-phenylether	U	360	1.0	330	360	86
100-01-6	4-Nitroaniline	U	550	1.0	500	550	150
534-52-1	4,6-Dinitro-2-Methylphenol	U	1300	1.0	1200	1300	370
86-30-6	N-Nitrosodiphenylamine	U	730	1.0	660	730	240
101-55-3	4-Bromophenyl-phenylether	U	360	1.0	330	360	94
1912-24-9	Atrazine	U	360	1.0	330	360	100
87-86-5	Pentachlorophenol	U	910	1.0	820	910	260
120-12-7	Anthracene	U	360	1.0	330	360	93
86-74-8	Carbazole	U	550	1.0	500	550	120

lw 4/16/09

KATAHDIN ANALYTICAL SERVICES
Report of Analytical Results

2

Client: CH2MHill
Project: TO-009 Lejeune
PO No:
Sample Date: 01/13/09
Received Date: 01/15/09
Extraction Date: 01/20/09
Analysis Date: 30-JAN-2009 03:21
Report Date: 02/07/2009
Matrix: SOIL
% Solids: 90.4

Lab ID: SC0210-3
Client ID: MR08-SS311-09A
SDG: TO9-37
Extracted by: AC
Extraction Method: SW846 3550
Analyst: JCG
Analysis Method: SW846 8270C
Lab Prep Batch: WG59991
Units: ug/Kgdrywt

CAS#	Compound	Flags	Results	DF	PQL	Adj.PQL	Adj.MDL
84-74-2	Di-n-butylphthalate	U	360	1.0	330	360	110
85-68-7	Butylbenzylphthalate	U	360	1.0	330	360	100
91-94-1	3,3'-Dichlorobenzidine	U	550	1.0	500	550	130
218-01-9	Chrysene	U	360	1.0	330	360	100
117-81-7	bis(2-Ethylhexyl)phthalate	U	360	1.0	330	360	110
117-84-0	Di-n-octylphthalate	U	360	1.0	330	360	230
367-12-4	2-Fluorophenol		67%				
13127-88-3	Phenol-D6		74%				
4165-60-0	Nitrobenzene-D5		64%				
321-60-8	2-Fluorobiphenyl		67%				
118-79-6	2,4,6-Tribromophenol		91%				
1718-51-0	Terphenyl-D14		94%				

lw 4/16/09

3

KATAHDIN ANALYTICAL SERVICES
Report of Analytical Results

Client: CH2MHill
Project: TO-009 Lejeune
PO No:
Sample Date: 01/13/09
Received Date: 01/15/09
Extraction Date: 01/20/09
Analysis Date: 30-JAN-2009 04:02
Report Date: 02/07/2009
Matrix: SOIL
% Solids: 85.2

Lab ID: SC0210-5
Client ID: MR08-IS311-8-9-09A
SDG: TO9-37
Extracted by: AC
Extraction Method: SW846 3550
Analyst: JCG
Analysis Method: SW846 8270C
Lab Prep Batch: WG59991
Units: ug/Kgdrywt

CAS#	Compound	Flags	Results	DF	PQL	Adj.PQL	Adj.MDL
100-52-7	Benzaldehyde	U	590	1.0	500	590	140
108-95-2	Phenol	U	590	1.0	500	590	180
111-44-4	Bis(2-Chloroethyl)ether	U	390	1.0	330	390	95
95-57-8	2-Chlorophenol	U	590	1.0	500	590	190
95-48-7	2-Methylphenol	U	700	1.0	600	700	230
108-60-1	2,2'-Oxybis(1-chloropropane)	U	390	1.0	330	390	100
98-86-2	Acetophenone	U	700	1.0	600	700	210
621-64-7	N-Nitroso-di-n-propylamine	U	390	1.0	330	390	97
65794-96-9	3&4-Methylphenol	U	700	1.0	600	700	220
67-72-1	Hexachloroethane	U	390	1.0	330	390	110
98-95-3	Nitrobenzene	U	390	1.0	330	390	110
78-59-1	Isophorone	U	390	1.0	330	390	88
88-75-5	2-Nitrophenol	U	700	1.0	600	700	200
105-67-9	2,4-Dimethylphenol	U	590	1.0	500	590	190
111-91-1	Bis(2-Chloroethoxy)methane	U	390	1.0	330	390	110
120-83-2	2,4-Dichlorophenol	U	590	1.0	500	590	180
106-47-8	4-Chloroaniline	U	590	1.0	500	590	140
105-60-2	Caprolactam	U	590	1.0	500	590	170
59-50-7	4-Chloro-3-Methylphenol	U	590	1.0	500	590	190
88-06-2	2,4,6-Trichlorophenol	U	590	1.0	500	590	180
95-95-4	2,4,5-Trichlorophenol	U	590	1.0	500	590	180
91-58-7	2-Chloronaphthalene	U	390	1.0	330	390	100
92-52-4	1,1'-Biphenyl	U	390	1.0	330	390	86
88-74-4	2-Nitroaniline	U	590	1.0	500	590	88
131-11-3	Dimethyl Phthalate	U	390	1.0	330	390	92
606-20-2	2,6-Dinitrotoluene	U	390	1.0	330	390	93
208-96-8	Acenaphthylene	U	390	1.0	330	390	82
99-09-2	3-Nitroaniline	U	590	1.0	500	590	110
83-32-9	Acenaphthene	U	390	1.0	330	390	76
51-28-5	2,4-Dinitrophenol	U	1400	1.0	1200	1400	440
132-64-9	Dibenzofuran	U	390	1.0	330	390	93
100-02-7	4-Nitrophenol	U	1400	1.0	1200	1400	360
121-14-2	2,4-Dinitrotoluene	U	390	1.0	330	390	100
84-66-2	Diethylphthalate	U	390	1.0	330	390	94
7005-72-3	4-Chlorophenyl-phenylether	U	390	1.0	330	390	92
100-01-6	4-Nitroaniline	U	590	1.0	500	590	160
534-52-1	4,6-Dinitro-2-Methylphenol	U	1400	1.0	1200	1400	400
86-30-6	N-Nitrosodiphenylamine	U	770	1.0	660	770	260
101-55-3	4-Bromophenyl-phenylether	U	390	1.0	330	390	100
1912-24-9	Atrazine	U	390	1.0	330	390	110
87-86-5	Pentachlorophenol	U	960	1.0	820	960	280
120-12-7	Anthracene	U	390	1.0	330	390	98
86-74-8	Carbazole	U	590	1.0	500	590	130

lw
4/16/09

KATAHDIN ANALYTICAL SERVICES
Report of Analytical Results

3

Client: CH2MHill
Project: TO-009 Lejeune
PO No:
Sample Date: 01/13/09
Received Date: 01/15/09
Extraction Date: 01/20/09
Analysis Date: 30-JAN-2009 04:02
Report Date: 02/07/2009
Matrix: SOIL
% Solids: 85.2

Lab ID: SC0210-5
Client ID: MR08-IS311-8-9-09A
SDG: TO9-37
Extracted by: AC
Extraction Method: SW846 3550
Analyst: JCG
Analysis Method: SW846 8270C
Lab Prep Batch: WG59991
Units: ug/Kgdrywt

CAS#	Compound	Flags	Results	DF	PQL	Adj.PQL	Adj.MDL
84-74-2	Di-n-butylphthalate	U	390	1.0	330	390	120
85-68-7	Butylbenzylphthalate	U	390	1.0	330	390	110
91-94-1	3,3'-Dichlorobenzidine	U	590	1.0	500	590	130
218-01-9	Chrysene	U	390	1.0	330	390	110
117-81-7	bis(2-Ethylhexyl)phthalate	U	390	1.0	330	390	120
117-84-0	Di-n-octylphthalate	U	390	1.0	330	390	250
367-12-4	2-Fluorophenol		74%				
13127-88-3	Phenol-D6		83%				
4165-60-0	Nitrobenzene-D5		72%				
321-60-8	2-Fluorobiphenyl		69%				
118-79-6	2,4,6-Tribromophenol		76%				
1718-51-0	Terphenyl-D14		98%				

RW
4/16/09

4

KATAHDIN ANALYTICAL SERVICES
Report of Analytical Results

Client: CH2MHill
Project: TO-009 Lejeune
PO No:
Sample Date: 01/13/09
Received Date: 01/15/09
Extraction Date: 01/20/09
Analysis Date: 30-JAN-2009 04:44
Report Date: 02/07/2009
Matrix: SOIL
% Solids: 92.9

Lab ID: SC0210-7
Client ID: 8-IS308-9-10-09A
SDG: TO9-37
Extracted by: AC
Extraction Method: SW846 3550
Analyst: JCG
Analysis Method: SW846 8270C
Lab Prep Batch: WG59991
Units: ug/Kgdrywt

CAS#	Compound	Flags	Results	DF	PQL	Adj.PQL	Adj.MDL
100-52-7	Benzaldehyde	U	540	1.0	500	540	130
108-95-2	Phenol	U	540	1.0	500	540	170
111-44-4	Bis(2-Chloroethyl)ether	U	360	1.0	330	360	87
95-57-8	2-Chlorophenol	U	540	1.0	500	540	180
95-48-7	2-Methylphenol	U	640	1.0	600	640	220
108-60-1	2,2'-Oxybis(1-chloropropane)	U	360	1.0	330	360	96
98-86-2	Acetophenone	U	640	1.0	600	640	190
621-64-7	N-Nitroso-di-n-propylamine	U	360	1.0	330	360	89
65794-96-9	3&4-Methylphenol	U	640	1.0	600	640	200
67-72-1	Hexachloroethane	U	360	1.0	330	360	100
98-95-3	Nitrobenzene	U	360	1.0	330	360	98
78-59-1	Isophorone	U	360	1.0	330	360	81
88-75-5	2-Nitrophenol	U	640	1.0	600	640	180
105-67-9	2,4-Dimethylphenol	U	540	1.0	500	540	180
111-91-1	Bis(2-Chloroethoxy)methane	U	360	1.0	330	360	100
120-83-2	2,4-Dichlorophenol	U	540	1.0	500	540	160
106-47-8	4-Chloroaniline	U	540	1.0	500	540	130
105-60-2	Caprolactam	U	540	1.0	500	540	150
59-50-7	4-Chloro-3-Methylphenol	U	540	1.0	500	540	180
88-06-2	2,4,6-Trichlorophenol	U	540	1.0	500	540	170
95-95-4	2,4,5-Trichlorophenol	U	540	1.0	500	540	170
91-58-7	2-Chloronaphthalene	U	360	1.0	330	360	94
92-52-4	1,1'-Biphenyl	U	360	1.0	330	360	78
88-74-4	2-Nitroaniline	U	540	1.0	500	540	81
131-11-3	Dimethyl Phthalate	U	360	1.0	330	360	84
606-20-2	2,6-Dinitrotoluene	U	360	1.0	330	360	85
208-96-8	Acenaphthylene	U	360	1.0	330	360	75
99-09-2	3-Nitroaniline	U	540	1.0	500	540	100
83-32-9	Acenaphthene	U	360	1.0	330	360	70
51-28-5	2,4-Dinitrophenol	U	1300	1.0	1200	1300	400
132-64-9	Dibenzofuran	U	360	1.0	330	360	85
100-02-7	4-Nitrophenol	U	1300	1.0	1200	1300	330
121-14-2	2,4-Dinitrotoluene	U	360	1.0	330	360	91
84-66-2	Diethylphthalate	U	360	1.0	330	360	86
7005-72-3	4-Chlorophenyl-phenylether	U	360	1.0	330	360	84
100-01-6	4-Nitroaniline	U	540	1.0	500	540	140
534-52-1	4,6-Dinitro-2-Methylphenol	U	1300	1.0	1200	1300	360
86-30-6	N-Nitrosodiphenylamine	U	710	1.0	660	710	240
101-55-3	4-Bromophenyl-phenylether	U	360	1.0	330	360	91
1912-24-9	Atrazine	U	360	1.0	330	360	98
87-86-5	Pentachlorophenol	U	880	1.0	820	880	250
120-12-7	Anthracene	U	360	1.0	330	360	90
86-74-8	Carbazole	U	540	1.0	500	540	120

RW
4/16/09

KATAHDIN ANALYTICAL SERVICES
Report of Analytical Results

Client: CH2MHill
Project: TO-009 Lejeune
PO No:
Sample Date: 01/13/09
Received Date: 01/15/09
Extraction Date: 01/20/09
Analysis Date: 30-JAN-2009 04:44
Report Date: 02/07/2009
Matrix: SOIL
% Solids: 92.9

Lab ID: SC0210-7
Client ID: 8-IS308-9-10-09A
SDG: TO9-37
Extracted by: AC
Extraction Method: SW846 3550
Analyst: JCG
Analysis Method: SW846 8270C
Lab Prep Batch: WG59991
Units: ug/Kgdrywt

CAS#	Compound	Flags	Results	DF	PQL	Adj.PQL	Adj.MDL
84-74-2	Di-n-butylphthalate	U	360	1.0	330	360	110
85-68-7	Butylbenzylphthalate	U	360	1.0	330	360	100
91-94-1	3,3'-Dichlorobenzidine	U	540	1.0	500	540	120
218-01-9	Chrysene	U	360	1.0	330	360	100
117-81-7	bis(2-Ethylhexyl)phthalate	J	120	1.0	330	360	100
117-84-0	Di-n-octylphthalate	U	360	1.0	330	360	230
367-12-4	2-Fluorophenol		71%				
13127-88-3	Phenol-D6		78%				
4165-60-0	Nitrobenzene-D5		67%				
321-60-8	2-Fluorobiphenyl		68%				
118-79-6	2,4,6-Tribromophenol		86%				
1718-51-0	Terphenyl-D14		91%				

LEW 4/16/09

KATAHDIN ANALYTICAL SERVICES
Report of Analytical Results

Client: CH2MHill
Project: TO-009 Lejeune
PO No:
Sample Date: 01/13/09
Received Date: 01/15/09
Extraction Date: 01/20/09
Analysis Date: 30-JAN-2009 18:25
Report Date: 02/07/2009
Matrix: SOIL
% Solids: 85.6

Lab ID: SC0210-9
Client ID: MR08-SS309-09A
SDG: TO9-37
Extracted by: AC
Extraction Method: SW846 3550
Analyst: JCG
Analysis Method: SW846 8270C
Lab Prep Batch: WG59991
Units: ug/Kgdrywt

CAS#	Compound	Flags	Results	DF	PQL	Adj.PQL	Adj.MDL
100-52-7	Benzaldehyde	U	580	1.0	500	580	140
108-95-2	Phenol	U	580	1.0	500	580	180
111-44-4	Bis(2-Chloroethyl)ether	U	380	1.0	330	380	95
95-57-8	2-Chlorophenol	U	580	1.0	500	580	190
95-48-7	2-Methylphenol	U	700	1.0	600	700	230
108-60-1	2,2'-Oxybis(1-chloropropane)	U	380	1.0	330	380	100
98-86-2	Acetophenone	U	700	1.0	600	700	210
621-64-7	N-Nitroso-di-n-propylamine	U	380	1.0	330	380	97
65794-96-9	3&4-Methylphenol	U	700	1.0	600	700	220
67-72-1	Hexachloroethane	U	380	1.0	330	380	110
98-95-3	Nitrobenzene	U	380	1.0	330	380	110
78-59-1	Isophorone	U	380	1.0	330	380	88
88-75-5	2-Nitrophenol	U	700	1.0	600	700	200
105-67-9	2,4-Dimethylphenol	U	580	1.0	500	580	190
111-91-1	Bis(2-Chloroethoxy)methane	U	380	1.0	330	380	110
120-83-2	2,4-Dichlorophenol	U	580	1.0	500	580	180
106-47-8	4-Chloroaniline	U	580	1.0	500	580	140
105-60-2	Caprolactam	U	580	1.0	500	580	170
59-50-7	4-Chloro-3-Methylphenol	U	580	1.0	500	580	190
88-06-2	2,4,6-Trichlorophenol	U	580	1.0	500	580	180
95-95-4	2,4,5-Trichlorophenol	U	580	1.0	500	580	180
91-58-7	2-Chloronaphthalene	U	380	1.0	330	380	100
92-52-4	1,1'-Biphenyl	U	380	1.0	330	380	85
88-74-4	2-Nitroaniline	U	580	1.0	500	580	88
131-11-3	Dimethyl Phthalate	U	380	1.0	330	380	91
606-20-2	2,6-Dinitrotoluene	U	380	1.0	330	380	92
208-96-8	Acenaphthylene	U	380	1.0	330	380	82
99-09-2	3-Nitroaniline	U	580	1.0	500	580	110
83-32-9	Acenaphthene	U	380	1.0	330	380	76
51-28-5	2,4-Dinitrophenol	U	1400	1.0	1200	1400	440
132-64-9	Dibenzofuran	U	380	1.0	330	380	92
100-02-7	4-Nitrophenol	U	1400	1.0	1200	1400	360
121-14-2	2,4-Dinitrotoluene	U	380	1.0	330	380	99
84-66-2	Diethylphthalate	U	380	1.0	330	380	93
7005-72-3	4-Chlorophenyl-phenylether	U	380	1.0	330	380	91
100-01-6	4-Nitroaniline	U	580	1.0	500	580	160
534-52-1	4,6-Dinitro-2-Methylphenol	U	1400	1.0	1200	1400	390
86-30-6	N-Nitrosodiphenylamine	U	770	1.0	660	770	260
101-55-3	4-Bromophenyl-phenylether	U	380	1.0	330	380	99
1912-24-9	Atrazine	U	380	1.0	330	380	110
87-86-5	Pentachlorophenol	U	960	1.0	820	960	280
120-12-7	Anthracene	U	380	1.0	330	380	98
86-74-8	Carbazole	U	580	1.0	500	580	130

lw
4/16/09

5

KATAHDIN ANALYTICAL SERVICES
Report of Analytical Results

Client: CH2MHill
Project: TO-009 Lejeune
PO No:
Sample Date: 01/13/09
Received Date: 01/15/09
Extraction Date: 01/20/09
Analysis Date: 30-JAN-2009 18:25
Report Date: 02/07/2009
Matrix: SOIL
% Solids: 85.6

Lab ID: SC0210-9
Client ID: MR08-SS309-09A
SDG: TO9-37
Extracted by: AC
Extraction Method: SW846 3550
Analyst: JCG
Analysis Method: SW846 8270C
Lab Prep Batch: WG59991
Units: ug/Kgdrywt

CAS#	Compound	Flags	Results	DF	PQL	Adj.PQL	Adj.MDL	
84-74-2	Di-n-butylphthalate	U	380	1.0	330	380	120	
85-68-7	Butylbenzylphthalate	U	380	1.0	330	380	110	
91-94-1	3,3'-Dichlorobenzidine	U	580	1.0	500	580	130	
218-01-9	Chrysene	U	380	1.0	330	380	110	
117-81-7	bis(2-Ethylhexyl)phthalate	~~J~~ 380U	~~120~~	1.0	330	380	110	BL
117-84-0	Di-n-octylphthalate	U	380	1.0	330	380	250	
367-12-4	2-Fluorophenol		73%					
13127-88-3	Phenol-D6		80%					
4165-60-0	Nitrobenzene-D5		72%					
321-60-8	2-Fluorobiphenyl		69%					
118-79-6	2,4,6-Tribromophenol		82%					
1718-51-0	Terphenyl-D14		90%					

MW 4/16/09

6

KATAHDIN ANALYTICAL SERVICES
Report of Analytical Results

Client: CH2MHill
Project: TO-009 Lejeune
PO No:
Sample Date: 01/13/09
Received Date: 01/15/09
Extraction Date: 01/20/09
Analysis Date: 30-JAN-2009 19:07
Report Date: 02/07/2009
Matrix: SOIL
% Solids: 83.9

Lab ID: SC0210-11
Client ID: MR08-SS309D-09A
SDG: TO9-37
Extracted by: AC
Extraction Method: SW846 3550
Analyst: JCG
Analysis Method: SW846 8270C
Lab Prep Batch: WG59991
Units: ug/Kgdrywt

CAS#	Compound	Flags	Results	DF	PQL	Adj.PQL	Adj.MDL
100-52-7	Benzaldehyde	U	600	1.0	500	600	140
108-95-2	Phenol	U	600	1.0	500	600	190
111-44-4	Bis(2-Chloroethyl)ether	U	390	1.0	330	390	96
95-57-8	2-Chlorophenol	U	600	1.0	500	600	200
95-48-7	2-Methylphenol	U	720	1.0	600	720	240
108-60-1	2,2'-Oxybis(1-chloropropane)	U	390	1.0	330	390	110
98-86-2	Acetophenone	U	720	1.0	600	720	210
621-64-7	N-Nitroso-di-n-propylamine	U	390	1.0	330	390	99
65794-96-9	3&4-Methylphenol	U	720	1.0	600	720	220
67-72-1	Hexachloroethane	U	390	1.0	330	390	110
98-95-3	Nitrobenzene	U	390	1.0	330	390	110
78-59-1	Isophorone	U	390	1.0	330	390	89
88-75-5	2-Nitrophenol	U	720	1.0	600	720	200
105-67-9	2,4-Dimethylphenol	U	600	1.0	500	600	200
111-91-1	Bis(2-Chloroethoxy)methane	U	390	1.0	330	390	110
120-83-2	2,4-Dichlorophenol	U	600	1.0	500	600	180
106-47-8	4-Chloroaniline	U	600	1.0	500	600	140
105-60-2	Caprolactam	U	600	1.0	500	600	170
59-50-7	4-Chloro-3-Methylphenol	U	600	1.0	500	600	200
88-06-2	2,4,6-Trichlorophenol	U	600	1.0	500	600	180
95-95-4	2,4,5-Trichlorophenol	U	600	1.0	500	600	180
91-58-7	2-Chloronaphthalene	U	390	1.0	330	390	100
92-52-4	1,1'-Biphenyl	U	390	1.0	330	390	87
88-74-4	2-Nitroaniline	U	600	1.0	500	600	89
131-11-3	Dimethyl Phthalate	U	390	1.0	330	390	93
606-20-2	2,6-Dinitrotoluene	U	390	1.0	330	390	94
208-96-8	Acenaphthylene	U	390	1.0	330	390	83
99-09-2	3-Nitroaniline	U	600	1.0	500	600	110
83-32-9	Acenaphthene	U	390	1.0	330	390	78
51-28-5	2,4-Dinitrophenol	U	1400	1.0	1200	1400	450
132-64-9	Dibenzofuran	U	390	1.0	330	390	94
100-02-7	4-Nitrophenol	U	1400	1.0	1200	1400	370
121-14-2	2,4-Dinitrotoluene	U	390	1.0	330	390	100
84-66-2	Diethylphthalate	U	390	1.0	330	390	95
7005-72-3	4-Chlorophenyl-phenylether	U	390	1.0	330	390	93
100-01-6	4-Nitroaniline	U	600	1.0	500	600	160
534-52-1	4,6-Dinitro-2-Methylphenol	U	1400	1.0	1200	1400	400
86-30-6	N-Nitrosodiphenylamine	U	790	1.0	660	790	260
101-55-3	4-Bromophenyl-phenylether	U	390	1.0	330	390	100
1912-24-9	Atrazine	U	390	1.0	330	390	110
87-86-5	Pentachlorophenol	U	980	1.0	820	980	280
120-12-7	Anthracene	U	390	1.0	330	390	100
86-74-8	Carbazole	U	600	1.0	500	600	130

lw 4/16/09

6

KATAHDIN ANALYTICAL SERVICES
Report of Analytical Results

Client: CH2MHill
Project: TO-009 Lejeune
PO No:
Sample Date: 01/13/09
Received Date: 01/15/09
Extraction Date: 01/20/09
Analysis Date: 30-JAN-2009 19:07
Report Date: 02/07/2009
Matrix: SOIL
% Solids: 83.9

Lab ID: SC0210-11
Client ID: MR08-SS309D-09A
SDG: TO9-37
Extracted by: AC
Extraction Method: SW846 3550
Analyst: JCG
Analysis Method: SW846 8270C
Lab Prep Batch: WG59991
Units: ug/Kgdrywt

CAS#	Compound	Flags	Results	DF	PQL	Adj.PQL	Adj.MDL	
84-74-2	Di-n-butylphthalate	U	390	1.0	330	390	120	
85-68-7	Butylbenzylphthalate	U	390	1.0	330	390	110	
91-94-1	3,3'-Dichlorobenzidine	U	600	1.0	500	600	140	
218-01-9	Chrysene	U	390	1.0	330	390	110	
117-81-7	bis(2-Ethylhexyl)phthalate	~~J~~ 3904	~~130~~	1.0	330	390	120	BL
117-84-0	Di-n-octylphthalate	U	390	1.0	330	390	250	
367-12-4	2-Fluorophenol		72%					
13127-88-3	Phenol-D6		81%					
4165-60-0	Nitrobenzene-D5		71%					
321-60-8	2-Fluorobiphenyl		70%					
118-79-6	2,4,6-Tribromophenol		88%					
1718-51-0	Terphenyl-D14		89%					

hw
4/16/09

7

KATAHDIN ANALYTICAL SERVICES
Report of Analytical Results

Client: CH2MHill
Project: TO-009 Lejeune
PO No:
Sample Date: 01/13/09
Received Date: 01/15/09
Extraction Date: 01/20/09
Analysis Date: 30-JAN-2009 12:04
Report Date: 02/07/2009
Matrix: SOIL
% Solids: 84.0

Lab ID: SC0210-13
Client ID: MR08-IS309-6-7-09A
SDG: TO9-37
Extracted by: AC
Extraction Method: SW846 3550
Analyst: JCG
Analysis Method: SW846 8270C
Lab Prep Batch: WG59991
Units: ug/Kgdrywt

CAS#	Compound	Flags	Results	DF	PQL	Adj.PQL	Adj.MDL
100-52-7	Benzaldehyde	U	600	1.0	500	600	140
108-95-2	Phenol	U	600	1.0	500	600	180
111-44-4	Bis(2-Chloroethyl)ether	U	390	1.0	330	390	96
95-57-8	2-Chlorophenol	U	600	1.0	500	600	200
95-48-7	2-Methylphenol	U	710	1.0	600	710	240
108-60-1	2,2'-Oxybis(1-chloropropane)	U	390	1.0	330	390	100
98-86-2	Acetophenone	U	710	1.0	600	710	210
621-64-7	N-Nitroso-di-n-propylamine	U	390	1.0	330	390	99
65794-96-9	3&4-Methylphenol	U	710	1.0	600	710	220
67-72-1	Hexachloroethane	U	390	1.0	330	390	110
98-95-3	Nitrobenzene	U	390	1.0	330	390	110
78-59-1	Isophorone	U	390	1.0	330	390	89
88-75-5	2-Nitrophenol	U	710	1.0	600	710	200
105-67-9	2,4-Dimethylphenol	U	600	1.0	500	600	200
111-91-1	Bis(2-Chloroethoxy)methane	U	390	1.0	330	390	110
120-83-2	2,4-Dichlorophenol	U	600	1.0	500	600	180
106-47-8	4-Chloroaniline	U	600	1.0	500	600	140
105-60-2	Caprolactam	U	600	1.0	500	600	170
59-50-7	4-Chloro-3-Methylphenol	U	600	1.0	500	600	200
88-06-2	2,4,6-Trichlorophenol	U	600	1.0	500	600	180
95-95-4	2,4,5-Trichlorophenol	U	600	1.0	500	600	180
91-58-7	2-Chloronaphthalene	U	390	1.0	330	390	100
92-52-4	1,1'-Biphenyl	U	390	1.0	330	390	87
88-74-4	2-Nitroaniline	U	600	1.0	500	600	89
131-11-3	Dimethyl Phthalate	U	390	1.0	330	390	93
606-20-2	2,6-Dinitrotoluene	U	390	1.0	330	390	94
208-96-8	Acenaphthylene	U	390	1.0	330	390	83
99-09-2	3-Nitroaniline	U	600	1.0	500	600	110
83-32-9	Acenaphthene	U	390	1.0	330	390	77
51-28-5	2,4-Dinitrophenol	U	1400	1.0	1200	1400	450
132-64-9	Dibenzofuran	U	390	1.0	330	390	94
100-02-7	4-Nitrophenol	U	1400	1.0	1200	1400	370
121-14-2	2,4-Dinitrotoluene	U	390	1.0	330	390	100
84-66-2	Diethylphthalate	U	390	1.0	330	390	95
7005-72-3	4-Chlorophenyl-phenylether	U	390	1.0	330	390	93
100-01-6	4-Nitroaniline	U	600	1.0	500	600	160
534-52-1	4,6-Dinitro-2-Methylphenol	U	1400	1.0	1200	1400	400
86-30-6	N-Nitrosodiphenylamine	U	780	1.0	660	780	260
101-55-3	4-Bromophenyl-phenylether	U	390	1.0	330	390	100
1912-24-9	Atrazine	U	390	1.0	330	390	110
87-86-5	Pentachlorophenol	U	980	1.0	820	980	280
120-12-7	Anthracene	U	390	1.0	330	390	100
86-74-8	Carbazole	U	600	1.0	500	600	130

lw
4/16/09

KATAHDIN ANALYTICAL SERVICES
Report of Analytical Results

7

Client: CH2MHill
Project: TO-009 Lejeune
PO No:
Sample Date: 01/13/09
Received Date: 01/15/09
Extraction Date: 01/20/09
Analysis Date: 30-JAN-2009 12:04
Report Date: 02/07/2009
Matrix: SOIL
% Solids: 84.0

Lab ID: SC0210-13
Client ID: MR08-IS309-6-7-09A
SDG: TO9-37
Extracted by: AC
Extraction Method: SW846 3550
Analyst: JCG
Analysis Method: SW846 8270C
Lab Prep Batch: WG59991
Units: ug/Kgdrywt

CAS#	Compound	Flags	Results	DF	PQL	Adj.PQL	Adj.MDL
84-74-2	Di-n-butylphthalate	U	390	1.0	330	390	120
85-68-7	Butylbenzylphthalate	U	390	1.0	330	390	110
91-94-1	3,3'-Dichlorobenzidine	U	600	1.0	500	600	140
218-01-9	Chrysene	U	390	1.0	330	390	110
117-81-7	bis(2-Ethylhexyl)phthalate	U	390	1.0	330	390	120
117-84-0	Di-n-octylphthalate	U	390	1.0	330	390	250
367-12-4	2-Fluorophenol		67%				
13127-88-3	Phenol-D6		74%				
4165-60-0	Nitrobenzene-D5		69%				
321-60-8	2-Fluorobiphenyl		63%				
118-79-6	2,4,6-Tribromophenol		66%				
1718-51-0	Terphenyl-D14		85%				

lew 4/16/09

8

KATAHDIN ANALYTICAL SERVICES
Report of Analytical Results

Client: CH2MHill.
Project: TO-009 Lejeune
PO No:
Sample Date: 01/13/09
Received Date: 01/15/09
Extraction Date: 01/20/09
Analysis Date: 30-JAN-2009 14:11
Report Date: 02/08/2009
Matrix: SOIL
% Solids: 86.3

Lab ID: SC0210-15
Client ID: MR08-IS309D-6-7-09A
SDG: TO9-37
Extracted by: AC
Extraction Method: SW846 3550
Analyst: JCG
Analysis Method: SW846 8270C
Lab Prep Batch: WG59991
Units: ug/Kgdrywt

CAS#	Compound	Flags	Results	DF	PQL	Adj.PQL	Adj.MDL
100-52-7	Benzaldehyde	U	580	1.0	500	580	140
108-95-2	Phenol	U	580	1.0	500	580	180
111-44-4	Bis(2-Chloroethyl)ether	U	380	1.0	330	380	94
95-57-8	2-Chlorophenol	U	580	1.0	500	580	190
95-48-7	2-Methylphenol	U	700	1.0	600	700	230
108-60-1	2,2'-Oxybis(1-chloropropane)	U	380	1.0	330	380	100
98-86-2	Acetophenone	U	700	1.0	600	700	210
621-64-7	N-Nitroso-di-n-propylamine	U	380	1.0	330	380	96
65794-96-9	3&4-Methylphenol	U	700	1.0	600	700	220
67-72-1	Hexachloroethane	U	380	1.0	330	380	110
98-95-3	Nitrobenzene	U	380	1.0	330	380	100
78-59-1	Isophorone	U	380	1.0	330	380	87
88-75-5	2-Nitrophenol	U	700	1.0	600	700	190
105-67-9	2,4-Dimethylphenol	U	580	1.0	500	580	190
111-91-1	Bis(2-Chloroethoxy)methane	U	380	1.0	330	380	110
120-83-2	2,4-Dichlorophenol	U	580	1.0	500	580	170
106-47-8	4-Chloroaniline	U	580	1.0	500	580	140
105-60-2	Caprolactam	U	580	1.0	500	580	170
59-50-7	4-Chloro-3-Methylphenol	U	580	1.0	500	580	190
88-06-2	2,4,6-Trichlorophenol	U	580	1.0	500	580	180
95-95-4	2,4,5-Trichlorophenol	U	580	1.0	500	580	180
91-58-7	2-Chloronaphthalene	U	380	1.0	330	380	100
92-52-4	1,1'-Biphenyl	U	380	1.0	330	380	84
88-74-4	2-Nitroaniline	U	580	1.0	500	580	87
131-11-3	Dimethyl Phthalate	U	380	1.0	330	380	90
606-20-2	2,6-Dinitrotoluene	U	380	1.0	330	380	92
208-96-8	Acenaphthylene	U	380	1.0	330	380	81
99-09-2	3-Nitroaniline	U	580	1.0	500	580	110
83-32-9	Acenaphthene	U	380	1.0	330	380	75
51-28-5	2,4-Dinitrophenol	U	1400	1.0	1200	1400	440
132-64-9	Dibenzofuran	U	380	1.0	330	380	92
100-02-7	4-Nitrophenol	U	1400	1.0	1200	1400	360
121-14-2	2,4-Dinitrotoluene	U	380	1.0	330	380	98
84-66-2	Diethylphthalate	U	380	1.0	330	380	93
7005-72-3	4-Chlorophenyl-phenylether	U	380	1.0	330	380	90
100-01-6	4-Nitroaniline	U	580	1.0	500	580	160
534-52-1	4,6-Dinitro-2-Methylphenol	U	1400	1.0	1200	1400	390
86-30-6	N-Nitrosodiphenylamine	U	760	1.0	660	760	250
101-55-3	4-Bromophenyl-phenylether	U	380	1.0	330	380	98
1912-24-9	Atrazine	U	380	1.0	330	380	100
87-86-5	Pentachlorophenol	U	950	1.0	820	950	270
120-12-7	Anthracene	U	380	1.0	330	380	97
86-74-8	Carbazole	U	580	1.0	500	580	130

dw 4/16/09

8

KATAHDIN ANALYTICAL SERVICES
Report of Analytical Results

Client: CH2MHill
Project: TO-009 Lejeune
PO No:
Sample Date: 01/13/09
Received Date: 01/15/09
Extraction Date: 01/20/09
Analysis Date: 30-JAN-2009 14:11
Report Date: 02/08/2009
Matrix: SOIL
% Solids: 86.3

Lab ID: SC0210-15
Client ID: MR08-IS309D-6-7-09A
SDG: TO9-37
Extracted by: AC
Extraction Method: SW846 3550
Analyst: JCG
Analysis Method: SW846 8270C
Lab Prep Batch: WG59991
Units: ug/Kgdrywt

CAS#	Compound	Flags	Results	DF	PQL	Adj.PQL	Adj.MDL
84-74-2	Di-n-butylphthalate	U	380	1.0	330	380	120
85-68-7	Butylbenzylphthalate	U	380	1.0	330	380	110
91-94-1	3,3'-Dichlorobenzidine	U	580	1.0	500	580	130
218-01-9	Chrysene	U	380	1.0	330	380	110
117-81-7	bis(2-Ethylhexyl)phthalate	J	150	1.0	330	380	110
117-84-0	Di-n-octylphthalate	U	380	1.0	330	380	240
367-12-4	2-Fluorophenol		64%				
13127-88-3	Phenol-D6		70%				
4165-60-0	Nitrobenzene-D5		62%				
321-60-8	2-Fluorobiphenyl		60%				
118-79-6	2,4,6-Tribromophenol		64%				
1718-51-0	Terphenyl-D14		91%				

fw 4/16/09

KATAHDIN ANALYTICAL SERVICES
Report of Analytical Results

Client: CH2MHill
Project: TO-009 Lejeune
PO No:
Sample Date: 01/13/09
Received Date: 01/15/09
Extraction Date: 01/20/09
Analysis Date: 30-JAN-2009 19:49
Report Date: 02/07/2009
Matrix: SOIL
% Solids: 86.9

Lab ID: SC0210-17
Client ID: MR08-SS310-09A
SDG: TO9-37
Extracted by: AC
Extraction Method: SW846 3550
Analyst: JCG
Analysis Method: SW846 8270C
Lab Prep Batch: WG59991
Units: ug/Kgdrywt

CAS#	Compound	Flags	Results	DF	PQL	Adj.PQL	Adj.MDL
100-52-7	Benzaldehyde	U	580	1.0	500	580	140
108-95-2	Phenol	U	580	1.0	500	580	180
111-44-4	Bis(2-Chloroethyl)ether	U	380	1.0	330	380	93
95-57-8	2-Chlorophenol	U	580	1.0	500	580	190
95-48-7	2-Methylphenol	U	690	1.0	600	690	230
108-60-1	2,2'-Oxybis(1-chloropropane)	U	380	1.0	330	380	100
98-86-2	Acetophenone	U	690	1.0	600	690	200
621-64-7	N-Nitroso-di-n-propylamine	U	380	1.0	330	380	95
65794-96-9	3&4-Methylphenol	U	690	1.0	600	690	220
67-72-1	Hexachloroethane	U	380	1.0	330	380	110
98-95-3	Nitrobenzene	U	380	1.0	330	380	100
78-59-1	Isophorone	U	380	1.0	330	380	86
88-75-5	2-Nitrophenol	U	690	1.0	600	690	190
105-67-9	2,4-Dimethylphenol	U	580	1.0	500	580	190
111-91-1	Bis(2-Chloroethoxy)methane	U	380	1.0	330	380	110
120-83-2	2,4-Dichlorophenol	U	580	1.0	500	580	170
106-47-8	4-Chloroaniline	U	580	1.0	500	580	140
105-60-2	Caprolactam	U	580	1.0	500	580	160
59-50-7	4-Chloro-3-Methylphenol	U	580	1.0	500	580	190
88-06-2	2,4,6-Trichlorophenol	U	580	1.0	500	580	180
95-95-4	2,4,5-Trichlorophenol	U	580	1.0	500	580	180
91-58-7	2-Chloronaphthalene	U	380	1.0	330	380	100
92-52-4	1,1'-Biphenyl	U	380	1.0	330	380	84
88-74-4	2-Nitroaniline	U	580	1.0	500	580	86
131-11-3	Dimethyl Phthalate	U	380	1.0	330	380	90
606-20-2	2,6-Dinitrotoluene	U	380	1.0	330	380	91
208-96-8	Acenaphthylene	U	380	1.0	330	380	80
99-09-2	3-Nitroaniline	U	580	1.0	500	580	110
83-32-9	Acenaphthene	U	380	1.0	330	380	75
51-28-5	2,4-Dinitrophenol	U	1400	1.0	1200	1400	430
132-64-9	Dibenzofuran	U	380	1.0	330	380	91
100-02-7	4-Nitrophenol	U	1400	1.0	1200	1400	360
121-14-2	2,4-Dinitrotoluene	U	380	1.0	330	380	98
84-66-2	Diethylphthalate	U	380	1.0	330	380	92
7005-72-3	4-Chlorophenyl-phenylether	U	380	1.0	330	380	90
100-01-6	4-Nitroaniline	U	580	1.0	500	580	150
534-52-1	4,6-Dinitro-2-Methylphenol	U	1400	1.0	1200	1400	390
86-30-6	N-Nitrosodiphenylamine	U	760	1.0	660	760	250
101-55-3	4-Bromophenyl-phenylether	U	380	1.0	330	380	98
1912-24-9	Atrazine	U	380	1.0	330	380	100
87-86-5	Pentachlorophenol	U	940	1.0	820	940	270
120-12-7	Anthracene	U	380	1.0	330	380	97
86-74-8	Carbazole	U	580	1.0	500	580	130

lw 4/16/09

9

KATAHDIN ANALYTICAL SERVICES
Report of Analytical Results

Client: CH2MHill
Project: TO-009 Lejeune
PO No:
Sample Date: 01/13/09
Received Date: 01/15/09
Extraction Date: 01/20/09
Analysis Date: 30-JAN-2009 19:49
Report Date: 02/07/2009
Matrix: SOIL
% Solids: 86.9

Lab ID: SC0210-17
Client ID: MR08-SS310-09A
SDG: TO9-37
Extracted by: AC
Extraction Method: SW846 3550
Analyst: JCG
Analysis Method: SW846 8270C
Lab Prep Batch: WG59991
Units: ug/Kgdrywt

CAS#	Compound	Flags	Results	DF	PQL	Adj.PQL	Adj.MDL
84-74-2	Di-n-butylphthalate	U	380	1.0	330	380	120
85-68-7	Butylbenzylphthalate	U	380	1.0	330	380	110
91-94-1	3,3'-Dichlorobenzidine	U	580	1.0	500	580	130
218-01-9	Chrysene	U	380	1.0	330	380	110
117-81-7	bis(2-Ethylhexyl)phthalate	~~J~~ 380U	~~190~~	1.0	330	380	110 BC
117-84-0	Di-n-octylphthalate	U	380	1.0	330	380	240
367-12-4	2-Fluorophenol		81%				
13127-88-3	Phenol-D6		91%				
4165-60-0	Nitrobenzene-D5		80%				
321-60-8	2-Fluorobiphenyl		76%				
118-79-6	2,4,6-Tribromophenol		94%				
1718-51-0	Terphenyl-D14		92%				

lus
4/16/09

KATAHDIN ANALYTICAL SERVICES
Report of Analytical Results

Client: CH2MHill
Project: TO-009 Lejeune
PO No:
Sample Date: 01/13/09
Received Date: 01/15/09
Extraction Date: 01/20/09
Analysis Date: 30-JAN-2009 12:46
Report Date: 02/07/2009
Matrix: SOIL
% Solids: 84.2

Lab ID: SC0210-19
Client ID: MR08-IS310-9-10-09A
SDG: TO9-37
Extracted by: AC
Extraction Method: SW846 3550
Analyst: JCG
Analysis Method: SW846 8270C
Lab Prep Batch: WG59991
Units: ug/Kgdrywt

CAS#	Compound	Flags	Results	DF	PQL	Adj.PQL	Adj.MDL
100-52-7	Benzaldehyde	U	590	1.0	500	590	140
108-95-2	Phenol	U	590	1.0	500	590	180
111-44-4	Bis(2-Chloroethyl)ether	U	390	1.0	330	390	96
95-57-8	2-Chlorophenol	U	590	1.0	500	590	190
95-48-7	2-Methylphenol	U	710	1.0	600	710	240
108-60-1	2,2'-Oxybis(1-chloropropane)	U	390	1.0	330	390	100
98-86-2	Acetophenone	U	710	1.0	600	710	210
621-64-7	N-Nitroso-di-n-propylamine	U	390	1.0	330	390	99
65794-96-9	3&4-Methylphenol	U	710	1.0	600	710	220
67-72-1	Hexachloroethane	U	390	1.0	330	390	110
98-95-3	Nitrobenzene	U	390	1.0	330	390	110
78-59-1	Isophorone	U	390	1.0	330	390	89
88-75-5	2-Nitrophenol	U	710	1.0	600	710	200
105-67-9	2,4-Dimethylphenol	U	590	1.0	500	590	200
111-91-1	Bis(2-Chloroethoxy)methane	U	390	1.0	330	390	110
120-83-2	2,4-Dichlorophenol	U	590	1.0	500	590	180
106-47-8	4-Chloroaniline	U	590	1.0	500	590	140
105-60-2	Caprolactam	U	590	1.0	500	590	170
59-50-7	4-Chloro-3-Methylphenol	U	590	1.0	500	590	200
88-06-2	2,4,6-Trichlorophenol	U	590	1.0	500	590	180
95-95-4	2,4,5-Trichlorophenol	U	590	1.0	500	590	180
91-58-7	2-Chloronaphthalene	U	390	1.0	330	390	100
92-52-4	1,1'-Biphenyl	U	390	1.0	330	390	87
88-74-4	2-Nitroaniline	U	590	1.0	500	590	89
131-11-3	Dimethyl Phthalate	U	390	1.0	330	390	93
606-20-2	2,6-Dinitrotoluene	U	390	1.0	330	390	94
208-96-8	Acenaphthylene	U	390	1.0	330	390	83
99-09-2	3-Nitroaniline	U	590	1.0	500	590	110
83-32-9	Acenaphthene	U	390	1.0	330	390	77
51-28-5	2,4-Dinitrophenol	U	1400	1.0	1200	1400	450
132-64-9	Dibenzofuran	U	390	1.0	330	390	94
100-02-7	4-Nitrophenol	U	1400	1.0	1200	1400	370
121-14-2	2,4-Dinitrotoluene	U	390	1.0	330	390	100
84-66-2	Diethylphthalate	U	390	1.0	330	390	95
7005-72-3	4-Chlorophenyl-phenylether	U	390	1.0	330	390	93
100-01-6	4-Nitroaniline	U	590	1.0	500	590	160
534-52-1	4,6-Dinitro-2-Methylphenol	U	1400	1.0	1200	1400	400
86-30-6	N-Nitrosodiphenylamine	U	780	1.0	660	780	260
101-55-3	4-Bromophenyl-phenylether	U	390	1.0	330	390	100
1912-24-9	Atrazine	U	390	1.0	330	390	110
87-86-5	Pentachlorophenol	U	970	1.0	820	970	280
120-12-7	Anthracene	U	390	1.0	330	390	100
86-74-8	Carbazole	U	590	1.0	500	590	130

lw 4/16/09

10

KATAHDIN ANALYTICAL SERVICES
Report of Analytical Results

Client: CH2MHill
Project: TO-009 Lejeune
PO No:
Sample Date: 01/13/09
Received Date: 01/15/09
Extraction Date: 01/20/09
Analysis Date: 30-JAN-2009 12:46
Report Date: 02/07/2009
Matrix: SOIL
% Solids: 84.2

Lab ID: SC0210-19
Client ID: MR08-IS310-9-10-09A
SDG: TO9-37
Extracted by: AC
Extraction Method: SW846 3550
Analyst: JCG
Analysis Method: SW846 8270C
Lab Prep Batch: WG59991
Units: ug/Kgdrywt

CAS#	Compound	Flags	Results	DF	PQL	Adj.PQL	Adj.MDL
84-74-2	Di-n-butylphthalate	U	390	1.0	330	390	120
85-68-7	Butylbenzylphthalate	U	390	1.0	330	390	110
91-94-1	3,3'-Dichlorobenzidine	U	590	1.0	500	590	140
218-01-9	Chrysene	U	390	1.0	330	390	110
117-81-7	bis(2-Ethylhexyl)phthalate	U	390	1.0	330	390	120
117-84-0	Di-n-octylphthalate	U	390	1.0	330	390	250
367-12-4	2-Fluorophenol		71%				
13127-88-3	Phenol-D6		80%				
4165-60-0	Nitrobenzene-D5		72%				
321-60-8	2-Fluorobiphenyl		70%				
118-79-6	2,4,6-Tribromophenol		77%				
1718-51-0	Terphenyl-D14		90%				

lew 4/16/09

11

KATAHDIN ANALYTICAL SERVICES
Report of Analytical Results

Client: CH2MHill
Project: TO-009 Lejeune
PO No:
Sample Date: 01/13/09
Received Date: 01/15/09
Extraction Date: 01/20/09
Analysis Date: 30-JAN-2009 21:13
Report Date: 02/07/2009
Matrix: SOIL
% Solids: 87.7

Lab ID: SC0210-21
Client ID: MR08-SS307-09A
SDG: TO9-37
Extracted by: AC
Extraction Method: SW846 3550
Analyst: JCG
Analysis Method: SW846 8270C
Lab Prep Batch: WG59991
Units: ug/Kgdrywt

CAS#	Compound	Flags	Results	DF	PQL	Adj.PQL	Adj.MDL
100-52-7	Benzaldehyde	U	570	1.0	500	570	140
108-95-2	Phenol	U	570	1.0	500	570	180
111-44-4	Bis(2-Chloroethyl)ether	U	380	1.0	330	380	92
95-57-8	2-Chlorophenol	U	570	1.0	500	570	190
95-48-7	2-Methylphenol	U	680	1.0	600	680	230
108-60-1	2,2'-Oxybis(1-chloropropane)	U	380	1.0	330	380	100
98-86-2	Acetophenone	U	680	1.0	600	680	200
621-64-7	N-Nitroso-di-n-propylamine	U	380	1.0	330	380	95
65794-96-9	3&4-Methylphenol	U	680	1.0	600	680	210
67-72-1	Hexachloroethane	U	380	1.0	330	380	110
98-95-3	Nitrobenzene	U	380	1.0	330	380	100
78-59-1	Isophorone	U	380	1.0	330	380	85
88-75-5	2-Nitrophenol	U	680	1.0	600	680	190
105-67-9	2,4-Dimethylphenol	U	570	1.0	500	570	190
111-91-1	Bis(2-Chloroethoxy)methane	U	380	1.0	330	380	110
120-83-2	2,4-Dichlorophenol	U	570	1.0	500	570	170
106-47-8	4-Chloroaniline	U	570	1.0	500	570	140
105-60-2	Caprolactam	U	570	1.0	500	570	160
59-50-7	4-Chloro-3-Methylphenol	U	570	1.0	500	570	190
88-06-2	2,4,6-Trichlorophenol	U	570	1.0	500	570	180
95-95-4	2,4,5-Trichlorophenol	U	570	1.0	500	570	180
91-58-7	2-Chloronaphthalene	U	380	1.0	330	380	99
92-52-4	1,1'-Biphenyl	U	380	1.0	330	380	83
88-74-4	2-Nitroaniline	U	570	1.0	500	570	85
131-11-3	Dimethyl Phthalate	U	380	1.0	330	380	89
606-20-2	2,6-Dinitrotoluene	U	380	1.0	330	380	90
208-96-8	Acenaphthylene	U	380	1.0	330	380	80
99-09-2	3-Nitroaniline	U	570	1.0	500	570	110
83-32-9	Acenaphthene	J	89	1.0	330	380	74
51-28-5	2,4-Dinitrophenol	U	1400	1.0	1200	1400	430
132-64-9	Dibenzofuran	U	380	1.0	330	380	90
100-02-7	4-Nitrophenol	U	1400	1.0	1200	1400	350
121-14-2	2,4-Dinitrotoluene	U	380	1.0	330	380	97
84-66-2	Diethylphthalate	U	380	1.0	330	380	91
7005-72-3	4-Chlorophenyl-phenylether	U	380	1.0	330	380	89
100-01-6	4-Nitroaniline	U	570	1.0	500	570	150
534-52-1	4,6-Dinitro-2-Methylphenol	U	1400	1.0	1200	1400	380
86-30-6	N-Nitrosodiphenylamine	U	750	1.0	660	750	250
101-55-3	4-Bromophenyl-phenylether	U	380	1.0	330	380	97
1912-24-9	Atrazine	U	380	1.0	330	380	100
87-86-5	Pentachlorophenol	U	930	1.0	820	930	270
120-12-7	Anthracene	U	380	1.0	330	380	96
86-74-8	Carbazole	U	570	1.0	500	570	130

MW 4/16/09

11

KATAHDIN ANALYTICAL SERVICES
Report of Analytical Results

Client: CH2MHill
Project: TO-009 Lejeune
PO No:
Sample Date: 01/13/09
Received Date: 01/15/09
Extraction Date: 01/20/09
Analysis Date: 30-JAN-2009 21:13
Report Date: 02/07/2009
Matrix: SOIL
% Solids: 87.7

Lab ID: SC0210-21
Client ID: MR08-SS307-09A
SDG: TO9-37
Extracted by: AC
Extraction Method: SW846 3550
Analyst: JCG
Analysis Method: SW846 8270C
Lab Prep Batch: WG59991
Units: ug/Kgdrywt

CAS#	Compound	Flags	Results	DF	PQL	Adj.PQL	Adj.MDL
84-74-2	Di-n-butylphthalate	U	380	1.0	330	380	120
85-68-7	Butylbenzylphthalate	U	380	1.0	330	380	110
91-94-1	3,3'-Dichlorobenzidine	U	570	1.0	500	570	130
218-01-9	Chrysene	J	120	1.0	330	380	110
117-81-7	bis(2-Ethylhexyl)phthalate	~~J~~ 380U	~~250~~	1.0	330	380	110 BL
117-84-0	Di-n-octylphthalate	U	380	1.0	330	380	240
367-12-4	2-Fluorophenol		75%				
13127-88-3	Phenol-D6		89%				
4165-60-0	Nitrobenzene-D5		73%				
321-60-8	2-Fluorobiphenyl		71%				
118-79-6	2,4,6-Tribromophenol		86%				
1718-51-0	Terphenyl-D14		97%				

JW
4/16/09

12

KATAHDIN ANALYTICAL SERVICES
Report of Analytical Results

Client: CH2MHill
Project: TO-009 Lejeune
PO No:
Sample Date: 01/13/09
Received Date: 01/15/09
Extraction Date: 01/21/09
Analysis Date: 28-JAN-2009 11:39
Report Date: 02/07/2009
Matrix: SOIL
% Solids: 87.3

Lab ID: SC0210-23
Client ID: MR08-IS307-6-7-09A
SDG: TO9-37
Extracted by: AC
Extraction Method: SW846 3550
Analyst: JLP
Analysis Method: SW846 8270C
Lab Prep Batch: WG60036
Units: ug/Kgdrywt

CAS#	Compound	Flags	Results	DF	PQL	Adj.PQL	Adj.MDL	
100-52-7	Benzaldehyde	U	570	1.0	500	570	140	
108-95-2	Phenol	U	570	1.0	500	570	180	
111-44-4	Bis(2-Chloroethyl)ether	U	380	1.0	330	380	93	
95-57-8	2-Chlorophenol	U	570	1.0	500	570	190	
95-48-7	2-Methylphenol	U	690	1.0	600	690	230	
108-60-1	2,2'-Oxybis(1-chloropropane)	U	380	1.0	330	380	100	
98-86-2	Acetophenone	U	690	1.0	600	690	200	
621-64-7	N-Nitroso-di-n-propylamine	U	380	1.0	330	380	95	
65794-96-9	3&4-Methylphenol	U	690	1.0	600	690	210	
67-72-1	Hexachloroethane	U	380	1.0	330	380	110	
98-95-3	Nitrobenzene	U	380	1.0	330	380	100	
78-59-1	Isophorone	U	380	1.0	330	380	86	
88-75-5	2-Nitrophenol	U	690	1.0	600	690	190	
105-67-9	2,4-Dimethylphenol	U	570	1.0	500	570	190	
111-91-1	Bis(2-Chloroethoxy)methane	U	380	1.0	330	380	110	
120-83-2	2,4-Dichlorophenol	U	570	1.0	500	570	170	
106-47-8	4-Chloroaniline	U	570	1.0	500	570	140	
105-60-2	Caprolactam	U	570	1.0	500	570	160	
59-50-7	4-Chloro-3-Methylphenol	U	570	1.0	500	570	190	
88-06-2	2,4,6-Trichlorophenol	U	570	1.0	500	570	180	
95-95-4	2,4,5-Trichlorophenol	U	570	1.0	500	570	180	
91-58-7	2-Chloronaphthalene	U	380	1.0	330	380	100	
92-52-4	1,1'-Biphenyl	U	380	1.0	330	380	84	
88-74-4	2-Nitroaniline	U	570	1.0	500	570	86	
131-11-3	Dimethyl Phthalate	U	380	1.0	330	380	89	
606-20-2	2,6-Dinitrotoluene	U	380	1.0	330	380	90	
208-96-8	Acenaphthylene	U	380	1.0	330	380	80	
99-09-2	3-Nitroaniline	U	570	1.0	500	570	110	
83-32-9	Acenaphthene	U	380	1.0	330	380	74	
51-28-5	2,4-Dinitrophenol	~~U~~ UJ	1400	1.0	1200	1400	430	CCH
132-64-9	Dibenzofuran	U	380	1.0	330	380	90	
100-02-7	4-Nitrophenol	U	1400	1.0	1200	1400	350	
121-14-2	2,4-Dinitrotoluene	U	380	1.0	330	380	97	
84-66-2	Diethylphthalate	U	380	1.0	330	380	92	
7005-72-3	4-Chlorophenyl-phenylether	U	380	1.0	330	380	89	
100-01-6	4-Nitroaniline	U	570	1.0	500	570	150	
534-52-1	4,6-Dinitro-2-Methylphenol	U	1400	1.0	1200	1400	380	
86-30-6	N-Nitrosodiphenylamine	U	760	1.0	660	760	250	
101-55-3	4-Bromophenyl-phenylether	U	380	1.0	330	380	97	
1912-24-9	Atrazine	U	380	1.0	330	380	100	
87-86-5	Pentachlorophenol	U	940	1.0	820	940	270	
120-12-7	Anthracene	U	380	1.0	330	380	96	
86-74-8	Carbazole	U	570	1.0	500	570	130	

JCW 4/16/09

KATAHDIN ANALYTICAL SERVICES
Report of Analytical Results

12

Client: CH2MHill
Project: TO-009 Lejeune
PO No:
Sample Date: 01/13/09
Received Date: 01/15/09
Extraction Date: 01/21/09
Analysis Date: 28-JAN-2009 11:39
Report Date: 02/07/2009
Matrix: SOIL
% Solids: 87.3

Lab ID: SC0210-23
Client ID: MR08-IS307-6-7-09A
SDG: TO9-37
Extracted by: AC
Extraction Method: SW846 3550
Analyst: JLP
Analysis Method: SW846 8270C
Lab Prep Batch: WG60036
Units: ug/Kgdrywt

CAS#	Compound	Flags	Results	DF	PQL	Adj.PQL	Adj.MDL
84-74-2	Di-n-butylphthalate	U	380	1.0	330	380	120
85-68-7	Butylbenzylphthalate	U	380	1.0	330	380	110
91-94-1	3,3'-Dichlorobenzidine	U	570	1.0	500	570	130
218-01-9	Chrysene	U	380	1.0	330	380	110
117-81-7	bis(2-Ethylhexyl)phthalate	U	380	1.0	330	380	110
117-84-0	Di-n-octylphthalate	U	380	1.0	330	380	240
367-12-4	2-Fluorophenol		79%				
13127-88-3	Phenol-D6		76%				
4165-60-0	Nitrobenzene-D5		69%				
321-60-8	2-Fluorobiphenyl		71%				
118-79-6	2,4,6-Tribromophenol		64%				
1718-51-0	Terphenyl-D14		78%				

lw
4/16/09

KATAHDIN ANALYTICAL SERVICES
Report of Analytical Results

Client: CH2MHill
Project: TO-009 Lejeune
PO No:
Sample Date: 01/13/09
Received Date: 01/15/09
Extraction Date: 01/21/09
Analysis Date: 28-JAN-2009 02:12
Report Date: 02/07/2009
Matrix: SOIL
% Solids: 84.2

Lab ID: SC0210-25
Client ID: MR08-SS284-09A
SDG: TO9-37
Extracted by: AC
Extraction Method: SW846 3550
Analyst: JCG
Analysis Method: SW846 8270C
Lab Prep Batch: WG60036
Units: ug/Kgdrywt

CAS#	Compound	Flags	Results	DF	PQL	Adj.PQL	Adj.MDL	
100-52-7	Benzaldehyde	U	590	1.0	500	590	140	
108-95-2	Phenol	U	590	1.0	500	590	180	
111-44-4	Bis(2-Chloroethyl)ether	U	390	1.0	330	390	96	
95-57-8	2-Chlorophenol	U	590	1.0	500	590	190	
95-48-7	2-Methylphenol	U	710	1.0	600	710	240	
108-60-1	2,2'-Oxybis(1-chloropropane)	U	390	1.0	330	390	100	
98-86-2	Acetophenone	U	710	1.0	600	710	210	
621-64-7	N-Nitroso-di-n-propylamine	U	390	1.0	330	390	98	
65794-96-9	3&4-Methylphenol	U	710	1.0	600	710	220	
67-72-1	Hexachloroethane	U	390	1.0	330	390	110	
98-95-3	Nitrobenzene	U	390	1.0	330	390	110	
78-59-1	Isophorone	U	390	1.0	330	390	89	
88-75-5	2-Nitrophenol	U	710	1.0	600	710	200	
105-67-9	2,4-Dimethylphenol	U	590	1.0	500	590	200	
111-91-1	Bis(2-Chloroethoxy)methane	U	390	1.0	330	390	110	
120-83-2	2,4-Dichlorophenol	U	590	1.0	500	590	180	
106-47-8	4-Chloroaniline	U	590	1.0	500	590	140	
105-60-2	Caprolactam	U	590	1.0	500	590	170	
59-50-7	4-Chloro-3-Methylphenol	U	590	1.0	500	590	200	
88-06-2	2,4,6-Trichlorophenol	U	590	1.0	500	590	180	
95-95-4	2,4,5-Trichlorophenol	U	590	1.0	500	590	180	
91-58-7	2-Chloronaphthalene	U	390	1.0	330	390	100	
92-52-4	1,1'-Biphenyl	U	390	1.0	330	390	87	
88-74-4	2-Nitroaniline	U	590	1.0	500	590	89	
131-11-3	Dimethyl Phthalate	U	390	1.0	330	390	92	
606-20-2	2,6-Dinitrotoluene	U	390	1.0	330	390	94	
208-96-8	Acenaphthylene	U	390	1.0	330	390	83	
99-09-2	3-Nitroaniline	U	590	1.0	500	590	110	
83-32-9	Acenaphthene	U	390	1.0	330	390	77	
51-28-5	2,4-Dinitrophenol	~~U~~ UJ	1400	1.0	1200	1400	450	CCH
132-64-9	Dibenzofuran	U	390	1.0	330	390	94	
100-02-7	4-Nitrophenol	~~U~~ UJ	1400	1.0	1200	1400	370	CCH
121-14-2	2,4-Dinitrotoluene	U	390	1.0	330	390	100	
84-66-2	Diethylphthalate	U	390	1.0	330	390	95	
7005-72-3	4-Chlorophenyl-phenylether	U	390	1.0	330	390	92	
100-01-6	4-Nitroaniline	U	590	1.0	500	590	160	
534-52-1	4,6-Dinitro-2-Methylphenol	U	1400	1.0	1200	1400	400	
86-30-6	N-Nitrosodiphenylamine	U	780	1.0	660	780	260	
101-55-3	4-Bromophenyl-phenylether	U	390	1.0	330	390	100	
1912-24-9	Atrazine	U	390	1.0	330	390	110	
87-86-5	Pentachlorophenol	U	970	1.0	820	970	280	
120-12-7	Anthracene	U	390	1.0	330	390	100	
86-74-8	Carbazole	U	590	1.0	500	590	130	

lw 4/16/09

KATAHDIN ANALYTICAL SERVICES
Report of Analytical Results

Client: CH2MHill
Project: TO-009 Lejeune
PO No:
Sample Date: 01/13/09
Received Date: 01/15/09
Extraction Date: 01/21/09
Analysis Date: 28-JAN-2009 02:12
Report Date: 02/07/2009
Matrix: SOIL
% Solids: 84.2

Lab ID: SC0210-25
Client ID: MR08-SS284-09A
SDG: TO9-37
Extracted by: AC
Extraction Method: SW846 3550
Analyst: JCG
Analysis Method: SW846 8270C
Lab Prep Batch: WG60036
Units: ug/Kgdrywt

CAS#	Compound	Flags	Results	DF	PQL	Adj.PQL	Adj.MDL
84-74-2	Di-n-butylphthalate	U	390	1.0	330	390	120
85-68-7	Butylbenzylphthalate	U	390	1.0	330	390	110
91-94-1	3,3'-Dichlorobenzidine	U	590	1.0	500	590	140
218-01-9	Chrysene	U	390	1.0	330	390	110
117-81-7	bis(2-Ethylhexyl)phthalate	U	390	1.0	330	390	120
117-84-0	Di-n-octylphthalate	U	390	1.0	330	390	250
367-12-4	2-Fluorophenol		67%				
13127-88-3	Phenol-D6		65%				
4165-60-0	Nitrobenzene-D5		60%				
321-60-8	2-Fluorobiphenyl		66%				
118-79-6	2,4,6-Tribromophenol		66%				
1718-51-0	Terphenyl-D14		85%				

pes
4/16/09

KATAHDIN ANALYTICAL SERVICES
Report of Analytical Results

Client: CH2MHill
Project: TO-009 Lejeune
PO No:
Sample Date: 01/13/09
Received Date: 01/15/09
Extraction Date: 01/21/09
Analysis Date: 28-JAN-2009 12:22
Report Date: 02/07/2009
Matrix: SOIL
% Solids: 90.0

Lab ID: SC0210-27
Client ID: MR08-IS284-6-7-09A
SDG: TO9-37
Extracted by: AC
Extraction Method: SW846 3550
Analyst: JLP
Analysis Method: SW846 8270C
Lab Prep Batch: WG60036
Units: ug/Kgdrywt

CAS#	Compound	Flags	Results	DF	PQL	Adj.PQL	Adj.MDL	
100-52-7	Benzaldehyde	U	560	1.0	500	560	130	
108-95-2	Phenol	U	560	1.0	500	560	170	
111-44-4	Bis(2-Chloroethyl)ether	U	370	1.0	330	370	90	
95-57-8	2-Chlorophenol	U	560	1.0	500	560	180	
95-48-7	2-Methylphenol	U	670	1.0	600	670	220	
108-60-1	2,2'-Oxybis(1-chloropropane)	U	370	1.0	330	370	99	
98-86-2	Acetophenone	U	670	1.0	600	670	200	
621-64-7	N-Nitroso-di-n-propylamine	U	370	1.0	330	370	92	
65794-96-9	3&4-Methylphenol	U	670	1.0	600	670	210	
67-72-1	Hexachloroethane	U	370	1.0	330	370	110	
98-95-3	Nitrobenzene	U	370	1.0	330	370	100	
78-59-1	Isophorone	U	370	1.0	330	370	83	
88-75-5	2-Nitrophenol	U	670	1.0	600	670	180	
105-67-9	2,4-Dimethylphenol	U	560	1.0	500	560	180	
111-91-1	Bis(2-Chloroethoxy)methane	U	370	1.0	330	370	110	
120-83-2	2,4-Dichlorophenol	U	560	1.0	500	560	170	
106-47-8	4-Chloroaniline	U	560	1.0	500	560	130	
105-60-2	Caprolactam	U	560	1.0	500	560	160	
59-50-7	4-Chloro-3-Methylphenol	U	560	1.0	500	560	180	
88-06-2	2,4,6-Trichlorophenol	U	560	1.0	500	560	170	
95-95-4	2,4,5-Trichlorophenol	U	560	1.0	500	560	170	
91-58-7	2-Chloronaphthalene	U	370	1.0	330	370	97	
92-52-4	1,1'-Biphenyl	U	370	1.0	330	370	81	
88-74-4	2-Nitroaniline	U	560	1.0	500	560	83	
131-11-3	Dimethyl Phthalate	U	370	1.0	330	370	87	
606-20-2	2,6-Dinitrotoluene	U	370	1.0	330	370	88	
208-96-8	Acenaphthylene	U	370	1.0	330	370	78	
99-09-2	3-Nitroaniline	U	560	1.0	500	560	100	
83-32-9	Acenaphthene	U	370	1.0	330	370	72	
51-28-5	2,4-Dinitrophenol	~~U~~ UJ	1300	1.0	1200	1300	420	CCH
132-64-9	Dibenzofuran	U	370	1.0	330	370	88	
100-02-7	4-Nitrophenol	U	1300	1.0	1200	1300	340	
121-14-2	2,4-Dinitrotoluene	U	370	1.0	330	370	94	
84-66-2	Diethylphthalate	U	370	1.0	330	370	89	
7005-72-3	4-Chlorophenyl-phenylether	U	370	1.0	330	370	87	
100-01-6	4-Nitroaniline	U	560	1.0	500	560	150	
534-52-1	4,6-Dinitro-2-Methylphenol	U	1300	1.0	1200	1300	370	
86-30-6	N-Nitrosodiphenylamine	U	730	1.0	660	730	240	
101-55-3	4-Bromophenyl-phenylether	U	370	1.0	330	370	94	
1912-24-9	Atrazine	U	370	1.0	330	370	100	
87-86-5	Pentachlorophenol	U	910	1.0	820	910	260	
120-12-7	Anthracene	U	370	1.0	330	370	93	
86-74-8	Carbazole	U	560	1.0	500	560	120	

MW
4/16/09

KATAHDIN ANALYTICAL SERVICES
Report of Analytical Results

Client: CH2MHill
Project: TO-009 Lejeune
PO No:
Sample Date: 01/13/09
Received Date: 01/15/09
Extraction Date: 01/21/09
Analysis Date: 28-JAN-2009 12:22
Report Date: 02/07/2009
Matrix: SOIL
% Solids: 90.0

Lab ID: SC0210-27
Client ID: MR08-IS284-6-7-09A
SDG: TO9-37
Extracted by: AC
Extraction Method: SW846 3550
Analyst: JLP
Analysis Method: SW846 8270C
Lab Prep Batch: WG60036
Units: ug/Kgdrywt

CAS#	Compound	Flags	Results	DF	PQL	Adj.PQL	Adj.MDL
84-74-2	Di-n-butylphthalate	U	370	1.0	330	370	110
85-68-7	Butylbenzylphthalate	U	370	1.0	330	370	100
91-94-1	3,3'-Dichlorobenzidine	U	560	1.0	500	560	130
218-01-9	Chrysene	U	370	1.0	330	370	100
117-81-7	bis(2-Ethylhexyl)phthalate	U	370	1.0	330	370	110
117-84-0	Di-n-octylphthalate	U	370	1.0	330	370	230
367-12-4	2-Fluorophenol		70%				
13127-88-3	Phenol-D6		71%				
4165-60-0	Nitrobenzene-D5		60%				
321-60-8	2-Fluorobiphenyl		66%				
118-79-6	2,4,6-Tribromophenol		60%				
1718-51-0	Terphenyl-D14		79%				

lew 4/16/09

15

KATAHDIN ANALYTICAL SERVICES
Report of Analytical Results

Client: CH2MHill
Project: TO-009 Lejeune
PO No:
Sample Date: 01/13/09
Received Date: 01/15/09
Extraction Date: 01/21/09
Analysis Date: 28-JAN-2009 02:54
Report Date: 02/07/2009
Matrix: SOIL
% Solids: 82.2

Lab ID: SC0210-29
Client ID: MR08-SS285-09A
SDG: TO9-37
Extracted by: AC
Extraction Method: SW846 3550
Analyst: JCG
Analysis Method: SW846 8270C
Lab Prep Batch: WG60036
Units: ug/Kgdrywt

CAS#	Compound	Flags	Results	DF	PQL	Adj.PQL	Adj.MDL	
100-52-7	Benzaldehyde	U	610	1.0	500	610	140	
108-95-2	Phenol	U	610	1.0	500	610	190	
111-44-4	Bis(2-Chloroethyl)ether	U	400	1.0	330	400	98	
95-57-8	2-Chlorophenol	U	610	1.0	500	610	200	
95-48-7	2-Methylphenol	U	730	1.0	600	730	240	
108-60-1	2,2'-Oxybis(1-chloropropane)	U	400	1.0	330	400	110	
98-86-2	Acetophenone	U	730	1.0	600	730	220	
621-64-7	N-Nitroso-di-n-propylamine	U	400	1.0	330	400	100	
65794-96-9	3&4-Methylphenol	U	730	1.0	600	730	230	
67-72-1	Hexachloroethane	U	400	1.0	330	400	120	
98-95-3	Nitrobenzene	U	400	1.0	330	400	110	
78-59-1	Isophorone	U	400	1.0	330	400	91	
88-75-5	2-Nitrophenol	U	730	1.0	600	730	200	
105-67-9	2,4-Dimethylphenol	U	610	1.0	500	610	200	
111-91-1	Bis(2-Chloroethoxy)methane	U	400	1.0	330	400	120	
120-83-2	2,4-Dichlorophenol	U	610	1.0	500	610	180	
106-47-8	4-Chloroaniline	U	610	1.0	500	610	140	
105-60-2	Caprolactam	U	610	1.0	500	610	180	
59-50-7	4-Chloro-3-Methylphenol	U	610	1.0	500	610	200	
88-06-2	2,4,6-Trichlorophenol	U	610	1.0	500	610	190	
95-95-4	2,4,5-Trichlorophenol	U	610	1.0	500	610	190	
91-58-7	2-Chloronaphthalene	U	400	1.0	330	400	100	
92-52-4	1,1'-Biphenyl	U	400	1.0	330	400	89	
88-74-4	2-Nitroaniline	U	610	1.0	500	610	91	
131-11-3	Dimethyl Phthalate	U	400	1.0	330	400	95	
606-20-2	2,6-Dinitrotoluene	U	400	1.0	330	400	96	
208-96-8	Acenaphthylene	U	400	1.0	330	400	85	
99-09-2	3-Nitroaniline	U	610	1.0	500	610	110	
83-32-9	Acenaphthene	U	400	1.0	330	400	79	
51-28-5	2,4-Dinitrophenol	~~U~~ UJ	1400	1.0	1200	1400	460	CCH
132-64-9	Dibenzofuran	U	400	1.0	330	400	96	
100-02-7	4-Nitrophenol	~~U~~ UJ	1400	1.0	1200	1400	380	CCH
121-14-2	2,4-Dinitrotoluene	U	400	1.0	330	400	100	
84-66-2	Diethylphthalate	U	400	1.0	330	400	97	
7005-72-3	4-Chlorophenyl-phenylether	U	400	1.0	330	400	95	
100-01-6	4-Nitroaniline	U	610	1.0	500	610	160	
534-52-1	4,6-Dinitro-2-Methylphenol	U	1400	1.0	1200	1400	410	
86-30-6	N-Nitrosodiphenylamine	U	800	1.0	660	800	270	
101-55-3	4-Bromophenyl-phenylether	U	400	1.0	330	400	100	
1912-24-9	Atrazine	U	400	1.0	330	400	110	
87-86-5	Pentachlorophenol	U	1000	1.0	820	1000	290	
120-12-7	Anthracene	U	400	1.0	330	400	100	
86-74-8	Carbazole	U	610	1.0	500	610	140	

RW 4/16/09

KATAHDIN ANALYTICAL SERVICES
Report of Analytical Results

Client: CH2MHill
Project: TO-009 Lejeune
PO No:
Sample Date: 01/13/09
Received Date: 01/15/09
Extraction Date: 01/21/09
Analysis Date: 28-JAN-2009 02:54
Report Date: 02/07/2009
Matrix: SOIL
% Solids: 82.2

Lab ID: SC0210-29
Client ID: MR08-SS285-09A
SDG: TO9-37
Extracted by: AC
Extraction Method: SW846 3550
Analyst: JCG
Analysis Method: SW846 8270C
Lab Prep Batch: WG60036
Units: ug/Kgdrywt

CAS#	Compound	Flags	Results	DF	PQL	Adj.PQL	Adj.MDL
84-74-2	Di-n-butylphthalate	U	400	1.0	330	400	120
85-68-7	Butylbenzylphthalate	U	400	1.0	330	400	110
91-94-1	3,3'-Dichlorobenzidine	U	610	1.0	500	610	140
218-01-9	Chrysene	U	400	1.0	330	400	120
117-81-7	bis(2-Ethylhexyl)phthalate	U	400	1.0	330	400	120
117-84-0	Di-n-octylphthalate	U	400	1.0	330	400	260
367-12-4	2-Fluorophenol		64%				
13127-88-3	Phenol-D6		63%				
4165-60-0	Nitrobenzene-D5		56%				
321-60-8	2-Fluorobiphenyl		59%				
118-79-6	2,4,6-Tribromophenol		64%				
1718-51-0	Terphenyl-D14		84%				

MW 4/16/09

16

KATAHDIN ANALYTICAL SERVICES
Report of Analytical Results

Client: CH2MHill
Project: TO-009 Lejeune
PO No:
Sample Date: 01/13/09
Received Date: 01/15/09
Extraction Date: 01/21/09
Analysis Date: 28-JAN-2009 13:04
Report Date: 02/07/2009
Matrix: SOIL
% Solids: 93.2

Lab ID: SC0210-31
Client ID: MR08-IS285-8-9-09A
SDG: TO9-37
Extracted by: AC
Extraction Method: SW846 3550
Analyst: JLP
Analysis Method: SW846 8270C
Lab Prep Batch: WG60036
Units: ug/Kgdrywt

CAS#	Compound	Flags	Results	DF	PQL	Adj.PQL	Adj.MDL	
100-52-7	Benzaldehyde	U	540	1.0	500	540	130	
108-95-2	Phenol	U	540	1.0	500	540	170	
111-44-4	Bis(2-Chloroethyl)ether	U	350	1.0	330	350	87	
95-57-8	2-Chlorophenol	U	540	1.0	500	540	180	
95-48-7	2-Methylphenol	U	640	1.0	600	640	210	
108-60-1	2,2'-Oxybis(1-chloropropane)	U	350	1.0	330	350	95	
98-86-2	Acetophenone	U	640	1.0	600	640	190	
621-64-7	N-Nitroso-di-n-propylamine	U	350	1.0	330	350	89	
65794-96-9	3&4-Methylphenol	U	640	1.0	600	640	200	
67-72-1	Hexachloroethane	U	350	1.0	330	350	100	
98-95-3	Nitrobenzene	U	350	1.0	330	350	98	
78-59-1	Isophorone	U	350	1.0	330	350	80	
88-75-5	2-Nitrophenol	U	640	1.0	600	640	180	
105-67-9	2,4-Dimethylphenol	U	540	1.0	500	540	180	
111-91-1	Bis(2-Chloroethoxy)methane	U	350	1.0	330	350	100	
120-83-2	2,4-Dichlorophenol	U	540	1.0	500	540	160	
106-47-8	4-Chloroaniline	U	540	1.0	500	540	130	
105-60-2	Caprolactam	U	540	1.0	500	540	150	
59-50-7	4-Chloro-3-Methylphenol	U	540	1.0	500	540	180	
88-06-2	2,4,6-Trichlorophenol	U	540	1.0	500	540	170	
95-95-4	2,4,5-Trichlorophenol	U	540	1.0	500	540	170	
91-58-7	2-Chloronaphthalene	U	350	1.0	330	350	93	
92-52-4	1,1'-Biphenyl	U	350	1.0	330	350	78	
88-74-4	2-Nitroaniline	U	540	1.0	500	540	80	
131-11-3	Dimethyl Phthalate	U	350	1.0	330	350	84	
606-20-2	2,6-Dinitrotoluene	U	350	1.0	330	350	85	
208-96-8	Acenaphthylene	U	350	1.0	330	350	75	
99-09-2	3-Nitroaniline	U	540	1.0	500	540	100	
83-32-9	Acenaphthene	U	350	1.0	330	350	70	
51-28-5	2,4-Dinitrophenol	~~U~~ UJ	1300	1.0	1200	1300	400	CCH
132-64-9	Dibenzofuran	U	350	1.0	330	350	85	
100-02-7	4-Nitrophenol	U	1300	1.0	1200	1300	330	
121-14-2	2,4-Dinitrotoluene	U	350	1.0	330	350	91	
84-66-2	Diethylphthalate	U	350	1.0	330	350	86	
7005-72-3	4-Chlorophenyl-phenylether	U	350	1.0	330	350	84	
100-01-6	4-Nitroaniline	U	540	1.0	500	540	140	
534-52-1	4,6-Dinitro-2-Methylphenol	U	1300	1.0	1200	1300	360	
86-30-6	N-Nitrosodiphenylamine	U	710	1.0	660	710	230	
101-55-3	4-Bromophenyl-phenylether	U	350	1.0	330	350	91	
1912-24-9	Atrazine	U	350	1.0	330	350	98	
87-86-5	Pentachlorophenol	U	880	1.0	820	880	250	
120-12-7	Anthracene	U	350	1.0	330	350	90	
86-74-8	Carbazole	U	540	1.0	500	540	120	

JLW 4/16/09

KATAHDIN ANALYTICAL SERVICES
Report of Analytical Results

Client: CH2MHill
Project: TO-009 Lejeune
PO No:
Sample Date: 01/13/09
Received Date: 01/15/09
Extraction Date: 01/21/09
Analysis Date: 28-JAN-2009 13:04
Report Date: 02/07/2009
Matrix: SOIL
% Solids: 93.2

Lab ID: SC0210-31
Client ID: MR08-IS285-8-9-09A
SDG: TO9-37
Extracted by: AC
Extraction Method: SW846 3550
Analyst: JLP
Analysis Method: SW846 8270C
Lab Prep Batch: WG60036
Units: ug/Kgdrywt

CAS#	Compound	Flags	Results	DF	PQL	Adj.PQL	Adj.MDL
84-74-2	Di-n-butylphthalate	U	350	1.0	330	350	110
85-68-7	Butylbenzylphthalate	U	350	1.0	330	350	100
91-94-1	3,3'-Dichlorobenzidine	U	540	1.0	500	540	120
218-01-9	Chrysene	U	350	1.0	330	350	100
117-81-7	bis(2-Ethylhexyl)phthalate	U	350	1.0	330	350	100
117-84-0	Di-n-octylphthalate	U	350	1.0	330	350	230
367-12-4	2-Fluorophenol		70%				
13127-88-3	Phenol-D6		71%				
4165-60-0	Nitrobenzene-D5		59%				
321-60-8	2-Fluorobiphenyl		64%				
118-79-6	2,4,6-Tribromophenol		55%				
1718-51-0	Terphenyl-D14		79%				

gW 4/16/09

KATAHDIN ANALYTICAL SERVICES
Report of Analytical Results

Client: CH2MHill
Project: TO-009 Lejeune
PO No:
Sample Date: 01/14/09
Received Date: 01/15/09
Extraction Date: 01/21/09
Analysis Date: 28-JAN-2009 03:37
Report Date: 02/07/2009
Matrix: SOIL
% Solids: 86.4

Lab ID: SC0210-33
Client ID: MR08-SS286-09A
SDG: TO9-37
Extracted by: AC
Extraction Method: SW846 3550
Analyst: JCG
Analysis Method: SW846 8270C
Lab Prep Batch: WG60036
Units: ug/Kgdrywt

CAS#	Compound	Flags	Results	DF	PQL	Adj.PQL	Adj.MDL	
100-52-7	Benzaldehyde	U	580	1.0	500	580	140	
108-95-2	Phenol	U	580	1.0	500	580	180	
111-44-4	Bis(2-Chloroethyl)ether	U	380	1.0	330	380	94	
95-57-8	2-Chlorophenol	U	580	1.0	500	580	190	
95-48-7	2-Methylphenol	U	690	1.0	600	690	230	
108-60-1	2,2'-Oxybis(1-chloropropane)	U	380	1.0	330	380	100	
98-86-2	Acetophenone	U	690	1.0	600	690	200	
621-64-7	N-Nitroso-di-n-propylamine	U	380	1.0	330	380	96	
65794-96-9	3&4-Methylphenol	U	690	1.0	600	690	220	
67-72-1	Hexachloroethane	U	380	1.0	330	380	110	
98-95-3	Nitrobenzene	U	380	1.0	330	380	100	
78-59-1	Isophorone	U	380	1.0	330	380	87	
88-75-5	2-Nitrophenol	U	690	1.0	600	690	190	
105-67-9	2,4-Dimethylphenol	U	580	1.0	500	580	190	
111-91-1	Bis(2-Chloroethoxy)methane	U	380	1.0	330	380	110	
120-83-2	2,4-Dichlorophenol	U	580	1.0	500	580	170	
106-47-8	4-Chloroaniline	U	580	1.0	500	580	140	
105-60-2	Caprolactam	U	580	1.0	500	580	170	
59-50-7	4-Chloro-3-Methylphenol	U	580	1.0	500	580	190	
88-06-2	2,4,6-Trichlorophenol	U	580	1.0	500	580	180	
95-95-4	2,4,5-Trichlorophenol	U	580	1.0	500	580	180	
91-58-7	2-Chloronaphthalene	U	380	1.0	330	380	100	
92-52-4	1,1'-Biphenyl	U	380	1.0	330	380	84	
88-74-4	2-Nitroaniline	U	580	1.0	500	580	87	
131-11-3	Dimethyl Phthalate	U	380	1.0	330	380	90	
606-20-2	2,6-Dinitrotoluene	U	380	1.0	330	380	91	
208-96-8	Acenaphthylene	U	380	1.0	330	380	81	
99-09-2	3-Nitroaniline	U	580	1.0	500	580	110	
83-32-9	Acenaphthene	U	380	1.0	330	380	75	
51-28-5	2,4-Dinitrophenol	~~U~~ UJ	1400	1.0	1200	1400	440	CCH
132-64-9	Dibenzofuran	U	380	1.0	330	380	91	
100-02-7	4-Nitrophenol	~~U~~ UJ	1400	1.0	1200	1400	360	CCH
121-14-2	2,4-Dinitrotoluene	U	380	1.0	330	380	98	
84-66-2	Diethylphthalate	U	380	1.0	330	380	92	
7005-72-3	4-Chlorophenyl-phenylether	U	380	1.0	330	380	90	
100-01-6	4-Nitroaniline	U	580	1.0	500	580	160	
534-52-1	4,6-Dinitro-2-Methylphenol	U	1400	1.0	1200	1400	390	
86-30-6	N-Nitrosodiphenylamine	U	760	1.0	660	760	250	
101-55-3	4-Bromophenyl-phenylether	U	380	1.0	330	380	98	
1912-24-9	Atrazine	U	380	1.0	330	380	100	
87-86-5	Pentachlorophenol	U	950	1.0	820	950	270	
120-12-7	Anthracene	U	380	1.0	330	380	97	
86-74-8	Carbazole	U	580	1.0	500	580	130	

MW 4/16/09

KATAHDIN ANALYTICAL SERVICES
Report of Analytical Results

17

Client: CH2MHill
Project: TO-009 Lejeune
PO No:
Sample Date: 01/14/09
Received Date: 01/15/09
Extraction Date: 01/21/09
Analysis Date: 28-JAN-2009 03:37
Report Date: 02/07/2009
Matrix: SOIL
% Solids: 86.4

Lab ID: SC0210-33
Client ID: MR08-SS286-09A
SDG: TO9-37
Extracted by: AC
Extraction Method: SW846 3550
Analyst: JCG
Analysis Method: SW846 8270C
Lab Prep Batch: WG60036
Units: ug/Kgdrywt

CAS#	Compound	Flags	Results	DF	PQL	Adj.PQL	Adj.MDL
84-74-2	Di-n-butylphthalate	U	380	1.0	330	380	120
85-68-7	Butylbenzylphthalate	U	380	1.0	330	380	110
91-94-1	3,3'-Dichlorobenzidine	U	580	1.0	500	580	130
218-01-9	Chrysene	U	380	1.0	330	380	110
117-81-7	bis(2-Ethylhexyl)phthalate	U	380	1.0	330	380	110
117-84-0	Di-n-octylphthalate	U	380	1.0	330	380	240
367-12-4	2-Fluorophenol		73%				
13127-88-3	Phenol-D6		67%				
4165-60-0	Nitrobenzene-D5		63%				
321-60-8	2-Fluorobiphenyl		68%				
118-79-6	2,4,6-Tribromophenol		72%				
1718-51-0	Terphenyl-D14		91%				

MW 4/16/09

KATAHDIN ANALYTICAL SERVICES
Report of Analytical Results

Client: CH2MHill
Project: TO-009 Lejeune
PO No:
Sample Date: 01/14/09
Received Date: 01/15/09
Extraction Date: 01/21/09
Analysis Date: 28-JAN-2009 13:47
Report Date: 02/07/2009
Matrix: SOIL
% Solids: 90.8

Lab ID: SC0210-35
Client ID: MR08-IS286-6-7-09A
SDG: TO9-37
Extracted by: AC
Extraction Method: SW846 3550
Analyst: JLP
Analysis Method: SW846 8270C
Lab Prep Batch: WG60036
Units: ug/Kgdrywt

CAS#	Compound	Flags	Results	DF	PQL	Adj.PQL	Adj.MDL	
100-52-7	Benzaldehyde	U	550	1.0	500	550	130	
108-95-2	Phenol	U	550	1.0	500	550	170	
111-44-4	Bis(2-Chloroethyl)ether	U	360	1.0	330	360	89	
95-57-8	2-Chlorophenol	U	550	1.0	500	550	180	
95-48-7	2-Methylphenol	U	660	1.0	600	660	220	
108-60-1	2,2'-Oxybis(1-chloropropane)	U	360	1.0	330	360	98	
98-86-2	Acetophenone	U	660	1.0	600	660	200	
621-64-7	N-Nitroso-di-n-propylamine	U	360	1.0	330	360	91	
65794-96-9	3&4-Methylphenol	U	660	1.0	600	660	200	
67-72-1	Hexachloroethane	U	360	1.0	330	360	100	
98-95-3	Nitrobenzene	U	360	1.0	330	360	100	
78-59-1	Isophorone	U	360	1.0	330	360	83	
88-75-5	2-Nitrophenol	U	660	1.0	600	660	180	
105-67-9	2,4-Dimethylphenol	U	550	1.0	500	550	180	
111-91-1	Bis(2-Chloroethoxy)methane	U	360	1.0	330	360	100	
120-83-2	2,4-Dichlorophenol	U	550	1.0	500	550	160	
106-47-8	4-Chloroaniline	U	550	1.0	500	550	130	
105-60-2	Caprolactam	U	550	1.0	500	550	160	
59-50-7	4-Chloro-3-Methylphenol	U	550	1.0	500	550	180	
88-06-2	2,4,6-Trichlorophenol	U	550	1.0	500	550	170	
95-95-4	2,4,5-Trichlorophenol	U	550	1.0	500	550	170	
91-58-7	2-Chloronaphthalene	U	360	1.0	330	360	96	
92-52-4	1,1'-Biphenyl	U	360	1.0	330	360	80	
88-74-4	2-Nitroaniline	U	550	1.0	500	550	83	
131-11-3	Dimethyl Phthalate	U	360	1.0	330	360	86	
606-20-2	2,6-Dinitrotoluene	U	360	1.0	330	360	87	
208-96-8	Acenaphthylene	U	360	1.0	330	360	77	
99-09-2	3-Nitroaniline	U	550	1.0	500	550	100	
83-32-9	Acenaphthene	U	360	1.0	330	360	72	
51-28-5	2,4-Dinitrophenol	~~U~~ UJ	1300	1.0	1200	1300	420	CCH
132-64-9	Dibenzofuran	U	360	1.0	330	360	87	
100-02-7	4-Nitrophenol	U	1300	1.0	1200	1300	340	
121-14-2	2,4-Dinitrotoluene	U	360	1.0	330	360	94	
84-66-2	Diethylphthalate	U	360	1.0	330	360	88	
7005-72-3	4-Chlorophenyl-phenylether	U	360	1.0	330	360	86	
100-01-6	4-Nitroaniline	U	550	1.0	500	550	150	
534-52-1	4,6-Dinitro-2-Methylphenol	U	1300	1.0	1200	1300	370	
86-30-6	N-Nitrosodiphenylamine	U	730	1.0	660	730	240	
101-55-3	4-Bromophenyl-phenylether	U	360	1.0	330	360	94	
1912-24-9	Atrazine	U	360	1.0	330	360	100	
87-86-5	Pentachlorophenol	U	900	1.0	820	900	260	
120-12-7	Anthracene	U	360	1.0	330	360	92	
86-74-8	Carbazole	U	550	1.0	500	550	120	

MW 4/16/09

KATAHDIN ANALYTICAL SERVICES
Report of Analytical Results

Client: CH2MHill
Project: TO-009 Lejeune
PO No:
Sample Date: 01/14/09
Received Date: 01/15/09
Extraction Date: 01/21/09
Analysis Date: 28-JAN-2009 13:47
Report Date: 02/07/2009
Matrix: SOIL
% Solids: 90.8

Lab ID: SC0210-35
Client ID: MR08-IS286-6-7-09A
SDG: TO9-37
Extracted by: AC
Extraction Method: SW846 3550
Analyst: JLP
Analysis Method: SW846 8270C
Lab Prep Batch: WG60036
Units: ug/Kgdrywt

CAS#	Compound	Flags	Results	DF	PQL	Adj.PQL	Adj.MDL
84-74-2	Di-n-butylphthalate	U	360	1.0	330	360	110
85-68-7	Butylbenzylphthalate	U	360	1.0	330	360	100
91-94-1	3,3'-Dichlorobenzidine	U	550	1.0	500	550	120
218-01-9	Chrysene	U	360	1.0	330	360	100
117-81-7	bis(2-Ethylhexyl)phthalate	U	360	1.0	330	360	110
117-84-0	Di-n-octylphthalate	U	360	1.0	330	360	230
367-12-4	2-Fluorophenol		83%				
13127-88-3	Phenol-D6		78%				
4165-60-0	Nitrobenzene-D5		67%				
321-60-8	2-Fluorobiphenyl		74%				
118-79-6	2,4,6-Tribromophenol		64%				
1718-51-0	Terphenyl-D14		84%				

lw
4/16/09

19

KATAHDIN ANALYTICAL SERVICES
Report of Analytical Results

Client: CH2MHill
Project: TO-009 Lejeune
PO No:
Sample Date: 01/14/09
Received Date: 01/15/09
Extraction Date: 01/21/09
Analysis Date: 28-JAN-2009 17:21
Report Date: 02/07/2009
Matrix: SOIL
% Solids: 82.8

Lab ID: SC0210-37
Client ID: MR08-SS287-09A
SDG: TO9-37
Extracted by: AC
Extraction Method: SW846 3550
Analyst: JLP
Analysis Method: SW846 8270C
Lab Prep Batch: WG60036
Units: ug/Kgdrywt

CAS#	Compound	Flags	Results	DF	PQL	Adj.PQL	Adj.MDL	
100-52-7	Benzaldehyde	U	600	1.0	500	600	140	
108-95-2	Phenol	U	600	1.0	500	600	190	
111-44-4	Bis(2-Chloroethyl)ether	U	400	1.0	330	400	98	
95-57-8	2-Chlorophenol	U	600	1.0	500	600	200	
95-48-7	2-Methylphenol	U	720	1.0	600	720	240	
108-60-1	2,2'-Oxybis(1-chloropropane)	U	400	1.0	330	400	110	
98-86-2	Acetophenone	U	720	1.0	600	720	220	
621-64-7	N-Nitroso-di-n-propylamine	U	400	1.0	330	400	100	
65794-96-9	3&4-Methylphenol	U	720	1.0	600	720	220	
67-72-1	Hexachloroethane	U	400	1.0	330	400	120	
98-95-3	Nitrobenzene	U	400	1.0	330	400	110	
78-59-1	Isophorone	U	400	1.0	330	400	91	
88-75-5	2-Nitrophenol	U	720	1.0	600	720	200	
105-67-9	2,4-Dimethylphenol	U	600	1.0	500	600	200	
111-91-1	Bis(2-Chloroethoxy)methane	U	400	1.0	330	400	120	
120-83-2	2,4-Dichlorophenol	U	600	1.0	500	600	180	
106-47-8	4-Chloroaniline	U	600	1.0	500	600	140	
105-60-2	Caprolactam	U	600	1.0	500	600	170	
59-50-7	4-Chloro-3-Methylphenol	U	600	1.0	500	600	200	
88-06-2	2,4,6-Trichlorophenol	U	600	1.0	500	600	190	
95-95-4	2,4,5-Trichlorophenol	U	600	1.0	500	600	190	
91-58-7	2-Chloronaphthalene	U	400	1.0	330	400	100	
92-52-4	1,1'-Biphenyl	U	400	1.0	330	400	88	
88-74-4	2-Nitroaniline	U	600	1.0	500	600	91	
131-11-3	Dimethyl Phthalate	U	400	1.0	330	400	94	
606-20-2	2,6-Dinitrotoluene	U	400	1.0	330	400	95	
208-96-8	Acenaphthylene	U	400	1.0	330	400	84	
99-09-2	3-Nitroaniline	U	600	1.0	500	600	110	
83-32-9	Acenaphthene	U	400	1.0	330	400	78	
51-28-5	2,4-Dinitrophenol	~~U~~ UJ	1400	1.0	1200	1400	460	CCU
132-64-9	Dibenzofuran	U	400	1.0	330	400	95	
100-02-7	4-Nitrophenol	U	1400	1.0	1200	1400	370	
121-14-2	2,4-Dinitrotoluene	U	400	1.0	330	400	100	
84-66-2	Diethylphthalate	U	400	1.0	330	400	97	
7005-72-3	4-Chlorophenyl-phenylether	U	400	1.0	330	400	94	
100-01-6	4-Nitroaniline	U	600	1.0	500	600	160	
534-52-1	4,6-Dinitro-2-Methylphenol	U	1400	1.0	1200	1400	410	
86-30-6	N-Nitrosodiphenylamine	U	800	1.0	660	800	260	
101-55-3	4-Bromophenyl-phenylether	U	400	1.0	330	400	100	
1912-24-9	Atrazine	U	400	1.0	330	400	110	
87-86-5	Pentachlorophenol	U	990	1.0	820	990	290	
120-12-7	Anthracene	U	400	1.0	330	400	100	
86-74-8	Carbazole	U	600	1.0	500	600	130	

LW 4/16/09

KATAHDIN ANALYTICAL SERVICES
Report of Analytical Results

Client: CH2MHill
Project: TO-009 Lejeune
PO No:
Sample Date: 01/14/09
Received Date: 01/15/09
Extraction Date: 01/21/09
Analysis Date: 28-JAN-2009 17:21
Report Date: 02/07/2009
Matrix: SOIL
% Solids: 82.8

Lab ID: SC0210-37
Client ID: MR08-SS287-09A
SDG: TO9-37
Extracted by: AC
Extraction Method: SW846 3550
Analyst: JLP
Analysis Method: SW846 8270C
Lab Prep Batch: WG60036
Units: ug/Kgdrywt

CAS#	Compound	Flags	Results	DF	PQL	Adj.PQL	Adj.MDL
84-74-2	Di-n-butylphthalate	U	400	1.0	330	400	120
85-68-7	Butylbenzylphthalate	U	400	1.0	330	400	110
91-94-1	3,3'-Dichlorobenzidine	U	600	1.0	500	600	140
218-01-9	Chrysene	U	400	1.0	330	400	110
117-81-7	bis(2-Ethylhexyl)phthalate	U	400	1.0	330	400	120
117-84-0	Di-n-octylphthalate	U	400	1.0	330	400	250
367-12-4	2-Fluorophenol		71%				
13127-88-3	Phenol-D6		70%				
4165-60-0	Nitrobenzene-D5		60%				
321-60-8	2-Fluorobiphenyl		67%				
118-79-6	2,4,6-Tribromophenol		78%				
1718-51-0	Terphenyl-D14		74%				

lew 4/16/09

KATAHDIN ANALYTICAL SERVICES
Report of Analytical Results

Client: CH2MHill
Project: TO-009 Lejeune
PO No:
Sample Date: 01/14/09
Received Date: 01/15/09
Extraction Date: 01/21/09
Analysis Date: 28-JAN-2009 14:30
Report Date: 02/07/2009
Matrix: SOIL
% Solids: 86.9

Lab ID: SC0210-39
Client ID: MR08-IS287-5-6-09A
SDG: TO9-37
Extracted by: AC
Extraction Method: SW846 3550
Analyst: JLP
Analysis Method: SW846 8270C
Lab Prep Batch: WG60036
Units: ug/Kgdrywt

CAS#	Compound	Flags	Results	DF	PQL	Adj.PQL	Adj.MDL	
100-52-7	Benzaldehyde	U	580	1.0	500	580	140	
108-95-2	Phenol	U	580	1.0	500	580	180	
111-44-4	Bis(2-Chloroethyl)ether	U	380	1.0	330	380	93	
95-57-8	2-Chlorophenol	U	580	1.0	500	580	190	
95-48-7	2-Methylphenol	U	690	1.0	600	690	230	
108-60-1	2,2'-Oxybis(1-chloropropane)	U	380	1.0	330	380	100	
98-86-2	Acetophenone	U	690	1.0	600	690	200	
621-64-7	N-Nitroso-di-n-propylamine	U	380	1.0	330	380	95	
65794-96-9	3&4-Methylphenol	U	690	1.0	600	690	220	
67-72-1	Hexachloroethane	U	380	1.0	330	380	110	
98-95-3	Nitrobenzene	U	380	1.0	330	380	100	
78-59-1	Isophorone	U	380	1.0	330	380	86	
88-75-5	2-Nitrophenol	U	690	1.0	600	690	190	
105-67-9	2,4-Dimethylphenol	U	580	1.0	500	580	190	
111-91-1	Bis(2-Chloroethoxy)methane	U	380	1.0	330	380	110	
120-83-2	2,4-Dichlorophenol	U	580	1.0	500	580	170	
106-47-8	4-Chloroaniline	U	580	1.0	500	580	140	
105-60-2	Caprolactam	U	580	1.0	500	580	160	
59-50-7	4-Chloro-3-Methylphenol	U	580	1.0	500	580	190	
88-06-2	2,4,6-Trichlorophenol	U	580	1.0	500	580	180	
95-95-4	2,4,5-Trichlorophenol	U	580	1.0	500	580	180	
91-58-7	2-Chloronaphthalene	U	380	1.0	330	380	100	
92-52-4	1,1'-Biphenyl	U	380	1.0	330	380	84	
88-74-4	2-Nitroaniline	U	580	1.0	500	580	86	
131-11-3	Dimethyl Phthalate	U	380	1.0	330	380	90	
606-20-2	2,6-Dinitrotoluene	U	380	1.0	330	380	91	
208-96-8	Acenaphthylene	U	380	1.0	330	380	80	
99-09-2	3-Nitroaniline	U	580	1.0	500	580	110	
83-32-9	Acenaphthene	U	380	1.0	330	380	75	
51-28-5	2,4-Dinitrophenol	~~U~~ UJ	1400	1.0	1200	1400	430	C CH
132-64-9	Dibenzofuran	U	380	1.0	330	380	91	
100-02-7	4-Nitrophenol	U	1400	1.0	1200	1400	360	
121-14-2	2,4-Dinitrotoluene	U	380	1.0	330	380	98	
84-66-2	Diethylphthalate	U	380	1.0	330	380	92	
7005-72-3	4-Chlorophenyl-phenylether	U	380	1.0	330	380	90	
100-01-6	4-Nitroaniline	U	580	1.0	500	580	150	
534-52-1	4,6-Dinitro-2-Methylphenol	U	1400	1.0	1200	1400	390	
86-30-6	N-Nitrosodiphenylamine	U	760	1.0	660	760	250	
101-55-3	4-Bromophenyl-phenylether	U	380	1.0	330	380	98	
1912-24-9	Atrazine	U	380	1.0	330	380	100	
87-86-5	Pentachlorophenol	U	940	1.0	820	940	270	
120-12-7	Anthracene	U	380	1.0	330	380	97	
86-74-8	Carbazole	U	580	1.0	500	580	130	

lw 4/16/09

KATAHDIN ANALYTICAL SERVICES
Report of Analytical Results

Client: CH2MHill
Project: TO-009 Lejeune
PO No:
Sample Date: 01/14/09
Received Date: 01/15/09
Extraction Date: 01/21/09
Analysis Date: 28-JAN-2009 14:30
Report Date: 02/07/2009
Matrix: SOIL
% Solids: 86.9

Lab ID: SC0210-39
Client ID: MR08-IS287-5-6-09A
SDG: TO9-37
Extracted by: AC
Extraction Method: SW846 3550
Analyst: JLP
Analysis Method: SW846 8270C
Lab Prep Batch: WG60036
Units: ug/Kgdrywt

CAS#	Compound	Flags	Results	DF	PQL	Adj.PQL	Adj.MDL
84-74-2	Di-n-butylphthalate	U	380	1.0	330	380	120
85-68-7	Butylbenzylphthalate	U	380	1.0	330	380	110
91-94-1	3,3'-Dichlorobenzidine	U	580	1.0	500	580	130
218-01-9	Chrysene	U	380	1.0	330	380	110
117-81-7	bis(2-Ethylhexyl)phthalate	U	380	1.0	330	380	110
117-84-0	Di-n-octylphthalate	U	380	1.0	330	380	240
367-12-4	2-Fluorophenol		76%				
13127-88-3	Phenol-D6		73%				
4165-60-0	Nitrobenzene-D5		66%				
321-60-8	2-Fluorobiphenyl		69%				
118-79-6	2,4,6-Tribromophenol		69%				
1718-51-0	Terphenyl-D14		82%				

lw 4/16/09

ENVIRONMENTAL
Data Services, Inc.

POLYNUCLEAR AROMATIC COMPOUNDS BY 8270SIM

USEPA Region IV - Level IV Review

Site: MCB Camp Lejeune, TO-09 SDG #: TO9-38

Client: CH2M HILL, Inc., Virginia Beach, Virginia Date: April 17, 2009

Laboratory: Katahdin Analytical Services, Scarborough, Maine Reviewer: Nancy Weaver

EDS ID	Client Sample ID	Laboratory Sample ID	Matrix
1	MR08-SS288-09A	SC0211-2	Soil
1MS	MR08-SS288-09AMS	SC0211-2MS	Soil
1MSD	MR08-SS288-09AMSD	SC0211-2MSD	Soil
2	MR08-IS288-6-7-09A	SC0211-4	Soil
2MS	MR08-IS288-6-7-09AMS	SC0211-4MS	Soil
2MSD	MR08-IS288-6-7-09AMSD	SC0211-4MSD	Soil
3	MR08-SS264-09A	SC0211-6	Soil
4	MR08-IS264-10-1109A	SC0211-8	Soil
5	MR08-SS263-09A	SC0211-10	Soil
6	MR08-IS263-2-3-09A	SC0211-12	Soil
7	MR08-SS262-09A	SC0211-14	Soil
8	MR08-IS262-4-5-09A	SC0211-16	Soil
9	MR08-SS261-09A	SC0211-18	Soil
10	MR08-IS261-4-5-09A	SC0211-20	Soil
11	MR08-SS260-09A	SC0211-22	Soil
12	MR08-IS260-6-7-09A	SC0211-24	Soil

The USEPA "Contract Laboratory Program National Functional Guidelines for Organic Data Review," October 1999, and professional judgement were used in evaluating the data in this summary report.

Holding Times - All samples were extracted within 14 days for soil samples and analyzed within 40 days for all samples.

GC/MS Tuning - All of the DFTPP tunes in the initial and continuing calibrations met the percent relative abundance criteria.

Initial Calibration - The initial calibrations exhibited acceptable %RSD and mean RRF values except the following.

Continuing Calibration - The continuing calibrations exhibited acceptable %D and RRF values except the following.

CCAL Date	Compound	%D/RRF	Qualifier	Affected Samples
01/27/09	Naphthalene	29.88%	J/UJ	3, 6
	Hexachlorobutadiene	45.05%	J/UJ	
	Hexachlorocyclopentadiene	48.23%	J/UJ	
02/01/09	2-Methylnaphthalene	62.31%	J/UJ	1, 2, 4, 5, 7-12
	Fluoranthene	26.48%	J/UJ	
	Hexachlorobutadiene	48.25%	J/UJ	
	Hexachlorocyclopentadiene	152.42%	J/UJ	

Surrogates - All samples exhibited acceptable surrogate recoveries.

MS/MSD - The MS/MSD sample exhibited acceptable %R and RPD values, except the following.

MS/MSD Sample ID	Compound	MS/MSD %R/RPD	Qualifier
1	2-Methylnaphthalene	154%/160%/Ok	None - ND
	Fluoranthene	Ok/190%/60	None - See CCAL
	Pyrene	Ok/162%/55	J
	Benzo (a) anthracene	Ok/151%/52	J
	Benzo (b) fluoranthene	Ok/166%/Ok	J
2	2-Methylnaphthalene	158%/187%/Ok	None - ND
	Hexachlorocyclopentadiene	Ok/158%/Ok	None - ND

Laboratory Control Sample - The LCS samples exhibited acceptable %R values except the following.

LCS ID	Compound	%R	Qualifier	Affected Samples
WG60037-LCS	2-Methylnaphthalene	166%	None	All ND
	Hexachlorocyclopentadiene	160%	None	All ND

Internal Standard (IS) Area Performance - All internal standards met response and retention time (RT) criteria.

Method Blank - The method blanks were free of contamination.

Field, Equipment Blank - Field QC results are summarized below.

Blank ID	Compound	Conc. ug/L	Action Level ug/kg	Qualifier	Affected Samples
MR08-EB01011409-SS	None - ND	-	-	-	-
MR08-FB122008	None - ND	-	-	-	-

Field Duplicates - Field duplicate samples were not analyzed.

Compound Quantitation - No discrepancies were identified.

KATAHDIN ANALYTICAL SERVICES
Report of Analytical Results

Client: CH2MHill
Project: TO-009 Lejeune
PO No:
Sample Date: 01/14/09
Received Date: 01/15/09
Extraction Date: 01/24/09
Analysis Date: 01-FEB-2009 22:15
Report Date: 02/07/2009
Matrix: SOIL
% Solids: 88.8

Lab ID: SC0211-2
Client ID: MR08-SS288-09A
SDG: TO9-38
Extracted by: AC
Extraction Method: SW846 3550
Analyst: JLP
Analysis Method: SW846 M8270C
Lab Prep Batch: WG60147
Units: ug/Kgdrywt

CAS#	Compound	Flags		Results	DF	PQL	Adj.PQL	Adj.MDL	
91-20-3	Naphthalene	U		11	1.0	10	11	2.9	
91-57-6	2-Methylnaphthalene	~~U~~	UJ	11	1.0	10	11	2.5	CCH
86-73-7	Fluorene	U		11	1.0	10	11	3.6	
85-01-8	Phenanthrene	J		3.8	1.0	10	11	2.0	
206-44-0	Fluoranthene		J	57	1.0	10	11	2.0	CCH
129-00-0	Pyrene		J	44	1.0	10	11	2.4	MSH
56-55-3	Benzo(a)anthracene		J	30	1.0	10	11	2.1	↓
205-99-2	Benzo(b)fluoranthene		J	37	1.0	10	11	2.7	↓
207-08-9	Benzo(k)fluoranthene			21	1.0	10	11	3.5	
50-32-8	Benzo(a)pyrene			26	1.0	10	11	3.7	
193-39-5	Indeno(1,2,3-cd)pyrene			14	1.0	10	11	2.1	
53-70-3	Dibenzo(a,h)anthracene	J		4.7	1.0	10	11	2.0	
191-24-2	Benzo(g,h,i)perylene			13	1.0	10	11	2.2	
118-74-1	Hexachlorobenzene	U		11	1.0	10	11	2.0	
87-68-3	Hexachlorobutadiene	~~U~~	UJ	11	1.0	10	11	2.6	CCH
77-47-4	Hexachlorocyclopentadiene	~~U~~	UJ	11	1.0	10	11	1.7	CCH
7297-45-2	2-Methylnaphthalene-D10			103%					
367-12-4	2,4-Dibromophenol			93%					
81103-79-9	Fluorene-d10			90%					
1718-51-1	Pyrene-D10			102%					

lw
4/17/09

2

KATAHDIN ANALYTICAL SERVICES
Report of Analytical Results

Client: CH2MHill
Project: TO-009 Lejeune
PO No:
Sample Date: 01/14/09
Received Date: 01/15/09
Extraction Date: 01/21/09
Analysis Date: 01-FEB-2009 16:54
Report Date: 02/07/2009
Matrix: SOIL
% Solids: 90.8

Lab ID: SC0211-4
Client ID: 08-IS288-6-7-09A
SDG: TO9-38
Extracted by: AC
Extraction Method: SW846 3550
Analyst: JLP
Analysis Method: SW846 M8270C
Lab Prep Batch: WG60037
Units: ug/Kgdrywt

CAS#	Compound	Flags	Results	DF	PQL	Adj.PQL	Adj.MDL	
91-20-3	Naphthalene	U	11	1.0	10	11	2.9	
91-57-6	2-Methylnaphthalene	~~U~~ UJ	11	1.0	10	11	2.4	CCH
86-73-7	Fluorene	U	11	1.0	10	11	3.5	
85-01-8	Phenanthrene	U	11	1.0	10	11	2.0	
206-44-0	Fluoranthene	~~U~~ UJ	11	1.0	10	11	2.0	CCH
129-00-0	Pyrene	U	11	1.0	10	11	2.3	
56-55-3	Benzo(a)anthracene	U	11	1.0	10	11	2.1	
205-99-2	Benzo(b)fluoranthene	U	11	1.0	10	11	2.6	
207-08-9	Benzo(k)fluoranthene	U	11	1.0	10	11	3.4	
50-32-8	Benzo(a)pyrene	U	11	1.0	10	11	3.6	
193-39-5	Indeno(1,2,3-cd)pyrene	U	11	1.0	10	11	2.1	
53-70-3	Dibenzo(a,h)anthracene	U	11	1.0	10	11	2.0	
191-24-2	Benzo(g,h,i)perylene	U	11	1.0	10	11	2.2	
118-74-1	Hexachlorobenzene	U	11	1.0	10	11	2.0	
87-68-3	Hexachlorobutadiene	~~U~~ UJ	11	1.0	10	11	2.5	CCH
77-47-4	Hexachlorocyclopentadiene	~~U~~ UJ	11	1.0	10	11	1.6	CCH
7297-45-2	2-Methylnaphthalene-D10		92%					
367-12-4	2,4-Dibromophenol		66%					
81103-79-9	Fluorene-d10		75%					
1718-51-1	Pyrene-D10		86%					

RW
4/17/09

3

KATAHDIN ANALYTICAL SERVICES
Report of Analytical Results

Client: CH2MHill
Project: TO-009 Lejeune
PO No:
Sample Date: 01/14/09
Received Date: 01/15/09
Extraction Date: 01/21/09
Analysis Date: 28-JAN-2009 03:43
Report Date: 02/07/2009
Matrix: SOIL
% Solids: 93.6

Lab ID: SC0211-6
Client ID: MR08-SS264-09A
SDG: TO9-38
Extracted by: AC
Extraction Method: SW846 3550
Analyst: JCG
Analysis Method: SW846 M8270C
Lab Prep Batch: WG60037
Units: ug/Kgdrywt

CAS#	Compound	Flags	Results	DF	PQL	Adj.PQL	Adj.MDL	
91-20-3	Naphthalene	~~U~~ UJ	11	1.0	10	11	2.8	CCH
91-57-6	2-Methylnaphthalene	U	11	1.0	10	11	2.4	
86-73-7	Fluorene	U	11	1.0	10	11	3.4	
85-01-8	Phenanthrene	J	5.7	1.0	10	11	1.9	
206-44-0	Fluoranthene		17	1.0	10	11	1.9	
129-00-0	Pyrene		17	1.0	10	11	2.2	
56-55-3	Benzo(a)anthracene	J	10	1.0	10	11	2.0	
205-99-2	Benzo(b)fluoranthene		16	1.0	10	11	2.6	
207-08-9	Benzo(k)fluoranthene		15	1.0	10	11	3.3	
50-32-8	Benzo(a)pyrene		14	1.0	10	11	3.5	
193-39-5	Indeno(1,2,3-cd)pyrene	J	7.9	1.0	10	11	2.0	
53-70-3	Dibenzo(a,h)anthracene	U	11	1.0	10	11	1.9	
191-24-2	Benzo(g,h,i)perylene	J	7.7	1.0	10	11	2.1	
118-74-1	Hexachlorobenzene	U	11	1.0	10	11	1.9	
87-68-3	Hexachlorobutadiene	~~U~~ UJ	11	1.0	10	11	2.4	CCH
77-47-4	Hexachlorocyclopentadiene	~~U~~ UJ	11	1.0	10	11	1.6	CCH
7297-45-2	2-Methylnaphthalene-D10		80%					
367-12-4	2,4-Dibromophenol		101%					
81103-79-9	Fluorene-d10		81%					
1718-51-1	Pyrene-D10		101%					

lw
4/17/09

KATAHDIN ANALYTICAL SERVICES
Report of Analytical Results

Client: CH2MHill
Project: TO-009 Lejeune
PO No:
Sample Date: 01/14/09
Received Date: 01/15/09
Extraction Date: 01/21/09
Analysis Date: 01-FEB-2009 17:34
Report Date: 02/07/2009
Matrix: SOIL
% Solids: 93.2

Lab ID: SC0211-8
Client ID: MR08-IS264-10-1109A
SDG: TO9-38
Extracted by: AC
Extraction Method: SW846 3550
Analyst: JLP
Analysis Method: SW846 M8270C
Lab Prep Batch: WG60037
Units: ug/Kgdrywt

CAS#	Compound	Flags		Results	DF	PQL	Adj.PQL	Adj.MDL	
91-20-3	Naphthalene	U		11	1.0	10	11	2.8	
91-57-6	2-Methylnaphthalene	~~U~~	UJ	11	1.0	10	11	2.4	CCH
86-73-7	Fluorene	U		11	1.0	10	11	3.4	
85-01-8	Phenanthrene	U		11	1.0	10	11	1.9	
206-44-0	Fluoranthene	~~U~~	UJ	11	1.0	10	11	1.9	CCH
129-00-0	Pyrene	U		11	1.0	10	11	2.2	
56-55-3	Benzo(a)anthracene	U		11	1.0	10	11	2.0	
205-99-2	Benzo(b)fluoranthene	U		11	1.0	10	11	2.6	
207-08-9	Benzo(k)fluoranthene	U		11	1.0	10	11	3.3	
50-32-8	Benzo(a)pyrene	U		11	1.0	10	11	3.5	
193-39-5	Indeno(1,2,3-cd)pyrene	U		11	1.0	10	11	2.0	
53-70-3	Dibenzo(a,h)anthracene	U		11	1.0	10	11	1.9	
191-24-2	Benzo(g,h,i)perylene	U		11	1.0	10	11	2.1	
118-74-1	Hexachlorobenzene	U		11	1.0	10	11	1.9	
87-68-3	Hexachlorobutadiene	~~U~~	UJ	11	1.0	10	11	2.5	CCH
77-47-4	Hexachlorocyclopentadiene	~~U~~	UJ	11	1.0	10	11	1.6	CCH
7297-45-2	2-Methylnaphthalene-D10			88%					
367-12-4	2,4-Dibromophenol			80%					
81103-79-9	Fluorene-d10			79%					
1718-51-1	Pyrene-D10			88%					

JW
4/17/09

5

KATAHDIN ANALYTICAL SERVICES
Report of Analytical Results

Client: CH2MHill
Project: TO-009 Lejeune
PO No:
Sample Date: 01/14/09
Received Date: 01/15/09
Extraction Date: 01/21/09
Analysis Date: 01-FEB-2009 20:15
Report Date: 02/07/2009
Matrix: SOIL
% Solids: 88.3

Lab ID: SC0211-10RA
Client ID: MR08-SS263-09A
SDG: TO9-38
Extracted by: AC
Extraction Method: SW846 3550
Analyst: JLP
Analysis Method: SW846 M8270C
Lab Prep Batch: WG60037
Units: ug/Kgdrywt

CAS#	Compound	Flags		Results	DF	PQL	Adj.PQL	Adj.MDL	
91-20-3	Naphthalene	U		11	1.0	10	11	2.9	
91-57-6	2-Methylnaphthalene	~~U~~	UJ	11	1.0	10	11	2.5	CCH
86-73-7	Fluorene	U		11	1.0	10	11	3.6	
85-01-8	Phenanthrene			20	1.0	10	11	2.0	
206-44-0	Fluoranthene		J	60	1.0	10	11	2.0	CCH
129-00-0	Pyrene			50	1.0	10	11	2.4	
56-55-3	Benzo(a)anthracene			28	1.0	10	11	2.2	
205-99-2	Benzo(b)fluoranthene			43	1.0	10	11	2.7	
207-08-9	Benzo(k)fluoranthene			24	1.0	10	11	3.5	
50-32-8	Benzo(a)pyrene			29	1.0	10	11	3.7	
193-39-5	Indeno(1,2,3-cd)pyrene			18	1.0	10	11	2.2	
53-70-3	Dibenzo(a,h)anthracene	J		6.0	1.0	10	11	2.0	
191-24-2	Benzo(g,h,i)perylene			19	1.0	10	11	2.3	
118-74-1	Hexachlorobenzene	U		11	1.0	10	11	2.0	
87-68-3	Hexachlorobutadiene	~~U~~	UJ	11	1.0	10	11	2.6	CCH
77-47-4	Hexachlorocyclopentadiene	~~U~~	UJ	11	1.0	10	11	1.7	CCH
7297-45-2	2-Methylnaphthalene-D10			95%					
367-12-4	2,4-Dibromophenol			87%					
81103-79-9	Fluorene-d10			82%					
1718-51-1	Pyrene-D10			99%					

LW
4/17/09

6

KATAHDIN ANALYTICAL SERVICES
Report of Analytical Results

Client: CH2MHill
Project: TO-009 Lejeune
PO No:
Sample Date: 01/14/09
Received Date: 01/15/09
Extraction Date: 01/21/09
Analysis Date: 28-JAN-2009 05:04
Report Date: 02/07/2009
Matrix: SOIL
% Solids: 86.3

Lab ID: SC0211-12
Client ID: MR08-IS263-2-3-09A
SDG: TO9-38
Extracted by: AC
Extraction Method: SW846 3550
Analyst: JCG
Analysis Method: SW846 M8270C
Lab Prep Batch: WG60037
Units: ug/Kgdrywt

CAS#	Compound	Flags		Results	DF	PQL	Adj.PQL	Adj.MDL	
91-20-3	Naphthalene	~~U~~	UJ	12	1.0	10	12	3.0	CCH
91-57-6	2-Methylnaphthalene	U		12	1.0	10	12	2.6	
86-73-7	Fluorene	U		12	1.0	10	12	3.7	
85-01-8	Phenanthrene			32	1.0	10	12	2.1	
206-44-0	Fluoranthene			62	1.0	10	12	2.1	
129-00-0	Pyrene			56	1.0	10	12	2.4	
56-55-3	Benzo(a)anthracene			35	1.0	10	12	2.2	
205-99-2	Benzo(b)fluoranthene			40	1.0	10	12	2.8	
207-08-9	Benzo(k)fluoranthene			31	1.0	10	12	3.6	
50-32-8	Benzo(a)pyrene			32	1.0	10	12	3.8	
193-39-5	Indeno(1,2,3-cd)pyrene			18	1.0	10	12	2.2	
53-70-3	Dibenzo(a,h)anthracene	J		6.7	1.0	10	12	2.1	
191-24-2	Benzo(g,h,i)perylene			15	1.0	10	12	2.3	
118-74-1	Hexachlorobenzene	U		12	1.0	10	12	2.1	
87-68-3	Hexachlorobutadiene	~~U~~	UJ	12	1.0	10	12	2.7	CCH
77-47-4	Hexachlorocyclopentadiene	~~U~~	UJ	12	1.0	10	12	1.7	CCH
7297-45-2	2-Methylnaphthalene-D10			86%					
367-12-4	2,4-Dibromophenol			95%					
81103-79-9	Fluorene-d10			85%					
1718-51-1	Pyrene-D10			104%					

fw
4/17/09

7

KATAHDIN ANALYTICAL SERVICES
Report of Analytical Results

Client: CH2MHill
Project: TO-009 Lejeune
PO No:
Sample Date: 01/14/09
Received Date: 01/15/09
Extraction Date: 01/21/09
Analysis Date: 01-FEB-2009 20:55
Report Date: 02/07/2009
Matrix: SOIL
% Solids: 90.6

Lab ID: SC0211-14
Client ID: MR08-SS262-09A
SDG: TO9-38
Extracted by: AC
Extraction Method: SW846 3550
Analyst: JLP
Analysis Method: SW846 M8270C
Lab Prep Batch: WG60037
Units: ug/Kgdrywt

CAS#	Compound	Flags	Results	DF	PQL	Adj.PQL	Adj.MDL	
91-20-3	Naphthalene	U	11	1.0	10	11	2.9	
91-57-6	2-Methylnaphthalene	~~U~~ UJ	11	1.0	10	11	2.4	CCH
86-73-7	Fluorene	U	11	1.0	10	11	3.5	
85-01-8	Phenanthrene	J	5.1	1.0	10	11	2.0	
206-44-0	Fluoranthene	J	16	1.0	10	11	2.0	CCH
129-00-0	Pyrene		11	1.0	10	11	2.3	
56-55-3	Benzo(a)anthracene	J	6.9	1.0	10	11	2.1	
205-99-2	Benzo(b)fluoranthene	J	8.3	1.0	10	11	2.6	
207-08-9	Benzo(k)fluoranthene	J	6.3	1.0	10	11	3.4	
50-32-8	Benzo(a)pyrene	J	6.4	1.0	10	11	3.6	
193-39-5	Indeno(1,2,3-cd)pyrene	J	4.3	1.0	10	11	2.1	
53-70-3	Dibenzo(a,h)anthracene	U	11	1.0	10	11	2.0	
191-24-2	Benzo(g,h,i)perylene	J	4.5	1.0	10	11	2.2	
118-74-1	Hexachlorobenzene	U	11	1.0	10	11	2.0	
87-68-3	Hexachlorobutadiene	~~U~~ UJ	11	1.0	10	11	2.5	CCH
77-47-4	Hexachlorocyclopentadiene	~~U~~ UJ	11	1.0	10	11	1.6	CCH
7297-45-2	2-Methylnaphthalene-D10		83%					
367-12-4	2,4-Dibromophenol		78%					
81103-79-9	Fluorene-d10		72%					
1718-51-1	Pyrene-D10		81%					

RW
4/17/09

8

KATAHDIN ANALYTICAL SERVICES
Report of Analytical Results

Client: CH2MHill
Project: TO-009 Lejeune
PO No:
Sample Date: 01/14/09
Received Date: 01/15/09
Extraction Date: 01/21/09
Analysis Date: 01-FEB-2009 18:14
Report Date: 02/07/2009
Matrix: SOIL
% Solids: 90.4

Lab ID: SC0211-16
Client ID: MR08-IS262-4-5-09A
SDG: TO9-38
Extracted by: AC
Extraction Method: SW846 3550
Analyst: JLP
Analysis Method: SW846 M8270C
Lab Prep Batch: WG60037
Units: ug/Kgdrywt

CAS#	Compound	Flags	Results	DF	PQL	Adj.PQL	Adj.MDL	
91-20-3	Naphthalene	U	11	1.0	10	11	2.9	
91-57-6	2-Methylnaphthalene	~~U~~ UJ	11	1.0	10	11	2.4	CCH
86-73-7	Fluorene	U	11	1.0	10	11	3.5	
85-01-8	Phenanthrene	U	11	1.0	10	11	2.0	
206-44-0	Fluoranthene	~~U~~ UJ	11	1.0	10	11	2.0	CCH
129-00-0	Pyrene	U	11	1.0	10	11	2.3	
56-55-3	Benzo(a)anthracene	U	11	1.0	10	11	2.1	
205-99-2	Benzo(b)fluoranthene	U	11	1.0	10	11	2.6	
207-08-9	Benzo(k)fluoranthene	U	11	1.0	10	11	3.4	
50-32-8	Benzo(a)pyrene	U	11	1.0	10	11	3.6	
193-39-5	Indeno(1,2,3-cd)pyrene	U	11	1.0	10	11	2.1	
53-70-3	Dibenzo(a,h)anthracene	U	11	1.0	10	11	2.0	
191-24-2	Benzo(g,h,i)perylene	U	11	1.0	10	11	2.2	
118-74-1	Hexachlorobenzene	U	11	1.0	10	11	2.0	
87-68-3	Hexachlorobutadiene	~~U~~ UJ	11	1.0	10	11	2.5	CCH
77-47-4	Hexachlorocyclopentadiene	~~U~~ UJ	11	1.0	10	11	1.6	CCH
7297-45-2	2-Methylnaphthalene-D10		81%					
367-12-4	2,4-Dibromophenol		83%					
81103-79-9	Fluorene-d10		79%					
1718-51-1	Pyrene-D10		75%					

RW
4/17/09

9

KATAHDIN ANALYTICAL SERVICES
Report of Analytical Results

Client: CH2MHill
Project: TO-009 Lejeune
PO No:
Sample Date: 01/14/09
Received Date: 01/15/09
Extraction Date: 01/21/09
Analysis Date: 01-FEB-2009 21:35
Report Date: 02/07/2009
Matrix: SOIL
% Solids: 89.0

Lab ID: SC0211-18
Client ID: MR08-SS261-09A
SDG: TO9-38
Extracted by: AC
Extraction Method: SW846 3550
Analyst: JLP
Analysis Method: SW846 M8270C
Lab Prep Batch: WG60037
Units: ug/Kgdrywt

CAS#	Compound	Flags		Results	DF	PQL	Adj.PQL	Adj.MDL	
91-20-3	Naphthalene	U		11	1.0	10	11	2.9	
91-57-6	2-Methylnaphthalene	~~U~~	UJ	11	1.0	10	11	2.5	CCH
86-73-7	Fluorene	U		11	1.0	10	11	3.6	
85-01-8	Phenanthrene	J		6.8	1.0	10	11	2.0	
206-44-0	Fluoranthene		J	24	1.0	10	11	2.0	CCH
129-00-0	Pyrene			18	1.0	10	11	2.4	
56-55-3	Benzo(a)anthracene			12	1.0	10	11	2.1	
205-99-2	Benzo(b)fluoranthene			21	1.0	10	11	2.7	
207-08-9	Benzo(k)fluoranthene	J		6.5	1.0	10	11	3.5	
50-32-8	Benzo(a)pyrene			11	1.0	10	11	3.7	
193-39-5	Indeno(1,2,3-cd)pyrene	J		7.5	1.0	10	11	2.1	
53-70-3	Dibenzo(a,h)anthracene	J		2.3	1.0	10	11	2.0	
191-24-2	Benzo(g,h,i)perylene	J		7.3	1.0	10	11	2.2	
118-74-1	Hexachlorobenzene	U		11	1.0	10	11	2.0	
87-68-3	Hexachlorobutadiene	~~U~~	UJ	11	1.0	10	11	2.6	CCH
77-47-4	Hexachlorocyclopentadiene	~~U~~	UJ	11	1.0	10	11	1.7	CCH
7297-45-2	2-Methylnaphthalene-D10			109%					
367-12-4	2,4-Dibromophenol			99%					
81103-79-9	Fluorene-d10			94%					
1718-51-1	Pyrene-D10			100%					

MW 4/17/09

10

KATAHDIN ANALYTICAL SERVICES
Report of Analytical Results

Client: CH2MHill
Project: TO-009 Lejeune
PO No:
Sample Date: 01/14/09
Received Date: 01/15/09
Extraction Date: 01/24/09
Analysis Date: 01-FEB-2009 18:55
Report Date: 02/07/2009
Matrix: SOIL
% Solids: 88.0

Lab ID: SC0211-20
Client ID: MR08-IS261-4-5-09A
SDG: TO9-38
Extracted by: AC
Extraction Method: SW846 3550
Analyst: JLP
Analysis Method: SW846 M8270C
Lab Prep Batch: WG60147
Units: ug/Kgdrywt

CAS#	Compound	Flags		Results	DF	PQL	Adj.PQL	Adj.MDL	
91-20-3	Naphthalene	U		11	1.0	10	11	3.0	
91-57-6	2-Methylnaphthalene	~~U~~	UJ	11	1.0	10	11	2.5	CCH
86-73-7	Fluorene	U		11	1.0	10	11	3.6	
85-01-8	Phenanthrene	U		11	1.0	10	11	2.0	
206-44-0	Fluoranthene	~~U~~	UJ	11	1.0	10	11	2.0	CCH
129-00-0	Pyrene	U		11	1.0	10	11	2.4	
56-55-3	Benzo(a)anthracene	U		11	1.0	10	11	2.2	
205-99-2	Benzo(b)fluoranthene	U		11	1.0	10	11	2.7	
207-08-9	Benzo(k)fluoranthene	U		11	1.0	10	11	3.5	
50-32-8	Benzo(a)pyrene	U		11	1.0	10	11	3.7	
193-39-5	Indeno(1,2,3-cd)pyrene	U		11	1.0	10	11	2.2	
53-70-3	Dibenzo(a,h)anthracene	U		11	1.0	10	11	2.0	
191-24-2	Benzo(g,h,i)perylene	U		11	1.0	10	11	2.3	
118-74-1	Hexachlorobenzene	U		11	1.0	10	11	2.0	
87-68-3	Hexachlorobutadiene	~~U~~	UJ	11	1.0	10	11	2.6	CCH
77-47-4	Hexachlorocyclopentadiene	~~U~~	UJ	11	1.0	10	11	1.7	CCH
7297-45-2	2-Methylnaphthalene-D10			101%					
367-12-4	2,4-Dibromophenol			99%					
81103-79-9	Fluorene-d10			95%					
1718-51-1	Pyrene-D10			95%					

lw
4/17/09

11

KATAHDIN ANALYTICAL SERVICES
Report of Analytical Results

Client: CH2MHill
Project: TO-009 Lejeune
PO No:
Sample Date: 01/14/09
Received Date: 01/15/09
Extraction Date: 01/24/09
Analysis Date: 02-FEB-2009 00:15
Report Date: 02/07/2009
Matrix: SOIL
% Solids: 92.8

Lab ID: SC0211-22
Client ID: MR08-SS260-09A
SDG: TO9-38
Extracted by: AC
Extraction Method: SW846 3550
Analyst: JLP
Analysis Method: SW846 M8270C
Lab Prep Batch: WG60147
Units: ug/Kgdrywt

CAS#	Compound	Flags	Results	DF	PQL	Adj.PQL	Adj.MDL	
91-20-3	Naphthalene	U	11	1.0	10	11	2.8	
91-57-6	2-Methylnaphthalene	~~U~~ UJ	11	1.0	10	11	2.4	CCH
86-73-7	Fluorene	U	11	1.0	10	11	3.4	
85-01-8	Phenanthrene	J	3.0	1.0	10	11	1.9	
206-44-0	Fluoranthene	~~U~~ UJ	11	1.0	10	11	1.9	CCH
129-00-0	Pyrene	J	5.2	1.0	10	11	2.3	
56-55-3	Benzo(a)anthracene	J	3.3	1.0	10	11	2.0	
205-99-2	Benzo(b)fluoranthene	U	11	1.0	10	11	2.6	
207-08-9	Benzo(k)fluoranthene	U	11	1.0	10	11	3.3	
50-32-8	Benzo(a)pyrene	U	11	1.0	10	11	3.6	
193-39-5	Indeno(1,2,3-cd)pyrene	U	11	1.0	10	11	2.0	
53-70-3	Dibenzo(a,h)anthracene	U	11	1.0	10	11	1.9	
191-24-2	Benzo(g,h,i)perylene	U	11	1.0	10	11	2.2	
118-74-1	Hexachlorobenzene	U	11	1.0	10	11	1.9	
87-68-3	Hexachlorobutadiene	~~U~~ UJ	11	1.0	10	11	2.5	CCH
77-47-4	Hexachlorocyclopentadiene	~~U~~ UJ	11	1.0	10	11	1.6	CCH
7297-45-2	2-Methylnaphthalene-D10		121%					
367-12-4	2,4-Dibromophenol		99%					
81103-79-9	Fluorene-d10		98%					
1718-51-1	Pyrene-D10		103%					

fw
4/17/09

12

KATAHDIN ANALYTICAL SERVICES
Report of Analytical Results

Client: CH2MHill
Project: TO-009 Lejeune
PO No:
Sample Date: 01/14/09
Received Date: 01/15/09
Extraction Date: 01/24/09
Analysis Date: 01-FEB-2009 19:35
Report Date: 02/07/2009
Matrix: SOIL
% Solids: 97.2

Lab ID: SC0211-24
Client ID: MR08-IS260-6-7-09A
SDG: TO9-38
Extracted by: AC
Extraction Method: SW846 3550
Analyst: JLP
Analysis Method: SW846 M8270C
Lab Prep Batch: WG60147
Units: ug/Kgdrywt

CAS#	Compound	Flags		Results	DF	PQL	Adj.PQL	Adj.MDL	
91-20-3	Naphthalene	U		10	1.0	10	10	2.7	
91-57-6	2-Methylnaphthalene	~~U~~	UJ	10	1.0	10	10	2.3	CCH
86-73-7	Fluorene	U		10	1.0	10	10	3.3	
85-01-8	Phenanthrene	U		10	1.0	10	10	1.8	
206-44-0	Fluoranthene	~~U~~	UJ	10	1.0	10	10	1.8	CCH
129-00-0	Pyrene	U		10	1.0	10	10	2.2	
56-55-3	Benzo(a)anthracene	U		10	1.0	10	10	2.0	
205-99-2	Benzo(b)fluoranthene	U		10	1.0	10	10	2.5	
207-08-9	Benzo(k)fluoranthene	U		10	1.0	10	10	3.2	
50-32-8	Benzo(a)pyrene	U		10	1.0	10	10	3.4	
193-39-5	Indeno(1,2,3-cd)pyrene	U		10	1.0	10	10	2.0	
53-70-3	Dibenzo(a,h)anthracene	U		10	1.0	10	10	1.8	
191-24-2	Benzo(g,h,i)perylene	U		10	1.0	10	10	2.0	
118-74-1	Hexachlorobenzene	U		10	1.0	10	10	1.8	
87-68-3	Hexachlorobutadiene	~~U~~	UJ	10	1.0	10	10	2.4	CCH
77-47-4	Hexachlorocyclopentadiene	~~U~~	UJ	10	1.0	10	10	1.5	CCH
7297-45-2	2-Methylnaphthalene-D10			102%					
367-12-4	2,4-Dibromophenol			83%					
81103-79-9	Fluorene-d10			80%					
1718-51-1	Pyrene-D10			92%					

JW
4/17/09

ENVIRONMENTAL
Data Services, Inc.

SEMIVOLATILE ORGANIC COMPOUNDS

USEPA Region IV - Level IV Review

Site: MCB Camp Lejeune, TO-09 SDG #: TO9-38

Client: CH2M HILL, Inc., Virginia Beach, Virginia Date: April 17, 2009

Laboratory: Katahdin Analytical Services, Scarborough, Maine Reviewer: Nancy Weaver

EDS ID	Client Sample ID	Laboratory Sample ID	Matrix
1	MR08-SS288-09A	SC0211-1	Soil
1MS	MR08-SS288-09AMS	SC0211-1MS	Soil
1MSD	MR08-SS288-09AMSD	SC0211-1MSD	Soil
2	MR08-IS288-6-7-09A	SC0211-3	Soil
2MS	MR08-IS288-6-7-09AMS	SC0211-3MS	Soil
2MSD	MR08-IS288-6-7-09AMSD	SC0211-3MSD	Soil
3	MR08-SS264-09A	SC0211-5	Soil
4	MR08-IS264-10-1109A	SC0211-7	Soil
5	MR08-SS263-09A	SC0211-9	Soil
6	MR08-IS263-2-3-09A	SC0211-11	Soil
7	MR08-SS262-09A	SC0211-13	Soil
8	MR08-IS262-4-5-09A	SC0211-15	Soil
9	MR08-SS261-09A	SC0211-17	Soil
10	MR08-IS261-4-5-09A	SC0211-19	Soil
11	MR08-SS260-09A	SC0211-21	Soil
12	MR08-IS260-6-7-09A	SC0211-23	Soil

The USEPA "Contract Laboratory Program National Functional Guidelines for Organic Data Review," October 1999, and professional judgement were used in evaluating the data in this summary report.

Holding Times - All samples were extracted within 14 days for soil samples and analyzed within 40 days for all samples.

GC/MS Tuning - All of the DFTPP tunes in the initial and continuing calibrations met the percent relative abundance criteria.

Initial Calibration - The initial calibrations exhibited acceptable %RSD and mean RRF values except the following.

Continuing Calibration - The continuing calibrations exhibited acceptable %D and RRF values except the following.

CCAL Date	Compound	%D/RRF	Qualifier	Affected Samples
02/01/09	Benzaldehyde	29.78%	J/UJ	2, 3
02/02/09	Benzaldehyde	33.53%	J/UJ	4-9

Surrogates - All samples exhibited acceptable surrogate recoveries.

MS/MSD - The MS/MSD sample exhibited acceptable %R and RPD values.

Laboratory Control Sample - The LCS samples exhibited acceptable %R values except the following.

Internal Standard (IS) Area Performance - All internal standards met response and retention time (RT) criteria.

Method Blank - The method blanks were free of contamination.

Field, Equipment Blank - Field QC results are summarized below.

Blank ID	Compound	Conc. ug/L	Action Level ug/L	Qualifier	Affected Samples
MR08-FB01011009	None - ND	-	-	-	-
MR08-EB01011409-SS	None - ND	-	-	-	-

Field Duplicates - Field duplicate samples were not included in this package.

Tentatively Identified Compounds (TICs) - TICs were not reported.

Compound Quantitation - No discrepancies were identified.

KATAHDIN ANALYTICAL SERVICES
Report of Analytical Results

Client: CH2MHill
Project: TO-009 Lejeune
PO No:
Sample Date: 01/14/09
Received Date: 01/15/09
Extraction Date: 01/24/09
Analysis Date: 30-JAN-2009 20:31
Report Date: 02/08/2009
Matrix: SOIL
% Solids: 88.8

Lab ID: SC0211-1
Client ID: MR08-SS288-09A
SDG: TO9-38
Extracted by: AC
Extraction Method: SW846 3550
Analyst: JCG
Analysis Method: SW846 8270C
Lab Prep Batch: WG60146
Units: ug/Kgdrywt

CAS#	Compound	Flags	Results	DF	PQL	Adj.PQL	Adj.MDL
100-52-7	Benzaldehyde	U	560	1.0	500	560	140
108-95-2	Phenol	U	560	1.0	500	560	180
111-44-4	Bis(2-Chloroethyl)ether	U	370	1.0	330	370	91
95-57-8	2-Chlorophenol	U	560	1.0	500	560	180
95-48-7	2-Methylphenol	U	680	1.0	600	680	220
108-60-1	2,2'-Oxybis(1-chloropropane)	U	370	1.0	330	370	100
98-86-2	Acetophenone	U	680	1.0	600	680	200
621-64-7	N-Nitroso-di-n-propylamine	U	370	1.0	330	370	93
65794-96-9	3&4-Methylphenol	U	680	1.0	600	680	210
67-72-1	Hexachloroethane	U	370	1.0	330	370	110
98-95-3	Nitrobenzene	U	370	1.0	330	370	100
78-59-1	Isophorone	U	370	1.0	330	370	84
88-75-5	2-Nitrophenol	U	680	1.0	600	680	190
105-67-9	2,4-Dimethylphenol	U	560	1.0	500	560	180
111-91-1	Bis(2-Chloroethoxy)methane	U	370	1.0	330	370	110
120-83-2	2,4-Dichlorophenol	U	560	1.0	500	560	170
106-47-8	4-Chloroaniline	U	560	1.0	500	560	130
105-60-2	Caprolactam	U	560	1.0	500	560	160
59-50-7	4-Chloro-3-Methylphenol	U	560	1.0	500	560	190
88-06-2	2,4,6-Trichlorophenol	U	560	1.0	500	560	170
95-95-4	2,4,5-Trichlorophenol	U	560	1.0	500	560	170
91-58-7	2-Chloronaphthalene	U	370	1.0	330	370	98
92-52-4	1,1'-Biphenyl	U	370	1.0	330	370	82
88-74-4	2-Nitroaniline	U	560	1.0	500	560	84
131-11-3	Dimethyl Phthalate	U	370	1.0	330	370	88
606-20-2	2,6-Dinitrotoluene	U	370	1.0	330	370	89
208-96-8	Acenaphthylene	U	370	1.0	330	370	79
99-09-2	3-Nitroaniline	U	560	1.0	500	560	100
83-32-9	Acenaphthene	U	370	1.0	330	370	73
51-28-5	2,4-Dinitrophenol	U	1400	1.0	1200	1400	420
132-64-9	Dibenzofuran	U	370	1.0	330	370	89
100-02-7	4-Nitrophenol	U	1400	1.0	1200	1400	350
121-14-2	2,4-Dinitrotoluene	U	370	1.0	330	370	96
84-66-2	Diethylphthalate	U	370	1.0	330	370	90
7005-72-3	4-Chlorophenyl-phenylether	U	370	1.0	330	370	88
100-01-6	4-Nitroaniline	U	560	1.0	500	560	150
534-52-1	4,6-Dinitro-2-Methylphenol	U	1400	1.0	1200	1400	380
86-30-6	N-Nitrosodiphenylamine	U	740	1.0	660	740	250
101-55-3	4-Bromophenyl-phenylether	U	370	1.0	330	370	96
1912-24-9	Atrazine	U	370	1.0	330	370	100
87-86-5	Pentachlorophenol	U	920	1.0	820	920	270
120-12-7	Anthracene	U	370	1.0	330	370	95
86-74-8	Carbazole	U	560	1.0	500	560	120

lw 4/17/09

KATAHDIN ANALYTICAL SERVICES
Report of Analytical Results

Client: CH2MHill
Project: TO-009 Lejeune
PO No:
Sample Date: 01/14/09
Received Date: 01/15/09
Extraction Date: 01/24/09
Analysis Date: 30-JAN-2009 20:31
Report Date: 02/08/2009
Matrix: SOIL
% Solids: 88.8

Lab ID: SC0211-1
Client ID: MR08-SS288-09A
SDG: TO9-38
Extracted by: AC
Extraction Method: SW846 3550
Analyst: JCG
Analysis Method: SW846 8270C
Lab Prep Batch: WG60146
Units: ug/Kgdrywt

CAS#	Compound	Flags	Results	DF	PQL	Adj.PQL	Adj.MDL
84-74-2	Di-n-butylphthalate	U	370	1.0	330	370	110
85-68-7	Butylbenzylphthalate	U	370	1.0	330	370	100
91-94-1	3,3'-Dichlorobenzidine	U	560	1.0	500	560	130
218-01-9	Chrysene	U	370	1.0	330	370	110
117-81-7	bis(2-Ethylhexyl)phthalate		520	1.0	330	370	110
117-84-0	Di-n-octylphthalate	U	370	1.0	330	370	240
367-12-4	2-Fluorophenol		71%				
13127-88-3	Phenol-D6		77%				
4165-60-0	Nitrobenzene-D5		68%				
321-60-8	2-Fluorobiphenyl		68%				
118-79-6	2,4,6-Tribromophenol		82%				
1718-51-0	Terphenyl-D14		94%				

QW
4/17/09

2

KATAHDIN ANALYTICAL SERVICES
Report of Analytical Results

Client: CH2MHill
Project: TO-009 Lejeune
PO No:
Sample Date: 01/14/09
Received Date: 01/15/09
Extraction Date: 01/21/09
Analysis Date: 01-FEB-2009 21:05
Report Date: 02/08/2009
Matrix: SOIL
% Solids: 90.8

Lab ID: SC0211-3
Client ID: 08-IS288-6-7-09A
SDG: TO9-38
Extracted by: AC
Extraction Method: SW846 3550
Analyst: JLP
Analysis Method: SW846 8270C
Lab Prep Batch: WG60036
Units: ug/Kgdrywt

CAS#	Compound	Flags	Results	DF	PQL	Adj.PQL	Adj.MDL
100-52-7	Benzaldehyde	~~U~~ UJ	550	1.0	500	550	130 CCH
108-95-2	Phenol	U	550	1.0	500	550	170
111-44-4	Bis(2-Chloroethyl)ether	U	360	1.0	330	360	89
95-57-8	2-Chlorophenol	U	550	1.0	500	550	180
95-48-7	2-Methylphenol	U	660	1.0	600	660	220
108-60-1	2,2'-Oxybis(1-chloropropane)	U	360	1.0	330	360	98
98-86-2	Acetophenone	U	660	1.0	600	660	200
621-64-7	N-Nitroso-di-n-propylamine	U	360	1.0	330	360	91
65794-96-9	3&4-Methylphenol	U	660	1.0	600	660	200
67-72-1	Hexachloroethane	U	360	1.0	330	360	100
98-95-3	Nitrobenzene	U	360	1.0	330	360	100
78-59-1	Isophorone	U	360	1.0	330	360	82
88-75-5	2-Nitrophenol	U	660	1.0	600	660	180
105-67-9	2,4-Dimethylphenol	U	550	1.0	500	550	180
111-91-1	Bis(2-Chloroethoxy)methane	U	360	1.0	330	360	100
120-83-2	2,4-Dichlorophenol	U	550	1.0	500	550	160
106-47-8	4-Chloroaniline	U	550	1.0	500	550	130
105-60-2	Caprolactam	U	550	1.0	500	550	160
59-50-7	4-Chloro-3-Methylphenol	U	550	1.0	500	550	180
88-06-2	2,4,6-Trichlorophenol	U	550	1.0	500	550	170
95-95-4	2,4,5-Trichlorophenol	U	550	1.0	500	550	170
91-58-7	2-Chloronaphthalene	U	360	1.0	330	360	96
92-52-4	1,1'-Biphenyl	U	360	1.0	330	360	80
88-74-4	2-Nitroaniline	U	550	1.0	500	550	82
131-11-3	Dimethyl Phthalate	U	360	1.0	330	360	86
606-20-2	2,6-Dinitrotoluene	U	360	1.0	330	360	87
208-96-8	Acenaphthylene	U	360	1.0	330	360	77
99-09-2	3-Nitroaniline	U	550	1.0	500	550	100
83-32-9	Acenaphthene	U	360	1.0	330	360	72
51-28-5	2,4-Dinitrophenol	U	1300	1.0	1200	1300	420
132-64-9	Dibenzofuran	U	360	1.0	330	360	87
100-02-7	4-Nitrophenol	U	1300	1.0	1200	1300	340
121-14-2	2,4-Dinitrotoluene	U	360	1.0	330	360	94
84-66-2	Diethylphthalate	U	360	1.0	330	360	88
7005-72-3	4-Chlorophenyl-phenylether	U	360	1.0	330	360	86
100-01-6	4-Nitroaniline	U	550	1.0	500	550	150
534-52-1	4,6-Dinitro-2-Methylphenol	U	1300	1.0	1200	1300	370
86-30-6	N-Nitrosodiphenylamine	U	730	1.0	660	730	240
101-55-3	4-Bromophenyl-phenylether	U	360	1.0	330	360	94
1912-24-9	Atrazine	U	360	1.0	330	360	100
87-86-5	Pentachlorophenol	U	900	1.0	820	900	260
120-12-7	Anthracene	U	360	1.0	330	360	92
86-74-8	Carbazole	U	550	1.0	500	550	120

JW 4/17/09

2

KATAHDIN ANALYTICAL SERVICES
Report of Analytical Results

Client: CH2MHill
Project: TO-009 Lejeune
PO No:
Sample Date: 01/14/09
Received Date: 01/15/09
Extraction Date: 01/21/09
Analysis Date: 01-FEB-2009 21:05
Report Date: 02/08/2009
Matrix: SOIL
% Solids: 90.8

Lab ID: SC0211-3
Client ID: 08-IS288-6-7-09A
SDG: TO9-38
Extracted by: AC
Extraction Method: SW846 3550
Analyst: JLP
Analysis Method: SW846 8270C
Lab Prep Batch: WG60036
Units: ug/Kgdrywt

CAS#	Compound	Flags	Results	DF	PQL	Adj.PQL	Adj.MDL
84-74-2	Di-n-butylphthalate	U	360	1.0	330	360	110
85-68-7	Butylbenzylphthalate	U	360	1.0	330	360	100
91-94-1	3,3'-Dichlorobenzidine	U	550	1.0	500	550	120
218-01-9	Chrysene	U	360	1.0	330	360	100
117-81-7	bis(2-Ethylhexyl)phthalate	U	360	1.0	330	360	110
117-84-0	Di-n-octylphthalate	U	360	1.0	330	360	230
367-12-4	2-Fluorophenol		64%				
13127-88-3	Phenol-D6		74%				
4165-60-0	Nitrobenzene-D5		62%				
321-60-8	2-Fluorobiphenyl		62%				
118-79-6	2,4,6-Tribromophenol		82%				
1718-51-0	Terphenyl-D14		76%				

MW
4/17/09

3

KATAHDIN ANALYTICAL SERVICES
Report of Analytical Results

Client: CH2MHill
Project: TO-009 Lejeune
PO No:
Sample Date: 01/14/09
Received Date: 01/15/09
Extraction Date: 01/21/09
Analysis Date: 02-FEB-2009 00:34
Report Date: 02/08/2009
Matrix: SOIL
% Solids: 93.6

Lab ID: SC0211-5
Client ID: MR08-SS264-09A
SDG: TO9-38
Extracted by: AC
Extraction Method: SW846 3550
Analyst: JLP
Analysis Method: SW846 8270C
Lab Prep Batch: WG60036
Units: ug/Kgdrywt

CAS#	Compound	Flags	Results	DF	PQL	Adj.PQL	Adj.MDL
100-52-7	Benzaldehyde	~~U~~ UJ	530	1.0	500	530	130 CCH
108-95-2	Phenol	U	530	1.0	500	530	170
111-44-4	Bis(2-Chloroethyl)ether	U	350	1.0	330	350	86
95-57-8	2-Chlorophenol	U	530	1.0	500	530	180
95-48-7	2-Methylphenol	U	640	1.0	600	640	210
108-60-1	2,2'-Oxybis(1-chloropropane)	U	350	1.0	330	350	95
98-86-2	Acetophenone	U	640	1.0	600	640	190
621-64-7	N-Nitroso-di-n-propylamine	U	350	1.0	330	350	89
65794-96-9	3&4-Methylphenol	U	640	1.0	600	640	200
67-72-1	Hexachloroethane	U	350	1.0	330	350	100
98-95-3	Nitrobenzene	U	350	1.0	330	350	97
78-59-1	Isophorone	U	350	1.0	330	350	80
88-75-5	2-Nitrophenol	U	640	1.0	600	640	180
105-67-9	2,4-Dimethylphenol	U	530	1.0	500	530	180
111-91-1	Bis(2-Chloroethoxy)methane	U	350	1.0	330	350	100
120-83-2	2,4-Dichlorophenol	U	530	1.0	500	530	160
106-47-8	4-Chloroaniline	U	530	1.0	500	530	130
105-60-2	Caprolactam	U	530	1.0	500	530	150
59-50-7	4-Chloro-3-Methylphenol	U	530	1.0	500	530	180
88-06-2	2,4,6-Trichlorophenol	U	530	1.0	500	530	160
95-95-4	2,4,5-Trichlorophenol	U	530	1.0	500	530	160
91-58-7	2-Chloronaphthalene	U	350	1.0	330	350	93
92-52-4	1,1'-Biphenyl	U	350	1.0	330	350	78
88-74-4	2-Nitroaniline	U	530	1.0	500	530	80
131-11-3	Dimethyl Phthalate	U	350	1.0	330	350	83
606-20-2	2,6-Dinitrotoluene	U	350	1.0	330	350	84
208-96-8	Acenaphthylene	U	350	1.0	330	350	75
99-09-2	3-Nitroaniline	U	530	1.0	500	530	100
83-32-9	Acenaphthene	U	350	1.0	330	350	69
51-28-5	2,4-Dinitrophenol	U	1300	1.0	1200	1300	400
132-64-9	Dibenzofuran	U	350	1.0	330	350	84
100-02-7	4-Nitrophenol	U	1300	1.0	1200	1300	330
121-14-2	2,4-Dinitrotoluene	U	350	1.0	330	350	91
84-66-2	Diethylphthalate	U	350	1.0	330	350	85
7005-72-3	4-Chlorophenyl-phenylether	U	350	1.0	330	350	83
100-01-6	4-Nitroaniline	U	530	1.0	500	530	140
534-52-1	4,6-Dinitro-2-Methylphenol	U	1300	1.0	1200	1300	360
86-30-6	N-Nitrosodiphenylamine	U	700	1.0	660	700	230
101-55-3	4-Bromophenyl-phenylether	U	350	1.0	330	350	91
1912-24-9	Atrazine	U	350	1.0	330	350	97
87-86-5	Pentachlorophenol	U	880	1.0	820	880	250
120-12-7	Anthracene	U	350	1.0	330	350	90
86-74-8	Carbazole	U	530	1.0	500	530	120

lw 4/17/09

3

KATAHDIN ANALYTICAL SERVICES
Report of Analytical Results

Client: CH2MHill
Project: TO-009 Lejeune
PO No:
Sample Date: 01/14/09
Received Date: 01/15/09
Extraction Date: 01/21/09
Analysis Date: 02-FEB-2009 00:34
Report Date: 02/08/2009
Matrix: SOIL
% Solids: 93.6

Lab ID: SC0211-5
Client ID: MR08-SS264-09A
SDG: TO9-38
Extracted by: AC
Extraction Method: SW846 3550
Analyst: JLP
Analysis Method: SW846 8270C
Lab Prep Batch: WG60036
Units: ug/Kgdrywt

CAS#	Compound	Flags	Results	DF	PQL	Adj.PQL	Adj.MDL
84-74-2	Di-n-butylphthalate	U	350	1.0	330	350	110
85-68-7	Butylbenzylphthalate	U	350	1.0	330	350	99
91-94-1	3,3'-Dichlorobenzidine	U	530	1.0	500	530	120
218-01-9	Chrysene	U	350	1.0	330	350	100
117-81-7	bis(2-Ethylhexyl)phthalate	J	150	1.0	330	350	100
117-84-0	Di-n-octylphthalate	U	350	1.0	330	350	220
367-12-4	2-Fluorophenol		68%				
13127-88-3	Phenol-D6		74%				
4165-60-0	Nitrobenzene-D5		64%				
321-60-8	2-Fluorobiphenyl		62%				
118-79-6	2,4,6-Tribromophenol		83%				
1718-51-0	Terphenyl-D14		85%				

LW
4/17/09

4

KATAHDIN ANALYTICAL SERVICES
Report of Analytical Results

Client: CH2MHill
Project: TO-009 Lejeune
PO No:
Sample Date: 01/14/09
Received Date: 01/15/09
Extraction Date: 01/21/09
Analysis Date: 02-FEB-2009 12:42
Report Date: 02/08/2009
Matrix: SOIL
% Solids: 93.2

Lab ID: SC0211-7
Client ID: MR08-IS264-10-1109A
SDG: TO9-38
Extracted by: AC
Extraction Method: SW846 3550
Analyst: JLP
Analysis Method: SW846 8270C
Lab Prep Batch: WG60036
Units: ug/Kgdrywt

CAS#	Compound	Flags	Results	DF	PQL	Adj.PQL	Adj.MDL
100-52-7	Benzaldehyde	~~U~~ UJ	540	1.0	500	540	130 CCH
108-95-2	Phenol	U	540	1.0	500	540	170
111-44-4	Bis(2-Chloroethyl)ether	U	350	1.0	330	350	87
95-57-8	2-Chlorophenol	U	540	1.0	500	540	180
95-48-7	2-Methylphenol	U	640	1.0	600	640	210
108-60-1	2,2'-Oxybis(1-chloropropane)	U	350	1.0	330	350	95
98-86-2	Acetophenone	U	640	1.0	600	640	190
621-64-7	N-Nitroso-di-n-propylamine	U	350	1.0	330	350	89
65794-96-9	3&4-Methylphenol	U	640	1.0	600	640	200
67-72-1	Hexachloroethane	U	350	1.0	330	350	100
98-95-3	Nitrobenzene	U	350	1.0	330	350	98
78-59-1	Isophorone	U	350	1.0	330	350	80
88-75-5	2-Nitrophenol	U	640	1.0	600	640	180
105-67-9	2,4-Dimethylphenol	U	540	1.0	500	540	180
111-91-1	Bis(2-Chloroethoxy)methane	U	350	1.0	330	350	100
120-83-2	2,4-Dichlorophenol	U	540	1.0	500	540	160
106-47-8	4-Chloroaniline	U	540	1.0	500	540	130
105-60-2	Caprolactam	U	540	1.0	500	540	150
59-50-7	4-Chloro-3-Methylphenol	U	540	1.0	500	540	180
88-06-2	2,4,6-Trichlorophenol	U	540	1.0	500	540	170
95-95-4	2,4,5-Trichlorophenol	U	540	1.0	500	540	170
91-58-7	2-Chloronaphthalene	U	350	1.0	330	350	93
92-52-4	1,1'-Biphenyl	U	350	1.0	330	350	78
88-74-4	2-Nitroaniline	U	540	1.0	500	540	80
131-11-3	Dimethyl Phthalate	U	350	1.0	330	350	84
606-20-2	2,6-Dinitrotoluene	U	350	1.0	330	350	85
208-96-8	Acenaphthylene	U	350	1.0	330	350	75
99-09-2	3-Nitroaniline	U	540	1.0	500	540	100
83-32-9	Acenaphthene	U	350	1.0	330	350	70
51-28-5	2,4-Dinitrophenol	U	1300	1.0	1200	1300	400
132-64-9	Dibenzofuran	U	350	1.0	330	350	85
100-02-7	4-Nitrophenol	U	1300	1.0	1200	1300	330
121-14-2	2,4-Dinitrotoluene	U	350	1.0	330	350	91
84-66-2	Diethylphthalate	U	350	1.0	330	350	86
7005-72-3	4-Chlorophenyl-phenylether	U	350	1.0	330	350	84
100-01-6	4-Nitroaniline	U	540	1.0	500	540	140
534-52-1	4,6-Dinitro-2-Methylphenol	U	1300	1.0	1200	1300	360
86-30-6	N-Nitrosodiphenylamine	U	710	1.0	660	710	230
101-55-3	4-Bromophenyl-phenylether	U	350	1.0	330	350	91
1912-24-9	Atrazine	U	350	1.0	330	350	98
87-86-5	Pentachlorophenol	U	880	1.0	820	880	250
120-12-7	Anthracene	U	350	1.0	330	350	90
86-74-8	Carbazole	U	540	1.0	500	540	120

MW
4/17/09

KATAHDIN ANALYTICAL SERVICES
Report of Analytical Results

4

Client: CH2MHill
Project: TO-009 Lejeune
PO No:
Sample Date: 01/14/09
Received Date: 01/15/09
Extraction Date: 01/21/09
Analysis Date: 02-FEB-2009 12:42
Report Date: 02/08/2009
Matrix: SOIL
% Solids: 93.2

Lab ID: SC0211-7
Client ID: MR08-IS264-10-1109A
SDG: TO9-38
Extracted by: AC
Extraction Method: SW846 3550
Analyst: JLP
Analysis Method: SW846 8270C
Lab Prep Batch: WG60036
Units: ug/Kgdrywt

CAS#	Compound	Flags	Results	DF	PQL	Adj.PQL	Adj.MDL
84-74-2	Di-n-butylphthalate	U	350	1.0	330	350	110
85-68-7	Butylbenzylphthalate	U	350	1.0	330	350	100
91-94-1	3,3'-Dichlorobenzidine	U	540	1.0	500	540	120
218-01-9	Chrysene	U	350	1.0	330	350	100
117-81-7	bis(2-Ethylhexyl)phthalate	U	350	1.0	330	350	100
117-84-0	Di-n-octylphthalate	U	350	1.0	330	350	230
367-12-4	2-Fluorophenol		69%				
13127-88-3	Phenol-D6		74%				
4165-60-0	Nitrobenzene-D5		66%				
321-60-8	2-Fluorobiphenyl		64%				
118-79-6	2,4,6-Tribromophenol		77%				
1718-51-0	Terphenyl-D14		92%				

fcw
4/17/09

5

KATAHDIN ANALYTICAL SERVICES
Report of Analytical Results

Client: CH2MHill
Project: TO-009 Lejeune
PO No:
Sample Date: 01/14/09
Received Date: 01/15/09
Extraction Date: 01/21/09
Analysis Date: 02-FEB-2009 13:24
Report Date: 02/08/2009
Matrix: SOIL
% Solids: 88.3

Lab ID: SC0211-9
Client ID: MR08-SS263-09A
SDG: TO9-38
Extracted by: AC
Extraction Method: SW846 3550
Analyst: JLP
Analysis Method: SW846 8270C
Lab Prep Batch: WG60036
Units: ug/Kgdrywt

CAS#	Compound	Flags	Results	DF	PQL	Adj.PQL	Adj.MDL
100-52-7	Benzaldehyde	~~U~~ UJ	570	1.0	500	570	140 CCH
108-95-2	Phenol	U	570	1.0	500	570	180
111-44-4	Bis(2-Chloroethyl)ether	U	370	1.0	330	370	92
95-57-8	2-Chlorophenol	U	570	1.0	500	570	180
95-48-7	2-Methylphenol	U	680	1.0	600	680	230
108-60-1	2,2'-Oxybis(1-chloropropane)	U	370	1.0	330	370	100
98-86-2	Acetophenone	U	680	1.0	600	680	200
621-64-7	N-Nitroso-di-n-propylamine	U	370	1.0	330	370	94
65794-96-9	3&4-Methylphenol	U	680	1.0	600	680	210
67-72-1	Hexachloroethane	U	370	1.0	330	370	110
98-95-3	Nitrobenzene	U	370	1.0	330	370	100
78-59-1	Isophorone	U	370	1.0	330	370	85
88-75-5	2-Nitrophenol	U	680	1.0	600	680	190
105-67-9	2,4-Dimethylphenol	U	570	1.0	500	570	190
111-91-1	Bis(2-Chloroethoxy)methane	U	370	1.0	330	370	110
120-83-2	2,4-Dichlorophenol	U	570	1.0	500	570	170
106-47-8	4-Chloroaniline	U	570	1.0	500	570	130
105-60-2	Caprolactam	U	570	1.0	500	570	160
59-50-7	4-Chloro-3-Methylphenol	U	570	1.0	500	570	190
88-06-2	2,4,6-Trichlorophenol	U	570	1.0	500	570	180
95-95-4	2,4,5-Trichlorophenol	U	570	1.0	500	570	180
91-58-7	2-Chloronaphthalene	U	370	1.0	330	370	98
92-52-4	1,1'-Biphenyl	U	370	1.0	330	370	83
88-74-4	2-Nitroaniline	U	570	1.0	500	570	85
131-11-3	Dimethyl Phthalate	U	370	1.0	330	370	88
606-20-2	2,6-Dinitrotoluene	U	370	1.0	330	370	89
208-96-8	Acenaphthylene	U	370	1.0	330	370	79
99-09-2	3-Nitroaniline	U	570	1.0	500	570	110
83-32-9	Acenaphthene	J	89	1.0	330	370	74
51-28-5	2,4-Dinitrophenol	U	1400	1.0	1200	1400	430
132-64-9	Dibenzofuran	U	370	1.0	330	370	89
100-02-7	4-Nitrophenol	U	1400	1.0	1200	1400	350
121-14-2	2,4-Dinitrotoluene	U	370	1.0	330	370	96
84-66-2	Diethylphthalate	U	370	1.0	330	370	90
7005-72-3	4-Chlorophenyl-phenylether	U	370	1.0	330	370	88
100-01-6	4-Nitroaniline	U	570	1.0	500	570	150
534-52-1	4,6-Dinitro-2-Methylphenol	U	1400	1.0	1200	1400	380
86-30-6	N-Nitrosodiphenylamine	U	750	1.0	660	750	250
101-55-3	4-Bromophenyl-phenylether	U	370	1.0	330	370	96
1912-24-9	Atrazine	U	370	1.0	330	370	100
87-86-5	Pentachlorophenol	U	930	1.0	820	930	270
120-12-7	Anthracene	U	370	1.0	330	370	95
86-74-8	Carbazole	U	570	1.0	500	570	120

lw
4/17/09

KATAHDIN ANALYTICAL SERVICES
Report of Analytical Results

Client: CH2MHill
Project: TO-009 Lejeune
PO No:
Sample Date: 01/14/09
Received Date: 01/15/09
Extraction Date: 01/21/09
Analysis Date: 02-FEB-2009 13:24
Report Date: 02/08/2009
Matrix: SOIL
% Solids: 88.3

Lab ID: SC0211-9
Client ID: MR08-SS263-09A
SDG: TO9-38
Extracted by: AC
Extraction Method: SW846 3550
Analyst: JLP
Analysis Method: SW846 8270C
Lab Prep Batch: WG60036
Units: ug/Kgdrywt

CAS#	Compound	Flags	Results	DF	PQL	Adj.PQL	Adj.MDL
84-74-2	Di-n-butylphthalate	U	370	1.0	330	370	110
85-68-7	Butylbenzylphthalate	U	370	1.0	330	370	100
91-94-1	3,3'-Dichlorobenzidine	U	570	1.0	500	570	130
218-01-9	Chrysene	U	370	1.0	330	370	110
117-81-7	bis(2-Ethylhexyl)phthalate	J	280	1.0	330	370	110
117-84-0	Di-n-octylphthalate	U	370	1.0	330	370	240
367-12-4	2-Fluorophenol		62%				
13127-88-3	Phenol-D6		71%				
4165-60-0	Nitrobenzene-D5		57%				
321-60-8	2-Fluorobiphenyl		57%				
118-79-6	2,4,6-Tribromophenol		72%				
1718-51-0	Terphenyl-D14		84%				

RW 4/17/09

6

KATAHDIN ANALYTICAL SERVICES
Report of Analytical Results

Client: CH2MHill
Project: TO-009 Lejeune
PO No:
Sample Date: 01/14/09
Received Date: 01/15/09
Extraction Date: 01/21/09
Analysis Date: 02-FEB-2009 14:06
Report Date: 02/08/2009
Matrix: SOIL
% Solids: 86.3

Lab ID: SC0211-11
Client ID: MR08-IS263-2-3-09A
SDG: TO9-38
Extracted by: AC
Extraction Method: SW846 3550
Analyst: JLP
Analysis Method: SW846 8270C
Lab Prep Batch: WG60036
Units: ug/Kgdrywt

CAS#	Compound	Flags	Results	DF	PQL	Adj.PQL	Adj.MDL
100-52-7	Benzaldehyde	~~J~~ UJ	580	1.0	500	580	140 CCH
108-95-2	Phenol	U	580	1.0	500	580	180
111-44-4	Bis(2-Chloroethyl)ether	U	380	1.0	330	380	94
95-57-8	2-Chlorophenol	U	580	1.0	500	580	190
95-48-7	2-Methylphenol	U	700	1.0	600	700	230
108-60-1	2,2'-Oxybis(1-chloropropane)	U	380	1.0	330	380	100
98-86-2	Acetophenone	U	700	1.0	600	700	210
621-64-7	N-Nitroso-di-n-propylamine	U	380	1.0	330	380	96
65794-96-9	3&4-Methylphenol	U	700	1.0	600	700	220
67-72-1	Hexachloroethane	U	380	1.0	330	380	110
98-95-3	Nitrobenzene	U	380	1.0	330	380	100
78-59-1	Isophorone	U	380	1.0	330	380	87
88-75-5	2-Nitrophenol	U	700	1.0	600	700	190
105-67-9	2,4-Dimethylphenol	U	580	1.0	500	580	190
111-91-1	Bis(2-Chloroethoxy)methane	U	380	1.0	330	380	110
120-83-2	2,4-Dichlorophenol	U	580	1.0	500	580	170
106-47-8	4-Chloroaniline	U	580	1.0	500	580	140
105-60-2	Caprolactam	U	580	1.0	500	580	170
59-50-7	4-Chloro-3-Methylphenol	U	580	1.0	500	580	190
88-06-2	2,4,6-Trichlorophenol	U	580	1.0	500	580	180
95-95-4	2,4,5-Trichlorophenol	U	580	1.0	500	580	180
91-58-7	2-Chloronaphthalene	U	380	1.0	330	380	100
92-52-4	1,1'-Biphenyl	U	380	1.0	330	380	85
88-74-4	2-Nitroaniline	U	580	1.0	500	580	87
131-11-3	Dimethyl Phthalate	U	380	1.0	330	380	90
606-20-2	2,6-Dinitrotoluene	U	380	1.0	330	380	92
208-96-8	Acenaphthylene	U	380	1.0	330	380	81
99-09-2	3-Nitroaniline	U	580	1.0	500	580	110
83-32-9	Acenaphthene	J	92	1.0	330	380	75
51-28-5	2,4-Dinitrophenol	U	1400	1.0	1200	1400	440
132-64-9	Dibenzofuran	U	380	1.0	330	380	92
100-02-7	4-Nitrophenol	U	1400	1.0	1200	1400	360
121-14-2	2,4-Dinitrotoluene	U	380	1.0	330	380	98
84-66-2	Diethylphthalate	U	380	1.0	330	380	93
7005-72-3	4-Chlorophenyl-phenylether	U	380	1.0	330	380	90
100-01-6	4-Nitroaniline	U	580	1.0	500	580	160
534-52-1	4,6-Dinitro-2-Methylphenol	U	1400	1.0	1200	1400	390
86-30-6	N-Nitrosodiphenylamine	U	760	1.0	660	760	250
101-55-3	4-Bromophenyl-phenylether	U	380	1.0	330	380	98
1912-24-9	Atrazine	U	380	1.0	330	380	100
87-86-5	Pentachlorophenol	U	950	1.0	820	950	270
120-12-7	Anthracene	U	380	1.0	330	380	97
86-74-8	Carbazole	U	580	1.0	500	580	130

RW 4/17/09

6

KATAHDIN ANALYTICAL SERVICES
Report of Analytical Results

Client: CH2MHill
Project: TO-009 Lejeune
PO No:
Sample Date: 01/14/09
Received Date: 01/15/09
Extraction Date: 01/21/09
Analysis Date: 02-FEB-2009 14:06
Report Date: 02/08/2009
Matrix: SOIL
% Solids: 86.3

Lab ID: SC0211-11
Client ID: MR08-IS263-2-3-09A
SDG: TO9-38
Extracted by: AC
Extraction Method: SW846 3550
Analyst: JLP
Analysis Method: SW846 8270C
Lab Prep Batch: WG60036
Units: ug/Kgdrywt

CAS#	Compound	Flags	Results	DF	PQL	Adj.PQL	Adj.MDL
84-74-2	Di-n-butylphthalate	U	380	1.0	330	380	120
85-68-7	Butylbenzylphthalate	U	380	1.0	330	380	110
91-94-1	3,3'-Dichlorobenzidine	U	580	1.0	500	580	130
218-01-9	Chrysene	U	380	1.0	330	380	110
117-81-7	bis(2-Ethylhexyl)phthalate	J	130	1.0	330	380	110
117-84-0	Di-n-octylphthalate	U	380	1.0	330	380	240
367-12-4	2-Fluorophenol		70%				
13127-88-3	Phenol-D6		78%				
4165-60-0	Nitrobenzene-D5		66%				
321-60-8	2-Fluorobiphenyl		65%				
118-79-6	2,4,6-Tribromophenol		80%				
1718-51-0	Terphenyl-D14		93%				

fw
4/17/09

7

KATAHDIN ANALYTICAL SERVICES
Report of Analytical Results

Client: CH2MHill
Project: TO-009 Lejeune
PO No:
Sample Date: 01/14/09
Received Date: 01/15/09
Extraction Date: 01/21/09
Analysis Date: 02-FEB-2009 14:49
Report Date: 02/08/2009
Matrix: SOIL
% Solids: 90.6

Lab ID: SC0211-13
Client ID: MR08-SS262-09A
SDG: TO9-38
Extracted by: AC
Extraction Method: SW846 3550
Analyst: JLP
Analysis Method: SW846 8270C
Lab Prep Batch: WG60036
Units: ug/Kgdrywt

CAS#	Compound	Flags	Results	DF	PQL	Adj.PQL	Adj.MDL
100-52-7	Benzaldehyde	~~U~~ UJ	550	1.0	500	550	130 CCH
108-95-2	Phenol	U	550	1.0	500	550	170
111-44-4	Bis(2-Chloroethyl)ether	U	360	1.0	330	360	89
95-57-8	2-Chlorophenol	U	550	1.0	500	550	180
95-48-7	2-Methylphenol	U	660	1.0	600	660	220
108-60-1	2,2'-Oxybis(1-chloropropane)	U	360	1.0	330	360	98
98-86-2	Acetophenone	U	660	1.0	600	660	200
621-64-7	N-Nitroso-di-n-propylamine	U	360	1.0	330	360	92
65794-96-9	3&4-Methylphenol	U	660	1.0	600	660	210
67-72-1	Hexachloroethane	U	360	1.0	330	360	100
98-95-3	Nitrobenzene	U	360	1.0	330	360	100
78-59-1	Isophorone	U	360	1.0	330	360	83
88-75-5	2-Nitrophenol	U	660	1.0	600	660	180
105-67-9	2,4-Dimethylphenol	U	550	1.0	500	550	180
111-91-1	Bis(2-Chloroethoxy)methane	U	360	1.0	330	360	100
120-83-2	2,4-Dichlorophenol	U	550	1.0	500	550	160
106-47-8	4-Chloroaniline	U	550	1.0	500	550	130
105-60-2	Caprolactam	U	550	1.0	500	550	160
59-50-7	4-Chloro-3-Methylphenol	U	550	1.0	500	550	180
88-06-2	2,4,6-Trichlorophenol	U	550	1.0	500	550	170
95-95-4	2,4,5-Trichlorophenol	U	550	1.0	500	550	170
91-58-7	2-Chloronaphthalene	U	360	1.0	330	360	96
92-52-4	1,1'-Biphenyl	U	360	1.0	330	360	80
88-74-4	2-Nitroaniline	U	550	1.0	500	550	83
131-11-3	Dimethyl Phthalate	U	360	1.0	330	360	86
606-20-2	2,6-Dinitrotoluene	U	360	1.0	330	360	87
208-96-8	Acenaphthylene	U	360	1.0	330	360	77
99-09-2	3-Nitroaniline	U	550	1.0	500	550	100
83-32-9	Acenaphthene	U	360	1.0	330	360	72
51-28-5	2,4-Dinitrophenol	U	1300	1.0	1200	1300	420
132-64-9	Dibenzofuran	U	360	1.0	330	360	87
100-02-7	4-Nitrophenol	U	1300	1.0	1200	1300	340
121-14-2	2,4-Dinitrotoluene	U	360	1.0	330	360	94
84-66-2	Diethylphthalate	U	360	1.0	330	360	88
7005-72-3	4-Chlorophenyl-phenylether	U	360	1.0	330	360	86
100-01-6	4-Nitroaniline	U	550	1.0	500	550	150
534-52-1	4,6-Dinitro-2-Methylphenol	U	1300	1.0	1200	1300	370
86-30-6	N-Nitrosodiphenylamine	U	730	1.0	660	730	240
101-55-3	4-Bromophenyl-phenylether	U	360	1.0	330	360	94
1912-24-9	Atrazine	U	360	1.0	330	360	100
87-86-5	Pentachlorophenol	U	900	1.0	820	900	260
120-12-7	Anthracene	U	360	1.0	330	360	93
86-74-8	Carbazole	U	550	1.0	500	550	120

QW 4/17/09

7

KATAHDIN ANALYTICAL SERVICES
Report of Analytical Results

Client: CH2MHill
Project: TO-009 Lejeune
PO No:
Sample Date: 01/14/09
Received Date: 01/15/09
Extraction Date: 01/21/09
Analysis Date: 02-FEB-2009 14:49
Report Date: 02/08/2009
Matrix: SOIL
% Solids: 90.6

Lab ID: SC0211-13
Client ID: MR08-SS262-09A
SDG: TO9-38
Extracted by: AC
Extraction Method: SW846 3550
Analyst: JLP
Analysis Method: SW846 8270C
Lab Prep Batch: WG60036
Units: ug/Kgdrywt

CAS#	Compound	Flags	Results	DF	PQL	Adj.PQL	Adj.MDL
84-74-2	Di-n-butylphthalate	U	360	1.0	330	360	110
85-68-7	Butylbenzylphthalate	U	360	1.0	330	360	100
91-94-1	3,3'-Dichlorobenzidine	U	550	1.0	500	550	120
218-01-9	Chrysene	U	360	1.0	330	360	100
117-81-7	bis(2-Ethylhexyl)phthalate	J	180	1.0	330	360	110
117-84-0	Di-n-octylphthalate	U	360	1.0	330	360	230
367-12-4	2-Fluorophenol		67%				
13127-88-3	Phenol-D6		74%				
4165-60-0	Nitrobenzene-D5		59%				
321-60-8	2-Fluorobiphenyl		59%				
118-79-6	2,4,6-Tribromophenol		81%				
1718-51-0	Terphenyl-D14		86%				

RW
4/17/09

8

KATAHDIN ANALYTICAL SERVICES
Report of Analytical Results

Client: CH2MHill
Project: TO-009 Lejeune
PO No:
Sample Date: 01/14/09
Received Date: 01/15/09
Extraction Date: 01/21/09
Analysis Date: 02-FEB-2009 15:31
Report Date: 02/08/2009
Matrix: SOIL
% Solids: 90.4

Lab ID: SC0211-15
Client ID: MR08-IS262-4-5-09A
SDG: TO9-38
Extracted by: AC
Extraction Method: SW846 3550
Analyst: JLP
Analysis Method: SW846 8270C
Lab Prep Batch: WG60036
Units: ug/Kgdrywt

CAS#	Compound	Flags	Results	DF	PQL	Adj.PQL	Adj.MDL
100-52-7	Benzaldehyde	~~U~~ UJ	550	1.0	500	550	130 CCH
108-95-2	Phenol	U	550	1.0	500	550	170
111-44-4	Bis(2-Chloroethyl)ether	U	360	1.0	330	360	90
95-57-8	2-Chlorophenol	U	550	1.0	500	550	180
95-48-7	2-Methylphenol	U	660	1.0	600	660	220
108-60-1	2,2'-Oxybis(1-chloropropane)	U	360	1.0	330	360	98
98-86-2	Acetophenone	U	660	1.0	600	660	200
621-64-7	N-Nitroso-di-n-propylamine	U	360	1.0	330	360	92
65794-96-9	3&4-Methylphenol	U	660	1.0	600	660	210
67-72-1	Hexachloroethane	U	360	1.0	330	360	110
98-95-3	Nitrobenzene	U	360	1.0	330	360	100
78-59-1	Isophorone	U	360	1.0	330	360	83
88-75-5	2-Nitrophenol	U	660	1.0	600	660	180
105-67-9	2,4-Dimethylphenol	U	550	1.0	500	550	180
111-91-1	Bis(2-Chloroethoxy)methane	U	360	1.0	330	360	110
120-83-2	2,4-Dichlorophenol	U	550	1.0	500	550	160
106-47-8	4-Chloroaniline	U	550	1.0	500	550	130
105-60-2	Caprolactam	U	550	1.0	500	550	160
59-50-7	4-Chloro-3-Methylphenol	U	550	1.0	500	550	180
88-06-2	2,4,6-Trichlorophenol	U	550	1.0	500	550	170
95-95-4	2,4,5-Trichlorophenol	U	550	1.0	500	550	170
91-58-7	2-Chloronaphthalene	U	360	1.0	330	360	96
92-52-4	1,1'-Biphenyl	U	360	1.0	330	360	81
88-74-4	2-Nitroaniline	U	550	1.0	500	550	83
131-11-3	Dimethyl Phthalate	U	360	1.0	330	360	86
606-20-2	2,6-Dinitrotoluene	U	360	1.0	330	360	87
208-96-8	Acenaphthylene	U	360	1.0	330	360	77
99-09-2	3-Nitroaniline	U	550	1.0	500	550	100
83-32-9	Acenaphthene	U	360	1.0	330	360	72
51-28-5	2,4-Dinitrophenol	U	1300	1.0	1200	1300	420
132-64-9	Dibenzofuran	U	360	1.0	330	360	87
100-02-7	4-Nitrophenol	U	1300	1.0	1200	1300	340
121-14-2	2,4-Dinitrotoluene	U	360	1.0	330	360	94
84-66-2	Diethylphthalate	U	360	1.0	330	360	88
7005-72-3	4-Chlorophenyl-phenylether	U	360	1.0	330	360	86
100-01-6	4-Nitroaniline	U	550	1.0	500	550	150
534-52-1	4,6-Dinitro-2-Methylphenol	U	1300	1.0	1200	1300	370
86-30-6	N-Nitrosodiphenylamine	U	730	1.0	660	730	240
101-55-3	4-Bromophenyl-phenylether	U	360	1.0	330	360	94
1912-24-9	Atrazine	U	360	1.0	330	360	100
87-86-5	Pentachlorophenol	U	910	1.0	820	910	260
120-12-7	Anthracene	U	360	1.0	330	360	93
86-74-8	Carbazole	U	550	1.0	500	550	120

MW 4/17/09

KATAHDIN ANALYTICAL SERVICES
Report of Analytical Results

8

Client: CH2MHill
Project: TO-009 Lejeune
PO No:
Sample Date: 01/14/09
Received Date: 01/15/09
Extraction Date: 01/21/09
Analysis Date: 02-FEB-2009 15:31
Report Date: 02/08/2009
Matrix: SOIL
% Solids: 90.4

Lab ID: SC0211-15
Client ID: MR08-IS262-4-5-09A
SDG: TO9-38
Extracted by: AC
Extraction Method: SW846 3550
Analyst: JLP
Analysis Method: SW846 8270C
Lab Prep Batch: WG60036
Units: ug/Kgdrywt

CAS#	Compound	Flags	Results	DF	PQL	Adj.PQL	Adj.MDL
84-74-2	Di-n-butylphthalate	U	360	1.0	330	360	110
85-68-7	Butylbenzylphthalate	U	360	1.0	330	360	100
91-94-1	3,3'-Dichlorobenzidine	U	550	1.0	500	550	130
218-01-9	Chrysene	U	360	1.0	330	360	100
117-81-7	bis(2-Ethylhexyl)phthalate	J	150	1.0	330	360	110
117-84-0	Di-n-octylphthalate	U	360	1.0	330	360	230
367-12-4	2-Fluorophenol		61%				
13127-88-3	Phenol-D6		73%				
4165-60-0	Nitrobenzene-D5		51%				
321-60-8	2-Fluorobiphenyl		58%				
118-79-6	2,4,6-Tribromophenol		70%				
1718-51-0	Terphenyl-D14		90%				

lw
4/17/09

9

KATAHDIN ANALYTICAL SERVICES
Report of Analytical Results

Client: CH2MHill
Project: TO-009 Lejeune
PO No:
Sample Date: 01/14/09
Received Date: 01/15/09
Extraction Date: 01/21/09
Analysis Date: 02-FEB-2009 16:14
Report Date: 02/08/2009
Matrix: SOIL
% Solids: 89.0

Lab ID: SC0211-17
Client ID: MR08-SS261-09A
SDG: TO9-38
Extracted by: AC
Extraction Method: SW846 3550
Analyst: JLP
Analysis Method: SW846 8270C
Lab Prep Batch: WG60036
Units: ug/Kgdrywt

CAS#	Compound	Flags	Results	DF	PQL	Adj.PQL	Adj.MDL
100-52-7	Benzaldehyde	~~U~~ UJ	560	1.0	500	560	130 CCH
108-95-2	Phenol	U	560	1.0	500	560	180
111-44-4	Bis(2-Chloroethyl)ether	U	370	1.0	330	370	91
95-57-8	2-Chlorophenol	U	560	1.0	500	560	180
95-48-7	2-Methylphenol	U	670	1.0	600	670	220
108-60-1	2,2'-Oxybis(1-chloropropane)	U	370	1.0	330	370	100
98-86-2	Acetophenone	U	670	1.0	600	670	200
621-64-7	N-Nitroso-di-n-propylamine	U	370	1.0	330	370	93
65794-96-9	3&4-Methylphenol	U	670	1.0	600	670	210
67-72-1	Hexachloroethane	U	370	1.0	330	370	110
98-95-3	Nitrobenzene	U	370	1.0	330	370	100
78-59-1	Isophorone	U	370	1.0	330	370	84
88-75-5	2-Nitrophenol	U	670	1.0	600	670	190
105-67-9	2,4-Dimethylphenol	U	560	1.0	500	560	180
111-91-1	Bis(2-Chloroethoxy)methane	U	370	1.0	330	370	110
120-83-2	2,4-Dichlorophenol	U	560	1.0	500	560	170
106-47-8	4-Chloroaniline	U	560	1.0	500	560	130
105-60-2	Caprolactam	U	560	1.0	500	560	160
59-50-7	4-Chloro-3-Methylphenol	U	560	1.0	500	560	190
88-06-2	2,4,6-Trichlorophenol	U	560	1.0	500	560	170
95-95-4	2,4,5-Trichlorophenol	U	560	1.0	500	560	170
91-58-7	2-Chloronaphthalene	U	370	1.0	330	370	98
92-52-4	1,1'-Biphenyl	U	370	1.0	330	370	82
88-74-4	2-Nitroaniline	U	560	1.0	500	560	84
131-11-3	Dimethyl Phthalate	U	370	1.0	330	370	88
606-20-2	2,6-Dinitrotoluene	U	370	1.0	330	370	89
208-96-8	Acenaphthylene	U	370	1.0	330	370	79
99-09-2	3-Nitroaniline	U	560	1.0	500	560	100
83-32-9	Acenaphthene	U	370	1.0	330	370	73
51-28-5	2,4-Dinitrophenol	U	1300	1.0	1200	1300	420
132-64-9	Dibenzofuran	U	370	1.0	330	370	89
100-02-7	4-Nitrophenol	U	1300	1.0	1200	1300	350
121-14-2	2,4-Dinitrotoluene	U	370	1.0	330	370	96
84-66-2	Diethylphthalate	U	370	1.0	330	370	90
7005-72-3	4-Chlorophenyl-phenylether	U	370	1.0	330	370	88
100-01-6	4-Nitroaniline	U	560	1.0	500	560	150
534-52-1	4,6-Dinitro-2-Methylphenol	U	1300	1.0	1200	1300	380
86-30-6	N-Nitrosodiphenylamine	U	740	1.0	660	740	250
101-55-3	4-Bromophenyl-phenylether	U	370	1.0	330	370	96
1912-24-9	Atrazine	U	370	1.0	330	370	100
87-86-5	Pentachlorophenol	U	920	1.0	820	920	270
120-12-7	Anthracene	U	370	1.0	330	370	94
86-74-8	Carbazole	U	560	1.0	500	560	120

fw 4/17/09

KATAHDIN ANALYTICAL SERVICES
Report of Analytical Results

Client: CH2MHill
Project: TO-009 Lejeune
PO No:
Sample Date: 01/14/09
Received Date: 01/15/09
Extraction Date: 01/21/09
Analysis Date: 02-FEB-2009 16:14
Report Date: 02/08/2009
Matrix: SOIL
% Solids: 89.0

Lab ID: SC0211-17
Client ID: MR08-SS261-09A
SDG: TO9-38
Extracted by: AC
Extraction Method: SW846 3550
Analyst: JLP
Analysis Method: SW846 8270C
Lab Prep Batch: WG60036
Units: ug/Kgdrywt

CAS#	Compound	Flags	Results	DF	PQL	Adj.PQL	Adj.MDL
84-74-2	Di-n-butylphthalate	U	370	1.0	330	370	110
85-68-7	Butylbenzylphthalate	U	370	1.0	330	370	100
91-94-1	3,3'-Dichlorobenzidine	U	560	1.0	500	560	130
218-01-9	Chrysene	U	370	1.0	330	370	110
117-81-7	bis(2-Ethylhexyl)phthalate	U	370	1.0	330	370	110
117-84-0	Di-n-octylphthalate	U	370	1.0	330	370	240
367-12-4	2-Fluorophenol		70%				
13127-88-3	Phenol-D6		78%				
4165-60-0	Nitrobenzene-D5		64%				
321-60-8	2-Fluorobiphenyl		66%				
118-79-6	2,4,6-Tribromophenol		84%				
1718-51-0	Terphenyl-D14		83%				

fcw
4/17/09

10

KATAHDIN ANALYTICAL SERVICES
Report of Analytical Results

Client: CH2MHill
Project: TO-009 Lejeune
PO No:
Sample Date: 01/14/09
Received Date: 01/15/09
Extraction Date: 01/24/09
Analysis Date: 30-JAN-2009 13:29
Report Date: 02/08/2009
Matrix: SOIL
% Solids: 88.0

Lab ID: SC0211-19
Client ID: MR08-IS261-4-5-09A
SDG: TO9-38
Extracted by: AC
Extraction Method: SW846 3550
Analyst: JCG
Analysis Method: SW846 8270C
Lab Prep Batch: WG60146
Units: ug/Kgdrywt

CAS#	Compound	Flags	Results	DF	PQL	Adj.PQL	Adj.MDL
100-52-7	Benzaldehyde	U	570	1.0	500	570	140
108-95-2	Phenol	U	570	1.0	500	570	180
111-44-4	Bis(2-Chloroethyl)ether	U	370	1.0	330	370	92
95-57-8	2-Chlorophenol	U	570	1.0	500	570	190
95-48-7	2-Methylphenol	U	680	1.0	600	680	230
108-60-1	2,2'-Oxybis(1-chloropropane)	U	370	1.0	330	370	100
98-86-2	Acetophenone	U	680	1.0	600	680	200
621-64-7	N-Nitroso-di-n-propylamine	U	370	1.0	330	370	94
65794-96-9	3&4-Methylphenol	U	680	1.0	600	680	210
67-72-1	Hexachloroethane	U	370	1.0	330	370	110
98-95-3	Nitrobenzene	U	370	1.0	330	370	100
78-59-1	Isophorone	U	370	1.0	330	370	85
88-75-5	2-Nitrophenol	U	680	1.0	600	680	190
105-67-9	2,4-Dimethylphenol	U	570	1.0	500	570	190
111-91-1	Bis(2-Chloroethoxy)methane	U	370	1.0	330	370	110
120-83-2	2,4-Dichlorophenol	U	570	1.0	500	570	170
106-47-8	4-Chloroaniline	U	570	1.0	500	570	140
105-60-2	Caprolactam	U	570	1.0	500	570	160
59-50-7	4-Chloro-3-Methylphenol	U	570	1.0	500	570	190
88-06-2	2,4,6-Trichlorophenol	U	570	1.0	500	570	180
95-95-4	2,4,5-Trichlorophenol	U	570	1.0	500	570	180
91-58-7	2-Chloronaphthalene	U	370	1.0	330	370	99
92-52-4	1,1'-Biphenyl	U	370	1.0	330	370	83
88-74-4	2-Nitroaniline	U	570	1.0	500	570	85
131-11-3	Dimethyl Phthalate	U	370	1.0	330	370	88
606-20-2	2,6-Dinitrotoluene	U	370	1.0	330	370	90
208-96-8	Acenaphthylene	U	370	1.0	330	370	80
99-09-2	3-Nitroaniline	U	570	1.0	500	570	110
83-32-9	Acenaphthene	J	89	1.0	330	370	74
51-28-5	2,4-Dinitrophenol	U	1400	1.0	1200	1400	430
132-64-9	Dibenzofuran	U	370	1.0	330	370	90
100-02-7	4-Nitrophenol	U	1400	1.0	1200	1400	350
121-14-2	2,4-Dinitrotoluene	U	370	1.0	330	370	96
84-66-2	Diethylphthalate	U	370	1.0	330	370	91
7005-72-3	4-Chlorophenyl-phenylether	U	370	1.0	330	370	88
100-01-6	4-Nitroaniline	U	570	1.0	500	570	150
534-52-1	4,6-Dinitro-2-Methylphenol	U	1400	1.0	1200	1400	380
86-30-6	N-Nitrosodiphenylamine	U	750	1.0	660	750	250
101-55-3	4-Bromophenyl-phenylether	U	370	1.0	330	370	96
1912-24-9	Atrazine	U	370	1.0	330	370	100
87-86-5	Pentachlorophenol	U	930	1.0	820	930	270
120-12-7	Anthracene	U	370	1.0	330	370	95
86-74-8	Carbazole	U	570	1.0	500	570	130

lw
4/17/09

10

KATAHDIN ANALYTICAL SERVICES
Report of Analytical Results

Client: CH2MHill
Project: TO-009 Lejeune
PO No:
Sample Date: 01/14/09
Received Date: 01/15/09
Extraction Date: 01/24/09
Analysis Date: 30-JAN-2009 13:29
Report Date: 02/08/2009
Matrix: SOIL
% Solids: 88.0

Lab ID: SC0211-19
Client ID: MR08-IS261-4-5-09A
SDG: TO9-38
Extracted by: AC
Extraction Method: SW846 3550
Analyst: JCG
Analysis Method: SW846 8270C
Lab Prep Batch: WG60146
Units: ug/Kgdrywt

CAS#	Compound	Flags	Results	DF	PQL	Adj.PQL	Adj.MDL
84-74-2	Di-n-butylphthalate	U	370	1.0	330	370	110
85-68-7	Butylbenzylphthalate	U	370	1.0	330	370	100
91-94-1	3,3'-Dichlorobenzidine	U	570	1.0	500	570	130
218-01-9	Chrysene	U	370	1.0	330	370	110
117-81-7	bis(2-Ethylhexyl)phthalate	J	180	1.0	330	370	110
117-84-0	Di-n-octylphthalate	U	370	1.0	330	370	240
367-12-4	2-Fluorophenol		77%				
13127-88-3	Phenol-D6		85%				
4165-60-0	Nitrobenzene-D5		75%				
321-60-8	2-Fluorobiphenyl		73%				
118-79-6	2,4,6-Tribromophenol		77%				
1718-51-0	Terphenyl-D14		92%				

LW
4/17/09

KATAHDIN ANALYTICAL SERVICES
Report of Analytical Results

Client: CH2MHill
Project: TO-009 Lejeune
PO No:
Sample Date: 01/14/09
Received Date: 01/15/09
Extraction Date: 01/24/09
Analysis Date: 30-JAN-2009 21:54
Report Date: 02/08/2009
Matrix: SOIL
% Solids: 92.8

Lab ID: SC0211-21
Client ID: MR08-SS260-09A
SDG: TO9-38
Extracted by: AC
Extraction Method: SW846 3550
Analyst: JCG
Analysis Method: SW846 8270C
Lab Prep Batch: WG60146
Units: ug/Kgdrywt

CAS#	Compound	Flags	Results	DF	PQL	Adj.PQL	Adj.MDL
100-52-7	Benzaldehyde	U	540	1.0	500	540	130
108-95-2	Phenol	U	540	1.0	500	540	170
111-44-4	Bis(2-Chloroethyl)ether	U	360	1.0	330	360	87
95-57-8	2-Chlorophenol	U	540	1.0	500	540	180
95-48-7	2-Methylphenol	U	650	1.0	600	650	220
108-60-1	2,2'-Oxybis(1-chloropropane)	U	360	1.0	330	360	96
98-86-2	Acetophenone	U	650	1.0	600	650	190
621-64-7	N-Nitroso-di-n-propylamine	U	360	1.0	330	360	89
65794-96-9	3&4-Methylphenol	U	650	1.0	600	650	200
67-72-1	Hexachloroethane	U	360	1.0	330	360	100
98-95-3	Nitrobenzene	U	360	1.0	330	360	98
78-59-1	Isophorone	U	360	1.0	330	360	81
88-75-5	2-Nitrophenol	U	650	1.0	600	650	180
105-67-9	2,4-Dimethylphenol	U	540	1.0	500	540	180
111-91-1	Bis(2-Chloroethoxy)methane	U	360	1.0	330	360	100
120-83-2	2,4-Dichlorophenol	U	540	1.0	500	540	160
106-47-8	4-Chloroaniline	U	540	1.0	500	540	130
105-60-2	Caprolactam	U	540	1.0	500	540	160
59-50-7	4-Chloro-3-Methylphenol	U	540	1.0	500	540	180
88-06-2	2,4,6-Trichlorophenol	U	540	1.0	500	540	170
95-95-4	2,4,5-Trichlorophenol	U	540	1.0	500	540	170
91-58-7	2-Chloronaphthalene	U	360	1.0	330	360	94
92-52-4	1,1'-Biphenyl	U	360	1.0	330	360	79
88-74-4	2-Nitroaniline	U	540	1.0	500	540	81
131-11-3	Dimethyl Phthalate	U	360	1.0	330	360	84
606-20-2	2,6-Dinitrotoluene	U	360	1.0	330	360	85
208-96-8	Acenaphthylene	U	360	1.0	330	360	75
99-09-2	3-Nitroaniline	U	540	1.0	500	540	100
83-32-9	Acenaphthene	U	360	1.0	330	360	70
51-28-5	2,4-Dinitrophenol	U	1300	1.0	1200	1300	410
132-64-9	Dibenzofuran	U	360	1.0	330	360	85
100-02-7	4-Nitrophenol	U	1300	1.0	1200	1300	330
121-14-2	2,4-Dinitrotoluene	U	360	1.0	330	360	92
84-66-2	Diethylphthalate	U	360	1.0	330	360	86
7005-72-3	4-Chlorophenyl-phenylether	U	360	1.0	330	360	84
100-01-6	4-Nitroaniline	U	540	1.0	500	540	140
534-52-1	4,6-Dinitro-2-Methylphenol	U	1300	1.0	1200	1300	360
86-30-6	N-Nitrosodiphenylamine	U	710	1.0	660	710	240
101-55-3	4-Bromophenyl-phenylether	U	360	1.0	330	360	92
1912-24-9	Atrazine	U	360	1.0	330	360	98
87-86-5	Pentachlorophenol	U	880	1.0	820	880	260
120-12-7	Anthracene	U	360	1.0	330	360	90
86-74-8	Carbazole	U	540	1.0	500	540	120

fw 4/17/09

11

KATAHDIN ANALYTICAL SERVICES
Report of Analytical Results

Client: CH2MHill
Project: TO-009 Lejeune
PO No:
Sample Date: 01/14/09
Received Date: 01/15/09
Extraction Date: 01/24/09
Analysis Date: 30-JAN-2009 21:54
Report Date: 02/08/2009
Matrix: SOIL
% Solids: 92.8

Lab ID: SC0211-21
Client ID: MR08-SS260-09A
SDG: TO9-38
Extracted by: AC
Extraction Method: SW846 3550
Analyst: JCG
Analysis Method: SW846 8270C
Lab Prep Batch: WG60146
Units: ug/Kgdrywt

CAS#	Compound	Flags	Results	DF	PQL	Adj.PQL	Adj.MDL
84-74-2	Di-n-butylphthalate	U	360	1.0	330	360	110
85-68-7	Butylbenzylphthalate	U	360	1.0	330	360	100
91-94-1	3,3'-Dichlorobenzidine	U	540	1.0	500	540	120
218-01-9	Chrysene	U	360	1.0	330	360	100
117-81-7	bis(2-Ethylhexyl)phthalate	J	140	1.0	330	360	100
117-84-0	Di-n-octylphthalate	U	360	1.0	330	360	230
367-12-4	2-Fluorophenol		83%				
13127-88-3	Phenol-D6		93%				
4165-60-0	Nitrobenzene-D5		81%				
321-60-8	2-Fluorobiphenyl		81%				
118-79-6	2,4,6-Tribromophenol		80%				
1718-51-0	Terphenyl-D14		95%				

lw
4/17/09

12

KATAHDIN ANALYTICAL SERVICES
Report of Analytical Results

Client: CH2MHill
Project: TO-009 Lejeune
PO No:
Sample Date: 01/14/09
Received Date: 01/15/09
Extraction Date: 01/24/09
Analysis Date: 30-JAN-2009 14:54
Report Date: 02/08/2009
Matrix: SOIL
% Solids: 97.2

Lab ID: SC0211-23
Client ID: MR08-IS260-6-7-09A
SDG: TO9-38
Extracted by: AC
Extraction Method: SW846 3550
Analyst: JCG
Analysis Method: SW846 8270C
Lab Prep Batch: WG60146
Units: ug/Kgdrywt

CAS#	Compound	Flags	Results	DF	PQL	Adj.PQL	Adj.MDL
100-52-7	Benzaldehyde	U	510	1.0	500	510	120
108-95-2	Phenol	U	510	1.0	500	510	160
111-44-4	Bis(2-Chloroethyl)ether	U	340	1.0	330	340	83
95-57-8	2-Chlorophenol	U	510	1.0	500	510	170
95-48-7	2-Methylphenol	U	620	1.0	600	620	200
108-60-1	2,2'-Oxybis(1-chloropropane)	U	340	1.0	330	340	92
98-86-2	Acetophenone	U	620	1.0	600	620	180
621-64-7	N-Nitroso-di-n-propylamine	U	340	1.0	330	340	85
65794-96-9	3&4-Methylphenol	U	620	1.0	600	620	190
67-72-1	Hexachloroethane	U	340	1.0	330	340	99
98-95-3	Nitrobenzene	U	340	1.0	330	340	94
78-59-1	Isophorone	U	340	1.0	330	340	77
88-75-5	2-Nitrophenol	U	620	1.0	600	620	170
105-67-9	2,4-Dimethylphenol	U	510	1.0	500	510	170
111-91-1	Bis(2-Chloroethoxy)methane	U	340	1.0	330	340	99
120-83-2	2,4-Dichlorophenol	U	510	1.0	500	510	150
106-47-8	4-Chloroaniline	U	510	1.0	500	510	120
105-60-2	Caprolactam	U	510	1.0	500	510	150
59-50-7	4-Chloro-3-Methylphenol	U	510	1.0	500	510	170
88-06-2	2,4,6-Trichlorophenol	U	510	1.0	500	510	160
95-95-4	2,4,5-Trichlorophenol	U	510	1.0	500	510	160
91-58-7	2-Chloronaphthalene	U	340	1.0	330	340	90
92-52-4	1,1'-Biphenyl	U	340	1.0	330	340	75
88-74-4	2-Nitroaniline	U	510	1.0	500	510	77
131-11-3	Dimethyl Phthalate	U	340	1.0	330	340	80
606-20-2	2,6-Dinitrotoluene	U	340	1.0	330	340	81
208-96-8	Acenaphthylene	U	340	1.0	330	340	72
99-09-2	3-Nitroaniline	U	510	1.0	500	510	97
83-32-9	Acenaphthene	U	340	1.0	330	340	67
51-28-5	2,4-Dinitrophenol	U	1200	1.0	1200	1200	390
132-64-9	Dibenzofuran	U	340	1.0	330	340	81
100-02-7	4-Nitrophenol	U	1200	1.0	1200	1200	320
121-14-2	2,4-Dinitrotoluene	U	340	1.0	330	340	87
84-66-2	Diethylphthalate	U	340	1.0	330	340	82
7005-72-3	4-Chlorophenyl-phenylether	U	340	1.0	330	340	80
100-01-6	4-Nitroaniline	U	510	1.0	500	510	140
534-52-1	4,6-Dinitro-2-Methylphenol	U	1200	1.0	1200	1200	350
86-30-6	N-Nitrosodiphenylamine	U	680	1.0	660	680	220
101-55-3	4-Bromophenyl-phenylether	U	340	1.0	330	340	87
1912-24-9	Atrazine	U	340	1.0	330	340	94
87-86-5	Pentachlorophenol	U	840	1.0	820	840	240
120-12-7	Anthracene	U	340	1.0	330	340	86
86-74-8	Carbazole	U	510	1.0	500	510	110

lcw
4/17/09

KATAHDIN ANALYTICAL SERVICES
Report of Analytical Results

12

Client: CH2MHill
Project: TO-009 Lejeune
PO No:
Sample Date: 01/14/09
Received Date: 01/15/09
Extraction Date: 01/24/09
Analysis Date: 30-JAN-2009 14:54
Report Date: 02/08/2009
Matrix: SOIL
% Solids: 97.2

Lab ID: SC0211-23
Client ID: MR08-IS260-6-7-09A
SDG: T09-38
Extracted by: AC
Extraction Method: SW846 3550
Analyst: JCG
Analysis Method: SW846 8270C
Lab Prep Batch: WG60146
Units: ug/Kgdrywt

CAS#	Compound	Flags	Results	DF	PQL	Adj.PQL	Adj.MDL
84-74-2	Di-n-butylphthalate	U	340	1.0	330	340	100
85-68-7	Butylbenzylphthalate	U	340	1.0	330	340	96
91-94-1	3,3'-Dichlorobenzidine	U	510	1.0	500	510	120
218-01-9	Chrysene	U	340	1.0	330	340	98
117-81-7	bis(2-Ethylhexyl)phthalate	U	340	1.0	330	340	100
117-84-0	Di-n-octylphthalate	U	340	1.0	330	340	220
367-12-4	2-Fluorophenol		74%				
13127-88-3	Phenol-D6		81%				
4165-60-0	Nitrobenzene-D5		72%				
321-60-8	2-Fluorobiphenyl		64%				
118-79-6	2,4,6-Tribromophenol		72%				
1718-51-0	Terphenyl-D14		87%				

kw
4/17/09

ENVIRONMENTAL
Data Services, Inc.

POLYNUCLEAR AROMATIC COMPOUNDS BY 8270SIM

USEPA Region IV - Level IV Review

Site: MCB Camp Lejeune, TO-09 SDG #: TO9-39

Client: CH2M HILL, Inc., Virginia Beach, Virginia Date: April 17, 2009

Laboratory: Katahdin Analytical Services, Scarborough, Maine Reviewer: Nancy Weaver

EDS ID	Client Sample ID	Laboratory Sample ID	Matrix
1	MR08-SS271-09A	SC0321-2	Soil
2	MR08-IS271-4-5-09A	SC0321-4	Soil
3	MR08-SS270-09A	SC0321-6	Soil
4	MR08-IS270-9-10-09A	SC0321-8	Soil
5	MR08-SS269-09A	SC0321-10	Soil
6	MR08-SS269D-09A	SC0321-12	Soil
7	MR08-IS269-7-8-09A	SC0321-14	Soil
8	MR08-IS269D-7-8-09A	SC0321-16	Soil
9	MR08-IS268-7-8-09A	SC0321-18	Soil
9MS	MR08-IS268-7-8-09AMS	SC0321-18MS	Soil
9MSD	MR08-IS268-7-8-09AMSD	SC0321-18MSD	Soil
10	MR08-SS267-09A	SC0321-20	Soil
11	MR08-IS267-7-8-09A	SC0321-22	Soil
12	MR08-IS236-7-8-09A	SC0321-24	Soil
13	MR08-SS236-09A	SC0321-26	Soil
14	MR08-SS222-09A	SC0321-28	Soil
15	MR08-IS222-4-5-09A	SC0321-30	Soil
16	MR08-IS223-4-5-09A	SC0321-32	Soil
17	MR08-SS223-09A	SC0321-34	Soil
18	MR08-IS212-4-5-09A	SC0321-36	Soil
19	MR08-SS212-09A	SC0321-38	Soil
20	MR08-IS213-4-5-09A	SC0321-40	Soil

The USEPA "Contract Laboratory Program National Functional Guidelines for Organic Data Review," October 1999, and professional judgment were used in evaluating the data in this summary report.

Holding Times - All samples were extracted within 14 days for soil samples and analyzed within 40 days for all samples.

GC/MS Tuning - All of the DFTPP tunes in the initial and continuing calibrations met the percent relative abundance criteria.

Initial Calibration - The initial calibrations exhibited acceptable %RSD and mean RRF values.

Continuing Calibration - The continuing calibrations exhibited acceptable %D and RRF values except the following.

CCAL Date	Compound	%D/RRF	Qualifier	Affected Samples
02/04/09 0833	Benzo (a) anthracene	67.74%	J/UJ	2, 4, 7-9, 11
02/04/09 1722	Benzo (a) anthracene	40.35%	J/UJ	1, 3, 5, 6, 12, 13, 14, 15, 16

Surrogates - All samples exhibited acceptable surrogate recoveries.

MS/MSD - The MS/MSD sample exhibited acceptable %R and RPD values.

Laboratory Control Sample - The LCS samples exhibited acceptable %R values except the following.

LCS ID	Compound	%R	Qualifier	Affected Samples
WG60147-LCS	Benzo (a) anthracene	160%	None	ND or already qualified due to CCAL

Internal Standard (IS) Area Performance - All internal standards met response and retention time (RT) criteria.

Method Blank - The method blanks were free of contamination.

Field, Equipment Blank - Field QC results are summarized below.

Blank ID	Compound	Conc. ug/L	Action Level ug/kg	Qualifier	Affected Samples
MR08-FB012609	None - ND	-	-	-	-
MR08-EB012009	None - ND	-	-	-	-

Field Duplicates - Field duplicate results are summarized below.

Compound	MR08-SS269-09A ug/kg	MR08-SS269D-09A ug/kg	RPD	Qualifier
Phenanthrene	22	19	15%	None
Fluoranthene	68	68	0%	None
Pyrene	49	48	2%	None

Compound	MR08-SS269-09A ug/kg	MR08-SS269D-09A ug/kg	RPD	Qualifier
Benzo (a) anthracene	50	50	0%	None
Benzo (b) fluoranthene	65	69	6%	None
Benzo (k) fluoranthene	32	29	10%	None
Benzo (a) pyrene	39	39	0%	None
Indeno (1,2,3-cd) pyrene	31	29	7%	None
Dibenzo (a,h) anthracene	12	12	0%	None
Benzo (g,h,i) perylene	32	30	6%	None

Compound	MR08-IS269-7-8-09A ug/kg	MR08-IS269D-7-8-09A ug/kg	RPD	Qualifier
None	ND	ND	-	-

Compound Quantitation - No discrepancies were identified.

KATAHDIN ANALYTICAL SERVICES
Report of Analytical Results

Client: CH2MHill
Project: TO-009 Lejeune
PO No:
Sample Date: 01/19/09
Received Date: 01/22/09
Extraction Date: 01/24/09
Analysis Date: 05-FEB-2009 03:02
Report Date: 02/10/2009
Matrix: SOIL
% Solids: 87.0

Lab ID: SC0321-2
Client ID: MR08-SS271-09A
SDG: TO9-39
Extracted by: AC
Extraction Method: SW846 3550
Analyst: JCG
Analysis Method: SW846 M8270C
Lab Prep Batch: WG60147
Units: ug/Kgdrywt

CAS#	Compound	Flags	Results	DF	PQL	Adj.PQL	Adj.MDL
91-20-3	Naphthalene	U	11	1.0	10	11	3.0
91-57-6	2-Methylnaphthalene	U	11	1.0	10	11	2.5
86-73-7	Fluorene	U	11	1.0	10	11	3.7
85-01-8	Phenanthrene	J	11	1.0	10	11	2.1
206-44-0	Fluoranthene	U	11	1.0	10	11	2.1
129-00-0	Pyrene	J	3.5	1.0	10	11	2.4
56-55-3	Benzo(a)anthracene	~~J~~ J	6.1	1.0	10	11	2.2 CCH
205-99-2	Benzo(b)fluoranthene	U	11	1.0	10	11	2.8
207-08-9	Benzo(k)fluoranthene	U	11	1.0	10	11	3.6
50-32-8	Benzo(a)pyrene	U	11	1.0	10	11	3.8
193-39-5	Indeno(1,2,3-cd)pyrene	U	11	1.0	10	11	2.2
53-70-3	Dibenzo(a,h)anthracene	U	11	1.0	10	11	2.1
191-24-2	Benzo(g,h,i)perylene	J	6.3	1.0	10	11	2.3
118-74-1	Hexachlorobenzene	U	11	1.0	10	11	2.1
87-68-3	Hexachlorobutadiene	U	11	1.0	10	11	2.6
77-47-4	Hexachlorocyclopentadiene	U	11	1.0	10	11	1.7
7297-45-2	2-Methylnaphthalene-D10		87%				
367-12-4	2,4-Dibromophenol		89%				
81103-79-9	Fluorene-d10		91%				
1718-51-1	Pyrene-D10		79%				

LW
4/17/09

2

KATAHDIN ANALYTICAL SERVICES
Report of Analytical Results

Client: CH2MHill
Project: TO-009 Lejeune
PO No:
Sample Date: 01/19/09
Received Date: 01/22/09
Extraction Date: 01/24/09
Analysis Date: 04-FEB-2009 11:20
Report Date: 02/10/2009
Matrix: SOIL
% Solids: 78.2

Lab ID: SC0321-4
Client ID: MR08-IS271-4-5-09A
SDG: TO9-39
Extracted by: AC
Extraction Method: SW846 3550
Analyst: JLP
Analysis Method: SW846 M8270C
Lab Prep Batch: WG60147
Units: ug/Kgdrywt

CAS#	Compound	Flags	Results	DF	PQL	Adj.PQL	Adj.MDL
91-20-3	Naphthalene	U	13	1.0	10	13	3.3
91-57-6	2-Methylnaphthalene	U	13	1.0	10	13	2.8
86-73-7	Fluorene	U	13	1.0	10	13	4.1
85-01-8	Phenanthrene	U	13	1.0	10	13	2.3
206-44-0	Fluoranthene	U	13	1.0	10	13	2.3
129-00-0	Pyrene	U	13	1.0	10	13	2.7
56-55-3	Benzo(a)anthracene	~~U~~ UJ	13	1.0	10	13	2.4 CCH
205-99-2	Benzo(b)fluoranthene	U	13	1.0	10	13	3.1
207-08-9	Benzo(k)fluoranthene	U	13	1.0	10	13	4.0
50-32-8	Benzo(a)pyrene	U	13	1.0	10	13	4.2
193-39-5	Indeno(1,2,3-cd)pyrene	U	13	1.0	10	13	2.4
53-70-3	Dibenzo(a,h)anthracene	U	13	1.0	10	13	2.3
191-24-2	Benzo(g,h,i)perylene	U	13	1.0	10	13	2.6
118-74-1	Hexachlorobenzene	U	13	1.0	10	13	2.3
87-68-3	Hexachlorobutadiene	U	13	1.0	10	13	2.9
77-47-4	Hexachlorocyclopentadiene	U	13	1.0	10	13	1.9
7297-45-2	2-Methylnaphthalene-D10		77%				
367-12-4	2,4-Dibromophenol		76%				
81103-79-9	Fluorene-d10		81%				
1718-51-1	Pyrene-D10		86%				

lw 4/17/09

3

KATAHDIN ANALYTICAL SERVICES
Report of Analytical Results

Client: CH2MHill
Project: TO-009 Lejeune
PO No:
Sample Date: 01/19/09
Received Date: 01/22/09
Extraction Date: 01/24/09
Analysis Date: 04-FEB-2009 23:36
Report Date: 02/10/2009
Matrix: SOIL
% Solids: 57.7

Lab ID: SC0321-6
Client ID: MR08-SS270-09A
SDG: TO9-39
Extracted by: AC
Extraction Method: SW846 3550
Analyst: JCG
Analysis Method: SW846 M8270C
Lab Prep Batch: WG60147
Units: ug/Kgdrywt

CAS#	Compound	Flags	Results	DF	PQL	Adj.PQL	Adj.MDL
91-20-3	Naphthalene	U	17	1.0	10	17	4.5
91-57-6	2-Methylnaphthalene	J	4.9	1.0	10	17	3.8
86-73-7	Fluorene	U	17	1.0	10	17	5.5
85-01-8	Phenanthrene		78	1.0	10	17	3.1
206-44-0	Fluoranthene		230	1.0	10	17	3.1
129-00-0	Pyrene		150	1.0	10	17	3.6
56-55-3	Benzo(a)anthracene	J	140	1.0	10	17	3.3 CCH
205-99-2	Benzo(b)fluoranthene		210	1.0	10	17	4.2
207-08-9	Benzo(k)fluoranthene		76	1.0	10	17	5.4
50-32-8	Benzo(a)pyrene		110	1.0	10	17	5.7
193-39-5	Indeno(1,2,3-cd)pyrene		83	1.0	10	17	3.3
53-70-3	Dibenzo(a,h)anthracene		33	1.0	10	17	3.1
191-24-2	Benzo(g,h,i)perylene		87	1.0	10	17	3.5
118-74-1	Hexachlorobenzene	U	17	1.0	10	17	3.1
87-68-3	Hexachlorobutadiene	U	17	1.0	10	17	4.0
77-47-4	Hexachlorocyclopentadiene	U	17	1.0	10	17	2.6
7297-45-2	2-Methylnaphthalene-D10		82%				
367-12-4	2,4-Dibromophenol		80%				
81103-79-9	Fluorene-d10		90%				
1718-51-1	Pyrene-D10		82%				

LW
4/17/09

4

KATAHDIN ANALYTICAL SERVICES
Report of Analytical Results

Client: CH2MHill
Project: TO-009 Lejeune
PO No:
Sample Date: 01/19/09
Received Date: 01/22/09
Extraction Date: 01/24/09
Analysis Date: 04-FEB-2009 12:01
Report Date: 02/10/2009
Matrix: SOIL
% Solids: 91.9

Lab ID: SC0321-8
Client ID: MR08-IS270-9-10-09A
SDG: TO9-39
Extracted by: AC
Extraction Method: SW846 3550
Analyst: JLP
Analysis Method: SW846 M8270C
Lab Prep Batch: WG60147
Units: ug/Kgdrywt

CAS#	Compound	Flags	Results	DF	PQL	Adj.PQL	Adj.MDL
91-20-3	Naphthalene	U	11	1.0	10	11	2.8
91-57-6	2-Methylnaphthalene	U	11	1.0	10	11	2.4
86-73-7	Fluorene	U	11	1.0	10	11	3.5
85-01-8	Phenanthrene	U	11	1.0	10	11	2.0
206-44-0	Fluoranthene	U	11	1.0	10	11	2.0
129-00-0	Pyrene	U	11	1.0	10	11	2.3
56-55-3	Benzo(a)anthracene	~~U~~ UJ	11	1.0	10	11	2.1 CCH
205-99-2	Benzo(b)fluoranthene	U	11	1.0	10	11	2.6
207-08-9	Benzo(k)fluoranthene	U	11	1.0	10	11	3.4
50-32-8	Benzo(a)pyrene	U	11	1.0	10	11	3.6
193-39-5	Indeno(1,2,3-cd)pyrene	U	11	1.0	10	11	2.1
53-70-3	Dibenzo(a,h)anthracene	U	11	1.0	10	11	2.0
191-24-2	Benzo(g,h,i)perylene	U	11	1.0	10	11	2.2
118-74-1	Hexachlorobenzene	U	11	1.0	10	11	2.0
87-68-3	Hexachlorobutadiene	U	11	1.0	10	11	2.5
77-47-4	Hexachlorocyclopentadiene	U	11	1.0	10	11	1.6
7297-45-2	2-Methylnaphthalene-D10		76%				
367-12-4	2,4-Dibromophenol		61%				
81103-79-9	Fluorene-d10		76%				
1718-51-1	Pyrene-D10		75%				

LW 4/17/09

5

KATAHDIN ANALYTICAL SERVICES
Report of Analytical Results

Client: CH2MHill
Project: TO-009 Lejeune
PO No:
Sample Date: 01/19/09
Received Date: 01/22/09
Extraction Date: 01/24/09
Analysis Date: 05-FEB-2009 02:21
Report Date: 02/10/2009
Matrix: SOIL
% Solids: 83.7

Lab ID: SC0321-10
Client ID: MR08-SS269-09A
SDG: TO9-39
Extracted by: AC
Extraction Method: SW846 3550
Analyst: JCG
Analysis Method: SW846 M8270C
Lab Prep Batch: WG60147
Units: ug/Kgdrywt

CAS#	Compound	Flags	Results	DF	PQL	Adj.PQL	Adj.MDL
91-20-3	Naphthalene	U	12	1.0	10	12	3.1
91-57-6	2-Methylnaphthalene	U	12	1.0	10	12	2.6
86-73-7	Fluorene	U	12	1.0	10	12	3.8
85-01-8	Phenanthrene		22	1.0	10	12	2.2
206-44-0	Fluoranthene		68	1.0	10	12	2.2
129-00-0	Pyrene		49	1.0	10	12	2.5
56-55-3	Benzo(a)anthracene	J	50	1.0	10	12	2.3 CH
205-99-2	Benzo(b)fluoranthene		65	1.0	10	12	2.9
207-08-9	Benzo(k)fluoranthene		32	1.0	10	12	3.7
50-32-8	Benzo(a)pyrene		39	1.0	10	12	3.9
193-39-5	Indeno(1,2,3-cd)pyrene		31	1.0	10	12	2.3
53-70-3	Dibenzo(a,h)anthracene		12	1.0	10	12	2.2
191-24-2	Benzo(g,h,i)perylene		32	1.0	10	12	2.4
118-74-1	Hexachlorobenzene	U	12	1.0	10	12	2.2
87-68-3	Hexachlorobutadiene	U	12	1.0	10	12	2.7
77-47-4	Hexachlorocyclopentadiene	U	12	1.0	10	12	1.8
7297-45-2	2-Methylnaphthalene-D10		91%				
367-12-4	2,4-Dibromophenol		92%				
81103-79-9	Fluorene-d10		94%				
1718-51-1	Pyrene-D10		88%				

lw
4/17/09

6

KATAHDIN ANALYTICAL SERVICES
Report of Analytical Results

Client: CH2MHill
Project: TO-009 Lejeune
PO No:
Sample Date: 01/19/09
Received Date: 01/22/09
Extraction Date: 01/24/09
Analysis Date: 05-FEB-2009 00:18
Report Date: 02/10/2009
Matrix: SOIL
% Solids: 85.4

Lab ID: SC0321-12
Client ID: MR08-SS269D-09A
SDG: TO9-39
Extracted by: AC
Extraction Method: SW846 3550
Analyst: JCG
Analysis Method: SW846 M8270C
Lab Prep Batch: WG60147
Units: ug/Kgdrywt

CAS#	Compound	Flags	Results	DF	PQL	Adj.PQL	Adj.MDL
91-20-3	Naphthalene	U	12	1.0	10	12	3.0
91-57-6	2-Methylnaphthalene	U	12	1.0	10	12	2.6
86-73-7	Fluorene	U	12	1.0	10	12	3.7
85-01-8	Phenanthrene		19	1.0	10	12	2.1
206-44-0	Fluoranthene		68	1.0	10	12	2.1
129-00-0	Pyrene		48	1.0	10	12	2.4
56-55-3	Benzo(a)anthracene	J	50	1.0	10	12	2.2 CCH
205-99-2	Benzo(b)fluoranthene		69	1.0	10	12	2.8
207-08-9	Benzo(k)fluoranthene		29	1.0	10	12	3.6
50-32-8	Benzo(a)pyrene		39	1.0	10	12	3.9
193-39-5	Indeno(1,2,3-cd)pyrene		29	1.0	10	12	2.2
53-70-3	Dibenzo(a,h)anthracene		12	1.0	10	12	2.1
191-24-2	Benzo(g,h,i)perylene		30	1.0	10	12	2.3
118-74-1	Hexachlorobenzene	U	12	1.0	10	12	2.1
87-68-3	Hexachlorobutadiene	U	12	1.0	10	12	2.7
77-47-4	Hexachlorocyclopentadiene	U	12	1.0	10	12	1.8
7297-45-2	2-Methylnaphthalene-D10		85%				
367-12-4	2,4-Dibromophenol		89%				
81103-79-9	Fluorene-d10		94%				
1718-51-1	Pyrene-D10		86%				

lw
4/17/09

7

KATAHDIN ANALYTICAL SERVICES
Report of Analytical Results

Client: CH2MHill
Project: TO-009 Lejeune
PO No:
Sample Date: 01/19/09
Received Date: 01/22/09
Extraction Date: 01/24/09
Analysis Date: 04-FEB-2009 12:43
Report Date: 02/10/2009
Matrix: SOIL
% Solids: 96.0

Lab ID: SC0321-14
Client ID: MR08-IS269-7-8-09A
SDG: TO9-39
Extracted by: AC
Extraction Method: SW846 3550
Analyst: JLP
Analysis Method: SW846 M8270C
Lab Prep Batch: WG60147
Units: ug/Kgdrywt

CAS#	Compound	Flags	Results	DF	PQL	Adj.PQL	Adj.MDL
91-20-3	Naphthalene	U	10	1.0	10	10	2.7
91-57-6	2-Methylnaphthalene	U	10	1.0	10	10	2.3
86-73-7	Fluorene	U	10	1.0	10	10	3.3
85-01-8	Phenanthrene	U	10	1.0	10	10	1.9
206-44-0	Fluoranthene	U	10	1.0	10	10	1.9
129-00-0	Pyrene	U	10	1.0	10	10	2.2
56-55-3	Benzo(a)anthracene	~~U~~ UJ	10	1.0	10	10	2.0 CCH
205-99-2	Benzo(b)fluoranthene	U	10	1.0	10	10	2.5
207-08-9	Benzo(k)fluoranthene	U	10	1.0	10	10	3.2
50-32-8	Benzo(a)pyrene	U	10	1.0	10	10	3.4
193-39-5	Indeno(1,2,3-cd)pyrene	U	10	1.0	10	10	2.0
53-70-3	Dibenzo(a,h)anthracene	U	10	1.0	10	10	1.9
191-24-2	Benzo(g,h,i)perylene	U	10	1.0	10	10	2.1
118-74-1	Hexachlorobenzene	U	10	1.0	10	10	1.9
87-68-3	Hexachlorobutadiene	U	10	1.0	10	10	2.4
77-47-4	Hexachlorocyclopentadiene	U	10	1.0	10	10	1.6
7297-45-2	2-Methylnaphthalene-D10		84%				
367-12-4	2,4-Dibromophenol		80%				
81103-79-9	Fluorene-d10		91%				
1718-51-1	Pyrene-D10		84%				

LW
4/17/09

8

KATAHDIN ANALYTICAL SERVICES
Report of Analytical Results

Client: CH2MHill
Project: TO-009 Lejeune
PO No:
Sample Date: 01/19/09
Received Date: 01/22/09
Extraction Date: 01/24/09
Analysis Date: 04-FEB-2009 14:47
Report Date: 02/10/2009
Matrix: SOIL
% Solids: 95.9

Lab ID: SC0321-16
Client ID: MR08-IS269D-7-8-09A
SDG: TO9-39
Extracted by: AC
Extraction Method: SW846 3550
Analyst: JLP
Analysis Method: SW846 M8270C
Lab Prep Batch: WG60147
Units: ug/Kgdrywt

CAS#	Compound	Flags	Results	DF	PQL	Adj.PQL	Adj.MDL	
91-20-3	Naphthalene	U	10	1.0	10	10	2.7	
91-57-6	2-Methylnaphthalene	U	10	1.0	10	10	2.3	
86-73-7	Fluorene	U	10	1.0	10	10	3.3	
85-01-8	Phenanthrene	U	10	1.0	10	10	1.9	
206-44-0	Fluoranthene	U	10	1.0	10	10	1.9	
129-00-0	Pyrene	U	10	1.0	10	10	2.2	
56-55-3	Benzo(a)anthracene	~~U~~ UJ	10	1.0	10	10	2.0	CCR
205-99-2	Benzo(b)fluoranthene	U	10	1.0	10	10	2.5	
207-08-9	Benzo(k)fluoranthene	U	10	1.0	10	10	3.2	
50-32-8	Benzo(a)pyrene	U	10	1.0	10	10	3.4	
193-39-5	Indeno(1,2,3-cd)pyrene	U	10	1.0	10	10	2.0	
53-70-3	Dibenzo(a,h)anthracene	U	10	1.0	10	10	1.9	
191-24-2	Benzo(g,h,i)perylene	U	10	1.0	10	10	2.1	
118-74-1	Hexachlorobenzene	U	10	1.0	10	10	1.9	
87-68-3	Hexachlorobutadiene	U	10	1.0	10	10	2.4	
77-47-4	Hexachlorocyclopentadiene	U	10	1.0	10	10	1.6	
7297-45-2	2-Methylnaphthalene-D10		82%					
367-12-4	2,4-Dibromophenol		78%					
81103-79-9	Fluorene-d10		86%					
1718-51-1	Pyrene-D10		78%					

JW 4/17/09

KATAHDIN ANALYTICAL SERVICES
Report of Analytical Results

Client: CH2MHill
Project: TO-009 Lejeune
PO No:
Sample Date: 01/19/09
Received Date: 01/22/09
Extraction Date: 01/24/09
Analysis Date: 04-FEB-2009 15:29
Report Date: 02/10/2009
Matrix: SOIL
% Solids: 88.2

Lab ID: SC0321-18
Client ID: 08-IS268-7-8-09A
SDG: TO9-39
Extracted by: AC
Extraction Method: SW846 3550
Analyst: JLP
Analysis Method: SW846 M8270C
Lab Prep Batch: WG60147
Units: ug/Kgdrywt

CAS#	Compound	Flags	Results	DF	PQL	Adj.PQL	Adj.MDL
91-20-3	Naphthalene	U	11	1.0	10	11	2.9
91-57-6	2-Methylnaphthalene	U	11	1.0	10	11	2.5
86-73-7	Fluorene	U	11	1.0	10	11	3.6
85-01-8	Phenanthrene	U	11	1.0	10	11	2.0
206-44-0	Fluoranthene	U	11	1.0	10	11	2.0
129-00-0	Pyrene	U	11	1.0	10	11	2.4
56-55-3	Benzo(a)anthracene	~~U~~ UJ	11	1.0	10	11	2.2 CCH
205-99-2	Benzo(b)fluoranthene	U	11	1.0	10	11	2.7
207-08-9	Benzo(k)fluoranthene	U	11	1.0	10	11	3.5
50-32-8	Benzo(a)pyrene	U	11	1.0	10	11	3.7
193-39-5	Indeno(1,2,3-cd)pyrene	U	11	1.0	10	11	2.2
53-70-3	Dibenzo(a,h)anthracene	U	11	1.0	10	11	2.0
191-24-2	Benzo(g,h,i)perylene	U	11	1.0	10	11	2.3
118-74-1	Hexachlorobenzene	U	11	1.0	10	11	2.0
87-68-3	Hexachlorobutadiene	U	11	1.0	10	11	2.6
77-47-4	Hexachlorocyclopentadiene	U	11	1.0	10	11	1.7
7297-45-2	2-Methylnaphthalene-D10		77%				
367-12-4	2,4-Dibromophenol		74%				
81103-79-9	Fluorene-d10		83%				
1718-51-1	Pyrene-D10		84%				

ccw 4/17/09

10

KATAHDIN ANALYTICAL SERVICES
Report of Analytical Results

Client: CH2MHill
Project: TO-009 Lejeune
PO No:
Sample Date: 01/19/09
Received Date: 01/22/09
Extraction Date: 01/24/09
Analysis Date: 05-FEB-2009 03:43
Report Date: 02/10/2009
Matrix: SOIL
% Solids: 95.8

Lab ID: SC0321-20
Client ID: MR08-SS267-09A
SDG: TO9-39
Extracted by: AC
Extraction Method: SW846 3550
Analyst: JCG
Analysis Method: SW846 M8270C
Lab Prep Batch: WG60147
Units: ug/Kgdrywt

CAS#	Compound	Flags	Results	DF	PQL	Adj.PQL	Adj.MDL	
91-20-3	Naphthalene	U	10	1.0	10	10	2.7	
91-57-6	2-Methylnaphthalene	U	10	1.0	10	10	2.3	
86-73-7	Fluorene	U	10	1.0	10	10	3.3	
85-01-8	Phenanthrene		84	1.0	10	10	1.9	
206-44-0	Fluoranthene		17	1.0	10	10	1.9	
129-00-0	Pyrene		16	1.0	10	10	2.2	
56-55-3	Benzo(a)anthracene	J	18	1.0	10	10	2.0	CCH
205-99-2	Benzo(b)fluoranthene	U	10	1.0	10	10	2.5	
207-08-9	Benzo(k)fluoranthene	U	10	1.0	10	10	3.2	
50-32-8	Benzo(a)pyrene		35	1.0	10	10	3.4	
193-39-5	Indeno(1,2,3-cd)pyrene	U	10	1.0	10	10	2.0	
53-70-3	Dibenzo(a,h)anthracene	U	10	1.0	10	10	1.9	
191-24-2	Benzo(g,h,i)perylene	U	10	1.0	10	10	2.1	
118-74-1	Hexachlorobenzene	U	10	1.0	10	10	1.9	
87-68-3	Hexachlorobutadiene	U	10	1.0	10	10	2.4	
77-47-4	Hexachlorocyclopentadiene	U	10	1.0	10	10	1.6	
7297-45-2	2-Methylnaphthalene-D10		89%					
367-12-4	2,4-Dibromophenol		90%					
81103-79-9	Fluorene-d10		91%					
1718-51-1	Pyrene-D10		60%					

lw
4/17/09

11

KATAHDIN ANALYTICAL SERVICES
Report of Analytical Results

Client: CH2MHill
Project: TO-009 Lejeune
PO No:
Sample Date: 01/19/09
Received Date: 01/22/09
Extraction Date: 01/24/09
Analysis Date: 04-FEB-2009 16:10
Report Date: 02/10/2009
Matrix: SOIL
% Solids: 88.8

Lab ID: SC0321-22
Client ID: MR08-IS267-7-8-09A
SDG: TO9-39
Extracted by: AC
Extraction Method: SW846 3550
Analyst: JLP
Analysis Method: SW846 M8270C
Lab Prep Batch: WG60147
Units: ug/Kgdrywt

CAS#	Compound	Flags	Results	DF	PQL	Adj.PQL	Adj.MDL	
91-20-3	Naphthalene	U	11	1.0	10	11	2.9	
91-57-6	2-Methylnaphthalene	U	11	1.0	10	11	2.5	
86-73-7	Fluorene	U	11	1.0	10	11	3.6	
85-01-8	Phenanthrene	U	11	1.0	10	11	2.0	
206-44-0	Fluoranthene	U	11	1.0	10	11	2.0	
129-00-0	Pyrene	U	11	1.0	10	11	2.4	
56-55-3	Benzo(a)anthracene	~~U~~ UJ	11	1.0	10	11	2.1	CCH
205-99-2	Benzo(b)fluoranthene	U	11	1.0	10	11	2.7	
207-08-9	Benzo(k)fluoranthene	U	11	1.0	10	11	3.5	
50-32-8	Benzo(a)pyrene	U	11	1.0	10	11	3.7	
193-39-5	Indeno(1,2,3-cd)pyrene	U	11	1.0	10	11	2.1	
53-70-3	Dibenzo(a,h)anthracene	U	11	1.0	10	11	2.0	
191-24-2	Benzo(g,h,i)perylene	U	11	1.0	10	11	2.2	
118-74-1	Hexachlorobenzene	U	11	1.0	10	11	2.0	
87-68-3	Hexachlorobutadiene	U	11	1.0	10	11	2.6	
77-47-4	Hexachlorocyclopentadiene	U	11	1.0	10	11	1.7	
7297-45-2	2-Methylnaphthalene-D10		82%					
367-12-4	2,4-Dibromophenol		72%					
81103-79-9	Fluorene-d10		86%					
1718-51-1	Pyrene-D10		83%					

LW 4/17/09

12

KATAHDIN ANALYTICAL SERVICES
Report of Analytical Results

Client: CH2MHill
Project: TO-009 Lejeune
PO No:
Sample Date: 01/20/09
Received Date: 01/22/09
Extraction Date: 01/24/09
Analysis Date: 04-FEB-2009 20:11
Report Date: 02/10/2009
Matrix: SOIL
% Solids: 83.6

Lab ID: SC0321-24
Client ID: MR08-IS236-7-8-09A
SDG: TO9-39
Extracted by: AC
Extraction Method: SW846 3550
Analyst: JCG
Analysis Method: SW846 M8270C
Lab Prep Batch: WG60147
Units: ug/Kgdrywt

CAS#	Compound	Flags	Results	DF	PQL	Adj.PQL	Adj.MDL
91-20-3	Naphthalene	U	12	1.0	10	12	3.1
91-57-6	2-Methylnaphthalene	U	12	1.0	10	12	2.6
86-73-7	Fluorene	U	12	1.0	10	12	3.8
85-01-8	Phenanthrene	U	12	1.0	10	12	2.2
206-44-0	Fluoranthene	U	12	1.0	10	12	2.2
129-00-0	Pyrene	U	12	1.0	10	12	2.5
56-55-3	Benzo(a)anthracene	~~U~~ UJ	12	1.0	10	12	2.3 CCH
205-99-2	Benzo(b)fluoranthene	U	12	1.0	10	12	2.9
207-08-9	Benzo(k)fluoranthene	U	12	1.0	10	12	3.7
50-32-8	Benzo(a)pyrene	U	12	1.0	10	12	3.9
193-39-5	Indeno(1,2,3-cd)pyrene	U	12	1.0	10	12	2.3
53-70-3	Dibenzo(a,h)anthracene	U	12	1.0	10	12	2.2
191-24-2	Benzo(g,h,i)perylene	U	12	1.0	10	12	2.4
118-74-1	Hexachlorobenzene	U	12	1.0	10	12	2.2
87-68-3	Hexachlorobutadiene	U	12	1.0	10	12	2.8
77-47-4	Hexachlorocyclopentadiene	U	12	1.0	10	12	1.8
7297-45-2	2-Methylnaphthalene-D10		77%				
367-12-4	2,4-Dibromophenol		67%				
81103-79-9	Fluorene-d10		80%				
1718-51-1	Pyrene-D10		85%				

MW 4/17/09

13

KATAHDIN ANALYTICAL SERVICES
Report of Analytical Results

Client: CH2MHill
Project: TO-009 Lejeune
PO No:
Sample Date: 01/20/09
Received Date: 01/22/09
Extraction Date: 01/24/09
Analysis Date: 04-FEB-2009 22:14
Report Date: 02/10/2009
Matrix: SOIL
% Solids: 79.9

Lab ID: SC0321-26
Client ID: MR08-SS236-09A
SDG: TO9-39
Extracted by: AC
Extraction Method: SW846 3550
Analyst: JCG
Analysis Method: SW846 M8270C
Lab Prep Batch: WG60147
Units: ug/Kgdrywt

CAS#	Compound	Flags	Results	DF	PQL	Adj.PQL	Adj.MDL	
91-20-3	Naphthalene	U	12	1.0	10	12	3.2	
91-57-6	2-Methylnaphthalene	U	12	1.0	10	12	2.8	
86-73-7	Fluorene	U	12	1.0	10	12	4.0	
85-01-8	Phenanthrene	J	12	1.0	10	12	2.2	
206-44-0	Fluoranthene		57	1.0	10	12	2.2	
129-00-0	Pyrene		41	1.0	10	12	2.6	
56-55-3	Benzo(a)anthracene	J	39	1.0	10	12	2.4	CCH
205-99-2	Benzo(b)fluoranthene		70	1.0	10	12	3.0	
207-08-9	Benzo(k)fluoranthene		26	1.0	10	12	3.9	
50-32-8	Benzo(a)pyrene		31	1.0	10	12	4.1	
193-39-5	Indeno(1,2,3-cd)pyrene		26	1.0	10	12	2.4	
53-70-3	Dibenzo(a,h)anthracene	J	9.7	1.0	10	12	2.2	
191-24-2	Benzo(g,h,i)perylene		27	1.0	10	12	2.5	
118-74-1	Hexachlorobenzene	U	12	1.0	10	12	2.2	
87-68-3	Hexachlorobutadiene	U	12	1.0	10	12	2.9	
77-47-4	Hexachlorocyclopentadiene	U	12	1.0	10	12	1.9	
7297-45-2	2-Methylnaphthalene-D10		77%					
367-12-4	2,4-Dibromophenol		72%					
81103-79-9	Fluorene-d10		84%					
1718-51-1	Pyrene-D10		79%					

lew 4/17/09

KATAHDIN ANALYTICAL SERVICES
Report of Analytical Results

Client: CH2MHill
Project: TO-009 Lejeune
PO No:
Sample Date: 01/20/09
Received Date: 01/22/09
Extraction Date: 01/24/09
Analysis Date: 04-FEB-2009 22:55
Report Date: 02/10/2009
Matrix: SOIL
% Solids: 86.7

Lab ID: SC0321-28
Client ID: MR08-SS222-09A
SDG: TO9-39
Extracted by: AC
Extraction Method: SW846 3550
Analyst: JCG
Analysis Method: SW846 M8270C
Lab Prep Batch: WG60147
Units: ug/Kgdrywt

CAS#	Compound	Flags	Results	DF	PQL	Adj.PQL	Adj.MDL	
91-20-3	Naphthalene	U	12	1.0	10	12	3.0	
91-57-6	2-Methylnaphthalene	U	12	1.0	10	12	2.5	
86-73-7	Fluorene	U	12	1.0	10	12	3.7	
85-01-8	Phenanthrene	J	10	1.0	10	12	2.1	
206-44-0	Fluoranthene		54	1.0	10	12	2.1	
129-00-0	Pyrene		34	1.0	10	12	2.4	
56-55-3	Benzo(a)anthracene	J	30	1.0	10	12	2.2	CCH
205-99-2	Benzo(b)fluoranthene		50	1.0	10	12	2.8	
207-08-9	Benzo(k)fluoranthene		23	1.0	10	12	3.6	
50-32-8	Benzo(a)pyrene		27	1.0	10	12	3.8	
193-39-5	Indeno(1,2,3-cd)pyrene		22	1.0	10	12	2.2	
53-70-3	Dibenzo(a,h)anthracene	J	8.3	1.0	10	12	2.1	
191-24-2	Benzo(g,h,i)perylene		23	1.0	10	12	2.3	
118-74-1	Hexachlorobenzene	U	12	1.0	10	12	2.1	
87-68-3	Hexachlorobutadiene	U	12	1.0	10	12	2.6	
77-47-4	Hexachlorocyclopentadiene	U	12	1.0	10	12	1.7	
7297-45-2	2-Methylnaphthalene-D10		76%					
367-12-4	2,4-Dibromophenol		79%					
81103-79-9	Fluorene-d10		87%					
1718-51-1	Pyrene-D10		87%					

MW 4/17/09

KATAHDIN ANALYTICAL SERVICES
Report of Analytical Results

Client: CH2MHill
Project: TO-009 Lejeune
PO No:
Sample Date: 01/20/09
Received Date: 01/22/09
Extraction Date: 01/24/09
Analysis Date: 04-FEB-2009 20:51
Report Date: 02/10/2009
Matrix: SOIL
% Solids: 89.5

Lab ID: SC0321-30
Client ID: MR08-IS222-4-5-09A
SDG: TO9-39
Extracted by: AC
Extraction Method: SW846 3550
Analyst: JCG
Analysis Method: SW846 M8270C
Lab Prep Batch: WG60147
Units: ug/Kgdrywt

CAS#	Compound	Flags	Results	DF	PQL	Adj.PQL	Adj.MDL
91-20-3	Naphthalene	U	11	1.0	10	11	2.9
91-57-6	2-Methylnaphthalene	U	11	1.0	10	11	2.4
86-73-7	Fluorene	U	11	1.0	10	11	3.6
85-01-8	Phenanthrene	U	11	1.0	10	11	2.0
206-44-0	Fluoranthene	U	11	1.0	10	11	2.0
129-00-0	Pyrene	U	11	1.0	10	11	2.3
56-55-3	Benzo(a)anthracene	~~U~~ UJ	11	1.0	10	11	2.1 CCH
205-99-2	Benzo(b)fluoranthene	U	11	1.0	10	11	2.7
207-08-9	Benzo(k)fluoranthene	U	11	1.0	10	11	3.5
50-32-8	Benzo(a)pyrene	U	11	1.0	10	11	3.7
193-39-5	Indeno(1,2,3-cd)pyrene	U	11	1.0	10	11	2.1
53-70-3	Dibenzo(a,h)anthracene	U	11	1.0	10	11	2.0
191-24-2	Benzo(g,h,i)perylene	U	11	1.0	10	11	2.2
118-74-1	Hexachlorobenzene	U	11	1.0	10	11	2.0
87-68-3	Hexachlorobutadiene	U	11	1.0	10	11	2.6
77-47-4	Hexachlorocyclopentadiene	U	11	1.0	10	11	1.7
7297-45-2	2-Methylnaphthalene-D10		72%				
367-12-4	2,4-Dibromophenol		64%				
81103-79-9	Fluorene-d10		79%				
1718-51-1	Pyrene-D10		89%				

lw 4/17/09

16

KATAHDIN ANALYTICAL SERVICES
Report of Analytical Results

Client: CH2MHill
Project: TO-009 Lejeune
PO No:
Sample Date: 01/20/09
Received Date: 01/22/09
Extraction Date: 01/24/09
Analysis Date: 04-FEB-2009 21:33
Report Date: 02/10/2009
Matrix: SOIL
% Solids: 89.0

Lab ID: SC0321-32
Client ID: MR08-IS223-4-5-09A
SDG: TO9-39
Extracted by: AC
Extraction Method: SW846 3550
Analyst: JCG
Analysis Method: SW846 M8270C
Lab Prep Batch: WG60147
Units: ug/Kgdrywt

CAS#	Compound	Flags	Results	DF	PQL	Adj.PQL	Adj.MDL
91-20-3	Naphthalene	U	11	1.0	10	11	2.9
91-57-6	2-Methylnaphthalene	U	11	1.0	10	11	2.5
86-73-7	Fluorene	U	11	1.0	10	11	3.6
85-01-8	Phenanthrene	U	11	1.0	10	11	2.0
206-44-0	Fluoranthene	U	11	1.0	10	11	2.0
129-00-0	Pyrene	U	11	1.0	10	11	2.4
56-55-3	Benzo(a)anthracene	~~U~~ UJ	11	1.0	10	11	2.1 CCH
205-99-2	Benzo(b)fluoranthene	U	11	1.0	10	11	2.7
207-08-9	Benzo(k)fluoranthene	U	11	1.0	10	11	3.5
50-32-8	Benzo(a)pyrene	U	11	1.0	10	11	3.7
193-39-5	Indeno(1,2,3-cd)pyrene	U	11	1.0	10	11	2.1
53-70-3	Dibenzo(a,h)anthracene	U	11	1.0	10	11	2.0
191-24-2	Benzo(g,h,i)perylene	U	11	1.0	10	11	2.2
118-74-1	Hexachlorobenzene	U	11	1.0	10	11	2.0
87-68-3	Hexachlorobutadiene	U	11	1.0	10	11	2.6
77-47-4	Hexachlorocyclopentadiene	U	11	1.0	10	11	1.7
7297-45-2	2-Methylnaphthalene-D10		76%				
367-12-4	2,4-Dibromophenol		72%				
81103-79-9	Fluorene-d10		81%				
1718-51-1	Pyrene-D10		82%				

AW 4/17/09

KATAHDIN ANALYTICAL SERVICES
Report of Analytical Results

Client: CH2MHill
Project: TO-009 Lejeune
PO No:
Sample Date: 01/20/09
Received Date: 01/22/09
Extraction Date: 01/26/09
Analysis Date: 03-FEB-2009 22:42
Report Date: 02/10/2009
Matrix: SOIL
% Solids: 89.3

Lab ID: SC0321-34
Client ID: MR08-SS223-09A
SDG: TO9-39
Extracted by: AC
Extraction Method: SW846 3550
Analyst: JCG
Analysis Method: SW846 M8270C
Lab Prep Batch: WG60197
Units: ug/Kgdrywt

CAS#	Compound	Flags	Results	DF	PQL	Adj.PQL	Adj.MDL
91-20-3	Naphthalene	U	11	1.0	10	11	2.9
91-57-6	2-Methylnaphthalene	U	11	1.0	10	11	2.5
86-73-7	Fluorene	U	11	1.0	10	11	3.6
85-01-8	Phenanthrene	J	4.3	1.0	10	11	2.0
206-44-0	Fluoranthene		23	1.0	10	11	2.0
129-00-0	Pyrene		15	1.0	10	11	2.4
56-55-3	Benzo(a)anthracene	J	6.2	1.0	10	11	2.1
205-99-2	Benzo(b)fluoranthene		20	1.0	10	11	2.7
207-08-9	Benzo(k)fluoranthene	J	9.1	1.0	10	11	3.5
50-32-8	Benzo(a)pyrene	J	11	1.0	10	11	3.7
193-39-5	Indeno(1,2,3-cd)pyrene	J	9.3	1.0	10	11	2.1
53-70-3	Dibenzo(a,h)anthracene	J	4.6	1.0	10	11	2.0
191-24-2	Benzo(g,h,i)perylene	J	11	1.0	10	11	2.2
118-74-1	Hexachlorobenzene	U	11	1.0	10	11	2.0
87-68-3	Hexachlorobutadiene	U	11	1.0	10	11	2.6
77-47-4	Hexachlorocyclopentadiene	U	11	1.0	10	11	1.7
7297-45-2	2-Methylnaphthalene-D10		79%				
367-12-4	2,4-Dibromophenol		74%				
81103-79-9	Fluorene-d10		86%				
1718-51-1	Pyrene-D10		96%				

lw
4/17/09

KATAHDIN ANALYTICAL SERVICES
Report of Analytical Results

Client: CH2MHill
Project: TO-009 Lejeune
PO No:
Sample Date: 01/20/09
Received Date: 01/22/09
Extraction Date: 01/26/09
Analysis Date: 03-FEB-2009 23:23
Report Date: 02/10/2009
Matrix: SOIL
% Solids: 87.3

Lab ID: SC0321-36
Client ID: MR08-IS212-4-5-09A
SDG: TO9-39
Extracted by: AC
Extraction Method: SW846 3550
Analyst: JCG
Analysis Method: SW846 M8270C
Lab Prep Batch: WG60197
Units: ug/Kgdrywt

CAS#	Compound	Flags	Results	DF	PQL	Adj.PQL	Adj.MDL
91-20-3	Naphthalene	U	11	1.0	10	11	3.0
91-57-6	2-Methylnaphthalene	U	11	1.0	10	11	2.5
86-73-7	Fluorene	U	11	1.0	10	11	3.7
85-01-8	Phenanthrene	U	11	1.0	10	11	2.1
206-44-0	Fluoranthene	U	11	1.0	10	11	2.1
129-00-0	Pyrene	U	11	1.0	10	11	2.4
56-55-3	Benzo(a)anthracene	U	11	1.0	10	11	2.2
205-99-2	Benzo(b)fluoranthene	U	11	1.0	10	11	2.8
207-08-9	Benzo(k)fluoranthene	U	11	1.0	10	11	3.6
50-32-8	Benzo(a)pyrene	U	11	1.0	10	11	3.8
193-39-5	Indeno(1,2,3-cd)pyrene	U	11	1.0	10	11	2.2
53-70-3	Dibenzo(a,h)anthracene	U	11	1.0	10	11	2.1
191-24-2	Benzo(g,h,i)perylene	U	11	1.0	10	11	2.3
118-74-1	Hexachlorobenzene	U	11	1.0	10	11	2.1
87-68-3	Hexachlorobutadiene	U	11	1.0	10	11	2.6
77-47-4	Hexachlorocyclopentadiene	U	11	1.0	10	11	1.7
7297-45-2	2-Methylnaphthalene-D10		87%				
367-12-4	2,4-Dibromophenol		78%				
81103-79-9	Fluorene-d10		92%				
1718-51-1	Pyrene-D10		107%				

hw
4/7/09

KATAHDIN ANALYTICAL SERVICES
Report of Analytical Results

Client: CH2MHill
Project: TO-009 Lejeune
PO No:
Sample Date: 01/20/09
Received Date: 01/22/09
Extraction Date: 01/26/09
Analysis Date: 04-FEB-2009 00:45
Report Date: 02/10/2009
Matrix: SOIL
% Solids: 87.7

Lab ID: SC0321-38
Client ID: MR08-SS212-09A
SDG: TO9-39
Extracted by: AC
Extraction Method: SW846 3550
Analyst: JCG
Analysis Method: SW846 M8270C
Lab Prep Batch: WG60197
Units: ug/Kgdrywt

CAS#	Compound	Flags	Results	DF	PQL	Adj.PQL	Adj.MDL
91-20-3	Naphthalene	U	11	1.0	10	11	3.0
91-57-6	2-Methylnaphthalene	U	11	1.0	10	11	2.5
86-73-7	Fluorene	U	11	1.0	10	11	3.6
85-01-8	Phenanthrene	J	3.1	1.0	10	11	2.0
206-44-0	Fluoranthene		12	1.0	10	11	2.0
129-00-0	Pyrene	J	9.2	1.0	10	11	2.4
56-55-3	Benzo(a)anthracene	J	4.2	1.0	10	11	2.2
205-99-2	Benzo(b)fluoranthene		12	1.0	10	11	2.7
207-08-9	Benzo(k)fluoranthene	J	5.6	1.0	10	11	3.5
50-32-8	Benzo(a)pyrene	J	6.6	1.0	10	11	3.8
193-39-5	Indeno(1,2,3-cd)pyrene	J	5.4	1.0	10	11	2.2
53-70-3	Dibenzo(a,h)anthracene	U	11	1.0	10	11	2.0
191-24-2	Benzo(g,h,i)perylene	J	5.8	1.0	10	11	2.3
118-74-1	Hexachlorobenzene	U	11	1.0	10	11	2.0
87-68-3	Hexachlorobutadiene	U	11	1.0	10	11	2.6
77-47-4	Hexachlorocyclopentadiene	U	11	1.0	10	11	1.7
7297-45-2	2-Methylnaphthalene-D10		82%				
367-12-4	2,4-Dibromophenol		82%				
81103-79-9	Fluorene-d10		96%				
1718-51-1	Pyrene-D10		91%				

lcw
4/17/09

KATAHDIN ANALYTICAL SERVICES
Report of Analytical Results

Client: CH2MHill
Project: TO-009 Lejeune
PO No:
Sample Date: 01/20/09
Received Date: 01/22/09
Extraction Date: 01/26/09
Analysis Date: 04-FEB-2009 00:04
Report Date: 02/10/2009
Matrix: SOIL
% Solids: 84.2

Lab ID: SC0321-40
Client ID: MR08-IS213-4-5-09A
SDG: TO9-39
Extracted by: AC
Extraction Method: SW846 3550
Analyst: JCG
Analysis Method: SW846 M8270C
Lab Prep Batch: WG60197
Units: ug/Kgdrywt

CAS#	Compound	Flags	Results	DF	PQL	Adj.PQL	Adj.MDL
91-20-3	Naphthalene	U	12	1.0	10	12	3.1
91-57-6	2-Methylnaphthalene	U	12	1.0	10	12	2.6
86-73-7	Fluorene	U	12	1.0	10	12	3.8
85-01-8	Phenanthrene	U	12	1.0	10	12	2.1
206-44-0	Fluoranthene	U	12	1.0	10	12	2.1
129-00-0	Pyrene	U	12	1.0	10	12	2.5
56-55-3	Benzo(a)anthracene	U	12	1.0	10	12	2.2
205-99-2	Benzo(b)fluoranthene	U	12	1.0	10	12	2.8
207-08-9	Benzo(k)fluoranthene	U	12	1.0	10	12	3.7
50-32-8	Benzo(a)pyrene	U	12	1.0	10	12	3.9
193-39-5	Indeno(1,2,3-cd)pyrene	U	12	1.0	10	12	2.2
53-70-3	Dibenzo(a,h)anthracene	U	12	1.0	10	12	2.1
191-24-2	Benzo(g,h,i)perylene	U	12	1.0	10	12	2.4
118-74-1	Hexachlorobenzene	U	12	1.0	10	12	2.1
87-68-3	Hexachlorobutadiene	U	12	1.0	10	12	2.7
77-47-4	Hexachlorocyclopentadiene	U	12	1.0	10	12	1.8
7297-45-2	2-Methylnaphthalene-D10		77%				
367-12-4	2,4-Dibromophenol		71%				
81103-79-9	Fluorene-d10		83%				
1718-51-1	Pyrene-D10		103%				

JW 4/17/09

ENVIRONMENTAL
Data Services, Inc.

SEMIVOLATILE ORGANIC COMPOUNDS
USEPA Region IV - Level IV Review

Site: MCB Camp Lejeune, TO-09 SDG #: TO9-39

Client: CH2M HILL, Inc., Virginia Beach, Virginia Date: April 17, 2009

Laboratory: Katahdin Analytical Services, Scarborough, Maine Reviewer: Nancy Weaver

EDS ID	Client Sample ID	Laboratory Sample ID	Matrix
1	MR08-SS271-09A	SC0321-1	Soil
2	MR08-IS271-4-5-09A	SC0321-3	Soil
3	MR08-SS270-09A	SC0321-5	Soil
4	MR08-IS270-9-10-09A	SC0321-7	Soil
5	MR08-SS269-09A	SC0321-9	Soil
6	MR08-SS269D-09A	SC0321-11	Soil
7	MR08-IS269-7-8-09A	SC0321-13	Soil
8	MR08-IS269D-7-8-09A	SC0321-15	Soil
9	MR08-IS268-7-8-09A	SC0321-17	Soil
9MS	MR08-IS268-7-8-09AMS	SC0321-17MS	Soil
9MSD	MR08-IS268-7-8-09AMSD	SC0321-17MSD	Soil
10	MR08-SS267-09A	SC0321-19	Soil
11	MR08-IS267-7-8-09A	SC0321-21	Soil
12	MR08-IS236-7-8-09A	SC0321-23	Soil
13	MR08-SS236-09A	SC0321-25	Soil
14	MR08-SS222-09A	SC0321-27	Soil
15	MR08-IS222-4-5-09A	SC0321-29	Soil
16	MR08-IS223-4-5-09A	SC0321-31	Soil
17	MR08-SS223-09A	SC0321-33	Soil
18	MR08-IS212-4-5-09A	SC0321-35	Soil
19	MR08-SS212-09A	SC0321-37	Soil
20	MR08-IS213-4-5-09A	SC0321-39	Soil

The USEPA "Contract Laboratory Program National Functional Guidelines for Organic Data Review," October 1999, and professional judgement were used in evaluating the data in this summary report.

Holding Times - All samples were extracted within 14 days for soil samples and analyzed within 40 days for all samples.

GC/MS Tuning - All of the DFTPP tunes in the initial and continuing calibrations met the percent relative abundance criteria.

Initial Calibration - The initial calibrations exhibited acceptable %RSD and mean RRF values.

Continuing Calibration - The continuing calibrations exhibited acceptable %D and RRF values except the following.

CCAL Date	Compound	%D/RRF	Qualifier	Affected Samples
02/09/09 0942	Benzaldehyde	37.61%	J/UJ	2, 4, 7-9, 11
	4-Nitrophenol	38.64%	J/UJ	2, 4, 7-9, 11
02/09/09 1719	Benzaldehyde	39.14%	J/UJ	1, 3, 5, 6, 12, 15, 16
	2,4-Dinitrophenol	25.04%	J/UJ	1, 3, 5, 6, 12, 15, 16
	4-Nitrophenol	49.46%	J/UJ	1, 3, 5, 6, 12, 15, 16

Surrogates - All samples exhibited acceptable surrogate recoveries.

MS/MSD - The MS/MSD sample exhibited acceptable %R and RPD values.

Laboratory Control Sample - The LCS samples exhibited acceptable %R values.

Internal Standard (IS) Area Performance - All internal standards met response and retention time (RT) criteria.

Method Blank - The method blanks were free of contamination.

Field, Equipment Blank - Field QC results are summarized below.

Blank ID	Compound	Conc. ug/L	Action Level ug/L	Qualifier	Affected Samples
MR08-FB012609	None - ND	-	-	-	-
MR08-EB012009	None - ND	-	-	-	-

Field Duplicates - Field duplicate results are summarized below.

Compound	MR08-SS269-09A ug/kg	MR08-SS269D-09A ug/kg	RPD	Qualifier
bis (2-Ethylhexyl) phthalate	900	810	11%	None
Acenaphthene	390 U	92	NC	None

Compound	MR08-IS269-7-8-09A ug/kg	MR08-IS269D-7-8-09A ug/kg	RPD	Qualifier
None	ND	ND	-	-

Tentatively Identified Compounds (TICs) - TICs were not reported.

Compound Quantitation - No discrepancies were identified.

KATAHDIN ANALYTICAL SERVICES
Report of Analytical Results

Client: CH2MHill
Project: TO-009 Lejeune
PO No:
Sample Date: 01/19/09
Received Date: 01/22/09
Extraction Date: 01/24/09
Analysis Date: 09-FEB-2009 20:08
Report Date: 02/11/2009
Matrix: SOIL
% Solids: 87.0

Lab ID: SC0321-1
Client ID: MR08-SS271-09A
SDG: TO9-39
Extracted by: AC
Extraction Method: SW846 3550
Analyst: JCG
Analysis Method: SW846 8270C
Lab Prep Batch: WG60146
Units: ug/Kgdrywt

CAS#	Compound	Flags	Results	DF	PQL	Adj.PQL	Adj.MDL
100-52-7	Benzaldehyde	~~U~~ UJ	570	1.0	500	570	140 CCH
108-95-2	Phenol	U	570	1.0	500	570	180
111-44-4	Bis(2-Chloroethyl)ether	U	380	1.0	330	380	93
95-57-8	2-Chlorophenol	U	570	1.0	500	570	190
95-48-7	2-Methylphenol	U	690	1.0	600	690	230
108-60-1	2,2'-Oxybis(1-chloropropane)	U	380	1.0	330	380	100
98-86-2	Acetophenone	U	690	1.0	600	690	200
621-64-7	N-Nitroso-di-n-propylamine	U	380	1.0	330	380	95
65794-96-9	3&4-Methylphenol	U	690	1.0	600	690	210
67-72-1	Hexachloroethane	U	380	1.0	330	380	110
98-95-3	Nitrobenzene	U	380	1.0	330	380	100
78-59-1	Isophorone	U	380	1.0	330	380	86
88-75-5	2-Nitrophenol	U	690	1.0	600	690	190
105-67-9	2,4-Dimethylphenol	U	570	1.0	500	570	190
111-91-1	Bis(2-Chloroethoxy)methane	U	380	1.0	330	380	110
120-83-2	2,4-Dichlorophenol	U	570	1.0	500	570	170
106-47-8	4-Chloroaniline	U	570	1.0	500	570	140
105-60-2	Caprolactam	U	570	1.0	500	570	160
59-50-7	4-Chloro-3-Methylphenol	U	570	1.0	500	570	190
88-06-2	2,4,6-Trichlorophenol	U	570	1.0	500	570	180
95-95-4	2,4,5-Trichlorophenol	U	570	1.0	500	570	180
91-58-7	2-Chloronaphthalene	U	380	1.0	330	380	100
92-52-4	1,1'-Biphenyl	U	380	1.0	330	380	84
88-74-4	2-Nitroaniline	U	570	1.0	500	570	86
131-11-3	Dimethyl Phthalate	U	380	1.0	330	380	90
606-20-2	2,6-Dinitrotoluene	U	380	1.0	330	380	91
208-96-8	Acenaphthylene	U	380	1.0	330	380	80
99-09-2	3-Nitroaniline	U	570	1.0	500	570	110
83-32-9	Acenaphthene	U	380	1.0	330	380	75
51-28-5	2,4-Dinitrophenol	~~U~~ UJ	1400	1.0	1200	1400	430 CCH
132-64-9	Dibenzofuran	U	380	1.0	330	380	91
100-02-7	4-Nitrophenol	~~U~~ UJ	1400	1.0	1200	1400	360 CCH
121-14-2	2,4-Dinitrotoluene	U	380	1.0	330	380	98
84-66-2	Diethylphthalate	U	380	1.0	330	380	92
7005-72-3	4-Chlorophenyl-phenylether	U	380	1.0	330	380	90
100-01-6	4-Nitroaniline	U	570	1.0	500	570	150
534-52-1	4,6-Dinitro-2-Methylphenol	U	1400	1.0	1200	1400	390
86-30-6	N-Nitrosodiphenylamine	U	760	1.0	660	760	250
101-55-3	4-Bromophenyl-phenylether	U	380	1.0	330	380	98
1912-24-9	Atrazine	U	380	1.0	330	380	100
87-86-5	Pentachlorophenol	U	940	1.0	820	940	270
120-12-7	Anthracene	U	380	1.0	330	380	96
86-74-8	Carbazole	U	570	1.0	500	570	130

lw 4/17/09

KATAHDIN ANALYTICAL SERVICES
Report of Analytical Results

Client: CH2MHill
Project: TO-009 Lejeune
PO No:
Sample Date: 01/19/09
Received Date: 01/22/09
Extraction Date: 01/24/09
Analysis Date: 09-FEB-2009 20:08
Report Date: 02/11/2009
Matrix: SOIL
% Solids: 87.0

Lab ID: SC0321-1
Client ID: MR08-SS271-09A
SDG: TO9-39
Extracted by: AC
Extraction Method: SW846 3550
Analyst: JCG
Analysis Method: SW846 8270C
Lab Prep Batch: WG60146
Units: ug/Kgdrywt

CAS#	Compound	Flags	Results	DF	PQL	Adj.PQL	Adj.MDL
84-74-2	Di-n-butylphthalate	U	380	1.0	330	380	120
85-68-7	Butylbenzylphthalate	U	380	1.0	330	380	110
91-94-1	3,3'-Dichlorobenzidine	U	570	1.0	500	570	130
218-01-9	Chrysene	U	380	1.0	330	380	110
117-81-7	bis(2-Ethylhexyl)phthalate	U	380	1.0	330	380	110
117-84-0	Di-n-octylphthalate	U	380	1.0	330	380	240
367-12-4	2-Fluorophenol		68%				
13127-88-3	Phenol-D6		78%				
4165-60-0	Nitrobenzene-D5		61%				
321-60-8	2-Fluorobiphenyl		64%				
118-79-6	2,4,6-Tribromophenol		63%				
1718-51-0	Terphenyl-D14		76%				

MW 4/17/09

2

KATAHDIN ANALYTICAL SERVICES
Report of Analytical Results

Client: CH2MHill
Project: TO-009 Lejeune
PO No:
Sample Date: 01/19/09
Received Date: 01/22/09
Extraction Date: 01/24/09
Analysis Date: 09-FEB-2009 10:26
Report Date: 02/11/2009
Matrix: SOIL
% Solids: 78.2

Lab ID: SC0321-3
Client ID: MR08-IS271-4-5-09A
SDG: TO9-39
Extracted by: AC
Extraction Method: SW846 3550
Analyst: JLP
Analysis Method: SW846 8270C
Lab Prep Batch: WG60146
Units: ug/Kgdrywt

CAS#	Compound	Flags	Results	DF	PQL	Adj.PQL	Adj.MDL	
100-52-7	Benzaldehyde	~~U~~ UJ	640	1.0	500	640	150	CCH
108-95-2	Phenol	U	640	1.0	500	640	200	
111-44-4	Bis(2-Chloroethyl)ether	U	420	1.0	330	420	100	
95-57-8	2-Chlorophenol	U	640	1.0	500	640	210	
95-48-7	2-Methylphenol	U	770	1.0	600	770	260	
108-60-1	2,2'-Oxybis(1-chloropropane)	U	420	1.0	330	420	110	
98-86-2	Acetophenone	U	770	1.0	600	770	230	
621-64-7	N-Nitroso-di-n-propylamine	U	420	1.0	330	420	110	
65794-96-9	3&4-Methylphenol	U	770	1.0	600	770	240	
67-72-1	Hexachloroethane	U	420	1.0	330	420	120	
98-95-3	Nitrobenzene	U	420	1.0	330	420	120	
78-59-1	Isophorone	U	420	1.0	330	420	96	
88-75-5	2-Nitrophenol	U	770	1.0	600	770	210	
105-67-9	2,4-Dimethylphenol	U	640	1.0	500	640	210	
111-91-1	Bis(2-Chloroethoxy)methane	U	420	1.0	330	420	120	
120-83-2	2,4-Dichlorophenol	U	640	1.0	500	640	190	
106-47-8	4-Chloroaniline	U	640	1.0	500	640	150	
105-60-2	Caprolactam	U	640	1.0	500	640	180	
59-50-7	4-Chloro-3-Methylphenol	U	640	1.0	500	640	210	
88-06-2	2,4,6-Trichlorophenol	U	640	1.0	500	640	200	
95-95-4	2,4,5-Trichlorophenol	U	640	1.0	500	640	200	
91-58-7	2-Chloronaphthalene	U	420	1.0	330	420	110	
92-52-4	1,1'-Biphenyl	U	420	1.0	330	420	93	
88-74-4	2-Nitroaniline	U	640	1.0	500	640	96	
131-11-3	Dimethyl Phthalate	U	420	1.0	330	420	100	
606-20-2	2,6-Dinitrotoluene	U	420	1.0	330	420	100	
208-96-8	Acenaphthylene	U	420	1.0	330	420	90	
99-09-2	3-Nitroaniline	U	640	1.0	500	640	120	
83-32-9	Acenaphthene	U	420	1.0	330	420	83	
51-28-5	2,4-Dinitrophenol	U	1500	1.0	1200	1500	480	
132-64-9	Dibenzofuran	U	420	1.0	330	420	100	
100-02-7	4-Nitrophenol	~~U~~ UJ	1500	1.0	1200	1500	400	CCH
121-14-2	2,4-Dinitrotoluene	U	420	1.0	330	420	110	
84-66-2	Diethylphthalate	U	420	1.0	330	420	100	
7005-72-3	4-Chlorophenyl-phenylether	U	420	1.0	330	420	100	
100-01-6	4-Nitroaniline	U	640	1.0	500	640	170	
534-52-1	4,6-Dinitro-2-Methylphenol	U	1500	1.0	1200	1500	430	
86-30-6	N-Nitrosodiphenylamine	U	840	1.0	660	840	280	
101-55-3	4-Bromophenyl-phenylether	U	420	1.0	330	420	110	
1912-24-9	Atrazine	U	420	1.0	330	420	120	
87-86-5	Pentachlorophenol	U	1000	1.0	820	1000	300	
120-12-7	Anthracene	U	420	1.0	330	420	110	
86-74-8	Carbazole	U	640	1.0	500	640	140	

LW
4/17/09

2

KATAHDIN ANALYTICAL SERVICES
Report of Analytical Results

Client: CH2MHill
Project: TO-009 Lejeune
PO No:
Sample Date: 01/19/09
Received Date: 01/22/09
Extraction Date: 01/24/09
Analysis Date: 09-FEB-2009 10:26
Report Date: 02/11/2009
Matrix: SOIL
% Solids: 78.2

Lab ID: SC0321-3
Client ID: MR08-IS271-4-5-09A
SDG: TO9-39
Extracted by: AC
Extraction Method: SW846 3550
Analyst: JLP
Analysis Method: SW846 8270C
Lab Prep Batch: WG60146
Units: ug/Kgdrywt

CAS#	Compound	Flags	Results	DF	PQL	Adj.PQL	Adj.MDL
84-74-2	Di-n-butylphthalate	U	420	1.0	330	420	130
85-68-7	Butylbenzylphthalate	U	420	1.0	330	420	120
91-94-1	3,3'-Dichlorobenzidine	U	640	1.0	500	640	140
218-01-9	Chrysene	U	420	1.0	330	420	120
117-81-7	bis(2-Ethylhexyl)phthalate	U	420	1.0	330	420	120
117-84-0	Di-n-octylphthalate	U	420	1.0	330	420	270
367-12-4	2-Fluorophenol		67%				
13127-88-3	Phenol-D6		72%				
4165-60-0	Nitrobenzene-D5		64%				
321-60-8	2-Fluorobiphenyl		62%				
118-79-6	2,4,6-Tribromophenol		68%				
1718-51-0	Terphenyl-D14		82%				

lw
4/17/09

3

KATAHDIN ANALYTICAL SERVICES
Report of Analytical Results

Client: CH2MHill
Project: TO-009 Lejeune
PO No:
Sample Date: 01/19/09
Received Date: 01/22/09
Extraction Date: 01/24/09
Analysis Date: 09-FEB-2009 20:50
Report Date: 02/11/2009
Matrix: SOIL
% Solids: 57.7

Lab ID: SC0321-5
Client ID: MR08-SS270-09A
SDG: TO9-39
Extracted by: AC
Extraction Method: SW846 3550
Analyst: JCG
Analysis Method: SW846 8270C
Lab Prep Batch: WG60146
Units: ug/Kgdrywt

CAS#	Compound	Flags	Results	DF	PQL	Adj.PQL	Adj.MDL
100-52-7	Benzaldehyde	~~U~~ UJ	870	1.0	500	870	210 CCH
108-95-2	Phenol	U	870	1.0	500	870	270
111-44-4	Bis(2-Chloroethyl)ether	U	570	1.0	330	570	140
95-57-8	2-Chlorophenol	U	870	1.0	500	870	280
95-48-7	2-Methylphenol	U	1000	1.0	600	1000	350
108-60-1	2,2'-Oxybis(1-chloropropane)	U	570	1.0	330	570	150
98-86-2	Acetophenone	U	1000	1.0	600	1000	310
621-64-7	N-Nitroso-di-n-propylamine	U	570	1.0	330	570	140
65794-96-9	3&4-Methylphenol	U	1000	1.0	600	1000	320
67-72-1	Hexachloroethane	U	570	1.0	330	570	170
98-95-3	Nitrobenzene	U	570	1.0	330	570	160
78-59-1	Isophorone	U	570	1.0	330	570	130
88-75-5	2-Nitrophenol	U	1000	1.0	600	1000	290
105-67-9	2,4-Dimethylphenol	U	870	1.0	500	870	280
111-91-1	Bis(2-Chloroethoxy)methane	U	570	1.0	330	570	170
120-83-2	2,4-Dichlorophenol	U	870	1.0	500	870	260
106-47-8	4-Chloroaniline	U	870	1.0	500	870	210
105-60-2	Caprolactam	U	870	1.0	500	870	250
59-50-7	4-Chloro-3-Methylphenol	U	870	1.0	500	870	290
88-06-2	2,4,6-Trichlorophenol	U	870	1.0	500	870	270
95-95-4	2,4,5-Trichlorophenol	U	870	1.0	500	870	270
91-58-7	2-Chloronaphthalene	U	570	1.0	330	570	150
92-52-4	1,1'-Biphenyl	U	570	1.0	330	570	130
88-74-4	2-Nitroaniline	U	870	1.0	500	870	130
131-11-3	Dimethyl Phthalate	U	570	1.0	330	570	140
606-20-2	2,6-Dinitrotoluene	U	570	1.0	330	570	140
208-96-8	Acenaphthylene	U	570	1.0	330	570	120
99-09-2	3-Nitroaniline	U	870	1.0	500	870	160
83-32-9	Acenaphthene	J	140	1.0	330	570	110
51-28-5	2,4-Dinitrophenol	~~U~~ UJ	2100	1.0	1200	2100	650 CCH
132-64-9	Dibenzofuran	U	570	1.0	330	570	140
100-02-7	4-Nitrophenol	~~U~~ UJ	2100	1.0	1200	2100	540 CCH
121-14-2	2,4-Dinitrotoluene	U	570	1.0	330	570	150
84-66-2	Diethylphthalate	U	570	1.0	330	570	140
7005-72-3	4-Chlorophenyl-phenylether	U	570	1.0	330	570	140
100-01-6	4-Nitroaniline	U	870	1.0	500	870	230
534-52-1	4,6-Dinitro-2-Methylphenol	U	2100	1.0	1200	2100	580
86-30-6	N-Nitrosodiphenylamine	U	1100	1.0	660	1100	380
101-55-3	4-Bromophenyl-phenylether	U	570	1.0	330	570	150
1912-24-9	Atrazine	U	570	1.0	330	570	160
87-86-5	Pentachlorophenol	U	1400	1.0	820	1400	410
120-12-7	Anthracene	U	570	1.0	330	570	140
86-74-8	Carbazole	U	870	1.0	500	870	190

LW 4/17/09

KATAHDIN ANALYTICAL SERVICES
Report of Analytical Results

Client: CH2MHill
Project: TO-009 Lejeune
PO No:
Sample Date: 01/19/09
Received Date: 01/22/09
Extraction Date: 01/24/09
Analysis Date: 09-FEB-2009 20:50
Report Date: 02/11/2009
Matrix: SOIL
% Solids: 57.7

Lab ID: SC0321-5
Client ID: MR08-SS270-09A
SDG: TO9-39
Extracted by: AC
Extraction Method: SW846 3550
Analyst: JCG
Analysis Method: SW846 8270C
Lab Prep Batch: WG60146
Units: ug/Kgdrywt

CAS#	Compound	Flags	Results	DF	PQL	Adj.PQL	Adj.MDL
84-74-2	Di-n-butylphthalate	U	570	1.0	330	570	170
85-68-7	Butylbenzylphthalate	U	570	1.0	330	570	160
91-94-1	3,3'-Dichlorobenzidine	U	870	1.0	500	870	200
218-01-9	Chrysene	U	570	1.0	330	570	160
117-81-7	bis(2-Ethylhexyl)phthalate		640	1.0	330	570	170
117-84-0	Di-n-octylphthalate	U	570	1.0	330	570	360
367-12-4	2-Fluorophenol		64%				
13127-88-3	Phenol-D6		74%				
4165-60-0	Nitrobenzene-D5		60%				
321-60-8	2-Fluorobiphenyl		62%				
118-79-6	2,4,6-Tribromophenol		80%				
1718-51-0	Terphenyl-D14		72%				

MW 4/17/09

4

KATAHDIN ANALYTICAL SERVICES
Report of Analytical Results

Client: CH2MHill
Project: TO-009 Lejeune
PO No:
Sample Date: 01/19/09
Received Date: 01/22/09
Extraction Date: 01/24/09
Analysis Date: 09-FEB-2009 11:09
Report Date: 02/11/2009
Matrix: SOIL
% Solids: 91.9

Lab ID: SC0321-7
Client ID: MR08-IS270-9-10-09A
SDG: TO9-39
Extracted by: AC
Extraction Method: SW846 3550
Analyst: JLP
Analysis Method: SW846 8270C
Lab Prep Batch: WG60146
Units: ug/Kgdrywt

CAS#	Compound	Flags	Results	DF	PQL	Adj.PQL	Adj.MDL
100-52-7	Benzaldehyde	~~U~~ UJ	540	1.0	500	540	130 CCH
108-95-2	Phenol	U	540	1.0	500	540	170
111-44-4	Bis(2-Chloroethyl)ether	U	360	1.0	330	360	88
95-57-8	2-Chlorophenol	U	540	1.0	500	540	180
95-48-7	2-Methylphenol	U	650	1.0	600	650	220
108-60-1	2,2'-Oxybis(1-chloropropane)	U	360	1.0	330	360	97
98-86-2	Acetophenone	U	650	1.0	600	650	190
621-64-7	N-Nitroso-di-n-propylamine	U	360	1.0	330	360	90
65794-96-9	3&4-Methylphenol	U	650	1.0	600	650	200
67-72-1	Hexachloroethane	U	360	1.0	330	360	100
98-95-3	Nitrobenzene	U	360	1.0	330	360	99
78-59-1	Isophorone	U	360	1.0	330	360	82
88-75-5	2-Nitrophenol	U	650	1.0	600	650	180
105-67-9	2,4-Dimethylphenol	U	540	1.0	500	540	180
111-91-1	Bis(2-Chloroethoxy)methane	U	360	1.0	330	360	100
120-83-2	2,4-Dichlorophenol	U	540	1.0	500	540	160
106-47-8	4-Chloroaniline	U	540	1.0	500	540	130
105-60-2	Caprolactam	U	540	1.0	500	540	160
59-50-7	4-Chloro-3-Methylphenol	U	540	1.0	500	540	180
88-06-2	2,4,6-Trichlorophenol	U	540	1.0	500	540	170
95-95-4	2,4,5-Trichlorophenol	U	540	1.0	500	540	170
91-58-7	2-Chloronaphthalene	U	360	1.0	330	360	95
92-52-4	1,1'-Biphenyl	U	360	1.0	330	360	79
88-74-4	2-Nitroaniline	U	540	1.0	500	540	82
131-11-3	Dimethyl Phthalate	U	360	1.0	330	360	85
606-20-2	2,6-Dinitrotoluene	U	360	1.0	330	360	86
208-96-8	Acenaphthylene	U	360	1.0	330	360	76
99-09-2	3-Nitroaniline	U	540	1.0	500	540	100
83-32-9	Acenaphthene	U	360	1.0	330	360	71
51-28-5	2,4-Dinitrophenol	U	1300	1.0	1200	1300	410
132-64-9	Dibenzofuran	U	360	1.0	330	360	86
100-02-7	4-Nitrophenol	~~U~~ UJ	1300	1.0	1200	1300	340 CCH
121-14-2	2,4-Dinitrotoluene	U	360	1.0	330	360	92
84-66-2	Diethylphthalate	U	360	1.0	330	360	87
7005-72-3	4-Chlorophenyl-phenylether	U	360	1.0	330	360	85
100-01-6	4-Nitroaniline	U	540	1.0	500	540	140
534-52-1	4,6-Dinitro-2-Methylphenol	U	1300	1.0	1200	1300	370
86-30-6	N-Nitrosodiphenylamine	U	720	1.0	660	720	240
101-55-3	4-Bromophenyl-phenylether	U	360	1.0	330	360	92
1912-24-9	Atrazine	U	360	1.0	330	360	99
87-86-5	Pentachlorophenol	U	890	1.0	820	890	260
120-12-7	Anthracene	U	360	1.0	330	360	91
86-74-8	Carbazole	U	540	1.0	500	540	120

LW 4/17/09

KATAHDIN ANALYTICAL SERVICES
Report of Analytical Results

Client: CH2MHill
Project: TO-009 Lejeune
PO No:
Sample Date: 01/19/09
Received Date: 01/22/09
Extraction Date: 01/24/09
Analysis Date: 09-FEB-2009 11:09
Report Date: 02/11/2009
Matrix: SOIL
% Solids: 91.9

Lab ID: SC0321-7
Client ID: MR08-IS270-9-10-09A
SDG: TO9-39
Extracted by: AC
Extraction Method: SW846 3550
Analyst: JLP
Analysis Method: SW846 8270C
Lab Prep Batch: WG60146
Units: ug/Kgdrywt

CAS#	Compound	Flags	Results	DF	PQL	Adj.PQL	Adj.MDL
84-74-2	Di-n-butylphthalate	U	360	1.0	330	360	110
85-68-7	Butylbenzylphthalate	U	360	1.0	330	360	100
91-94-1	3,3'-Dichlorobenzidine	U	540	1.0	500	540	120
218-01-9	Chrysene	U	360	1.0	330	360	100
117-81-7	bis(2-Ethylhexyl)phthalate	U	360	1.0	330	360	110
117-84-0	Di-n-octylphthalate	U	360	1.0	330	360	230
367-12-4	2-Fluorophenol		72%				
13127-88-3	Phenol-D6		79%				
4165-60-0	Nitrobenzene-D5		76%				
321-60-8	2-Fluorobiphenyl		64%				
118-79-6	2,4,6-Tribromophenol		74%				
1718-51-0	Terphenyl-D14		85%				

LW 4/17/09

5

KATAHDIN ANALYTICAL SERVICES
Report of Analytical Results

Client: CH2MHill
Project: TO-009 Lejeune
PO No:
Sample Date: 01/19/09
Received Date: 01/22/09
Extraction Date: 01/24/09
Analysis Date: 09-FEB-2009 21:32
Report Date: 02/11/2009
Matrix: SOIL
% Solids: 83.7

Lab ID: SC0321-9
Client ID: MR08-SS269-09A
SDG: TO9-39
Extracted by: AC
Extraction Method: SW846 3550
Analyst: JCG
Analysis Method: SW846 8270C
Lab Prep Batch: WG60146
Units: ug/Kgdrywt

CAS#	Compound	Flags	Results	DF	PQL	Adj.PQL	Adj.MDL	
100-52-7	Benzaldehyde	~~U~~ UJ	600	1.0	500	600	140	CCH
108-95-2	Phenol	U	600	1.0	500	600	190	
111-44-4	Bis(2-Chloroethyl)ether	U	390	1.0	330	390	97	
95-57-8	2-Chlorophenol	U	600	1.0	500	600	200	
95-48-7	2-Methylphenol	U	720	1.0	600	720	240	
108-60-1	2,2'-Oxybis(1-chloropropane)	U	390	1.0	330	390	110	
98-86-2	Acetophenone	U	720	1.0	600	720	210	
621-64-7	N-Nitroso-di-n-propylamine	U	390	1.0	330	390	99	
65794-96-9	3&4-Methylphenol	U	720	1.0	600	720	220	
67-72-1	Hexachloroethane	U	390	1.0	330	390	110	
98-95-3	Nitrobenzene	U	390	1.0	330	390	110	
78-59-1	Isophorone	U	390	1.0	330	390	90	
88-75-5	2-Nitrophenol	U	720	1.0	600	720	200	
105-67-9	2,4-Dimethylphenol	U	600	1.0	500	600	200	
111-91-1	Bis(2-Chloroethoxy)methane	U	390	1.0	330	390	110	
120-83-2	2,4-Dichlorophenol	U	600	1.0	500	600	180	
106-47-8	4-Chloroaniline	U	600	1.0	500	600	140	
105-60-2	Caprolactam	U	600	1.0	500	600	170	
59-50-7	4-Chloro-3-Methylphenol	U	600	1.0	500	600	200	
88-06-2	2,4,6-Trichlorophenol	U	600	1.0	500	600	180	
95-95-4	2,4,5-Trichlorophenol	U	600	1.0	500	600	180	
91-58-7	2-Chloronaphthalene	U	390	1.0	330	390	100	
92-52-4	1,1'-Biphenyl	U	390	1.0	330	390	87	
88-74-4	2-Nitroaniline	U	600	1.0	500	600	90	
131-11-3	Dimethyl Phthalate	U	390	1.0	330	390	93	
606-20-2	2,6-Dinitrotoluene	U	390	1.0	330	390	94	
208-96-8	Acenaphthylene	U	390	1.0	330	390	84	
99-09-2	3-Nitroaniline	U	600	1.0	500	600	110	
83-32-9	Acenaphthene	U	390	1.0	330	390	78	
51-28-5	2,4-Dinitrophenol	~~U~~ UJ	1400	1.0	1200	1400	450	CCH
132-64-9	Dibenzofuran	U	390	1.0	330	390	94	
100-02-7	4-Nitrophenol	~~U~~ UJ	1400	1.0	1200	1400	370	CCH
121-14-2	2,4-Dinitrotoluene	U	390	1.0	330	390	100	
84-66-2	Diethylphthalate	U	390	1.0	330	390	96	
7005-72-3	4-Chlorophenyl-phenylether	U	390	1.0	330	390	93	
100-01-6	4-Nitroaniline	U	600	1.0	500	600	160	
534-52-1	4,6-Dinitro-2-Methylphenol	U	1400	1.0	1200	1400	400	
86-30-6	N-Nitrosodiphenylamine	U	790	1.0	660	790	260	
101-55-3	4-Bromophenyl-phenylether	U	390	1.0	330	390	100	
1912-24-9	Atrazine	U	390	1.0	330	390	110	
87-86-5	Pentachlorophenol	U	980	1.0	820	980	280	
120-12-7	Anthracene	U	390	1.0	330	390	100	
86-74-8	Carbazole	U	600	1.0	500	600	130	

MW 4/17/09

5

KATAHDIN ANALYTICAL SERVICES
Report of Analytical Results

Client: CH2MHill
Project: TO-009 Lejeune
PO No:
Sample Date: 01/19/09
Received Date: 01/22/09
Extraction Date: 01/24/09
Analysis Date: 09-FEB-2009 21:32
Report Date: 02/11/2009
Matrix: SOIL
% Solids: 83.7

Lab ID: SC0321-9
Client ID: MR08-SS269-09A
SDG: TO9-39
Extracted by: AC
Extraction Method: SW846 3550
Analyst: JCG
Analysis Method: SW846 8270C
Lab Prep Batch: WG60146
Units: ug/Kgdrywt

CAS#	Compound	Flags	Results	DF	PQL	Adj.PQL	Adj.MDL
84-74-2	Di-n-butylphthalate	U	390	1.0	330	390	120
85-68-7	Butylbenzylphthalate	U	390	1.0	330	390	110
91-94-1	3,3'-Dichlorobenzidine	U	600	1.0	500	600	140
218-01-9	Chrysene	U	390	1.0	330	390	110
117-81-7	bis(2-Ethylhexyl)phthalate		900	1.0	330	390	120
117-84-0	Di-n-octylphthalate	U	390	1.0	330	390	250
367-12-4	2-Fluorophenol		72%				
13127-88-3	Phenol-D6		83%				
4165-60-0	Nitrobenzene-D5		69%				
321-60-8	2-Fluorobiphenyl		74%				
118-79-6	2,4,6-Tribromophenol		79%				
1718-51-0	Terphenyl-D14		84%				

lw 4/17/09

6

KATAHDIN ANALYTICAL SERVICES
Report of Analytical Results

Client: CH2MHill
Project: TO-009 Lejeune
PO No:
Sample Date: 01/19/09
Received Date: 01/22/09
Extraction Date: 01/24/09
Analysis Date: 09-FEB-2009 22:14
Report Date: 02/11/2009
Matrix: SOIL
% Solids: 85.4

Lab ID: SC0321-11
Client ID: MR08-SS269D-09A
SDG: TO9-39
Extracted by: AC
Extraction Method: SW846 3550
Analyst: JCG
Analysis Method: SW846 8270C
Lab Prep Batch: WG60146
Units: ug/Kgdrywt

CAS#	Compound	Flags	Results	DF	PQL	Adj.PQL	Adj.MDL	
100-52-7	Benzaldehyde	~~J~~ UJ	580	1.0	500	580	140	CCH
108-95-2	Phenol	U	580	1.0	500	580	180	
111-44-4	Bis(2-Chloroethyl)ether	U	390	1.0	330	390	95	
95-57-8	2-Chlorophenol	U	580	1.0	500	580	190	
95-48-7	2-Methylphenol	U	700	1.0	600	700	230	
108-60-1	2,2'-Oxybis(1-chloropropane)	U	390	1.0	330	390	100	
98-86-2	Acetophenone	U	700	1.0	600	700	210	
621-64-7	N-Nitroso-di-n-propylamine	U	390	1.0	330	390	97	
65794-96-9	3&4-Methylphenol	U	700	1.0	600	700	220	
67-72-1	Hexachloroethane	U	390	1.0	330	390	110	
98-95-3	Nitrobenzene	U	390	1.0	330	390	110	
78-59-1	Isophorone	U	390	1.0	330	390	88	
88-75-5	2-Nitrophenol	U	700	1.0	600	700	200	
105-67-9	2,4-Dimethylphenol	U	580	1.0	500	580	190	
111-91-1	Bis(2-Chloroethoxy)methane	U	390	1.0	330	390	110	
120-83-2	2,4-Dichlorophenol	U	580	1.0	500	580	180	
106-47-8	4-Chloroaniline	U	580	1.0	500	580	140	
105-60-2	Caprolactam	U	580	1.0	500	580	170	
59-50-7	4-Chloro-3-Methylphenol	U	580	1.0	500	580	190	
88-06-2	2,4,6-Trichlorophenol	U	580	1.0	500	580	180	
95-95-4	2,4,5-Trichlorophenol	U	580	1.0	500	580	180	
91-58-7	2-Chloronaphthalene	U	390	1.0	330	390	100	
92-52-4	1,1'-Biphenyl	U	390	1.0	330	390	85	
88-74-4	2-Nitroaniline	U	580	1.0	500	580	88	
131-11-3	Dimethyl Phthalate	U	390	1.0	330	390	91	
606-20-2	2,6-Dinitrotoluene	U	390	1.0	330	390	92	
208-96-8	Acenaphthylene	U	390	1.0	330	390	82	
99-09-2	3-Nitroaniline	U	580	1.0	500	580	110	
83-32-9	Acenaphthene	J	92	1.0	330	390	76	
51-28-5	2,4-Dinitrophenol	~~J~~ UJ	1400	1.0	1200	1400	440	CCH
132-64-9	Dibenzofuran	U	390	1.0	330	390	92	
100-02-7	4-Nitrophenol	~~J~~ UJ	1400	1.0	1200	1400	360	CCH
121-14-2	2,4-Dinitrotoluene	U	390	1.0	330	390	99	
84-66-2	Diethylphthalate	U	390	1.0	330	390	94	
7005-72-3	4-Chlorophenyl-phenylether	U	390	1.0	330	390	91	
100-01-6	4-Nitroaniline	U	580	1.0	500	580	160	
534-52-1	4,6-Dinitro-2-Methylphenol	U	1400	1.0	1200	1400	390	
86-30-6	N-Nitrosodiphenylamine	U	770	1.0	660	770	260	
101-55-3	4-Bromophenyl-phenylether	U	390	1.0	330	390	99	
1912-24-9	Atrazine	U	390	1.0	330	390	110	
87-86-5	Pentachlorophenol	U	960	1.0	820	960	280	
120-12-7	Anthracene	U	390	1.0	330	390	98	
86-74-8	Carbazole	U	580	1.0	500	580	130	

lw 4/17/09

6

KATAHDIN ANALYTICAL SERVICES
Report of Analytical Results

Client: CH2MHill
Project: TO-009 Lejeune
PO No:
Sample Date: 01/19/09
Received Date: 01/22/09
Extraction Date: 01/24/09
Analysis Date: 09-FEB-2009 22:14
Report Date: 02/11/2009
Matrix: SOIL
% Solids: 85.4

Lab ID: SC0321-11
Client ID: MR08-SS269D-09A
SDG: TO9-39
Extracted by: AC
Extraction Method: SW846 3550
Analyst: JCG
Analysis Method: SW846 8270C
Lab Prep Batch: WG60146
Units: ug/Kgdrywt

CAS#	Compound	Flags	Results	DF	PQL	Adj.PQL	Adj.MDL
84-74-2	Di-n-butylphthalate	U	390	1.0	330	390	120
85-68-7	Butylbenzylphthalate	U	390	1.0	330	390	110
91-94-1	3,3'-Dichlorobenzidine	U	580	1.0	500	580	130
218-01-9	Chrysene	U	390	1.0	330	390	110
117-81-7	bis(2-Ethylhexyl)phthalate		810	1.0	330	390	110
117-84-0	Di-n-octylphthalate	U	390	1.0	330	390	250
367-12-4	2-Fluorophenol		70%				
13127-88-3	Phenol-D6		76%				
4165-60-0	Nitrobenzene-D5		66%				
321-60-8	2-Fluorobiphenyl		62%				
118-79-6	2,4,6-Tribromophenol		78%				
1718-51-0	Terphenyl-D14		69%				

LW
4/17/09

7

KATAHDIN ANALYTICAL SERVICES
Report of Analytical Results

Client: CH2MHill
Project: TO-009 Lejeune
PO No:
Sample Date: 01/19/09
Received Date: 01/22/09
Extraction Date: 01/24/09
Analysis Date: 09-FEB-2009 11:51
Report Date: 02/11/2009
Matrix: SOIL
% Solids: 96.0

Lab ID: SC0321-13
Client ID: MR08-IS269-7-8-09A
SDG: TO9-39
Extracted by: AC
Extraction Method: SW846 3550
Analyst: JLP
Analysis Method: SW846 8270C
Lab Prep Batch: WG60146
Units: ug/Kgdrywt

CAS#	Compound	Flags	Results	DF	PQL	Adj.PQL	Adj.MDL	
100-52-7	Benzaldehyde	~~U~~ UJ	520	1.0	500	520	120	CCH
108-95-2	Phenol	U	520	1.0	500	520	160	
111-44-4	Bis(2-Chloroethyl)ether	U	340	1.0	330	340	84	
95-57-8	2-Chlorophenol	U	520	1.0	500	520	170	
95-48-7	2-Methylphenol	U	620	1.0	600	620	210	
108-60-1	2,2'-Oxybis(1-chloropropane)	U	340	1.0	330	340	93	
98-86-2	Acetophenone	U	620	1.0	600	620	180	
621-64-7	N-Nitroso-di-n-propylamine	U	340	1.0	330	340	86	
65794-96-9	3&4-Methylphenol	U	620	1.0	600	620	190	
67-72-1	Hexachloroethane	U	340	1.0	330	340	100	
98-95-3	Nitrobenzene	U	340	1.0	330	340	95	
78-59-1	Isophorone	U	340	1.0	330	340	78	
88-75-5	2-Nitrophenol	U	620	1.0	600	620	170	
105-67-9	2,4-Dimethylphenol	U	520	1.0	500	520	170	
111-91-1	Bis(2-Chloroethoxy)methane	U	340	1.0	330	340	100	
120-83-2	2,4-Dichlorophenol	U	520	1.0	500	520	160	
106-47-8	4-Chloroaniline	U	520	1.0	500	520	120	
105-60-2	Caprolactam	U	520	1.0	500	520	150	
59-50-7	4-Chloro-3-Methylphenol	U	520	1.0	500	520	170	
88-06-2	2,4,6-Trichlorophenol	U	520	1.0	500	520	160	
95-95-4	2,4,5-Trichlorophenol	U	520	1.0	500	520	160	
91-58-7	2-Chloronaphthalene	U	340	1.0	330	340	91	
92-52-4	1,1'-Biphenyl	U	340	1.0	330	340	76	
88-74-4	2-Nitroaniline	U	520	1.0	500	520	78	
131-11-3	Dimethyl Phthalate	U	340	1.0	330	340	81	
606-20-2	2,6-Dinitrotoluene	U	340	1.0	330	340	82	
208-96-8	Acenaphthylene	U	340	1.0	330	340	73	
99-09-2	3-Nitroaniline	U	520	1.0	500	520	98	
83-32-9	Acenaphthene	U	340	1.0	330	340	68	
51-28-5	2,4-Dinitrophenol	U	1200	1.0	1200	1200	390	
132-64-9	Dibenzofuran	U	340	1.0	330	340	82	
100-02-7	4-Nitrophenol	~~U~~ UJ	1200	1.0	1200	1200	320	CCH
121-14-2	2,4-Dinitrotoluene	U	340	1.0	330	340	88	
84-66-2	Diethylphthalate	U	340	1.0	330	340	83	
7005-72-3	4-Chlorophenyl-phenylether	U	340	1.0	330	340	81	
100-01-6	4-Nitroaniline	U	520	1.0	500	520	140	
534-52-1	4,6-Dinitro-2-Methylphenol	U	1200	1.0	1200	1200	350	
86-30-6	N-Nitrosodiphenylamine	U	690	1.0	660	690	230	
101-55-3	4-Bromophenyl-phenylether	U	340	1.0	330	340	88	
1912-24-9	Atrazine	U	340	1.0	330	340	95	
87-86-5	Pentachlorophenol	U	850	1.0	820	850	250	
120-12-7	Anthracene	U	340	1.0	330	340	88	
86-74-8	Carbazole	U	520	1.0	500	520	120	

LW 9/17/09

7

KATAHDIN ANALYTICAL SERVICES
Report of Analytical Results

Client: CH2MHill
Project: TO-009 Lejeune
PO No:
Sample Date: 01/19/09
Received Date: 01/22/09
Extraction Date: 01/24/09
Analysis Date: 09-FEB-2009 11:51
Report Date: 02/11/2009
Matrix: SOIL
% Solids: 96.0

Lab ID: SC0321-13
Client ID: MR08-IS269-7-8-09A
SDG: TO9-39
Extracted by: AC
Extraction Method: SW846 3550
Analyst: JLP
Analysis Method: SW846 8270C
Lab Prep Batch: WG60146
Units: ug/Kgdrywt

CAS#	Compound	Flags	Results	DF	PQL	Adj.PQL	Adj.MDL
84-74-2	Di-n-butylphthalate	U	340	1.0	330	340	100
85-68-7	Butylbenzylphthalate	U	340	1.0	330	340	97
91-94-1	3,3'-Dichlorobenzidine	U	520	1.0	500	520	120
218-01-9	Chrysene	U	340	1.0	330	340	99
117-81-7	bis(2-Ethylhexyl)phthalate	U	340	1.0	330	340	100
117-84-0	Di-n-octylphthalate	U	340	1.0	330	340	220
367-12-4	2-Fluorophenol		71%				
13127-88-3	Phenol-D6		76%				
4165-60-0	Nitrobenzene-D5		67%				
321-60-8	2-Fluorobiphenyl		61%				
118-79-6	2,4,6-Tribromophenol		63%				
1718-51-0	Terphenyl-D14		85%				

fw
4/17/09

8

KATAHDIN ANALYTICAL SERVICES
Report of Analytical Results

Client: CH2MHill
Project: TO-009 Lejeune
PO No:
Sample Date: 01/19/09
Received Date: 01/22/09
Extraction Date: 01/24/09
Analysis Date: 09-FEB-2009 12:34
Report Date: 02/11/2009
Matrix: SOIL
% Solids: 95.9

Lab ID: SC0321-15
Client ID: MR08-IS269D-7-8-09A
SDG: TO9-39
Extracted by: AC
Extraction Method: SW846 3550
Analyst: JLP
Analysis Method: SW846 8270C
Lab Prep Batch: WG60146
Units: ug/Kgdrywt

CAS#	Compound	Flags	Results	DF	PQL	Adj.PQL	Adj.MDL	
100-52-7	Benzaldehyde	~~U~~ UJ	520	1.0	500	520	120	CCH
108-95-2	Phenol	U	520	1.0	500	520	160	
111-44-4	Bis(2-Chloroethyl)ether	U	340	1.0	330	340	84	
95-57-8	2-Chlorophenol	U	520	1.0	500	520	170	
95-48-7	2-Methylphenol	U	620	1.0	600	620	210	
108-60-1	2,2'-Oxybis(1-chloropropane)	U	340	1.0	330	340	93	
98-86-2	Acetophenone	U	620	1.0	600	620	180	
621-64-7	N-Nitroso-di-n-propylamine	U	340	1.0	330	340	86	
65794-96-9	3&4-Methylphenol	U	620	1.0	600	620	200	
67-72-1	Hexachloroethane	U	340	1.0	330	340	100	
98-95-3	Nitrobenzene	U	340	1.0	330	340	95	
78-59-1	Isophorone	U	340	1.0	330	340	78	
88-75-5	2-Nitrophenol	U	620	1.0	600	620	170	
105-67-9	2,4-Dimethylphenol	U	520	1.0	500	520	170	
111-91-1	Bis(2-Chloroethoxy)methane	U	340	1.0	330	340	100	
120-83-2	2,4-Dichlorophenol	U	520	1.0	500	520	160	
106-47-8	4-Chloroaniline	U	520	1.0	500	520	120	
105-60-2	Caprolactam	U	520	1.0	500	520	150	
59-50-7	4-Chloro-3-Methylphenol	U	520	1.0	500	520	170	
88-06-2	2,4,6-Trichlorophenol	U	520	1.0	500	520	160	
95-95-4	2,4,5-Trichlorophenol	U	520	1.0	500	520	160	
91-58-7	2-Chloronaphthalene	U	340	1.0	330	340	91	
92-52-4	1,1'-Biphenyl	U	340	1.0	330	340	76	
88-74-4	2-Nitroaniline	U	520	1.0	500	520	78	
131-11-3	Dimethyl Phthalate	U	340	1.0	330	340	81	
606-20-2	2,6-Dinitrotoluene	U	340	1.0	330	340	82	
208-96-8	Acenaphthylene	U	340	1.0	330	340	73	
99-09-2	3-Nitroaniline	U	520	1.0	500	520	98	
83-32-9	Acenaphthene	U	340	1.0	330	340	68	
51-28-5	2,4-Dinitrophenol	U	1200	1.0	1200	1200	390	
132-64-9	Dibenzofuran	U	340	1.0	330	340	82	
100-02-7	4-Nitrophenol	~~U~~ UJ	1200	1.0	1200	1200	320	CCH
121-14-2	2,4-Dinitrotoluene	U	340	1.0	330	340	89	
84-66-2	Diethylphthalate	U	340	1.0	330	340	83	
7005-72-3	4-Chlorophenyl-phenylether	U	340	1.0	330	340	81	
100-01-6	4-Nitroaniline	U	520	1.0	500	520	140	
534-52-1	4,6-Dinitro-2-Methylphenol	U	1200	1.0	1200	1200	350	
86-30-6	N-Nitrosodiphenylamine	U	690	1.0	660	690	230	
101-55-3	4-Bromophenyl-phenylether	U	340	1.0	330	340	89	
1912-24-9	Atrazine	U	340	1.0	330	340	95	
87-86-5	Pentachlorophenol	U	860	1.0	820	860	250	
120-12-7	Anthracene	U	340	1.0	330	340	88	
86-74-8	Carbazole	U	520	1.0	500	520	120	

LW 4/17/09

KATAHDIN ANALYTICAL SERVICES
Report of Analytical Results

Client: CH2MHill
Project: TO-009 Lejeune
PO No:
Sample Date: 01/19/09
Received Date: 01/22/09
Extraction Date: 01/24/09
Analysis Date: 09-FEB-2009 12:34
Report Date: 02/11/2009
Matrix: SOIL
% Solids: 95.9

Lab ID: SC0321-15
Client ID: MR08-IS269D-7-8-09A
SDG: TO9-39
Extracted by: AC
Extraction Method: SW846 3550
Analyst: JLP
Analysis Method: SW846 8270C
Lab Prep Batch: WG60146
Units: ug/Kgdrywt

CAS#	Compound	Flags	Results	DF	PQL	Adj.PQL	Adj.MDL
84-74-2	Di-n-butylphthalate	U	340	1.0	330	340	100
85-68-7	Butylbenzylphthalate	U	340	1.0	330	340	97
91-94-1	3,3'-Dichlorobenzidine	U	520	1.0	500	520	120
218-01-9	Chrysene	U	340	1.0	330	340	99
117-81-7	bis(2-Ethylhexyl)phthalate	U	340	1.0	330	340	100
117-84-0	Di-n-octylphthalate	U	340	1.0	330	340	220
367-12-4	2-Fluorophenol		70%				
13127-88-3	Phenol-D6		74%				
4165-60-0	Nitrobenzene-D5		69%				
321-60-8	2-Fluorobiphenyl		63%				
118-79-6	2,4,6-Tribromophenol		64%				
1718-51-0	Terphenyl-D14		79%				

MW 4/17/09

KATAHDIN ANALYTICAL SERVICES
Report of Analytical Results

Client: CH2MHill
Project: TO-009 Lejeune
PO No:
Sample Date: 01/19/09
Received Date: 01/22/09
Extraction Date: 01/24/09
Analysis Date: 09-FEB-2009 13:16
Report Date: 02/11/2009
Matrix: SOIL
% Solids: 88.2

Lab ID: SC0321-17
Client ID: MR08-IS268-7-8-09A
SDG: TO9-39
Extracted by: AC
Extraction Method: SW846 3550
Analyst: JLP
Analysis Method: SW846 8270C
Lab Prep Batch: WG60146
Units: ug/Kgdrywt

CAS#	Compound	Flags	Results	DF	PQL	Adj.PQL	Adj.MDL	
100-52-7	Benzaldehyde	~~U~~ UJ	570	1.0	500	570	140	CCH
108-95-2	Phenol	U	570	1.0	500	570	180	
111-44-4	Bis(2-Chloroethyl)ether	U	370	1.0	330	370	92	
95-57-8	2-Chlorophenol	U	570	1.0	500	570	180	
95-48-7	2-Methylphenol	U	680	1.0	600	680	230	
108-60-1	2,2'-Oxybis(1-chloropropane)	U	370	1.0	330	370	100	
98-86-2	Acetophenone	U	680	1.0	600	680	200	
621-64-7	N-Nitroso-di-n-propylamine	U	370	1.0	330	370	94	
65794-96-9	3&4-Methylphenol	U	680	1.0	600	680	210	
67-72-1	Hexachloroethane	U	370	1.0	330	370	110	
98-95-3	Nitrobenzene	U	370	1.0	330	370	100	
78-59-1	Isophorone	U	370	1.0	330	370	85	
88-75-5	2-Nitrophenol	U	680	1.0	600	680	190	
105-67-9	2,4-Dimethylphenol	U	570	1.0	500	570	190	
111-91-1	Bis(2-Chloroethoxy)methane	U	370	1.0	330	370	110	
120-83-2	2,4-Dichlorophenol	U	570	1.0	500	570	170	
106-47-8	4-Chloroaniline	U	570	1.0	500	570	130	
105-60-2	Caprolactam	U	570	1.0	500	570	160	
59-50-7	4-Chloro-3-Methylphenol	U	570	1.0	500	570	190	
88-06-2	2,4,6-Trichlorophenol	U	570	1.0	500	570	180	
95-95-4	2,4,5-Trichlorophenol	U	570	1.0	500	570	180	
91-58-7	2-Chloronaphthalene	U	370	1.0	330	370	99	
92-52-4	1,1'-Biphenyl	U	370	1.0	330	370	83	
88-74-4	2-Nitroaniline	U	570	1.0	500	570	85	
131-11-3	Dimethyl Phthalate	U	370	1.0	330	370	88	
606-20-2	2,6-Dinitrotoluene	U	370	1.0	330	370	90	
208-96-8	Acenaphthylene	U	370	1.0	330	370	79	
99-09-2	3-Nitroaniline	U	570	1.0	500	570	110	
83-32-9	Acenaphthene	U	370	1.0	330	370	74	
51-28-5	2,4-Dinitrophenol	U	1400	1.0	1200	1400	430	
132-64-9	Dibenzofuran	U	370	1.0	330	370	90	
100-02-7	4-Nitrophenol	~~U~~ UJ	1400	1.0	1200	1400	350	CCH
121-14-2	2,4-Dinitrotoluene	U	370	1.0	330	370	96	
84-66-2	Diethylphthalate	U	370	1.0	330	370	91	
7005-72-3	4-Chlorophenyl-phenylether	U	370	1.0	330	370	88	
100-01-6	4-Nitroaniline	U	570	1.0	500	570	150	
534-52-1	4,6-Dinitro-2-Methylphenol	U	1400	1.0	1200	1400	380	
86-30-6	N-Nitrosodiphenylamine	U	750	1.0	660	750	250	
101-55-3	4-Bromophenyl-phenylether	U	370	1.0	330	370	96	
1912-24-9	Atrazine	U	370	1.0	330	370	100	
87-86-5	Pentachlorophenol	U	930	1.0	820	930	270	
120-12-7	Anthracene	U	370	1.0	330	370	95	
86-74-8	Carbazole	U	570	1.0	500	570	120	

LW
4/17/09

KATAHDIN ANALYTICAL SERVICES
Report of Analytical Results

Client: CH2MHill
Project: TO-009 Lejeune
PO No:
Sample Date: 01/19/09
Received Date: 01/22/09
Extraction Date: 01/24/09
Analysis Date: 09-FEB-2009 13:16
Report Date: 02/11/2009
Matrix: SOIL
% Solids: 88.2

Lab ID: SC0321-17
Client ID: MR08-IS268-7-8-09A
SDG: TO9-39
Extracted by: AC
Extraction Method: SW846 3550
Analyst: JLP
Analysis Method: SW846 8270C
Lab Prep Batch: WG60146
Units: ug/Kgdrywt

CAS#	Compound	Flags	Results	DF	PQL	Adj.PQL	Adj.MDL
84-74-2	Di-n-butylphthalate	U	370	1.0	330	370	110
85-68-7	Butylbenzylphthalate	U	370	1.0	330	370	100
91-94-1	3,3'-Dichlorobenzidine	U	570	1.0	500	570	130
218-01-9	Chrysene	U	370	1.0	330	370	110
117-81-7	bis(2-Ethylhexyl)phthalate	U	370	1.0	330	370	110
117-84-0	Di-n-octylphthalate	U	370	1.0	330	370	240
367-12-4	2-Fluorophenol		65%				
13127-88-3	Phenol-D6		69%				
4165-60-0	Nitrobenzene-D5		60%				
321-60-8	2-Fluorobiphenyl		55%				
118-79-6	2,4,6-Tribromophenol		57%				
1718-51-0	Terphenyl-D14		72%				

lw
4/17/09

KATAHDIN ANALYTICAL SERVICES
Report of Analytical Results

Client: CH2MHill
Project: TO-009 Lejeune
PO No:
Sample Date: 01/19/09
Received Date: 01/22/09
Extraction Date: 01/24/09
Analysis Date: 11-FEB-2009 00:38
Report Date: 02/11/2009
Matrix: SOIL
% Solids: 95.8

Lab ID: SC0321-19RA
Client ID: MR08-SS267-09A
SDG: TO9-39
Extracted by: AC
Extraction Method: SW846 3550
Analyst: JLP
Analysis Method: SW846 8270C
Lab Prep Batch: WG60146
Units: ug/Kgdrywt

CAS#	Compound	Flags	Results	DF	PQL	Adj.PQL	Adj.MDL
100-52-7	Benzaldehyde	U	520	1.0	500	520	120
108-95-2	Phenol	U	520	1.0	500	520	160
111-44-4	Bis(2-Chloroethyl)ether	U	340	1.0	330	340	84
95-57-8	2-Chlorophenol	U	520	1.0	500	520	170
95-48-7	2-Methylphenol	U	630	1.0	600	630	210
108-60-1	2,2'-Oxybis(1-chloropropane)	U	340	1.0	330	340	93
98-86-2	Acetophenone	U	630	1.0	600	630	180
621-64-7	N-Nitroso-di-n-propylamine	U	340	1.0	330	340	87
65794-96-9	3&4-Methylphenol	U	630	1.0	600	630	200
67-72-1	Hexachloroethane	U	340	1.0	330	340	100
98-95-3	Nitrobenzene	U	340	1.0	330	340	95
78-59-1	Isophorone	U	340	1.0	330	340	78
88-75-5	2-Nitrophenol	U	630	1.0	600	630	170
105-67-9	2,4-Dimethylphenol	U	520	1.0	500	520	170
111-91-1	Bis(2-Chloroethoxy)methane	U	340	1.0	330	340	100
120-83-2	2,4-Dichlorophenol	U	520	1.0	500	520	160
106-47-8	4-Chloroaniline	U	520	1.0	500	520	120
105-60-2	Caprolactam	U	520	1.0	500	520	150
59-50-7	4-Chloro-3-Methylphenol	U	520	1.0	500	520	170
88-06-2	2,4,6-Trichlorophenol	U	520	1.0	500	520	160
95-95-4	2,4,5-Trichlorophenol	U	520	1.0	500	520	160
91-58-7	2-Chloronaphthalene	U	340	1.0	330	340	91
92-52-4	1,1'-Biphenyl	U	340	1.0	330	340	76
88-74-4	2-Nitroaniline	U	520	1.0	500	520	78
131-11-3	Dimethyl Phthalate	U	340	1.0	330	340	81
606-20-2	2,6-Dinitrotoluene	U	340	1.0	330	340	82
208-96-8	Acenaphthylene	U	340	1.0	330	340	73
99-09-2	3-Nitroaniline	U	520	1.0	500	520	98
83-32-9	Acenaphthene	U	340	1.0	330	340	68
51-28-5	2,4-Dinitrophenol	U	1200	1.0	1200	1200	390
132-64-9	Dibenzofuran	U	340	1.0	330	340	82
100-02-7	4-Nitrophenol	U	1200	1.0	1200	1200	320
121-14-2	2,4-Dinitrotoluene	U	340	1.0	330	340	89
84-66-2	Diethylphthalate	U	340	1.0	330	340	84
7005-72-3	4-Chlorophenyl-phenylether	U	340	1.0	330	340	81
100-01-6	4-Nitroaniline	U	520	1.0	500	520	140
534-52-1	4,6-Dinitro-2-Methylphenol	U	1200	1.0	1200	1200	350
86-30-6	N-Nitrosodiphenylamine	U	690	1.0	660	690	230
101-55-3	4-Bromophenyl-phenylether	U	340	1.0	330	340	89
1912-24-9	Atrazine	U	340	1.0	330	340	95
87-86-5	Pentachlorophenol	U	860	1.0	820	860	250
120-12-7	Anthracene	U	340	1.0	330	340	88
86-74-8	Carbazole	U	520	1.0	500	520	120

lw
4/17/09

KATAHDIN ANALYTICAL SERVICES
Report of Analytical Results

Client: CH2MHill
Project: TO-009 Lejeune
PO No:
Sample Date: 01/19/09
Received Date: 01/22/09
Extraction Date: 01/24/09
Analysis Date: 11-FEB-2009 00:38
Report Date: 02/11/2009
Matrix: SOIL
% Solids: 95.8

Lab ID: SC0321-19RA
Client ID: MR08-SS267-09A
SDG: TO9-39
Extracted by: AC
Extraction Method: SW846 3550
Analyst: JLP
Analysis Method: SW846 8270C
Lab Prep Batch: WG60146
Units: ug/Kgdrywt

CAS#	Compound	Flags	Results	DF	PQL	Adj.PQL	Adj.MDL
84-74-2	Di-n-butylphthalate	U	340	1.0	330	340	100
85-68-7	Butylbenzylphthalate	U	340	1.0	330	340	97
91-94-1	3,3'-Dichlorobenzidine	U	520	1.0	500	520	120
218-01-9	Chrysene	U	340	1.0	330	340	99
117-81-7	bis(2-Ethylhexyl)phthalate	U	340	1.0	330	340	100
117-84-0	Di-n-octylphthalate	U	340	1.0	330	340	220
367-12-4	2-Fluorophenol		71%				
13127-88-3	Phenol-D6		84%				
4165-60-0	Nitrobenzene-D5		76%				
321-60-8	2-Fluorobiphenyl		78%				
118-79-6	2,4,6-Tribromophenol		55%				
1718-51-0	Terphenyl-D14		89%				

dw 4/17/09

11

KATAHDIN ANALYTICAL SERVICES
Report of Analytical Results

Client: CH2MHill
Project: TO-009 Lejeune
PO No:
Sample Date: 01/19/09
Received Date: 01/22/09
Extraction Date: 01/24/09
Analysis Date: 09-FEB-2009 13:58
Report Date: 02/11/2009
Matrix: SOIL
% Solids: 88.8

Lab ID: SC0321-21
Client ID: MR08-IS267-7-8-09A
SDG: TO9-39
Extracted by: AC
Extraction Method: SW846 3550
Analyst: JLP
Analysis Method: SW846 8270C
Lab Prep Batch: WG60146
Units: ug/Kgdrywt

CAS#	Compound	Flags	Results	DF	PQL	Adj.PQL	Adj.MDL	
100-52-7	Benzaldehyde	~~U~~ UJ	560	1.0	500	560	140	CCU
108-95-2	Phenol	U	560	1.0	500	560	180	
111-44-4	Bis(2-Chloroethyl)ether	U	370	1.0	330	370	91	
95-57-8	2-Chlorophenol	U	560	1.0	500	560	180	
95-48-7	2-Methylphenol	U	680	1.0	600	680	220	
108-60-1	2,2'-Oxybis(1-chloropropane)	U	370	1.0	330	370	100	
98-86-2	Acetophenone	U	680	1.0	600	680	200	
621-64-7	N-Nitroso-di-n-propylamine	U	370	1.0	330	370	93	
65794-96-9	3&4-Methylphenol	U	680	1.0	600	680	210	
67-72-1	Hexachloroethane	U	370	1.0	330	370	110	
98-95-3	Nitrobenzene	U	370	1.0	330	370	100	
78-59-1	Isophorone	U	370	1.0	330	370	84	
88-75-5	2-Nitrophenol	U	680	1.0	600	680	190	
105-67-9	2,4-Dimethylphenol	U	560	1.0	500	560	180	
111-91-1	Bis(2-Chloroethoxy)methane	U	370	1.0	330	370	110	
120-83-2	2,4-Dichlorophenol	U	560	1.0	500	560	170	
106-47-8	4-Chloroaniline	U	560	1.0	500	560	130	
105-60-2	Caprolactam	U	560	1.0	500	560	160	
59-50-7	4-Chloro-3-Methylphenol	U	560	1.0	500	560	190	
88-06-2	2,4,6-Trichlorophenol	U	560	1.0	500	560	170	
95-95-4	2,4,5-Trichlorophenol	U	560	1.0	500	560	170	
91-58-7	2-Chloronaphthalene	U	370	1.0	330	370	98	
92-52-4	1,1'-Biphenyl	U	370	1.0	330	370	82	
88-74-4	2-Nitroaniline	U	560	1.0	500	560	84	
131-11-3	Dimethyl Phthalate	U	370	1.0	330	370	88	
606-20-2	2,6-Dinitrotoluene	U	370	1.0	330	370	89	
208-96-8	Acenaphthylene	U	370	1.0	330	370	79	
99-09-2	3-Nitroaniline	U	560	1.0	500	560	100	
83-32-9	Acenaphthene	U	370	1.0	330	370	73	
51-28-5	2,4-Dinitrophenol	U	1400	1.0	1200	1400	420	
132-64-9	Dibenzofuran	U	370	1.0	330	370	89	
100-02-7	4-Nitrophenol	~~U~~ UJ	1400	1.0	1200	1400	350	CCU
121-14-2	2,4-Dinitrotoluene	U	370	1.0	330	370	96	
84-66-2	Diethylphthalate	U	370	1.0	330	370	90	
7005-72-3	4-Chlorophenyl-phenylether	U	370	1.0	330	370	88	
100-01-6	4-Nitroaniline	U	560	1.0	500	560	150	
534-52-1	4,6-Dinitro-2-Methylphenol	U	1400	1.0	1200	1400	380	
86-30-6	N-Nitrosodiphenylamine	U	740	1.0	660	740	250	
101-55-3	4-Bromophenyl-phenylether	U	370	1.0	330	370	96	
1912-24-9	Atrazine	U	370	1.0	330	370	100	
87-86-5	Pentachlorophenol	U	920	1.0	820	920	270	
120-12-7	Anthracene	U	370	1.0	330	370	94	
86-74-8	Carbazole	U	560	1.0	500	560	120	

LW
4/17/09

KATAHDIN ANALYTICAL SERVICES
Report of Analytical Results

11

Client: CH2MHill
Project: TO-009 Lejeune
PO No:
Sample Date: 01/19/09
Received Date: 01/22/09
Extraction Date: 01/24/09
Analysis Date: 09-FEB-2009 13:58
Report Date: 02/11/2009
Matrix: SOIL
% Solids: 88.8

Lab ID: SC0321-21
Client ID: MR08-IS267-7-8-09A
SDG: TO9-39
Extracted by: AC
Extraction Method: SW846 3550
Analyst: JLP
Analysis Method: SW846 8270C
Lab Prep Batch: WG60146
Units: ug/Kgdrywt

CAS#	Compound	Flags	Results	DF	PQL	Adj.PQL	Adj.MDL
84-74-2	Di-n-butylphthalate	U	370	1.0	330	370	110
85-68-7	Butylbenzylphthalate	U	370	1.0	330	370	100
91-94-1	3,3'-Dichlorobenzidine	U	560	1.0	500	560	130
218-01-9	Chrysene	U	370	1.0	330	370	110
117-81-7	bis(2-Ethylhexyl)phthalate	U	370	1.0	330	370	110
117-84-0	Di-n-octylphthalate	U	370	1.0	330	370	240
367-12-4	2-Fluorophenol		71%				
13127-88-3	Phenol-D6		76%				
4165-60-0	Nitrobenzene-D5		67%				
321-60-8	2-Fluorobiphenyl		65%				
118-79-6	2,4,6-Tribromophenol		67%				
1718-51-0	Terphenyl-D14		81%				

dW
4/17/09

12

KATAHDIN ANALYTICAL SERVICES
Report of Analytical Results

Client: CH2MHill
Project: TO-009 Lejeune
PO No:
Sample Date: 01/20/09
Received Date: 01/22/09
Extraction Date: 01/24/09
Analysis Date: 09-FEB-2009 18:03
Report Date: 02/11/2009
Matrix: SOIL
% Solids: 83.6

Lab ID: SC0321-23
Client ID: MR08-IS236-7-8-09A
SDG: TO9-39
Extracted by: AC
Extraction Method: SW846 3550
Analyst: JCG
Analysis Method: SW846 8270C
Lab Prep Batch: WG60146
Units: ug/Kgdrywt

CAS#	Compound	Flags	Results	DF	PQL	Adj.PQL	Adj.MDL	
100-52-7	Benzaldehyde	~~U~~ UJ	600	1.0	500	600	140	CCH
108-95-2	Phenol	U	600	1.0	500	600	190	
111-44-4	Bis(2-Chloroethyl)ether	U	390	1.0	330	390	97	
95-57-8	2-Chlorophenol	U	600	1.0	500	600	200	
95-48-7	2-Methylphenol	U	720	1.0	600	720	240	
108-60-1	2,2'-Oxybis(1-chloropropane)	U	390	1.0	330	390	110	
98-86-2	Acetophenone	U	720	1.0	600	720	210	
621-64-7	N-Nitroso-di-n-propylamine	U	390	1.0	330	390	99	
65794-96-9	3&4-Methylphenol	U	720	1.0	600	720	220	
67-72-1	Hexachloroethane	U	390	1.0	330	390	110	
98-95-3	Nitrobenzene	U	390	1.0	330	390	110	
78-59-1	Isophorone	U	390	1.0	330	390	90	
88-75-5	2-Nitrophenol	U	720	1.0	600	720	200	
105-67-9	2,4-Dimethylphenol	U	600	1.0	500	600	200	
111-91-1	Bis(2-Chloroethoxy)methane	U	390	1.0	330	390	110	
120-83-2	2,4-Dichlorophenol	U	600	1.0	500	600	180	
106-47-8	4-Chloroaniline	U	600	1.0	500	600	140	
105-60-2	Caprolactam	U	600	1.0	500	600	170	
59-50-7	4-Chloro-3-Methylphenol	U	600	1.0	500	600	200	
88-06-2	2,4,6-Trichlorophenol	U	600	1.0	500	600	180	
95-95-4	2,4,5-Trichlorophenol	U	600	1.0	500	600	180	
91-58-7	2-Chloronaphthalene	U	390	1.0	330	390	100	
92-52-4	1,1'-Biphenyl	U	390	1.0	330	390	87	
88-74-4	2-Nitroaniline	U	600	1.0	500	600	90	
131-11-3	Dimethyl Phthalate	U	390	1.0	330	390	93	
606-20-2	2,6-Dinitrotoluene	U	390	1.0	330	390	94	
208-96-8	Acenaphthylene	U	390	1.0	330	390	84	
99-09-2	3-Nitroaniline	U	600	1.0	500	600	110	
83-32-9	Acenaphthene	U	390	1.0	330	390	78	
51-28-5	2,4-Dinitrophenol	~~U~~ UJ	1400	1.0	1200	1400	450	CCH
132-64-9	Dibenzofuran	U	390	1.0	330	390	94	
100-02-7	4-Nitrophenol	~~U~~ UJ	1400	1.0	1200	1400	370	CCH
121-14-2	2,4-Dinitrotoluene	U	390	1.0	330	390	100	
84-66-2	Diethylphthalate	U	390	1.0	330	390	96	
7005-72-3	4-Chlorophenyl-phenylether	U	390	1.0	330	390	93	
100-01-6	4-Nitroaniline	U	600	1.0	500	600	160	
534-52-1	4,6-Dinitro-2-Methylphenol	U	1400	1.0	1200	1400	400	
86-30-6	N-Nitrosodiphenylamine	U	790	1.0	660	790	260	
101-55-3	4-Bromophenyl-phenylether	U	390	1.0	330	390	100	
1912-24-9	Atrazine	U	390	1.0	330	390	110	
87-86-5	Pentachlorophenol	U	980	1.0	820	980	280	
120-12-7	Anthracene	U	390	1.0	330	390	100	
86-74-8	Carbazole	U	600	1.0	500	600	130	

lw 4/17/09

KATAHDIN ANALYTICAL SERVICES
Report of Analytical Results

Client: CH2MHill
Project: TO-009 Lejeune
PO No:
Sample Date: 01/20/09
Received Date: 01/22/09
Extraction Date: 01/24/09
Analysis Date: 09-FEB-2009 18:03
Report Date: 02/11/2009
Matrix: SOIL
% Solids: 83.6

Lab ID: SC0321-23
Client ID: MR08-IS236-7-8-09A
SDG: TO9-39
Extracted by: AC
Extraction Method: SW846 3550
Analyst: JCG
Analysis Method: SW846 8270C
Lab Prep Batch: WG60146
Units: ug/Kgdrywt

CAS#	Compound	Flags	Results	DF	PQL	Adj.PQL	Adj.MDL
84-74-2	Di-n-butylphthalate	U	390	1.0	330	390	120
85-68-7	Butylbenzylphthalate	U	390	1.0	330	390	110
91-94-1	3,3'-Dichlorobenzidine	U	600	1.0	500	600	140
218-01-9	Chrysene	U	390	1.0	330	390	110
117-81-7	bis(2-Ethylhexyl)phthalate	U	390	1.0	330	390	120
117-84-0	Di-n-octylphthalate	U	390	1.0	330	390	250
367-12-4	2-Fluorophenol		63%				
13127-88-3	Phenol-D6		68%				
4165-60-0	Nitrobenzene-D5		65%				
321-60-8	2-Fluorobiphenyl		58%				
118-79-6	2,4,6-Tribromophenol		57%				
1718-51-0	Terphenyl-D14		80%				

fw
4/17/09

KATAHDIN ANALYTICAL SERVICES
Report of Analytical Results

Client: CH2MHill
Project: TO-009 Lejeune
PO No:
Sample Date: 01/20/09
Received Date: 01/22/09
Extraction Date: 01/24/09
Analysis Date: 10-FEB-2009 23:14
Report Date: 02/11/2009
Matrix: SOIL
% Solids: 79.9

Lab ID: SC0321-25
Client ID: MR08-SS236-09A
SDG: TO9-39
Extracted by: AC
Extraction Method: SW846 3550
Analyst: JLP
Analysis Method: SW846 8270C
Lab Prep Batch: WG60146
Units: ug/Kgdrywt

CAS#	Compound	Flags	Results	DF	PQL	Adj.PQL	Adj.MDL
100-52-7	Benzaldehyde	U	620	1.0	500	620	150
108-95-2	Phenol	U	620	1.0	500	620	200
111-44-4	Bis(2-Chloroethyl)ether	U	410	1.0	330	410	100
95-57-8	2-Chlorophenol	U	620	1.0	500	620	200
95-48-7	2-Methylphenol	U	750	1.0	600	750	250
108-60-1	2,2'-Oxybis(1-chloropropane)	U	410	1.0	330	410	110
98-86-2	Acetophenone	U	750	1.0	600	750	220
621-64-7	N-Nitroso-di-n-propylamine	U	410	1.0	330	410	100
65794-96-9	3&4-Methylphenol	U	750	1.0	600	750	230
67-72-1	Hexachloroethane	U	410	1.0	330	410	120
98-95-3	Nitrobenzene	U	410	1.0	330	410	110
78-59-1	Isophorone	U	410	1.0	330	410	94
88-75-5	2-Nitrophenol	U	750	1.0	600	750	210
105-67-9	2,4-Dimethylphenol	U	620	1.0	500	620	210
111-91-1	Bis(2-Chloroethoxy)methane	U	410	1.0	330	410	120
120-83-2	2,4-Dichlorophenol	U	620	1.0	500	620	190
106-47-8	4-Chloroaniline	U	620	1.0	500	620	150
105-60-2	Caprolactam	U	620	1.0	500	620	180
59-50-7	4-Chloro-3-Methylphenol	U	620	1.0	500	620	210
88-06-2	2,4,6-Trichlorophenol	U	620	1.0	500	620	190
95-95-4	2,4,5-Trichlorophenol	U	620	1.0	500	620	190
91-58-7	2-Chloronaphthalene	U	410	1.0	330	410	110
92-52-4	1,1'-Biphenyl	U	410	1.0	330	410	91
88-74-4	2-Nitroaniline	U	620	1.0	500	620	94
131-11-3	Dimethyl Phthalate	U	410	1.0	330	410	98
606-20-2	2,6-Dinitrotoluene	U	410	1.0	330	410	99
208-96-8	Acenaphthylene	U	410	1.0	330	410	88
99-09-2	3-Nitroaniline	U	620	1.0	500	620	120
83-32-9	Acenaphthene	U	410	1.0	330	410	81
51-28-5	2,4-Dinitrophenol	U	1500	1.0	1200	1500	470
132-64-9	Dibenzofuran	U	410	1.0	330	410	99
100-02-7	4-Nitrophenol	U	1500	1.0	1200	1500	390
121-14-2	2,4-Dinitrotoluene	U	410	1.0	330	410	110
84-66-2	Diethylphthalate	U	410	1.0	330	410	100
7005-72-3	4-Chlorophenyl-phenylether	U	410	1.0	330	410	98
100-01-6	4-Nitroaniline	U	620	1.0	500	620	170
534-52-1	4,6-Dinitro-2-Methylphenol	U	1500	1.0	1200	1500	420
86-30-6	N-Nitrosodiphenylamine	U	820	1.0	660	820	270
101-55-3	4-Bromophenyl-phenylether	U	410	1.0	330	410	110
1912-24-9	Atrazine	U	410	1.0	330	410	110
87-86-5	Pentachlorophenol	U	1000	1.0	820	1000	300
120-12-7	Anthracene	U	410	1.0	330	410	100
86-74-8	Carbazole	U	620	1.0	500	620	140

LW
4/17/09

KATAHDIN ANALYTICAL SERVICES
Report of Analytical Results

Client: CH2MHill
Project: TO-009 Lejeune
PO No:
Sample Date: 01/20/09
Received Date: 01/22/09
Extraction Date: 01/24/09
Analysis Date: 10-FEB-2009 23:14
Report Date: 02/11/2009
Matrix: SOIL
% Solids: 79.9

Lab ID: SC0321-25
Client ID: MR08-SS236-09A
SDG: TO9-39
Extracted by: AC
Extraction Method: SW846 3550
Analyst: JLP
Analysis Method: SW846 8270C
Lab Prep Batch: WG60146
Units: ug/Kgdrywt

CAS#	Compound	Flags	Results	DF	PQL	Adj.PQL	Adj.MDL
84-74-2	Di-n-butylphthalate	U	410	1.0	330	410	130
85-68-7	Butylbenzylphthalate	U	410	1.0	330	410	120
91-94-1	3,3'-Dichlorobenzidine	U	620	1.0	500	620	140
218-01-9	Chrysene	U	410	1.0	330	410	120
117-81-7	bis(2-Ethylhexyl)phthalate	U	410	1.0	330	410	120
117-84-0	Di-n-octylphthalate	U	410	1.0	330	410	260
367-12-4	2-Fluorophenol		72%				
13127-88-3	Phenol-D6		84%				
4165-60-0	Nitrobenzene-D5		77%				
321-60-8	2-Fluorobiphenyl		72%				
118-79-6	2,4,6-Tribromophenol		104%				
1718-51-0	Terphenyl-D14		87%				

fw
4/17/09

KATAHDIN ANALYTICAL SERVICES
Report of Analytical Results

Client: CH2MHill
Project: TO-009 Lejeune
PO No:
Sample Date: 01/20/09
Received Date: 01/22/09
Extraction Date: 01/24/09
Analysis Date: 10-FEB-2009 23:56
Report Date: 02/11/2009
Matrix: SOIL
% Solids: 86.7

Lab ID: SC0321-27
Client ID: MR08-SS222-09A
SDG: TO9-39
Extracted by: AC
Extraction Method: SW846 3550
Analyst: JLP
Analysis Method: SW846 8270C
Lab Prep Batch: WG60146
Units: ug/Kgdrywt

CAS#	Compound	Flags	Results	DF	PQL	Adj.PQL	Adj.MDL
100-52-7	Benzaldehyde	U	580	1.0	500	580	140
108-95-2	Phenol	U	580	1.0	500	580	180
111-44-4	Bis(2-Chloroethyl)ether	U	380	1.0	330	380	93
95-57-8	2-Chlorophenol	U	580	1.0	500	580	190
95-48-7	2-Methylphenol	U	690	1.0	600	690	230
108-60-1	2,2'-Oxybis(1-chloropropane)	U	380	1.0	330	380	100
98-86-2	Acetophenone	U	690	1.0	600	690	200
621-64-7	N-Nitroso-di-n-propylamine	U	380	1.0	330	380	96
65794-96-9	3&4-Methylphenol	U	690	1.0	600	690	220
67-72-1	Hexachloroethane	U	380	1.0	330	380	110
98-95-3	Nitrobenzene	U	380	1.0	330	380	100
78-59-1	Isophorone	U	380	1.0	330	380	86
88-75-5	2-Nitrophenol	U	690	1.0	600	690	190
105-67-9	2,4-Dimethylphenol	U	580	1.0	500	580	190
111-91-1	Bis(2-Chloroethoxy)methane	U	380	1.0	330	380	110
120-83-2	2,4-Dichlorophenol	U	580	1.0	500	580	170
106-47-8	4-Chloroaniline	U	580	1.0	500	580	140
105-60-2	Caprolactam	U	580	1.0	500	580	170
59-50-7	4-Chloro-3-Methylphenol	U	580	1.0	500	580	190
88-06-2	2,4,6-Trichlorophenol	U	580	1.0	500	580	180
95-95-4	2,4,5-Trichlorophenol	U	580	1.0	500	580	180
91-58-7	2-Chloronaphthalene	U	380	1.0	330	380	100
92-52-4	1,1'-Biphenyl	U	380	1.0	330	380	84
88-74-4	2-Nitroaniline	U	580	1.0	500	580	86
131-11-3	Dimethyl Phthalate	U	380	1.0	330	380	90
606-20-2	2,6-Dinitrotoluene	U	380	1.0	330	380	91
208-96-8	Acenaphthylene	U	380	1.0	330	380	81
99-09-2	3-Nitroaniline	U	580	1.0	500	580	110
83-32-9	Acenaphthene	U	380	1.0	330	380	75
51-28-5	2,4-Dinitrophenol	U	1400	1.0	1200	1400	430
132-64-9	Dibenzofuran	U	380	1.0	330	380	91
100-02-7	4-Nitrophenol	U	1400	1.0	1200	1400	360
121-14-2	2,4-Dinitrotoluene	U	380	1.0	330	380	98
84-66-2	Diethylphthalate	U	380	1.0	330	380	92
7005-72-3	4-Chlorophenyl-phenylether	U	380	1.0	330	380	90
100-01-6	4-Nitroaniline	U	580	1.0	500	580	150
534-52-1	4,6-Dinitro-2-Methylphenol	U	1400	1.0	1200	1400	390
86-30-6	N-Nitrosodiphenylamine	U	760	1.0	660	760	250
101-55-3	4-Bromophenyl-phenylether	U	380	1.0	330	380	98
1912-24-9	Atrazine	U	380	1.0	330	380	100
87-86-5	Pentachlorophenol	U	940	1.0	820	940	270
120-12-7	Anthracene	U	380	1.0	330	380	97
86-74-8	Carbazole	U	580	1.0	500	580	130

lw 4/17/09

KATAHDIN ANALYTICAL SERVICES
Report of Analytical Results

Client: CH2MHill
Project: TO-009 Lejeune
PO No:
Sample Date: 01/20/09
Received Date: 01/22/09
Extraction Date: 01/24/09
Analysis Date: 10-FEB-2009 23:56
Report Date: 02/11/2009
Matrix: SOIL
% Solids: 86.7

Lab ID: SC0321-27
Client ID: MR08-SS222-09A
SDG: TO9-39
Extracted by: AC
Extraction Method: SW846 3550
Analyst: JLP
Analysis Method: SW846 8270C
Lab Prep Batch: WG60146
Units: ug/Kgdrywt

CAS#	Compound	Flags	Results	DF	PQL	Adj.PQL	Adj.MDL
84-74-2	Di-n-butylphthalate	U	380	1.0	330	380	120
85-68-7	Butylbenzylphthalate	U	380	1.0	330	380	110
91-94-1	3,3'-Dichlorobenzidine	U	580	1.0	500	580	130
218-01-9	Chrysene	U	380	1.0	330	380	110
117-81-7	bis(2-Ethylhexyl)phthalate	U	380	1.0	330	380	110
117-84-0	Di-n-octylphthalate	U	380	1.0	330	380	240
367-12-4	2-Fluorophenol		75%				
13127-88-3	Phenol-D6		86%				
4165-60-0	Nitrobenzene-D5		78%				
321-60-8	2-Fluorobiphenyl		78%				
118-79-6	2,4,6-Tribromophenol		118%				
1718-51-0	Terphenyl-D14		90%				

lw
4/17/09

KATAHDIN ANALYTICAL SERVICES
Report of Analytical Results

Client: CH2MHill
Project: TO-009 Lejeune
PO No:
Sample Date: 01/20/09
Received Date: 01/22/09
Extraction Date: 01/24/09
Analysis Date: 09-FEB-2009 18:45
Report Date: 02/11/2009
Matrix: SOIL
% Solids: 89.5

Lab ID: SC0321-29
Client ID: MR08-IS222-4-5-09A
SDG: TO9-39
Extracted by: AC
Extraction Method: SW846 3550
Analyst: JCG
Analysis Method: SW846 8270C
Lab Prep Batch: WG60146
Units: ug/Kgdrywt

CAS#	Compound	Flags	Results	DF	PQL	Adj.PQL	Adj.MDL	
100-52-7	Benzaldehyde	~~U~~ UJ	560	1.0	500	560	130	CCH
108-95-2	Phenol	U	560	1.0	500	560	170	
111-44-4	Bis(2-Chloroethyl)ether	U	370	1.0	330	370	90	
95-57-8	2-Chlorophenol	U	560	1.0	500	560	180	
95-48-7	2-Methylphenol	U	670	1.0	600	670	220	
108-60-1	2,2'-Oxybis(1-chloropropane)	U	370	1.0	330	370	99	
98-86-2	Acetophenone	U	670	1.0	600	670	200	
621-64-7	N-Nitroso-di-n-propylamine	U	370	1.0	330	370	93	
65794-96-9	3&4-Methylphenol	U	670	1.0	600	670	210	
67-72-1	Hexachloroethane	U	370	1.0	330	370	110	
98-95-3	Nitrobenzene	U	370	1.0	330	370	100	
78-59-1	Isophorone	U	370	1.0	330	370	84	
88-75-5	2-Nitrophenol	U	670	1.0	600	670	190	
105-67-9	2,4-Dimethylphenol	U	560	1.0	500	560	180	
111-91-1	Bis(2-Chloroethoxy)methane	U	370	1.0	330	370	110	
120-83-2	2,4-Dichlorophenol	U	560	1.0	500	560	170	
106-47-8	4-Chloroaniline	U	560	1.0	500	560	130	
105-60-2	Caprolactam	U	560	1.0	500	560	160	
59-50-7	4-Chloro-3-Methylphenol	U	560	1.0	500	560	180	
88-06-2	2,4,6-Trichlorophenol	U	560	1.0	500	560	170	
95-95-4	2,4,5-Trichlorophenol	U	560	1.0	500	560	170	
91-58-7	2-Chloronaphthalene	U	370	1.0	330	370	97	
92-52-4	1,1'-Biphenyl	U	370	1.0	330	370	82	
88-74-4	2-Nitroaniline	U	560	1.0	500	560	84	
131-11-3	Dimethyl Phthalate	U	370	1.0	330	370	87	
606-20-2	2,6-Dinitrotoluene	U	370	1.0	330	370	88	
208-96-8	Acenaphthylene	U	370	1.0	330	370	78	
99-09-2	3-Nitroaniline	U	560	1.0	500	560	100	
83-32-9	Acenaphthene	U	370	1.0	330	370	73	
51-28-5	2,4-Dinitrophenol	~~U~~ UJ	1300	1.0	1200	1300	420	CCH
132-64-9	Dibenzofuran	U	370	1.0	330	370	88	
100-02-7	4-Nitrophenol	~~U~~ UJ	1300	1.0	1200	1300	340	CCH
121-14-2	2,4-Dinitrotoluene	U	370	1.0	330	370	95	
84-66-2	Diethylphthalate	U	370	1.0	330	370	89	
7005-72-3	4-Chlorophenyl-phenylether	U	370	1.0	330	370	87	
100-01-6	4-Nitroaniline	U	560	1.0	500	560	150	
534-52-1	4,6-Dinitro-2-Methylphenol	U	1300	1.0	1200	1300	380	
86-30-6	N-Nitrosodiphenylamine	U	740	1.0	660	740	240	
101-55-3	4-Bromophenyl-phenylether	U	370	1.0	330	370	95	
1912-24-9	Atrazine	U	370	1.0	330	370	100	
87-86-5	Pentachlorophenol	U	920	1.0	820	920	260	
120-12-7	Anthracene	U	370	1.0	330	370	94	
86-74-8	Carbazole	U	560	1.0	500	560	120	

MW 4/17/09

15

KATAHDIN ANALYTICAL SERVICES
Report of Analytical Results

Client: CH2MHill
Project: TO-009 Lejeune
PO No:
Sample Date: 01/20/09
Received Date: 01/22/09
Extraction Date: 01/24/09
Analysis Date: 09-FEB-2009 18:45
Report Date: 02/11/2009
Matrix: SOIL
% Solids: 89.5

Lab ID: SC0321-29
Client ID: MR08-IS222-4-5-09A
SDG: TO9-39
Extracted by: AC
Extraction Method: SW846 3550
Analyst: JCG
Analysis Method: SW846 8270C
Lab Prep Batch: WG60146
Units: ug/Kgdrywt

CAS#	Compound	Flags	Results	DF	PQL	Adj.PQL	Adj.MDL
84-74-2	Di-n-butylphthalate	U	370	1.0	330	370	110
85-68-7	Butylbenzylphthalate	U	370	1.0	330	370	100
91-94-1	3,3'-Dichlorobenzidine	U	560	1.0	500	560	130
218-01-9	Chrysene	U	370	1.0	330	370	110
117-81-7	bis(2-Ethylhexyl)phthalate	U	370	1.0	330	370	110
117-84-0	Di-n-octylphthalate	U	370	1.0	330	370	240
367-12-4	2-Fluorophenol		62%				
13127-88-3	Phenol-D6		67%				
4165-60-0	Nitrobenzene-D5		60%				
321-60-8	2-Fluorobiphenyl		56%				
118-79-6	2,4,6-Tribromophenol		60%				
1718-51-0	Terphenyl-D14		79%				

lw 4/17/09

16

KATAHDIN ANALYTICAL SERVICES
Report of Analytical Results

Client: CH2MHill
Project: TO-009 Lejeune
PO No:
Sample Date: 01/20/09
Received Date: 01/22/09
Extraction Date: 01/24/09
Analysis Date: 09-FEB-2009 19:27
Report Date: 02/11/2009
Matrix: SOIL
% Solids: 89.0

Lab ID: SC0321-31
Client ID: MR08-IS223-4-5-09A
SDG: TO9-39
Extracted by: AC
Extraction Method: SW846 3550
Analyst: JCG
Analysis Method: SW846 8270C
Lab Prep Batch: WG60146
Units: ug/Kgdrywt

CAS#	Compound	Flags	Results	DF	PQL	Adj.PQL	Adj.MDL	
100-52-7	Benzaldehyde	~~U~~ UJ	560	1.0	500	560	130	CCH
108-95-2	Phenol	U	560	1.0	500	560	180	
111-44-4	Bis(2-Chloroethyl)ether	U	370	1.0	330	370	91	
95-57-8	2-Chlorophenol	U	560	1.0	500	560	180	
95-48-7	2-Methylphenol	U	670	1.0	600	670	220	
108-60-1	2,2'-Oxybis(1-chloropropane)	U	370	1.0	330	370	100	
98-86-2	Acetophenone	U	670	1.0	600	670	200	
621-64-7	N-Nitroso-di-n-propylamine	U	370	1.0	330	370	93	
65794-96-9	3&4-Methylphenol	U	670	1.0	600	670	210	
67-72-1	Hexachloroethane	U	370	1.0	330	370	110	
98-95-3	Nitrobenzene	U	370	1.0	330	370	100	
78-59-1	Isophorone	U	370	1.0	330	370	84	
88-75-5	2-Nitrophenol	U	670	1.0	600	670	190	
105-67-9	2,4-Dimethylphenol	U	560	1.0	500	560	180	
111-91-1	Bis(2-Chloroethoxy)methane	U	370	1.0	330	370	110	
120-83-2	2,4-Dichlorophenol	U	560	1.0	500	560	170	
106-47-8	4-Chloroaniline	U	560	1.0	500	560	130	
105-60-2	Caprolactam	U	560	1.0	500	560	160	
59-50-7	4-Chloro-3-Methylphenol	U	560	1.0	500	560	190	
88-06-2	2,4,6-Trichlorophenol	U	560	1.0	500	560	170	
95-95-4	2,4,5-Trichlorophenol	U	560	1.0	500	560	170	
91-58-7	2-Chloronaphthalene	U	370	1.0	330	370	98	
92-52-4	1,1'-Biphenyl	U	370	1.0	330	370	82	
88-74-4	2-Nitroaniline	U	560	1.0	500	560	84	
131-11-3	Dimethyl Phthalate	U	370	1.0	330	370	88	
606-20-2	2,6-Dinitrotoluene	U	370	1.0	330	370	89	
208-96-8	Acenaphthylene	U	370	1.0	330	370	79	
99-09-2	3-Nitroaniline	U	560	1.0	500	560	100	
83-32-9	Acenaphthene	U	370	1.0	330	370	73	
51-28-5	2,4-Dinitrophenol	~~U~~ UJ	1300	1.0	1200	1300	420	CCH
132-64-9	Dibenzofuran	U	370	1.0	330	370	89	
100-02-7	4-Nitrophenol	~~U~~ UJ	1300	1.0	1200	1300	350	CCH
121-14-2	2,4-Dinitrotoluene	U	370	1.0	330	370	96	
84-66-2	Diethylphthalate	U	370	1.0	330	370	90	
7005-72-3	4-Chlorophenyl-phenylether	U	370	1.0	330	370	88	
100-01-6	4-Nitroaniline	U	560	1.0	500	560	150	
534-52-1	4,6-Dinitro-2-Methylphenol	U	1300	1.0	1200	1300	380	
86-30-6	N-Nitrosodiphenylamine	U	740	1.0	660	740	250	
101-55-3	4-Bromophenyl-phenylether	U	370	1.0	330	370	96	
1912-24-9	Atrazine	U	370	1.0	330	370	100	
87-86-5	Pentachlorophenol	U	920	1.0	820	920	270	
120-12-7	Anthracene	U	370	1.0	330	370	94	
86-74-8	Carbazole	U	560	1.0	500	560	120	

DW 4/17/09

KATAHDIN ANALYTICAL SERVICES
Report of Analytical Results

Client: CH2MHill
Project: TO-009 Lejeune
PO No:
Sample Date: 01/20/09
Received Date: 01/22/09
Extraction Date: 01/24/09
Analysis Date: 09-FEB-2009 19:27
Report Date: 02/11/2009
Matrix: SOIL
% Solids: 89.0

Lab ID: SC0321-31
Client ID: MR08-IS223-4-5-09A
SDG: TO9-39
Extracted by: AC
Extraction Method: SW846 3550
Analyst: JCG
Analysis Method: SW846 8270C
Lab Prep Batch: WG60146
Units: ug/Kgdrywt

CAS#	Compound	Flags	Results	DF	PQL	Adj.PQL	Adj.MDL
84-74-2	Di-n-butylphthalate	U	370	1.0	330	370	110
85-68-7	Butylbenzylphthalate	U	370	1.0	330	370	100
91-94-1	3,3'-Dichlorobenzidine	U	560	1.0	500	560	130
218-01-9	Chrysene	U	370	1.0	330	370	110
117-81-7	bis(2-Ethylhexyl)phthalate	U	370	1.0	330	370	110
117-84-0	Di-n-octylphthalate	U	370	1.0	330	370	240
367-12-4	2-Fluorophenol		64%				
13127-88-3	Phenol-D6		68%				
4165-60-0	Nitrobenzene-D5		63%				
321-60-8	2-Fluorobiphenyl		56%				
118-79-6	2,4,6-Tribromophenol		58%				
1718-51-0	Terphenyl-D14		77%				

lw
4/17/09

KATAHDIN ANALYTICAL SERVICES
Report of Analytical Results

Client: CH2MHill
Project: TO-009 Lejeune
PO No:
Sample Date: 01/20/09
Received Date: 01/22/09
Extraction Date: 01/26/09
Analysis Date: 06-FEB-2009 15:48
Report Date: 02/11/2009
Matrix: SOIL
% Solids: 89.3

Lab ID: SC0321-33
Client ID: MR08-SS223-09A
SDG: TO9-39
Extracted by: AC
Extraction Method: SW846 3550
Analyst: JCG
Analysis Method: SW846 8270C
Lab Prep Batch: WG60196
Units: ug/Kgdrywt

CAS#	Compound	Flags	Results	DF	PQL	Adj.PQL	Adj.MDL
100-52-7	Benzaldehyde	U	560	1.0	500	560	130
108-95-2	Phenol	U	560	1.0	500	560	170
111-44-4	Bis(2-Chloroethyl)ether	U	370	1.0	330	370	91
95-57-8	2-Chlorophenol	U	560	1.0	500	560	180
95-48-7	2-Methylphenol	U	670	1.0	600	670	220
108-60-1	2,2'-Oxybis(1-chloropropane)	U	370	1.0	330	370	100
98-86-2	Acetophenone	U	670	1.0	600	670	200
621-64-7	N-Nitroso-di-n-propylamine	U	370	1.0	330	370	93
65794-96-9	3&4-Methylphenol	U	670	1.0	600	670	210
67-72-1	Hexachloroethane	U	370	1.0	330	370	110
98-95-3	Nitrobenzene	U	370	1.0	330	370	100
78-59-1	Isophorone	U	370	1.0	330	370	84
88-75-5	2-Nitrophenol	U	670	1.0	600	670	190
105-67-9	2,4-Dimethylphenol	U	560	1.0	500	560	180
111-91-1	Bis(2-Chloroethoxy)methane	U	370	1.0	330	370	110
120-83-2	2,4-Dichlorophenol	U	560	1.0	500	560	170
106-47-8	4-Chloroaniline	U	560	1.0	500	560	130
105-60-2	Caprolactam	U	560	1.0	500	560	160
59-50-7	4-Chloro-3-Methylphenol	U	560	1.0	500	560	180
88-06-2	2,4,6-Trichlorophenol	U	560	1.0	500	560	170
95-95-4	2,4,5-Trichlorophenol	U	560	1.0	500	560	170
91-58-7	2-Chloronaphthalene	U	370	1.0	330	370	97
92-52-4	1,1'-Biphenyl	U	370	1.0	330	370	82
88-74-4	2-Nitroaniline	U	560	1.0	500	560	84
131-11-3	Dimethyl Phthalate	U	370	1.0	330	370	87
606-20-2	2,6-Dinitrotoluene	U	370	1.0	330	370	88
208-96-8	Acenaphthylene	U	370	1.0	330	370	78
99-09-2	3-Nitroaniline	U	560	1.0	500	560	100
83-32-9	Acenaphthene	U	370	1.0	330	370	73
51-28-5	2,4-Dinitrophenol	U	1300	1.0	1200	1300	420
132-64-9	Dibenzofuran	U	370	1.0	330	370	88
100-02-7	4-Nitrophenol	U	1300	1.0	1200	1300	350
121-14-2	2,4-Dinitrotoluene	U	370	1.0	330	370	95
84-66-2	Diethylphthalate	U	370	1.0	330	370	90
7005-72-3	4-Chlorophenyl-phenylether	U	370	1.0	330	370	87
100-01-6	4-Nitroaniline	U	560	1.0	500	560	150
534-52-1	4,6-Dinitro-2-Methylphenol	U	1300	1.0	1200	1300	380
86-30-6	N-Nitrosodiphenylamine	U	740	1.0	660	740	240
101-55-3	4-Bromophenyl-phenylether	U	370	1.0	330	370	95
1912-24-9	Atrazine	U	370	1.0	330	370	100
87-86-5	Pentachlorophenol	U	920	1.0	820	920	260
120-12-7	Anthracene	U	370	1.0	330	370	94
86-74-8	Carbazole	U	560	1.0	500	560	120

lwe 4/17/09

KATAHDIN ANALYTICAL SERVICES
Report of Analytical Results

Client: CH2MHill
Project: TO-009 Lejeune
PO No:
Sample Date: 01/20/09
Received Date: 01/22/09
Extraction Date: 01/26/09
Analysis Date: 06-FEB-2009 15:48
Report Date: 02/11/2009
Matrix: SOIL
% Solids: 89.3

Lab ID: SC0321-33
Client ID: MR08-SS223-09A
SDG: TO9-39
Extracted by: AC
Extraction Method: SW846 3550
Analyst: JCG
Analysis Method: SW846 8270C
Lab Prep Batch: WG60196
Units: ug/Kgdrywt

CAS#	Compound	Flags	Results	DF	PQL	Adj.PQL	Adj.MDL
84-74-2	Di-n-butylphthalate	U	370	1.0	330	370	110
85-68-7	Butylbenzylphthalate	U	370	1.0	330	370	100
91-94-1	3,3'-Dichlorobenzidine	U	560	1.0	500	560	130
218-01-9	Chrysene	U	370	1.0	330	370	110
117-81-7	bis(2-Ethylhexyl)phthalate	U	370	1.0	330	370	110
117-84-0	Di-n-octylphthalate	U	370	1.0	330	370	240
367-12-4	2-Fluorophenol		76%				
13127-88-3	Phenol-D6		75%				
4165-60-0	Nitrobenzene-D5		72%				
321-60-8	2-Fluorobiphenyl		70%				
118-79-6	2,4,6-Tribromophenol		69%				
1718-51-0	Terphenyl-D14		101%				

lw
4/17/09

KATAHDIN ANALYTICAL SERVICES
Report of Analytical Results

Client: CH2MHill
Project: TO-009 Lejeune
PO No:
Sample Date: 01/20/09
Received Date: 01/22/09
Extraction Date: 01/26/09
Analysis Date: 06-FEB-2009 16:31
Report Date: 02/11/2009
Matrix: SOIL
% Solids: 87.3

Lab ID: SC0321-35
Client ID: MR08-IS212-4-5-09A
SDG: TO9-39
Extracted by: AC
Extraction Method: SW846 3550
Analyst: JCG
Analysis Method: SW846 8270C
Lab Prep Batch: WG60196
Units: ug/Kgdrywt

CAS#	Compound	Flags	Results	DF	PQL	Adj.PQL	Adj.MDL
100-52-7	Benzaldehyde	U	570	1.0	500	570	140
108-95-2	Phenol	U	570	1.0	500	570	180
111-44-4	Bis(2-Chloroethyl)ether	U	380	1.0	330	380	93
95-57-8	2-Chlorophenol	U	570	1.0	500	570	190
95-48-7	2-Methylphenol	U	690	1.0	600	690	230
108-60-1	2,2'-Oxybis(1-chloropropane)	U	380	1.0	330	380	100
98-86-2	Acetophenone	U	690	1.0	600	690	200
621-64-7	N-Nitroso-di-n-propylamine	U	380	1.0	330	380	95
65794-96-9	3&4-Methylphenol	U	690	1.0	600	690	210
67-72-1	Hexachloroethane	U	380	1.0	330	380	110
98-95-3	Nitrobenzene	U	380	1.0	330	380	100
78-59-1	Isophorone	U	380	1.0	330	380	86
88-75-5	2-Nitrophenol	U	690	1.0	600	690	190
105-67-9	2,4-Dimethylphenol	U	570	1.0	500	570	190
111-91-1	Bis(2-Chloroethoxy)methane	U	380	1.0	330	380	110
120-83-2	2,4-Dichlorophenol	U	570	1.0	500	570	170
106-47-8	4-Chloroaniline	U	570	1.0	500	570	140
105-60-2	Caprolactam	U	570	1.0	500	570	160
59-50-7	4-Chloro-3-Methylphenol	U	570	1.0	500	570	190
88-06-2	2,4,6-Trichlorophenol	U	570	1.0	500	570	180
95-95-4	2,4,5-Trichlorophenol	U	570	1.0	500	570	180
91-58-7	2-Chloronaphthalene	U	380	1.0	330	380	100
92-52-4	1,1'-Biphenyl	U	380	1.0	330	380	84
88-74-4	2-Nitroaniline	U	570	1.0	500	570	86
131-11-3	Dimethyl Phthalate	U	380	1.0	330	380	89
606-20-2	2,6-Dinitrotoluene	U	380	1.0	330	380	90
208-96-8	Acenaphthylene	U	380	1.0	330	380	80
99-09-2	3-Nitroaniline	U	570	1.0	500	570	110
83-32-9	Acenaphthene	U	380	1.0	330	380	74
51-28-5	2,4-Dinitrophenol	U	1400	1.0	1200	1400	430
132-64-9	Dibenzofuran	U	380	1.0	330	380	90
100-02-7	4-Nitrophenol	U	1400	1.0	1200	1400	350
121-14-2	2,4-Dinitrotoluene	U	380	1.0	330	380	97
84-66-2	Diethylphthalate	U	380	1.0	330	380	92
7005-72-3	4-Chlorophenyl-phenylether	U	380	1.0	330	380	89
100-01-6	4-Nitroaniline	U	570	1.0	500	570	150
534-52-1	4,6-Dinitro-2-Methylphenol	U	1400	1.0	1200	1400	390
86-30-6	N-Nitrosodiphenylamine	U	760	1.0	660	760	250
101-55-3	4-Bromophenyl-phenylether	U	380	1.0	330	380	97
1912-24-9	Atrazine	U	380	1.0	330	380	100
87-86-5	Pentachlorophenol	U	940	1.0	820	940	270
120-12-7	Anthracene	U	380	1.0	330	380	96
86-74-8	Carbazole	U	570	1.0	500	570	130

lw
4/17/09

KATAHDIN ANALYTICAL SERVICES
Report of Analytical Results

Client: CH2MHill
Project: TO-009 Lejeune
PO No:
Sample Date: 01/20/09
Received Date: 01/22/09
Extraction Date: 01/26/09
Analysis Date: 06-FEB-2009 16:31
Report Date: 02/11/2009
Matrix: SOIL
% Solids: 87.3

Lab ID: SC0321-35
Client ID: MR08-IS212-4-5-09A
SDG: TO9-39
Extracted by: AC
Extraction Method: SW846 3550
Analyst: JCG
Analysis Method: SW846 8270C
Lab Prep Batch: WG60196
Units: ug/Kgdrywt

CAS#	Compound	Flags	Results	DF	PQL	Adj.PQL	Adj.MDL
84-74-2	Di-n-butylphthalate	U	380	1.0	330	380	120
85-68-7	Butylbenzylphthalate	U	380	1.0	330	380	110
91-94-1	3,3'-Dichlorobenzidine	U	570	1.0	500	570	130
218-01-9	Chrysene	U	380	1.0	330	380	110
117-81-7	bis(2-Ethylhexyl)phthalate	U	380	1.0	330	380	110
117-84-0	Di-n-octylphthalate	U	380	1.0	330	380	240
367-12-4	2-Fluorophenol		83%				
13127-88-3	Phenol-D6		80%				
4165-60-0	Nitrobenzene-D5		78%				
321-60-8	2-Fluorobiphenyl		81%				
118-79-6	2,4,6-Tribromophenol		66%				
1718-51-0	Terphenyl-D14		102%				

MW
4/17/09

KATAHDIN ANALYTICAL SERVICES
Report of Analytical Results

Client: CH2MHill
Project: TO-009 Lejeune
PO No:
Sample Date: 01/20/09
Received Date: 01/22/09
Extraction Date: 01/26/09
Analysis Date: 06-FEB-2009 17:13
Report Date: 02/11/2009
Matrix: SOIL
% Solids: 87.7

Lab ID: SC0321-37
Client ID: MR08-SS212-09A
SDG: TO9-39
Extracted by: AC
Extraction Method: SW846 3550
Analyst: JCG
Analysis Method: SW846 8270C
Lab Prep Batch: WG60196
Units: ug/Kgdrywt

CAS#	Compound	Flags	Results	DF	PQL	Adj.PQL	Adj.MDL
100-52-7	Benzaldehyde	U	570	1.0	500	570	140
108-95-2	Phenol	U	570	1.0	500	570	180
111-44-4	Bis(2-Chloroethyl)ether	U	380	1.0	330	380	92
95-57-8	2-Chlorophenol	U	570	1.0	500	570	190
95-48-7	2-Methylphenol	U	680	1.0	600	680	230
108-60-1	2,2'-Oxybis(1-chloropropane)	U	380	1.0	330	380	100
98-86-2	Acetophenone	U	680	1.0	600	680	200
621-64-7	N-Nitroso-di-n-propylamine	U	380	1.0	330	380	95
65794-96-9	3&4-Methylphenol	U	680	1.0	600	680	210
67-72-1	Hexachloroethane	U	380	1.0	330	380	110
98-95-3	Nitrobenzene	U	380	1.0	330	380	100
78-59-1	Isophorone	U	380	1.0	330	380	86
88-75-5	2-Nitrophenol	U	680	1.0	600	680	190
105-67-9	2,4-Dimethylphenol	U	570	1.0	500	570	190
111-91-1	Bis(2-Chloroethoxy)methane	U	380	1.0	330	380	110
120-83-2	2,4-Dichlorophenol	U	570	1.0	500	570	170
106-47-8	4-Chloroaniline	U	570	1.0	500	570	140
105-60-2	Caprolactam	U	570	1.0	500	570	160
59-50-7	4-Chloro-3-Methylphenol	U	570	1.0	500	570	190
88-06-2	2,4,6-Trichlorophenol	U	570	1.0	500	570	180
95-95-4	2,4,5-Trichlorophenol	U	570	1.0	500	570	180
91-58-7	2-Chloronaphthalene	U	380	1.0	330	380	99
92-52-4	1,1'-Biphenyl	U	380	1.0	330	380	83
88-74-4	2-Nitroaniline	U	570	1.0	500	570	86
131-11-3	Dimethyl Phthalate	U	380	1.0	330	380	89
606-20-2	2,6-Dinitrotoluene	U	380	1.0	330	380	90
208-96-8	Acenaphthylene	U	380	1.0	330	380	80
99-09-2	3-Nitroaniline	U	570	1.0	500	570	110
83-32-9	Acenaphthene	U	380	1.0	330	380	74
51-28-5	2,4-Dinitrophenol	U	1400	1.0	1200	1400	430
132-64-9	Dibenzofuran	U	380	1.0	330	380	90
100-02-7	4-Nitrophenol	U	1400	1.0	1200	1400	350
121-14-2	2,4-Dinitrotoluene	U	380	1.0	330	380	97
84-66-2	Diethylphthalate	U	380	1.0	330	380	91
7005-72-3	4-Chlorophenyl-phenylether	U	380	1.0	330	380	89
100-01-6	4-Nitroaniline	U	570	1.0	500	570	150
534-52-1	4,6-Dinitro-2-Methylphenol	U	1400	1.0	1200	1400	380
86-30-6	N-Nitrosodiphenylamine	U	750	1.0	660	750	250
101-55-3	4-Bromophenyl-phenylether	U	380	1.0	330	380	97
1912-24-9	Atrazine	U	380	1.0	330	380	100
87-86-5	Pentachlorophenol	U	930	1.0	820	930	270
120-12-7	Anthracene	U	380	1.0	330	380	96
86-74-8	Carbazole	U	570	1.0	500	570	130

4/17/09

KATAHDIN ANALYTICAL SERVICES
Report of Analytical Results

Client: CH2MHill
Project: TO-009 Lejeune
PO No:
Sample Date: 01/20/09
Received Date: 01/22/09
Extraction Date: 01/26/09
Analysis Date: 06-FEB-2009 17:13
Report Date: 02/11/2009
Matrix: SOIL
% Solids: 87.7

Lab ID: SC0321-37
Client ID: MR08-SS212-09A
SDG: TO9-39
Extracted by: AC
Extraction Method: SW846 3550
Analyst: JCG
Analysis Method: SW846 8270C
Lab Prep Batch: WG60196
Units: ug/Kgdrywt

CAS#	Compound	Flags	Results	DF	PQL	Adj.PQL	Adj.MDL
84-74-2	Di-n-butylphthalate	U	380	1.0	330	380	120
85-68-7	Butylbenzylphthalate	U	380	1.0	330	380	110
91-94-1	3,3'-Dichlorobenzidine	U	570	1.0	500	570	130
218-01-9	Chrysene	U	380	1.0	330	380	110
117-81-7	bis(2-Ethylhexyl)phthalate	U	380	1.0	330	380	110
117-84-0	Di-n-octylphthalate	U	380	1.0	330	380	240
367-12-4	2-Fluorophenol		82%				
13127-88-3	Phenol-D6		82%				
4165-60-0	Nitrobenzene-D5		73%				
321-60-8	2-Fluorobiphenyl		84%				
118-79-6	2,4,6-Tribromophenol		83%				
1718-51-0	Terphenyl-D14		101%				

lw
4/17/09

KATAHDIN ANALYTICAL SERVICES
Report of Analytical Results

Client: CH2MHill
Project: TO-009 Lejeune
PO No:
Sample Date: 01/20/09
Received Date: 01/22/09
Extraction Date: 01/26/09
Analysis Date: 06-FEB-2009 17:56
Report Date: 02/11/2009
Matrix: SOIL
% Solids: 84.2

Lab ID: SC0321-39
Client ID: MR08-IS213-4-5-09A
SDG: TO9-39
Extracted by: AC
Extraction Method: SW846 3550
Analyst: JCG
Analysis Method: SW846 8270C
Lab Prep Batch: WG60196
Units: ug/Kgdrywt

CAS#	Compound	Flags	Results	DF	PQL	Adj.PQL	Adj.MDL
100-52-7	Benzaldehyde	U	590	1.0	500	590	140
108-95-2	Phenol	U	590	1.0	500	590	180
111-44-4	Bis(2-Chloroethyl)ether	U	390	1.0	330	390	96
95-57-8	2-Chlorophenol	U	590	1.0	500	590	190
95-48-7	2-Methylphenol	U	710	1.0	600	710	240
108-60-1	2,2'-Oxybis(1-chloropropane)	U	390	1.0	330	390	100
98-86-2	Acetophenone	U	710	1.0	600	710	210
621-64-7	N-Nitroso-di-n-propylamine	U	390	1.0	330	390	98
65794-96-9	3&4-Methylphenol	U	710	1.0	600	710	220
67-72-1	Hexachloroethane	U	390	1.0	330	390	110
98-95-3	Nitrobenzene	U	390	1.0	330	390	110
78-59-1	Isophorone	U	390	1.0	330	390	89
88-75-5	2-Nitrophenol	U	710	1.0	600	710	200
105-67-9	2,4-Dimethylphenol	U	590	1.0	500	590	200
111-91-1	Bis(2-Chloroethoxy)methane	U	390	1.0	330	390	110
120-83-2	2,4-Dichlorophenol	U	590	1.0	500	590	180
106-47-8	4-Chloroaniline	U	590	1.0	500	590	140
105-60-2	Caprolactam	U	590	1.0	500	590	170
59-50-7	4-Chloro-3-Methylphenol	U	590	1.0	500	590	200
88-06-2	2,4,6-Trichlorophenol	U	590	1.0	500	590	180
95-95-4	2,4,5-Trichlorophenol	U	590	1.0	500	590	180
91-58-7	2-Chloronaphthalene	U	390	1.0	330	390	100
92-52-4	1,1'-Biphenyl	U	390	1.0	330	390	87
88-74-4	2-Nitroaniline	U	590	1.0	500	590	89
131-11-3	Dimethyl Phthalate	U	390	1.0	330	390	93
606-20-2	2,6-Dinitrotoluene	U	390	1.0	330	390	94
208-96-8	Acenaphthylene	U	390	1.0	330	390	83
99-09-2	3-Nitroaniline	U	590	1.0	500	590	110
83-32-9	Acenaphthene	U	390	1.0	330	390	77
51-28-5	2,4-Dinitrophenol	U	1400	1.0	1200	1400	450
132-64-9	Dibenzofuran	U	390	1.0	330	390	94
100-02-7	4-Nitrophenol	U	1400	1.0	1200	1400	370
121-14-2	2,4-Dinitrotoluene	U	390	1.0	330	390	100
84-66-2	Diethylphthalate	U	390	1.0	330	390	95
7005-72-3	4-Chlorophenyl-phenylether	U	390	1.0	330	390	93
100-01-6	4-Nitroaniline	U	590	1.0	500	590	160
534-52-1	4,6-Dinitro-2-Methylphenol	U	1400	1.0	1200	1400	400
86-30-6	N-Nitrosodiphenylamine	U	780	1.0	660	780	260
101-55-3	4-Bromophenyl-phenylether	U	390	1.0	330	390	100
1912-24-9	Atrazine	U	390	1.0	330	390	110
87-86-5	Pentachlorophenol	U	970	1.0	820	970	280
120-12-7	Anthracene	U	390	1.0	330	390	100
86-74-8	Carbazole	U	590	1.0	500	590	130

LW
4/17/09

KATAHDIN ANALYTICAL SERVICES
Report of Analytical Results

Client: CH2MHill
Project: TO-009 Lejeune
PO No:
Sample Date: 01/20/09
Received Date: 01/22/09
Extraction Date: 01/26/09
Analysis Date: 06-FEB-2009 17:56
Report Date: 02/11/2009
Matrix: SOIL
% Solids: 84.2

Lab ID: SC0321-39
Client ID: MR08-IS213-4-5-09A
SDG: TO9-39
Extracted by: AC
Extraction Method: SW846 3550
Analyst: JCG
Analysis Method: SW846 8270C
Lab Prep Batch: WG60196
Units: ug/Kgdrywt

CAS#	Compound	Flags	Results	DF	PQL	Adj.PQL	Adj.MDL
84-74-2	Di-n-butylphthalate	U	390	1.0	330	390	120
85-68-7	Butylbenzylphthalate	U	390	1.0	330	390	110
91-94-1	3,3'-Dichlorobenzidine	U	590	1.0	500	590	140
218-01-9	Chrysene	U	390	1.0	330	390	110
117-81-7	bis(2-Ethylhexyl)phthalate	U	390	1.0	330	390	120
117-84-0	Di-n-octylphthalate	U	390	1.0	330	390	250
367-12-4	2-Fluorophenol		77%				
13127-88-3	Phenol-D6		78%				
4165-60-0	Nitrobenzene-D5		79%				
321-60-8	2-Fluorobiphenyl		80%				
118-79-6	2,4,6-Tribromophenol		71%				
1718-51-0	Terphenyl-D14		98%				

lw 4/17/09

ENVIRONMENTAL
Data Services, Inc.

POLYNUCLEAR AROMATIC COMPOUNDS BY 8270SIM

USEPA Region IV - Level IV Review

Site: MCB Camp Lejeune, TO-09 SDG #: TO9-40

Client: CH2M HILL, Inc., Virginia Beach, Virginia Date: April 17, 2009

Laboratory: Katahdin Analytical Services, Scarborough, Maine Reviewer: Nancy Weaver

EDS ID	Client Sample ID	Laboratory Sample ID	Matrix
1	MR08-SS268-09A	SC0322-2	Soil
1MS	MR08-SS268-09AMS	SC0322-2MS	Soil
1MSD	MR08-SS268-09AMSD	SC0322-2MSD	Soil
2	MR08-SS213-09A	SC0322-4	Soil
3	MR08-IS247-8-10-09A	SC0364-2	Soil
4	MR08-SS247-09A	SC0364-4	Soil
5	MR08-IS319-9-10-09A	SC0364-6	Soil
6	MR08-IS319D-9-10-09A	SC0364-8	Soil
7	MR08-SS319-09A	SC0364-10	Soil
8	MR08-SS319D-09A	SC0364-12	Soil
9	MR08-SS318-09A	SC0364-14	Soil
10	MR08-IS318-4-5-09A	SC0364-16	Soil
11	MR08-SS317-09A	SC0364-18	Soil
12	MR08-IS317-4-5-09A	SC0364-20	Soil
13	MR08-SS153-09A	SC0364-22	Soil
13DL	MR08-SS153-09ADL	SC0364-22DL	Soil
14	MR08-IS153-2-3-09A	SC0364-24	Soil
15	MR08-SS162-09A	SC0364-26	Soil
16	MR08-IS162-4-5-09A	SC0364-28	Soil
17	MR08-SS316-09A	SC0364-30	Soil
17DL	MR08-SS316-09ADL	SC0364-30DL	Soil
18	MR08-IS316-4-5-09A	SC0364-32	Soil
19	MR08-IS315-4-5-09A	SC0364-34	Soil
20	MR08-SS315-09A	SC0364-36	Soil

The USEPA "Contract Laboratory Program National Functional Guidelines for Organic Data Review," October 1999, and professional judgment were used in evaluating the data in this summary report.

Holding Times - All samples were extracted within 14 days for soil samples and analyzed within 40 days for all samples.

GC/MS Tuning - All of the DFTPP tunes in the initial and continuing calibrations met the percent relative abundance criteria.

Initial Calibration - The initial calibrations exhibited acceptable %RSD and mean RRF values.

Continuing Calibration - The continuing calibrations exhibited acceptable %D and RRF values except the following.

CCAL Date	Compound	%D/RRF	Qualifier	Affected Samples
02/04/09	Fluoranthene	27.88%	J/UJ	3-12, 14
	Indeno (1,2,3-cd) pyrene	25.28%	J/UJ	3-12, 14
	Benzo (g,h,i) perylene	27.68%	J/UJ	3-12, 14
	Hexachlorobutadiene	67.30%	J/UJ	3-12, 14
	Hexachlorocyclopentadiene	66.86%	J/UJ	3-12, 14
02/05/09	2-Methylnaphthalene	28.41%	J/UJ	1, 2, 13DL, 17DL, 20
	Hexachlorobutadiene	39.02%	J/UJ	1, 2, 13DL, 17DL, 20

Surrogates - All samples exhibited acceptable surrogate recoveries except the following.

Sample ID	Surrogate	%R	Qualifier
7	S1-2-Methylnaphthalene-d10	130%	None for 1 out

MS/MSD - The MS/MSD sample exhibited acceptable %R and RPD values except the following.

MS/MSD Sample ID	Compound	MS/MSD %R/RPD	Qualifier
1	2-Methylnaphthalene	62%/61%/Ok	None - See CCAL
	Fluoranthene	Ok/19%/Ok	J/UJ

Laboratory Control Sample - The LCS samples exhibited acceptable %R values except the following.

LCS ID	Compound	%R	Qualifier	Affected Samples
WG60197-LCS	2-Methylnaphthalene	56%	None	See CCAL
WG60273-LCS	2-Methylnaphthalene	42%	J/UJ	20

Internal Standard (IS) Area Performance - All internal standards met response and retention time (RT) criteria.

Method Blank - The method blanks exhibited the following contamination.

Blank ID	Compound	Conc. ug/kg	Action Level ug/kg	Qualifier	Affected Samples
WG60255-BLANK	2-Methylnaphthalene	7.3	36.5	U	3-5, 7, 8, 11-13, 13DL, 17, 17DL
	Fluoranthene	3.0	15	U	3, 4, 5, 9, 15
	Pyrene	2.4	12	U	3, 4, 9, 15
	Benzo (a) anthracene	2.6	13	U	3, 4, 7-9, 15
	Benzo (g,h,i) perylene	4.5	22.5	U	3, 4, 7-9, 15

Field, Equipment Blank - Field QC results are summarized below.

Blank ID	Compound	Conc. ug/L	Action Level ug/kg	Qualifier	Affected Samples
MR08-FB012609	None - ND	-	-	-	-
MR08-EB012109	None - ND	-	-	-	-

Field Duplicates - Field duplicate results are summarized below.

Compound	MR08-IS319-9-10-09A ug/kg	MR08-IS319D-9-10-09A ug/kg	RPD	Qualifier
None	ND	ND	-	-

Compound	MR08-SS319-09A ug/kg	MR08-SS319D-09A ug/kg	RPD	Qualifier
Phenanthrene	7.9	5.2	41%	None
Fluoranthene	38	26	38%	None
Pyrene	25	17	38%	None
Benzo (b) fluoranthene	20	18	11%	None
Benzo (k) fluoranthene	16	13	21%	None
Benzo (a) pyrene	15	10	40%	None
Indeno (1,2,3-cd) pyrene	11	7.7	35%	None
Dibenzo (a,h) anthracene	3.2	2.1	42%	None

Compound Quantitation - Several samples exhibited high concentrations of target compounds and were flagged (E) by the laboratory. The samples were diluted and reanalyzed and the dilution result for these compounds should be used for reporting.

KATAHDIN ANALYTICAL SERVICES
Report of Analytical Results

Client: CH2MHill
Project: TO-009 Lejeune
PO No:
Sample Date: 01/19/09
Received Date: 01/22/09
Extraction Date: 01/26/09
Analysis Date: 06-FEB-2009 03:21
Report Date: 02/15/2009
Matrix: SOIL
% Solids: 82.7

Lab ID: SC0322-2
Client ID: MR08-SS268-09A
SDG: TO9-40
Extracted by: AC
Extraction Method: SW846 3550
Analyst: JCG
Analysis Method: SW846 M8270C
Lab Prep Batch: WG60197
Units: ug/Kgdrywt

CAS#	Compound	Flags		Results	DF	PQL	Adj.PQL	Adj.MDL	
91-20-3	Naphthalene	U		12	1.0	10	12	3.1	
91-57-6	2-Methylnaphthalene	~~J~~	J	3.1	1.0	10	12	2.7	~~MSL~~ CCH
86-73-7	Fluorene	J		6.6	1.0	10	12	3.9	
85-01-8	Phenanthrene			78	1.0	10	12	2.2	
206-44-0	Fluoranthene		J	140	1.0	10	12	2.2	MSL
129-00-0	Pyrene			120	1.0	10	12	2.5	
56-55-3	Benzo(a)anthracene			65	1.0	10	12	2.3	
205-99-2	Benzo(b)fluoranthene			110	1.0	10	12	2.9	
207-08-9	Benzo(k)fluoranthene			64	1.0	10	12	3.7	
50-32-8	Benzo(a)pyrene			70	1.0	10	12	4.0	
193-39-5	Indeno(1,2,3-cd)pyrene			43	1.0	10	12	2.3	
53-70-3	Dibenzo(a,h)anthracene			17	1.0	10	12	2.2	
191-24-2	Benzo(g,h,i)perylene			39	1.0	10	12	2.4	
118-74-1	Hexachlorobenzene	U		12	1.0	10	12	2.2	
87-68-3	Hexachlorobutadiene	~~U~~	UJ	12	1.0	10	12	2.8	CCH
77-47-4	Hexachlorocyclopentadiene	U		12	1.0	10	12	1.8	
7297-45-2	2-Methylnaphthalene-D10			48%					
367-12-4	2,4-Dibromophenol			110%					
81103-79-9	Fluorene-d10			103%					
1718-51-1	Pyrene-D10			103%					

LW
4/17/09

2

KATAHDIN ANALYTICAL SERVICES
Report of Analytical Results

Client: CH2MHill
Project: TO-009 Lejeune
PO No:
Sample Date: 01/20/09
Received Date: 01/22/09
Extraction Date: 01/26/09
Analysis Date: 06-FEB-2009 04:01
Report Date: 02/15/2009
Matrix: SOIL
% Solids: 89.8

Lab ID: SC0322-4
Client ID: MR08-SS213-09A
SDG: T09-40
Extracted by: AC
Extraction Method: SW846 3550
Analyst: JCG
Analysis Method: SW846 M8270C
Lab Prep Batch: WG60197
Units: ug/Kgdrywt

CAS#	Compound	Flags	Results	DF	PQL	Adj.PQL	Adj.MDL	
91-20-3	Naphthalene	U	11	1.0	10	11	2.9	
91-57-6	2-Methylnaphthalene	~~J~~ UJ	11	1.0	10	11	2.4	~~BSL~~ CCH
86-73-7	Fluorene	U	11	1.0	10	11	3.6	
85-01-8	Phenanthrene	J	4.0	1.0	10	11	2.0	
206-44-0	Fluoranthene		20	1.0	10	11	2.0	
129-00-0	Pyrene		18	1.0	10	11	2.3	
56-55-3	Benzo(a)anthracene	J	7.9	1.0	10	11	2.1	
205-99-2	Benzo(b)fluoranthene		25	1.0	10	11	2.7	
207-08-9	Benzo(k)fluoranthene	J	9.8	1.0	10	11	3.4	
50-32-8	Benzo(a)pyrene		13	1.0	10	11	3.7	
193-39-5	Indeno(1,2,3-cd)pyrene	J	9.1	1.0	10	11	2.1	
53-70-3	Dibenzo(a,h)anthracene	U	11	1.0	10	11	2.0	
191-24-2	Benzo(g,h,i)perylene	J	9.7	1.0	10	11	2.2	
118-74-1	Hexachlorobenzene	U	11	1.0	10	11	2.0	
87-68-3	Hexachlorobutadiene	~~J~~ UJ	11	1.0	10	11	2.6	CCH
77-47-4	Hexachlorocyclopentadiene	U	11	1.0	10	11	1.7	
7297-45-2	2-Methylnaphthalene-D10		51%					
367-12-4	2,4-Dibromophenol		96%					
81103-79-9	Fluorene-d10		104%					
1718-51-1	Pyrene-D10		110%					

MW
4/17/09

3

KATAHDIN ANALYTICAL SERVICES
Report of Analytical Results

Client: CH2MHill
Project: TO-009 Lejeune
PO No:
Sample Date: 01/21/09
Received Date: 01/24/09
Extraction Date: 01/28/09
Analysis Date: 04-FEB-2009 20:39
Report Date: 02/15/2009
Matrix: SOIL
% Solids: 93.7

Lab ID: SC0364-2
Client ID: MR08-IS247-8-10-09A
SDG: TO9-40
Extracted by: AC
Extraction Method: SW846 3550
Analyst: JCG
Analysis Method: SW846 M8270C
Lab Prep Batch: WG60255
Units: ug/Kgdrywt

CAS#	Compound	Flags		Results	DF	PQL	Adj.PQL	Adj.MDL	
91-20-3	Naphthalene	U		11	1.0	10	11	2.8	
91-57-6	2-Methylnaphthalene	~~JB~~	11U	~~8.5~~	1.0	10	11	2.3	BL
86-73-7	Fluorene	U		11	1.0	10	11	3.4	
85-01-8	Phenanthrene	J		~~2~~.2	1.0	10	11	1.9	
206-44-0	Fluoranthene	~~JB~~	11UJ	~~3.5~~	1.0	10	11	1.9	~~BL~~ CCH
129-00-0	Pyrene	~~JB~~	11U	~~2.1~~	1.0	10	11	2.2	BL
56-55-3	Benzo(a)anthracene	~~JB~~	11U	2.8	1.0	10	11	2.0	BL
205-99-2	Benzo(b)fluoranthene	J		2.4	1.0	10	11	2.6	
207-08-9	Benzo(k)fluoranthene	J		2.7	1.0	10	11	3.3	
50-32-8	Benzo(a)pyrene	U		11	1.0	10	11	3.5	
193-39-5	Indeno(1,2,3-cd)pyrene	~~U~~	UJ	11	1.0	10	11	2.0	CCH
53-70-3	Dibenzo(a,h)anthracene	U		11	1.0	10	11	1.9	
191-24-2	Benzo(g,h,i)perylene	~~JB~~	11UJ	~~1.3~~	1.0	10	11	2.1	~~BL~~ CCH
118-74-1	Hexachlorobenzene	J		2.0	1.0	10	11	1.9	
87-68-3	Hexachlorobutadiene	~~J~~	J	3.6	1.0	10	11	2.4	CCH
77-47-4	Hexachlorocyclopentadiene	~~J~~	J	8.9	1.0	10	11	1.6	CCH
7297-45-2	2-Methylnaphthalene-D10			96%					
367-12-4	2,4-Dibromophenol			80%					
81103-79-9	Fluorene-d10			70%					
1718-51-1	Pyrene-D10			66%					

MW 4/17/09

4

KATAHDIN ANALYTICAL SERVICES
Report of Analytical Results

Client: CH2MHill
Project: TO-009 Lejeune
PO No:
Sample Date: 01/21/09
Received Date: 01/24/09
Extraction Date: 01/28/09
Analysis Date: 04-FEB-2009 21:19
Report Date: 02/15/2009
Matrix: SOIL
% Solids: 92.4

Lab ID: SC0364-4
Client ID: MR08-SS247-09A
SDG: TO9-40
Extracted by: AC
Extraction Method: SW846 3550
Analyst: JCG
Analysis Method: SW846 M8270C
Lab Prep Batch: WG60255
Units: ug/Kgdrywt

CAS#	Compound	Flags		Results	DF	PQL	Adj.PQL	Adj.MDL	
91-20-3	Naphthalene	U		11	1.0	10	11	2.8	
91-57-6	2-Methylnaphthalene	~~JB~~	11U	~~7.2~~	1.0	10	11	2.4	BL
86-73-7	Fluorene	U		11	1.0	10	11	3.5	
85-01-8	Phenanthrene	U		11	1.0	10	11	1.9	
206-44-0	Fluoranthene	~~JB~~	11UJ	~~5.3~~	1.0	10	11	1.9	~~BL~~ CCH
129-00-0	Pyrene	~~JB~~	11U	~~3.9~~	1.0	10	11	2.3	BL
56-55-3	Benzo(a)anthracene	~~JB~~	11U	~~2.4~~	1.0	10	11	2.0	BL
205-99-2	Benzo(b)fluoranthene	U		11	1.0	10	11	2.6	
207-08-9	Benzo(k)fluoranthene	U		11	1.0	10	11	3.4	
50-32-8	Benzo(a)pyrene	U		11	1.0	10	11	3.6	
193-39-5	Indeno(1,2,3-cd)pyrene	~~J~~	J	2.2	1.0	10	11	2.0	CCH
53-70-3	Dibenzo(a,h)anthracene	U		11	1.0	10	11	1.9	
191-24-2	Benzo(g,h,i)perylene	~~JB~~	11UJ	~~2.2~~	1.0	10	11	2.2	~~BL~~ CCH
118-74-1	Hexachlorobenzene	U		11	1.0	10	11	1.9	
87-68-3	Hexachlorobutadiene	~~U~~	UJ	11	1.0	10	11	2.5	CCH
77-47-4	Hexachlorocyclopentadiene	~~U~~	UJ	11	1.0	10	11	1.6	CCH
7297-45-2	2-Methylnaphthalene-D10			99%					
367-12-4	2,4-Dibromophenol			79%					
81103-79-9	Fluorene-d10			68%					
1718-51-1	Pyrene-D10			74%					

lw
4/17/09

5

KATAHDIN ANALYTICAL SERVICES
Report of Analytical Results

Client: CH2MHill
Project: TO-009 Lejeune
PO No:
Sample Date: 01/21/09
Received Date: 01/24/09
Extraction Date: 01/28/09
Analysis Date: 04-FEB-2009 22:00
Report Date: 02/15/2009
Matrix: SOIL
% Solids: 83.1

Lab ID: SC0364-6
Client ID: MR08-IS319-9-10-09A
SDG: TO9-40
Extracted by: AC
Extraction Method: SW846 3550
Analyst: JCG
Analysis Method: SW846 M8270C
Lab Prep Batch: WG60255
Units: ug/Kgdrywt

CAS#	Compound	Flags	Results	DF	PQL	Adj.PQL	Adj.MDL	
91-20-3	Naphthalene	U	12	1.0	10	12	3.1	
91-57-6	2-Methylnaphthalene	~~JB~~	12U ~~8.2~~	1.0	10	12	2.6	BL
86-73-7	Fluorene	U	12	1.0	10	12	3.8	
85-01-8	Phenanthrene	U	12	1.0	10	12	2.2	
206-44-0	Fluoranthene	~~JB~~	12UJ ~~2.5~~	1.0	10	12	2.2	~~BL~~ CCH
129-00-0	Pyrene	U	12	1.0	10	12	2.5	
56-55-3	Benzo(a)anthracene	U	12	1.0	10	12	2.3	
205-99-2	Benzo(b)fluoranthene	U	12	1.0	10	12	2.9	
207-08-9	Benzo(k)fluoranthene	U	12	1.0	10	12	3.7	
50-32-8	Benzo(a)pyrene	U	12	1.0	10	12	4.0	
193-39-5	Indeno(1,2,3-cd)pyrene	~~U~~	UJ 12	1.0	10	12	2.3	CCH
53-70-3	Dibenzo(a,h)anthracene	U	12	1.0	10	12	2.2	
191-24-2	Benzo(g,h,i)perylene	~~U~~	UJ 12	1.0	10	12	2.4	CCH
118-74-1	Hexachlorobenzene	U	12	1.0	10	12	2.2	
87-68-3	Hexachlorobutadiene	~~U~~	UJ 12	1.0	10	12	2.8	CCH
77-47-4	Hexachlorocyclopentadiene	~~U~~	UJ 12	1.0	10	12	1.8	CCH
7297-45-2	2-Methylnaphthalene-D10		114%					
367-12-4	2,4-Dibromophenol		77%					
81103-79-9	Fluorene-d10		77%					
1718-51-1	Pyrene-D10		62%					

AW
4/17/09

6

KATAHDIN ANALYTICAL SERVICES
Report of Analytical Results

Client: CH2MHill
Project: TO-009 Lejeune
PO No:
Sample Date: 01/21/09
Received Date: 01/24/09
Extraction Date: 01/28/09
Analysis Date: 04-FEB-2009 22:40
Report Date: 02/15/2009
Matrix: SOIL
% Solids: 79.8

Lab ID: SC0364-8
Client ID: MR08-IS319D-9-10-09
SDG: TO9-40
Extracted by: AC
Extraction Method: SW846 3550
Analyst: JCG
Analysis Method: SW846 M8270C
Lab Prep Batch: WG60255
Units: ug/Kgdrywt

CAS#	Compound	Flags		Results	DF	PQL	Adj.PQL	Adj.MDL	
91-20-3	Naphthalene	U		12	1.0	10	12	3.2	
91-57-6	2-Methylnaphthalene	U		12	1.0	10	12	2.8	
86-73-7	Fluorene	U		12	1.0	10	12	4.0	
85-01-8	Phenanthrene	U		12	1.0	10	12	2.2	
206-44-0	Fluoranthene	~~U~~	UJ	12	1.0	10	12	2.2	CCH
129-00-0	Pyrene	U		12	1.0	10	12	2.6	
56-55-3	Benzo(a)anthracene	U		12	1.0	10	12	2.4	
205-99-2	Benzo(b)fluoranthene	U		12	1.0	10	12	3.0	
207-08-9	Benzo(k)fluoranthene	U		12	1.0	10	12	3.9	
50-32-8	Benzo(a)pyrene	U		12	1.0	10	12	4.1	
193-39-5	Indeno(1,2,3-cd)pyrene	~~U~~	UJ	12	1.0	10	12	2.4	CCH
53-70-3	Dibenzo(a,h)anthracene	U		12	1.0	10	12	2.2	
191-24-2	Benzo(g,h,i)perylene	~~U~~	UJ	12	1.0	10	12	2.5	CCH
118-74-1	Hexachlorobenzene	U		12	1.0	10	12	2.2	
87-68-3	Hexachlorobutadiene	~~U~~	UJ	12	1.0	10	12	2.9	CCH
77-47-4	Hexachlorocyclopentadiene	~~U~~	UJ	12	1.0	10	12	1.9	CCH
7297-45-2	2-Methylnaphthalene-D10			88%					
367-12-4	2,4-Dibromophenol			66%					
81103-79-9	Fluorene-d10			64%					
1718-51-1	Pyrene-D10			63%					

4/17/09

7

KATAHDIN ANALYTICAL SERVICES
Report of Analytical Results

Client: CH2MHill
Project: TO-009 Lejeune
PO No:
Sample Date: 01/21/09
Received Date: 01/24/09
Extraction Date: 01/28/09
Analysis Date: 04-FEB-2009 23:20
Report Date: 02/15/2009
Matrix: SOIL
% Solids: 85.9

Lab ID: SC0364-10
Client ID: MR08-SS319-09A
SDG: TO9-40
Extracted by: AC
Extraction Method: SW846 3550
Analyst: JCG
Analysis Method: SW846 M8270C
Lab Prep Batch: WG60255
Units: ug/Kgdrywt

CAS#	Compound	Flags	Results	DF	PQL	Adj.PQL	Adj.MDL
91-20-3	Naphthalene	U	12	1.0	10	12	3.0
91-57-6	2-Methylnaphthalene	~~JB~~ 12U	~~7.7~~	1.0	10	12	2.6 BL
86-73-7	Fluorene	U	12	1.0	10	12	3.7
85-01-8	Phenanthrene	J	7.9	1.0	10	12	2.1
206-44-0	Fluoranthene	~~B~~ J	38	1.0	10	12	2.1 CCH
129-00-0	Pyrene	~~B~~	25	1.0	10	12	2.4
56-55-3	Benzo(a)anthracene	~~B~~ 12U	~~12~~	1.0	10	12	2.2 BL
205-99-2	Benzo(b)fluoranthene		20	1.0	10	12	2.8
207-08-9	Benzo(k)fluoranthene		16	1.0	10	12	3.6
50-32-8	Benzo(a)pyrene		15	1.0	10	12	3.8
193-39-5	Indeno(1,2,3-cd)pyrene	~~J~~ J	11	1.0	10	12	2.2 CCH
53-70-3	Dibenzo(a,h)anthracene	J	3.2	1.0	10	12	2.1
191-24-2	Benzo(g,h,i)perylene	~~JB~~ 12UJ	~~11~~	1.0	10	12	2.3 ~~BL~~ CCH
118-74-1	Hexachlorobenzene	U	12	1.0	10	12	2.1
87-68-3	Hexachlorobutadiene	~~U~~ UJ	12	1.0	10	12	2.7 CCH
77-47-4	Hexachlorocyclopentadiene	~~U~~ UJ	12	1.0	10	12	1.7 CCH
7297-45-2	2-Methylnaphthalene-D10		*130%				
367-12-4	2,4-Dibromophenol		81%				
81103-79-9	Fluorene-d10		85%				
1718-51-1	Pyrene-D10		83%				

LW
4/17/09

KATAHDIN ANALYTICAL SERVICES
Report of Analytical Results

Client: CH2MHill
Project: TO-009 Lejeune
PO No:
Sample Date: 01/21/09
Received Date: 01/24/09
Extraction Date: 01/28/09
Analysis Date: 05-FEB-2009 00:00
Report Date: 02/15/2009
Matrix: SOIL
% Solids: 86.0

Lab ID: SC0364-12
Client ID: MR08-SS319D-09A
SDG: TO9-40
Extracted by: AC
Extraction Method: SW846 3550
Analyst: JCG
Analysis Method: SW846 M8270C
Lab Prep Batch: WG60255
Units: ug/Kgdrywt

CAS#	Compound	Flags		Results	DF	PQL	Adj.PQL	Adj.MDL	
91-20-3	Naphthalene	U		12	1.0	10	12	3.0	
91-57-6	2-Methylnaphthalene	~~JB~~	12U	~~7.8~~	1.0	10	12	2.6	BL
86-73-7	Fluorene	U		12	1.0	10	12	3.7	
85-01-8	Phenanthrene	J		5.2	1.0	10	12	2.1	
206-44-0	Fluoranthene	~~B~~	J	26	1.0	10	12	2.1	CCH
129-00-0	Pyrene	~~B~~		17	1.0	10	12	2.4	
56-55-3	Benzo(a)anthracene	~~JB~~	12U	~~9.6~~	1.0	10	12	2.2	BL
205-99-2	Benzo(b)fluoranthene			18	1.0	10	12	2.8	
207-08-9	Benzo(k)fluoranthene			13	1.0	10	12	3.6	
50-32-8	Benzo(a)pyrene	J		10	1.0	10	12	3.8	
193-39-5	Indeno(1,2,3-cd)pyrene	~~J~~	J	7.7	1.0	10	12	2.2	CCH
53-70-3	Dibenzo(a,h)anthracene	J		2.1	1.0	10	12	2.1	
191-24-2	Benzo(g,h,i)perylene	~~JB~~	12UJ	~~7.6~~	1.0	10	12	2.3	BL CCH
118-74-1	Hexachlorobenzene	U		12	1.0	10	12	2.1	
87-68-3	Hexachlorobutadiene	~~U~~	UJ	12	1.0	10	12	2.7	CCH
77-47-4	Hexachlorocyclopentadiene	~~U~~	UJ	12	1.0	10	12	1.7	CCH
7297-45-2	2-Methylnaphthalene-D10			116%					
367-12-4	2,4-Dibromophenol			71%					
81103-79-9	Fluorene-d10			80%					
1718-51-1	Pyrene-D10			78%					

LW 4/17/09

9

KATAHDIN ANALYTICAL SERVICES
Report of Analytical Results

Client: CH2MHill
Project: TO-009 Lejeune
PO No:
Sample Date: 01/21/09
Received Date: 01/24/09
Extraction Date: 01/28/09
Analysis Date: 05-FEB-2009 00:40
Report Date: 02/15/2009
Matrix: SOIL
% Solids: 84.2

Lab ID: SC0364-14
Client ID: MR08-SS318-09A
SDG: TO9-40
Extracted by: AC
Extraction Method: SW846 3550
Analyst: JCG
Analysis Method: SW846 M8270C
Lab Prep Batch: WG60255
Units: ug/Kgdrywt

CAS#	Compound	Flags	Results	DF	PQL	Adj.PQL	Adj.MDL	
91-20-3	Naphthalene	U	12	1.0	10	12	3.1	
91-57-6	2-Methylnaphthalene	U	12	1.0	10	12	2.6	
86-73-7	Fluorene	U	12	1.0	10	12	3.8	
85-01-8	Phenanthrene	J	2.2	1.0	10	12	2.1	
206-44-0	Fluoranthene	~~JB~~	12uJ ~~9.0~~	1.0	10	12	2.1	BL CCH
129-00-0	Pyrene	~~JB~~	12u ~~6.7~~	1.0	10	12	2.5	BL
56-55-3	Benzo(a)anthracene	~~JB~~	~~3.2~~	1.0	10	12	2.2	
205-99-2	Benzo(b)fluoranthene	U	12	1.0	10	12	2.8	
207-08-9	Benzo(k)fluoranthene	U	12	1.0	10	12	3.7	
50-32-8	Benzo(a)pyrene	U	12	1.0	10	12	3.9	
193-39-5	Indeno(1,2,3-cd)pyrene	~~U~~ uJ	12	1.0	10	12	2.2	CCH
53-70-3	Dibenzo(a,h)anthracene	U	12	1.0	10	12	2.1	
191-24-2	Benzo(g,h,i)perylene	~~JB~~	12uJ ~~2.8~~	1.0	10	12	2.4	~~BL~~ CCH
118-74-1	Hexachlorobenzene	U	12	1.0	10	12	2.1	
87-68-3	Hexachlorobutadiene	~~U~~ uJ	12	1.0	10	12	2.7	CCH
77-47-4	Hexachlorocyclopentadiene	~~U~~ uJ	12	1.0	10	12	1.8	CCH
7297-45-2	2-Methylnaphthalene-D10		112%					
367-12-4	2,4-Dibromophenol		86%					
81103-79-9	Fluorene-d10		76%					
1718-51-1	Pyrene-D10		80%					

kw
4/17/09

KATAHDIN ANALYTICAL SERVICES
Report of Analytical Results

Client: CH2MHill
Project: TO-009 Lejeune
PO No:
Sample Date: 01/21/09
Received Date: 01/24/09
Extraction Date: 01/28/09
Analysis Date: 05-FEB-2009 01:20
Report Date: 02/15/2009
Matrix: SOIL
% Solids: 96.4

Lab ID: SC0364-16
Client ID: MR08-IS318-4-5-09A
SDG: TO9-40
Extracted by: AC
Extraction Method: SW846 3550
Analyst: JCG
Analysis Method: SW846 M8270C
Lab Prep Batch: WG60255
Units: ug/Kgdrywt

CAS#	Compound	Flags	Results	DF	PQL	Adj.PQL	Adj.MDL	
91-20-3	Naphthalene	U	10	1.0	10	10	2.7	
91-57-6	2-Methylnaphthalene	U	10	1.0	10	10	2.3	
86-73-7	Fluorene	U	10	1.0	10	10	3.3	
85-01-8	Phenanthrene	U	10	1.0	10	10	1.9	
206-44-0	Fluoranthene	~~U~~ UJ	10	1.0	10	10	1.9	CCH
129-00-0	Pyrene	U	10	1.0	10	10	2.2	
56-55-3	Benzo(a)anthracene	U	10	1.0	10	10	2.0	
205-99-2	Benzo(b)fluoranthene	U	10	1.0	10	10	2.5	
207-08-9	Benzo(k)fluoranthene	U	10	1.0	10	10	3.2	
50-32-8	Benzo(a)pyrene	U	10	1.0	10	10	3.4	
193-39-5	Indeno(1,2,3-cd)pyrene	~~U~~ UJ	10	1.0	10	10	2.0	CCH
53-70-3	Dibenzo(a,h)anthracene	U	10	1.0	10	10	1.9	
191-24-2	Benzo(g,h,i)perylene	~~U~~ UJ	10	1.0	10	10	2.1	CCH
118-74-1	Hexachlorobenzene	U	10	1.0	10	10	1.9	
87-68-3	Hexachlorobutadiene	~~U~~ UJ	10	1.0	10	10	2.4	CCH
77-47-4	Hexachlorocyclopentadiene	~~U~~ UJ	10	1.0	10	10	1.6	CCH
7297-45-2	2-Methylnaphthalene-D10		107%					
367-12-4	2,4-Dibromophenol		84%					
81103-79-9	Fluorene-d10		73%					
1718-51-1	Pyrene-D10		79%					

LW 4/17/09

11.

KATAHDIN ANALYTICAL SERVICES
Report of Analytical Results

Client: CH2MHill
Project: TO-009 Lejeune
PO No:
Sample Date: 01/21/09
Received Date: 01/24/09
Extraction Date: 01/28/09
Analysis Date: 05-FEB-2009 02:00
Report Date: 02/15/2009
Matrix: SOIL
% Solids: 71.9

Lab ID: SC0364-18
Client ID: MR08-SS317-09A
SDG: TO9-40
Extracted by: AC
Extraction Method: SW846 3550
Analyst: JCG
Analysis Method: SW846 M8270C
Lab Prep Batch: WG60255
Units: ug/Kgdrywt

CAS#	Compound	Flags		Results	DF	PQL	Adj.PQL	Adj.MDL	
91-20-3	Naphthalene	U		14	1.0	10	14	3.6	
91-57-6	2-Methylnaphthalene	~~JB~~	14U	~~12~~	1.0	10	14	3.0	BL
86-73-7	Fluorene	U		14	1.0	10	14	4.4	
85-01-8	Phenanthrene			32	1.0	10	14	2.5	
206-44-0	Fluoranthene	~~B~~	J	200	1.0	10	14	2.5	CCH
129-00-0	Pyrene	~~B~~		160	1.0	10	14	2.9	
56-55-3	Benzo(a)anthracene	~~B~~		170	1.0	10	14	2.6	
205-99-2	Benzo(b)fluoranthene			320	1.0	10	14	3.3	
207-08-9	Benzo(k)fluoranthene			140	1.0	10	14	4.3	
50-32-8	Benzo(a)pyrene			160	1.0	10	14	4.6	
193-39-5	Indeno(1,2,3-cd)pyrene		J	96	1.0	10	14	2.6	CCH
53-70-3	Dibenzo(a,h)anthracene			37	1.0	10	14	2.5	
191-24-2	Benzo(g,h,i)perylene	~~B~~	J	79	1.0	10	14	2.8	CCH
118-74-1	Hexachlorobenzene	U		14	1.0	10	14	2.5	
87-68-3	Hexachlorobutadiene	~~U~~	UJ	14	1.0	10	14	3.2	CCH
77-47-4	Hexachlorocyclopentadiene	~~U~~	UJ	14	1.0	10	14	2.1	CCH
7297-45-2	2-Methylnaphthalene-D10			120%					
367-12-4	2,4-Dibromophenol			92%					
81103-79-9	Fluorene-d10			81%					
1718-51-1	Pyrene-D10			86%					

LW
4/17/09

12

KATAHDIN ANALYTICAL SERVICES
Report of Analytical Results

Client: CH2MHill
Project: TO-009 Lejeune
PO No:
Sample Date: 01/21/09
Received Date: 01/24/09
Extraction Date: 01/28/09
Analysis Date: 05-FEB-2009 02:40
Report Date: 02/15/2009
Matrix: SOIL
% Solids: 86.5

Lab ID: SC0364-20
Client ID: MR08-IS317-4-5-09A
SDG: TO9-40
Extracted by: GN
Extraction Method: SW846 3550
Analyst: JCG
Analysis Method: SW846 M8270C
Lab Prep Batch: WG60255
Units: ug/Kgdrywt

CAS#	Compound	Flags	Results	DF	PQL	Adj.PQL	Adj.MDL
91-20-3	Naphthalene	U	12	1.0	10	12	3.0
91-57-6	2-Methylnaphthalene	~~JB~~ 12u	~~7.4~~	1.0	10	12	2.5 BL
86-73-7	Fluorene	U	12	1.0	10	12	3.7
85-01-8	Phenanthrene	U	12	1.0	10	12	2.1
206-44-0	Fluoranthene	~~U~~ UJ	12	1.0	10	12	2.1 CCH
129-00-0	Pyrene	U	12	1.0	10	12	2.4
56-55-3	Benzo(a)anthracene	U	12	1.0	10	12	2.2
205-99-2	Benzo(b)fluoranthene	U	12	1.0	10	12	2.8
207-08-9	Benzo(k)fluoranthene	U	12	1.0	10	12	3.6
50-32-8	Benzo(a)pyrene	U	12	1.0	10	12	3.8
193-39-5	Indeno(1,2,3-cd)pyrene	~~U~~ UJ	12	1.0	10	12	2.2 CCH
53-70-3	Dibenzo(a,h)anthracene	U	12	1.0	10	12	2.1
191-24-2	Benzo(g,h,i)perylene	~~U~~ UJ	12	1.0	10	12	2.3 CCH
118-74-1	Hexachlorobenzene	U	12	1.0	10	12	2.1
87-68-3	Hexachlorobutadiene	~~U~~ UJ	12	1.0	10	12	2.6 CCH
77-47-4	Hexachlorocyclopentadiene	~~U~~ UJ	12	1.0	10	12	1.7 CCH
7297-45-2	2-Methylnaphthalene-D10		101%				
367-12-4	2,4-Dibromophenol		87%				
81103-79-9	Fluorene-d10		77%				
1718-51-1	Pyrene-D10		84%				

lw
4/17/09

13

KATAHDIN ANALYTICAL SERVICES
Report of Analytical Results

Client: CH2MHill
Project: TO-009 Lejeune
PO No:
Sample Date: 01/21/09
Received Date: 01/24/09
Extraction Date: 01/28/09
Analysis Date: 05-FEB-2009 16:28
Report Date: 02/15/2009
Matrix: SOIL
% Solids: 85.8

Lab ID: SC0364-22
Client ID: MR08-SS153-09A
SDG: TO9-40
Extracted by: GN
Extraction Method: SW846 3550
Analyst: JLP
Analysis Method: SW846 M8270C
Lab Prep Batch: WG60255
Units: ug/Kgdrywt

CAS#	Compound	Flags	Results	DF	PQL	Adj.PQL	Adj.MDL
91-20-3	Naphthalene	U	12	1.0	10	12	3.0
91-57-6	2-Methylnaphthalene	~~B~~ U	22	1.0	10	12	2.6 BL
86-73-7	Fluorene		24	1.0	10	12	3.7
85-01-8	Phenanthrene	~~B~~ 380	~~390~~ 2~~1~~.0	10 23	~~12~~ 4.2	~~2.1~~ R DL	
206-44-0	Fluoranthene	~~B~~	290	1.0	10	12	2.1
129-00-0	Pyrene	~~B~~	280	1.0	10	12	2.4
56-55-3	Benzo(a)anthracene	~~B~~	62	1.0	10	12	2.2
205-99-2	Benzo(b)fluoranthene		53	1.0	10	12	2.8
207-08-9	Benzo(k)fluoranthene		23	1.0	10	12	3.6
50-32-8	Benzo(a)pyrene		38	1.0	10	12	3.8
193-39-5	Indeno(1,2,3-cd)pyrene	U	12	1.0	10	12	2.2
53-70-3	Dibenzo(a,h)anthracene	U	12	1.0	10	12	2.1
191-24-2	Benzo(g,h,i)perylene	~~B~~	42	1.0	10	12	2.3
118-74-1	Hexachlorobenzene	U	12	1.0	10	12	2.1
87-68-3	Hexachlorobutadiene	U	12	1.0	10	12	2.7
77-47-4	Hexachlorocyclopentadiene	U	12	1.0	10	12	1.7
7297-45-2	2-Methylnaphthalene-D10		61%				
367-12-4	2,4-Dibromophenol		84%				
81103-79-9	Fluorene-d10		96%				
1718-51-1	Pyrene-D10		104%				

JW
4/17/09

13DL

KATAHDIN ANALYTICAL SERVICES
Report of Analytical Results

Client: CH2MHill
Project: TO-009 Lejeune
PO No:
Sample Date: 01/21/09
Received Date: 01/24/09
Extraction Date: 01/28/09
Analysis Date: 06-FEB-2009 02:01
Report Date: 02/15/2009
Matrix: SOIL
% Solids: 85.8

Lab ID: SC0364-22DL
Client ID: MR08-SS153-09A
SDG: TO9-40
Extracted by: GN
Extraction Method: SW846 3550
Analyst: JCG
Analysis Method: SW846 M8270C
Lab Prep Batch: WG60255
Units: ug/Kgdrywt

Use original

CAS#	Compound	Flags	Results	DF	PQL	Adj.PQL	Adj.MDL
91-20-3	Naphthalene	U	23	2.0	10	23	6.0
91-57-6	2-Methylnaphthalene	~~JB~~	23UJ ~~17~~	2.0	10	23	5.1 ~~B~~ CCH
86-73-7	Fluorene		24	2.0	10	23	7.4
85-01-8	Phenanthrene		380	2.0	10	23	4.2
206-44-0	Fluoranthene	~~B~~	270	2.0	10	23	4.2
129-00-0	Pyrene	~~B~~	280	2.0	10	23	4.9
56-55-3	Benzo(a)anthracene	~~B~~	55	2.0	10	23	4.4
205-99-2	Benzo(b)fluoranthene		73	2.0	10	23	5.6
207-08-9	Benzo(k)fluoranthene		25	2.0	10	23	7.2
50-32-8	Benzo(a)pyrene		49	2.0	10	23	7.7
193-39-5	Indeno(1,2,3-cd)pyrene	U	23	2.0	10	23	4.4
53-70-3	Dibenzo(a,h)anthracene	U	23	2.0	10	23	4.2
191-24-2	Benzo(g,h,i)perylene	~~B~~	58	2.0	10	23	4.7
118-74-1	Hexachlorobenzene	U	23	2.0	10	23	4.2
87-68-3	Hexachlorobutadiene	~~U~~ UJ	23	2.0	10	23	5.4 CCH
77-47-4	Hexachlorocyclopentadiene	U	23	2.0	10	23	3.5
7297-45-2	2-Methylnaphthalene-D10		50%				
367-12-4	2,4-Dibromophenol		86%				
81103-79-9	Fluorene-d10		92%				
1718-51-1	Pyrene-D10		103%				

R DL

LW 4/17/09

KATAHDIN ANALYTICAL SERVICES
Report of Analytical Results

Client: CH2MHill
Project: TO-009 Lejeune
PO No:
Sample Date: 01/21/09
Received Date: 01/24/09
Extraction Date: 01/28/09
Analysis Date: 05-FEB-2009 03:20
Report Date: 02/15/2009
Matrix: SOIL
% Solids: 87.6

Lab ID: SC0364-24
Client ID: MR08-IS153-2-3-09A
SDG: TO9-40
Extracted by: GN
Extraction Method: SW846 3550
Analyst: JCG
Analysis Method: SW846 M8270C
Lab Prep Batch: WG60255
Units: ug/Kgdrywt

CAS#	Compound	Flags	Results	DF	PQL	Adj.PQL	Adj.MDL	
91-20-3	Naphthalene	U	11	1.0	10	11	3.0	
91-57-6	2-Methylnaphthalene	U	11	1.0	10	11	2.5	
86-73-7	Fluorene	U	11	1.0	10	11	3.6	
85-01-8	Phenanthrene	U	11	1.0	10	11	2.0	
206-44-0	Fluoranthene	~~U~~ UJ	11	1.0	10	11	2.0	CCH
129-00-0	Pyrene	U	11	1.0	10	11	2.4	
56-55-3	Benzo(a)anthracene	U	11	1.0	10	11	2.2	
205-99-2	Benzo(b)fluoranthene	U	11	1.0	10	11	2.7	
207-08-9	Benzo(k)fluoranthene	U	11	1.0	10	11	3.5	
50-32-8	Benzo(a)pyrene	U	11	1.0	10	11	3.8	
193-39-5	Indeno(1,2,3-cd)pyrene	~~U~~ UJ	11	1.0	10	11	2.2	CCH
53-70-3	Dibenzo(a,h)anthracene	U	11	1.0	10	11	2.0	
191-24-2	Benzo(g,h,i)perylene	~~U~~ UJ	11	1.0	10	11	2.3	CCH
118-74-1	Hexachlorobenzene	U	11	1.0	10	11	2.0	
87-68-3	Hexachlorobutadiene	~~U~~ UJ	11	1.0	10	11	2.6	CCH
77-47-4	Hexachlorocyclopentadiene	~~U~~ UJ	11	1.0	10	11	1.7	CCH
7297-45-2	2-Methylnaphthalene-D10		90%					
367-12-4	2,4-Dibromophenol		75%					
81103-79-9	Fluorene-d10		68%					
1718-51-1	Pyrene-D10		70%					

CCH 4/13/09

KATAHDIN ANALYTICAL SERVICES
Report of Analytical Results

Client: CH2MHill
Project: TO-009 Lejeune
PO No:
Sample Date: 01/21/09
Received Date: 01/24/09
Extraction Date: 01/28/09
Analysis Date: 05-FEB-2009 15:48
Report Date: 02/15/2009
Matrix: SOIL
% Solids: 87.6

Lab ID: SC0364-26
Client ID: MR08-SS162-09A
SDG: TO9-40
Extracted by: GN
Extraction Method: SW846 3550
Analyst: JLP
Analysis Method: SW846 M8270C
Lab Prep Batch: WG60255
Units: ug/Kgdrywt

CAS#	Compound	Flags	Results	DF	PQL	Adj.PQL	Adj.MDL	
91-20-3	Naphthalene	U	11	1.0	10	11	3.0	
91-57-6	2-Methylnaphthalene	U	11	1.0	10	11	2.5	
86-73-7	Fluorene	U	11	1.0	10	11	3.6	
85-01-8	Phenanthrene	J	5.0	1.0	10	11	2.0	
206-44-0	Fluoranthene	~~JB~~	11U ~~7.3~~	1.0	10	11	2.0	BL
129-00-0	Pyrene	~~JB~~	11U ~~8.5~~	1.0	10	11	2.4	↓
56-55-3	Benzo(a)anthracene	~~JB~~	11U ~~2.6~~	1.0	10	11	2.2	
205-99-2	Benzo(b)fluoranthene	U	11	1.0	10	11	2.7	
207-08-9	Benzo(k)fluoranthene	U	11	1.0	10	11	3.5	
50-32-8	Benzo(a)pyrene	J	4.9	1.0	10	11	3.8	
193-39-5	Indeno(1,2,3-cd)pyrene	U	11	1.0	10	11	2.2	
53-70-3	Dibenzo(a,h)anthracene	U	11	1.0	10	11	2.0	
191-24-2	Benzo(g,h,i)perylene	~~JB~~	11U ~~7.5~~	1.0	10	11	2.3	BL
118-74-1	Hexachlorobenzene	U	11	1.0	10	11	2.0	
87-68-3	Hexachlorobutadiene	U	11	1.0	10	11	2.6	
77-47-4	Hexachlorocyclopentadiene	U	11	1.0	10	11	1.7	
7297-45-2	2-Methylnaphthalene-D10		54%					
367-12-4	2,4-Dibromophenol		73%					
81103-79-9	Fluorene-d10		92%					
1718-51-1	Pyrene-D10		103%					

lw
4/13/09

16

KATAHDIN ANALYTICAL SERVICES
Report of Analytical Results

Client: CH2MHill
Project: TO-009 Lejeune
PO No:
Sample Date: 01/21/09
Received Date: 01/24/09
Extraction Date: 01/28/09
Analysis Date: 05-FEB-2009 14:28
Report Date: 02/15/2009
Matrix: SOIL
% Solids: 91.0

Lab ID: SC0364-28
Client ID: MR08-IS162-4-5-09A
SDG: TO9-40
Extracted by: GN
Extraction Method: SW846 3550
Analyst: JLP
Analysis Method: SW846 M8270C
Lab Prep Batch: WG60255
Units: ug/Kgdrywt

CAS#	Compound	Flags	Results	DF	PQL	Adj.PQL	Adj.MDL
91-20-3	Naphthalene	U	11	1.0	10	11	2.8
91-57-6	2-Methylnaphthalene	U	11	1.0	10	11	2.4
86-73-7	Fluorene	U	11	1.0	10	11	3.5
85-01-8	Phenanthrene	U	11	1.0	10	11	2.0
206-44-0	Fluoranthene	U	11	1.0	10	11	2.0
129-00-0	Pyrene	U	11	1.0	10	11	2.3
56-55-3	Benzo(a)anthracene	U	11	1.0	10	11	2.1
205-99-2	Benzo(b)fluoranthene	U	11	1.0	10	11	2.6
207-08-9	Benzo(k)fluoranthene	U	11	1.0	10	11	3.4
50-32-8	Benzo(a)pyrene	U	11	1.0	10	11	3.6
193-39-5	Indeno(1,2,3-cd)pyrene	U	11	1.0	10	11	2.1
53-70-3	Dibenzo(a,h)anthracene	U	11	1.0	10	11	2.0
191-24-2	Benzo(g,h,i)perylene	U	11	1.0	10	11	2.2
118-74-1	Hexachlorobenzene	U	11	1.0	10	11	2.0
87-68-3	Hexachlorobutadiene	U	11	1.0	10	11	2.5
77-47-4	Hexachlorocyclopentadiene	U	11	1.0	10	11	1.6
7297-45-2	2-Methylnaphthalene-D10		51%				
367-12-4	2,4-Dibromophenol		64%				
81103-79-9	Fluorene-d10		78%				
1718-51-1	Pyrene-D10		80%				

MW
4/17/09

KATAHDIN ANALYTICAL SERVICES
Report of Analytical Results

Client: CH2MHill
Project: TO-009 Lejeune
PO No:
Sample Date: 01/21/09
Received Date: 01/24/09
Extraction Date: 01/28/09
Analysis Date: 05-FEB-2009 15:08
Report Date: 02/15/2009
Matrix: SOIL
% Solids: 86.7

Lab ID: SC0364-30
Client ID: MR08-SS316-09A
SDG: TO9-40
Extracted by: GN
Extraction Method: SW846 3550
Analyst: JLP
Analysis Method: SW846 M8270C
Lab Prep Batch: WG60255
Units: ug/Kgdrywt

CAS#	Compound	Flags	Results	DF	PQL	Adj.PQL	Adj.MDL	
91-20-3	Naphthalene		30	1.0	10	12	3.0	
91-57-6	2-Methylnaphthalene	~~B~~	u 21	1.0	10	12	2.5	BL
86-73-7	Fluorene		25	1.0	10	12	3.7	
85-01-8	Phenanthrene	~~E~~	290 ~~320~~	3 ~~1.0~~	10 35	~~12~~ 6.2	~~2.1~~	R DL
206-44-0	Fluoranthene	~~E~~	370 ~~450~~	3 ~~1.0~~	10 35	~~12~~ 6.2	~~2.1~~	R DL
129-00-0	Pyrene	~~E~~	240	1.0	10	12	2.4	
56-55-3	Benzo(a)anthracene	~~E~~	130	1.0	10	12	2.2	
205-99-2	Benzo(b)fluoranthene		180	1.0	10	12	2.8	
207-08-9	Benzo(k)fluoranthene		110	1.0	10	12	3.6	
50-32-8	Benzo(a)pyrene		120	1.0	10	12	3.8	
193-39-5	Indeno(1,2,3-cd)pyrene		76	1.0	10	12	2.2	
53-70-3	Dibenzo(a,h)anthracene		29	1.0	10	12	2.1	
191-24-2	Benzo(g,h,i)perylene	~~B~~	64	1.0	10	12	2.3	
118-74-1	Hexachlorobenzene	U	12	1.0	10	12	2.1	
87-68-3	Hexachlorobutadiene	U	12	1.0	10	12	2.6	
77-47-4	Hexachlorocyclopentadiene	U	12	1.0	10	12	1.7	
7297-45-2	2-Methylnaphthalene-D10		54%					
367-12-4	2,4-Dibromophenol		73%					
81103-79-9	Fluorene-d10		84%					
1718-51-1	Pyrene-D10		77%					

lw 4/17/09

1701

KATAHDIN ANALYTICAL SERVICES
Report of Analytical Results

Client: CH2MHill
Project: TO-009 Lejeune
PO No:
Sample Date: 01/21/09
Received Date: 01/24/09
Extraction Date: 01/28/09
Analysis Date: 06-FEB-2009 01:21
Report Date: 02/15/2009
Matrix: SOIL
% Solids: 86.7

Lab ID: SC0364-30DL
Client ID: MR08-SS316-09A
SDG: TO9-40
Extracted by: GN
Extraction Method: SW846 3550
Analyst: JCG
Analysis Method: SW846 M8270C
Lab Prep Batch: WG60255
Units: ug/Kgdrywt

Use original

CAS#	Compound	Flags	Results	DF	PQL	Adj.PQL	Adj.MDL
91-20-3	Naphthalene	J	24	3.0	10	35	9.0
91-57-6	2-Methylnaphthalene	~~J~~	35UJ ~~17~~	3.0	10	35	7.6 ~~BE~~ CCH
86-73-7	Fluorene	J	26	3.0	10	35	11
85-01-8	Phenanthrene		290	3.0	10	35	6.2
206-44-0	Fluoranthene	~~B~~	370	3.0	10	35	6.2
129-00-0	Pyrene	~~B~~	340	3.0	10	35	7.3
56-55-3	Benzo(a)anthracene	~~B~~	130	3.0	10	35	6.6
205-99-2	Benzo(b)fluoranthene		170	3.0	10	35	8.3
207-08-9	Benzo(k)fluoranthene		110	3.0	10	35	11
50-32-8	Benzo(a)pyrene		120	3.0	10	35	11
193-39-5	Indeno(1,2,3-cd)pyrene		91	3.0	10	35	6.6
53-70-3	Dibenzo(a,h)anthracene	U	25	3.0	10	35	6.2
191-24-2	Benzo(g,h,i)perylene	~~B~~	85	3.0	10	35	6.9
118-74-1	Hexachlorobenzene	U	35	3.0	10	35	6.2
87-68-3	Hexachlorobutadiene	~~U~~ UJ	35	3.0	10	35	8.0 CCH
77-47-4	Hexachlorocyclopentadiene	U	35	3.0	10	35	5.2
7297-45-2	2-Methylnaphthalene-D10		51%				
367-12-4	2,4-Dibromophenol		62%				
81103-79-9	Fluorene-d10		79%				
1718-51-1	Pyrene-D10		97%				

DL

R

Page 01 of 01 R1296.D

MW 4/17/09

18

KATAHDIN ANALYTICAL SERVICES
Report of Analytical Results

Client: CH2MHill
Project: TO-009 Lejeune
PO No:
Sample Date: 01/21/09
Received Date: 01/24/09
Extraction Date: 01/28/09
Analysis Date: 05-FEB-2009 13:48
Report Date: 02/15/2009
Matrix: SOIL
% Solids: 88.0

Lab ID: SC0364-32
Client ID: MR08-IS316-4-5-09A
SDG: TO9-40
Extracted by: GN
Extraction Method: SW846 3550
Analyst: JLP
Analysis Method: SW846 M8270C
Lab Prep Batch: WG60255
Units: ug/Kgdrywt

CAS#	Compound	Flags	Results	DF	PQL	Adj.PQL	Adj.MDL
91-20-3	Naphthalene	U	11	1.0	10	11	3.0
91-57-6	2-Methylnaphthalene	U	11	1.0	10	11	2.5
86-73-7	Fluorene	U	11	1.0	10	11	3.6
85-01-8	Phenanthrene	U	11	1.0	10	11	2.0
206-44-0	Fluoranthene	U	11	1.0	10	11	2.0
129-00-0	Pyrene	U	11	1.0	10	11	2.4
56-55-3	Benzo(a)anthracene	U	11	1.0	10	11	2.2
205-99-2	Benzo(b)fluoranthene	U	11	1.0	10	11	2.7
207-08-9	Benzo(k)fluoranthene	U	11	1.0	10	11	3.5
50-32-8	Benzo(a)pyrene	U	11	1.0	10	11	3.7
193-39-5	Indeno(1,2,3-cd)pyrene	U	11	1.0	10	11	2.2
53-70-3	Dibenzo(a,h)anthracene	U	11	1.0	10	11	2.0
191-24-2	Benzo(g,h,i)perylene	U	11	1.0	10	11	2.3
118-74-1	Hexachlorobenzene	U	11	1.0	10	11	2.0
87-68-3	Hexachlorobutadiene	U	11	1.0	10	11	2.6
77-47-4	Hexachlorocyclopentadiene	U	11	1.0	10	11	1.7
7297-45-2	2-Methylnaphthalene-D10		56%				
367-12-4	2,4-Dibromophenol		67%				
81103-79-9	Fluorene-d10		87%				
1718-51-1	Pyrene-D10		78%				

lw
4/1/09

KATAHDIN ANALYTICAL SERVICES
Report of Analytical Results

Client: CH2MHill
Project: TO-009 Lejeune
PO No:
Sample Date: 01/21/09
Received Date: 01/24/09
Extraction Date: 01/28/09
Analysis Date: 05-FEB-2009 13:08
Report Date: 02/15/2009
Matrix: SOIL
% Solids: 88.2

Lab ID: SC0364-34
Client ID: MR08-IS315-4-5-09A
SDG: TO9-40
Extracted by: GN
Extraction Method: SW846 3550
Analyst: JLP
Analysis Method: SW846 M8270C
Lab Prep Batch: WG60255
Units: ug/Kgdrywt

CAS#	Compound	Flags	Results	DF	PQL	Adj.PQL	Adj.MDL
91-20-3	Naphthalene	U	11	1.0	10	11	2.9
91-57-6	2-Methylnaphthalene	U	11	1.0	10	11	2.5
86-73-7	Fluorene	U	11	1.0	10	11	3.6
85-01-8	Phenanthrene	U	11	1.0	10	11	2.0
206-44-0	Fluoranthene	U	11	1.0	10	11	2.0
129-00-0	Pyrene	U	11	1.0	10	11	2.4
56-55-3	Benzo(a)anthracene	U	11	1.0	10	11	2.2
205-99-2	Benzo(b)fluoranthene	U	11	1.0	10	11	2.7
207-08-9	Benzo(k)fluoranthene	U	11	1.0	10	11	3.5
50-32-8	Benzo(a)pyrene	U	11	1.0	10	11	3.7
193-39-5	Indeno(1,2,3-cd)pyrene	U	11	1.0	10	11	2.2
53-70-3	Dibenzo(a,h)anthracene	U	11	1.0	10	11	2.0
191-24-2	Benzo(g,h,i)perylene	U	11	1.0	10	11	2.3
118-74-1	Hexachlorobenzene	U	11	1.0	10	11	2.0
87-68-3	Hexachlorobutadiene	U	11	1.0	10	11	2.6
77-47-4	Hexachlorocyclopentadiene	U	11	1.0	10	11	1.7
7297-45-2	2-Methylnaphthalene-D10		49%				
367-12-4	2,4-Dibromophenol		58%				
81103-79-9	Fluorene-d10		73%				
1718-51-1	Pyrene-D10		76%				

fw 4/17/09

20

KATAHDIN ANALYTICAL SERVICES
Report of Analytical Results

Client: CH2MHill
Project: TO-009 Lejeune
PO No:
Sample Date: 01/21/09
Received Date: 01/24/09
Extraction Date: 01/29/09
Analysis Date: 06-FEB-2009 02:41
Report Date: 02/15/2009
Matrix: SOIL
% Solids: 82.8

Lab ID: SC0364-36
Client ID: MR08-SS315-09A
SDG: TO9-40
Extracted by: CB
Extraction Method: SW846 3550
Analyst: JCG
Analysis Method: SW846 M8270C
Lab Prep Batch: WG60273
Units: ug/Kgdrywt

CAS#	Compound	Flags	Results	DF	PQL	Adj.PQL	Adj.MDL
91-20-3	Naphthalene	U	12	1.0	10	12	3.1
91-57-6	2-Methylnaphthalene	~~U~~ UJ	12	1.0	10	12	2.6 BSL CCH
86-73-7	Fluorene	U	12	1.0	10	12	3.9
85-01-8	Phenanthrene		45	1.0	10	12	2.2
206-44-0	Fluoranthene		120	1.0	10	12	2.2
129-00-0	Pyrene		120	1.0	10	12	2.5
56-55-3	Benzo(a)anthracene		64	1.0	10	12	2.3
205-99-2	Benzo(b)fluoranthene		110	1.0	10	12	2.9
207-08-9	Benzo(k)fluoranthene		63	1.0	10	12	3.7
50-32-8	Benzo(a)pyrene		67	1.0	10	12	4.0
193-39-5	Indeno(1,2,3-cd)pyrene		46	1.0	10	12	2.3
53-70-3	Dibenzo(a,h)anthracene		19	1.0	10	12	2.2
191-24-2	Benzo(g,h,i)perylene		40	1.0	10	12	2.4
118-74-1	Hexachlorobenzene	U	12	1.0	10	12	2.2
87-68-3	Hexachlorobutadiene	~~U~~ UJ	12	1.0	10	12	2.8 CCH
77-47-4	Hexachlorocyclopentadiene	U	12	1.0	10	12	1.8
7297-45-2	2-Methylnaphthalene-D10		48%				
367-12-4	2,4-Dibromophenol		79%				
81103-79-9	Fluorene-d10		85%				
1718-51-1	Pyrene-D10		90%				

LW
4/17/09

ENVIRONMENTAL
Data Services, Inc.

SEMIVOLATILE ORGANIC COMPOUNDS
USEPA Region IV - Level IV Review

Site: MCB Camp Lejeune, TO-09 SDG #: TO9-40

Client: CH2M HILL, Inc., Virginia Beach, Virginia Date: April 17, 2009

Laboratory: Katahdin Analytical Services, Scarborough, Maine Reviewer: Nancy Weaver

EDS ID	Client Sample ID	Laboratory Sample ID	Matrix
1	MR08-SS268-09A	SC0322-1	Soil
1MS	MR08-SS268-09AMS	SC0322-1MS	Soil
1MSD	MR08-SS268-09AMSD	SC0322-1MSD	Soil
2	MR08-SS213-09A	SC0322-3	Soil
3	MR08-IS247-8-10-09A	SC0364-1	Soil
4	MR08-SS247-09A	SC0364-3	Soil
5	MR08-IS319-9-10-09A	SC0364-5	Soil
6	MR08-IS319D-9-10-09A	SC0364-7	Soil
7	MR08-SS319-09A	SC0364-9	Soil
8	MR08-SS319D-09A	SC0364-11	Soil
9	MR08-SS318-09A	SC0364-13	Soil
10	MR08-IS318-4-5-09A	SC0364-15	Soil
11	MR08-SS317-09A	SC0364-17	Soil
12	MR08-IS317-4-5-09A	SC0364-19	Soil
13	MR08-SS153-09A	SC0364-21	Soil
14	MR08-IS153-2-3-09A	SC0364-23	Soil
15	MR08-SS162-09A	SC0364-25	Soil
16	MR08-IS162-4-5-09A	SC0364-27	Soil
17	MR08-SS316-09A	SC0364-29	Soil
18	MR08-IS316-4-5-09A	SC0364-31	Soil
19	MR08-IS315-4-5-09A	SC0364-33	Soil
20	MR08-SS315-09A	SC0364-35	Soil

The USEPA "Contract Laboratory Program National Functional Guidelines for Organic Data Review," October 1999, and professional judgement were used in evaluating the data in this summary report.

Holding Times - All samples were extracted within 14 days for soil samples and analyzed within 40 days for all samples.

GC/MS Tuning - All of the DFTPP tunes in the initial and continuing calibrations met the percent relative abundance criteria.

Initial Calibration - The initial calibrations exhibited acceptable %RSD and mean RRF values except the following.

ICAL Date	Compound	%RSD/RRF	Qualifier	Affected Samples
02/11/09	Benzaldehyde	37.857%	J/UJ	3-20

Continuing Calibration - The continuing calibrations exhibited acceptable %D and RRF values except the following.

CCAL Date	Compound	%D/RRF	Qualifier	Affected Samples
02/08/09	Benzaldehyde	26.47%	J/UJ	1, 2
	2,4-Dinitrophenol	42.88%	J/UJ	1, 2
	4-Nitrophenol	57.45%	J/UJ	1, 2
	Butylbenzylphthalate	28.76%	J/UJ	1, 2
	bis (2-Ethylhexyl) phthalate	31.24%	J/UJ	1, 2
02/11/09	3,3'-Dichlorobenzidine	26.26%	J/UJ	3-12
02/12/09	Benzaldehyde	88.58%	J/UJ	Already qualified due to ICAL
	4-Nitrophenol	71.11%	None	13-20

Surrogates - All samples exhibited acceptable surrogate recoveries.

MS/MSD - The MS/MSD sample exhibited acceptable %R and RPD values.

Laboratory Control Sample - The LCS samples exhibited acceptable %R values.

Internal Standard (IS) Area Performance - All internal standards met response and retention time (RT) criteria.

Method Blank - The method blanks were free of contamination.

Field, Equipment Blank - Field QC results are summarized below.

Blank ID	Compound	Conc. ug/L	Action Level ug/L	Qualifier	Affected Samples
MR08-FB012609	None - ND	-	-	-	-
MR08-EB012109	None - ND	-	-	-	-

Field Duplicates - Field duplicate results are summarized below.

Compound	MR08-IS319-9-10-09A ug/kg	MR08-IS319D-9-10-09A ug/kg	RPD	Qualifier
None	ND	ND	-	-

Compound	MR08-SS319-09A ug/kg	MR08-SS319D-09A ug/kg	RPD	Qualifier
bis (2-Ethylhexyl) phthalate	630	490	NC	None

Tentatively Identified Compounds (TICs) - TICs were not reported.

Compound Quantitation - No discrepancies were identified.

KATAHDIN ANALYTICAL SERVICES
Report of Analytical Results

Client: CH2MHill
Project: TO-009 Lejeune
PO No:
Sample Date: 01/19/09
Received Date: 01/22/09
Extraction Date: 01/26/09
Analysis Date: 08-FEB-2009 19:05
Report Date: 02/15/2009
Matrix: SOIL
% Solids: 82.7

Lab ID: SC0322-1
Client ID: MR08-SS268-09A
SDG: TO9-40
Extracted by: AC
Extraction Method: SW846 3550
Analyst: EKC
Analysis Method: SW846 8270C
Lab Prep Batch: WG60196
Units: ug/Kgdrywt

CAS#	Compound	Flags	Results	DF	PQL	Adj.PQL	Adj.MDL
100-52-7	Benzaldehyde	~~J~~ UJ	600	1.0	500	600	140 CCH
108-95-2	Phenol	U	600	1.0	500	600	190
111-44-4	Bis(2-Chloroethyl)ether	U	400	1.0	330	400	98
95-57-8	2-Chlorophenol	U	600	1.0	500	600	200
95-48-7	2-Methylphenol	U	720	1.0	600	720	240
108-60-1	2,2'-Oxybis(1-chloropropane)	U	400	1.0	330	400	110
98-86-2	Acetophenone	U	720	1.0	600	720	220
621-64-7	N-Nitroso-di-n-propylamine	U	400	1.0	330	400	100
65794-96-9	3&4-Methylphenol	U	720	1.0	600	720	230
67-72-1	Hexachloroethane	U	400	1.0	330	400	120
98-95-3	Nitrobenzene	U	400	1.0	330	400	110
78-59-1	Isophorone	U	400	1.0	330	400	91
88-75-5	2-Nitrophenol	U	720	1.0	600	720	200
105-67-9	2,4-Dimethylphenol	U	600	1.0	500	600	200
111-91-1	Bis(2-Chloroethoxy)methane	U	400	1.0	330	400	120
120-83-2	2,4-Dichlorophenol	U	600	1.0	500	600	180
106-47-8	4-Chloroaniline	U	600	1.0	500	600	140
105-60-2	Caprolactam	U	600	1.0	500	600	170
59-50-7	4-Chloro-3-Methylphenol	U	600	1.0	500	600	200
88-06-2	2,4,6-Trichlorophenol	U	600	1.0	500	600	190
95-95-4	2,4,5-Trichlorophenol	U	600	1.0	500	600	190
91-58-7	2-Chloronaphthalene	U	400	1.0	330	400	100
92-52-4	1,1'-Biphenyl	U	400	1.0	330	400	88
88-74-4	2-Nitroaniline	U	600	1.0	500	600	91
131-11-3	Dimethyl Phthalate	U	400	1.0	330	400	94
606-20-2	2,6-Dinitrotoluene	U	400	1.0	330	400	96
208-96-8	Acenaphthylene	U	400	1.0	330	400	85
99-09-2	3-Nitroaniline	U	600	1.0	500	600	110
83-32-9	Acenaphthene	J	100	1.0	330	400	79
51-28-5	2,4-Dinitrophenol	~~J~~ UJ	1400	1.0	1200	1400	460 CCH
132-64-9	Dibenzofuran	U	400	1.0	330	400	96
100-02-7	4-Nitrophenol	~~J~~ UJ	1400	1.0	1200	1400	370 CCH
121-14-2	2,4-Dinitrotoluene	U	400	1.0	330	400	100
84-66-2	Diethylphthalate	U	400	1.0	330	400	97
7005-72-3	4-Chlorophenyl-phenylether	U	400	1.0	330	400	94
100-01-6	4-Nitroaniline	U	600	1.0	500	600	160
534-52-1	4,6-Dinitro-2-Methylphenol	U	1400	1.0	1200	1400	410
86-30-6	N-Nitrosodiphenylamine	U	800	1.0	660	800	260
101-55-3	4-Bromophenyl-phenylether	U	400	1.0	330	400	100
1912-24-9	Atrazine	U	400	1.0	330	400	110
87-86-5	Pentachlorophenol	U	990	1.0	820	990	290
120-12-7	Anthracene	U	400	1.0	330	400	100
86-74-8	Carbazole	U	600	1.0	500	600	130

LW
4/17/09

KATAHDIN ANALYTICAL SERVICES
Report of Analytical Results

Client: CH2MHill
Project: TO-009 Lejeune
PO No:
Sample Date: 01/19/09
Received Date: 01/22/09
Extraction Date: 01/26/09
Analysis Date: 08-FEB-2009 19:05
Report Date: 02/15/2009
Matrix: SOIL
% Solids: 82.7

Lab ID: SC0322-1
Client ID: MR08-SS268-09A
SDG: TO9-40
Extracted by: AC
Extraction Method: SW846 3550
Analyst: EKC
Analysis Method: SW846 8270C
Lab Prep Batch: WG60196
Units: ug/Kgdrywt

CAS#	Compound	Flags		Results	DF	PQL	Adj.PQL	Adj.MDL	
84-74-2	Di-n-butylphthalate	U		400	1.0	330	400	120	
85-68-7	Butylbenzylphthalate	~~U~~	UJ	400	1.0	330	400	110	CCH
91-94-1	3,3'-Dichlorobenzidine	U		600	1.0	500	600	140	
218-01-9	Chrysene	U		400	1.0	330	400	110	
117-81-7	bis(2-Ethylhexyl)phthalate		J	560	1.0	330	400	120	CCH
117-84-0	Di-n-octylphthalate	U		400	1.0	330	400	260	
367-12-4	2-Fluorophenol			70%					
13127-88-3	Phenol-D6			77%					
4165-60-0	Nitrobenzene-D5			70%					
321-60-8	2-Fluorobiphenyl			75%					
118-79-6	2,4,6-Tribromophenol			84%					
1718-51-0	Terphenyl-D14			87%					

UW
4/17/09

KATAHDIN ANALYTICAL SERVICES
Report of Analytical Results

2

Client: CH2MHill
Project: TO-009 Lejeune
PO No:
Sample Date: 01/20/09
Received Date: 01/22/09
Extraction Date: 01/26/09
Analysis Date: 08-FEB-2009 19:47
Report Date: 02/15/2009
Matrix: SOIL
% Solids: 89.8

Lab ID: SC0322-3
Client ID: MR08-SS213-09A
SDG: TO9-40
Extracted by: AC
Extraction Method: SW846 3550
Analyst: EKC
Analysis Method: SW846 8270C
Lab Prep Batch: WG60196
Units: ug/Kgdrywt

CAS#	Compound	Flags	Results	DF	PQL	Adj.PQL	Adj.MDL	
100-52-7	Benzaldehyde	~~U~~ UJ	560	1.0	500	560	130	CCH
108-95-2	Phenol	U	560	1.0	500	560	170	
111-44-4	Bis(2-Chloroethyl)ether	U	370	1.0	330	370	90	
95-57-8	2-Chlorophenol	U	560	1.0	500	560	180	
95-48-7	2-Methylphenol	U	670	1.0	600	670	220	
108-60-1	2,2'-Oxybis(1-chloropropane)	U	370	1.0	330	370	99	
98-86-2	Acetophenone	U	670	1.0	600	670	200	
621-64-7	N-Nitroso-di-n-propylamine	U	370	1.0	330	370	92	
65794-96-9	3&4-Methylphenol	U	670	1.0	600	670	210	
67-72-1	Hexachloroethane	U	370	1.0	330	370	110	
98-95-3	Nitrobenzene	U	370	1.0	330	370	100	
78-59-1	Isophorone	U	370	1.0	330	370	83	
88-75-5	2-Nitrophenol	U	670	1.0	600	670	180	
105-67-9	2,4-Dimethylphenol	U	560	1.0	500	560	180	
111-91-1	Bis(2-Chloroethoxy)methane	U	370	1.0	330	370	110	
120-83-2	2,4-Dichlorophenol	U	560	1.0	500	560	170	
106-47-8	4-Chloroaniline	U	560	1.0	500	560	130	
105-60-2	Caprolactam	U	560	1.0	500	560	160	
59-50-7	4-Chloro-3-Methylphenol	U	560	1.0	500	560	180	
88-06-2	2,4,6-Trichlorophenol	U	560	1.0	500	560	170	
95-95-4	2,4,5-Trichlorophenol	U	560	1.0	500	560	170	
91-58-7	2-Chloronaphthalene	U	370	1.0	330	370	97	
92-52-4	1,1'-Biphenyl	U	370	1.0	330	370	81	
88-74-4	2-Nitroaniline	U	560	1.0	500	560	83	
131-11-3	Dimethyl Phthalate	U	370	1.0	330	370	87	
606-20-2	2,6-Dinitrotoluene	U	370	1.0	330	370	88	
208-96-8	Acenaphthylene	U	370	1.0	330	370	78	
99-09-2	3-Nitroaniline	U	560	1.0	500	560	100	
83-32-9	Acenaphthene	U	370	1.0	330	370	72	
51-28-5	2,4-Dinitrophenol	~~U~~ UJ	1300	1.0	1200	1300	420	CCH
132-64-9	Dibenzofuran	U	370	1.0	330	370	88	
100-02-7	4-Nitrophenol	~~U~~ UJ	1300	1.0	1200	1300	340	CCH
121-14-2	2,4-Dinitrotoluene	U	370	1.0	330	370	95	
84-66-2	Diethylphthalate	U	370	1.0	330	370	89	
7005-72-3	4-Chlorophenyl-phenylether	U	370	1.0	330	370	87	
100-01-6	4-Nitroaniline	U	560	1.0	500	560	150	
534-52-1	4,6-Dinitro-2-Methylphenol	U	1300	1.0	1200	1300	380	
86-30-6	N-Nitrosodiphenylamine	U	730	1.0	660	730	240	
101-55-3	4-Bromophenyl-phenylether	U	370	1.0	330	370	95	
1912-24-9	Atrazine	U	370	1.0	330	370	100	
87-86-5	Pentachlorophenol	U	910	1.0	820	910	260	
120-12-7	Anthracene	U	370	1.0	330	370	93	
86-74-8	Carbazole	U	560	1.0	500	560	120	

lw 4/17/09

KATAHDIN ANALYTICAL SERVICES
Report of Analytical Results

2

Client: CH2MHill
Project: TO-009 Lejeune
PO No:
Sample Date: 01/20/09
Received Date: 01/22/09
Extraction Date: 01/26/09
Analysis Date: 08-FEB-2009 19:47
Report Date: 02/15/2009
Matrix: SOIL
% Solids: 89.8

Lab ID: SC0322-3
Client ID: MR08-SS213-09A
SDG: TO9-40
Extracted by: AC
Extraction Method: SW846 3550
Analyst: EKC
Analysis Method: SW846 8270C
Lab Prep Batch: WG60196
Units: ug/Kgdrywt

CAS#	Compound	Flags	Results	DF	PQL	Adj.PQL	Adj.MDL	
84-74-2	Di-n-butylphthalate	U	370	1.0	330	370	110	
85-68-7	Butylbenzylphthalate	~~U~~ UJ	370	1.0	330	370	100	CCH
91-94-1	3,3'-Dichlorobenzidine	U	560	1.0	500	560	130	
218-01-9	Chrysene	U	370	1.0	330	370	100	
117-81-7	bis(2-Ethylhexyl)phthalate	~~U~~ J	220	1.0	330	370	110	CCH
117-84-0	Di-n-octylphthalate	U	370	1.0	330	370	230	
367-12-4	2-Fluorophenol		83%					
13127-88-3	Phenol-D6		89%					
4165-60-0	Nitrobenzene-D5		79%					
321-60-8	2-Fluorobiphenyl		82%					
118-79-6	2,4,6-Tribromophenol		91%					
1718-51-0	Terphenyl-D14		100%					

CW
4/17/09

KATAHDIN ANALYTICAL SERVICES
Report of Analytical Results

3

Client: CH2MHill
Project: TO-009 Lejeune
PO No:
Sample Date: 01/21/09
Received Date: 01/24/09
Extraction Date: 01/28/09
Analysis Date: 11-FEB-2009 21:38
Report Date: 02/15/2009
Matrix: SOIL
% Solids: 93.7

Lab ID: SC0364-1
Client ID: MR08-IS247-8-10-09A
SDG: TO9-40
Extracted by: AC
Extraction Method: SW846 3550
Analyst: JCG
Analysis Method: SW846 8270C
Lab Prep Batch: WG60254
Units: ug/Kgdrywt

CAS#	Compound	Flags	Results	DF	PQL	Adj.PQL	Adj.MDL
100-52-7	Benzaldehyde	~~J~~ UJ	530	1.0	500	530	130 JCB
108-95-2	Phenol	U	530	1.0	500	530	170
111-44-4	Bis(2-Chloroethyl)ether	U	350	1.0	330	350	86
95-57-8	2-Chlorophenol	U	530	1.0	500	530	170
95-48-7	2-Methylphenol	U	640	1.0	600	640	210
108-60-1	2,2'-Oxybis(1-chloropropane)	U	350	1.0	330	350	95
98-86-2	Acetophenone	U	640	1.0	600	640	190
621-64-7	N-Nitroso-di-n-propylamine	U	350	1.0	330	350	88
65794-96-9	3&4-Methylphenol	U	640	1.0	600	640	200
67-72-1	Hexachloroethane	U	350	1.0	330	350	100
98-95-3	Nitrobenzene	U	350	1.0	330	350	97
78-59-1	Isophorone	U	350	1.0	330	350	80
88-75-5	2-Nitrophenol	U	640	1.0	600	640	180
105-67-9	2,4-Dimethylphenol	U	530	1.0	500	530	180
111-91-1	Bis(2-Chloroethoxy)methane	U	350	1.0	330	350	100
120-83-2	2,4-Dichlorophenol	U	530	1.0	500	530	160
106-47-8	4-Chloroaniline	U	530	1.0	500	530	130
105-60-2	Caprolactam	U	530	1.0	500	530	150
59-50-7	4-Chloro-3-Methylphenol	U	530	1.0	500	530	180
88-06-2	2,4,6-Trichlorophenol	U	530	1.0	500	530	160
95-95-4	2,4,5-Trichlorophenol	U	530	1.0	500	530	160
91-58-7	2-Chloronaphthalene	U	350	1.0	330	350	93
92-52-4	1,1'-Biphenyl	U	350	1.0	330	350	78
88-74-4	2-Nitroaniline	U	530	1.0	500	530	80
131-11-3	Dimethyl Phthalate	U	350	1.0	330	350	83
606-20-2	2,6-Dinitrotoluene	U	350	1.0	330	350	84
208-96-8	Acenaphthylene	U	350	1.0	330	350	75
99-09-2	3-Nitroaniline	U	530	1.0	500	530	100
83-32-9	Acenaphthene	U	350	1.0	330	350	69
51-28-5	2,4-Dinitrophenol	U	1300	1.0	1200	1300	400
132-64-9	Dibenzofuran	U	350	1.0	330	350	84
100-02-7	4-Nitrophenol	U	1300	1.0	1200	1300	330
121-14-2	2,4-Dinitrotoluene	U	350	1.0	330	350	91
84-66-2	Diethylphthalate	U	350	1.0	330	350	85
7005-72-3	4-Chlorophenyl-phenylether	U	350	1.0	330	350	83
100-01-6	4-Nitroaniline	U	530	1.0	500	530	140
534-52-1	4,6-Dinitro-2-Methylphenol	U	1300	1.0	1200	1300	360
86-30-6	N-Nitrosodiphenylamine	U	700	1.0	660	700	230
101-55-3	4-Bromophenyl-phenylether	U	350	1.0	330	350	91
1912-24-9	Atrazine	U	350	1.0	330	350	97
87-86-5	Pentachlorophenol	U	870	1.0	820	870	250
120-12-7	Anthracene	U	350	1.0	330	350	90
86-74-8	Carbazole	U	530	1.0	500	530	120

lw 4/17/09

3

KATAHDIN ANALYTICAL SERVICES
Report of Analytical Results

Client: CH2MHill
Project: TO-009 Lejeune
PO No:
Sample Date: 01/21/09
Received Date: 01/24/09
Extraction Date: 01/28/09
Analysis Date: 11-FEB-2009 21:38
Report Date: 02/15/2009
Matrix: SOIL
% Solids: 93.7

Lab ID: SC0364-1
Client ID: MR08-IS247-8-10-09A
SDG: TO9-40
Extracted by: AC
Extraction Method: SW846 3550
Analyst: JCG
Analysis Method: SW846 8270C
Lab Prep Batch: WG60254
Units: ug/Kgdrywt

CAS#	Compound	Flags	Results	DF	PQL	Adj.PQL	Adj.MDL	
84-74-2	Di-n-butylphthalate	U	350	1.0	330	350	110	
85-68-7	Butylbenzylphthalate	U	350	1.0	330	350	99	
91-94-1	3,3'-Dichlorobenzidine	~~J~~ UJ	530	1.0	500	530	120	CCH
218-01-9	Chrysene	U	350	1.0	330	350	100	
117-81-7	bis(2-Ethylhexyl)phthalate	J	130	1.0	330	350	100	
117-84-0	Di-n-octylphthalate	U	350	1.0	330	350	220	
367-12-4	2-Fluorophenol		68%					
13127-88-3	Phenol-D6		83%					
4165-60-0	Nitrobenzene-D5		73%					
321-60-8	2-Fluorobiphenyl		77%					
118-79-6	2,4,6-Tribromophenol		69%					
1718-51-0	Terphenyl-D14		75%					

RW
4/17/09

4

KATAHDIN ANALYTICAL SERVICES
Report of Analytical Results

Client: CH2MHill
Project: TO-009 Lejeune
PO No:
Sample Date: 01/21/09
Received Date: 01/24/09
Extraction Date: 01/28/09
Analysis Date: 11-FEB-2009 22:20
Report Date: 02/15/2009
Matrix: SOIL
% Solids: 92.4

Lab ID: SC0364-3
Client ID: MR08-SS247-09A
SDG: TO9-40
Extracted by: AC
Extraction Method: SW846 3550
Analyst: JCG
Analysis Method: SW846 8270C
Lab Prep Batch: WG60254
Units: ug/Kgdrywt

CAS#	Compound	Flags	Results	DF	PQL	Adj.PQL	Adj.MDL
100-52-7	Benzaldehyde	~~U~~ UJ	540	1.0	500	540	130 JEB
108-95-2	Phenol	U	540	1.0	500	540	170
111-44-4	Bis(2-Chloroethyl)ether	U	360	1.0	330	360	88
95-57-8	2-Chlorophenol	U	540	1.0	500	540	180
95-48-7	2-Methylphenol	U	650	1.0	600	650	220
108-60-1	2,2'-Oxybis(1-chloropropane)	U	360	1.0	330	360	96
98-86-2	Acetophenone	U	650	1.0	600	650	190
621-64-7	N-Nitroso-di-n-propylamine	U	360	1.0	330	360	90
65794-96-9	3&4-Methylphenol	U	650	1.0	600	650	200
67-72-1	Hexachloroethane	U	360	1.0	330	360	100
98-95-3	Nitrobenzene	U	360	1.0	330	360	98
78-59-1	Isophorone	U	360	1.0	330	360	81
88-75-5	2-Nitrophenol	U	650	1.0	600	650	180
105-67-9	2,4-Dimethylphenol	U	540	1.0	500	540	180
111-91-1	Bis(2-Chloroethoxy)methane	U	360	1.0	330	360	100
120-83-2	2,4-Dichlorophenol	U	540	1.0	500	540	160
106-47-8	4-Chloroaniline	U	540	1.0	500	540	130
105-60-2	Caprolactam	U	540	1.0	500	540	160
59-50-7	4-Chloro-3-Methylphenol	U	540	1.0	500	540	180
88-06-2	2,4,6-Trichlorophenol	U	540	1.0	500	540	170
95-95-4	2,4,5-Trichlorophenol	U	540	1.0	500	540	170
91-58-7	2-Chloronaphthalene	U	360	1.0	330	360	94
92-52-4	1,1'-Biphenyl	U	360	1.0	330	360	79
88-74-4	2-Nitroaniline	U	540	1.0	500	540	81
131-11-3	Dimethyl Phthalate	U	360	1.0	330	360	84
606-20-2	2,6-Dinitrotoluene	U	360	1.0	330	360	85
208-96-8	Acenaphthylene	U	360	1.0	330	360	76
99-09-2	3-Nitroaniline	U	540	1.0	500	540	100
83-32-9	Acenaphthene	U	360	1.0	330	360	70
51-28-5	2,4-Dinitrophenol	U	1300	1.0	1200	1300	410
132-64-9	Dibenzofuran	U	360	1.0	330	360	85
100-02-7	4-Nitrophenol	U	1300	1.0	1200	1300	330
121-14-2	2,4-Dinitrotoluene	U	360	1.0	330	360	92
84-66-2	Diethylphthalate	U	360	1.0	330	360	86
7005-72-3	4-Chlorophenyl-phenylether	U	360	1.0	330	360	84
100-01-6	4-Nitroaniline	U	540	1.0	500	540	140
534-52-1	4,6-Dinitro-2-Methylphenol	U	1300	1.0	1200	1300	360
86-30-6	N-Nitrosodiphenylamine	U	710	1.0	660	710	240
101-55-3	4-Bromophenyl-phenylether	U	360	1.0	330	360	92
1912-24-9	Atrazine	U	360	1.0	330	360	98
87-86-5	Pentachlorophenol	U	890	1.0	820	890	260
120-12-7	Anthracene	U	360	1.0	330	360	91
86-74-8	Carbazole	U	540	1.0	500	540	120

kw 4/17/09

4

KATAHDIN ANALYTICAL SERVICES
Report of Analytical Results

Client: CH2MHill
Project: TO-009 Lejeune
PO No:
Sample Date: 01/21/09
Received Date: 01/24/09
Extraction Date: 01/28/09
Analysis Date: 11-FEB-2009 22:20
Report Date: 02/15/2009
Matrix: SOIL
% Solids: 92.4

Lab ID: SC0364-3
Client ID: MR08-SS247-09A
SDG: TO9-40
Extracted by: AC
Extraction Method: SW846 3550
Analyst: JCG
Analysis Method: SW846 8270C
Lab Prep Batch: WG60254
Units: ug/Kgdrywt

CAS#	Compound	Flags	Results	DF	PQL	Adj.PQL	Adj.MDL	
84-74-2	Di-n-butylphthalate	U	360	1.0	330	360	110	
85-68-7	Butylbenzylphthalate	U	360	1.0	330	360	100	
91-94-1	3,3'-Dichlorobenzidine	~~U~~ UJ	540	1.0	500	540	120	CCH
218-01-9	Chrysene	U	360	1.0	330	360	100	
117-81-7	bis(2-Ethylhexyl)phthalate	U	360	1.0	330	360	110	
117-84-0	Di-n-octylphthalate	U	360	1.0	330	360	230	
367-12-4	2-Fluorophenol		65%					
13127-88-3	Phenol-D6		84%					
4165-60-0	Nitrobenzene-D5		76%					
321-60-8	2-Fluorobiphenyl		74%					
118-79-6	2,4,6-Tribromophenol		60%					
1718-51-0	Terphenyl-D14		79%					

lus
4/17/09

5

KATAHDIN ANALYTICAL SERVICES
Report of Analytical Results

Client: CH2MHill
Project: TO-009 Lejeune
PO No:
Sample Date: 01/21/09
Received Date: 01/24/09
Extraction Date: 01/28/09
Analysis Date: 11-FEB-2009 23:03
Report Date: 02/15/2009
Matrix: SOIL
% Solids: 83.1

Lab ID: SC0364-5
Client ID: MR08-IS319-9-10-09A
SDG: TO9-40
Extracted by: AC
Extraction Method: SW846 3550
Analyst: JCG
Analysis Method: SW846 8270C
Lab Prep Batch: WG60254
Units: ug/Kgdrywt

CAS#	Compound	Flags	Results	DF	PQL	Adj.PQL	Adj.MDL
100-52-7	Benzaldehyde	~~U~~ UJ	600	1.0	500	600	140 JLB
108-95-2	Phenol	U	600	1.0	500	600	190
111-44-4	Bis(2-Chloroethyl)ether	U	400	1.0	330	400	97
95-57-8	2-Chlorophenol	U	600	1.0	500	600	200
95-48-7	2-Methylphenol	U	720	1.0	600	720	240
108-60-1	2,2'-Oxybis(1-chloropropane)	U	400	1.0	330	400	110
98-86-2	Acetophenone	U	720	1.0	600	720	210
621-64-7	N-Nitroso-di-n-propylamine	U	400	1.0	330	400	100
65794-96-9	3&4-Methylphenol	U	720	1.0	600	720	220
67-72-1	Hexachloroethane	U	400	1.0	330	400	120
98-95-3	Nitrobenzene	U	400	1.0	330	400	110
78-59-1	Isophorone	U	400	1.0	330	400	90
88-75-5	2-Nitrophenol	U	720	1.0	600	720	200
105-67-9	2,4-Dimethylphenol	U	600	1.0	500	600	200
111-91-1	Bis(2-Chloroethoxy)methane	U	400	1.0	330	400	120
120-83-2	2,4-Dichlorophenol	U	600	1.0	500	600	180
106-47-8	4-Chloroaniline	U	600	1.0	500	600	140
105-60-2	Caprolactam	U	600	1.0	500	600	170
59-50-7	4-Chloro-3-Methylphenol	U	600	1.0	500	600	200
88-06-2	2,4,6-Trichlorophenol	U	600	1.0	500	600	190
95-95-4	2,4,5-Trichlorophenol	U	600	1.0	500	600	190
91-58-7	2-Chloronaphthalene	U	400	1.0	330	400	100
92-52-4	1,1'-Biphenyl	U	400	1.0	330	400	88
88-74-4	2-Nitroaniline	U	600	1.0	500	600	90
131-11-3	Dimethyl Phthalate	U	400	1.0	330	400	94
606-20-2	2,6-Dinitrotoluene	U	400	1.0	330	400	95
208-96-8	Acenaphthylene	U	400	1.0	330	400	84
99-09-2	3-Nitroaniline	U	600	1.0	500	600	110
83-32-9	Acenaphthene	U	400	1.0	330	400	78
51-28-5	2,4-Dinitrophenol	U	1400	1.0	1200	1400	450
132-64-9	Dibenzofuran	U	400	1.0	330	400	95
100-02-7	4-Nitrophenol	U	1400	1.0	1200	1400	370
121-14-2	2,4-Dinitrotoluene	U	400	1.0	330	400	100
84-66-2	Diethylphthalate	U	400	1.0	330	400	96
7005-72-3	4-Chlorophenyl-phenylether	U	400	1.0	330	400	94
100-01-6	4-Nitroaniline	U	600	1.0	500	600	160
534-52-1	4,6-Dinitro-2-Methylphenol	U	1400	1.0	1200	1400	400
86-30-6	N-Nitrosodiphenylamine	U	790	1.0	660	790	260
101-55-3	4-Bromophenyl-phenylether	U	400	1.0	330	400	100
1912-24-9	Atrazine	U	400	1.0	330	400	110
87-86-5	Pentachlorophenol	U	990	1.0	820	990	280
120-12-7	Anthracene	U	400	1.0	330	400	100
86-74-8	Carbazole	U	600	1.0	500	600	130

lw 4/17/09

5

KATAHDIN ANALYTICAL SERVICES
Report of Analytical Results

Client: CH2MHill
Project: TO-009 Lejeune
PO No:
Sample Date: 01/21/09
Received Date: 01/24/09
Extraction Date: 01/28/09
Analysis Date: 11-FEB-2009 23:03
Report Date: 02/15/2009
Matrix: SOIL
% Solids: 83.1

Lab ID: SC0364-5
Client ID: MR08-IS319-9-10-09A
SDG: TO9-40
Extracted by: AC
Extraction Method: SW846 3550
Analyst: JCG
Analysis Method: SW846 8270C
Lab Prep Batch: WG60254
Units: ug/Kgdrywt

CAS#	Compound	Flags	Results	DF	PQL	Adj.PQL	Adj.MDL	
84-74-2	Di-n-butylphthalate	U	400	1.0	330	400	120	
85-68-7	Butylbenzylphthalate	U	400	1.0	330	400	110	
91-94-1	3,3'-Dichlorobenzidine	~~U~~ UJ	600	1.0	500	600	140	CCH
218-01-9	Chrysene	U	400	1.0	330	400	110	
117-81-7	bis(2-Ethylhexyl)phthalate	U	400	1.0	330	400	120	
117-84-0	Di-n-octylphthalate	U	400	1.0	330	400	250	
367-12-4	2-Fluorophenol		65%					
13127-88-3	Phenol-D6		84%					
4165-60-0	Nitrobenzene-D5		76%					
321-60-8	2-Fluorobiphenyl		76%					
118-79-6	2,4,6-Tribromophenol		62%					
1718-51-0	Terphenyl-D14		74%					

LW 4/17/09

KATAHDIN ANALYTICAL SERVICES
Report of Analytical Results

6

Client: CH2MHill
Project: TO-009 Lejeune
PO No:
Sample Date: 01/21/09
Received Date: 01/24/09
Extraction Date: 01/28/09
Analysis Date: 11-FEB-2009 23:45
Report Date: 02/15/2009
Matrix: SOIL
% Solids: 79.8

Lab ID: SC0364-7
Client ID: MR08-IS319D-9-10-09
SDG: TO9-40
Extracted by: AC
Extraction Method: SW846 3550
Analyst: JCG
Analysis Method: SW846 8270C
Lab Prep Batch: WG60254
Units: ug/Kgdrywt

CAS#	Compound	Flags	Results	DF	PQL	Adj.PQL	Adj.MDL
100-52-7	Benzaldehyde	~~U~~ UJ	630	1.0	500	630	150 JEB
108-95-2	Phenol	U	630	1.0	500	630	200
111-44-4	Bis(2-Chloroethyl)ether	U	410	1.0	330	410	100
95-57-8	2-Chlorophenol	U	630	1.0	500	630	200
95-48-7	2-Methylphenol	U	750	1.0	600	750	250
108-60-1	2,2'-Oxybis(1-chloropropane)	U	410	1.0	330	410	110
98-86-2	Acetophenone	U	750	1.0	600	750	220
621-64-7	N-Nitroso-di-n-propylamine	U	410	1.0	330	410	100
65794-96-9	3&4-Methylphenol	U	750	1.0	600	750	230
67-72-1	Hexachloroethane	U	410	1.0	330	410	120
98-95-3	Nitrobenzene	U	410	1.0	330	410	110
78-59-1	Isophorone	U	410	1.0	330	410	94
88-75-5	2-Nitrophenol	U	750	1.0	600	750	210
105-67-9	2,4-Dimethylphenol	U	630	1.0	500	630	210
111-91-1	Bis(2-Chloroethoxy)methane	U	410	1.0	330	410	120
120-83-2	2,4-Dichlorophenol	U	630	1.0	500	630	190
106-47-8	4-Chloroaniline	U	630	1.0	500	630	150
105-60-2	Caprolactam	U	630	1.0	500	630	180
59-50-7	4-Chloro-3-Methylphenol	U	630	1.0	500	630	210
88-06-2	2,4,6-Trichlorophenol	U	630	1.0	500	630	190
95-95-4	2,4,5-Trichlorophenol	U	630	1.0	500	630	190
91-58-7	2-Chloronaphthalene	U	410	1.0	330	410	110
92-52-4	1,1'-Biphenyl	U	410	1.0	330	410	91
88-74-4	2-Nitroaniline	U	630	1.0	500	630	94
131-11-3	Dimethyl Phthalate	U	410	1.0	330	410	98
606-20-2	2,6-Dinitrotoluene	U	410	1.0	330	410	99
208-96-8	Acenaphthylene	U	410	1.0	330	410	88
99-09-2	3-Nitroaniline	U	630	1.0	500	630	120
83-32-9	Acenaphthene	U	410	1.0	330	410	81
51-28-5	2,4-Dinitrophenol	U	1500	1.0	1200	1500	470
132-64-9	Dibenzofuran	U	410	1.0	330	410	99
100-02-7	4-Nitrophenol	U	1500	1.0	1200	1500	390
121-14-2	2,4-Dinitrotoluene	U	410	1.0	330	410	110
84-66-2	Diethylphthalate	U	410	1.0	330	410	100
7005-72-3	4-Chlorophenyl-phenylether	U	410	1.0	330	410	98
100-01-6	4-Nitroaniline	U	630	1.0	500	630	170
534-52-1	4,6-Dinitro-2-Methylphenol	U	1500	1.0	1200	1500	420
86-30-6	N-Nitrosodiphenylamine	U	830	1.0	660	830	270
101-55-3	4-Bromophenyl-phenylether	U	410	1.0	330	410	110
1912-24-9	Atrazine	U	410	1.0	330	410	110
87-86-5	Pentachlorophenol	U	1000	1.0	820	1000	300
120-12-7	Anthracene	U	410	1.0	330	410	100
86-74-8	Carbazole	U	630	1.0	500	630	140

RW 4/17/09

KATAHDIN ANALYTICAL SERVICES
Report of Analytical Results

4

Client: CH2MHill
Project: TO-009 Lejeune
PO No:
Sample Date: 01/21/09
Received Date: 01/24/09
Extraction Date: 01/28/09
Analysis Date: 11-FEB-2009 23:45
Report Date: 02/15/2009
Matrix: SOIL
% Solids: 79.8

Lab ID: SC0364-7
Client ID: MR08-IS319D-9-10-09
SDG: TO9-40
Extracted by: AC
Extraction Method: SW846 3550
Analyst: JCG
Analysis Method: SW846 8270C
Lab Prep Batch: WG60254
Units: ug/Kgdrywt

CAS#	Compound	Flags	Results	DF	PQL	Adj.PQL	Adj.MDL	
84-74-2	Di-n-butylphthalate	U	410	1.0	330	410	130	
85-68-7	Butylbenzylphthalate	U	410	1.0	330	410	120	
91-94-1	3,3'-Dichlorobenzidine	~~U~~ UJ	630	1.0	500	630	140	CH
218-01-9	Chrysene	U	410	1.0	330	410	120	
117-81-7	bis(2-Ethylhexyl)phthalate	U	410	1.0	330	410	120	
117-84-0	Di-n-octylphthalate	U	410	1.0	330	410	260	
367-12-4	2-Fluorophenol		67%					
13127-88-3	Phenol-D6		86%					
4165-60-0	Nitrobenzene-D5		73%					
321-60-8	2-Fluorobiphenyl		70%					
118-79-6	2,4,6-Tribromophenol		71%					
1718-51-0	Terphenyl-D14		80%					

lw 4/17/09

7

KATAHDIN ANALYTICAL SERVICES
Report of Analytical Results

Client: CH2MHill
Project: TO-009 Lejeune
PO No:
Sample Date: 01/21/09
Received Date: 01/24/09
Extraction Date: 01/28/09
Analysis Date: 12-FEB-2009 00:27
Report Date: 02/15/2009
Matrix: SOIL
% Solids: 85.9

Lab ID: SC0364-9
Client ID: MR08-SS319-09A
SDG: TO9-40
Extracted by: AC
Extraction Method: SW846 3550
Analyst: JCG
Analysis Method: SW846 8270C
Lab Prep Batch: WG60254
Units: ug/Kgdrywt

CAS#	Compound	Flags	Results	DF	PQL	Adj.PQL	Adj.MDL
100-52-7	Benzaldehyde	~~U~~ UJ	580	1.0	500	580	140 ICB
108-95-2	Phenol	U	580	1.0	500	580	180
111-44-4	Bis(2-Chloroethyl)ether	U	380	1.0	330	380	94
95-57-8	2-Chlorophenol	U	580	1.0	500	580	190
95-48-7	2-Methylphenol	U	700	1.0	600	700	230
108-60-1	2,2'-Oxybis(1-chloropropane)	U	380	1.0	330	380	100
98-86-2	Acetophenone	U	700	1.0	600	700	210
621-64-7	N-Nitroso-di-n-propylamine	U	380	1.0	330	380	97
65794-96-9	3&4-Methylphenol	U	700	1.0	600	700	220
67-72-1	Hexachloroethane	U	380	1.0	330	380	110
98-95-3	Nitrobenzene	U	380	1.0	330	380	100
78-59-1	Isophorone	U	380	1.0	330	380	87
88-75-5	2-Nitrophenol	U	700	1.0	600	700	190
105-67-9	2,4-Dimethylphenol	U	580	1.0	500	580	190
111-91-1	Bis(2-Chloroethoxy)methane	U	380	1.0	330	380	110
120-83-2	2,4-Dichlorophenol	U	580	1.0	500	580	170
106-47-8	4-Chloroaniline	U	580	1.0	500	580	140
105-60-2	Caprolactam	U	580	1.0	500	580	170
59-50-7	4-Chloro-3-Methylphenol	U	580	1.0	500	580	190
88-06-2	2,4,6-Trichlorophenol	U	580	1.0	500	580	180
95-95-4	2,4,5-Trichlorophenol	U	580	1.0	500	580	180
91-58-7	2-Chloronaphthalene	U	380	1.0	330	380	100
92-52-4	1,1'-Biphenyl	U	380	1.0	330	380	85
88-74-4	2-Nitroaniline	U	580	1.0	500	580	87
131-11-3	Dimethyl Phthalate	U	380	1.0	330	380	91
606-20-2	2,6-Dinitrotoluene	U	380	1.0	330	380	92
208-96-8	Acenaphthylene	U	380	1.0	330	380	81
99-09-2	3-Nitroaniline	U	580	1.0	500	580	110
83-32-9	Acenaphthene	U	380	1.0	330	380	76
51-28-5	2,4-Dinitrophenol	U	1400	1.0	1200	1400	440
132-64-9	Dibenzofuran	U	380	1.0	330	380	92
100-02-7	4-Nitrophenol	U	1400	1.0	1200	1400	360
121-14-2	2,4-Dinitrotoluene	U	380	1.0	330	380	99
84-66-2	Diethylphthalate	U	380	1.0	330	380	93
7005-72-3	4-Chlorophenyl-phenylether	U	380	1.0	330	380	91
100-01-6	4-Nitroaniline	U	580	1.0	500	580	160
534-52-1	4,6-Dinitro-2-Methylphenol	U	1400	1.0	1200	1400	390
86-30-6	N-Nitrosodiphenylamine	U	770	1.0	660	770	250
101-55-3	4-Bromophenyl-phenylether	U	380	1.0	330	380	99
1912-24-9	Atrazine	U	380	1.0	330	380	100
87-86-5	Pentachlorophenol	U	950	1.0	820	950	280
120-12-7	Anthracene	U	380	1.0	330	380	98
86-74-8	Carbazole	U	580	1.0	500	580	130

bw
4/17/09

7

KATAHDIN ANALYTICAL SERVICES
Report of Analytical Results

Client: CH2MHill
Project: TO-009 Lejeune
PO No:
Sample Date: 01/21/09
Received Date: 01/24/09
Extraction Date: 01/28/09
Analysis Date: 12-FEB-2009 00:27
Report Date: 02/15/2009
Matrix: SOIL
% Solids: 85.9

Lab ID: SC0364-9
Client ID: MR08-SS319-09A
SDG: TO9-40
Extracted by: AC
Extraction Method: SW846 3550
Analyst: JCG
Analysis Method: SW846 8270C
Lab Prep Batch: WG60254
Units: ug/Kgdrywt

CAS#	Compound	Flags	Results	DF	PQL	Adj.PQL	Adj.MDL
84-74-2	Di-n-butylphthalate	U	380	1.0	330	380	120
85-68-7	Butylbenzylphthalate	U	380	1.0	330	380	110
91-94-1	3,3'-Dichlorobenzidine	~~U~~ UJ	580	1.0	500	580	130 CCH
218-01-9	Chrysene	U	380	1.0	330	380	110
117-81-7	bis(2-Ethylhexyl)phthalate		630	1.0	330	380	110
117-84-0	Di-n-octylphthalate	U	380	1.0	330	380	240
367-12-4	2-Fluorophenol		80%				
13127-88-3	Phenol-D6		97%				
4165-60-0	Nitrobenzene-D5		84%				
321-60-8	2-Fluorobiphenyl		88%				
118-79-6	2,4,6-Tribromophenol		100%				
1718-51-0	Terphenyl-D14		78%				

lw
4/17/09

KATAHDIN ANALYTICAL SERVICES
Report of Analytical Results

8

Client: CH2MHill
Project: TO-009 Lejeune
PO No:
Sample Date: 01/21/09
Received Date: 01/24/09
Extraction Date: 01/28/09
Analysis Date: 12-FEB-2009 01:10
Report Date: 02/15/2009
Matrix: SOIL
% Solids: 86.0

Lab ID: SC0364-11
Client ID: MR08-SS319D-09A
SDG: TO9-40
Extracted by: AC
Extraction Method: SW846 3550
Analyst: JCG
Analysis Method: SW846 8270C
Lab Prep Batch: WG60254
Units: ug/Kgdrywt

CAS#	Compound	Flags	Results	DF	PQL	Adj.PQL	Adj.MDL
100-52-7	Benzaldehyde	~~U~~ UJ	580	1.0	500	580	140 JCB
108-95-2	Phenol	U	580	1.0	500	580	180
111-44-4	Bis(2-Chloroethyl)ether	U	380	1.0	330	380	94
95-57-8	2-Chlorophenol	U	580	1.0	500	580	190
95-48-7	2-Methylphenol	U	700	1.0	600	700	230
108-60-1	2,2'-Oxybis(1-chloropropane)	U	380	1.0	330	380	100
98-86-2	Acetophenone	U	700	1.0	600	700	210
621-64-7	N-Nitroso-di-n-propylamine	U	380	1.0	330	380	96
65794-96-9	3&4-Methylphenol	U	700	1.0	600	700	220
67-72-1	Hexachloroethane	U	380	1.0	330	380	110
98-95-3	Nitrobenzene	U	380	1.0	330	380	100
78-59-1	Isophorone	U	380	1.0	330	380	87
88-75-5	2-Nitrophenol	U	700	1.0	600	700	190
105-67-9	2,4-Dimethylphenol	U	580	1.0	500	580	190
111-91-1	Bis(2-Chloroethoxy)methane	U	380	1.0	330	380	110
120-83-2	2,4-Dichlorophenol	U	580	1.0	500	580	170
106-47-8	4-Chloroaniline	U	580	1.0	500	580	140
105-60-2	Caprolactam	U	580	1.0	500	580	170
59-50-7	4-Chloro-3-Methylphenol	U	580	1.0	500	580	190
88-06-2	2,4,6-Trichlorophenol	U	580	1.0	500	580	180
95-95-4	2,4,5-Trichlorophenol	U	580	1.0	500	580	180
91-58-7	2-Chloronaphthalene	U	380	1.0	330	380	100
92-52-4	1,1'-Biphenyl	U	380	1.0	330	380	85
88-74-4	2-Nitroaniline	U	580	1.0	500	580	87
131-11-3	Dimethyl Phthalate	U	380	1.0	330	380	91
606-20-2	2,6-Dinitrotoluene	U	380	1.0	330	380	92
208-96-8	Acenaphthylene	U	380	1.0	330	380	81
99-09-2	3-Nitroaniline	U	580	1.0	500	580	110
83-32-9	Acenaphthene	U	380	1.0	330	380	76
51-28-5	2,4-Dinitrophenol	U	1400	1.0	1200	1400	440
132-64-9	Dibenzofuran	U	380	1.0	330	380	92
100-02-7	4-Nitrophenol	U	1400	1.0	1200	1400	360
121-14-2	2,4-Dinitrotoluene	U	380	1.0	330	380	99
84-66-2	Diethylphthalate	U	380	1.0	330	380	93
7005-72-3	4-Chlorophenyl-phenylether	U	380	1.0	330	380	91
100-01-6	4-Nitroaniline	U	580	1.0	500	580	160
534-52-1	4,6-Dinitro-2-Methylphenol	U	1400	1.0	1200	1400	390
86-30-6	N-Nitrosodiphenylamine	U	770	1.0	660	770	250
101-55-3	4-Bromophenyl-phenylether	U	380	1.0	330	380	99
1912-24-9	Atrazine	U	380	1.0	330	380	100
87-86-5	Pentachlorophenol	U	950	1.0	820	950	280
120-12-7	Anthracene	U	380	1.0	330	380	98
86-74-8	Carbazole	U	580	1.0	500	580	130

lw 4/17/09

8

KATAHDIN ANALYTICAL SERVICES
Report of Analytical Results

Client: CH2MHill
Project: TO-009 Lejeune
PO No:
Sample Date: 01/21/09
Received Date: 01/24/09
Extraction Date: 01/28/09
Analysis Date: 12-FEB-2009 01:10
Report Date: 02/15/2009
Matrix: SOIL
% Solids: 86.0

Lab ID: SC0364-11
Client ID: MR08-SS319D-09A
SDG: TO9-40
Extracted by: AC
Extraction Method: SW846 3550
Analyst: JCG
Analysis Method: SW846 8270C
Lab Prep Batch: WG60254
Units: ug/Kgdrywt

CAS#	Compound	Flags	Results	DF	PQL	Adj.PQL	Adj.MDL	
84-74-2	Di-n-butylphthalate	U	380	1.0	330	380	120	
85-68-7	Butylbenzylphthalate	U	380	1.0	330	380	110	
91-94-1	3,3'-Dichlorobenzidine	~~U~~ UJ	580	1.0	500	580	130	CCH
218-01-9	Chrysene	U	380	1.0	330	380	110	
117-81-7	bis(2-Ethylhexyl)phthalate		490	1.0	330	380	110	
117-84-0	Di-n-octylphthalate	U	380	1.0	330	380	240	
367-12-4	2-Fluorophenol		64%					
13127-88-3	Phenol-D6		88%					
4165-60-0	Nitrobenzene-D5		75%					
321-60-8	2-Fluorobiphenyl		79%					
118-79-6	2,4,6-Tribromophenol		52%					
1718-51-0	Terphenyl-D14		78%					

MW 4/17/09

KATAHDIN ANALYTICAL SERVICES
Report of Analytical Results

9

Client: CH2MHill
Project: TO-009 Lejeune
PO No:
Sample Date: 01/21/09
Received Date: 01/24/09
Extraction Date: 01/28/09
Analysis Date: 12-FEB-2009 01:52
Report Date: 02/15/2009
Matrix: SOIL
% Solids: 84.2

Lab ID: SC0364-13
Client ID: MR08-SS318-09A
SDG: TO9-40
Extracted by: AC
Extraction Method: SW846 3550
Analyst: JCG
Analysis Method: SW846 8270C
Lab Prep Batch: WG60254
Units: ug/Kgdrywt

CAS#	Compound	Flags	Results	DF	PQL	Adj.PQL	Adj.MDL
100-52-7	Benzaldehyde	~~J~~ UJ	590	1.0	500	590	140 ICB
108-95-2	Phenol	U	590	1.0	500	590	180
111-44-4	Bis(2-Chloroethyl)ether	U	390	1.0	330	390	96
95-57-8	2-Chlorophenol	U	590	1.0	500	590	190
95-48-7	2-Methylphenol	U	710	1.0	600	710	240
108-60-1	2,2'-Oxybis(1-chloropropane)	U	390	1.0	330	390	100
98-86-2	Acetophenone	U	710	1.0	600	710	210
621-64-7	N-Nitroso-di-n-propylamine	U	390	1.0	330	390	98
65794-96-9	3&4-Methylphenol	U	710	1.0	600	710	220
67-72-1	Hexachloroethane	U	390	1.0	330	390	110
98-95-3	Nitrobenzene	U	390	1.0	330	390	110
78-59-1	Isophorone	U	390	1.0	330	390	89
88-75-5	2-Nitrophenol	U	710	1.0	600	710	200
105-67-9	2,4-Dimethylphenol	U	590	1.0	500	590	200
111-91-1	Bis(2-Chloroethoxy)methane	U	390	1.0	330	390	110
120-83-2	2,4-Dichlorophenol	U	590	1.0	500	590	180
106-47-8	4-Chloroaniline	U	590	1.0	500	590	140
105-60-2	Caprolactam	U	590	1.0	500	590	170
59-50-7	4-Chloro-3-Methylphenol	U	590	1.0	500	590	200
88-06-2	2,4,6-Trichlorophenol	U	590	1.0	500	590	180
95-95-4	2,4,5-Trichlorophenol	U	590	1.0	500	590	180
91-58-7	2-Chloronaphthalene	U	390	1.0	330	390	100
92-52-4	1,1'-Biphenyl	U	390	1.0	330	390	87
88-74-4	2-Nitroaniline	U	590	1.0	500	590	89
131-11-3	Dimethyl Phthalate	U	390	1.0	330	390	93
606-20-2	2,6-Dinitrotoluene	U	390	1.0	330	390	94
208-96-8	Acenaphthylene	U	390	1.0	330	390	83
99-09-2	3-Nitroaniline	U	590	1.0	500	590	110
83-32-9	Acenaphthene	U	390	1.0	330	390	77
51-28-5	2,4-Dinitrophenol	U	1400	1.0	1200	1400	450
132-64-9	Dibenzofuran	U	390	1.0	330	390	94
100-02-7	4-Nitrophenol	U	1400	1.0	1200	1400	370
121-14-2	2,4-Dinitrotoluene	U	390	1.0	330	390	100
84-66-2	Diethylphthalate	U	390	1.0	330	390	95
7005-72-3	4-Chlorophenyl-phenylether	U	390	1.0	330	390	93
100-01-6	4-Nitroaniline	U	590	1.0	500	590	160
534-52-1	4,6-Dinitro-2-Methylphenol	U	1400	1.0	1200	1400	400
86-30-6	N-Nitrosodiphenylamine	U	780	1.0	660	780	260
101-55-3	4-Bromophenyl-phenylether	U	390	1.0	330	390	100
1912-24-9	Atrazine	U	390	1.0	330	390	110
87-86-5	Pentachlorophenol	U	970	1.0	820	970	280
120-12-7	Anthracene	U	390	1.0	330	390	100
86-74-8	Carbazole	U	590	1.0	500	590	130

lw 4/17/09

KATAHDIN ANALYTICAL SERVICES
Report of Analytical Results

Client: CH2MHill
Project: TO-009 Lejeune
PO No:
Sample Date: 01/21/09
Received Date: 01/24/09
Extraction Date: 01/28/09
Analysis Date: 12-FEB-2009 01:52
Report Date: 02/15/2009
Matrix: SOIL
% Solids: 84.2

Lab ID: SC0364-13
Client ID: MR08-SS318-09A
SDG: TO9-40
Extracted by: AC
Extraction Method: SW846 3550
Analyst: JCG
Analysis Method: SW846 8270C
Lab Prep Batch: WG60254
Units: ug/Kgdrywt

CAS#	Compound	Flags	Results	DF	PQL	Adj.PQL	Adj.MDL	
84-74-2	Di-n-butylphthalate	U	390	1.0	330	390	120	
85-68-7	Butylbenzylphthalate	U	390	1.0	330	390	110	
91-94-1	3,3'-Dichlorobenzidine	~~J~~ UJ	590	1.0	500	590	140	CCH
218-01-9	Chrysene	U	390	1.0	330	390	110	
117-81-7	bis(2-Ethylhexyl)phthalate	J	170	1.0	330	390	120	
117-84-0	Di-n-octylphthalate	U	390	1.0	330	390	250	
367-12-4	2-Fluorophenol		74%					
13127-88-3	Phenol-D6		92%					
4165-60-0	Nitrobenzene-D5		85%					
321-60-8	2-Fluorobiphenyl		88%					
118-79-6	2,4,6-Tribromophenol		80%					
1718-51-0	Terphenyl-D14		86%					

lw
4/17/09

10

KATAHDIN ANALYTICAL SERVICES
Report of Analytical Results

Client: CH2MHill
Project: TO-009 Lejeune
PO No:
Sample Date: 01/21/09
Received Date: 01/24/09
Extraction Date: 01/28/09
Analysis Date: 12-FEB-2009 02:34
Report Date: 02/15/2009
Matrix: SOIL
% Solids: 96.4

Lab ID: SC0364-15
Client ID: MR08-IS318-4-5-09A
SDG: TO9-40
Extracted by: AC
Extraction Method: SW846 3550
Analyst: JCG
Analysis Method: SW846 8270C
Lab Prep Batch: WG60254
Units: ug/Kgdrywt

CAS#	Compound	Flags	Results	DF	PQL	Adj.PQL	Adj.MDL
100-52-7	Benzaldehyde	~~J~~ UJ	520	1.0	500	520	120 JEB
108-95-2	Phenol	U	520	1.0	500	520	160
111-44-4	Bis(2-Chloroethyl)ether	U	340	1.0	330	340	84
95-57-8	2-Chlorophenol	U	520	1.0	500	520	170
95-48-7	2-Methylphenol	U	620	1.0	600	620	210
108-60-1	2,2'-Oxybis(1-chloropropane)	U	340	1.0	330	340	92
98-86-2	Acetophenone	U	620	1.0	600	620	180
621-64-7	N-Nitroso-di-n-propylamine	U	340	1.0	330	340	86
65794-96-9	3&4-Methylphenol	U	620	1.0	600	620	190
67-72-1	Hexachloroethane	U	340	1.0	330	340	100
98-95-3	Nitrobenzene	U	340	1.0	330	340	94
78-59-1	Isophorone	U	340	1.0	330	340	78
88-75-5	2-Nitrophenol	U	620	1.0	600	620	170
105-67-9	2,4-Dimethylphenol	U	520	1.0	500	520	170
111-91-1	Bis(2-Chloroethoxy)methane	U	340	1.0	330	340	100
120-83-2	2,4-Dichlorophenol	U	520	1.0	500	520	160
106-47-8	4-Chloroaniline	U	520	1.0	500	520	120
105-60-2	Caprolactam	U	520	1.0	500	520	150
59-50-7	4-Chloro-3-Methylphenol	U	520	1.0	500	520	170
88-06-2	2,4,6-Trichlorophenol	U	520	1.0	500	520	160
95-95-4	2,4,5-Trichlorophenol	U	520	1.0	500	520	160
91-58-7	2-Chloronaphthalene	U	340	1.0	330	340	90
92-52-4	1,1'-Biphenyl	U	340	1.0	330	340	76
88-74-4	2-Nitroaniline	U	520	1.0	500	520	78
131-11-3	Dimethyl Phthalate	U	340	1.0	330	340	81
606-20-2	2,6-Dinitrotoluene	U	340	1.0	330	340	82
208-96-8	Acenaphthylene	U	340	1.0	330	340	72
99-09-2	3-Nitroaniline	U	520	1.0	500	520	97
83-32-9	Acenaphthene	U	340	1.0	330	340	67
51-28-5	2,4-Dinitrophenol	U	1200	1.0	1200	1200	390
132-64-9	Dibenzofuran	U	340	1.0	330	340	82
100-02-7	4-Nitrophenol	U	1200	1.0	1200	1200	320
121-14-2	2,4-Dinitrotoluene	U	340	1.0	330	340	88
84-66-2	Diethylphthalate	U	340	1.0	330	340	83
7005-72-3	4-Chlorophenyl-phenylether	U	340	1.0	330	340	81
100-01-6	4-Nitroaniline	U	520	1.0	500	520	140
534-52-1	4,6-Dinitro-2-Methylphenol	U	1200	1.0	1200	1200	350
86-30-6	N-Nitrosodiphenylamine	U	680	1.0	660	680	230
101-55-3	4-Bromophenyl-phenylether	U	340	1.0	330	340	88
1912-24-9	Atrazine	U	340	1.0	330	340	94
87-86-5	Pentachlorophenol	U	850	1.0	820	850	240
120-12-7	Anthracene	U	340	1.0	330	340	87
86-74-8	Carbazole	U	520	1.0	500	520	120

MW 4/17/09

10

KATAHDIN ANALYTICAL SERVICES
Report of Analytical Results

Client: CH2MHill
Project: TO-009 Lejeune
PO No:
Sample Date: 01/21/09
Received Date: 01/24/09
Extraction Date: 01/28/09
Analysis Date: 12-FEB-2009 02:34
Report Date: 02/15/2009
Matrix: SOIL
% Solids: 96.4

Lab ID: SC0364-15
Client ID: MR08-IS318-4-5-09A
SDG: TO9-40
Extracted by: AC
Extraction Method: SW846 3550
Analyst: JCG
Analysis Method: SW846 8270C
Lab Prep Batch: WG60254
Units: ug/Kgdrywt

CAS#	Compound	Flags	Results	DF	PQL	Adj.PQL	Adj.MDL
84-74-2	Di-n-butylphthalate	U	340	1.0	330	340	100
85-68-7	Butylbenzylphthalate	U	340	1.0	330	340	96
91-94-1	3,3'-Dichlorobenzidine	~~U~~ UJ	520	1.0	500	520	120 CCH
218-01-9	Chrysene	U	340	1.0	330	340	98
117-81-7	bis(2-Ethylhexyl)phthalate	U	340	1.0	330	340	100
117-84-0	Di-n-octylphthalate	U	340	1.0	330	340	220
367-12-4	2-Fluorophenol		67%				
13127-88-3	Phenol-D6		80%				
4165-60-0	Nitrobenzene-D5		77%				
321-60-8	2-Fluorobiphenyl		70%				
118-79-6	2,4,6-Tribromophenol		67%				
1718-51-0	Terphenyl-D14		84%				

lw 4/17/09

KATAHDIN ANALYTICAL SERVICES
Report of Analytical Results

11

Client: CH2MHill
Project: TO-009 Lejeune
PO No:
Sample Date: 01/21/09
Received Date: 01/24/09
Extraction Date: 01/28/09
Analysis Date: 12-FEB-2009 03:16
Report Date: 02/15/2009
Matrix: SOIL
% Solids: 71.9

Lab ID: SC0364-17
Client ID: MR08-SS317-09A
SDG: TO9-40
Extracted by: AC
Extraction Method: SW846 3550
Analyst: JCG
Analysis Method: SW846 8270C
Lab Prep Batch: WG60254
Units: ug/Kgdrywt

CAS#	Compound	Flags	Results	DF	PQL	Adj.PQL	Adj.MDL
100-52-7	Benzaldehyde	~~U~~ UJ	700	1.0	500	700	170 JCB
108-95-2	Phenol	U	700	1.0	500	700	220
111-44-4	Bis(2-Chloroethyl)ether	U	460	1.0	330	460	110
95-57-8	2-Chlorophenol	U	700	1.0	500	700	230
95-48-7	2-Methylphenol	U	830	1.0	600	830	280
108-60-1	2,2'-Oxybis(1-chloropropane)	U	460	1.0	330	460	120
98-86-2	Acetophenone	U	830	1.0	600	830	250
621-64-7	N-Nitroso-di-n-propylamine	U	460	1.0	330	460	120
65794-96-9	3&4-Methylphenol	U	830	1.0	600	830	260
67-72-1	Hexachloroethane	U	460	1.0	330	460	130
98-95-3	Nitrobenzene	U	460	1.0	330	460	130
78-59-1	Isophorone	U	460	1.0	330	460	100
88-75-5	2-Nitrophenol	U	830	1.0	600	830	230
105-67-9	2,4-Dimethylphenol	U	700	1.0	500	700	230
111-91-1	Bis(2-Chloroethoxy)methane	U	460	1.0	330	460	130
120-83-2	2,4-Dichlorophenol	U	700	1.0	500	700	210
106-47-8	4-Chloroaniline	U	700	1.0	500	700	160
105-60-2	Caprolactam	U	700	1.0	500	700	200
59-50-7	4-Chloro-3-Methylphenol	U	700	1.0	500	700	230
88-06-2	2,4,6-Trichlorophenol	U	700	1.0	500	700	220
95-95-4	2,4,5-Trichlorophenol	U	700	1.0	500	700	220
91-58-7	2-Chloronaphthalene	U	460	1.0	330	460	120
92-52-4	1,1'-Biphenyl	U	460	1.0	330	460	100
88-74-4	2-Nitroaniline	U	700	1.0	500	700	100
131-11-3	Dimethyl Phthalate	U	460	1.0	330	460	110
606-20-2	2,6-Dinitrotoluene	U	460	1.0	330	460	110
208-96-8	Acenaphthylene	U	460	1.0	330	460	97
99-09-2	3-Nitroaniline	U	700	1.0	500	700	130
83-32-9	Acenaphthene	U	460	1.0	330	460	90
51-28-5	2,4-Dinitrophenol	U	1700	1.0	1200	1700	520
132-64-9	Dibenzofuran	U	460	1.0	330	460	110
100-02-7	4-Nitrophenol	U	1700	1.0	1200	1700	430
121-14-2	2,4-Dinitrotoluene	U	460	1.0	330	460	120
84-66-2	Diethylphthalate	U	460	1.0	330	460	110
7005-72-3	4-Chlorophenyl-phenylether	U	460	1.0	330	460	110
100-01-6	4-Nitroaniline	U	700	1.0	500	700	190
534-52-1	4,6-Dinitro-2-Methylphenol	U	1700	1.0	1200	1700	470
86-30-6	N-Nitrosodiphenylamine	U	920	1.0	660	920	300
101-55-3	4-Bromophenyl-phenylether	U	460	1.0	330	460	120
1912-24-9	Atrazine	U	460	1.0	330	460	130
87-86-5	Pentachlorophenol	U	1100	1.0	820	1100	330
120-12-7	Anthracene	U	460	1.0	330	460	120
86-74-8	Carbazole	U	700	1.0	500	700	150

MW 4/17/09

KATAHDIN ANALYTICAL SERVICES
Report of Analytical Results

11

Client: CH2MHill
Project: TO-009 Lejeune
PO No:
Sample Date: 01/21/09
Received Date: 01/24/09
Extraction Date: 01/28/09
Analysis Date: 12-FEB-2009 03:16
Report Date: 02/15/2009
Matrix: SOIL
% Solids: 71.9

Lab ID: SC0364-17
Client ID: MR08-SS317-09A
SDG: TO9-40
Extracted by: AC
Extraction Method: SW846 3550
Analyst: JCG
Analysis Method: SW846 8270C
Lab Prep Batch: WG60254
Units: ug/Kgdrywt

CAS#	Compound	Flags	Results	DF	PQL	Adj.PQL	Adj.MDL
84-74-2	Di-n-butylphthalate	U	460	1.0	330	460	140
85-68-7	Butylbenzylphthalate	U	460	1.0	330	460	130
91-94-1	3,3'-Dichlorobenzidine	~~J~~ UJ	700	1.0	500	700	160 CCH
218-01-9	Chrysene	J	220	1.0	330	460	130
117-81-7	bis(2-Ethylhexyl)phthalate	J	340	1.0	330	460	140
117-84-0	Di-n-octylphthalate	U	460	1.0	330	460	290
367-12-4	2-Fluorophenol		79%				
13127-88-3	Phenol-D6		94%				
4165-60-0	Nitrobenzene-D5		83%				
321-60-8	2-Fluorobiphenyl		84%				
118-79-6	2,4,6-Tribromophenol		92%				
1718-51-0	Terphenyl-D14		83%				

lw 4/17/09

12

KATAHDIN ANALYTICAL SERVICES
Report of Analytical Results

Client: CH2MHill
Project: TO-009 Lejeune
PO No:
Sample Date: 01/21/09
Received Date: 01/24/09
Extraction Date: 01/28/09
Analysis Date: 12-FEB-2009 03:58
Report Date: 02/15/2009
Matrix: SOIL
% Solids: 86.5

Lab ID: SC0364-19
Client ID: MR08-IS317-4-5-09A
SDG: TO9-40
Extracted by: AC
Extraction Method: SW846 3550
Analyst: JCG
Analysis Method: SW846 8270C
Lab Prep Batch: WG60254
Units: ug/Kgdrywt

CAS#	Compound	Flags	Results	DF	PQL	Adj.PQL	Adj.MDL
100-52-7	Benzaldehyde	~~J~~ U J	580	1.0	500	580	140 JCB
108-95-2	Phenol	U	580	1.0	500	580	180
111-44-4	Bis(2-Chloroethyl)ether	U	380	1.0	330	380	94
95-57-8	2-Chlorophenol	U	580	1.0	500	580	190
95-48-7	2-Methylphenol	U	690	1.0	600	690	230
108-60-1	2,2'-Oxybis(1-chloropropane)	U	380	1.0	330	380	100
98-86-2	Acetophenone	U	690	1.0	600	690	200
621-64-7	N-Nitroso-di-n-propylamine	U	380	1.0	330	380	96
65794-96-9	3&4-Methylphenol	U	690	1.0	600	690	220
67-72-1	Hexachloroethane	U	380	1.0	330	380	110
98-95-3	Nitrobenzene	U	380	1.0	330	380	100
78-59-1	Isophorone	U	380	1.0	330	380	87
88-75-5	2-Nitrophenol	U	690	1.0	600	690	190
105-67-9	2,4-Dimethylphenol	U	580	1.0	500	580	190
111-91-1	Bis(2-Chloroethoxy)methane	U	380	1.0	330	380	110
120-83-2	2,4-Dichlorophenol	U	580	1.0	500	580	170
106-47-8	4-Chloroaniline	U	580	1.0	500	580	140
105-60-2	Caprolactam	U	580	1.0	500	580	170
59-50-7	4-Chloro-3-Methylphenol	U	580	1.0	500	580	190
88-06-2	2,4,6-Trichlorophenol	U	580	1.0	500	580	180
95-95-4	2,4,5-Trichlorophenol	U	580	1.0	500	580	180
91-58-7	2-Chloronaphthalene	U	380	1.0	330	380	100
92-52-4	1,1'-Biphenyl	U	380	1.0	330	380	84
88-74-4	2-Nitroaniline	U	580	1.0	500	580	87
131-11-3	Dimethyl Phthalate	U	380	1.0	330	380	90
606-20-2	2,6-Dinitrotoluene	U	380	1.0	330	380	91
208-96-8	Acenaphthylene	U	380	1.0	330	380	81
99-09-2	3-Nitroaniline	U	580	1.0	500	580	110
83-32-9	Acenaphthene	U	380	1.0	330	380	75
51-28-5	2,4-Dinitrophenol	U	1400	1.0	1200	1400	440
132-64-9	Dibenzofuran	U	380	1.0	330	380	91
100-02-7	4-Nitrophenol	U	1400	1.0	1200	1400	360
121-14-2	2,4-Dinitrotoluene	U	380	1.0	330	380	98
84-66-2	Diethylphthalate	U	380	1.0	330	380	92
7005-72-3	4-Chlorophenyl-phenylether	U	380	1.0	330	380	90
100-01-6	4-Nitroaniline	U	580	1.0	500	580	150
534-52-1	4,6-Dinitro-2-Methylphenol	U	1400	1.0	1200	1400	390
86-30-6	N-Nitrosodiphenylamine	U	760	1.0	660	760	250
101-55-3	4-Bromophenyl-phenylether	U	380	1.0	330	380	98
1912-24-9	Atrazine	U	380	1.0	330	380	100
87-86-5	Pentachlorophenol	U	950	1.0	820	950	270
120-12-7	Anthracene	U	380	1.0	330	380	97
86-74-8	Carbazole	U	580	1.0	500	580	130

lw 4/17/09

12

KATAHDIN ANALYTICAL SERVICES
Report of Analytical Results

Client: CH2MHill
Project: TO-009 Lejeune
PO No:
Sample Date: 01/21/09
Received Date: 01/24/09
Extraction Date: 01/28/09
Analysis Date: 12-FEB-2009 03:58
Report Date: 02/15/2009
Matrix: SOIL
% Solids: 86.5

Lab ID: SC0364-19
Client ID: MR08-IS317-4-5-09A
SDG: TO9-40
Extracted by: AC
Extraction Method: SW846 3550
Analyst: JCG
Analysis Method: SW846 8270C
Lab Prep Batch: WG60254
Units: ug/Kgdrywt

CAS#	Compound	Flags	Results	DF	PQL	Adj.PQL	Adj.MDL
84-74-2	Di-n-butylphthalate	U	380	1.0	330	380	120
85-68-7	Butylbenzylphthalate	U	380	1.0	330	380	110
91-94-1	3,3'-Dichlorobenzidine	~~J~~ UJ	580	1.0	500	580	130 CCH
218-01-9	Chrysene	U	380	1.0	330	380	110
117-81-7	bis(2-Ethylhexyl)phthalate	J	160	1.0	330	380	110
117-84-0	Di-n-octylphthalate	U	380	1.0	330	380	240
367-12-4	2-Fluorophenol		74%				
13127-88-3	Phenol-D6		93%				
4165-60-0	Nitrobenzene-D5		86%				
321-60-8	2-Fluorobiphenyl		82%				
118-79-6	2,4,6-Tribromophenol		77%				
1718-51-0	Terphenyl-D14		85%				

lw 4/17/09

KATAHDIN ANALYTICAL SERVICES
Report of Analytical Results

Client: CH2MHill
Project: TO-009 Lejeune
PO No:
Sample Date: 01/21/09
Received Date: 01/24/09
Extraction Date: 01/28/09
Analysis Date: 12-FEB-2009 12:43
Report Date: 02/15/2009
Matrix: SOIL
% Solids: 85.8

Lab ID: SC0364-21
Client ID: MR08-SS153-09A
SDG: TO9-40
Extracted by: AC
Extraction Method: SW846 3550
Analyst: JLP
Analysis Method: SW846 8270C
Lab Prep Batch: WG60254
Units: ug/Kgdrywt

CAS#	Compound	Flags	Results	DF	PQL	Adj.PQL	Adj.MDL	
100-52-7	Benzaldehyde	~~U~~ UJ	580	1.0	500	580	140	ICB
108-95-2	Phenol	U	580	1.0	500	580	180	
111-44-4	Bis(2-Chloroethyl)ether	U	380	1.0	330	380	94	
95-57-8	2-Chlorophenol	U	580	1.0	500	580	190	
95-48-7	2-Methylphenol	U	700	1.0	600	700	230	
108-60-1	2,2'-Oxybis(1-chloropropane)	U	380	1.0	330	380	100	
98-86-2	Acetophenone	U	700	1.0	600	700	210	
621-64-7	N-Nitroso-di-n-propylamine	U	380	1.0	330	380	97	
65794-96-9	3&4-Methylphenol	U	700	1.0	600	700	220	
67-72-1	Hexachloroethane	U	380	1.0	330	380	110	
98-95-3	Nitrobenzene	U	380	1.0	330	380	110	
78-59-1	Isophorone	U	380	1.0	330	380	87	
88-75-5	2-Nitrophenol	U	700	1.0	600	700	190	
105-67-9	2,4-Dimethylphenol	U	580	1.0	500	580	190	
111-91-1	Bis(2-Chloroethoxy)methane	U	380	1.0	330	380	110	
120-83-2	2,4-Dichlorophenol	U	580	1.0	500	580	170	
106-47-8	4-Chloroaniline	U	580	1.0	500	580	140	
105-60-2	Caprolactam	U	580	1.0	500	580	170	
59-50-7	4-Chloro-3-Methylphenol	U	580	1.0	500	580	190	
88-06-2	2,4,6-Trichlorophenol	U	580	1.0	500	580	180	
95-95-4	2,4,5-Trichlorophenol	U	580	1.0	500	580	180	
91-58-7	2-Chloronaphthalene	U	380	1.0	330	380	100	
92-52-4	1,1'-Biphenyl	U	380	1.0	330	380	85	
88-74-4	2-Nitroaniline	U	580	1.0	500	580	87	
131-11-3	Dimethyl Phthalate	U	380	1.0	330	380	91	
606-20-2	2,6-Dinitrotoluene	U	380	1.0	330	380	92	
208-96-8	Acenaphthylene	U	380	1.0	330	380	82	
99-09-2	3-Nitroaniline	U	580	1.0	500	580	110	
83-32-9	Acenaphthene	U	380	1.0	330	380	76	
51-28-5	2,4-Dinitrophenol	U	1400	1.0	1200	1400	440	
132-64-9	Dibenzofuran	U	380	1.0	330	380	92	
100-02-7	4-Nitrophenol	~~U~~ UJ	1400	1.0	1200	1400	360	CCH
121-14-2	2,4-Dinitrotoluene	U	380	1.0	330	380	99	
84-66-2	Diethylphthalate	U	380	1.0	330	380	93	
7005-72-3	4-Chlorophenyl-phenylether	U	380	1.0	330	380	91	
100-01-6	4-Nitroaniline	U	580	1.0	500	580	160	
534-52-1	4,6-Dinitro-2-Methylphenol	U	1400	1.0	1200	1400	390	
86-30-6	N-Nitrosodiphenylamine	U	770	1.0	660	770	260	
101-55-3	4-Bromophenyl-phenylether	U	380	1.0	330	380	99	
1912-24-9	Atrazine	U	380	1.0	330	380	110	
87-86-5	Pentachlorophenol	U	960	1.0	820	960	280	
120-12-7	Anthracene	J	270	1.0	330	380	98	
86-74-8	Carbazole	U	580	1.0	500	580	130	

lw 4/17/09

KATAHDIN ANALYTICAL SERVICES
Report of Analytical Results

Client: CH2MHill
Project: TO-009 Lejeune
PO No:
Sample Date: 01/21/09
Received Date: 01/24/09
Extraction Date: 01/28/09
Analysis Date: 12-FEB-2009 12:43
Report Date: 02/15/2009
Matrix: SOIL
% Solids: 85.8

Lab ID: SC0364-21
Client ID: MR08-SS153-09A
SDG: TO9-40
Extracted by: AC
Extraction Method: SW846 3550
Analyst: JLP
Analysis Method: SW846 8270C
Lab Prep Batch: WG60254
Units: ug/Kgdrywt

CAS#	Compound	Flags	Results	DF	PQL	Adj.PQL	Adj.MDL
84-74-2	Di-n-butylphthalate	U	380	1.0	330	380	120
85-68-7	Butylbenzylphthalate	U	380	1.0	330	380	110
91-94-1	3,3'-Dichlorobenzidine	U	580	1.0	500	580	130
218-01-9	Chrysene	U	380	1.0	330	380	110
117-81-7	bis(2-Ethylhexyl)phthalate	J	120	1.0	330	380	110
117-84-0	Di-n-octylphthalate	U	380	1.0	330	380	240
367-12-4	2-Fluorophenol		70%				
13127-88-3	Phenol-D6		91%				
4165-60-0	Nitrobenzene-D5		68%				
321-60-8	2-Fluorobiphenyl		78%				
118-79-6	2,4,6-Tribromophenol		64%				
1718-51-0	Terphenyl-D14		72%				

lw
4/17/09

KATAHDIN ANALYTICAL SERVICES
Report of Analytical Results

Client: CH2MHill
Project: TO-009 Lejeune
PO No:
Sample Date: 01/21/09
Received Date: 01/24/09
Extraction Date: 01/28/09
Analysis Date: 12-FEB-2009 08:27
Report Date: 02/15/2009
Matrix: SOIL
% Solids: 87.6

Lab ID: SC0364-23
Client ID: MR08-IS153-2-3-09A
SDG: TO9-40
Extracted by: AC
Extraction Method: SW846 3550
Analyst: JLP
Analysis Method: SW846 8270C
Lab Prep Batch: WG60254
Units: ug/Kgdrywt

CAS#	Compound	Flags	Results	DF	PQL	Adj.PQL	Adj.MDL	
100-52-7	Benzaldehyde	~~U~~ UJ	570	1.0	500	570	140	ICB
108-95-2	Phenol	U	570	1.0	500	570	180	
111-44-4	Bis(2-Chloroethyl)ether	U	380	1.0	330	380	92	
95-57-8	2-Chlorophenol	U	570	1.0	500	570	190	
95-48-7	2-Methylphenol	U	680	1.0	600	680	230	
108-60-1	2,2'-Oxybis(1-chloropropane)	U	380	1.0	330	380	100	
98-86-2	Acetophenone	U	680	1.0	600	680	200	
621-64-7	N-Nitroso-di-n-propylamine	U	380	1.0	330	380	95	
65794-96-9	3&4-Methylphenol	U	680	1.0	600	680	210	
67-72-1	Hexachloroethane	U	380	1.0	330	380	110	
98-95-3	Nitrobenzene	U	380	1.0	330	380	100	
78-59-1	Isophorone	U	380	1.0	330	380	86	
88-75-5	2-Nitrophenol	U	680	1.0	600	680	190	
105-67-9	2,4-Dimethylphenol	U	570	1.0	500	570	190	
111-91-1	Bis(2-Chloroethoxy)methane	U	380	1.0	330	380	110	
120-83-2	2,4-Dichlorophenol	U	570	1.0	500	570	170	
106-47-8	4-Chloroaniline	U	570	1.0	500	570	140	
105-60-2	Caprolactam	U	570	1.0	500	570	160	
59-50-7	4-Chloro-3-Methylphenol	U	570	1.0	500	570	190	
88-06-2	2,4,6-Trichlorophenol	U	570	1.0	500	570	180	
95-95-4	2,4,5-Trichlorophenol	U	570	1.0	500	570	180	
91-58-7	2-Chloronaphthalene	U	380	1.0	330	380	99	
92-52-4	1,1'-Biphenyl	U	380	1.0	330	380	83	
88-74-4	2-Nitroaniline	U	570	1.0	500	570	86	
131-11-3	Dimethyl Phthalate	U	380	1.0	330	380	89	
606-20-2	2,6-Dinitrotoluene	U	380	1.0	330	380	90	
208-96-8	Acenaphthylene	U	380	1.0	330	380	80	
99-09-2	3-Nitroaniline	U	570	1.0	500	570	110	
83-32-9	Acenaphthene	U	380	1.0	330	380	74	
51-28-5	2,4-Dinitrophenol	U	1400	1.0	1200	1400	430	
132-64-9	Dibenzofuran	U	380	1.0	330	380	90	
100-02-7	4-Nitrophenol	~~U~~ UJ	1400	1.0	1200	1400	350	CCH
121-14-2	2,4-Dinitrotoluene	U	380	1.0	330	380	97	
84-66-2	Diethylphthalate	U	380	1.0	330	380	91	
7005-72-3	4-Chlorophenyl-phenylether	U	380	1.0	330	380	89	
100-01-6	4-Nitroaniline	U	570	1.0	500	570	150	
534-52-1	4,6-Dinitro-2-Methylphenol	U	1400	1.0	1200	1400	380	
86-30-6	N-Nitrosodiphenylamine	U	750	1.0	660	750	250	
101-55-3	4-Bromophenyl-phenylether	U	380	1.0	330	380	97	
1912-24-9	Atrazine	U	380	1.0	330	380	100	
87-86-5	Pentachlorophenol	U	940	1.0	820	940	270	
120-12-7	Anthracene	U	380	1.0	330	380	96	
86-74-8	Carbazole	U	570	1.0	500	570	130	

AW 4/17/09

KATAHDIN ANALYTICAL SERVICES
Report of Analytical Results

Client: CH2MHill
Project: TO-009 Lejeune
PO No:
Sample Date: 01/21/09
Received Date: 01/24/09
Extraction Date: 01/28/09
Analysis Date: 12-FEB-2009 08:27
Report Date: 02/15/2009
Matrix: SOIL
% Solids: 87.6

Lab ID: SC0364-23
Client ID: MR08-IS153-2-3-09A
SDG: TO9-40
Extracted by: AC
Extraction Method: SW846 3550
Analyst: JLP
Analysis Method: SW846 8270C
Lab Prep Batch: WG60254
Units: ug/Kgdrywt

CAS#	Compound	Flags	Results	DF	PQL	Adj.PQL	Adj.MDL
84-74-2	Di-n-butylphthalate	U	380	1.0	330	380	120
85-68-7	Butylbenzylphthalate	U	380	1.0	330	380	110
91-94-1	3,3'-Dichlorobenzidine	U	570	1.0	500	570	130
218-01-9	Chrysene	U	380	1.0	330	380	110
117-81-7	bis(2-Ethylhexyl)phthalate	U	380	1.0	330	380	110
117-84-0	Di-n-octylphthalate	U	380	1.0	330	380	240
367-12-4	2-Fluorophenol		64%				
13127-88-3	Phenol-D6		78%				
4165-60-0	Nitrobenzene-D5		68%				
321-60-8	2-Fluorobiphenyl		74%				
118-79-6	2,4,6-Tribromophenol		63%				
1718-51-0	Terphenyl-D14		76%				

RW
4/17/09

15

KATAHDIN ANALYTICAL SERVICES
Report of Analytical Results

Client: CH2MHill
Project: TO-009 Lejeune
PO No:
Sample Date: 01/21/09
Received Date: 01/24/09
Extraction Date: 01/28/09
Analysis Date: 12-FEB-2009 11:18
Report Date: 02/15/2009
Matrix: SOIL
% Solids: 87.6

Lab ID: SC0364-25
Client ID: MR08-SS162-09A
SDG: TO9-40
Extracted by: AC
Extraction Method: SW846 3550
Analyst: JLP
Analysis Method: SW846 8270C
Lab Prep Batch: WG60254
Units: ug/Kgdrywt

CAS#	Compound	Flags	Results	DF	PQL	Adj.PQL	Adj.MDL	
100-52-7	Benzaldehyde	~~U~~ UJ	570	1.0	500	570	140	ICB
108-95-2	Phenol	U	570	1.0	500	570	180	
111-44-4	Bis(2-Chloroethyl)ether	U	380	1.0	330	380	92	
95-57-8	2-Chlorophenol	U	570	1.0	500	570	190	
95-48-7	2-Methylphenol	U	680	1.0	600	680	230	
108-60-1	2,2'-Oxybis(1-chloropropane)	U	380	1.0	330	380	100	
98-86-2	Acetophenone	U	680	1.0	600	680	200	
621-64-7	N-Nitroso-di-n-propylamine	U	380	1.0	330	380	95	
65794-96-9	3&4-Methylphenol	U	680	1.0	600	680	210	
67-72-1	Hexachloroethane	U	380	1.0	330	380	110	
98-95-3	Nitrobenzene	U	380	1.0	330	380	100	
78-59-1	Isophorone	U	380	1.0	330	380	86	
88-75-5	2-Nitrophenol	U	680	1.0	600	680	190	
105-67-9	2,4-Dimethylphenol	U	570	1.0	500	570	190	
111-91-1	Bis(2-Chloroethoxy)methane	U	380	1.0	330	380	110	
120-83-2	2,4-Dichlorophenol	U	570	1.0	500	570	170	
106-47-8	4-Chloroaniline	U	570	1.0	500	570	140	
105-60-2	Caprolactam	U	570	1.0	500	570	160	
59-50-7	4-Chloro-3-Methylphenol	U	570	1.0	500	570	190	
88-06-2	2,4,6-Trichlorophenol	U	570	1.0	500	570	180	
95-95-4	2,4,5-Trichlorophenol	U	570	1.0	500	570	180	
91-58-7	2-Chloronaphthalene	U	380	1.0	330	380	99	
92-52-4	1,1'-Biphenyl	U	380	1.0	330	380	83	
88-74-4	2-Nitroaniline	U	570	1.0	500	570	86	
131-11-3	Dimethyl Phthalate	U	380	1.0	330	380	89	
606-20-2	2,6-Dinitrotoluene	U	380	1.0	330	380	90	
208-96-8	Acenaphthylene	U	380	1.0	330	380	80	
99-09-2	3-Nitroaniline	U	570	1.0	500	570	110	
83-32-9	Acenaphthene	U	380	1.0	330	380	74	
51-28-5	2,4-Dinitrophenol	U	1400	1.0	1200	1400	430	
132-64-9	Dibenzofuran	U	380	1.0	330	380	90	
100-02-7	4-Nitrophenol	~~U~~ UJ	1400	1.0	1200	1400	350	CCH
121-14-2	2,4-Dinitrotoluene	U	380	1.0	330	380	97	
84-66-2	Diethylphthalate	U	380	1.0	330	380	91	
7005-72-3	4-Chlorophenyl-phenylether	U	380	1.0	330	380	89	
100-01-6	4-Nitroaniline	U	570	1.0	500	570	150	
534-52-1	4,6-Dinitro-2-Methylphenol	U	1400	1.0	1200	1400	380	
86-30-6	N-Nitrosodiphenylamine	U	750	1.0	660	750	250	
101-55-3	4-Bromophenyl-phenylether	U	380	1.0	330	380	97	
1912-24-9	Atrazine	U	380	1.0	330	380	100	
87-86-5	Pentachlorophenol	U	940	1.0	820	940	270	
120-12-7	Anthracene	U	380	1.0	330	380	96	
86-74-8	Carbazole	U	570	1.0	500	570	130	

MW 4/17/09

KATAHDIN ANALYTICAL SERVICES
Report of Analytical Results

Client: CH2MHill
Project: TO-009 Lejeune
PO No:
Sample Date: 01/21/09
Received Date: 01/24/09
Extraction Date: 01/28/09
Analysis Date: 12-FEB-2009 11:18
Report Date: 02/15/2009
Matrix: SOIL
% Solids: 87.6

Lab ID: SC0364-25
Client ID: MR08-SS162-09A
SDG: TO9-40
Extracted by: AC
Extraction Method: SW846 3550
Analyst: JLP
Analysis Method: SW846 8270C
Lab Prep Batch: WG60254
Units: ug/Kgdrywt

CAS#	Compound	Flags	Results	DF	PQL	Adj.PQL	Adj.MDL
84-74-2	Di-n-butylphthalate	U	380	1.0	330	380	120
85-68-7	Butylbenzylphthalate	U	380	1.0	330	380	110
91-94-1	3,3'-Dichlorobenzidine	U	570	1.0	500	570	130
218-01-9	Chrysene	U	380	1.0	330	380	110
117-81-7	bis(2-Ethylhexyl)phthalate	U	380	1.0	330	380	110
117-84-0	Di-n-octylphthalate	U	380	1.0	330	380	240
367-12-4	2-Fluorophenol		59%				
13127-88-3	Phenol-D6		76%				
4165-60-0	Nitrobenzene-D5		68%				
321-60-8	2-Fluorobiphenyl		68%				
118-79-6	2,4,6-Tribromophenol		48%				
1718-51-0	Terphenyl-D14		81%				

lw
4/17/09

KATAHDIN ANALYTICAL SERVICES
Report of Analytical Results

16

Client: CH2MHill
Project: TO-009 Lejeune
PO No:
Sample Date: 01/21/09
Received Date: 01/24/09
Extraction Date: 01/28/09
Analysis Date: 12-FEB-2009 09:10
Report Date: 02/15/2009
Matrix: SOIL
% Solids: 91.0

Lab ID: SC0364-27
Client ID: MR08-IS162-4-5-09A
SDG: TO9-40
Extracted by: AC
Extraction Method: SW846 3550
Analyst: JLP
Analysis Method: SW846 8270C
Lab Prep Batch: WG60254
Units: ug/Kgdrywt

CAS#	Compound	Flags	Results	DF	PQL	Adj.PQL	Adj.MDL	
100-52-7	Benzaldehyde	~~U~~ UJ	550	1.0	500	550	130	ICB
108-95-2	Phenol	U	550	1.0	500	550	170	
111-44-4	Bis(2-Chloroethyl)ether	U	360	1.0	330	360	89	
95-57-8	2-Chlorophenol	U	550	1.0	500	550	180	
95-48-7	2-Methylphenol	U	660	1.0	600	660	220	
108-60-1	2,2'-Oxybis(1-chloropropane)	U	360	1.0	330	360	98	
98-86-2	Acetophenone	U	660	1.0	600	660	200	
621-64-7	N-Nitroso-di-n-propylamine	U	360	1.0	330	360	91	
65794-96-9	3&4-Methylphenol	U	660	1.0	600	660	200	
67-72-1	Hexachloroethane	U	360	1.0	330	360	100	
98-95-3	Nitrobenzene	U	360	1.0	330	360	100	
78-59-1	Isophorone	U	360	1.0	330	360	82	
88-75-5	2-Nitrophenol	U	660	1.0	600	660	180	
105-67-9	2,4-Dimethylphenol	U	550	1.0	500	550	180	
111-91-1	Bis(2-Chloroethoxy)methane	U	360	1.0	330	360	100	
120-83-2	2,4-Dichlorophenol	U	550	1.0	500	550	160	
106-47-8	4-Chloroaniline	U	550	1.0	500	550	130	
105-60-2	Caprolactam	U	550	1.0	500	550	160	
59-50-7	4-Chloro-3-Methylphenol	U	550	1.0	500	550	180	
88-06-2	2,4,6-Trichlorophenol	U	550	1.0	500	550	170	
95-95-4	2,4,5-Trichlorophenol	U	550	1.0	500	550	170	
91-58-7	2-Chloronaphthalene	U	360	1.0	330	360	96	
92-52-4	1,1'-Biphenyl	U	360	1.0	330	360	80	
88-74-4	2-Nitroaniline	U	550	1.0	500	550	82	
131-11-3	Dimethyl Phthalate	U	360	1.0	330	360	86	
606-20-2	2,6-Dinitrotoluene	U	360	1.0	330	360	87	
208-96-8	Acenaphthylene	U	360	1.0	330	360	77	
99-09-2	3-Nitroaniline	U	550	1.0	500	550	100	
83-32-9	Acenaphthene	U	360	1.0	330	360	71	
51-28-5	2,4-Dinitrophenol	U	1300	1.0	1200	1300	410	
132-64-9	Dibenzofuran	U	360	1.0	330	360	87	
100-02-7	4-Nitrophenol	~~U~~ UJ	1300	1.0	1200	1300	340	CCH
121-14-2	2,4-Dinitrotoluene	U	360	1.0	330	360	93	
84-66-2	Diethylphthalate	U	360	1.0	330	360	88	
7005-72-3	4-Chlorophenyl-phenylether	U	360	1.0	330	360	86	
100-01-6	4-Nitroaniline	U	550	1.0	500	550	150	
534-52-1	4,6-Dinitro-2-Methylphenol	U	1300	1.0	1200	1300	370	
86-30-6	N-Nitrosodiphenylamine	U	720	1.0	660	720	240	
101-55-3	4-Bromophenyl-phenylether	U	360	1.0	330	360	93	
1912-24-9	Atrazine	U	360	1.0	330	360	100	
87-86-5	Pentachlorophenol	U	900	1.0	820	900	260	
120-12-7	Anthracene	U	360	1.0	330	360	92	
86-74-8	Carbazole	U	550	1.0	500	550	120	

CW
4/17/09

KATAHDIN ANALYTICAL SERVICES
Report of Analytical Results

Client: CH2MHill
Project: TO-009 Lejeune
PO No:
Sample Date: 01/21/09
Received Date: 01/24/09
Extraction Date: 01/28/09
Analysis Date: 12-FEB-2009 09:10
Report Date: 02/15/2009
Matrix: SOIL
% Solids: 91.0

Lab ID: SC0364-27
Client ID: MR08-IS162-4-5-09A
SDG: TO9-40
Extracted by: AC
Extraction Method: SW846 3550
Analyst: JLP
Analysis Method: SW846 8270C
Lab Prep Batch: WG60254
Units: ug/Kgdrywt

CAS#	Compound	Flags	Results	DF	PQL	Adj.PQL	Adj.MDL
84-74-2	Di-n-butylphthalate	U	360	1.0	330	360	110
85-68-7	Butylbenzylphthalate	U	360	1.0	330	360	100
91-94-1	3,3'-Dichlorobenzidine	U	550	1.0	500	550	120
218-01-9	Chrysene	U	360	1.0	330	360	100
117-81-7	bis(2-Ethylhexyl)phthalate	J	200	1.0	330	360	110
117-84-0	Di-n-octylphthalate	U	360	1.0	330	360	230
367-12-4	2-Fluorophenol		60%				
13127-88-3	Phenol-D6		76%				
4165-60-0	Nitrobenzene-D5		72%				
321-60-8	2-Fluorobiphenyl		67%				
118-79-6	2,4,6-Tribromophenol		51%				
1718-51-0	Terphenyl-D14		78%				

lw
4/17/09

KATAHDIN ANALYTICAL SERVICES
Report of Analytical Results

17

Client: CH2MHill
Project: TO-009 Lejeune
PO No:
Sample Date: 01/21/09
Received Date: 01/24/09
Extraction Date: 01/28/09
Analysis Date: 12-FEB-2009 12:00
Report Date: 02/15/2009
Matrix: SOIL
% Solids: 86.7

Lab ID: SC0364-29
Client ID: MR08-SS316-09A
SDG: TO9-40
Extracted by: AC
Extraction Method: SW846 3550
Analyst: JLP
Analysis Method: SW846 8270C
Lab Prep Batch: WG60254
Units: ug/Kgdrywt

CAS#	Compound	Flags	Results	DF	PQL	Adj.PQL	Adj.MDL
100-52-7	Benzaldehyde	~~U~~ UJ	580	1.0	500	580	140 ICB
108-95-2	Phenol	U	580	1.0	500	580	180
111-44-4	Bis(2-Chloroethyl)ether	U	380	1.0	330	380	93
95-57-8	2-Chlorophenol	U	580	1.0	500	580	190
95-48-7	2-Methylphenol	U	690	1.0	600	690	230
108-60-1	2,2'-Oxybis(1-chloropropane)	U	380	1.0	330	380	100
98-86-2	Acetophenone	U	690	1.0	600	690	200
621-64-7	N-Nitroso-di-n-propylamine	U	380	1.0	330	380	96
65794-96-9	3&4-Methylphenol	U	690	1.0	600	690	220
67-72-1	Hexachloroethane	U	380	1.0	330	380	110
98-95-3	Nitrobenzene	U	380	1.0	330	380	100
78-59-1	Isophorone	U	380	1.0	330	380	86
88-75-5	2-Nitrophenol	U	690	1.0	600	690	190
105-67-9	2,4-Dimethylphenol	U	580	1.0	500	580	190
111-91-1	Bis(2-Chloroethoxy)methane	U	380	1.0	330	380	110
120-83-2	2,4-Dichlorophenol	U	580	1.0	500	580	170
106-47-8	4-Chloroaniline	U	580	1.0	500	580	140
105-60-2	Caprolactam	U	580	1.0	500	580	170
59-50-7	4-Chloro-3-Methylphenol	U	580	1.0	500	580	190
88-06-2	2,4,6-Trichlorophenol	U	580	1.0	500	580	180
95-95-4	2,4,5-Trichlorophenol	U	580	1.0	500	580	180
91-58-7	2-Chloronaphthalene	U	380	1.0	330	380	100
92-52-4	1,1'-Biphenyl	U	380	1.0	330	380	84
88-74-4	2-Nitroaniline	U	580	1.0	500	580	86
131-11-3	Dimethyl Phthalate	U	380	1.0	330	380	90
606-20-2	2,6-Dinitrotoluene	U	380	1.0	330	380	91
208-96-8	Acenaphthylene	U	380	1.0	330	380	81
99-09-2	3-Nitroaniline	U	580	1.0	500	580	110
83-32-9	Acenaphthene	U	380	1.0	330	380	75
51-28-5	2,4-Dinitrophenol	U	1400	1.0	1200	1400	430
132-64-9	Dibenzofuran	U	380	1.0	330	380	91
100-02-7	4-Nitrophenol	~~U~~ UJ	1400	1.0	1200	1400	360 CCH
121-14-2	2,4-Dinitrotoluene	U	380	1.0	330	380	98
84-66-2	Diethylphthalate	U	380	1.0	330	380	92
7005-72-3	4-Chlorophenyl-phenylether	U	380	1.0	330	380	90
100-01-6	4-Nitroaniline	U	580	1.0	500	580	150
534-52-1	4,6-Dinitro-2-Methylphenol	U	1400	1.0	1200	1400	390
86-30-6	N-Nitrosodiphenylamine	U	760	1.0	660	760	250
101-55-3	4-Bromophenyl-phenylether	U	380	1.0	330	380	98
1912-24-9	Atrazine	U	380	1.0	330	380	100
87-86-5	Pentachlorophenol	U	940	1.0	820	940	270
120-12-7	Anthracene	J	210	1.0	330	380	97
86-74-8	Carbazole	U	580	1.0	500	580	130

lw 4/17/09

KATAHDIN ANALYTICAL SERVICES
Report of Analytical Results

Client: CH2MHill
Project: TO-009 Lejeune
PO No:
Sample Date: 01/21/09
Received Date: 01/24/09
Extraction Date: 01/28/09
Analysis Date: 12-FEB-2009 12:00
Report Date: 02/15/2009
Matrix: SOIL
% Solids: 86.7

Lab ID: SC0364-29
Client ID: MR08-SS316-09A
SDG: TO9-40
Extracted by: AC
Extraction Method: SW846 3550
Analyst: JLP
Analysis Method: SW846 8270C
Lab Prep Batch: WG60254
Units: ug/Kgdrywt

CAS#	Compound	Flags	Results	DF	PQL	Adj.PQL	Adj.MDL
84-74-2	Di-n-butylphthalate	U	380	1.0	330	380	120
85-68-7	Butylbenzylphthalate	U	380	1.0	330	380	110
91-94-1	3,3'-Dichlorobenzidine	U	580	1.0	500	580	130
218-01-9	Chrysene	J	180	1.0	330	380	110
117-81-7	bis(2-Ethylhexyl)phthalate	J	180	1.0	330	380	110
117-84-0	Di-n-octylphthalate	U	380	1.0	330	380	240
367-12-4	2-Fluorophenol		68%				
13127-88-3	Phenol-D6		80%				
4165-60-0	Nitrobenzene-D5		63%				
321-60-8	2-Fluorobiphenyl		65%				
118-79-6	2,4,6-Tribromophenol		82%				
1718-51-0	Terphenyl-D14		76%				

lw
4/17/09

KATAHDIN ANALYTICAL SERVICES
Report of Analytical Results

18

Client: CH2MHill
Project: TO-009 Lejeune
PO No:
Sample Date: 01/21/09
Received Date: 01/24/09
Extraction Date: 01/28/09
Analysis Date: 12-FEB-2009 09:52
Report Date: 02/15/2009
Matrix: SOIL
% Solids: 88.0

Lab ID: SC0364-31
Client ID: MR08-IS316-4-5-09A
SDG: TO9-40
Extracted by: AC
Extraction Method: SW846 3550
Analyst: JLP
Analysis Method: SW846 8270C
Lab Prep Batch: WG60254
Units: ug/Kgdrywt

CAS#	Compound	Flags	Results	DF	PQL	Adj.PQL	Adj.MDL
100-52-7	Benzaldehyde	~~U~~ UJ	570	1.0	500	570	140 ICB
108-95-2	Phenol	U	570	1.0	500	570	180
111-44-4	Bis(2-Chloroethyl)ether	U	370	1.0	330	370	92
95-57-8	2-Chlorophenol	U	570	1.0	500	570	190
95-48-7	2-Methylphenol	U	680	1.0	600	680	230
108-60-1	2,2'-Oxybis(1-chloropropane)	U	370	1.0	330	370	100
98-86-2	Acetophenone	U	680	1.0	600	680	200
621-64-7	N-Nitroso-di-n-propylamine	U	370	1.0	330	370	94
65794-96-9	3&4-Methylphenol	U	680	1.0	600	680	210
67-72-1	Hexachloroethane	U	370	1.0	330	370	110
98-95-3	Nitrobenzene	U	370	1.0	330	370	100
78-59-1	Isophorone	U	370	1.0	330	370	85
88-75-5	2-Nitrophenol	U	680	1.0	600	680	190
105-67-9	2,4-Dimethylphenol	U	570	1.0	500	570	190
111-91-1	Bis(2-Chloroethoxy)methane	U	370	1.0	330	370	110
120-83-2	2,4-Dichlorophenol	U	570	1.0	500	570	170
106-47-8	4-Chloroaniline	U	570	1.0	500	570	140
105-60-2	Caprolactam	U	570	1.0	500	570	160
59-50-7	4-Chloro-3-Methylphenol	U	570	1.0	500	570	190
88-06-2	2,4,6-Trichlorophenol	U	570	1.0	500	570	180
95-95-4	2,4,5-Trichlorophenol	U	570	1.0	500	570	180
91-58-7	2-Chloronaphthalene	U	370	1.0	330	370	99
92-52-4	1,1'-Biphenyl	U	370	1.0	330	370	83
88-74-4	2-Nitroaniline	U	570	1.0	500	570	85
131-11-3	Dimethyl Phthalate	U	370	1.0	330	370	88
606-20-2	2,6-Dinitrotoluene	U	370	1.0	330	370	90
208-96-8	Acenaphthylene	U	370	1.0	330	370	80
99-09-2	3-Nitroaniline	U	570	1.0	500	570	110
83-32-9	Acenaphthene	U	370	1.0	330	370	74
51-28-5	2,4-Dinitrophenol	U	1400	1.0	1200	1400	430
132-64-9	Dibenzofuran	U	370	1.0	330	370	90
100-02-7	4-Nitrophenol	~~U~~ UJ	1400	1.0	1200	1400	350 CCH
121-14-2	2,4-Dinitrotoluene	U	370	1.0	330	370	96
84-66-2	Diethylphthalate	U	370	1.0	330	370	91
7005-72-3	4-Chlorophenyl-phenylether	U	370	1.0	330	370	88
100-01-6	4-Nitroaniline	U	570	1.0	500	570	150
534-52-1	4,6-Dinitro-2-Methylphenol	U	1400	1.0	1200	1400	380
86-30-6	N-Nitrosodiphenylamine	U	750	1.0	660	750	250
101-55-3	4-Bromophenyl-phenylether	U	370	1.0	330	370	96
1912-24-9	Atrazine	U	370	1.0	330	370	100
87-86-5	Pentachlorophenol	U	930	1.0	820	930	270
120-12-7	Anthracene	U	370	1.0	330	370	95
86-74-8	Carbazole	U	570	1.0	500	570	130

lw 4/17/09

KATAHDIN ANALYTICAL SERVICES
Report of Analytical Results

Client: CH2MHill
Project: TO-009 Lejeune
PO No:
Sample Date: 01/21/09
Received Date: 01/24/09
Extraction Date: 01/28/09
Analysis Date: 12-FEB-2009 09:52
Report Date: 02/15/2009
Matrix: SOIL
% Solids: 88.0

Lab ID: SC0364-31
Client ID: MR08-IS316-4-5-09A
SDG: TO9-40
Extracted by: AC
Extraction Method: SW846 3550
Analyst: JLP
Analysis Method: SW846 8270C
Lab Prep Batch: WG60254
Units: ug/Kgdrywt

CAS#	Compound	Flags	Results	DF	PQL	Adj.PQL	Adj.MDL
84-74-2	Di-n-butylphthalate	U	370	1.0	330	370	110
85-68-7	Butylbenzylphthalate	U	370	1.0	330	370	100
91-94-1	3,3'-Dichlorobenzidine	U	570	1.0	500	570	130
218-01-9	Chrysene	U	370	1.0	330	370	110
117-81-7	bis(2-Ethylhexyl)phthalate	J	200	1.0	330	370	110
117-84-0	Di-n-octylphthalate	U	370	1.0	330	370	240
367-12-4	2-Fluorophenol		68%				
13127-88-3	Phenol-D6		84%				
4165-60-0	Nitrobenzene-D5		75%				
321-60-8	2-Fluorobiphenyl		76%				
118-79-6	2,4,6-Tribromophenol		58%				
1718-51-0	Terphenyl-D14		76%				

MW
4/17/09

KATAHDIN ANALYTICAL SERVICES
Report of Analytical Results

Client: CH2MHill
Project: TO-009 Lejeune
PO No:
Sample Date: 01/21/09
Received Date: 01/24/09
Extraction Date: 01/28/09
Analysis Date: 12-FEB-2009 10:35
Report Date: 02/15/2009
Matrix: SOIL
% Solids: 88.2

Lab ID: SC0364-33
Client ID: MR08-IS315-4-5-09A
SDG: TO9-40
Extracted by: AC
Extraction Method: SW846 3550
Analyst: JLP
Analysis Method: SW846 8270C
Lab Prep Batch: WG60254
Units: ug/Kgdrywt

CAS#	Compound	Flags	Results	DF	PQL	Adj.PQL	Adj.MDL	
100-52-7	Benzaldehyde	~~U~~ UJ	570	1.0	500	570	140	JEB
108-95-2	Phenol	U	570	1.0	500	570	180	
111-44-4	Bis(2-Chloroethyl)ether	U	370	1.0	330	370	92	
95-57-8	2-Chlorophenol	U	570	1.0	500	570	190	
95-48-7	2-Methylphenol	U	680	1.0	600	680	230	
108-60-1	2,2'-Oxybis(1-chloropropane)	U	370	1.0	330	370	100	
98-86-2	Acetophenone	U	680	1.0	600	680	200	
621-64-7	N-Nitroso-di-n-propylamine	U	370	1.0	330	370	94	
65794-96-9	3&4-Methylphenol	U	680	1.0	600	680	210	
67-72-1	Hexachloroethane	U	370	1.0	330	370	110	
98-95-3	Nitrobenzene	U	370	1.0	330	370	100	
78-59-1	Isophorone	U	370	1.0	330	370	85	
88-75-5	2-Nitrophenol	U	680	1.0	600	680	190	
105-67-9	2,4-Dimethylphenol	U	570	1.0	500	570	190	
111-91-1	Bis(2-Chloroethoxy)methane	U	370	1.0	330	370	110	
120-83-2	2,4-Dichlorophenol	U	570	1.0	500	570	170	
106-47-8	4-Chloroaniline	U	570	1.0	500	570	130	
105-60-2	Caprolactam	U	570	1.0	500	570	160	
59-50-7	4-Chloro-3-Methylphenol	U	570	1.0	500	570	190	
88-06-2	2,4,6-Trichlorophenol	U	570	1.0	500	570	180	
95-95-4	2,4,5-Trichlorophenol	U	570	1.0	500	570	180	
91-58-7	2-Chloronaphthalene	U	370	1.0	330	370	99	
92-52-4	1,1'-Biphenyl	U	370	1.0	330	370	83	
88-74-4	2-Nitroaniline	U	570	1.0	500	570	85	
131-11-3	Dimethyl Phthalate	U	370	1.0	330	370	88	
606-20-2	2,6-Dinitrotoluene	U	370	1.0	330	370	90	
208-96-8	Acenaphthylene	U	370	1.0	330	370	79	
99-09-2	3-Nitroaniline	U	570	1.0	500	570	110	
83-32-9	Acenaphthene	U	370	1.0	330	370	74	
51-28-5	2,4-Dinitrophenol	U	1400	1.0	1200	1400	430	
132-64-9	Dibenzofuran	U	370	1.0	330	370	90	
100-02-7	4-Nitrophenol	~~U~~ UJ	1400	1.0	1200	1400	350	CCH
121-14-2	2,4-Dinitrotoluene	U	370	1.0	330	370	96	
84-66-2	Diethylphthalate	U	370	1.0	330	370	91	
7005-72-3	4-Chlorophenyl-phenylether	U	370	1.0	330	370	88	
100-01-6	4-Nitroaniline	U	570	1.0	500	570	150	
534-52-1	4,6-Dinitro-2-Methylphenol	U	1400	1.0	1200	1400	380	
86-30-6	N-Nitrosodiphenylamine	U	750	1.0	660	750	250	
101-55-3	4-Bromophenyl-phenylether	U	370	1.0	330	370	96	
1912-24-9	Atrazine	U	370	1.0	330	370	100	
87-86-5	Pentachlorophenol	U	930	1.0	820	930	270	
120-12-7	Anthracene	U	370	1.0	330	370	95	
86-74-8	Carbazole	U	570	1.0	500	570	120	

LW 4/17/09

KATAHDIN ANALYTICAL SERVICES
Report of Analytical Results

Client: CH2MHill
Project: TO-009 Lejeune
PO No:
Sample Date: 01/21/09
Received Date: 01/24/09
Extraction Date: 01/28/09
Analysis Date: 12-FEB-2009 10:35
Report Date: 02/15/2009
Matrix: SOIL
% Solids: 88.2

Lab ID: SC0364-33
Client ID: MR08-IS315-4-5-09A
SDG: TO9-40
Extracted by: AC
Extraction Method: SW846 3550
Analyst: JLP
Analysis Method: SW846 8270C
Lab Prep Batch: WG60254
Units: ug/Kgdrywt

CAS#	Compound	Flags	Results	DF	PQL	Adj.PQL	Adj.MDL
84-74-2	Di-n-butylphthalate	U	370	1.0	330	370	110
85-68-7	Butylbenzylphthalate	U	370	1.0	330	370	100
91-94-1	3,3'-Dichlorobenzidine	U	570	1.0	500	570	130
218-01-9	Chrysene	U	370	1.0	330	370	110
117-81-7	bis(2-Ethylhexyl)phthalate	J	130	1.0	330	370	110
117-84-0	Di-n-octylphthalate	U	370	1.0	330	370	240
367-12-4	2-Fluorophenol		63%				
13127-88-3	Phenol-D6		76%				
4165-60-0	Nitrobenzene-D5		66%				
321-60-8	2-Fluorobiphenyl		73%				
118-79-6	2,4,6-Tribromophenol		60%				
1718-51-0	Terphenyl-D14		72%				

LW
4/17/09

KATAHDIN ANALYTICAL SERVICES
Report of Analytical Results

Client: CH2MHill
Project: TO-009 Lejeune
PO No:
Sample Date: 01/21/09
Received Date: 01/24/09
Extraction Date: 01/29/09
Analysis Date: 12-FEB-2009 16:17
Report Date: 02/15/2009
Matrix: SOIL
% Solids: 82.8

Lab ID: SC0364-35
Client ID: MR08-SS315-09A
SDG: TO9-40
Extracted by: CB
Extraction Method: SW846 3550
Analyst: JLP
Analysis Method: SW846 8270C
Lab Prep Batch: WG60272
Units: ug/Kgdrywt

CAS#	Compound	Flags	Results	DF	PQL	Adj.PQL	Adj.MDL	
100-52-7	Benzaldehyde	~~U~~ UJ	600	1.0	500	600	140	ICB
108-95-2	Phenol	U	600	1.0	500	600	190	
111-44-4	Bis(2-Chloroethyl)ether	U	400	1.0	330	400	98	
95-57-8	2-Chlorophenol	U	600	1.0	500	600	200	
95-48-7	2-Methylphenol	U	720	1.0	600	720	240	
108-60-1	2,2'-Oxybis(1-chloropropane)	U	400	1.0	330	400	110	
98-86-2	Acetophenone	U	720	1.0	600	720	210	
621-64-7	N-Nitroso-di-n-propylamine	U	400	1.0	330	400	100	
65794-96-9	3&4-Methylphenol	U	720	1.0	600	720	220	
67-72-1	Hexachloroethane	U	400	1.0	330	400	120	
98-95-3	Nitrobenzene	U	400	1.0	330	400	110	
78-59-1	Isophorone	U	400	1.0	330	400	90	
88-75-5	2-Nitrophenol	U	720	1.0	600	720	200	
105-67-9	2,4-Dimethylphenol	U	600	1.0	500	600	200	
111-91-1	Bis(2-Chloroethoxy)methane	U	400	1.0	330	400	120	
120-83-2	2,4-Dichlorophenol	U	600	1.0	500	600	180	
106-47-8	4-Chloroaniline	U	600	1.0	500	600	140	
105-60-2	Caprolactam	U	600	1.0	500	600	170	
59-50-7	4-Chloro-3-Methylphenol	U	600	1.0	500	600	200	
88-06-2	2,4,6-Trichlorophenol	U	600	1.0	500	600	190	
95-95-4	2,4,5-Trichlorophenol	U	600	1.0	500	600	190	
91-58-7	2-Chloronaphthalene	U	400	1.0	330	400	100	
92-52-4	1,1'-Biphenyl	U	400	1.0	330	400	88	
88-74-4	2-Nitroaniline	U	600	1.0	500	600	90	
131-11-3	Dimethyl Phthalate	U	400	1.0	330	400	94	
606-20-2	2,6-Dinitrotoluene	U	400	1.0	330	400	95	
208-96-8	Acenaphthylene	U	400	1.0	330	400	84	
99-09-2	3-Nitroaniline	U	600	1.0	500	600	110	
83-32-9	Acenaphthene	U	400	1.0	330	400	78	
51-28-5	2,4-Dinitrophenol	U	1400	1.0	1200	1400	460	
132-64-9	Dibenzofuran	U	400	1.0	330	400	95	
100-02-7	4-Nitrophenol	~~U~~ UJ	1400	1.0	1200	1400	370	CCH
121-14-2	2,4-Dinitrotoluene	U	400	1.0	330	400	100	
84-66-2	Diethylphthalate	U	400	1.0	330	400	97	
7005-72-3	4-Chlorophenyl-phenylether	U	400	1.0	330	400	94	
100-01-6	4-Nitroaniline	U	600	1.0	500	600	160	
534-52-1	4,6-Dinitro-2-Methylphenol	U	1400	1.0	1200	1400	410	
86-30-6	N-Nitrosodiphenylamine	U	800	1.0	660	800	260	
101-55-3	4-Bromophenyl-phenylether	U	400	1.0	330	400	100	
1912-24-9	Atrazine	U	400	1.0	330	400	110	
87-86-5	Pentachlorophenol	U	990	1.0	820	990	290	
120-12-7	Anthracene	U	400	1.0	330	400	100	
86-74-8	Carbazole	U	600	1.0	500	600	130	

lew
4/17/09

KATAHDIN ANALYTICAL SERVICES
Report of Analytical Results

20

Client: CH2MHill
Project: TO-009 Lejeune
PO No:
Sample Date: 01/21/09
Received Date: 01/24/09
Extraction Date: 01/29/09
Analysis Date: 12-FEB-2009 16:17
Report Date: 02/15/2009
Matrix: SOIL
% Solids: 82.8

Lab ID: SC0364-35
Client ID: MR08-SS315-09A
SDG: TO9-40
Extracted by: CB
Extraction Method: SW846 3550
Analyst: JLP
Analysis Method: SW846 8270C
Lab Prep Batch: WG60272
Units: ug/Kgdrywt

CAS#	Compound	Flags	Results	DF	PQL	Adj.PQL	Adj.MDL
84-74-2	Di-n-butylphthalate	U	400	1.0	330	400	120
85-68-7	Butylbenzylphthalate	U	400	1.0	330	400	110
91-94-1	3,3'-Dichlorobenzidine	U	600	1.0	500	600	140
218-01-9	Chrysene	U	400	1.0	330	400	110
117-81-7	bis(2-Ethylhexyl)phthalate	J	180	1.0	330	400	120
117-84-0	Di-n-octylphthalate	U	400	1.0	330	400	250
367-12-4	2-Fluorophenol		76%				
13127-88-3	Phenol-D6		86%				
4165-60-0	Nitrobenzene-D5		73%				
321-60-8	2-Fluorobiphenyl		78%				
118-79-6	2,4,6-Tribromophenol		97%				
1718-51-0	Terphenyl-D14		77%				

MW 4/17/09

ENVIRONMENTAL
Data Services, Inc.

POLYNUCLEAR AROMATIC COMPOUNDS BY 8270SIM

USEPA Region IV - Level IV Review

Site: MCB Camp Lejeune, TO-09 SDG #: TO9-41

Client: CH2M HILL, Inc., Virginia Beach, Virginia Date: April 16, 2009

Laboratory: Katahdin Analytical Services, Scarborough, Maine Reviewer: Nancy Weaver

EDS ID	Client Sample ID	Laboratory Sample ID	Matrix
1	MR08-EB012009	SC0323-2	Water
2	MR08-EB012109	SC0363-2	Water
3	MR08-EB012209	SC0363-4	Water
4	MR08-EB012309	SC0414-2RA	Water
5	MR08-EB012409	SC0414-4RA	Water
6	MR08-EB012509	SC0414-6RA	Water
7	MR08-EB012609	SC0414-8RA	Water
8	MR08-FB012609	SC0414-10RA	Water

The USEPA "Contract Laboratory Program National Functional Guidelines for Organic Data Review," October 1999, and professional judgment were used in evaluating the data in this summary report.

Holding Times - All samples were extracted within 7 days for water samples and analyzed within 40 days for all samples.

GC/MS Tuning - All of the DFTPP tunes in the initial and continuing calibrations met the percent relative abundance criteria.

Initial Calibration - The initial calibrations exhibited acceptable %RSD and mean RRF values.

Continuing Calibration - The continuing calibrations exhibited acceptable %D and RRF values.

Surrogates - All samples exhibited acceptable surrogate recoveries.

MS/MSD - A MS/MSD sample was not analyzed.

Laboratory Control Sample - The LCS samples exhibited acceptable %R values.

Internal Standard (IS) Area Performance - All internal standards met response and retention time (RT) criteria.

Method Blank - The method blanks were free of contamination.

Field, Equipment Blank - Field QC results are summarized below.

Blank ID	Compound	Conc. ug/L	Action Level ug/kg	Qualifier	Affected Samples
MR08-EB012009	None - ND	-	-	-	-
MR08-EB012109	None - ND	-	-	-	-
MR08-EB012209	None - ND	-	-	-	-
MR08-EB012309	Indeno (1,2,3-cd) pyrene	0.071	11.8	-	Applies to samples in other data packages
	Dibenzo (a,h) anthracene	0.096	16.0	-	
	Benzo (g,h,i) perylene	0.10	16.7	-	
MR08-EB012409	None - ND	-	-	-	-
MR08-EB012509	Phenanthrene	0.099	16.5	-	See other SDGs
MR08-EB012609	None - ND	-	-	-	-
MR08-FB012609	None - ND	-	-	-	-

Field Duplicates - Field duplicate samples were not included in this data package.

Compound Quantitation - No discrepancies were identified.

KATAHDIN ANALYTICAL SERVICES
Report of Analytical Results

Client: CH2MHill
Project: TO-009 Lejeune
PO No:
Sample Date: 01/20/09
Received Date: 01/22/09
Extraction Date: 01/23/08
Analysis Date: 06-FEB-2009 19:23
Report Date: 02/15/2009
Matrix: WATER
% Solids: NA

Lab ID: SC0323-2
Client ID: MR08-EB012009
SDG: TO9-41
Extracted by: CB
Extraction Method: SW846 3510
Analyst: JCG
Analysis Method: SW846 M8270C
Lab Prep Batch: WG60127
Units: ug/L

CAS#	Compound	Flags	Results	DF	PQL	Adj.PQL	Adj.MDL
91-20-3	Naphthalene	U	0.24	1.0	0.25	0.24	0.060
91-57-6	2-Methylnaphthalene	U	0.24	1.0	0.25	0.24	0.073
86-73-7	Fluorene	U	0.24	1.0	0.25	0.24	0.058
85-01-8	Phenanthrene	U	0.24	1.0	0.25	0.24	0.048
206-44-0	Fluoranthene	U	0.24	1.0	0.25	0.24	0.069
129-00-0	Pyrene	U	0.24	1.0	0.25	0.24	0.056
56-55-3	Benzo(a)anthracene	U	0.24	1.0	0.25	0.24	0.043
205-99-2	Benzo(b)fluoranthene	U	0.25	1.0	0.27	0.25	0.084
207-08-9	Benzo(k)fluoranthene	U	0.24	1.0	0.25	0.24	0.046
50-32-8	Benzo(a)pyrene	U	0.24	1.0	0.25	0.24	0.062
193-39-5	Indeno(1,2,3-cd)pyrene	U	0.24	1.0	0.25	0.24	0.049
53-70-3	Dibenzo(a,h)anthracene	U	0.24	1.0	0.25	0.24	0.066
191-24-2	Benzo(g,h,i)perylene	U	0.24	1.0	0.25	0.24	0.061
118-74-1	Hexachlorobenzene	U	0.24	1.0	0.25	0.24	0.052
87-68-3	Hexachlorobutadiene	U	0.25	1.0	0.27	0.25	0.082
77-47-4	Hexachlorocyclopentadiene	U	0.24	1.0	0.25	0.24	0.063
7297-45-2	2-Methylnaphthalene-D10		76%				
367-12-4	2,4-Dibromophenol		84%				
81103-79-9	Fluorene-d10		87%				
1718-51-1	Pyrene-D10		94%				

lw
4/16/09

2

KATAHDIN ANALYTICAL SERVICES
Report of Analytical Results

Client: CH2MHill
Project: TO-009 Lejeune
PO No:
Sample Date: 01/21/09
Received Date: 01/24/09
Extraction Date: 01/27/09
Analysis Date: 06-FEB-2009 22:03
Report Date: 02/15/2009
Matrix: WATER
% Solids: NA

Lab ID: SC0363-2
Client ID: MR08-EB012109
SDG: TO9-41
Extracted by: KF
Extraction Method: SW846 3510
Analyst: JCG
Analysis Method: SW846 M8270C
Lab Prep Batch: WG60210
Units: ug/L

CAS#	Compound	Flags	Results	DF	PQL	Adj.PQL	Adj.MDL
91-20-3	Naphthalene	U	0.26	1.0	0.25	0.26	0.067
91-57-6	2-Methylnaphthalene	U	0.26	1.0	0.25	0.26	0.081
86-73-7	Fluorene	U	0.26	1.0	0.25	0.26	0.064
85-01-8	Phenanthrene	U	0.26	1.0	0.25	0.26	0.054
206-44-0	Fluoranthene	U	0.26	1.0	0.25	0.26	0.077
129-00-0	Pyrene	U	0.26	1.0	0.25	0.26	0.062
56-55-3	Benzo(a)anthracene	U	0.26	1.0	0.25	0.26	0.048
205-99-2	Benzo(b)fluoranthene	U	0.28	1.0	0.27	0.28	0.094
207-08-9	Benzo(k)fluoranthene	U	0.26	1.0	0.25	0.26	0.052
50-32-8	Benzo(a)pyrene	U	0.26	1.0	0.25	0.26	0.069
193-39-5	Indeno(1,2,3-cd)pyrene	U	0.26	1.0	0.25	0.26	0.055
53-70-3	Dibenzo(a,h)anthracene	U	0.26	1.0	0.25	0.26	0.074
191-24-2	Benzo(g,h,i)perylene	U	0.26	1.0	0.25	0.26	0.068
118-74-1	Hexachlorobenzene	U	0.26	1.0	0.25	0.26	0.058
87-68-3	Hexachlorobutadiene	U	0.28	1.0	0.27	0.28	0.092
77-47-4	Hexachlorocyclopentadiene	U	0.26	1.0	0.25	0.26	0.070
7297-45-2	2-Methylnaphthalene-D10		62%				
367-12-4	2,4-Dibromophenol		80%				
81103-79-9	Fluorene-d10		77%				
1718-51-1	Pyrene-D10		96%				

lw
4/16/09

3

KATAHDIN ANALYTICAL SERVICES
Report of Analytical Results

Client: CH2MHill
Project: TO-009 Lejeune
PO No:
Sample Date: 01/22/09
Received Date: 01/24/09
Extraction Date: 01/27/09
Analysis Date: 06-FEB-2009 22:43
Report Date: 02/15/2009
Matrix: WATER
% Solids: NA

Lab ID: SC0363-4
Client ID: MR08-EB012209
SDG: TO9-41
Extracted by: KF
Extraction Method: SW846 3510
Analyst: JCG
Analysis Method: SW846 M8270C
Lab Prep Batch: WG60210
Units: ug/L

CAS#	Compound	Flags	Results	DF	PQL	Adj.PQL	Adj.MDL
91-20-3	Naphthalene	U	0.25	1.0	0.25	0.25	0.063
91-57-6	2-Methylnaphthalene	U	0.25	1.0	0.25	0.25	0.076
86-73-7	Fluorene	U	0.25	1.0	0.25	0.25	0.060
85-01-8	Phenanthrene	U	0.25	1.0	0.25	0.25	0.050
206-44-0	Fluoranthene	U	0.25	1.0	0.25	0.25	0.072
129-00-0	Pyrene	U	0.25	1.0	0.25	0.25	0.058
56-55-3	Benzo(a)anthracene	U	0.25	1.0	0.25	0.25	0.046
205-99-2	Benzo(b)fluoranthene	U	0.27	1.0	0.27	0.27	0.088
207-08-9	Benzo(k)fluoranthene	U	0.25	1.0	0.25	0.25	0.048
50-32-8	Benzo(a)pyrene	U	0.25	1.0	0.25	0.25	0.065
193-39-5	Indeno(1,2,3-cd)pyrene	U	0.25	1.0	0.25	0.25	0.051
53-70-3	Dibenzo(a,h)anthracene	U	0.25	1.0	0.25	0.25	0.069
191-24-2	Benzo(g,h,i)perylene	U	0.25	1.0	0.25	0.25	0.064
118-74-1	Hexachlorobenzene	U	0.25	1.0	0.25	0.25	0.054
87-68-3	Hexachlorobutadiene	U	0.27	1.0	0.27	0.27	0.086
77-47-4	Hexachlorocyclopentadiene	U	0.25	1.0	0.25	0.25	0.066
7297-45-2	2-Methylnaphthalene-D10		64%				
367-12-4	2,4-Dibromophenol		68%				
81103-79-9	Fluorene-d10		78%				
1718-51-1	Pyrene-D10		90%				

RW
4/16/09

4

KATAHDIN ANALYTICAL SERVICES
Report of Analytical Results

Client: CH2MHill
Project: TO-009 Lejeune
PO No:
Sample Date: 01/23/09
Received Date: 01/27/09
Extraction Date: 01/28/09
Analysis Date: 12-FEB-2009 03:12
Report Date: 02/15/2009
Matrix: WATER
% Solids: NA

Lab ID: SC0414-2RA
Client ID: MR08-EB012309
SDG: TO9-41
Extracted by: KF
Extraction Method: SW846 3510
Analyst: JCG
Analysis Method: SW846 M8270C
Lab Prep Batch: WG60238
Units: ug/L

CAS#	Compound	Flags	Results	DF	PQL	Adj.PQL	Adj.MDL
91-20-3	Naphthalene	U	0.24	1.0	0.25	0.24	0.062
91-57-6	2-Methylnaphthalene	U	0.24	1.0	0.25	0.24	0.074
86-73-7	Fluorene	U	0.24	1.0	0.25	0.24	0.059
85-01-8	Phenanthrene	U	0.24	1.0	0.25	0.24	0.049
206-44-0	Fluoranthene	U	0.24	1.0	0.25	0.24	0.070
129-00-0	Pyrene	U	0.24	1.0	0.25	0.24	0.057
56-55-3	Benzo(a)anthracene	U	0.24	1.0	0.25	0.24	0.044
205-99-2	Benzo(b)fluoranthene	U	0.26	1.0	0.27	0.26	0.086
207-08-9	Benzo(k)fluoranthene	U	0.24	1.0	0.25	0.24	0.047
50-32-8	Benzo(a)pyrene	U	0.24	1.0	0.25	0.24	0.063
193-39-5	Indeno(1,2,3-cd)pyrene	J	0.071	1.0	0.25	0.24	0.050
53-70-3	Dibenzo(a,h)anthracene	J	0.096	1.0	0.25	0.24	0.067
191-24-2	Benzo(g,h,i)perylene	J	0.10	1.0	0.25	0.24	0.062
118-74-1	Hexachlorobenzene	U	0.24	1.0	0.25	0.24	0.053
87-68-3	Hexachlorobutadiene	U	0.26	1.0	0.27	0.26	0.084
77-47-4	Hexachlorocyclopentadiene	U	0.24	1.0	0.25	0.24	0.064
7297-45-2	2-Methylnaphthalene-D10		68%				
367-12-4	2,4-Dibromophenol		53%				
81103-79-9	Fluorene-d10		71%				
1718-51-1	Pyrene-D10		111%				

fw
4/16/09

KATAHDIN ANALYTICAL SERVICES
Report of Analytical Results

Client: CH2MHill
Project: TO-009 Lejeune
PO No:
Sample Date: 01/24/09
Received Date: 01/27/09
Extraction Date: 01/28/09
Analysis Date: 12-FEB-2009 03:53
Report Date: 02/15/2009
Matrix: WATER
% Solids: NA

Lab ID: SC0414-4RA
Client ID: MR08-EB012409
SDG: TO9-41
Extracted by: KF
Extraction Method: SW846 3510
Analyst: JCG
Analysis Method: SW846 M8270C
Lab Prep Batch: WG60238
Units: ug/L

CAS#	Compound	Flags	Results	DF	PQL	Adj.PQL	Adj.MDL
91-20-3	Naphthalene	U	0.24	1.0	0.25	0.24	0.060
91-57-6	2-Methylnaphthalene	U	0.24	1.0	0.25	0.24	0.073
86-73-7	Fluorene	U	0.24	1.0	0.25	0.24	0.058
85-01-8	Phenanthrene	U	0.24	1.0	0.25	0.24	0.048
206-44-0	Fluoranthene	U	0.24	1.0	0.25	0.24	0.069
129-00-0	Pyrene	U	0.24	1.0	0.25	0.24	0.056
56-55-3	Benzo(a)anthracene	U	0.24	1.0	0.25	0.24	0.043
205-99-2	Benzo(b)fluoranthene	U	0.25	1.0	0.27	0.25	0.084
207-08-9	Benzo(k)fluoranthene	U	0.24	1.0	0.25	0.24	0.046
50-32-8	Benzo(a)pyrene	U	0.24	1.0	0.25	0.24	0.062
193-39-5	Indeno(1,2,3-cd)pyrene	U	0.24	1.0	0.25	0.24	0.049
53-70-3	Dibenzo(a,h)anthracene	U	0.24	1.0	0.25	0.24	0.066
191-24-2	Benzo(g,h,i)perylene	U	0.24	1.0	0.25	0.24	0.061
118-74-1	Hexachlorobenzene	U	0.24	1.0	0.25	0.24	0.052
87-68-3	Hexachlorobutadiene	U	0.25	1.0	0.27	0.25	0.082
77-47-4	Hexachlorocyclopentadiene	U	0.24	1.0	0.25	0.24	0.063
7297-45-2	2-Methylnaphthalene-D10		63%				
367-12-4	2,4-Dibromophenol		49%				
81103-79-9	Fluorene-d10		82%				
1718-51-1	Pyrene-D10		117%				

kw
4/16/09

6

KATAHDIN ANALYTICAL SERVICES
Report of Analytical Results

Client: CH2MHill
Project: TO-009 Lejeune
PO No:
Sample Date: 01/25/09
Received Date: 01/27/09
Extraction Date: 01/28/09
Analysis Date: 12-FEB-2009 04:35
Report Date: 02/15/2009
Matrix: WATER
% Solids: NA

Lab ID: SC0414-6RA
Client ID: MR08-EB012509
SDG: TO9-41
Extracted by: KF
Extraction Method: SW846 3510
Analyst: JCG
Analysis Method: SW846 M8270C
Lab Prep Batch: WG60238
Units: ug/L

CAS#	Compound	Flags	Results	DF	PQL	Adj.PQL	Adj.MDL
91-20-3	Naphthalene	U	0.24	1.0	0.25	0.24	0.061
91-57-6	2-Methylnaphthalene	U	0.24	1.0	0.25	0.24	0.073
86-73-7	Fluorene	U	0.24	1.0	0.25	0.24	0.058
85-01-8	Phenanthrene	J	0.099	1.0	0.25	0.24	0.048
206-44-0	Fluoranthene	U	0.24	1.0	0.25	0.24	0.070
129-00-0	Pyrene	U	0.24	1.0	0.25	0.24	0.056
56-55-3	Benzo(a)anthracene	U	0.24	1.0	0.25	0.24	0.044
205-99-2	Benzo(b)fluoranthene	U	0.26	1.0	0.27	0.26	0.085
207-08-9	Benzo(k)fluoranthene	U	0.24	1.0	0.25	0.24	0.047
50-32-8	Benzo(a)pyrene	U	0.24	1.0	0.25	0.24	0.063
193-39-5	Indeno(1,2,3-cd)pyrene	U	0.24	1.0	0.25	0.24	0.050
53-70-3	Dibenzo(a,h)anthracene	U	0.24	1.0	0.25	0.24	0.067
191-24-2	Benzo(g,h,i)perylene	U	0.24	1.0	0.25	0.24	0.062
118-74-1	Hexachlorobenzene	U	0.24	1.0	0.25	0.24	0.052
87-68-3	Hexachlorobutadiene	U	0.26	1.0	0.27	0.26	0.083
77-47-4	Hexachlorocyclopentadiene	U	0.24	1.0	0.25	0.24	0.064
7297-45-2	2-Methylnaphthalene-D10		68%				
367-12-4	2,4-Dibromophenol		48%				
81103-79-9	Fluorene-d10		64%				
1718-51-1	Pyrene-D10		96%				

4/16/09

7

KATAHDIN ANALYTICAL SERVICES
Report of Analytical Results

Client: CH2MHill
Project: TO-009 Lejeune
PO No:
Sample Date: 01/26/09
Received Date: 01/27/09
Extraction Date: 01/28/09
Analysis Date: 12-FEB-2009 05:16
Report Date: 02/15/2009
Matrix: WATER
% Solids: NA

Lab ID: SC0414-8RA
Client ID: MR08-EB012609
SDG: TO9-41
Extracted by: KF
Extraction Method: SW846 3510
Analyst: JCG
Analysis Method: SW846 M8270C
Lab Prep Batch: WG60238
Units: ug/L

CAS#	Compound	Flags	Results	DF	PQL	Adj.PQL	Adj.MDL
91-20-3	Naphthalene	U	0.24	1.0	0.25	0.24	0.062
91-57-6	2-Methylnaphthalene	U	0.24	1.0	0.25	0.24	0.074
86-73-7	Fluorene	U	0.24	1.0	0.25	0.24	0.059
85-01-8	Phenanthrene	U	0.24	1.0	0.25	0.24	0.049
206-44-0	Fluoranthene	U	0.24	1.0	0.25	0.24	0.070
129-00-0	Pyrene	U	0.24	1.0	0.25	0.24	0.057
56-55-3	Benzo(a)anthracene	U	0.24	1.0	0.25	0.24	0.044
205-99-2	Benzo(b)fluoranthene	U	0.26	1.0	0.27	0.26	0.086
207-08-9	Benzo(k)fluoranthene	U	0.24	1.0	0.25	0.24	0.047
50-32-8	Benzo(a)pyrene	U	0.24	1.0	0.25	0.24	0.063
193-39-5	Indeno(1,2,3-cd)pyrene	U	0.24	1.0	0.25	0.24	0.050
53-70-3	Dibenzo(a,h)anthracene	U	0.24	1.0	0.25	0.24	0.067
191-24-2	Benzo(g,h,i)perylene	U	0.24	1.0	0.25	0.24	0.062
118-74-1	Hexachlorobenzene	U	0.24	1.0	0.25	0.24	0.053
87-68-3	Hexachlorobutadiene	U	0.26	1.0	0.27	0.26	0.084
77-47-4	Hexachlorocyclopentadiene	U	0.24	1.0	0.25	0.24	0.064
7297-45-2	2-Methylnaphthalene-D10		80%				
367-12-4	2,4-Dibromophenol		60%				
81103-79-9	Fluorene-d10		94%				
1718-51-1	Pyrene-D10		108%				

lew
4/16/09

8

KATAHDIN ANALYTICAL SERVICES
Report of Analytical Results

Client: CH2MHill
Project: TO-009 Lejeune
PO No:
Sample Date: 01/26/09
Received Date: 01/27/09
Extraction Date: 01/28/09
Analysis Date: 12-FEB-2009 05:58
Report Date: 02/15/2009
Matrix: WATER
% Solids: NA

Lab ID: SC0414-10RA
Client ID: MR08-FB012609
SDG: TO9-41
Extracted by: KF
Extraction Method: SW846 3510
Analyst: JCG
Analysis Method: SW846 M8270C
Lab Prep Batch: WG60238
Units: ug/L

CAS#	Compound	Flags	Results	DF	PQL	Adj.PQL	Adj.MDL
91-20-3	Naphthalene	U	0.26	1.0	0.25	0.26	0.067
91-57-6	2-Methylnaphthalene	U	0.26	1.0	0.25	0.26	0.081
86-73-7	Fluorene	U	0.26	1.0	0.25	0.26	0.064
85-01-8	Phenanthrene	U	0.26	1.0	0.25	0.26	0.054
206-44-0	Fluoranthene	U	0.26	1.0	0.25	0.26	0.077
129-00-0	Pyrene	U	0.26	1.0	0.25	0.26	0.062
56-55-3	Benzo(a)anthracene	U	0.26	1.0	0.25	0.26	0.048
205-99-2	Benzo(b)fluoranthene	U	0.28	1.0	0.27	0.28	0.094
207-08-9	Benzo(k)fluoranthene	U	0.26	1.0	0.25	0.26	0.052
50-32-8	Benzo(a)pyrene	U	0.26	1.0	0.25	0.26	0.069
193-39-5	Indeno(1,2,3-cd)pyrene	U	0.26	1.0	0.25	0.26	0.055
53-70-3	Dibenzo(a,h)anthracene	U	0.26	1.0	0.25	0.26	0.074
191-24-2	Benzo(g,h,i)perylene	U	0.26	1.0	0.25	0.26	0.068
118-74-1	Hexachlorobenzene	U	0.26	1.0	0.25	0.26	0.058
87-68-3	Hexachlorobutadiene	U	0.28	1.0	0.27	0.28	0.092
77-47-4	Hexachlorocyclopentadiene	U	0.26	1.0	0.25	0.26	0.070
7297-45-2	2-Methylnaphthalene-D10		77%				
367-12-4	2,4-Dibromophenol		52%				
81103-79-9	Fluorene-d10		86%				
1718-51-1	Pyrene-D10		119%				

MW 4/16/09

ENVIRONMENTAL
Data Services, Inc.

SEMIVOLATILE ORGANIC COMPOUNDS
USEPA Region IV - Level IV Review

Site: MCB Camp Lejeune, TO-09 SDG #: T09-41

Client: CH2M HILL, Inc., Virginia Beach, Virginia Date: April 16, 2009

Laboratory: Katahdin Analytical Services, Scarborough, Maine Reviewer: Nancy Weaver

EDS ID	Client Sample ID	Laboratory Sample ID	Matrix
1	MR08-EB012009	SC0323-1RA	Water
2	MR08-EB012109	SC0363-1	Water
3	MR08-EB012209	SC0363-3	Water
4	MR08-EB012309	SC0414-1	Water
5	MR08-EB012409	SC0414-3	Water
6	MR08-EB012509	SC0414-5	Water
7	MR08-EB012609	SC0414-7	Water
8	MR08-FB012609	SC0414-9RA	Water

The USEPA "Contract Laboratory Program National Functional Guidelines for Organic Data Review," October 1999, and professional judgement were used in evaluating the data in this summary report.

Holding Times - All samples were extracted within 7 days for water samples and analyzed within 40 days for all samples.

GC/MS Tuning - All of the DFTPP tunes in the initial and continuing calibrations met the percent relative abundance criteria.

Initial Calibration - The initial calibrations exhibited acceptable %RSD and mean RRF values except the following.

Continuing Calibration - The continuing calibrations exhibited acceptable %D and RRF values except the following.

CCAL Date	Compound	%D/RRF	Qualifier	Affected Samples
02/09/09	4-Nitroaniline	37.10%	J/UJ	2, 3
	3, 3'-Dichlorobenzidine	47.52%	J/UJ	2, 3
02/10/09	Caprolactam	26.89%	J/UJ	4-7

CCAL Date	Compound	%D/RRF	Qualifier	Affected Samples
02/10/09	2, 4-Dinitrophenol	32.33%	J/UJ	4-7
	4-Nitroaniline	32.72%	J/UJ	4-7
	3, 3'-Dichlorobenzidine	29.90%	J/UJ	4-7
02/11/09	2, 4-Dinitrophenol	36.32%	J/UJ	1, 8
	4-Nitroaniline	28.82%	J/UJ	1, 8
	Butylbenzylphthalate	25.13%	J/UJ	1, 8
	3, 3'-Dichlorobenzidine	33.78%	J/UJ	1, 8
	bis (2-Ethylhexyl) phthalate	27.21%	J/UJ	1, 8
	Di-n-octylphthalate	48.14%	J/UJ	1, 8

Surrogates - All samples exhibited acceptable surrogate recoveries

MS/MSD - A MS/MSD sample was not analyzed.

Laboratory Control Sample - The LCS samples exhibited acceptable %R values except the following.

LCS ID	Compound	%R	Qualifier	Affected Samples
WG60209-LCS	Dimethylphthalate	10%	J/UJ	2, 3

Internal Standard (IS) Area Performance - All internal standards met response and retention time (RT) criteria.

Method Blank - The method blanks exhibited the following contamination.

Field, Equipment Blank - Field QC results are summarized below.

Blank ID	Compound	Conc. ug/L	Action Level ug/L	Qualifier	Affected Samples
MR08-EB012009	None - ND	-	-	-	-
MR08-EB012109	None - ND	-	-	-	-
MR08-EB012209	None - ND	-	-	-	-
MR08-EB012309	None - ND	-	-	-	-
MR08-EB012409	None - ND	-	-	-	-
MR08-EB012509	None - ND	-	-	-	-
MR08-EB012609	None - ND	-	-	-	-
MR08-FB012609	None - ND	-	-	-	-

Field Duplicates - Field duplicate samples were not included in this data package.

Tentatively Identified Compounds (TICs) - TICs were not reported.

Compound Quantitation - No discrepancies were identified.

KATAHDIN ANALYTICAL SERVICES
Report of Analytical Results

Client: CH2MHill
Project: TO-009 Lejeune
PO No:
Sample Date: 01/20/09
Received Date: 01/22/09
Extraction Date: 01/23/08
Analysis Date: 11-FEB-2009 13:24
Report Date: 02/15/2009
Matrix: WATER
% Solids: NA

Lab ID: SC0323-1RA
Client ID: MR08-EB012009
SDG: TO9-41
Extracted by: CB
Extraction Method: SW846 3510
Analyst: JLP
Analysis Method: SW846 8270C
Lab Prep Batch: WG60126
Units: ug/L

CAS#	Compound	Flags	Results	DF	PQL	Adj.PQL	Adj.MDL
100-52-7	Benzaldehyde	U	9	1.0	10	9	3
108-95-2	Phenol	U	9	1.0	10	9	2
111-44-4	Bis(2-Chloroethyl)ether	U	9	1.0	10	9	2
95-57-8	2-Chlorophenol	U	11	1.0	12	11	3
95-48-7	2-Methylphenol	U	11	1.0	12	11	4
108-60-1	2,2'-Oxybis(1-chloropropane)	U	9	1.0	10	9	2
98-86-2	Acetophenone	U	11	1.0	12	11	4
621-64-7	N-Nitroso-di-n-propylamine	U	9	1.0	10	9	2
65794-96-9	3&4-Methylphenol	U	9	1.0	10	9	2
67-72-1	Hexachloroethane	U	9	1.0	10	9	2
98-95-3	Nitrobenzene	U	9	1.0	10	9	2
78-59-1	Isophorone	U	9	1.0	10	9	2
88-75-5	2-Nitrophenol	U	9	1.0	10	9	3
105-67-9	2,4-Dimethylphenol	U	11	1.0	12	11	4
111-91-1	Bis(2-Chloroethoxy)methane	U	9	1.0	10	9	2
120-83-2	2,4-Dichlorophenol	U	11	1.0	12	11	4
106-47-8	4-Chloroaniline	U	9	1.0	10	9	2
105-60-2	Caprolactam	U	9	1.0	10	9	0.4
59-50-7	4-Chloro-3-Methylphenol	U	9	1.0	10	9	2
88-06-2	2,4,6-Trichlorophenol	U	9	1.0	10	9	3
95-95-4	2,4,5-Trichlorophenol	U	24	1.0	25	24	4
91-58-7	2-Chloronaphthalene	U	9	1.0	10	9	2
92-52-4	1,1'-Biphenyl	U	9	1.0	10	9	2
88-74-4	2-Nitroaniline	U	24	1.0	25	24	1
131-11-3	Dimethyl Phthalate	U	9	1.0	10	9	0.7
606-20-2	2,6-Dinitrotoluene	U	9	1.0	10	9	1.0
208-96-8	Acenaphthylene	U	9	1.0	10	9	2
99-09-2	3-Nitroaniline	U	24	1.0	25	24	1
83-32-9	Acenaphthene	U	9	1.0	10	9	2
51-28-5	2,4-Dinitrophenol	~~U~~ UJ	42	1.0	45	42	14 CCH
132-64-9	Dibenzofuran	U	9	1.0	10	9	1
100-02-7	4-Nitrophenol	U	24	1.0	25	24	5
121-14-2	2,4-Dinitrotoluene	U	9	1.0	10	9	1
84-66-2	Diethylphthalate	U	9	1.0	10	9	1
7005-72-3	4-Chlorophenyl-phenylether	U	9	1.0	10	9	1
100-01-6	4-Nitroaniline	~~U~~ UJ	24	1.0	25	24	2 CCH
534-52-1	4,6-Dinitro-2-Methylphenol	U	24	1.0	25	24	6
86-30-6	N-Nitrosodiphenylamine	U	9	1.0	10	9	2
101-55-3	4-Bromophenyl-phenylether	U	9	1.0	10	9	1
1912-24-9	Atrazine	U	9	1.0	10	9	2
87-86-5	Pentachlorophenol	U	24	1.0	25	24	7
120-12-7	Anthracene	U	9	1.0	10	9	1
86-74-8	Carbazole	U	9	1.0	10	9	1

LW 4/16/09

KATAHDIN ANALYTICAL SERVICES
Report of Analytical Results

Client: CH2MHill
Project: TO-009 Lejeune
PO No:
Sample Date: 01/20/09
Received Date: 01/22/09
Extraction Date: 01/23/08
Analysis Date: 11-FEB-2009 13:24
Report Date: 02/15/2009
Matrix: WATER
% Solids: NA

Lab ID: SC0323-1RA
Client ID: MR08-EB012009
SDG: TO9-41
Extracted by: CB
Extraction Method: SW846 3510
Analyst: JLP
Analysis Method: SW846 8270C
Lab Prep Batch: WG60126
Units: ug/L

CAS#	Compound	Flags	Results	DF	PQL	Adj.PQL	Adj.MDL
84-74-2	Di-n-butylphthalate	U	9	1.0	10	9	1
85-68-7	Butylbenzylphthalate	~~U~~ UJ	9	1.0	10	9	1 CCH
91-94-1	3,3'-Dichlorobenzidine	~~U~~ UJ	9	1.0	10	9	3 CCH
218-01-9	Chrysene	U	9	1.0	10	9	1
117-81-7	bis(2-Ethylhexyl)phthalate	~~U~~ UJ	9	1.0	10	9	2 CCH
117-84-0	Di-n-octylphthalate	~~U~~ UJ	9	1.0	10	9	2 CCH
367-12-4	2-Fluorophenol		51%				
13127-88-3	Phenol-D6		30%				
4165-60-0	Nitrobenzene-D5		89%				
321-60-8	2-Fluorobiphenyl		97%				
118-79-6	2,4,6-Tribromophenol		82%				
1718-51-0	Terphenyl-D14		89%				

kw 4/16/09

2

KATAHDIN ANALYTICAL SERVICES
Report of Analytical Results

Client: CH2MHill
Project: TO-009 Lejeune
PO No:
Sample Date: 01/21/09
Received Date: 01/24/09
Extraction Date: 01/27/09
Analysis Date: 09-FEB-2009 15:52
Report Date: 02/15/2009
Matrix: WATER
% Solids: NA

Lab ID: SC0363-1
Client ID: MR08-EB012109
SDG: TO9-41
Extracted by: KF
Extraction Method: SW846 3510
Analyst: JLP
Analysis Method: SW846 8270C
Lab Prep Batch: WG60209
Units: ug/L

CAS#	Compound	Flags	Results	DF	PQL	Adj.PQL	Adj.MDL	
100-52-7	Benzaldehyde	U	10	1.0	10	10	3	
108-95-2	Phenol	U	10	1.0	10	10	2	
111-44-4	Bis(2-Chloroethyl)ether	U	10	1.0	10	10	2	
95-57-8	2-Chlorophenol	U	13	1.0	12	13	4	
95-48-7	2-Methylphenol	U	13	1.0	12	13	4	
108-60-1	2,2'-Oxybis(1-chloropropane)	U	10	1.0	10	10	2	
98-86-2	Acetophenone	U	13	1.0	12	13	4	
621-64-7	N-Nitroso-di-n-propylamine	U	10	1.0	10	10	2	
65794-96-9	3&4-Methylphenol	U	10	1.0	10	10	3	
67-72-1	Hexachloroethane	U	10	1.0	10	10	2	
98-95-3	Nitrobenzene	U	10	1.0	10	10	2	
78-59-1	Isophorone	U	10	1.0	10	10	2	
88-75-5	2-Nitrophenol	U	10	1.0	10	10	4	
105-67-9	2,4-Dimethylphenol	U	13	1.0	12	13	4	
111-91-1	Bis(2-Chloroethoxy)methane	U	10	1.0	10	10	2	
120-83-2	2,4-Dichlorophenol	U	13	1.0	12	13	4	
106-47-8	4-Chloroaniline	U	10	1.0	10	10	2	
105-60-2	Caprolactam	U	10	1.0	10	10	0.4	
59-50-7	4-Chloro-3-Methylphenol	U	10	1.0	10	10	3	
88-06-2	2,4,6-Trichlorophenol	U	10	1.0	10	10	3	
95-95-4	2,4,5-Trichlorophenol	U	26	1.0	25	26	4	
91-58-7	2-Chloronaphthalene	U	10	1.0	10	10	2	
92-52-4	1,1'-Biphenyl	U	10	1.0	10	10	2	
88-74-4	2-Nitroaniline	U	26	1.0	25	26	2	
131-11-3	Dimethyl Phthalate	~~U~~ UJ	10	1.0	10	10	0.8	BSL
606-20-2	2,6-Dinitrotoluene	U	10	1.0	10	10	1	
208-96-8	Acenaphthylene	U	10	1.0	10	10	2	
99-09-2	3-Nitroaniline	U	26	1.0	25	26	1	
83-32-9	Acenaphthene	U	10	1.0	10	10	2	
51-28-5	2,4-Dinitrophenol	U	47	1.0	45	47	16	
132-64-9	Dibenzofuran	U	10	1.0	10	10	2	
100-02-7	4-Nitrophenol	U	26	1.0	25	26	6	
121-14-2	2,4-Dinitrotoluene	U	10	1.0	10	10	1	
84-66-2	Diethylphthalate	U	10	1.0	10	10	1	
7005-72-3	4-Chlorophenyl-phenylether	U	10	1.0	10	10	1	
100-01-6	4-Nitroaniline	~~U~~ UJ	26	1.0	25	26	2	CCH
534-52-1	4,6-Dinitro-2-Methylphenol	U	26	1.0	25	26	6	
86-30-6	N-Nitrosodiphenylamine	U	10	1.0	10	10	2	
101-55-3	4-Bromophenyl-phenylether	U	10	1.0	10	10	1	
1912-24-9	Atrazine	U	10	1.0	10	10	2	
87-86-5	Pentachlorophenol	U	26	1.0	25	26	8	
120-12-7	Anthracene	U	10	1.0	10	10	1	
86-74-8	Carbazole	U	10	1.0	10	10	1	

CW 4/16/09

KATAHDIN ANALYTICAL SERVICES
Report of Analytical Results

2

Client: CH2MHill
Project: TO-009 Lejeune
PO No:
Sample Date: 01/21/09
Received Date: 01/24/09
Extraction Date: 01/27/09
Analysis Date: 09-FEB-2009 15:52
Report Date: 02/15/2009
Matrix: WATER
% Solids: NA

Lab ID: SC0363-1
Client ID: MR08-EB012109
SDG: TO9-41
Extracted by: KF
Extraction Method: SW846 3510
Analyst: JLP
Analysis Method: SW846 8270C
Lab Prep Batch: WG60209
Units: ug/L

CAS#	Compound	Flags	Results	DF	PQL	Adj.PQL	Adj.MDL
84-74-2	Di-n-butylphthalate	U	10	1.0	10	10	1
85-68-7	Butylbenzylphthalate	U	10	1.0	10	10	2
91-94-1	3,3'-Dichlorobenzidine	~~U~~ UJ	10	1.0	10	10	3 CCH
218-01-9	Chrysene	U	10	1.0	10	10	1
117-81-7	bis(2-Ethylhexyl)phthalate	U	10	1.0	10	10	2
117-84-0	Di-n-octylphthalate	U	10	1.0	10	10	2
367-12-4	2-Fluorophenol		46%				
13127-88-3	Phenol-D6		26%				
4165-60-0	Nitrobenzene-D5		62%				
321-60-8	2-Fluorobiphenyl		72%				
118-79-6	2,4,6-Tribromophenol		58%				
1718-51-0	Terphenyl-D14		106%				

lw
4/16/09

3

KATAHDIN ANALYTICAL SERVICES
Report of Analytical Results

Client: CH2MHill
Project: TO-009 Lejeune
PO No:
Sample Date: 01/22/09
Received Date: 01/24/09
Extraction Date: 01/27/09
Analysis Date: 09-FEB-2009 16:34
Report Date: 02/15/2009
Matrix: WATER
% Solids: NA

Lab ID: SC0363-3
Client ID: MR08-EB012209
SDG: TO9-41
Extracted by: KF
Extraction Method: SW846 3510
Analyst: JLP
Analysis Method: SW846 8270C
Lab Prep Batch: WG60209
Units: ug/L

CAS#	Compound	Flags	Results	DF	PQL	Adj.PQL	Adj.MDL	
100-52-7	Benzaldehyde	U	10	1.0	10	10	3	
108-95-2	Phenol	U	10	1.0	10	10	2	
111-44-4	Bis(2-Chloroethyl)ether	U	10	1.0	10	10	2	
95-57-8	2-Chlorophenol	U	12	1.0	12	12	3	
95-48-7	2-Methylphenol	U	12	1.0	12	12	4	
108-60-1	2,2'-Oxybis(1-chloropropane)	U	10	1.0	10	10	2	
98-86-2	Acetophenone	U	12	1.0	12	12	4	
621-64-7	N-Nitroso-di-n-propylamine	U	10	1.0	10	10	2	
65794-96-9	3&4-Methylphenol	U	10	1.0	10	10	3	
67-72-1	Hexachloroethane	U	10	1.0	10	10	2	
98-95-3	Nitrobenzene	U	10	1.0	10	10	2	
78-59-1	Isophorone	U	10	1.0	10	10	2	
88-75-5	2-Nitrophenol	U	10	1.0	10	10	4	
105-67-9	2,4-Dimethylphenol	U	12	1.0	12	12	4	
111-91-1	Bis(2-Chloroethoxy)methane	U	10	1.0	10	10	2	
120-83-2	2,4-Dichlorophenol	U	12	1.0	12	12	4	
106-47-8	4-Chloroaniline	U	10	1.0	10	10	2	
105-60-2	Caprolactam	U	10	1.0	10	10	0.4	
59-50-7	4-Chloro-3-Methylphenol	U	10	1.0	10	10	2	
88-06-2	2,4,6-Trichlorophenol	U	10	1.0	10	10	3	
95-95-4	2,4,5-Trichlorophenol	U	25	1.0	25	25	4	
91-58-7	2-Chloronaphthalene	U	10	1.0	10	10	2	
92-52-4	1,1'-Biphenyl	U	10	1.0	10	10	2	
88-74-4	2-Nitroaniline	U	25	1.0	25	25	2	
131-11-3	Dimethyl Phthalate	~~U~~ UJ	10	1.0	10	10	0.8	BSL
606-20-2	2,6-Dinitrotoluene	U	10	1.0	10	10	1	
208-96-8	Acenaphthylene	U	10	1.0	10	10	2	
99-09-2	3-Nitroaniline	U	25	1.0	25	25	1	
83-32-9	Acenaphthene	U	10	1.0	10	10	2	
51-28-5	2,4-Dinitrophenol	U	44	1.0	45	44	15	
132-64-9	Dibenzofuran	U	10	1.0	10	10	1	
100-02-7	4-Nitrophenol	U	25	1.0	25	25	6	
121-14-2	2,4-Dinitrotoluene	U	10	1.0	10	10	1	
84-66-2	Diethylphthalate	U	10	1.0	10	10	1	
7005-72-3	4-Chlorophenyl-phenylether	U	10	1.0	10	10	1	
100-01-6	4-Nitroaniline	~~U~~ UJ	25	1.0	25	25	2	CCH
534-52-1	4,6-Dinitro-2-Methylphenol	U	25	1.0	25	25	6	
86-30-6	N-Nitrosodiphenylamine	U	10	1.0	10	10	2	
101-55-3	4-Bromophenyl-phenylether	U	10	1.0	10	10	1	
1912-24-9	Atrazine	U	10	1.0	10	10	2	
87-86-5	Pentachlorophenol	U	25	1.0	25	25	8	
120-12-7	Anthracene	U	10	1.0	10	10	1	
86-74-8	Carbazole	U	10	1.0	10	10	1	

lw
4/16/09

KATAHDIN ANALYTICAL SERVICES
Report of Analytical Results

3

Client: CH2MHill
Project: TO-009 Lejeune
PO No:
Sample Date: 01/22/09
Received Date: 01/24/09
Extraction Date: 01/27/09
Analysis Date: 09-FEB-2009 16:34
Report Date: 02/15/2009
Matrix: WATER
% Solids: NA

Lab ID: SC0363-3
Client ID: MR08-EB012209
SDG: TO9-41
Extracted by: KF
Extraction Method: SW846 3510
Analyst: JLP
Analysis Method: SW846 8270C
Lab Prep Batch: WG60209
Units: ug/L

CAS#	Compound	Flags	Results	DF	PQL	Adj.PQL	Adj.MDL	
84-74-2	Di-n-butylphthalate	U	10	1.0	10	10	1	
85-68-7	Butylbenzylphthalate	U	10	1.0	10	10	1	
91-94-1	3,3'-Dichlorobenzidine	~~U~~ UJ	10	1.0	10	10	3	CCH
218-01-9	Chrysene	U	10	1.0	10	10	1	
117-81-7	bis(2-Ethylhexyl)phthalate	U	10	1.0	10	10	2	
117-84-0	Di-n-octylphthalate	U	10	1.0	10	10	2	
367-12-4	2-Fluorophenol		43%					
13127-88-3	Phenol-D6		21%					
4165-60-0	Nitrobenzene-D5		62%					
321-60-8	2-Fluorobiphenyl		71%					
118-79-6	2,4,6-Tribromophenol		57%					
1718-51-0	Terphenyl-D14		94%					

LW
4/16/09

4

KATAHDIN ANALYTICAL SERVICES
Report of Analytical Results

Client: CH2MHill
Project: TO-009 Lejeune
PO No:
Sample Date: 01/23/09
Received Date: 01/27/09
Extraction Date: 01/28/09
Analysis Date: 10-FEB-2009 08:28
Report Date: 02/15/2009
Matrix: WATER
% Solids: NA

Lab ID: SC0414-1
Client ID: MR08-EB012309
SDG: TO9-41
Extracted by: KF
Extraction Method: SW846 3510
Analyst: JLP
Analysis Method: SW846 8270C
Lab Prep Batch: WG60237
Units: ug/L

CAS#	Compound	Flags	Results	DF	PQL	Adj.PQL	Adj.MDL	
100-52-7	Benzaldehyde	U	10	1.0	10	10	3	
108-95-2	Phenol	U	10	1.0	10	10	2	
111-44-4	Bis(2-Chloroethyl)ether	U	10	1.0	10	10	2	
95-57-8	2-Chlorophenol	U	12	1.0	12	12	3	
95-48-7	2-Methylphenol	U	12	1.0	12	12	4	
108-60-1	2,2'-Oxybis(1-chloropropane)	U	10	1.0	10	10	2	
98-86-2	Acetophenone	U	12	1.0	12	12	4	
621-64-7	N-Nitroso-di-n-propylamine	U	10	1.0	10	10	2	
65794-96-9	3&4-Methylphenol	U	10	1.0	10	10	2	
67-72-1	Hexachloroethane	U	10	1.0	10	10	2	
98-95-3	Nitrobenzene	U	10	1.0	10	10	2	
78-59-1	Isophorone	U	10	1.0	10	10	2	
88-75-5	2-Nitrophenol	U	10	1.0	10	10	3	
105-67-9	2,4-Dimethylphenol	U	12	1.0	12	12	4	
111-91-1	Bis(2-Chloroethoxy)methane	U	10	1.0	10	10	2	
120-83-2	2,4-Dichlorophenol	U	12	1.0	12	12	4	
106-47-8	4-Chloroaniline	U	10	1.0	10	10	2	
105-60-2	Caprolactam	~~U~~ UJ	10	1.0	10	10	0.4	CCH
59-50-7	4-Chloro-3-Methylphenol	U	10	1.0	10	10	2	
88-06-2	2,4,6-Trichlorophenol	U	10	1.0	10	10	3	
95-95-4	2,4,5-Trichlorophenol	U	24	1.0	25	24	4	
91-58-7	2-Chloronaphthalene	U	10	1.0	10	10	2	
92-52-4	1,1'-Biphenyl	U	10	1.0	10	10	2	
88-74-4	2-Nitroaniline	U	24	1.0	25	24	1	
131-11-3	Dimethyl Phthalate	U	10	1.0	10	10	0.8	
606-20-2	2,6-Dinitrotoluene	U	10	1.0	10	10	1	
208-96-8	Acenaphthylene	U	10	1.0	10	10	2	
99-09-2	3-Nitroaniline	U	24	1.0	25	24	1	
83-32-9	Acenaphthene	U	10	1.0	10	10	2	
51-28-5	2,4-Dinitrophenol	~~U~~ UJ	43	1.0	45	43	14	CCH
132-64-9	Dibenzofuran	U	10	1.0	10	10	1	
100-02-7	4-Nitrophenol	U	24	1.0	25	24	5	
121-14-2	2,4-Dinitrotoluene	U	10	1.0	10	10	1	
84-66-2	Diethylphthalate	U	10	1.0	10	10	1	
7005-72-3	4-Chlorophenyl-phenylether	U	10	1.0	10	10	1	
100-01-6	4-Nitroaniline	~~U~~ UJ	24	1.0	25	24	2	CCH
534-52-1	4,6-Dinitro-2-Methylphenol	U	24	1.0	25	24	6	
86-30-6	N-Nitrosodiphenylamine	U	10	1.0	10	10	2	
101-55-3	4-Bromophenyl-phenylether	U	10	1.0	10	10	1	
1912-24-9	Atrazine	U	10	1.0	10	10	2	
87-86-5	Pentachlorophenol	U	24	1.0	25	24	7	
120-12-7	Anthracene	U	10	1.0	10	10	1	
86-74-8	Carbazole	U	10	1.0	10	10	1	

lw 4/16/09

KATAHDIN ANALYTICAL SERVICES
Report of Analytical Results

4

Client: CH2MHill
Project: TO-009 Lejeune
PO No:
Sample Date: 01/23/09
Received Date: 01/27/09
Extraction Date: 01/28/09
Analysis Date: 10-FEB-2009 08:28
Report Date: 02/15/2009
Matrix: WATER
% Solids: NA

Lab ID: SC0414-1
Client ID: MR08-EB012309
SDG: TO9-41
Extracted by: KF
Extraction Method: SW846 3510
Analyst: JLP
Analysis Method: SW846 8270C
Lab Prep Batch: WG60237
Units: ug/L

CAS#	Compound	Flags	Results	DF	PQL	Adj.PQL	Adj.MDL
84-74-2	Di-n-butylphthalate	U	10	1.0	10	10	1
85-68-7	Butylbenzylphthalate	U	10	1.0	10	10	1
91-94-1	3,3'-Dichlorobenzidine	~~U~~ UJ	10	1.0	10	10	3 CCH
218-01-9	Chrysene	U	10	1.0	10	10	1
117-81-7	bis(2-Ethylhexyl)phthalate	U	10	1.0	10	10	2
117-84-0	Di-n-octylphthalate	U	10	1.0	10	10	2
367-12-4	2-Fluorophenol		35%				
13127-88-3	Phenol-D6		22%				
4165-60-0	Nitrobenzene-D5		56%				
321-60-8	2-Fluorobiphenyl		59%				
118-79-6	2,4,6-Tribromophenol		56%				
1718-51-0	Terphenyl-D14		97%				

lcw 4/16/09

5

KATAHDIN ANALYTICAL SERVICES
Report of Analytical Results

Client: CH2MHill
Project: TO-009 Lejeune
PO No:
Sample Date: 01/24/09
Received Date: 01/27/09
Extraction Date: 01/28/09
Analysis Date: 10-FEB-2009 09:10
Report Date: 02/15/2009
Matrix: WATER
% Solids: NA

Lab ID: SC0414-3
Client ID: MR08-EB012409
SDG: TO9-41
Extracted by: KF
Extraction Method: SW846 3510
Analyst: JLP
Analysis Method: SW846 8270C
Lab Prep Batch: WG60237
Units: ug/L

CAS#	Compound	Flags	Results	DF	PQL	Adj.PQL	Adj.MDL
100-52-7	Benzaldehyde	U	9	1.0	10	9	3
108-95-2	Phenol	U	9	1.0	10	9	2
111-44-4	Bis(2-Chloroethyl)ether	U	9	1.0	10	9	2
95-57-8	2-Chlorophenol	U	11	1.0	12	11	3
95-48-7	2-Methylphenol	U	11	1.0	12	11	4
108-60-1	2,2'-Oxybis(1-chloropropane)	U	9	1.0	10	9	2
98-86-2	Acetophenone	U	11	1.0	12	11	4
621-64-7	N-Nitroso-di-n-propylamine	U	9	1.0	10	9	2
65794-96-9	3&4-Methylphenol	U	9	1.0	10	9	2
67-72-1	Hexachloroethane	U	9	1.0	10	9	2
98-95-3	Nitrobenzene	U	9	1.0	10	9	2
78-59-1	Isophorone	U	9	1.0	10	9	2
88-75-5	2-Nitrophenol	U	9	1.0	10	9	3
105-67-9	2,4-Dimethylphenol	U	11	1.0	12	11	4
111-91-1	Bis(2-Chloroethoxy)methane	U	9	1.0	10	9	2
120-83-2	2,4-Dichlorophenol	U	11	1.0	12	11	4
106-47-8	4-Chloroaniline	U	9	1.0	10	9	2
105-60-2	Caprolactam	~~U~~ UJ	9	1.0	10	9	0.4 CCH
59-50-7	4-Chloro-3-Methylphenol	U	9	1.0	10	9	2
88-06-2	2,4,6-Trichlorophenol	U	9	1.0	10	9	3
95-95-4	2,4,5-Trichlorophenol	U	24	1.0	25	24	4
91-58-7	2-Chloronaphthalene	U	9	1.0	10	9	2
92-52-4	1,1'-Biphenyl	U	9	1.0	10	9	2
88-74-4	2-Nitroaniline	U	24	1.0	25	24	1
131-11-3	Dimethyl Phthalate	U	9	1.0	10	9	0.7
606-20-2	2,6-Dinitrotoluene	U	9	1.0	10	9	1.0
208-96-8	Acenaphthylene	U	9	1.0	10	9	2
99-09-2	3-Nitroaniline	U	24	1.0	25	24	1
83-32-9	Acenaphthene	U	9	1.0	10	9	2
51-28-5	2,4-Dinitrophenol	~~U~~ UJ	42	1.0	45	42	14 CCH
132-64-9	Dibenzofuran	U	9	1.0	10	9	1
100-02-7	4-Nitrophenol	U	24	1.0	25	24	5
121-14-2	2,4-Dinitrotoluene	U	9	1.0	10	9	1
84-66-2	Diethylphthalate	U	9	1.0	10	9	1
7005-72-3	4-Chlorophenyl-phenylether	U	9	1.0	10	9	1
100-01-6	4-Nitroaniline	~~U~~ UJ	24	1.0	25	24	2 CCH
534-52-1	4,6-Dinitro-2-Methylphenol	U	24	1.0	25	24	6
86-30-6	N-Nitrosodiphenylamine	U	9	1.0	10	9	2
101-55-3	4-Bromophenyl-phenylether	U	9	1.0	10	9	1
1912-24-9	Atrazine	U	9	1.0	10	9	2
87-86-5	Pentachlorophenol	U	24	1.0	25	24	7
120-12-7	Anthracene	U	9	1.0	10	9	1
86-74-8	Carbazole	U	9	1.0	10	9	1

LW 4/16/09

KATAHDIN ANALYTICAL SERVICES
Report of Analytical Results

5

Client: CH2MHill
Project: TO-009 Lejeune
PO No:
Sample Date: 01/24/09
Received Date: 01/27/09
Extraction Date: 01/28/09
Analysis Date: 10-FEB-2009 09:10
Report Date: 02/15/2009
Matrix: WATER
% Solids: NA

Lab ID: SC0414-3
Client ID: MR08-EB012409
SDG: TO9-41
Extracted by: KF
Extraction Method: SW846 3510
Analyst: JLP
Analysis Method: SW846 8270C
Lab Prep Batch: WG60237
Units: ug/L

CAS#	Compound	Flags	Results	DF	PQL	Adj.PQL	Adj.MDL
84-74-2	Di-n-butylphthalate	U	9	1.0	10	9	1
85-68-7	Butylbenzylphthalate	U	9	1.0	10	9	1
91-94-1	3,3'-Dichlorobenzidine	~~U~~ UJ	9	1.0	10	9	3 CCH
218-01-9	Chrysene	U	9	1.0	10	9	1
117-81-7	bis(2-Ethylhexyl)phthalate	U	9	1.0	10	9	2
117-84-0	Di-n-octylphthalate	U	9	1.0	10	9	2
367-12-4	2-Fluorophenol		27%				
13127-88-3	Phenol-D6		15%				
4165-60-0	Nitrobenzene-D5		49%				
321-60-8	2-Fluorobiphenyl		56%				
118-79-6	2,4,6-Tribromophenol		61%				
1718-51-0	Terphenyl-D14		100%				

lw 4/16/09

6

KATAHDIN ANALYTICAL SERVICES
Report of Analytical Results

Client: CH2MHill
Project: TO-009 Lejeune
PO No:
Sample Date: 01/25/09
Received Date: 01/27/09
Extraction Date: 01/28/09
Analysis Date: 10-FEB-2009 09:53
Report Date: 02/15/2009
Matrix: WATER
% Solids: NA

Lab ID: SC0414-5
Client ID: MR08-EB012509
SDG: TO9-41
Extracted by: KF
Extraction Method: SW846 3510
Analyst: JLP
Analysis Method: SW846 8270C
Lab Prep Batch: WG60237
Units: ug/L

CAS#	Compound	Flags	Results	DF	PQL	Adj.PQL	Adj.MDL
100-52-7	Benzaldehyde	U	10	1.0	10	10	3
108-95-2	Phenol	U	10	1.0	10	10	2
111-44-4	Bis(2-Chloroethyl)ether	U	10	1.0	10	10	2
95-57-8	2-Chlorophenol	U	11	1.0	12	11	3
95-48-7	2-Methylphenol	U	11	1.0	12	11	4
108-60-1	2,2'-Oxybis(1-chloropropane)	U	10	1.0	10	10	2
98-86-2	Acetophenone	U	11	1.0	12	11	4
621-64-7	N-Nitroso-di-n-propylamine	U	10	1.0	10	10	2
65794-96-9	3&4-Methylphenol	U	10	1.0	10	10	2
67-72-1	Hexachloroethane	U	10	1.0	10	10	2
98-95-3	Nitrobenzene	U	10	1.0	10	10	2
78-59-1	Isophorone	U	10	1.0	10	10	2
88-75-5	2-Nitrophenol	U	10	1.0	10	10	3
105-67-9	2,4-Dimethylphenol	U	11	1.0	12	11	4
111-91-1	Bis(2-Chloroethoxy)methane	U	10	1.0	10	10	2
120-83-2	2,4-Dichlorophenol	U	11	1.0	12	11	4
106-47-8	4-Chloroaniline	U	10	1.0	10	10	2
105-60-2	Caprolactam	~~U~~ UJ	10	1.0	10	10	0.4 CCH
59-50-7	4-Chloro-3-Methylphenol	U	10	1.0	10	10	2
88-06-2	2,4,6-Trichlorophenol	U	10	1.0	10	10	3
95-95-4	2,4,5-Trichlorophenol	U	24	1.0	25	24	4
91-58-7	2-Chloronaphthalene	U	10	1.0	10	10	2
92-52-4	1,1'-Biphenyl	U	10	1.0	10	10	2
88-74-4	2-Nitroaniline	U	24	1.0	25	24	1
131-11-3	Dimethyl Phthalate	U	10	1.0	10	10	0.8
606-20-2	2,6-Dinitrotoluene	U	10	1.0	10	10	1
208-96-8	Acenaphthylene	U	10	1.0	10	10	2
99-09-2	3-Nitroaniline	U	24	1.0	25	24	1
83-32-9	Acenaphthene	U	10	1.0	10	10	2
51-28-5	2,4-Dinitrophenol	~~U~~ UJ	43	1.0	45	43	14 CCH
132-64-9	Dibenzofuran	U	10	1.0	10	10	1
100-02-7	4-Nitrophenol	U	24	1.0	25	24	5
121-14-2	2,4-Dinitrotoluene	U	10	1.0	10	10	1
84-66-2	Diethylphthalate	U	10	1.0	10	10	1
7005-72-3	4-Chlorophenyl-phenylether	U	10	1.0	10	10	1
100-01-6	4-Nitroaniline	~~U~~ UJ	24	1.0	25	24	2 CCH
534-52-1	4,6-Dinitro-2-Methylphenol	U	24	1.0	25	24	6
86-30-6	N-Nitrosodiphenylamine	U	10	1.0	10	10	2
101-55-3	4-Bromophenyl-phenylether	U	10	1.0	10	10	1
1912-24-9	Atrazine	U	10	1.0	10	10	2
87-86-5	Pentachlorophenol	U	24	1.0	25	24	7
120-12-7	Anthracene	U	10	1.0	10	10	1
86-74-8	Carbazole	U	10	1.0	10	10	1

lw 4/16/09

KATAHDIN ANALYTICAL SERVICES
Report of Analytical Results

6

Client: CH2MHill
Project: TO-009 Lejeune
PO No:
Sample Date: 01/25/09
Received Date: 01/27/09
Extraction Date: 01/28/09
Analysis Date: 10-FEB-2009 09:53
Report Date: 02/15/2009
Matrix: WATER
% Solids: NA

Lab ID: SC0414-5
Client ID: MR08-EB012509
SDG: TO9-41
Extracted by: KF
Extraction Method: SW846 3510
Analyst: JLP
Analysis Method: SW846 8270C
Lab Prep Batch: WG60237
Units: ug/L

CAS#	Compound	Flags	Results	DF	PQL	Adj.PQL	Adj.MDL
84-74-2	Di-n-butylphthalate	U	10	1.0	10	10	1
85-68-7	Butylbenzylphthalate	U	10	1.0	10	10	1
91-94-1	3,3'-Dichlorobenzidine	~~U~~ UJ	10	1.0	10	10	3 CCH
218-01-9	Chrysene	U	10	1.0	10	10	1
117-81-7	bis(2-Ethylhexyl)phthalate	U	10	1.0	10	10	2
117-84-0	Di-n-octylphthalate	U	10	1.0	10	10	2
367-12-4	2-Fluorophenol		40%				
13127-88-3	Phenol-D6		21%				
4165-60-0	Nitrobenzene-D5		63%				
321-60-8	2-Fluorobiphenyl		67%				
118-79-6	2,4,6-Tribromophenol		52%				
1718-51-0	Terphenyl-D14		103%				

lcw 4/16/09

7

KATAHDIN ANALYTICAL SERVICES
Report of Analytical Results

Client: CH2MHill
Project: TO-009 Lejeune
PO No:
Sample Date: 01/26/09
Received Date: 01/27/09
Extraction Date: 01/28/09
Analysis Date: 10-FEB-2009 10:35
Report Date: 02/15/2009
Matrix: WATER
% Solids: NA

Lab ID: SC0414-7
Client ID: MR08-EB012609
SDG: TO9-41
Extracted by: KF
Extraction Method: SW846 3510
Analyst: JLP
Analysis Method: SW846 8270C
Lab Prep Batch: WG60237
Units: ug/L

CAS#	Compound	Flags	Results	DF	PQL	Adj.PQL	Adj.MDL
100-52-7	Benzaldehyde	U	10	1.0	10	10	3
108-95-2	Phenol	U	10	1.0	10	10	2
111-44-4	Bis(2-Chloroethyl)ether	U	10	1.0	10	10	2
95-57-8	2-Chlorophenol	U	12	1.0	12	12	3
95-48-7	2-Methylphenol	U	12	1.0	12	12	4
108-60-1	2,2'-Oxybis(1-chloropropane)	U	10	1.0	10	10	2
98-86-2	Acetophenone	U	12	1.0	12	12	4
621-64-7	N-Nitroso-di-n-propylamine	U	10	1.0	10	10	2
65794-96-9	3&4-Methylphenol	U	10	1.0	10	10	2
67-72-1	Hexachloroethane	U	10	1.0	10	10	2
98-95-3	Nitrobenzene	U	10	1.0	10	10	2
78-59-1	Isophorone	U	10	1.0	10	10	2
88-75-5	2-Nitrophenol	U	10	1.0	10	10	3
105-67-9	2,4-Dimethylphenol	U	12	1.0	12	12	4
111-91-1	Bis(2-Chloroethoxy)methane	U	10	1.0	10	10	2
120-83-2	2,4-Dichlorophenol	U	12	1.0	12	12	4
106-47-8	4-Chloroaniline	U	10	1.0	10	10	2
105-60-2	Caprolactam	~~U~~ UJ	10	1.0	10	10	0.4 CCH
59-50-7	4-Chloro-3-Methylphenol	U	10	1.0	10	10	2
88-06-2	2,4,6-Trichlorophenol	U	10	1.0	10	10	3
95-95-4	2,4,5-Trichlorophenol	U	24	1.0	25	24	4
91-58-7	2-Chloronaphthalene	U	10	1.0	10	10	2
92-52-4	1,1'-Biphenyl	U	10	1.0	10	10	2
88-74-4	2-Nitroaniline	U	24	1.0	25	24	1
131-11-3	Dimethyl Phthalate	U	10	1.0	10	10	0.8
606-20-2	2,6-Dinitrotoluene	U	10	1.0	10	10	1
208-96-8	Acenaphthylene	U	10	1.0	10	10	2
99-09-2	3-Nitroaniline	U	24	1.0	25	24	1
83-32-9	Acenaphthene	U	10	1.0	10	10	2
51-28-5	2,4-Dinitrophenol	~~U~~ UJ	43	1.0	45	43	14 CCH
132-64-9	Dibenzofuran	U	10	1.0	10	10	1
100-02-7	4-Nitrophenol	U	24	1.0	25	24	5
121-14-2	2,4-Dinitrotoluene	U	10	1.0	10	10	1
84-66-2	Diethylphthalate	U	10	1.0	10	10	1
7005-72-3	4-Chlorophenyl-phenylether	U	10	1.0	10	10	1
100-01-6	4-Nitroaniline	~~U~~ UJ	24	1.0	25	24	2 CCH
534-52-1	4,6-Dinitro-2-Methylphenol	U	24	1.0	25	24	6
86-30-6	N-Nitrosodiphenylamine	U	10	1.0	10	10	2
101-55-3	4-Bromophenyl-phenylether	U	10	1.0	10	10	1
1912-24-9	Atrazine	U	10	1.0	10	10	2
87-86-5	Pentachlorophenol	U	24	1.0	25	24	7
120-12-7	Anthracene	U	10	1.0	10	10	1
86-74-8	Carbazole	U	10	1.0	10	10	1

MW 4/14/09

KATAHDIN ANALYTICAL SERVICES
Report of Analytical Results

7

Client: CH2MHill
Project: TO-009 Lejeune
PO No:
Sample Date: 01/26/09
Received Date: 01/27/09
Extraction Date: 01/28/09
Analysis Date: 10-FEB-2009 10:35
Report Date: 02/15/2009
Matrix: WATER
% Solids: NA

Lab ID: SC0414-7
Client ID: MR08-EB012609
SDG: TO9-41
Extracted by: KF
Extraction Method: SW846 3510
Analyst: JLP
Analysis Method: SW846 8270C
Lab Prep Batch: WG60237
Units: ug/L

CAS#	Compound	Flags	Results	DF	PQL	Adj.PQL	Adj.MDL
84-74-2	Di-n-butylphthalate	U	10	1.0	10	10	1
85-68-7	Butylbenzylphthalate	U	10	1.0	10	10	1
91-94-1	3,3'-Dichlorobenzidine	~~U~~ UJ	10	1.0	10	10	3 CCH
218-01-9	Chrysene	U	10	1.0	10	10	1
117-81-7	bis(2-Ethylhexyl)phthalate	U	10	1.0	10	10	2
117-84-0	Di-n-octylphthalate	U	10	1.0	10	10	2
367-12-4	2-Fluorophenol		35%				
13127-88-3	Phenol-D6		20%				
4165-60-0	Nitrobenzene-D5		70%				
321-60-8	2-Fluorobiphenyl		68%				
118-79-6	2,4,6-Tribromophenol		52%				
1718-51-0	Terphenyl-D14		98%				

dlw 4/16/09

8

KATAHDIN ANALYTICAL SERVICES
Report of Analytical Results

Client: CH2MHill
Project: TO-009 Lejeune
PO No:
Sample Date: 01/26/09
Received Date: 01/27/09
Extraction Date: 01/28/09
Analysis Date: 11-FEB-2009 12:42
Report Date: 02/15/2009
Matrix: WATER
% Solids: NA

Lab ID: SC0414-9RA
Client ID: MR08-FB012609
SDG: TO9-41
Extracted by: KF
Extraction Method: SW846 3510
Analyst: JLP
Analysis Method: SW846 8270C
Lab Prep Batch: WG60237
Units: ug/L

CAS#	Compound	Flags	Results	DF	PQL	Adj.PQL	Adj.MDL
100-52-7	Benzaldehyde	U	10	1.0	10	10	3
108-95-2	Phenol	U	10	1.0	10	10	2
111-44-4	Bis(2-Chloroethyl)ether	U	10	1.0	10	10	2
95-57-8	2-Chlorophenol	U	13	1.0	12	13	4
95-48-7	2-Methylphenol	U	13	1.0	12	13	4
108-60-1	2,2'-Oxybis(1-chloropropane)	U	10	1.0	10	10	2
98-86-2	Acetophenone	U	13	1.0	12	13	4
621-64-7	N-Nitroso-di-n-propylamine	U	10	1.0	10	10	2
65794-96-9	3&4-Methylphenol	U	10	1.0	10	10	3
67-72-1	Hexachloroethane	U	10	1.0	10	10	2
98-95-3	Nitrobenzene	U	10	1.0	10	10	2
78-59-1	Isophorone	U	10	1.0	10	10	2
88-75-5	2-Nitrophenol	U	10	1.0	10	10	4
105-67-9	2,4-Dimethylphenol	U	13	1.0	12	13	4
111-91-1	Bis(2-Chloroethoxy)methane	U	10	1.0	10	10	2
120-83-2	2,4-Dichlorophenol	U	13	1.0	12	13	4
106-47-8	4-Chloroaniline	U	10	1.0	10	10	2
105-60-2	Caprolactam	U	10	1.0	10	10	0.4
59-50-7	4-Chloro-3-Methylphenol	U	10	1.0	10	10	3
88-06-2	2,4,6-Trichlorophenol	U	10	1.0	10	10	3
95-95-4	2,4,5-Trichlorophenol	U	26	1.0	25	26	4
91-58-7	2-Chloronaphthalene	U	10	1.0	10	10	2
92-52-4	1,1'-Biphenyl	U	10	1.0	10	10	2
88-74-4	2-Nitroaniline	U	26	1.0	25	26	2
131-11-3	Dimethyl Phthalate	U	10	1.0	10	10	0.8
606-20-2	2,6-Dinitrotoluene	U	10	1.0	10	10	1
208-96-8	Acenaphthylene	U	10	1.0	10	10	2
99-09-2	3-Nitroaniline	U	26	1.0	25	26	1
83-32-9	Acenaphthene	U	10	1.0	10	10	2
51-28-5	2,4-Dinitrophenol	~~U~~ UJ	47	1.0	45	47	16 CCH
132-64-9	Dibenzofuran	U	10	1.0	10	10	2
100-02-7	4-Nitrophenol	U	26	1.0	25	26	6
121-14-2	2,4-Dinitrotoluene	U	10	1.0	10	10	1
84-66-2	Diethylphthalate	U	10	1.0	10	10	1
7005-72-3	4-Chlorophenyl-phenylether	U	10	1.0	10	10	1
100-01-6	4-Nitroaniline	~~U~~ UJ	26	1.0	25	26	2 CCH
534-52-1	4,6-Dinitro-2-Methylphenol	U	26	1.0	25	26	6
86-30-6	N-Nitrosodiphenylamine	U	10	1.0	10	10	2
101-55-3	4-Bromophenyl-phenylether	U	10	1.0	10	10	1
1912-24-9	Atrazine	U	10	1.0	10	10	2
87-86-5	Pentachlorophenol	U	26	1.0	25	26	8
120-12-7	Anthracene	U	10	1.0	10	10	1
86-74-8	Carbazole	U	10	1.0	10	10	1

MW 4/16/09

8

KATAHDIN ANALYTICAL SERVICES
Report of Analytical Results

Client: CH2MHill
Project: TO-009 Lejeune
PO No:
Sample Date: 01/26/09
Received Date: 01/27/09
Extraction Date: 01/28/09
Analysis Date: 11-FEB-2009 12:42
Report Date: 02/15/2009
Matrix: WATER
% Solids: NA

Lab ID: SC0414-9RA
Client ID: MR08-FB012609
SDG: TO9-41
Extracted by: KF
Extraction Method: SW846 3510
Analyst: JLP
Analysis Method: SW846 8270C
Lab Prep Batch: WG60237
Units: ug/L

CAS#	Compound	Flags	Results	DF	PQL	Adj.PQL	Adj.MDL	
84-74-2	Di-n-butylphthalate	U	10	1.0	10	10	1	
85-68-7	Butylbenzylphthalate	~~U~~ UJ	10	1.0	10	10	2	CCH
91-94-1	3,3'-Dichlorobenzidine	~~U~~ UJ	10	1.0	10	10	3	CCH
218-01-9	Chrysene	U	10	1.0	10	10	1	
117-81-7	bis(2-Ethylhexyl)phthalate	~~U~~ UJ	10	1.0	10	10	2	CCH
117-84-0	Di-n-octylphthalate	~~U~~ UJ	10	1.0	10	10	2	CCH
367-12-4	2-Fluorophenol		55%					
13127-88-3	Phenol-D6		35%					
4165-60-0	Nitrobenzene-D5		83%					
321-60-8	2-Fluorobiphenyl		90%					
118-79-6	2,4,6-Tribromophenol		78%					
1718-51-0	Terphenyl-D14		128%					

lew 4/16/09

ENVIRONMENTAL
Data Services, Inc.

POLYNUCLEAR AROMATIC COMPOUNDS BY 8270SIM

USEPA Region IV - Level IV Review

Site: MCB Camp Lejeune, TO-09 SDG #: TO9-42

Client: CH2M HILL, Inc., Virginia Beach, Virginia Date: April 18, 2009

Laboratory: Katahdin Analytical Services, Scarborough, Maine Reviewer: Nancy Weaver

EDS ID	Client Sample ID	Laboratory Sample ID	Matrix
1	MR08-IS314-4-5-09A	SC0365-2	Soil
2	MR08-IS337-4.5-5.5	SC0365-4	Soil
3	MR08-SS337-09A	SC0365-6	Soil
4	MR08-SS336-09A	SC0365-8	Soil
5	MR08-IS336-4-5-09A	SC0365-10	Soil
6	MR08-IS335-4-5-09A	SC0365-12	Soil
7	MR08-SS335-09A	SC0365-14	Soil
8	MR08-SS334-09A	SC0365-16	Soil
9	MR08-IS334-4-5-09A	SC0365-18	Soil
10	MR08-SS333-09A	SC0365-20	Soil
11	MR08-IS333-4-5-09A	SC0365-22	Soil
12	MR08-IS332-4-5-09A	SC0365-24	Soil
13	MR08-SS332-09A	SC0365-26	Soil
13DL	MR08-SS332-09ADL	SC0365-26DL	Soil
14	MR08-SS343-09A	SC0365-28	Soil
15	MR08-IS343-4-5-09A	SC0365-30	Soil
16	MR08-SS342-09A	SC0365-32	Soil
17	MR08-IS341-4-5-09A	SC0365-34	Soil
18	MR08-SS341-09A	SC0365-36	Soil
19	MR08-SS340-09A	SC0365-38	Soil
20	MR08-IS340-4-5-09A	SC0365-40	Soil

The USEPA "Contract Laboratory Program National Functional Guidelines for Organic Data Review," October 1999, and professional judgment were used in evaluating the data in this summary report.

Holding Times - All samples were extracted within 14 days for soil samples and analyzed within 40 days for all samples.

GC/MS Tuning - All of the DFTPP tunes in the initial and continuing calibrations met the percent relative abundance criteria.

Initial Calibration - The initial calibrations exhibited acceptable %RSD and mean RRF values.

Continuing Calibration - The continuing calibrations exhibited acceptable %D and RRF values.

Surrogates - All samples exhibited acceptable surrogate recoveries.

MS/MSD - A MS/MSD sample was not analyzed.

Laboratory Control Sample - The LCS samples exhibited acceptable %R values except the following.

LCS ID	Compound	%R	Qualifier	Affected Samples
WG60273-LCS	2-Methylnaphthalene	64%	J/UJ	1-19, 13DL

Internal Standard (IS) Area Performance - All internal standards met response and retention time (RT) criteria.

Method Blank - The method blanks were free of contamination.

Field, Equipment Blank - Field QC results are summarized below.

Blank ID	Compound	Conc. ug/L	Action Level ug/kg	Qualifier	Affected Samples
MR08-FB012609	ND	-	-	-	-
MR08-EB012209	ND	-	-	-	-

Field Duplicates - Field duplicate samples were not analyzed.

Compound Quantitation - One sample exhibited a high concentration of fluoranthene and was flagged (E) by the laboratory. The sample was diluted and reanalyzed and the dilution result for fluoranthene should be used for reporting.

KATAHDIN ANALYTICAL SERVICES
Report of Analytical Results

Client: CH2MHill
Project: TO-009 Lejeune
PO No:
Sample Date: 01/21/09
Received Date: 01/24/09
Extraction Date: 01/29/09
Analysis Date: 12-FEB-2009 11:12
Report Date: 02/18/2009
Matrix: SOIL
% Solids: 83.8

Lab ID: SC0365-2
Client ID: MR08-IS314-4-5-09A
SDG: TO9-42
Extracted by: CB
Extraction Method: SW846 3550
Analyst: JLP
Analysis Method: SW846 M8270C
Lab Prep Batch: WG60273
Units: ug/Kgdrywt

CAS#	Compound	Flags	Results	DF	PQL	Adj.PQL	Adj.MDL	
91-20-3	Naphthalene	U	12	1.0	10	12	3.1	
91-57-6	2-Methylnaphthalene	~~J~~ J	8.9	1.0	10	12	2.6	BSL
86-73-7	Fluorene	U	12	1.0	10	12	3.8	
85-01-8	Phenanthrene	J	5.3	1.0	10	12	2.1	
206-44-0	Fluoranthene	J	2.8	1.0	10	12	2.1	
129-00-0	Pyrene	J	2.6	1.0	10	12	2.5	
56-55-3	Benzo(a)anthracene	U	12	1.0	10	12	2.3	
205-99-2	Benzo(b)fluoranthene	U	12	1.0	10	12	2.9	
207-08-9	Benzo(k)fluoranthene	U	12	1.0	10	12	3.7	
50-32-8	Benzo(a)pyrene	U	12	1.0	10	12	3.9	
193-39-5	Indeno(1,2,3-cd)pyrene	U	12	1.0	10	12	2.3	
53-70-3	Dibenzo(a,h)anthracene	J	2.7	1.0	10	12	2.1	
191-24-2	Benzo(g,h,i)perylene		27	1.0	10	12	2.4	
118-74-1	Hexachlorobenzene	U	12	1.0	10	12	2.1	
87-68-3	Hexachlorobutadiene	U	12	1.0	10	12	2.7	
77-47-4	Hexachlorocyclopentadiene	J	11	1.0	10	12	1.8	
7297-45-2	2-Methylnaphthalene-D10		72%					
367-12-4	2,4-Dibromophenol		54%					
81103-79-9	Fluorene-d10		75%					
1718-51-1	Pyrene-D10		83%					

4/18/09

2

KATAHDIN ANALYTICAL SERVICES
Report of Analytical Results

Client: CH2MHill
Project: TO-009 Lejeune
PO No:
Sample Date: 01/22/09
Received Date: 01/24/09
Extraction Date: 01/29/09
Analysis Date: 12-FEB-2009 11:54
Report Date: 02/18/2009
Matrix: SOIL
% Solids: 90.9

Lab ID: SC0365-4
Client ID: MR08-IS337-4.5-5.5
SDG: TO9-42
Extracted by: CB
Extraction Method: SW846 3550
Analyst: JLP
Analysis Method: SW846 M8270C
Lab Prep Batch: WG60273
Units: ug/Kgdrywt

CAS#	Compound	Flags	Results	DF	PQL	Adj.PQL	Adj.MDL	
91-20-3	Naphthalene	U	11	1.0	10	11	2.8	
91-57-6	2-Methylnaphthalene	~~U~~ UJ	11	1.0	10	11	2.4	BSL
86-73-7	Fluorene	U	11	1.0	10	11	3.5	
85-01-8	Phenanthrene	U	11	1.0	10	11	2.0	
206-44-0	Fluoranthene	U	11	1.0	10	11	2.0	
129-00-0	Pyrene	U	11	1.0	10	11	2.3	
56-55-3	Benzo(a)anthracene	U	11	1.0	10	11	2.1	
205-99-2	Benzo(b)fluoranthene	U	11	1.0	10	11	2.6	
207-08-9	Benzo(k)fluoranthene	U	11	1.0	10	11	3.4	
50-32-8	Benzo(a)pyrene	U	11	1.0	10	11	3.6	
193-39-5	Indeno(1,2,3-cd)pyrene	U	11	1.0	10	11	2.1	
53-70-3	Dibenzo(a,h)anthracene	U	11	1.0	10	11	2.0	
191-24-2	Benzo(g,h,i)perylene	U	11	1.0	10	11	2.2	
118-74-1	Hexachlorobenzene	U	11	1.0	10	11	2.0	
87-68-3	Hexachlorobutadiene	U	11	1.0	10	11	2.5	
77-47-4	Hexachlorocyclopentadiene	U	11	1.0	10	11	1.6	
7297-45-2	2-Methylnaphthalene-D10		76%					
367-12-4	2,4-Dibromophenol		60%					
81103-79-9	Fluorene-d10		84%					
1718-51-1	Pyrene-D10		90%					

lw
4/18/09

KATAHDIN ANALYTICAL SERVICES
Report of Analytical Results

3

Client: CH2MHill
Project: TO-009 Lejeune
PO No:
Sample Date: 01/22/09
Received Date: 01/24/09
Extraction Date: 01/29/09
Analysis Date: 12-FEB-2009 12:36
Report Date: 02/18/2009
Matrix: SOIL
% Solids: 82.9

Lab ID: SC0365-6
Client ID: MR08-SS337-09A
SDG: TO9-42
Extracted by: CB
Extraction Method: SW846 3550
Analyst: JLP
Analysis Method: SW846 M8270C
Lab Prep Batch: WG60273
Units: ug/Kgdrywt

CAS#	Compound	Flags	Results	DF	PQL	Adj.PQL	Adj.MDL	
91-20-3	Naphthalene	U	12	1.0	10	12	3.1	
91-57-6	2-Methylnaphthalene	~~U~~ UJ	12	1.0	10	12	2.6	BSL
86-73-7	Fluorene	U	12	1.0	10	12	3.8	
85-01-8	Phenanthrene	J	7.9	1.0	10	12	2.2	
206-44-0	Fluoranthene	J	11	1.0	10	12	2.2	
129-00-0	Pyrene	J	9.0	1.0	10	12	2.5	
56-55-3	Benzo(a)anthracene		15	1.0	10	12	2.3	
205-99-2	Benzo(b)fluoranthene		14	1.0	10	12	2.9	
207-08-9	Benzo(k)fluoranthene	J	5.7	1.0	10	12	3.7	
50-32-8	Benzo(a)pyrene	J	6.7	1.0	10	12	4.0	
193-39-5	Indeno(1,2,3-cd)pyrene	J	5.9	1.0	10	12	2.3	
53-70-3	Dibenzo(a,h)anthracene	U	12	1.0	10	12	2.2	
191-24-2	Benzo(g,h,i)perylene	J	8.0	1.0	10	12	2.4	
118-74-1	Hexachlorobenzene	U	12	1.0	10	12	2.2	
87-68-3	Hexachlorobutadiene	U	12	1.0	10	12	2.8	
77-47-4	Hexachlorocyclopentadiene	U	12	1.0	10	12	1.8	
7297-45-2	2-Methylnaphthalene-D10		69%					
367-12-4	2,4-Dibromophenol		56%					
81103-79-9	Fluorene-d10		76%					
1718-51-1	Pyrene-D10		79%					

KW
4/18/09

4

KATAHDIN ANALYTICAL SERVICES
Report of Analytical Results

Client: CH2MHill
Project: TO-009 Lejeune
PO No:
Sample Date: 01/22/09
Received Date: 01/24/09
Extraction Date: 01/29/09
Analysis Date: 12-FEB-2009 13:17
Report Date: 02/18/2009
Matrix: SOIL
% Solids: 89.2

Lab ID: SC0365-8
Client ID: MR08-SS336-09A
SDG: TO9-42
Extracted by: CB
Extraction Method: SW846 3550
Analyst: JLP
Analysis Method: SW846 M8270C
Lab Prep Batch: WG60273
Units: ug/Kgdrywt

CAS#	Compound	Flags	Results	DF	PQL	Adj.PQL	Adj.MDL	
91-20-3	Naphthalene	U	11	1.0	10	11	2.9	
91-57-6	2-Methylnaphthalene	~~J~~ J	7.8	1.0	10	11	2.5	BSL
86-73-7	Fluorene	U	11	1.0	10	11	3.6	
85-01-8	Phenanthrene	J	5.8	1.0	10	11	2.0	
206-44-0	Fluoranthene	J	11	1.0	10	11	2.0	
129-00-0	Pyrene	J	8.3	1.0	10	11	2.4	
56-55-3	Benzo(a)anthracene		14	1.0	10	11	2.1	
205-99-2	Benzo(b)fluoranthene		14	1.0	10	11	2.7	
207-08-9	Benzo(k)fluoranthene	J	5.2	1.0	10	11	3.5	
50-32-8	Benzo(a)pyrene	J	7.1	1.0	10	11	3.7	
193-39-5	Indeno(1,2,3-cd)pyrene	J	5.7	1.0	10	11	2.1	
53-70-3	Dibenzo(a,h)anthracene	U	11	1.0	10	11	2.0	
191-24-2	Benzo(g,h,i)perylene	J	7.1	1.0	10	11	2.2	
118-74-1	Hexachlorobenzene	U	11	1.0	10	11	2.0	
87-68-3	Hexachlorobutadiene	U	11	1.0	10	11	2.6	
77-47-4	Hexachlorocyclopentadiene	U	11	1.0	10	11	1.7	
7297-45-2	2-Methylnaphthalene-D10		75%					
367-12-4	2,4-Dibromophenol		59%					
81103-79-9	Fluorene-d10		78%					
1718-51-1	Pyrene-D10		83%					

fcw 4/18/09

5

KATAHDIN ANALYTICAL SERVICES
Report of Analytical Results

Client: CH2MHill
Project: TO-009 Lejeune
PO No:
Sample Date: 01/22/09
Received Date: 01/24/09
Extraction Date: 01/29/09
Analysis Date: 12-FEB-2009 13:59
Report Date: 02/18/2009
Matrix: SOIL
% Solids: 83.1

Lab ID: SC0365-10
Client ID: MR08-IS336-4-5-09A
SDG: TO9-42
Extracted by: CB
Extraction Method: SW846 3550
Analyst: JLP
Analysis Method: SW846 M8270C
Lab Prep Batch: WG60273
Units: ug/Kgdrywt

CAS#	Compound	Flags	Results	DF	PQL	Adj.PQL	Adj.MDL	
91-20-3	Naphthalene	U	12	1.0	10	12	3.1	
91-57-6	2-Methylnaphthalene	~~U~~ UJ	12	1.0	10	12	2.6	BSL
86-73-7	Fluorene	U	12	1.0	10	12	3.8	
85-01-8	Phenanthrene	U	12	1.0	10	12	2.2	
206-44-0	Fluoranthene	U	12	1.0	10	12	2.2	
129-00-0	Pyrene	U	12	1.0	10	12	2.5	
56-55-3	Benzo(a)anthracene	U	12	1.0	10	12	2.3	
205-99-2	Benzo(b)fluoranthene	U	12	1.0	10	12	2.9	
207-08-9	Benzo(k)fluoranthene	U	12	1.0	10	12	3.7	
50-32-8	Benzo(a)pyrene	U	12	1.0	10	12	4.0	
193-39-5	Indeno(1,2,3-cd)pyrene	U	12	1.0	10	12	2.3	
53-70-3	Dibenzo(a,h)anthracene	U	12	1.0	10	12	2.2	
191-24-2	Benzo(g,h,i)perylene	U	12	1.0	10	12	2.4	
118-74-1	Hexachlorobenzene	U	12	1.0	10	12	2.2	
87-68-3	Hexachlorobutadiene	U	12	1.0	10	12	2.8	
77-47-4	Hexachlorocyclopentadiene	J	11	1.0	10	12	1.8	
7297-45-2	2-Methylnaphthalene-D10		86%					
367-12-4	2,4-Dibromophenol		66%					
81103-79-9	Fluorene-d10		86%					
1718-51-1	Pyrene-D10		88%					

MW
4/18/09

6

KATAHDIN ANALYTICAL SERVICES
Report of Analytical Results

Client: CH2MHill
Project: TO-009 Lejeune
PO No:
Sample Date: 01/22/09
Received Date: 01/24/09
Extraction Date: 01/29/09
Analysis Date: 12-FEB-2009 14:41
Report Date: 02/18/2009
Matrix: SOIL
% Solids: 88.8

Lab ID: SC0365-12
Client ID: MR08-IS335-4-5-09A
SDG: TO9-42
Extracted by: CB
Extraction Method: SW846 3550
Analyst: JLP
Analysis Method: SW846 M8270C
Lab Prep Batch: WG60273
Units: ug/Kgdrywt

CAS#	Compound	Flags	Results	DF	PQL	Adj.PQL	Adj.MDL	
91-20-3	Naphthalene	U	11	1.0	10	11	2.9	
91-57-6	2-Methylnaphthalene	~~J~~ J	8.3	1.0	10	11	2.5	BSL
86-73-7	Fluorene	U	11	1.0	10	11	3.6	
85-01-8	Phenanthrene	J	4.9	1.0	10	11	2.0	
206-44-0	Fluoranthene	J	2.2	1.0	10	11	2.0	
129-00-0	Pyrene	U	11	1.0	10	11	2.4	
56-55-3	Benzo(a)anthracene		12	1.0	10	11	2.1	
205-99-2	Benzo(b)fluoranthene	U	11	1.0	10	11	2.7	
207-08-9	Benzo(k)fluoranthene	U	11	1.0	10	11	3.5	
50-32-8	Benzo(a)pyrene	U	11	1.0	10	11	3.7	
193-39-5	Indeno(1,2,3-cd)pyrene	J	2.6	1.0	10	11	2.1	
53-70-3	Dibenzo(a,h)anthracene	J	2.4	1.0	10	11	2.0	
191-24-2	Benzo(g,h,i)perylene		18	1.0	10	11	2.2	
118-74-1	Hexachlorobenzene	J	2.0	1.0	10	11	2.0	
87-68-3	Hexachlorobutadiene	U	11	1.0	10	11	2.6	
77-47-4	Hexachlorocyclopentadiene	J	11	1.0	10	11	1.7	
7297-45-2	2-Methylnaphthalene-D10		82%					
367-12-4	2,4-Dibromophenol		66%					
81103-79-9	Fluorene-d10		87%					
1718-51-1	Pyrene-D10		96%					

RW 4/18/09

7

KATAHDIN ANALYTICAL SERVICES
Report of Analytical Results

Client: CH2MHill
Project: TO-009 Lejeune
PO No:
Sample Date: 01/22/09
Received Date: 01/24/09
Extraction Date: 01/29/09
Analysis Date: 13-FEB-2009 00:11
Report Date: 02/18/2009
Matrix: SOIL
% Solids: 82.5

Lab ID: SC0365-14RA
Client ID: MR08-SS335-09A
SDG: TO9-42
Extracted by: CB
Extraction Method: SW846 3550
Analyst: JCG
Analysis Method: SW846 M8270C
Lab Prep Batch: WG60273
Units: ug/Kgdrywt

CAS#	Compound	Flags	Results	DF	PQL	Adj.PQL	Adj.MDL
91-20-3	Naphthalene	U	12	1.0	10	12	3.2
91-57-6	2-Methylnaphthalene	~~J~~ J	6.2	1.0	10	12	2.7 BSL
86-73-7	Fluorene	U	12	1.0	10	12	3.9
85-01-8	Phenanthrene		51	1.0	10	12	2.2
206-44-0	Fluoranthene		140	1.0	10	12	2.2
129-00-0	Pyrene		120	1.0	10	12	2.5
56-55-3	Benzo(a)anthracene		63	1.0	10	12	2.3
205-99-2	Benzo(b)fluoranthene		92	1.0	10	12	2.9
207-08-9	Benzo(k)fluoranthene		53	1.0	10	12	3.8
50-32-8	Benzo(a)pyrene		63	1.0	10	12	4.0
193-39-5	Indeno(1,2,3-cd)pyrene		40	1.0	10	12	2.3
53-70-3	Dibenzo(a,h)anthracene		16	1.0	10	12	2.2
191-24-2	Benzo(g,h,i)perylene		44	1.0	10	12	2.4
118-74-1	Hexachlorobenzene	U	12	1.0	10	12	2.2
87-68-3	Hexachlorobutadiene	U	12	1.0	10	12	2.8
77-47-4	Hexachlorocyclopentadiene	U	12	1.0	10	12	1.8
7297-45-2	2-Methylnaphthalene-D10		73%				
367-12-4	2,4-Dibromophenol		81%				
81103-79-9	Fluorene-d10		81%				
1718-51-1	Pyrene-D10		105%				

lw 4/18/09

KATAHDIN ANALYTICAL SERVICES
Report of Analytical Results

Client: CH2MHill
Project: TO-009 Lejeune
PO No:
Sample Date: 01/22/09
Received Date: 01/24/09
Extraction Date: 01/29/09
Analysis Date: 17-FEB-2009 19:36
Report Date: 02/18/2009
Matrix: SOIL
% Solids: 96.0

Lab ID: SC0365-16RA
Client ID: MR08-SS334-09A
SDG: TO9-42
Extracted by: CB
Extraction Method: SW846 3550
Analyst: JCG
Analysis Method: SW846 M8270C
Lab Prep Batch: WG60273
Units: ug/Kgdrywt

CAS#	Compound	Flags	Results	DF	PQL	Adj.PQL	Adj.MDL
91-20-3	Naphthalene	U	10	1.0	10	10	2.7
91-57-6	2-Methylnaphthalene	~~J~~ UJ	10	1.0	10	10	2.3 BSL
86-73-7	Fluorene	U	10	1.0	10	10	3.3
85-01-8	Phenanthrene		25	1.0	10	10	1.9
206-44-0	Fluoranthene		72	1.0	10	10	1.9
129-00-0	Pyrene		63	1.0	10	10	2.2
56-55-3	Benzo(a)anthracene		34	1.0	10	10	2.0
205-99-2	Benzo(b)fluoranthene		47	1.0	10	10	2.5
207-08-9	Benzo(k)fluoranthene		40	1.0	10	10	3.2
50-32-8	Benzo(a)pyrene		33	1.0	10	10	3.4
193-39-5	Indeno(1,2,3-cd)pyrene		28	1.0	10	10	2.0
53-70-3	Dibenzo(a,h)anthracene	J	10	1.0	10	10	1.9
191-24-2	Benzo(g,h,i)perylene		27	1.0	10	10	2.1
118-74-1	Hexachlorobenzene	U	10	1.0	10	10	1.9
87-68-3	Hexachlorobutadiene	U	10	1.0	10	10	2.4
77-47-4	Hexachlorocyclopentadiene	U	10	1.0	10	10	1.6
7297-45-2	2-Methylnaphthalene-D10		61%				
367-12-4	2,4-Dibromophenol		78%				
81103-79-9	Fluorene-d10		73%				
1718-51-1	Pyrene-D10		91%				

LW
4/18/09

9

KATAHDIN ANALYTICAL SERVICES
Report of Analytical Results

Client: CH2MHill
Project: TO-009 Lejeune
PO No:
Sample Date: 01/22/09
Received Date: 01/24/09
Extraction Date: 01/29/09
Analysis Date: 12-FEB-2009 23:29
Report Date: 02/18/2009
Matrix: SOIL
% Solids: 90.0

Lab ID: SC0365-18RA
Client ID: MR08-IS334-4-5-09A
SDG: TO9-42
Extracted by: CB
Extraction Method: SW846 3550
Analyst: JCG
Analysis Method: SW846 M8270C
Lab Prep Batch: WG60273
Units: ug/Kgdrywt

CAS#	Compound	Flags	Results	DF	PQL	Adj.PQL	Adj.MDL
91-20-3	Naphthalene	U	11	1.0	10	11	2.9
91-57-6	2-Methylnaphthalene	~~U~~ J	5.1	1.0	10	11	2.4 BSL
86-73-7	Fluorene	U	11	1.0	10	11	3.6
85-01-8	Phenanthrene	U	11	1.0	10	11	2.0
206-44-0	Fluoranthene	J	2.4	1.0	10	11	2.0
129-00-0	Pyrene	J	2.5	1.0	10	11	2.3
56-55-3	Benzo(a)anthracene	J	7.1	1.0	10	11	2.1
205-99-2	Benzo(b)fluoranthene	J	6.5	1.0	10	11	2.7
207-08-9	Benzo(k)fluoranthene	U	11	1.0	10	11	3.4
50-32-8	Benzo(a)pyrene	U	11	1.0	10	11	3.7
193-39-5	Indeno(1,2,3-cd)pyrene	U	11	1.0	10	11	2.1
53-70-3	Dibenzo(a,h)anthracene	J	2.4	1.0	10	11	2.0
191-24-2	Benzo(g,h,i)perylene	J	2.2	1.0	10	11	2.2
118-74-1	Hexachlorobenzene	U	11	1.0	10	11	2.0
87-68-3	Hexachlorobutadiene	U	11	1.0	10	11	2.6
77-47-4	Hexachlorocyclopentadiene	J	7.9	1.0	10	11	1.7
7297-45-2	2-Methylnaphthalene-D10		66%				
367-12-4	2,4-Dibromophenol		68%				
81103-79-9	Fluorene-d10		68%				
1718-51-1	Pyrene-D10		93%				

lw 4/18/09

10

KATAHDIN ANALYTICAL SERVICES
Report of Analytical Results

Client: CH2MHill
Project: TO-009 Lejeune
PO No:
Sample Date: 01/22/09
Received Date: 01/24/09
Extraction Date: 01/29/09
Analysis Date: 13-FEB-2009 00:53
Report Date: 02/18/2009
Matrix: SOIL
% Solids: 87.4

Lab ID: SC0365-20
Client ID: MR08-SS333-09A
SDG: TO9-42
Extracted by: CB
Extraction Method: SW846 3550
Analyst: JCG
Analysis Method: SW846 M8270C
Lab Prep Batch: WG60273
Units: ug/Kgdrywt

CAS#	Compound	Flags	Results	DF	PQL	Adj.PQL	Adj.MDL
91-20-3	Naphthalene	U	11	1.0	10	11	3.0
91-57-6	2-Methylnaphthalene	~~U~~ J	5.5	1.0	10	11	2.5 BSL
86-73-7	Fluorene	U	11	1.0	10	11	3.7
85-01-8	Phenanthrene		30	1.0	10	11	2.0
206-44-0	Fluoranthene		110	1.0	10	11	2.0
129-00-0	Pyrene		90	1.0	10	11	2.4
56-55-3	Benzo(a)anthracene		47	1.0	10	11	2.2
205-99-2	Benzo(b)fluoranthene		88	1.0	10	11	2.7
207-08-9	Benzo(k)fluoranthene		44	1.0	10	11	3.5
50-32-8	Benzo(a)pyrene		54	1.0	10	11	3.8
193-39-5	Indeno(1,2,3-cd)pyrene		44	1.0	10	11	2.2
53-70-3	Dibenzo(a,h)anthracene		14	1.0	10	11	2.0
191-24-2	Benzo(g,h,i)perylene		47	1.0	10	11	2.3
118-74-1	Hexachlorobenzene	U	11	1.0	10	11	2.0
87-68-3	Hexachlorobutadiene	U	11	1.0	10	11	2.6
77-47-4	Hexachlorocyclopentadiene	U	11	1.0	10	11	1.7
7297-45-2	2-Methylnaphthalene-D10		68%				
367-12-4	2,4-Dibromophenol		79%				
81103-79-9	Fluorene-d10		83%				
1718-51-1	Pyrene-D10		95%				

DW 4/18/09

11

KATAHDIN ANALYTICAL SERVICES
Report of Analytical Results

Client: CH2MHill
Project: TO-009 Lejeune
PO No:
Sample Date: 01/22/09
Received Date: 01/24/09
Extraction Date: 01/29/09
Analysis Date: 13-FEB-2009 01:34
Report Date: 02/18/2009
Matrix: SOIL
% Solids: 87.7

Lab ID: SC0365-22
Client ID: MR08-IS333-4-5-09A
SDG: TO9-42
Extracted by: CB
Extraction Method: SW846 3550
Analyst: JCG
Analysis Method: SW846 M8270C
Lab Prep Batch: WG60273
Units: ug/Kgdrywt

CAS#	Compound	Flags	Results	DF	PQL	Adj.PQL	Adj.MDL	
91-20-3	Naphthalene	U	11	1.0	10	11	3.0	
91-57-6	2-Methylnaphthalene	~~U~~ UJ	11	1.0	10	11	2.5	BSL
86-73-7	Fluorene	U	11	1.0	10	11	3.6	
85-01-8	Phenanthrene	U	11	1.0	10	11	2.0	
206-44-0	Fluoranthene	U	11	1.0	10	11	2.0	
129-00-0	Pyrene	U	11	1.0	10	11	2.4	
56-55-3	Benzo(a)anthracene	J	6.1	1.0	10	11	2.2	
205-99-2	Benzo(b)fluoranthene	U	11	1.0	10	11	2.7	
207-08-9	Benzo(k)fluoranthene	U	11	1.0	10	11	3.5	
50-32-8	Benzo(a)pyrene	U	11	1.0	10	11	3.8	
193-39-5	Indeno(1,2,3-cd)pyrene	U	11	1.0	10	11	2.2	
53-70-3	Dibenzo(a,h)anthracene	U	11	1.0	10	11	2.0	
191-24-2	Benzo(g,h,i)perylene	U	11	1.0	10	11	2.3	
118-74-1	Hexachlorobenzene	U	11	1.0	10	11	2.0	
87-68-3	Hexachlorobutadiene	U	11	1.0	10	11	2.6	
77-47-4	Hexachlorocyclopentadiene	U	11	1.0	10	11	1.7	
7297-45-2	2-Methylnaphthalene-D10		73%					
367-12-4	2,4-Dibromophenol		76%					
81103-79-9	Fluorene-d10		89%					
1718-51-1	Pyrene-D10		94%					

hw
4/18/09

12

KATAHDIN ANALYTICAL SERVICES
Report of Analytical Results

Client: CH2MHill
Project: TO-009 Lejeune
PO No:
Sample Date: 01/22/09
Received Date: 01/24/09
Extraction Date: 01/29/09
Analysis Date: 13-FEB-2009 02:16
Report Date: 02/18/2009
Matrix: SOIL
% Solids: 93.2

Lab ID: SC0365-24
Client ID: MR08-IS332-4-5-09A
SDG: TO9-42
Extracted by: CB
Extraction Method: SW846 3550
Analyst: JCG
Analysis Method: SW846 M8270C
Lab Prep Batch: WG60273
Units: ug/Kgdrywt

CAS#	Compound	Flags	Results	DF	PQL	Adj.PQL	Adj.MDL
91-20-3	Naphthalene	U	11	1.0	10	11	2.8
91-57-6	2-Methylnaphthalene	~~U~~ UJ	11	1.0	10	11	2.4 BSL
86-73-7	Fluorene	U	11	1.0	10	11	3.4
85-01-8	Phenanthrene	U	11	1.0	10	11	1.9
206-44-0	Fluoranthene	U	11	1.0	10	11	1.9
129-00-0	Pyrene	U	11	1.0	10	11	2.2
56-55-3	Benzo(a)anthracene	J	5.4	1.0	10	11	2.0
205-99-2	Benzo(b)fluoranthene	U	11	1.0	10	11	2.6
207-08-9	Benzo(k)fluoranthene	U	11	1.0	10	11	3.3
50-32-8	Benzo(a)pyrene	U	11	1.0	10	11	3.5
193-39-5	Indeno(1,2,3-cd)pyrene	U	11	1.0	10	11	2.0
53-70-3	Dibenzo(a,h)anthracene	U	11	1.0	10	11	1.9
191-24-2	Benzo(g,h,i)perylene	U	11	1.0	10	11	2.1
118-74-1	Hexachlorobenzene	U	11	1.0	10	11	1.9
87-68-3	Hexachlorobutadiene	U	11	1.0	10	11	2.5
77-47-4	Hexachlorocyclopentadiene	U	11	1.0	10	11	1.6
7297-45-2	2-Methylnaphthalene-D10		65%				
367-12-4	2,4-Dibromophenol		71%				
81103-79-9	Fluorene-d10		79%				
1718-51-1	Pyrene-D10		95%				

lw
4/18/09

KATAHDIN ANALYTICAL SERVICES
Report of Analytical Results

Client: CH2MHill
Project: TO-009 Lejeune
PO No:
Sample Date: 01/22/09
Received Date: 01/24/09
Extraction Date: 01/29/09
Analysis Date: 13-FEB-2009 02:58
Report Date: 02/18/2009
Matrix: SOIL
% Solids: 82.7

Lab ID: SC0365-26
Client ID: MR08-SS332-09A
SDG: TO9-42
Extracted by: CB
Extraction Method: SW846 3550
Analyst: JCG
Analysis Method: SW846 M8270C
Lab Prep Batch: WG60273
Units: ug/Kgdrywt

CAS#	Compound	Flags	Results	DF	PQL	Adj.PQL	Adj.MDL
91-20-3	Naphthalene	U	12	1.0	10	12	3.1
91-57-6	2-Methylnaphthalene	~~J~~ J	6.7	1.0	10	12	2.7 BSL
86-73-7	Fluorene	J	6.2	1.0	10	12	3.9
85-01-8	Phenanthrene		130	1.0	10	12	2.2
206-44-0	Fluoranthene	~~E~~	380 ~~350~~	2~~1~~.0	10 24	~~12~~	4.4 ~~2.2~~ R DL
129-00-0	Pyrene		290	1.0	10	12	2.5
56-55-3	Benzo(a)anthracene		170	1.0	10	12	2.3
205-99-2	Benzo(b)fluoranthene		250	1.0	10	12	2.9
207-08-9	Benzo(k)fluoranthene		160	1.0	10	12	3.7
50-32-8	Benzo(a)pyrene		180	1.0	10	12	4.0
193-39-5	Indeno(1,2,3-cd)pyrene		130	1.0	10	12	2.3
53-70-3	Dibenzo(a,h)anthracene		42	1.0	10	12	2.2
191-24-2	Benzo(g,h,i)perylene		130	1.0	10	12	2.4
118-74-1	Hexachlorobenzene	U	12	1.0	10	12	2.2
87-68-3	Hexachlorobutadiene	U	12	1.0	10	12	2.8
77-47-4	Hexachlorocyclopentadiene	U	12	1.0	10	12	1.8
7297-45-2	2-Methylnaphthalene-D10		62%				
367-12-4	2,4-Dibromophenol		84%				
81103-79-9	Fluorene-d10		81%				
1718-51-1	Pyrene-D10		93%				

gw 4/18/09

13DL

KATAHDIN ANALYTICAL SERVICES
Report of Analytical Results

Client: CH2MHill
Project: TO-009 Lejeune
PO No:
Sample Date: 01/22/09
Received Date: 01/24/09
Extraction Date: 01/29/09
Analysis Date: 13-FEB-2009 21:11
Report Date: 02/18/2009
Matrix: SOIL
% Solids: 82.7

Lab ID: SC0365-26DL
Client ID: MR08-SS332-09A
SDG: TO9-42
Extracted by: CB
Extraction Method: SW846 3550
Analyst: JCG
Analysis Method: SW846 M8270C
Lab Prep Batch: WG60273
Units: ug/Kgdrywt

use original

CAS#	Compound	Flags	Results	DF	PQL	Adj.PQL	Adj.MDL
91-20-3	Naphthalene	U	24	2.0	10	24	6.3
91-57-6	2-Methylnaphthalene	~~U~~ J	12	2.0	10	24	5.3 BSL
86-73-7	Fluorene	U	24	2.0	10	24	7.7
85-01-8	Phenanthrene		190	2.0	10	24	4.4
206-44-0	Fluoranthene		380	2.0	10	24	4.4
129-00-0	Pyrene		310	2.0	10	24	5.1
56-55-3	Benzo(a)anthracene		180	2.0	10	24	4.6
205-99-2	Benzo(b)fluoranthene		250	2.0	10	24	5.8
207-08-9	Benzo(k)fluoranthene		190	2.0	10	24	7.5
50-32-8	Benzo(a)pyrene		190	2.0	10	24	8.0
193-39-5	Indeno(1,2,3-cd)pyrene		160	2.0	10	24	4.6
53-70-3	Dibenzo(a,h)anthracene		65	2.0	10	24	4.4
191-24-2	Benzo(g,h,i)perylene		150	2.0	10	24	4.8
118-74-1	Hexachlorobenzene	U	24	2.0	10	24	4.4
87-68-3	Hexachlorobutadiene	U	24	2.0	10	24	5.6
77-47-4	Hexachlorocyclopentadiene	U	24	2.0	10	24	3.6
7297-45-2	2-Methylnaphthalene-D10		70%				
367-12-4	2,4-Dibromophenol		94%				
81103-79-9	Fluorene-d10		91%				
1718-51-1	Pyrene-D10		93%				

R DL

JW 4/18/09

KATAHDIN ANALYTICAL SERVICES
Report of Analytical Results

Client: CH2MHill
Project: TO-009 Lejeune
PO No:
Sample Date: 01/22/09
Received Date: 01/24/09
Extraction Date: 01/29/09
Analysis Date: 13-FEB-2009 03:39
Report Date: 02/18/2009
Matrix: SOIL
% Solids: 92.3

Lab ID: SC0365-28
Client ID: MR08-SS343-09A
SDG: TO9-42
Extracted by: CB
Extraction Method: SW846 3550
Analyst: JCG
Analysis Method: SW846 M8270C
Lab Prep Batch: WG60273
Units: ug/Kgdrywt

CAS#	Compound	Flags	Results	DF	PQL	Adj.PQL	Adj.MDL	
91-20-3	Naphthalene	U	11	1.0	10	11	2.8	
91-57-6	2-Methylnaphthalene	~~U~~ UJ	11	1.0	10	11	2.4	BSL
86-73-7	Fluorene	U	11	1.0	10	11	3.5	
85-01-8	Phenanthrene		26	1.0	10	11	1.9	
206-44-0	Fluoranthene	J	7.7	1.0	10	11	1.9	
129-00-0	Pyrene		25	1.0	10	11	2.3	
56-55-3	Benzo(a)anthracene		19	1.0	10	11	2.0	
205-99-2	Benzo(b)fluoranthene	U	11	1.0	10	11	2.6	
207-08-9	Benzo(k)fluoranthene	U	11	1.0	10	11	3.4	
50-32-8	Benzo(a)pyrene		16	1.0	10	11	3.6	
193-39-5	Indeno(1,2,3-cd)pyrene	U	11	1.0	10	11	2.0	
53-70-3	Dibenzo(a,h)anthracene	U	11	1.0	10	11	1.9	
191-24-2	Benzo(g,h,i)perylene	U	11	1.0	10	11	2.2	
118-74-1	Hexachlorobenzene	U	11	1.0	10	11	1.9	
87-68-3	Hexachlorobutadiene	U	11	1.0	10	11	2.5	
77-47-4	Hexachlorocyclopentadiene	U	11	1.0	10	11	1.6	
7297-45-2	2-Methylnaphthalene-D10		76%					
367-12-4	2,4-Dibromophenol		96%					
81103-79-9	Fluorene-d10		97%					
1718-51-1	Pyrene-D10		105%					

MW 4/18/09

15

KATAHDIN ANALYTICAL SERVICES
Report of Analytical Results

Client: CH2MHill
Project: TO-009 Lejeune
PO No:
Sample Date: 01/22/09
Received Date: 01/24/09
Extraction Date: 01/29/09
Analysis Date: 13-FEB-2009 04:21
Report Date: 02/18/2009
Matrix: SOIL
% Solids: 91.7

Lab ID: SC0365-30
Client ID: MR08-IS343-4-5-09A
SDG: TO9-42
Extracted by: CB
Extraction Method: SW846 3550
Analyst: JCG
Analysis Method: SW846 M8270C
Lab Prep Batch: WG60273
Units: ug/Kgdrywt

CAS#	Compound	Flags	Results	DF	PQL	Adj.PQL	Adj.MDL
91-20-3	Naphthalene	U	11	1.0	10	11	2.8
91-57-6	2-Methylnaphthalene	~~U~~ UJ	11	1.0	10	11	2.4 BSL
86-73-7	Fluorene	U	11	1.0	10	11	3.5
85-01-8	Phenanthrene	J	8.9	1.0	10	11	2.0
206-44-0	Fluoranthene	J	4.2	1.0	10	11	2.0
129-00-0	Pyrene	J	7.0	1.0	10	11	2.3
56-55-3	Benzo(a)anthracene	J	8.8	1.0	10	11	2.1
205-99-2	Benzo(b)fluoranthene	U	11	1.0	10	11	2.6
207-08-9	Benzo(k)fluoranthene	U	11	1.0	10	11	3.4
50-32-8	Benzo(a)pyrene	U	11	1.0	10	11	3.6
193-39-5	Indeno(1,2,3-cd)pyrene	U	11	1.0	10	11	2.1
53-70-3	Dibenzo(a,h)anthracene	U	11	1.0	10	11	2.0
191-24-2	Benzo(g,h,i)perylene	U	11	1.0	10	11	2.2
118-74-1	Hexachlorobenzene	U	11	1.0	10	11	2.0
87-68-3	Hexachlorobutadiene	U	11	1.0	10	11	2.5
77-47-4	Hexachlorocyclopentadiene	U	11	1.0	10	11	1.6
7297-45-2	2-Methylnaphthalene-D10		80%				
367-12-4	2,4-Dibromophenol		94%				
81103-79-9	Fluorene-d10		88%				
1718-51-1	Pyrene-D10		111%				

Mes 4/18/09

16

KATAHDIN ANALYTICAL SERVICES
Report of Analytical Results

Client: CH2MHill
Project: TO-009 Lejeune
PO No:
Sample Date: 01/22/09
Received Date: 01/24/09
Extraction Date: 01/29/09
Analysis Date: 13-FEB-2009 05:02
Report Date: 02/18/2009
Matrix: SOIL
% Solids: 81.5

Lab ID: SC0365-32
Client ID: MR08-SS342-09A
SDG: TO9-42
Extracted by: CB
Extraction Method: SW846 3550
Analyst: JCG
Analysis Method: SW846 M8270C
Lab Prep Batch: WG60273
Units: ug/Kgdrywt

CAS#	Compound	Flags	Results	DF	PQL	Adj.PQL	Adj.MDL
91-20-3	Naphthalene	U	12	1.0	10	12	3.2
91-57-6	2-Methylnaphthalene	~~J~~ J	6.4	1.0	10	12	2.7 BSL
86-73-7	Fluorene	U	12	1.0	10	12	3.9
85-01-8	Phenanthrene		30	1.0	10	12	2.2
206-44-0	Fluoranthene		110	1.0	10	12	2.2
129-00-0	Pyrene		100	1.0	10	12	2.6
56-55-3	Benzo(a)anthracene		57	1.0	10	12	2.3
205-99-2	Benzo(b)fluoranthene		100	1.0	10	12	2.9
207-08-9	Benzo(k)fluoranthene		58	1.0	10	12	3.8
50-32-8	Benzo(a)pyrene		66	1.0	10	12	4.0
193-39-5	Indeno(1,2,3-cd)pyrene		48	1.0	10	12	2.3
53-70-3	Dibenzo(a,h)anthracene		22	1.0	10	12	2.2
191-24-2	Benzo(g,h,i)perylene		43	1.0	10	12	2.4
118-74-1	Hexachlorobenzene	U	12	1.0	10	12	2.2
87-68-3	Hexachlorobutadiene	U	12	1.0	10	12	2.8
77-47-4	Hexachlorocyclopentadiene	U	12	1.0	10	12	1.8
7297-45-2	2-Methylnaphthalene-D10		62%				
367-12-4	2,4-Dibromophenol		79%				
81103-79-9	Fluorene-d10		70%				
1718-51-1	Pyrene-D10		95%				

RLW
4/1/09

KATAHDIN ANALYTICAL SERVICES
Report of Analytical Results

Client: CH2MHill
Project: TO-009 Lejeune
PO No:
Sample Date: 01/22/09
Received Date: 01/24/09
Extraction Date: 01/29/09
Analysis Date: 13-FEB-2009 05:43
Report Date: 02/18/2009
Matrix: SOIL
% Solids: 90.3

Lab ID: SC0365-34
Client ID: MR08-IS341-4-5-09A
SDG: TO9-42
Extracted by: CB
Extraction Method: SW846 3550
Analyst: JCG
Analysis Method: SW846 M8270C
Lab Prep Batch: WG60273
Units: ug/Kgdrywt

CAS#	Compound	Flags	Results	DF	PQL	Adj.PQL	Adj.MDL
91-20-3	Naphthalene	U	11	1.0	10	11	2.9
91-57-6	2-Methylnaphthalene	~~U~~ UJ	11	1.0	10	11	2.4 BSL
86-73-7	Fluorene	U	11	1.0	10	11	3.5
85-01-8	Phenanthrene	U	11	1.0	10	11	2.0
206-44-0	Fluoranthene	J	2.6	1.0	10	11	2.0
129-00-0	Pyrene	U	11	1.0	10	11	2.3
56-55-3	Benzo(a)anthracene	J	7.0	1.0	10	11	2.1
205-99-2	Benzo(b)fluoranthene	U	11	1.0	10	11	2.6
207-08-9	Benzo(k)fluoranthene	U	11	1.0	10	11	3.4
50-32-8	Benzo(a)pyrene	U	11	1.0	10	11	3.6
193-39-5	Indeno(1,2,3-cd)pyrene	J	2.2	1.0	10	11	2.1
53-70-3	Dibenzo(a,h)anthracene	U	11	1.0	10	11	2.0
191-24-2	Benzo(g,h,i)perylene	U	11	1.0	10	11	2.2
118-74-1	Hexachlorobenzene	U	11	1.0	10	11	2.0
87-68-3	Hexachlorobutadiene	U	11	1.0	10	11	2.5
77-47-4	Hexachlorocyclopentadiene	U	11	1.0	10	11	1.7
7297-45-2	2-Methylnaphthalene-D10		68%				
367-12-4	2,4-Dibromophenol		77%				
81103-79-9	Fluorene-d10		80%				
1718-51-1	Pyrene-D10		94%				

fw
6/18/09

KATAHDIN ANALYTICAL SERVICES
Report of Analytical Results

Client: CH2MHill
Project: TO-009 Lejeune
PO No:
Sample Date: 01/22/09
Received Date: 01/24/09
Extraction Date: 01/29/09
Analysis Date: 13-FEB-2009 19:08
Report Date: 02/18/2009
Matrix: SOIL
% Solids: 86.1

Lab ID: SC0365-36
Client ID: MR08-SS341-09A
SDG: TO9-42
Extracted by: CB
Extraction Method: SW846 3550
Analyst: JCG
Analysis Method: SW846 M8270C
Lab Prep Batch: WG60273
Units: ug/Kgdrywt

CAS#	Compound	Flags	Results	DF	PQL	Adj.PQL	Adj.MDL
91-20-3	Naphthalene	U	12	1.0	10	12	3.0
91-57-6	2-Methylnaphthalene	~~J~~ J	5.8	1.0	10	12	2.6 BSL
86-73-7	Fluorene	J	4.4	1.0	10	12	3.7
85-01-8	Phenanthrene		96	1.0	10	12	2.1
206-44-0	Fluoranthene		180	1.0	10	12	2.1
129-00-0	Pyrene		150	1.0	10	12	2.4
56-55-3	Benzo(a)anthracene		89	1.0	10	12	2.2
205-99-2	Benzo(b)fluoranthene		130	1.0	10	12	2.8
207-08-9	Benzo(k)fluoranthene		61	1.0	10	12	3.6
50-32-8	Benzo(a)pyrene		83	1.0	10	12	3.8
193-39-5	Indeno(1,2,3-cd)pyrene		63	1.0	10	12	2.2
53-70-3	Dibenzo(a,h)anthracene		25	1.0	10	12	2.1
191-24-2	Benzo(g,h,i)perylene		55	1.0	10	12	2.3
118-74-1	Hexachlorobenzene	U	12	1.0	10	12	2.1
87-68-3	Hexachlorobutadiene	U	12	1.0	10	12	2.7
77-47-4	Hexachlorocyclopentadiene	U	12	1.0	10	12	1.7
7297-45-2	2-Methylnaphthalene-D10		68%				
367-12-4	2,4-Dibromophenol		83%				
81103-79-9	Fluorene-d10		84%				
1718-51-1	Pyrene-D10		97%				

lw 4/18/09

KATAHDIN ANALYTICAL SERVICES
Report of Analytical Results

Client: CH2MHill
Project: TO-009 Lejeune
PO No:
Sample Date: 01/22/09
Received Date: 01/24/09
Extraction Date: 01/29/09
Analysis Date: 13-FEB-2009 19:49
Report Date: 02/18/2009
Matrix: SOIL
% Solids: 86.3

Lab ID: SC0365-38
Client ID: MR08-SS340-09A
SDG: TO9-42
Extracted by: CB
Extraction Method: SW846 3550
Analyst: JCG
Analysis Method: SW846 M8270C
Lab Prep Batch: WG60273
Units: ug/Kgdrywt

CAS#	Compound	Flags	Results	DF	PQL	Adj.PQL	Adj.MDL
91-20-3	Naphthalene	U	12	1.0	10	12	3.0
91-57-6	2-Methylnaphthalene	~~J~~ J	5.6	1.0	10	12	2.5 BSL
86-73-7	Fluorene	U	12	1.0	10	12	3.7
85-01-8	Phenanthrene		28	1.0	10	12	2.1
206-44-0	Fluoranthene		49	1.0	10	12	2.1
129-00-0	Pyrene		36	1.0	10	12	2.4
56-55-3	Benzo(a)anthracene		25	1.0	10	12	2.2
205-99-2	Benzo(b)fluoranthene		32	1.0	10	12	2.8
207-08-9	Benzo(k)fluoranthene		18	1.0	10	12	3.6
50-32-8	Benzo(a)pyrene		21	1.0	10	12	3.8
193-39-5	Indeno(1,2,3-cd)pyrene		16	1.0	10	12	2.2
53-70-3	Dibenzo(a,h)anthracene	J	7.1	1.0	10	12	2.1
191-24-2	Benzo(g,h,i)perylene		14	1.0	10	12	2.3
118-74-1	Hexachlorobenzene	U	12	1.0	10	12	2.1
87-68-3	Hexachlorobutadiene	U	12	1.0	10	12	2.7
77-47-4	Hexachlorocyclopentadiene	U	12	1.0	10	12	1.7
7297-45-2	2-Methylnaphthalene-D10		63%				
367-12-4	2,4-Dibromophenol		78%				
81103-79-9	Fluorene-d10		81%				
1718-51-1	Pyrene-D10		89%				

4/18/09

KATAHDIN ANALYTICAL SERVICES
Report of Analytical Results

Client: CH2MHill
Project: TO-009 Lejeune
PO No:
Sample Date: 01/22/09
Received Date: 01/24/09
Extraction Date: 01/29/09
Analysis Date: 13-FEB-2009 20:30
Report Date: 02/18/2009
Matrix: SOIL
% Solids: 81.2

Lab ID: SC0365-40
Client ID: MR08-IS340-4-5-09A
SDG: T09-42
Extracted by: CB
Extraction Method: SW846 3550
Analyst: JCG
Analysis Method: SW846 M8270C
Lab Prep Batch: WG60295
Units: ug/Kgdrywt

CAS#	Compound	Flags	Results	DF	PQL	Adj.PQL	Adj.MDL
91-20-3	Naphthalene	U	12	1.0	10	12	3.2
91-57-6	2-Methylnaphthalene	J	5.9	1.0	10	12	2.7
86-73-7	Fluorene	U	12	1.0	10	12	3.9
85-01-8	Phenanthrene		33	1.0	10	12	2.2
206-44-0	Fluoranthene		77	1.0	10	12	2.2
129-00-0	Pyrene		64	1.0	10	12	2.6
56-55-3	Benzo(a)anthracene		35	1.0	10	12	2.3
205-99-2	Benzo(b)fluoranthene		63	1.0	10	12	3.0
207-08-9	Benzo(k)fluoranthene		38	1.0	10	12	3.8
50-32-8	Benzo(a)pyrene		40	1.0	10	12	4.1
193-39-5	Indeno(1,2,3-cd)pyrene		36	1.0	10	12	2.3
53-70-3	Dibenzo(a,h)anthracene		15	1.0	10	12	2.2
191-24-2	Benzo(g,h,i)perylene		33	1.0	10	12	2.5
118-74-1	Hexachlorobenzene	U	12	1.0	10	12	2.2
87-68-3	Hexachlorobutadiene	U	12	1.0	10	12	2.8
77-47-4	Hexachlorocyclopentadiene	U	12	1.0	10	12	1.8
7297-45-2	2-Methylnaphthalene-D10		66%				
367-12-4	2,4-Dibromophenol		75%				
81103-79-9	Fluorene-d10		78%				
1718-51-1	Pyrene-D10		94%				

lw
4/18/09

ENVIRONMENTAL
Data Services, Inc.

SEMIVOLATILE ORGANIC COMPOUNDS

USEPA Region IV - Level IV Review

Site: MCB Camp Lejeune, TO-09 SDG #: TO9-42

Client: CH2M HILL, Inc., Virginia Beach, Virginia Date: April 18, 2009

Laboratory: Katahdin Analytical Services, Scarborough, Maine Reviewer: Nancy Weaver

EDS ID	Client Sample ID	Laboratory Sample ID	Matrix
1	MR08-IS314-4-5-09A	SC0365-1	Soil
2	MR08-IS337-4.5-5.5	SC0365-3	Soil
3	MR08-SS337-09A	SC0365-5	Soil
4	MR08-SS336-09A	SC0365-7	Soil
5	MR08-IS336-4-5-09A	SC0365-9	Soil
6	MR08-IS335-4-5-09A	SC0365-11	Soil
7	MR08-SS335-09A	SC0365-13	Soil
8	MR08-SS334-09A	SC0365-15	Soil
9	MR08-IS334-4-5-09A	SC0365-17	Soil
10	MR08-SS333-09A	SC0365-19	Soil
11	MR08-IS333-4-5-09A	SC0365-21	Soil
12	MR08-IS332-4-5-09A	SC0365-23	Soil
13	MR08-SS332-09A	SC0365-25	Soil
14	MR08-SS343-09A	SC0365-27	Soil
15	MR08-IS343-4-5-09A	SC0365-29	Soil
16	MR08-SS342-09A	SC0365-31	Soil
17	MR08-IS341-4-5-09A	SC0365-33	Soil
18	MR08-SS341-09A	SC0365-35	Soil
19	MR08-SS340-09A	SC0365-37	Soil
20	MR08-IS340-4-5-09A	SC0365-39	Soil

The USEPA "Contract Laboratory Program National Functional Guidelines for Organic Data Review," October 1999, and professional judgement were used in evaluating the data in this summary report.

Holding Times - All samples were extracted within 14 days for soil samples and analyzed within 40 days for all samples.

GC/MS Tuning - All of the DFTPP tunes in the initial and continuing calibrations met the percent relative abundance criteria.

Initial Calibration - The initial calibrations exhibited acceptable %RSD and mean RRF values except the following.

ICAL Date	Compound	%RSD/RRF	Qualifier	Affected Samples
02/11/09	4, 6-Dinitro-2-methylphenol	68.71%	J/UJ	20
	Benzaldehyde	48.07%	J/UJ	20
	Pentachlorophenol	50.06%	J/UJ	20
	1,1'-Biphenyl	31.02%	J/UJ	20
	2, 4-Dinitrophenol	79.64%	J/UJ	20
02/11/09	Benzaldehyde	37.85%	J/UJ	1-19
	4-Nitrophenol	30.97%	J/UJ	1-19

Continuing Calibration - The continuing calibrations exhibited acceptable %D and RRF values except the following.

CCAL Date	Compound	%D/RRF	Qualifier	Affected Samples
02/13/09	Benzaldehyde	87.95%	None	Already qualified due to ICAL
	2, 2'-Oxybis (1-chloropropane)	37.42%	J/UJ	20
02/16/09	Benzaldehyde	88.67%	None	Already qualified due to ICAL
	Di-n-octylphthalate	34.13%	J/UJ	1-4
02/17/09 (0749)	Benzaldehyde	92.99%	None	Already qualified due to ICAL
	2, 4-Dinitrophenol	38.25%	J/UJ	5-15
	4-Nitroaniline	26.22%	J/UJ	5-15
	Di-n-octylphthalate	29.93%	J/UJ	5-15
02/17/09 (2007)	Benzaldehyde	40.67%	None	Already qualified due to ICAL
	Di-n-octylphthalate	31.54%	J/UJ	16-19

Surrogates - All samples exhibited acceptable surrogate recoveries.

MS/MSD - A MS/MSD sample was not analyzed.

Laboratory Control Sample - The LCS samples exhibited acceptable %R values except the following.

LCS ID	Compound	%R	Qualifier	Affected Samples
WG60292-LCS	2, 4-Dinitrophenol	12%	None	See ICAL

Internal Standard (IS) Area Performance - All internal standards met response and retention time (RT) criteria.

Method Blank - The method blanks were free of contamination.

Field, Equipment Blank - Field QC results are summarized below.

Blank ID	Compound	Conc. ug/L	Action Level ug/L	Qualifier	Affected Samples
MR08-FB012609	None - ND	-	-	-	-
MR08-EB012209	None - ND	-	-	-	-

Field Duplicates - Field duplicate samples were not analyzed.

Tentatively Identified Compounds (TICs) - TICs were not reported.

Compound Quantitation - No discrepancies were identified.

KATAHDIN ANALYTICAL SERVICES
Report of Analytical Results

Client: CH2MHill
Project: TO-009 Lejeune
PO No:
Sample Date: 01/21/09
Received Date: 01/24/09
Extraction Date: 01/29/09
Analysis Date: 16-FEB-2009 17:04
Report Date: 02/18/2009
Matrix: SOIL
% Solids: 83.8

Lab ID: SC0365-1
Client ID: MR08-IS314-4-5-09A
SDG: TO9-42
Extracted by: CB
Extraction Method: SW846 3550
Analyst: JCG
Analysis Method: SW846 8270C
Lab Prep Batch: WG60272
Units: ug/Kgdrywt

CAS#	Compound	Flags	Results	DF	PQL	Adj.PQL	Adj.MDL	
100-52-7	Benzaldehyde	~~U~~ UJ	600	1.0	500	600	140	ICB
108-95-2	Phenol	U	600	1.0	500	600	190	
111-44-4	Bis(2-Chloroethyl)ether	U	390	1.0	330	390	97	
95-57-8	2-Chlorophenol	U	600	1.0	500	600	200	
95-48-7	2-Methylphenol	U	720	1.0	600	720	240	
108-60-1	2,2'-Oxybis(1-chloropropane)	U	390	1.0	330	390	110	
98-86-2	Acetophenone	U	720	1.0	600	720	210	
621-64-7	N-Nitroso-di-n-propylamine	U	390	1.0	330	390	99	
65794-96-9	3&4-Methylphenol	U	720	1.0	600	720	220	
67-72-1	Hexachloroethane	U	390	1.0	330	390	110	
98-95-3	Nitrobenzene	U	390	1.0	330	390	110	
78-59-1	Isophorone	U	390	1.0	330	390	89	
88-75-5	2-Nitrophenol	U	720	1.0	600	720	200	
105-67-9	2,4-Dimethylphenol	U	600	1.0	500	600	200	
111-91-1	Bis(2-Chloroethoxy)methane	U	390	1.0	330	390	110	
120-83-2	2,4-Dichlorophenol	U	600	1.0	500	600	180	
106-47-8	4-Chloroaniline	U	600	1.0	500	600	140	
105-60-2	Caprolactam	U	600	1.0	500	600	170	
59-50-7	4-Chloro-3-Methylphenol	U	600	1.0	500	600	200	
88-06-2	2,4,6-Trichlorophenol	U	600	1.0	500	600	180	
95-95-4	2,4,5-Trichlorophenol	U	600	1.0	500	600	180	
91-58-7	2-Chloronaphthalene	U	390	1.0	330	390	100	
92-52-4	1,1'-Biphenyl	U	390	1.0	330	390	87	
88-74-4	2-Nitroaniline	U	600	1.0	500	600	89	
131-11-3	Dimethyl Phthalate	U	390	1.0	330	390	93	
606-20-2	2,6-Dinitrotoluene	U	390	1.0	330	390	94	
208-96-8	Acenaphthylene	U	390	1.0	330	390	84	
99-09-2	3-Nitroaniline	U	600	1.0	500	600	110	
83-32-9	Acenaphthene	U	390	1.0	330	390	78	
51-28-5	2,4-Dinitrophenol	U	1400	1.0	1200	1400	450	
132-64-9	Dibenzofuran	U	390	1.0	330	390	94	
100-02-7	4-Nitrophenol	~~U~~ UJ	1400	1.0	1200	1400	370	ICB
121-14-2	2,4-Dinitrotoluene	U	390	1.0	330	390	100	
84-66-2	Diethylphthalate	U	390	1.0	330	390	95	
7005-72-3	4-Chlorophenyl-phenylether	U	390	1.0	330	390	93	
100-01-6	4-Nitroaniline	U	600	1.0	500	600	160	
534-52-1	4,6-Dinitro-2-Methylphenol	U	1400	1.0	1200	1400	400	
86-30-6	N-Nitrosodiphenylamine	U	790	1.0	660	790	260	
101-55-3	4-Bromophenyl-phenylether	U	390	1.0	330	390	100	
1912-24-9	Atrazine	U	390	1.0	330	390	110	
87-86-5	Pentachlorophenol	U	980	1.0	820	980	280	
120-12-7	Anthracene	U	390	1.0	330	390	100	
86-74-8	Carbazole	U	600	1.0	500	600	130	

lw
4/18/09

KATAHDIN ANALYTICAL SERVICES
Report of Analytical Results

Client: CH2MHill
Project: TO-009 Lejeune
PO No:
Sample Date: 01/21/09
Received Date: 01/24/09
Extraction Date: 01/29/09
Analysis Date: 16-FEB-2009 17:04
Report Date: 02/18/2009
Matrix: SOIL
% Solids: 83.8

Lab ID: SC0365-1
Client ID: MR08-IS314-4-5-09A
SDG: TO9-42
Extracted by: CB
Extraction Method: SW846 3550
Analyst: JCG
Analysis Method: SW846 8270C
Lab Prep Batch: WG60272
Units: ug/Kgdrywt

CAS#	Compound	Flags	Results	DF	PQL	Adj.PQL	Adj.MDL	
84-74-2	Di-n-butylphthalate	U	390	1.0	330	390	120	
85-68-7	Butylbenzylphthalate	U	390	1.0	330	390	110	
91-94-1	3,3'-Dichlorobenzidine	U	600	1.0	500	600	140	
218-01-9	Chrysene	U	390	1.0	330	390	110	
117-81-7	bis(2-Ethylhexyl)phthalate	J	130	1.0	330	390	120	
117-84-0	Di-n-octylphthalate	~~J~~ UJ	390	1.0	330	390	250	CCH
367-12-4	2-Fluorophenol		66%					
13127-88-3	Phenol-D6		84%					
4165-60-0	Nitrobenzene-D5		73%					
321-60-8	2-Fluorobiphenyl		74%					
118-79-6	2,4,6-Tribromophenol		65%					
1718-51-0	Terphenyl-D14		68%					

LW 4/18/09

2

KATAHDIN ANALYTICAL SERVICES
Report of Analytical Results

Client: CH2MHill
Project: TO-009 Lejeune
PO No:
Sample Date: 01/22/09
Received Date: 01/24/09
Extraction Date: 01/29/09
Analysis Date: 16-FEB-2009 17:46
Report Date: 02/18/2009
Matrix: SOIL
% Solids: 90.9

Lab ID: SC0365-3
Client ID: MR08-IS337-4.5-5.5
SDG: TO9-42
Extracted by: CB
Extraction Method: SW846 3550
Analyst: JCG
Analysis Method: SW846 8270C
Lab Prep Batch: WG60272
Units: ug/Kgdrywt

CAS#	Compound	Flags	Results	DF	PQL	Adj.PQL	Adj.MDL	
100-52-7	Benzaldehyde	~~U~~ UJ	550	1.0	500	550	130	ICB
108-95-2	Phenol	U	550	1.0	500	550	170	
111-44-4	Bis(2-Chloroethyl)ether	U	360	1.0	330	360	89	
95-57-8	2-Chlorophenol	U	550	1.0	500	550	180	
95-48-7	2-Methylphenol	U	660	1.0	600	660	220	
108-60-1	2,2'-Oxybis(1-chloropropane)	U	360	1.0	330	360	98	
98-86-2	Acetophenone	U	660	1.0	600	660	200	
621-64-7	N-Nitroso-di-n-propylamine	U	360	1.0	330	360	91	
65794-96-9	3&4-Methylphenol	U	660	1.0	600	660	200	
67-72-1	Hexachloroethane	U	360	1.0	330	360	100	
98-95-3	Nitrobenzene	U	360	1.0	330	360	100	
78-59-1	Isophorone	U	360	1.0	330	360	82	
88-75-5	2-Nitrophenol	U	660	1.0	600	660	180	
105-67-9	2,4-Dimethylphenol	U	550	1.0	500	550	180	
111-91-1	Bis(2-Chloroethoxy)methane	U	360	1.0	330	360	100	
120-83-2	2,4-Dichlorophenol	U	550	1.0	500	550	160	
106-47-8	4-Chloroaniline	U	550	1.0	500	550	130	
105-60-2	Caprolactam	U	550	1.0	500	550	160	
59-50-7	4-Chloro-3-Methylphenol	U	550	1.0	500	550	180	
88-06-2	2,4,6-Trichlorophenol	U	550	1.0	500	550	170	
95-95-4	2,4,5-Trichlorophenol	U	550	1.0	500	550	170	
91-58-7	2-Chloronaphthalene	U	360	1.0	330	360	96	
92-52-4	1,1'-Biphenyl	U	360	1.0	330	360	80	
88-74-4	2-Nitroaniline	U	550	1.0	500	550	82	
131-11-3	Dimethyl Phthalate	U	360	1.0	330	360	86	
606-20-2	2,6-Dinitrotoluene	U	360	1.0	330	360	87	
208-96-8	Acenaphthylene	U	360	1.0	330	360	77	
99-09-2	3-Nitroaniline	U	550	1.0	500	550	100	
83-32-9	Acenaphthene	U	360	1.0	330	360	71	
51-28-5	2,4-Dinitrophenol	U	1300	1.0	1200	1300	410	
132-64-9	Dibenzofuran	U	360	1.0	330	360	87	
100-02-7	4-Nitrophenol	~~U~~ UJ	1300	1.0	1200	1300	340	ICB
121-14-2	2,4-Dinitrotoluene	U	360	1.0	330	360	93	
84-66-2	Diethylphthalate	U	360	1.0	330	360	88	
7005-72-3	4-Chlorophenyl-phenylether	U	360	1.0	330	360	86	
100-01-6	4-Nitroaniline	U	550	1.0	500	550	150	
534-52-1	4,6-Dinitro-2-Methylphenol	U	1300	1.0	1200	1300	370	
86-30-6	N-Nitrosodiphenylamine	U	720	1.0	660	720	240	
101-55-3	4-Bromophenyl-phenylether	U	360	1.0	330	360	93	
1912-24-9	Atrazine	U	360	1.0	330	360	100	
87-86-5	Pentachlorophenol	U	900	1.0	820	900	260	
120-12-7	Anthracene	U	360	1.0	330	360	92	
86-74-8	Carbazole	U	550	1.0	500	550	120	

LW
4/18/09

2

KATAHDIN ANALYTICAL SERVICES
Report of Analytical Results

Client: CH2MHill
Project: TO-009 Lejeune
PO No:
Sample Date: 01/22/09
Received Date: 01/24/09
Extraction Date: 01/29/09
Analysis Date: 16-FEB-2009 17:46
Report Date: 02/18/2009
Matrix: SOIL
% Solids: 90.9

Lab ID: SC0365-3
Client ID: MR08-IS337-4.5-5.5
SDG: TO9-42
Extracted by: CB
Extraction Method: SW846 3550
Analyst: JCG
Analysis Method: SW846 8270C
Lab Prep Batch: WG60272
Units: ug/Kgdrywt

CAS#	Compound	Flags	Results	DF	PQL	Adj.PQL	Adj.MDL	
84-74-2	Di-n-butylphthalate	U	360	1.0	330	360	110	
85-68-7	Butylbenzylphthalate	U	360	1.0	330	360	100	
91-94-1	3,3'-Dichlorobenzidine	U	550	1.0	500	550	120	
218-01-9	Chrysene	U	360	1.0	330	360	100	
117-81-7	bis(2-Ethylhexyl)phthalate	U	360	1.0	330	360	110	
117-84-0	Di-n-octylphthalate	~~U~~ UJ	360	1.0	330	360	230	CCH
367-12-4	2-Fluorophenol		75%					
13127-88-3	Phenol-D6		92%					
4165-60-0	Nitrobenzene-D5		78%					
321-60-8	2-Fluorobiphenyl		88%					
118-79-6	2,4,6-Tribromophenol		75%					
1718-51-0	Terphenyl-D14		71%					

lw
4/18/09

3

KATAHDIN ANALYTICAL SERVICES
Report of Analytical Results

Client: CH2MHill
Project: TO-009 Lejeune
PO No:
Sample Date: 01/22/09
Received Date: 01/24/09
Extraction Date: 01/29/09
Analysis Date: 16-FEB-2009 18:29
Report Date: 02/18/2009
Matrix: SOIL
% Solids: 82.9

Lab ID: SC0365-5
Client ID: MR08-SS337-09A
SDG: TO9-42
Extracted by: CB
Extraction Method: SW846 3550
Analyst: JCG
Analysis Method: SW846 8270C
Lab Prep Batch: WG60272
Units: ug/Kgdrywt

CAS#	Compound	Flags	Results	DF	PQL	Adj.PQL	Adj.MDL	
100-52-7	Benzaldehyde	~~U~~ UJ	600	1.0	500	600	140	JCB
108-95-2	Phenol	U	600	1.0	500	600	190	
111-44-4	Bis(2-Chloroethyl)ether	U	400	1.0	330	400	98	
95-57-8	2-Chlorophenol	U	600	1.0	500	600	200	
95-48-7	2-Methylphenol	U	720	1.0	600	720	240	
108-60-1	2,2'-Oxybis(1-chloropropane)	U	400	1.0	330	400	110	
98-86-2	Acetophenone	U	720	1.0	600	720	210	
621-64-7	N-Nitroso-di-n-propylamine	U	400	1.0	330	400	100	
65794-96-9	3&4-Methylphenol	U	720	1.0	600	720	220	
67-72-1	Hexachloroethane	U	400	1.0	330	400	120	
98-95-3	Nitrobenzene	U	400	1.0	330	400	110	
78-59-1	Isophorone	U	400	1.0	330	400	90	
88-75-5	2-Nitrophenol	U	720	1.0	600	720	200	
105-67-9	2,4-Dimethylphenol	U	600	1.0	500	600	200	
111-91-1	Bis(2-Chloroethoxy)methane	U	400	1.0	330	400	120	
120-83-2	2,4-Dichlorophenol	U	600	1.0	500	600	180	
106-47-8	4-Chloroaniline	U	600	1.0	500	600	140	
105-60-2	Caprolactam	U	600	1.0	500	600	170	
59-50-7	4-Chloro-3-Methylphenol	U	600	1.0	500	600	200	
88-06-2	2,4,6-Trichlorophenol	U	600	1.0	500	600	190	
95-95-4	2,4,5-Trichlorophenol	U	600	1.0	500	600	190	
91-58-7	2-Chloronaphthalene	U	400	1.0	330	400	100	
92-52-4	1,1'-Biphenyl	U	400	1.0	330	400	88	
88-74-4	2-Nitroaniline	U	600	1.0	500	600	90	
131-11-3	Dimethyl Phthalate	U	400	1.0	330	400	94	
606-20-2	2,6-Dinitrotoluene	U	400	1.0	330	400	95	
208-96-8	Acenaphthylene	U	400	1.0	330	400	84	
99-09-2	3-Nitroaniline	U	600	1.0	500	600	110	
83-32-9	Acenaphthene	U	400	1.0	330	400	78	
51-28-5	2,4-Dinitrophenol	U	1400	1.0	1200	1400	450	
132-64-9	Dibenzofuran	U	400	1.0	330	400	95	
100-02-7	4-Nitrophenol	~~U~~ UJ	1400	1.0	1200	1400	370	JCB
121-14-2	2,4-Dinitrotoluene	U	400	1.0	330	400	100	
84-66-2	Diethylphthalate	U	400	1.0	330	400	96	
7005-72-3	4-Chlorophenyl-phenylether	U	400	1.0	330	400	94	
100-01-6	4-Nitroaniline	U	600	1.0	500	600	160	
534-52-1	4,6-Dinitro-2-Methylphenol	U	1400	1.0	1200	1400	410	
86-30-6	N-Nitrosodiphenylamine	U	800	1.0	660	800	260	
101-55-3	4-Bromophenyl-phenylether	U	400	1.0	330	400	100	
1912-24-9	Atrazine	U	400	1.0	330	400	110	
87-86-5	Pentachlorophenol	U	990	1.0	820	990	280	
120-12-7	Anthracene	U	400	1.0	330	400	100	
86-74-8	Carbazole	U	600	1.0	500	600	130	

LCW 4/18/09

3

KATAHDIN ANALYTICAL SERVICES
Report of Analytical Results

Client: CH2MHill
Project: TO-009 Lejeune
PO No:
Sample Date: 01/22/09
Received Date: 01/24/09
Extraction Date: 01/29/09
Analysis Date: 16-FEB-2009 18:29
Report Date: 02/18/2009
Matrix: SOIL
% Solids: 82.9

Lab ID: SC0365-5
Client ID: MR08-SS337-09A
SDG: TO9-42
Extracted by: CB
Extraction Method: SW846 3550
Analyst: JCG
Analysis Method: SW846 8270C
Lab Prep Batch: WG60272
Units: ug/Kgdrywt

CAS#	Compound	Flags	Results	DF	PQL	Adj.PQL	Adj.MDL	
84-74-2	Di-n-butylphthalate	U	400	1.0	330	400	120	
85-68-7	Butylbenzylphthalate	U	400	1.0	330	400	110	
91-94-1	3,3'-Dichlorobenzidine	U	600	1.0	500	600	140	
218-01-9	Chrysene	U	400	1.0	330	400	110	
117-81-7	bis(2-Ethylhexyl)phthalate	U	400	1.0	330	400	120	
117-84-0	Di-n-octylphthalate	~~U~~ UJ	400	1.0	330	400	250	CCH
367-12-4	2-Fluorophenol		73%					
13127-88-3	Phenol-D6		84%					
4165-60-0	Nitrobenzene-D5		72%					
321-60-8	2-Fluorobiphenyl		80%					
118-79-6	2,4,6-Tribromophenol		96%					
1718-51-0	Terphenyl-D14		73%					

fw
4/18/09

4

KATAHDIN ANALYTICAL SERVICES
Report of Analytical Results

Client: CH2MHill
Project: TO-009 Lejeune
PO No:
Sample Date: 01/22/09
Received Date: 01/24/09
Extraction Date: 01/29/09
Analysis Date: 16-FEB-2009 19:11
Report Date: 02/18/2009
Matrix: SOIL
% Solids: 89.2

Lab ID: SC0365-7
Client ID: MR08-SS336-09A
SDG: TO9-42
Extracted by: CB
Extraction Method: SW846 3550
Analyst: JCG
Analysis Method: SW846 8270C
Lab Prep Batch: WG60272
Units: ug/Kgdrywt

CAS#	Compound	Flags	Results	DF	PQL	Adj.PQL	Adj.MDL	
100-52-7	Benzaldehyde	~~U~~ UJ	560	1.0	500	560	130	ICB
108-95-2	Phenol	U	560	1.0	500	560	170	
111-44-4	Bis(2-Chloroethyl)ether	U	370	1.0	330	370	91	
95-57-8	2-Chlorophenol	U	560	1.0	500	560	180	
95-48-7	2-Methylphenol	U	670	1.0	600	670	220	
108-60-1	2,2'-Oxybis(1-chloropropane)	U	370	1.0	330	370	100	
98-86-2	Acetophenone	U	670	1.0	600	670	200	
621-64-7	N-Nitroso-di-n-propylamine	U	370	1.0	330	370	93	
65794-96-9	3&4-Methylphenol	U	670	1.0	600	670	210	
67-72-1	Hexachloroethane	U	370	1.0	330	370	110	
98-95-3	Nitrobenzene	U	370	1.0	330	370	100	
78-59-1	Isophorone	U	370	1.0	330	370	84	
88-75-5	2-Nitrophenol	U	670	1.0	600	670	190	
105-67-9	2,4-Dimethylphenol	U	560	1.0	500	560	180	
111-91-1	Bis(2-Chloroethoxy)methane	U	370	1.0	330	370	110	
120-83-2	2,4-Dichlorophenol	U	560	1.0	500	560	170	
106-47-8	4-Chloroaniline	U	560	1.0	500	560	130	
105-60-2	Caprolactam	U	560	1.0	500	560	160	
59-50-7	4-Chloro-3-Methylphenol	U	560	1.0	500	560	190	
88-06-2	2,4,6-Trichlorophenol	U	560	1.0	500	560	170	
95-95-4	2,4,5-Trichlorophenol	U	560	1.0	500	560	170	
91-58-7	2-Chloronaphthalene	U	370	1.0	330	370	98	
92-52-4	1,1'-Biphenyl	U	370	1.0	330	370	82	
88-74-4	2-Nitroaniline	U	560	1.0	500	560	84	
131-11-3	Dimethyl Phthalate	U	370	1.0	330	370	87	
606-20-2	2,6-Dinitrotoluene	U	370	1.0	330	370	88	
208-96-8	Acenaphthylene	U	370	1.0	330	370	78	
99-09-2	3-Nitroaniline	U	560	1.0	500	560	100	
83-32-9	Acenaphthene	U	370	1.0	330	370	73	
51-28-5	2,4-Dinitrophenol	U	1300	1.0	1200	1300	420	
132-64-9	Dibenzofuran	U	370	1.0	330	370	88	
100-02-7	4-Nitrophenol	~~U~~ UJ	1300	1.0	1200	1300	350	ICB
121-14-2	2,4-Dinitrotoluene	U	370	1.0	330	370	95	
84-66-2	Diethylphthalate	U	370	1.0	330	370	90	
7005-72-3	4-Chlorophenyl-phenylether	U	370	1.0	330	370	87	
100-01-6	4-Nitroaniline	U	560	1.0	500	560	150	
534-52-1	4,6-Dinitro-2-Methylphenol	U	1300	1.0	1200	1300	380	
86-30-6	N-Nitrosodiphenylamine	U	740	1.0	660	740	240	
101-55-3	4-Bromophenyl-phenylether	U	370	1.0	330	370	95	
1912-24-9	Atrazine	U	370	1.0	330	370	100	
87-86-5	Pentachlorophenol	U	920	1.0	820	920	260	
120-12-7	Anthracene	U	370	1.0	330	370	94	
86-74-8	Carbazole	U	560	1.0	500	560	120	

MW 4/18/09

4

KATAHDIN ANALYTICAL SERVICES
Report of Analytical Results

Client: CH2MHill
Project: TO-009 Lejeune
PO No:
Sample Date: 01/22/09
Received Date: 01/24/09
Extraction Date: 01/29/09
Analysis Date: 16-FEB-2009 19:11
Report Date: 02/18/2009
Matrix: SOIL
% Solids: 89.2

Lab ID: SC0365-7
Client ID: MR08-SS336-09A
SDG: TO9-42
Extracted by: CB
Extraction Method: SW846 3550
Analyst: JCG
Analysis Method: SW846 8270C
Lab Prep Batch: WG60272
Units: ug/Kgdrywt

CAS#	Compound	Flags	Results	DF	PQL	Adj.PQL	Adj.MDL	
84-74-2	Di-n-butylphthalate	U	370	1.0	330	370	110	
85-68-7	Butylbenzylphthalate	U	370	1.0	330	370	100	
91-94-1	3,3'-Dichlorobenzidine	U	560	1.0	500	560	130	
218-01-9	Chrysene	U	370	1.0	330	370	110	
117-81-7	bis(2-Ethylhexyl)phthalate	U	370	1.0	330	370	110	
117-84-0	Di-n-octylphthalate	~~U~~ UJ	370	1.0	330	370	240	CCH
367-12-4	2-Fluorophenol		59%					
13127-88-3	Phenol-D6		75%					
4165-60-0	Nitrobenzene-D5		65%					
321-60-8	2-Fluorobiphenyl		69%					
118-79-6	2,4,6-Tribromophenol		49%					
1718-51-0	Terphenyl-D14		64%					

JW
4/18/09

5

KATAHDIN ANALYTICAL SERVICES
Report of Analytical Results

Client: CH2MHill
Project: TO-009 Lejeune
PO No:
Sample Date: 01/22/09
Received Date: 01/24/09
Extraction Date: 01/29/09
Analysis Date: 17-FEB-2009 08:32
Report Date: 02/18/2009
Matrix: SOIL
% Solids: 83.1

Lab ID: SC0365-9
Client ID: MR08-IS336-4-5-09A
SDG: TO9-42
Extracted by: CB
Extraction Method: SW846 3550
Analyst: JLP
Analysis Method: SW846 8270C
Lab Prep Batch: WG60272
Units: ug/Kgdrywt

CAS#	Compound	Flags	Results	DF	PQL	Adj.PQL	Adj.MDL	
100-52-7	Benzaldehyde	~~U~~ UJ	600	1.0	500	600	140	ICB
108-95-2	Phenol	U	600	1.0	500	600	190	
111-44-4	Bis(2-Chloroethyl)ether	U	400	1.0	330	400	97	
95-57-8	2-Chlorophenol	U	600	1.0	500	600	200	
95-48-7	2-Methylphenol	U	720	1.0	600	720	240	
108-60-1	2,2'-Oxybis(1-chloropropane)	U	400	1.0	330	400	110	
98-86-2	Acetophenone	U	720	1.0	600	720	210	
621-64-7	N-Nitroso-di-n-propylamine	U	400	1.0	330	400	100	
65794-96-9	3&4-Methylphenol	U	720	1.0	600	720	220	
67-72-1	Hexachloroethane	U	400	1.0	330	400	120	
98-95-3	Nitrobenzene	U	400	1.0	330	400	110	
78-59-1	Isophorone	U	400	1.0	330	400	90	
88-75-5	2-Nitrophenol	U	720	1.0	600	720	200	
105-67-9	2,4-Dimethylphenol	U	600	1.0	500	600	200	
111-91-1	Bis(2-Chloroethoxy)methane	U	400	1.0	330	400	120	
120-83-2	2,4-Dichlorophenol	U	600	1.0	500	600	180	
106-47-8	4-Chloroaniline	U	600	1.0	500	600	140	
105-60-2	Caprolactam	U	600	1.0	500	600	170	
59-50-7	4-Chloro-3-Methylphenol	U	600	1.0	500	600	200	
88-06-2	2,4,6-Trichlorophenol	U	600	1.0	500	600	190	
95-95-4	2,4,5-Trichlorophenol	U	600	1.0	500	600	190	
91-58-7	2-Chloronaphthalene	U	400	1.0	330	400	100	
92-52-4	1,1'-Biphenyl	U	400	1.0	330	400	88	
88-74-4	2-Nitroaniline	U	600	1.0	500	600	90	
131-11-3	Dimethyl Phthalate	U	400	1.0	330	400	94	
606-20-2	2,6-Dinitrotoluene	U	400	1.0	330	400	95	
208-96-8	Acenaphthylene	U	400	1.0	330	400	84	
99-09-2	3-Nitroaniline	U	600	1.0	500	600	110	
83-32-9	Acenaphthene	U	400	1.0	330	400	78	
51-28-5	2,4-Dinitrophenol	~~U~~ UJ	1400	1.0	1200	1400	450	CCH
132-64-9	Dibenzofuran	U	400	1.0	330	400	95	
100-02-7	4-Nitrophenol	~~U~~ UJ	1400	1.0	1200	1400	370	ICB
121-14-2	2,4-Dinitrotoluene	U	400	1.0	330	400	100	
84-66-2	Diethylphthalate	U	400	1.0	330	400	96	
7005-72-3	4-Chlorophenyl-phenylether	U	400	1.0	330	400	94	
100-01-6	4-Nitroaniline	~~U~~ UJ	600	1.0	500	600	160	CCH
534-52-1	4,6-Dinitro-2-Methylphenol	U	1400	1.0	1200	1400	400	
86-30-6	N-Nitrosodiphenylamine	U	790	1.0	660	790	260	
101-55-3	4-Bromophenyl-phenylether	U	400	1.0	330	400	100	
1912-24-9	Atrazine	U	400	1.0	330	400	110	
87-86-5	Pentachlorophenol	U	990	1.0	820	990	280	
120-12-7	Anthracene	U	400	1.0	330	400	100	
86-74-8	Carbazole	U	600	1.0	500	600	130	

WJ
4/18/09

5

KATAHDIN ANALYTICAL SERVICES
Report of Analytical Results

Client: CH2MHill
Project: TO-009 Lejeune
PO No:
Sample Date: 01/22/09
Received Date: 01/24/09
Extraction Date: 01/29/09
Analysis Date: 17-FEB-2009 08:32
Report Date: 02/18/2009
Matrix: SOIL
% Solids: 83.1

Lab ID: SC0365-9
Client ID: MR08-IS336-4-5-09A
SDG: TO9-42
Extracted by: CB
Extraction Method: SW846 3550
Analyst: JLP
Analysis Method: SW846 8270C
Lab Prep Batch: WG60272
Units: ug/Kgdrywt

CAS#	Compound	Flags	Results	DF	PQL	Adj.PQL	Adj.MDL
84-74-2	Di-n-butylphthalate	U	400	1.0	330	400	120
85-68-7	Butylbenzylphthalate	U	400	1.0	330	400	110
91-94-1	3,3'-Dichlorobenzidine	U	600	1.0	500	600	140
218-01-9	Chrysene	U	400	1.0	330	400	110
117-81-7	bis(2-Ethylhexyl)phthalate	U	400	1.0	330	400	120
117-84-0	Di-n-octylphthalate	~~U~~ UJ	400	1.0	330	400	250 CCH
367-12-4	2-Fluorophenol		69%				
13127-88-3	Phenol-D6		84%				
4165-60-0	Nitrobenzene-D5		68%				
321-60-8	2-Fluorobiphenyl		74%				
118-79-6	2,4,6-Tribromophenol		64%				
1718-51-0	Terphenyl-D14		68%				

LW
4/18/09

6

KATAHDIN ANALYTICAL SERVICES
Report of Analytical Results

Client: CH2MHill
Project: TO-009 Lejeune
PO No:
Sample Date: 01/22/09
Received Date: 01/24/09
Extraction Date: 01/29/09
Analysis Date: 17-FEB-2009 09:14
Report Date: 02/18/2009
Matrix: SOIL
% Solids: 88.8

Lab ID: SC0365-11
Client ID: MR08-IS335-4-5-09A
SDG: TO9-42
Extracted by: CB
Extraction Method: SW846 3550
Analyst: JLP
Analysis Method: SW846 8270C
Lab Prep Batch: WG60272
Units: ug/Kgdrywt

CAS#	Compound	Flags	Results	DF	PQL	Adj.PQL	Adj.MDL	
100-52-7	Benzaldehyde	~~U~~ UJ	560	1.0	500	560	140	ICB
108-95-2	Phenol	U	560	1.0	500	560	180	
111-44-4	Bis(2-Chloroethyl)ether	U	370	1.0	330	370	91	
95-57-8	2-Chlorophenol	U	560	1.0	500	560	180	
95-48-7	2-Methylphenol	U	680	1.0	600	680	220	
108-60-1	2,2'-Oxybis(1-chloropropane)	U	370	1.0	330	370	100	
98-86-2	Acetophenone	U	680	1.0	600	680	200	
621-64-7	N-Nitroso-di-n-propylamine	U	370	1.0	330	370	93	
65794-96-9	3&4-Methylphenol	U	680	1.0	600	680	210	
67-72-1	Hexachloroethane	U	370	1.0	330	370	110	
98-95-3	Nitrobenzene	U	370	1.0	330	370	100	
78-59-1	Isophorone	U	370	1.0	330	370	84	
88-75-5	2-Nitrophenol	U	680	1.0	600	680	190	
105-67-9	2,4-Dimethylphenol	U	560	1.0	500	560	180	
111-91-1	Bis(2-Chloroethoxy)methane	U	370	1.0	330	370	110	
120-83-2	2,4-Dichlorophenol	U	560	1.0	500	560	170	
106-47-8	4-Chloroaniline	U	560	1.0	500	560	130	
105-60-2	Caprolactam	U	560	1.0	500	560	160	
59-50-7	4-Chloro-3-Methylphenol	U	560	1.0	500	560	190	
88-06-2	2,4,6-Trichlorophenol	U	560	1.0	500	560	170	
95-95-4	2,4,5-Trichlorophenol	U	560	1.0	500	560	170	
91-58-7	2-Chloronaphthalene	U	370	1.0	330	370	98	
92-52-4	1,1'-Biphenyl	U	370	1.0	330	370	82	
88-74-4	2-Nitroaniline	U	560	1.0	500	560	84	
131-11-3	Dimethyl Phthalate	U	370	1.0	330	370	88	
606-20-2	2,6-Dinitrotoluene	U	370	1.0	330	370	89	
208-96-8	Acenaphthylene	U	370	1.0	330	370	79	
99-09-2	3-Nitroaniline	U	560	1.0	500	560	100	
83-32-9	Acenaphthene	U	370	1.0	330	370	73	
51-28-5	2,4-Dinitrophenol	~~U~~ UJ	1400	1.0	1200	1400	420	CCH
132-64-9	Dibenzofuran	U	370	1.0	330	370	89	
100-02-7	4-Nitrophenol	~~U~~ UJ	1400	1.0	1200	1400	350	ICB
121-14-2	2,4-Dinitrotoluene	U	370	1.0	330	370	96	
84-66-2	Diethylphthalate	U	370	1.0	330	370	90	
7005-72-3	4-Chlorophenyl-phenylether	U	370	1.0	330	370	88	
100-01-6	4-Nitroaniline	~~U~~ UJ	560	1.0	500	560	150	CCH
534-52-1	4,6-Dinitro-2-Methylphenol	U	1400	1.0	1200	1400	380	
86-30-6	N-Nitrosodiphenylamine	U	740	1.0	660	740	250	
101-55-3	4-Bromophenyl-phenylether	U	370	1.0	330	370	96	
1912-24-9	Atrazine	U	370	1.0	330	370	100	
87-86-5	Pentachlorophenol	U	920	1.0	820	920	270	
120-12-7	Anthracene	U	370	1.0	330	370	94	
86-74-8	Carbazole	U	560	1.0	500	560	120	

Rev 4/18/09

6

KATAHDIN ANALYTICAL SERVICES
Report of Analytical Results

Client: CH2MHill
Project: TO-009 Lejeune
PO No:
Sample Date: 01/22/09
Received Date: 01/24/09
Extraction Date: 01/29/09
Analysis Date: 17-FEB-2009 09:14
Report Date: 02/18/2009
Matrix: SOIL
% Solids: 88.8

Lab ID: SC0365-11
Client ID: MR08-IS335-4-5-09A
SDG: TO9-42
Extracted by: CB
Extraction Method: SW846 3550
Analyst: JLP
Analysis Method: SW846 8270C
Lab Prep Batch: WG60272
Units: ug/Kgdrywt

CAS#	Compound	Flags	Results	DF	PQL	Adj.PQL	Adj.MDL	
84-74-2	Di-n-butylphthalate	U	370	1.0	330	370	110	
85-68-7	Butylbenzylphthalate	U	370	1.0	330	370	100	
91-94-1	3,3'-Dichlorobenzidine	U	560	1.0	500	560	130	
218-01-9	Chrysene	U	370	1.0	330	370	110	
117-81-7	bis(2-Ethylhexyl)phthalate	U	370	1.0	330	370	110	
117-84-0	Di-n-octylphthalate	~~U~~ WJ	370	1.0	330	370	240	CCH
367-12-4	2-Fluorophenol		63%					
13127-88-3	Phenol-D6		73%					
4165-60-0	Nitrobenzene-D5		62%					
321-60-8	2-Fluorobiphenyl		63%					
118-79-6	2,4,6-Tribromophenol		59%					
1718-51-0	Terphenyl-D14		68%					

JLW 4/18/09

7

KATAHDIN ANALYTICAL SERVICES
Report of Analytical Results

Client: CH2MHill
Project: TO-009 Lejeune
PO No:
Sample Date: 01/22/09
Received Date: 01/24/09
Extraction Date: 01/29/09
Analysis Date: 17-FEB-2009 09:57
Report Date: 02/18/2009
Matrix: SOIL
% Solids: 82.5

Lab ID: SC0365-13
Client ID: MR08-SS335-09A
SDG: TO9-42
Extracted by: CB
Extraction Method: SW846 3550
Analyst: JLP
Analysis Method: SW846 8270C
Lab Prep Batch: WG60272
Units: ug/Kgdrywt

CAS#	Compound	Flags	Results	DF	PQL	Adj.PQL	Adj.MDL	
100-52-7	Benzaldehyde	~~U~~ UJ	610	1.0	500	610	140	ICB
108-95-2	Phenol	U	610	1.0	500	610	190	
111-44-4	Bis(2-Chloroethyl)ether	U	400	1.0	330	400	98	
95-57-8	2-Chlorophenol	U	610	1.0	500	610	200	
95-48-7	2-Methylphenol	U	730	1.0	600	730	240	
108-60-1	2,2'-Oxybis(1-chloropropane)	U	400	1.0	330	400	110	
98-86-2	Acetophenone	U	730	1.0	600	730	220	
621-64-7	N-Nitroso-di-n-propylamine	U	400	1.0	330	400	100	
65794-96-9	3&4-Methylphenol	U	730	1.0	600	730	230	
67-72-1	Hexachloroethane	U	400	1.0	330	400	120	
98-95-3	Nitrobenzene	U	400	1.0	330	400	110	
78-59-1	Isophorone	U	400	1.0	330	400	91	
88-75-5	2-Nitrophenol	U	730	1.0	600	730	200	
105-67-9	2,4-Dimethylphenol	U	610	1.0	500	610	200	
111-91-1	Bis(2-Chloroethoxy)methane	U	400	1.0	330	400	120	
120-83-2	2,4-Dichlorophenol	U	610	1.0	500	610	180	
106-47-8	4-Chloroaniline	U	610	1.0	500	610	140	
105-60-2	Caprolactam	U	610	1.0	500	610	170	
59-50-7	4-Chloro-3-Methylphenol	U	610	1.0	500	610	200	
88-06-2	2,4,6-Trichlorophenol	U	610	1.0	500	610	190	
95-95-4	2,4,5-Trichlorophenol	U	610	1.0	500	610	190	
91-58-7	2-Chloronaphthalene	U	400	1.0	330	400	100	
92-52-4	1,1'-Biphenyl	U	400	1.0	330	400	88	
88-74-4	2-Nitroaniline	U	610	1.0	500	610	91	
131-11-3	Dimethyl Phthalate	U	400	1.0	330	400	94	
606-20-2	2,6-Dinitrotoluene	U	400	1.0	330	400	96	
208-96-8	Acenaphthylene	U	400	1.0	330	400	85	
99-09-2	3-Nitroaniline	U	610	1.0	500	610	110	
83-32-9	Acenaphthene	U	400	1.0	330	400	79	
51-28-5	2,4-Dinitrophenol	~~U~~ UJ	1400	1.0	1200	1400	460	CCH
132-64-9	Dibenzofuran	U	400	1.0	330	400	96	
100-02-7	4-Nitrophenol	~~U~~ UJ	1400	1.0	1200	1400	370	ICB
121-14-2	2,4-Dinitrotoluene	U	400	1.0	330	400	100	
84-66-2	Diethylphthalate	U	400	1.0	330	400	97	
7005-72-3	4-Chlorophenyl-phenylether	U	400	1.0	330	400	94	
100-01-6	4-Nitroaniline	~~U~~ UJ	610	1.0	500	610	160	CCH
534-52-1	4,6-Dinitro-2-Methylphenol	U	1400	1.0	1200	1400	410	
86-30-6	N-Nitrosodiphenylamine	U	800	1.0	660	800	260	
101-55-3	4-Bromophenyl-phenylether	U	400	1.0	330	400	100	
1912-24-9	Atrazine	U	400	1.0	330	400	110	
87-86-5	Pentachlorophenol	U	990	1.0	820	990	290	
120-12-7	Anthracene	U	400	1.0	330	400	100	
86-74-8	Carbazole	U	610	1.0	500	610	130	

RW 4/18/09

7

KATAHDIN ANALYTICAL SERVICES
Report of Analytical Results

Client: CH2MHill
Project: TO-009 Lejeune
PO No:
Sample Date: 01/22/09
Received Date: 01/24/09
Extraction Date: 01/29/09
Analysis Date: 17-FEB-2009 09:57
Report Date: 02/18/2009
Matrix: SOIL
% Solids: 82.5

Lab ID: SC0365-13
Client ID: MR08-SS335-09A
SDG: TO9-42
Extracted by: CB
Extraction Method: SW846 3550
Analyst: JLP
Analysis Method: SW846 8270C
Lab Prep Batch: WG60272
Units: ug/Kgdrywt

CAS#	Compound	Flags	Results	DF	PQL	Adj.PQL	Adj.MDL	
84-74-2	Di-n-butylphthalate	U	400	1.0	330	400	120	
85-68-7	Butylbenzylphthalate	U	400	1.0	330	400	110	
91-94-1	3,3'-Dichlorobenzidine	U	610	1.0	500	610	140	
218-01-9	Chrysene	U	400	1.0	330	400	120	
117-81-7	bis(2-Ethylhexyl)phthalate	J	140	1.0	330	400	120	
117-84-0	Di-n-octylphthalate	~~J~~ UJ	400	1.0	330	400	260	CCH
367-12-4	2-Fluorophenol		72%					
13127-88-3	Phenol-D6		82%					
4165-60-0	Nitrobenzene-D5		63%					
321-60-8	2-Fluorobiphenyl		78%					
118-79-6	2,4,6-Tribromophenol		94%					
1718-51-0	Terphenyl-D14		72%					

lw 4/18/09

8

KATAHDIN ANALYTICAL SERVICES
Report of Analytical Results

Client: CH2MHill
Project: TO-009 Lejeune
PO No:
Sample Date: 01/22/09
Received Date: 01/24/09
Extraction Date: 01/29/09
Analysis Date: 17-FEB-2009 10:39
Report Date: 02/18/2009
Matrix: SOIL
% Solids: 96.0

Lab ID: SC0365-15
Client ID: MR08-SS334-09A
SDG: TO9-42
Extracted by: CB
Extraction Method: SW846 3550
Analyst: JLP
Analysis Method: SW846 8270C
Lab Prep Batch: WG60272
Units: ug/Kgdrywt

CAS#	Compound	Flags	Results	DF	PQL	Adj.PQL	Adj.MDL	
100-52-7	Benzaldehyde	~~U~~ UJ	520	1.0	500	520	120	ICB
108-95-2	Phenol	U	520	1.0	500	520	160	
111-44-4	Bis(2-Chloroethyl)ether	U	340	1.0	330	340	84	
95-57-8	2-Chlorophenol	U	520	1.0	500	520	170	
95-48-7	2-Methylphenol	U	620	1.0	600	620	210	
108-60-1	2,2'-Oxybis(1-chloropropane)	U	340	1.0	330	340	93	
98-86-2	Acetophenone	U	620	1.0	600	620	180	
621-64-7	N-Nitroso-di-n-propylamine	U	340	1.0	330	340	86	
65794-96-9	3&4-Methylphenol	U	620	1.0	600	620	190	
67-72-1	Hexachloroethane	U	340	1.0	330	340	100	
98-95-3	Nitrobenzene	U	340	1.0	330	340	95	
78-59-1	Isophorone	U	340	1.0	330	340	78	
88-75-5	2-Nitrophenol	U	620	1.0	600	620	170	
105-67-9	2,4-Dimethylphenol	U	520	1.0	500	520	170	
111-91-1	Bis(2-Chloroethoxy)methane	U	340	1.0	330	340	100	
120-83-2	2,4-Dichlorophenol	U	520	1.0	500	520	160	
106-47-8	4-Chloroaniline	U	520	1.0	500	520	120	
105-60-2	Caprolactam	U	520	1.0	500	520	150	
59-50-7	4-Chloro-3-Methylphenol	U	520	1.0	500	520	170	
88-06-2	2,4,6-Trichlorophenol	U	520	1.0	500	520	160	
95-95-4	2,4,5-Trichlorophenol	U	520	1.0	500	520	160	
91-58-7	2-Chloronaphthalene	U	340	1.0	330	340	91	
92-52-4	1,1'-Biphenyl	U	340	1.0	330	340	76	
88-74-4	2-Nitroaniline	U	520	1.0	500	520	78	
131-11-3	Dimethyl Phthalate	U	340	1.0	330	340	81	
606-20-2	2,6-Dinitrotoluene	U	340	1.0	330	340	82	
208-96-8	Acenaphthylene	U	340	1.0	330	340	73	
99-09-2	3-Nitroaniline	U	520	1.0	500	520	98	
83-32-9	Acenaphthene	U	340	1.0	330	340	68	
51-28-5	2,4-Dinitrophenol	~~U~~ UJ	1200	1.0	1200	1200	390	CCH
132-64-9	Dibenzofuran	U	340	1.0	330	340	82	
100-02-7	4-Nitrophenol	~~U~~ UJ	1200	1.0	1200	1200	320	ICB
121-14-2	2,4-Dinitrotoluene	U	340	1.0	330	340	88	
84-66-2	Diethylphthalate	U	340	1.0	330	340	83	
7005-72-3	4-Chlorophenyl-phenylether	U	340	1.0	330	340	81	
100-01-6	4-Nitroaniline	~~U~~ UJ	520	1.0	500	520	140	CCH
534-52-1	4,6-Dinitro-2-Methylphenol	U	1200	1.0	1200	1200	350	
86-30-6	N-Nitrosodiphenylamine	U	690	1.0	660	690	230	
101-55-3	4-Bromophenyl-phenylether	U	340	1.0	330	340	88	
1912-24-9	Atrazine	U	340	1.0	330	340	95	
87-86-5	Pentachlorophenol	U	850	1.0	820	850	250	
120-12-7	Anthracene	U	340	1.0	330	340	88	
86-74-8	Carbazole	U	520	1.0	500	520	120	

fw
4/18/09

8

KATAHDIN ANALYTICAL SERVICES
Report of Analytical Results

Client: CH2MHill
Project: TO-009 Lejeune
PO No:
Sample Date: 01/22/09
Received Date: 01/24/09
Extraction Date: 01/29/09
Analysis Date: 17-FEB-2009 10:39
Report Date: 02/18/2009
Matrix: SOIL
% Solids: 96.0

Lab ID: SC0365-15
Client ID: MR08-SS334-09A
SDG: TO9-42
Extracted by: CB
Extraction Method: SW846 3550
Analyst: JLP
Analysis Method: SW846 8270C
Lab Prep Batch: WG60272
Units: ug/Kgdrywt

CAS#	Compound	Flags	Results	DF	PQL	Adj.PQL	Adj.MDL	
84-74-2	Di-n-butylphthalate	U	340	1.0	330	340	100	
85-68-7	Butylbenzylphthalate	U	340	1.0	330	340	97	
91-94-1	3,3'-Dichlorobenzidine	U	520	1.0	500	520	120	
218-01-9	Chrysene	U	340	1.0	330	340	99	
117-81-7	bis(2-Ethylhexyl)phthalate	U	340	1.0	330	340	100	
117-84-0	Di-n-octylphthalate	~~U~~ UJ	340	1.0	330	340	220	CCH
367-12-4	2-Fluorophenol		66%					
13127-88-3	Phenol-D6		75%					
4165-60-0	Nitrobenzene-D5		62%					
321-60-8	2-Fluorobiphenyl		71%					
118-79-6	2,4,6-Tribromophenol		88%					
1718-51-0	Terphenyl-D14		65%					

4/18/09

9

KATAHDIN ANALYTICAL SERVICES
Report of Analytical Results

Client: CH2MHill
Project: TO-009 Lejeune
PO No:
Sample Date: 01/22/09
Received Date: 01/24/09
Extraction Date: 01/29/09
Analysis Date: 17-FEB-2009 11:22
Report Date: 02/18/2009
Matrix: SOIL
% Solids: 90.0

Lab ID: SC0365-17
Client ID: MR08-IS334-4-5-09A
SDG: TO9-42
Extracted by: CB
Extraction Method: SW846 3550
Analyst: JLP
Analysis Method: SW846 8270C
Lab Prep Batch: WG60272
Units: ug/Kgdrywt

CAS#	Compound	Flags	Results	DF	PQL	Adj.PQL	Adj.MDL	
100-52-7	Benzaldehyde	~~U~~ UJ	560	1.0	500	560	130	ICB
108-95-2	Phenol	U	560	1.0	500	560	170	
111-44-4	Bis(2-Chloroethyl)ether	U	370	1.0	330	370	90	
95-57-8	2-Chlorophenol	U	560	1.0	500	560	180	
95-48-7	2-Methylphenol	U	670	1.0	600	670	220	
108-60-1	2,2'-Oxybis(1-chloropropane)	U	370	1.0	330	370	99	
98-86-2	Acetophenone	U	670	1.0	600	670	200	
621-64-7	N-Nitroso-di-n-propylamine	U	370	1.0	330	370	92	
65794-96-9	3&4-Methylphenol	U	670	1.0	600	670	210	
67-72-1	Hexachloroethane	U	370	1.0	330	370	110	
98-95-3	Nitrobenzene	U	370	1.0	330	370	100	
78-59-1	Isophorone	U	370	1.0	330	370	83	
88-75-5	2-Nitrophenol	U	670	1.0	600	670	180	
105-67-9	2,4-Dimethylphenol	U	560	1.0	500	560	180	
111-91-1	Bis(2-Chloroethoxy)methane	U	370	1.0	330	370	110	
120-83-2	2,4-Dichlorophenol	U	560	1.0	500	560	170	
106-47-8	4-Chloroaniline	U	560	1.0	500	560	130	
105-60-2	Caprolactam	U	560	1.0	500	560	160	
59-50-7	4-Chloro-3-Methylphenol	U	560	1.0	500	560	180	
88-06-2	2,4,6-Trichlorophenol	U	560	1.0	500	560	170	
95-95-4	2,4,5-Trichlorophenol	U	560	1.0	500	560	170	
91-58-7	2-Chloronaphthalene	U	370	1.0	330	370	97	
92-52-4	1,1'-Biphenyl	U	370	1.0	330	370	81	
88-74-4	2-Nitroaniline	U	560	1.0	500	560	83	
131-11-3	Dimethyl Phthalate	U	370	1.0	330	370	87	
606-20-2	2,6-Dinitrotoluene	U	370	1.0	330	370	88	
208-96-8	Acenaphthylene	U	370	1.0	330	370	78	
99-09-2	3-Nitroaniline	U	560	1.0	500	560	100	
83-32-9	Acenaphthene	U	370	1.0	330	370	72	
51-28-5	2,4-Dinitrophenol	~~U~~ UJ	1300	1.0	1200	1300	420	CCH
132-64-9	Dibenzofuran	U	370	1.0	330	370	88	
100-02-7	4-Nitrophenol	~~U~~ UJ	1300	1.0	1200	1300	340	ICB
121-14-2	2,4-Dinitrotoluene	U	370	1.0	330	370	94	
84-66-2	Diethylphthalate	U	370	1.0	330	370	89	
7005-72-3	4-Chlorophenyl-phenylether	U	370	1.0	330	370	87	
100-01-6	4-Nitroaniline	~~U~~ UJ	560	1.0	500	560	150	CCH
534-52-1	4,6-Dinitro-2-Methylphenol	U	1300	1.0	1200	1300	370	
86-30-6	N-Nitrosodiphenylamine	U	730	1.0	660	730	240	
101-55-3	4-Bromophenyl-phenylether	U	370	1.0	330	370	94	
1912-24-9	Atrazine	U	370	1.0	330	370	100	
87-86-5	Pentachlorophenol	U	910	1.0	820	910	260	
120-12-7	Anthracene	U	370	1.0	330	370	93	
86-74-8	Carbazole	U	560	1.0	500	560	120	

lw
4/8/09

9

KATAHDIN ANALYTICAL SERVICES
Report of Analytical Results

Client: CH2MHill
Project: TO-009 Lejeune
PO No:
Sample Date: 01/22/09
Received Date: 01/24/09
Extraction Date: 01/29/09
Analysis Date: 17-FEB-2009 11:22
Report Date: 02/18/2009
Matrix: SOIL
% Solids: 90.0

Lab ID: SC0365-17
Client ID: MR08-IS334-4-5-09A
SDG: TO9-42
Extracted by: CB
Extraction Method: SW846 3550
Analyst: JLP
Analysis Method: SW846 8270C
Lab Prep Batch: WG60272
Units: ug/Kgdrywt

CAS#	Compound	Flags	Results	DF	PQL	Adj.PQL	Adj.MDL	
84-74-2	Di-n-butylphthalate	U	370	1.0	330	370	110	
85-68-7	Butylbenzylphthalate	U	370	1.0	330	370	100	
91-94-1	3,3'-Dichlorobenzidine	U	560	1.0	500	560	130	
218-01-9	Chrysene	U	370	1.0	330	370	100	
117-81-7	bis(2-Ethylhexyl)phthalate	J	150	1.0	330	370	110	
117-84-0	Di-n-octylphthalate	~~J~~ UJ	370	1.0	330	370	230	CCH
367-12-4	2-Fluorophenol		60%					
13127-88-3	Phenol-D6		75%					
4165-60-0	Nitrobenzene-D5		60%					
321-60-8	2-Fluorobiphenyl		65%					
118-79-6	2,4,6-Tribromophenol		52%					
1718-51-0	Terphenyl-D14		67%					

LW
4/18/09

10

KATAHDIN ANALYTICAL SERVICES
Report of Analytical Results

Client: CH2MHill
Project: TO-009 Lejeune
PO No:
Sample Date: 01/22/09
Received Date: 01/24/09
Extraction Date: 01/29/09
Analysis Date: 17-FEB-2009 12:04
Report Date: 02/18/2009
Matrix: SOIL
% Solids: 87.4

Lab ID: SC0365-19
Client ID: MR08-SS333-09A
SDG: TO9-42
Extracted by: CB
Extraction Method: SW846 3550
Analyst: JLP
Analysis Method: SW846 8270C
Lab Prep Batch: WG60272
Units: ug/Kgdrywt

CAS#	Compound	Flags	Results	DF	PQL	Adj.PQL	Adj.MDL	
100-52-7	Benzaldehyde	~~U~~ UJ	570	1.0	500	570	140	ICB
108-95-2	Phenol	U	570	1.0	500	570	180	
111-44-4	Bis(2-Chloroethyl)ether	U	380	1.0	330	380	93	
95-57-8	2-Chlorophenol	U	570	1.0	500	570	190	
95-48-7	2-Methylphenol	U	690	1.0	600	690	230	
108-60-1	2,2'-Oxybis(1-chloropropane)	U	380	1.0	330	380	100	
98-86-2	Acetophenone	U	690	1.0	600	690	200	
621-64-7	N-Nitroso-di-n-propylamine	U	380	1.0	330	380	95	
65794-96-9	3&4-Methylphenol	U	690	1.0	600	690	210	
67-72-1	Hexachloroethane	U	380	1.0	330	380	110	
98-95-3	Nitrobenzene	U	380	1.0	330	380	100	
78-59-1	Isophorone	U	380	1.0	330	380	86	
88-75-5	2-Nitrophenol	U	690	1.0	600	690	190	
105-67-9	2,4-Dimethylphenol	U	570	1.0	500	570	190	
111-91-1	Bis(2-Chloroethoxy)methane	U	380	1.0	330	380	110	
120-83-2	2,4-Dichlorophenol	U	570	1.0	500	570	170	
106-47-8	4-Chloroaniline	U	570	1.0	500	570	140	
105-60-2	Caprolactam	U	570	1.0	500	570	160	
59-50-7	4-Chloro-3-Methylphenol	U	570	1.0	500	570	190	
88-06-2	2,4,6-Trichlorophenol	U	570	1.0	500	570	180	
95-95-4	2,4,5-Trichlorophenol	U	570	1.0	500	570	180	
91-58-7	2-Chloronaphthalene	U	380	1.0	330	380	100	
92-52-4	1,1'-Biphenyl	U	380	1.0	330	380	84	
88-74-4	2-Nitroaniline	U	570	1.0	500	570	86	
131-11-3	Dimethyl Phthalate	U	380	1.0	330	380	89	
606-20-2	2,6-Dinitrotoluene	U	380	1.0	330	380	90	
208-96-8	Acenaphthylene	U	380	1.0	330	380	80	
99-09-2	3-Nitroaniline	U	570	1.0	500	570	110	
83-32-9	Acenaphthene	U	380	1.0	330	380	74	
51-28-5	2,4-Dinitrophenol	~~U~~ UJ	1400	1.0	1200	1400	430	CCH
132-64-9	Dibenzofuran	U	380	1.0	330	380	90	
100-02-7	4-Nitrophenol	~~U~~ UJ	1400	1.0	1200	1400	350	ICB
121-14-2	2,4-Dinitrotoluene	U	380	1.0	330	380	97	
84-66-2	Diethylphthalate	U	380	1.0	330	380	92	
7005-72-3	4-Chlorophenyl-phenylether	U	380	1.0	330	380	89	
100-01-6	4-Nitroaniline	~~U~~ UJ	570	1.0	500	570	150	CCH
534-52-1	4,6-Dinitro-2-Methylphenol	U	1400	1.0	1200	1400	380	
86-30-6	N-Nitrosodiphenylamine	U	760	1.0	660	760	250	
101-55-3	4-Bromophenyl-phenylether	U	380	1.0	330	380	97	
1912-24-9	Atrazine	U	380	1.0	330	380	100	
87-86-5	Pentachlorophenol	U	940	1.0	820	940	270	
120-12-7	Anthracene	U	380	1.0	330	380	96	
86-74-8	Carbazole	U	570	1.0	500	570	130	

LCW 4/1/8/09

10

KATAHDIN ANALYTICAL SERVICES
Report of Analytical Results

Client: CH2MHill
Project: TO-009 Lejeune
PO No:
Sample Date: 01/22/09
Received Date: 01/24/09
Extraction Date: 01/29/09
Analysis Date: 17-FEB-2009 12:04
Report Date: 02/18/2009
Matrix: SOIL
% Solids: 87.4

Lab ID: SC0365-19
Client ID: MR08-SS333-09A
SDG: TO9-42
Extracted by: CB
Extraction Method: SW846 3550
Analyst: JLP
Analysis Method: SW846 8270C
Lab Prep Batch: WG60272
Units: ug/Kgdrywt

CAS#	Compound	Flags	Results	DF	PQL	Adj.PQL	Adj.MDL	
84-74-2	Di-n-butylphthalate	U	380	1.0	330	380	120	
85-68-7	Butylbenzylphthalate	U	380	1.0	330	380	110	
91-94-1	3,3'-Dichlorobenzidine	U	570	1.0	500	570	130	
218-01-9	Chrysene	U	380	1.0	330	380	110	
117-81-7	bis(2-Ethylhexyl)phthalate	U	380	1.0	330	380	110	
117-84-0	Di-n-octylphthalate	~~U~~ UJ	380	1.0	330	380	240	CCH
367-12-4	2-Fluorophenol		64%					
13127-88-3	Phenol-D6		75%					
4165-60-0	Nitrobenzene-D5		64%					
321-60-8	2-Fluorobiphenyl		71%					
118-79-6	2,4,6-Tribromophenol		77%					
1718-51-0	Terphenyl-D14		68%					

QCO
4/18/09

11

KATAHDIN ANALYTICAL SERVICES
Report of Analytical Results

Client: CH2MHill
Project: TO-009 Lejeune
PO No:
Sample Date: 01/22/09
Received Date: 01/24/09
Extraction Date: 01/29/09
Analysis Date: 17-FEB-2009 12:46
Report Date: 02/18/2009
Matrix: SOIL
% Solids: 87.7

Lab ID: SC0365-21
Client ID: MR08-IS333-4-5-09A
SDG: TO9-42
Extracted by: CB
Extraction Method: SW846 3550
Analyst: JLP
Analysis Method: SW846 8270C
Lab Prep Batch: WG60272
Units: ug/Kgdrywt

CAS#	Compound	Flags	Results	DF	PQL	Adj.PQL	Adj.MDL	
100-52-7	Benzaldehyde	~~U~~ UJ	570	1.0	500	570	140	ICB
108-95-2	Phenol	U	570	1.0	500	570	180	
111-44-4	Bis(2-Chloroethyl)ether	U	380	1.0	330	380	92	
95-57-8	2-Chlorophenol	U	570	1.0	500	570	190	
95-48-7	2-Methylphenol	U	680	1.0	600	680	230	
108-60-1	2,2'-Oxybis(1-chloropropane)	U	380	1.0	330	380	100	
98-86-2	Acetophenone	U	680	1.0	600	680	200	
621-64-7	N-Nitroso-di-n-propylamine	U	380	1.0	330	380	95	
65794-96-9	3&4-Methylphenol	U	680	1.0	600	680	210	
67-72-1	Hexachloroethane	U	380	1.0	330	380	110	
98-95-3	Nitrobenzene	U	380	1.0	330	380	100	
78-59-1	Isophorone	U	380	1.0	330	380	86	
88-75-5	2-Nitrophenol	U	680	1.0	600	680	190	
105-67-9	2,4-Dimethylphenol	U	570	1.0	500	570	190	
111-91-1	Bis(2-Chloroethoxy)methane	U	380	1.0	330	380	110	
120-83-2	2,4-Dichlorophenol	U	570	1.0	500	570	170	
106-47-8	4-Chloroaniline	U	570	1.0	500	570	140	
105-60-2	Caprolactam	U	570	1.0	500	570	160	
59-50-7	4-Chloro-3-Methylphenol	U	570	1.0	500	570	190	
88-06-2	2,4,6-Trichlorophenol	U	570	1.0	500	570	180	
95-95-4	2,4,5-Trichlorophenol	U	570	1.0	500	570	180	
91-58-7	2-Chloronaphthalene	U	380	1.0	330	380	99	
92-52-4	1,1'-Biphenyl	U	380	1.0	330	380	83	
88-74-4	2-Nitroaniline	U	570	1.0	500	570	86	
131-11-3	Dimethyl Phthalate	U	380	1.0	330	380	89	
606-20-2	2,6-Dinitrotoluene	U	380	1.0	330	380	90	
208-96-8	Acenaphthylene	U	380	1.0	330	380	80	
99-09-2	3-Nitroaniline	U	570	1.0	500	570	110	
83-32-9	Acenaphthene	U	380	1.0	330	380	74	
51-28-5	2,4-Dinitrophenol	~~U~~ UJ	1400	1.0	1200	1400	430	CCH
132-64-9	Dibenzofuran	U	380	1.0	330	380	90	
100-02-7	4-Nitrophenol	~~U~~ UJ	1400	1.0	1200	1400	350	ICB
121-14-2	2,4-Dinitrotoluene	U	380	1.0	330	380	97	
84-66-2	Diethylphthalate	U	380	1.0	330	380	91	
7005-72-3	4-Chlorophenyl-phenylether	U	380	1.0	330	380	89	
100-01-6	4-Nitroaniline	~~U~~ UJ	570	1.0	500	570	150	CCH
534-52-1	4,6-Dinitro-2-Methylphenol	U	1400	1.0	1200	1400	380	
86-30-6	N-Nitrosodiphenylamine	U	750	1.0	660	750	250	
101-55-3	4-Bromophenyl-phenylether	U	380	1.0	330	380	97	
1912-24-9	Atrazine	U	380	1.0	330	380	100	
87-86-5	Pentachlorophenol	U	940	1.0	820	940	270	
120-12-7	Anthracene	U	380	1.0	330	380	96	
86-74-8	Carbazole	U	570	1.0	500	570	130	

MW 4/18/09

11

KATAHDIN ANALYTICAL SERVICES
Report of Analytical Results

Client: CH2MHill
Project: TO-009 Lejeune
PO No:
Sample Date: 01/22/09
Received Date: 01/24/09
Extraction Date: 01/29/09
Analysis Date: 17-FEB-2009 12:46
Report Date: 02/18/2009
Matrix: SOIL
% Solids: 87.7

Lab ID: SC0365-21
Client ID: MR08-IS333-4-5-09A
SDG: TO9-42
Extracted by: CB
Extraction Method: SW846 3550
Analyst: JLP
Analysis Method: SW846 8270C
Lab Prep Batch: WG60272
Units: ug/Kgdrywt

CAS#	Compound	Flags	Results	DF	PQL	Adj.PQL	Adj.MDL	
84-74-2	Di-n-butylphthalate	U	380	1.0	330	380	120	
85-68-7	Butylbenzylphthalate	U	380	1.0	330	380	110	
91-94-1	3,3'-Dichlorobenzidine	U	570	1.0	500	570	130	
218-01-9	Chrysene	U	380	1.0	330	380	110	
117-81-7	bis(2-Ethylhexyl)phthalate	U	380	1.0	330	380	110	
117-84-0	Di-n-octylphthalate	~~J~~ UJ	380	1.0	330	380	240	CCH
367-12-4	2-Fluorophenol		66%					
13127-88-3	Phenol-D6		83%					
4165-60-0	Nitrobenzene-D5		63%					
321-60-8	2-Fluorobiphenyl		66%					
118-79-6	2,4,6-Tribromophenol		63%					
1718-51-0	Terphenyl-D14		65%					

fw
4/8/09

12

KATAHDIN ANALYTICAL SERVICES
Report of Analytical Results

Client: CH2MHill
Project: TO-009 Lejeune
PO No:
Sample Date: 01/22/09
Received Date: 01/24/09
Extraction Date: 01/29/09
Analysis Date: 17-FEB-2009 13:29
Report Date: 02/18/2009
Matrix: SOIL
% Solids: 93.2

Lab ID: SC0365-23
Client ID: MR08-IS332-4-5-09A
SDG: TO9-42
Extracted by: CB
Extraction Method: SW846 3550
Analyst: JLP
Analysis Method: SW846 8270C
Lab Prep Batch: WG60272
Units: ug/Kgdrywt

CAS#	Compound	Flags	Results	DF	PQL	Adj.PQL	Adj.MDL	
100-52-7	Benzaldehyde	~~U~~ UJ	540	1.0	500	540	130	ICB
108-95-2	Phenol	U	540	1.0	500	540	170	
111-44-4	Bis(2-Chloroethyl)ether	U	350	1.0	330	350	87	
95-57-8	2-Chlorophenol	U	540	1.0	500	540	180	
95-48-7	2-Methylphenol	U	640	1.0	600	640	210	
108-60-1	2,2'-Oxybis(1-chloropropane)	U	350	1.0	330	350	96	
98-86-2	Acetophenone	U	640	1.0	600	640	190	
621-64-7	N-Nitroso-di-n-propylamine	U	350	1.0	330	350	89	
65794-96-9	3&4-Methylphenol	U	640	1.0	600	640	200	
67-72-1	Hexachloroethane	U	350	1.0	330	350	100	
98-95-3	Nitrobenzene	U	350	1.0	330	350	98	
78-59-1	Isophorone	U	350	1.0	330	350	80	
88-75-5	2-Nitrophenol	U	640	1.0	600	640	180	
105-67-9	2,4-Dimethylphenol	U	540	1.0	500	540	180	
111-91-1	Bis(2-Chloroethoxy)methane	U	350	1.0	330	350	100	
120-83-2	2,4-Dichlorophenol	U	540	1.0	500	540	160	
106-47-8	4-Chloroaniline	U	540	1.0	500	540	130	
105-60-2	Caprolactam	U	540	1.0	500	540	150	
59-50-7	4-Chloro-3-Methylphenol	U	540	1.0	500	540	180	
88-06-2	2,4,6-Trichlorophenol	U	540	1.0	500	540	170	
95-95-4	2,4,5-Trichlorophenol	U	540	1.0	500	540	170	
91-58-7	2-Chloronaphthalene	U	350	1.0	330	350	93	
92-52-4	1,1'-Biphenyl	U	350	1.0	330	350	78	
88-74-4	2-Nitroaniline	U	540	1.0	500	540	80	
131-11-3	Dimethyl Phthalate	U	350	1.0	330	350	84	
606-20-2	2,6-Dinitrotoluene	U	350	1.0	330	350	85	
208-96-8	Acenaphthylene	U	350	1.0	330	350	75	
99-09-2	3-Nitroaniline	U	540	1.0	500	540	100	
83-32-9	Acenaphthene	U	350	1.0	330	350	70	
51-28-5	2,4-Dinitrophenol	~~U~~ UJ	1300	1.0	1200	1300	400	CCH
132-64-9	Dibenzofuran	U	350	1.0	330	350	85	
100-02-7	4-Nitrophenol	~~U~~ UJ	1300	1.0	1200	1300	330	ICB
121-14-2	2,4-Dinitrotoluene	U	350	1.0	330	350	91	
84-66-2	Diethylphthalate	U	350	1.0	330	350	86	
7005-72-3	4-Chlorophenyl-phenylether	U	350	1.0	330	350	84	
100-01-6	4-Nitroaniline	~~U~~ UJ	540	1.0	500	540	140	CCH
534-52-1	4,6-Dinitro-2-Methylphenol	U	1300	1.0	1200	1300	360	
86-30-6	N-Nitrosodiphenylamine	U	710	1.0	660	710	240	
101-55-3	4-Bromophenyl-phenylether	U	350	1.0	330	350	91	
1912-24-9	Atrazine	U	350	1.0	330	350	98	
87-86-5	Pentachlorophenol	U	880	1.0	820	880	250	
120-12-7	Anthracene	U	350	1.0	330	350	90	
86-74-8	Carbazole	U	540	1.0	500	540	120	

MW
4/18/09

KATAHDIN ANALYTICAL SERVICES
Report of Analytical Results

Client: CH2MHill
Project: TO-009 Lejeune
PO No:
Sample Date: 01/22/09
Received Date: 01/24/09
Extraction Date: 01/29/09
Analysis Date: 17-FEB-2009 13:29
Report Date: 02/18/2009
Matrix: SOIL
% Solids: 93.2

Lab ID: SC0365-23
Client ID: MR08-IS332-4-5-09A
SDG: TO9-42
Extracted by: CB
Extraction Method: SW846 3550
Analyst: JLP
Analysis Method: SW846 8270C
Lab Prep Batch: WG60272
Units: ug/Kgdrywt

CAS#	Compound	Flags	Results	DF	PQL	Adj.PQL	Adj.MDL
84-74-2	Di-n-butylphthalate	U	350	1.0	330	350	110
85-68-7	Butylbenzylphthalate	U	350	1.0	330	350	100
91-94-1	3,3'-Dichlorobenzidine	U	540	1.0	500	540	120
218-01-9	Chrysene	U	350	1.0	330	350	100
117-81-7	bis(2-Ethylhexyl)phthalate	J	170	1.0	330	350	100
117-84-0	Di-n-octylphthalate	~~U~~ UJ	350	1.0	330	350	230 CCH
367-12-4	2-Fluorophenol		64%				
13127-88-3	Phenol-D6		74%				
4165-60-0	Nitrobenzene-D5		65%				
321-60-8	2-Fluorobiphenyl		69%				
118-79-6	2,4,6-Tribromophenol		61%				
1718-51-0	Terphenyl-D14		69%				

JLL
4/18/09

KATAHDIN ANALYTICAL SERVICES
Report of Analytical Results

Client: CH2MHill
Project: TO-009 Lejeune
PO No:
Sample Date: 01/22/09
Received Date: 01/24/09
Extraction Date: 01/29/09
Analysis Date: 17-FEB-2009 14:12
Report Date: 02/18/2009
Matrix: SOIL
% Solids: 82.7

Lab ID: SC0365-25
Client ID: MR08-SS332-09A
SDG: TO9-42
Extracted by: CB
Extraction Method: SW846 3550
Analyst: JLP
Analysis Method: SW846 8270C
Lab Prep Batch: WG60272
Units: ug/Kgdrywt

CAS#	Compound	Flags	Results	DF	PQL	Adj.PQL	Adj.MDL	
100-52-7	Benzaldehyde	~~J~~ UJ	600	1.0	500	600	140	JEB
108-95-2	Phenol	U	600	1.0	500	600	190	
111-44-4	Bis(2-Chloroethyl)ether	U	400	1.0	330	400	98	
95-57-8	2-Chlorophenol	U	600	1.0	500	600	200	
95-48-7	2-Methylphenol	U	720	1.0	600	720	240	
108-60-1	2,2'-Oxybis(1-chloropropane)	U	400	1.0	330	400	110	
98-86-2	Acetophenone	U	720	1.0	600	720	220	
621-64-7	N-Nitroso-di-n-propylamine	U	400	1.0	330	400	100	
65794-96-9	3&4-Methylphenol	U	720	1.0	600	720	230	
67-72-1	Hexachloroethane	U	400	1.0	330	400	120	
98-95-3	Nitrobenzene	U	400	1.0	330	400	110	
78-59-1	Isophorone	U	400	1.0	330	400	91	
88-75-5	2-Nitrophenol	U	720	1.0	600	720	200	
105-67-9	2,4-Dimethylphenol	U	600	1.0	500	600	200	
111-91-1	Bis(2-Chloroethoxy)methane	U	400	1.0	330	400	120	
120-83-2	2,4-Dichlorophenol	U	600	1.0	500	600	180	
106-47-8	4-Chloroaniline	U	600	1.0	500	600	140	
105-60-2	Caprolactam	U	600	1.0	500	600	170	
59-50-7	4-Chloro-3-Methylphenol	U	600	1.0	500	600	200	
88-06-2	2,4,6-Trichlorophenol	U	600	1.0	500	600	190	
95-95-4	2,4,5-Trichlorophenol	U	600	1.0	500	600	190	
91-58-7	2-Chloronaphthalene	U	400	1.0	330	400	100	
92-52-4	1,1'-Biphenyl	U	400	1.0	330	400	88	
88-74-4	2-Nitroaniline	U	600	1.0	500	600	91	
131-11-3	Dimethyl Phthalate	U	400	1.0	330	400	94	
606-20-2	2,6-Dinitrotoluene	U	400	1.0	330	400	96	
208-96-8	Acenaphthylene	U	400	1.0	330	400	85	
99-09-2	3-Nitroaniline	U	600	1.0	500	600	110	
83-32-9	Acenaphthene	U	400	1.0	330	400	79	
51-28-5	2,4-Dinitrophenol	~~J~~ UJ	1400	1.0	1200	1400	460	CCH
132-64-9	Dibenzofuran	U	400	1.0	330	400	96	
100-02-7	4-Nitrophenol	~~J~~ UJ	1400	1.0	1200	1400	370	JEB
121-14-2	2,4-Dinitrotoluene	U	400	1.0	330	400	100	
84-66-2	Diethylphthalate	U	400	1.0	330	400	97	
7005-72-3	4-Chlorophenyl-phenylether	U	400	1.0	330	400	94	
100-01-6	4-Nitroaniline	~~J~~ UJ	600	1.0	500	600	160	CCH
534-52-1	4,6-Dinitro-2-Methylphenol	U	1400	1.0	1200	1400	410	
86-30-6	N-Nitrosodiphenylamine	U	800	1.0	660	800	260	
101-55-3	4-Bromophenyl-phenylether	U	400	1.0	330	400	100	
1912-24-9	Atrazine	U	400	1.0	330	400	110	
87-86-5	Pentachlorophenol	U	990	1.0	820	990	290	
120-12-7	Anthracene	U	400	1.0	330	400	100	
86-74-8	Carbazole	U	600	1.0	500	600	130	

lew
4/18/09

KATAHDIN ANALYTICAL SERVICES
Report of Analytical Results

Client: CH2MHill
Project: TO-009 Lejeune
PO No:
Sample Date: 01/22/09
Received Date: 01/24/09
Extraction Date: 01/29/09
Analysis Date: 17-FEB-2009 14:12
Report Date: 02/18/2009
Matrix: SOIL
% Solids: 82.7

Lab ID: SC0365-25
Client ID: MR08-SS332-09A
SDG: TO9-42
Extracted by: CB
Extraction Method: SW846 3550
Analyst: JLP
Analysis Method: SW846 8270C
Lab Prep Batch: WG60272
Units: ug/Kgdrywt

CAS#	Compound	Flags	Results	DF	PQL	Adj.PQL	Adj.MDL
84-74-2	Di-n-butylphthalate	U	400	1.0	330	400	120
85-68-7	Butylbenzylphthalate	U	400	1.0	330	400	110
91-94-1	3,3'-Dichlorobenzidine	U	600	1.0	500	600	140
218-01-9	Chrysene	J	260	1.0	330	400	110
117-81-7	bis(2-Ethylhexyl)phthalate	J	120	1.0	330	400	120
117-84-0	Di-n-octylphthalate	~~U~~ UJ	400	1.0	330	400	260 CCH
367-12-4	2-Fluorophenol		71%				
13127-88-3	Phenol-D6		86%				
4165-60-0	Nitrobenzene-D5		64%				
321-60-8	2-Fluorobiphenyl		70%				
118-79-6	2,4,6-Tribromophenol		93%				
1718-51-0	Terphenyl-D14		74%				

LW 4/18/09

KATAHDIN ANALYTICAL SERVICES
Report of Analytical Results

Client: CH2MHill
Project: TO-009 Lejeune
PO No:
Sample Date: 01/22/09
Received Date: 01/24/09
Extraction Date: 01/29/09
Analysis Date: 17-FEB-2009 15:49
Report Date: 02/18/2009
Matrix: SOIL
% Solids: 92.3

Lab ID: SC0365-27
Client ID: MR08-SS343-09A
SDG: TO9-42
Extracted by: CB
Extraction Method: SW846 3550
Analyst: JLP
Analysis Method: SW846 8270C
Lab Prep Batch: WG60272
Units: ug/Kgdrywt

CAS#	Compound	Flags	Results	DF	PQL	Adj.PQL	Adj.MDL	
100-52-7	Benzaldehyde	~~U~~ UJ	540	1.0	500	540	130	ICB
108-95-2	Phenol	U	540	1.0	500	540	170	
111-44-4	Bis(2-Chloroethyl)ether	U	360	1.0	330	360	88	
95-57-8	2-Chlorophenol	U	540	1.0	500	540	180	
95-48-7	2-Methylphenol	U	650	1.0	600	650	220	
108-60-1	2,2'-Oxybis(1-chloropropane)	U	360	1.0	330	360	96	
98-86-2	Acetophenone	U	650	1.0	600	650	190	
621-64-7	N-Nitroso-di-n-propylamine	U	360	1.0	330	360	90	
65794-96-9	3&4-Methylphenol	U	650	1.0	600	650	200	
67-72-1	Hexachloroethane	U	360	1.0	330	360	100	
98-95-3	Nitrobenzene	U	360	1.0	330	360	98	
78-59-1	Isophorone	U	360	1.0	330	360	81	
88-75-5	2-Nitrophenol	U	650	1.0	600	650	180	
105-67-9	2,4-Dimethylphenol	U	540	1.0	500	540	180	
111-91-1	Bis(2-Chloroethoxy)methane	U	360	1.0	330	360	100	
120-83-2	2,4-Dichlorophenol	U	540	1.0	500	540	160	
106-47-8	4-Chloroaniline	U	540	1.0	500	540	130	
105-60-2	Caprolactam	U	540	1.0	500	540	160	
59-50-7	4-Chloro-3-Methylphenol	U	540	1.0	500	540	180	
88-06-2	2,4,6-Trichlorophenol	U	540	1.0	500	540	170	
95-95-4	2,4,5-Trichlorophenol	U	540	1.0	500	540	170	
91-58-7	2-Chloronaphthalene	U	360	1.0	330	360	94	
92-52-4	1,1'-Biphenyl	U	360	1.0	330	360	79	
88-74-4	2-Nitroaniline	U	540	1.0	500	540	81	
131-11-3	Dimethyl Phthalate	U	360	1.0	330	360	84	
606-20-2	2,6-Dinitrotoluene	U	360	1.0	330	360	86	
208-96-8	Acenaphthylene	U	360	1.0	330	360	76	
99-09-2	3-Nitroaniline	U	540	1.0	500	540	100	
83-32-9	Acenaphthene	U	360	1.0	330	360	70	
51-28-5	2,4-Dinitrophenol	~~U~~ UJ	1300	1.0	1200	1300	410	CCH
132-64-9	Dibenzofuran	U	360	1.0	330	360	86	
100-02-7	4-Nitrophenol	~~U~~ UJ	1300	1.0	1200	1300	330	ICB
121-14-2	2,4-Dinitrotoluene	U	360	1.0	330	360	92	
84-66-2	Diethylphthalate	U	360	1.0	330	360	87	
7005-72-3	4-Chlorophenyl-phenylether	U	360	1.0	330	360	84	
100-01-6	4-Nitroaniline	~~U~~ UJ	540	1.0	500	540	140	CCH
534-52-1	4,6-Dinitro-2-Methylphenol	U	1300	1.0	1200	1300	360	
86-30-6	N-Nitrosodiphenylamine	U	710	1.0	660	710	240	
101-55-3	4-Bromophenyl-phenylether	U	360	1.0	330	360	92	
1912-24-9	Atrazine	U	360	1.0	330	360	98	
87-86-5	Pentachlorophenol	U	890	1.0	820	890	260	
120-12-7	Anthracene	U	360	1.0	330	360	91	
86-74-8	Carbazole	U	540	1.0	500	540	120	

JCL 4/18/09

KATAHDIN ANALYTICAL SERVICES
Report of Analytical Results

Client: CH2MHill
Project: TO-009 Lejeune
PO No:
Sample Date: 01/22/09
Received Date: 01/24/09
Extraction Date: 01/29/09
Analysis Date: 17-FEB-2009 15:49
Report Date: 02/18/2009
Matrix: SOIL
% Solids: 92.3

Lab ID: SC0365-27
Client ID: MR08-SS343-09A
SDG: TO9-42
Extracted by: CB
Extraction Method: SW846 3550
Analyst: JLP
Analysis Method: SW846 8270C
Lab Prep Batch: WG60272
Units: ug/Kgdrywt

CAS#	Compound	Flags	Results	DF	PQL	Adj.PQL	Adj.MDL	
84-74-2	Di-n-butylphthalate	U	360	1.0	330	360	110	
85-68-7	Butylbenzylphthalate	U	360	1.0	330	360	100	
91-94-1	3,3'-Dichlorobenzidine	U	540	1.0	500	540	120	
218-01-9	Chrysene	U	360	1.0	330	360	100	
117-81-7	bis(2-Ethylhexyl)phthalate	U	360	1.0	330	360	110	
117-84-0	Di-n-octylphthalate	~~U~~ UJ	360	1.0	330	360	230	CCH
367-12-4	2-Fluorophenol		69%					
13127-88-3	Phenol-D6		90%					
4165-60-0	Nitrobenzene-D5		72%					
321-60-8	2-Fluorobiphenyl		90%					
118-79-6	2,4,6-Tribromophenol		82%					
1718-51-0	Terphenyl-D14		83%					

JLW
4/18/09

KATAHDIN ANALYTICAL SERVICES
Report of Analytical Results

Client: CH2MHill
Project: TO-009 Lejeune
PO No:
Sample Date: 01/22/09
Received Date: 01/24/09
Extraction Date: 01/29/09
Analysis Date: 17-FEB-2009 16:31
Report Date: 02/18/2009
Matrix: SOIL
% Solids: 91.7

Lab ID: SC0365-29
Client ID: MR08-IS343-4-5-09A
SDG: TO9-42
Extracted by: CB
Extraction Method: SW846 3550
Analyst: JLP
Analysis Method: SW846 8270C
Lab Prep Batch: WG60272
Units: ug/Kgdrywt

CAS#	Compound	Flags	Results	DF	PQL	Adj.PQL	Adj.MDL	
100-52-7	Benzaldehyde	~~U~~ UJ	540	1.0	500	540	130	ICB
108-95-2	Phenol	U	540	1.0	500	540	170	
111-44-4	Bis(2-Chloroethyl)ether	U	360	1.0	330	360	88	
95-57-8	2-Chlorophenol	U	540	1.0	500	540	180	
95-48-7	2-Methylphenol	U	650	1.0	600	650	220	
108-60-1	2,2'-Oxybis(1-chloropropane)	U	360	1.0	330	360	97	
98-86-2	Acetophenone	U	650	1.0	600	650	190	
621-64-7	N-Nitroso-di-n-propylamine	U	360	1.0	330	360	90	
65794-96-9	3&4-Methylphenol	U	650	1.0	600	650	200	
67-72-1	Hexachloroethane	U	360	1.0	330	360	100	
98-95-3	Nitrobenzene	U	360	1.0	330	360	99	
78-59-1	Isophorone	U	360	1.0	330	360	82	
88-75-5	2-Nitrophenol	U	650	1.0	600	650	180	
105-67-9	2,4-Dimethylphenol	U	540	1.0	500	540	180	
111-91-1	Bis(2-Chloroethoxy)methane	U	360	1.0	330	360	100	
120-83-2	2,4-Dichlorophenol	U	540	1.0	500	540	160	
106-47-8	4-Chloroaniline	U	540	1.0	500	540	130	
105-60-2	Caprolactam	U	540	1.0	500	540	160	
59-50-7	4-Chloro-3-Methylphenol	U	540	1.0	500	540	180	
88-06-2	2,4,6-Trichlorophenol	U	540	1.0	500	540	170	
95-95-4	2,4,5-Trichlorophenol	U	540	1.0	500	540	170	
91-58-7	2-Chloronaphthalene	U	360	1.0	330	360	95	
92-52-4	1,1'-Biphenyl	U	360	1.0	330	360	80	
88-74-4	2-Nitroaniline	U	540	1.0	500	540	82	
131-11-3	Dimethyl Phthalate	U	360	1.0	330	360	85	
606-20-2	2,6-Dinitrotoluene	U	360	1.0	330	360	86	
208-96-8	Acenaphthylene	U	360	1.0	330	360	76	
99-09-2	3-Nitroaniline	U	540	1.0	500	540	100	
83-32-9	Acenaphthene	U	360	1.0	330	360	71	
51-28-5	2,4-Dinitrophenol	~~U~~ UJ	1300	1.0	1200	1300	410	CCH
132-64-9	Dibenzofuran	U	360	1.0	330	360	86	
100-02-7	4-Nitrophenol	~~U~~ UJ	1300	1.0	1200	1300	340	ICB
121-14-2	2,4-Dinitrotoluene	U	360	1.0	330	360	93	
84-66-2	Diethylphthalate	U	360	1.0	330	360	87	
7005-72-3	4-Chlorophenyl-phenylether	U	360	1.0	330	360	85	
100-01-6	4-Nitroaniline	~~U~~ UJ	540	1.0	500	540	150	CCH
534-52-1	4,6-Dinitro-2-Methylphenol	U	1300	1.0	1200	1300	370	
86-30-6	N-Nitrosodiphenylamine	U	720	1.0	660	720	240	
101-55-3	4-Bromophenyl-phenylether	U	360	1.0	330	360	93	
1912-24-9	Atrazine	U	360	1.0	330	360	99	
87-86-5	Pentachlorophenol	U	890	1.0	820	890	260	
120-12-7	Anthracene	U	360	1.0	330	360	92	
86-74-8	Carbazole	U	540	1.0	500	540	120	

kw
4/1/09

KATAHDIN ANALYTICAL SERVICES
Report of Analytical Results

Client: CH2MHill
Project: TO-009 Lejeune
PO No:
Sample Date: 01/22/09
Received Date: 01/24/09
Extraction Date: 01/29/09
Analysis Date: 17-FEB-2009 16:31
Report Date: 02/18/2009
Matrix: SOIL
% Solids: 91.7

Lab ID: SC0365-29
Client ID: MR08-IS343-4-5-09A
SDG: TO9-42
Extracted by: CB
Extraction Method: SW846 3550
Analyst: JLP
Analysis Method: SW846 8270C
Lab Prep Batch: WG60272
Units: ug/Kgdrywt

CAS#	Compound	Flags	Results	DF	PQL	Adj.PQL	Adj.MDL	
84-74-2	Di-n-butylphthalate	U	360	1.0	330	360	110	
85-68-7	Butylbenzylphthalate	U	360	1.0	330	360	100	
91-94-1	3,3'-Dichlorobenzidine	U	540	1.0	500	540	120	
218-01-9	Chrysene	U	360	1.0	330	360	100	
117-81-7	bis(2-Ethylhexyl)phthalate	J	220	1.0	330	360	110	
117-84-0	Di-n-octylphthalate	~~U~~ UJ	360	1.0	330	360	230	CAH
367-12-4	2-Fluorophenol		73%					
13127-88-3	Phenol-D6		81%					
4165-60-0	Nitrobenzene-D5		71%					
321-60-8	2-Fluorobiphenyl		87%					
118-79-6	2,4,6-Tribromophenol		91%					
1718-51-0	Terphenyl-D14		72%					

JLD 4/18/09

16

KATAHDIN ANALYTICAL SERVICES
Report of Analytical Results

Client: CH2MHill
Project: TO-009 Lejeune
PO No:
Sample Date: 01/22/09
Received Date: 01/24/09
Extraction Date: 01/29/09
Analysis Date: 17-FEB-2009 23:36
Report Date: 02/18/2009
Matrix: SOIL
% Solids: 81.5

Lab ID: SC0365-31
Client ID: MR08-SS342-09A
SDG: TO9-42
Extracted by: CB
Extraction Method: SW846 3550
Analyst: JCG
Analysis Method: SW846 8270C
Lab Prep Batch: WG60272
Units: ug/Kgdrywt

CAS#	Compound	Flags	Results	DF	PQL	Adj.PQL	Adj.MDL	
100-52-7	Benzaldehyde	~~U~~ UJ	610	1.0	500	610	150	JCB
108-95-2	Phenol	U	610	1.0	500	610	190	
111-44-4	Bis(2-Chloroethyl)ether	U	400	1.0	330	400	99	
95-57-8	2-Chlorophenol	U	610	1.0	500	610	200	
95-48-7	2-Methylphenol	U	740	1.0	600	740	240	
108-60-1	2,2'-Oxybis(1-chloropropane)	U	400	1.0	330	400	110	
98-86-2	Acetophenone	U	740	1.0	600	740	220	
621-64-7	N-Nitroso-di-n-propylamine	U	400	1.0	330	400	100	
65794-96-9	3&4-Methylphenol	U	740	1.0	600	740	230	
67-72-1	Hexachloroethane	U	400	1.0	330	400	120	
98-95-3	Nitrobenzene	U	400	1.0	330	400	110	
78-59-1	Isophorone	U	400	1.0	330	400	92	
88-75-5	2-Nitrophenol	U	740	1.0	600	740	200	
105-67-9	2,4-Dimethylphenol	U	610	1.0	500	610	200	
111-91-1	Bis(2-Chloroethoxy)methane	U	400	1.0	330	400	120	
120-83-2	2,4-Dichlorophenol	U	610	1.0	500	610	180	
106-47-8	4-Chloroaniline	U	610	1.0	500	610	150	
105-60-2	Caprolactam	U	610	1.0	500	610	180	
59-50-7	4-Chloro-3-Methylphenol	U	610	1.0	500	610	200	
88-06-2	2,4,6-Trichlorophenol	U	610	1.0	500	610	190	
95-95-4	2,4,5-Trichlorophenol	U	610	1.0	500	610	190	
91-58-7	2-Chloronaphthalene	U	400	1.0	330	400	110	
92-52-4	1,1'-Biphenyl	U	400	1.0	330	400	90	
88-74-4	2-Nitroaniline	U	610	1.0	500	610	92	
131-11-3	Dimethyl Phthalate	U	400	1.0	330	400	96	
606-20-2	2,6-Dinitrotoluene	U	400	1.0	330	400	97	
208-96-8	Acenaphthylene	U	400	1.0	330	400	86	
99-09-2	3-Nitroaniline	U	610	1.0	500	610	120	
83-32-9	Acenaphthene	U	400	1.0	330	400	80	
51-28-5	2,4-Dinitrophenol	U	1500	1.0	1200	1500	460	
132-64-9	Dibenzofuran	U	400	1.0	330	400	97	
100-02-7	4-Nitrophenol	~~U~~ UJ	1500	1.0	1200	1500	380	JCB
121-14-2	2,4-Dinitrotoluene	U	400	1.0	330	400	100	
84-66-2	Diethylphthalate	U	400	1.0	330	400	98	
7005-72-3	4-Chlorophenyl-phenylether	U	400	1.0	330	400	96	
100-01-6	4-Nitroaniline	U	610	1.0	500	610	160	
534-52-1	4,6-Dinitro-2-Methylphenol	U	1500	1.0	1200	1500	410	
86-30-6	N-Nitrosodiphenylamine	U	810	1.0	660	810	270	
101-55-3	4-Bromophenyl-phenylether	U	400	1.0	330	400	100	
1912-24-9	Atrazine	U	400	1.0	330	400	110	
87-86-5	Pentachlorophenol	U	1000	1.0	820	1000	290	
120-12-7	Anthracene	U	400	1.0	330	400	100	
86-74-8	Carbazole	U	610	1.0	500	610	140	

LW
4/18/09

KATAHDIN ANALYTICAL SERVICES
Report of Analytical Results

Client: CH2MHill
Project: TO-009 Lejeune
PO No:
Sample Date: 01/22/09
Received Date: 01/24/09
Extraction Date: 01/29/09
Analysis Date: 17-FEB-2009 23:36
Report Date: 02/18/2009
Matrix: SOIL
% Solids: 81.5

Lab ID: SC0365-31
Client ID: MR08-SS342-09A
SDG: TO9-42
Extracted by: CB
Extraction Method: SW846 3550
Analyst: JCG
Analysis Method: SW846 8270C
Lab Prep Batch: WG60272
Units: ug/Kgdrywt

CAS#	Compound	Flags	Results	DF	PQL	Adj.PQL	Adj.MDL	
84-74-2	Di-n-butylphthalate	U	400	1.0	330	400	120	
85-68-7	Butylbenzylphthalate	U	400	1.0	330	400	110	
91-94-1	3,3'-Dichlorobenzidine	U	610	1.0	500	610	140	
218-01-9	Chrysene	U	400	1.0	330	400	120	
117-81-7	bis(2-Ethylhexyl)phthalate	J	180	1.0	330	400	120	
117-84-0	Di-n-octylphthalate	~~J~~ UJ	400	1.0	330	400	260	CCH
367-12-4	2-Fluorophenol		69%					
13127-88-3	Phenol-D6		82%					
4165-60-0	Nitrobenzene-D5		67%					
321-60-8	2-Fluorobiphenyl		71%					
118-79-6	2,4,6-Tribromophenol		88%					
1718-51-0	Terphenyl-D14		69%					

LW
4/18/09

17

KATAHDIN ANALYTICAL SERVICES
Report of Analytical Results

Client: CH2MHill
Project: TO-009 Lejeune
PO No:
Sample Date: 01/22/09
Received Date: 01/24/09
Extraction Date: 01/29/09
Analysis Date: 18-FEB-2009 00:18
Report Date: 02/18/2009
Matrix: SOIL
% Solids: 90.3

Lab ID: SC0365-33
Client ID: MR08-IS341-4-5-09A
SDG: TO9-42
Extracted by: CB
Extraction Method: SW846 3550
Analyst: JCG
Analysis Method: SW846 8270C
Lab Prep Batch: WG60272
Units: ug/Kgdrywt

CAS#	Compound	Flags	Results	DF	PQL	Adj.PQL	Adj.MDL	
100-52-7	Benzaldehyde	~~U~~ UJ	550	1.0	500	550	130	ICB
108-95-2	Phenol	U	550	1.0	500	550	170	
111-44-4	Bis(2-Chloroethyl)ether	U	360	1.0	330	360	90	
95-57-8	2-Chlorophenol	U	550	1.0	500	550	180	
95-48-7	2-Methylphenol	U	660	1.0	600	660	220	
108-60-1	2,2'-Oxybis(1-chloropropane)	U	360	1.0	330	360	98	
98-86-2	Acetophenone	U	660	1.0	600	660	200	
621-64-7	N-Nitroso-di-n-propylamine	U	360	1.0	330	360	92	
65794-96-9	3&4-Methylphenol	U	660	1.0	600	660	210	
67-72-1	Hexachloroethane	U	360	1.0	330	360	110	
98-95-3	Nitrobenzene	U	360	1.0	330	360	100	
78-59-1	Isophorone	U	360	1.0	330	360	83	
88-75-5	2-Nitrophenol	U	660	1.0	600	660	180	
105-67-9	2,4-Dimethylphenol	U	550	1.0	500	550	180	
111-91-1	Bis(2-Chloroethoxy)methane	U	360	1.0	330	360	110	
120-83-2	2,4-Dichlorophenol	U	550	1.0	500	550	170	
106-47-8	4-Chloroaniline	U	550	1.0	500	550	130	
105-60-2	Caprolactam	U	550	1.0	500	550	160	
59-50-7	4-Chloro-3-Methylphenol	U	550	1.0	500	550	180	
88-06-2	2,4,6-Trichlorophenol	U	550	1.0	500	550	170	
95-95-4	2,4,5-Trichlorophenol	U	550	1.0	500	550	170	
91-58-7	2-Chloronaphthalene	U	360	1.0	330	360	96	
92-52-4	1,1'-Biphenyl	U	360	1.0	330	360	81	
88-74-4	2-Nitroaniline	U	550	1.0	500	550	83	
131-11-3	Dimethyl Phthalate	U	360	1.0	330	360	86	
606-20-2	2,6-Dinitrotoluene	U	360	1.0	330	360	87	
208-96-8	Acenaphthylene	U	360	1.0	330	360	77	
99-09-2	3-Nitroaniline	U	550	1.0	500	550	100	
83-32-9	Acenaphthene	U	360	1.0	330	360	72	
51-28-5	2,4-Dinitrophenol	U	1300	1.0	1200	1300	420	
132-64-9	Dibenzofuran	U	360	1.0	330	360	87	
100-02-7	4-Nitrophenol	~~U~~ UJ	1300	1.0	1200	1300	340	ICB
121-14-2	2,4-Dinitrotoluene	U	360	1.0	330	360	94	
84-66-2	Diethylphthalate	U	360	1.0	330	360	88	
7005-72-3	4-Chlorophenyl-phenylether	U	360	1.0	330	360	86	
100-01-6	4-Nitroaniline	U	550	1.0	500	550	150	
534-52-1	4,6-Dinitro-2-Methylphenol	U	1300	1.0	1200	1300	370	
86-30-6	N-Nitrosodiphenylamine	U	730	1.0	660	730	240	
101-55-3	4-Bromophenyl-phenylether	U	360	1.0	330	360	94	
1912-24-9	Atrazine	U	360	1.0	330	360	100	
87-86-5	Pentachlorophenol	U	910	1.0	820	910	260	
120-12-7	Anthracene	U	360	1.0	330	360	93	
86-74-8	Carbazole	U	550	1.0	500	550	120	

MW 4/18/09

KATAHDIN ANALYTICAL SERVICES
Report of Analytical Results

Client: CH2MHill
Project: TO-009 Lejeune
PO No:
Sample Date: 01/22/09
Received Date: 01/24/09
Extraction Date: 01/29/09
Analysis Date: 18-FEB-2009 00:18
Report Date: 02/18/2009
Matrix: SOIL
% Solids: 90.3

Lab ID: SC0365-33
Client ID: MR08-IS341-4-5-09A
SDG: TO9-42
Extracted by: CB
Extraction Method: SW846 3550
Analyst: JCG
Analysis Method: SW846 8270C
Lab Prep Batch: WG60272
Units: ug/Kgdrywt

CAS#	Compound	Flags	Results	DF	PQL	Adj.PQL	Adj.MDL
84-74-2	Di-n-butylphthalate	U	360	1.0	330	360	110
85-68-7	Butylbenzylphthalate	U	360	1.0	330	360	100
91-94-1	3,3'-Dichlorobenzidine	U	550	1.0	500	550	130
218-01-9	Chrysene	U	360	1.0	330	360	100
117-81-7	bis(2-Ethylhexyl)phthalate	J	250	1.0	330	360	110
117-84-0	Di-n-octylphthalate	~~U~~ UJ	360	1.0	330	360	230 CCH
367-12-4	2-Fluorophenol		57%				
13127-88-3	Phenol-D6		69%				
4165-60-0	Nitrobenzene-D5		63%				
321-60-8	2-Fluorobiphenyl		62%				
118-79-6	2,4,6-Tribromophenol		54%				
1718-51-0	Terphenyl-D14		65%				

MW 4/18/09

KATAHDIN ANALYTICAL SERVICES
Report of Analytical Results

Client: CH2MHill
Project: TO-009 Lejeune
PO No:
Sample Date: 01/22/09
Received Date: 01/24/09
Extraction Date: 01/29/09
Analysis Date: 18-FEB-2009 01:00
Report Date: 02/18/2009
Matrix: SOIL
% Solids: 86.1

Lab ID: SC0365-35
Client ID: MR08-SS341-09A
SDG: TO9-42
Extracted by: CB
Extraction Method: SW846 3550
Analyst: JCG
Analysis Method: SW846 8270C
Lab Prep Batch: WG60272
Units: ug/Kgdrywt

CAS#	Compound	Flags	Results	DF	PQL	Adj.PQL	Adj.MDL	
100-52-7	Benzaldehyde	~~U~~ UJ	580	1.0	500	580	140	ICB
108-95-2	Phenol	U	580	1.0	500	580	180	
111-44-4	Bis(2-Chloroethyl)ether	U	380	1.0	330	380	94	
95-57-8	2-Chlorophenol	U	580	1.0	500	580	190	
95-48-7	2-Methylphenol	U	700	1.0	600	700	230	
108-60-1	2,2'-Oxybis(1-chloropropane)	U	380	1.0	330	380	100	
98-86-2	Acetophenone	U	700	1.0	600	700	210	
621-64-7	N-Nitroso-di-n-propylamine	U	380	1.0	330	380	96	
65794-96-9	3&4-Methylphenol	U	700	1.0	600	700	220	
67-72-1	Hexachloroethane	U	380	1.0	330	380	110	
98-95-3	Nitrobenzene	U	380	1.0	330	380	100	
78-59-1	Isophorone	U	380	1.0	330	380	87	
88-75-5	2-Nitrophenol	U	700	1.0	600	700	190	
105-67-9	2,4-Dimethylphenol	U	580	1.0	500	580	190	
111-91-1	Bis(2-Chloroethoxy)methane	U	380	1.0	330	380	110	
120-83-2	2,4-Dichlorophenol	U	580	1.0	500	580	170	
106-47-8	4-Chloroaniline	U	580	1.0	500	580	140	
105-60-2	Caprolactam	U	580	1.0	500	580	170	
59-50-7	4-Chloro-3-Methylphenol	U	580	1.0	500	580	190	
88-06-2	2,4,6-Trichlorophenol	U	580	1.0	500	580	180	
95-95-4	2,4,5-Trichlorophenol	U	580	1.0	500	580	180	
91-58-7	2-Chloronaphthalene	U	380	1.0	330	380	100	
92-52-4	1,1'-Biphenyl	U	380	1.0	330	380	85	
88-74-4	2-Nitroaniline	U	580	1.0	500	580	87	
131-11-3	Dimethyl Phthalate	U	380	1.0	330	380	90	
606-20-2	2,6-Dinitrotoluene	U	380	1.0	330	380	92	
208-96-8	Acenaphthylene	U	380	1.0	330	380	81	
99-09-2	3-Nitroaniline	U	580	1.0	500	580	110	
83-32-9	Acenaphthene	U	380	1.0	330	380	75	
51-28-5	2,4-Dinitrophenol	U	1400	1.0	1200	1400	440	
132-64-9	Dibenzofuran	U	380	1.0	330	380	92	
100-02-7	4-Nitrophenol	~~U~~ UJ	1400	1.0	1200	1400	360	ICB
121-14-2	2,4-Dinitrotoluene	U	380	1.0	330	380	99	
84-66-2	Diethylphthalate	U	380	1.0	330	380	93	
7005-72-3	4-Chlorophenyl-phenylether	U	380	1.0	330	380	90	
100-01-6	4-Nitroaniline	U	580	1.0	500	580	160	
534-52-1	4,6-Dinitro-2-Methylphenol	U	1400	1.0	1200	1400	390	
86-30-6	N-Nitrosodiphenylamine	U	770	1.0	660	770	250	
101-55-3	4-Bromophenyl-phenylether	U	380	1.0	330	380	99	
1912-24-9	Atrazine	U	380	1.0	330	380	100	
87-86-5	Pentachlorophenol	U	950	1.0	820	950	280	
120-12-7	Anthracene	U	380	1.0	330	380	98	
86-74-8	Carbazole	U	580	1.0	500	580	130	

lw
4/18/09

KATAHDIN ANALYTICAL SERVICES
Report of Analytical Results

Client: CH2MHill
Project: TO-009 Lejeune
PO No:
Sample Date: 01/22/09
Received Date: 01/24/09
Extraction Date: 01/29/09
Analysis Date: 18-FEB-2009 01:00
Report Date: 02/18/2009
Matrix: SOIL
% Solids: 86.1

Lab ID: SC0365-35
Client ID: MR08-SS341-09A
SDG: TO9-42
Extracted by: CB
Extraction Method: SW846 3550
Analyst: JCG
Analysis Method: SW846 8270C
Lab Prep Batch: WG60272
Units: ug/Kgdrywt

CAS#	Compound	Flags	Results	DF	PQL	Adj.PQL	Adj.MDL
84-74-2	Di-n-butylphthalate	U	380	1.0	330	380	120
85-68-7	Butylbenzylphthalate	U	380	1.0	330	380	110
91-94-1	3,3'-Dichlorobenzidine	U	580	1.0	500	580	130
218-01-9	Chrysene	J	120	1.0	330	380	110
117-81-7	bis(2-Ethylhexyl)phthalate	U	380	1.0	330	380	110
117-84-0	Di-n-octylphthalate	~~J~~ UJ	380	1.0	330	380	240 CCH
367-12-4	2-Fluorophenol		64%				
13127-88-3	Phenol-D6		76%				
4165-60-0	Nitrobenzene-D5		62%				
321-60-8	2-Fluorobiphenyl		68%				
118-79-6	2,4,6-Tribromophenol		85%				
1718-51-0	Terphenyl-D14		65%				

LW
4/18/09

KATAHDIN ANALYTICAL SERVICES
Report of Analytical Results

Client: CH2MHill
Project: TO-009 Lejeune
PO No:
Sample Date: 01/22/09
Received Date: 01/24/09
Extraction Date: 01/29/09
Analysis Date: 18-FEB-2009 01:42
Report Date: 02/18/2009
Matrix: SOIL
% Solids: 86.3

Lab ID: SC0365-37
Client ID: MR08-SS340-09A
SDG: TO9-42
Extracted by: CB
Extraction Method: SW846 3550
Analyst: JCG
Analysis Method: SW846 8270C
Lab Prep Batch: WG60272
Units: ug/Kgdrywt

CAS#	Compound	Flags	Results	DF	PQL	Adj.PQL	Adj.MDL	
100-52-7	Benzaldehyde	~~U~~ UJ	580	1.0	500	580	140	ICB
108-95-2	Phenol	U	580	1.0	500	580	180	
111-44-4	Bis(2-Chloroethyl)ether	U	380	1.0	330	380	94	
95-57-8	2-Chlorophenol	U	580	1.0	500	580	190	
95-48-7	2-Methylphenol	U	690	1.0	600	690	230	
108-60-1	2,2'-Oxybis(1-chloropropane)	U	380	1.0	330	380	100	
98-86-2	Acetophenone	U	690	1.0	600	690	210	
621-64-7	N-Nitroso-di-n-propylamine	U	380	1.0	330	380	96	
65794-96-9	3&4-Methylphenol	U	690	1.0	600	690	220	
67-72-1	Hexachloroethane	U	380	1.0	330	380	110	
98-95-3	Nitrobenzene	U	380	1.0	330	380	100	
78-59-1	Isophorone	U	380	1.0	330	380	87	
88-75-5	2-Nitrophenol	U	690	1.0	600	690	190	
105-67-9	2,4-Dimethylphenol	U	580	1.0	500	580	190	
111-91-1	Bis(2-Chloroethoxy)methane	U	380	1.0	330	380	110	
120-83-2	2,4-Dichlorophenol	U	580	1.0	500	580	170	
106-47-8	4-Chloroaniline	U	580	1.0	500	580	140	
105-60-2	Caprolactam	U	580	1.0	500	580	170	
59-50-7	4-Chloro-3-Methylphenol	U	580	1.0	500	580	190	
88-06-2	2,4,6-Trichlorophenol	U	580	1.0	500	580	180	
95-95-4	2,4,5-Trichlorophenol	U	580	1.0	500	580	180	
91-58-7	2-Chloronaphthalene	U	380	1.0	330	380	100	
92-52-4	1,1'-Biphenyl	U	380	1.0	330	380	84	
88-74-4	2-Nitroaniline	U	580	1.0	500	580	87	
131-11-3	Dimethyl Phthalate	U	380	1.0	330	380	90	
606-20-2	2,6-Dinitrotoluene	U	380	1.0	330	380	91	
208-96-8	Acenaphthylene	U	380	1.0	330	380	81	
99-09-2	3-Nitroaniline	U	580	1.0	500	580	110	
83-32-9	Acenaphthene	U	380	1.0	330	380	75	
51-28-5	2,4-Dinitrophenol	U	1400	1.0	1200	1400	440	
132-64-9	Dibenzofuran	U	380	1.0	330	380	91	
100-02-7	4-Nitrophenol	~~U~~ UJ	1400	1.0	1200	1400	360	ICB
121-14-2	2,4-Dinitrotoluene	U	380	1.0	330	380	98	
84-66-2	Diethylphthalate	U	380	1.0	330	380	93	
7005-72-3	4-Chlorophenyl-phenylether	U	380	1.0	330	380	90	
100-01-6	4-Nitroaniline	U	580	1.0	500	580	160	
534-52-1	4,6-Dinitro-2-Methylphenol	U	1400	1.0	1200	1400	390	
86-30-6	N-Nitrosodiphenylamine	U	760	1.0	660	760	250	
101-55-3	4-Bromophenyl-phenylether	U	380	1.0	330	380	98	
1912-24-9	Atrazine	U	380	1.0	330	380	100	
87-86-5	Pentachlorophenol	U	950	1.0	820	950	270	
120-12-7	Anthracene	U	380	1.0	330	380	97	
86-74-8	Carbazole	U	580	1.0	500	580	130	

MW 4/18/09

KATAHDIN ANALYTICAL SERVICES
Report of Analytical Results

Client: CH2MHill
Project: TO-009 Lejeune
PO No:
Sample Date: 01/22/09
Received Date: 01/24/09
Extraction Date: 01/29/09
Analysis Date: 18-FEB-2009 01:42
Report Date: 02/18/2009
Matrix: SOIL
% Solids: 86.3

Lab ID: SC0365-37
Client ID: MR08-SS340-09A
SDG: TO9-42
Extracted by: CB
Extraction Method: SW846 3550
Analyst: JCG
Analysis Method: SW846 8270C
Lab Prep Batch: WG60272
Units: ug/Kgdrywt

CAS#	Compound	Flags	Results	DF	PQL	Adj.PQL	Adj.MDL
84-74-2	Di-n-butylphthalate	U	380	1.0	330	380	120
85-68-7	Butylbenzylphthalate	U	380	1.0	330	380	110
91-94-1	3,3'-Dichlorobenzidine	U	580	1.0	500	580	130
218-01-9	Chrysene	U	380	1.0	330	380	110
117-81-7	bis(2-Ethylhexyl)phthalate	U	380	1.0	330	380	110
117-84-0	Di-n-octylphthalate	~~U~~ UJ	380	1.0	330	380	240 CCH
367-12-4	2-Fluorophenol		58%				
13127-88-3	Phenol-D6		72%				
4165-60-0	Nitrobenzene-D5		62%				
321-60-8	2-Fluorobiphenyl		60%				
118-79-6	2,4,6-Tribromophenol		65%				
1718-51-0	Terphenyl-D14		70%				

fw 4/8/09

KATAHDIN ANALYTICAL SERVICES
Report of Analytical Results

Client: CH2MHill
Project: TO-009 Lejeune
PO No:
Sample Date: 01/22/09
Received Date: 01/24/09
Extraction Date: 01/29/09
Analysis Date: 13-FEB-2009 14:05
Report Date: 02/18/2009
Matrix: SOIL
% Solids: 81.2

Lab ID: SC0365-39
Client ID: MR08-IS340-4-5-09A
SDG: TO9-42
Extracted by: CB
Extraction Method: SW846 3550
Analyst: JCG
Analysis Method: SW846 8270C
Lab Prep Batch: WG60292
Units: ug/Kgdrywt

CAS#	Compound	Flags	Results	DF	PQL	Adj.PQL	Adj.MDL	
100-52-7	Benzaldehyde	~~U~~ UJ	620	1.0	500	620	150	ICB
108-95-2	Phenol	U	620	1.0	500	620	190	
111-44-4	Bis(2-Chloroethyl)ether	U	410	1.0	330	410	100	
95-57-8	2-Chlorophenol	U	620	1.0	500	620	200	
95-48-7	2-Methylphenol	U	740	1.0	600	740	250	
108-60-1	2,2'-Oxybis(1-chloropropane)	~~U~~ UJ	410	1.0	330	410	110	CCH
98-86-2	Acetophenone	U	740	1.0	600	740	220	
621-64-7	N-Nitroso-di-n-propylamine	U	410	1.0	330	410	100	
65794-96-9	3&4-Methylphenol	U	740	1.0	600	740	230	
67-72-1	Hexachloroethane	U	410	1.0	330	410	120	
98-95-3	Nitrobenzene	U	410	1.0	330	410	110	
78-59-1	Isophorone	U	410	1.0	330	410	92	
88-75-5	2-Nitrophenol	U	740	1.0	600	740	200	
105-67-9	2,4-Dimethylphenol	U	620	1.0	500	620	200	
111-91-1	Bis(2-Chloroethoxy)methane	U	410	1.0	330	410	120	
120-83-2	2,4-Dichlorophenol	U	620	1.0	500	620	180	
106-47-8	4-Chloroaniline	U	620	1.0	500	620	150	
105-60-2	Caprolactam	U	620	1.0	500	620	180	
59-50-7	4-Chloro-3-Methylphenol	U	620	1.0	500	620	200	
88-06-2	2,4,6-Trichlorophenol	U	620	1.0	500	620	190	
95-95-4	2,4,5-Trichlorophenol	U	620	1.0	500	620	190	
91-58-7	2-Chloronaphthalene	U	410	1.0	330	410	110	
92-52-4	1,1'-Biphenyl	~~U~~ UJ	410	1.0	330	410	90	ICB
88-74-4	2-Nitroaniline	U	620	1.0	500	620	92	
131-11-3	Dimethyl Phthalate	U	410	1.0	330	410	96	
606-20-2	2,6-Dinitrotoluene	U	410	1.0	330	410	97	
208-96-8	Acenaphthylene	U	410	1.0	330	410	86	
99-09-2	3-Nitroaniline	U	620	1.0	500	620	120	
83-32-9	Acenaphthene	U	410	1.0	330	410	80	
51-28-5	2,4-Dinitrophenol	~~U~~ UJ	1500	1.0	1200	1500	460	~~BS~~ ICB
132-64-9	Dibenzofuran	U	410	1.0	330	410	97	
100-02-7	4-Nitrophenol	U	1500	1.0	1200	1500	380	
121-14-2	2,4-Dinitrotoluene	U	410	1.0	330	410	100	
84-66-2	Diethylphthalate	U	410	1.0	330	410	98	
7005-72-3	4-Chlorophenyl-phenylether	U	410	1.0	330	410	96	
100-01-6	4-Nitroaniline	U	620	1.0	500	620	160	
534-52-1	4,6-Dinitro-2-Methylphenol	~~U~~ UJ	1500	1.0	1200	1500	420	ICB
86-30-6	N-Nitrosodiphenylamine	U	810	1.0	660	810	270	
101-55-3	4-Bromophenyl-phenylether	U	410	1.0	330	410	100	
1912-24-9	Atrazine	U	410	1.0	330	410	110	
87-86-5	Pentachlorophenol	~~U~~ UJ	1000	1.0	820	1000	290	ICB
120-12-7	Anthracene	U	410	1.0	330	410	100	
86-74-8	Carbazole	U	620	1.0	500	620	140	

MW 4/18/09

KATAHDIN ANALYTICAL SERVICES
Report of Analytical Results

Client: CH2MHill
Project: TO-009 Lejeune
PO No:
Sample Date: 01/22/09
Received Date: 01/24/09
Extraction Date: 01/29/09
Analysis Date: 13-FEB-2009 14:05
Report Date: 02/18/2009
Matrix: SOIL
% Solids: 81.2

Lab ID: SC0365-39
Client ID: MR08-IS340-4-5-09A
SDG: TO9-42
Extracted by: CB
Extraction Method: SW846 3550
Analyst: JCG
Analysis Method: SW846 8270C
Lab Prep Batch: WG60292
Units: ug/Kgdrywt

CAS#	Compound	Flags	Results	DF	PQL	Adj.PQL	Adj.MDL
84-74-2	Di-n-butylphthalate	U	410	1.0	330	410	120
85-68-7	Butylbenzylphthalate	U	410	1.0	330	410	110
91-94-1	3,3'-Dichlorobenzidine	U	620	1.0	500	620	140
218-01-9	Chrysene	U	410	1.0	330	410	120
117-81-7	bis(2-Ethylhexyl)phthalate	J	230	1.0	330	410	120
117-84-0	Di-n-octylphthalate	U	410	1.0	330	410	260
367-12-4	2-Fluorophenol		73%				
13127-88-3	Phenol-D6		70%				
4165-60-0	Nitrobenzene-D5		81%				
321-60-8	2-Fluorobiphenyl		87%				
118-79-6	2,4,6-Tribromophenol		73%				
1718-51-0	Terphenyl-D14		83%				

MW
4/18/09

ENVIRONMENTAL
Data Services, Inc.

POLYNUCLEAR AROMATIC COMPOUNDS BY 8270SIM

USEPA Region IV - Level IV Review

Site: MCB Camp Lejeune, TO-09 SDG #: TO9-43

Client: CH2M HILL, Inc., Virginia Beach, Virginia Date: April 18, 2009

Laboratory: Katahdin Analytical Services, Scarborough, Maine Reviewer: Nancy Weaver

EDS ID	Client Sample ID	Laboratory Sample ID	Matrix
1	MR08-SS339-09A	SC0366-2	Soil
2	MR08-IS339-4-5-09A	SC0366-4	Soil
3	MR08-SS338-09A	SC0366-6	Soil
4	MR08-SS338D-09A	SC0366-8	Soil
5	MR08-IS338-4-5-09A	SC0366-10	Soil
6	MR08-IS338D-4-5-09A	SC0366-12	Soil
7	MR08-SS314-09A	SC0366-14	Soil
8	MR08-IS342-4-5-09A	SC0408-2	Soil
9	MR08-IS362-4-5-09A	SC0408-4	Soil
10	MR08-SS362-09A	SC0408-6	Soil
11	MR08-IS363-4-5-09A	SC0408-8	Soil
12	MR08-SS363-09A	SC0408-10	Soil
13	MR08-IS364-4-5-09A	SC0408-12	Soil
14	MR08-SS364-09A	SC0408-14	Soil
15	MR08-IS365-4-5-09A	SC0408-16	Soil
16	MR08-SS365-09A	SC0408-18	Soil
17	MR08-SS366-09A	SC0408-20	Soil
18	MR08-IS366-4-5-09A	SC0408-22	Soil
19	MR08-SS367-09A	SC0408-24	Soil
20	MR08-IS329-1-2-09A	SC0408-26	Soil
20MS	MR08-IS329-1-2-09AMS	SC0408-26MS	Soil
20MSD	MR08-IS329-1-2-09AMSD	SC0408-26MSD	Soil

The USEPA "Contract Laboratory Program National Functional Guidelines for Organic Data Review," October 1999, and professional judgment were used in evaluating the data in this summary report.

Holding Times - All samples were extracted within 14 days for soil samples and analyzed within 40 days for all samples.

GC/MS Tuning - All of the DFTPP tunes in the initial and continuing calibrations met the percent relative abundance criteria.

Initial Calibration - The initial calibrations exhibited acceptable %RSD and mean RRF values.

Continuing Calibration - The continuing calibrations exhibited acceptable %D and RRF values.

Surrogates - All samples exhibited acceptable surrogate recoveries.

MS/MSD - The MS/MSD sample exhibited acceptable %R and RPD values.

Laboratory Control Sample - The LCS samples exhibited acceptable %R values.

Internal Standard (IS) Area Performance - All internal standards met response and retention time (RT) criteria.

Method Blank - The method blanks were free of contamination.

Field, Equipment Blank - Field QC results are summarized below.

Blank ID	Compound	Conc. ug/L	Action Level ug/L	Qualifier	Affected Samples
MR08-FB012609	None - ND	-	-	-	-
MR08-EB012209	None - ND	-	-	-	-

Field Duplicates - Field duplicate results are summarized below.

Compound	MR08-SS338-09A ug/kg	MR08-SS338D-09A ug/kg	RPD	Qualifier
Phenanthrene	54	13	122%	None
Fluoranthene	38	11 U	NC	None
Pyrene	42	11 U	NC	None
Benzo (a) anthracene	30	11 U	NC	None

Compound	MR08-IS338-4-5-09A ug/kg	MR08-IS338D-4-5-09A ug/kg	RPD	Qualifier
Phenanthrene	5.3	5.8	9%	None
Fluoranthene	11 U	2.6	NC	None
Pyrene	3.7	5.3	36%	None
Benzo (a) anthracene	7.4	7.8	5%	None

Compound Quantitation - No discrepancies were identified.

KATAHDIN ANALYTICAL SERVICES
Report of Analytical Results

Client: CH2MHill
Project: TO-009 Lejeune
PO No:
Sample Date: 01/22/09
Received Date: 01/24/09
Extraction Date: 01/29/09
Analysis Date: 13-FEB-2009 17:45
Report Date: 02/16/2009
Matrix: SOIL
% Solids: 77.1

Lab ID: SC0366-2
Client ID: MR08-SS339-09A
SDG: TO9-43
Extracted by: CB
Extraction Method: SW846 3550
Analyst: JCG
Analysis Method: SW846 M8270C
Lab Prep Batch: WG60295
Units: ug/Kgdrywt

CAS#	Compound	Flags	Results	DF	PQL	Adj.PQL	Adj.MDL
91-20-3	Naphthalene	U	13	1.0	10	13	3.4
91-57-6	2-Methylnaphthalene	U	13	1.0	10	13	2.8
86-73-7	Fluorene	U	13	1.0	10	13	4.2
85-01-8	Phenanthrene		38	1.0	10	13	2.3
206-44-0	Fluoranthene		94	1.0	10	13	2.3
129-00-0	Pyrene		74	1.0	10	13	2.7
56-55-3	Benzo(a)anthracene		45	1.0	10	13	2.5
205-99-2	Benzo(b)fluoranthene		82	1.0	10	13	3.1
207-08-9	Benzo(k)fluoranthene		39	1.0	10	13	4.0
50-32-8	Benzo(a)pyrene		47	1.0	10	13	4.3
193-39-5	Indeno(1,2,3-cd)pyrene		41	1.0	10	13	2.5
53-70-3	Dibenzo(a,h)anthracene		14	1.0	10	13	2.3
191-24-2	Benzo(g,h,i)perylene		38	1.0	10	13	2.6
118-74-1	Hexachlorobenzene	U	13	1.0	10	13	2.3
87-68-3	Hexachlorobutadiene	U	13	1.0	10	13	3.0
77-47-4	Hexachlorocyclopentadiene	U	13	1.0	10	13	1.9
7297-45-2	2-Methylnaphthalene-D10		64%				
367-12-4	2,4-Dibromophenol		81%				
81103-79-9	Fluorene-d10		79%				
1718-51-1	Pyrene-D10		89%				

liW
4/18/09

2

KATAHDIN ANALYTICAL SERVICES
Report of Analytical Results

Client: CH2MHill
Project: TO-009 Lejeune
PO No:
Sample Date: 01/22/09
Received Date: 01/24/09
Extraction Date: 01/29/09
Analysis Date: 13-FEB-2009 18:26
Report Date: 02/16/2009
Matrix: SOIL
% Solids: 90.5

Lab ID: SC0366-4
Client ID: MR08-IS339-4-5-09A
SDG: TO9-43
Extracted by: CB
Extraction Method: SW846 3550
Analyst: JCG
Analysis Method: SW846 M8270C
Lab Prep Batch: WG60295
Units: ug/Kgdrywt

CAS#	Compound	Flags	Results	DF	PQL	Adj.PQL	Adj.MDL
91-20-3	Naphthalene	U	11	1.0	10	11	2.9
91-57-6	2-Methylnaphthalene	U	11	1.0	10	11	2.4
86-73-7	Fluorene	U	11	1.0	10	11	3.5
85-01-8	Phenanthrene	U	11	1.0	10	11	2.0
206-44-0	Fluoranthene	U	11	1.0	10	11	2.0
129-00-0	Pyrene	U	11	1.0	10	11	2.3
56-55-3	Benzo(a)anthracene	J	5.7	1.0	10	11	2.1
205-99-2	Benzo(b)fluoranthene	U	11	1.0	10	11	2.6
207-08-9	Benzo(k)fluoranthene	U	11	1.0	10	11	3.4
50-32-8	Benzo(a)pyrene	U	11	1.0	10	11	3.6
193-39-5	Indeno(1,2,3-cd)pyrene	U	11	1.0	10	11	2.1
53-70-3	Dibenzo(a,h)anthracene	U	11	1.0	10	11	2.0
191-24-2	Benzo(g,h,i)perylene	U	11	1.0	10	11	2.2
118-74-1	Hexachlorobenzene	U	11	1.0	10	11	2.0
87-68-3	Hexachlorobutadiene	U	11	1.0	10	11	2.5
77-47-4	Hexachlorocyclopentadiene	U	11	1.0	10	11	1.6
7297-45-2	2-Methylnaphthalene-D10		75%				
367-12-4	2,4-Dibromophenol		80%				
81103-79-9	Fluorene-d10		85%				
1718-51-1	Pyrene-D10		102%				

LW
4/18/09

3

KATAHDIN ANALYTICAL SERVICES
Report of Analytical Results

Client: CH2MHill
Project: TO-009 Lejeune
PO No:
Sample Date: 01/22/09
Received Date: 01/24/09
Extraction Date: 01/29/09
Analysis Date: 13-FEB-2009 21:52
Report Date: 02/16/2009
Matrix: SOIL
% Solids: 79.0

Lab ID: SC0366-6
Client ID: MR08-SS338-09A
SDG: TO9-43
Extracted by: CB
Extraction Method: SW846 3550
Analyst: JCG
Analysis Method: SW846 M8270C
Lab Prep Batch: WG60295
Units: ug/Kgdrywt

CAS#	Compound	Flags	Results	DF	PQL	Adj.PQL	Adj.MDL
91-20-3	Naphthalene	U	13	1.0	10	13	3.3
91-57-6	2-Methylnaphthalene	U	13	1.0	10	13	2.8
86-73-7	Fluorene	U	13	1.0	10	13	4.0
85-01-8	Phenanthrene		54	1.0	10	13	2.3
206-44-0	Fluoranthene		38	1.0	10	13	2.3
129-00-0	Pyrene		42	1.0	10	13	2.6
56-55-3	Benzo(a)anthracene		30	1.0	10	13	2.4
205-99-2	Benzo(b)fluoranthene	U	13	1.0	10	13	3.0
207-08-9	Benzo(k)fluoranthene	U	13	1.0	10	13	3.9
50-32-8	Benzo(a)pyrene	U	13	1.0	10	13	4.2
193-39-5	Indeno(1,2,3-cd)pyrene	U	13	1.0	10	13	2.4
53-70-3	Dibenzo(a,h)anthracene	U	13	1.0	10	13	2.3
191-24-2	Benzo(g,h,i)perylene	U	13	1.0	10	13	2.5
118-74-1	Hexachlorobenzene	U	13	1.0	10	13	2.3
87-68-3	Hexachlorobutadiene	U	13	1.0	10	13	2.9
77-47-4	Hexachlorocyclopentadiene	U	13	1.0	10	13	1.9
7297-45-2	2-Methylnaphthalene-D10		81%				
367-12-4	2,4-Dibromophenol		101%				
81103-79-9	Fluorene-d10		94%				
1718-51-1	Pyrene-D10		106%				

RW
4/18/09

4

KATAHDIN ANALYTICAL SERVICES
Report of Analytical Results

Client: CH2MHill
Project: TO-009 Lejeune
PO No:
Sample Date: 01/22/09
Received Date: 01/24/09
Extraction Date: 01/29/09
Analysis Date: 13-FEB-2009 22:33
Report Date: 02/16/2009
Matrix: SOIL
% Solids: 92.0

Lab ID: SC0366-8
Client ID: MR08-SS338D-09A
SDG: TO9-43
Extracted by: CB
Extraction Method: SW846 3550
Analyst: JCG
Analysis Method: SW846 M8270C
Lab Prep Batch: WG60295
Units: ug/Kgdrywt

CAS#	Compound	Flags	Results	DF	PQL	Adj.PQL	Adj.MDL
91-20-3	Naphthalene	U	11	1.0	10	11	2.8
91-57-6	2-Methylnaphthalene	U	11	1.0	10	11	2.4
86-73-7	Fluorene	U	11	1.0	10	11	3.5
85-01-8	Phenanthrene		13	1.0	10	11	2.0
206-44-0	Fluoranthene	U	11	1.0	10	11	2.0
129-00-0	Pyrene	U	11	1.0	10	11	2.3
56-55-3	Benzo(a)anthracene	U	11	1.0	10	11	2.1
205-99-2	Benzo(b)fluoranthene	U	11	1.0	10	11	2.6
207-08-9	Benzo(k)fluoranthene	U	11	1.0	10	11	3.4
50-32-8	Benzo(a)pyrene	U	11	1.0	10	11	3.6
193-39-5	Indeno(1,2,3-cd)pyrene	U	11	1.0	10	11	2.1
53-70-3	Dibenzo(a,h)anthracene	U	11	1.0	10	11	2.0
191-24-2	Benzo(g,h,i)perylene	U	11	1.0	10	11	2.2
118-74-1	Hexachlorobenzene	U	11	1.0	10	11	2.0
87-68-3	Hexachlorobutadiene	U	11	1.0	10	11	2.5
77-47-4	Hexachlorocyclopentadiene	U	11	1.0	10	11	1.6
7297-45-2	2-Methylnaphthalene-D10		84%				
367-12-4	2,4-Dibromophenol		99%				
81103-79-9	Fluorene-d10		91%				
1718-51-1	Pyrene-D10		102%				

AW
4/18/09

KATAHDIN ANALYTICAL SERVICES
Report of Analytical Results

Client: CH2MHill
Project: TO-009 Lejeune
PO No:
Sample Date: 01/22/09
Received Date: 01/24/09
Extraction Date: 01/29/09
Analysis Date: 15-FEB-2009 15:39
Report Date: 02/16/2009
Matrix: SOIL
% Solids: 87.9

Lab ID: SC0366-10
Client ID: MR08-IS338-4-5-09A
SDG: TO9-43
Extracted by: CB
Extraction Method: SW846 3550
Analyst: JLP
Analysis Method: SW846 M8270C
Lab Prep Batch: WG60295
Units: ug/Kgdrywt

CAS#	Compound	Flags	Results	DF	PQL	Adj.PQL	Adj.MDL
91-20-3	Naphthalene	U	11	1.0	10	11	3.0
91-57-6	2-Methylnaphthalene	U	11	1.0	10	11	2.5
86-73-7	Fluorene	U	11	1.0	10	11	3.6
85-01-8	Phenanthrene	J	5.3	1.0	10	11	2.0
206-44-0	Fluoranthene	U	11	1.0	10	11	2.0
129-00-0	Pyrene	J	3.7	1.0	10	11	2.4
56-55-3	Benzo(a)anthracene	J	7.4	1.0	10	11	2.2
205-99-2	Benzo(b)fluoranthene	U	11	1.0	10	11	2.7
207-08-9	Benzo(k)fluoranthene	U	11	1.0	10	11	3.5
50-32-8	Benzo(a)pyrene	U	11	1.0	10	11	3.8
193-39-5	Indeno(1,2,3-cd)pyrene	U	11	1.0	10	11	2.2
53-70-3	Dibenzo(a,h)anthracene	U	11	1.0	10	11	2.0
191-24-2	Benzo(g,h,i)perylene	U	11	1.0	10	11	2.3
118-74-1	Hexachlorobenzene	U	11	1.0	10	11	2.0
87-68-3	Hexachlorobutadiene	U	11	1.0	10	11	2.6
77-47-4	Hexachlorocyclopentadiene	U	11	1.0	10	11	1.7
7297-45-2	2-Methylnaphthalene-D10		51%				
367-12-4	2,4-Dibromophenol		68%				
81103-79-9	Fluorene-d10		68%				
1718-51-1	Pyrene-D10		91%				

fw
4/18/09

6

KATAHDIN ANALYTICAL SERVICES
Report of Analytical Results

Client: CH2MHill
Project: TO-009 Lejeune
PO No:
Sample Date: 01/22/09
Received Date: 01/24/09
Extraction Date: 01/29/09
Analysis Date: 15-FEB-2009 16:21
Report Date: 02/16/2009
Matrix: SOIL
% Solids: 88.6

Lab ID: SC0366-12
Client ID: MR08-IS338D-4-5-09A
SDG: TO9-43
Extracted by: CB
Extraction Method: SW846 3550
Analyst: JLP
Analysis Method: SW846 M8270C
Lab Prep Batch: WG60295
Units: ug/Kgdrywt

CAS#	Compound	Flags	Results	DF	PQL	Adj.PQL	Adj.MDL
91-20-3	Naphthalene	U	11	1.0	10	11	2.9
91-57-6	2-Methylnaphthalene	U	11	1.0	10	11	2.5
86-73-7	Fluorene	U	11	1.0	10	11	3.6
85-01-8	Phenanthrene	J	5.8	1.0	10	11	2.0
206-44-0	Fluoranthene	J	2.6	1.0	10	11	2.0
129-00-0	Pyrene	J	5.3	1.0	10	11	2.4
56-55-3	Benzo(a)anthracene	J	7.8	1.0	10	11	2.1
205-99-2	Benzo(b)fluoranthene	U	11	1.0	10	11	2.7
207-08-9	Benzo(k)fluoranthene	U	11	1.0	10	11	3.5
50-32-8	Benzo(a)pyrene	U	11	1.0	10	11	3.7
193-39-5	Indeno(1,2,3-cd)pyrene	U	11	1.0	10	11	2.1
53-70-3	Dibenzo(a,h)anthracene	U	11	1.0	10	11	2.0
191-24-2	Benzo(g,h,i)perylene	U	11	1.0	10	11	2.2
118-74-1	Hexachlorobenzene	U	11	1.0	10	11	2.0
87-68-3	Hexachlorobutadiene	U	11	1.0	10	11	2.6
77-47-4	Hexachlorocyclopentadiene	U	11	1.0	10	11	1.7
7297-45-2	2-Methylnaphthalene-D10		67%				
367-12-4	2,4-Dibromophenol		73%				
81103-79-9	Fluorene-d10		68%				
1718-51-1	Pyrene-D10		93%				

lew
4/18/09

7

KATAHDIN ANALYTICAL SERVICES
Report of Analytical Results

Client: CH2MHill
Project: TO-009 Lejeune
PO No:
Sample Date: 01/22/09
Received Date: 01/24/09
Extraction Date: 01/29/09
Analysis Date: 15-FEB-2009 17:02
Report Date: 02/16/2009
Matrix: SOIL
% Solids: 74.0

Lab ID: SC0366-14
Client ID: MR08-SS314-09A
SDG: TO9-43
Extracted by: CB
Extraction Method: SW846 3550
Analyst: JLP
Analysis Method: SW846 M8270C
Lab Prep Batch: WG60295
Units: ug/Kgdrywt

CAS#	Compound	Flags	Results	DF	PQL	Adj.PQL	Adj.MDL
91-20-3	Naphthalene	U	14	1.0	10	14	3.5
91-57-6	2-Methylnaphthalene	J	8.3	1.0	10	14	3.0
86-73-7	Fluorene	U	14	1.0	10	14	4.3
85-01-8	Phenanthrene		56	1.0	10	14	2.4
206-44-0	Fluoranthene		140	1.0	10	14	2.4
129-00-0	Pyrene		100	1.0	10	14	2.8
56-55-3	Benzo(a)anthracene		52	1.0	10	14	2.6
205-99-2	Benzo(b)fluoranthene		110	1.0	10	14	3.2
207-08-9	Benzo(k)fluoranthene		59	1.0	10	14	4.2
50-32-8	Benzo(a)pyrene		64	1.0	10	14	4.4
193-39-5	Indeno(1,2,3-cd)pyrene		51	1.0	10	14	2.6
53-70-3	Dibenzo(a,h)anthracene		24	1.0	10	14	2.4
191-24-2	Benzo(g,h,i)perylene		45	1.0	10	14	2.7
118-74-1	Hexachlorobenzene	U	14	1.0	10	14	2.4
87-68-3	Hexachlorobutadiene	U	14	1.0	10	14	3.1
77-47-4	Hexachlorocyclopentadiene	J	9.4	1.0	10	14	2.0
7297-45-2	2-Methylnaphthalene-D10		73%				
367-12-4	2,4-Dibromophenol		73%				
81103-79-9	Fluorene-d10		70%				
1718-51-1	Pyrene-D10		64%				

lw
4/18/09

8

KATAHDIN ANALYTICAL SERVICES
Report of Analytical Results

Client: CH2MHill
Project: TO-009 Lejeune
PO No:
Sample Date: 01/22/09
Received Date: 01/27/09
Extraction Date: 01/29/09
Analysis Date: 15-FEB-2009 17:44
Report Date: 02/16/2009
Matrix: SOIL
% Solids: 88.6

Lab ID: SC0408-2
Client ID: MR08-IS342-4-5-09A
SDG: TO9-43
Extracted by: CB
Extraction Method: SW846 3550
Analyst: JLP
Analysis Method: SW846 M8270C
Lab Prep Batch: WG60295
Units: ug/Kgdrywt

CAS#	Compound	Flags	Results	DF	PQL	Adj.PQL	Adj.MDL
91-20-3	Naphthalene	U	11	1.0	10	11	2.9
91-57-6	2-Methylnaphthalene	U	11	1.0	10	11	2.5
86-73-7	Fluorene	U	11	1.0	10	11	3.6
85-01-8	Phenanthrene	U	11	1.0	10	11	2.0
206-44-0	Fluoranthene	U	11	1.0	10	11	2.0
129-00-0	Pyrene	U	11	1.0	10	11	2.4
56-55-3	Benzo(a)anthracene	U	11	1.0	10	11	2.1
205-99-2	Benzo(b)fluoranthene	U	11	1.0	10	11	2.7
207-08-9	Benzo(k)fluoranthene	U	11	1.0	10	11	3.5
50-32-8	Benzo(a)pyrene	U	11	1.0	10	11	3.7
193-39-5	Indeno(1,2,3-cd)pyrene	U	11	1.0	10	11	2.1
53-70-3	Dibenzo(a,h)anthracene	U	11	1.0	10	11	2.0
191-24-2	Benzo(g,h,i)perylene	U	11	1.0	10	11	2.2
118-74-1	Hexachlorobenzene	U	11	1.0	10	11	2.0
87-68-3	Hexachlorobutadiene	U	11	1.0	10	11	2.6
77-47-4	Hexachlorocyclopentadiene	U	11	1.0	10	11	1.7
7297-45-2	2-Methylnaphthalene-D10		72%				
367-12-4	2,4-Dibromophenol		80%				
81103-79-9	Fluorene-d10		83%				
1718-51-1	Pyrene-D10		101%				

QW
4/18/09

KATAHDIN ANALYTICAL SERVICES
Report of Analytical Results

Client: CH2MHill
Project: TO-009 Lejeune
PO No:
Sample Date: 01/23/09
Received Date: 01/27/09
Extraction Date: 01/29/09
Analysis Date: 15-FEB-2009 18:25
Report Date: 02/16/2009
Matrix: SOIL
% Solids: 90.6

Lab ID: SC0408-4
Client ID: MR08-IS362-4-5-09A
SDG: TO9-43
Extracted by: CB
Extraction Method: SW846 3550
Analyst: JLP
Analysis Method: SW846 M8270C
Lab Prep Batch: WG60295
Units: ug/Kgdrywt

CAS#	Compound	Flags	Results	DF	PQL	Adj.PQL	Adj.MDL
91-20-3	Naphthalene	U	11	1.0	10	11	2.9
91-57-6	2-Methylnaphthalene	J	5.4	1.0	10	11	2.4
86-73-7	Fluorene	U	11	1.0	10	11	3.5
85-01-8	Phenanthrene	U	11	1.0	10	11	2.0
206-44-0	Fluoranthene	J	2.2	1.0	10	11	2.0
129-00-0	Pyrene	U	11	1.0	10	11	2.3
56-55-3	Benzo(a)anthracene	J	7.2	1.0	10	11	2.1
205-99-2	Benzo(b)fluoranthene	J	7.6	1.0	10	11	2.6
207-08-9	Benzo(k)fluoranthene	U	11	1.0	10	11	3.4
50-32-8	Benzo(a)pyrene	U	11	1.0	10	11	3.6
193-39-5	Indeno(1,2,3-cd)pyrene	J	2.8	1.0	10	11	2.1
53-70-3	Dibenzo(a,h)anthracene	J	2.5	1.0	10	11	2.0
191-24-2	Benzo(g,h,i)perylene	U	11	1.0	10	11	2.2
118-74-1	Hexachlorobenzene	U	11	1.0	10	11	2.0
87-68-3	Hexachlorobutadiene	U	11	1.0	10	11	2.5
77-47-4	Hexachlorocyclopentadiene	J	7.7	1.0	10	11	1.6
7297-45-2	2-Methylnaphthalene-D10		66%				
367-12-4	2,4-Dibromophenol		69%				
81103-79-9	Fluorene-d10		65%				
1718-51-1	Pyrene-D10		97%				

RW
4/18/09

10

KATAHDIN ANALYTICAL SERVICES
Report of Analytical Results

Client: CH2MHill
Project: TO-009 Lejeune
PO No:
Sample Date: 01/23/09
Received Date: 01/27/09
Extraction Date: 01/29/09
Analysis Date: 15-FEB-2009 19:06
Report Date: 02/16/2009
Matrix: SOIL
% Solids: 79.5

Lab ID: SC0408-6
Client ID: MR08-SS362-09A
SDG: TO9-43
Extracted by: CB
Extraction Method: SW846 3550
Analyst: JLP
Analysis Method: SW846 M8270C
Lab Prep Batch: WG60295
Units: ug/Kgdrywt

CAS#	Compound	Flags	Results	DF	PQL	Adj.PQL	Adj.MDL
91-20-3	Naphthalene	U	12	1.0	10	12	3.3
91-57-6	2-Methylnaphthalene	J	6.4	1.0	10	12	2.8
86-73-7	Fluorene	U	12	1.0	10	12	4.0
85-01-8	Phenanthrene		42	1.0	10	12	2.3
206-44-0	Fluoranthene		120	1.0	10	12	2.3
129-00-0	Pyrene		120	1.0	10	12	2.6
56-55-3	Benzo(a)anthracene		60	1.0	10	12	2.4
205-99-2	Benzo(b)fluoranthene		97	1.0	10	12	3.0
207-08-9	Benzo(k)fluoranthene		54	1.0	10	12	3.9
50-32-8	Benzo(a)pyrene		60	1.0	10	12	4.2
193-39-5	Indeno(1,2,3-cd)pyrene		47	1.0	10	12	2.4
53-70-3	Dibenzo(a,h)anthracene		19	1.0	10	12	2.3
191-24-2	Benzo(g,h,i)perylene		44	1.0	10	12	2.5
118-74-1	Hexachlorobenzene	U	12	1.0	10	12	2.3
87-68-3	Hexachlorobutadiene	U	12	1.0	10	12	2.9
77-47-4	Hexachlorocyclopentadiene	U	12	1.0	10	12	1.9
7297-45-2	2-Methylnaphthalene-D10		48%				
367-12-4	2,4-Dibromophenol		68%				
81103-79-9	Fluorene-d10		63%				
1718-51-1	Pyrene-D10		94%				

RW
4/18/09

11

KATAHDIN ANALYTICAL SERVICES
Report of Analytical Results

Client: CH2MHill
Project: TO-009 Lejeune
PO No:
Sample Date: 01/23/09
Received Date: 01/27/09
Extraction Date: 01/29/09
Analysis Date: 15-FEB-2009 19:47
Report Date: 02/16/2009
Matrix: SOIL
% Solids: 88.6

Lab ID: SC0408-8
Client ID: MR08-IS363-4-5-09A
SDG: TO9-43
Extracted by: CB
Extraction Method: SW846 3550
Analyst: JLP
Analysis Method: SW846 M8270C
Lab Prep Batch: WG60295
Units: ug/Kgdrywt

CAS#	Compound	Flags	Results	DF	PQL	Adj.PQL	Adj.MDL
91-20-3	Naphthalene	U	11	1.0	10	11	2.9
91-57-6	2-Methylnaphthalene	U	11	1.0	10	11	2.5
86-73-7	Fluorene	U	11	1.0	10	11	3.6
85-01-8	Phenanthrene	U	11	1.0	10	11	2.0
206-44-0	Fluoranthene	U	11	1.0	10	11	2.0
129-00-0	Pyrene	U	11	1.0	10	11	2.4
56-55-3	Benzo(a)anthracene	J	5.9	1.0	10	11	2.1
205-99-2	Benzo(b)fluoranthene	U	11	1.0	10	11	2.7
207-08-9	Benzo(k)fluoranthene	U	11	1.0	10	11	3.5
50-32-8	Benzo(a)pyrene	U	11	1.0	10	11	3.7
193-39-5	Indeno(1,2,3-cd)pyrene	U	11	1.0	10	11	2.1
53-70-3	Dibenzo(a,h)anthracene	U	11	1.0	10	11	2.0
191-24-2	Benzo(g,h,i)perylene	U	11	1.0	10	11	2.2
118-74-1	Hexachlorobenzene	U	11	1.0	10	11	2.0
87-68-3	Hexachlorobutadiene	U	11	1.0	10	11	2.6
77-47-4	Hexachlorocyclopentadiene	U	11	1.0	10	11	1.7
7297-45-2	2-Methylnaphthalene-D10		77%				
367-12-4	2,4-Dibromophenol		91%				
81103-79-9	Fluorene-d10		87%				
1718-51-1	Pyrene-D10		120%				

lW 4/18/09

KATAHDIN ANALYTICAL SERVICES
Report of Analytical Results

Client: CH2MHill
Project: TO-009 Lejeune
PO No:
Sample Date: 01/23/09
Received Date: 01/27/09
Extraction Date: 01/29/09
Analysis Date: 15-FEB-2009 20:28
Report Date: 02/16/2009
Matrix: SOIL
% Solids: 87.4

Lab ID: SC0408-10
Client ID: MR08-SS363-09A
SDG: TO9-43
Extracted by: CB
Extraction Method: SW846 3550
Analyst: JLP
Analysis Method: SW846 M8270C
Lab Prep Batch: WG60295
Units: ug/Kgdrywt

CAS#	Compound	Flags	Results	DF	PQL	Adj.PQL	Adj.MDL
91-20-3	Naphthalene	U	11	1.0	10	11	3.0
91-57-6	2-Methylnaphthalene	U	11	1.0	10	11	2.5
86-73-7	Fluorene	U	11	1.0	10	11	3.7
85-01-8	Phenanthrene		15	1.0	10	11	2.0
206-44-0	Fluoranthene		60	1.0	10	11	2.0
129-00-0	Pyrene		51	1.0	10	11	2.4
56-55-3	Benzo(a)anthracene		29	1.0	10	11	2.2
205-99-2	Benzo(b)fluoranthene		50	1.0	10	11	2.7
207-08-9	Benzo(k)fluoranthene		31	1.0	10	11	3.5
50-32-8	Benzo(a)pyrene		32	1.0	10	11	3.8
193-39-5	Indeno(1,2,3-cd)pyrene		23	1.0	10	11	2.2
53-70-3	Dibenzo(a,h)anthracene	J	9.9	1.0	10	11	2.0
191-24-2	Benzo(g,h,i)perylene		21	1.0	10	11	2.3
118-74-1	Hexachlorobenzene	U	11	1.0	10	11	2.0
87-68-3	Hexachlorobutadiene	U	11	1.0	10	11	2.6
77-47-4	Hexachlorocyclopentadiene	U	11	1.0	10	11	1.7
7297-45-2	2-Methylnaphthalene-D10		64%				
367-12-4	2,4-Dibromophenol		73%				
81103-79-9	Fluorene-d10		74%				
1718-51-1	Pyrene-D10		91%				

LW 4/18/09

KATAHDIN ANALYTICAL SERVICES
Report of Analytical Results

Client: CH2MHill
Project: TO-009 Lejeune
PO No:
Sample Date: 01/23/09
Received Date: 01/27/09
Extraction Date: 01/29/09
Analysis Date: 15-FEB-2009 21:09
Report Date: 02/16/2009
Matrix: SOIL
% Solids: 85.0

Lab ID: SC0408-12
Client ID: MR08-IS364-4-5-09A
SDG: TO9-43
Extracted by: CB
Extraction Method: SW846 3550
Analyst: JLP
Analysis Method: SW846 M8270C
Lab Prep Batch: WG60295
Units: ug/Kgdrywt

CAS#	Compound	Flags	Results	DF	PQL	Adj.PQL	Adj.MDL
91-20-3	Naphthalene	U	12	1.0	10	12	3.0
91-57-6	2-Methylnaphthalene	U	12	1.0	10	12	2.6
86-73-7	Fluorene	U	12	1.0	10	12	3.8
85-01-8	Phenanthrene	J	2.8	1.0	10	12	2.1
206-44-0	Fluoranthene	J	6.4	1.0	10	12	2.1
129-00-0	Pyrene	J	6.2	1.0	10	12	2.5
56-55-3	Benzo(a)anthracene	J	8.7	1.0	10	12	2.2
205-99-2	Benzo(b)fluoranthene	J	9.3	1.0	10	12	2.8
207-08-9	Benzo(k)fluoranthene	U	12	1.0	10	12	3.6
50-32-8	Benzo(a)pyrene	U	12	1.0	10	12	3.9
193-39-5	Indeno(1,2,3-cd)pyrene	U	12	1.0	10	12	2.2
53-70-3	Dibenzo(a,h)anthracene	U	12	1.0	10	12	2.1
191-24-2	Benzo(g,h,i)perylene	U	12	1.0	10	12	2.4
118-74-1	Hexachlorobenzene	U	12	1.0	10	12	2.1
87-68-3	Hexachlorobutadiene	U	12	1.0	10	12	2.7
77-47-4	Hexachlorocyclopentadiene	U	12	1.0	10	12	1.8
7297-45-2	2-Methylnaphthalene-D10		57%				
367-12-4	2,4-Dibromophenol		64%				
81103-79-9	Fluorene-d10		59%				
1718-51-1	Pyrene-D10		84%				

JLW
4/18/09

KATAHDIN ANALYTICAL SERVICES
Report of Analytical Results

Client: CH2MHill
Project: TO-009 Lejeune
PO No:
Sample Date: 01/23/09
Received Date: 01/27/09
Extraction Date: 01/29/09
Analysis Date: 15-FEB-2009 21:50
Report Date: 02/16/2009
Matrix: SOIL
% Solids: 71.3

Lab ID: SC0408-14
Client ID: MR08-SS364-09A
SDG: TO9-43
Extracted by: CB
Extraction Method: SW846 3550
Analyst: JLP
Analysis Method: SW846 M8270C
Lab Prep Batch: WG60295
Units: ug/Kgdrywt

CAS#	Compound	Flags	Results	DF	PQL	Adj.PQL	Adj.MDL
91-20-3	Naphthalene	U	14	1.0	10	14	3.6
91-57-6	2-Methylnaphthalene	J	6.6	1.0	10	14	3.1
86-73-7	Fluorene	U	14	1.0	10	14	4.5
85-01-8	Phenanthrene		40	1.0	10	14	2.5
206-44-0	Fluoranthene		140	1.0	10	14	2.5
129-00-0	Pyrene		130	1.0	10	14	2.9
56-55-3	Benzo(a)anthracene		64	1.0	10	14	2.7
205-99-2	Benzo(b)fluoranthene		110	1.0	10	14	3.4
207-08-9	Benzo(k)fluoranthene		62	1.0	10	14	4.3
50-32-8	Benzo(a)pyrene		70	1.0	10	14	4.6
193-39-5	Indeno(1,2,3-cd)pyrene		55	1.0	10	14	2.7
53-70-3	Dibenzo(a,h)anthracene		22	1.0	10	14	2.5
191-24-2	Benzo(g,h,i)perylene		51	1.0	10	14	2.8
118-74-1	Hexachlorobenzene	U	14	1.0	10	14	2.5
87-68-3	Hexachlorobutadiene	U	14	1.0	10	14	3.2
77-47-4	Hexachlorocyclopentadiene	U	14	1.0	10	14	2.1
7297-45-2	2-Methylnaphthalene-D10		60%				
367-12-4	2,4-Dibromophenol		70%				
81103-79-9	Fluorene-d10		71%				
1718-51-1	Pyrene-D10		85%				

LW
4/18/09

KATAHDIN ANALYTICAL SERVICES
Report of Analytical Results

Client: CH2MHill
Project: TO-009 Lejeune
PO No:
Sample Date: 01/23/09
Received Date: 01/27/09
Extraction Date: 01/29/09
Analysis Date: 15-FEB-2009 22:31
Report Date: 02/16/2009
Matrix: SOIL
% Solids: 95.0

Lab ID: SC0408-16
Client ID: MR08-IS365-4-5-09A
SDG: TO9-43
Extracted by: CB
Extraction Method: SW846 3550
Analyst: JLP
Analysis Method: SW846 M8270C
Lab Prep Batch: WG60295
Units: ug/Kgdrywt

CAS#	Compound	Flags	Results	DF	PQL	Adj.PQL	Adj.MDL
91-20-3	Naphthalene	U	10	1.0	10	10	2.7
91-57-6	2-Methylnaphthalene	J	5.2	1.0	10	10	2.3
86-73-7	Fluorene	U	10	1.0	10	10	3.4
85-01-8	Phenanthrene	U	10	1.0	10	10	1.9
206-44-0	Fluoranthene	U	10	1.0	10	10	1.9
129-00-0	Pyrene	U	10	1.0	10	10	2.2
56-55-3	Benzo(a)anthracene	J	6.2	1.0	10	10	2.0
205-99-2	Benzo(b)fluoranthene	U	10	1.0	10	10	2.5
207-08-9	Benzo(k)fluoranthene	U	10	1.0	10	10	3.3
50-32-8	Benzo(a)pyrene	U	10	1.0	10	10	3.5
193-39-5	Indeno(1,2,3-cd)pyrene	U	10	1.0	10	10	2.0
53-70-3	Dibenzo(a,h)anthracene	U	10	1.0	10	10	1.9
191-24-2	Benzo(g,h,i)perylene		40	1.0	10	10	2.1
118-74-1	Hexachlorobenzene	U	10	1.0	10	10	1.9
87-68-3	Hexachlorobutadiene	U	10	1.0	10	10	2.4
77-47-4	Hexachlorocyclopentadiene	J	7.6	1.0	10	10	1.6
7297-45-2	2-Methylnaphthalene-D10		69%				
367-12-4	2,4-Dibromophenol		67%				
81103-79-9	Fluorene-d10		72%				
1718-51-1	Pyrene-D10		85%				

MW 4/18/09

16

KATAHDIN ANALYTICAL SERVICES
Report of Analytical Results

Client: CH2MHill
Project: TO-009 Lejeune
PO No:
Sample Date: 01/23/09
Received Date: 01/27/09
Extraction Date: 01/29/09
Analysis Date: 15-FEB-2009 23:12
Report Date: 02/16/2009
Matrix: SOIL
% Solids: 87.0

Lab ID: SC0408-18
Client ID: MR08-SS365-09A
SDG: TO9-43
Extracted by: CB
Extraction Method: SW846 3550
Analyst: JLP
Analysis Method: SW846 M8270C
Lab Prep Batch: WG60295
Units: ug/Kgdrywt

CAS#	Compound	Flags	Results	DF	PQL	Adj.PQL	Adj.MDL
91-20-3	Naphthalene	U	11	1.0	10	11	3.0
91-57-6	2-Methylnaphthalene	J	5.3	1.0	10	11	2.5
86-73-7	Fluorene	U	11	1.0	10	11	3.7
85-01-8	Phenanthrene		23	1.0	10	11	2.1
206-44-0	Fluoranthene		98	1.0	10	11	2.1
129-00-0	Pyrene		94	1.0	10	11	2.4
56-55-3	Benzo(a)anthracene		44	1.0	10	11	2.2
205-99-2	Benzo(b)fluoranthene		77	1.0	10	11	2.8
207-08-9	Benzo(k)fluoranthene		50	1.0	10	11	3.6
50-32-8	Benzo(a)pyrene		51	1.0	10	11	3.8
193-39-5	Indeno(1,2,3-cd)pyrene		41	1.0	10	11	2.2
53-70-3	Dibenzo(a,h)anthracene		18	1.0	10	11	2.1
191-24-2	Benzo(g,h,i)perylene		38	1.0	10	11	2.3
118-74-1	Hexachlorobenzene	U	11	1.0	10	11	2.1
87-68-3	Hexachlorobutadiene	U	11	1.0	10	11	2.6
77-47-4	Hexachlorocyclopentadiene	U	11	1.0	10	11	1.7
7297-45-2	2-Methylnaphthalene-D10		57%				
367-12-4	2,4-Dibromophenol		65%				
81103-79-9	Fluorene-d10		60%				
1718-51-1	Pyrene-D10		87%				

lw
4/18/09

KATAHDIN ANALYTICAL SERVICES
Report of Analytical Results

Client: CH2MHill
Project: TO-009 Lejeune
PO No:
Sample Date: 01/23/09
Received Date: 01/27/09
Extraction Date: 01/29/09
Analysis Date: 15-FEB-2009 23:53
Report Date: 02/16/2009
Matrix: SOIL
% Solids: 92.0

Lab ID: SC0408-20
Client ID: MR08-SS366-09A
SDG: TO9-43
Extracted by: CB
Extraction Method: SW846 3550
Analyst: JLP
Analysis Method: SW846 M8270C
Lab Prep Batch: WG60295
Units: ug/Kgdrywt

CAS#	Compound	Flags	Results	DF	PQL	Adj.PQL	Adj.MDL
91-20-3	Naphthalene	U	11	1.0	10	11	2.8
91-57-6	2-Methylnaphthalene	J	5.2	1.0	10	11	2.4
86-73-7	Fluorene	U	11	1.0	10	11	3.5
85-01-8	Phenanthrene	U	11	1.0	10	11	2.0
206-44-0	Fluoranthene	U	11	1.0	10	11	2.0
129-00-0	Pyrene	J	2.3	1.0	10	11	2.3
56-55-3	Benzo(a)anthracene	U	11	1.0	10	11	2.1
205-99-2	Benzo(b)fluoranthene	U	11	1.0	10	11	2.6
207-08-9	Benzo(k)fluoranthene	U	11	1.0	10	11	3.4
50-32-8	Benzo(a)pyrene	U	11	1.0	10	11	3.6
193-39-5	Indeno(1,2,3-cd)pyrene	U	11	1.0	10	11	2.1
53-70-3	Dibenzo(a,h)anthracene	U	11	1.0	10	11	2.0
191-24-2	Benzo(g,h,i)perylene	J	4.8	1.0	10	11	2.2
118-74-1	Hexachlorobenzene	U	11	1.0	10	11	2.0
87-68-3	Hexachlorobutadiene	U	11	1.0	10	11	2.5
77-47-4	Hexachlorocyclopentadiene	U	11	1.0	10	11	1.6
7297-45-2	2-Methylnaphthalene-D10		65%				
367-12-4	2,4-Dibromophenol		69%				
81103-79-9	Fluorene-d10		76%				
1718-51-1	Pyrene-D10		96%				

MS
4/18/09

KATAHDIN ANALYTICAL SERVICES
Report of Analytical Results

Client: CH2MHill
Project: TO-009 Lejeune
PO No:
Sample Date: 01/23/09
Received Date: 01/27/09
Extraction Date: 01/29/09
Analysis Date: 16-FEB-2009 00:34
Report Date: 02/16/2009
Matrix: SOIL
% Solids: 90.5

Lab ID: SC0408-22
Client ID: MR08-IS366-4-5-09A
SDG: TO9-43
Extracted by: CB
Extraction Method: SW846 3550
Analyst: JLP
Analysis Method: SW846 M8270C
Lab Prep Batch: WG60295
Units: ug/Kgdrywt

CAS#	Compound	Flags	Results	DF	PQL	Adj.PQL	Adj.MDL
91-20-3	Naphthalene	U	11	1.0	10	11	2.9
91-57-6	2-Methylnaphthalene	J	5.2	1.0	10	11	2.4
86-73-7	Fluorene	U	11	1.0	10	11	3.5
85-01-8	Phenanthrene	U	11	1.0	10	11	2.0
206-44-0	Fluoranthene	U	11	1.0	10	11	2.0
129-00-0	Pyrene	U	11	1.0	10	11	2.3
56-55-3	Benzo(a)anthracene	J	5.8	1.0	10	11	2.1
205-99-2	Benzo(b)fluoranthene	U	11	1.0	10	11	2.6
207-08-9	Benzo(k)fluoranthene	U	11	1.0	10	11	3.4
50-32-8	Benzo(a)pyrene	U	11	1.0	10	11	3.6
193-39-5	Indeno(1,2,3-cd)pyrene	U	11	1.0	10	11	2.1
53-70-3	Dibenzo(a,h)anthracene	U	11	1.0	10	11	2.0
191-24-2	Benzo(g,h,i)perylene	U	11	1.0	10	11	2.2
118-74-1	Hexachlorobenzene	U	11	1.0	10	11	2.0
87-68-3	Hexachlorobutadiene	U	11	1.0	10	11	2.5
77-47-4	Hexachlorocyclopentadiene	J	7.6	1.0	10	11	1.6
7297-45-2	2-Methylnaphthalene-D10		68%				
367-12-4	2,4-Dibromophenol		73%				
81103-79-9	Fluorene-d10		78%				
1718-51-1	Pyrene-D10		97%				

MW
4/18/09

KATAHDIN ANALYTICAL SERVICES
Report of Analytical Results

Client: CH2MHill
Project: TO-009 Lejeune
PO No:
Sample Date: 01/23/09
Received Date: 01/27/09
Extraction Date: 01/29/09
Analysis Date: 16-FEB-2009 01:15
Report Date: 02/16/2009
Matrix: SOIL
% Solids: 93.5

Lab ID: SC0408-24
Client ID: MR08-SS367-09A
SDG: TO9-43
Extracted by: CB
Extraction Method: SW846 3550
Analyst: JLP
Analysis Method: SW846 M8270C
Lab Prep Batch: WG60295
Units: ug/Kgdrywt

CAS#	Compound	Flags	Results	DF	PQL	Adj.PQL	Adj.MDL
91-20-3	Naphthalene	U	11	1.0	10	11	2.8
91-57-6	2-Methylnaphthalene	U	11	1.0	10	11	2.4
86-73-7	Fluorene	U	11	1.0	10	11	3.4
85-01-8	Phenanthrene	U	11	1.0	10	11	1.9
206-44-0	Fluoranthene	U	11	1.0	10	11	1.9
129-00-0	Pyrene	U	11	1.0	10	11	2.2
56-55-3	Benzo(a)anthracene	U	11	1.0	10	11	2.0
205-99-2	Benzo(b)fluoranthene	U	11	1.0	10	11	2.6
207-08-9	Benzo(k)fluoranthene	U	11	1.0	10	11	3.3
50-32-8	Benzo(a)pyrene	U	11	1.0	10	11	3.5
193-39-5	Indeno(1,2,3-cd)pyrene	U	11	1.0	10	11	2.0
53-70-3	Dibenzo(a,h)anthracene	U	11	1.0	10	11	1.9
191-24-2	Benzo(g,h,i)perylene	U	11	1.0	10	11	2.1
118-74-1	Hexachlorobenzene	U	11	1.0	10	11	1.9
87-68-3	Hexachlorobutadiene	U	11	1.0	10	11	2.4
77-47-4	Hexachlorocyclopentadiene	U	11	1.0	10	11	1.6
7297-45-2	2-Methylnaphthalene-D10		65%				
367-12-4	2,4-Dibromophenol		72%				
81103-79-9	Fluorene-d10		67%				
1718-51-1	Pyrene-D10		91%				

lw 4/18/09

KATAHDIN ANALYTICAL SERVICES
Report of Analytical Results

Client: CH2MHill
Project: TO-009 Lejeune
PO No:
Sample Date: 01/24/09
Received Date: 01/27/09
Extraction Date: 01/29/09
Analysis Date: 13-FEB-2009 17:03
Report Date: 02/20/2009
Matrix: SOIL
% Solids: 92.1

Lab ID: SC0408-26
Client ID: 08-IS329-1-2-09A
SDG: TO9-43
Extracted by: CB
Extraction Method: SW846 3550
Analyst: JCG
Analysis Method: SW846 M8270C
Lab Prep Batch: WG60321
Units: ug/Kgdrywt

CAS#	Compound	Flags	Results	DF	PQL	Adj.PQL	Adj.MDL
91-20-3	Naphthalene	U	11	1.0	10	11	2.8
91-57-6	2-Methylnaphthalene	U	11	1.0	10	11	2.4
86-73-7	Fluorene	U	11	1.0	10	11	3.5
85-01-8	Phenanthrene	U	11	1.0	10	11	2.0
206-44-0	Fluoranthene	U	11	1.0	10	11	2.0
129-00-0	Pyrene	U	11	1.0	10	11	2.3
56-55-3	Benzo(a)anthracene	J	5.9	1.0	10	11	2.1
205-99-2	Benzo(b)fluoranthene	U	11	1.0	10	11	2.6
207-08-9	Benzo(k)fluoranthene	U	11	1.0	10	11	3.4
50-32-8	Benzo(a)pyrene	U	11	1.0	10	11	3.6
193-39-5	Indeno(1,2,3-cd)pyrene	U	11	1.0	10	11	2.1
53-70-3	Dibenzo(a,h)anthracene	U	11	1.0	10	11	2.0
191-24-2	Benzo(g,h,i)perylene	U	11	1.0	10	11	2.2
118-74-1	Hexachlorobenzene	U	11	1.0	10	11	2.0
87-68-3	Hexachlorobutadiene	U	11	1.0	10	11	2.5
77-47-4	Hexachlorocyclopentadiene	U	11	1.0	10	11	1.6
7297-45-2	2-Methylnaphthalene-D10		66%				
367-12-4	2,4-Dibromophenol		72%				
81103-79-9	Fluorene-d10		79%				
1718-51-1	Pyrene-D10		84%				

lew
4/18/09

ENVIRONMENTAL
Data Services, Inc.

SEMIVOLATILE ORGANIC COMPOUNDS

USEPA Region IV - Level IV Review

Site: MCB Camp Lejeune, TO-09 SDG #: TO9-43

Client: CH2M HILL, Inc., Virginia Beach, Virginia Date: April 18, 2009

Laboratory: Katahdin Analytical Services, Scarborough, Maine Reviewer: Nancy Weaver

EDS ID	Client Sample ID	Laboratory Sample ID	Matrix
1	MR08-SS339-09A	SC0366-1	Soil
2	MR08-IS339-4-5-09A	SC0366-3	Soil
3	MR08-SS338-09A	SC0366-5	Soil
4	MR08-SS338D-09A	SC0366-7	Soil
5	MR08-IS338-4-5-09A	SC0366-9	Soil
6	MR08-IS338D-4-5-09A	SC0366-11	Soil
7	MR08-SS314-09A	SC0366-13	Soil
8	MR08-IS342-4-5-09A	SC0408-1	Soil
9	MR08-IS362-4-5-09A	SC0408-3	Soil
10	MR08-SS362-09A	SC0408-5	Soil
11	MR08-IS363-4-5-09A	SC0408-7	Soil
12	MR08-SS363-09A	SC0408-9	Soil
13	MR08-IS364-4-5-09A	SC0408-11	Soil
14	MR08-SS364-09A	SC0408-13	Soil
15	MR08-IS365-4-5-09A	SC0408-15	Soil
16	MR08-SS365-09A	SC0408-17	Soil
17	MR08-SS366-09A	SC0408-19	Soil
18	MR08-IS366-4-5-09A	SC0408-21	Soil
19	MR08-SS367-09A	SC0408-23	Soil
20	MR08-IS329-1-2-09A	SC0408-25	Soil
20MS	MR08-IS329-1-2-09AMS	SC0408-25MS	Soil
20MSD	MR08-IS329-1-2-09AMSD	SC0408-25MSD	Soil

The USEPA "Contract Laboratory Program National Functional Guidelines for Organic Data Review," October 1999, and professional judgement were used in evaluating the data in this summary report.

Holding Times - All samples were extracted within 14 days for soil samples and analyzed within 40 days for all samples.

GC/MS Tuning - All of the DFTPP tunes in the initial and continuing calibrations met the percent relative abundance criteria.

Initial Calibration - The initial calibrations exhibited acceptable %RSD and mean RRF values except the following.

ICAL Date	Compound	%RSD/RRF	Qualifier	Affected Samples
02/11/09	1,1-Biphenyl	31.02%	J/UJ	All samples
	Benzaldehyde	48.07%	J/UJ	All samples
	2,4-Dinitrophenol	79.64%	J/UJ	All samples
	4,6-Dinitro-2-methylphenol	68.71%	J/UJ	All samples
	Pentachlorophenol	50.08%	J/UJ	All samples

Continuing Calibration - The continuing calibrations exhibited acceptable %D and RRF values except the following.

CCAL Date	Compound	%D/RRF	Qualifier	Affected Samples
02/12/09	Benzaldehyde	85.09%	None	Already qualified due to ICAL
	1,1-Biphenyl	25.76%	None	Already qualified due to ICAL
	2,4-Dinitrophenol	39.33%	None	Already qualified due to ICAL
	4,6-Dinitro-2-methylphenol	31.05%	None	Already qualified due to ICAL
	Pentachlorophenol	27.82%	None	Already qualified due to ICAL
02/13/09	Benzaldehyde	87.95%	None	Already qualified due to ICAL
	2,2'-Oxybis (1-Chloropropane)	37.42%	J/UJ	9, 17

Surrogates - All samples exhibited acceptable surrogate recoveries except the following.

Sample ID	Surrogate	%R	Qualifier
3	Nitrobenzene-d5	102%	J - positive results
	2-Fluorobiphenyl	116%	
4	Nitrobenzene-d5	101%	J - positive results
	2-Fluorobiphenyl	122%	

MS/MSD - The MS/MSD sample exhibited acceptable %R and RPD values except the following.

MS/MSD Sample ID	Compound	MS/MSD %R/RPD	Qualifier
20	4-Chloroaniline	Ok/Ok/54	None for RPD alone
	Caprolactam	22%/Ok/81	J/UJ
	3,3'-Dichlorobenzidine	Ok/Ok/80	None for RPD alone

Laboratory Control Sample - The LCS samples exhibited acceptable %R values except the following.

LCS ID	Compound	%R	Qualifier	Affected Samples
WG60292-LCS	2,4-Dinitrophenol	128%	None	Already qualified due to ICAL
WG60320-LCS	Caprolactam	28%	None	Already qualified due to MS/MSD

Internal Standard (IS) Area Performance - All internal standards met response and retention time (RT) criteria.

Method Blank - The method blanks exhibited the following contamination.

Blank ID	Compound	Conc. ug/kg	Action Level ug/kg	Qualifier	Affected Samples
WG60320-BLANK	bis (2-Ethylhexyl) phthalate	150	1500	U	20

Field, Equipment Blank - Field QC results are summarized below.

Blank ID	Compound	Conc. ug/L	Action Level ug/L	Qualifier	Affected Samples
MR08-FB012609	None - ND	-	-	-	-
MR08-EB012209	None - ND	-	-	-	-

Field Duplicates - Field duplicate results are summarized below.

Compound	MR08-SS338-09A ug/kg	MR08-SS338D-09A ug/kg	RPD	Qualifier
Butylbenzylphthalate	140	360 U	NC	None
bis (2-Ethylhexyl)phthalate	370	330	11%	None

Compound	MR08-IS338-4-5-09A ug/kg	MR08-IS338D-4-5-09A ug/kg	RPD	Qualifier
bis (2-Ethylhexyl)phthalate	420	380	10%	None

Tentatively Identified Compounds (TICs) - TICs were not reported.

Compound Quantitation - No discrepancies were identified.

KATAHDIN ANALYTICAL SERVICES
Report of Analytical Results

Client: CH2MHill
Project: TO-009 Lejeune
PO No:
Sample Date: 01/22/09
Received Date: 01/24/09
Extraction Date: 01/29/09
Analysis Date: 12-FEB-2009 03:09
Report Date: 02/16/2009
Matrix: SOIL
% Solids: 77.1

Lab ID: SC0366-1
Client ID: MR08-SS339-09A
SDG: TO9-43
Extracted by: CB
Extraction Method: SW846 3550
Analyst: JCG
Analysis Method: SW846 8270C
Lab Prep Batch: WG60292
Units: ug/Kgdrywt

CAS#	Compound	Flags	Results	DF	PQL	Adj.PQL	Adj.MDL	
100-52-7	Benzaldehyde	~~U~~ UJ	650	1.0	500	650	160	ICB
108-95-2	Phenol	U	650	1.0	500	650	200	
111-44-4	Bis(2-Chloroethyl)ether	U	430	1.0	330	430	100	
95-57-8	2-Chlorophenol	U	650	1.0	500	650	210	
95-48-7	2-Methylphenol	U	780	1.0	600	780	260	
108-60-1	2,2'-Oxybis(1-chloropropane)	U	430	1.0	330	430	120	
98-86-2	Acetophenone	U	780	1.0	600	780	230	
621-64-7	N-Nitroso-di-n-propylamine	U	430	1.0	330	430	110	
65794-96-9	3&4-Methylphenol	U	780	1.0	600	780	240	
67-72-1	Hexachloroethane	U	430	1.0	330	430	120	
98-95-3	Nitrobenzene	U	430	1.0	330	430	120	
78-59-1	Isophorone	U	430	1.0	330	430	97	
88-75-5	2-Nitrophenol	U	780	1.0	600	780	220	
105-67-9	2,4-Dimethylphenol	U	650	1.0	500	650	210	
111-91-1	Bis(2-Chloroethoxy)methane	U	430	1.0	330	430	120	
120-83-2	2,4-Dichlorophenol	U	650	1.0	500	650	190	
106-47-8	4-Chloroaniline	U	650	1.0	500	650	150	
105-60-2	Caprolactam	U	650	1.0	500	650	190	
59-50-7	4-Chloro-3-Methylphenol	U	650	1.0	500	650	220	
88-06-2	2,4,6-Trichlorophenol	U	650	1.0	500	650	200	
95-95-4	2,4,5-Trichlorophenol	U	650	1.0	500	650	200	
91-58-7	2-Chloronaphthalene	U	430	1.0	330	430	110	
92-52-4	1,1'-Biphenyl	~~U~~ UJ	430	1.0	330	430	95	ICB
88-74-4	2-Nitroaniline	U	650	1.0	500	650	97	
131-11-3	Dimethyl Phthalate	U	430	1.0	330	430	100	
606-20-2	2,6-Dinitrotoluene	U	430	1.0	330	430	100	
208-96-8	Acenaphthylene	U	430	1.0	330	430	91	
99-09-2	3-Nitroaniline	U	650	1.0	500	650	120	
83-32-9	Acenaphthene	U	430	1.0	330	430	84	
51-28-5	2,4-Dinitrophenol	~~U~~ UJ	1600	1.0	1200	1600	490	ICB
132-64-9	Dibenzofuran	U	430	1.0	330	430	100	
100-02-7	4-Nitrophenol	U	1600	1.0	1200	1600	400	
121-14-2	2,4-Dinitrotoluene	U	430	1.0	330	430	110	
84-66-2	Diethylphthalate	U	430	1.0	330	430	100	
7005-72-3	4-Chlorophenyl-phenylether	U	430	1.0	330	430	100	
100-01-6	4-Nitroaniline	U	650	1.0	500	650	170	
534-52-1	4,6-Dinitro-2-Methylphenol	~~U~~ UJ	1600	1.0	1200	1600	440	ICB
86-30-6	N-Nitrosodiphenylamine	U	860	1.0	660	860	280	
101-55-3	4-Bromophenyl-phenylether	U	430	1.0	330	430	110	
1912-24-9	Atrazine	U	430	1.0	330	430	120	
87-86-5	Pentachlorophenol	~~U~~ UJ	1100	1.0	820	1100	310	ICB
120-12-7	Anthracene	U	430	1.0	330	430	110	
86-74-8	Carbazole	U	650	1.0	500	650	140	

DW
4/18/09

KATAHDIN ANALYTICAL SERVICES
Report of Analytical Results

Client: CH2MHill
Project: TO-009 Lejeune
PO No:
Sample Date: 01/22/09
Received Date: 01/24/09
Extraction Date: 01/29/09
Analysis Date: 12-FEB-2009 03:09
Report Date: 02/16/2009
Matrix: SOIL
% Solids: 77.1

Lab ID: SC0366-1
Client ID: MR08-SS339-09A
SDG: TO9-43
Extracted by: CB
Extraction Method: SW846 3550
Analyst: JCG
Analysis Method: SW846 8270C
Lab Prep Batch: WG60292
Units: ug/Kgdrywt

CAS#	Compound	Flags	Results	DF	PQL	Adj.PQL	Adj.MDL
84-74-2	Di-n-butylphthalate	U	430	1.0	330	430	130
85-68-7	Butylbenzylphthalate	J	180	1.0	330	430	120
91-94-1	3,3'-Dichlorobenzidine	U	650	1.0	500	650	150
218-01-9	Chrysene	U	430	1.0	330	430	120
117-81-7	bis(2-Ethylhexyl)phthalate	J	340	1.0	330	430	130
117-84-0	Di-n-octylphthalate	U	430	1.0	330	430	270
367-12-4	2-Fluorophenol		71%				
13127-88-3	Phenol-D6		66%				
4165-60-0	Nitrobenzene-D5		74%				
321-60-8	2-Fluorobiphenyl		83%				
118-79-6	2,4,6-Tribromophenol		79%				
1718-51-0	Terphenyl-D14		87%				

MW
4/18/09

2

KATAHDIN ANALYTICAL SERVICES
Report of Analytical Results

Client: CH2MHill
Project: TO-009 Lejeune
PO No:
Sample Date: 01/22/09
Received Date: 01/24/09
Extraction Date: 01/29/09
Analysis Date: 12-FEB-2009 03:52
Report Date: 02/16/2009
Matrix: SOIL
% Solids: 90.5

Lab ID: SC0366-3
Client ID: MR08-IS339-4-5-09A
SDG: TO9-43
Extracted by: CB
Extraction Method: SW846 3550
Analyst: JCG
Analysis Method: SW846 8270C
Lab Prep Batch: WG60292
Units: ug/Kgdrywt

CAS#	Compound	Flags	Results	DF	PQL	Adj.PQL	Adj.MDL	
100-52-7	Benzaldehyde	~~U~~ UJ	550	1.0	500	550	130	ICB
108-95-2	Phenol	U	550	1.0	500	550	170	
111-44-4	Bis(2-Chloroethyl)ether	U	360	1.0	330	360	89	
95-57-8	2-Chlorophenol	U	550	1.0	500	550	180	
95-48-7	2-Methylphenol	U	660	1.0	600	660	220	
108-60-1	2,2'-Oxybis(1-chloropropane)	U	360	1.0	330	360	98	
98-86-2	Acetophenone	U	660	1.0	600	660	200	
621-64-7	N-Nitroso-di-n-propylamine	U	360	1.0	330	360	92	
65794-96-9	3&4-Methylphenol	U	660	1.0	600	660	210	
67-72-1	Hexachloroethane	U	360	1.0	330	360	110	
98-95-3	Nitrobenzene	U	360	1.0	330	360	100	
78-59-1	Isophorone	U	360	1.0	330	360	83	
88-75-5	2-Nitrophenol	U	660	1.0	600	660	180	
105-67-9	2,4-Dimethylphenol	U	550	1.0	500	550	180	
111-91-1	Bis(2-Chloroethoxy)methane	U	360	1.0	330	360	110	
120-83-2	2,4-Dichlorophenol	U	550	1.0	500	550	160	
106-47-8	4-Chloroaniline	U	550	1.0	500	550	130	
105-60-2	Caprolactam	U	550	1.0	500	550	160	
59-50-7	4-Chloro-3-Methylphenol	U	550	1.0	500	550	180	
88-06-2	2,4,6-Trichlorophenol	U	550	1.0	500	550	170	
95-95-4	2,4,5-Trichlorophenol	U	550	1.0	500	550	170	
91-58-7	2-Chloronaphthalene	U	360	1.0	330	360	96	
92-52-4	1,1'-Biphenyl	~~U~~ UJ	360	1.0	330	360	81	ICB
88-74-4	2-Nitroaniline	U	550	1.0	500	550	83	
131-11-3	Dimethyl Phthalate	U	360	1.0	330	360	86	
606-20-2	2,6-Dinitrotoluene	U	360	1.0	330	360	87	
208-96-8	Acenaphthylene	U	360	1.0	330	360	77	
99-09-2	3-Nitroaniline	U	550	1.0	500	550	100	
83-32-9	Acenaphthene	U	360	1.0	330	360	72	
51-28-5	2,4-Dinitrophenol	~~U~~ UJ	1300	1.0	1200	1300	420	ICB
132-64-9	Dibenzofuran	U	360	1.0	330	360	87	
100-02-7	4-Nitrophenol	U	1300	1.0	1200	1300	340	
121-14-2	2,4-Dinitrotoluene	U	360	1.0	330	360	94	
84-66-2	Diethylphthalate	U	360	1.0	330	360	88	
7005-72-3	4-Chlorophenyl-phenylether	U	360	1.0	330	360	86	
100-01-6	4-Nitroaniline	U	550	1.0	500	550	150	
534-52-1	4,6-Dinitro-2-Methylphenol	~~U~~ UJ	1300	1.0	1200	1300	370	ICB
86-30-6	N-Nitrosodiphenylamine	U	730	1.0	660	730	240	
101-55-3	4-Bromophenyl-phenylether	U	360	1.0	330	360	94	
1912-24-9	Atrazine	U	360	1.0	330	360	100	
87-86-5	Pentachlorophenol	~~U~~ UJ	900	1.0	820	900	260	ICB
120-12-7	Anthracene	U	360	1.0	330	360	93	
86-74-8	Carbazole	U	550	1.0	500	550	120	

LW
4/18/09

KATAHDIN ANALYTICAL SERVICES
Report of Analytical Results

Client: CH2MHill
Project: TO-009 Lejeune
PO No:
Sample Date: 01/22/09
Received Date: 01/24/09
Extraction Date: 01/29/09
Analysis Date: 12-FEB-2009 03:52
Report Date: 02/16/2009
Matrix: SOIL
% Solids: 90.5

Lab ID: SC0366-3
Client ID: MR08-IS339-4-5-09A
SDG: TO9-43
Extracted by: CB
Extraction Method: SW846 3550
Analyst: JCG
Analysis Method: SW846 8270C
Lab Prep Batch: WG60292
Units: ug/Kgdrywt

CAS#	Compound	Flags	Results	DF	PQL	Adj.PQL	Adj.MDL
84-74-2	Di-n-butylphthalate	U	360	1.0	330	360	110
85-68-7	Butylbenzylphthalate	U	360	1.0	330	360	100
91-94-1	3,3'-Dichlorobenzidine	U	550	1.0	500	550	120
218-01-9	Chrysene	U	360	1.0	330	360	100
117-81-7	bis(2-Ethylhexyl)phthalate	J	350	1.0	330	360	110
117-84-0	Di-n-octylphthalate	U	360	1.0	330	360	230
367-12-4	2-Fluorophenol		78%				
13127-88-3	Phenol-D6		76%				
4165-60-0	Nitrobenzene-D5		90%				
321-60-8	2-Fluorobiphenyl		92%				
118-79-6	2,4,6-Tribromophenol		65%				
1718-51-0	Terphenyl-D14		105%				

lw 4/18/09

3

KATAHDIN ANALYTICAL SERVICES
Report of Analytical Results

Client: CH2MHill
Project: TO-009 Lejeune
PO No:
Sample Date: 01/22/09
Received Date: 01/24/09
Extraction Date: 01/29/09
Analysis Date: 12-FEB-2009 04:34
Report Date: 02/16/2009
Matrix: SOIL
% Solids: 79.0

Lab ID: SC0366-5
Client ID: MR08-SS338-09A
SDG: TO9-43
Extracted by: CB
Extraction Method: SW846 3550
Analyst: JCG
Analysis Method: SW846 8270C
Lab Prep Batch: WG60292
Units: ug/Kgdrywt

CAS#	Compound	Flags	Results	DF	PQL	Adj.PQL	Adj.MDL	
100-52-7	Benzaldehyde	~~U~~ UJ	630	1.0	500	630	150	ICB
108-95-2	Phenol	U	630	1.0	500	630	200	
111-44-4	Bis(2-Chloroethyl)ether	U	420	1.0	330	420	100	
95-57-8	2-Chlorophenol	U	630	1.0	500	630	210	
95-48-7	2-Methylphenol	U	760	1.0	600	760	250	
108-60-1	2,2'-Oxybis(1-chloropropane)	U	420	1.0	330	420	110	
98-86-2	Acetophenone	U	760	1.0	600	760	220	
621-64-7	N-Nitroso-di-n-propylamine	U	420	1.0	330	420	100	
65794-96-9	3&4-Methylphenol	U	760	1.0	600	760	240	
67-72-1	Hexachloroethane	U	420	1.0	330	420	120	
98-95-3	Nitrobenzene	U	420	1.0	330	420	120	
78-59-1	Isophorone	U	420	1.0	330	420	95	
88-75-5	2-Nitrophenol	U	760	1.0	600	760	210	
105-67-9	2,4-Dimethylphenol	U	630	1.0	500	630	210	
111-91-1	Bis(2-Chloroethoxy)methane	U	420	1.0	330	420	120	
120-83-2	2,4-Dichlorophenol	U	630	1.0	500	630	190	
106-47-8	4-Chloroaniline	U	630	1.0	500	630	150	
105-60-2	Caprolactam	U	630	1.0	500	630	180	
59-50-7	4-Chloro-3-Methylphenol	U	630	1.0	500	630	210	
88-06-2	2,4,6-Trichlorophenol	U	630	1.0	500	630	200	
95-95-4	2,4,5-Trichlorophenol	U	630	1.0	500	630	200	
91-58-7	2-Chloronaphthalene	U	420	1.0	330	420	110	
92-52-4	1,1'-Biphenyl	~~U~~ UJ	420	1.0	330	420	92	ICB
88-74-4	2-Nitroaniline	U	630	1.0	500	630	95	
131-11-3	Dimethyl Phthalate	U	420	1.0	330	420	99	
606-20-2	2,6-Dinitrotoluene	U	420	1.0	330	420	100	
208-96-8	Acenaphthylene	U	420	1.0	330	420	88	
99-09-2	3-Nitroaniline	U	630	1.0	500	630	120	
83-32-9	Acenaphthene	U	420	1.0	330	420	82	
51-28-5	2,4-Dinitrophenol	~~U~~ UJ	1500	1.0	1200	1500	480	ICB
132-64-9	Dibenzofuran	U	420	1.0	330	420	100	
100-02-7	4-Nitrophenol	U	1500	1.0	1200	1500	390	
121-14-2	2,4-Dinitrotoluene	U	420	1.0	330	420	110	
84-66-2	Diethylphthalate	U	420	1.0	330	420	100	
7005-72-3	4-Chlorophenyl-phenylether	U	420	1.0	330	420	99	
100-01-6	4-Nitroaniline	U	630	1.0	500	630	170	
534-52-1	4,6-Dinitro-2-Methylphenol	~~U~~ UJ	1500	1.0	1200	1500	430	ICB
86-30-6	N-Nitrosodiphenylamine	U	840	1.0	660	840	280	
101-55-3	4-Bromophenyl-phenylether	U	420	1.0	330	420	110	
1912-24-9	Atrazine	U	420	1.0	330	420	120	
87-86-5	Pentachlorophenol	~~U~~ UJ	1000	1.0	820	1000	300	ICB
120-12-7	Anthracene	U	420	1.0	330	420	110	
86-74-8	Carbazole	U	630	1.0	500	630	140	

MW 4/18/09

3

KATAHDIN ANALYTICAL SERVICES
Report of Analytical Results

Client: CH2MHill
Project: TO-009 Lejeune
PO No:
Sample Date: 01/22/09
Received Date: 01/24/09
Extraction Date: 01/29/09
Analysis Date: 12-FEB-2009 04:34
Report Date: 02/16/2009
Matrix: SOIL
% Solids: 79.0

Lab ID: SC0366-5
Client ID: MR08-SS338-09A
SDG: TO9-43
Extracted by: CB
Extraction Method: SW846 3550
Analyst: JCG
Analysis Method: SW846 8270C
Lab Prep Batch: WG60292
Units: ug/Kgdrywt

CAS#	Compound	Flags		Results	DF	PQL	Adj.PQL	Adj.MDL	
84-74-2	Di-n-butylphthalate	U		420	1.0	330	420	130	
85-68-7	Butylbenzylphthalate	~~J~~	J	140	1.0	330	420	120	SSH
91-94-1	3,3'-Dichlorobenzidine	U		630	1.0	500	630	140	
218-01-9	Chrysene	U		420	1.0	330	420	120	
117-81-7	bis(2-Ethylhexyl)phthalate	~~J~~	J	370	1.0	330	420	120	SSH
117-84-0	Di-n-octylphthalate	U		420	1.0	330	420	270	
367-12-4	2-Fluorophenol			94%					
13127-88-3	Phenol-D6			91%					
4165-60-0	Nitrobenzene-D5			*102%					
321-60-8	2-Fluorobiphenyl			*116%					
118-79-6	2,4,6-Tribromophenol			75%					
1718-51-0	Terphenyl-D14			118%					

LW 4/18/09

4

KATAHDIN ANALYTICAL SERVICES
Report of Analytical Results

Client: CH2MHill
Project: TO-009 Lejeune
PO No:
Sample Date: 01/22/09
Received Date: 01/24/09
Extraction Date: 01/29/09
Analysis Date: 12-FEB-2009 05:17
Report Date: 02/16/2009
Matrix: SOIL
% Solids: 92.0

Lab ID: SC0366-7
Client ID: MR08-SS338D-09A
SDG: TO9-43
Extracted by: CB
Extraction Method: SW846 3550
Analyst: JCG
Analysis Method: SW846 8270C
Lab Prep Batch: WG60292
Units: ug/Kgdrywt

CAS#	Compound	Flags	Results	DF	PQL	Adj.PQL	Adj.MDL	
100-52-7	Benzaldehyde	~~U~~ UJ	540	1.0	500	540	130	JCB
108-95-2	Phenol	U	540	1.0	500	540	170	
111-44-4	Bis(2-Chloroethyl)ether	U	360	1.0	330	360	88	
95-57-8	2-Chlorophenol	U	540	1.0	500	540	180	
95-48-7	2-Methylphenol	U	650	1.0	600	650	220	
108-60-1	2,2'-Oxybis(1-chloropropane)	U	360	1.0	330	360	97	
98-86-2	Acetophenone	U	650	1.0	600	650	190	
621-64-7	N-Nitroso-di-n-propylamine	U	360	1.0	330	360	90	
65794-96-9	3&4-Methylphenol	U	650	1.0	600	650	200	
67-72-1	Hexachloroethane	U	360	1.0	330	360	100	
98-95-3	Nitrobenzene	U	360	1.0	330	360	99	
78-59-1	Isophorone	U	360	1.0	330	360	82	
88-75-5	2-Nitrophenol	U	650	1.0	600	650	180	
105-67-9	2,4-Dimethylphenol	U	540	1.0	500	540	180	
111-91-1	Bis(2-Chloroethoxy)methane	U	360	1.0	330	360	100	
120-83-2	2,4-Dichlorophenol	U	540	1.0	500	540	160	
106-47-8	4-Chloroaniline	U	540	1.0	500	540	130	
105-60-2	Caprolactam	U	540	1.0	500	540	160	
59-50-7	4-Chloro-3-Methylphenol	U	540	1.0	500	540	180	
88-06-2	2,4,6-Trichlorophenol	U	540	1.0	500	540	170	
95-95-4	2,4,5-Trichlorophenol	U	540	1.0	500	540	170	
91-58-7	2-Chloronaphthalene	U	360	1.0	330	360	95	
92-52-4	1,1'-Biphenyl	~~U~~ UJ	360	1.0	330	360	79	JCB
88-74-4	2-Nitroaniline	U	540	1.0	500	540	82	
131-11-3	Dimethyl Phthalate	U	360	1.0	330	360	85	
606-20-2	2,6-Dinitrotoluene	U	360	1.0	330	360	86	
208-96-8	Acenaphthylene	U	360	1.0	330	360	76	
99-09-2	3-Nitroaniline	U	540	1.0	500	540	100	
83-32-9	Acenaphthene	U	360	1.0	330	360	71	
51-28-5	2,4-Dinitrophenol	~~U~~ UJ	1300	1.0	1200	1300	410	JCB
132-64-9	Dibenzofuran	U	360	1.0	330	360	86	
100-02-7	4-Nitrophenol	U	1300	1.0	1200	1300	340	
121-14-2	2,4-Dinitrotoluene	U	360	1.0	330	360	92	
84-66-2	Diethylphthalate	U	360	1.0	330	360	87	
7005-72-3	4-Chlorophenyl-phenylether	U	360	1.0	330	360	85	
100-01-6	4-Nitroaniline	U	540	1.0	500	540	140	
534-52-1	4,6-Dinitro-2-Methylphenol	~~U~~ UJ	1300	1.0	1200	1300	370	JCB
86-30-6	N-Nitrosodiphenylamine	U	720	1.0	660	720	240	
101-55-3	4-Bromophenyl-phenylether	U	360	1.0	330	360	92	
1912-24-9	Atrazine	U	360	1.0	330	360	99	
87-86-5	Pentachlorophenol	~~U~~ UJ	890	1.0	820	890	260	JCB
120-12-7	Anthracene	U	360	1.0	330	360	91	
86-74-8	Carbazole	U	540	1.0	500	540	120	

MW 4/18/09

KATAHDIN ANALYTICAL SERVICES
Report of Analytical Results

Client: CH2MHill
Project: TO-009 Lejeune
PO No:
Sample Date: 01/22/09
Received Date: 01/24/09
Extraction Date: 01/29/09
Analysis Date: 12-FEB-2009 05:17
Report Date: 02/16/2009
Matrix: SOIL
% Solids: 92.0

Lab ID: SC0366-7
Client ID: MR08-SS338D-09A
SDG: TO9-43
Extracted by: CB
Extraction Method: SW846 3550
Analyst: JCG
Analysis Method: SW846 8270C
Lab Prep Batch: WG60292
Units: ug/Kgdrywt

CAS#	Compound	Flags	Results	DF	PQL	Adj.PQL	Adj.MDL	
84-74-2	Di-n-butylphthalate	U	360	1.0	330	360	110	
85-68-7	Butylbenzylphthalate	U	360	1.0	330	360	100	
91-94-1	3,3'-Dichlorobenzidine	U	540	1.0	500	540	120	
218-01-9	Chrysene	U	360	1.0	330	360	100	
117-81-7	bis(2-Ethylhexyl)phthalate	~~J~~ J	330	1.0	330	360	110	SSH
117-84-0	Di-n-octylphthalate	U	360	1.0	330	360	230	
367-12-4	2-Fluorophenol		91%					
13127-88-3	Phenol-D6		91%					
4165-60-0	Nitrobenzene-D5		*101%					
321-60-8	2-Fluorobiphenyl		*122%					
118-79-6	2,4,6-Tribromophenol		65%					
1718-51-0	Terphenyl-D14		112%					

MW
4/18/09

KATAHDIN ANALYTICAL SERVICES
Report of Analytical Results

Client: CH2MHill
Project: TO-009 Lejeune
PO No:
Sample Date: 01/22/09
Received Date: 01/24/09
Extraction Date: 01/29/09
Analysis Date: 12-FEB-2009 05:59
Report Date: 02/16/2009
Matrix: SOIL
% Solids: 87.9

Lab ID: SC0366-9
Client ID: MR08-IS338-4-5-09A
SDG: TO9-43
Extracted by: CB
Extraction Method: SW846 3550
Analyst: JCG
Analysis Method: SW846 8270C
Lab Prep Batch: WG60292
Units: ug/Kgdrywt

CAS#	Compound	Flags	Results	DF	PQL	Adj.PQL	Adj.MDL	
100-52-7	Benzaldehyde	~~U~~ UJ	570	1.0	500	570	140	ICB
108-95-2	Phenol	U	570	1.0	500	570	180	
111-44-4	Bis(2-Chloroethyl)ether	U	380	1.0	330	380	92	
95-57-8	2-Chlorophenol	U	570	1.0	500	570	190	
95-48-7	2-Methylphenol	U	680	1.0	600	680	230	
108-60-1	2,2'-Oxybis(1-chloropropane)	U	380	1.0	330	380	100	
98-86-2	Acetophenone	U	680	1.0	600	680	200	
621-64-7	N-Nitroso-di-n-propylamine	U	380	1.0	330	380	94	
65794-96-9	3&4-Methylphenol	U	680	1.0	600	680	210	
67-72-1	Hexachloroethane	U	380	1.0	330	380	110	
98-95-3	Nitrobenzene	U	380	1.0	330	380	100	
78-59-1	Isophorone	U	380	1.0	330	380	85	
88-75-5	2-Nitrophenol	U	680	1.0	600	680	190	
105-67-9	2,4-Dimethylphenol	U	570	1.0	500	570	190	
111-91-1	Bis(2-Chloroethoxy)methane	U	380	1.0	330	380	110	
120-83-2	2,4-Dichlorophenol	U	570	1.0	500	570	170	
106-47-8	4-Chloroaniline	U	570	1.0	500	570	140	
105-60-2	Caprolactam	U	570	1.0	500	570	160	
59-50-7	4-Chloro-3-Methylphenol	U	570	1.0	500	570	190	
88-06-2	2,4,6-Trichlorophenol	U	570	1.0	500	570	180	
95-95-4	2,4,5-Trichlorophenol	U	570	1.0	500	570	180	
91-58-7	2-Chloronaphthalene	U	380	1.0	330	380	99	
92-52-4	1,1'-Biphenyl	~~U~~ UJ	380	1.0	330	380	83	ICB
88-74-4	2-Nitroaniline	U	570	1.0	500	570	85	
131-11-3	Dimethyl Phthalate	U	380	1.0	330	380	89	
606-20-2	2,6-Dinitrotoluene	U	380	1.0	330	380	90	
208-96-8	Acenaphthylene	U	380	1.0	330	380	80	
99-09-2	3-Nitroaniline	U	570	1.0	500	570	110	
83-32-9	Acenaphthene	U	380	1.0	330	380	74	
51-28-5	2,4-Dinitrophenol	~~U~~ UJ	1400	1.0	1200	1400	430	ICB
132-64-9	Dibenzofuran	U	380	1.0	330	380	90	
100-02-7	4-Nitrophenol	U	1400	1.0	1200	1400	350	
121-14-2	2,4-Dinitrotoluene	U	380	1.0	330	380	97	
84-66-2	Diethylphthalate	U	380	1.0	330	380	91	
7005-72-3	4-Chlorophenyl-phenylether	U	380	1.0	330	380	89	
100-01-6	4-Nitroaniline	U	570	1.0	500	570	150	
534-52-1	4,6-Dinitro-2-Methylphenol	~~U~~ UJ	1400	1.0	1200	1400	380	ICB
86-30-6	N-Nitrosodiphenylamine	U	750	1.0	660	750	250	
101-55-3	4-Bromophenyl-phenylether	U	380	1.0	330	380	97	
1912-24-9	Atrazine	U	380	1.0	330	380	100	
87-86-5	Pentachlorophenol	~~U~~ UJ	930	1.0	820	930	270	ICB
120-12-7	Anthracene	U	380	1.0	330	380	96	
86-74-8	Carbazole	U	570	1.0	500	570	130	

LW 4/18/09

5

KATAHDIN ANALYTICAL SERVICES
Report of Analytical Results

Client: CH2MHill
Project: TO-009 Lejeune
PO No:
Sample Date: 01/22/09
Received Date: 01/24/09
Extraction Date: 01/29/09
Analysis Date: 12-FEB-2009 05:59
Report Date: 02/16/2009
Matrix: SOIL
% Solids: 87.9

Lab ID: SC0366-9
Client ID: MR08-IS338-4-5-09A
SDG: TO9-43
Extracted by: CB
Extraction Method: SW846 3550
Analyst: JCG
Analysis Method: SW846 8270C
Lab Prep Batch: WG60292
Units: ug/Kgdrywt

CAS#	Compound	Flags	Results	DF	PQL	Adj.PQL	Adj.MDL
84-74-2	Di-n-butylphthalate	U	380	1.0	330	380	110
85-68-7	Butylbenzylphthalate	U	380	1.0	330	380	100
91-94-1	3,3'-Dichlorobenzidine	U	570	1.0	500	570	130
218-01-9	Chrysene	U	380	1.0	330	380	110
117-81-7	bis(2-Ethylhexyl)phthalate		420	1.0	330	380	110
117-84-0	Di-n-octylphthalate	U	380	1.0	330	380	240
367-12-4	2-Fluorophenol		50%				
13127-88-3	Phenol-D6		56%				
4165-60-0	Nitrobenzene-D5		54%				
321-60-8	2-Fluorobiphenyl		75%				
118-79-6	2,4,6-Tribromophenol		51%				
1718-51-0	Terphenyl-D14		82%				

RW 4/18/09

6

KATAHDIN ANALYTICAL SERVICES
Report of Analytical Results

Client: CH2MHill
Project: TO-009 Lejeune
PO No:
Sample Date: 01/22/09
Received Date: 01/24/09
Extraction Date: 01/29/09
Analysis Date: 12-FEB-2009 06:42
Report Date: 02/16/2009
Matrix: SOIL
% Solids: 88.6

Lab ID: SC0366-11
Client ID: MR08-IS338D-4-5-09A
SDG: TO9-43
Extracted by: CB
Extraction Method: SW846 3550
Analyst: JCG
Analysis Method: SW846 8270C
Lab Prep Batch: WG60292
Units: ug/Kgdrywt

CAS#	Compound	Flags	Results	DF	PQL	Adj.PQL	Adj.MDL	
100-52-7	Benzaldehyde	~~U~~ UJ	560	1.0	500	560	140	ICB
108-95-2	Phenol	U	560	1.0	500	560	180	
111-44-4	Bis(2-Chloroethyl)ether	U	370	1.0	330	370	91	
95-57-8	2-Chlorophenol	U	560	1.0	500	560	180	
95-48-7	2-Methylphenol	U	680	1.0	600	680	220	
108-60-1	2,2'-Oxybis(1-chloropropane)	U	370	1.0	330	370	100	
98-86-2	Acetophenone	U	680	1.0	600	680	200	
621-64-7	N-Nitroso-di-n-propylamine	U	370	1.0	330	370	94	
65794-96-9	3&4-Methylphenol	U	680	1.0	600	680	210	
67-72-1	Hexachloroethane	U	370	1.0	330	370	110	
98-95-3	Nitrobenzene	U	370	1.0	330	370	100	
78-59-1	Isophorone	U	370	1.0	330	370	85	
88-75-5	2-Nitrophenol	U	680	1.0	600	680	190	
105-67-9	2,4-Dimethylphenol	U	560	1.0	500	560	190	
111-91-1	Bis(2-Chloroethoxy)methane	U	370	1.0	330	370	110	
120-83-2	2,4-Dichlorophenol	U	560	1.0	500	560	170	
106-47-8	4-Chloroaniline	U	560	1.0	500	560	130	
105-60-2	Caprolactam	U	560	1.0	500	560	160	
59-50-7	4-Chloro-3-Methylphenol	U	560	1.0	500	560	190	
88-06-2	2,4,6-Trichlorophenol	U	560	1.0	500	560	170	
95-95-4	2,4,5-Trichlorophenol	U	560	1.0	500	560	170	
91-58-7	2-Chloronaphthalene	U	370	1.0	330	370	98	
92-52-4	1,1'-Biphenyl	~~U~~ UJ	370	1.0	330	370	82	ICB
88-74-4	2-Nitroaniline	U	560	1.0	500	560	85	
131-11-3	Dimethyl Phthalate	U	370	1.0	330	370	88	
606-20-2	2,6-Dinitrotoluene	U	370	1.0	330	370	89	
208-96-8	Acenaphthylene	U	370	1.0	330	370	79	
99-09-2	3-Nitroaniline	U	560	1.0	500	560	110	
83-32-9	Acenaphthene	U	370	1.0	330	370	73	
51-28-5	2,4-Dinitrophenol	~~U~~ UJ	1400	1.0	1200	1400	420	ICB
132-64-9	Dibenzofuran	U	370	1.0	330	370	89	
100-02-7	4-Nitrophenol	U	1400	1.0	1200	1400	350	
121-14-2	2,4-Dinitrotoluene	U	370	1.0	330	370	96	
84-66-2	Diethylphthalate	U	370	1.0	330	370	90	
7005-72-3	4-Chlorophenyl-phenylether	U	370	1.0	330	370	88	
100-01-6	4-Nitroaniline	U	560	1.0	500	560	150	
534-52-1	4,6-Dinitro-2-Methylphenol	~~U~~ UJ	1400	1.0	1200	1400	380	ICB
86-30-6	N-Nitrosodiphenylamine	U	740	1.0	660	740	250	
101-55-3	4-Bromophenyl-phenylether	U	370	1.0	330	370	96	
1912-24-9	Atrazine	U	370	1.0	330	370	100	
87-86-5	Pentachlorophenol	~~U~~ UJ	920	1.0	820	920	270	ICB
120-12-7	Anthracene	U	370	1.0	330	370	95	
86-74-8	Carbazole	U	560	1.0	500	560	120	

UW 4/18/09

KATAHDIN ANALYTICAL SERVICES
Report of Analytical Results

6

Client: CH2MHill
Project: TO-009 Lejeune
PO No:
Sample Date: 01/22/09
Received Date: 01/24/09
Extraction Date: 01/29/09
Analysis Date: 12-FEB-2009 06:42
Report Date: 02/16/2009
Matrix: SOIL
% Solids: 88.6

Lab ID: SC0366-11
Client ID: MR08-IS338D-4-5-09A
SDG: TO9-43
Extracted by: CB
Extraction Method: SW846 3550
Analyst: JCG
Analysis Method: SW846 8270C
Lab Prep Batch: WG60292
Units: ug/Kgdrywt

CAS#	Compound	Flags	Results	DF	PQL	Adj.PQL	Adj.MDL
84-74-2	Di-n-butylphthalate	U	370	1.0	330	370	110
85-68-7	Butylbenzylphthalate	U	370	1.0	330	370	100
91-94-1	3,3'-Dichlorobenzidine	U	560	1.0	500	560	130
218-01-9	Chrysene	U	370	1.0	330	370	110
117-81-7	bis(2-Ethylhexyl)phthalate		380	1.0	330	370	110
117-84-0	Di-n-octylphthalate	U	370	1.0	330	370	240
367-12-4	2-Fluorophenol		77%				
13127-88-3	Phenol-D6		72%				
4165-60-0	Nitrobenzene-D5		84%				
321-60-8	2-Fluorobiphenyl		93%				
118-79-6	2,4,6-Tribromophenol		50%				
1718-51-0	Terphenyl-D14		84%				

MW 4/18/09

KATAHDIN ANALYTICAL SERVICES
Report of Analytical Results

Client: CH2MHill
Project: TO-009 Lejeune
PO No:
Sample Date: 01/22/09
Received Date: 01/24/09
Extraction Date: 01/29/09
Analysis Date: 12-FEB-2009 07:24
Report Date: 02/16/2009
Matrix: SOIL
% Solids: 74.0

Lab ID: SC0366-13
Client ID: MR08-SS314-09A
SDG: TO9-43
Extracted by: CB
Extraction Method: SW846 3550
Analyst: JCG
Analysis Method: SW846 8270C
Lab Prep Batch: WG60292
Units: ug/Kgdrywt

CAS#	Compound	Flags	Results	DF	PQL	Adj.PQL	Adj.MDL	
100-52-7	Benzaldehyde	~~U~~ UJ	680	1.0	500	680	160	ICB
108-95-2	Phenol	U	680	1.0	500	680	210	
111-44-4	Bis(2-Chloroethyl)ether	U	440	1.0	330	440	110	
95-57-8	2-Chlorophenol	U	680	1.0	500	680	220	
95-48-7	2-Methylphenol	U	810	1.0	600	810	270	
108-60-1	2,2'-Oxybis(1-chloropropane)	U	440	1.0	330	440	120	
98-86-2	Acetophenone	U	810	1.0	600	810	240	
621-64-7	N-Nitroso-di-n-propylamine	U	440	1.0	330	440	110	
65794-96-9	3&4-Methylphenol	U	810	1.0	600	810	250	
67-72-1	Hexachloroethane	U	440	1.0	330	440	130	
98-95-3	Nitrobenzene	U	440	1.0	330	440	120	
78-59-1	Isophorone	U	440	1.0	330	440	100	
88-75-5	2-Nitrophenol	U	810	1.0	600	810	220	
105-67-9	2,4-Dimethylphenol	U	680	1.0	500	680	220	
111-91-1	Bis(2-Chloroethoxy)methane	U	440	1.0	330	440	130	
120-83-2	2,4-Dichlorophenol	U	680	1.0	500	680	200	
106-47-8	4-Chloroaniline	U	680	1.0	500	680	160	
105-60-2	Caprolactam	U	680	1.0	500	680	190	
59-50-7	4-Chloro-3-Methylphenol	U	680	1.0	500	680	220	
88-06-2	2,4,6-Trichlorophenol	U	680	1.0	500	680	210	
95-95-4	2,4,5-Trichlorophenol	U	680	1.0	500	680	210	
91-58-7	2-Chloronaphthalene	U	440	1.0	330	440	120	
92-52-4	1,1'-Biphenyl	~~U~~ UJ	440	1.0	330	440	99	ICB
88-74-4	2-Nitroaniline	U	680	1.0	500	680	100	
131-11-3	Dimethyl Phthalate	U	440	1.0	330	440	100	
606-20-2	2,6-Dinitrotoluene	U	440	1.0	330	440	110	
208-96-8	Acenaphthylene	U	440	1.0	330	440	94	
99-09-2	3-Nitroaniline	U	680	1.0	500	680	130	
83-32-9	Acenaphthene	U	440	1.0	330	440	88	
51-28-5	2,4-Dinitrophenol	~~U~~ UJ	1600	1.0	1200	1600	510	ICB
132-64-9	Dibenzofuran	U	440	1.0	330	440	110	
100-02-7	4-Nitrophenol	U	1600	1.0	1200	1600	420	
121-14-2	2,4-Dinitrotoluene	U	440	1.0	330	440	110	
84-66-2	Diethylphthalate	U	440	1.0	330	440	110	
7005-72-3	4-Chlorophenyl-phenylether	U	440	1.0	330	440	100	
100-01-6	4-Nitroaniline	U	680	1.0	500	680	180	
534-52-1	4,6-Dinitro-2-Methylphenol	~~U~~ UJ	1600	1.0	1200	1600	460	ICB
86-30-6	N-Nitrosodiphenylamine	U	890	1.0	660	890	300	
101-55-3	4-Bromophenyl-phenylether	U	440	1.0	330	440	110	
1912-24-9	Atrazine	U	440	1.0	330	440	120	
87-86-5	Pentachlorophenol	~~U~~ UJ	1100	1.0	820	1100	320	ICB
120-12-7	Anthracene	U	440	1.0	330	440	110	
86-74-8	Carbazole	U	680	1.0	500	680	150	

lw 4/18/09

KATAHDIN ANALYTICAL SERVICES
Report of Analytical Results

Client: CH2MHill
Project: TO-009 Lejeune
PO No:
Sample Date: 01/22/09
Received Date: 01/24/09
Extraction Date: 01/29/09
Analysis Date: 12-FEB-2009 07:24
Report Date: 02/16/2009
Matrix: SOIL
% Solids: 74.0

Lab ID: SC0366-13
Client ID: MR08-SS314-09A
SDG: TO9-43
Extracted by: CB
Extraction Method: SW846 3550
Analyst: JCG
Analysis Method: SW846 8270C
Lab Prep Batch: WG60292
Units: ug/Kgdrywt

CAS#	Compound	Flags	Results	DF	PQL	Adj.PQL	Adj.MDL
84-74-2	Di-n-butylphthalate	U	440	1.0	330	440	140
85-68-7	Butylbenzylphthalate	U	440	1.0	330	440	120
91-94-1	3,3'-Dichlorobenzidine	U	680	1.0	500	680	150
218-01-9	Chrysene	U	440	1.0	330	440	130
117-81-7	bis(2-Ethylhexyl)phthalate	J	280	1.0	330	440	130
117-84-0	Di-n-octylphthalate	U	440	1.0	330	440	280
367-12-4	2-Fluorophenol		80%				
13127-88-3	Phenol-D6		75%				
4165-60-0	Nitrobenzene-D5		83%				
321-60-8	2-Fluorobiphenyl		87%				
118-79-6	2,4,6-Tribromophenol		68%				
1718-51-0	Terphenyl-D14		81%				

lw
4/18/09

8

KATAHDIN ANALYTICAL SERVICES
Report of Analytical Results

Client: CH2MHill
Project: TO-009 Lejeune
PO No:
Sample Date: 01/22/09
Received Date: 01/27/09
Extraction Date: 01/29/09
Analysis Date: 12-FEB-2009 14:41
Report Date: 02/16/2009
Matrix: SOIL
% Solids: 88.6

Lab ID: SC0408-1
Client ID: MR08-IS342-4-5-09A
SDG: TO9-43
Extracted by: CB
Extraction Method: SW846 3550
Analyst: JCG
Analysis Method: SW846 8270C
Lab Prep Batch: WG60292
Units: ug/Kgdrywt

CAS#	Compound	Flags	Results	DF	PQL	Adj.PQL	Adj.MDL	
100-52-7	Benzaldehyde	~~U~~ UJ	560	1.0	500	560	140	ICB
108-95-2	Phenol	U	560	1.0	500	560	180	
111-44-4	Bis(2-Chloroethyl)ether	U	370	1.0	330	370	91	
95-57-8	2-Chlorophenol	U	560	1.0	500	560	180	
95-48-7	2-Methylphenol	U	680	1.0	600	680	220	
108-60-1	2,2'-Oxybis(1-chloropropane)	U	370	1.0	330	370	100	
98-86-2	Acetophenone	U	680	1.0	600	680	200	
621-64-7	N-Nitroso-di-n-propylamine	U	370	1.0	330	370	94	
65794-96-9	3&4-Methylphenol	U	680	1.0	600	680	210	
67-72-1	Hexachloroethane	U	370	1.0	330	370	110	
98-95-3	Nitrobenzene	U	370	1.0	330	370	100	
78-59-1	Isophorone	U	370	1.0	330	370	85	
88-75-5	2-Nitrophenol	U	680	1.0	600	680	190	
105-67-9	2,4-Dimethylphenol	U	560	1.0	500	560	190	
111-91-1	Bis(2-Chloroethoxy)methane	U	370	1.0	330	370	110	
120-83-2	2,4-Dichlorophenol	U	560	1.0	500	560	170	
106-47-8	4-Chloroaniline	U	560	1.0	500	560	130	
105-60-2	Caprolactam	U	560	1.0	500	560	160	
59-50-7	4-Chloro-3-Methylphenol	U	560	1.0	500	560	190	
88-06-2	2,4,6-Trichlorophenol	U	560	1.0	500	560	170	
95-95-4	2,4,5-Trichlorophenol	U	560	1.0	500	560	170	
91-58-7	2-Chloronaphthalene	U	370	1.0	330	370	98	
92-52-4	1,1'-Biphenyl	~~U~~ UJ	370	1.0	330	370	82	ICB
88-74-4	2-Nitroaniline	U	560	1.0	500	560	85	
131-11-3	Dimethyl Phthalate	U	370	1.0	330	370	88	
606-20-2	2,6-Dinitrotoluene	U	370	1.0	330	370	89	
208-96-8	Acenaphthylene	U	370	1.0	330	370	79	
99-09-2	3-Nitroaniline	U	560	1.0	500	560	110	
83-32-9	Acenaphthene	U	370	1.0	330	370	73	
51-28-5	2,4-Dinitrophenol	~~U~~ UJ	1400	1.0	1200	1400	420	ICB
132-64-9	Dibenzofuran	U	370	1.0	330	370	89	
100-02-7	4-Nitrophenol	U	1400	1.0	1200	1400	350	
121-14-2	2,4-Dinitrotoluene	U	370	1.0	330	370	96	
84-66-2	Diethylphthalate	U	370	1.0	330	370	90	
7005-72-3	4-Chlorophenyl-phenylether	U	370	1.0	330	370	88	
100-01-6	4-Nitroaniline	U	560	1.0	500	560	150	
534-52-1	4,6-Dinitro-2-Methylphenol	~~U~~ UJ	1400	1.0	1200	1400	380	ICB
86-30-6	N-Nitrosodiphenylamine	U	740	1.0	660	740	250	
101-55-3	4-Bromophenyl-phenylether	U	370	1.0	330	370	96	
1912-24-9	Atrazine	U	370	1.0	330	370	100	
87-86-5	Pentachlorophenol	~~U~~ UJ	920	1.0	820	920	270	ICB
120-12-7	Anthracene	U	370	1.0	330	370	95	
86-74-8	Carbazole	U	560	1.0	500	560	120	

MW 4/18/09

KATAHDIN ANALYTICAL SERVICES
Report of Analytical Results

Client: CH2MHill
Project: TO-009 Lejeune
PO No:
Sample Date: 01/22/09
Received Date: 01/27/09
Extraction Date: 01/29/09
Analysis Date: 12-FEB-2009 14:41
Report Date: 02/16/2009
Matrix: SOIL
% Solids: 88.6

Lab ID: SC0408-1
Client ID: MR08-IS342-4-5-09A
SDG: TO9-43
Extracted by: CB
Extraction Method: SW846 3550
Analyst: JCG
Analysis Method: SW846 8270C
Lab Prep Batch: WG60292
Units: ug/Kgdrywt

CAS#	Compound	Flags	Results	DF	PQL	Adj.PQL	Adj.MDL
84-74-2	Di-n-butylphthalate	U	370	1.0	330	370	110
85-68-7	Butylbenzylphthalate	U	370	1.0	330	370	100
91-94-1	3,3'-Dichlorobenzidine	U	560	1.0	500	560	130
218-01-9	Chrysene	U	370	1.0	330	370	110
117-81-7	bis(2-Ethylhexyl)phthalate	J	290	1.0	330	370	110
117-84-0	Di-n-octylphthalate	U	370	1.0	330	370	240
367-12-4	2-Fluorophenol		86%				
13127-88-3	Phenol-D6		82%				
4165-60-0	Nitrobenzene-D5		91%				
321-60-8	2-Fluorobiphenyl		98%				
118-79-6	2,4,6-Tribromophenol		95%				
1718-51-0	Terphenyl-D14		104%				

fw 4/18/09

KATAHDIN ANALYTICAL SERVICES
Report of Analytical Results

Client: CH2MHill
Project: TO-009 Lejeune
PO No:
Sample Date: 01/23/09
Received Date: 01/27/09
Extraction Date: 01/29/09
Analysis Date: 13-FEB-2009 12:41
Report Date: 02/16/2009
Matrix: SOIL
% Solids: 90.6

Lab ID: SC0408-3RA
Client ID: MR08-IS362-4-5-09A
SDG: TO9-43
Extracted by: CB
Extraction Method: SW846 3550
Analyst: JCG
Analysis Method: SW846 8270C
Lab Prep Batch: WG60292
Units: ug/Kgdrywt

CAS#	Compound	Flags	Results	DF	PQL	Adj.PQL	Adj.MDL	
100-52-7	Benzaldehyde	~~U~~ UJ	550	1.0	500	550	130	ICB
108-95-2	Phenol	U	550	1.0	500	550	170	
111-44-4	Bis(2-Chloroethyl)ether	U	360	1.0	330	360	89	
95-57-8	2-Chlorophenol	U	550	1.0	500	550	180	
95-48-7	2-Methylphenol	U	660	1.0	600	660	220	
108-60-1	2,2'-Oxybis(1-chloropropane)	~~U~~ UJ	360	1.0	330	360	98	CCH
98-86-2	Acetophenone	U	660	1.0	600	660	200	
621-64-7	N-Nitroso-di-n-propylamine	U	360	1.0	330	360	92	
65794-96-9	3&4-Methylphenol	U	660	1.0	600	660	210	
67-72-1	Hexachloroethane	U	360	1.0	330	360	100	
98-95-3	Nitrobenzene	U	360	1.0	330	360	100	
78-59-1	Isophorone	U	360	1.0	330	360	83	
88-75-5	2-Nitrophenol	U	660	1.0	600	660	180	
105-67-9	2,4-Dimethylphenol	U	550	1.0	500	550	180	
111-91-1	Bis(2-Chloroethoxy)methane	U	360	1.0	330	360	100	
120-83-2	2,4-Dichlorophenol	U	550	1.0	500	550	160	
106-47-8	4-Chloroaniline	U	550	1.0	500	550	130	
105-60-2	Caprolactam	U	550	1.0	500	550	160	
59-50-7	4-Chloro-3-Methylphenol	U	550	1.0	500	550	180	
88-06-2	2,4,6-Trichlorophenol	U	550	1.0	500	550	170	
95-95-4	2,4,5-Trichlorophenol	U	550	1.0	500	550	170	
91-58-7	2-Chloronaphthalene	U	360	1.0	330	360	96	
92-52-4	1,1'-Biphenyl	~~U~~ UJ	360	1.0	330	360	80	ICB
88-74-4	2-Nitroaniline	U	550	1.0	500	550	83	
131-11-3	Dimethyl Phthalate	U	360	1.0	330	360	86	
606-20-2	2,6-Dinitrotoluene	U	360	1.0	330	360	87	
208-96-8	Acenaphthylene	U	360	1.0	330	360	77	
99-09-2	3-Nitroaniline	U	550	1.0	500	550	100	
83-32-9	Acenaphthene	U	360	1.0	330	360	72	
51-28-5	2,4-Dinitrophenol	~~U~~ UJ	1300	1.0	1200	1300	420	ICB
132-64-9	Dibenzofuran	U	360	1.0	330	360	87	
100-02-7	4-Nitrophenol	U	1300	1.0	1200	1300	340	
121-14-2	2,4-Dinitrotoluene	U	360	1.0	330	360	94	
84-66-2	Diethylphthalate	U	360	1.0	330	360	88	
7005-72-3	4-Chlorophenyl-phenylether	U	360	1.0	330	360	86	
100-01-6	4-Nitroaniline	U	550	1.0	500	550	150	
534-52-1	4,6-Dinitro-2-Methylphenol	~~U~~ UJ	1300	1.0	1200	1300	370	ICB
86-30-6	N-Nitrosodiphenylamine	U	730	1.0	660	730	240	
101-55-3	4-Bromophenyl-phenylether	U	360	1.0	330	360	94	
1912-24-9	Atrazine	U	360	1.0	330	360	100	
87-86-5	Pentachlorophenol	~~U~~ UJ	900	1.0	820	900	260	ICB
120-12-7	Anthracene	U	360	1.0	330	360	93	
86-74-8	Carbazole	U	550	1.0	500	550	120	

lw
4/18/09

KATAHDIN ANALYTICAL SERVICES
Report of Analytical Results

Client: CH2MHill
Project: TO-009 Lejeune
PO No:
Sample Date: 01/23/09
Received Date: 01/27/09
Extraction Date: 01/29/09
Analysis Date: 13-FEB-2009 12:41
Report Date: 02/16/2009
Matrix: SOIL
% Solids: 90.6

Lab ID: SC0408-3RA
Client ID: MR08-IS362-4-5-09A
SDG: TO9-43
Extracted by: CB
Extraction Method: SW846 3550
Analyst: JCG
Analysis Method: SW846 8270C
Lab Prep Batch: WG60292
Units: ug/Kgdrywt

CAS#	Compound	Flags	Results	DF	PQL	Adj.PQL	Adj.MDL
84-74-2	Di-n-butylphthalate	U	360	1.0	330	360	110
85-68-7	Butylbenzylphthalate	U	360	1.0	330	360	100
91-94-1	3,3'-Dichlorobenzidine	U	550	1.0	500	550	120
218-01-9	Chrysene	U	360	1.0	330	360	100
117-81-7	bis(2-Ethylhexyl)phthalate	J	300	1.0	330	360	110
117-84-0	Di-n-octylphthalate	U	360	1.0	330	360	230
367-12-4	2-Fluorophenol		78%				
13127-88-3	Phenol-D6		73%				
4165-60-0	Nitrobenzene-D5		87%				
321-60-8	2-Fluorobiphenyl		87%				
118-79-6	2,4,6-Tribromophenol		86%				
1718-51-0	Terphenyl-D14		114%				

lw
4/18/09

KATAHDIN ANALYTICAL SERVICES
Report of Analytical Results

Client: CH2MHill
Project: TO-009 Lejeune
PO No:
Sample Date: 01/23/09
Received Date: 01/27/09
Extraction Date: 01/29/09
Analysis Date: 12-FEB-2009 16:06
Report Date: 02/16/2009
Matrix: SOIL
% Solids: 79.5

Lab ID: SC0408-5
Client ID: MR08-SS362-09A
SDG: TO9-43
Extracted by: CB
Extraction Method: SW846 3550
Analyst: JCG
Analysis Method: SW846 8270C
Lab Prep Batch: WG60292
Units: ug/Kgdrywt

CAS#	Compound	Flags	Results	DF	PQL	Adj.PQL	Adj.MDL	
100-52-7	Benzaldehyde	~~U~~ UJ	630	1.0	500	630	150	ICB
108-95-2	Phenol	U	630	1.0	500	630	200	
111-44-4	Bis(2-Chloroethyl)ether	U	420	1.0	330	420	100	
95-57-8	2-Chlorophenol	U	630	1.0	500	630	210	
95-48-7	2-Methylphenol	U	750	1.0	600	750	250	
108-60-1	2,2'-Oxybis(1-chloropropane)	U	420	1.0	330	420	110	
98-86-2	Acetophenone	U	750	1.0	600	750	220	
621-64-7	N-Nitroso-di-n-propylamine	U	420	1.0	330	420	100	
65794-96-9	3&4-Methylphenol	U	750	1.0	600	750	240	
67-72-1	Hexachloroethane	U	420	1.0	330	420	120	
98-95-3	Nitrobenzene	U	420	1.0	330	420	110	
78-59-1	Isophorone	U	420	1.0	330	420	94	
88-75-5	2-Nitrophenol	U	750	1.0	600	750	210	
105-67-9	2,4-Dimethylphenol	U	630	1.0	500	630	210	
111-91-1	Bis(2-Chloroethoxy)methane	U	420	1.0	330	420	120	
120-83-2	2,4-Dichlorophenol	U	630	1.0	500	630	190	
106-47-8	4-Chloroaniline	U	630	1.0	500	630	150	
105-60-2	Caprolactam	U	630	1.0	500	630	180	
59-50-7	4-Chloro-3-Methylphenol	U	630	1.0	500	630	210	
88-06-2	2,4,6-Trichlorophenol	U	630	1.0	500	630	200	
95-95-4	2,4,5-Trichlorophenol	U	630	1.0	500	630	200	
91-58-7	2-Chloronaphthalene	U	420	1.0	330	420	110	
92-52-4	1,1'-Biphenyl	~~U~~ UJ	420	1.0	330	420	92	ICB
88-74-4	2-Nitroaniline	U	630	1.0	500	630	94	
131-11-3	Dimethyl Phthalate	U	420	1.0	330	420	98	
606-20-2	2,6-Dinitrotoluene	U	420	1.0	330	420	99	
208-96-8	Acenaphthylene	U	420	1.0	330	420	88	
99-09-2	3-Nitroaniline	U	630	1.0	500	630	120	
83-32-9	Acenaphthene	U	420	1.0	330	420	82	
51-28-5	2,4-Dinitrophenol	~~U~~ UJ	1500	1.0	1200	1500	470	ICB
132-64-9	Dibenzofuran	U	420	1.0	330	420	99	
100-02-7	4-Nitrophenol	U	1500	1.0	1200	1500	390	
121-14-2	2,4-Dinitrotoluene	U	420	1.0	330	420	110	
84-66-2	Diethylphthalate	U	420	1.0	330	420	100	
7005-72-3	4-Chlorophenyl-phenylether	U	420	1.0	330	420	98	
100-01-6	4-Nitroaniline	U	630	1.0	500	630	170	
534-52-1	4,6-Dinitro-2-Methylphenol	~~U~~ UJ	1500	1.0	1200	1500	420	ICB
86-30-6	N-Nitrosodiphenylamine	U	830	1.0	660	830	280	
101-55-3	4-Bromophenyl-phenylether	U	420	1.0	330	420	110	
1912-24-9	Atrazine	U	420	1.0	330	420	110	
87-86-5	Pentachlorophenol	~~U~~ UJ	1000	1.0	820	1000	300	ICB
120-12-7	Anthracene	U	420	1.0	330	420	100	
86-74-8	Carbazole	U	630	1.0	500	630	140	

RW
4/18/09

KATAHDIN ANALYTICAL SERVICES
Report of Analytical Results

Client: CH2MHill
Project: TO-009 Lejeune
PO No:
Sample Date: 01/23/09
Received Date: 01/27/09
Extraction Date: 01/29/09
Analysis Date: 12-FEB-2009 16:06
Report Date: 02/16/2009
Matrix: SOIL
% Solids: 79.5

Lab ID: SC0408-5
Client ID: MR08-SS362-09A
SDG: TO9-43
Extracted by: CB
Extraction Method: SW846 3550
Analyst: JCG
Analysis Method: SW846 8270C
Lab Prep Batch: WG60292
Units: ug/Kgdrywt

CAS#	Compound	Flags	Results	DF	PQL	Adj.PQL	Adj.MDL
84-74-2	Di-n-butylphthalate	U	420	1.0	330	420	130
85-68-7	Butylbenzylphthalate	U	420	1.0	330	420	120
91-94-1	3,3'-Dichlorobenzidine	U	630	1.0	500	630	140
218-01-9	Chrysene	U	420	1.0	330	420	120
117-81-7	bis(2-Ethylhexyl)phthalate	J	240	1.0	330	420	120
117-84-0	Di-n-octylphthalate	U	420	1.0	330	420	260
367-12-4	2-Fluorophenol		50%				
13127-88-3	Phenol-D6		50%				
4165-60-0	Nitrobenzene-D5		49%				
321-60-8	2-Fluorobiphenyl		66%				
118-79-6	2,4,6-Tribromophenol		85%				
1718-51-0	Terphenyl-D14		95%				

lw 4/18/09

11

KATAHDIN ANALYTICAL SERVICES
Report of Analytical Results

Client: CH2MHill
Project: TO-009 Lejeune
PO No:
Sample Date: 01/23/09
Received Date: 01/27/09
Extraction Date: 01/29/09
Analysis Date: 12-FEB-2009 16:48
Report Date: 02/16/2009
Matrix: SOIL
% Solids: 88.6

Lab ID: SC0408-7
Client ID: MR08-IS363-4-5-09A
SDG: TO9-43
Extracted by: CB
Extraction Method: SW846 3550
Analyst: JCG
Analysis Method: SW846 8270C
Lab Prep Batch: WG60292
Units: ug/Kgdrywt

CAS#	Compound	Flags	Results	DF	PQL	Adj.PQL	Adj.MDL	
100-52-7	Benzaldehyde	~~U~~ UJ	560	1.0	500	560	140	ICB
108-95-2	Phenol	U	560	1.0	500	560	180	
111-44-4	Bis(2-Chloroethyl)ether	U	370	1.0	330	370	91	
95-57-8	2-Chlorophenol	U	560	1.0	500	560	180	
95-48-7	2-Methylphenol	U	680	1.0	600	680	220	
108-60-1	2,2'-Oxybis(1-chloropropane)	U	370	1.0	330	370	100	
98-86-2	Acetophenone	U	680	1.0	600	680	200	
621-64-7	N-Nitroso-di-n-propylamine	U	370	1.0	330	370	94	
65794-96-9	3&4-Methylphenol	U	680	1.0	600	680	210	
67-72-1	Hexachloroethane	U	370	1.0	330	370	110	
98-95-3	Nitrobenzene	U	370	1.0	330	370	100	
78-59-1	Isophorone	U	370	1.0	330	370	85	
88-75-5	2-Nitrophenol	U	680	1.0	600	680	190	
105-67-9	2,4-Dimethylphenol	U	560	1.0	500	560	190	
111-91-1	Bis(2-Chloroethoxy)methane	U	370	1.0	330	370	110	
120-83-2	2,4-Dichlorophenol	U	560	1.0	500	560	170	
106-47-8	4-Chloroaniline	U	560	1.0	500	560	130	
105-60-2	Caprolactam	U	560	1.0	500	560	160	
59-50-7	4-Chloro-3-Methylphenol	U	560	1.0	500	560	190	
88-06-2	2,4,6-Trichlorophenol	U	560	1.0	500	560	170	
95-95-4	2,4,5-Trichlorophenol	U	560	1.0	500	560	170	
91-58-7	2-Chloronaphthalene	U	370	1.0	330	370	98	
92-52-4	1,1'-Biphenyl	~~U~~ UJ	370	1.0	330	370	82	ICB
88-74-4	2-Nitroaniline	U	560	1.0	500	560	85	
131-11-3	Dimethyl Phthalate	U	370	1.0	330	370	88	
606-20-2	2,6-Dinitrotoluene	U	370	1.0	330	370	89	
208-96-8	Acenaphthylene	U	370	1.0	330	370	79	
99-09-2	3-Nitroaniline	U	560	1.0	500	560	110	
83-32-9	Acenaphthene	U	370	1.0	330	370	73	
51-28-5	2,4-Dinitrophenol	~~U~~ UJ	1400	1.0	1200	1400	420	ICB
132-64-9	Dibenzofuran	U	370	1.0	330	370	89	
100-02-7	4-Nitrophenol	U	1400	1.0	1200	1400	350	
121-14-2	2,4-Dinitrotoluene	U	370	1.0	330	370	96	
84-66-2	Diethylphthalate	U	370	1.0	330	370	90	
7005-72-3	4-Chlorophenyl-phenylether	U	370	1.0	330	370	88	
100-01-6	4-Nitroaniline	U	560	1.0	500	560	150	
534-52-1	4,6-Dinitro-2-Methylphenol	~~U~~ UJ	1400	1.0	1200	1400	380	ICB
86-30-6	N-Nitrosodiphenylamine	U	740	1.0	660	740	250	
101-55-3	4-Bromophenyl-phenylether	U	370	1.0	330	370	96	
1912-24-9	Atrazine	U	370	1.0	330	370	100	
87-86-5	Pentachlorophenol	~~U~~ UJ	920	1.0	820	920	270	ICB
120-12-7	Anthracene	U	370	1.0	330	370	95	
86-74-8	Carbazole	U	560	1.0	500	560	120	

LW
4/18/09

KATAHDIN ANALYTICAL SERVICES
Report of Analytical Results

Client: CH2MHill
Project: TO-009 Lejeune
PO No:
Sample Date: 01/23/09
Received Date: 01/27/09
Extraction Date: 01/29/09
Analysis Date: 12-FEB-2009 16:48
Report Date: 02/16/2009
Matrix: SOIL
% Solids: 88.6

Lab ID: SC0408-7
Client ID: MR08-IS363-4-5-09A
SDG: TO9-43
Extracted by: CB
Extraction Method: SW846 3550
Analyst: JCG
Analysis Method: SW846 8270C
Lab Prep Batch: WG60292
Units: ug/Kgdrywt

CAS#	Compound	Flags	Results	DF	PQL	Adj.PQL	Adj.MDL
84-74-2	Di-n-butylphthalate	U	370	1.0	330	370	110
85-68-7	Butylbenzylphthalate	U	370	1.0	330	370	100
91-94-1	3,3'-Dichlorobenzidine	U	560	1.0	500	560	130
218-01-9	Chrysene	U	370	1.0	330	370	110
117-81-7	bis(2-Ethylhexyl)phthalate	J	250	1.0	330	370	110
117-84-0	Di-n-octylphthalate	U	370	1.0	330	370	240
367-12-4	2-Fluorophenol		63%				
13127-88-3	Phenol-D6		68%				
4165-60-0	Nitrobenzene-D5		68%				
321-60-8	2-Fluorobiphenyl		86%				
118-79-6	2,4,6-Tribromophenol		87%				
1718-51-0	Terphenyl-D14		116%				

LW
4/18/09

KATAHDIN ANALYTICAL SERVICES
Report of Analytical Results

Client: CH2MHill
Project: TO-009 Lejeune
PO No:
Sample Date: 01/23/09
Received Date: 01/27/09
Extraction Date: 01/29/09
Analysis Date: 12-FEB-2009 17:31
Report Date: 02/16/2009
Matrix: SOIL
% Solids: 87.4

Lab ID: SC0408-9
Client ID: MR08-SS363-09A
SDG: TO9-43
Extracted by: CB
Extraction Method: SW846 3550
Analyst: JCG
Analysis Method: SW846 8270C
Lab Prep Batch: WG60292
Units: ug/Kgdrywt

CAS#	Compound	Flags	Results	DF	PQL	Adj.PQL	Adj.MDL
100-52-7	Benzaldehyde	~~U~~ UJ	570	1.0	500	570	140 ICB
108-95-2	Phenol	U	570	1.0	500	570	180
111-44-4	Bis(2-Chloroethyl)ether	U	380	1.0	330	380	93
95-57-8	2-Chlorophenol	U	570	1.0	500	570	190
95-48-7	2-Methylphenol	U	690	1.0	600	690	230
108-60-1	2,2'-Oxybis(1-chloropropane)	U	380	1.0	330	380	100
98-86-2	Acetophenone	U	690	1.0	600	690	200
621-64-7	N-Nitroso-di-n-propylamine	U	380	1.0	330	380	95
65794-96-9	3&4-Methylphenol	U	690	1.0	600	690	210
67-72-1	Hexachloroethane	U	380	1.0	330	380	110
98-95-3	Nitrobenzene	U	380	1.0	330	380	100
78-59-1	Isophorone	U	380	1.0	330	380	86
88-75-5	2-Nitrophenol	U	690	1.0	600	690	190
105-67-9	2,4-Dimethylphenol	U	570	1.0	500	570	190
111-91-1	Bis(2-Chloroethoxy)methane	U	380	1.0	330	380	110
120-83-2	2,4-Dichlorophenol	U	570	1.0	500	570	170
106-47-8	4-Chloroaniline	U	570	1.0	500	570	140
105-60-2	Caprolactam	U	570	1.0	500	570	160
59-50-7	4-Chloro-3-Methylphenol	U	570	1.0	500	570	190
88-06-2	2,4,6-Trichlorophenol	U	570	1.0	500	570	180
95-95-4	2,4,5-Trichlorophenol	U	570	1.0	500	570	180
91-58-7	2-Chloronaphthalene	U	380	1.0	330	380	100
92-52-4	1,1'-Biphenyl	~~U~~ UJ	380	1.0	330	380	84 ICB
88-74-4	2-Nitroaniline	U	570	1.0	500	570	86
131-11-3	Dimethyl Phthalate	U	380	1.0	330	380	89
606-20-2	2,6-Dinitrotoluene	U	380	1.0	330	380	90
208-96-8	Acenaphthylene	U	380	1.0	330	380	80
99-09-2	3-Nitroaniline	U	570	1.0	500	570	110
83-32-9	Acenaphthene	U	380	1.0	330	380	74
51-28-5	2,4-Dinitrophenol	~~U~~ UJ	1400	1.0	1200	1400	430 ICB
132-64-9	Dibenzofuran	U	380	1.0	330	380	90
100-02-7	4-Nitrophenol	U	1400	1.0	1200	1400	350
121-14-2	2,4-Dinitrotoluene	U	380	1.0	330	380	97
84-66-2	Diethylphthalate	U	380	1.0	330	380	92
7005-72-3	4-Chlorophenyl-phenylether	U	380	1.0	330	380	89
100-01-6	4-Nitroaniline	U	570	1.0	500	570	150
534-52-1	4,6-Dinitro-2-Methylphenol	~~U~~ UJ	1400	1.0	1200	1400	380 ICB
86-30-6	N-Nitrosodiphenylamine	U	750	1.0	660	750	250
101-55-3	4-Bromophenyl-phenylether	U	380	1.0	330	380	97
1912-24-9	Atrazine	U	380	1.0	330	380	100
87-86-5	Pentachlorophenol	~~U~~ UJ	940	1.0	820	940	270 ICB
120-12-7	Anthracene	U	380	1.0	330	380	96
86-74-8	Carbazole	U	570	1.0	500	570	130

lus 4/18/09

KATAHDIN ANALYTICAL SERVICES
Report of Analytical Results

Client: CH2MHill
Project: TO-009 Lejeune
PO No:
Sample Date: 01/23/09
Received Date: 01/27/09
Extraction Date: 01/29/09
Analysis Date: 12-FEB-2009 17:31
Report Date: 02/16/2009
Matrix: SOIL
% Solids: 87.4

Lab ID: SC0408-9
Client ID: MR08-SS363-09A
SDG: TO9-43
Extracted by: CB
Extraction Method: SW846 3550
Analyst: JCG
Analysis Method: SW846 8270C
Lab Prep Batch: WG60292
Units: ug/Kgdrywt

CAS#	Compound	Flags	Results	DF	PQL	Adj.PQL	Adj.MDL
84-74-2	Di-n-butylphthalate	U	380	1.0	330	380	120
85-68-7	Butylbenzylphthalate	U	380	1.0	330	380	110
91-94-1	3,3'-Dichlorobenzidine	U	570	1.0	500	570	130
218-01-9	Chrysene	U	380	1.0	330	380	110
117-81-7	bis(2-Ethylhexyl)phthalate	J	280	1.0	330	380	110
117-84-0	Di-n-octylphthalate	U	380	1.0	330	380	240
367-12-4	2-Fluorophenol		80%				
13127-88-3	Phenol-D6		78%				
4165-60-0	Nitrobenzene-D5		82%				
321-60-8	2-Fluorobiphenyl		88%				
118-79-6	2,4,6-Tribromophenol		96%				
1718-51-0	Terphenyl-D14		101%				

lw 4/18/09

KATAHDIN ANALYTICAL SERVICES
Report of Analytical Results

Client: CH2MHill
Project: TO-009 Lejeune
PO No:
Sample Date: 01/23/09
Received Date: 01/27/09
Extraction Date: 01/29/09
Analysis Date: 12-FEB-2009 18:13
Report Date: 02/16/2009
Matrix: SOIL
% Solids: 85.0

Lab ID: SC0408-11
Client ID: MR08-IS364-4-5-09A
SDG: TO9-43
Extracted by: CB
Extraction Method: SW846 3550
Analyst: JCG
Analysis Method: SW846 8270C
Lab Prep Batch: WG60292
Units: ug/Kgdrywt

CAS#	Compound	Flags	Results	DF	PQL	Adj.PQL	Adj.MDL	
100-52-7	Benzaldehyde	~~U~~ UJ	590	1.0	500	590	140	ICB
108-95-2	Phenol	U	590	1.0	500	590	180	
111-44-4	Bis(2-Chloroethyl)ether	U	390	1.0	330	390	95	
95-57-8	2-Chlorophenol	U	590	1.0	500	590	190	
95-48-7	2-Methylphenol	U	700	1.0	600	700	240	
108-60-1	2,2'-Oxybis(1-chloropropane)	U	390	1.0	330	390	100	
98-86-2	Acetophenone	U	700	1.0	600	700	210	
621-64-7	N-Nitroso-di-n-propylamine	U	390	1.0	330	390	98	
65794-96-9	3&4-Methylphenol	U	700	1.0	600	700	220	
67-72-1	Hexachloroethane	U	390	1.0	330	390	110	
98-95-3	Nitrobenzene	U	390	1.0	330	390	110	
78-59-1	Isophorone	U	390	1.0	330	390	88	
88-75-5	2-Nitrophenol	U	700	1.0	600	700	200	
105-67-9	2,4-Dimethylphenol	U	590	1.0	500	590	190	
111-91-1	Bis(2-Chloroethoxy)methane	U	390	1.0	330	390	110	
120-83-2	2,4-Dichlorophenol	U	590	1.0	500	590	180	
106-47-8	4-Chloroaniline	U	590	1.0	500	590	140	
105-60-2	Caprolactam	U	590	1.0	500	590	170	
59-50-7	4-Chloro-3-Methylphenol	U	590	1.0	500	590	200	
88-06-2	2,4,6-Trichlorophenol	U	590	1.0	500	590	180	
95-95-4	2,4,5-Trichlorophenol	U	590	1.0	500	590	180	
91-58-7	2-Chloronaphthalene	U	390	1.0	330	390	100	
92-52-4	1,1'-Biphenyl	~~U~~ UJ	390	1.0	330	390	86	ICB
88-74-4	2-Nitroaniline	U	590	1.0	500	590	88	
131-11-3	Dimethyl Phthalate	U	390	1.0	330	390	92	
606-20-2	2,6-Dinitrotoluene	U	390	1.0	330	390	93	
208-96-8	Acenaphthylene	U	390	1.0	330	390	82	
99-09-2	3-Nitroaniline	U	590	1.0	500	590	110	
83-32-9	Acenaphthene	U	390	1.0	330	390	76	
51-28-5	2,4-Dinitrophenol	~~U~~ UJ	1400	1.0	1200	1400	440	ICB
132-64-9	Dibenzofuran	U	390	1.0	330	390	93	
100-02-7	4-Nitrophenol	U	1400	1.0	1200	1400	360	
121-14-2	2,4-Dinitrotoluene	U	390	1.0	330	390	100	
84-66-2	Diethylphthalate	U	390	1.0	330	390	94	
7005-72-3	4-Chlorophenyl-phenylether	U	390	1.0	330	390	92	
100-01-6	4-Nitroaniline	U	590	1.0	500	590	160	
534-52-1	4,6-Dinitro-2-Methylphenol	~~U~~ UJ	1400	1.0	1200	1400	400	ICB
86-30-6	N-Nitrosodiphenylamine	U	780	1.0	660	780	260	
101-55-3	4-Bromophenyl-phenylether	U	390	1.0	330	390	100	
1912-24-9	Atrazine	U	390	1.0	330	390	110	
87-86-5	Pentachlorophenol	~~U~~ UJ	960	1.0	820	960	280	ICB
120-12-7	Anthracene	U	390	1.0	330	390	99	
86-74-8	Carbazole	U	590	1.0	500	590	130	

lw
4/18/09

KATAHDIN ANALYTICAL SERVICES
Report of Analytical Results

Client: CH2MHill
Project: TO-009 Lejeune
PO No:
Sample Date: 01/23/09
Received Date: 01/27/09
Extraction Date: 01/29/09
Analysis Date: 12-FEB-2009 18:13
Report Date: 02/16/2009
Matrix: SOIL
% Solids: 85.0

Lab ID: SC0408-11
Client ID: MR08-IS364-4-5-09A
SDG: TO9-43
Extracted by: CB
Extraction Method: SW846 3550
Analyst: JCG
Analysis Method: SW846 8270C
Lab Prep Batch: WG60292
Units: ug/Kgdrywt

CAS#	Compound	Flags	Results	DF	PQL	Adj.PQL	Adj.MDL
84-74-2	Di-n-butylphthalate	U	390	1.0	330	390	120
85-68-7	Butylbenzylphthalate	U	390	1.0	330	390	110
91-94-1	3,3'-Dichlorobenzidine	U	590	1.0	500	590	130
218-01-9	Chrysene	U	390	1.0	330	390	110
117-81-7	bis(2-Ethylhexyl)phthalate	J	250	1.0	330	390	120
117-84-0	Di-n-octylphthalate	U	390	1.0	330	390	250
367-12-4	2-Fluorophenol		73%				
13127-88-3	Phenol-D6		70%				
4165-60-0	Nitrobenzene-D5		74%				
321-60-8	2-Fluorobiphenyl		80%				
118-79-6	2,4,6-Tribromophenol		80%				
1718-51-0	Terphenyl-D14		88%				

kw 4/18/09

KATAHDIN ANALYTICAL SERVICES
Report of Analytical Results

Client: CH2MHill
Project: TO-009 Lejeune
PO No:
Sample Date: 01/23/09
Received Date: 01/27/09
Extraction Date: 01/29/09
Analysis Date: 12-FEB-2009 18:56
Report Date: 02/16/2009
Matrix: SOIL
% Solids: 71.3

Lab ID: SC0408-13
Client ID: MR08-SS364-09A
SDG: TO9-43
Extracted by: CB
Extraction Method: SW846 3550
Analyst: JCG
Analysis Method: SW846 8270C
Lab Prep Batch: WG60292
Units: ug/Kgdrywt

CAS#	Compound	Flags	Results	DF	PQL	Adj.PQL	Adj.MDL	
100-52-7	Benzaldehyde	~~U~~ UJ	700	1.0	500	700	170	JCB
108-95-2	Phenol	U	700	1.0	500	700	220	
111-44-4	Bis(2-Chloroethyl)ether	U	460	1.0	330	460	110	
95-57-8	2-Chlorophenol	U	700	1.0	500	700	230	
95-48-7	2-Methylphenol	U	840	1.0	600	840	280	
108-60-1	2,2'-Oxybis(1-chloropropane)	U	460	1.0	330	460	120	
98-86-2	Acetophenone	U	840	1.0	600	840	250	
621-64-7	N-Nitroso-di-n-propylamine	U	460	1.0	330	460	120	
65794-96-9	3&4-Methylphenol	U	840	1.0	600	840	260	
67-72-1	Hexachloroethane	U	460	1.0	330	460	130	
98-95-3	Nitrobenzene	U	460	1.0	330	460	130	
78-59-1	Isophorone	U	460	1.0	330	460	100	
88-75-5	2-Nitrophenol	U	840	1.0	600	840	230	
105-67-9	2,4-Dimethylphenol	U	700	1.0	500	700	230	
111-91-1	Bis(2-Chloroethoxy)methane	U	460	1.0	330	460	130	
120-83-2	2,4-Dichlorophenol	U	700	1.0	500	700	210	
106-47-8	4-Chloroaniline	U	700	1.0	500	700	170	
105-60-2	Caprolactam	U	700	1.0	500	700	200	
59-50-7	4-Chloro-3-Methylphenol	U	700	1.0	500	700	230	
88-06-2	2,4,6-Trichlorophenol	U	700	1.0	500	700	220	
95-95-4	2,4,5-Trichlorophenol	U	700	1.0	500	700	220	
91-58-7	2-Chloronaphthalene	U	460	1.0	330	460	120	
92-52-4	1,1'-Biphenyl	~~U~~ UJ	460	1.0	330	460	100	JCB
88-74-4	2-Nitroaniline	U	700	1.0	500	700	100	
131-11-3	Dimethyl Phthalate	U	460	1.0	330	460	110	
606-20-2	2,6-Dinitrotoluene	U	460	1.0	330	460	110	
208-96-8	Acenaphthylene	U	460	1.0	330	460	98	
99-09-2	3-Nitroaniline	U	700	1.0	500	700	130	
83-32-9	Acenaphthene	U	460	1.0	330	460	91	
51-28-5	2,4-Dinitrophenol	~~U~~ UJ	1700	1.0	1200	1700	530	JCB
132-64-9	Dibenzofuran	U	460	1.0	330	460	110	
100-02-7	4-Nitrophenol	U	1700	1.0	1200	1700	430	
121-14-2	2,4-Dinitrotoluene	U	460	1.0	330	460	120	
84-66-2	Diethylphthalate	U	460	1.0	330	460	110	
7005-72-3	4-Chlorophenyl-phenylether	U	460	1.0	330	460	110	
100-01-6	4-Nitroaniline	U	700	1.0	500	700	190	
534-52-1	4,6-Dinitro-2-Methylphenol	~~U~~ UJ	1700	1.0	1200	1700	470	JCB
86-30-6	N-Nitrosodiphenylamine	U	920	1.0	660	920	310	
101-55-3	4-Bromophenyl-phenylether	U	460	1.0	330	460	120	
1912-24-9	Atrazine	U	460	1.0	330	460	130	
87-86-5	Pentachlorophenol	~~U~~ UJ	1200	1.0	820	1200	330	JCB
120-12-7	Anthracene	U	460	1.0	330	460	120	
86-74-8	Carbazole	U	700	1.0	500	700	160	

RW
4/18/09

KATAHDIN ANALYTICAL SERVICES
Report of Analytical Results

Client: CH2MHill
Project: TO-009 Lejeune
PO No:
Sample Date: 01/23/09
Received Date: 01/27/09
Extraction Date: 01/29/09
Analysis Date: 12-FEB-2009 18:56
Report Date: 02/16/2009
Matrix: SOIL
% Solids: 71.3

Lab ID: SC0408-13
Client ID: MR08-SS364-09A
SDG: TO9-43
Extracted by: CB
Extraction Method: SW846 3550
Analyst: JCG
Analysis Method: SW846 8270C
Lab Prep Batch: WG60292
Units: ug/Kgdrywt

CAS#	Compound	Flags	Results	DF	PQL	Adj.PQL	Adj.MDL
84-74-2	Di-n-butylphthalate	U	460	1.0	330	460	140
85-68-7	Butylbenzylphthalate	U	460	1.0	330	460	130
91-94-1	3,3'-Dichlorobenzidine	U	700	1.0	500	700	160
218-01-9	Chrysene	U	460	1.0	330	460	130
117-81-7	bis(2-Ethylhexyl)phthalate		740	1.0	330	460	140
117-84-0	Di-n-octylphthalate	U	460	1.0	330	460	300
367-12-4	2-Fluorophenol		74%				
13127-88-3	Phenol-D6		68%				
4165-60-0	Nitrobenzene-D5		74%				
321-60-8	2-Fluorobiphenyl		77%				
118-79-6	2,4,6-Tribromophenol		82%				
1718-51-0	Terphenyl-D14		82%				

MW 4/18/09

15

KATAHDIN ANALYTICAL SERVICES
Report of Analytical Results

Client: CH2MHill
Project: TO-009 Lejeune
PO No:
Sample Date: 01/23/09
Received Date: 01/27/09
Extraction Date: 01/29/09
Analysis Date: 12-FEB-2009 19:41
Report Date: 02/16/2009
Matrix: SOIL
% Solids: 95.0

Lab ID: SC0408-15
Client ID: MR08-IS365-4-5-09A
SDG: TO9-43
Extracted by: CB
Extraction Method: SW846 3550
Analyst: JCG
Analysis Method: SW846 8270C
Lab Prep Batch: WG60292
Units: ug/Kgdrywt

CAS#	Compound	Flags	Results	DF	PQL	Adj.PQL	Adj.MDL	
100-52-7	Benzaldehyde	~~U~~ UJ	530	1.0	500	530	130	ICB
108-95-2	Phenol	U	530	1.0	500	530	160	
111-44-4	Bis(2-Chloroethyl)ether	U	350	1.0	330	350	85	
95-57-8	2-Chlorophenol	U	530	1.0	500	530	170	
95-48-7	2-Methylphenol	U	630	1.0	600	630	210	
108-60-1	2,2'-Oxybis(1-chloropropane)	U	350	1.0	330	350	94	
98-86-2	Acetophenone	U	630	1.0	600	630	190	
621-64-7	N-Nitroso-di-n-propylamine	U	350	1.0	330	350	87	
65794-96-9	3&4-Methylphenol	U	630	1.0	600	630	200	
67-72-1	Hexachloroethane	U	350	1.0	330	350	100	
98-95-3	Nitrobenzene	U	350	1.0	330	350	96	
78-59-1	Isophorone	U	350	1.0	330	350	79	
88-75-5	2-Nitrophenol	U	630	1.0	600	630	180	
105-67-9	2,4-Dimethylphenol	U	530	1.0	500	530	170	
111-91-1	Bis(2-Chloroethoxy)methane	U	350	1.0	330	350	100	
120-83-2	2,4-Dichlorophenol	U	530	1.0	500	530	160	
106-47-8	4-Chloroaniline	U	530	1.0	500	530	120	
105-60-2	Caprolactam	U	530	1.0	500	530	150	
59-50-7	4-Chloro-3-Methylphenol	U	530	1.0	500	530	170	
88-06-2	2,4,6-Trichlorophenol	U	530	1.0	500	530	160	
95-95-4	2,4,5-Trichlorophenol	U	530	1.0	500	530	160	
91-58-7	2-Chloronaphthalene	U	350	1.0	330	350	92	
92-52-4	1,1'-Biphenyl	~~U~~ UJ	350	1.0	330	350	77	ICB
88-74-4	2-Nitroaniline	U	530	1.0	500	530	79	
131-11-3	Dimethyl Phthalate	U	350	1.0	330	350	82	
606-20-2	2,6-Dinitrotoluene	U	350	1.0	330	350	83	
208-96-8	Acenaphthylene	U	350	1.0	330	350	74	
99-09-2	3-Nitroaniline	U	530	1.0	500	530	99	
83-32-9	Acenaphthene	U	350	1.0	330	350	68	
51-28-5	2,4-Dinitrophenol	~~U~~ UJ	1300	1.0	1200	1300	400	ICB
132-64-9	Dibenzofuran	U	350	1.0	330	350	83	
100-02-7	4-Nitrophenol	U	1300	1.0	1200	1300	320	
121-14-2	2,4-Dinitrotoluene	U	350	1.0	330	350	89	
84-66-2	Diethylphthalate	U	350	1.0	330	350	84	
7005-72-3	4-Chlorophenyl-phenylether	U	350	1.0	330	350	82	
100-01-6	4-Nitroaniline	U	530	1.0	500	530	140	
534-52-1	4,6-Dinitro-2-Methylphenol	~~U~~ UJ	1300	1.0	1200	1300	350	ICB
86-30-6	N-Nitrosodiphenylamine	U	690	1.0	660	690	230	
101-55-3	4-Bromophenyl-phenylether	U	350	1.0	330	350	89	
1912-24-9	Atrazine	U	350	1.0	330	350	96	
87-86-5	Pentachlorophenol	~~U~~ UJ	860	1.0	820	860	250	ICB
120-12-7	Anthracene	U	350	1.0	330	350	88	
86-74-8	Carbazole	U	530	1.0	500	530	120	

MW
4/18/09

KATAHDIN ANALYTICAL SERVICES
Report of Analytical Results

Client: CH2MHill
Project: TO-009 Lejeune
PO No:
Sample Date: 01/23/09
Received Date: 01/27/09
Extraction Date: 01/29/09
Analysis Date: 12-FEB-2009 19:41
Report Date: 02/16/2009
Matrix: SOIL
% Solids: 95.0

Lab ID: SC0408-15
Client ID: MR08-IS365-4-5-09A
SDG: TO9-43
Extracted by: CB
Extraction Method: SW846 3550
Analyst: JCG
Analysis Method: SW846 8270C
Lab Prep Batch: WG60292
Units: ug/Kgdrywt

CAS#	Compound	Flags	Results	DF	PQL	Adj.PQL	Adj.MDL
84-74-2	Di-n-butylphthalate	U	350	1.0	330	350	110
85-68-7	Butylbenzylphthalate	U	350	1.0	330	350	98
91-94-1	3,3'-Dichlorobenzidine	U	530	1.0	500	530	120
218-01-9	Chrysene	U	350	1.0	330	350	100
117-81-7	bis(2-Ethylhexyl)phthalate	J	210	1.0	330	350	100
117-84-0	Di-n-octylphthalate	U	350	1.0	330	350	220
367-12-4	2-Fluorophenol		72%				
13127-88-3	Phenol-D6		69%				
4165-60-0	Nitrobenzene-D5		79%				
321-60-8	2-Fluorobiphenyl		81%				
118-79-6	2,4,6-Tribromophenol		70%				
1718-51-0	Terphenyl-D14		88%				

MW
4/18/09

KATAHDIN ANALYTICAL SERVICES
Report of Analytical Results

Client: CH2MHill
Project: TO-009 Lejeune
PO No:
Sample Date: 01/23/09
Received Date: 01/27/09
Extraction Date: 01/29/09
Analysis Date: 12-FEB-2009 20:24
Report Date: 02/16/2009
Matrix: SOIL
% Solids: 87.0

Lab ID: SC0408-17
Client ID: MR08-SS365-09A
SDG: TO9-43
Extracted by: CB
Extraction Method: SW846 3550
Analyst: JCG
Analysis Method: SW846 8270C
Lab Prep Batch: WG60292
Units: ug/Kgdrywt

CAS#	Compound	Flags	Results	DF	PQL	Adj.PQL	Adj.MDL	
100-52-7	Benzaldehyde	~~U~~ UJ	570	1.0	500	570	140	ICB
108-95-2	Phenol	U	570	1.0	500	570	180	
111-44-4	Bis(2-Chloroethyl)ether	U	380	1.0	330	380	93	
95-57-8	2-Chlorophenol	U	570	1.0	500	570	190	
95-48-7	2-Methylphenol	U	690	1.0	600	690	230	
108-60-1	2,2'-Oxybis(1-chloropropane)	U	380	1.0	330	380	100	
98-86-2	Acetophenone	U	690	1.0	600	690	200	
621-64-7	N-Nitroso-di-n-propylamine	U	380	1.0	330	380	95	
65794-96-9	3&4-Methylphenol	U	690	1.0	600	690	210	
67-72-1	Hexachloroethane	U	380	1.0	330	380	110	
98-95-3	Nitrobenzene	U	380	1.0	330	380	100	
78-59-1	Isophorone	U	380	1.0	330	380	86	
88-75-5	2-Nitrophenol	U	690	1.0	600	690	190	
105-67-9	2,4-Dimethylphenol	U	570	1.0	500	570	190	
111-91-1	Bis(2-Chloroethoxy)methane	U	380	1.0	330	380	110	
120-83-2	2,4-Dichlorophenol	U	570	1.0	500	570	170	
106-47-8	4-Chloroaniline	U	570	1.0	500	570	140	
105-60-2	Caprolactam	U	570	1.0	500	570	160	
59-50-7	4-Chloro-3-Methylphenol	U	570	1.0	500	570	190	
88-06-2	2,4,6-Trichlorophenol	U	570	1.0	500	570	180	
95-95-4	2,4,5-Trichlorophenol	U	570	1.0	500	570	180	
91-58-7	2-Chloronaphthalene	U	380	1.0	330	380	100	
92-52-4	1,1'-Biphenyl	~~U~~ UJ	380	1.0	330	380	84	ICB
88-74-4	2-Nitroaniline	U	570	1.0	500	570	86	
131-11-3	Dimethyl Phthalate	U	380	1.0	330	380	90	
606-20-2	2,6-Dinitrotoluene	U	380	1.0	330	380	91	
208-96-8	Acenaphthylene	U	380	1.0	330	380	80	
99-09-2	3-Nitroaniline	U	570	1.0	500	570	110	
83-32-9	Acenaphthene	U	380	1.0	330	380	75	
51-28-5	2,4-Dinitrophenol	~~U~~ UJ	1400	1.0	1200	1400	430	ICB
132-64-9	Dibenzofuran	U	380	1.0	330	380	91	
100-02-7	4-Nitrophenol	U	1400	1.0	1200	1400	360	
121-14-2	2,4-Dinitrotoluene	U	380	1.0	330	380	98	
84-66-2	Diethylphthalate	U	380	1.0	330	380	92	
7005-72-3	4-Chlorophenyl-phenylether	U	380	1.0	330	380	90	
100-01-6	4-Nitroaniline	U	570	1.0	500	570	150	
534-52-1	4,6-Dinitro-2-Methylphenol	~~U~~ UJ	1400	1.0	1200	1400	390	ICB
86-30-6	N-Nitrosodiphenylamine	U	760	1.0	660	760	250	
101-55-3	4-Bromophenyl-phenylether	U	380	1.0	330	380	98	
1912-24-9	Atrazine	U	380	1.0	330	380	100	
87-86-5	Pentachlorophenol	~~U~~ UJ	940	1.0	820	940	270	ICB
120-12-7	Anthracene	U	380	1.0	330	380	96	
86-74-8	Carbazole	U	570	1.0	500	570	130	

lw
4/18/09

KATAHDIN ANALYTICAL SERVICES
Report of Analytical Results

Client: CH2MHill
Project: TO-009 Lejeune
PO No:
Sample Date: 01/23/09
Received Date: 01/27/09
Extraction Date: 01/29/09
Analysis Date: 12-FEB-2009 20:24
Report Date: 02/16/2009
Matrix: SOIL
% Solids: 87.0

Lab ID: SC0408-17
Client ID: MR08-SS365-09A
SDG: TO9-43
Extracted by: CB
Extraction Method: SW846 3550
Analyst: JCG
Analysis Method: SW846 8270C
Lab Prep Batch: WG60292
Units: ug/Kgdrywt

CAS#	Compound	Flags	Results	DF	PQL	Adj.PQL	Adj.MDL
84-74-2	Di-n-butylphthalate	U	380	1.0	330	380	120
85-68-7	Butylbenzylphthalate	U	380	1.0	330	380	110
91-94-1	3,3'-Dichlorobenzidine	U	570	1.0	500	570	130
218-01-9	Chrysene	U	380	1.0	330	380	110
117-81-7	bis(2-Ethylhexyl)phthalate	J	200	1.0	330	380	110
117-84-0	Di-n-octylphthalate	U	380	1.0	330	380	240
367-12-4	2-Fluorophenol		69%				
13127-88-3	Phenol-D6		67%				
4165-60-0	Nitrobenzene-D5		68%				
321-60-8	2-Fluorobiphenyl		72%				
118-79-6	2,4,6-Tribromophenol		79%				
1718-51-0	Terphenyl-D14		84%				

JW
4/18/09

KATAHDIN ANALYTICAL SERVICES
Report of Analytical Results

Client: CH2MHill
Project: TO-009 Lejeune
PO No:
Sample Date: 01/23/09
Received Date: 01/27/09
Extraction Date: 01/29/09
Analysis Date: 13-FEB-2009 13:23
Report Date: 02/16/2009
Matrix: SOIL
% Solids: 92.0

Lab ID: SC0408-19RA
Client ID: MR08-SS366-09A
SDG: TO9-43
Extracted by: CB
Extraction Method: SW846 3550
Analyst: JCG
Analysis Method: SW846 8270C
Lab Prep Batch: WG60292
Units: ug/Kgdrywt

CAS#	Compound	Flags	Results	DF	PQL	Adj.PQL	Adj.MDL	
100-52-7	Benzaldehyde	~~U~~ UJ	540	1.0	500	540	130	ICB
108-95-2	Phenol	U	540	1.0	500	540	170	
111-44-4	Bis(2-Chloroethyl)ether	U	360	1.0	330	360	88	
95-57-8	2-Chlorophenol	U	540	1.0	500	540	180	
95-48-7	2-Methylphenol	U	650	1.0	600	650	220	
108-60-1	2,2'-Oxybis(1-chloropropane)	~~U~~ UJ	360	1.0	330	360	97	CCH
98-86-2	Acetophenone	U	650	1.0	600	650	190	
621-64-7	N-Nitroso-di-n-propylamine	U	360	1.0	330	360	90	
65794-96-9	3&4-Methylphenol	U	650	1.0	600	650	200	
67-72-1	Hexachloroethane	U	360	1.0	330	360	100	
98-95-3	Nitrobenzene	U	360	1.0	330	360	99	
78-59-1	Isophorone	U	360	1.0	330	360	82	
88-75-5	2-Nitrophenol	U	650	1.0	600	650	180	
105-67-9	2,4-Dimethylphenol	U	540	1.0	500	540	180	
111-91-1	Bis(2-Chloroethoxy)methane	U	360	1.0	330	360	100	
120-83-2	2,4-Dichlorophenol	U	540	1.0	500	540	160	
106-47-8	4-Chloroaniline	U	540	1.0	500	540	130	
105-60-2	Caprolactam	U	540	1.0	500	540	160	
59-50-7	4-Chloro-3-Methylphenol	U	540	1.0	500	540	180	
88-06-2	2,4,6-Trichlorophenol	U	540	1.0	500	540	170	
95-95-4	2,4,5-Trichlorophenol	U	540	1.0	500	540	170	
91-58-7	2-Chloronaphthalene	U	360	1.0	330	360	94	
92-52-4	1,1'-Biphenyl	~~U~~ UJ	360	1.0	330	360	79	ICB
88-74-4	2-Nitroaniline	U	540	1.0	500	540	82	
131-11-3	Dimethyl Phthalate	U	360	1.0	330	360	85	
606-20-2	2,6-Dinitrotoluene	U	360	1.0	330	360	86	
208-96-8	Acenaphthylene	U	360	1.0	330	360	76	
99-09-2	3-Nitroaniline	U	540	1.0	500	540	100	
83-32-9	Acenaphthene	U	360	1.0	330	360	71	
51-28-5	2,4-Dinitrophenol	~~U~~ UJ	1300	1.0	1200	1300	410	ICB
132-64-9	Dibenzofuran	U	360	1.0	330	360	86	
100-02-7	4-Nitrophenol	U	1300	1.0	1200	1300	340	
121-14-2	2,4-Dinitrotoluene	U	360	1.0	330	360	92	
84-66-2	Diethylphthalate	U	360	1.0	330	360	87	
7005-72-3	4-Chlorophenyl-phenylether	U	360	1.0	330	360	85	
100-01-6	4-Nitroaniline	U	540	1.0	500	540	140	
534-52-1	4,6-Dinitro-2-Methylphenol	~~U~~ UJ	1300	1.0	1200	1300	370	ICB
86-30-6	N-Nitrosodiphenylamine	U	720	1.0	660	720	240	
101-55-3	4-Bromophenyl-phenylether	U	360	1.0	330	360	92	
1912-24-9	Atrazine	U	360	1.0	330	360	99	
87-86-5	Pentachlorophenol	~~U~~ UJ	890	1.0	820	890	260	ICB
120-12-7	Anthracene	U	360	1.0	330	360	91	
86-74-8	Carbazole	U	540	1.0	500	540	120	

lw
4/18/09

KATAHDIN ANALYTICAL SERVICES
Report of Analytical Results

Client: CH2MHill
Project: TO-009 Lejeune
PO No:
Sample Date: 01/23/09
Received Date: 01/27/09
Extraction Date: 01/29/09
Analysis Date: 13-FEB-2009 13:23
Report Date: 02/16/2009
Matrix: SOIL
% Solids: 92.0

Lab ID: SC0408-19RA
Client ID: MR08-SS366-09A
SDG: TO9-43
Extracted by: CB
Extraction Method: SW846 3550
Analyst: JCG
Analysis Method: SW846 8270C
Lab Prep Batch: WG60292
Units: ug/Kgdrywt

CAS#	Compound	Flags	Results	DF	PQL	Adj.PQL	Adj.MDL
84-74-2	Di-n-butylphthalate	U	360	1.0	330	360	110
85-68-7	Butylbenzylphthalate	U	360	1.0	330	360	100
91-94-1	3,3'-Dichlorobenzidine	U	540	1.0	500	540	120
218-01-9	Chrysene	U	360	1.0	330	360	100
117-81-7	bis(2-Ethylhexyl)phthalate	J	220	1.0	330	360	110
117-84-0	Di-n-octylphthalate	U	360	1.0	330	360	230
367-12-4	2-Fluorophenol		72%				
13127-88-3	Phenol-D6		70%				
4165-60-0	Nitrobenzene-D5		79%				
321-60-8	2-Fluorobiphenyl		90%				
118-79-6	2,4,6-Tribromophenol		70%				
1718-51-0	Terphenyl-D14		77%				

LW
4/18/09

KATAHDIN ANALYTICAL SERVICES
Report of Analytical Results

Client: CH2MHill
Project: TO-009 Lejeune
PO No:
Sample Date: 01/23/09
Received Date: 01/27/09
Extraction Date: 01/29/09
Analysis Date: 12-FEB-2009 21:49
Report Date: 02/16/2009
Matrix: SOIL
% Solids: 90.5

Lab ID: SC0408-21
Client ID: MR08-IS366-4-5-09A
SDG: TO9-43
Extracted by: CB
Extraction Method: SW846 3550
Analyst: JCG
Analysis Method: SW846 8270C
Lab Prep Batch: WG60292
Units: ug/Kgdrywt

CAS#	Compound	Flags	Results	DF	PQL	Adj.PQL	Adj.MDL	
100-52-7	Benzaldehyde	~~B~~ UJ	550	1.0	500	550	130	ICB
108-95-2	Phenol	U	550	1.0	500	550	170	
111-44-4	Bis(2-Chloroethyl)ether	U	360	1.0	330	360	90	
95-57-8	2-Chlorophenol	U	550	1.0	500	550	180	
95-48-7	2-Methylphenol	U	660	1.0	600	660	220	
108-60-1	2,2'-Oxybis(1-chloropropane)	U	360	1.0	330	360	98	
98-86-2	Acetophenone	U	660	1.0	600	660	200	
621-64-7	N-Nitroso-di-n-propylamine	U	360	1.0	330	360	92	
65794-96-9	3&4-Methylphenol	U	660	1.0	600	660	210	
67-72-1	Hexachloroethane	U	360	1.0	330	360	110	
98-95-3	Nitrobenzene	U	360	1.0	330	360	100	
78-59-1	Isophorone	U	360	1.0	330	360	83	
88-75-5	2-Nitrophenol	U	660	1.0	600	660	180	
105-67-9	2,4-Dimethylphenol	U	550	1.0	500	550	180	
111-91-1	Bis(2-Chloroethoxy)methane	U	360	1.0	330	360	110	
120-83-2	2,4-Dichlorophenol	U	550	1.0	500	550	160	
106-47-8	4-Chloroaniline	U	550	1.0	500	550	130	
105-60-2	Caprolactam	U	550	1.0	500	550	160	
59-50-7	4-Chloro-3-Methylphenol	U	550	1.0	500	550	180	
88-06-2	2,4,6-Trichlorophenol	U	550	1.0	500	550	170	
95-95-4	2,4,5-Trichlorophenol	U	550	1.0	500	550	170	
91-58-7	2-Chloronaphthalene	U	360	1.0	330	360	96	
92-52-4	1,1'-Biphenyl	~~B~~ UJ	360	1.0	330	360	81	ICB
88-74-4	2-Nitroaniline	U	550	1.0	500	550	83	
131-11-3	Dimethyl Phthalate	U	360	1.0	330	360	86	
606-20-2	2,6-Dinitrotoluene	U	360	1.0	330	360	87	
208-96-8	Acenaphthylene	U	360	1.0	330	360	77	
99-09-2	3-Nitroaniline	U	550	1.0	500	550	100	
83-32-9	Acenaphthene	U	360	1.0	330	360	72	
51-28-5	2,4-Dinitrophenol	~~B~~ UJ	1300	1.0	1200	1300	420	ICB
132-64-9	Dibenzofuran	U	360	1.0	330	360	87	
100-02-7	4-Nitrophenol	U	1300	1.0	1200	1300	340	
121-14-2	2,4-Dinitrotoluene	U	360	1.0	330	360	94	
84-66-2	Diethylphthalate	U	360	1.0	330	360	88	
7005-72-3	4-Chlorophenyl-phenylether	U	360	1.0	330	360	86	
100-01-6	4-Nitroaniline	U	550	1.0	500	550	150	
534-52-1	4,6-Dinitro-2-Methylphenol	~~B~~ UJ	1300	1.0	1200	1300	370	ICB
86-30-6	N-Nitrosodiphenylamine	U	730	1.0	660	730	240	
101-55-3	4-Bromophenyl-phenylether	U	360	1.0	330	360	94	
1912-24-9	Atrazine	U	360	1.0	330	360	100	
87-86-5	Pentachlorophenol	~~B~~ UJ	910	1.0	820	910	260	ICB
120-12-7	Anthracene	U	360	1.0	330	360	93	
86-74-8	Carbazole	U	550	1.0	500	550	120	

lw 4/18/09

KATAHDIN ANALYTICAL SERVICES
Report of Analytical Results

Client: CH2MHill
Project: TO-009 Lejeune
PO No:
Sample Date: 01/23/09
Received Date: 01/27/09
Extraction Date: 01/29/09
Analysis Date: 12-FEB-2009 21:49
Report Date: 02/16/2009
Matrix: SOIL
% Solids: 90.5

Lab ID: SC0408-21
Client ID: MR08-IS366-4-5-09A
SDG: TO9-43
Extracted by: CB
Extraction Method: SW846 3550
Analyst: JCG
Analysis Method: SW846 8270C
Lab Prep Batch: WG60292
Units: ug/Kgdrywt

CAS#	Compound	Flags	Results	DF	PQL	Adj.PQL	Adj.MDL
84-74-2	Di-n-butylphthalate	U	360	1.0	330	360	110
85-68-7	Butylbenzylphthalate	U	360	1.0	330	360	100
91-94-1	3,3'-Dichlorobenzidine	U	550	1.0	500	550	120
218-01-9	Chrysene	U	360	1.0	330	360	100
117-81-7	bis(2-Ethylhexyl)phthalate	J	240	1.0	330	360	110
117-84-0	Di-n-octylphthalate	U	360	1.0	330	360	230
367-12-4	2-Fluorophenol		80%				
13127-88-3	Phenol-D6		79%				
4165-60-0	Nitrobenzene-D5		92%				
321-60-8	2-Fluorobiphenyl		87%				
118-79-6	2,4,6-Tribromophenol		73%				
1718-51-0	Terphenyl-D14		90%				

JW
4/18/09

KATAHDIN ANALYTICAL SERVICES
Report of Analytical Results

Client: CH2MHill
Project: TO-009 Lejeune
PO No:
Sample Date: 01/23/09
Received Date: 01/27/09
Extraction Date: 01/29/09
Analysis Date: 12-FEB-2009 22:31
Report Date: 02/16/2009
Matrix: SOIL
% Solids: 93.5

Lab ID: SC0408-23
Client ID: MR08-SS367-09A
SDG: TO9-43
Extracted by: CB
Extraction Method: SW846 3550
Analyst: JCG
Analysis Method: SW846 8270C
Lab Prep Batch: WG60292
Units: ug/Kgdrywt

CAS#	Compound	Flags	Results	DF	PQL	Adj.PQL	Adj.MDL	
100-52-7	Benzaldehyde	~~U~~ UJ	530	1.0	500	530	130	ICB
108-95-2	Phenol	U	530	1.0	500	530	170	
111-44-4	Bis(2-Chloroethyl)ether	U	350	1.0	330	350	87	
95-57-8	2-Chlorophenol	U	530	1.0	500	530	180	
95-48-7	2-Methylphenol	U	640	1.0	600	640	210	
108-60-1	2,2'-Oxybis(1-chloropropane)	U	350	1.0	330	350	95	
98-86-2	Acetophenone	U	640	1.0	600	640	190	
621-64-7	N-Nitroso-di-n-propylamine	U	350	1.0	330	350	89	
65794-96-9	3&4-Methylphenol	U	640	1.0	600	640	200	
67-72-1	Hexachloroethane	U	350	1.0	330	350	100	
98-95-3	Nitrobenzene	U	350	1.0	330	350	97	
78-59-1	Isophorone	U	350	1.0	330	350	80	
88-75-5	2-Nitrophenol	U	640	1.0	600	640	180	
105-67-9	2,4-Dimethylphenol	U	530	1.0	500	530	180	
111-91-1	Bis(2-Chloroethoxy)methane	U	350	1.0	330	350	100	
120-83-2	2,4-Dichlorophenol	U	530	1.0	500	530	160	
106-47-8	4-Chloroaniline	U	530	1.0	500	530	130	
105-60-2	Caprolactam	U	530	1.0	500	530	150	
59-50-7	4-Chloro-3-Methylphenol	U	530	1.0	500	530	180	
88-06-2	2,4,6-Trichlorophenol	U	530	1.0	500	530	160	
95-95-4	2,4,5-Trichlorophenol	U	530	1.0	500	530	160	
91-58-7	2-Chloronaphthalene	U	350	1.0	330	350	93	
92-52-4	1,1'-Biphenyl	~~U~~ UJ	350	1.0	330	350	78	ICB
88-74-4	2-Nitroaniline	U	530	1.0	500	530	80	
131-11-3	Dimethyl Phthalate	U	350	1.0	330	350	83	
606-20-2	2,6-Dinitrotoluene	U	350	1.0	330	350	84	
208-96-8	Acenaphthylene	U	350	1.0	330	350	75	
99-09-2	3-Nitroaniline	U	530	1.0	500	530	100	
83-32-9	Acenaphthene	U	350	1.0	330	350	70	
51-28-5	2,4-Dinitrophenol	~~U~~ UJ	1300	1.0	1200	1300	400	ICB
132-64-9	Dibenzofuran	U	350	1.0	330	350	84	
100-02-7	4-Nitrophenol	U	1300	1.0	1200	1300	330	
121-14-2	2,4-Dinitrotoluene	U	350	1.0	330	350	91	
84-66-2	Diethylphthalate	U	350	1.0	330	350	86	
7005-72-3	4-Chlorophenyl-phenylether	U	350	1.0	330	350	83	
100-01-6	4-Nitroaniline	U	530	1.0	500	530	140	
534-52-1	4,6-Dinitro-2-Methylphenol	~~U~~ UJ	1300	1.0	1200	1300	360	ICB
86-30-6	N-Nitrosodiphenylamine	U	700	1.0	660	700	230	
101-55-3	4-Bromophenyl-phenylether	U	350	1.0	330	350	91	
1912-24-9	Atrazine	U	350	1.0	330	350	97	
87-86-5	Pentachlorophenol	~~U~~ UJ	880	1.0	820	880	250	ICB
120-12-7	Anthracene	U	350	1.0	330	350	90	
86-74-8	Carbazole	U	530	1.0	500	530	120	

RW
4/18/09

KATAHDIN ANALYTICAL SERVICES
Report of Analytical Results

Client: CH2MHill
Project: TO-009 Lejeune
PO No:
Sample Date: 01/23/09
Received Date: 01/27/09
Extraction Date: 01/29/09
Analysis Date: 12-FEB-2009 22:31
Report Date: 02/16/2009
Matrix: SOIL
% Solids: 93.5

Lab ID: SC0408-23
Client ID: MR08-SS367-09A
SDG: TO9-43
Extracted by: CB
Extraction Method: SW846 3550
Analyst: JCG
Analysis Method: SW846 8270C
Lab Prep Batch: WG60292
Units: ug/Kgdrywt

CAS#	Compound	Flags	Results	DF	PQL	Adj.PQL	Adj.MDL
84-74-2	Di-n-butylphthalate	U	350	1.0	330	350	110
85-68-7	Butylbenzylphthalate	U	350	1.0	330	350	99
91-94-1	3,3'-Dichlorobenzidine	U	530	1.0	500	530	120
218-01-9	Chrysene	U	350	1.0	330	350	100
117-81-7	bis(2-Ethylhexyl)phthalate	J	200	1.0	330	350	100
117-84-0	Di-n-octylphthalate	U	350	1.0	330	350	220
367-12-4	2-Fluorophenol		82%				
13127-88-3	Phenol-D6		80%				
4165-60-0	Nitrobenzene-D5		87%				
321-60-8	2-Fluorobiphenyl		91%				
118-79-6	2,4,6-Tribromophenol		80%				
1718-51-0	Terphenyl-D14		88%				

ALW
4/18/09

KATAHDIN ANALYTICAL SERVICES
Report of Analytical Results

Client: CH2MHill
Project: TO-009 Lejeune
PO No:
Sample Date: 01/24/09
Received Date: 01/27/09
Extraction Date: 01/30/09
Analysis Date: 12-FEB-2009 23:13
Report Date: 02/20/2009
Matrix: SOIL
% Solids: 92.1

Lab ID: SC0408-25
Client ID: 08-IS329-1-2-09A
SDG: TO9-43
Extracted by: AC
Extraction Method: SW846 3550
Analyst: JCG
Analysis Method: SW846 8270C
Lab Prep Batch: WG60320
Units: ug/Kgdrywt

CAS#	Compound	Flags	Results	DF	PQL	Adj.PQL	Adj.MDL	
100-52-7	Benzaldehyde	~~U~~ UJ	540	1.0	500	540	130	ICB
108-95-2	Phenol	U	540	1.0	500	540	170	
111-44-4	Bis(2-Chloroethyl)ether	U	360	1.0	330	360	88	
95-57-8	2-Chlorophenol	U	540	1.0	500	540	180	
95-48-7	2-Methylphenol	U	650	1.0	600	650	220	
108-60-1	2,2'-Oxybis(1-chloropropane)	U	360	1.0	330	360	97	
98-86-2	Acetophenone	U	650	1.0	600	650	190	
621-64-7	N-Nitroso-di-n-propylamine	U	360	1.0	330	360	90	
65794-96-9	3&4-Methylphenol	U	650	1.0	600	650	200	
67-72-1	Hexachloroethane	U	360	1.0	330	360	100	
98-95-3	Nitrobenzene	U	360	1.0	330	360	99	
78-59-1	Isophorone	U	360	1.0	330	360	81	
88-75-5	2-Nitrophenol	U	650	1.0	600	650	180	
105-67-9	2,4-Dimethylphenol	U	540	1.0	500	540	180	
111-91-1	Bis(2-Chloroethoxy)methane	U	360	1.0	330	360	100	
120-83-2	2,4-Dichlorophenol	U	540	1.0	500	540	160	
106-47-8	4-Chloroaniline	U	540	1.0	500	540	130	
105-60-2	Caprolactam	~~U~~ UJ	540	1.0	500	540	160	MSL
59-50-7	4-Chloro-3-Methylphenol	U	540	1.0	500	540	180	
88-06-2	2,4,6-Trichlorophenol	U	540	1.0	500	540	170	
95-95-4	2,4,5-Trichlorophenol	U	540	1.0	500	540	170	
91-58-7	2-Chloronaphthalene	U	360	1.0	330	360	94	
92-52-4	1,1'-Biphenyl	~~U~~ UJ	360	1.0	330	360	79	ICB
88-74-4	2-Nitroaniline	U	540	1.0	500	540	81	
131-11-3	Dimethyl Phthalate	U	360	1.0	330	360	85	
606-20-2	2,6-Dinitrotoluene	U	360	1.0	330	360	86	
208-96-8	Acenaphthylene	U	360	1.0	330	360	76	
99-09-2	3-Nitroaniline	U	540	1.0	500	540	100	
83-32-9	Acenaphthene	U	360	1.0	330	360	70	
51-28-5	2,4-Dinitrophenol	~~U~~ UJ	1300	1.0	1200	1300	410	ICB
132-64-9	Dibenzofuran	U	360	1.0	330	360	86	
100-02-7	4-Nitrophenol	U	1300	1.0	1200	1300	340	
121-14-2	2,4-Dinitrotoluene	U	360	1.0	330	360	92	
84-66-2	Diethylphthalate	U	360	1.0	330	360	87	
7005-72-3	4-Chlorophenyl-phenylether	U	360	1.0	330	360	85	
100-01-6	4-Nitroaniline	U	540	1.0	500	540	140	
534-52-1	4,6-Dinitro-2-Methylphenol	~~U~~ UJ	1300	1.0	1200	1300	360	ICB
86-30-6	N-Nitrosodiphenylamine	U	720	1.0	660	720	240	
101-55-3	4-Bromophenyl-phenylether	U	360	1.0	330	360	92	
1912-24-9	Atrazine	U	360	1.0	330	360	99	
87-86-5	Pentachlorophenol	~~U~~ UJ	890	1.0	820	890	260	ICB
120-12-7	Anthracene	U	360	1.0	330	360	91	
86-74-8	Carbazole	U	540	1.0	500	540	120	

RW
4/18/09

KATAHDIN ANALYTICAL SERVICES
Report of Analytical Results

Client: CH2MHill
Project: TO-009 Lejeune
PO No:
Sample Date: 01/24/09
Received Date: 01/27/09
Extraction Date: 01/30/09
Analysis Date: 12-FEB-2009 23:13
Report Date: 02/20/2009
Matrix: SOIL
% Solids: 92.1

Lab ID: SC0408-25
Client ID: 08-IS329-1-2-09A
SDG: TO9-43
Extracted by: AC
Extraction Method: SW846 3550
Analyst: JCG
Analysis Method: SW846 8270C
Lab Prep Batch: WG60320
Units: ug/Kgdrywt

CAS#	Compound	Flags	Results	DF	PQL	Adj.PQL	Adj.MDL	
84-74-2	Di-n-butylphthalate	U	360	1.0	330	360	110	
85-68-7	Butylbenzylphthalate	U	360	1.0	330	360	100	
91-94-1	3,3'-Dichlorobenzidine	U	540	1.0	500	540	120	
218-01-9	Chrysene	U	360	1.0	330	360	100	
117-81-7	bis(2-Ethylhexyl)phthalate	~~JB~~ 360U	~~220~~	1.0	330	360	110	BL
117-84-0	Di-n-octylphthalate	U	360	1.0	330	360	230	
367-12-4	2-Fluorophenol		65%					
13127-88-3	Phenol-D6		68%					
4165-60-0	Nitrobenzene-D5		72%					
321-60-8	2-Fluorobiphenyl		77%					
118-79-6	2,4,6-Tribromophenol		62%					
1718-51-0	Terphenyl-D14		88%					

MW 4/18/09

ENVIRONMENTAL
Data Services, Inc.

POLYNUCLEAR AROMATIC COMPOUNDS BY 8270SIM

USEPA Region IV - Level IV Review

Site: MCB Camp Lejeune, TO-09 SDG #: TO9-44

Client: CH2M HILL, Inc., Virginia Beach, Virginia Date: April 18, 2009

Laboratory: Katahdin Analytical Services, Scarborough, Maine Reviewer: Nancy Weaver

EDS ID	Client Sample ID	Laboratory Sample ID	Matrix
1	MR08-IS367-4-5-09A	SC0409-2	Soil
2	MR08-SS356-09A	SC0409-4	Soil
3	MR08-IS356-4-5-09A	SC0409-6	Soil
4	MR08-SS357-09A	SC0409-8	Soil
5	MR08-IS357-4-5-09A	SC0409-10	Soil
6	MR08-SS358-09A	SC0409-12	Soil
7	MR08-IS358-4-5-09A	SC0409-14	Soil
8	MR08-IS359-4-5-09A	SC0409-16	Soil
9	MR08-SS359-09A	SC0409-18	Soil
9RE	MR08-SS359-09ARE	SC0409-18RE	Soil
10	MR08-IS360-4-5-09A	SC0409-20	Soil
11	MR08-IS360D-4-5-09A	SC0409-22	Soil
12	MR08-SS360-09A	SC0409-24	Soil
13	MR08-SS360D-09A	SC0409-26	Soil
14	MR08-SS361-09A	SC0409-28	Soil
15	MR08-IS361-4-5-09A	SC0409-30	Soil
16	MR08-SS368-09A	SC0409-32	Soil
16DL	MR08-SS368-09ADL	SC0409-32DL	Soil
17	MR08-IS368-4-5-09A	SC0409-34	Soil
18	MR08-SS355-09A	SC0409-36	Soil
18DL	MR08-SS355-09ADL	SC0409-36DL	Soil
19	MR08-IS355-4-5-09A	SC0409-38	Soil
20	MR08-SS329-09A	SC0409-40	Soil
20MS	MR08-SS329-09AMS	SC0409-40MS	Soil
20MSD	MR08-SS329-09AMSD	SC0409-40MSD	Soil
20DL	MR08-SS329-09ADL	SC0409-40DL	Soil

The USEPA "Contract Laboratory Program National Functional Guidelines for Organic Data Review," October 1999, and professional judgment were used in evaluating the data in this summary report.

Holding Times - All samples were extracted within 14 days for soil samples and analyzed within 40 days for all samples except the following.

Sample	Date Sampled	Date Extracted	# of Days	Qualifier
9RE	01/23/09	02/16/09	24	J/UJ
11	01/23/09	02/12/09	20	J/UJ
20	01/24/09	02/16/09	23	J/UJ
20DL	01/24/09	02/16/09	23	J/UJ

GC/MS Tuning - All of the DFTPP tunes in the initial and continuing calibrations met the percent relative abundance criteria.

Initial Calibration - The initial calibrations exhibited acceptable %RSD and mean RRF values.

Continuing Calibration - The continuing calibrations exhibited acceptable %D and RRF values except the following.

CCAL Date	Compound	%D/RRF	Qualifier	Affected Samples
02/16/09	Hexachlorobutadiene	28.91%	J/UJ	1-5
	Hexachlorocyclopentadiene	30.27%	None	See LCS
02/17/09	Benzo (b) fluoranthene	25.27%	J/UJ	6-8, 10, 12-15, 17

Surrogates - All samples exhibited acceptable surrogate recoveries except the following.

Sample ID	Surrogate	%R	Qualifier
8	Fluorene-d10	46%	None for 1 out
9	2-Methylnaphthalene-d10	30%	J/UJ
	Fluorene-d10	42%	J/UJ

MS/MSD - The MS/MSD sample exhibited acceptable %R and RPD values except the following.

MS/MSD Sample ID	Compound	MS/MSD %R/RPD	Qualifier
20	Phenanthrene	Ok/8%/Ok	None - 4X rule
	Indeno (1,2,3-cd) pyrene	12%/Ok/Ok	None - 4X rule
	Hexachlorocyclopentadiene	27%/26%/Ok	None - See HT

Laboratory Control Sample - The LCS samples exhibited acceptable %R values except the following.

LCS ID	Compound	%R	Qualifier	Affected Samples
WG60348-LCS	Naphthalene	32%	J/UJ	1-10, 12-15, 16, 16DL, 17, 18DL
	2-Methylnaphthalene	36%	J/UJ	
	Fluorene	38%	J/UJ	

LCS ID	Compound	%R	Qualifier	Affected Samples
WG60348-LCS	Phenanthrene	38%	J/UJ	1-10, 12-15, 16, 16DL, 17, 18DL
	Benzo (k) fluoranthene	38%	J/UJ	
	Benzo (a) pyrene	38%	J/UJ	
	Hexachlorocyclopentadiene	21%	J/UJ	

Internal Standard (IS) Area Performance - All internal standards met response and retention time (RT) criteria.

Method Blank - The method blanks exhibited the following contamination.

Blank ID	Compound	Conc. ug/kg	Action Level ug/kg	Qualifier	Affected Samples
WG60348-BLANK	Benzo (a) anthracene	5.0	25	U	1, 4, 6-8, 10, 17, 19

Field, Equipment Blank - Field QC results are summarized below.

Blank ID	Compound	Conc. ug/L	Action Level ug/L	Qualifier	Affected Samples
MR08-FB012609	None - ND	-	-	-	-
MR08-EB012309	None - ND	-	-	-	-

Field Duplicates - Field duplicate results are summarized below.

Compound	MR08-IS360-4-5-09A ug/kg	MR08-IS360D-4-5-09A ug/kg	RPD	Qualifier
Phenanthrene	11 U	11	NC	None
Fluoranthene	3.0	45	175%	None
Pyrene	11 U	38	NC	None
Benzo (a) anthracene	11 U	30	NC	None
Benzo (b) fluoranthene	11 U	30	NC	None
Benzo (k) fluoranthene	11 U	16	NC	None
Benzo (a) pyrene	11 U	20	NC	None
Indeno (1,2,3-cd) pyrene	3.0	11	114%	None
Dibenzo (a,h) anthracene	11 U	5.8	NC	None
Benzo (g,h,i) perylene	2.8	10	113%	None

Compound	MR08-SS360-09A ug/kg	MR08-SS360D-09A ug/kg	RPD	Qualifier
Phenanthrene	14	17	19%	None
Fluoranthene	54	54	0%	None
Pyrene	41	47	14%	None
Benzo (a) anthracene	26	29	11%	None
Benzo (b) fluoranthene	47	49	4%	None
Benzo (k) fluoranthene	21	24	13%	None
Benzo (a) pyrene	25	29	15%	None

Compound	MR08-SS360-09A ug/kg	MR08-SS360D-09A ug/kg	RPD	Qualifier
Indeno (1,2,3-cd) pyrene	23	24	4%	None
Dibenzo (a,h) anthracene	9.1	8.6	6%	None
Benzo (g,h,i) perylene	22	22	0%	None

Compound Quantitation - Several samples exhibited high concentrations of target compounds and were flagged (E) by the laboratory. The samples were diluted and reanalyzed and the dilution results for these compounds should be used for reporting.

KATAHDIN ANALYTICAL SERVICES
Report of Analytical Results

Client: CH2MHill
Project: TO-009 Lejeune
PO No:
Sample Date: 01/23/09
Received Date: 01/27/09
Extraction Date: 01/30/09
Analysis Date: 16-FEB-2009 16:39
Report Date: 02/19/2009
Matrix: SOIL
% Solids: 92.8

Lab ID: SC0409-2
Client ID: MR08-IS367-4-5-09A
SDG: TO9-44
Extracted by: AC
Extraction Method: SW846 3550
Analyst: JCG
Analysis Method: SW846 M8270C
Lab Prep Batch: WG60348
Units: ug/Kgdrywt

CAS#	Compound	Flags	Results	DF	PQL	Adj.PQL	Adj.MDL	
91-20-3	Naphthalene	~~U~~ UJ	11	1.0	10	11	2.8	BSL
91-57-6	2-Methylnaphthalene	~~U~~ ↓	11	1.0	10	11	2.4	↓
86-73-7	Fluorene	~~U~~ ↓	11	1.0	10	11	3.4	↓
85-01-8	Phenanthrene	~~U~~ ↓	11	1.0	10	11	1.9	↓
206-44-0	Fluoranthene	J	2.6	1.0	10	11	1.9	
129-00-0	Pyrene	U	11	1.0	10	11	2.3	
56-55-3	Benzo(a)anthracene	~~JB~~ 11U	~~7.3~~	1.0	10	11	2.0	BL
205-99-2	Benzo(b)fluoranthene	J	8.2	1.0	10	11	2.6	
207-08-9	Benzo(k)fluoranthene	~~J~~ J	3.2	1.0	10	11	3.3	BSL
50-32-8	Benzo(a)pyrene	~~U~~ UJ	11	1.0	10	11	3.6	BSL
193-39-5	Indeno(1,2,3-cd)pyrene	J	3.9	1.0	10	11	2.0	
53-70-3	Dibenzo(a,h)anthracene	J	3.3	1.0	10	11	1.9	
191-24-2	Benzo(g,h,i)perylene	J	4.2	1.0	10	11	2.2	
118-74-1	Hexachlorobenzene	U	11	1.0	10	11	1.9	
87-68-3	Hexachlorobutadiene	~~U~~ UJ	11	1.0	10	11	2.5	CCH
77-47-4	Hexachlorocyclopentadiene	~~U~~ UJ	11	1.0	10	11	1.6	~~CCH~~ BSL
7297-45-2	2-Methylnaphthalene-D10		71%					
367-12-4	2,4-Dibromophenol		74%					
81103-79-9	Fluorene-d10		73%					
1718-51-1	Pyrene-D10		89%					

lw
2/18/09

2

KATAHDIN ANALYTICAL SERVICES
Report of Analytical Results

Client: CH2MHill
Project: TO-009 Lejeune
PO No:
Sample Date: 01/23/09
Received Date: 01/27/09
Extraction Date: 01/30/09
Analysis Date: 16-FEB-2009 20:48
Report Date: 02/19/2009
Matrix: SOIL
% Solids: 88.4

Lab ID: SC0409-4
Client ID: MR08-SS356-09A
SDG: TO9-44
Extracted by: AC
Extraction Method: SW846 3550
Analyst: JCG
Analysis Method: SW846 M8270C
Lab Prep Batch: WG60348
Units: ug/Kgdrywt

CAS#	Compound	Flags	Results	DF	PQL	Adj.PQL	Adj.MDL	
91-20-3	Naphthalene	~~U~~ UJ	11	1.0	10	11	2.9	BSL
91-57-6	2-Methylnaphthalene	~~U~~	11	1.0	10	11	2.5	
86-73-7	Fluorene	~~U~~	11	1.0	10	11	3.6	
85-01-8	Phenanthrene	~~J~~ J	11	1.0	10	11	2.0	
206-44-0	Fluoranthene	J	7.0	1.0	10	11	2.0	
129-00-0	Pyrene	J	9.5	1.0	10	11	2.4	
56-55-3	Benzo(a)anthracene	U	11	1.0	10	11	2.2	
205-99-2	Benzo(b)fluoranthene	U	11	1.0	10	11	2.7	
207-08-9	Benzo(k)fluoranthene	~~U~~ UJ	11	1.0	10	11	3.5	BSL
50-32-8	Benzo(a)pyrene	~~U~~ UJ	11	1.0	10	11	3.7	BSL
193-39-5	Indeno(1,2,3-cd)pyrene	U	11	1.0	10	11	2.2	
53-70-3	Dibenzo(a,h)anthracene	U	11	1.0	10	11	2.0	
191-24-2	Benzo(g,h,i)perylene	U	11	1.0	10	11	2.3	
118-74-1	Hexachlorobenzene	U	11	1.0	10	11	2.0	
87-68-3	Hexachlorobutadiene	~~U~~ UJ	11	1.0	10	11	2.6	CLH
77-47-4	Hexachlorocyclopentadiene	~~U~~ UJ	11	1.0	10	11	1.7	~~CLH~~ BSL
7297-45-2	2-Methylnaphthalene-D10		73%					
367-12-4	2,4-Dibromophenol		82%					
81103-79-9	Fluorene-d10		84%					
1718-51-1	Pyrene-D10		94%					

LW
4/18/09

3

KATAHDIN ANALYTICAL SERVICES
Report of Analytical Results

Client: CH2MHill
Project: TO-009 Lejeune
PO No:
Sample Date: 01/23/09
Received Date: 01/27/09
Extraction Date: 01/30/09
Analysis Date: 16-FEB-2009 17:21
Report Date: 02/19/2009
Matrix: SOIL
% Solids: 91.0

Lab ID: SC0409-6
Client ID: MR08-IS356-4-5-09A
SDG: TO9-44
Extracted by: AC
Extraction Method: SW846 3550
Analyst: JCG
Analysis Method: SW846 M8270C
Lab Prep Batch: WG60348
Units: ug/Kgdrywt

CAS#	Compound	Flags	Results	DF	PQL	Adj.PQL	Adj.MDL	
91-20-3	Naphthalene	U UJ	11	1.0	10	11	2.8	BSL
91-57-6	2-Methylnaphthalene	U	11	1.0	10	11	2.4	
86-73-7	Fluorene	U	11	1.0	10	11	3.5	
85-01-8	Phenanthrene	U	11	1.0	10	11	2.0	
206-44-0	Fluoranthene	U	11	1.0	10	11	2.0	
129-00-0	Pyrene	U	11	1.0	10	11	2.3	
56-55-3	Benzo(a)anthracene	U	11	1.0	10	11	2.1	
205-99-2	Benzo(b)fluoranthene	U	11	1.0	10	11	2.6	
207-08-9	Benzo(k)fluoranthene	U UJ	11	1.0	10	11	3.4	BSL
50-32-8	Benzo(a)pyrene	U UJ	11	1.0	10	11	3.6	BSL
193-39-5	Indeno(1,2,3-cd)pyrene	U	11	1.0	10	11	2.1	
53-70-3	Dibenzo(a,h)anthracene	U	11	1.0	10	11	2.0	
191-24-2	Benzo(g,h,i)perylene	U	11	1.0	10	11	2.2	
118-74-1	Hexachlorobenzene	U	11	1.0	10	11	2.0	
87-68-3	Hexachlorobutadiene	U UJ	11	1.0	10	11	2.5	CCH
77-47-4	Hexachlorocyclopentadiene	U UJ	11	1.0	10	11	1.6	~~CCH~~ BSL
7297-45-2	2-Methylnaphthalene-D10		59%					
367-12-4	2,4-Dibromophenol		71%					
81103-79-9	Fluorene-d10		73%					
1718-51-1	Pyrene-D10		77%					

LW
4/18/09

4

KATAHDIN ANALYTICAL SERVICES
Report of Analytical Results

Client: CH2MHill
Project: TO-009 Lejeune
PO No:
Sample Date: 01/23/09
Received Date: 01/27/09
Extraction Date: 01/30/09
Analysis Date: 16-FEB-2009 19:26
Report Date: 02/19/2009
Matrix: SOIL
% Solids: 87.8

Lab ID: SC0409-8
Client ID: MR08-SS357-09A
SDG: TO9-44
Extracted by: AC
Extraction Method: SW846 3550
Analyst: JCG
Analysis Method: SW846 M8270C
Lab Prep Batch: WG60348
Units: ug/Kgdrywt

CAS#	Compound	Flags	Results	DF	PQL	Adj.PQL	Adj.MDL	
91-20-3	Naphthalene	~~U~~ UJ	11	1.0	10	11	3.0	BSL
91-57-6	2-Methylnaphthalene	~~U~~	11	1.0	10	11	2.5	
86-73-7	Fluorene	~~U~~	11	1.0	10	11	3.6	
85-01-8	Phenanthrene	~~U~~	11	1.0	10	11	2.0	
206-44-0	Fluoranthene	J	2.1	1.0	10	11	2.0	
129-00-0	Pyrene	U	11	1.0	10	11	2.4	
56-55-3	Benzo(a)anthracene	~~JB~~ UU	~~6.8~~	1.0	10	11	2.2	BL
205-99-2	Benzo(b)fluoranthene	U	11	1.0	10	11	2.7	
207-08-9	Benzo(k)fluoranthene	~~U~~ UJ	11	1.0	10	11	3.5	BSL
50-32-8	Benzo(a)pyrene	~~U~~ UJ	11	1.0	10	11	3.8	BSL
193-39-5	Indeno(1,2,3-cd)pyrene	U	11	1.0	10	11	2.2	
53-70-3	Dibenzo(a,h)anthracene	U	11	1.0	10	11	2.0	
191-24-2	Benzo(g,h,i)perylene	J	1.8	1.0	10	11	2.3	
118-74-1	Hexachlorobenzene	U	11	1.0	10	11	2.0	
87-68-3	Hexachlorobutadiene	~~U~~ UJ	11	1.0	10	11	2.6	CCH
77-47-4	Hexachlorocyclopentadiene	~~U~~ UJ	11	1.0	10	11	1.7	~~CCH~~ BSL
7297-45-2	2-Methylnaphthalene-D10		68%					
367-12-4	2,4-Dibromophenol		82%					
81103-79-9	Fluorene-d10		86%					
1718-51-1	Pyrene-D10		86%					

GW
4/18/09

5

KATAHDIN ANALYTICAL SERVICES
Report of Analytical Results

Client: CH2MHill
Project: TO-009 Lejeune
PO No:
Sample Date: 01/23/09
Received Date: 01/27/09
Extraction Date: 01/30/09
Analysis Date: 16-FEB-2009 20:07
Report Date: 02/19/2009
Matrix: SOIL
% Solids: 88.6

Lab ID: SC0409-10
Client ID: MR08-IS357-4-5-09A
SDG: TO9-44
Extracted by: AC
Extraction Method: SW846 3550
Analyst: JCG
Analysis Method: SW846 M8270C
Lab Prep Batch: WG60348
Units: ug/Kgdrywt

CAS#	Compound	Flags	Results	DF	PQL	Adj.PQL	Adj.MDL	
91-20-3	Naphthalene	U UJ	11	1.0	10	11	2.9	BSL
91-57-6	2-Methylnaphthalene	U	11	1.0	10	11	2.5	
86-73-7	Fluorene	U	11	1.0	10	11	3.6	
85-01-8	Phenanthrene	U	11	1.0	10	11	2.0	
206-44-0	Fluoranthene	U	11	1.0	10	11	2.0	
129-00-0	Pyrene	U	11	1.0	10	11	2.4	
56-55-3	Benzo(a)anthracene	U	11	1.0	10	11	2.1	
205-99-2	Benzo(b)fluoranthene	U	11	1.0	10	11	2.7	
207-08-9	Benzo(k)fluoranthene	U UJ	11	1.0	10	11	3.5	BSL
50-32-8	Benzo(a)pyrene	U UJ	11	1.0	10	11	3.7	BSL
193-39-5	Indeno(1,2,3-cd)pyrene	U	11	1.0	10	11	2.1	
53-70-3	Dibenzo(a,h)anthracene	U	11	1.0	10	11	2.0	
191-24-2	Benzo(g,h,i)perylene	J	1.2	1.0	10	11	2.2	
118-74-1	Hexachlorobenzene	U	11	1.0	10	11	2.0	
87-68-3	Hexachlorobutadiene	U UJ	11	1.0	10	11	2.6	CCH
77-47-4	Hexachlorocyclopentadiene	U UJ	11	1.0	10	11	1.7	CCH BSL
7297-45-2	2-Methylnaphthalene-D10		68%					
367-12-4	2,4-Dibromophenol		76%					
81103-79-9	Fluorene-d10		88%					
1718-51-1	Pyrene-D10		95%					

WJ
4/18/09

6

KATAHDIN ANALYTICAL SERVICES
Report of Analytical Results

Client: CH2MHill
Project: TO-009 Lejeune
PO No:
Sample Date: 01/23/09
Received Date: 01/27/09
Extraction Date: 01/30/09
Analysis Date: 17-FEB-2009 09:04
Report Date: 02/19/2009
Matrix: SOIL
% Solids: 93.0

Lab ID: SC0409-12
Client ID: MR08-SS358-09A
SDG: TO9-44
Extracted by: AC
Extraction Method: SW846 3550
Analyst: JLP
Analysis Method: SW846 M8270C
Lab Prep Batch: WG60348
Units: ug/Kgdrywt

CAS#	Compound	Flags	Results	DF	PQL	Adj.PQL	Adj.MDL	
91-20-3	Naphthalene	~~U~~ UJ	11	1.0	10	11	2.8	BSL
91-57-6	2-Methylnaphthalene	~~J~~ J	5.4	1.0	10	11	2.4	
86-73-7	Fluorene	~~U~~ UJ	11	1.0	10	11	3.4	
85-01-8	Phenanthrene	J	12	1.0	10	11	1.9	
206-44-0	Fluoranthene	J	7.9	1.0	10	11	1.9	
129-00-0	Pyrene	J	9.0	1.0	10	11	2.2	
56-55-3	Benzo(a)anthracene	~~U~~ U	11	1.0	10	11	2.0	BL
205-99-2	Benzo(b)fluoranthene	~~U~~ UJ	11	1.0	10	11	2.6	CCH
207-08-9	Benzo(k)fluoranthene	~~U~~	11	1.0	10	11	3.3	BSL
50-32-8	Benzo(a)pyrene	~~U~~	11	1.0	10	11	3.5	BSL
193-39-5	Indeno(1,2,3-cd)pyrene	U	11	1.0	10	11	2.0	
53-70-3	Dibenzo(a,h)anthracene	U	11	1.0	10	11	1.9	
191-24-2	Benzo(g,h,i)perylene	U	11	1.0	10	11	2.1	
118-74-1	Hexachlorobenzene	U	11	1.0	10	11	1.9	
87-68-3	Hexachlorobutadiene	U	11	1.0	10	11	2.5	
77-47-4	Hexachlorocyclopentadiene	~~J~~ J	7.5	1.0	10	11	1.6	BSL
7297-45-2	2-Methylnaphthalene-D10		78%					
367-12-4	2,4-Dibromophenol		94%					
81103-79-9	Fluorene-d10		86%					
1718-51-1	Pyrene-D10		94%					

LW
4/18/09

7

KATAHDIN ANALYTICAL SERVICES
Report of Analytical Results

Client: CH2MHill
Project: TO-009 Lejeune
PO No:
Sample Date: 01/23/09
Received Date: 01/27/09
Extraction Date: 01/30/09
Analysis Date: 17-FEB-2009 09:46
Report Date: 02/19/2009
Matrix: SOIL
% Solids: 94.4

Lab ID: SC0409-14
Client ID: MR08-IS358-4-5-09A
SDG: TO9-44
Extracted by: AC
Extraction Method: SW846 3550
Analyst: JLP
Analysis Method: SW846 M8270C
Lab Prep Batch: WG60348
Units: ug/Kgdrywt

CAS#	Compound	Flags	Results	DF	PQL	Adj.PQL	Adj.MDL	
91-20-3	Naphthalene	~~U~~ UJ	10	1.0	10	10	2.8	BSL
91-57-6	2-Methylnaphthalene	~~J~~ J	5.2	1.0	10	10	2.3	
86-73-7	Fluorene	~~U~~ UJ	10	1.0	10	10	3.4	
85-01-8	Phenanthrene	~~U~~ UJ	10	1.0	10	10	1.9	
206-44-0	Fluoranthene	J	2.1	1.0	10	10	1.9	
129-00-0	Pyrene	U	10	1.0	10	10	2.2	
56-55-3	Benzo(a)anthracene	~~JB~~ 10U	~~6.4~~	1.0	10	10	2.0	BL
205-99-2	Benzo(b)fluoranthene	~~J~~ J	6.6	1.0	10	10	2.5	CCH
207-08-9	Benzo(k)fluoranthene	~~U~~ UJ	10	1.0	10	10	3.3	BSL
50-32-8	Benzo(a)pyrene	~~U~~ UJ	10	1.0	10	10	3.5	BSL
193-39-5	Indeno(1,2,3-cd)pyrene	U	10	1.0	10	10	2.0	
53-70-3	Dibenzo(a,h)anthracene	U	10	1.0	10	10	1.9	
191-24-2	Benzo(g,h,i)perylene	U	10	1.0	10	10	2.1	
118-74-1	Hexachlorobenzene	U	10	1.0	10	10	1.9	
87-68-3	Hexachlorobutadiene	U	10	1.0	10	10	2.4	
77-47-4	Hexachlorocyclopentadiene	~~J~~ J	7.6	1.0	10	10	1.6	BSL
7297-45-2	2-Methylnaphthalene-D10		58%					
367-12-4	2,4-Dibromophenol		66%					
81103-79-9	Fluorene-d10		55%					
1718-51-1	Pyrene-D10		74%					

lw
4/18/09

8

KATAHDIN ANALYTICAL SERVICES
Report of Analytical Results

Client: CH2MHill
Project: TO-009 Lejeune
PO No:
Sample Date: 01/23/09
Received Date: 01/27/09
Extraction Date: 01/30/09
Analysis Date: 17-FEB-2009 10:27
Report Date: 02/19/2009
Matrix: SOIL
% Solids: 91.9

Lab ID: SC0409-16
Client ID: MR08-IS359-4-5-09A
SDG: TO9-44
Extracted by: AC
Extraction Method: SW846 3550
Analyst: JLP
Analysis Method: SW846 M8270C
Lab Prep Batch: WG60348
Units: ug/Kgdrywt

CAS#	Compound	Flags	Results	DF	PQL	Adj.PQL	Adj.MDL	
91-20-3	Naphthalene	~~U~~ UJ	11	1.0	10	11	2.8	BSL
91-57-6	2-Methylnaphthalene	~~U~~	11	1.0	10	11	2.4	
86-73-7	Fluorene	~~U~~	11	1.0	10	11	3.5	
85-01-8	Phenanthrene	~~U~~	11	1.0	10	11	2.0	
206-44-0	Fluoranthene	U	11	1.0	10	11	2.0	
129-00-0	Pyrene	U	11	1.0	10	11	2.3	
56-55-3	Benzo(a)anthracene	~~JB~~ UU	~~5.7~~	1.0	10	11	2.1	BL
205-99-2	Benzo(b)fluoranthene	~~U~~ UJ	11	1.0	10	11	2.6	CCH
207-08-9	Benzo(k)fluoranthene	~~U~~ UJ	11	1.0	10	11	3.4	BSL
50-32-8	Benzo(a)pyrene	~~U~~ UJ	11	1.0	10	11	3.6	BSL
193-39-5	Indeno(1,2,3-cd)pyrene	U	11	1.0	10	11	2.1	
53-70-3	Dibenzo(a,h)anthracene	U	11	1.0	10	11	2.0	
191-24-2	Benzo(g,h,i)perylene	U	11	1.0	10	11	2.2	
118-74-1	Hexachlorobenzene	U	11	1.0	10	11	2.0	
87-68-3	Hexachlorobutadiene	U	11	1.0	10	11	2.5	
77-47-4	Hexachlorocyclopentadiene	~~J~~ J	7.5	1.0	10	11	1.6	BSL
7297-45-2	2-Methylnaphthalene-D10		36%					
367-12-4	2,4-Dibromophenol		47%					
81103-79-9	Fluorene-d10		* 46%					
1718-51-1	Pyrene-D10		57%					

LW
4/18/09

9

KATAHDIN ANALYTICAL SERVICES
Report of Analytical Results

Client: CH2MHill
Project: TO-009 Lejeune
PO No:
Sample Date: 01/23/09
Received Date: 01/27/09
Extraction Date: 01/30/09
Analysis Date: 17-FEB-2009 11:08
Report Date: 02/19/2009
Matrix: SOIL
% Solids: 93.1

Lab ID: SC0409-18
Client ID: MR08-SS359-09A
SDG: TO9-44
Extracted by: AC
Extraction Method: SW846 3550
Analyst: JLP
Analysis Method: SW846 M8270C
Lab Prep Batch: WG60348
Units: ug/Kgdrywt

Use reanalyses

R RE

CAS#	Compound	Flags	Results	DF	PQL	Adj.PQL	Adj.MDL
91-20-3	Naphthalene	U UJ	11	1.0	10	11	2.8 SSL
91-57-6	2-Methylnaphthalene	U	11	1.0	10	11	2.4
86-73-7	Fluorene	U	11	1.0	10	11	3.4
85-01-8	Phenanthrene	U	11	1.0	10	11	1.9
206-44-0	Fluoranthene	U	11	1.0	10	11	1.9
129-00-0	Pyrene	U	11	1.0	10	11	2.2
56-55-3	Benzo(a)anthracene	U	11	1.0	10	11	2.0
205-99-2	Benzo(b)fluoranthene	U	11	1.0	10	11	2.6
207-08-9	Benzo(k)fluoranthene	U	11	1.0	10	11	3.3
50-32-8	Benzo(a)pyrene	U	11	1.0	10	11	3.5
193-39-5	Indeno(1,2,3-cd)pyrene	U	11	1.0	10	11	2.0
53-70-3	Dibenzo(a,h)anthracene	U	11	1.0	10	11	1.9
191-24-2	Benzo(g,h,i)perylene	U	11	1.0	10	11	2.1
118-74-1	Hexachlorobenzene	U	11	1.0	10	11	1.9
87-68-3	Hexachlorobutadiene	U	11	1.0	10	11	2.5
77-47-4	Hexachlorocyclopentadiene	U	11	1.0	10	11	1.6
7297-45-2	2-Methylnaphthalene-D10		* 30%				
367-12-4	2,4-Dibromophenol		46%				
81103-79-9	Fluorene-d10		* 42%				
1718-51-1	Pyrene-D10		47%				

lw 4/18/09

9RE

KATAHDIN ANALYTICAL SERVICES
Report of Analytical Results

Client: CH2MHill
Project: TO-009 Lejeune
PO No:
Sample Date: 01/23/09
Received Date: 01/27/09
Extraction Date: 02/16/09
Analysis Date: 18-FEB-2009 20:53
Report Date: 02/19/2009
Matrix: SOIL
% Solids: 93.1

Lab ID: SC0409-18RE
Client ID: MR08-SS359-09A
SDG: TO9-44
Extracted by: AC
Extraction Method: SW846 3550
Analyst: JCG
Analysis Method: SW846 M8270C
Lab Prep Batch: WG60859
Units: ug/Kgdrywt

CAS#	Compound	Flags		Results	DF	PQL	Adj.PQL	Adj.MDL	
91-20-3	Naphthalene	U	UJ	11	1.0	10	11	2.8	HT
91-57-6	2-Methylnaphthalene	U		11	1.0	10	11	2.4	
86-73-7	Fluorene	U		11	1.0	10	11	3.4	
85-01-8	Phenanthrene	J	J	2.2	1.0	10	11	1.9	
206-44-0	Fluoranthene	U	UJ	11	1.0	10	11	1.9	
129-00-0	Pyrene	U		11	1.0	10	11	2.2	
56-55-3	Benzo(a)anthracene	U		11	1.0	10	11	2.0	
205-99-2	Benzo(b)fluoranthene	U		11	1.0	10	11	2.6	
207-08-9	Benzo(k)fluoranthene	U		11	1.0	10	11	3.3	
50-32-8	Benzo(a)pyrene	U		11	1.0	10	11	3.5	
193-39-5	Indeno(1,2,3-cd)pyrene	U		11	1.0	10	11	2.0	
53-70-3	Dibenzo(a,h)anthracene	U		11	1.0	10	11	1.9	
191-24-2	Benzo(g,h,i)perylene	U		11	1.0	10	11	2.1	
118-74-1	Hexachlorobenzene	U		11	1.0	10	11	1.9	
87-68-3	Hexachlorobutadiene	U		11	1.0	10	11	2.5	
77-47-4	Hexachlorocyclopentadiene	U		11	1.0	10	11	1.6	
7297-45-2	2-Methylnaphthalene-D10			93%					
367-12-4	2,4-Dibromophenol			91%					
81103-79-9	Fluorene-d10			80%					
1718-51-1	Pyrene-D10			94%					

lew
4/18/09

10

KATAHDIN ANALYTICAL SERVICES
Report of Analytical Results

Client: CH2MHill
Project: TO-009 Lejeune
PO No:
Sample Date: 01/23/09
Received Date: 01/27/09
Extraction Date: 01/30/09
Analysis Date: 17-FEB-2009 11:50
Report Date: 02/19/2009
Matrix: SOIL
% Solids: 87.4

Lab ID: SC0409-20
Client ID: MR08-IS360-4-5-09A
SDG: TO9-44
Extracted by: AC
Extraction Method: SW846 3550
Analyst: JLP
Analysis Method: SW846 M8270C
Lab Prep Batch: WG60348
Units: ug/Kgdrywt

CAS#	Compound	Flags	Results	DF	PQL	Adj.PQL	Adj.MDL	
91-20-3	Naphthalene	~~U~~ UJ	11	1.0	10	11	3.0	BSL
91-57-6	2-Methylnaphthalene	~~U~~	11	1.0	10	11	2.5	
86-73-7	Fluorene	~~U~~	11	1.0	10	11	3.7	
85-01-8	Phenanthrene	~~U~~	11	1.0	10	11	2.0	
206-44-0	Fluoranthene	J	3.0	1.0	10	11	2.0	
129-00-0	Pyrene	U	11	1.0	10	11	2.4	
56-55-3	Benzo(a)anthracene	~~JB~~ 11U	~~6.8~~	1.0	10	11	2.2	BL
205-99-2	Benzo(b)fluoranthene	~~U~~ UJ	11	1.0	10	11	2.7	CLH
207-08-9	Benzo(k)fluoranthene	~~U~~ UJ	11	1.0	10	11	3.5	BSL
50-32-8	Benzo(a)pyrene	~~U~~ UJ	11	1.0	10	11	3.8	BSL
193-39-5	Indeno(1,2,3-cd)pyrene	J	3.0	1.0	10	11	2.2	
53-70-3	Dibenzo(a,h)anthracene	U	11	1.0	10	11	2.0	
191-24-2	Benzo(g,h,i)perylene	J	2.8	1.0	10	11	2.3	
118-74-1	Hexachlorobenzene	U	11	1.0	10	11	2.0	
87-68-3	Hexachlorobutadiene	U	11	1.0	10	11	2.6	
77-47-4	Hexachlorocyclopentadiene	~~U~~ UJ	11	1.0	10	11	1.7	BSL
7297-45-2	2-Methylnaphthalene-D10		57%					
367-12-4	2,4-Dibromophenol		66%					
81103-79-9	Fluorene-d10		63%					
1718-51-1	Pyrene-D10		74%					

lw
4/18/09

11

KATAHDIN ANALYTICAL SERVICES
Report of Analytical Results

Client: CH2MHill
Project: TO-009 Lejeune
PO No:
Sample Date: 01/23/09
Received Date: 01/27/09
Extraction Date: 2/12/09 MW
Analysis Date: 17-FEB-2009 22:21
Report Date: 02/19/2009
Matrix: SOIL
% Solids: 88.1

Lab ID: SC0409-22RE
Client ID: MR08-IS360D-4-5-09A
SDG: TO9-44
Extracted by:
Extraction Method: SW846 3520
Analyst: JCG
Analysis Method: SW846 M8270C
Lab Prep Batch: WG60727
Units: ug/Kgdrywt

CAS#	Compound	Flags		Results	DF	PQL	Adj.PQL	Adj.MDL	
91-20-3	Naphthalene	~~U~~	UJ	11	1.0	10	11	3.0	HT
91-57-6	2-Methylnaphthalene	~~U~~		11	1.0	10	11	2.5	
86-73-7	Fluorene	~~U~~		11	1.0	10	11	3.6	
85-01-8	Phenanthrene	~~J~~	J	11	1.0	10	11	2.0	
206-44-0	Fluoranthene			45	1.0	10	11	2.0	
129-00-0	Pyrene			38	1.0	10	11	2.4	
56-55-3	Benzo(a)anthracene			30	1.0	10	11	2.2	
205-99-2	Benzo(b)fluoranthene			30	1.0	10	11	2.7	
207-08-9	Benzo(k)fluoranthene			16	1.0	10	11	3.5	
50-32-8	Benzo(a)pyrene			20	1.0	10	11	3.7	
193-39-5	Indeno(1,2,3-cd)pyrene	~~J~~		11	1.0	10	11	2.2	
53-70-3	Dibenzo(a,h)anthracene	~~J~~		5.8	1.0	10	11	2.0	
191-24-2	Benzo(g,h,i)perylene	~~J~~		10	1.0	10	11	2.3	
118-74-1	Hexachlorobenzene	~~U~~	UJ	11	1.0	10	11	2.0	
87-68-3	Hexachlorobutadiene	~~U~~		11	1.0	10	11	2.6	
77-47-4	Hexachlorocyclopentadiene	~~U~~		11	1.0	10	11	1.7	
7297-45-2	2-Methylnaphthalene-D10			76%					
367-12-4	2,4-Dibromophenol			95%					
81103-79-9	Fluorene-d10			86%					
1718-51-1	Pyrene-D10			98%					

MW
4/18/09

KATAHDIN ANALYTICAL SERVICES
Report of Analytical Results

Client: CH2MHill
Project: TO-009 Lejeune
PO No:
Sample Date: 01/23/09
Received Date: 01/27/09
Extraction Date: 01/30/09
Analysis Date: 17-FEB-2009 12:31
Report Date: 02/19/2009
Matrix: SOIL
% Solids: 89.1

Lab ID: SC0409-24
Client ID: MR08-SS360-09A
SDG: TO9-44
Extracted by: AC
Extraction Method: SW846 3550
Analyst: JLP
Analysis Method: SW846 M8270C
Lab Prep Batch: WG60348
Units: ug/Kgdrywt

CAS#	Compound	Flags	Results	DF	PQL	Adj.PQL	Adj.MDL	
91-20-3	Naphthalene	~~U~~ UJ	11	1.0	10	11	2.9	BSL
91-57-6	2-Methylnaphthalene	~~U~~	11	1.0	10	11	2.5	
86-73-7	Fluorene	~~U~~ J	11	1.0	10	11	3.6	
85-01-8	Phenanthrene		14	1.0	10	11	2.0	
206-44-0	Fluoranthene		54	1.0	10	11	2.0	
129-00-0	Pyrene		41	1.0	10	11	2.4	
56-55-3	Benzo(a)anthracene	~~B~~	26	1.0	10	11	2.1	
205-99-2	Benzo(b)fluoranthene	J	47	1.0	10	11	2.7	CCH
207-08-9	Benzo(k)fluoranthene	J	21	1.0	10	11	3.5	BSL
50-32-8	Benzo(a)pyrene	J	25	1.0	10	11	3.7	BSL
193-39-5	Indeno(1,2,3-cd)pyrene		23	1.0	10	11	2.1	
53-70-3	Dibenzo(a,h)anthracene	J	9.1	1.0	10	11	2.0	
191-24-2	Benzo(g,h,i)perylene		22	1.0	10	11	2.2	
118-74-1	Hexachlorobenzene	U	11	1.0	10	11	2.0	
87-68-3	Hexachlorobutadiene	U	11	1.0	10	11	2.6	
77-47-4	Hexachlorocyclopentadiene	~~U~~ UJ	11	1.0	10	11	1.7	BSL
7297-45-2	2-Methylnaphthalene-D10		58%					
367-12-4	2,4-Dibromophenol		78%					
81103-79-9	Fluorene-d10		71%					
1718-51-1	Pyrene-D10		85%					

fen
4/18/09

13

KATAHDIN ANALYTICAL SERVICES
Report of Analytical Results

Client: CH2MHill
Project: TO-009 Lejeune
PO No:
Sample Date: 01/23/09
Received Date: 01/27/09
Extraction Date: 01/30/09
Analysis Date: 17-FEB-2009 13:54
Report Date: 02/19/2009
Matrix: SOIL
% Solids: 89.1

Lab ID: SC0409-26
Client ID: MR08-SS360D-09A
SDG: TO9-44
Extracted by: AC
Extraction Method: SW846 3550
Analyst: JLP
Analysis Method: SW846 M8270C
Lab Prep Batch: WG60348
Units: ug/Kgdrywt

CAS#	Compound	Flags	Results	DF	PQL	Adj.PQL	Adj.MDL	
91-20-3	Naphthalene	~~U~~ UJ	11	1.0	10	11	2.9	BSL
91-57-6	2-Methylnaphthalene	~~U~~	11	1.0	10	11	2.5	
86-73-7	Fluorene	~~U~~ J	11	1.0	10	11	3.6	
85-01-8	Phenanthrene		17	1.0	10	11	2.0	
206-44-0	Fluoranthene		54	1.0	10	11	2.0	
129-00-0	Pyrene		47	1.0	10	11	2.4	
56-55-3	Benzo(a)anthracene	~~B~~	29	1.0	10	11	2.1	
205-99-2	Benzo(b)fluoranthene	J	49	1.0	10	11	2.7	CCH
207-08-9	Benzo(k)fluoranthene		24	1.0	10	11	3.5	BSL
50-32-8	Benzo(a)pyrene		29	1.0	10	11	3.7	BSL
193-39-5	Indeno(1,2,3-cd)pyrene		24	1.0	10	11	2.1	
53-70-3	Dibenzo(a,h)anthracene	J	8.6	1.0	10	11	2.0	
191-24-2	Benzo(g,h,i)perylene		22	1.0	10	11	2.2	
118-74-1	Hexachlorobenzene	U	11	1.0	10	11	2.0	
87-68-3	Hexachlorobutadiene	U	11	1.0	10	11	2.6	
77-47-4	Hexachlorocyclopentadiene	~~U~~ UJ	11	1.0	10	11	1.7	BSL
7297-45-2	2-Methylnaphthalene-D10		77%					
367-12-4	2,4-Dibromophenol		92%					
81103-79-9	Fluorene-d10		76%					
1718-51-1	Pyrene-D10		102%					

QW
4/18/09

KATAHDIN ANALYTICAL SERVICES
Report of Analytical Results

Client: CH2MHill
Project: TO-009 Lejeune
PO No:
Sample Date: 01/23/09
Received Date: 01/27/09
Extraction Date: 01/30/09
Analysis Date: 17-FEB-2009 14:35
Report Date: 02/19/2009
Matrix: SOIL
% Solids: 90.3

Lab ID: SC0409-28
Client ID: MR08-SS361-09A
SDG: TO9-44
Extracted by: AC
Extraction Method: SW846 3550
Analyst: JLP
Analysis Method: SW846 M8270C
Lab Prep Batch: WG60348
Units: ug/Kgdrywt

CAS#	Compound	Flags	Results	DF	PQL	Adj.PQL	Adj.MDL	
91-20-3	Naphthalene	~~U~~ UJ	11	1.0	10	11	2.9	BSL
91-57-6	2-Methylnaphthalene	~~U~~	11	1.0	10	11	2.4	
86-73-7	Fluorene	~~U~~	11	1.0	10	11	3.5	
85-01-8	Phenanthrene	~~J~~ J	6.8	1.0	10	11	2.0	
206-44-0	Fluoranthene	J	5.5	1.0	10	11	2.0	
129-00-0	Pyrene	J	5.5	1.0	10	11	2.3	
56-55-3	Benzo(a)anthracene	~~B~~	28	1.0	10	11	2.1	
205-99-2	Benzo(b)fluoranthene	~~U~~ UJ	11	1.0	10	11	2.6	CCM
207-08-9	Benzo(k)fluoranthene	~~U~~ UJ	11	1.0	10	11	3.4	BSL
50-32-8	Benzo(a)pyrene	~~U~~ UJ	11	1.0	10	11	3.6	BSL
193-39-5	Indeno(1,2,3-cd)pyrene	U	11	1.0	10	11	2.1	
53-70-3	Dibenzo(a,h)anthracene	U	11	1.0	10	11	2.0	
191-24-2	Benzo(g,h,i)perylene	U	11	1.0	10	11	2.2	
118-74-1	Hexachlorobenzene	U	11	1.0	10	11	2.0	
87-68-3	Hexachlorobutadiene	U	11	1.0	10	11	2.5	
77-47-4	Hexachlorocyclopentadiene	~~U~~ UJ	11	1.0	10	11	1.7	BSL
7297-45-2	2-Methylnaphthalene-D10		80%					
367-12-4	2,4-Dibromophenol		100%					
81103-79-9	Fluorene-d10		83%					
1718-51-1	Pyrene-D10		113%					

MW
4/18/09

15

KATAHDIN ANALYTICAL SERVICES
Report of Analytical Results

Client: CH2MHill
Project: TO-009 Lejeune
PO No:
Sample Date: 01/23/09
Received Date: 01/27/09
Extraction Date: 01/30/09
Analysis Date: 17-FEB-2009 15:17
Report Date: 02/19/2009
Matrix: SOIL
% Solids: 88.1

Lab ID: SC0409-30
Client ID: MR08-IS361-4-5-09A
SDG: TO9-44
Extracted by: AC
Extraction Method: SW846 3550
Analyst: JLP
Analysis Method: SW846 M8270C
Lab Prep Batch: WG60348
Units: ug/Kgdrywt

CAS#	Compound	Flags	Results	DF	PQL	Adj.PQL	Adj.MDL	
91-20-3	Naphthalene	~~U~~ UJ	11	1.0	10	11	3.0	BSL
91-57-6	2-Methylnaphthalene	~~U~~	11	1.0	10	11	2.5	
86-73-7	Fluorene	~~U~~	11	1.0	10	11	3.6	
85-01-8	Phenanthrene	U	11	1.0	10	11	2.0	
206-44-0	Fluoranthene	U	11	1.0	10	11	2.0	
129-00-0	Pyrene	U	11	1.0	10	11	2.4	
56-55-3	Benzo(a)anthracene	U	11	1.0	10	11	2.2	
205-99-2	Benzo(b)fluoranthene	~~U~~ UJ	11	1.0	10	11	2.7	CCH
207-08-9	Benzo(k)fluoranthene	~~U~~ UJ	11	1.0	10	11	3.5	BSL
50-32-8	Benzo(a)pyrene	~~U~~ UJ	11	1.0	10	11	3.7	BSL
193-39-5	Indeno(1,2,3-cd)pyrene	U	11	1.0	10	11	2.2	
53-70-3	Dibenzo(a,h)anthracene	U	11	1.0	10	11	2.0	
191-24-2	Benzo(g,h,i)perylene	U	11	1.0	10	11	2.3	
118-74-1	Hexachlorobenzene	U	11	1.0	10	11	2.0	
87-68-3	Hexachlorobutadiene	U	11	1.0	10	11	2.6	
77-47-4	Hexachlorocyclopentadiene	~~U~~ UJ	11	1.0	10	11	1.7	BSL
7297-45-2	2-Methylnaphthalene-D10		63%					
367-12-4	2,4-Dibromophenol		81%					
81103-79-9	Fluorene-d10		70%					
1718-51-1	Pyrene-D10		95%					

MW
4/18/09

16

KATAHDIN ANALYTICAL SERVICES
Report of Analytical Results

Client: CH2MHill
Project: TO-009 Lejeune
PO No:
Sample Date: 01/23/09
Received Date: 01/27/09
Extraction Date: 01/30/09
Analysis Date: 17-FEB-2009 15:58
Report Date: 02/19/2009
Matrix: SOIL
% Solids: 81.2

Lab ID: SC0409-32
Client ID: MR08-SS368-09A
SDG: TO9-44
Extracted by: AC
Extraction Method: SW846 3550
Analyst: JLP
Analysis Method: SW846 M8270C
Lab Prep Batch: WG60348
Units: ug/Kgdrywt

CAS#	Compound	Flags	Results	DF	PQL	Adj.PQL	Adj.MDL
91-20-3	Naphthalene	~~U~~ UJ	12	1.0	10	12	3.2 BSL
91-57-6	2-Methylnaphthalene	~~J~~ J	8.9	1.0	10	12	2.7
86-73-7	Fluorene	~~J~~ J	12	1.0	10	12	3.9
85-01-8	Phenanthrene	~~E~~ 430 J	~~380~~ 5	1.0 BSL	10 62	~~12~~ 11	~~2.2~~ R DL
206-44-0	Fluoranthene	~~E~~ 1000	~~840~~	1.0	10	~~12~~ 11	~~2.2~~
129-00-0	Pyrene	~~E~~ 860	~~830~~	1.0	10	~~12~~ 13	~~2.6~~
56-55-3	Benzo(a)anthracene	~~EB~~ 470	~~470~~	1.0	10	~~12~~ 12	~~2.3~~
205-99-2	Benzo(b)fluoranthene	~~E~~ 800	~~920~~	1.0	10	~~12~~ 15	~~3.0~~
207-08-9	Benzo(k)fluoranthene	~~E~~ J 400	~~340~~	1.0 BSL	10	~~12~~ 19	~~3.8~~
50-32-8	Benzo(a)pyrene	~~E~~ J 520	~~530~~	1.0 BSL	10	~~12~~ 20	~~4.1~~
193-39-5	Indeno(1,2,3-cd)pyrene	~~E~~ 350	~~370~~	1.0	10	~~12~~ 12	~~2.3~~
53-70-3	Dibenzo(a,h)anthracene		210	1.0	10	12	2.2
191-24-2	Benzo(g,h,i)perylene	~~E~~ 340	~~340~~ 5	1.0	10 62	~~12~~ 12	~~2.5~~ R DL
118-74-1	Hexachlorobenzene	U	12	1.0	10	12	2.2
87-68-3	Hexachlorobutadiene	U	12	1.0	10	12	2.8
77-47-4	Hexachlorocyclopentadiene	~~U~~ UJ	12	1.0 BSL	10	12	1.8
7297-45-2	2-Methylnaphthalene-D10		83%				
367-12-4	2,4-Dibromophenol		103%				
81103-79-9	Fluorene-d10		83%				
1718-51-1	Pyrene-D10		104%				

LW
4/18/09

16DL

KATAHDIN ANALYTICAL SERVICES
Report of Analytical Results

Client: CH2MHill
Project: TO-009 Lejeune
PO No:
Sample Date: 01/23/09
Received Date: 01/27/09
Extraction Date: 01/30/09
Analysis Date: 18-FEB-2009 03:09
Report Date: 02/19/2009
Matrix: SOIL
% Solids: 81.2

Lab ID: SC0409-32DL
Client ID: MR08-SS368-09A
SDG: TO9-44
Extracted by: AC
Extraction Method: SW846 3550
Analyst: JCG
Analysis Method: SW846 M8270C
Lab Prep Batch: WG60348
Units: ug/Kgdrywt

Use original

CAS#	Compound	Flags	Results	DF	PQL	Adj.PQL	Adj.MDL	
91-20-3	Naphthalene	~~U~~ UJ	62	5.0	10	62	16	BSL
91-57-6	2-Methylnaphthalene	~~U~~ UJ	29	5.0	10	62	14	
86-73-7	Fluorene	~~U~~ UJ	62	5.0	10	62	20	
85-01-8	Phenanthrene		430	5.0	10	62	11	
206-44-0	Fluoranthene		1000	5.0	10	62	11	
129-00-0	Pyrene		860	5.0	10	62	13	
56-55-3	Benzo(a)anthracene	~~J~~	470	5.0	10	62	12	
205-99-2	Benzo(b)fluoranthene	J	800	5.0	10	62	15	BSL
207-08-9	Benzo(k)fluoranthene	J	400	5.0	10	62	19	BSL
50-32-8	Benzo(a)pyrene		520	5.0	10	62	20	
193-39-5	Indeno(1,2,3-cd)pyrene		350	5.0	10	62	12	
53-70-3	Dibenzo(a,h)anthracene		170	5.0	10	62	11	
191-24-2	Benzo(g,h,i)perylene		340	5.0	10	62	12	
118-74-1	Hexachlorobenzene	U	62	5.0	10	62	11	
87-68-3	Hexachlorobutadiene	U	62	5.0	10	62	14	
77-47-4	Hexachlorocyclopentadiene	~~U~~ UJ	62	5.0	10	62	9.2	BSL
7297-45-2	2-Methylnaphthalene-D10		77%					
367-12-4	2,4-Dibromophenol		81%					
81103-79-9	Fluorene-d10		87%					
1718-51-1	Pyrene-D10		107%					

PL

R

lw 4/18/09

KATAHDIN ANALYTICAL SERVICES
Report of Analytical Results

Client: CH2MHill
Project: TO-009 Lejeune
PO No:
Sample Date: 01/23/09
Received Date: 01/27/09
Extraction Date: 01/30/09
Analysis Date: 17-FEB-2009 16:40
Report Date: 02/19/2009
Matrix: SOIL
% Solids: 88.6

Lab ID: SC0409-34
Client ID: MR08-IS368-4-5-09A
SDG: TO9-44
Extracted by: AC
Extraction Method: SW846 3550
Analyst: JLP
Analysis Method: SW846 M8270C
Lab Prep Batch: WG60348
Units: ug/Kgdrywt

CAS#	Compound	Flags	Results	DF	PQL	Adj.PQL	Adj.MDL	
91-20-3	Naphthalene	~~U~~ UJ	11	1.0	10	11	2.9	BSL
91-57-6	2-Methylnaphthalene	~~J~~ J	5.2	1.0	10	11	2.5	
86-73-7	Fluorene	~~U~~ UJ	11	1.0	10	11	3.6	
85-01-8	Phenanthrene	~~U~~ UJ	11	1.0	10	11	2.0	
206-44-0	Fluoranthene	J	2.3	1.0	10	11	2.0	
129-00-0	Pyrene	U	11	1.0	10	11	2.4	
56-55-3	Benzo(a)anthracene	~~JB~~ UU	~~6.3~~	1.0	10	11	2.1	BL
205-99-2	Benzo(b)fluoranthene	~~U~~ UJ	11	1.0	10	11	2.7	CCH
207-08-9	Benzo(k)fluoranthene	~~U~~	11	1.0	10	11	3.5	BSL
50-32-8	Benzo(a)pyrene	~~U~~	11	1.0	10	11	3.7	BSL
193-39-5	Indeno(1,2,3-cd)pyrene	U	11	1.0	10	11	2.1	
53-70-3	Dibenzo(a,h)anthracene	U	11	1.0	10	11	2.0	
191-24-2	Benzo(g,h,i)perylene	U	11	1.0	10	11	2.2	
118-74-1	Hexachlorobenzene	U	11	1.0	10	11	2.0	
87-68-3	Hexachlorobutadiene	U	11	1.0	10	11	2.6	
77-47-4	Hexachlorocyclopentadiene	~~U~~ UJ	11	1.0	10	11	1.7	BSL
7297-45-2	2-Methylnaphthalene-D10		79%					
367-12-4	2,4-Dibromophenol		91%					
81103-79-9	Fluorene-d10		72%					
1718-51-1	Pyrene-D10		105%					

kw
4/18/09

18

KATAHDIN ANALYTICAL SERVICES
Report of Analytical Results

Client: CH2MHill
Project: TO-009 Lejeune
PO No:
Sample Date: 01/23/09
Received Date: 01/27/09
Extraction Date: 01/30/09
Analysis Date: 18-FEB-2009 01:06
Report Date: 02/19/2009
Matrix: SOIL
% Solids: 86.9

Lab ID: SC0409-36
Client ID: MR08-SS355-09A
SDG: TO9-44
Extracted by: AC
Extraction Method: SW846 3550
Analyst: JCG
Analysis Method: SW846 M8270C
Lab Prep Batch: WG60348
Units: ug/Kgdrywt

CAS#	Compound	Flags	Results	DF	PQL	Adj.PQL	Adj.MDL
91-20-3	Naphthalene	U	12	1.0	10	12	3.0
91-57-6	2-Methylnaphthalene	J	6.4	1.0	10	12	2.5
86-73-7	Fluorene	U	12	1.0	10	12	3.7
85-01-8	Phenanthrene		140	1.0	10	12	2.1
206-44-0	Fluoranthene	~~E~~	330 ~~340~~	2~~1~~.0	10	23 ~~12~~	4.1 ~~2.1~~ R DL
129-00-0	Pyrene		260	1.0	10	12	2.4
56-55-3	Benzo(a)anthracene	~~E~~	140	1.0	10	12	2.2
205-99-2	Benzo(b)fluoranthene		190	1.0	10	12	2.8
207-08-9	Benzo(k)fluoranthene		170	1.0	10	12	3.6
50-32-8	Benzo(a)pyrene		150	1.0	10	12	3.8
193-39-5	Indeno(1,2,3-cd)pyrene		110	1.0	10	12	2.2
53-70-3	Dibenzo(a,h)anthracene		45	1.0	10	12	2.1
191-24-2	Benzo(g,h,i)perylene		100	1.0	10	12	2.3
118-74-1	Hexachlorobenzene	U	12	1.0	10	12	2.1
87-68-3	Hexachlorobutadiene	U	12	1.0	10	12	2.6
77-47-4	Hexachlorocyclopentadiene	U	12	1.0	10	12	1.7
7297-45-2	2-Methylnaphthalene-D10		75%				
367-12-4	2,4-Dibromophenol		94%				
81103-79-9	Fluorene-d10		87%				
1718-51-1	Pyrene-D10		99%				

KW
4/18/09

1801

KATAHDIN ANALYTICAL SERVICES
Report of Analytical Results

Client: CH2MHill
Project: TO-009 Lejeune
PO No:
Sample Date: 01/23/09
Received Date: 01/27/09
Extraction Date: 01/30/09
Analysis Date: 18-FEB-2009 14:01
Report Date: 02/19/2009
Matrix: SOIL
% Solids: 86.9

Lab ID: SC0409-36DL
Client ID: MR08-SS355-09A
SDG: TO9-44
Extracted by: AC
Extraction Method: SW846 3550
Analyst: JLP
Analysis Method: SW846 M8270C
Lab Prep Batch: WG60348
Units: ug/Kgdrywt

Use original

CAS#	Compound	Flags	Results	DF	PQL	Adj.PQL	Adj.MDL	
91-20-3	Naphthalene	~~U~~ UJ	23	2.0	10	23	6.0	BSL
91-57-6	2-Methylnaphthalene	~~J~~ J	11	2.0	10	23	5.1	
86-73-7	Fluorene	~~U~~ UJ	23	2.0	10	23	7.4	
85-01-8	Phenanthrene	J	120	2.0	10	23	4.1	
206-44-0	Fluoranthene		330	2.0	10	23	4.1	
129-00-0	Pyrene		260	2.0	10	23	4.8	
56-55-3	Benzo(a)anthracene	~~J~~	140	2.0	10	23	4.4	
205-99-2	Benzo(b)fluoranthene		250	2.0	10	23	5.5	
207-08-9	Benzo(k)fluoranthene	J	120	2.0	10	23	7.1	BSL
50-32-8	Benzo(a)pyrene	J	150	2.0	10	23	7.6	BSL
193-39-5	Indeno(1,2,3-cd)pyrene		120	2.0	10	23	4.4	
53-70-3	Dibenzo(a,h)anthracene		42	2.0	10	23	4.1	
191-24-2	Benzo(g,h,i)perylene		110	2.0	10	23	4.6	
118-74-1	Hexachlorobenzene	U	23	2.0	10	23	4.1	
87-68-3	Hexachlorobutadiene	U	23	2.0	10	23	5.3	
77-47-4	Hexachlorocyclopentadiene	~~U~~ UJ	23	2.0	10	23	3.4	BSL
7297-45-2	2-Methylnaphthalene-D10		81%					
367-12-4	2,4-Dibromophenol		100%					
81103-79-9	Fluorene-d10		93%					
1718-51-1	Pyrene-D10		102%					

RDL

MW
4/18/09

19

KATAHDIN ANALYTICAL SERVICES
Report of Analytical Results

Client: CH2MHill
Project: TO-009 Lejeune
PO No:
Sample Date: 01/23/09
Received Date: 01/27/09
Extraction Date: 01/30/09
Analysis Date: 17-FEB-2009 23:02
Report Date: 02/19/2009
Matrix: SOIL
% Solids: 89.4

Lab ID: SC0409-38
Client ID: MR08-IS355-4-5-09A
SDG: TO9-44
Extracted by: AC
Extraction Method: SW846 3550
Analyst: JCG
Analysis Method: SW846 M8270C
Lab Prep Batch: WG60348
Units: ug/Kgdrywt

CAS#	Compound	Flags	Results	DF	PQL	Adj.PQL	Adj.MDL
91-20-3	Naphthalene	U	11	1.0	10	11	2.9
91-57-6	2-Methylnaphthalene	J	6.4	1.0	10	11	2.5
86-73-7	Fluorene	U	11	1.0	10	11	3.6
85-01-8	Phenanthrene	U	11	1.0	10	11	2.0
206-44-0	Fluoranthene	J	3.5	1.0	10	11	2.0
129-00-0	Pyrene	J	2.4	1.0	10	11	2.3
56-55-3	Benzo(a)anthracene	~~JB~~ U	7.8	1.0	10	11	2.1 BL
205-99-2	Benzo(b)fluoranthene	J	7.6	1.0	10	11	2.7
207-08-9	Benzo(k)fluoranthene	J	3.2	1.0	10	11	3.5
50-32-8	Benzo(a)pyrene	U	11	1.0	10	11	3.7
193-39-5	Indeno(1,2,3-cd)pyrene	J	3.9	1.0	10	11	2.1
53-70-3	Dibenzo(a,h)anthracene	J	3.5	1.0	10	11	2.0
191-24-2	Benzo(g,h,i)perylene	J	4.0	1.0	10	11	2.2
118-74-1	Hexachlorobenzene	J	1.8	1.0	10	11	2.0
87-68-3	Hexachlorobutadiene	U	11	1.0	10	11	2.6
77-47-4	Hexachlorocyclopentadiene	U	11	1.0	10	11	1.7
7297-45-2	2-Methylnaphthalene-D10		79%				
367-12-4	2,4-Dibromophenol		89%				
81103-79-9	Fluorene-d10		85%				
1718-51-1	Pyrene-D10		91%				

KWJ
4/18/09

20

KATAHDIN ANALYTICAL SERVICES
Report of Analytical Results

Client: CH2MHill
Project: TO-009 Lejeune
PO No:
Sample Date: 01/24/09
Received Date: 01/27/09
Extraction Date: 02/16/09
Analysis Date: 18-FEB-2009 03:50
Report Date: 02/19/2009
Matrix: SOIL
% Solids: 85.5

Lab ID: SC0409-40RE
Client ID: MR08-SS329-09A
SDG: TO9-44
Extracted by: AC
Extraction Method: SW846 3550
Analyst: JCG
Analysis Method: SW846 M8270C
Lab Prep Batch: WG60727
Units: ug/Kgdrywt

CAS#	Compound	Flags	Results	DF	PQL	Adj.PQL	Adj.MDL
91-20-3	Naphthalene	~~U~~ UJ	12	1.0	10	12	3.0 HT
91-57-6	2-Methylnaphthalene	~~J~~ J	5.5	1.0	10	12	2.6
86-73-7	Fluorene	~~J~~ J	4.2	1.0	10	12	3.7
85-01-8	Phenanthrene	J	290	1.0	10	12	2.1
206-44-0	Fluoranthene	~~E~~ J	1500 ~~1100~~	8 1.0 HT	10	94 ~~12~~ 17	~~2.1~~ R DL
129-00-0	Pyrene	~~E~~	1200 ~~1200~~	1.0	10	~~12~~ 20	~~2.1~~
56-55-3	Benzo(a)anthracene	~~E~~	630 ~~580~~	1.0	10	~~12~~ 18	~~2.1~~
205-99-2	Benzo(b)fluoranthene	~~E~~	1400 ~~1100~~	1.0	10	~~12~~ 22	~~2.8~~
207-08-9	Benzo(k)fluoranthene	~~E~~	560 ~~520~~	1.0	10	~~12~~ 29	~~3.6~~
50-32-8	Benzo(a)pyrene	~~E~~	790 ~~680~~	1.0	10	~~12~~ 31	~~3.8~~
193-39-5	Indeno(1,2,3-cd)pyrene	~~E~~	600 ~~560~~	1.0	10	~~12~~ 18	~~2.2~~
53-70-3	Dibenzo(a,h)anthracene	J	270	1.0	10	12	2.1 HT
191-24-2	Benzo(g,h,i)perylene	~~E~~ J	580 ~~490~~	8 1.0 HT	10	94 ~~12~~ 19	~~2.3~~ R DL
118-74-1	Hexachlorobenzene	~~U~~ UJ	12	1.0	10	12	2.1 HT
87-68-3	Hexachlorobutadiene	~~U~~	12	1.0	10	12	2.7
77-47-4	Hexachlorocyclopentadiene	~~U~~	12	1.0	10	12	1.8
7297-45-2	2-Methylnaphthalene-D10		64%				
367-12-4	2,4-Dibromophenol		96%				
81103-79-9	Fluorene-d10		83%				
1718-51-1	Pyrene-D10		129%				

RW
4/18/09

20DL

KATAHDIN ANALYTICAL SERVICES
Report of Analytical Results

Client: CH2MHill
Project: TO-009 Lejeune
PO No:
Sample Date: 01/24/09
Received Date: 01/27/09
Extraction Date: 02/16/09
Analysis Date: 18-FEB-2009 13:20
Report Date: 02/25/2009
Matrix: SOIL
% Solids: 85.5

Lab ID: SC0409-40DL
Client ID: MR08-SS329-09A
SDG: TO9-44
Extracted by: CB
Extraction Method: SW846 3550
Analyst: JLP
Analysis Method: SW846 M8270C
Lab Prep Batch: WG60727
Units: ug/Kgdrywt

Use original

CAS#	Compound	Flags	Results	DF	PQL	Adj.PQL	Adj.MDL
91-20-3	Naphthalene	U UJ	94	8.0	10	94	24 HT
91-57-6	2-Methylnaphthalene	U	94	8.0	10	94	20
86-73-7	Fluorene	U	94	8.0	10	94	30
85-01-8	Phenanthrene	J	260	8.0	10	94	17
206-44-0	Fluoranthene		1500	8.0	10	94	17
129-00-0	Pyrene		1200	8.0	10	94	20
56-55-3	Benzo(a)anthracene		630	8.0	10	94	18
205-99-2	Benzo(b)fluoranthene		1400	8.0	10	94	22
207-08-9	Benzo(k)fluoranthene		560	8.0	10	94	29
50-32-8	Benzo(a)pyrene		790	8.0	10	94	31
193-39-5	Indeno(1,2,3-cd)pyrene		600	8.0	10	94	18
53-70-3	Dibenzo(a,h)anthracene		210	8.0	10	94	17
191-24-2	Benzo(g,h,i)perylene		580	8.0	10	94	19
118-74-1	Hexachlorobenzene	U UJ	94	8.0	10	94	17
87-68-3	Hexachlorobutadiene	U	94	8.0	10	94	22
77-47-4	Hexachlorocyclopentadiene	U	94	8.0	10	94	14
7297-45-2	2-Methylnaphthalene-D10		74%				
367-12-4	2,4-Dibromophenol		126%				
81103-79-9	Fluorene-d10		117%				
1718-51-1	Pyrene-D10		113%				

RDL

fw
4/18/09

ENVIRONMENTAL
Data Services, Inc.

SEMIVOLATILE ORGANIC COMPOUNDS
USEPA Region IV - Level IV Review

Site: MCB Camp Lejeune, TO-09 SDG #: TO9-44

Client: CH2M HILL, Inc., Virginia Beach, Virginia Date: April 18, 2009

Laboratory: Katahdin Analytical Services, Scarborough, Maine Reviewer: Nancy Weaver

EDS ID	Client Sample ID	Laboratory Sample ID	Matrix
1	MR08-IS367-4-5-09A	SC0409-1	Soil
2	MR08-SS356-09A	SC0409-3	Soil
3	MR08-IS356-4-5-09A	SC0409-5	Soil
4	MR08-SS357-09A	SC0409-7	Soil
5	MR08-IS357-4-5-09A	SC0409-9	Soil
6	MR08-SS358-09A	SC0409-11	Soil
7	MR08-IS358-4-5-09A	SC0409-13	Soil
8	MR08-IS359-4-5-09A	SC0409-15	Soil
9	MR08-SS359-09A	SC0409-17	Soil
9RE	MR08-SS359-09ARE	SC0409-17RE	Soil
10	MR08-IS360-4-5-09A	SC0409-19	Soil
11	MR08-IS360D-4-5-09A	SC0409-21	Soil
12	MR08-SS360-09A	SC0409-23	Soil
13	MR08-SS360D-09A	SC0409-25	Soil
14	MR08-SS361-09A	SC0409-27	Soil
15	MR08-IS361-4-5-09A	SC0409-29	Soil
16	MR08-SS368-09A	SC0409-31	Soil
17	MR08-IS368-4-5-09A	SC0409-33	Soil
18	MR08-SS355-09A	SC0409-35	Soil
19	MR08-IS355-4-5-09A	SC0409-37	Soil
20	MR08-SS329-09A	SC0409-39	Soil
20MS	MR08-SS329-09AMS	SC0409-39MS	Soil
20MSD	MR08-SS329-09AMSD	SC0409-39MSD	Soil

The USEPA "Contract Laboratory Program National Functional Guidelines for Organic Data Review," October 1999, and professional judgment were used in evaluating the data in this summary report.

Holding Times - All samples were extracted within 14 days for soil samples and analyzed within 40 days for all samples except the following.

Sample	Date Sampled	Date Extracted	# of Days	Qualifier
9RE	01/23/09	02/16/09	24	J/UJ

Sample	Date Sampled	Date Extracted	# of Days	Qualifier
11	01/23/09	02/12/09	20	J/UJ
20	01/24/09	02/12/09	19	J/UJ

GC/MS Tuning - All of the DFTPP tunes in the initial and continuing calibrations met the percent relative abundance criteria.

Initial Calibration - The initial calibrations exhibited acceptable %RSD and mean RRF values except the following.

ICAL Date	Compound	%RSD/RRF	Qualifier	Affected Samples
02/11/09	Benzaldehyde	37.85%	J/UJ	2-10, 12-19
	4-Nitrophenol	30.97%	J/UJ	2-10, 12-19
02/19/09	Benzaldehyde	51.16%	J/UJ	1

Continuing Calibration - The continuing calibrations exhibited acceptable %D and RRF values except the following.

CCAL Date	Compound	%D/RRF	Qualifier	Affected Samples
02/13/09	Benzaldehyde	89.21%	None	See ICAL & HT
02/15/09	Benzaldehyde	93.27%	None	See ICAL & HT
02/18/09	Benzaldehyde	89.53%	None	See ICAL & HT

Surrogates - All samples exhibited acceptable surrogate recoveries except the following.

Sample ID	Surrogate	%R	Qualifier
8	Phenol-d6	39%	None for 1 out per fraction
	2-Fluorobiphenyl	36%	None for 1 out per fraction
9	2-Fluorophenol	30%	J/UJ
	Phenol-d6	31%	
	Nitrobenzene-d5	26%	
	2-Fluorobiphenyl	29%	

MS/MSD - The MS/MSD sample exhibited acceptable %R and RPD values except the following.

MS/MSD Sample ID	Compound	MS/MSD %R/RPD	Qualifier
20	1,1'-Biphenyl	47%/Ok/Ok	None - See HT
	n-Nitrosodiphenylamine	44%/Ok/Ok	None - See HT
	3,3'-Dichlorobenzidine	Ok/Ok/59	None for RPD alone

Laboratory Control Sample - The LCS samples exhibited acceptable %R values except the following.

LCS ID	Compound	%R	Qualifier	Affected Samples
WG60347-LCS	Dimethylphthalate	115%	None	All ND
WG60726-LCS	Dimethylphthalate	119%	None	All ND

Internal Standard (IS) Area Performance - All internal standards met response and retention time (RT) criteria.

Method Blank - The method blanks were free of contamination.

Field, Equipment Blank - Field QC results are summarized below.

Blank ID	Compound	Conc. ug/L	Action Level ug/L	Qualifier	Affected Samples
MR08-FB012609	None - ND	-	-	-	-
MR08-EB012309	None - ND	-	-	-	-

Field Duplicates - Field duplicate results are summarized below.

Compound	MR08-IS360-4-5-09A ug/kg	MR08-IS360D-4-5-09A ug/kg	RPD	Qualifier
bis (2-Ethylhexyl) phthalate	380 U	140	NC	None

Compound	MR08-SS360-09A ug/kg	MR08-SS360D-09A ug/kg	RPD	Qualifier
bis (2-Ethylhexyl) phthalate	370 U	130	NC	None

Tentatively Identified Compounds (TICs) - TICs were not reported.

Compound Quantitation - EDS sample ID #9 was reanalyzed due to a low surrogate percent recovery in the original analysis, however, the reanalysis was outside of holding times. The original analysis results should be used for reporting purposes.

KATAHDIN ANALYTICAL SERVICES
Report of Analytical Results

Client: CH2MHill
Project: TO-009 Lejeune
PO No:
Sample Date: 01/23/09
Received Date: 01/27/09
Extraction Date: 01/30/09
Analysis Date: 19-FEB-2009 23:14
Report Date: 02/24/2009
Matrix: SOIL
% Solids: 92.8

Lab ID: SC0409-1
Client ID: MR08-IS367-4-5-09A
SDG: TO9-44
Extracted by: AC
Extraction Method: SW846 3550
Analyst: JCG
Analysis Method: SW846 8270C
Lab Prep Batch: WG60347
Units: ug/Kgdrywt

CAS#	Compound	Flags	Results	DF	PQL	Adj.PQL	Adj.MDL
100-52-7	Benzaldehyde	~~U~~ UJ	540	1.0	500	540	130 JCB
108-95-2	Phenol	U	540	1.0	500	540	170
111-44-4	Bis(2-Chloroethyl)ether	U	360	1.0	330	360	87
95-57-8	2-Chlorophenol	U	540	1.0	500	540	180
95-48-7	2-Methylphenol	U	650	1.0	600	650	220
108-60-1	2,2'-Oxybis(1-chloropropane)	U	360	1.0	330	360	96
98-86-2	Acetophenone	U	650	1.0	600	650	190
621-64-7	N-Nitroso-di-n-propylamine	U	360	1.0	330	360	89
65794-96-9	3&4-Methylphenol	U	650	1.0	600	650	200
67-72-1	Hexachloroethane	U	360	1.0	330	360	100
98-95-3	Nitrobenzene	U	360	1.0	330	360	98
78-59-1	Isophorone	U	360	1.0	330	360	81
88-75-5	2-Nitrophenol	U	650	1.0	600	650	180
105-67-9	2,4-Dimethylphenol	U	540	1.0	500	540	180
111-91-1	Bis(2-Chloroethoxy)methane	U	360	1.0	330	360	100
120-83-2	2,4-Dichlorophenol	U	540	1.0	500	540	160
106-47-8	4-Chloroaniline	U	540	1.0	500	540	130
105-60-2	Caprolactam	U	540	1.0	500	540	160
59-50-7	4-Chloro-3-Methylphenol	U	540	1.0	500	540	180
88-06-2	2,4,6-Trichlorophenol	U	540	1.0	500	540	170
95-95-4	2,4,5-Trichlorophenol	U	540	1.0	500	540	170
91-58-7	2-Chloronaphthalene	U	360	1.0	330	360	94
92-52-4	1,1'-Biphenyl	U	360	1.0	330	360	79
88-74-4	2-Nitroaniline	U	540	1.0	500	540	81
131-11-3	Dimethyl Phthalate	U	360	1.0	330	360	84
606-20-2	2,6-Dinitrotoluene	U	360	1.0	330	360	85
208-96-8	Acenaphthylene	U	360	1.0	330	360	75
99-09-2	3-Nitroaniline	U	540	1.0	500	540	100
83-32-9	Acenaphthene	U	360	1.0	330	360	70
51-28-5	2,4-Dinitrophenol	U	1300	1.0	1200	1300	410
132-64-9	Dibenzofuran	U	360	1.0	330	360	85
100-02-7	4-Nitrophenol	U	1300	1.0	1200	1300	330
121-14-2	2,4-Dinitrotoluene	U	360	1.0	330	360	92
84-66-2	Diethylphthalate	U	360	1.0	330	360	86
7005-72-3	4-Chlorophenyl-phenylether	U	360	1.0	330	360	84
100-01-6	4-Nitroaniline	U	540	1.0	500	540	140
534-52-1	4,6-Dinitro-2-Methylphenol	U	1300	1.0	1200	1300	360
86-30-6	N-Nitrosodiphenylamine	U	710	1.0	660	710	240
101-55-3	4-Bromophenyl-phenylether	U	360	1.0	330	360	92
1912-24-9	Atrazine	U	360	1.0	330	360	98
87-86-5	Pentachlorophenol	U	880	1.0	820	880	260
120-12-7	Anthracene	U	360	1.0	330	360	90
86-74-8	Carbazole	U	540	1.0	500	540	120

lw 4/18/09

KATAHDIN ANALYTICAL SERVICES
Report of Analytical Results

Client: CH2MHill
Project: TO-009 Lejeune
PO No:
Sample Date: 01/23/09
Received Date: 01/27/09
Extraction Date: 01/30/09
Analysis Date: 19-FEB-2009 23:14
Report Date: 02/24/2009
Matrix: SOIL
% Solids: 92.8

Lab ID: SC0409-1
Client ID: MR08-IS367-4-5-09A
SDG: TO9-44
Extracted by: AC
Extraction Method: SW846 3550
Analyst: JCG
Analysis Method: SW846 8270C
Lab Prep Batch: WG60347
Units: ug/Kgdrywt

CAS#	Compound	Flags	Results	DF	PQL	Adj.PQL	Adj.MDL
84-74-2	Di-n-butylphthalate	U	360	1.0	330	360	110
85-68-7	Butylbenzylphthalate	U	360	1.0	330	360	100
91-94-1	3,3'-Dichlorobenzidine	U	540	1.0	500	540	120
218-01-9	Chrysene	U	360	1.0	330	360	100
117-81-7	bis(2-Ethylhexyl)phthalate	J	210	1.0	330	360	100
117-84-0	Di-n-octylphthalate	U	360	1.0	330	360	230
367-12-4	2-Fluorophenol		71%				
13127-88-3	Phenol-D6		85%				
4165-60-0	Nitrobenzene-D5		80%				
321-60-8	2-Fluorobiphenyl		82%				
118-79-6	2,4,6-Tribromophenol		60%				
1718-51-0	Terphenyl-D14		80%				

MCW 4/18/07

2

KATAHDIN ANALYTICAL SERVICES
Report of Analytical Results

Client: CH2MHill
Project: TO-009 Lejeune
PO No:
Sample Date: 01/23/09
Received Date: 01/27/09
Extraction Date: 01/30/09
Analysis Date: 13-FEB-2009 13:47
Report Date: 02/24/2009
Matrix: SOIL
% Solids: 88.4

Lab ID: SC0409-3
Client ID: MR08-SS356-09A
SDG: TO9-44
Extracted by: AC
Extraction Method: SW846 3550
Analyst: JCG
Analysis Method: SW846 8270C
Lab Prep Batch: WG60347
Units: ug/Kgdrywt

CAS#	Compound	Flags	Results	DF	PQL	Adj.PQL	Adj.MDL	
100-52-7	Benzaldehyde	~~U~~ UJ	560	1.0	500	560	140	ICB
108-95-2	Phenol	U	560	1.0	500	560	180	
111-44-4	Bis(2-Chloroethyl)ether	U	370	1.0	330	370	92	
95-57-8	2-Chlorophenol	U	560	1.0	500	560	180	
95-48-7	2-Methylphenol	U	680	1.0	600	680	230	
108-60-1	2,2'-Oxybis(1-chloropropane)	U	370	1.0	330	370	100	
98-86-2	Acetophenone	U	680	1.0	600	680	200	
621-64-7	N-Nitroso-di-n-propylamine	U	370	1.0	330	370	94	
65794-96-9	3&4-Methylphenol	U	680	1.0	600	680	210	
67-72-1	Hexachloroethane	U	370	1.0	330	370	110	
98-95-3	Nitrobenzene	U	370	1.0	330	370	100	
78-59-1	Isophorone	U	370	1.0	330	370	85	
88-75-5	2-Nitrophenol	U	680	1.0	600	680	190	
105-67-9	2,4-Dimethylphenol	U	560	1.0	500	560	190	
111-91-1	Bis(2-Chloroethoxy)methane	U	370	1.0	330	370	110	
120-83-2	2,4-Dichlorophenol	U	560	1.0	500	560	170	
106-47-8	4-Chloroaniline	U	560	1.0	500	560	130	
105-60-2	Caprolactam	U	560	1.0	500	560	160	
59-50-7	4-Chloro-3-Methylphenol	U	560	1.0	500	560	190	
88-06-2	2,4,6-Trichlorophenol	U	560	1.0	500	560	180	
95-95-4	2,4,5-Trichlorophenol	U	560	1.0	500	560	180	
91-58-7	2-Chloronaphthalene	U	370	1.0	330	370	98	
92-52-4	1,1'-Biphenyl	U	370	1.0	330	370	83	
88-74-4	2-Nitroaniline	U	560	1.0	500	560	85	
131-11-3	Dimethyl Phthalate	U	370	1.0	330	370	88	
606-20-2	2,6-Dinitrotoluene	U	370	1.0	330	370	89	
208-96-8	Acenaphthylene	U	370	1.0	330	370	79	
99-09-2	3-Nitroaniline	U	560	1.0	500	560	110	
83-32-9	Acenaphthene	U	370	1.0	330	370	74	
51-28-5	2,4-Dinitrophenol	U	1400	1.0	1200	1400	430	
132-64-9	Dibenzofuran	U	370	1.0	330	370	89	
100-02-7	4-Nitrophenol	~~U~~ UJ	1400	1.0	1200	1400	350	ICB
121-14-2	2,4-Dinitrotoluene	U	370	1.0	330	370	96	
84-66-2	Diethylphthalate	U	370	1.0	330	370	90	
7005-72-3	4-Chlorophenyl-phenylether	U	370	1.0	330	370	88	
100-01-6	4-Nitroaniline	U	560	1.0	500	560	150	
534-52-1	4,6-Dinitro-2-Methylphenol	U	1400	1.0	1200	1400	380	
86-30-6	N-Nitrosodiphenylamine	U	750	1.0	660	750	250	
101-55-3	4-Bromophenyl-phenylether	U	370	1.0	330	370	96	
1912-24-9	Atrazine	U	370	1.0	330	370	100	
87-86-5	Pentachlorophenol	U	930	1.0	820	930	270	
120-12-7	Anthracene	U	370	1.0	330	370	95	
86-74-8	Carbazole	U	560	1.0	500	560	120	

lw
4/18/09

2

KATAHDIN ANALYTICAL SERVICES
Report of Analytical Results

Client: CH2MHill
Project: TO-009 Lejeune
PO No:
Sample Date: 01/23/09
Received Date: 01/27/09
Extraction Date: 01/30/09
Analysis Date: 13-FEB-2009 13:47
Report Date: 02/24/2009
Matrix: SOIL
% Solids: 88.4

Lab ID: SC0409-3
Client ID: MR08-SS356-09A
SDG: TO9-44
Extracted by: AC
Extraction Method: SW846 3550
Analyst: JCG
Analysis Method: SW846 8270C
Lab Prep Batch: WG60347
Units: ug/Kgdrywt

CAS#	Compound	Flags	Results	DF	PQL	Adj.PQL	Adj.MDL
84-74-2	Di-n-butylphthalate	U	370	1.0	330	370	110
85-68-7	Butylbenzylphthalate	U	370	1.0	330	370	100
91-94-1	3,3'-Dichlorobenzidine	U	560	1.0	500	560	130
218-01-9	Chrysene	U	370	1.0	330	370	110
117-81-7	bis(2-Ethylhexyl)phthalate	J	160	1.0	330	370	110
117-84-0	Di-n-octylphthalate	U	370	1.0	330	370	240
367-12-4	2-Fluorophenol		73%				
13127-88-3	Phenol-D6		92%				
4165-60-0	Nitrobenzene-D5		61%				
321-60-8	2-Fluorobiphenyl		94%				
118-79-6	2,4,6-Tribromophenol		109%				
1718-51-0	Terphenyl-D14		89%				

MW
4/18/09

3

KATAHDIN ANALYTICAL SERVICES
Report of Analytical Results

Client: CH2MHill
Project: TO-009 Lejeune
PO No:
Sample Date: 01/23/09
Received Date: 01/27/09
Extraction Date: 01/30/09
Analysis Date: 13-FEB-2009 14:30
Report Date: 02/24/2009
Matrix: SOIL
% Solids: 91.0

Lab ID: SC0409-5
Client ID: MR08-IS356-4-5-09A
SDG: TO9-44
Extracted by: AC
Extraction Method: SW846 3550
Analyst: JCG
Analysis Method: SW846 8270C
Lab Prep Batch: WG60347
Units: ug/Kgdrywt

CAS#	Compound	Flags	Results	DF	PQL	Adj.PQL	Adj.MDL	
100-52-7	Benzaldehyde	~~U~~ UJ	550	1.0	500	550	130	ICB
108-95-2	Phenol	U	550	1.0	500	550	170	
111-44-4	Bis(2-Chloroethyl)ether	U	360	1.0	330	360	89	
95-57-8	2-Chlorophenol	U	550	1.0	500	550	180	
95-48-7	2-Methylphenol	U	660	1.0	600	660	220	
108-60-1	2,2'-Oxybis(1-chloropropane)	U	360	1.0	330	360	98	
98-86-2	Acetophenone	U	660	1.0	600	660	200	
621-64-7	N-Nitroso-di-n-propylamine	U	360	1.0	330	360	91	
65794-96-9	3&4-Methylphenol	U	660	1.0	600	660	200	
67-72-1	Hexachloroethane	U	360	1.0	330	360	100	
98-95-3	Nitrobenzene	U	360	1.0	330	360	100	
78-59-1	Isophorone	U	360	1.0	330	360	82	
88-75-5	2-Nitrophenol	U	660	1.0	600	660	180	
105-67-9	2,4-Dimethylphenol	U	550	1.0	500	550	180	
111-91-1	Bis(2-Chloroethoxy)methane	U	360	1.0	330	360	100	
120-83-2	2,4-Dichlorophenol	U	550	1.0	500	550	160	
106-47-8	4-Chloroaniline	U	550	1.0	500	550	130	
105-60-2	Caprolactam	U	550	1.0	500	550	160	
59-50-7	4-Chloro-3-Methylphenol	U	550	1.0	500	550	180	
88-06-2	2,4,6-Trichlorophenol	U	550	1.0	500	550	170	
95-95-4	2,4,5-Trichlorophenol	U	550	1.0	500	550	170	
91-58-7	2-Chloronaphthalene	U	360	1.0	330	360	96	
92-52-4	1,1'-Biphenyl	U	360	1.0	330	360	80	
88-74-4	2-Nitroaniline	U	550	1.0	500	550	82	
131-11-3	Dimethyl Phthalate	U	360	1.0	330	360	86	
606-20-2	2,6-Dinitrotoluene	U	360	1.0	330	360	87	
208-96-8	Acenaphthylene	U	360	1.0	330	360	77	
99-09-2	3-Nitroaniline	U	550	1.0	500	550	100	
83-32-9	Acenaphthene	U	360	1.0	330	360	71	
51-28-5	2,4-Dinitrophenol	U	1300	1.0	1200	1300	410	
132-64-9	Dibenzofuran	U	360	1.0	330	360	87	
100-02-7	4-Nitrophenol	~~U~~ UJ	1300	1.0	1200	1300	340	ICB
121-14-2	2,4-Dinitrotoluene	U	360	1.0	330	360	93	
84-66-2	Diethylphthalate	U	360	1.0	330	360	88	
7005-72-3	4-Chlorophenyl-phenylether	U	360	1.0	330	360	86	
100-01-6	4-Nitroaniline	U	550	1.0	500	550	150	
534-52-1	4,6-Dinitro-2-Methylphenol	U	1300	1.0	1200	1300	370	
86-30-6	N-Nitrosodiphenylamine	U	720	1.0	660	720	240	
101-55-3	4-Bromophenyl-phenylether	U	360	1.0	330	360	93	
1912-24-9	Atrazine	U	360	1.0	330	360	100	
87-86-5	Pentachlorophenol	U	900	1.0	820	900	260	
120-12-7	Anthracene	U	360	1.0	330	360	92	
86-74-8	Carbazole	U	550	1.0	500	550	120	

LW
4/18/09

3

KATAHDIN ANALYTICAL SERVICES
Report of Analytical Results

Client: CH2MHill
Project: TO-009 Lejeune
PO No:
Sample Date: 01/23/09
Received Date: 01/27/09
Extraction Date: 01/30/09
Analysis Date: 13-FEB-2009 14:30
Report Date: 02/24/2009
Matrix: SOIL
% Solids: 91.0

Lab ID: SC0409-5
Client ID: MR08-IS356-4-5-09A
SDG: TO9-44
Extracted by: AC
Extraction Method: SW846 3550
Analyst: JCG
Analysis Method: SW846 8270C
Lab Prep Batch: WG60347
Units: ug/Kgdrywt

CAS#	Compound	Flags	Results	DF	PQL	Adj.PQL	Adj.MDL
84-74-2	Di-n-butylphthalate	U	360	1.0	330	360	110
85-68-7	Butylbenzylphthalate	U	360	1.0	330	360	100
91-94-1	3,3'-Dichlorobenzidine	U	550	1.0	500	550	120
218-01-9	Chrysene	U	360	1.0	330	360	100
117-81-7	bis(2-Ethylhexyl)phthalate	J	160	1.0	330	360	110
117-84-0	Di-n-octylphthalate	U	360	1.0	330	360	230
367-12-4	2-Fluorophenol		56%				
13127-88-3	Phenol-D6		71%				
4165-60-0	Nitrobenzene-D5		60%				
321-60-8	2-Fluorobiphenyl		60%				
118-79-6	2,4,6-Tribromophenol		64%				
1718-51-0	Terphenyl-D14		65%				

kw
4/18/09

4

KATAHDIN ANALYTICAL SERVICES
Report of Analytical Results

Client: CH2MHill
Project: TO-009 Lejeune
PO No:
Sample Date: 01/23/09
Received Date: 01/27/09
Extraction Date: 01/30/09
Analysis Date: 13-FEB-2009 15:13
Report Date: 02/24/2009
Matrix: SOIL
% Solids: 87.8

Lab ID: SC0409-7
Client ID: MR08-SS357-09A
SDG: TO9-44
Extracted by: AC
Extraction Method: SW846 3550
Analyst: JCG
Analysis Method: SW846 8270C
Lab Prep Batch: WG60347
Units: ug/Kgdrywt

CAS#	Compound	Flags	Results	DF	PQL	Adj.PQL	Adj.MDL
100-52-7	Benzaldehyde	~~U~~ UJ	570	1.0	500	570	140 ICB
108-95-2	Phenol	U	570	1.0	500	570	180
111-44-4	Bis(2-Chloroethyl)ether	U	380	1.0	330	380	92
95-57-8	2-Chlorophenol	U	570	1.0	500	570	190
95-48-7	2-Methylphenol	U	680	1.0	600	680	230
108-60-1	2,2'-Oxybis(1-chloropropane)	U	380	1.0	330	380	100
98-86-2	Acetophenone	U	680	1.0	600	680	200
621-64-7	N-Nitroso-di-n-propylamine	U	380	1.0	330	380	94
65794-96-9	3&4-Methylphenol	U	680	1.0	600	680	210
67-72-1	Hexachloroethane	U	380	1.0	330	380	110
98-95-3	Nitrobenzene	U	380	1.0	330	380	100
78-59-1	Isophorone	U	380	1.0	330	380	85
88-75-5	2-Nitrophenol	U	680	1.0	600	680	190
105-67-9	2,4-Dimethylphenol	U	570	1.0	500	570	190
111-91-1	Bis(2-Chloroethoxy)methane	U	380	1.0	330	380	110
120-83-2	2,4-Dichlorophenol	U	570	1.0	500	570	170
106-47-8	4-Chloroaniline	U	570	1.0	500	570	140
105-60-2	Caprolactam	U	570	1.0	500	570	160
59-50-7	4-Chloro-3-Methylphenol	U	570	1.0	500	570	190
88-06-2	2,4,6-Trichlorophenol	U	570	1.0	500	570	180
95-95-4	2,4,5-Trichlorophenol	U	570	1.0	500	570	180
91-58-7	2-Chloronaphthalene	U	380	1.0	330	380	99
92-52-4	1,1'-Biphenyl	U	380	1.0	330	380	83
88-74-4	2-Nitroaniline	U	570	1.0	500	570	85
131-11-3	Dimethyl Phthalate	U	380	1.0	330	380	89
606-20-2	2,6-Dinitrotoluene	U	380	1.0	330	380	90
208-96-8	Acenaphthylene	U	380	1.0	330	380	80
99-09-2	3-Nitroaniline	U	570	1.0	500	570	110
83-32-9	Acenaphthene	U	380	1.0	330	380	74
51-28-5	2,4-Dinitrophenol	U	1400	1.0	1200	1400	430
132-64-9	Dibenzofuran	U	380	1.0	330	380	90
100-02-7	4-Nitrophenol	~~U~~ UJ	1400	1.0	1200	1400	350 ICB
121-14-2	2,4-Dinitrotoluene	U	380	1.0	330	380	97
84-66-2	Diethylphthalate	U	380	1.0	330	380	91
7005-72-3	4-Chlorophenyl-phenylether	U	380	1.0	330	380	89
100-01-6	4-Nitroaniline	U	570	1.0	500	570	150
534-52-1	4,6-Dinitro-2-Methylphenol	U	1400	1.0	1200	1400	380
86-30-6	N-Nitrosodiphenylamine	U	750	1.0	660	750	250
101-55-3	4-Bromophenyl-phenylether	U	380	1.0	330	380	97
1912-24-9	Atrazine	U	380	1.0	330	380	100
87-86-5	Pentachlorophenol	U	930	1.0	820	930	270
120-12-7	Anthracene	U	380	1.0	330	380	96
86-74-8	Carbazole	U	570	1.0	500	570	130

hw
4/18/09

KATAHDIN ANALYTICAL SERVICES
Report of Analytical Results

Client: CH2MHill
Project: TO-009 Lejeune
PO No:
Sample Date: 01/23/09
Received Date: 01/27/09
Extraction Date: 01/30/09
Analysis Date: 13-FEB-2009 15:13
Report Date: 02/24/2009
Matrix: SOIL
% Solids: 87.8

Lab ID: SC0409-7
Client ID: MR08-SS357-09A
SDG: TO9-44
Extracted by: AC
Extraction Method: SW846 3550
Analyst: JCG
Analysis Method: SW846 8270C
Lab Prep Batch: WG60347
Units: ug/Kgdrywt

CAS#	Compound	Flags	Results	DF	PQL	Adj.PQL	Adj.MDL
84-74-2	Di-n-butylphthalate	U	380	1.0	330	380	120
85-68-7	Butylbenzylphthalate	U	380	1.0	330	380	100
91-94-1	3,3'-Dichlorobenzidine	U	570	1.0	500	570	130
218-01-9	Chrysene	U	380	1.0	330	380	110
117-81-7	bis(2-Ethylhexyl)phthalate	J	260	1.0	330	380	110
117-84-0	Di-n-octylphthalate	U	380	1.0	330	380	240
367-12-4	2-Fluorophenol		76%				
13127-88-3	Phenol-D6		94%				
4165-60-0	Nitrobenzene-D5		76%				
321-60-8	2-Fluorobiphenyl		85%				
118-79-6	2,4,6-Tribromophenol		90%				
1718-51-0	Terphenyl-D14		78%				

hw
4/18/09

KATAHDIN ANALYTICAL SERVICES
Report of Analytical Results

Client: CH2MHill
Project: TO-009 Lejeune
PO No:
Sample Date: 01/23/09
Received Date: 01/27/09
Extraction Date: 01/30/09
Analysis Date: 13-FEB-2009 15:55
Report Date: 02/24/2009
Matrix: SOIL
% Solids: 88.6

Lab ID: SC0409-9
Client ID: MR08-IS357-4-5-09A
SDG: TO9-44
Extracted by: AC
Extraction Method: SW846 3550
Analyst: JCG
Analysis Method: SW846 8270C
Lab Prep Batch: WG60347
Units: ug/Kgdrywt

CAS#	Compound	Flags	Results	DF	PQL	Adj.PQL	Adj.MDL
100-52-7	Benzaldehyde	~~U~~ UJ	560	1.0	500	560	140 JCB
108-95-2	Phenol	U	560	1.0	500	560	180
111-44-4	Bis(2-Chloroethyl)ether	U	370	1.0	330	370	91
95-57-8	2-Chlorophenol	U	560	1.0	500	560	180
95-48-7	2-Methylphenol	U	680	1.0	600	680	220
108-60-1	2,2'-Oxybis(1-chloropropane)	U	370	1.0	330	370	100
98-86-2	Acetophenone	U	680	1.0	600	680	200
621-64-7	N-Nitroso-di-n-propylamine	U	370	1.0	330	370	94
65794-96-9	3&4-Methylphenol	U	680	1.0	600	680	210
67-72-1	Hexachloroethane	U	370	1.0	330	370	110
98-95-3	Nitrobenzene	U	370	1.0	330	370	100
78-59-1	Isophorone	U	370	1.0	330	370	85
88-75-5	2-Nitrophenol	U	680	1.0	600	680	190
105-67-9	2,4-Dimethylphenol	U	560	1.0	500	560	190
111-91-1	Bis(2-Chloroethoxy)methane	U	370	1.0	330	370	110
120-83-2	2,4-Dichlorophenol	U	560	1.0	500	560	170
106-47-8	4-Chloroaniline	U	560	1.0	500	560	130
105-60-2	Caprolactam	U	560	1.0	500	560	160
59-50-7	4-Chloro-3-Methylphenol	U	560	1.0	500	560	190
88-06-2	2,4,6-Trichlorophenol	U	560	1.0	500	560	170
95-95-4	2,4,5-Trichlorophenol	U	560	1.0	500	560	170
91-58-7	2-Chloronaphthalene	U	370	1.0	330	370	98
92-52-4	1,1'-Biphenyl	U	370	1.0	330	370	82
88-74-4	2-Nitroaniline	U	560	1.0	500	560	85
131-11-3	Dimethyl Phthalate	U	370	1.0	330	370	88
606-20-2	2,6-Dinitrotoluene	U	370	1.0	330	370	89
208-96-8	Acenaphthylene	U	370	1.0	330	370	79
99-09-2	3-Nitroaniline	U	560	1.0	500	560	110
83-32-9	Acenaphthene	U	370	1.0	330	370	73
51-28-5	2,4-Dinitrophenol	U	1400	1.0	1200	1400	420
132-64-9	Dibenzofuran	U	370	1.0	330	370	89
100-02-7	4-Nitrophenol	~~U~~ UJ	1400	1.0	1200	1400	350 JCB
121-14-2	2,4-Dinitrotoluene	U	370	1.0	330	370	96
84-66-2	Diethylphthalate	U	370	1.0	330	370	90
7005-72-3	4-Chlorophenyl-phenylether	U	370	1.0	330	370	88
100-01-6	4-Nitroaniline	U	560	1.0	500	560	150
534-52-1	4,6-Dinitro-2-Methylphenol	U	1400	1.0	1200	1400	380
86-30-6	N-Nitrosodiphenylamine	U	740	1.0	660	740	250
101-55-3	4-Bromophenyl-phenylether	U	370	1.0	330	370	96
1912-24-9	Atrazine	U	370	1.0	330	370	100
87-86-5	Pentachlorophenol	U	920	1.0	820	920	270
120-12-7	Anthracene	U	370	1.0	330	370	95
86-74-8	Carbazole	U	560	1.0	500	560	120

hW
4/18/09

5

KATAHDIN ANALYTICAL SERVICES
Report of Analytical Results

Client: CH2MHill
Project: TO-009 Lejeune
PO No:
Sample Date: 01/23/09
Received Date: 01/27/09
Extraction Date: 01/30/09
Analysis Date: 13-FEB-2009 15:55
Report Date: 02/24/2009
Matrix: SOIL
% Solids: 88.6

Lab ID: SC0409-9
Client ID: MR08-IS357-4-5-09A
SDG: TO9-44
Extracted by: AC
Extraction Method: SW846 3550
Analyst: JCG
Analysis Method: SW846 8270C
Lab Prep Batch: WG60347
Units: ug/Kgdrywt

CAS#	Compound	Flags	Results	DF	PQL	Adj.PQL	Adj.MDL
84-74-2	Di-n-butylphthalate	U	370	1.0	330	370	110
85-68-7	Butylbenzylphthalate	U	370	1.0	330	370	100
91-94-1	3,3'-Dichlorobenzidine	U	560	1.0	500	560	130
218-01-9	Chrysene	U	370	1.0	330	370	110
117-81-7	bis(2-Ethylhexyl)phthalate	U	370	1.0	330	370	110
117-84-0	Di-n-octylphthalate	U	370	1.0	330	370	240
367-12-4	2-Fluorophenol		64%				
13127-88-3	Phenol-D6		79%				
4165-60-0	Nitrobenzene-D5		71%				
321-60-8	2-Fluorobiphenyl		79%				
118-79-6	2,4,6-Tribromophenol		58%				
1718-51-0	Terphenyl-D14		75%				

NW
4/18/09

6

KATAHDIN ANALYTICAL SERVICES
Report of Analytical Results

Client: CH2MHill
Project: TO-009 Lejeune
PO No:
Sample Date: 01/23/09
Received Date: 01/27/09
Extraction Date: 01/30/09
Analysis Date: 13-FEB-2009 16:37
Report Date: 02/24/2009
Matrix: SOIL
% Solids: 93.0

Lab ID: SC0409-11
Client ID: MR08-SS358-09A
SDG: TO9-44
Extracted by: AC
Extraction Method: SW846 3550
Analyst: JCG
Analysis Method: SW846 8270C
Lab Prep Batch: WG60347
Units: ug/Kgdrywt

CAS#	Compound	Flags	Results	DF	PQL	Adj.PQL	Adj.MDL	
100-52-7	Benzaldehyde	~~U~~ UJ	540	1.0	500	540	130	ICB
108-95-2	Phenol	U	540	1.0	500	540	170	
111-44-4	Bis(2-Chloroethyl)ether	U	350	1.0	330	350	87	
95-57-8	2-Chlorophenol	U	540	1.0	500	540	180	
95-48-7	2-Methylphenol	U	640	1.0	600	640	210	
108-60-1	2,2'-Oxybis(1-chloropropane)	U	350	1.0	330	350	96	
98-86-2	Acetophenone	U	640	1.0	600	640	190	
621-64-7	N-Nitroso-di-n-propylamine	U	350	1.0	330	350	89	
65794-96-9	3&4-Methylphenol	U	640	1.0	600	640	200	
67-72-1	Hexachloroethane	U	350	1.0	330	350	100	
98-95-3	Nitrobenzene	U	350	1.0	330	350	98	
78-59-1	Isophorone	U	350	1.0	330	350	81	
88-75-5	2-Nitrophenol	U	640	1.0	600	640	180	
105-67-9	2,4-Dimethylphenol	U	540	1.0	500	540	180	
111-91-1	Bis(2-Chloroethoxy)methane	U	350	1.0	330	350	100	
120-83-2	2,4-Dichlorophenol	U	540	1.0	500	540	160	
106-47-8	4-Chloroaniline	U	540	1.0	500	540	130	
105-60-2	Caprolactam	U	540	1.0	500	540	150	
59-50-7	4-Chloro-3-Methylphenol	U	540	1.0	500	540	180	
88-06-2	2,4,6-Trichlorophenol	U	540	1.0	500	540	170	
95-95-4	2,4,5-Trichlorophenol	U	540	1.0	500	540	170	
91-58-7	2-Chloronaphthalene	U	350	1.0	330	350	94	
92-52-4	1,1'-Biphenyl	U	350	1.0	330	350	78	
88-74-4	2-Nitroaniline	U	540	1.0	500	540	81	
131-11-3	Dimethyl Phthalate	U	350	1.0	330	350	84	
606-20-2	2,6-Dinitrotoluene	U	350	1.0	330	350	85	
208-96-8	Acenaphthylene	U	350	1.0	330	350	75	
99-09-2	3-Nitroaniline	U	540	1.0	500	540	100	
83-32-9	Acenaphthene	U	350	1.0	330	350	70	
51-28-5	2,4-Dinitrophenol	U	1300	1.0	1200	1300	400	
132-64-9	Dibenzofuran	U	350	1.0	330	350	85	
100-02-7	4-Nitrophenol	~~U~~ UJ	1300	1.0	1200	1300	330	ICB
121-14-2	2,4-Dinitrotoluene	U	350	1.0	330	350	91	
84-66-2	Diethylphthalate	U	350	1.0	330	350	86	
7005-72-3	4-Chlorophenyl-phenylether	U	350	1.0	330	350	84	
100-01-6	4-Nitroaniline	U	540	1.0	500	540	140	
534-52-1	4,6-Dinitro-2-Methylphenol	U	1300	1.0	1200	1300	360	
86-30-6	N-Nitrosodiphenylamine	U	710	1.0	660	710	240	
101-55-3	4-Bromophenyl-phenylether	U	350	1.0	330	350	91	
1912-24-9	Atrazine	U	350	1.0	330	350	98	
87-86-5	Pentachlorophenol	U	880	1.0	820	880	250	
120-12-7	Anthracene	U	350	1.0	330	350	90	
86-74-8	Carbazole	U	540	1.0	500	540	120	

MW 4/18/09

KATAHDIN ANALYTICAL SERVICES
Report of Analytical Results

6

Client: CH2MHill
Project: TO-009 Lejeune
PO No:
Sample Date: 01/23/09
Received Date: 01/27/09
Extraction Date: 01/30/09
Analysis Date: 13-FEB-2009 16:37
Report Date: 02/24/2009
Matrix: SOIL
% Solids: 93.0

Lab ID: SC0409-11
Client ID: MR08-SS358-09A
SDG: TO9-44
Extracted by: AC
Extraction Method: SW846 3550
Analyst: JCG
Analysis Method: SW846 8270C
Lab Prep Batch: WG60347
Units: ug/Kgdrywt

CAS#	Compound	Flags	Results	DF	PQL	Adj.PQL	Adj.MDL
84-74-2	Di-n-butylphthalate	U	350	1.0	330	350	110
85-68-7	Butylbenzylphthalate	U	350	1.0	330	350	100
91-94-1	3,3'-Dichlorobenzidine	U	540	1.0	500	540	120
218-01-9	Chrysene	U	350	1.0	330	350	100
117-81-7	bis(2-Ethylhexyl)phthalate	U	350	1.0	330	350	100
117-84-0	Di-n-octylphthalate	U	350	1.0	330	350	230
367-12-4	2-Fluorophenol		71%				
13127-88-3	Phenol-D6		95%				
4165-60-0	Nitrobenzene-D5		69%				
321-60-8	2-Fluorobiphenyl		84%				
118-79-6	2,4,6-Tribromophenol		90%				
1718-51-0	Terphenyl-D14		72%				

GW
4/18/09

7

KATAHDIN ANALYTICAL SERVICES
Report of Analytical Results

Client: CH2MHill
Project: TO-009 Lejeune
PO No:
Sample Date: 01/23/09
Received Date: 01/27/09
Extraction Date: 01/30/09
Analysis Date: 13-FEB-2009 17:20
Report Date: 02/24/2009
Matrix: SOIL
% Solids: 94.4

Lab ID: SC0409-13
Client ID: MR08-IS358-4-5-09A
SDG: TO9-44
Extracted by: AC
Extraction Method: SW846 3550
Analyst: JCG
Analysis Method: SW846 8270C
Lab Prep Batch: WG60347
Units: ug/Kgdrywt

CAS#	Compound	Flags	Results	DF	PQL	Adj.PQL	Adj.MDL	
100-52-7	Benzaldehyde	~~U~~ UJ	530	1.0	500	530	130	ICB
108-95-2	Phenol	U	530	1.0	500	530	160	
111-44-4	Bis(2-Chloroethyl)ether	U	350	1.0	330	350	86	
95-57-8	2-Chlorophenol	U	530	1.0	500	530	170	
95-48-7	2-Methylphenol	U	640	1.0	600	640	210	
108-60-1	2,2'-Oxybis(1-chloropropane)	U	350	1.0	330	350	94	
98-86-2	Acetophenone	U	640	1.0	600	640	190	
621-64-7	N-Nitroso-di-n-propylamine	U	350	1.0	330	350	88	
65794-96-9	3&4-Methylphenol	U	640	1.0	600	640	200	
67-72-1	Hexachloroethane	U	350	1.0	330	350	100	
98-95-3	Nitrobenzene	U	350	1.0	330	350	96	
78-59-1	Isophorone	U	350	1.0	330	350	79	
88-75-5	2-Nitrophenol	U	640	1.0	600	640	180	
105-67-9	2,4-Dimethylphenol	U	530	1.0	500	530	170	
111-91-1	Bis(2-Chloroethoxy)methane	U	350	1.0	330	350	100	
120-83-2	2,4-Dichlorophenol	U	530	1.0	500	530	160	
106-47-8	4-Chloroaniline	U	530	1.0	500	530	130	
105-60-2	Caprolactam	U	530	1.0	500	530	150	
59-50-7	4-Chloro-3-Methylphenol	U	530	1.0	500	530	180	
88-06-2	2,4,6-Trichlorophenol	U	530	1.0	500	530	160	
95-95-4	2,4,5-Trichlorophenol	U	530	1.0	500	530	160	
91-58-7	2-Chloronaphthalene	U	350	1.0	330	350	92	
92-52-4	1,1'-Biphenyl	U	350	1.0	330	350	77	
88-74-4	2-Nitroaniline	U	530	1.0	500	530	79	
131-11-3	Dimethyl Phthalate	U	350	1.0	330	350	82	
606-20-2	2,6-Dinitrotoluene	U	350	1.0	330	350	84	
208-96-8	Acenaphthylene	U	350	1.0	330	350	74	
99-09-2	3-Nitroaniline	U	530	1.0	500	530	100	
83-32-9	Acenaphthene	U	350	1.0	330	350	69	
51-28-5	2,4-Dinitrophenol	U	1300	1.0	1200	1300	400	
132-64-9	Dibenzofuran	U	350	1.0	330	350	84	
100-02-7	4-Nitrophenol	~~U~~ UJ	1300	1.0	1200	1300	330	ICB
121-14-2	2,4-Dinitrotoluene	U	350	1.0	330	350	90	
84-66-2	Diethylphthalate	U	350	1.0	330	350	85	
7005-72-3	4-Chlorophenyl-phenylether	U	350	1.0	330	350	82	
100-01-6	4-Nitroaniline	U	530	1.0	500	530	140	
534-52-1	4,6-Dinitro-2-Methylphenol	U	1300	1.0	1200	1300	360	
86-30-6	N-Nitrosodiphenylamine	U	700	1.0	660	700	230	
101-55-3	4-Bromophenyl-phenylether	U	350	1.0	330	350	90	
1912-24-9	Atrazine	U	350	1.0	330	350	96	
87-86-5	Pentachlorophenol	U	870	1.0	820	870	250	
120-12-7	Anthracene	U	350	1.0	330	350	89	
86-74-8	Carbazole	U	530	1.0	500	530	120	

LW
4/18/09

KATAHDIN ANALYTICAL SERVICES
Report of Analytical Results

Client: CH2MHill
Project: TO-009 Lejeune
PO No:
Sample Date: 01/23/09
Received Date: 01/27/09
Extraction Date: 01/30/09
Analysis Date: 13-FEB-2009 17:20
Report Date: 02/24/2009
Matrix: SOIL
% Solids: 94.4

Lab ID: SC0409-13
Client ID: MR08-IS358-4-5-09A
SDG: TO9-44
Extracted by: AC
Extraction Method: SW846 3550
Analyst: JCG
Analysis Method: SW846 8270C
Lab Prep Batch: WG60347
Units: ug/Kgdrywt

CAS#	Compound	Flags	Results	DF	PQL	Adj.PQL	Adj.MDL
84-74-2	Di-n-butylphthalate	U	350	1.0	330	350	110
85-68-7	Butylbenzylphthalate	U	350	1.0	330	350	98
91-94-1	3,3'-Dichlorobenzidine	U	530	1.0	500	530	120
218-01-9	Chrysene	U	350	1.0	330	350	100
117-81-7	bis(2-Ethylhexyl)phthalate	U	350	1.0	330	350	100
117-84-0	Di-n-octylphthalate	U	350	1.0	330	350	220
367-12-4	2-Fluorophenol		57%				
13127-88-3	Phenol-D6		68%				
4165-60-0	Nitrobenzene-D5		60%				
321-60-8	2-Fluorobiphenyl		62%				
118-79-6	2,4,6-Tribromophenol		50%				
1718-51-0	Terphenyl-D14		66%				

LW
4/18/09

8

KATAHDIN ANALYTICAL SERVICES
Report of Analytical Results

Client: CH2MHill
Project: TO-009 Lejeune
PO No:
Sample Date: 01/23/09
Received Date: 01/27/09
Extraction Date: 01/30/09
Analysis Date: 13-FEB-2009 18:02
Report Date: 02/24/2009
Matrix: SOIL
% Solids: 91.9

Lab ID: SC0409-15
Client ID: MR08-IS359-4-5-09A
SDG: TO9-44
Extracted by: AC
Extraction Method: SW846 3550
Analyst: JCG
Analysis Method: SW846 8270C
Lab Prep Batch: WG60347
Units: ug/Kgdrywt

CAS#	Compound	Flags	Results	DF	PQL	Adj.PQL	Adj.MDL
100-52-7	Benzaldehyde	~~U~~ UJ	540	1.0	500	540	130 ICB
108-95-2	Phenol	U	540	1.0	500	540	170
111-44-4	Bis(2-Chloroethyl)ether	U	360	1.0	330	360	88
95-57-8	2-Chlorophenol	U	540	1.0	500	540	180
95-48-7	2-Methylphenol	U	650	1.0	600	650	220
108-60-1	2,2'-Oxybis(1-chloropropane)	U	360	1.0	330	360	97
98-86-2	Acetophenone	U	650	1.0	600	650	190
621-64-7	N-Nitroso-di-n-propylamine	U	360	1.0	330	360	90
65794-96-9	3&4-Methylphenol	U	650	1.0	600	650	200
67-72-1	Hexachloroethane	U	360	1.0	330	360	100
98-95-3	Nitrobenzene	U	360	1.0	330	360	99
78-59-1	Isophorone	U	360	1.0	330	360	82
88-75-5	2-Nitrophenol	U	650	1.0	600	650	180
105-67-9	2,4-Dimethylphenol	U	540	1.0	500	540	180
111-91-1	Bis(2-Chloroethoxy)methane	U	360	1.0	330	360	100
120-83-2	2,4-Dichlorophenol	U	540	1.0	500	540	160
106-47-8	4-Chloroaniline	U	540	1.0	500	540	130
105-60-2	Caprolactam	U	540	1.0	500	540	160
59-50-7	4-Chloro-3-Methylphenol	U	540	1.0	500	540	180
88-06-2	2,4,6-Trichlorophenol	U	540	1.0	500	540	170
95-95-4	2,4,5-Trichlorophenol	U	540	1.0	500	540	170
91-58-7	2-Chloronaphthalene	U	360	1.0	330	360	95
92-52-4	1,1'-Biphenyl	U	360	1.0	330	360	79
88-74-4	2-Nitroaniline	U	540	1.0	500	540	82
131-11-3	Dimethyl Phthalate	U	360	1.0	330	360	85
606-20-2	2,6-Dinitrotoluene	U	360	1.0	330	360	86
208-96-8	Acenaphthylene	U	360	1.0	330	360	76
99-09-2	3-Nitroaniline	U	540	1.0	500	540	100
83-32-9	Acenaphthene	U	360	1.0	330	360	71
51-28-5	2,4-Dinitrophenol	U	1300	1.0	1200	1300	410
132-64-9	Dibenzofuran	U	360	1.0	330	360	86
100-02-7	4-Nitrophenol	~~U~~ UJ	1300	1.0	1200	1300	340 ICB
121-14-2	2,4-Dinitrotoluene	U	360	1.0	330	360	92
84-66-2	Diethylphthalate	U	360	1.0	330	360	87
7005-72-3	4-Chlorophenyl-phenylether	U	360	1.0	330	360	85
100-01-6	4-Nitroaniline	U	540	1.0	500	540	140
534-52-1	4,6-Dinitro-2-Methylphenol	U	1300	1.0	1200	1300	370
86-30-6	N-Nitrosodiphenylamine	U	720	1.0	660	720	240
101-55-3	4-Bromophenyl-phenylether	U	360	1.0	330	360	92
1912-24-9	Atrazine	U	360	1.0	330	360	99
87-86-5	Pentachlorophenol	U	890	1.0	820	890	260
120-12-7	Anthracene	U	360	1.0	330	360	91
86-74-8	Carbazole	U	540	1.0	500	540	120

hw
4/18/09

KATAHDIN ANALYTICAL SERVICES
Report of Analytical Results

Client: CH2MHill
Project: TO-009 Lejeune
PO No:
Sample Date: 01/23/09
Received Date: 01/27/09
Extraction Date: 01/30/09
Analysis Date: 13-FEB-2009 18:02
Report Date: 02/24/2009
Matrix: SOIL
% Solids: 91.9

Lab ID: SC0409-15
Client ID: MR08-IS359-4-5-09A
SDG: TO9-44
Extracted by: AC
Extraction Method: SW846 3550
Analyst: JCG
Analysis Method: SW846 8270C
Lab Prep Batch: WG60347
Units: ug/Kgdrywt

CAS#	Compound	Flags	Results	DF	PQL	Adj.PQL	Adj.MDL
84-74-2	Di-n-butylphthalate	U	360	1.0	330	360	110
85-68-7	Butylbenzylphthalate	U	360	1.0	330	360	100
91-94-1	3,3'-Dichlorobenzidine	U	540	1.0	500	540	120
218-01-9	Chrysene	U	360	1.0	330	360	100
117-81-7	bis(2-Ethylhexyl)phthalate	U	360	1.0	330	360	110
117-84-0	Di-n-octylphthalate	U	360	1.0	330	360	230
367-12-4	2-Fluorophenol		37%				
13127-88-3	Phenol-D6		* 39%				
4165-60-0	Nitrobenzene-D5		36%				
321-60-8	2-Fluorobiphenyl		* 36%				
118-79-6	2,4,6-Tribromophenol		42%				
1718-51-0	Terphenyl-D14		52%				

KW
4/18/09

9

KATAHDIN ANALYTICAL SERVICES
Report of Analytical Results

Client: CH2MHill
Project: TO-009 Lejeune
PO No:
Sample Date: 01/23/09
Received Date: 01/27/09
Extraction Date: 01/30/09
Analysis Date: 13-FEB-2009 18:44
Report Date: 02/24/2009
Matrix: SOIL
% Solids: 93.1

Lab ID: SC0409-17
Client ID: MR08-SS359-09A
SDG: TO9-44
Extracted by: AC
Extraction Method: SW846 3550
Analyst: JCG
Analysis Method: SW846 8270C
Lab Prep Batch: WG60347
Units: ug/Kgdrywt

CAS#	Compound	Flags		Results	DF	PQL	Adj.PQL	Adj.MDL	
100-52-7	Benzaldehyde	U	UJ	540	1.0	500	540	130	~~SSL~~ ICB
108-95-2	Phenol	U		540	1.0	500	540	170	SSL
111-44-4	Bis(2-Chloroethyl)ether	U		350	1.0	330	350	87	
95-57-8	2-Chlorophenol	U		540	1.0	500	540	180	
95-48-7	2-Methylphenol	U		640	1.0	600	640	210	
108-60-1	2,2'-Oxybis(1-chloropropane)	U		350	1.0	330	350	96	
98-86-2	Acetophenone	U		640	1.0	600	640	190	
621-64-7	N-Nitroso-di-n-propylamine	U		350	1.0	330	350	89	
65794-96-9	3&4-Methylphenol	U		640	1.0	600	640	200	
67-72-1	Hexachloroethane	U		350	1.0	330	350	100	
98-95-3	Nitrobenzene	U		350	1.0	330	350	98	
78-59-1	Isophorone	U		350	1.0	330	350	80	
88-75-5	2-Nitrophenol	U		640	1.0	600	640	180	
105-67-9	2,4-Dimethylphenol	U		540	1.0	500	540	180	
111-91-1	Bis(2-Chloroethoxy)methane	U		350	1.0	330	350	100	
120-83-2	2,4-Dichlorophenol	U		540	1.0	500	540	160	
106-47-8	4-Chloroaniline	U		540	1.0	500	540	130	
105-60-2	Caprolactam	U		540	1.0	500	540	150	
59-50-7	4-Chloro-3-Methylphenol	U		540	1.0	500	540	180	
88-06-2	2,4,6-Trichlorophenol	U		540	1.0	500	540	170	
95-95-4	2,4,5-Trichlorophenol	U		540	1.0	500	540	170	
91-58-7	2-Chloronaphthalene	U		350	1.0	330	350	93	
92-52-4	1,1'-Biphenyl	U		350	1.0	330	350	78	
88-74-4	2-Nitroaniline	U		540	1.0	500	540	80	
131-11-3	Dimethyl Phthalate	U		350	1.0	330	350	84	
606-20-2	2,6-Dinitrotoluene	U		350	1.0	330	350	85	
208-96-8	Acenaphthylene	U		350	1.0	330	350	75	
99-09-2	3-Nitroaniline	U		540	1.0	500	540	100	
83-32-9	Acenaphthene	U		350	1.0	330	350	70	
51-28-5	2,4-Dinitrophenol	U		1300	1.0	1200	1300	400	
132-64-9	Dibenzofuran	U		350	1.0	330	350	85	
100-02-7	4-Nitrophenol	U		1300	1.0	1200	1300	330	ICB
121-14-2	2,4-Dinitrotoluene	U		350	1.0	330	350	91	SSL
84-66-2	Diethylphthalate	U		350	1.0	330	350	86	
7005-72-3	4-Chlorophenyl-phenylether	U		350	1.0	330	350	84	
100-01-6	4-Nitroaniline	U		540	1.0	500	540	140	
534-52-1	4,6-Dinitro-2-Methylphenol	U		1300	1.0	1200	1300	360	
86-30-6	N-Nitrosodiphenylamine	U		710	1.0	660	710	240	
101-55-3	4-Bromophenyl-phenylether	U		350	1.0	330	350	91	
1912-24-9	Atrazine	U		350	1.0	330	350	98	
87-86-5	Pentachlorophenol	U		880	1.0	820	880	250	
120-12-7	Anthracene	U		350	1.0	330	350	90	
86-74-8	Carbazole	U		540	1.0	500	540	120	

LW
4/18/09

9

KATAHDIN ANALYTICAL SERVICES
Report of Analytical Results

Client: CH2MHill
Project: TO-009 Lejeune
PO No:
Sample Date: 01/23/09
Received Date: 01/27/09
Extraction Date: 01/30/09
Analysis Date: 13-FEB-2009 18:44
Report Date: 02/24/2009
Matrix: SOIL
% Solids: 93.1

Lab ID: SC0409-17
Client ID: MR08-SS359-09A
SDG: TO9-44
Extracted by: AC
Extraction Method: SW846 3550
Analyst: JCG
Analysis Method: SW846 8270C
Lab Prep Batch: WG60347
Units: ug/Kgdrywt

CAS#	Compound	Flags		Results	DF	PQL	Adj.PQL	Adj.MDL	
84-74-2	Di-n-butylphthalate	U	UJ	350	1.0	330	350	110	SSL
85-68-7	Butylbenzylphthalate	U		350	1.0	330	350	100	
91-94-1	3,3'-Dichlorobenzidine	U		540	1.0	500	540	120	
218-01-9	Chrysene	U		350	1.0	330	350	100	
117-81-7	bis(2-Ethylhexyl)phthalate	U		350	1.0	330	350	100	
117-84-0	Di-n-octylphthalate	U		350	1.0	330	350	230	
367-12-4	2-Fluorophenol			* 30%					
13127-88-3	Phenol-D6			* 31%					
4165-60-0	Nitrobenzene-D5			* 26%					
321-60-8	2-Fluorobiphenyl			* 29%					
118-79-6	2,4,6-Tribromophenol			40%					
1718-51-0	Terphenyl-D14			46%					

kw
4/18/09

9RE

KATAHDIN ANALYTICAL SERVICES
Report of Analytical Results

Client: CH2MHill
Project: TO-009 Lejeune
PO No:
Sample Date: 01/23/09
Received Date: 01/27/09
Extraction Date: 02/16/09
Analysis Date: 18-FEB-2009 16:13
Report Date: 02/20/2009
Matrix: SOIL
% Solids: 93.1

Lab ID: SC0409-17RE
Client ID: MR08-SS359-09A
SDG: TO9-44
Extracted by: AC
Extraction Method: SW846 3550
Analyst: JLP
Analysis Method: SW846 8270C
Lab Prep Batch: WG60887
Units: ug/Kgdrywt

use original

CAS#	Compound	Flags	Results	DF	PQL	Adj.PQL	Adj.MDL	
100-52-7	Benzaldehyde	U UJ	540	1.0	500	540	130	HT
108-95-2	Phenol	U	540	1.0	500	540	170	HT
111-44-4	Bis(2-Chloroethyl)ether	U	350	1.0	330	350	87	
95-57-8	2-Chlorophenol	U	540	1.0	500	540	180	
95-48-7	2-Methylphenol	U	640	1.0	600	640	210	
108-60-1	2,2'-Oxybis(1-chloropropane)	U	350	1.0	330	350	96	
98-86-2	Acetophenone	U	640	1.0	600	640	190	
621-64-7	N-Nitroso-di-n-propylamine	U	350	1.0	330	350	89	
65794-96-9	3&4-Methylphenol	U	640	1.0	600	640	200	
67-72-1	Hexachloroethane	U	350	1.0	330	350	100	
98-95-3	Nitrobenzene	U	350	1.0	330	350	98	
78-59-1	Isophorone	U	350	1.0	330	350	80	
88-75-5	2-Nitrophenol	U	640	1.0	600	640	180	
105-67-9	2,4-Dimethylphenol	U	540	1.0	500	540	180	
111-91-1	Bis(2-Chloroethoxy)methane	U	350	1.0	330	350	100	
120-83-2	2,4-Dichlorophenol	U	540	1.0	500	540	160	
106-47-8	4-Chloroaniline	U	540	1.0	500	540	130	
105-60-2	Caprolactam	U	540	1.0	500	540	150	
59-50-7	4-Chloro-3-Methylphenol	U	540	1.0	500	540	180	
88-06-2	2,4,6-Trichlorophenol	U	540	1.0	500	540	170	
95-95-4	2,4,5-Trichlorophenol	U	540	1.0	500	540	170	
91-58-7	2-Chloronaphthalene	U	350	1.0	330	350	93	
92-52-4	1,1'-Biphenyl	U	350	1.0	330	350	78	
88-74-4	2-Nitroaniline	U	540	1.0	500	540	80	
131-11-3	Dimethyl Phthalate	U	350	1.0	330	350	84	
606-20-2	2,6-Dinitrotoluene	U	350	1.0	330	350	85	
208-96-8	Acenaphthylene	U	350	1.0	330	350	75	
99-09-2	3-Nitroaniline	U	540	1.0	500	540	100	
83-32-9	Acenaphthene	U	350	1.0	330	350	70	
51-28-5	2,4-Dinitrophenol	U	1300	1.0	1200	1300	400	
132-64-9	Dibenzofuran	U	350	1.0	330	350	85	
100-02-7	4-Nitrophenol	U	1300	1.0	1200	1300	330	HT
121-14-2	2,4-Dinitrotoluene	U	350	1.0	330	350	91	HT
84-66-2	Diethylphthalate	U	350	1.0	330	350	86	
7005-72-3	4-Chlorophenyl-phenylether	U	350	1.0	330	350	84	
100-01-6	4-Nitroaniline	U	540	1.0	500	540	140	
534-52-1	4,6-Dinitro-2-Methylphenol	U	1300	1.0	1200	1300	360	
86-30-6	N-Nitrosodiphenylamine	U	710	1.0	660	710	240	
101-55-3	4-Bromophenyl-phenylether	U	350	1.0	330	350	91	
1912-24-9	Atrazine	U	350	1.0	330	350	98	
87-86-5	Pentachlorophenol	U	880	1.0	820	880	250	
120-12-7	Anthracene	U	350	1.0	330	350	90	
86-74-8	Carbazole	U	540	1.0	500	540	120	

RE

lw
11/8/09

9RE

KATAHDIN ANALYTICAL SERVICES
Report of Analytical Results

Client: CH2MHill
Project: TO-009 Lejeune
PO No:
Sample Date: 01/23/09
Received Date: 01/27/09
Extraction Date: 02/16/09
Analysis Date: 18-FEB-2009 16:13
Report Date: 02/20/2009
Matrix: SOIL
% Solids: 93.1

Lab ID: SC0409-17RE
Client ID: MR08-SS359-09A
SDG: T09-44
Extracted by: AC
Extraction Method: SW846 3550
Analyst: JLP
Analysis Method: SW846 8270C
Lab Prep Batch: WG60887
Units: ug/Kgdrywt

Use original

CAS#	Compound	Flags	Results	DF	PQL	Adj.PQL	Adj.MDL	
84-74-2	Di-n-butylphthalate	~~U~~ UJ	350	1.0	330	350	110	HT
85-68-7	Butylbenzylphthalate	~~U~~	350	1.0	330	350	100	
91-94-1	3,3'-Dichlorobenzidine	~~U~~	540	1.0	500	540	120	
218-01-9	Chrysene	~~U~~	350	1.0	330	350	100	
117-81-7	bis(2-Ethylhexyl)phthalate	~~U~~	350	1.0	330	350	100	
117-84-0	Di-n-octylphthalate	U	350	1.0	330	350	230	
367-12-4	2-Fluorophenol		72%					
13127-88-3	Phenol-D6		87%					
4165-60-0	Nitrobenzene-D5		74%					
321-60-8	2-Fluorobiphenyl		76%					
118-79-6	2,4,6-Tribromophenol		91%					
1718-51-0	Terphenyl-D14		88%					

R RE

lw
4/18/09

10

KATAHDIN ANALYTICAL SERVICES
Report of Analytical Results

Client: CH2MHill
Project: TO-009 Lejeune
PO No:
Sample Date: 01/23/09
Received Date: 01/27/09
Extraction Date: 01/30/09
Analysis Date: 13-FEB-2009 19:26
Report Date: 02/24/2009
Matrix: SOIL
% Solids: 87.4

Lab ID: SC0409-19
Client ID: MR08-IS360-4-5-09A
SDG: TO9-44
Extracted by: AC
Extraction Method: SW846 3550
Analyst: JCG
Analysis Method: SW846 8270C
Lab Prep Batch: WG60347
Units: ug/Kgdrywt

CAS#	Compound	Flags	Results	DF	PQL	Adj.PQL	Adj.MDL	
100-52-7	Benzaldehyde	~~U~~ UJ	570	1.0	500	570	140	JCB
108-95-2	Phenol	U	570	1.0	500	570	180	
111-44-4	Bis(2-Chloroethyl)ether	U	380	1.0	330	380	93	
95-57-8	2-Chlorophenol	U	570	1.0	500	570	190	
95-48-7	2-Methylphenol	U	690	1.0	600	690	230	
108-60-1	2,2'-Oxybis(1-chloropropane)	U	380	1.0	330	380	100	
98-86-2	Acetophenone	U	690	1.0	600	690	200	
621-64-7	N-Nitroso-di-n-propylamine	U	380	1.0	330	380	95	
65794-96-9	3&4-Methylphenol	U	690	1.0	600	690	210	
67-72-1	Hexachloroethane	U	380	1.0	330	380	110	
98-95-3	Nitrobenzene	U	380	1.0	330	380	100	
78-59-1	Isophorone	U	380	1.0	330	380	86	
88-75-5	2-Nitrophenol	U	690	1.0	600	690	190	
105-67-9	2,4-Dimethylphenol	U	570	1.0	500	570	190	
111-91-1	Bis(2-Chloroethoxy)methane	U	380	1.0	330	380	110	
120-83-2	2,4-Dichlorophenol	U	570	1.0	500	570	170	
106-47-8	4-Chloroaniline	U	570	1.0	500	570	140	
105-60-2	Caprolactam	U	570	1.0	500	570	160	
59-50-7	4-Chloro-3-Methylphenol	U	570	1.0	500	570	190	
88-06-2	2,4,6-Trichlorophenol	U	570	1.0	500	570	180	
95-95-4	2,4,5-Trichlorophenol	U	570	1.0	500	570	180	
91-58-7	2-Chloronaphthalene	U	380	1.0	330	380	100	
92-52-4	1,1'-Biphenyl	U	380	1.0	330	380	83	
88-74-4	2-Nitroaniline	U	570	1.0	500	570	86	
131-11-3	Dimethyl Phthalate	U	380	1.0	330	380	89	
606-20-2	2,6-Dinitrotoluene	U	380	1.0	330	380	90	
208-96-8	Acenaphthylene	U	380	1.0	330	380	80	
99-09-2	3-Nitroaniline	U	570	1.0	500	570	110	
83-32-9	Acenaphthene	U	380	1.0	330	380	74	
51-28-5	2,4-Dinitrophenol	U	1400	1.0	1200	1400	430	
132-64-9	Dibenzofuran	U	380	1.0	330	380	90	
100-02-7	4-Nitrophenol	~~U~~ UJ	1400	1.0	1200	1400	350	JCB
121-14-2	2,4-Dinitrotoluene	U	380	1.0	330	380	97	
84-66-2	Diethylphthalate	U	380	1.0	330	380	92	
7005-72-3	4-Chlorophenyl-phenylether	U	380	1.0	330	380	89	
100-01-6	4-Nitroaniline	U	570	1.0	500	570	150	
534-52-1	4,6-Dinitro-2-Methylphenol	U	1400	1.0	1200	1400	380	
86-30-6	N-Nitrosodiphenylamine	U	750	1.0	660	750	250	
101-55-3	4-Bromophenyl-phenylether	U	380	1.0	330	380	97	
1912-24-9	Atrazine	U	380	1.0	330	380	100	
87-86-5	Pentachlorophenol	U	940	1.0	820	940	270	
120-12-7	Anthracene	U	380	1.0	330	380	96	
86-74-8	Carbazole	U	570	1.0	500	570	130	

LW
4/18/09

KATAHDIN ANALYTICAL SERVICES
Report of Analytical Results

Client: CH2MHill
Project: TO-009 Lejeune
PO No:
Sample Date: 01/23/09
Received Date: 01/27/09
Extraction Date: 01/30/09
Analysis Date: 13-FEB-2009 19:26
Report Date: 02/24/2009
Matrix: SOIL
% Solids: 87.4

Lab ID: SC0409-19
Client ID: MR08-IS360-4-5-09A
SDG: TO9-44
Extracted by: AC
Extraction Method: SW846 3550
Analyst: JCG
Analysis Method: SW846 8270C
Lab Prep Batch: WG60347
Units: ug/Kgdrywt

CAS#	Compound	Flags	Results	DF	PQL	Adj.PQL	Adj.MDL
84-74-2	Di-n-butylphthalate	U	380	1.0	330	380	120
85-68-7	Butylbenzylphthalate	U	380	1.0	330	380	110
91-94-1	3,3'-Dichlorobenzidine	U	570	1.0	500	570	130
218-01-9	Chrysene	U	380	1.0	330	380	110
117-81-7	bis(2-Ethylhexyl)phthalate	U	380	1.0	330	380	110
117-84-0	Di-n-octylphthalate	U	380	1.0	330	380	240
367-12-4	2-Fluorophenol		58%				
13127-88-3	Phenol-D6		73%				
4165-60-0	Nitrobenzene-D5		60%				
321-60-8	2-Fluorobiphenyl		64%				
118-79-6	2,4,6-Tribromophenol		51%				
1718-51-0	Terphenyl-D14		71%				

LW
4/18/09

11

KATAHDIN ANALYTICAL SERVICES
Report of Analytical Results

Client: CH2MHill
Project: TO-009 Lejeune
PO No:
Sample Date: 01/23/09
Received Date: 01/27/09
Extraction Date: 02/12/09
Analysis Date: 13-FEB-2009 20:08
Report Date: 02/24/2009
Matrix: SOIL
% Solids: 88.1

Lab ID: SC0409-21RE
Client ID: MR08-IS360D-4-5-09A
SDG: TO9-44
Extracted by: CB
Extraction Method: SW846 3550
Analyst: JCG
Analysis Method: SW846 8270C
Lab Prep Batch: WG60726
Units: ug/Kgdrywt

CAS#	Compound	Flags	Results	DF	PQL	Adj.PQL	Adj.MDL
100-52-7	Benzaldehyde	~~U~~ UJ	570	1.0	500	570	140 ~~ICB~~ HT
108-95-2	Phenol	U	570	1.0	500	570	180 HT
111-44-4	Bis(2-Chloroethyl)ether	U	370	1.0	330	370	92
95-57-8	2-Chlorophenol	U	570	1.0	500	570	190
95-48-7	2-Methylphenol	U	680	1.0	600	680	230
108-60-1	2,2'-Oxybis(1-chloropropane)	U	370	1.0	330	370	100
98-86-2	Acetophenone	U	680	1.0	600	680	200
621-64-7	N-Nitroso-di-n-propylamine	U	370	1.0	330	370	94
65794-96-9	3&4-Methylphenol	U	680	1.0	600	680	210
67-72-1	Hexachloroethane	U	370	1.0	330	370	110
98-95-3	Nitrobenzene	U	370	1.0	330	370	100
78-59-1	Isophorone	U	370	1.0	330	370	85
88-75-5	2-Nitrophenol	U	680	1.0	600	680	190
105-67-9	2,4-Dimethylphenol	U	570	1.0	500	570	190
111-91-1	Bis(2-Chloroethoxy)methane	U	370	1.0	330	370	110
120-83-2	2,4-Dichlorophenol	U	570	1.0	500	570	170
106-47-8	4-Chloroaniline	U	570	1.0	500	570	140
105-60-2	Caprolactam	U	570	1.0	500	570	160
59-50-7	4-Chloro-3-Methylphenol	U	570	1.0	500	570	190
88-06-2	2,4,6-Trichlorophenol	U	570	1.0	500	570	180
95-95-4	2,4,5-Trichlorophenol	U	570	1.0	500	570	180
91-58-7	2-Chloronaphthalene	U	370	1.0	330	370	99
92-52-4	1,1'-Biphenyl	U	370	1.0	330	370	83
88-74-4	2-Nitroaniline	U	570	1.0	500	570	85
131-11-3	Dimethyl Phthalate	U	370	1.0	330	370	88
606-20-2	2,6-Dinitrotoluene	U	370	1.0	330	370	90
208-96-8	Acenaphthylene	U	370	1.0	330	370	79
99-09-2	3-Nitroaniline	U	570	1.0	500	570	110
83-32-9	Acenaphthene	U	370	1.0	330	370	74
51-28-5	2,4-Dinitrophenol	U	1400	1.0	1200	1400	430
132-64-9	Dibenzofuran	U	370	1.0	330	370	90
100-02-7	4-Nitrophenol	U	1400	1.0	1200	1400	350
121-14-2	2,4-Dinitrotoluene	U	370	1.0	330	370	96
84-66-2	Diethylphthalate	U	370	1.0	330	370	91
7005-72-3	4-Chlorophenyl-phenylether	U	370	1.0	330	370	88
100-01-6	4-Nitroaniline	U	570	1.0	500	570	150
534-52-1	4,6-Dinitro-2-Methylphenol	U	1400	1.0	1200	1400	380
86-30-6	N-Nitrosodiphenylamine	U	750	1.0	660	750	250
101-55-3	4-Bromophenyl-phenylether	U	370	1.0	330	370	96
1912-24-9	Atrazine	U	370	1.0	330	370	100
87-86-5	Pentachlorophenol	U	930	1.0	820	930	270
120-12-7	Anthracene	U	370	1.0	330	370	95
86-74-8	Carbazole	U	570	1.0	500	570	120

kw
4/18/09

KATAHDIN ANALYTICAL SERVICES
Report of Analytical Results

11

Client: CH2MHill
Project: TO-009 Lejeune
PO No:
Sample Date: 01/23/09
Received Date: 01/27/09
Extraction Date: 02/12/09
Analysis Date: 13-FEB-2009 20:08
Report Date: 02/24/2009
Matrix: SOIL
% Solids: 88.1

Lab ID: SC0409-21RE
Client ID: MR08-IS360D-4-5-09A
SDG: TO9-44
Extracted by: CB
Extraction Method: SW846 3550
Analyst: JCG
Analysis Method: SW846 8270C
Lab Prep Batch: WG60726
Units: ug/Kgdrywt

CAS#	Compound	Flags	Results	DF	PQL	Adj.PQL	Adj.MDL	
84-74-2	Di-n-butylphthalate	U UJ	370	1.0	330	370	110	HT
85-68-7	Butylbenzylphthalate	U	370	1.0	330	370	100	
91-94-1	3,3'-Dichlorobenzidine	U	570	1.0	500	570	130	
218-01-9	Chrysene	U	370	1.0	330	370	110	
117-81-7	bis(2-Ethylhexyl)phthalate	J J	140	1.0	330	370	110	
117-84-0	Di-n-octylphthalate	U UJ	370	1.0	330	370	240	
367-12-4	2-Fluorophenol		84%					
13127-88-3	Phenol-D6		92%					
4165-60-0	Nitrobenzene-D5		82%					
321-60-8	2-Fluorobiphenyl		90%					
118-79-6	2,4,6-Tribromophenol		99%					
1718-51-0	Terphenyl-D14		87%					

kw 4/18/09

KATAHDIN ANALYTICAL SERVICES
Report of Analytical Results

Client: CH2MHill
Project: TO-009 Lejeune
PO No:
Sample Date: 01/23/09
Received Date: 01/27/09
Extraction Date: 01/30/09
Analysis Date: 15-FEB-2009 13:48
Report Date: 02/24/2009
Matrix: SOIL
% Solids: 89.1

Lab ID: SC0409-23
Client ID: MR08-SS360-09A
SDG: TO9-44
Extracted by: AC
Extraction Method: SW846 3550
Analyst: JLP
Analysis Method: SW846 8270C
Lab Prep Batch: WG60347
Units: ug/Kgdrywt

CAS#	Compound	Flags	Results	DF	PQL	Adj.PQL	Adj.MDL	
100-52-7	Benzaldehyde	~~U~~ UJ	560	1.0	500	560	130	ICB
108-95-2	Phenol	U	560	1.0	500	560	180	
111-44-4	Bis(2-Chloroethyl)ether	U	370	1.0	330	370	91	
95-57-8	2-Chlorophenol	U	560	1.0	500	560	180	
95-48-7	2-Methylphenol	U	670	1.0	600	670	220	
108-60-1	2,2'-Oxybis(1-chloropropane)	U	370	1.0	330	370	100	
98-86-2	Acetophenone	U	670	1.0	600	670	200	
621-64-7	N-Nitroso-di-n-propylamine	U	370	1.0	330	370	93	
65794-96-9	3&4-Methylphenol	U	670	1.0	600	670	210	
67-72-1	Hexachloroethane	U	370	1.0	330	370	110	
98-95-3	Nitrobenzene	U	370	1.0	330	370	100	
78-59-1	Isophorone	U	370	1.0	330	370	84	
88-75-5	2-Nitrophenol	U	670	1.0	600	670	190	
105-67-9	2,4-Dimethylphenol	U	560	1.0	500	560	180	
111-91-1	Bis(2-Chloroethoxy)methane	U	370	1.0	330	370	110	
120-83-2	2,4-Dichlorophenol	U	560	1.0	500	560	170	
106-47-8	4-Chloroaniline	U	560	1.0	500	560	130	
105-60-2	Caprolactam	U	560	1.0	500	560	160	
59-50-7	4-Chloro-3-Methylphenol	U	560	1.0	500	560	190	
88-06-2	2,4,6-Trichlorophenol	U	560	1.0	500	560	170	
95-95-4	2,4,5-Trichlorophenol	U	560	1.0	500	560	170	
91-58-7	2-Chloronaphthalene	U	370	1.0	330	370	98	
92-52-4	1,1'-Biphenyl	U	370	1.0	330	370	82	
88-74-4	2-Nitroaniline	U	560	1.0	500	560	84	
131-11-3	Dimethyl Phthalate	U	370	1.0	330	370	88	
606-20-2	2,6-Dinitrotoluene	U	370	1.0	330	370	89	
208-96-8	Acenaphthylene	U	370	1.0	330	370	78	
99-09-2	3-Nitroaniline	U	560	1.0	500	560	100	
83-32-9	Acenaphthene	U	370	1.0	330	370	73	
51-28-5	2,4-Dinitrophenol	U	1300	1.0	1200	1300	420	
132-64-9	Dibenzofuran	U	370	1.0	330	370	89	
100-02-7	4-Nitrophenol	~~U~~ UJ	1300	1.0	1200	1300	350	ICB
121-14-2	2,4-Dinitrotoluene	U	370	1.0	330	370	95	
84-66-2	Diethylphthalate	U	370	1.0	330	370	90	
7005-72-3	4-Chlorophenyl-phenylether	U	370	1.0	330	370	88	
100-01-6	4-Nitroaniline	U	560	1.0	500	560	150	
534-52-1	4,6-Dinitro-2-Methylphenol	U	1300	1.0	1200	1300	380	
86-30-6	N-Nitrosodiphenylamine	U	740	1.0	660	740	240	
101-55-3	4-Bromophenyl-phenylether	U	370	1.0	330	370	95	
1912-24-9	Atrazine	U	370	1.0	330	370	100	
87-86-5	Pentachlorophenol	U	920	1.0	820	920	270	
120-12-7	Anthracene	U	370	1.0	330	370	94	
86-74-8	Carbazole	U	560	1.0	500	560	120	

LW
4/18/09

KATAHDIN ANALYTICAL SERVICES
Report of Analytical Results

Client: CH2MHill
Project: TO-009 Lejeune
PO No:
Sample Date: 01/23/09
Received Date: 01/27/09
Extraction Date: 01/30/09
Analysis Date: 15-FEB-2009 13:48
Report Date: 02/24/2009
Matrix: SOIL
% Solids: 89.1

Lab ID: SC0409-23
Client ID: MR08-SS360-09A
SDG: TO9-44
Extracted by: AC
Extraction Method: SW846 3550
Analyst: JLP
Analysis Method: SW846 8270C
Lab Prep Batch: WG60347
Units: ug/Kgdrywt

CAS#	Compound	Flags	Results	DF	PQL	Adj.PQL	Adj.MDL
84-74-2	Di-n-butylphthalate	U	370	1.0	330	370	110
85-68-7	Butylbenzylphthalate	U	370	1.0	330	370	100
91-94-1	3,3'-Dichlorobenzidine	U	560	1.0	500	560	130
218-01-9	Chrysene	U	370	1.0	330	370	110
117-81-7	bis(2-Ethylhexyl)phthalate	U	370	1.0	330	370	110
117-84-0	Di-n-octylphthalate	U	370	1.0	330	370	240
367-12-4	2-Fluorophenol		53%				
13127-88-3	Phenol-D6		60%				
4165-60-0	Nitrobenzene-D5		54%				
321-60-8	2-Fluorobiphenyl		61%				
118-79-6	2,4,6-Tribromophenol		69%				
1718-51-0	Terphenyl-D14		67%				

LW
4/18/09

KATAHDIN ANALYTICAL SERVICES
Report of Analytical Results

Client: CH2MHill
Project: TO-009 Lejeune
PO No:
Sample Date: 01/23/09
Received Date: 01/27/09
Extraction Date: 01/30/09
Analysis Date: 15-FEB-2009 14:30
Report Date: 02/24/2009
Matrix: SOIL
% Solids: 89.1

Lab ID: SC0409-25
Client ID: MR08-SS360D-09A
SDG: TO9-44
Extracted by: AC
Extraction Method: SW846 3550
Analyst: JLP
Analysis Method: SW846 8270C
Lab Prep Batch: WG60347
Units: ug/Kgdrywt

CAS#	Compound	Flags	Results	DF	PQL	Adj.PQL	Adj.MDL
100-52-7	Benzaldehyde	~~J~~ UJ	560	1.0	500	560	130 ICB
108-95-2	Phenol	U	560	1.0	500	560	180
111-44-4	Bis(2-Chloroethyl)ether	U	370	1.0	330	370	91
95-57-8	2-Chlorophenol	U	560	1.0	500	560	180
95-48-7	2-Methylphenol	U	670	1.0	600	670	220
108-60-1	2,2'-Oxybis(1-chloropropane)	U	370	1.0	330	370	100
98-86-2	Acetophenone	U	670	1.0	600	670	200
621-64-7	N-Nitroso-di-n-propylamine	U	370	1.0	330	370	93
65794-96-9	3&4-Methylphenol	U	670	1.0	600	670	210
67-72-1	Hexachloroethane	U	370	1.0	330	370	110
98-95-3	Nitrobenzene	U	370	1.0	330	370	100
78-59-1	Isophorone	U	370	1.0	330	370	84
88-75-5	2-Nitrophenol	U	670	1.0	600	670	190
105-67-9	2,4-Dimethylphenol	U	560	1.0	500	560	180
111-91-1	Bis(2-Chloroethoxy)methane	U	370	1.0	330	370	110
120-83-2	2,4-Dichlorophenol	U	560	1.0	500	560	170
106-47-8	4-Chloroaniline	U	560	1.0	500	560	130
105-60-2	Caprolactam	U	560	1.0	500	560	160
59-50-7	4-Chloro-3-Methylphenol	U	560	1.0	500	560	190
88-06-2	2,4,6-Trichlorophenol	U	560	1.0	500	560	170
95-95-4	2,4,5-Trichlorophenol	U	560	1.0	500	560	170
91-58-7	2-Chloronaphthalene	U	370	1.0	330	370	98
92-52-4	1,1'-Biphenyl	U	370	1.0	330	370	82
88-74-4	2-Nitroaniline	U	560	1.0	500	560	84
131-11-3	Dimethyl Phthalate	U	370	1.0	330	370	88
606-20-2	2,6-Dinitrotoluene	U	370	1.0	330	370	89
208-96-8	Acenaphthylene	U	370	1.0	330	370	78
99-09-2	3-Nitroaniline	U	560	1.0	500	560	100
83-32-9	Acenaphthene	U	370	1.0	330	370	73
51-28-5	2,4-Dinitrophenol	U	1300	1.0	1200	1300	420
132-64-9	Dibenzofuran	U	370	1.0	330	370	89
100-02-7	4-Nitrophenol	~~J~~ UJ	1300	1.0	1200	1300	350 ICB
121-14-2	2,4-Dinitrotoluene	U	370	1.0	330	370	95
84-66-2	Diethylphthalate	U	370	1.0	330	370	90
7005-72-3	4-Chlorophenyl-phenylether	U	370	1.0	330	370	88
100-01-6	4-Nitroaniline	U	560	1.0	500	560	150
534-52-1	4,6-Dinitro-2-Methylphenol	U	1300	1.0	1200	1300	380
86-30-6	N-Nitrosodiphenylamine	U	740	1.0	660	740	240
101-55-3	4-Bromophenyl-phenylether	U	370	1.0	330	370	95
1912-24-9	Atrazine	U	370	1.0	330	370	100
87-86-5	Pentachlorophenol	U	920	1.0	820	920	260
120-12-7	Anthracene	U	370	1.0	330	370	94
86-74-8	Carbazole	U	560	1.0	500	560	120

lw 4/18/09

KATAHDIN ANALYTICAL SERVICES
Report of Analytical Results

Client: CH2MHill
Project: TO-009 Lejeune
PO No:
Sample Date: 01/23/09
Received Date: 01/27/09
Extraction Date: 01/30/09
Analysis Date: 15-FEB-2009 14:30
Report Date: 02/24/2009
Matrix: SOIL
% Solids: 89.1

Lab ID: SC0409-25
Client ID: MR08-SS360D-09A
SDG: TO9-44
Extracted by: AC
Extraction Method: SW846 3550
Analyst: JLP
Analysis Method: SW846 8270C
Lab Prep Batch: WG60347
Units: ug/Kgdrywt

CAS#	Compound	Flags	Results	DF	PQL	Adj.PQL	Adj.MDL
84-74-2	Di-n-butylphthalate	U	370	1.0	330	370	110
85-68-7	Butylbenzylphthalate	U	370	1.0	330	370	100
91-94-1	3,3'-Dichlorobenzidine	U	560	1.0	500	560	130
218-01-9	Chrysene	U	370	1.0	330	370	110
117-81-7	bis(2-Ethylhexyl)phthalate	J	130	1.0	330	370	110
117-84-0	Di-n-octylphthalate	U	370	1.0	330	370	240
367-12-4	2-Fluorophenol		71%				
13127-88-3	Phenol-D6		78%				
4165-60-0	Nitrobenzene-D5		70%				
321-60-8	2-Fluorobiphenyl		71%				
118-79-6	2,4,6-Tribromophenol		81%				
1718-51-0	Terphenyl-D14		74%				

lw
4/18/09

14

KATAHDIN ANALYTICAL SERVICES
Report of Analytical Results

Client: CH2MHill
Project: TO-009 Lejeune
PO No:
Sample Date: 01/23/09
Received Date: 01/27/09
Extraction Date: 01/30/09
Analysis Date: 15-FEB-2009 23:35
Report Date: 02/24/2009
Matrix: SOIL
% Solids: 90.3

Lab ID: SC0409-27
Client ID: MR08-SS361-09A
SDG: TO9-44
Extracted by: AC
Extraction Method: SW846 3550
Analyst: JLP
Analysis Method: SW846 8270C
Lab Prep Batch: WG60347
Units: ug/Kgdrywt

CAS#	Compound	Flags	Results	DF	PQL	Adj.PQL	Adj.MDL	
100-52-7	Benzaldehyde	~~U~~ UJ	550	1.0	500	550	130	ICB
108-95-2	Phenol	U	550	1.0	500	550	170	
111-44-4	Bis(2-Chloroethyl)ether	U	360	1.0	330	360	90	
95-57-8	2-Chlorophenol	U	550	1.0	500	550	180	
95-48-7	2-Methylphenol	U	660	1.0	600	660	220	
108-60-1	2,2'-Oxybis(1-chloropropane)	U	360	1.0	330	360	98	
98-86-2	Acetophenone	U	660	1.0	600	660	200	
621-64-7	N-Nitroso-di-n-propylamine	U	360	1.0	330	360	92	
65794-96-9	3&4-Methylphenol	U	660	1.0	600	660	210	
67-72-1	Hexachloroethane	U	360	1.0	330	360	110	
98-95-3	Nitrobenzene	U	360	1.0	330	360	100	
78-59-1	Isophorone	U	360	1.0	330	360	83	
88-75-5	2-Nitrophenol	U	660	1.0	600	660	180	
105-67-9	2,4-Dimethylphenol	U	550	1.0	500	550	180	
111-91-1	Bis(2-Chloroethoxy)methane	U	360	1.0	330	360	110	
120-83-2	2,4-Dichlorophenol	U	550	1.0	500	550	170	
106-47-8	4-Chloroaniline	U	550	1.0	500	550	130	
105-60-2	Caprolactam	U	550	1.0	500	550	160	
59-50-7	4-Chloro-3-Methylphenol	U	550	1.0	500	550	180	
88-06-2	2,4,6-Trichlorophenol	U	550	1.0	500	550	170	
95-95-4	2,4,5-Trichlorophenol	U	550	1.0	500	550	170	
91-58-7	2-Chloronaphthalene	U	360	1.0	330	360	96	
92-52-4	1,1'-Biphenyl	U	360	1.0	330	360	81	
88-74-4	2-Nitroaniline	U	550	1.0	500	550	83	
131-11-3	Dimethyl Phthalate	U	360	1.0	330	360	86	
606-20-2	2,6-Dinitrotoluene	U	360	1.0	330	360	88	
208-96-8	Acenaphthylene	U	360	1.0	330	360	78	
99-09-2	3-Nitroaniline	U	550	1.0	500	550	100	
83-32-9	Acenaphthene	U	360	1.0	330	360	72	
51-28-5	2,4-Dinitrophenol	U	1300	1.0	1200	1300	420	
132-64-9	Dibenzofuran	U	360	1.0	330	360	88	
100-02-7	4-Nitrophenol	~~U~~ UJ	1300	1.0	1200	1300	340	ICB
121-14-2	2,4-Dinitrotoluene	U	360	1.0	330	360	94	
84-66-2	Diethylphthalate	U	360	1.0	330	360	89	
7005-72-3	4-Chlorophenyl-phenylether	U	360	1.0	330	360	86	
100-01-6	4-Nitroaniline	U	550	1.0	500	550	150	
534-52-1	4,6-Dinitro-2-Methylphenol	U	1300	1.0	1200	1300	370	
86-30-6	N-Nitrosodiphenylamine	U	730	1.0	660	730	240	
101-55-3	4-Bromophenyl-phenylether	U	360	1.0	330	360	94	
1912-24-9	Atrazine	U	360	1.0	330	360	100	
87-86-5	Pentachlorophenol	U	910	1.0	820	910	260	
120-12-7	Anthracene	U	360	1.0	330	360	93	
86-74-8	Carbazole	U	550	1.0	500	550	120	

fw
4/18/09

KATAHDIN ANALYTICAL SERVICES
Report of Analytical Results

Client: CH2MHill
Project: TO-009 Lejeune
PO No:
Sample Date: 01/23/09
Received Date: 01/27/09
Extraction Date: 01/30/09
Analysis Date: 15-FEB-2009 23:35
Report Date: 02/24/2009
Matrix: SOIL
% Solids: 90.3

Lab ID: SC0409-27
Client ID: MR08-SS361-09A
SDG: TO9-44
Extracted by: AC
Extraction Method: SW846 3550
Analyst: JLP
Analysis Method: SW846 8270C
Lab Prep Batch: WG60347
Units: ug/Kgdrywt

CAS#	Compound	Flags	Results	DF	PQL	Adj.PQL	Adj.MDL
84-74-2	Di-n-butylphthalate	U	360	1.0	330	360	110
85-68-7	Butylbenzylphthalate	U	360	1.0	330	360	100
91-94-1	3,3'-Dichlorobenzidine	U	550	1.0	500	550	130
218-01-9	Chrysene	U	360	1.0	330	360	100
117-81-7	bis(2-Ethylhexyl)phthalate	J	200	1.0	330	360	110
117-84-0	Di-n-octylphthalate	U	360	1.0	330	360	230
367-12-4	2-Fluorophenol		72%				
13127-88-3	Phenol-D6		91%				
4165-60-0	Nitrobenzene-D5		68%				
321-60-8	2-Fluorobiphenyl		80%				
118-79-6	2,4,6-Tribromophenol		85%				
1718-51-0	Terphenyl-D14		72%				

lew
4/18/09

KATAHDIN ANALYTICAL SERVICES
Report of Analytical Results

Client: CH2MHill
Project: TO-009 Lejeune
PO No:
Sample Date: 01/23/09
Received Date: 01/27/09
Extraction Date: 01/30/09
Analysis Date: 15-FEB-2009 15:13
Report Date: 02/24/2009
Matrix: SOIL
% Solids: 88.1

Lab ID: SC0409-29
Client ID: MR08-IS361-4-5-09A
SDG: TO9-44
Extracted by: AC
Extraction Method: SW846 3550
Analyst: JLP
Analysis Method: SW846 8270C
Lab Prep Batch: WG60347
Units: ug/Kgdrywt

CAS#	Compound	Flags	Results	DF	PQL	Adj.PQL	Adj.MDL
100-52-7	Benzaldehyde	~~U~~ UJ	570	1.0	500	570	140 ICB
108-95-2	Phenol	U	570	1.0	500	570	180
111-44-4	Bis(2-Chloroethyl)ether	U	370	1.0	330	370	92
95-57-8	2-Chlorophenol	U	570	1.0	500	570	190
95-48-7	2-Methylphenol	U	680	1.0	600	680	230
108-60-1	2,2'-Oxybis(1-chloropropane)	U	370	1.0	330	370	100
98-86-2	Acetophenone	U	680	1.0	600	680	200
621-64-7	N-Nitroso-di-n-propylamine	U	370	1.0	330	370	94
65794-96-9	3&4-Methylphenol	U	680	1.0	600	680	210
67-72-1	Hexachloroethane	U	370	1.0	330	370	110
98-95-3	Nitrobenzene	U	370	1.0	330	370	100
78-59-1	Isophorone	U	370	1.0	330	370	85
88-75-5	2-Nitrophenol	U	680	1.0	600	680	190
105-67-9	2,4-Dimethylphenol	U	570	1.0	500	570	190
111-91-1	Bis(2-Chloroethoxy)methane	U	370	1.0	330	370	110
120-83-2	2,4-Dichlorophenol	U	570	1.0	500	570	170
106-47-8	4-Chloroaniline	U	570	1.0	500	570	140
105-60-2	Caprolactam	U	570	1.0	500	570	160
59-50-7	4-Chloro-3-Methylphenol	U	570	1.0	500	570	190
88-06-2	2,4,6-Trichlorophenol	U	570	1.0	500	570	180
95-95-4	2,4,5-Trichlorophenol	U	570	1.0	500	570	180
91-58-7	2-Chloronaphthalene	U	370	1.0	330	370	99
92-52-4	1,1'-Biphenyl	U	370	1.0	330	370	83
88-74-4	2-Nitroaniline	U	570	1.0	500	570	85
131-11-3	Dimethyl Phthalate	U	370	1.0	330	370	88
606-20-2	2,6-Dinitrotoluene	U	370	1.0	330	370	90
208-96-8	Acenaphthylene	U	370	1.0	330	370	79
99-09-2	3-Nitroaniline	U	570	1.0	500	570	110
83-32-9	Acenaphthene	U	370	1.0	330	370	74
51-28-5	2,4-Dinitrophenol	U	1400	1.0	1200	1400	430
132-64-9	Dibenzofuran	U	370	1.0	330	370	90
100-02-7	4-Nitrophenol	~~U~~ UJ	1400	1.0	1200	1400	350 ICB
121-14-2	2,4-Dinitrotoluene	U	370	1.0	330	370	96
84-66-2	Diethylphthalate	U	370	1.0	330	370	91
7005-72-3	4-Chlorophenyl-phenylether	U	370	1.0	330	370	88
100-01-6	4-Nitroaniline	U	570	1.0	500	570	150
534-52-1	4,6-Dinitro-2-Methylphenol	U	1400	1.0	1200	1400	380
86-30-6	N-Nitrosodiphenylamine	U	750	1.0	660	750	250
101-55-3	4-Bromophenyl-phenylether	U	370	1.0	330	370	96
1912-24-9	Atrazine	U	370	1.0	330	370	100
87-86-5	Pentachlorophenol	U	930	1.0	820	930	270
120-12-7	Anthracene	U	370	1.0	330	370	95
86-74-8	Carbazole	U	570	1.0	500	570	130

kw
4/18/09

KATAHDIN ANALYTICAL SERVICES
Report of Analytical Results

Client: CH2MHill
Project: TO-009 Lejeune
PO No:
Sample Date: 01/23/09
Received Date: 01/27/09
Extraction Date: 01/30/09
Analysis Date: 15-FEB-2009 15:13
Report Date: 02/24/2009
Matrix: SOIL
% Solids: 88.1

Lab ID: SC0409-29
Client ID: MR08-IS361-4-5-09A
SDG: TO9-44
Extracted by: AC
Extraction Method: SW846 3550
Analyst: JLP
Analysis Method: SW846 8270C
Lab Prep Batch: WG60347
Units: ug/Kgdrywt

CAS#	Compound	Flags	Results	DF	PQL	Adj.PQL	Adj.MDL
84-74-2	Di-n-butylphthalate	U	370	1.0	330	370	110
85-68-7	Butylbenzylphthalate	U	370	1.0	330	370	100
91-94-1	3,3'-Dichlorobenzidine	U	570	1.0	500	570	130
218-01-9	Chrysene	U	370	1.0	330	370	110
117-81-7	bis(2-Ethylhexyl)phthalate	J	140	1.0	330	370	110
117-84-0	Di-n-octylphthalate	U	370	1.0	330	370	240
367-12-4	2-Fluorophenol		56%				
13127-88-3	Phenol-D6		67%				
4165-60-0	Nitrobenzene-D5		53%				
321-60-8	2-Fluorobiphenyl		57%				
118-79-6	2,4,6-Tribromophenol		59%				
1718-51-0	Terphenyl-D14		70%				

KW 4/8/09

KATAHDIN ANALYTICAL SERVICES
Report of Analytical Results

Client: CH2MHill
Project: TO-009 Lejeune
PO No:
Sample Date: 01/23/09
Received Date: 01/27/09
Extraction Date: 01/30/09
Analysis Date: 16-FEB-2009 00:17
Report Date: 02/24/2009
Matrix: SOIL
% Solids: 81.2

Lab ID: SC0409-31
Client ID: MR08-SS368-09A
SDG: TO9-44
Extracted by: AC
Extraction Method: SW846 3550
Analyst: JLP
Analysis Method: SW846 8270C
Lab Prep Batch: WG60347
Units: ug/Kgdrywt

CAS#	Compound	Flags	Results	DF	PQL	Adj.PQL	Adj.MDL	
100-52-7	Benzaldehyde	~~U~~ UJ	620	1.0	500	620	150	ICB
108-95-2	Phenol	U	620	1.0	500	620	190	
111-44-4	Bis(2-Chloroethyl)ether	U	410	1.0	330	410	100	
95-57-8	2-Chlorophenol	U	620	1.0	500	620	200	
95-48-7	2-Methylphenol	U	740	1.0	600	740	250	
108-60-1	2,2'-Oxybis(1-chloropropane)	U	410	1.0	330	410	110	
98-86-2	Acetophenone	U	740	1.0	600	740	220	
621-64-7	N-Nitroso-di-n-propylamine	U	410	1.0	330	410	100	
65794-96-9	3&4-Methylphenol	U	740	1.0	600	740	230	
67-72-1	Hexachloroethane	U	410	1.0	330	410	120	
98-95-3	Nitrobenzene	U	410	1.0	330	410	110	
78-59-1	Isophorone	U	410	1.0	330	410	92	
88-75-5	2-Nitrophenol	U	740	1.0	600	740	200	
105-67-9	2,4-Dimethylphenol	U	620	1.0	500	620	200	
111-91-1	Bis(2-Chloroethoxy)methane	U	410	1.0	330	410	120	
120-83-2	2,4-Dichlorophenol	U	620	1.0	500	620	180	
106-47-8	4-Chloroaniline	U	620	1.0	500	620	150	
105-60-2	Caprolactam	U	620	1.0	500	620	180	
59-50-7	4-Chloro-3-Methylphenol	U	620	1.0	500	620	200	
88-06-2	2,4,6-Trichlorophenol	U	620	1.0	500	620	190	
95-95-4	2,4,5-Trichlorophenol	U	620	1.0	500	620	190	
91-58-7	2-Chloronaphthalene	U	410	1.0	330	410	110	
92-52-4	1,1'-Biphenyl	U	410	1.0	330	410	90	
88-74-4	2-Nitroaniline	U	620	1.0	500	620	92	
131-11-3	Dimethyl Phthalate	U	410	1.0	330	410	96	
606-20-2	2,6-Dinitrotoluene	U	410	1.0	330	410	97	
208-96-8	Acenaphthylene	U	410	1.0	330	410	86	
99-09-2	3-Nitroaniline	U	620	1.0	500	620	120	
83-32-9	Acenaphthene	U	410	1.0	330	410	80	
51-28-5	2,4-Dinitrophenol	U	1500	1.0	1200	1500	460	
132-64-9	Dibenzofuran	U	410	1.0	330	410	97	
100-02-7	4-Nitrophenol	~~U~~ UJ	1500	1.0	1200	1500	380	ICB
121-14-2	2,4-Dinitrotoluene	U	410	1.0	330	410	100	
84-66-2	Diethylphthalate	U	410	1.0	330	410	98	
7005-72-3	4-Chlorophenyl-phenylether	U	410	1.0	330	410	96	
100-01-6	4-Nitroaniline	U	620	1.0	500	620	160	
534-52-1	4,6-Dinitro-2-Methylphenol	U	1500	1.0	1200	1500	410	
86-30-6	N-Nitrosodiphenylamine	U	810	1.0	660	810	270	
101-55-3	4-Bromophenyl-phenylether	U	410	1.0	330	410	100	
1912-24-9	Atrazine	U	410	1.0	330	410	110	
87-86-5	Pentachlorophenol	U	1000	1.0	820	1000	290	
120-12-7	Anthracene	U	410	1.0	330	410	100	
86-74-8	Carbazole	U	620	1.0	500	620	140	

LW 4/8/09

KATAHDIN ANALYTICAL SERVICES
Report of Analytical Results

Client: CH2MHill
Project: TO-009 Lejeune
PO No:
Sample Date: 01/23/09
Received Date: 01/27/09
Extraction Date: 01/30/09
Analysis Date: 16-FEB-2009 00:17
Report Date: 02/24/2009
Matrix: SOIL
% Solids: 81.2

Lab ID: SC0409-31
Client ID: MR08-SS368-09A
SDG: TO9-44
Extracted by: AC
Extraction Method: SW846 3550
Analyst: JLP
Analysis Method: SW846 8270C
Lab Prep Batch: WG60347
Units: ug/Kgdrywt

CAS#	Compound	Flags	Results	DF	PQL	Adj.PQL	Adj.MDL
84-74-2	Di-n-butylphthalate	U	410	1.0	330	410	120
85-68-7	Butylbenzylphthalate	U	410	1.0	330	410	110
91-94-1	3,3'-Dichlorobenzidine	U	620	1.0	500	620	140
218-01-9	Chrysene		700	1.0	330	410	120
117-81-7	bis(2-Ethylhexyl)phthalate	J	160	1.0	330	410	120
117-84-0	Di-n-octylphthalate	U	410	1.0	330	410	260
367-12-4	2-Fluorophenol		69%				
13127-88-3	Phenol-D6		78%				
4165-60-0	Nitrobenzene-D5		58%				
321-60-8	2-Fluorobiphenyl		80%				
118-79-6	2,4,6-Tribromophenol		77%				
1718-51-0	Terphenyl-D14		68%				

MW
4/18/09

17

KATAHDIN ANALYTICAL SERVICES
Report of Analytical Results

Client: CH2MHill
Project: TO-009 Lejeune
PO No:
Sample Date: 01/23/09
Received Date: 01/27/09
Extraction Date: 01/30/09
Analysis Date: 15-FEB-2009 15:55
Report Date: 02/24/2009
Matrix: SOIL
% Solids: 88.6

Lab ID: SC0409-33
Client ID: MR08-IS368-4-5-09A
SDG: TO9-44
Extracted by: AC
Extraction Method: SW846 3550
Analyst: JLP
Analysis Method: SW846 8270C
Lab Prep Batch: WG60347
Units: ug/Kgdrywt

CAS#	Compound	Flags	Results	DF	PQL	Adj.PQL	Adj.MDL
100-52-7	Benzaldehyde	~~U~~ UJ	560	1.0	500	560	140 ICB
108-95-2	Phenol	U	560	1.0	500	560	180
111-44-4	Bis(2-Chloroethyl)ether	U	370	1.0	330	370	91
95-57-8	2-Chlorophenol	U	560	1.0	500	560	180
95-48-7	2-Methylphenol	U	680	1.0	600	680	220
108-60-1	2,2'-Oxybis(1-chloropropane)	U	370	1.0	330	370	100
98-86-2	Acetophenone	U	680	1.0	600	680	200
621-64-7	N-Nitroso-di-n-propylamine	U	370	1.0	330	370	94
65794-96-9	3&4-Methylphenol	U	680	1.0	600	680	210
67-72-1	Hexachloroethane	U	370	1.0	330	370	110
98-95-3	Nitrobenzene	U	370	1.0	330	370	100
78-59-1	Isophorone	U	370	1.0	330	370	85
88-75-5	2-Nitrophenol	U	680	1.0	600	680	190
105-67-9	2,4-Dimethylphenol	U	560	1.0	500	560	190
111-91-1	Bis(2-Chloroethoxy)methane	U	370	1.0	330	370	110
120-83-2	2,4-Dichlorophenol	U	560	1.0	500	560	170
106-47-8	4-Chloroaniline	U	560	1.0	500	560	130
105-60-2	Caprolactam	U	560	1.0	500	560	160
59-50-7	4-Chloro-3-Methylphenol	U	560	1.0	500	560	190
88-06-2	2,4,6-Trichlorophenol	U	560	1.0	500	560	170
95-95-4	2,4,5-Trichlorophenol	U	560	1.0	500	560	170
91-58-7	2-Chloronaphthalene	U	370	1.0	330	370	98
92-52-4	1,1'-Biphenyl	U	370	1.0	330	370	82
88-74-4	2-Nitroaniline	U	560	1.0	500	560	85
131-11-3	Dimethyl Phthalate	U	370	1.0	330	370	88
606-20-2	2,6-Dinitrotoluene	U	370	1.0	330	370	89
208-96-8	Acenaphthylene	U	370	1.0	330	370	79
99-09-2	3-Nitroaniline	U	560	1.0	500	560	110
83-32-9	Acenaphthene	U	370	1.0	330	370	73
51-28-5	2,4-Dinitrophenol	U	1400	1.0	1200	1400	420
132-64-9	Dibenzofuran	U	370	1.0	330	370	89
100-02-7	4-Nitrophenol	~~U~~ UJ	1400	1.0	1200	1400	350 ICB
121-14-2	2,4-Dinitrotoluene	U	370	1.0	330	370	96
84-66-2	Diethylphthalate	U	370	1.0	330	370	90
7005-72-3	4-Chlorophenyl-phenylether	U	370	1.0	330	370	88
100-01-6	4-Nitroaniline	U	560	1.0	500	560	150
534-52-1	4,6-Dinitro-2-Methylphenol	U	1400	1.0	1200	1400	380
86-30-6	N-Nitrosodiphenylamine	U	740	1.0	660	740	250
101-55-3	4-Bromophenyl-phenylether	U	370	1.0	330	370	96
1912-24-9	Atrazine	U	370	1.0	330	370	100
87-86-5	Pentachlorophenol	U	920	1.0	820	920	270
120-12-7	Anthracene	U	370	1.0	330	370	95
86-74-8	Carbazole	U	560	1.0	500	560	120

LW
4/18/09

KATAHDIN ANALYTICAL SERVICES
Report of Analytical Results

Client: CH2MHill
Project: TO-009 Lejeune
PO No:
Sample Date: 01/23/09
Received Date: 01/27/09
Extraction Date: 01/30/09
Analysis Date: 15-FEB-2009 15:55
Report Date: 02/24/2009
Matrix: SOIL
% Solids: 88.6

Lab ID: SC0409-33
Client ID: MR08-IS368-4-5-09A
SDG: TO9-44
Extracted by: AC
Extraction Method: SW846 3550
Analyst: JLP
Analysis Method: SW846 8270C
Lab Prep Batch: WG60347
Units: ug/Kgdrywt

CAS#	Compound	Flags	Results	DF	PQL	Adj.PQL	Adj.MDL
84-74-2	Di-n-butylphthalate	U	370	1.0	330	370	110
85-68-7	Butylbenzylphthalate	U	370	1.0	330	370	100
91-94-1	3,3'-Dichlorobenzidine	U	560	1.0	500	560	130
218-01-9	Chrysene	U	370	1.0	330	370	110
117-81-7	bis(2-Ethylhexyl)phthalate	J	150	1.0	330	370	110
117-84-0	Di-n-octylphthalate	U	370	1.0	330	370	240
367-12-4	2-Fluorophenol		74%				
13127-88-3	Phenol-D6		83%				
4165-60-0	Nitrobenzene-D5		69%				
321-60-8	2-Fluorobiphenyl		78%				
118-79-6	2,4,6-Tribromophenol		69%				
1718-51-0	Terphenyl-D14		70%				

lcw
4/18/09

KATAHDIN ANALYTICAL SERVICES
Report of Analytical Results

Client: CH2MHill
Project: TO-009 Lejeune
PO No:
Sample Date: 01/23/09
Received Date: 01/27/09
Extraction Date: 01/30/09
Analysis Date: 15-FEB-2009 17:20
Report Date: 02/24/2009
Matrix: SOIL
% Solids: 86.9

Lab ID: SC0409-35
Client ID: MR08-SS355-09A
SDG: T09-44
Extracted by: AC
Extraction Method: SW846 3550
Analyst: JLP
Analysis Method: SW846 8270C
Lab Prep Batch: WG60347
Units: ug/Kgdrywt

CAS#	Compound	Flags	Results	DF	PQL	Adj.PQL	Adj.MDL	
100-52-7	Benzaldehyde	~~U~~ UJ	580	1.0	500	580	140	ICB
108-95-2	Phenol	U	580	1.0	500	580	180	
111-44-4	Bis(2-Chloroethyl)ether	U	380	1.0	330	380	93	
95-57-8	2-Chlorophenol	U	580	1.0	500	580	190	
95-48-7	2-Methylphenol	U	690	1.0	600	690	230	
108-60-1	2,2'-Oxybis(1-chloropropane)	U	380	1.0	330	380	100	
98-86-2	Acetophenone	U	690	1.0	600	690	200	
621-64-7	N-Nitroso-di-n-propylamine	U	380	1.0	330	380	95	
65794-96-9	3&4-Methylphenol	U	690	1.0	600	690	220	
67-72-1	Hexachloroethane	U	380	1.0	330	380	110	
98-95-3	Nitrobenzene	U	380	1.0	330	380	100	
78-59-1	Isophorone	U	380	1.0	330	380	86	
88-75-5	2-Nitrophenol	U	690	1.0	600	690	190	
105-67-9	2,4-Dimethylphenol	U	580	1.0	500	580	190	
111-91-1	Bis(2-Chloroethoxy)methane	U	380	1.0	330	380	110	
120-83-2	2,4-Dichlorophenol	U	580	1.0	500	580	170	
106-47-8	4-Chloroaniline	U	580	1.0	500	580	140	
105-60-2	Caprolactam	U	580	1.0	500	580	160	
59-50-7	4-Chloro-3-Methylphenol	U	580	1.0	500	580	190	
88-06-2	2,4,6-Trichlorophenol	U	580	1.0	500	580	180	
95-95-4	2,4,5-Trichlorophenol	U	580	1.0	500	580	180	
91-58-7	2-Chloronaphthalene	U	380	1.0	330	380	100	
92-52-4	1,1'-Biphenyl	U	380	1.0	330	380	84	
88-74-4	2-Nitroaniline	U	580	1.0	500	580	86	
131-11-3	Dimethyl Phthalate	U	380	1.0	330	380	90	
606-20-2	2,6-Dinitrotoluene	U	380	1.0	330	380	91	
208-96-8	Acenaphthylene	U	380	1.0	330	380	80	
99-09-2	3-Nitroaniline	U	580	1.0	500	580	110	
83-32-9	Acenaphthene	U	380	1.0	330	380	75	
51-28-5	2,4-Dinitrophenol	U	1400	1.0	1200	1400	430	
132-64-9	Dibenzofuran	U	380	1.0	330	380	91	
100-02-7	4-Nitrophenol	~~U~~ UJ	1400	1.0	1200	1400	360	ICB
121-14-2	2,4-Dinitrotoluene	U	380	1.0	330	380	98	
84-66-2	Diethylphthalate	U	380	1.0	330	380	92	
7005-72-3	4-Chlorophenyl-phenylether	U	380	1.0	330	380	90	
100-01-6	4-Nitroaniline	U	580	1.0	500	580	150	
534-52-1	4,6-Dinitro-2-Methylphenol	U	1400	1.0	1200	1400	390	
86-30-6	N-Nitrosodiphenylamine	U	760	1.0	660	760	250	
101-55-3	4-Bromophenyl-phenylether	U	380	1.0	330	380	98	
1912-24-9	Atrazine	U	380	1.0	330	380	100	
87-86-5	Pentachlorophenol	U	940	1.0	820	940	270	
120-12-7	Anthracene	U	380	1.0	330	380	97	
86-74-8	Carbazole	U	580	1.0	500	580	130	

LW
4/18/09

KATAHDIN ANALYTICAL SERVICES
Report of Analytical Results

Client: CH2MHill
Project: TO-009 Lejeune
PO No:
Sample Date: 01/23/09
Received Date: 01/27/09
Extraction Date: 01/30/09
Analysis Date: 15-FEB-2009 17:20
Report Date: 02/24/2009
Matrix: SOIL
% Solids: 86.9

Lab ID: SC0409-35
Client ID: MR08-SS355-09A
SDG: TO9-44
Extracted by: AC
Extraction Method: SW846 3550
Analyst: JLP
Analysis Method: SW846 8270C
Lab Prep Batch: WG60347
Units: ug/Kgdrywt

CAS#	Compound	Flags	Results	DF	PQL	Adj.PQL	Adj.MDL
84-74-2	Di-n-butylphthalate	U	380	1.0	330	380	120
85-68-7	Butylbenzylphthalate	U	380	1.0	330	380	110
91-94-1	3,3'-Dichlorobenzidine	U	580	1.0	500	580	130
218-01-9	Chrysene	J	200	1.0	330	380	110
117-81-7	bis(2-Ethylhexyl)phthalate	U	380	1.0	330	380	110
117-84-0	Di-n-octylphthalate	U	380	1.0	330	380	240
367-12-4	2-Fluorophenol		75%				
13127-88-3	Phenol-D6		90%				
4165-60-0	Nitrobenzene-D5		70%				
321-60-8	2-Fluorobiphenyl		80%				
118-79-6	2,4,6-Tribromophenol		90%				
1718-51-0	Terphenyl-D14		72%				

RW
4/18/09

KATAHDIN ANALYTICAL SERVICES
Report of Analytical Results

Client: CH2MHill
Project: TO-009 Lejeune
PO No:
Sample Date: 01/23/09
Received Date: 01/27/09
Extraction Date: 01/30/09
Analysis Date: 15-FEB-2009 16:38
Report Date: 02/24/2009
Matrix: SOIL
% Solids: 89.4

Lab ID: SC0409-37
Client ID: MR08-IS355-4-5-09A
SDG: TO9-44
Extracted by: AC
Extraction Method: SW846 3550
Analyst: JLP
Analysis Method: SW846 8270C
Lab Prep Batch: WG60347
Units: ug/Kgdrywt

CAS#	Compound	Flags	Results	DF	PQL	Adj.PQL	Adj.MDL	
100-52-7	Benzaldehyde	~~U~~ UJ	560	1.0	500	560	130	ICB
108-95-2	Phenol	U	560	1.0	500	560	170	
111-44-4	Bis(2-Chloroethyl)ether	U	370	1.0	330	370	91	
95-57-8	2-Chlorophenol	U	560	1.0	500	560	180	
95-48-7	2-Methylphenol	U	670	1.0	600	670	220	
108-60-1	2,2'-Oxybis(1-chloropropane)	U	370	1.0	330	370	100	
98-86-2	Acetophenone	U	670	1.0	600	670	200	
621-64-7	N-Nitroso-di-n-propylamine	U	370	1.0	330	370	93	
65794-96-9	3&4-Methylphenol	U	670	1.0	600	670	210	
67-72-1	Hexachloroethane	U	370	1.0	330	370	110	
98-95-3	Nitrobenzene	U	370	1.0	330	370	100	
78-59-1	Isophorone	U	370	1.0	330	370	84	
88-75-5	2-Nitrophenol	U	670	1.0	600	670	190	
105-67-9	2,4-Dimethylphenol	U	560	1.0	500	560	180	
111-91-1	Bis(2-Chloroethoxy)methane	U	370	1.0	330	370	110	
120-83-2	2,4-Dichlorophenol	U	560	1.0	500	560	170	
106-47-8	4-Chloroaniline	U	560	1.0	500	560	130	
105-60-2	Caprolactam	U	560	1.0	500	560	160	
59-50-7	4-Chloro-3-Methylphenol	U	560	1.0	500	560	180	
88-06-2	2,4,6-Trichlorophenol	U	560	1.0	500	560	170	
95-95-4	2,4,5-Trichlorophenol	U	560	1.0	500	560	170	
91-58-7	2-Chloronaphthalene	U	370	1.0	330	370	97	
92-52-4	1,1'-Biphenyl	U	370	1.0	330	370	82	
88-74-4	2-Nitroaniline	U	560	1.0	500	560	84	
131-11-3	Dimethyl Phthalate	U	370	1.0	330	370	87	
606-20-2	2,6-Dinitrotoluene	U	370	1.0	330	370	88	
208-96-8	Acenaphthylene	U	370	1.0	330	370	78	
99-09-2	3-Nitroaniline	U	560	1.0	500	560	100	
83-32-9	Acenaphthene	U	370	1.0	330	370	73	
51-28-5	2,4-Dinitrophenol	U	1300	1.0	1200	1300	420	
132-64-9	Dibenzofuran	U	370	1.0	330	370	88	
100-02-7	4-Nitrophenol	~~U~~ UJ	1300	1.0	1200	1300	340	ICB
121-14-2	2,4-Dinitrotoluene	U	370	1.0	330	370	95	
84-66-2	Diethylphthalate	U	370	1.0	330	370	89	
7005-72-3	4-Chlorophenyl-phenylether	U	370	1.0	330	370	87	
100-01-6	4-Nitroaniline	U	560	1.0	500	560	150	
534-52-1	4,6-Dinitro-2-Methylphenol	U	1300	1.0	1200	1300	380	
86-30-6	N-Nitrosodiphenylamine	U	740	1.0	660	740	240	
101-55-3	4-Bromophenyl-phenylether	U	370	1.0	330	370	95	
1912-24-9	Atrazine	U	370	1.0	330	370	100	
87-86-5	Pentachlorophenol	U	920	1.0	820	920	260	
120-12-7	Anthracene	U	370	1.0	330	370	94	
86-74-8	Carbazole	U	560	1.0	500	560	120	

RW
4/18/09

KATAHDIN ANALYTICAL SERVICES
Report of Analytical Results

Client: CH2MHill
Project: TO-009 Lejeune
PO No:
Sample Date: 01/23/09
Received Date: 01/27/09
Extraction Date: 01/30/09
Analysis Date: 15-FEB-2009 16:38
Report Date: 02/24/2009
Matrix: SOIL
% Solids: 89.4

Lab ID: SC0409-37
Client ID: MR08-IS355-4-5-09A
SDG: TO9-44
Extracted by: AC
Extraction Method: SW846 3550
Analyst: JLP
Analysis Method: SW846 8270C
Lab Prep Batch: WG60347
Units: ug/Kgdrywt

CAS#	Compound	Flags	Results	DF	PQL	Adj.PQL	Adj.MDL
84-74-2	Di-n-butylphthalate	U	370	1.0	330	370	110
85-68-7	Butylbenzylphthalate	U	370	1.0	330	370	100
91-94-1	3,3'-Dichlorobenzidine	U	560	1.0	500	560	130
218-01-9	Chrysene	U	370	1.0	330	370	110
117-81-7	bis(2-Ethylhexyl)phthalate	J	130	1.0	330	370	110
117-84-0	Di-n-octylphthalate	U	370	1.0	330	370	240
367-12-4	2-Fluorophenol		71%				
13127-88-3	Phenol-D6		79%				
4165-60-0	Nitrobenzene-D5		67%				
321-60-8	2-Fluorobiphenyl		76%				
118-79-6	2,4,6-Tribromophenol		70%				
1718-51-0	Terphenyl-D14		70%				

New 4/18/09

KATAHDIN ANALYTICAL SERVICES
Report of Analytical Results

Client: CH2MHill
Project: TO-009 Lejeune
PO No:
Sample Date: 01/24/09
Received Date: 01/27/09
Extraction Date: 02/12/09
Analysis Date: 15-FEB-2009 18:02
Report Date: 02/24/2009
Matrix: SOIL
% Solids: 85.5

Lab ID: SC0409-39RE
Client ID: MR08-SS329-09A
SDG: TO9-44
Extracted by: CB
Extraction Method: SW846 3550
Analyst: JLP
Analysis Method: SW846 8270C
Lab Prep Batch: WG60726
Units: ug/Kgdrywt

CAS#	Compound	Flags	Results	DF	PQL	Adj.PQL	Adj.MDL	
100-52-7	Benzaldehyde	~~U~~ UJ	580	1.0	500	580	140	~~JGB~~ HT
108-95-2	Phenol	U	580	1.0	500	580	180	HT
111-44-4	Bis(2-Chloroethyl)ether	U	380	1.0	330	380	95	
95-57-8	2-Chlorophenol	U	580	1.0	500	580	190	
95-48-7	2-Methylphenol	U	700	1.0	600	700	230	
108-60-1	2,2'-Oxybis(1-chloropropane)	U	380	1.0	330	380	100	
98-86-2	Acetophenone	U	700	1.0	600	700	210	
621-64-7	N-Nitroso-di-n-propylamine	U	380	1.0	330	380	97	
65794-96-9	3&4-Methylphenol	U	700	1.0	600	700	220	
67-72-1	Hexachloroethane	U	380	1.0	330	380	110	
98-95-3	Nitrobenzene	U	380	1.0	330	380	110	
78-59-1	Isophorone	U	380	1.0	330	380	88	
88-75-5	2-Nitrophenol	U	700	1.0	600	700	200	
105-67-9	2,4-Dimethylphenol	U	580	1.0	500	580	190	
111-91-1	Bis(2-Chloroethoxy)methane	U	380	1.0	330	380	110	
120-83-2	2,4-Dichlorophenol	U	580	1.0	500	580	180	
106-47-8	4-Chloroaniline	U	580	1.0	500	580	140	
105-60-2	Caprolactam	U	580	1.0	500	580	170	
59-50-7	4-Chloro-3-Methylphenol	U	580	1.0	500	580	190	
88-06-2	2,4,6-Trichlorophenol	U	580	1.0	500	580	180	
95-95-4	2,4,5-Trichlorophenol	U	580	1.0	500	580	180	
91-58-7	2-Chloronaphthalene	U	380	1.0	330	380	100	
92-52-4	1,1'-Biphenyl	~~U~~ UJ	380	1.0	330	380	85	~~MSL~~ HT
88-74-4	2-Nitroaniline	U	580	1.0	500	580	88	HT
131-11-3	Dimethyl Phthalate	U	380	1.0	330	380	91	
606-20-2	2,6-Dinitrotoluene	U	380	1.0	330	380	92	
208-96-8	Acenaphthylene	U	380	1.0	330	380	82	
99-09-2	3-Nitroaniline	U	580	1.0	500	580	110	
83-32-9	Acenaphthene	U	380	1.0	330	380	76	
51-28-5	2,4-Dinitrophenol	U	1400	1.0	1200	1400	440	
132-64-9	Dibenzofuran	U	380	1.0	330	380	92	
100-02-7	4-Nitrophenol	U	1400	1.0	1200	1400	360	
121-14-2	2,4-Dinitrotoluene	U	380	1.0	330	380	99	
84-66-2	Diethylphthalate	U	380	1.0	330	380	94	
7005-72-3	4-Chlorophenyl-phenylether	U	380	1.0	330	380	91	
100-01-6	4-Nitroaniline	U	580	1.0	500	580	160	
534-52-1	4,6-Dinitro-2-Methylphenol	U	1400	1.0	1200	1400	390	
86-30-6	N-Nitrosodiphenylamine	~~U~~ UJ	770	1.0	660	770	260	~~MSL~~ HT
101-55-3	4-Bromophenyl-phenylether	U	380	1.0	330	380	99	HT
1912-24-9	Atrazine	U	380	1.0	330	380	110	
87-86-5	Pentachlorophenol	U	960	1.0	820	960	280	
120-12-7	Anthracene	U	380	1.0	330	380	98	
86-74-8	Carbazole	U	580	1.0	500	580	130	

LW 4/18/09

20

KATAHDIN ANALYTICAL SERVICES
Report of Analytical Results

Client: CH2MHill
Project: TO-009 Lejeune
PO No:
Sample Date: 01/24/09
Received Date: 01/27/09
Extraction Date: 02/12/09
Analysis Date: 15-FEB-2009 18:02
Report Date: 02/24/2009
Matrix: SOIL
% Solids: 85.5

Lab ID: SC0409-39RE
Client ID: MR08-SS329-09A
SDG: TO9-44
Extracted by: CB
Extraction Method: SW846 3550
Analyst: JLP
Analysis Method: SW846 8270C
Lab Prep Batch: WG60726
Units: ug/Kgdrywt

CAS#	Compound	Flags	Results	DF	PQL	Adj.PQL	Adj.MDL
84-74-2	Di-n-butylphthalate	~~U~~ UJ	380	1.0	330	380	120 HT
85-68-7	Butylbenzylphthalate	~~U~~	380	1.0	330	380	110
91-94-1	3,3'-Dichlorobenzidine	~~U~~	580	1.0	500	580	130
218-01-9	Chrysene	J	820	1.0	330	380	110
117-81-7	bis(2-Ethylhexyl)phthalate	~~U~~ UJ	380	1.0	330	380	110
117-84-0	Di-n-octylphthalate	~~U~~ UJ	380	1.0	330	380	250
367-12-4	2-Fluorophenol		65%				
13127-88-3	Phenol-D6		81%				
4165-60-0	Nitrobenzene-D5		56%				
321-60-8	2-Fluorobiphenyl		64%				
118-79-6	2,4,6-Tribromophenol		101%				
1718-51-0	Terphenyl-D14		71%				

RW
6/18/09

ENVIRONMENTAL
Data Services, Inc.

POLYNUCLEAR AROMATIC COMPOUNDS BY 8270SIM

USEPA Region IV - Level IV Review

Site: MCB Camp Lejeune, TO-09 SDG #: TO9-45

Client: CH2M HILL, Inc., Virginia Beach, Virginia Date: April 18, 2009

Laboratory: Katahdin Analytical Services, Scarborough, Maine Reviewer: Nancy Weaver

EDS ID	Client Sample ID	Laboratory Sample ID	Matrix
1	MR08-IS344-2-3-09A	SC0410-2	Soil
2	MR08-SS344-09A	SC0410-4	Soil
3	MR08-SS331-09A	SC0410-6	Soil
4	MR08-IS331-4-5-09A	SC0410-8	Soil
5	MR08-SS330-09A	SC0410-10	Soil
5DL	MR08-SS330-09ADL	SC0410-10DL	Soil
6	MR08-IS330-0-1-09A	SC0410-12	Soil
7	MR08-SS345-09A	SC0410-14	Soil
7DL	MR08-SS345-09ADL	SC0410-14DL	Soil
8	MR08-SS345D-09A	SC0410-16	Soil
8DL	MR08-SS345D-09ADL	SC0410-16DL	Soil
9	MR08-IS345-1-2-09A	SC0410-18	Soil
9RE	MR08-IS345-1-2-09ARE	SC0410-18RE	Soil
10	MR08-IS345D-1-2-09A	SC0410-20	Soil
11	MR08-SS346-09A	SC0410-22	Soil
12	MR08-IS346-1-2-09A	SC0410-24	Soil
13	MR08-SS354-09A	SC0410-26	Soil
14	MR08-IS354-1-2-09A	SC0410-28	Soil
15	MR08-SS369-09A	SC0410-30	Soil
16	MR08-SS369D-09A	SC0410-32	Soil
16DL	MR08-SS369D-09ADL	SC0410-32DL	Soil
17	MR08-IS369-1-2-09A	SC0410-34	Soil
18	MR08-IS369D-1-2-09A	SC0410-36	Soil
19	MR08-SS370-09A	SC0410-38	Soil
19DL	MR08-SS370-09ADL	SC0410-38DL	Soil
20	MR08-SS372-09A	SC0410-40	Soil
20MS	MR08-SS372-09AMS	SC0410-40MS	Soil
20MSD	MR08-SS372-09AMSD	SC0410-40MSD	Soil
20DL	MR08-SS372-09ADL	SC0410-40DL	Soil

The USEPA "Contract Laboratory Program National Functional Guidelines for Organic Data Review," October 1999, and professional judgment were used in evaluating the data in this summary report.

Holding Times - All samples were extracted within 14 days for soil samples and analyzed within 40 days for all samples except the following.

Sample	Date Sampled	Date Extracted	# of Days	Qualifier
9RE	01/24/09	02/16/09	23	J/UJ

GC/MS Tuning - All of the DFTPP tunes in the initial and continuing calibrations met the percent relative abundance criteria.

Initial Calibration - The initial calibrations exhibited acceptable %RSD and mean RRF values.

Continuing Calibration - The continuing calibrations exhibited acceptable %D and RRF values except the following.

CCAL Date	Compound	%D/RRF	Qualifier	Affected Samples
02/22/09	Hexachlorocyclopentadiene	26.18%	J/UJ	11-13, 15, 16DL, 17
02/17/09	Naphthalene	28.95%	J/UJ	18, 19

Surrogates - Several samples were diluted out and flagged "OD". No action was taken on this basis.

MS/MSD - The MS/MSD sample exhibited acceptable %R and RPD values except the following.

MS/MSD Sample ID	Compound	MS/MSD %R/RPD	Qualifier
20	Pyrene	Ok/1242%/Ok	None - 4X rule
	Benzo (a) anthracene	569%/543%/Ok	None - 4X rule
	Benzo (b) fluoranthene	181%/Ok/Ok	None - 4X rule
	Benzo (k) fluoranthene	530%543%/Ok	None - 4X rule
	Indeno (1,2,3-cd) pyrene	0%/0%/Ok	None - 4X rule
	Benzo (g,h,i) perylene	336%/388%/Ok	None - 4X rule
	Hexachlorocyclopentadiene	12%/8%/Ok	J/R

Laboratory Control Sample - The LCS samples exhibited acceptable %R values except the following.

LCS ID	Compound	%R	Qualifier	Affected Samples
WG60396-LCS	Naphthalene	114%	J	20

Internal Standard (IS) Area Performance - All internal standards met response and retention time (RT) criteria except the following.

Sample ID	Internal Standard	Area Count	Qualifier
16	IS6-Perylene-d16	Low	J/UJ

Method Blank - The method blanks were free of contamination.

Field, Equipment Blank - Field QC results are summarized below.

Blank ID	Compound	Conc. ug/L	Action Level ug/L	Qualifier	Affected Samples
MR08-FB012609	None - ND	-	-	-	-
MR08-EB012409	None - ND	-	-	-	-

Field Duplicates - Field duplicate results are summarized below.

Compound	MR08-SS345-09A ug/kg	MR08-SS345D-09A ug/kg	RPD	Qualifier
Fluorene	5.4	6.0	11%	None
Phenanthrene	420	440	5%	None
Fluoranthene	1500	1200	22%	None
Pyrene	1100	1100	0%	None
Benzo (a) anthracene	540	480	12%	None
Benzo (b) fluoranthene	590	460	25%	None
Benzo (k) fluoranthene	550	470	16%	None
Benzo (a) pyrene	490	420	15%	None
Indeno (1,2,3-cd) pyrene	390	300	26%	None
Dibenzo (a,h) anthracene	130	120	8%	None
Benzo (g,h,i) perylene	400	280	35%	None

Compound	MR08-IS345-1-2-09A ug/kg	MR08-IS345D-1-2-09A ug/kg	RPD	Qualifier
None	ND	ND	-	-

Compound	MR08-SS369-09A ug/kg	MR08-SS369D-09A ug/kg	RPD	Qualifier
Naphthalene	11 U	6.9	NC	None
2-Methylnaphthalene	11 U	5.5	NC	None
Fluorene	11 U	19	NC	None
Phenanthrene	35	460	172%	None
Fluoranthene	58	920	176%	None
Pyrene	48	670	173%	None
Benzo (a) anthracene	9.9	420	191%	None
Benzo (b) fluoranthene	11 U	600	NC	None
Benzo (k) fluoranthene	11 U	360	NC	None
Benzo (a) pyrene	6.9	440	194%	None

Compound	MR08-SS369-09A ug/kg	MR08-SS369D-09A ug/kg	RPD	Qualifier
Indeno (1,2,3-cd) pyrene	9.4	390	191%	None
Dibenzo (a,h) anthracene	11 U	190	NC	None
Benzo (g,h,i) perylene	11	420	190%	None

Compound	MR08-IS369-1-2-09A ug/kg	MR08-IS369D-1-2-09A ug/kg	RPD	Qualifier
None	ND	ND	-	-

Compound Quantitation - Several samples exhibited high concentrations of target compounds and were flagged (E) by the laboratory. The samples were diluted and reanalyzed and the dilution results for these compounds should be used for reporting.

KATAHDIN ANALYTICAL SERVICES
Report of Analytical Results

Client: CH2MHill
Project: TO-009 Lejeune
PO No:
Sample Date: 01/24/09
Received Date: 01/27/09
Extraction Date: 01/30/09
Analysis Date: 20-FEB-2009 01:47
Report Date: 02/25/2009
Matrix: SOIL
% Solids: 86.9

Lab ID: SC0410-2
Client ID: MR08-IS344-2-3-09A
SDG: TO9-45
Extracted by: AC
Extraction Method: SW846 3550
Analyst: JCG
Analysis Method: SW846 M8270C
Lab Prep Batch: WG60321
Units: ug/Kgdrywt

CAS#	Compound	Flags	Results	DF	PQL	Adj.PQL	Adj.MDL
91-20-3	Naphthalene	U	12	1.0	10	12	3.0
91-57-6	2-Methylnaphthalene	U	12	1.0	10	12	2.5
86-73-7	Fluorene	U	12	1.0	10	12	3.7
85-01-8	Phenanthrene	U	12	1.0	10	12	2.1
206-44-0	Fluoranthene	U	12	1.0	10	12	2.1
129-00-0	Pyrene	U	12	1.0	10	12	2.4
56-55-3	Benzo(a)anthracene	U	12	1.0	10	12	2.2
205-99-2	Benzo(b)fluoranthene	J	8.9	1.0	10	12	2.8
207-08-9	Benzo(k)fluoranthene	J	1.2	1.0	10	12	3.6
50-32-8	Benzo(a)pyrene	U	12	1.0	10	12	3.8
193-39-5	Indeno(1,2,3-cd)pyrene	U	12	1.0	10	12	2.2
53-70-3	Dibenzo(a,h)anthracene	U	12	1.0	10	12	2.1
191-24-2	Benzo(g,h,i)perylene	J	2.5	1.0	10	12	2.3
118-74-1	Hexachlorobenzene	U	12	1.0	10	12	2.1
87-68-3	Hexachlorobutadiene	U	12	1.0	10	12	2.6
77-47-4	Hexachlorocyclopentadiene	U	12	1.0	10	12	1.7
7297-45-2	2-Methylnaphthalene-D10		77%				
367-12-4	2,4-Dibromophenol		68%				
81103-79-9	Fluorene-d10		83%				
1718-51-1	Pyrene-D10		89%				

lw
4/18/09

2

KATAHDIN ANALYTICAL SERVICES
Report of Analytical Results

Client: CH2MHill
Project: TO-009 Lejeune
PO No:
Sample Date: 01/24/09
Received Date: 01/27/09
Extraction Date: 01/30/09
Analysis Date: 20-FEB-2009 02:28
Report Date: 02/25/2009
Matrix: SOIL
% Solids: 75.4

Lab ID: SC0410-4
Client ID: MR08-SS344-09A
SDG: T09-45
Extracted by: AC
Extraction Method: SW846 3550
Analyst: JCG
Analysis Method: SW846 M8270C
Lab Prep Batch: WG60321
Units: ug/Kgdrywt

CAS#	Compound	Flags	Results	DF	PQL	Adj.PQL	Adj.MDL
91-20-3	Naphthalene	J	4.9	1.0	10	13	3.4
91-57-6	2-Methylnaphthalene	J	8.9	1.0	10	13	2.9
86-73-7	Fluorene	U	13	1.0	10	13	4.2
85-01-8	Phenanthrene		85	1.0	10	13	2.4
206-44-0	Fluoranthene		320	1.0	10	13	2.4
129-00-0	Pyrene		300	1.0	10	13	2.8
56-55-3	Benzo(a)anthracene		150	1.0	10	13	2.5
205-99-2	Benzo(b)fluoranthene		290	1.0	10	13	3.2
207-08-9	Benzo(k)fluoranthene		210	1.0	10	13	4.1
50-32-8	Benzo(a)pyrene		210	1.0	10	13	4.4
193-39-5	Indeno(1,2,3-cd)pyrene		200	1.0	10	13	2.5
53-70-3	Dibenzo(a,h)anthracene		68	1.0	10	13	2.4
191-24-2	Benzo(g,h,i)perylene		210	1.0	10	13	2.6
118-74-1	Hexachlorobenzene	U	13	1.0	10	13	2.4
87-68-3	Hexachlorobutadiene	U	13	1.0	10	13	3.0
77-47-4	Hexachlorocyclopentadiene	U	13	1.0	10	13	2.0
7297-45-2	2-Methylnaphthalene-D10		70%				
367-12-4	2,4-Dibromophenol		62%				
81103-79-9	Fluorene-d10		88%				
1718-51-1	Pyrene-D10		85%				

RW
4/18/09

3

KATAHDIN ANALYTICAL SERVICES
Report of Analytical Results

Client: CH2MHill
Project: TO-009 Lejeune
PO No:
Sample Date: 01/24/09
Received Date: 01/27/09
Extraction Date: 01/30/09
Analysis Date: 20-FEB-2009 03:09
Report Date: 02/25/2009
Matrix: SOIL
% Solids: 87.6

Lab ID: SC0410-6
Client ID: MR08-SS331-09A
SDG: TO9-45
Extracted by: AC
Extraction Method: SW846 3550
Analyst: JCG
Analysis Method: SW846 M8270C
Lab Prep Batch: WG60321
Units: ug/Kgdrywt

CAS#	Compound	Flags	Results	DF	PQL	Adj.PQL	Adj.MDL
91-20-3	Naphthalene	U	11	1.0	10	11	3.0
91-57-6	2-Methylnaphthalene	U	11	1.0	10	11	2.5
86-73-7	Fluorene	U	11	1.0	10	11	3.6
85-01-8	Phenanthrene		72	1.0	10	11	2.0
206-44-0	Fluoranthene		200	1.0	10	11	2.0
129-00-0	Pyrene		170	1.0	10	11	2.4
56-55-3	Benzo(a)anthracene		89	1.0	10	11	2.2
205-99-2	Benzo(b)fluoranthene		160	1.0	10	11	2.7
207-08-9	Benzo(k)fluoranthene		110	1.0	10	11	3.5
50-32-8	Benzo(a)pyrene		110	1.0	10	11	3.8
193-39-5	Indeno(1,2,3-cd)pyrene		100	1.0	10	11	2.2
53-70-3	Dibenzo(a,h)anthracene		38	1.0	10	11	2.0
191-24-2	Benzo(g,h,i)perylene		110	1.0	10	11	2.3
118-74-1	Hexachlorobenzene	U	11	1.0	10	11	2.0
87-68-3	Hexachlorobutadiene	U	11	1.0	10	11	2.6
77-47-4	Hexachlorocyclopentadiene	U	11	1.0	10	11	1.7
7297-45-2	2-Methylnaphthalene-D10		64%				
367-12-4	2,4-Dibromophenol		60%				
81103-79-9	Fluorene-d10		80%				
1718-51-1	Pyrene-D10		80%				

WW
4/18/09

KATAHDIN ANALYTICAL SERVICES
Report of Analytical Results

Client: CH2MHill
Project: TO-009 Lejeune
PO No:
Sample Date: 01/24/09
Received Date: 01/27/09
Extraction Date: 01/30/09
Analysis Date: 20-FEB-2009 03:50
Report Date: 02/25/2009
Matrix: SOIL
% Solids: 86.7

Lab ID: SC0410-8
Client ID: MR08-IS331-4-5-09A
SDG: TO9-45
Extracted by: AC
Extraction Method: SW846 3550
Analyst: JCG
Analysis Method: SW846 M8270C
Lab Prep Batch: WG60321
Units: ug/Kgdrywt

CAS#	Compound	Flags	Results	DF	PQL	Adj.PQL	Adj.MDL
91-20-3	Naphthalene	U	12	1.0	10	12	3.0
91-57-6	2-Methylnaphthalene	U	12	1.0	10	12	2.5
86-73-7	Fluorene	U	12	1.0	10	12	3.7
85-01-8	Phenanthrene	U	12	1.0	10	12	2.1
206-44-0	Fluoranthene	J	2.4	1.0	10	12	2.1
129-00-0	Pyrene	J	2.8	1.0	10	12	2.4
56-55-3	Benzo(a)anthracene	U	12	1.0	10	12	2.2
205-99-2	Benzo(b)fluoranthene	J	9.3	1.0	10	12	2.8
207-08-9	Benzo(k)fluoranthene	J	2.2	1.0	10	12	3.6
50-32-8	Benzo(a)pyrene	U	12	1.0	10	12	3.8
193-39-5	Indeno(1,2,3-cd)pyrene	J	2.4	1.0	10	12	2.2
53-70-3	Dibenzo(a,h)anthracene	U	12	1.0	10	12	2.1
191-24-2	Benzo(g,h,i)perylene		37	1.0	10	12	2.3
118-74-1	Hexachlorobenzene	U	12	1.0	10	12	2.1
87-68-3	Hexachlorobutadiene	U	12	1.0	10	12	2.6
77-47-4	Hexachlorocyclopentadiene	U	12	1.0	10	12	1.7
7297-45-2	2-Methylnaphthalene-D10		68%				
367-12-4	2,4-Dibromophenol		57%				
81103-79-9	Fluorene-d10		82%				
1718-51-1	Pyrene-D10		87%				

RW 4/8/09

KATAHDIN ANALYTICAL SERVICES
Report of Analytical Results

Client: CH2MHill
Project: TO-009 Lejeune
PO No:
Sample Date: 01/24/09
Received Date: 01/27/09
Extraction Date: 01/30/09
Analysis Date: 20-FEB-2009 04:32
Report Date: 02/25/2009
Matrix: SOIL
% Solids: 88.2

Lab ID: SC0410-10
Client ID: MR08-SS330-09A
SDG: TO9-45
Extracted by: AC
Extraction Method: SW846 3550
Analyst: JCG
Analysis Method: SW846 M8270C
Lab Prep Batch: WG60321
Units: ug/Kgdrywt

CAS#	Compound	Flags	Results	DF	PQL	Adj.PQL	Adj.MDL
91-20-3	Naphthalene	U	11	1.0	10	11	2.9
91-57-6	2-Methylnaphthalene	U	11	1.0	10	11	2.5
86-73-7	Fluorene	J	6.6	1.0	10	11	3.6
85-01-8	Phenanthrene	~~E~~ 570	~~430~~	10 1.0	10	110 11 20	2.0 RDL
206-44-0	Fluoranthene	~~E~~ 1900	~~1500~~	1.0	10	11 20	2.0
129-00-0	Pyrene	~~E~~ 1400	~~1300~~	1.0	10	11 24	2.4
56-55-3	Benzo(a)anthracene	~~E~~ 710	~~680~~	1.0	10	11 22	2.2
205-99-2	Benzo(b)fluoranthene	~~E~~ 1000	~~1000~~	1.0	10	11 27	2.7
207-08-9	Benzo(k)fluoranthene	~~E~~ 910	~~900~~	1.0	10	11 35	3.5
50-32-8	Benzo(a)pyrene	~~E~~ 880	~~820~~	1.0	10	11 37	3.7
193-39-5	Indeno(1,2,3-cd)pyrene	~~E~~ 740	~~650~~	1.0	10	11 22	2.2
53-70-3	Dibenzo(a,h)anthracene		240	1.0	10	11	2.0
191-24-2	Benzo(g,h,i)perylene	~~E~~ 770	~~610~~ 10	1.0	10	110 ~~11~~ 23	~~2.3~~ RDL
118-74-1	Hexachlorobenzene	U	11	1.0	10	11	2.0
87-68-3	Hexachlorobutadiene	U	11	1.0	10	11	2.6
77-47-4	Hexachlorocyclopentadiene	U	11	1.0	10	11	1.7
7297-45-2	2-Methylnaphthalene-D10		57%				
367-12-4	2,4-Dibromophenol		52%				
81103-79-9	Fluorene-d10		65%				
1718-51-1	Pyrene-D10		68%				

QW 4/18/09

5DL

KATAHDIN ANALYTICAL SERVICES
Report of Analytical Results

Client: CH2MHill
Project: TO-009 Lejeune
PO No:
Sample Date: 01/24/09
Received Date: 01/27/09
Extraction Date: 01/30/09
Analysis Date: 20-FEB-2009 15:19
Report Date: 02/25/2009
Matrix: SOIL
% Solids: 88.2

Lab ID: SC0410-10DL
Client ID: MR08-SS330-09A
SDG: TO9-45
Extracted by: AC
Extraction Method: SW846 3550
Analyst: JCG
Analysis Method: SW846 M8270C
Lab Prep Batch: WG60321
Units: ug/Kgdrywt

use mgNAI

CAS#	Compound	Flags	Results	DF	PQL	Adj.PQL	Adj.MDL
91-20-3	Naphthalene	U	110	10	10	110	29
91-57-6	2-Methylnaphthalene	U	110	10	10	110	25
86-73-7	Fluorene	U	110	10	10	110	36
85-01-8	Phenanthrene		570	10	10	110	20
206-44-0	Fluoranthene		1900	10	10	110	20
129-00-0	Pyrene		1400	10	10	110	24
56-55-3	Benzo(a)anthracene		710	10	10	110	22
205-99-2	Benzo(b)fluoranthene		1000	10	10	110	27
207-08-9	Benzo(k)fluoranthene		910	10	10	110	35
50-32-8	Benzo(a)pyrene		880	10	10	110	37
193-39-5	Indeno(1,2,3-cd)pyrene		740	10	10	110	22
53-70-3	Dibenzo(a,h)anthracene		250	10	10	110	20
191-24-2	Benzo(g,h,i)perylene		770	10	10	110	23
118-74-1	Hexachlorobenzene	U	110	10	10	110	20
87-68-3	Hexachlorobutadiene	U	110	10	10	110	26
77-47-4	Hexachlorocyclopentadiene	U	110	10	10	110	17
7297-45-2	2-Methylnaphthalene-D10		D				
367-12-4	2,4-Dibromophenol		D				
81103-79-9	Fluorene-d10		D				
1718-51-1	Pyrene-D10		D				

R 2

LW 4/18/09

b

KATAHDIN ANALYTICAL SERVICES
Report of Analytical Results

Client: CH2MHill
Project: TO-009 Lejeune
PO No:
Sample Date: 01/24/09
Received Date: 01/27/09
Extraction Date: 01/30/09
Analysis Date: 20-FEB-2009 05:13
Report Date: 02/25/2009
Matrix: SOIL
% Solids: 89.1

Lab ID: SC0410-12
Client ID: MR08-IS330-0-1-09A
SDG: T09-45
Extracted by: AC
Extraction Method: SW846 3550
Analyst: JCG
Analysis Method: SW846 M8270C
Lab Prep Batch: WG60321
Units: ug/Kgdrywt

CAS#	Compound	Flags	Results	DF	PQL	Adj.PQL	Adj.MDL
91-20-3	Naphthalene	U	11	1.0	10	11	2.9
91-57-6	2-Methylnaphthalene	U	11	1.0	10	11	2.5
86-73-7	Fluorene	U	11	1.0	10	11	3.6
85-01-8	Phenanthrene		74	1.0	10	11	2.0
206-44-0	Fluoranthene		290	1.0	10	11	2.0
129-00-0	Pyrene		260	1.0	10	11	2.4
56-55-3	Benzo(a)anthracene		140	1.0	10	11	2.1
205-99-2	Benzo(b)fluoranthene		220	1.0	10	11	2.7
207-08-9	Benzo(k)fluoranthene		200	1.0	10	11	3.5
50-32-8	Benzo(a)pyrene		180	1.0	10	11	3.7
193-39-5	Indeno(1,2,3-cd)pyrene		140	1.0	10	11	2.1
53-70-3	Dibenzo(a,h)anthracene		54	1.0	10	11	2.0
191-24-2	Benzo(g,h,i)perylene		140	1.0	10	11	2.2
118-74-1	Hexachlorobenzene	U	11	1.0	10	11	2.0
87-68-3	Hexachlorobutadiene	U	11	1.0	10	11	2.6
77-47-4	Hexachlorocyclopentadiene	U	11	1.0	10	11	1.7
7297-45-2	2-Methylnaphthalene-D10		70%				
367-12-4	2,4-Dibromophenol		63%				
81103-79-9	Fluorene-d10		82%				
1718-51-1	Pyrene-D10		78%				

LW
4/18/09

7

KATAHDIN ANALYTICAL SERVICES
Report of Analytical Results

Client: CH2MHill
Project: TO-009 Lejeune
PO No:
Sample Date: 01/24/09
Received Date: 01/27/09
Extraction Date: 01/30/09
Analysis Date: 20-FEB-2009 05:54
Report Date: 02/25/2009
Matrix: SOIL
% Solids: 90.3

Lab ID: SC0410-14
Client ID: MR08-SS345-09A
SDG: TO9-45
Extracted by: AC
Extraction Method: SW846 3550
Analyst: JCG
Analysis Method: SW846 M8270C
Lab Prep Batch: WG60321
Units: ug/Kgdrywt

CAS#	Compound	Flags	Results	DF	PQL	Adj.PQL	Adj.MDL
91-20-3	Naphthalene	U	11	1.0	10	11	2.9
91-57-6	2-Methylnaphthalene	U	11	1.0	10	11	2.4
86-73-7	Fluorene	J	5.4	1.0	10	11	3.5
85-01-8	Phenanthrene	~~E~~ 420	~~310~~ 8	1.0	10	89 ~~11~~ 16	~~2.0~~ R DL
206-44-0	Fluoranthene	~~E~~ 1500	~~1100~~	1.0	10	~~11~~ 16	~~2.0~~
129-00-0	Pyrene	~~E~~ 1100	~~1100~~	1.0	10	~~11~~ 19	~~2.3~~
56-55-3	Benzo(a)anthracene	~~E~~ 540	~~570~~	1.0	10	~~11~~ 17	2.1
205-99-2	Benzo(b)fluoranthene	~~E~~ 590	~~580~~	1.0	10	~~11~~ 21	~~2.6~~
207-08-9	Benzo(k)fluoranthene	~~E~~ 550	~~560~~	1.0	10	~~11~~ 27	~~3.4~~
50-32-8	Benzo(a)pyrene	~~E~~ 490	~~470~~	1.0	10	~~11~~ 29	~~3.6~~
193-39-5	Indeno(1,2,3-cd)pyrene	~~E~~ 390	~~340~~	1.0	10	~~11~~ 17	~~2.1~~
53-70-3	Dibenzo(a,h)anthracene		130	1.0	10	11	2.0
191-24-2	Benzo(g,h,i)perylene	~~E~~ 400	~~310~~ 8	~~1.0~~	10	89 11 18	~~2.2~~ R DL
118-74-1	Hexachlorobenzene	U	11	1.0	10	11	2.0
87-68-3	Hexachlorobutadiene	U	11	1.0	10	11	2.5
77-47-4	Hexachlorocyclopentadiene	U	11	1.0	10	11	1.7
7297-45-2	2-Methylnaphthalene-D10		73%				
367-12-4	2,4-Dibromophenol		64%				
81103-79-9	Fluorene-d10		86%				
1718-51-1	Pyrene-D10		89%				

lw
4/1/09

7DL

KATAHDIN ANALYTICAL SERVICES
Report of Analytical Results

Client: CH2MHill
Project: TO-009 Lejeune
PO No:
Sample Date: 01/24/09
Received Date: 01/27/09
Extraction Date: 01/30/09
Analysis Date: 20-FEB-2009 16:00
Report Date: 02/25/2009
Matrix: SOIL
% Solids: 90.3

Lab ID: SC0410-14DL
Client ID: MR08-SS345-09A
SDG: TO9-45
Extracted by: AC
Extraction Method: SW846 3550
Analyst: JCG
Analysis Method: SW846 M8270C
Lab Prep Batch: WG60321
Units: ug/Kgdrywt

use original

R DL

CAS#	Compound	Flags	Results	DF	PQL	Adj.PQL	Adj.MDL
91-20-3	Naphthalene	U	89	8.0	10	89	23
91-57-6	2-Methylnaphthalene	U	89	8.0	10	89	19
86-73-7	Fluorene	U	89	8.0	10	89	28
85-01-8	Phenanthrene		420	8.0	10	89	16
206-44-0	Fluoranthene		1500	8.0	10	89	16
129-00-0	Pyrene		1100	8.0	10	89	19
56-55-3	Benzo(a)anthracene		540	8.0	10	89	17
205-99-2	Benzo(b)fluoranthene		590	8.0	10	89	21
207-08-9	Benzo(k)fluoranthene		550	8.0	10	89	27
50-32-8	Benzo(a)pyrene		490	8.0	10	89	29
193-39-5	Indeno(1,2,3-cd)pyrene		390	8.0	10	89	17
53-70-3	Dibenzo(a,h)anthracene		160	8.0	10	89	16
191-24-2	Benzo(g,h,i)perylene		400	8.0	10	89	18
118-74-1	Hexachlorobenzene	U	89	8.0	10	89	16
87-68-3	Hexachlorobutadiene	U	89	8.0	10	89	20
77-47-4	Hexachlorocyclopentadiene	U	89	8.0	10	89	13
7297-45-2	2-Methylnaphthalene-D10		76%				
367-12-4	2,4-Dibromophenol		54%				
81103-79-9	Fluorene-d10		84%				
1718-51-1	Pyrene-D10		87%				

AW 4/8/09

8

KATAHDIN ANALYTICAL SERVICES
Report of Analytical Results

Client: CH2MHill
Project: TO-009 Lejeune
PO No:
Sample Date: 01/24/09
Received Date: 01/27/09
Extraction Date: 01/30/09
Analysis Date: 20-FEB-2009 06:36
Report Date: 02/25/2009
Matrix: SOIL
% Solids: 87.1

Lab ID: SC0410-16
Client ID: MR08-SS345D-09A
SDG: TO9-45
Extracted by: AC
Extraction Method: SW846 3550
Analyst: JCG
Analysis Method: SW846 M8270C
Lab Prep Batch: WG60321
Units: ug/Kgdrywt

CAS#	Compound	Flags	Results	DF	PQL	Adj.PQL	Adj.MDL
91-20-3	Naphthalene	U	11	1.0	10	11	3.0
91-57-6	2-Methylnaphthalene	U	11	1.0	10	11	2.5
86-73-7	Fluorene	J	6.0	1.0	10	11	3.7
85-01-8	Phenanthrene	~~E~~ 440	~~330~~ 6	1.0	10	69 11	12 ~~2.1~~ R DL
206-44-0	Fluoranthene	~~E~~ 1200	~~960~~	1.0	10	11	12 ~~2.1~~
129-00-0	Pyrene	~~E~~ 1100	~~970~~	1.0	10	11	14 ~~2.4~~
56-55-3	Benzo(a)anthracene	~~E~~ 480	~~480~~	1.0	10	11	13 ~~2.2~~
205-99-2	Benzo(b)fluoranthene	~~E~~ 960	~~680~~	1.0	10	11	16 ~~2.8~~
207-08-9	Benzo(k)fluoranthene	~~E~~ 470	~~360~~	1.0	10	11	21 ~~3.6~~
50-32-8	Benzo(a)pyrene	~~E~~ 920	~~430~~	1.0	10	11	23 ~~3.8~~
193-39-5	Indeno(1,2,3-cd)pyrene		300	1.0	10	11	2.2
53-70-3	Dibenzo(a,h)anthracene		120	1.0	10	11	2.1
191-24-2	Benzo(g,h,i)perylene		280	1.0	10	11	2.3
118-74-1	Hexachlorobenzene	U	11	1.0	10	11	2.1
87-68-3	Hexachlorobutadiene	U	11	1.0	10	11	2.6
77-47-4	Hexachlorocyclopentadiene	U	11	1.0	10	11	1.7
7297-45-2	2-Methylnaphthalene-D10		71%				
367-12-4	2,4-Dibromophenol		64%				
81103-79-9	Fluorene-d10		87%				
1718-51-1	Pyrene-D10		85%				

LW 4/18/09

8DL

KATAHDIN ANALYTICAL SERVICES
Report of Analytical Results

Client: CH2MHill
Project: TO-009 Lejeune
PO No:
Sample Date: 01/24/09
Received Date: 01/27/09
Extraction Date: 01/30/09
Analysis Date: 20-FEB-2009 16:42
Report Date: 02/25/2009
Matrix: SOIL
% Solids: 87.1

Lab ID: SC0410-16DL
Client ID: MR08-SS345D-09A
SDG: TO9-45
Extracted by: AC
Extraction Method: SW846 3550
Analyst: JCG
Analysis Method: SW846 M8270C
Lab Prep Batch: WG60321
Units: ug/Kgdrywt

use original

R DL

CAS#	Compound	Flags	Results	DF	PQL	Adj.PQL	Adj.MDL
91-20-3	Naphthalene	U	69	6.0	10	69	18
91-57-6	2-Methylnaphthalene	U	69	6.0	10	69	15
86-73-7	Fluorene	U	69	6.0	10	69	22
85-01-8	Phenanthrene		440	6.0	10	69	12
206-44-0	Fluoranthene		1200	6.0	10	69	12
129-00-0	Pyrene		1100	6.0	10	69	14
56-55-3	Benzo(a)anthracene		480	6.0	10	69	13
205-99-2	Benzo(b)fluoranthene		460	6.0	10	69	16
207-08-9	Benzo(k)fluoranthene		470	6.0	10	69	21
50-32-8	Benzo(a)pyrene		420	6.0	10	69	23
193-39-5	Indeno(1,2,3-cd)pyrene		320	6.0	10	69	13
53-70-3	Dibenzo(a,h)anthracene		120	6.0	10	69	12
191-24-2	Benzo(g,h,i)perylene		320	6.0	10	69	14
118-74-1	Hexachlorobenzene	U	69	6.0	10	69	12
87-68-3	Hexachlorobutadiene	U	69	6.0	10	69	16
77-47-4	Hexachlorocyclopentadiene	U	69	6.0	10	69	10
7297-45-2	2-Methylnaphthalene-D10		81%				
367-12-4	2,4-Dibromophenol		54%				
81103-79-9	Fluorene-d10		67%				
1718-51-1	Pyrene-D10		89%				

RW 4/18/09

KATAHDIN ANALYTICAL SERVICES
Report of Analytical Results

Client: CH2MHill
Project: TO-009 Lejeune
PO No:
Sample Date: 01/24/09
Received Date: 01/27/09
Extraction Date: 01/30/09
Analysis Date: 20-FEB-2009 17:24
Report Date: 02/25/2009
Matrix: SOIL
% Solids: 89.5

Lab ID: SC0410-18
Client ID: MR08-IS345-1-2-09A
SDG: TO9-45
Extracted by: AC
Extraction Method: SW846 3550
Analyst: JCG
Analysis Method: SW846 M8270C
Lab Prep Batch: WG60321
Units: ug/Kgdrywt

* SEE reanalysis

CAS#	Compound	Flags	Results	DF	PQL	Adj.PQL	Adj.MDL
91-20-3	Naphthalene	E	1100	1.0	10	11	2.9
91-57-6	2-Methylnaphthalene	E	2000	1.0	10	11	2.4
86-73-7	Fluorene	E	1400	1.0	10	11	3.6
85-01-8	Phenanthrene	E	1700	1.0	10	11	2.0
206-44-0	Fluoranthene	E	1400	1.0	10	11	2.0
129-00-0	Pyrene	E	1400	1.0	10	11	2.3
56-55-3	Benzo(a)anthracene	E	1600	1.0	10	11	2.1
205-99-2	Benzo(b)fluoranthene	E	1500	1.0	10	11	2.7
207-08-9	Benzo(k)fluoranthene	E	1100	1.0	10	11	3.5
50-32-8	Benzo(a)pyrene	E	1300	1.0	10	11	3.7
193-39-5	Indeno(1,2,3-cd)pyrene	E	1400	1.0	10	11	2.1
53-70-3	Dibenzo(a,h)anthracene	E	1500	1.0	10	11	2.0
191-24-2	Benzo(g,h,i)perylene	E	1200	1.0	10	11	2.2
118-74-1	Hexachlorobenzene	E	1400	1.0	10	11	2.0
87-68-3	Hexachlorobutadiene	E	1600	1.0	10	11	2.6
77-47-4	Hexachlorocyclopentadiene	E	1200	1.0	10	11	1.7
7297-45-2	2-Methylnaphthalene-D10		61%				
367-12-4	2,4-Dibromophenol		65%				
81103-79-9	Fluorene-d10		85%				
1718-51-1	Pyrene-D10		84%				

R RE

Page 01 of 01 G4749.D

* laboratory accidentally spiked w/LCS spiking mix

LW 4/18/09

9RE

KATAHDIN ANALYTICAL SERVICES
Report of Analytical Results

Client: CH2MHill
Project: TO-009 Lejeune
PO No:
Sample Date: 01/24/09
Received Date: 01/27/09
Extraction Date: 02/16/09
Analysis Date: 22-FEB-2009 17:30
Report Date: 02/25/2009
Matrix: SOIL
% Solids: 89.5

Lab ID: SC0410-18RE
Client ID: MR08-IS345-1-2-09A
SDG: TO9-45
Extracted by: AC
Extraction Method: SW846 3550
Analyst: JLP
Analysis Method: SW846 M8270C
Lab Prep Batch: WG60859
Units: ug/Kgdrywt

CAS#	Compound	Flags	Results	DF	PQL	Adj.PQL	Adj.MDL
91-20-3	Naphthalene	U UJ	11	1.0	10	11	2.9 HT
91-57-6	2-Methylnaphthalene	U	11	1.0	10	11	2.4
86-73-7	Fluorene	U	11	1.0	10	11	3.6
85-01-8	Phenanthrene	U	11	1.0	10	11	2.0
206-44-0	Fluoranthene	U	11	1.0	10	11	2.0
129-00-0	Pyrene	U	11	1.0	10	11	2.3
56-55-3	Benzo(a)anthracene	U	11	1.0	10	11	2.1
205-99-2	Benzo(b)fluoranthene	U	11	1.0	10	11	2.7
207-08-9	Benzo(k)fluoranthene	U	11	1.0	10	11	3.5
50-32-8	Benzo(a)pyrene	U	11	1.0	10	11	3.7
193-39-5	Indeno(1,2,3-cd)pyrene	U	11	1.0	10	11	2.1
53-70-3	Dibenzo(a,h)anthracene	U	11	1.0	10	11	2.0
191-24-2	Benzo(g,h,i)perylene	U	11	1.0	10	11	2.2
118-74-1	Hexachlorobenzene	U	11	1.0	10	11	2.0
87-68-3	Hexachlorobutadiene	U	11	1.0	10	11	2.6
77-47-4	Hexachlorocyclopentadiene	U	11	1.0	10	11	1.7
7297-45-2	2-Methylnaphthalene-D10		82%				
367-12-4	2,4-Dibromophenol		75%				
81103-79-9	Fluorene-d10		86%				
1718-51-1	Pyrene-D10		78%				

MW 4/18/09

10

KATAHDIN ANALYTICAL SERVICES
Report of Analytical Results

Client: CH2MHill
Project: TO-009 Lejeune
PO No:
Sample Date: 01/24/09
Received Date: 01/27/09
Extraction Date: 01/30/09
Analysis Date: 20-FEB-2009 18:06
Report Date: 02/25/2009
Matrix: SOIL
% Solids: 86.9

Lab ID: SC0410-20
Client ID: MR08-IS345D-1-2-09A
SDG: TO9-45
Extracted by: AC
Extraction Method: SW846 3550
Analyst: JCG
Analysis Method: SW846 M8270C
Lab Prep Batch: WG60321
Units: ug/Kgdrywt

CAS#	Compound	Flags	Results	DF	PQL	Adj.PQL	Adj.MDL
91-20-3	Naphthalene	U	12	1.0	10	12	3.0
91-57-6	2-Methylnaphthalene	U	12	1.0	10	12	2.5
86-73-7	Fluorene	U	12	1.0	10	12	3.7
85-01-8	Phenanthrene	U	12	1.0	10	12	2.1
206-44-0	Fluoranthene	U	12	1.0	10	12	2.1
129-00-0	Pyrene	U	12	1.0	10	12	2.4
56-55-3	Benzo(a)anthracene	U	12	1.0	10	12	2.2
205-99-2	Benzo(b)fluoranthene	U	12	1.0	10	12	2.8
207-08-9	Benzo(k)fluoranthene	U	12	1.0	10	12	3.6
50-32-8	Benzo(a)pyrene	U	12	1.0	10	12	3.8
193-39-5	Indeno(1,2,3-cd)pyrene	U	12	1.0	10	12	2.2
53-70-3	Dibenzo(a,h)anthracene	U	12	1.0	10	12	2.1
191-24-2	Benzo(g,h,i)perylene	U	12	1.0	10	12	2.3
118-74-1	Hexachlorobenzene	U	12	1.0	10	12	2.1
87-68-3	Hexachlorobutadiene	U	12	1.0	10	12	2.6
77-47-4	Hexachlorocyclopentadiene	U	12	1.0	10	12	1.7
7297-45-2	2-Methylnaphthalene-D10		80%				
367-12-4	2,4-Dibromophenol		60%				
81103-79-9	Fluorene-d10		84%				
1718-51-1	Pyrene-D10		86%				

lw
4/18/09

11

KATAHDIN ANALYTICAL SERVICES
Report of Analytical Results

Client: CH2MHill
Project: TO-009 Lejeune
PO No:
Sample Date: 01/24/09
Received Date: 01/27/09
Extraction Date: 01/30/09
Analysis Date: 22-FEB-2009 20:56
Report Date: 02/25/2009
Matrix: SOIL
% Solids: 91.8

Lab ID: SC0410-22RA
Client ID: MR08-SS346-09A
SDG: TO9-45
Extracted by: AC
Extraction Method: SW846 3550
Analyst: JLP
Analysis Method: SW846 M8270C
Lab Prep Batch: WG60321
Units: ug/Kgdrywt

CAS#	Compound	Flags	Results	DF	PQL	Adj.PQL	Adj.MDL
91-20-3	Naphthalene	U	11	1.0	10	11	2.8
91-57-6	2-Methylnaphthalene	U	11	1.0	10	11	2.4
86-73-7	Fluorene	U	11	1.0	10	11	3.5
85-01-8	Phenanthrene	U	11	1.0	10	11	2.0
206-44-0	Fluoranthene	J	8.3	1.0	10	11	2.0
129-00-0	Pyrene	J	9.0	1.0	10	11	2.3
56-55-3	Benzo(a)anthracene	J	3.8	1.0	10	11	2.1
205-99-2	Benzo(b)fluoranthene		22	1.0	10	11	2.6
207-08-9	Benzo(k)fluoranthene		16	1.0	10	11	3.4
50-32-8	Benzo(a)pyrene		12	1.0	10	11	3.6
193-39-5	Indeno(1,2,3-cd)pyrene		21	1.0	10	11	2.1
53-70-3	Dibenzo(a,h)anthracene	J	6.6	1.0	10	11	2.0
191-24-2	Benzo(g,h,i)perylene		36	1.0	10	11	2.2
118-74-1	Hexachlorobenzene	U	11	1.0	10	11	2.0
87-68-3	Hexachlorobutadiene	U	11	1.0	10	11	2.5
77-47-4	Hexachlorocyclopentadiene	~~J~~ UJ	11	1.0	10	11	1.6 CCN
7297-45-2	2-Methylnaphthalene-D10		69%				
367-12-4	2,4-Dibromophenol		49%				
81103-79-9	Fluorene-d10		71%				
1718-51-1	Pyrene-D10		69%				

MW
4/18/09

12

KATAHDIN ANALYTICAL SERVICES
Report of Analytical Results

Client: CH2MHill
Project: TO-009 Lejeune
PO No:
Sample Date: 01/24/09
Received Date: 01/27/09
Extraction Date: 01/30/09
Analysis Date: 22-FEB-2009 18:11
Report Date: 02/25/2009
Matrix: SOIL
% Solids: 86.9

Lab ID: SC0410-24RA
Client ID: MR08-IS346-1-2-09A
SDG: TO9-45
Extracted by: AC
Extraction Method: SW846 3550
Analyst: JLP
Analysis Method: SW846 M8270C
Lab Prep Batch: WG60321
Units: ug/Kgdrywt

CAS#	Compound	Flags	Results	DF	PQL	Adj.PQL	Adj.MDL
91-20-3	Naphthalene	U	12	1.0	10	12	3.0
91-57-6	2-Methylnaphthalene	U	12	1.0	10	12	2.5
86-73-7	Fluorene	U	12	1.0	10	12	3.7
85-01-8	Phenanthrene	U	12	1.0	10	12	2.1
206-44-0	Fluoranthene	U	12	1.0	10	12	2.1
129-00-0	Pyrene	U	12	1.0	10	12	2.4
56-55-3	Benzo(a)anthracene	U	12	1.0	10	12	2.2
205-99-2	Benzo(b)fluoranthene	U	12	1.0	10	12	2.8
207-08-9	Benzo(k)fluoranthene	U	12	1.0	10	12	3.6
50-32-8	Benzo(a)pyrene	U	12	1.0	10	12	3.8
193-39-5	Indeno(1,2,3-cd)pyrene	U	12	1.0	10	12	2.2
53-70-3	Dibenzo(a,h)anthracene	U	12	1.0	10	12	2.1
191-24-2	Benzo(g,h,i)perylene	U	12	1.0	10	12	2.3
118-74-1	Hexachlorobenzene	U	12	1.0	10	12	2.1
87-68-3	Hexachlorobutadiene	U	12	1.0	10	12	2.6
77-47-4	Hexachlorocyclopentadiene	~~U~~ UJ	12	1.0	10	12	1.7 CH
7297-45-2	2-Methylnaphthalene-D10		71%				
367-12-4	2,4-Dibromophenol		55%				
81103-79-9	Fluorene-d10		79%				
1718-51-1	Pyrene-D10		74%				

kw
4/18/09

13

KATAHDIN ANALYTICAL SERVICES
Report of Analytical Results

Client: CH2MHill
Project: TO-009 Lejeune
PO No:
Sample Date: 01/24/09
Received Date: 01/27/09
Extraction Date: 01/30/09
Analysis Date: 22-FEB-2009 21:37
Report Date: 02/25/2009
Matrix: SOIL
% Solids: 92.5

Lab ID: SC0410-26RA
Client ID: MR08-SS354-09A
SDG: TO9-45
Extracted by: AC
Extraction Method: SW846 3550
Analyst: JLP
Analysis Method: SW846 M8270C
Lab Prep Batch: WG60321
Units: ug/Kgdrywt

CAS#	Compound	Flags	Results	DF	PQL	Adj.PQL	Adj.MDL	
91-20-3	Naphthalene	U	11	1.0	10	11	2.8	
91-57-6	2-Methylnaphthalene	U	11	1.0	10	11	2.4	
86-73-7	Fluorene	U	11	1.0	10	11	3.4	
85-01-8	Phenanthrene	J	3.1	1.0	10	11	1.9	
206-44-0	Fluoranthene		53	1.0	10	11	1.9	
129-00-0	Pyrene		81	1.0	10	11	2.3	
56-55-3	Benzo(a)anthracene		14	1.0	10	11	2.0	
205-99-2	Benzo(b)fluoranthene		19	1.0	10	11	2.6	
207-08-9	Benzo(k)fluoranthene		17	1.0	10	11	3.4	
50-32-8	Benzo(a)pyrene	J	9.5	1.0	10	11	3.6	
193-39-5	Indeno(1,2,3-cd)pyrene	J	7.1	1.0	10	11	2.0	
53-70-3	Dibenzo(a,h)anthracene	J	2.8	1.0	10	11	1.9	
191-24-2	Benzo(g,h,i)perylene	J	5.2	1.0	10	11	2.2	
118-74-1	Hexachlorobenzene	U	11	1.0	10	11	1.9	
87-68-3	Hexachlorobutadiene	U	11	1.0	10	11	2.5	
77-47-4	Hexachlorocyclopentadiene	~~U~~ UJ	11	1.0	10	11	1.6	CEH
7297-45-2	2-Methylnaphthalene-D10		72%					
367-12-4	2,4-Dibromophenol		55%					
81103-79-9	Fluorene-d10		75%					
1718-51-1	Pyrene-D10		81%					

MW 4/18/09

KATAHDIN ANALYTICAL SERVICES
Report of Analytical Results

Client: CH2MHill
Project: TO-009 Lejeune
PO No:
Sample Date: 01/24/09
Received Date: 01/27/09
Extraction Date: 01/30/09
Analysis Date: 20-FEB-2009 19:28
Report Date: 02/25/2009
Matrix: SOIL
% Solids: 85.9

Lab ID: SC0410-28
Client ID: MR08-IS354-1-2-09A
SDG: TO9-45
Extracted by: AC
Extraction Method: SW846 3550
Analyst: JCG
Analysis Method: SW846 M8270C
Lab Prep Batch: WG60321
Units: ug/Kgdrywt

CAS#	Compound	Flags	Results	DF	PQL	Adj.PQL	Adj.MDL
91-20-3	Naphthalene	U	12	1.0	10	12	3.0
91-57-6	2-Methylnaphthalene	U	12	1.0	10	12	2.6
86-73-7	Fluorene	U	12	1.0	10	12	3.7
85-01-8	Phenanthrene	U	12	1.0	10	12	2.1
206-44-0	Fluoranthene	U	12	1.0	10	12	2.1
129-00-0	Pyrene	U	12	1.0	10	12	2.4
56-55-3	Benzo(a)anthracene	U	12	1.0	10	12	2.2
205-99-2	Benzo(b)fluoranthene	U	12	1.0	10	12	2.8
207-08-9	Benzo(k)fluoranthene	U	12	1.0	10	12	3.6
50-32-8	Benzo(a)pyrene	U	12	1.0	10	12	3.8
193-39-5	Indeno(1,2,3-cd)pyrene	U	12	1.0	10	12	2.2
53-70-3	Dibenzo(a,h)anthracene	U	12	1.0	10	12	2.1
191-24-2	Benzo(g,h,i)perylene	U	12	1.0	10	12	2.3
118-74-1	Hexachlorobenzene	U	12	1.0	10	12	2.1
87-68-3	Hexachlorobutadiene	U	12	1.0	10	12	2.7
77-47-4	Hexachlorocyclopentadiene	U	12	1.0	10	12	1.7
7297-45-2	2-Methylnaphthalene-D10		81%				
367-12-4	2,4-Dibromophenol		66%				
81103-79-9	Fluorene-d10		90%				
1718-51-1	Pyrene-D10		92%				

fcw
4/18/09

KATAHDIN ANALYTICAL SERVICES
Report of Analytical Results

Client: CH2MHill
Project: TO-009 Lejeune
PO No:
Sample Date: 01/24/09
Received Date: 01/27/09
Extraction Date: 01/30/09
Analysis Date: 22-FEB-2009 22:18
Report Date: 02/25/2009
Matrix: SOIL
% Solids: 93.1

Lab ID: SC0410-30RA
Client ID: MR08-SS369-09A
SDG: TO9-45
Extracted by: AC
Extraction Method: SW846 3550
Analyst: JLP
Analysis Method: SW846 M8270C
Lab Prep Batch: WG60321
Units: ug/Kgdrywt

CAS#	Compound	Flags	Results	DF	PQL	Adj.PQL	Adj.MDL
91-20-3	Naphthalene	U	11	1.0	10	11	2.8
91-57-6	2-Methylnaphthalene	U	11	1.0	10	11	2.4
86-73-7	Fluorene	U	11	1.0	10	11	3.4
85-01-8	Phenanthrene		35	1.0	10	11	1.9
206-44-0	Fluoranthene		58	1.0	10	11	1.9
129-00-0	Pyrene		48	1.0	10	11	2.2
56-55-3	Benzo(a)anthracene	J	9.9	1.0	10	11	2.0
205-99-2	Benzo(b)fluoranthene	U	11	1.0	10	11	2.6
207-08-9	Benzo(k)fluoranthene	U	11	1.0	10	11	3.3
50-32-8	Benzo(a)pyrene	J	6.9	1.0	10	11	3.5
193-39-5	Indeno(1,2,3-cd)pyrene	J	9.4	1.0	10	11	2.0
53-70-3	Dibenzo(a,h)anthracene	U	11	1.0	10	11	1.9
191-24-2	Benzo(g,h,i)perylene		11	1.0	10	11	2.1
118-74-1	Hexachlorobenzene	U	11	1.0	10	11	1.9
87-68-3	Hexachlorobutadiene	U	11	1.0	10	11	2.5
77-47-4	Hexachlorocyclopentadiene	~~U~~ UJ	11	1.0	10	11	1.6 CCH
7297-45-2	2-Methylnaphthalene-D10		82%				
367-12-4	2,4-Dibromophenol		61%				
81103-79-9	Fluorene-d10		86%				
1718-51-1	Pyrene-D10		88%				

lw
4/18/09

16

KATAHDIN ANALYTICAL SERVICES
Report of Analytical Results

Client: CH2MHill
Project: TO-009 Lejeune
PO No:
Sample Date: 01/24/09
Received Date: 01/27/09
Extraction Date: 01/30/09
Analysis Date: 20-FEB-2009 22:13
Report Date: 02/25/2009
Matrix: SOIL
% Solids: 93.7

Lab ID: SC0410-32
Client ID: MR08-SS369D-09A
SDG: TO9-45
Extracted by: AC
Extraction Method: SW846 3550
Analyst: JCG
Analysis Method: SW846 M8270C
Lab Prep Batch: WG60321
Units: ug/Kgdrywt

CAS#	Compound	Flags	Results	DF	PQL	Adj.PQL	Adj.MDL
91-20-3	Naphthalene	J	6.9	1.0	10	11	2.8
91-57-6	2-Methylnaphthalene	J	5.5	1.0	10	11	2.3
86-73-7	Fluorene		19	1.0	10	11	3.4
85-01-8	Phenanthrene	~~E~~ 460	~~380~~ 5	1.0	10	53 11	9.6 ~~1.9~~ RDL
206-44-0	Fluoranthene	~~E~~ 920	~~750~~	1.0	10	11	9.6 ~~1.9~~
129-00-0	Pyrene	~~E~~ 670	~~800~~	1.0	10	11	11 ~~2.2~~
56-55-3	Benzo(a)anthracene	~~E~~ 420	~~470~~	1.0	10	11	10 ~~2.0~~
205-99-2	Benzo(b)fluoranthene	~~E~~ 600	~~480~~	1.0	10	11	13 ~~2.6~~
207-08-9	Benzo(k)fluoranthene	~~E~~ 360	~~710~~	1.0	10	11	16 ~~3.3~~
50-32-8	Benzo(a)pyrene	~~E~~ 440	~~500~~	1.0	10	11	18 ~~3.5~~
193-39-5	Indeno(1,2,3-cd)pyrene	~~E~~ 390	~~350~~	~~1.0~~	10	~~11~~	10 ~~2.0~~
53-70-3	Dibenzo(a,h)anthracene	J	190	1.0	10	11	1.9 ISL
191-24-2	Benzo(g,h,i)perylene	~~E~~ 420	~~370~~ 5	~~1.0~~	10	53 ~~11~~	11 ~~2.1~~ RDL
118-74-1	Hexachlorobenzene	~~U~~ UJ	11	1.0	10	11	1.9 ISL
87-68-3	Hexachlorobutadiene	~~U~~	11	1.0	10	11	2.4
77-47-4	Hexachlorocyclopentadiene	~~U~~	11	1.0	10	11	1.6
7297-45-2	2-Methylnaphthalene-D10		83%				
367-12-4	2,4-Dibromophenol		66%				
81103-79-9	Fluorene-d10		90%				
1718-51-1	Pyrene-D10		102%				

RW 4/18/09

16DL

KATAHDIN ANALYTICAL SERVICES
Report of Analytical Results

Client: CH2MHill
Project: TO-009 Lejeune
PO No:
Sample Date: 01/24/09
Received Date: 01/27/09
Extraction Date: 01/30/09
Analysis Date: 22-FEB-2009 20:15
Report Date: 02/25/2009
Matrix: SOIL
% Solids: 93.7

Lab ID: SC0410-32DL2
Client ID: MR08-SS369D-09A
SDG: TO9-45
Extracted by: AC
Extraction Method: SW846 3550
Analyst: JLP
Analysis Method: SW846 M8270C
Lab Prep Batch: WG60321
Units: ug/Kgdrywt

use original

RDL

CAS#	Compound	Flags	Results	DF	PQL	Adj.PQL	Adj.MDL
91-20-3	Naphthalene	U	53	5.0	10	53	14
91-57-6	2-Methylnaphthalene	U	53	5.0	10	53	12
86-73-7	Fluorene	J	20	5.0	10	53	17
85-01-8	Phenanthrene		460	5.0	10	53	9.6
206-44-0	Fluoranthene		920	5.0	10	53	9.6
129-00-0	Pyrene		670	5.0	10	53	11
56-55-3	Benzo(a)anthracene		420	5.0	10	53	10
205-99-2	Benzo(b)fluoranthene		600	5.0	10	53	13
207-08-9	Benzo(k)fluoranthene		360	5.0	10	53	16
50-32-8	Benzo(a)pyrene		440	5.0	10	53	18
193-39-5	Indeno(1,2,3-cd)pyrene		390	5.0	10	53	10
53-70-3	Dibenzo(a,h)anthracene		140	5.0	10	53	9.6
191-24-2	Benzo(g,h,i)perylene		420	5.0	10	53	11
118-74-1	Hexachlorobenzene	U	53	5.0	10	53	9.6
87-68-3	Hexachlorobutadiene	U	53	5.0	10	53	12
77-47-4	Hexachlorocyclopentadiene	~~U~~ UJ	53	5.0	10	53	8.0 CCH
7297-45-2	2-Methylnaphthalene-D10		81%				
367-12-4	2,4-Dibromophenol		59%				
81103-79-9	Fluorene-d10		87%				
1718-51-1	Pyrene-D10		83%				

lw 4/18/09

17

KATAHDIN ANALYTICAL SERVICES
Report of Analytical Results

Client: CH2MHill
Project: TO-009 Lejeune
PO No:
Sample Date: 01/24/09
Received Date: 01/27/09
Extraction Date: 01/30/09
Analysis Date: 22-FEB-2009 18:53
Report Date: 02/25/2009
Matrix: SOIL
% Solids: 90.7

Lab ID: SC0410-34RA
Client ID: MR08-IS369-1-2-09A
SDG: TO9-45
Extracted by: AC
Extraction Method: SW846 3550
Analyst: JLP
Analysis Method: SW846 M8270C
Lab Prep Batch: WG60321
Units: ug/Kgdrywt

CAS#	Compound	Flags	Results	DF	PQL	Adj.PQL	Adj.MDL
91-20-3	Naphthalene	U	11	1.0	10	11	2.9
91-57-6	2-Methylnaphthalene	U	11	1.0	10	11	2.4
86-73-7	Fluorene	U	11	1.0	10	11	3.5
85-01-8	Phenanthrene	U	11	1.0	10	11	2.0
206-44-0	Fluoranthene	U	11	1.0	10	11	2.0
129-00-0	Pyrene	U	11	1.0	10	11	2.3
56-55-3	Benzo(a)anthracene	U	11	1.0	10	11	2.1
205-99-2	Benzo(b)fluoranthene	U	11	1.0	10	11	2.6
207-08-9	Benzo(k)fluoranthene	U	11	1.0	10	11	3.4
50-32-8	Benzo(a)pyrene	U	11	1.0	10	11	3.6
193-39-5	Indeno(1,2,3-cd)pyrene	U	11	1.0	10	11	2.1
53-70-3	Dibenzo(a,h)anthracene	U	11	1.0	10	11	2.0
191-24-2	Benzo(g,h,i)perylene	U	11	1.0	10	11	2.2
118-74-1	Hexachlorobenzene	U	11	1.0	10	11	2.0
87-68-3	Hexachlorobutadiene	U	11	1.0	10	11	2.5
77-47-4	Hexachlorocyclopentadiene	~~U~~ UJ	11	1.0	10	11	1.6 CCH
7297-45-2	2-Methylnaphthalene-D10		75%				
367-12-4	2,4-Dibromophenol		57%				
81103-79-9	Fluorene-d10		70%				
1718-51-1	Pyrene-D10		76%				

lw 4/18/09

18

KATAHDIN ANALYTICAL SERVICES
Report of Analytical Results

Client: CH2MHill
Project: TO-009 Lejeune
PO No:
Sample Date: 01/24/09
Received Date: 01/27/09
Extraction Date: 02/02/09
Analysis Date: 17-FEB-2009 19:54
Report Date: 02/25/2009
Matrix: SOIL
% Solids: 91.4

Lab ID: SC0410-36
Client ID: MR08-IS369D-1-2-09A
SDG: TO9-45
Extracted by: CB
Extraction Method: SW846 3550
Analyst: JCG
Analysis Method: SW846 M8270C
Lab Prep Batch: WG60396
Units: ug/Kgdrywt

CAS#	Compound	Flags	Results	DF	PQL	Adj.PQL	Adj.MDL
91-20-3	Naphthalene	~~U~~ UJ	11	1.0	10	11	2.8 CCH
91-57-6	2-Methylnaphthalene	U	11	1.0	10	11	2.4
86-73-7	Fluorene	U	11	1.0	10	11	3.5
85-01-8	Phenanthrene	U	11	1.0	10	11	2.0
206-44-0	Fluoranthene	U	11	1.0	10	11	2.0
129-00-0	Pyrene	U	11	1.0	10	11	2.3
56-55-3	Benzo(a)anthracene	U	11	1.0	10	11	2.1
205-99-2	Benzo(b)fluoranthene	U	11	1.0	10	11	2.6
207-08-9	Benzo(k)fluoranthene	U	11	1.0	10	11	3.4
50-32-8	Benzo(a)pyrene	U	11	1.0	10	11	3.6
193-39-5	Indeno(1,2,3-cd)pyrene	U	11	1.0	10	11	2.1
53-70-3	Dibenzo(a,h)anthracene	U	11	1.0	10	11	2.0
191-24-2	Benzo(g,h,i)perylene	U	11	1.0	10	11	2.2
118-74-1	Hexachlorobenzene	U	11	1.0	10	11	2.0
87-68-3	Hexachlorobutadiene	U	11	1.0	10	11	2.5
77-47-4	Hexachlorocyclopentadiene	U	11	1.0	10	11	1.6
7297-45-2	2-Methylnaphthalene-D10		36%				
367-12-4	2,4-Dibromophenol		86%				
81103-79-9	Fluorene-d10		73%				
1718-51-1	Pyrene-D10		116%				

MW 4/8/09

19

KATAHDIN ANALYTICAL SERVICES
Report of Analytical Results

Client: CH2MHill
Project: TO-009 Lejeune
PO No:
Sample Date: 01/24/09
Received Date: 01/27/09
Extraction Date: 02/02/09
Analysis Date: 17-FEB-2009 20:36
Report Date: 02/25/2009
Matrix: SOIL
% Solids: 83.5

Lab ID: SC0410-38
Client ID: MR08-SS370-09A
SDG: TO9-45
Extracted by: CB
Extraction Method: SW846 3550
Analyst: JCG
Analysis Method: SW846 M8270C
Lab Prep Batch: WG60396
Units: ug/Kgdrywt

CAS#	Compound	Flags	Results	DF	PQL	Adj.PQL	Adj.MDL
91-20-3	Naphthalene	~~U~~ WJ	12	1.0	10	12	3.1 CCH
91-57-6	2-Methylnaphthalene	U	12	1.0	10	12	2.6
86-73-7	Fluorene	U	12	1.0	10	12	3.8
85-01-8	Phenanthrene		68	1.0	10	12	2.2
206-44-0	Fluoranthene		290	1.0	10	12	2.2
129-00-0	Pyrene	~~E~~ 320	~~350~~ 3~~1~~.0		10	36 ~~12~~ 7.5	~~2.5~~ R DL
56-55-3	Benzo(a)anthracene		240	1.0	10	12	2.3
205-99-2	Benzo(b)fluoranthene	~~E~~ 380	~~450~~ 3~~1~~.0		10	36 ~~12~~ 8.6	~~2.9~~ R DL
207-08-9	Benzo(k)fluoranthene		140	1.0	10	12	3.7
50-32-8	Benzo(a)pyrene		250	1.0	10	12	4.0
193-39-5	Indeno(1,2,3-cd)pyrene	~~E~~ 290	~~420~~ 3~~1~~.0		10	36 ~~12~~ 6.8	~~3.8~~ DL
53-70-3	Dibenzo(a,h)anthracene		78	1.0	10	12	2.2
191-24-2	Benzo(g,h,i)perylene		260	1.0	10	12	2.4
118-74-1	Hexachlorobenzene	U	12	1.0	10	12	2.2
87-68-3	Hexachlorobutadiene	U	12	1.0	10	12	2.8
77-47-4	Hexachlorocyclopentadiene	U	12	1.0	10	12	1.8
7297-45-2	2-Methylnaphthalene-D10		33%				
367-12-4	2,4-Dibromophenol		93%				
81103-79-9	Fluorene-d10		72%				
1718-51-1	Pyrene-D10		113%				

lw
4/18/09

19DL

KATAHDIN ANALYTICAL SERVICES
Report of Analytical Results

Client: CH2MHill
Project: TO-009 Lejeune
PO No:
Sample Date: 01/24/09
Received Date: 01/27/09
Extraction Date: 02/02/09
Analysis Date: 19-FEB-2009 00:20
Report Date: 02/25/2009
Matrix: SOIL
% Solids: 83.5

Lab ID: SC0410-38DL
Client ID: MR08-SS370-09A
SDG: TO9-45
Extracted by: CB
Extraction Method: SW846 3550
Analyst: JCG
Analysis Method: SW846 M8270C
Lab Prep Batch: WG60396
Units: ug/Kgdrywt

use 07g.wd

R DL

CAS#	Compound	Flags	Results	DF	PQL	Adj.PQL	Adj.MDL
91-20-3	Naphthalene	U	36	3.0	10	36	9.3
91-57-6	2-Methylnaphthalene	U	36	3.0	10	36	7.9
86-73-7	Fluorene	U	36	3.0	10	36	11
85-01-8	Phenanthrene		60	3.0	10	36	6.5
206-44-0	Fluoranthene		400	3.0	10	36	6.5
129-00-0	Pyrene		320	3.0	10	36	7.5
56-55-3	Benzo(a)anthracene		220	3.0	10	36	6.8
205-99-2	Benzo(b)fluoranthene		380	3.0	10	36	8.6
207-08-9	Benzo(k)fluoranthene		200	3.0	10	36	11
50-32-8	Benzo(a)pyrene		250	3.0	10	36	12
193-39-5	Indeno(1,2,3-cd)pyrene		290	3.0	10	36	6.8
53-70-3	Dibenzo(a,h)anthracene		42	3.0	10	36	6.5
191-24-2	Benzo(g,h,i)perylene		180	3.0	10	36	7.2
118-74-1	Hexachlorobenzene	U	36	3.0	10	36	6.5
87-68-3	Hexachlorobutadiene	U	36	3.0	10	36	8.3
77-47-4	Hexachlorocyclopentadiene	U	36	3.0	10	36	5.4
7297-45-2	2-Methylnaphthalene-D10		99%				
367-12-4	2,4-Dibromophenol		79%				
81103-79-9	Fluorene-d10		68%				
1718-51-1	Pyrene-D10		92%				

LW 3/18/09

20

KATAHDIN ANALYTICAL SERVICES
Report of Analytical Results

Client: CH2MHill
Project: TO-009 Lejeune
PO No:
Sample Date: 01/25/09
Received Date: 01/27/09
Extraction Date: 02/02/09
Analysis Date: 19-FEB-2009 01:01
Report Date: 02/25/2009
Matrix: SOIL
% Solids: 86.2

Lab ID: SC0410-40DL
Client ID: MR08-SS372-09A
SDG: TO9-45
Extracted by: CB
Extraction Method: SW846 3550
Analyst: JCG
Analysis Method: SW846 M8270C
Lab Prep Batch: WG60396
Units: ug/Kgdrywt

CAS#	Compound	Flags	Results	DF	PQL	Adj.PQL	Adj.MDL
91-20-3	Naphthalene	~~J~~ J	8.5	2.0	10	23	6.0 BSH
91-57-6	2-Methylnaphthalene	U	23	2.0	10	23	5.1
86-73-7	Fluorene		29	2.0	10	23	7.4
85-01-8	Phenanthrene	~~E~~ 2100	~~1400~~ 50	2.0	10	580 23 100	~~4.2~~ R DL
206-44-0	Fluoranthene	~~E~~ 8600	~~6400~~	2.0	10	23 100	~~4.2~~
129-00-0	Pyrene	~~E~~ 7900	~~3900~~	2.0	10	23 120	~~4.9~~
56-55-3	Benzo(a)anthracene	~~E~~ 3400	~~3100~~	2.0	10	23 110	~~4.4~~
205-99-2	Benzo(b)fluoranthene	~~E~~ 6100	~~5000~~	2.0	10	23 140	~~5.6~~
207-08-9	Benzo(k)fluoranthene	~~E~~ 2400	~~1400~~	2.0	10	23 180	7.2
50-32-8	Benzo(a)pyrene	~~E~~ 3400	~~2700~~	2.0	10	23 190	7.6
193-39-5	Indeno(1,2,3-cd)pyrene	~~E~~ 2600	~~2700~~	2.0	10	23 110	4.4
53-70-3	Dibenzo(a,h)anthracene		480	2.0	10	23	4.2
191-24-2	Benzo(g,h,i)perylene	~~E~~ 2300	~~1600~~ 50	~~2.0~~	10	580 ~~23~~ 120	~~4.6~~ R DL
118-74-1	Hexachlorobenzene	U	23	2.0	10	23	4.2
87-68-3	Hexachlorobutadiene	U	23	2.0	10	23	5.3
77-47-4	Hexachlorocyclopentadiene	~~U~~ R	23	2.0	10	23	3.5 MSL
7297-45-2	2-Methylnaphthalene-D10		116%				
367-12-4	2,4-Dibromophenol		84%				
81103-79-9	Fluorene-d10		75%				
1718-51-1	Pyrene-D10		101%				

Qw
1/18/09

20DL

KATAHDIN ANALYTICAL SERVICES
Report of Analytical Results

Client: CH2MHill
Project: TO-009 Lejeune
PO No:
Sample Date: 01/25/09
Received Date: 01/27/09
Extraction Date: 02/02/09
Analysis Date: 19-FEB-2009 17:50
Report Date: 02/26/2009
Matrix: SOIL
% Solids: 86.2

Lab ID: SC0410-40DL2
Client ID: MR08-SS372-09A
SDG: TO9-45
Extracted by: CB
Extraction Method: SW846 3550
Analyst: JCG
Analysis Method: SW846 M8270C
Lab Prep Batch: WG60396
Units: ug/Kgdrywt

use original

CAS#	Compound	Flags	Results	DF	PQL	Adj.PQL	Adj.MDL
91-20-3	Naphthalene	U	580	50	10	580	150
91-57-6	2-Methylnaphthalene	U	580	50	10	580	130
86-73-7	Fluorene	U	580	50	10	580	180
85-01-8	Phenanthrene		2100	50	10	580	100
206-44-0	Fluoranthene		8600	50	10	580	100
129-00-0	Pyrene		4900	50	10	580	120
56-55-3	Benzo(a)anthracene		3400	50	10	580	110
205-99-2	Benzo(b)fluoranthene		6100	50	10	580	140
207-08-9	Benzo(k)fluoranthene		2400	50	10	580	180
50-32-8	Benzo(a)pyrene		3400	50	10	580	190
193-39-5	Indeno(1,2,3-cd)pyrene		2000	50	10	580	110
53-70-3	Dibenzo(a,h)anthracene	J	530	50	10	580	100
191-24-2	Benzo(g,h,i)perylene		2300	50	10	580	120
118-74-1	Hexachlorobenzene	U	580	50	10	580	100
87-68-3	Hexachlorobutadiene	U	580	50	10	580	130
77-47-4	Hexachlorocyclopentadiene	U	580	50	10	580	87
7297-45-2	2-Methylnaphthalene-D10		D				
367-12-4	2,4-Dibromophenol		D				
81103-79-9	Fluorene-d10		D				
1718-51-1	Pyrene-D10		D				

R DL

Page 01 of 01 R1522.D

lew 11/18/09

ENVIRONMENTAL
Data Services, Inc.

SEMIVOLATILE ORGANIC COMPOUNDS
USEPA Region IV - Level IV Review

Site: MCB Camp Lejeune, TO-09 SDG #: TO9-45

Client: CH2M HILL, Inc., Virginia Beach, Virginia Date: April 18, 2009

Laboratory: Katahdin Analytical Services, Scarborough, Maine Reviewer: Nancy Weaver

EDS ID	Client Sample ID	Laboratory Sample ID	Matrix
1	MR08-IS344-2-3-09A	SC0410-1	Soil
2	MR08-SS344-09A	SC0410-3	Soil
3	MR08-SS331-09A	SC0410-5	Soil
4	MR08-IS331-4-5-09A	SC0410-7	Soil
5	MR08-SS330-09A	SC0410-9	Soil
6	MR08-IS330-0-1-09A	SC0410-11	Soil
7	MR08-SS345-09A	SC0410-13	Soil
8	MR08-SS345D-09A	SC0410-15	Soil
9	MR08-IS345-1-2-09A	SC0410-17	Soil
9RE	MR08-IS345-1-2-09ARE	SC0410-17RE	Soil
10	MR08-IS345D-1-2-09A	SC0410-19	Soil
11	MR08-SS346-09A	SC0410-21	Soil
12	MR08-IS346-1-2-09A	SC0410-23	Soil
13	MR08-SS354-09A	SC0410-25	Soil
14	MR08-IS354-1-2-09A	SC0410-27	Soil
15	MR08-SS369-09A	SC0410-29	Soil
16	MR08-SS369D-09A	SC0410-31	Soil
17	MR08-IS369-1-2-09A	SC0410-33	Soil
18	MR08-IS369D-1-2-09A	SC0410-35	Soil
19	MR08-SS370-09A	SC0410-37	Soil
20	MR08-SS372-09A	SC0410-39	Soil
20MS	MR08-SS372-09AMS	SC0410-39MS	Soil
20MSD	MR08-SS372-09AMSD	SC0410-39MSD	Soil

The USEPA "Contract Laboratory Program National Functional Guidelines for Organic Data Review," October 1999, and professional judgment were used in evaluating the data in this summary report.

Holding Times - All samples were extracted within 14 days for soil samples and analyzed within 40 days for all samples except the following.

Sample	Date Sampled	Date Extracted	# of Days	Qualifier
9RE*	01/24/09	02/16/09	23	J/UJ

* EDS sample ID #9 was re-analyzed outside of holding time due to the original analysis having been spiked with LCS spiking solution and 2X the surrogate amount. The reanalysis sample should be used for reporting purposes.

GC/MS Tuning - All of the DFTPP tunes in the initial and continuing calibrations met the percent relative abundance criteria.

Initial Calibration - The initial calibrations exhibited acceptable %RSD and mean RRF values except the following.

ICAL Date	Compound	%RSD/RRF	Qualifier	Affected Samples
02/11/09	Benzaldehyde	48.07%	J/UJ	1-8, 10
	1,1'-Biphenyl	31.02%	J/UJ	1-8, 10
	2,4-Dinitrophenol	79.64%	J/UJ	1-8, 10
	4,6-Dinitro-2-methylphenol	68.71%	J/UJ	1-8, 10
	Pentachlorophenol	50.06%	J/UJ	1-8, 10
02/11/09	Benzaldehyde	37.84%	J/UJ	11-20
	4-Nitrophenol	30.94%	J/UJ	11-20

Continuing Calibration - The continuing calibrations exhibited acceptable %D and RRF values except the following.

CCAL Date	Compound	%D/RRF	Qualifier	Affected Samples
02/13/09	Benzaldehyde	87.95%	None	Already qualified due to ICAL
	2,2'-Oxybis(1-Chloropropane)	37.42%	J/UJ	1-8, 10
02/18/09	Benzaldehyde	89.53%	None	Already qualified due to ICAL
02/18/09 2043	Benzaldehyde	92.08%	None	Already qualified due to ICAL
	Di-n-octylphthalate	36.56%	J/UJ	11-20

Surrogates - All samples exhibited acceptable surrogate recoveries except the following.

Sample ID	Surrogate	%R	Qualifier
9	2-Fluorophenol	143%	J - All positive results
	Phenol-d6	148%	J - All positive results
	Nitrobenzene-d5	167%	J - All positive results
	2-Fluorobiphenyl	179%	J - All positive results
	2,4,6-Tribromophenol	155%	J - All positive results
	Terphenyl-d14	157%	J - All positive results
13	2,4,6-Tribromophenol	33%	None for 1 out

MS/MSD - The MS/MSD sample exhibited acceptable %R and RPD values except the following.

MS/MSD Sample ID	Compound	MS/MSD %R/RPD	Qualifier
20	4-Chloroaniline	9%/9%/Ok	J/R
	Chrysene	30%/48%/Ok	J/UJ

Laboratory Control Sample - The LCS samples exhibited acceptable %R values except the following.

LCS ID	Compound	%R	Qualifier	Affected Samples
WG60320-LCS2	Caprolactam	28%	J/UJ	1-8, 10
WG60320-LCS	Caprolactam	14%	J/UJ	11-17
	4,6-Dinitro-2-methylphenol	29%	J/UJ	11-17

Internal Standard (IS) Area Performance - All internal standards met response and retention time (RT) criteria.

Method Blank - The method blanks exhibited the following contamination.

Blank ID	Compound	Conc. ug/kg	Action Level ug/kg	Qualifier	Affected Samples
WG60320-BLANK	bis (2-Ethylhexyl) phthalate	150	1500	U	1-10

Field, Equipment Blank - Field QC results are summarized below.

Blank ID	Compound	Conc. ug/L	Action Level ug/L	Qualifier	Affected Samples
MR08-FB012609	None - ND	-	-	-	-
MR08-EB012409	None - ND	-	-	-	-

Field Duplicates - Field duplicate results are summarized below.

Compound	MR08-SS345-09A ug/kg	MR08-SS345D-09A ug/kg	RPD	Qualifier
Carbazole	140	570 U	NC	None
Chrysene	620	510	19%	None

Compound	MR08-IS345-1-2-09A ug/kg	MR08-IS345D-1-2-09A ug/kg	RPD	Qualifier
None	ND	ND	-	-

Compound	MR08-SS369-09A ug/kg	MR08-SS369D-09A ug/kg	RPD	Qualifier
Chrysene	350 U	710	NC	None
bis (2-Ethylhexyl) phthalate	240	190	23%	None

Compound	MR08-IS369-1-2-09A ug/kg	MR08-IS369D-1-2-09A ug/kg	RPD	Qualifier
None	ND	ND	-	-

Tentatively Identified Compounds (TICs) - TICs were not reported.

Compound Quantitation - No discrepancies were identified.

KATAHDIN ANALYTICAL SERVICES
Report of Analytical Results

Client: CH2MHill
Project: TO-009 Lejeune
PO No:
Sample Date: 01/24/09
Received Date: 01/27/09
Extraction Date: 01/30/09
Analysis Date: 13-FEB-2009 14:48
Report Date: 02/25/2009
Matrix: SOIL
% Solids: 86.9

Lab ID: SC0410-1
Client ID: MR08-IS344-2-3-09A
SDG: TO9-45
Extracted by: AC
Extraction Method: SW846 3550
Analyst: JCG
Analysis Method: SW846 8270C
Lab Prep Batch: WG60320
Units: ug/Kgdrywt

CAS#	Compound	Flags	Results	DF	PQL	Adj.PQL	Adj.MDL	
100-52-7	Benzaldehyde	~~U~~ UJ	580	1.0	500	580	140	ICB
108-95-2	Phenol	U	580	1.0	500	580	180	
111-44-4	Bis(2-Chloroethyl)ether	U	380	1.0	330	380	93	
95-57-8	2-Chlorophenol	U	580	1.0	500	580	190	
95-48-7	2-Methylphenol	U	690	1.0	600	690	230	
108-60-1	2,2'-Oxybis(1-chloropropane)	~~U~~ UJ	380	1.0	330	380	100	cCH
98-86-2	Acetophenone	U	690	1.0	600	690	200	
621-64-7	N-Nitroso-di-n-propylamine	U	380	1.0	330	380	96	
65794-96-9	3&4-Methylphenol	U	690	1.0	600	690	220	
67-72-1	Hexachloroethane	U	380	1.0	330	380	110	
98-95-3	Nitrobenzene	U	380	1.0	330	380	100	
78-59-1	Isophorone	U	380	1.0	330	380	86	
88-75-5	2-Nitrophenol	U	690	1.0	600	690	190	
105-67-9	2,4-Dimethylphenol	U	580	1.0	500	580	190	
111-91-1	Bis(2-Chloroethoxy)methane	U	380	1.0	330	380	110	
120-83-2	2,4-Dichlorophenol	U	580	1.0	500	580	170	
106-47-8	4-Chloroaniline	U	580	1.0	500	580	140	
105-60-2	Caprolactam	~~U~~ UJ	580	1.0	500	580	160	BSL
59-50-7	4-Chloro-3-Methylphenol	U	580	1.0	500	580	190	
88-06-2	2,4,6-Trichlorophenol	U	580	1.0	500	580	180	
95-95-4	2,4,5-Trichlorophenol	U	580	1.0	500	580	180	
91-58-7	2-Chloronaphthalene	U	380	1.0	330	380	100	
92-52-4	1,1'-Biphenyl	~~U~~ UJ	380	1.0	330	380	84	ICB
88-74-4	2-Nitroaniline	U	580	1.0	500	580	86	
131-11-3	Dimethyl Phthalate	U	380	1.0	330	380	90	
606-20-2	2,6-Dinitrotoluene	U	380	1.0	330	380	91	
208-96-8	Acenaphthylene	U	380	1.0	330	380	80	
99-09-2	3-Nitroaniline	U	580	1.0	500	580	110	
83-32-9	Acenaphthene	U	380	1.0	330	380	75	
51-28-5	2,4-Dinitrophenol	~~U~~ UJ	1400	1.0	1200	1400	430	ICB
132-64-9	Dibenzofuran	U	380	1.0	330	380	91	
100-02-7	4-Nitrophenol	U	1400	1.0	1200	1400	360	
121-14-2	2,4-Dinitrotoluene	U	380	1.0	330	380	98	
84-66-2	Diethylphthalate	U	380	1.0	330	380	92	
7005-72-3	4-Chlorophenyl-phenylether	U	380	1.0	330	380	90	
100-01-6	4-Nitroaniline	U	580	1.0	500	580	150	
534-52-1	4,6-Dinitro-2-Methylphenol	~~U~~ UJ	1400	1.0	1200	1400	390	ICB
86-30-6	N-Nitrosodiphenylamine	U	760	1.0	660	760	250	
101-55-3	4-Bromophenyl-phenylether	U	380	1.0	330	380	98	
1912-24-9	Atrazine	U	380	1.0	330	380	100	
87-86-5	Pentachlorophenol	~~U~~ UJ	940	1.0	820	940	270	ICB
120-12-7	Anthracene	U	380	1.0	330	380	97	
86-74-8	Carbazole	U	580	1.0	500	580	130	

kw
4/18/09

KATAHDIN ANALYTICAL SERVICES
Report of Analytical Results

1

Client: CH2MHill
Project: TO-009 Lejeune
PO No:
Sample Date: 01/24/09
Received Date: 01/27/09
Extraction Date: 01/30/09
Analysis Date: 13-FEB-2009 14:48
Report Date: 02/25/2009
Matrix: SOIL
% Solids: 86.9

Lab ID: SC0410-1
Client ID: MR08-IS344-2-3-09A
SDG: TO9-45
Extracted by: AC
Extraction Method: SW846 3550
Analyst: JCG
Analysis Method: SW846 8270C
Lab Prep Batch: WG60320
Units: ug/Kgdrywt

CAS#	Compound	Flags	Results	DF	PQL	Adj.PQL	Adj.MDL
84-74-2	Di-n-butylphthalate	U	380	1.0	330	380	120
85-68-7	Butylbenzylphthalate	U	380	1.0	330	380	110
91-94-1	3,3'-Dichlorobenzidine	U	580	1.0	500	580	130
218-01-9	Chrysene	U	380	1.0	330	380	110
117-81-7	bis(2-Ethylhexyl)phthalate	~~JB~~ 380u	240	1.0	330	380	110 Bl
117-84-0	Di-n-octylphthalate	U	380	1.0	330	380	240
367-12-4	2-Fluorophenol		75%				
13127-88-3	Phenol-D6		69%				
4165-60-0	Nitrobenzene-D5		77%				
321-60-8	2-Fluorobiphenyl		82%				
118-79-6	2,4,6-Tribromophenol		74%				
1718-51-0	Terphenyl-D14		84%				

lw
4/18/09

KATAHDIN ANALYTICAL SERVICES
Report of Analytical Results

2

Client: CH2MHill
Project: TO-009 Lejeune
PO No:
Sample Date: 01/24/09
Received Date: 01/27/09
Extraction Date: 01/30/09
Analysis Date: 13-FEB-2009 15:30
Report Date: 02/25/2009
Matrix: SOIL
% Solids: 75.4

Lab ID: SC0410-3
Client ID: MR08-SS344-09A
SDG: TO9-45
Extracted by: AC
Extraction Method: SW846 3550
Analyst: JCG
Analysis Method: SW846 8270C
Lab Prep Batch: WG60320
Units: ug/Kgdrywt

CAS#	Compound	Flags	Results	DF	PQL	Adj.PQL	Adj.MDL	
100-52-7	Benzaldehyde	~~U~~ UJ	660	1.0	500	660	160	ICB
108-95-2	Phenol	U	660	1.0	500	660	210	
111-44-4	Bis(2-Chloroethyl)ether	U	440	1.0	330	440	110	
95-57-8	2-Chlorophenol	U	660	1.0	500	660	220	
95-48-7	2-Methylphenol	U	800	1.0	600	800	260	
108-60-1	2,2'-Oxybis(1-chloropropane)	~~U~~ UJ	440	1.0	330	440	120	CCH
98-86-2	Acetophenone	U	800	1.0	600	800	240	
621-64-7	N-Nitroso-di-n-propylamine	U	440	1.0	330	440	110	
65794-96-9	3&4-Methylphenol	U	800	1.0	600	800	250	
67-72-1	Hexachloroethane	U	440	1.0	330	440	130	
98-95-3	Nitrobenzene	U	440	1.0	330	440	120	
78-59-1	Isophorone	U	440	1.0	330	440	99	
88-75-5	2-Nitrophenol	U	800	1.0	600	800	220	
105-67-9	2,4-Dimethylphenol	U	660	1.0	500	660	220	
111-91-1	Bis(2-Chloroethoxy)methane	U	440	1.0	330	440	130	
120-83-2	2,4-Dichlorophenol	U	660	1.0	500	660	200	
106-47-8	4-Chloroaniline	U	660	1.0	500	660	160	
105-60-2	Caprolactam	~~U~~ UJ	660	1.0	500	660	190	BSL
59-50-7	4-Chloro-3-Methylphenol	U	660	1.0	500	660	220	
88-06-2	2,4,6-Trichlorophenol	U	660	1.0	500	660	200	
95-95-4	2,4,5-Trichlorophenol	U	660	1.0	500	660	200	
91-58-7	2-Chloronaphthalene	U	440	1.0	330	440	120	
92-52-4	1,1'-Biphenyl	~~U~~ UJ	440	1.0	330	440	97	ICB
88-74-4	2-Nitroaniline	U	660	1.0	500	660	99	
131-11-3	Dimethyl Phthalate	U	440	1.0	330	440	100	
606-20-2	2,6-Dinitrotoluene	U	440	1.0	330	440	100	
208-96-8	Acenaphthylene	U	440	1.0	330	440	93	
99-09-2	3-Nitroaniline	U	660	1.0	500	660	120	
83-32-9	Acenaphthene	U	440	1.0	330	440	86	
51-28-5	2,4-Dinitrophenol	~~U~~ UJ	1600	1.0	1200	1600	500	ICB
132-64-9	Dibenzofuran	U	440	1.0	330	440	100	
100-02-7	4-Nitrophenol	U	1600	1.0	1200	1600	410	
121-14-2	2,4-Dinitrotoluene	U	440	1.0	330	440	110	
84-66-2	Diethylphthalate	U	440	1.0	330	440	110	
7005-72-3	4-Chlorophenyl-phenylether	U	440	1.0	330	440	100	
100-01-6	4-Nitroaniline	U	660	1.0	500	660	180	
534-52-1	4,6-Dinitro-2-Methylphenol	~~U~~ UJ	1600	1.0	1200	1600	450	ICB
86-30-6	N-Nitrosodiphenylamine	U	870	1.0	660	870	290	
101-55-3	4-Bromophenyl-phenylether	U	440	1.0	330	440	110	
1912-24-9	Atrazine	U	440	1.0	330	440	120	
87-86-5	Pentachlorophenol	~~U~~ UJ	1100	1.0	820	1100	310	ICB
120-12-7	Anthracene	U	440	1.0	330	440	110	
86-74-8	Carbazole	U	660	1.0	500	660	150	

LW
4/18/09

KATAHDIN ANALYTICAL SERVICES
Report of Analytical Results

2

Client: CH2MHill
Project: TO-009 Lejeune
PO No:
Sample Date: 01/24/09
Received Date: 01/27/09
Extraction Date: 01/30/09
Analysis Date: 13-FEB-2009 15:30
Report Date: 02/25/2009
Matrix: SOIL
% Solids: 75.4

Lab ID: SC0410-3
Client ID: MR08-SS344-09A
SDG: TO9-45
Extracted by: AC
Extraction Method: SW846 3550
Analyst: JCG
Analysis Method: SW846 8270C
Lab Prep Batch: WG60320
Units: ug/Kgdrywt

CAS#	Compound	Flags	Results	DF	PQL	Adj.PQL	Adj.MDL	
84-74-2	Di-n-butylphthalate	U	440	1.0	330	440	130	
85-68-7	Butylbenzylphthalate	U	440	1.0	330	440	120	
91-94-1	3,3'-Dichlorobenzidine	U	660	1.0	500	660	150	
218-01-9	Chrysene	J	240	1.0	330	440	120	
117-81-7	bis(2-Ethylhexyl)phthalate	~~JB~~	440U ~~320~~	1.0	330	440	130	BL
117-84-0	Di-n-octylphthalate	U	440	1.0	330	440	280	
367-12-4	2-Fluorophenol		68%					
13127-88-3	Phenol-D6		65%					
4165-60-0	Nitrobenzene-D5		71%					
321-60-8	2-Fluorobiphenyl		84%					
118-79-6	2,4,6-Tribromophenol		86%					
1718-51-0	Terphenyl-D14		82%					

RW 4/18/09

KATAHDIN ANALYTICAL SERVICES
Report of Analytical Results

3

Client: CH2MHill
Project: TO-009 Lejeune
PO No:
Sample Date: 01/24/09
Received Date: 01/27/09
Extraction Date: 01/30/09
Analysis Date: 13-FEB-2009 16:12
Report Date: 02/25/2009
Matrix: SOIL
% Solids: 87.6

Lab ID: SC0410-5
Client ID: MR08-SS331-09A
SDG: TO9-45
Extracted by: AC
Extraction Method: SW846 3550
Analyst: JCG
Analysis Method: SW846 8270C
Lab Prep Batch: WG60320
Units: ug/Kgdrywt

CAS#	Compound	Flags	Results	DF	PQL	Adj.PQL	Adj.MDL	
100-52-7	Benzaldehyde	~~U~~ UJ	570	1.0	500	570	140	ICB
108-95-2	Phenol	U	570	1.0	500	570	180	
111-44-4	Bis(2-Chloroethyl)ether	U	380	1.0	330	380	92	
95-57-8	2-Chlorophenol	U	570	1.0	500	570	190	
95-48-7	2-Methylphenol	U	680	1.0	600	680	230	
108-60-1	2,2'-Oxybis(1-chloropropane)	~~U~~ UJ	380	1.0	330	380	100	CCH
98-86-2	Acetophenone	U	680	1.0	600	680	200	
621-64-7	N-Nitroso-di-n-propylamine	U	380	1.0	330	380	95	
65794-96-9	3&4-Methylphenol	U	680	1.0	600	680	210	
67-72-1	Hexachloroethane	U	380	1.0	330	380	110	
98-95-3	Nitrobenzene	U	380	1.0	330	380	100	
78-59-1	Isophorone	U	380	1.0	330	380	86	
88-75-5	2-Nitrophenol	U	680	1.0	600	680	190	
105-67-9	2,4-Dimethylphenol	U	570	1.0	500	570	190	
111-91-1	Bis(2-Chloroethoxy)methane	U	380	1.0	330	380	110	
120-83-2	2,4-Dichlorophenol	U	570	1.0	500	570	170	
106-47-8	4-Chloroaniline	U	570	1.0	500	570	140	
105-60-2	Caprolactam	~~U~~ UJ	570	1.0	500	570	160	BSL
59-50-7	4-Chloro-3-Methylphenol	U	570	1.0	500	570	190	
88-06-2	2,4,6-Trichlorophenol	U	570	1.0	500	570	180	
95-95-4	2,4,5-Trichlorophenol	U	570	1.0	500	570	180	
91-58-7	2-Chloronaphthalene	U	380	1.0	330	380	99	
92-52-4	1,1'-Biphenyl	~~U~~ UJ	380	1.0	330	380	83	ICB
88-74-4	2-Nitroaniline	U	570	1.0	500	570	86	
131-11-3	Dimethyl Phthalate	U	380	1.0	330	380	89	
606-20-2	2,6-Dinitrotoluene	U	380	1.0	330	380	90	
208-96-8	Acenaphthylene	U	380	1.0	330	380	80	
99-09-2	3-Nitroaniline	U	570	1.0	500	570	110	
83-32-9	Acenaphthene	U	380	1.0	330	380	74	
51-28-5	2,4-Dinitrophenol	~~U~~ UJ	1400	1.0	1200	1400	430	ICB
132-64-9	Dibenzofuran	U	380	1.0	330	380	90	
100-02-7	4-Nitrophenol	U	1400	1.0	1200	1400	350	
121-14-2	2,4-Dinitrotoluene	U	380	1.0	330	380	97	
84-66-2	Diethylphthalate	U	380	1.0	330	380	91	
7005-72-3	4-Chlorophenyl-phenylether	U	380	1.0	330	380	89	
100-01-6	4-Nitroaniline	U	570	1.0	500	570	150	
534-52-1	4,6-Dinitro-2-Methylphenol	~~U~~ UJ	1400	1.0	1200	1400	380	ICB
86-30-6	N-Nitrosodiphenylamine	U	750	1.0	660	750	250	
101-55-3	4-Bromophenyl-phenylether	U	380	1.0	330	380	97	
1912-24-9	Atrazine	U	380	1.0	330	380	100	
87-86-5	Pentachlorophenol	~~U~~ UJ	940	1.0	820	940	270	ICB
120-12-7	Anthracene	U	380	1.0	330	380	96	
86-74-8	Carbazole	U	570	1.0	500	570	130	

RW 4/18/09

KATAHDIN ANALYTICAL SERVICES
Report of Analytical Results

3

Client: CH2MHill
Project: TO-009 Lejeune
PO No:
Sample Date: 01/24/09
Received Date: 01/27/09
Extraction Date: 01/30/09
Analysis Date: 13-FEB-2009 16:12
Report Date: 02/25/2009
Matrix: SOIL
% Solids: 87.6

Lab ID: SC0410-5
Client ID: MR08-SS331-09A
SDG: TO9-45
Extracted by: AC
Extraction Method: SW846 3550
Analyst: JCG
Analysis Method: SW846 8270C
Lab Prep Batch: WG60320
Units: ug/Kgdrywt

CAS#	Compound	Flags	Results	DF	PQL	Adj.PQL	Adj.MDL	
84-74-2	Di-n-butylphthalate	U	380	1.0	330	380	120	
85-68-7	Butylbenzylphthalate	U	380	1.0	330	380	110	
91-94-1	3,3'-Dichlorobenzidine	U	570	1.0	500	570	130	
218-01-9	Chrysene	J	140	1.0	330	380	110	
117-81-7	bis(2-Ethylhexyl)phthalate	~~JB~~ 380u	~~200~~	1.0	330	380	110	BL
117-84-0	Di-n-octylphthalate	U	380	1.0	330	380	240	
367-12-4	2-Fluorophenol		69%					
13127-88-3	Phenol-D6		66%					
4165-60-0	Nitrobenzene-D5		77%					
321-60-8	2-Fluorobiphenyl		84%					
118-79-6	2,4,6-Tribromophenol		70%					
1718-51-0	Terphenyl-D14		78%					

lw 4/18/09

KATAHDIN ANALYTICAL SERVICES
Report of Analytical Results

4

Client: CH2MHill
Project: TO-009 Lejeune
PO No:
Sample Date: 01/24/09
Received Date: 01/27/09
Extraction Date: 01/30/09
Analysis Date: 13-FEB-2009 16:54
Report Date: 02/25/2009
Matrix: SOIL
% Solids: 86.7

Lab ID: SC0410-7
Client ID: MR08-IS331-4-5-09A
SDG: TO9-45
Extracted by: AC
Extraction Method: SW846 3550
Analyst: JCG
Analysis Method: SW846 8270C
Lab Prep Batch: WG60320
Units: ug/Kgdrywt

CAS#	Compound	Flags	Results	DF	PQL	Adj.PQL	Adj.MDL	
100-52-7	Benzaldehyde	~~U~~ UJ	580	1.0	500	580	140	ICB
108-95-2	Phenol	U	580	1.0	500	580	180	
111-44-4	Bis(2-Chloroethyl)ether	U	380	1.0	330	380	93	
95-57-8	2-Chlorophenol	U	580	1.0	500	580	190	
95-48-7	2-Methylphenol	U	690	1.0	600	690	230	
108-60-1	2,2'-Oxybis(1-chloropropane)	~~U~~ UJ	380	1.0	330	380	100	cert
98-86-2	Acetophenone	U	690	1.0	600	690	200	
621-64-7	N-Nitroso-di-n-propylamine	U	380	1.0	330	380	96	
65794-96-9	3&4-Methylphenol	U	690	1.0	600	690	220	
67-72-1	Hexachloroethane	U	380	1.0	330	380	110	
98-95-3	Nitrobenzene	U	380	1.0	330	380	100	
78-59-1	Isophorone	U	380	1.0	330	380	86	
88-75-5	2-Nitrophenol	U	690	1.0	600	690	190	
105-67-9	2,4-Dimethylphenol	U	580	1.0	500	580	190	
111-91-1	Bis(2-Chloroethoxy)methane	U	380	1.0	330	380	110	
120-83-2	2,4-Dichlorophenol	U	580	1.0	500	580	170	
106-47-8	4-Chloroaniline	U	580	1.0	500	580	140	
105-60-2	Caprolactam	~~U~~ UJ	580	1.0	500	580	160	BSL
59-50-7	4-Chloro-3-Methylphenol	U	580	1.0	500	580	190	
88-06-2	2,4,6-Trichlorophenol	U	580	1.0	500	580	180	
95-95-4	2,4,5-Trichlorophenol	U	580	1.0	500	580	180	
91-58-7	2-Chloronaphthalene	U	380	1.0	330	380	100	
92-52-4	1,1'-Biphenyl	~~U~~ UJ	380	1.0	330	380	84	ICB
88-74-4	2-Nitroaniline	U	580	1.0	500	580	86	
131-11-3	Dimethyl Phthalate	U	380	1.0	330	380	90	
606-20-2	2,6-Dinitrotoluene	U	380	1.0	330	380	91	
208-96-8	Acenaphthylene	U	380	1.0	330	380	81	
99-09-2	3-Nitroaniline	U	580	1.0	500	580	110	
83-32-9	Acenaphthene	U	380	1.0	330	380	75	
51-28-5	2,4-Dinitrophenol	~~U~~ UJ	1400	1.0	1200	1400	430	ICB
132-64-9	Dibenzofuran	U	380	1.0	330	380	91	
100-02-7	4-Nitrophenol	U	1400	1.0	1200	1400	360	
121-14-2	2,4-Dinitrotoluene	U	380	1.0	330	380	98	
84-66-2	Diethylphthalate	U	380	1.0	330	380	92	
7005-72-3	4-Chlorophenyl-phenylether	U	380	1.0	330	380	90	
100-01-6	4-Nitroaniline	U	580	1.0	500	580	150	
534-52-1	4,6-Dinitro-2-Methylphenol	~~U~~ UJ	1400	1.0	1200	1400	390	ICB
86-30-6	N-Nitrosodiphenylamine	U	760	1.0	660	760	250	
101-55-3	4-Bromophenyl-phenylether	U	380	1.0	330	380	98	
1912-24-9	Atrazine	U	380	1.0	330	380	100	
87-86-5	Pentachlorophenol	~~U~~ UJ	940	1.0	820	940	270	ICB
120-12-7	Anthracene	U	380	1.0	330	380	97	
86-74-8	Carbazole	U	580	1.0	500	580	130	

JW 4/18/09

KATAHDIN ANALYTICAL SERVICES
Report of Analytical Results

4

Client: CH2MHill
Project: TO-009 Lejeune
PO No:
Sample Date: 01/24/09
Received Date: 01/27/09
Extraction Date: 01/30/09
Analysis Date: 13-FEB-2009 16:54
Report Date: 02/25/2009
Matrix: SOIL
% Solids: 86.7

Lab ID: SC0410-7
Client ID: MR08-IS331-4-5-09A
SDG: TO9-45
Extracted by: AC
Extraction Method: SW846 3550
Analyst: JCG
Analysis Method: SW846 8270C
Lab Prep Batch: WG60320
Units: ug/Kgdrywt

CAS#	Compound	Flags	Results	DF	PQL	Adj.PQL	Adj.MDL
84-74-2	Di-n-butylphthalate	U	380	1.0	330	380	120
85-68-7	Butylbenzylphthalate	U	380	1.0	330	380	110
91-94-1	3,3'-Dichlorobenzidine	U	580	1.0	500	580	130
218-01-9	Chrysene	U	380	1.0	330	380	110
117-81-7	bis(2-Ethylhexyl)phthalate	~~JB~~ 380U	~~240~~	1.0	330	380	110 B
117-84-0	Di-n-octylphthalate	U	380	1.0	330	380	240
367-12-4	2-Fluorophenol		73%				
13127-88-3	Phenol-D6		71%				
4165-60-0	Nitrobenzene-D5		80%				
321-60-8	2-Fluorobiphenyl		87%				
118-79-6	2,4,6-Tribromophenol		70%				
1718-51-0	Terphenyl-D14		87%				

LW 4/18/09

KATAHDIN ANALYTICAL SERVICES
Report of Analytical Results

5

Client: CH2MHill
Project: TO-009 Lejeune
PO No:
Sample Date: 01/24/09
Received Date: 01/27/09
Extraction Date: 01/30/09
Analysis Date: 13-FEB-2009 17:36
Report Date: 02/25/2009
Matrix: SOIL
% Solids: 88.2

Lab ID: SC0410-9
Client ID: MR08-SS330-09A
SDG: TO9-45
Extracted by: AC
Extraction Method: SW846 3550
Analyst: JCG
Analysis Method: SW846 8270C
Lab Prep Batch: WG60320
Units: ug/Kgdrywt

CAS#	Compound	Flags	Results	DF	PQL	Adj.PQL	Adj.MDL	
100-52-7	Benzaldehyde	~~U~~ UJ	570	1.0	500	570	140	ICB
108-95-2	Phenol	U	570	1.0	500	570	180	
111-44-4	Bis(2-Chloroethyl)ether	U	370	1.0	330	370	92	
95-57-8	2-Chlorophenol	U	570	1.0	500	570	180	
95-48-7	2-Methylphenol	U	680	1.0	600	680	230	
108-60-1	2,2'-Oxybis(1-chloropropane)	~~U~~ UJ	370	1.0	330	370	100	CCH
98-86-2	Acetophenone	U	680	1.0	600	680	200	
621-64-7	N-Nitroso-di-n-propylamine	U	370	1.0	330	370	94	
65794-96-9	3&4-Methylphenol	U	680	1.0	600	680	210	
67-72-1	Hexachloroethane	U	370	1.0	330	370	110	
98-95-3	Nitrobenzene	U	370	1.0	330	370	100	
78-59-1	Isophorone	U	370	1.0	330	370	85	
88-75-5	2-Nitrophenol	U	680	1.0	600	680	190	
105-67-9	2,4-Dimethylphenol	U	570	1.0	500	570	190	
111-91-1	Bis(2-Chloroethoxy)methane	U	370	1.0	330	370	110	
120-83-2	2,4-Dichlorophenol	U	570	1.0	500	570	170	
106-47-8	4-Chloroaniline	U	570	1.0	500	570	130	
105-60-2	Caprolactam	~~U~~ UJ	570	1.0	500	570	160	BSL
59-50-7	4-Chloro-3-Methylphenol	U	570	1.0	500	570	190	
88-06-2	2,4,6-Trichlorophenol	U	570	1.0	500	570	180	
95-95-4	2,4,5-Trichlorophenol	U	570	1.0	500	570	180	
91-58-7	2-Chloronaphthalene	U	370	1.0	330	370	98	
92-52-4	1,1'-Biphenyl	~~U~~ UJ	370	1.0	330	370	83	ICB
88-74-4	2-Nitroaniline	U	570	1.0	500	570	85	
131-11-3	Dimethyl Phthalate	U	370	1.0	330	370	88	
606-20-2	2,6-Dinitrotoluene	U	370	1.0	330	370	90	
208-96-8	Acenaphthylene	U	370	1.0	330	370	79	
99-09-2	3-Nitroaniline	U	570	1.0	500	570	110	
83-32-9	Acenaphthene	U	370	1.0	330	370	74	
51-28-5	2,4-Dinitrophenol	~~U~~ UJ	1400	1.0	1200	1400	430	ICB
132-64-9	Dibenzofuran	U	370	1.0	330	370	90	
100-02-7	4-Nitrophenol	U	1400	1.0	1200	1400	350	
121-14-2	2,4-Dinitrotoluene	U	370	1.0	330	370	96	
84-66-2	Diethylphthalate	U	370	1.0	330	370	91	
7005-72-3	4-Chlorophenyl-phenylether	U	370	1.0	330	370	88	
100-01-6	4-Nitroaniline	U	570	1.0	500	570	150	
534-52-1	4,6-Dinitro-2-Methylphenol	~~U~~ UJ	1400	1.0	1200	1400	380	ICB
86-30-6	N-Nitrosodiphenylamine	U	750	1.0	660	750	250	
101-55-3	4-Bromophenyl-phenylether	U	370	1.0	330	370	96	
1912-24-9	Atrazine	U	370	1.0	330	370	100	
87-86-5	Pentachlorophenol	~~U~~ UJ	930	1.0	820	930	270	ICB
120-12-7	Anthracene	U	370	1.0	330	370	95	
86-74-8	Carbazole	U	570	1.0	500	570	120	

lw
4/18/09

KATAHDIN ANALYTICAL SERVICES
Report of Analytical Results

Client: CH2MHill
Project: TO-009 Lejeune
PO No:
Sample Date: 01/24/09
Received Date: 01/27/09
Extraction Date: 01/30/09
Analysis Date: 13-FEB-2009 17:36
Report Date: 02/25/2009
Matrix: SOIL
% Solids: 88.2

Lab ID: SC0410-9
Client ID: MR08-SS330-09A
SDG: TO9-45
Extracted by: AC
Extraction Method: SW846 3550
Analyst: JCG
Analysis Method: SW846 8270C
Lab Prep Batch: WG60320
Units: ug/Kgdrywt

CAS#	Compound	Flags	Results	DF	PQL	Adj.PQL	Adj.MDL	
84-74-2	Di-n-butylphthalate	U	370	1.0	330	370	110	
85-68-7	Butylbenzylphthalate	J	160	1.0	330	370	100	
91-94-1	3,3'-Dichlorobenzidine	U	570	1.0	500	570	130	
218-01-9	Chrysene		1000	1.0	330	370	110	
117-81-7	bis(2-Ethylhexyl)phthalate	~~JB~~ 370U	~~300~~	1.0	330	370	110	BL
117-84-0	Di-n-octylphthalate	U	370	1.0	330	370	240	
367-12-4	2-Fluorophenol		69%					
13127-88-3	Phenol-D6		61%					
4165-60-0	Nitrobenzene-D5		69%					
321-60-8	2-Fluorobiphenyl		80%					
118-79-6	2,4,6-Tribromophenol		68%					
1718-51-0	Terphenyl-D14		69%					

lw
4/18/09

KATAHDIN ANALYTICAL SERVICES
Report of Analytical Results

6

Client: CH2MHill
Project: TO-009 Lejeune
PO No:
Sample Date: 01/24/09
Received Date: 01/27/09
Extraction Date: 01/30/09
Analysis Date: 13-FEB-2009 18:19
Report Date: 02/25/2009
Matrix: SOIL
% Solids: 89.1

Lab ID: SC0410-11
Client ID: MR08-IS330-0-1-09A
SDG: TO9-45
Extracted by: AC
Extraction Method: SW846 3550
Analyst: JCG
Analysis Method: SW846 8270C
Lab Prep Batch: WG60320
Units: ug/Kgdrywt

CAS#	Compound	Flags	Results	DF	PQL	Adj.PQL	Adj.MDL	
100-52-7	Benzaldehyde	~~U~~ UJ	560	1.0	500	560	130	ICB
108-95-2	Phenol	U	560	1.0	500	560	180	
111-44-4	Bis(2-Chloroethyl)ether	U	370	1.0	330	370	91	
95-57-8	2-Chlorophenol	U	560	1.0	500	560	180	
95-48-7	2-Methylphenol	U	670	1.0	600	670	220	
108-60-1	2,2'-Oxybis(1-chloropropane)	~~U~~ UJ	370	1.0	330	370	100	CCH
98-86-2	Acetophenone	U	670	1.0	600	670	200	
621-64-7	N-Nitroso-di-n-propylamine	U	370	1.0	330	370	93	
65794-96-9	3&4-Methylphenol	U	670	1.0	600	670	210	
67-72-1	Hexachloroethane	U	370	1.0	330	370	110	
98-95-3	Nitrobenzene	U	370	1.0	330	370	100	
78-59-1	Isophorone	U	370	1.0	330	370	84	
88-75-5	2-Nitrophenol	U	670	1.0	600	670	190	
105-67-9	2,4-Dimethylphenol	U	560	1.0	500	560	180	
111-91-1	Bis(2-Chloroethoxy)methane	U	370	1.0	330	370	110	
120-83-2	2,4-Dichlorophenol	U	560	1.0	500	560	170	
106-47-8	4-Chloroaniline	U	560	1.0	500	560	130	
105-60-2	Caprolactam	~~U~~ UJ	560	1.0	500	560	160	BSL
59-50-7	4-Chloro-3-Methylphenol	U	560	1.0	500	560	190	
88-06-2	2,4,6-Trichlorophenol	U	560	1.0	500	560	170	
95-95-4	2,4,5-Trichlorophenol	U	560	1.0	500	560	170	
91-58-7	2-Chloronaphthalene	U	370	1.0	330	370	98	
92-52-4	1,1'-Biphenyl	~~U~~ UJ	370	1.0	330	370	82	ICB
88-74-4	2-Nitroaniline	U	560	1.0	500	560	84	
131-11-3	Dimethyl Phthalate	U	370	1.0	330	370	88	
606-20-2	2,6-Dinitrotoluene	U	370	1.0	330	370	89	
208-96-8	Acenaphthylene	U	370	1.0	330	370	78	
99-09-2	3-Nitroaniline	U	560	1.0	500	560	100	
83-32-9	Acenaphthene	U	370	1.0	330	370	73	
51-28-5	2,4-Dinitrophenol	~~U~~ UJ	1300	1.0	1200	1300	420	ICB
132-64-9	Dibenzofuran	U	370	1.0	330	370	89	
100-02-7	4-Nitrophenol	U	1300	1.0	1200	1300	350	
121-14-2	2,4-Dinitrotoluene	U	370	1.0	330	370	95	
84-66-2	Diethylphthalate	U	370	1.0	330	370	90	
7005-72-3	4-Chlorophenyl-phenylether	U	370	1.0	330	370	88	
100-01-6	4-Nitroaniline	U	560	1.0	500	560	150	
534-52-1	4,6-Dinitro-2-Methylphenol	~~U~~ UJ	1300	1.0	1200	1300	380	ICB
86-30-6	N-Nitrosodiphenylamine	U	740	1.0	660	740	240	
101-55-3	4-Bromophenyl-phenylether	U	370	1.0	330	370	95	
1912-24-9	Atrazine	U	370	1.0	330	370	100	
87-86-5	Pentachlorophenol	~~U~~ UJ	920	1.0	820	920	260	ICB
120-12-7	Anthracene	U	370	1.0	330	370	94	
86-74-8	Carbazole	U	560	1.0	500	560	120	

lw
4/18/09

Report of Analytical Results

6

Client: CH2MHill
Project: TO-009 Lejeune
PO No:
Sample Date: 01/24/09
Received Date: 01/27/09
Extraction Date: 01/30/09
Analysis Date: 13-FEB-2009 18:19
Report Date: 02/25/2009
Matrix: SOIL
% Solids: 89.1

Lab ID: SC0410-11
Client ID: MR08-IS330-0-1-09A
SDG: T09-45
Extracted by: AC
Extraction Method: SW846 3550
Analyst: JCG
Analysis Method: SW846 8270C
Lab Prep Batch: WG60320
Units: ug/Kgdrywt

CAS#	Compound	Flags	Results	DF	PQL	Adj.PQL	Adj.MDL	
84-74-2	Di-n-butylphthalate	U	370	1.0	330	370	110	
85-68-7	Butylbenzylphthalate	U	370	1.0	330	370	100	
91-94-1	3,3'-Dichlorobenzidine	U	560	1.0	500	560	130	
218-01-9	Chrysene	J	190	1.0	330	370	110	
117-81-7	bis(2-Ethylhexyl)phthalate	~~JB~~ 370U	~~270~~	1.0	330	370	110	BC
117-84-0	Di-n-octylphthalate	U	370	1.0	330	370	240	
367-12-4	2-Fluorophenol		73%					
13127-88-3	Phenol-D6		69%					
4165-60-0	Nitrobenzene-D5		82%					
321-60-8	2-Fluorobiphenyl		91%					
118-79-6	2,4,6-Tribromophenol		78%					
1718-51-0	Terphenyl-D14		88%					

lw
4/18/09

KATAHDIN ANALYTICAL SERVICES
Report of Analytical Results

7

Client: CH2MHill
Project: TO-009 Lejeune
PO No:
Sample Date: 01/24/09
Received Date: 01/27/09
Extraction Date: 01/30/09
Analysis Date: 13-FEB-2009 19:01
Report Date: 02/25/2009
Matrix: SOIL
% Solids: 90.3

Lab ID: SC0410-13
Client ID: MR08-SS345-09A
SDG: TO9-45
Extracted by: AC
Extraction Method: SW846 3550
Analyst: JCG
Analysis Method: SW846 8270C
Lab Prep Batch: WG60320
Units: ug/Kgdrywt

CAS#	Compound	Flags	Results	DF	PQL	Adj.PQL	Adj.MDL	
100-52-7	Benzaldehyde	~~U~~ UJ	550	1.0	500	550	130	JCB
108-95-2	Phenol	U	550	1.0	500	550	170	
111-44-4	Bis(2-Chloroethyl)ether	U	360	1.0	330	360	90	
95-57-8	2-Chlorophenol	U	550	1.0	500	550	180	
95-48-7	2-Methylphenol	U	660	1.0	600	660	220	
108-60-1	2,2'-Oxybis(1-chloropropane)	~~U~~ UJ	360	1.0	330	360	98	CCH
98-86-2	Acetophenone	U	660	1.0	600	660	200	
621-64-7	N-Nitroso-di-n-propylamine	U	360	1.0	330	360	92	
65794-96-9	3&4-Methylphenol	U	660	1.0	600	660	210	
67-72-1	Hexachloroethane	U	360	1.0	330	360	110	
98-95-3	Nitrobenzene	U	360	1.0	330	360	100	
78-59-1	Isophorone	U	360	1.0	330	360	83	
88-75-5	2-Nitrophenol	U	660	1.0	600	660	180	
105-67-9	2,4-Dimethylphenol	U	550	1.0	500	550	180	
111-91-1	Bis(2-Chloroethoxy)methane	U	360	1.0	330	360	110	
120-83-2	2,4-Dichlorophenol	U	550	1.0	500	550	170	
106-47-8	4-Chloroaniline	U	550	1.0	500	550	130	
105-60-2	Caprolactam	~~U~~ UJ	550	1.0	500	550	160	BSL
59-50-7	4-Chloro-3-Methylphenol	U	550	1.0	500	550	180	
88-06-2	2,4,6-Trichlorophenol	U	550	1.0	500	550	170	
95-95-4	2,4,5-Trichlorophenol	U	550	1.0	500	550	170	
91-58-7	2-Chloronaphthalene	U	360	1.0	330	360	96	
92-52-4	1,1'-Biphenyl	~~U~~ UJ	360	1.0	330	360	81	JCB
88-74-4	2-Nitroaniline	U	550	1.0	500	550	83	
131-11-3	Dimethyl Phthalate	U	360	1.0	330	360	86	
606-20-2	2,6-Dinitrotoluene	U	360	1.0	330	360	87	
208-96-8	Acenaphthylene	U	360	1.0	330	360	78	
99-09-2	3-Nitroaniline	U	550	1.0	500	550	100	
83-32-9	Acenaphthene	U	360	1.0	330	360	72	
51-28-5	2,4-Dinitrophenol	~~U~~ UJ	1300	1.0	1200	1300	420	JCB
132-64-9	Dibenzofuran	U	360	1.0	330	360	87	
100-02-7	4-Nitrophenol	U	1300	1.0	1200	1300	340	
121-14-2	2,4-Dinitrotoluene	U	360	1.0	330	360	94	
84-66-2	Diethylphthalate	U	360	1.0	330	360	89	
7005-72-3	4-Chlorophenyl-phenylether	U	360	1.0	330	360	86	
100-01-6	4-Nitroaniline	U	550	1.0	500	550	150	
534-52-1	4,6-Dinitro-2-Methylphenol	~~U~~ UJ	1300	1.0	1200	1300	370	JCB
86-30-6	N-Nitrosodiphenylamine	U	730	1.0	660	730	240	
101-55-3	4-Bromophenyl-phenylether	U	360	1.0	330	360	94	
1912-24-9	Atrazine	U	360	1.0	330	360	100	
87-86-5	Pentachlorophenol	~~U~~ UJ	910	1.0	820	910	260	JCB
120-12-7	Anthracene	U	360	1.0	330	360	93	
86-74-8	Carbazole	J	140	1.0	500	550	120	

lw
4/18/09

KATAHDIN ANALYTICAL SERVICES
Report of Analytical Results

7

Client: CH2MHill
Project: TO-009 Lejeune
PO No:
Sample Date: 01/24/09
Received Date: 01/27/09
Extraction Date: 01/30/09
Analysis Date: 13-FEB-2009 19:01
Report Date: 02/25/2009
Matrix: SOIL
% Solids: 90.3

Lab ID: SC0410-13
Client ID: MR08-SS345-09A
SDG: TO9-45
Extracted by: AC
Extraction Method: SW846 3550
Analyst: JCG
Analysis Method: SW846 8270C
Lab Prep Batch: WG60320
Units: ug/Kgdrywt

CAS#	Compound	Flags	Results	DF	PQL	Adj.PQL	Adj.MDL
84-74-2	Di-n-butylphthalate	U	360	1.0	330	360	110
85-68-7	Butylbenzylphthalate	U	360	1.0	330	360	100
91-94-1	3,3'-Dichlorobenzidine	U	550	1.0	500	550	130
218-01-9	Chrysene		620	1.0	330	360	100
117-81-7	bis(2-Ethylhexyl)phthalate	~~B~~ U	650	1.0	330	360	110 BL
117-84-0	Di-n-octylphthalate	U	360	1.0	330	360	230
367-12-4	2-Fluorophenol		69%				
13127-88-3	Phenol-D6		65%				
4165-60-0	Nitrobenzene-D5		83%				
321-60-8	2-Fluorobiphenyl		96%				
118-79-6	2,4,6-Tribromophenol		54%				
1718-51-0	Terphenyl-D14		82%				

Rw
4/18/09

KATAHDIN ANALYTICAL SERVICES
Report of Analytical Results

8

Client: CH2MHill
Project: TO-009 Lejeune
PO No:
Sample Date: 01/24/09
Received Date: 01/27/09
Extraction Date: 01/30/09
Analysis Date: 13-FEB-2009 19:43
Report Date: 02/25/2009
Matrix: SOIL
% Solids: 87.1

Lab ID: SC0410-15
Client ID: MR08-SS345D-09A
SDG: TO9-45
Extracted by: AC
Extraction Method: SW846 3550
Analyst: JCG
Analysis Method: SW846 8270C
Lab Prep Batch: WG60320
Units: ug/Kgdrywt

CAS#	Compound	Flags	Results	DF	PQL	Adj.PQL	Adj.MDL	
100-52-7	Benzaldehyde	~~U~~ UJ	570	1.0	500	570	140	ICB
108-95-2	Phenol	U	570	1.0	500	570	180	
111-44-4	Bis(2-Chloroethyl)ether	U	380	1.0	330	380	93	
95-57-8	2-Chlorophenol	U	570	1.0	500	570	190	
95-48-7	2-Methylphenol	U	690	1.0	600	690	230	
108-60-1	2,2'-Oxybis(1-chloropropane)	~~U~~ UJ	380	1.0	330	380	100	CCH
98-86-2	Acetophenone	U	690	1.0	600	690	200	
621-64-7	N-Nitroso-di-n-propylamine	U	380	1.0	330	380	95	
65794-96-9	3&4-Methylphenol	U	690	1.0	600	690	210	
67-72-1	Hexachloroethane	U	380	1.0	330	380	110	
98-95-3	Nitrobenzene	U	380	1.0	330	380	100	
78-59-1	Isophorone	U	380	1.0	330	380	86	
88-75-5	2-Nitrophenol	U	690	1.0	600	690	190	
105-67-9	2,4-Dimethylphenol	U	570	1.0	500	570	190	
111-91-1	Bis(2-Chloroethoxy)methane	U	380	1.0	330	380	110	
120-83-2	2,4-Dichlorophenol	U	570	1.0	500	570	170	
106-47-8	4-Chloroaniline	U	570	1.0	500	570	140	
105-60-2	Caprolactam	~~U~~ UJ	570	1.0	500	570	160	BSL
59-50-7	4-Chloro-3-Methylphenol	U	570	1.0	500	570	190	
88-06-2	2,4,6-Trichlorophenol	U	570	1.0	500	570	180	
95-95-4	2,4,5-Trichlorophenol	U	570	1.0	500	570	180	
91-58-7	2-Chloronaphthalene	U	380	1.0	330	380	100	
92-52-4	1,1'-Biphenyl	~~U~~ UJ	380	1.0	330	380	84	ICB
88-74-4	2-Nitroaniline	U	570	1.0	500	570	86	
131-11-3	Dimethyl Phthalate	U	380	1.0	330	380	90	
606-20-2	2,6-Dinitrotoluene	U	380	1.0	330	380	91	
208-96-8	Acenaphthylene	U	380	1.0	330	380	80	
99-09-2	3-Nitroaniline	U	570	1.0	500	570	110	
83-32-9	Acenaphthene	U	380	1.0	330	380	75	ICB
51-28-5	2,4-Dinitrophenol	~~U~~ UJ	1400	1.0	1200	1400	430	
132-64-9	Dibenzofuran	U	380	1.0	330	380	91	
100-02-7	4-Nitrophenol	U	1400	1.0	1200	1400	350	
121-14-2	2,4-Dinitrotoluene	U	380	1.0	330	380	98	
84-66-2	Diethylphthalate	U	380	1.0	330	380	92	
7005-72-3	4-Chlorophenyl-phenylether	U	380	1.0	330	380	90	
100-01-6	4-Nitroaniline	U	570	1.0	500	570	150	
534-52-1	4,6-Dinitro-2-Methylphenol	~~U~~ UJ	1400	1.0	1200	1400	390	ICB
86-30-6	N-Nitrosodiphenylamine	U	760	1.0	660	760	250	
101-55-3	4-Bromophenyl-phenylether	U	380	1.0	330	380	98	
1912-24-9	Atrazine	U	380	1.0	330	380	100	
87-86-5	Pentachlorophenol	~~U~~ UJ	940	1.0	820	940	270	ICB
120-12-7	Anthracene	U	380	1.0	330	380	96	
86-74-8	Carbazole	U	570	1.0	500	570	130	

QW
4/18/09

KATAHDIN ANALYTICAL SERVICES
Report of Analytical Results

8

Client: CH2MHill
Project: TO-009 Lejeune
PO No:
Sample Date: 01/24/09
Received Date: 01/27/09
Extraction Date: 01/30/09
Analysis Date: 13-FEB-2009 19:43
Report Date: 02/25/2009
Matrix: SOIL
% Solids: 87.1

Lab ID: SC0410-15
Client ID: MR08-SS345D-09A
SDG: TO9-45
Extracted by: AC
Extraction Method: SW846 3550
Analyst: JCG
Analysis Method: SW846 8270C
Lab Prep Batch: WG60320
Units: ug/Kgdrywt

CAS#	Compound	Flags	Results	DF	PQL	Adj.PQL	Adj.MDL
84-74-2	Di-n-butylphthalate	U	380	1.0	330	380	120
85-68-7	Butylbenzylphthalate	U	380	1.0	330	380	110
91-94-1	3,3'-Dichlorobenzidine	U	570	1.0	500	570	130
218-01-9	Chrysene		510	1.0	330	380	110
117-81-7	bis(2-Ethylhexyl)phthalate	~~B~~ U	410	1.0	330	380	110 B
117-84-0	Di-n-octylphthalate	U	380	1.0	330	380	240
367-12-4	2-Fluorophenol		70%				
13127-88-3	Phenol-D6		70%				
4165-60-0	Nitrobenzene-D5		77%				
321-60-8	2-Fluorobiphenyl		96%				
118-79-6	2,4,6-Tribromophenol		65%				
1718-51-0	Terphenyl-D14		78%				

kW
4/18/09

KATAHDIN ANALYTICAL SERVICES
Report of Analytical Results

9

Client: CH2MHill
Project: TO-009 Lejeune
PO No:
Sample Date: 01/24/09
Received Date: 01/27/09
Extraction Date: 01/30/09
Analysis Date: 13-FEB-2009 20:26
Report Date: 02/25/2009
Matrix: SOIL
% Solids: 89.5

Lab ID: SC0410-17
Client ID: MR08-IS345-1-2-09A
SDG: TO9-45
Extracted by: AC
Extraction Method: SW846 3550
Analyst: JCG
Analysis Method: SW846 8270C
Lab Prep Batch: WG60320
Units: ug/Kgdrywt

Use reanalysis

CAS#	Compound	Flags	Results	DF	PQL	Adj.PQL	Adj.MDL
100-52-7	Benzaldehyde	J	2100	1.0	500	560	130
108-95-2	Phenol		2500	1.0	500	560	170
111-44-4	Bis(2-Chloroethyl)ether		1400	1.0	330	370	90
95-57-8	2-Chlorophenol		2900	1.0	500	560	180
95-48-7	2-Methylphenol		2600	1.0	600	670	220
108-60-1	2,2'-Oxybis(1-chloropropane)		1800	1.0	330	370	99
98-86-2	Acetophenone		1400	1.0	600	670	200
621-64-7	N-Nitroso-di-n-propylamine		1200	1.0	330	370	93
65794-96-9	3&4-Methylphenol		2700	1.0	600	670	210
67-72-1	Hexachloroethane		1200	1.0	330	370	110
98-95-3	Nitrobenzene		1500	1.0	330	370	100
78-59-1	Isophorone		1400	1.0	330	370	84
88-75-5	2-Nitrophenol		3200	1.0	600	670	190
105-67-9	2,4-Dimethylphenol		800	1.0	500	560	180
111-91-1	Bis(2-Chloroethoxy)methane		1400	1.0	330	370	110
120-83-2	2,4-Dichlorophenol		3000	1.0	500	560	170
106-47-8	4-Chloroaniline		220	1.0	500	560	130
105-60-2	Caprolactam		1400	1.0	500	560	160
59-50-7	4-Chloro-3-Methylphenol		2600	1.0	500	560	180
88-06-2	2,4,6-Trichlorophenol		3100	1.0	500	560	170
95-95-4	2,4,5-Trichlorophenol		3300	1.0	500	560	170
91-58-7	2-Chloronaphthalene		1200	1.0	330	370	97
92-52-4	1,1'-Biphenyl		1800	1.0	330	370	82
88-74-4	2-Nitroaniline		1800	1.0	500	560	84
131-11-3	Dimethyl Phthalate		1400	1.0	330	370	87
606-20-2	2,6-Dinitrotoluene		1400	1.0	330	370	88
208-96-8	Acenaphthylene		1500	1.0	330	370	78
99-09-2	3-Nitroaniline		820	1.0	500	560	100
83-32-9	Acenaphthene		1500	1.0	330	370	72
51-28-5	2,4-Dinitrophenol		3100	1.0	1200	1300	420
132-64-9	Dibenzofuran		1600	1.0	330	370	88
100-02-7	4-Nitrophenol		2700	1.0	1200	1300	340
121-14-2	2,4-Dinitrotoluene		1200	1.0	330	370	95
84-66-2	Diethylphthalate		1000	1.0	330	370	89
7005-72-3	4-Chlorophenyl-phenylether		1300	1.0	330	370	87
100-01-6	4-Nitroaniline		1300	1.0	500	560	150
534-52-1	4,6-Dinitro-2-Methylphenol		4200	1.0	1200	1300	380
86-30-6	N-Nitrosodiphenylamine		1400	1.0	660	740	240
101-55-3	4-Bromophenyl-phenylether		1600	1.0	330	370	95
1912-24-9	Atrazine		1200	1.0	330	370	100
87-86-5	Pentachlorophenol		3300	1.0	820	920	260
120-12-7	Anthracene		1500	1.0	330	370	94
86-74-8	Carbazole		1600	1.0	500	560	120

SSH

R RE

lew 4/18/09

KATAHDIN ANALYTICAL SERVICES
Report of Analytical Results

Client: CH2MHill
Project: TO-009 Lejeune
PO No:
Sample Date: 01/24/09
Received Date: 01/27/09
Extraction Date: 01/30/09
Analysis Date: 13-FEB-2009 20:26
Report Date: 02/25/2009
Matrix: SOIL
% Solids: 89.5

Lab ID: SC0410-17
Client ID: MR08-IS345-1-2-09A
SDG: TO9-45
Extracted by: AC
Extraction Method: SW846 3550
Analyst: JCG
Analysis Method: SW846 8270C
Lab Prep Batch: WG60320
Units: ug/Kgdrywt

Use reanalysis

CAS#	Compound	Flags	Results	DF	PQL	Adj.PQL	Adj.MDL	
84-74-2	Di-n-butylphthalate	J	740	1.0	330	370	110	SSH
85-68-7	Butylbenzylphthalate		900	1.0	330	370	100	
91-94-1	3,3'-Dichlorobenzidine	J	560	1.0	500	560	130	
218-01-9	Chrysene		1400	1.0	330	370	110	
117-81-7	bis(2-Ethylhexyl)phthalate	~~JB~~	370UJ ~~340~~	1.0	330	370	110	~~BL~~ SSH
117-84-0	Di-n-octylphthalate	J	440	1.0	330	370	240	SSH
367-12-4	2-Fluorophenol		*143%					
13127-88-3	Phenol-D6		*148%					
4165-60-0	Nitrobenzene-D5		*167%					
321-60-8	2-Fluorobiphenyl		*179%					
118-79-6	2,4,6-Tribromophenol		*155%					
1718-51-0	Terphenyl-D14		*157%					

RE

LW 4/18/09

9RE

KATAHDIN ANALYTICAL SERVICES
Report of Analytical Results

Client: CH2MHill
Project: TO-009 Lejeune
PO No:
Sample Date: 01/24/09
Received Date: 01/27/09
Extraction Date: 02/16/09
Analysis Date: 18-FEB-2009 15:30
Report Date: 02/24/2009
Matrix: SOIL
% Solids: 89.5

Lab ID: SC0410-17RE
Client ID: MR08-IS345-1-2-09A
SDG: TO9-45
Extracted by: AC
Extraction Method: SW846 3550
Analyst: JLP
Analysis Method: SW846 8270C
Lab Prep Batch: WG60887
Units: ug/Kgdrywt

CAS#	Compound	Flags	Results	DF	PQL	Adj.PQL	Adj.MDL
100-52-7	Benzaldehyde	U UJ	560	1.0	500	560	130 HT
108-95-2	Phenol	U	560	1.0	500	560	170
111-44-4	Bis(2-Chloroethyl)ether	U	370	1.0	330	370	90
95-57-8	2-Chlorophenol	U	560	1.0	500	560	180
95-48-7	2-Methylphenol	U	670	1.0	600	670	220
108-60-1	2,2'-Oxybis(1-chloropropane)	U	370	1.0	330	370	99
98-86-2	Acetophenone	U	670	1.0	600	670	200
621-64-7	N-Nitroso-di-n-propylamine	U	370	1.0	330	370	93
65794-96-9	3&4-Methylphenol	U	670	1.0	600	670	210
67-72-1	Hexachloroethane	U	370	1.0	330	370	110
98-95-3	Nitrobenzene	U	370	1.0	330	370	100
78-59-1	Isophorone	U	370	1.0	330	370	84
88-75-5	2-Nitrophenol	U	670	1.0	600	670	190
105-67-9	2,4-Dimethylphenol	U	560	1.0	500	560	180
111-91-1	Bis(2-Chloroethoxy)methane	U	370	1.0	330	370	110
120-83-2	2,4-Dichlorophenol	U	560	1.0	500	560	170
106-47-8	4-Chloroaniline	U	560	1.0	500	560	130
105-60-2	Caprolactam	U	560	1.0	500	560	160
59-50-7	4-Chloro-3-Methylphenol	U	560	1.0	500	560	180
88-06-2	2,4,6-Trichlorophenol	U	560	1.0	500	560	170
95-95-4	2,4,5-Trichlorophenol	U	560	1.0	500	560	170
91-58-7	2-Chloronaphthalene	U	370	1.0	330	370	97
92-52-4	1,1'-Biphenyl	U	370	1.0	330	370	82
88-74-4	2-Nitroaniline	U	560	1.0	500	560	84
131-11-3	Dimethyl Phthalate	U	370	1.0	330	370	87
606-20-2	2,6-Dinitrotoluene	U	370	1.0	330	370	88
208-96-8	Acenaphthylene	U	370	1.0	330	370	78
99-09-2	3-Nitroaniline	U	560	1.0	500	560	100
83-32-9	Acenaphthene	U	370	1.0	330	370	72
51-28-5	2,4-Dinitrophenol	U	1300	1.0	1200	1300	420
132-64-9	Dibenzofuran	U	370	1.0	330	370	88
100-02-7	4-Nitrophenol	U	1300	1.0	1200	1300	340
121-14-2	2,4-Dinitrotoluene	U	370	1.0	330	370	95
84-66-2	Diethylphthalate	U	370	1.0	330	370	89
7005-72-3	4-Chlorophenyl-phenylether	U	370	1.0	330	370	87
100-01-6	4-Nitroaniline	U	560	1.0	500	560	150
534-52-1	4,6-Dinitro-2-Methylphenol	U	1300	1.0	1200	1300	380
86-30-6	N-Nitrosodiphenylamine	U	740	1.0	660	740	240
101-55-3	4-Bromophenyl-phenylether	U	370	1.0	330	370	95
1912-24-9	Atrazine	U	370	1.0	330	370	100
87-86-5	Pentachlorophenol	U	920	1.0	820	920	260
120-12-7	Anthracene	U	370	1.0	330	370	94
86-74-8	Carbazole	U	560	1.0	500	560	120

LW
4/8/09

9RE

KATAHDIN ANALYTICAL SERVICES
Report of Analytical Results

Client: CH2MHill
Project: TO-009 Lejeune
PO No:
Sample Date: 01/24/09
Received Date: 01/27/09
Extraction Date: 02/16/09
Analysis Date: 18-FEB-2009 15:30
Report Date: 02/24/2009
Matrix: SOIL
% Solids: 89.5

Lab ID: SC0410-17RE
Client ID: MR08-IS345-1-2-09A
SDG: TO9-45
Extracted by: AC
Extraction Method: SW846 3550
Analyst: JLP
Analysis Method: SW846 8270C
Lab Prep Batch: WG60887
Units: ug/Kgdrywt

CAS#	Compound	Flags	Results	DF	PQL	Adj.PQL	Adj.MDL
84-74-2	Di-n-butylphthalate	U UJ	370	1.0	330	370	110 HT
85-68-7	Butylbenzylphthalate	U	370	1.0	330	370	100
91-94-1	3,3'-Dichlorobenzidine	U	560	1.0	500	560	130
218-01-9	Chrysene	U	370	1.0	330	370	110
117-81-7	bis(2-Ethylhexyl)phthalate	U	370	1.0	330	370	110
117-84-0	Di-n-octylphthalate	U	370	1.0	330	370	240
367-12-4	2-Fluorophenol		74%				
13127-88-3	Phenol-D6		87%				
4165-60-0	Nitrobenzene-D5		79%				
321-60-8	2-Fluorobiphenyl		75%				
118-79-6	2,4,6-Tribromophenol		88%				
1718-51-0	Terphenyl-D14		83%				

lw
4/18/09

KATAHDIN ANALYTICAL SERVICES
Report of Analytical Results

10

Client: CH2MHill
Project: TO-009 Lejeune
PO No:
Sample Date: 01/24/09
Received Date: 01/27/09
Extraction Date: 01/30/09
Analysis Date: 13-FEB-2009 21:08
Report Date: 02/25/2009
Matrix: SOIL
% Solids: 86.9

Lab ID: SC0410-19
Client ID: MR08-IS345D-1-2-09A
SDG: TO9-45
Extracted by: AC
Extraction Method: SW846 3550
Analyst: JCG
Analysis Method: SW846 8270C
Lab Prep Batch: WG60320
Units: ug/Kgdrywt

CAS#	Compound	Flags	Results	DF	PQL	Adj.PQL	Adj.MDL	
100-52-7	Benzaldehyde	~~U~~ UJ	580	1.0	500	580	140	ICB
108-95-2	Phenol	U	580	1.0	500	580	180	
111-44-4	Bis(2-Chloroethyl)ether	U	380	1.0	330	380	93	
95-57-8	2-Chlorophenol	U	580	1.0	500	580	190	
95-48-7	2-Methylphenol	U	690	1.0	600	690	230	
108-60-1	2,2'-Oxybis(1-chloropropane)	~~U~~ UJ	380	1.0	330	380	100	CCH
98-86-2	Acetophenone	U	690	1.0	600	690	200	
621-64-7	N-Nitroso-di-n-propylamine	U	380	1.0	330	380	95	
65794-96-9	3&4-Methylphenol	U	690	1.0	600	690	220	
67-72-1	Hexachloroethane	U	380	1.0	330	380	110	
98-95-3	Nitrobenzene	U	380	1.0	330	380	100	
78-59-1	Isophorone	U	380	1.0	330	380	86	
88-75-5	2-Nitrophenol	U	690	1.0	600	690	190	
105-67-9	2,4-Dimethylphenol	U	580	1.0	500	580	190	
111-91-1	Bis(2-Chloroethoxy)methane	U	380	1.0	330	380	110	
120-83-2	2,4-Dichlorophenol	U	580	1.0	500	580	170	
106-47-8	4-Chloroaniline	U	580	1.0	500	580	140	
105-60-2	Caprolactam	~~U~~ UJ	580	1.0	500	580	160	BSL
59-50-7	4-Chloro-3-Methylphenol	U	580	1.0	500	580	190	
88-06-2	2,4,6-Trichlorophenol	U	580	1.0	500	580	180	
95-95-4	2,4,5-Trichlorophenol	U	580	1.0	500	580	180	
91-58-7	2-Chloronaphthalene	U	380	1.0	330	380	100	
92-52-4	1,1'-Biphenyl	~~U~~ UJ	380	1.0	330	380	84	ICB
88-74-4	2-Nitroaniline	U	580	1.0	500	580	86	
131-11-3	Dimethyl Phthalate	U	380	1.0	330	380	90	
606-20-2	2,6-Dinitrotoluene	U	380	1.0	330	380	91	
208-96-8	Acenaphthylene	U	380	1.0	330	380	80	
99-09-2	3-Nitroaniline	U	580	1.0	500	580	110	
83-32-9	Acenaphthene	U	380	1.0	330	380	75	
51-28-5	2,4-Dinitrophenol	~~U~~ UJ	1400	1.0	1200	1400	430	ICB
132-64-9	Dibenzofuran	U	380	1.0	330	380	91	
100-02-7	4-Nitrophenol	U	1400	1.0	1200	1400	360	
121-14-2	2,4-Dinitrotoluene	U	380	1.0	330	380	98	
84-66-2	Diethylphthalate	U	380	1.0	330	380	92	
7005-72-3	4-Chlorophenyl-phenylether	U	380	1.0	330	380	90	
100-01-6	4-Nitroaniline	U	580	1.0	500	580	150	
534-52-1	4,6-Dinitro-2-Methylphenol	~~U~~ UJ	1400	1.0	1200	1400	390	ICB
86-30-6	N-Nitrosodiphenylamine	U	760	1.0	660	760	250	
101-55-3	4-Bromophenyl-phenylether	U	380	1.0	330	380	98	
1912-24-9	Atrazine	U	380	1.0	330	380	100	
87-86-5	Pentachlorophenol	~~U~~ UJ	940	1.0	820	940	270	ICB
120-12-7	Anthracene	U	380	1.0	330	380	97	
86-74-8	Carbazole	U	580	1.0	500	580	130	

lw
4/23/09

KATAHDIN ANALYTICAL SERVICES
Report of Analytical Results

10

Client: CH2MHill
Project: TO-009 Lejeune
PO No:
Sample Date: 01/24/09
Received Date: 01/27/09
Extraction Date: 01/30/09
Analysis Date: 13-FEB-2009 21:08
Report Date: 02/25/2009
Matrix: SOIL
% Solids: 86.9

Lab ID: SC0410-19
Client ID: MR08-IS345D-1-2-09A
SDG: TO9-45
Extracted by: AC
Extraction Method: SW846 3550
Analyst: JCG
Analysis Method: SW846 8270C
Lab Prep Batch: WG60320
Units: ug/Kgdrywt

CAS#	Compound	Flags	Results	DF	PQL	Adj.PQL	Adj.MDL	
84-74-2	Di-n-butylphthalate	U	380	1.0	330	380	120	
85-68-7	Butylbenzylphthalate	U	380	1.0	330	380	110	
91-94-1	3,3'-Dichlorobenzidine	U	580	1.0	500	580	130	
218-01-9	Chrysene	U	380	1.0	330	380	110	
117-81-7	bis(2-Ethylhexyl)phthalate	~~JB~~ 380U	~~200~~	1.0	330	380	110	BL
117-84-0	Di-n-octylphthalate	U	380	1.0	330	380	240	
367-12-4	2-Fluorophenol		63%					
13127-88-3	Phenol-D6		69%					
4165-60-0	Nitrobenzene-D5		86%					
321-60-8	2-Fluorobiphenyl		98%					
118-79-6	2,4,6-Tribromophenol		43%					
1718-51-0	Terphenyl-D14		94%					

kw 4/18/09

KATAHDIN ANALYTICAL SERVICES
Report of Analytical Results

11

Client: CH2MHill
Project: TO-009 Lejeune
PO No:
Sample Date: 01/24/09
Received Date: 01/27/09
Extraction Date: 01/30/09
Analysis Date: 19-FEB-2009 04:28
Report Date: 02/25/2009
Matrix: SOIL
% Solids: 91.8

Lab ID: SC0410-21
Client ID: MR08-SS346-09A
SDG: TO9-45
Extracted by: AC
Extraction Method: SW846 3550
Analyst: JCG
Analysis Method: SW846 8270C
Lab Prep Batch: WG60320
Units: ug/Kgdrywt

CAS#	Compound	Flags	Results	DF	PQL	Adj.PQL	Adj.MDL	
100-52-7	Benzaldehyde	~~U~~ UJ	540	1.0	500	540	130	JCB
108-95-2	Phenol	U	540	1.0	500	540	170	
111-44-4	Bis(2-Chloroethyl)ether	U	360	1.0	330	360	88	
95-57-8	2-Chlorophenol	U	540	1.0	500	540	180	
95-48-7	2-Methylphenol	U	650	1.0	600	650	220	
108-60-1	2,2'-Oxybis(1-chloropropane)	U	360	1.0	330	360	97	
98-86-2	Acetophenone	U	650	1.0	600	650	190	
621-64-7	N-Nitroso-di-n-propylamine	U	360	1.0	330	360	90	
65794-96-9	3&4-Methylphenol	U	650	1.0	600	650	200	
67-72-1	Hexachloroethane	U	360	1.0	330	360	100	
98-95-3	Nitrobenzene	U	360	1.0	330	360	99	
78-59-1	Isophorone	U	360	1.0	330	360	82	
88-75-5	2-Nitrophenol	U	650	1.0	600	650	180	
105-67-9	2,4-Dimethylphenol	U	540	1.0	500	540	180	
111-91-1	Bis(2-Chloroethoxy)methane	U	360	1.0	330	360	100	
120-83-2	2,4-Dichlorophenol	U	540	1.0	500	540	160	
106-47-8	4-Chloroaniline	U	540	1.0	500	540	130	
105-60-2	Caprolactam	~~U~~ UJ	540	1.0	500	540	160	BSL
59-50-7	4-Chloro-3-Methylphenol	U	540	1.0	500	540	180	
88-06-2	2,4,6-Trichlorophenol	U	540	1.0	500	540	170	
95-95-4	2,4,5-Trichlorophenol	U	540	1.0	500	540	170	
91-58-7	2-Chloronaphthalene	U	360	1.0	330	360	95	
92-52-4	1,1'-Biphenyl	U	360	1.0	330	360	80	
88-74-4	2-Nitroaniline	U	540	1.0	500	540	82	
131-11-3	Dimethyl Phthalate	U	360	1.0	330	360	85	
606-20-2	2,6-Dinitrotoluene	U	360	1.0	330	360	86	
208-96-8	Acenaphthylene	U	360	1.0	330	360	76	
99-09-2	3-Nitroaniline	U	540	1.0	500	540	100	
83-32-9	Acenaphthene	U	360	1.0	330	360	71	
51-28-5	2,4-Dinitrophenol	U	1300	1.0	1200	1300	410	
132-64-9	Dibenzofuran	U	360	1.0	330	360	86	
100-02-7	4-Nitrophenol	~~U~~ UJ	1300	1.0	1200	1300	340	JCB
121-14-2	2,4-Dinitrotoluene	U	360	1.0	330	360	93	
84-66-2	Diethylphthalate	U	360	1.0	330	360	87	
7005-72-3	4-Chlorophenyl-phenylether	U	360	1.0	330	360	85	
100-01-6	4-Nitroaniline	U	540	1.0	500	540	140	
534-52-1	4,6-Dinitro-2-Methylphenol	~~U~~ UJ	1300	1.0	1200	1300	370	BSL
86-30-6	N-Nitrosodiphenylamine	U	720	1.0	660	720	240	
101-55-3	4-Bromophenyl-phenylether	U	360	1.0	330	360	93	
1912-24-9	Atrazine	U	360	1.0	330	360	99	
87-86-5	Pentachlorophenol	U	890	1.0	820	890	260	
120-12-7	Anthracene	U	360	1.0	330	360	92	
86-74-8	Carbazole	U	540	1.0	500	540	120	

RW
4/18/09

KATAHDIN ANALYTICAL SERVICES
Report of Analytical Results

11

Client: CH2MHill
Project: TO-009 Lejeune
PO No:
Sample Date: 01/24/09
Received Date: 01/27/09
Extraction Date: 01/30/09
Analysis Date: 19-FEB-2009 04:28
Report Date: 02/25/2009
Matrix: SOIL
% Solids: 91.8

Lab ID: SC0410-21
Client ID: MR08-SS346-09A
SDG: TO9-45
Extracted by: AC
Extraction Method: SW846 3550
Analyst: JCG
Analysis Method: SW846 8270C
Lab Prep Batch: WG60320
Units: ug/Kgdrywt

CAS#	Compound	Flags	Results	DF	PQL	Adj.PQL	Adj.MDL	
84-74-2	Di-n-butylphthalate	U	360	1.0	330	360	110	
85-68-7	Butylbenzylphthalate	U	360	1.0	330	360	100	
91-94-1	3,3'-Dichlorobenzidine	U	540	1.0	500	540	120	
218-01-9	Chrysene	U	360	1.0	330	360	100	
117-81-7	bis(2-Ethylhexyl)phthalate	J	140	1.0	330	360	110	
117-84-0	Di-n-octylphthalate	~~J~~ UJ	360	1.0	330	360	230	CCH
367-12-4	2-Fluorophenol		50%					
13127-88-3	Phenol-D6		70%					
4165-60-0	Nitrobenzene-D5		64%					
321-60-8	2-Fluorobiphenyl		68%					
118-79-6	2,4,6-Tribromophenol		43%					
1718-51-0	Terphenyl-D14		61%					

lw 4/28/09

KATAHDIN ANALYTICAL SERVICES
Report of Analytical Results

12

Client: CH2MHill
Project: TO-009 Lejeune
PO No:
Sample Date: 01/24/09
Received Date: 01/27/09
Extraction Date: 01/30/09
Analysis Date: 18-FEB-2009 22:51
Report Date: 02/25/2009
Matrix: SOIL
% Solids: 86.9

Lab ID: SC0410-23
Client ID: MR08-IS346-1-2-09A
SDG: TO9-45
Extracted by: AC
Extraction Method: SW846 3550
Analyst: JCG
Analysis Method: SW846 8270C
Lab Prep Batch: WG60320
Units: ug/Kgdrywt

CAS#	Compound	Flags	Results	DF	PQL	Adj.PQL	Adj.MDL	
100-52-7	Benzaldehyde	~~U~~ UJ	580	1.0	500	580	140	JCB
108-95-2	Phenol	U	580	1.0	500	580	180	
111-44-4	Bis(2-Chloroethyl)ether	U	380	1.0	330	380	93	
95-57-8	2-Chlorophenol	U	580	1.0	500	580	190	
95-48-7	2-Methylphenol	U	690	1.0	600	690	230	
108-60-1	2,2'-Oxybis(1-chloropropane)	U	380	1.0	330	380	100	
98-86-2	Acetophenone	U	690	1.0	600	690	200	
621-64-7	N-Nitroso-di-n-propylamine	U	380	1.0	330	380	96	
65794-96-9	3&4-Methylphenol	U	690	1.0	600	690	220	
67-72-1	Hexachloroethane	U	380	1.0	330	380	110	
98-95-3	Nitrobenzene	U	380	1.0	330	380	100	
78-59-1	Isophorone	U	380	1.0	330	380	86	
88-75-5	2-Nitrophenol	U	690	1.0	600	690	190	
105-67-9	2,4-Dimethylphenol	U	580	1.0	500	580	190	
111-91-1	Bis(2-Chloroethoxy)methane	U	380	1.0	330	380	110	
120-83-2	2,4-Dichlorophenol	U	580	1.0	500	580	170	
106-47-8	4-Chloroaniline	U	580	1.0	500	580	140	
105-60-2	Caprolactam	~~U~~ UJ	580	1.0	500	580	160	BSL
59-50-7	4-Chloro-3-Methylphenol	U	580	1.0	500	580	190	
88-06-2	2,4,6-Trichlorophenol	U	580	1.0	500	580	180	
95-95-4	2,4,5-Trichlorophenol	U	580	1.0	500	580	180	
91-58-7	2-Chloronaphthalene	U	380	1.0	330	380	100	
92-52-4	1,1'-Biphenyl	U	380	1.0	330	380	84	
88-74-4	2-Nitroaniline	U	580	1.0	500	580	86	
131-11-3	Dimethyl Phthalate	U	380	1.0	330	380	90	
606-20-2	2,6-Dinitrotoluene	U	380	1.0	330	380	91	
208-96-8	Acenaphthylene	U	380	1.0	330	380	80	
99-09-2	3-Nitroaniline	U	580	1.0	500	580	110	
83-32-9	Acenaphthene	U	380	1.0	330	380	75	
51-28-5	2,4-Dinitrophenol	U	1400	1.0	1200	1400	430	
132-64-9	Dibenzofuran	U	380	1.0	330	380	91	
100-02-7	4-Nitrophenol	~~U~~ UJ	1400	1.0	1200	1400	360	JCB
121-14-2	2,4-Dinitrotoluene	U	380	1.0	330	380	98	
84-66-2	Diethylphthalate	U	380	1.0	330	380	92	
7005-72-3	4-Chlorophenyl-phenylether	U	380	1.0	330	380	90	
100-01-6	4-Nitroaniline	U	580	1.0	500	580	150	
534-52-1	4,6-Dinitro-2-Methylphenol	~~U~~ UJ	1400	1.0	1200	1400	390	BSL
86-30-6	N-Nitrosodiphenylamine	U	760	1.0	660	760	250	
101-55-3	4-Bromophenyl-phenylether	U	380	1.0	330	380	98	
1912-24-9	Atrazine	U	380	1.0	330	380	100	
87-86-5	Pentachlorophenol	U	940	1.0	820	940	270	
120-12-7	Anthracene	U	380	1.0	330	380	97	
86-74-8	Carbazole	U	580	1.0	500	580	130	

LW
4/18/09

KATAHDIN ANALYTICAL SERVICES
Report of Analytical Results

12

Client: CH2MHill
Project: TO-009 Lejeune
PO No:
Sample Date: 01/24/09
Received Date: 01/27/09
Extraction Date: 01/30/09
Analysis Date: 18-FEB-2009 22:51
Report Date: 02/25/2009
Matrix: SOIL
% Solids: 86.9

Lab ID: SC0410-23
Client ID: MR08-IS346-1-2-09A
SDG: TO9-45
Extracted by: AC
Extraction Method: SW846 3550
Analyst: JCG
Analysis Method: SW846 8270C
Lab Prep Batch: WG60320
Units: ug/Kgdrywt

CAS#	Compound	Flags	Results	DF	PQL	Adj.PQL	Adj.MDL	
84-74-2	Di-n-butylphthalate	U	380	1.0	330	380	120	
85-68-7	Butylbenzylphthalate	U	380	1.0	330	380	110	
91-94-1	3,3'-Dichlorobenzidine	U	580	1.0	500	580	130	
218-01-9	Chrysene	U	380	1.0	330	380	110	
117-81-7	bis(2-Ethylhexyl)phthalate	J	140	1.0	330	380	110	
117-84-0	Di-n-octylphthalate	~~J~~ UJ	380	1.0	330	380	240	CCH
367-12-4	2-Fluorophenol		62%					
13127-88-3	Phenol-D6		75%					
4165-60-0	Nitrobenzene-D5		74%					
321-60-8	2-Fluorobiphenyl		67%					
118-79-6	2,4,6-Tribromophenol		58%					
1718-51-0	Terphenyl-D14		65%					

lew
4/18/09

KATAHDIN ANALYTICAL SERVICES
Report of Analytical Results

13

Client: CH2MHill
Project: TO-009 Lejeune
PO No:
Sample Date: 01/24/09
Received Date: 01/27/09
Extraction Date: 01/30/09
Analysis Date: 19-FEB-2009 05:10
Report Date: 02/25/2009
Matrix: SOIL
% Solids: 92.5

Lab ID: SC0410-25
Client ID: MR08-SS354-09A
SDG: TO9-45
Extracted by: AC
Extraction Method: SW846 3550
Analyst: JCG
Analysis Method: SW846 8270C
Lab Prep Batch: WG60320
Units: ug/Kgdrywt

CAS#	Compound	Flags	Results	DF	PQL	Adj.PQL	Adj.MDL	
100-52-7	Benzaldehyde	~~U~~ UJ	540	1.0	500	540	130	JCB
108-95-2	Phenol	U	540	1.0	500	540	170	
111-44-4	Bis(2-Chloroethyl)ether	U	360	1.0	330	360	88	
95-57-8	2-Chlorophenol	U	540	1.0	500	540	180	
95-48-7	2-Methylphenol	U	650	1.0	600	650	220	
108-60-1	2,2'-Oxybis(1-chloropropane)	U	360	1.0	330	360	96	
98-86-2	Acetophenone	U	650	1.0	600	650	190	
621-64-7	N-Nitroso-di-n-propylamine	U	360	1.0	330	360	90	
65794-96-9	3&4-Methylphenol	U	650	1.0	600	650	200	
67-72-1	Hexachloroethane	U	360	1.0	330	360	100	
98-95-3	Nitrobenzene	U	360	1.0	330	360	98	
78-59-1	Isophorone	U	360	1.0	330	360	81	
88-75-5	2-Nitrophenol	U	650	1.0	600	650	180	
105-67-9	2,4-Dimethylphenol	U	540	1.0	500	540	180	
111-91-1	Bis(2-Chloroethoxy)methane	U	360	1.0	330	360	100	
120-83-2	2,4-Dichlorophenol	U	540	1.0	500	540	160	
106-47-8	4-Chloroaniline	U	540	1.0	500	540	130	
105-60-2	Caprolactam	~~U~~ UJ	540	1.0	500	540	160	BSL
59-50-7	4-Chloro-3-Methylphenol	U	540	1.0	500	540	180	
88-06-2	2,4,6-Trichlorophenol	U	540	1.0	500	540	170	
95-95-4	2,4,5-Trichlorophenol	U	540	1.0	500	540	170	
91-58-7	2-Chloronaphthalene	U	360	1.0	330	360	94	
92-52-4	1,1'-Biphenyl	U	360	1.0	330	360	79	
88-74-4	2-Nitroaniline	U	540	1.0	500	540	81	
131-11-3	Dimethyl Phthalate	U	360	1.0	330	360	84	
606-20-2	2,6-Dinitrotoluene	U	360	1.0	330	360	85	
208-96-8	Acenaphthylene	U	360	1.0	330	360	76	
99-09-2	3-Nitroaniline	U	540	1.0	500	540	100	
83-32-9	Acenaphthene	U	360	1.0	330	360	70	
51-28-5	2,4-Dinitrophenol	U	1300	1.0	1200	1300	410	
132-64-9	Dibenzofuran	U	360	1.0	330	360	85	
100-02-7	4-Nitrophenol	~~U~~ UJ	1300	1.0	1200	1300	330	ICB
121-14-2	2,4-Dinitrotoluene	U	360	1.0	330	360	92	
84-66-2	Diethylphthalate	U	360	1.0	330	360	86	
7005-72-3	4-Chlorophenyl-phenylether	U	360	1.0	330	360	84	
100-01-6	4-Nitroaniline	U	540	1.0	500	540	140	
534-52-1	4,6-Dinitro-2-Methylphenol	~~U~~ UJ	1300	1.0	1200	1300	360	BSL
86-30-6	N-Nitrosodiphenylamine	U	710	1.0	660	710	240	
101-55-3	4-Bromophenyl-phenylether	U	360	1.0	330	360	92	
1912-24-9	Atrazine	U	360	1.0	330	360	98	
87-86-5	Pentachlorophenol	U	890	1.0	820	890	260	
120-12-7	Anthracene	U	360	1.0	330	360	91	
86-74-8	Carbazole	U	540	1.0	500	540	120	

LW
4/18/09

KATAHDIN ANALYTICAL SERVICES
Report of Analytical Results

13

Client: CH2MHill
Project: TO-009 Lejeune
PO No:
Sample Date: 01/24/09
Received Date: 01/27/09
Extraction Date: 01/30/09
Analysis Date: 19-FEB-2009 05:10
Report Date: 02/25/2009
Matrix: SOIL
% Solids: 92.5

Lab ID: SC0410-25
Client ID: MR08-SS354-09A
SDG: TO9-45
Extracted by: AC
Extraction Method: SW846 3550
Analyst: JCG
Analysis Method: SW846 8270C
Lab Prep Batch: WG60320
Units: ug/Kgdrywt

CAS#	Compound	Flags	Results	DF	PQL	Adj.PQL	Adj.MDL
84-74-2	Di-n-butylphthalate	U	360	1.0	330	360	110
85-68-7	Butylbenzylphthalate	U	360	1.0	330	360	100
91-94-1	3,3'-Dichlorobenzidine	U	540	1.0	500	540	120
218-01-9	Chrysene	U	360	1.0	330	360	100
117-81-7	bis(2-Ethylhexyl)phthalate	J	230	1.0	330	360	100
117-84-0	Di-n-octylphthalate	~~J~~ UJ	360	1.0	330	360	230 CCH
367-12-4	2-Fluorophenol		51%				
13127-88-3	Phenol-D6		73%				
4165-60-0	Nitrobenzene-D5		72%				
321-60-8	2-Fluorobiphenyl		72%				
118-79-6	2,4,6-Tribromophenol		* 33%				
1718-51-0	Terphenyl-D14		68%				

LW 4/18/09

KATAHDIN ANALYTICAL SERVICES
Report of Analytical Results

14

Client: CH2MHill
Project: TO-009 Lejeune
PO No:
Sample Date: 01/24/09
Received Date: 01/27/09
Extraction Date: 01/30/09
Analysis Date: 18-FEB-2009 23:33
Report Date: 02/25/2009
Matrix: SOIL
% Solids: 85.9

Lab ID: SC0410-27
Client ID: MR08-IS354-1-2-09A
SDG: TO9-45
Extracted by: AC
Extraction Method: SW846 3550
Analyst: JCG
Analysis Method: SW846 8270C
Lab Prep Batch: WG60320
Units: ug/Kgdrywt

CAS#	Compound	Flags	Results	DF	PQL	Adj.PQL	Adj.MDL	
100-52-7	Benzaldehyde	~~J~~ UJ	580	1.0	500	580	140	JCB
108-95-2	Phenol	U	580	1.0	500	580	180	
111-44-4	Bis(2-Chloroethyl)ether	U	380	1.0	330	380	94	
95-57-8	2-Chlorophenol	U	580	1.0	500	580	190	
95-48-7	2-Methylphenol	U	700	1.0	600	700	230	
108-60-1	2,2'-Oxybis(1-chloropropane)	U	380	1.0	330	380	100	
98-86-2	Acetophenone	U	700	1.0	600	700	210	
621-64-7	N-Nitroso-di-n-propylamine	U	380	1.0	330	380	96	
65794-96-9	3&4-Methylphenol	U	700	1.0	600	700	220	
67-72-1	Hexachloroethane	U	380	1.0	330	380	110	
98-95-3	Nitrobenzene	U	380	1.0	330	380	100	
78-59-1	Isophorone	U	380	1.0	330	380	87	
88-75-5	2-Nitrophenol	U	700	1.0	600	700	190	
105-67-9	2,4-Dimethylphenol	U	580	1.0	500	580	190	
111-91-1	Bis(2-Chloroethoxy)methane	U	380	1.0	330	380	110	
120-83-2	2,4-Dichlorophenol	U	580	1.0	500	580	170	
106-47-8	4-Chloroaniline	U	580	1.0	500	580	140	
105-60-2	Caprolactam	~~J~~ UJ	580	1.0	500	580	170	BSL
59-50-7	4-Chloro-3-Methylphenol	U	580	1.0	500	580	190	
88-06-2	2,4,6-Trichlorophenol	U	580	1.0	500	580	180	
95-95-4	2,4,5-Trichlorophenol	U	580	1.0	500	580	180	
91-58-7	2-Chloronaphthalene	U	380	1.0	330	380	100	
92-52-4	1,1'-Biphenyl	U	380	1.0	330	380	85	
88-74-4	2-Nitroaniline	U	580	1.0	500	580	87	
131-11-3	Dimethyl Phthalate	U	380	1.0	330	380	91	
606-20-2	2,6-Dinitrotoluene	U	380	1.0	330	380	92	
208-96-8	Acenaphthylene	U	380	1.0	330	380	81	
99-09-2	3-Nitroaniline	U	580	1.0	500	580	110	
83-32-9	Acenaphthene	U	380	1.0	330	380	76	
51-28-5	2,4-Dinitrophenol	U	1400	1.0	1200	1400	440	
132-64-9	Dibenzofuran	U	380	1.0	330	380	92	
100-02-7	4-Nitrophenol	~~J~~ UJ	1400	1.0	1200	1400	360	JCB
121-14-2	2,4-Dinitrotoluene	U	380	1.0	330	380	99	
84-66-2	Diethylphthalate	U	380	1.0	330	380	93	
7005-72-3	4-Chlorophenyl-phenylether	U	380	1.0	330	380	91	
100-01-6	4-Nitroaniline	U	580	1.0	500	580	160	
534-52-1	4,6-Dinitro-2-Methylphenol	~~J~~ UJ	1400	1.0	1200	1400	390	BSL
86-30-6	N-Nitrosodiphenylamine	U	770	1.0	660	770	250	
101-55-3	4-Bromophenyl-phenylether	U	380	1.0	330	380	99	
1912-24-9	Atrazine	U	380	1.0	330	380	100	
87-86-5	Pentachlorophenol	U	950	1.0	820	950	280	
120-12-7	Anthracene	U	380	1.0	330	380	98	
86-74-8	Carbazole	U	580	1.0	500	580	130	

LW
4/18/09

KATAHDIN ANALYTICAL SERVICES
Report of Analytical Results

14

Client: CH2MHill
Project: TO-009 Lejeune
PO No:
Sample Date: 01/24/09
Received Date: 01/27/09
Extraction Date: 01/30/09
Analysis Date: 18-FEB-2009 23:33
Report Date: 02/25/2009
Matrix: SOIL
% Solids: 85.9

Lab ID: SC0410-27
Client ID: MR08-IS354-1-2-09A
SDG: T09-45
Extracted by: AC
Extraction Method: SW846 3550
Analyst: JCG
Analysis Method: SW846 8270C
Lab Prep Batch: WG60320
Units: ug/Kgdrywt

CAS#	Compound	Flags	Results	DF	PQL	Adj.PQL	Adj.MDL	
84-74-2	Di-n-butylphthalate	U	380	1.0	330	380	120	
85-68-7	Butylbenzylphthalate	U	380	1.0	330	380	110	
91-94-1	3,3'-Dichlorobenzidine	U	580	1.0	500	580	130	
218-01-9	Chrysene	U	380	1.0	330	380	110	
117-81-7	bis(2-Ethylhexyl)phthalate	U	380	1.0	330	380	110	
117-84-0	Di-n-octylphthalate	~~U~~ UJ	380	1.0	330	380	240	CCH
367-12-4	2-Fluorophenol		64%					
13127-88-3	Phenol-D6		82%					
4165-60-0	Nitrobenzene-D5		77%					
321-60-8	2-Fluorobiphenyl		83%					
118-79-6	2,4,6-Tribromophenol		67%					
1718-51-0	Terphenyl-D14		70%					

lw
4/18/09

KATAHDIN ANALYTICAL SERVICES
Report of Analytical Results

15

Client: CH2MHill
Project: TO-009 Lejeune
PO No:
Sample Date: 01/24/09
Received Date: 01/27/09
Extraction Date: 01/30/09
Analysis Date: 19-FEB-2009 05:52
Report Date: 02/25/2009
Matrix: SOIL
% Solids: 93.1

Lab ID: SC0410-29
Client ID: MR08-SS369-09A
SDG: TO9-45
Extracted by: AC
Extraction Method: SW846 3550
Analyst: JCG
Analysis Method: SW846 8270C
Lab Prep Batch: WG60320
Units: ug/Kgdrywt

CAS#	Compound	Flags	Results	DF	PQL	Adj.PQL	Adj.MDL	
100-52-7	Benzaldehyde	~~U~~ UJ	540	1.0	500	540	130	ICB
108-95-2	Phenol	U	540	1.0	500	540	170	
111-44-4	Bis(2-Chloroethyl)ether	U	350	1.0	330	350	87	
95-57-8	2-Chlorophenol	U	540	1.0	500	540	180	
95-48-7	2-Methylphenol	U	640	1.0	600	640	210	
108-60-1	2,2'-Oxybis(1-chloropropane)	U	350	1.0	330	350	96	
98-86-2	Acetophenone	U	640	1.0	600	640	190	
621-64-7	N-Nitroso-di-n-propylamine	U	350	1.0	330	350	89	
65794-96-9	3&4-Methylphenol	U	640	1.0	600	640	200	
67-72-1	Hexachloroethane	U	350	1.0	330	350	100	
98-95-3	Nitrobenzene	U	350	1.0	330	350	98	
78-59-1	Isophorone	U	350	1.0	330	350	80	
88-75-5	2-Nitrophenol	U	640	1.0	600	640	180	
105-67-9	2,4-Dimethylphenol	U	540	1.0	500	540	180	
111-91-1	Bis(2-Chloroethoxy)methane	U	350	1.0	330	350	100	
120-83-2	2,4-Dichlorophenol	U	540	1.0	500	540	160	
106-47-8	4-Chloroaniline	U	540	1.0	500	540	130	
105-60-2	Caprolactam	~~U~~ UJ	540	1.0	500	540	150	BSL
59-50-7	4-Chloro-3-Methylphenol	U	540	1.0	500	540	180	
88-06-2	2,4,6-Trichlorophenol	U	540	1.0	500	540	170	
95-95-4	2,4,5-Trichlorophenol	U	540	1.0	500	540	170	
91-58-7	2-Chloronaphthalene	U	350	1.0	330	350	93	
92-52-4	1,1'-Biphenyl	U	350	1.0	330	350	78	
88-74-4	2-Nitroaniline	U	540	1.0	500	540	80	
131-11-3	Dimethyl Phthalate	U	350	1.0	330	350	84	
606-20-2	2,6-Dinitrotoluene	U	350	1.0	330	350	85	
208-96-8	Acenaphthylene	U	350	1.0	330	350	75	
99-09-2	3-Nitroaniline	U	540	1.0	500	540	100	
83-32-9	Acenaphthene	U	350	1.0	330	350	70	
51-28-5	2,4-Dinitrophenol	U	1300	1.0	1200	1300	400	
132-64-9	Dibenzofuran	U	350	1.0	330	350	85	
100-02-7	4-Nitrophenol	~~U~~ UJ	1300	1.0	1200	1300	330	ICB
121-14-2	2,4-Dinitrotoluene	U	350	1.0	330	350	91	
84-66-2	Diethylphthalate	U	350	1.0	330	350	86	
7005-72-3	4-Chlorophenyl-phenylether	U	350	1.0	330	350	84	
100-01-6	4-Nitroaniline	U	540	1.0	500	540	140	
534-52-1	4,6-Dinitro-2-Methylphenol	~~U~~ UJ	1300	1.0	1200	1300	360	BSL
86-30-6	N-Nitrosodiphenylamine	U	710	1.0	660	710	240	
101-55-3	4-Bromophenyl-phenylether	U	350	1.0	330	350	91	
1912-24-9	Atrazine	U	350	1.0	330	350	98	
87-86-5	Pentachlorophenol	U	880	1.0	820	880	250	
120-12-7	Anthracene	U	350	1.0	330	350	90	
86-74-8	Carbazole	U	540	1.0	500	540	120	

JW 4/18/09

KATAHDIN ANALYTICAL SERVICES
Report of Analytical Results

15

Client: CH2MHill
Project: TO-009 Lejeune
PO No:
Sample Date: 01/24/09
Received Date: 01/27/09
Extraction Date: 01/30/09
Analysis Date: 19-FEB-2009 05:52
Report Date: 02/25/2009
Matrix: SOIL
% Solids: 93.1

Lab ID: SC0410-29
Client ID: MR08-SS369-09A
SDG: TO9-45
Extracted by: AC
Extraction Method: SW846 3550
Analyst: JCG
Analysis Method: SW846 8270C
Lab Prep Batch: WG60320
Units: ug/Kgdrywt

CAS#	Compound	Flags	Results	DF	PQL	Adj.PQL	Adj.MDL
84-74-2	Di-n-butylphthalate	U	350	1.0	330	350	110
85-68-7	Butylbenzylphthalate	U	350	1.0	330	350	100
91-94-1	3,3'-Dichlorobenzidine	U	540	1.0	500	540	120
218-01-9	Chrysene	U	350	1.0	330	350	100
117-81-7	bis(2-Ethylhexyl)phthalate	J	240	1.0	330	350	100
117-84-0	Di-n-octylphthalate	~~U~~ UJ	350	1.0	330	350	230 CCH
367-12-4	2-Fluorophenol		66%				
13127-88-3	Phenol-D6		83%				
4165-60-0	Nitrobenzene-D5		73%				
321-60-8	2-Fluorobiphenyl		72%				
118-79-6	2,4,6-Tribromophenol		61%				
1718-51-0	Terphenyl-D14		71%				

lw
4/18/09

KATAHDIN ANALYTICAL SERVICES
Report of Analytical Results

16

Client: CH2MHill
Project: TO-009 Lejeune
PO No:
Sample Date: 01/24/09
Received Date: 01/27/09
Extraction Date: 01/30/09
Analysis Date: 19-FEB-2009 03:04
Report Date: 02/25/2009
Matrix: SOIL
% Solids: 93.7

Lab ID: SC0410-31
Client ID: MR08-SS369D-09A
SDG: TO9-45
Extracted by: AC
Extraction Method: SW846 3550
Analyst: JCG
Analysis Method: SW846 8270C
Lab Prep Batch: WG60320
Units: ug/Kgdrywt

CAS#	Compound	Flags	Results	DF	PQL	Adj.PQL	Adj.MDL	
100-52-7	Benzaldehyde	~~U~~ UJ	530	1.0	500	530	130	ICB
108-95-2	Phenol	U	530	1.0	500	530	170	
111-44-4	Bis(2-Chloroethyl)ether	U	350	1.0	330	350	86	
95-57-8	2-Chlorophenol	U	530	1.0	500	530	180	
95-48-7	2-Methylphenol	U	640	1.0	600	640	210	
108-60-1	2,2'-Oxybis(1-chloropropane)	U	350	1.0	330	350	95	
98-86-2	Acetophenone	U	640	1.0	600	640	190	
621-64-7	N-Nitroso-di-n-propylamine	U	350	1.0	330	350	89	
65794-96-9	3&4-Methylphenol	U	640	1.0	600	640	200	
67-72-1	Hexachloroethane	U	350	1.0	330	350	100	
98-95-3	Nitrobenzene	U	350	1.0	330	350	97	
78-59-1	Isophorone	U	350	1.0	330	350	80	
88-75-5	2-Nitrophenol	U	640	1.0	600	640	180	
105-67-9	2,4-Dimethylphenol	U	530	1.0	500	530	180	
111-91-1	Bis(2-Chloroethoxy)methane	U	350	1.0	330	350	100	
120-83-2	2,4-Dichlorophenol	U	530	1.0	500	530	160	
106-47-8	4-Chloroaniline	U	530	1.0	500	530	130	
105-60-2	Caprolactam	~~U~~ UJ	530	1.0	500	530	150	BSL
59-50-7	4-Chloro-3-Methylphenol	U	530	1.0	500	530	180	
88-06-2	2,4,6-Trichlorophenol	U	530	1.0	500	530	160	
95-95-4	2,4,5-Trichlorophenol	U	530	1.0	500	530	160	
91-58-7	2-Chloronaphthalene	U	350	1.0	330	350	93	
92-52-4	1,1'-Biphenyl	U	350	1.0	330	350	78	
88-74-4	2-Nitroaniline	U	530	1.0	500	530	80	
131-11-3	Dimethyl Phthalate	U	350	1.0	330	350	83	
606-20-2	2,6-Dinitrotoluene	U	350	1.0	330	350	84	
208-96-8	Acenaphthylene	U	350	1.0	330	350	75	
99-09-2	3-Nitroaniline	U	530	1.0	500	530	100	
83-32-9	Acenaphthene	U	350	1.0	330	350	69	
51-28-5	2,4-Dinitrophenol	U	1300	1.0	1200	1300	400	
132-64-9	Dibenzofuran	U	350	1.0	330	350	84	
100-02-7	4-Nitrophenol	~~U~~ UJ	1300	1.0	1200	1300	330	ICB
121-14-2	2,4-Dinitrotoluene	U	350	1.0	330	350	91	
84-66-2	Diethylphthalate	U	350	1.0	330	350	85	
7005-72-3	4-Chlorophenyl-phenylether	U	350	1.0	330	350	83	
100-01-6	4-Nitroaniline	U	530	1.0	500	530	140	
534-52-1	4,6-Dinitro-2-Methylphenol	~~U~~ UJ	1300	1.0	1200	1300	360	BSL
86-30-6	N-Nitrosodiphenylamine	U	700	1.0	660	700	230	
101-55-3	4-Bromophenyl-phenylether	U	350	1.0	330	350	91	
1912-24-9	Atrazine	U	350	1.0	330	350	97	
87-86-5	Pentachlorophenol	U	880	1.0	820	880	250	
120-12-7	Anthracene	U	350	1.0	330	350	90	
86-74-8	Carbazole	U	530	1.0	500	530	120	

KW
4/18/09

KATAHDIN ANALYTICAL SERVICES
Report of Analytical Results

16

Client: CH2MHill
Project: TO-009 Lejeune
PO No:
Sample Date: 01/24/09
Received Date: 01/27/09
Extraction Date: 01/30/09
Analysis Date: 19-FEB-2009 03:04
Report Date: 02/25/2009
Matrix: SOIL
% Solids: 93.7

Lab ID: SC0410-31
Client ID: MR08-SS369D-09A
SDG: TO9-45
Extracted by: AC
Extraction Method: SW846 3550
Analyst: JCG
Analysis Method: SW846 8270C
Lab Prep Batch: WG60320
Units: ug/Kgdrywt

CAS#	Compound	Flags	Results	DF	PQL	Adj.PQL	Adj.MDL
84-74-2	Di-n-butylphthalate	U	350	1.0	330	350	110
85-68-7	Butylbenzylphthalate	U	350	1.0	330	350	99
91-94-1	3,3'-Dichlorobenzidine	U	530	1.0	500	530	120
218-01-9	Chrysene		710	1.0	330	350	100
117-81-7	bis(2-Ethylhexyl)phthalate	J	190	1.0	330	350	100
117-84-0	Di-n-octylphthalate	~~U~~ UJ	350	1.0	330	350	220 CCH
367-12-4	2-Fluorophenol		67%				
13127-88-3	Phenol-D6		80%				
4165-60-0	Nitrobenzene-D5		69%				
321-60-8	2-Fluorobiphenyl		81%				
118-79-6	2,4,6-Tribromophenol		96%				
1718-51-0	Terphenyl-D14		79%				

MW 4/18/09

KATAHDIN ANALYTICAL SERVICES
Report of Analytical Results

17

Client: CH2MHill
Project: TO-009 Lejeune
PO No:
Sample Date: 01/24/09
Received Date: 01/27/09
Extraction Date: 01/30/09
Analysis Date: 18-FEB-2009 21:26
Report Date: 02/25/2009
Matrix: SOIL
% Solids: 90.7

Lab ID: SC0410-33
Client ID: MR08-IS369-1-2-09A
SDG: T09-45
Extracted by: AC
Extraction Method: SW846 3550
Analyst: JCG
Analysis Method: SW846 8270C
Lab Prep Batch: WG60320
Units: ug/Kgdrywt

CAS#	Compound	Flags	Results	DF	PQL	Adj.PQL	Adj.MDL	
100-52-7	Benzaldehyde	~~U~~ UJ	550	1.0	500	550	130	JeB
108-95-2	Phenol	U	550	1.0	500	550	170	
111-44-4	Bis(2-Chloroethyl)ether	U	360	1.0	330	360	89	
95-57-8	2-Chlorophenol	U	550	1.0	500	550	180	
95-48-7	2-Methylphenol	U	660	1.0	600	660	220	
108-60-1	2,2'-Oxybis(1-chloropropane)	U	360	1.0	330	360	98	
98-86-2	Acetophenone	U	660	1.0	600	660	200	
621-64-7	N-Nitroso-di-n-propylamine	U	360	1.0	330	360	92	
65794-96-9	3&4-Methylphenol	U	660	1.0	600	660	210	
67-72-1	Hexachloroethane	U	360	1.0	330	360	100	
98-95-3	Nitrobenzene	U	360	1.0	330	360	100	
78-59-1	Isophorone	U	360	1.0	330	360	83	
88-75-5	2-Nitrophenol	U	660	1.0	600	660	180	
105-67-9	2,4-Dimethylphenol	U	550	1.0	500	550	180	
111-91-1	Bis(2-Chloroethoxy)methane	U	360	1.0	330	360	100	
120-83-2	2,4-Dichlorophenol	U	550	1.0	500	550	160	
106-47-8	4-Chloroaniline	U	550	1.0	500	550	130	
105-60-2	Caprolactam	~~U~~ UJ	550	1.0	500	550	160	BSL
59-50-7	4-Chloro-3-Methylphenol	U	550	1.0	500	550	180	
88-06-2	2,4,6-Trichlorophenol	U	550	1.0	500	550	170	
95-95-4	2,4,5-Trichlorophenol	U	550	1.0	500	550	170	
91-58-7	2-Chloronaphthalene	U	360	1.0	330	360	96	
92-52-4	1,1'-Biphenyl	U	360	1.0	330	360	80	
88-74-4	2-Nitroaniline	U	550	1.0	500	550	83	
131-11-3	Dimethyl Phthalate	U	360	1.0	330	360	86	
606-20-2	2,6-Dinitrotoluene	U	360	1.0	330	360	87	
208-96-8	Acenaphthylene	U	360	1.0	330	360	77	
99-09-2	3-Nitroaniline	U	550	1.0	500	550	100	
83-32-9	Acenaphthene	U	360	1.0	330	360	72	
51-28-5	2,4-Dinitrophenol	U	1300	1.0	1200	1300	420	
132-64-9	Dibenzofuran	U	360	1.0	330	360	87	
100-02-7	4-Nitrophenol	~~U~~ UJ	1300	1.0	1200	1300	340	JeB
121-14-2	2,4-Dinitrotoluene	U	360	1.0	330	360	94	
84-66-2	Diethylphthalate	U	360	1.0	330	360	88	
7005-72-3	4-Chlorophenyl-phenylether	U	360	1.0	330	360	86	
100-01-6	4-Nitroaniline	U	550	1.0	500	550	150	
534-52-1	4,6-Dinitro-2-Methylphenol	~~U~~ UJ	1300	1.0	1200	1300	370	BSL
86-30-6	N-Nitrosodiphenylamine	U	730	1.0	660	730	240	
101-55-3	4-Bromophenyl-phenylether	U	360	1.0	330	360	94	
1912-24-9	Atrazine	U	360	1.0	330	360	100	
87-86-5	Pentachlorophenol	U	900	1.0	820	900	260	
120-12-7	Anthracene	U	360	1.0	330	360	93	
86-74-8	Carbazole	U	550	1.0	500	550	120	

lw
4/18/09

KATAHDIN ANALYTICAL SERVICES
Report of Analytical Results

17

Client: CH2MHill
Project: TO-009 Lejeune
PO No:
Sample Date: 01/24/09
Received Date: 01/27/09
Extraction Date: 01/30/09
Analysis Date: 18-FEB-2009 21:26
Report Date: 02/25/2009
Matrix: SOIL
% Solids: 90.7

Lab ID: SC0410-33
Client ID: MR08-IS369-1-2-09A
SDG: TO9-45
Extracted by: AC
Extraction Method: SW846 3550
Analyst: JCG
Analysis Method: SW846 8270C
Lab Prep Batch: WG60320
Units: ug/Kgdrywt

CAS#	Compound	Flags	Results	DF	PQL	Adj.PQL	Adj.MDL	
84-74-2	Di-n-butylphthalate	U	360	1.0	330	360	110	
85-68-7	Butylbenzylphthalate	U	360	1.0	330	360	100	
91-94-1	3,3'-Dichlorobenzidine	U	550	1.0	500	550	120	
218-01-9	Chrysene	U	360	1.0	330	360	100	
117-81-7	bis(2-Ethylhexyl)phthalate	U	360	1.0	330	360	110	
117-84-0	Di-n-octylphthalate	~~U~~ UJ	360	1.0	330	360	230	CCH
367-12-4	2-Fluorophenol		68%					
13127-88-3	Phenol-D6		82%					
4165-60-0	Nitrobenzene-D5		85%					
321-60-8	2-Fluorobiphenyl		77%					
118-79-6	2,4,6-Tribromophenol		66%					
1718-51-0	Terphenyl-D14		69%					

lw 4/18/09

KATAHDIN ANALYTICAL SERVICES
Report of Analytical Results

18

Client: CH2MHill
Project: TO-009 Lejeune
PO No:
Sample Date: 01/24/09
Received Date: 01/27/09
Extraction Date: 02/02/09
Analysis Date: 19-FEB-2009 00:15
Report Date: 02/25/2009
Matrix: SOIL
% Solids: 91.4

Lab ID: SC0410-35
Client ID: MR08-IS369D-1-2-09A
SDG: TO9-45
Extracted by: CB
Extraction Method: SW846 3550
Analyst: JCG
Analysis Method: SW846 8270C
Lab Prep Batch: WG60395
Units: ug/Kgdrywt

CAS#	Compound	Flags	Results	DF	PQL	Adj.PQL	Adj.MDL
100-52-7	Benzaldehyde	~~U~~ UJ	550	1.0	500	550	130 JEB
108-95-2	Phenol	U	550	1.0	500	550	170
111-44-4	Bis(2-Chloroethyl)ether	U	360	1.0	330	360	89
95-57-8	2-Chlorophenol	U	550	1.0	500	550	180
95-48-7	2-Methylphenol	U	660	1.0	600	660	220
108-60-1	2,2'-Oxybis(1-chloropropane)	U	360	1.0	330	360	97
98-86-2	Acetophenone	U	660	1.0	600	660	190
621-64-7	N-Nitroso-di-n-propylamine	U	360	1.0	330	360	91
65794-96-9	3&4-Methylphenol	U	660	1.0	600	660	200
67-72-1	Hexachloroethane	U	360	1.0	330	360	100
98-95-3	Nitrobenzene	U	360	1.0	330	360	100
78-59-1	Isophorone	U	360	1.0	330	360	82
88-75-5	2-Nitrophenol	U	660	1.0	600	660	180
105-67-9	2,4-Dimethylphenol	U	550	1.0	500	550	180
111-91-1	Bis(2-Chloroethoxy)methane	U	360	1.0	330	360	100
120-83-2	2,4-Dichlorophenol	U	550	1.0	500	550	160
106-47-8	4-Chloroaniline	U	550	1.0	500	550	130
105-60-2	Caprolactam	U	550	1.0	500	550	160
59-50-7	4-Chloro-3-Methylphenol	U	550	1.0	500	550	180
88-06-2	2,4,6-Trichlorophenol	U	550	1.0	500	550	170
95-95-4	2,4,5-Trichlorophenol	U	550	1.0	500	550	170
91-58-7	2-Chloronaphthalene	U	360	1.0	330	360	95
92-52-4	1,1'-Biphenyl	U	360	1.0	330	360	80
88-74-4	2-Nitroaniline	U	550	1.0	500	550	82
131-11-3	Dimethyl Phthalate	U	360	1.0	330	360	85
606-20-2	2,6-Dinitrotoluene	U	360	1.0	330	360	86
208-96-8	Acenaphthylene	U	360	1.0	330	360	76
99-09-2	3-Nitroaniline	U	550	1.0	500	550	100
83-32-9	Acenaphthene	U	360	1.0	330	360	71
51-28-5	2,4-Dinitrophenol	U	1300	1.0	1200	1300	410
132-64-9	Dibenzofuran	U	360	1.0	330	360	86
100-02-7	4-Nitrophenol	~~U~~ UJ	1300	1.0	1200	1300	340 JEB
121-14-2	2,4-Dinitrotoluene	U	360	1.0	330	360	93
84-66-2	Diethylphthalate	U	360	1.0	330	360	88
7005-72-3	4-Chlorophenyl-phenylether	U	360	1.0	330	360	85
100-01-6	4-Nitroaniline	U	550	1.0	500	550	150
534-52-1	4,6-Dinitro-2-Methylphenol	U	1300	1.0	1200	1300	370
86-30-6	N-Nitrosodiphenylamine	U	720	1.0	660	720	240
101-55-3	4-Bromophenyl-phenylether	U	360	1.0	330	360	93
1912-24-9	Atrazine	U	360	1.0	330	360	100
87-86-5	Pentachlorophenol	U	900	1.0	820	900	260
120-12-7	Anthracene	U	360	1.0	330	360	92
86-74-8	Carbazole	U	550	1.0	500	550	120

CW
4/18/09

KATAHDIN ANALYTICAL SERVICES
Report of Analytical Results

18

Client: CH2MHill
Project: TO-009 Lejeune
PO No:
Sample Date: 01/24/09
Received Date: 01/27/09
Extraction Date: 02/02/09
Analysis Date: 19-FEB-2009 00:15
Report Date: 02/25/2009
Matrix: SOIL
% Solids: 91.4

Lab ID: SC0410-35
Client ID: MR08-IS369D-1-2-09A
SDG: TO9-45
Extracted by: CB
Extraction Method: SW846 3550
Analyst: JCG
Analysis Method: SW846 8270C
Lab Prep Batch: WG60395
Units: ug/Kgdrywt

CAS#	Compound	Flags	Results	DF	PQL	Adj.PQL	Adj.MDL	
84-74-2	Di-n-butylphthalate	U	360	1.0	330	360	110	
85-68-7	Butylbenzylphthalate	U	360	1.0	330	360	100	
91-94-1	3,3'-Dichlorobenzidine	U	550	1.0	500	550	120	
218-01-9	Chrysene	U	360	1.0	330	360	100	
117-81-7	bis(2-Ethylhexyl)phthalate	U	360	1.0	330	360	110	
117-84-0	Di-n-octylphthalate	~~U~~ UJ	360	1.0	330	360	230	CH
367-12-4	2-Fluorophenol		66%					
13127-88-3	Phenol-D6		78%					
4165-60-0	Nitrobenzene-D5		77%					
321-60-8	2-Fluorobiphenyl		74%					
118-79-6	2,4,6-Tribromophenol		64%					
1718-51-0	Terphenyl-D14		68%					

lw
4/18/09

KATAHDIN ANALYTICAL SERVICES
Report of Analytical Results

19

Client: CH2MHill
Project: TO-009 Lejeune
PO No:
Sample Date: 01/24/09
Received Date: 01/27/09
Extraction Date: 02/02/09
Analysis Date: 19-FEB-2009 00:58
Report Date: 02/25/2009
Matrix: SOIL
% Solids: 83.5

Lab ID: SC0410-37
Client ID: MR08-SS370-09A
SDG: TO9-45
Extracted by: CB
Extraction Method: SW846 3550
Analyst: JCG
Analysis Method: SW846 8270C
Lab Prep Batch: WG60395
Units: ug/Kgdrywt

CAS#	Compound	Flags	Results	DF	PQL	Adj.PQL	Adj.MDL	
100-52-7	Benzaldehyde	~~U~~ UJ	600	1.0	500	600	140	JCB
108-95-2	Phenol	U	600	1.0	500	600	190	
111-44-4	Bis(2-Chloroethyl)ether	U	400	1.0	330	400	97	
95-57-8	2-Chlorophenol	U	600	1.0	500	600	200	
95-48-7	2-Methylphenol	U	720	1.0	600	720	240	
108-60-1	2,2'-Oxybis(1-chloropropane)	U	400	1.0	330	400	110	
98-86-2	Acetophenone	U	720	1.0	600	720	210	
621-64-7	N-Nitroso-di-n-propylamine	U	400	1.0	330	400	99	
65794-96-9	3&4-Methylphenol	U	720	1.0	600	720	220	
67-72-1	Hexachloroethane	U	400	1.0	330	400	110	
98-95-3	Nitrobenzene	U	400	1.0	330	400	110	
78-59-1	Isophorone	U	400	1.0	330	400	90	
88-75-5	2-Nitrophenol	U	720	1.0	600	720	200	
105-67-9	2,4-Dimethylphenol	U	600	1.0	500	600	200	
111-91-1	Bis(2-Chloroethoxy)methane	U	400	1.0	330	400	110	
120-83-2	2,4-Dichlorophenol	U	600	1.0	500	600	180	
106-47-8	4-Chloroaniline	U	600	1.0	500	600	140	
105-60-2	Caprolactam	U	600	1.0	500	600	170	
59-50-7	4-Chloro-3-Methylphenol	U	600	1.0	500	600	200	
88-06-2	2,4,6-Trichlorophenol	U	600	1.0	500	600	180	
95-95-4	2,4,5-Trichlorophenol	U	600	1.0	500	600	180	
91-58-7	2-Chloronaphthalene	U	400	1.0	330	400	100	
92-52-4	1,1'-Biphenyl	U	400	1.0	330	400	87	
88-74-4	2-Nitroaniline	U	600	1.0	500	600	90	
131-11-3	Dimethyl Phthalate	U	400	1.0	330	400	93	
606-20-2	2,6-Dinitrotoluene	U	400	1.0	330	400	94	
208-96-8	Acenaphthylene	U	400	1.0	330	400	84	
99-09-2	3-Nitroaniline	U	600	1.0	500	600	110	
83-32-9	Acenaphthene	U	400	1.0	330	400	78	
51-28-5	2,4-Dinitrophenol	U	1400	1.0	1200	1400	450	
132-64-9	Dibenzofuran	U	400	1.0	330	400	94	
100-02-7	4-Nitrophenol	~~U~~ UJ	1400	1.0	1200	1400	370	JCB
121-14-2	2,4-Dinitrotoluene	U	400	1.0	330	400	100	
84-66-2	Diethylphthalate	U	400	1.0	330	400	96	
7005-72-3	4-Chlorophenyl-phenylether	U	400	1.0	330	400	93	
100-01-6	4-Nitroaniline	U	600	1.0	500	600	160	
534-52-1	4,6-Dinitro-2-Methylphenol	U	1400	1.0	1200	1400	400	
86-30-6	N-Nitrosodiphenylamine	U	790	1.0	660	790	260	
101-55-3	4-Bromophenyl-phenylether	U	400	1.0	330	400	100	
1912-24-9	Atrazine	U	400	1.0	330	400	110	
87-86-5	Pentachlorophenol	U	980	1.0	820	980	280	
120-12-7	Anthracene	U	400	1.0	330	400	100	
86-74-8	Carbazole	U	600	1.0	500	600	130	

hw
4/18/09

KATAHDIN ANALYTICAL SERVICES
Report of Analytical Results

Client: CH2MHill
Project: TO-009 Lejeune
PO No:
Sample Date: 01/24/09
Received Date: 01/27/09
Extraction Date: 02/02/09
Analysis Date: 19-FEB-2009 00:58
Report Date: 02/25/2009
Matrix: SOIL
% Solids: 83.5

Lab ID: SC0410-37
Client ID: MR08-SS370-09A
SDG: TO9-45
Extracted by: CB
Extraction Method: SW846 3550
Analyst: JCG
Analysis Method: SW846 8270C
Lab Prep Batch: WG60395
Units: ug/Kgdrywt

CAS#	Compound	Flags	Results	DF	PQL	Adj.PQL	Adj.MDL
84-74-2	Di-n-butylphthalate	U	400	1.0	330	400	120
85-68-7	Butylbenzylphthalate	U	400	1.0	330	400	110
91-94-1	3,3'-Dichlorobenzidine	U	600	1.0	500	600	140
218-01-9	Chrysene	J	310	1.0	330	400	110
117-81-7	bis(2-Ethylhexyl)phthalate	U	400	1.0	330	400	120
117-84-0	Di-n-octylphthalate	~~U~~ UJ	400	1.0	330	400	250 CCH
367-12-4	2-Fluorophenol		66%				
13127-88-3	Phenol-D6		75%				
4165-60-0	Nitrobenzene-D5		71%				
321-60-8	2-Fluorobiphenyl		63%				
118-79-6	2,4,6-Tribromophenol		82%				
1718-51-0	Terphenyl-D14		69%				

MW 4/23/09

KATAHDIN ANALYTICAL SERVICES
Report of Analytical Results

20

Client: CH2MHill
Project: TO-009 Lejeune
PO No:
Sample Date: 01/25/09
Received Date: 01/27/09
Extraction Date: 02/02/09
Analysis Date: 19-FEB-2009 03:46
Report Date: 02/25/2009
Matrix: SOIL
% Solids: 86.2

Lab ID: SC0410-39
Client ID: MR08-SS372-09A
SDG: T09-45
Extracted by: CB
Extraction Method: SW846 3550
Analyst: JCG
Analysis Method: SW846 8270C
Lab Prep Batch: WG60395
Units: ug/Kgdrywt

CAS#	Compound	Flags	Results	DF	PQL	Adj.PQL	Adj.MDL	
100-52-7	Benzaldehyde	~~U~~ UJ	580	1.0	500	580	140	ICB
108-95-2	Phenol	U	580	1.0	500	580	180	
111-44-4	Bis(2-Chloroethyl)ether	U	380	1.0	330	380	94	
95-57-8	2-Chlorophenol	U	580	1.0	500	580	190	
95-48-7	2-Methylphenol	U	700	1.0	600	700	230	
108-60-1	2,2'-Oxybis(1-chloropropane)	U	380	1.0	330	380	100	
98-86-2	Acetophenone	U	700	1.0	600	700	210	
621-64-7	N-Nitroso-di-n-propylamine	U	380	1.0	330	380	96	
65794-96-9	3&4-Methylphenol	U	700	1.0	600	700	220	
67-72-1	Hexachloroethane	U	380	1.0	330	380	110	
98-95-3	Nitrobenzene	U	380	1.0	330	380	100	
78-59-1	Isophorone	U	380	1.0	330	380	87	
88-75-5	2-Nitrophenol	U	700	1.0	600	700	190	
105-67-9	2,4-Dimethylphenol	U	580	1.0	500	580	190	
111-91-1	Bis(2-Chloroethoxy)methane	U	380	1.0	330	380	110	
120-83-2	2,4-Dichlorophenol	U	580	1.0	500	580	170	
106-47-8	4-Chloroaniline	~~U~~ R	580	1.0	500	580	140	MSL
105-60-2	Caprolactam	U	580	1.0	500	580	170	
59-50-7	4-Chloro-3-Methylphenol	U	580	1.0	500	580	190	
88-06-2	2,4,6-Trichlorophenol	U	580	1.0	500	580	180	
95-95-4	2,4,5-Trichlorophenol	U	580	1.0	500	580	180	
91-58-7	2-Chloronaphthalene	U	380	1.0	330	380	100	
92-52-4	1,1'-Biphenyl	U	380	1.0	330	380	85	
88-74-4	2-Nitroaniline	U	580	1.0	500	580	87	
131-11-3	Dimethyl Phthalate	U	380	1.0	330	380	90	
606-20-2	2,6-Dinitrotoluene	U	380	1.0	330	380	92	
208-96-8	Acenaphthylene	U	380	1.0	330	380	81	
99-09-2	3-Nitroaniline	U	580	1.0	500	580	110	
83-32-9	Acenaphthene	U	380	1.0	330	380	75	
51-28-5	2,4-Dinitrophenol	U	1400	1.0	1200	1400	440	
132-64-9	Dibenzofuran	U	380	1.0	330	380	92	
100-02-7	4-Nitrophenol	~~U~~ UJ	1400	1.0	1200	1400	360	ICB
121-14-2	2,4-Dinitrotoluene	U	380	1.0	330	380	98	
84-66-2	Diethylphthalate	U	380	1.0	330	380	93	
7005-72-3	4-Chlorophenyl-phenylether	U	380	1.0	330	380	90	
100-01-6	4-Nitroaniline	U	580	1.0	500	580	160	
534-52-1	4,6-Dinitro-2-Methylphenol	U	1400	1.0	1200	1400	390	
86-30-6	N-Nitrosodiphenylamine	U	760	1.0	660	760	250	
101-55-3	4-Bromophenyl-phenylether	U	380	1.0	330	380	98	
1912-24-9	Atrazine	U	380	1.0	330	380	100	
87-86-5	Pentachlorophenol	U	950	1.0	820	950	270	
120-12-7	Anthracene	J	150	1.0	330	380	97	
86-74-8	Carbazole	J	240	1.0	500	580	130	

MW
4/18/09

20

KATAHDIN ANALYTICAL SERVICES
Report of Analytical Results

Client: CH2MHill
Project: TO-009 Lejeune
PO No:
Sample Date: 01/25/09
Received Date: 01/27/09
Extraction Date: 02/02/09
Analysis Date: 19-FEB-2009 03:46
Report Date: 02/25/2009
Matrix: SOIL
% Solids: 86.2

Lab ID: SC0410-39
Client ID: MR08-SS372-09A
SDG: TO9-45
Extracted by: CB
Extraction Method: SW846 3550
Analyst: JCG
Analysis Method: SW846 8270C
Lab Prep Batch: WG60395
Units: ug/Kgdrywt

CAS#	Compound	Flags	Results	DF	PQL	Adj.PQL	Adj.MDL	
84-74-2	Di-n-butylphthalate	U	380	1.0	330	380	120	
85-68-7	Butylbenzylphthalate	J	120	1.0	330	380	110	
91-94-1	3,3'-Dichlorobenzidine	U	580	1.0	500	580	130	
218-01-9	Chrysene	J	3600	1.0	330	380	110	MSL
117-81-7	bis(2-Ethylhexyl)phthalate		740	1.0	330	380	110	
117-84-0	Di-n-octylphthalate	~~U~~ UJ	380	1.0	330	380	240	CEH
367-12-4	2-Fluorophenol		83%					
13127-88-3	Phenol-D6		94%					
4165-60-0	Nitrobenzene-D5		80%					
321-60-8	2-Fluorobiphenyl		80%					
118-79-6	2,4,6-Tribromophenol		100%					
1718-51-0	Terphenyl-D14		79%					

MW 4/18/09

ENVIRONMENTAL
Data Services, Inc.

POLYNUCLEAR AROMATIC COMPOUNDS BY 8270SIM

USEPA Region IV - Level IV Review

Site: MCB Camp Lejeune, TO-09 SDG #: TO9-46

Client: CH2M HILL, Inc., Virginia Beach, Virginia Date: April 19, 2009

Laboratory: Katahdin Analytical Services, Scarborough, Maine Reviewer: Nancy Weaver

EDS ID	Client Sample ID	Laboratory Sample ID	Matrix
1	MR08-IS370-1-2-09A	SC0411-2	Soil
2	MR08-SS353-09A	SC0411-4	Soil
3	MR08-IS353-1-2-09A	SC0411-6	Soil
4	MR08-SS328-09A	SC0411-8	Soil
4DL	MR08-SS328-09ADL	SC0411-8DL	Soil
5	MR08-IS328-4-5-09A	SC0411-10	Soil
6	MR08-SS347-09A	SC0411-12	Soil
7	MR08-IS347-3-4-09A	SC0411-14	Soil
8	MR08-SS279-09A	SC0411-16	Soil
9	MR08-SS279D-09A	SC0411-18	Soil
10	MR08-IS279-1-2-09A	SC0411-20	Soil
11	MR08-IS279D-1-2-09A	SC0411-22	Soil
12	MR08-IS352-1-2-09A	SC0411-24	Soil
13	MR08-SS352-09A	SC0411-26	Soil
14	MR08-SS371-09A	SC0411-28	Soil
15	MR08-IS371-1-2-09A	SC0411-30	Soil
16	MR08-IS372-1-2-09A	SC0411-32	Soil
16MS	MR08-IS372-1-2-09AMS	SC0411-32MS	Soil
16MSD	MR08-IS372-1-2-09AMSD	SC0411-32MSD	Soil
17	MR08-SS373-09A	SC0411-34	Soil
18	MR08-SS373D-09A	SC0411-36	Soil
18DL	MR08-SS373D-09ADL	SC0411-36DL	Soil
19	MR08-IS373-2-3-09A	SC0411-38	Soil
20	MR08-IS373D-2-3-09A	SC0411-40	Soil

The USEPA "Contract Laboratory Program National Functional Guidelines for Organic Data Review," October 1999, and professional judgment were used in evaluating the data in this summary report.

Holding Times - All samples were extracted within 14 days for soil samples and analyzed within 40 days for all samples.

GC/MS Tuning - All of the DFTPP tunes in the initial and continuing calibrations met the percent relative abundance criteria.

Initial Calibration - The initial calibrations exhibited acceptable %RSD and mean RRF values.

Continuing Calibration - The continuing calibrations exhibited acceptable %D and RRF values except the following.

CCAL Date	Compound	%D/RRF	Qualifier	Affected Samples
02/19/09	Pyrene	32.33%	J/UJ	18DL
02/17/09	Naphthalene	28.75%	J/UJ	1, 2, 6-8, 10-14

Surrogates - All samples exhibited acceptable surrogate recoveries except the following.

Sample ID	Surrogate	%R	Qualifier
1	2-Methylnaphthalene-d10	30%	None for 1 out
6	2-Methylnaphthalene-d10	31%	None for 1 out
10	2-Methylnaphthalene-d10	28%	None for 1 out

MS/MSD - The MS/MSD sample exhibited acceptable %R and RPD values except the following.

MS/MSD Sample ID	Compound	MS/MSD %R/RPD	Qualifier
16	Hexachlorocyclopentadiene	Ok/29%/Ok	J/UJ

Laboratory Control Sample - The LCS samples exhibited acceptable %R values except the following.

LCS ID	Compound	%R	Qualifier	Affected Samples
WG60396-LCS2	Naphthalene	114%	J	3, 4, 15, 18

Internal Standard (IS) Area Performance - All internal standards met response and retention time (RT) criteria.

Method Blank - The method blanks were free of contamination.

Field, Equipment Blank - Field QC results are summarized below.

Blank ID	Compound	Conc. ug/L	Action Level ug/L	Qualifier	Affected Samples
MR08-FB012609	None - ND	-	-	-	-
MR08-EB012409	None - ND	-	-	-	-
MR08-EB012509	None - ND	-	-	-	-

Field Duplicates - Field duplicate results are summarized below.

Compound	MR08-SS279-09A ug/kg	MR08-SS279D-09A ug/kg	RPD	Qualifier
Phenanthrene	11 U	3.6	NC	None
Fluoranthene	5.1	13	87%	None
Pyrene	10	13	26%	None
Benzo (a) anthracene	4.9	6.9	34%	None
Benzo (b) fluoranthene	22	11 U	NC	None
Benzo (a) pyrene	6.0	6.5	8%	None
Indeno (1,2,3-cd) pyrene	40	10	120%	None
Benzo (g,h,i) perylene	20	13	42%	None

Compound	MR08-IS279-1-2-09A ug/kg	MR08-IS279D-1-2-09A ug/kg	RPD	Qualifier
Fluoranthene	12 U	3.8	NC	None
Pyrene	12 U	4.7	NC	None
Benzo (a) anthracene	12 U	4.2	NC	None
Benzo (a) pyrene	12 U	3.9	NC	None
Indeno (1,2,3-cd) pyrene	12 U	15	NC	None
Benzo (g,h,i) perylene	12 U	4.8	NC	None

Compound	MR08-SS373-09A ug/kg	MR08-SS373D-09A ug/kg	RPD	Qualifier
Naphthalene	12 U	3.2	NC	None
2-Methylnaphthalene	6.1	6.5	6%	None
Phenanthrene	73	98	29%	None
Fluoranthene	240	270	12%	None
Pyrene	180	280	43%	None
Benzo (a) anthracene	95	130	31%	None
Benzo (b) fluoranthene	180	260	36%	None
Benzo (k) fluoranthene	91	100	9%	None
Benzo (a) pyrene	100	140	33%	None
Indeno (1,2,3-cd) pyrene	84	120	35%	None
Dibenzo (a,h) anthracene	30	41	31%	None
Benzo (g,h,i) perylene	81	110	30%	None

Compound	MR08-IS373-2-3-09A ug/kg	MR08-IS373D-2-3-09A ug/kg	RPD	Qualifier
2-Methylnaphthalene	12 U	7.3	NC	None
Phenanthrene	12 U	2.6	NC	None
Fluoranthene	12 U	3.0	NC	None
Benzo (a) anthracene	6.3	8.2	26%	None
Indeno (1,2,3-cd) pyrene	12 U	2.4	NC	None

Compound	MR08-IS373-2-3-09A ug/kg	MR08-IS373D-2-3-09A ug/kg	RPD	Qualifier
Dibenzo (a,h) anthracene	12 U	2.1	NC	None
Benzo (g,h,i) perylene	12 U	3.2	NC	None

Compound Quantitation - Two samples exhibited high concentrations of target compounds and were flagged (E) by the laboratory. The samples were diluted and reanalyzed and the dilution results for these compounds should be used for reporting.

KATAHDIN ANALYTICAL SERVICES
Report of Analytical Results

1

Client: CH2MHill
Project: TO-009 Lejeune
PO No:
Sample Date: 01/24/09
Received Date: 01/27/09
Extraction Date: 02/02/09
Analysis Date: 17-FEB-2009 19:13
Report Date: 02/25/2009
Matrix: SOIL
% Solids: 90.1

Lab ID: SC0411-2RA
Client ID: MR08-IS370-1-2-09A
SDG: TO9-46
Extracted by: CB
Extraction Method: SW846 3550
Analyst: JCG
Analysis Method: SW846 M8270C
Lab Prep Batch: WG60396
Units: ug/Kgdrywt

CAS#	Compound	Flags	Results	DF	PQL	Adj.PQL	Adj.MDL
91-20-3	Naphthalene	~~U~~ UJ	11	1.0	10	11	2.9 CU
91-57-6	2-Methylnaphthalene	U	11	1.0	10	11	2.4
86-73-7	Fluorene	U	11	1.0	10	11	3.6
85-01-8	Phenanthrene	U	11	1.0	10	11	2.0
206-44-0	Fluoranthene	J	7.5	1.0	10	11	2.0
129-00-0	Pyrene	J	7.9	1.0	10	11	2.3
56-55-3	Benzo(a)anthracene	J	4.4	1.0	10	11	2.1
205-99-2	Benzo(b)fluoranthene		14	1.0	10	11	2.7
207-08-9	Benzo(k)fluoranthene	J	3.5	1.0	10	11	3.4
50-32-8	Benzo(a)pyrene	J	4.4	1.0	10	11	3.7
193-39-5	Indeno(1,2,3-cd)pyrene		14	1.0	10	11	2.1
53-70-3	Dibenzo(a,h)anthracene	U	11	1.0	10	11	2.0
191-24-2	Benzo(g,h,i)perylene	J	6.1	1.0	10	11	2.2
118-74-1	Hexachlorobenzene	U	11	1.0	10	11	2.0
87-68-3	Hexachlorobutadiene	U	11	1.0	10	11	2.6
77-47-4	Hexachlorocyclopentadiene	U	11	1.0	10	11	1.7
7297-45-2	2-Methylnaphthalene-D10		* 30%				
367-12-4	2,4-Dibromophenol		91%				
81103-79-9	Fluorene-d10		63%				
1718-51-1	Pyrene-D10		95%				

MW
6/19/09

2

KATAHDIN ANALYTICAL SERVICES
Report of Analytical Results

Client: CH2MHill
Project: TO-009 Lejeune
PO No:
Sample Date: 01/24/09
Received Date: 01/27/09
Extraction Date: 02/02/09
Analysis Date: 18-FEB-2009 02:05
Report Date: 02/25/2009
Matrix: SOIL
% Solids: 93.1

Lab ID: SC0411-4
Client ID: MR08-SS353-09A
SDG: TO9-46
Extracted by: CB
Extraction Method: SW846 3550
Analyst: JCG
Analysis Method: SW846 M8270C
Lab Prep Batch: WG60396
Units: ug/Kgdrywt

CAS#	Compound	Flags	Results	DF	PQL	Adj.PQL	Adj.MDL
91-20-3	Naphthalene	~~U~~ UJ	11	1.0	10	11	2.8 CU
91-57-6	2-Methylnaphthalene	U	11	1.0	10	11	2.4
86-73-7	Fluorene	U	11	1.0	10	11	3.4
85-01-8	Phenanthrene	J	2.2	1.0	10	11	1.9
206-44-0	Fluoranthene	J	6.4	1.0	10	11	1.9
129-00-0	Pyrene		16	1.0	10	11	2.2
56-55-3	Benzo(a)anthracene	U	11	1.0	10	11	2.0
205-99-2	Benzo(b)fluoranthene	U	11	1.0	10	11	2.6
207-08-9	Benzo(k)fluoranthene	U	11	1.0	10	11	3.3
50-32-8	Benzo(a)pyrene	J	11	1.0	10	11	3.5
193-39-5	Indeno(1,2,3-cd)pyrene		54	1.0	10	11	2.0
53-70-3	Dibenzo(a,h)anthracene	U	11	1.0	10	11	1.9
191-24-2	Benzo(g,h,i)perylene		24	1.0	10	11	2.1
118-74-1	Hexachlorobenzene	U	11	1.0	10	11	1.9
87-68-3	Hexachlorobutadiene	U	11	1.0	10	11	2.5
77-47-4	Hexachlorocyclopentadiene	U	11	1.0	10	11	1.6
7297-45-2	2-Methylnaphthalene-D10		45%				
367-12-4	2,4-Dibromophenol		106%				
81103-79-9	Fluorene-d10		72%				
1718-51-1	Pyrene-D10		125%				

lw 4/17/09

3

KATAHDIN ANALYTICAL SERVICES
Report of Analytical Results

Client: CH2MHill
Project: TO-009 Lejeune
PO No:
Sample Date: 01/24/09
Received Date: 01/27/09
Extraction Date: 02/02/09
Analysis Date: 17-FEB-2009 15:17
Report Date: 02/25/2009
Matrix: SOIL
% Solids: 82.0

Lab ID: SC0411-6
Client ID: MR08-IS353-1-2-09A
SDG: TO9-46
Extracted by: CB
Extraction Method: SW846 3550
Analyst: JLP
Analysis Method: SW846 M8270C
Lab Prep Batch: WG60396
Units: ug/Kgdrywt

CAS#	Compound	Flags	Results	DF	PQL	Adj.PQL	Adj.MDL
91-20-3	Naphthalene	~~J~~ J	3.6	1.0	10	12	3.2 BS4
91-57-6	2-Methylnaphthalene	J	2.7	1.0	10	12	2.7
86-73-7	Fluorene	U	12	1.0	10	12	3.9
85-01-8	Phenanthrene	U	12	1.0	10	12	2.2
206-44-0	Fluoranthene	U	12	1.0	10	12	2.2
129-00-0	Pyrene	J	2.6	1.0	10	12	2.6
56-55-3	Benzo(a)anthracene	J	2.8	1.0	10	12	2.3
205-99-2	Benzo(b)fluoranthene	U	12	1.0	10	12	2.9
207-08-9	Benzo(k)fluoranthene	U	12	1.0	10	12	3.8
50-32-8	Benzo(a)pyrene	U	12	1.0	10	12	4.0
193-39-5	Indeno(1,2,3-cd)pyrene	U	12	1.0	10	12	2.3
53-70-3	Dibenzo(a,h)anthracene	U	12	1.0	10	12	2.2
191-24-2	Benzo(g,h,i)perylene	U	12	1.0	10	12	2.4
118-74-1	Hexachlorobenzene	U	12	1.0	10	12	2.2
87-68-3	Hexachlorobutadiene	U	12	1.0	10	12	2.8
77-47-4	Hexachlorocyclopentadiene	U	12	1.0	10	12	1.8
7297-45-2	2-Methylnaphthalene-D10		88%				
367-12-4	2,4-Dibromophenol		75%				
81103-79-9	Fluorene-d10		65%				
1718-51-1	Pyrene-D10		110%				

MW
4/19/09

4

KATAHDIN ANALYTICAL SERVICES
Report of Analytical Results

Client: CH2MHill
Project: TO-009 Lejeune
PO No:
Sample Date: 01/24/09
Received Date: 01/27/09
Extraction Date: 02/02/09
Analysis Date: 18-FEB-2009 22:15
Report Date: 02/25/2009
Matrix: SOIL
% Solids: 86.8

Lab ID: SC0411-8DL
Client ID: MR08-SS328-09A
SDG: TO9-46
Extracted by: CB
Extraction Method: SW846 3550
Analyst: JCG
Analysis Method: SW846 M8270C
Lab Prep Batch: WG60396
Units: ug/Kgdrywt

CAS#	Compound	Flags	Results	DF	PQL	Adj.PQL	Adj.MDL	
91-20-3	Naphthalene	~~J~~ J	6.8	2.0	10	23	6.0	BSH
91-57-6	2-Methylnaphthalene	U	23	2.0	10	23	5.1	
86-73-7	Fluorene	J	9.1	2.0	10	23	7.4	
85-01-8	Phenanthrene		320	2.0	10	23	4.1	
206-44-0	Fluoranthene	~~E~~	1500 ~~1400~~	10 2.0	10	120 ~~23~~	21 ~~4.1~~	R DL
129-00-0	Pyrene	~~E~~	1200 ~~960~~	10 2.0	10	120 ~~23~~	24 ~~4.8~~	R DL
56-55-3	Benzo(a)anthracene		550	2.0	10	23	4.4	
205-99-2	Benzo(b)fluoranthene	~~E~~	1100 ~~1000~~	10 2.0	10	120 ~~23~~	28 ~~5.5~~	R DL
207-08-9	Benzo(k)fluoranthene		470	2.0	10	23	7.1	
50-32-8	Benzo(a)pyrene	~~E~~	710 ~~670~~	10 2.0	10	120 ~~23~~	38 ~~7.6~~	R DL
193-39-5	Indeno(1,2,3-cd)pyrene	~~E~~	840 ~~710~~	10 2.0	10	120 ~~23~~	22 ~~4.4~~	R DL
53-70-3	Dibenzo(a,h)anthracene		110	2.0	10	23	4.1	
191-24-2	Benzo(g,h,i)perylene		490	2.0	10	23	4.6	
118-74-1	Hexachlorobenzene	U	23	2.0	10	23	4.1	
87-68-3	Hexachlorobutadiene	U	23	2.0	10	23	5.3	
77-47-4	Hexachlorocyclopentadiene	U	23	2.0	10	23	3.4	
7297-45-2	2-Methylnaphthalene-D10		92%					
367-12-4	2,4-Dibromophenol		87%					
81103-79-9	Fluorene-d10		69%					
1718-51-1	Pyrene-D10		84%					

MW
4/19/09

HDL

KATAHDIN ANALYTICAL SERVICES
Report of Analytical Results

Client: CH2MHill
Project: TO-009 Lejeune
PO No:
Sample Date: 01/24/09
Received Date: 01/27/09
Extraction Date: 02/02/09
Analysis Date: 18-FEB-2009 21:34
Report Date: 02/25/2009
Matrix: SOIL
% Solids: 86.8

Lab ID: SC0411-8DL2
Client ID: MR08-SS328-09A
SDG: TO9-46
Extracted by: CB
Extraction Method: SW846 3550
Analyst: JCG
Analysis Method: SW846 M8270C
Lab Prep Batch: WG60396
Units: ug/Kgdrywt

use original

R DL

CAS#	Compound	Flags	Results	DF	PQL	Adj.PQL	Adj.MDL
91-20-3	Naphthalene	U	120	10	10	120	30
91-57-6	2-Methylnaphthalene	U	120	10	10	120	25
86-73-7	Fluorene	U	120	10	10	120	37
85-01-8	Phenanthrene		350	10	10	120	21
206-44-0	Fluoranthene		1500	10	10	120	21
129-00-0	Pyrene		1200	10	10	120	24
56-55-3	Benzo(a)anthracene		660	10	10	120	22
205-99-2	Benzo(b)fluoranthene		1100	10	10	120	28
207-08-9	Benzo(k)fluoranthene		600	10	10	120	36
50-32-8	Benzo(a)pyrene		770	10	10	120	38
193-39-5	Indeno(1,2,3-cd)pyrene		840	10	10	120	22
53-70-3	Dibenzo(a,h)anthracene	U	120	10	10	120	21
191-24-2	Benzo(g,h,i)perylene		600	10	10	120	23
118-74-1	Hexachlorobenzene	U	120	10	10	120	21
87-68-3	Hexachlorobutadiene	U	120	10	10	120	26
77-47-4	Hexachlorocyclopentadiene	U	120	10	10	120	17
7297-45-2	2-Methylnaphthalene-D10		D				
367-12-4	2,4-Dibromophenol		D				
81103-79-9	Fluorene-d10		D				
1718-51-1	Pyrene-D10		D				

lew
4/9/09

KATAHDIN ANALYTICAL SERVICES
Report of Analytical Results

Client: CH2MHill
Project: TO-009 Lejeune
PO No:
Sample Date: 01/24/09
Received Date: 01/27/09
Extraction Date: 02/02/09
Analysis Date: 17-FEB-2009 15:58
Report Date: 02/25/2009
Matrix: SOIL
% Solids: 92.0

Lab ID: SC0411-10
Client ID: MR08-IS328-4-5-09A
SDG: TO9-46
Extracted by: CB
Extraction Method: SW846 3550
Analyst: JLP
Analysis Method: SW846 8270C
Lab Prep Batch: WG60396
Units: ug/Kgdrywt

CAS#	Compound	Flags	Results	DF	PQL	Adj.PQL	Adj.MDL
91-20-3	Naphthalene	U	11	1.0	10	11	2.8
91-57-6	2-Methylnaphthalene	U	11	1.0	10	11	2.4
86-73-7	Fluorene	U	11	1.0	10	11	3.5
85-01-8	Phenanthrene	U	11	1.0	10	11	2.0
206-44-0	Fluoranthene	J	2.8	1.0	10	11	2.0
129-00-0	Pyrene	J	2.6	1.0	10	11	2.3
56-55-3	Benzo(a)anthracene	U	11	1.0	10	11	2.1
205-99-2	Benzo(b)fluoranthene	U	11	1.0	10	11	2.6
207-08-9	Benzo(k)fluoranthene	U	11	1.0	10	11	3.4
50-32-8	Benzo(a)pyrene	U	11	1.0	10	11	3.6
193-39-5	Indeno(1,2,3-cd)pyrene	U	11	1.0	10	11	2.1
53-70-3	Dibenzo(a,h)anthracene	U	11	1.0	10	11	2.0
191-24-2	Benzo(g,h,i)perylene	U	11	1.0	10	11	2.2
118-74-1	Hexachlorobenzene	U	11	1.0	10	11	2.0
87-68-3	Hexachlorobutadiene	U	11	1.0	10	11	2.5
77-47-4	Hexachlorocyclopentadiene	U	11	1.0	10	11	1.6
7297-45-2	2-Methylnaphthalene-D10		91%				
367-12-4	2,4-Dibromophenol		99%				
81103-79-9	Fluorene-d10		78%				
1718-51-1	Pyrene-D10		110%				

lw
4/9/09

6

KATAHDIN ANALYTICAL SERVICES
Report of Analytical Results

Client: CH2MHill
Project: TO-009 Lejeune
PO No:
Sample Date: 01/24/09
Received Date: 01/27/09
Extraction Date: 02/02/09
Analysis Date: 17-FEB-2009 21:17
Report Date: 02/25/2009
Matrix: SOIL
% Solids: 90.0

Lab ID: SC0411-12
Client ID: MR08-SS347-09A
SDG: TO9-46
Extracted by: CB
Extraction Method: SW846 3550
Analyst: JCG
Analysis Method: SW846 M8270C
Lab Prep Batch: WG60396
Units: ug/Kgdrywt

CAS#	Compound	Flags	Results	DF	PQL	Adj.PQL	Adj.MDL
91-20-3	Naphthalene	~~U~~ UJ	11	1.0	10	11	2.9 CCH
91-57-6	2-Methylnaphthalene	U	11	1.0	10	11	2.4
86-73-7	Fluorene	U	11	1.0	10	11	3.6
85-01-8	Phenanthrene	U	11	1.0	10	11	2.0
206-44-0	Fluoranthene	J	4.5	1.0	10	11	2.0
129-00-0	Pyrene	J	5.2	1.0	10	11	2.3
56-55-3	Benzo(a)anthracene	J	3.0	1.0	10	11	2.1
205-99-2	Benzo(b)fluoranthene	U	11	1.0	10	11	2.7
207-08-9	Benzo(k)fluoranthene	U	11	1.0	10	11	3.4
50-32-8	Benzo(a)pyrene	U	11	1.0	10	11	3.7
193-39-5	Indeno(1,2,3-cd)pyrene	U	11	1.0	10	11	2.1
53-70-3	Dibenzo(a,h)anthracene	U	11	1.0	10	11	2.0
191-24-2	Benzo(g,h,i)perylene	J	2.9	1.0	10	11	2.2
118-74-1	Hexachlorobenzene	U	11	1.0	10	11	2.0
87-68-3	Hexachlorobutadiene	U	11	1.0	10	11	2.6
77-47-4	Hexachlorocyclopentadiene	U	11	1.0	10	11	1.7
7297-45-2	2-Methylnaphthalene-D10		* 31%				
367-12-4	2,4-Dibromophenol		98%				
81103-79-9	Fluorene-d10		66%				
1718-51-1	Pyrene-D10		126%				

11/19/09

7

KATAHDIN ANALYTICAL SERVICES
Report of Analytical Results

Client: CH2MHill
Project: TO-009 Lejeune
PO No:
Sample Date: 01/24/09
Received Date: 01/27/09
Extraction Date: 02/02/09
Analysis Date: 17-FEB-2009 21:58
Report Date: 02/25/2009
Matrix: SOIL
% Solids: 88.6

Lab ID: SC0411-14
Client ID: MR08-IS347-3-4-09A
SDG: TO9-46
Extracted by: CB
Extraction Method: SW846 3550
Analyst: JCG
Analysis Method: SW846 M8270C
Lab Prep Batch: WG60396
Units: ug/Kgdrywt

CAS#	Compound	Flags	Results	DF	PQL	Adj.PQL	Adj.MDL
91-20-3	Naphthalene	~~U~~ UJ	11	1.0	10	11	2.9 CG
91-57-6	2-Methylnaphthalene	U	11	1.0	10	11	2.5
86-73-7	Fluorene	U	11	1.0	10	11	3.6
85-01-8	Phenanthrene	U	11	1.0	10	11	2.0
206-44-0	Fluoranthene	U	11	1.0	10	11	2.0
129-00-0	Pyrene	U	11	1.0	10	11	2.4
56-55-3	Benzo(a)anthracene	U	11	1.0	10	11	2.1
205-99-2	Benzo(b)fluoranthene	U	11	1.0	10	11	2.7
207-08-9	Benzo(k)fluoranthene	U	11	1.0	10	11	3.5
50-32-8	Benzo(a)pyrene	U	11	1.0	10	11	3.7
193-39-5	Indeno(1,2,3-cd)pyrene	U	11	1.0	10	11	2.1
53-70-3	Dibenzo(a,h)anthracene	U	11	1.0	10	11	2.0
191-24-2	Benzo(g,h,i)perylene	U	11	1.0	10	11	2.2
118-74-1	Hexachlorobenzene	U	11	1.0	10	11	2.0
87-68-3	Hexachlorobutadiene	U	11	1.0	10	11	2.6
77-47-4	Hexachlorocyclopentadiene	U	11	1.0	10	11	1.7
7297-45-2	2-Methylnaphthalene-D10		39%				
367-12-4	2,4-Dibromophenol		107%				
81103-79-9	Fluorene-d10		73%				
1718-51-1	Pyrene-D10		153%				

LW 4/17/09

8

KATAHDIN ANALYTICAL SERVICES
Report of Analytical Results

Client: CH2MHill
Project: TO-009 Lejeune
PO No:
Sample Date: 01/25/09
Received Date: 01/27/09
Extraction Date: 02/02/09
Analysis Date: 18-FEB-2009 04:48
Report Date: 02/25/2009
Matrix: SOIL
% Solids: 89.6

Lab ID: SC0411-16
Client ID: MR08-SS279-09A
SDG: TO9-46
Extracted by: CB
Extraction Method: SW846 3550
Analyst: JCG
Analysis Method: SW846 M8270C
Lab Prep Batch: WG60396
Units: ug/Kgdrywt

CAS#	Compound	Flags	Results	DF	PQL	Adj.PQL	Adj.MDL
91-20-3	Naphthalene	~~U~~ UJ	11	1.0	10	11	2.9 CCH
91-57-6	2-Methylnaphthalene	U	11	1.0	10	11	2.4
86-73-7	Fluorene	U	11	1.0	10	11	3.6
85-01-8	Phenanthrene	U	11	1.0	10	11	2.0
206-44-0	Fluoranthene	J	5.1	1.0	10	11	2.0
129-00-0	Pyrene	J	10	1.0	10	11	2.3
56-55-3	Benzo(a)anthracene	J	4.9	1.0	10	11	2.1
205-99-2	Benzo(b)fluoranthene		22	1.0	10	11	2.7
207-08-9	Benzo(k)fluoranthene	U	11	1.0	10	11	3.5
50-32-8	Benzo(a)pyrene	J	6.0	1.0	10	11	3.7
193-39-5	Indeno(1,2,3-cd)pyrene		40	1.0	10	11	2.1
53-70-3	Dibenzo(a,h)anthracene	U	11	1.0	10	11	2.0
191-24-2	Benzo(g,h,i)perylene		20	1.0	10	11	2.2
118-74-1	Hexachlorobenzene	U	11	1.0	10	11	2.0
87-68-3	Hexachlorobutadiene	U	11	1.0	10	11	2.6
77-47-4	Hexachlorocyclopentadiene	U	11	1.0	10	11	1.7
7297-45-2	2-Methylnaphthalene-D10		48%				
367-12-4	2,4-Dibromophenol		95%				
81103-79-9	Fluorene-d10		71%				
1718-51-1	Pyrene-D10		112%				

hw
4/19/09

9

KATAHDIN ANALYTICAL SERVICES
Report of Analytical Results

Client: CH2MHill
Project: TO-009 Lejeune
PO No:
Sample Date: 01/25/09
Received Date: 01/27/09
Extraction Date: 02/02/09
Analysis Date: 18-FEB-2009 22:57
Report Date: 02/25/2009
Matrix: SOIL
% Solids: 91.2

Lab ID: SC0411-18
Client ID: MR08-SS279D-09A
SDG: TO9-46
Extracted by: CB
Extraction Method: SW846 3550
Analyst: JCG
Analysis Method: SW846 M8270C
Lab Prep Batch: WG60396
Units: ug/Kgdrywt

CAS#	Compound	Flags	Results	DF	PQL	Adj.PQL	Adj.MDL
91-20-3	Naphthalene	U	11	1.0	10	11	2.8
91-57-6	2-Methylnaphthalene	U	11	1.0	10	11	2.4
86-73-7	Fluorene	U	11	1.0	10	11	3.5
85-01-8	Phenanthrene	J	3.6	1.0	10	11	2.0
206-44-0	Fluoranthene		13	1.0	10	11	2.0
129-00-0	Pyrene		13	1.0	10	11	2.3
56-55-3	Benzo(a)anthracene	J	6.9	1.0	10	11	2.1
205-99-2	Benzo(b)fluoranthene	U	11	1.0	10	11	2.6
207-08-9	Benzo(k)fluoranthene	U	11	1.0	10	11	3.4
50-32-8	Benzo(a)pyrene	J	6.5	1.0	10	11	3.6
193-39-5	Indeno(1,2,3-cd)pyrene	J	10	1.0	10	11	2.1
53-70-3	Dibenzo(a,h)anthracene	U	11	1.0	10	11	2.0
191-24-2	Benzo(g,h,i)perylene		13	1.0	10	11	2.2
118-74-1	Hexachlorobenzene	U	11	1.0	10	11	2.0
87-68-3	Hexachlorobutadiene	U	11	1.0	10	11	2.5
77-47-4	Hexachlorocyclopentadiene	U	11	1.0	10	11	1.6
7297-45-2	2-Methylnaphthalene-D10		113%				
367-12-4	2,4-Dibromophenol		89%				
81103-79-9	Fluorene-d10		82%				
1718-51-1	Pyrene-D10		105%				

lw
4/19/09

10

KATAHDIN ANALYTICAL SERVICES
Report of Analytical Results

Client: CH2MHill
Project: TO-009 Lejeune
PO No:
Sample Date: 01/25/09
Received Date: 01/27/09
Extraction Date: 02/02/09
Analysis Date: 17-FEB-2009 22:39
Report Date: 02/25/2009
Matrix: SOIL
% Solids: 85.4

Lab ID: SC0411-20
Client ID: MR08-IS279-1-2-09A
SDG: TO9-46
Extracted by: CB
Extraction Method: SW846 3550
Analyst: JCG
Analysis Method: SW846 M8270C
Lab Prep Batch: WG60396
Units: ug/Kgdrywt

CAS#	Compound	Flags	Results	DF	PQL	Adj.PQL	Adj.MDL
91-20-3	Naphthalene	~~U~~ UJ	12	1.0	10	12	3.0 CCH
91-57-6	2-Methylnaphthalene	U	12	1.0	10	12	2.6
86-73-7	Fluorene	U	12	1.0	10	12	3.7
85-01-8	Phenanthrene	U	12	1.0	10	12	2.1
206-44-0	Fluoranthene	U	12	1.0	10	12	2.1
129-00-0	Pyrene	U	12	1.0	10	12	2.4
56-55-3	Benzo(a)anthracene	U	12	1.0	10	12	2.2
205-99-2	Benzo(b)fluoranthene	U	12	1.0	10	12	2.8
207-08-9	Benzo(k)fluoranthene	U	12	1.0	10	12	3.6
50-32-8	Benzo(a)pyrene	U	12	1.0	10	12	3.9
193-39-5	Indeno(1,2,3-cd)pyrene	U	12	1.0	10	12	2.2
53-70-3	Dibenzo(a,h)anthracene	U	12	1.0	10	12	2.1
191-24-2	Benzo(g,h,i)perylene	U	12	1.0	10	12	2.3
118-74-1	Hexachlorobenzene	U	12	1.0	10	12	2.1
87-68-3	Hexachlorobutadiene	U	12	1.0	10	12	2.7
77-47-4	Hexachlorocyclopentadiene	U	12	1.0	10	12	1.8
7297-45-2	2-Methylnaphthalene-D10		* 28%				
367-12-4	2,4-Dibromophenol		70%				
81103-79-9	Fluorene-d10		56%				
1718-51-1	Pyrene-D10		87%				

LW
4/19/09

11

KATAHDIN ANALYTICAL SERVICES
Report of Analytical Results

Client: CH2MHill
Project: TO-009 Lejeune
PO No:
Sample Date: 01/25/09
Received Date: 01/27/09
Extraction Date: 02/02/09
Analysis Date: 17-FEB-2009 23:20
Report Date: 02/25/2009
Matrix: SOIL
% Solids: 86.0

Lab ID: SC0411-22
Client ID: MR08-IS279D-1-2-09A
SDG: TO9-46
Extracted by: CB
Extraction Method: SW846 3550
Analyst: JCG
Analysis Method: SW846 M8270C
Lab Prep Batch: WG60396
Units: ug/Kgdrywt

CAS#	Compound	Flags	Results	DF	PQL	Adj.PQL	Adj.MDL
91-20-3	Naphthalene	~~U~~ UJ	12	1.0	10	12	3.0 CCH
91-57-6	2-Methylnaphthalene	U	12	1.0	10	12	2.6
86-73-7	Fluorene	U	12	1.0	10	12	3.7
85-01-8	Phenanthrene	U	12	1.0	10	12	2.1
206-44-0	Fluoranthene	J	3.8	1.0	10	12	2.1
129-00-0	Pyrene	J	4.7	1.0	10	12	2.4
56-55-3	Benzo(a)anthracene	J	4.2	1.0	10	12	2.2
205-99-2	Benzo(b)fluoranthene	U	12	1.0	10	12	2.8
207-08-9	Benzo(k)fluoranthene	U	12	1.0	10	12	3.6
50-32-8	Benzo(a)pyrene	J	3.9	1.0	10	12	3.8
193-39-5	Indeno(1,2,3-cd)pyrene		15	1.0	10	12	2.2
53-70-3	Dibenzo(a,h)anthracene	U	12	1.0	10	12	2.1
191-24-2	Benzo(g,h,i)perylene	J	4.8	1.0	10	12	2.3
118-74-1	Hexachlorobenzene	U	12	1.0	10	12	2.1
87-68-3	Hexachlorobutadiene	U	12	1.0	10	12	2.7
77-47-4	Hexachlorocyclopentadiene	U	12	1.0	10	12	1.7
7297-45-2	2-Methylnaphthalene-D10		38%				
367-12-4	2,4-Dibromophenol		100%				
81103-79-9	Fluorene-d10		71%				
1718-51-1	Pyrene-D10		112%				

hw
4/19/09

12

KATAHDIN ANALYTICAL SERVICES
Report of Analytical Results

Client: CH2MHill
Project: TO-009 Lejeune
PO No:
Sample Date: 01/25/09
Received Date: 01/27/09
Extraction Date: 02/02/09
Analysis Date: 18-FEB-2009 00:01
Report Date: 02/25/2009
Matrix: SOIL
% Solids: 90.9

Lab ID: SC0411-24
Client ID: MR08-IS352-1-2-09A
SDG: TO9-46
Extracted by: CB
Extraction Method: SW846 3550
Analyst: JCG
Analysis Method: SW846 M8270C
Lab Prep Batch: WG60396
Units: ug/Kgdrywt

CAS#	Compound	Flags	Results	DF	PQL	Adj.PQL	Adj.MDL
91-20-3	Naphthalene	~~U~~ UJ	11	1.0	10	11	2.9 CCH
91-57-6	2-Methylnaphthalene	U	11	1.0	10	11	2.4
86-73-7	Fluorene	U	11	1.0	10	11	3.5
85-01-8	Phenanthrene	U	11	1.0	10	11	2.0
206-44-0	Fluoranthene	U	11	1.0	10	11	2.0
129-00-0	Pyrene	U	11	1.0	10	11	2.3
56-55-3	Benzo(a)anthracene	U	11	1.0	10	11	2.1
205-99-2	Benzo(b)fluoranthene	U	11	1.0	10	11	2.6
207-08-9	Benzo(k)fluoranthene	U	11	1.0	10	11	3.4
50-32-8	Benzo(a)pyrene	U	11	1.0	10	11	3.6
193-39-5	Indeno(1,2,3-cd)pyrene	U	11	1.0	10	11	2.1
53-70-3	Dibenzo(a,h)anthracene	U	11	1.0	10	11	2.0
191-24-2	Benzo(g,h,i)perylene	U	11	1.0	10	11	2.2
118-74-1	Hexachlorobenzene	U	11	1.0	10	11	2.0
87-68-3	Hexachlorobutadiene	U	11	1.0	10	11	2.5
77-47-4	Hexachlorocyclopentadiene	U	11	1.0	10	11	1.6
7297-45-2	2-Methylnaphthalene-D10		39%				
367-12-4	2,4-Dibromophenol		101%				
81103-79-9	Fluorene-d10		73%				
1718-51-1	Pyrene-D10		140%				

LW 4/19/09

13

KATAHDIN ANALYTICAL SERVICES
Report of Analytical Results

Client: CH2MHill
Project: TO-009 Lejeune
PO No:
Sample Date: 01/25/09
Received Date: 01/27/09
Extraction Date: 02/02/09
Analysis Date: 18-FEB-2009 00:42
Report Date: 02/25/2009
Matrix: SOIL
% Solids: 81.7

Lab ID: SC0411-26
Client ID: MR08-SS352-09A
SDG: TO9-46
Extracted by: CB
Extraction Method: SW846 3550
Analyst: JCG
Analysis Method: SW846 M8270C
Lab Prep Batch: WG60396
Units: ug/Kgdrywt

CAS#	Compound	Flags	Results	DF	PQL	Adj.PQL	Adj.MDL
91-20-3	Naphthalene	~~U~~ UJ	12	1.0	10	12	3.2 CCY
91-57-6	2-Methylnaphthalene	U	12	1.0	10	12	2.7
86-73-7	Fluorene	U	12	1.0	10	12	3.9
85-01-8	Phenanthrene		34	1.0	10	12	2.2
206-44-0	Fluoranthene		130	1.0	10	12	2.2
129-00-0	Pyrene		130	1.0	10	12	2.6
56-55-3	Benzo(a)anthracene		69	1.0	10	12	2.3
205-99-2	Benzo(b)fluoranthene		130	1.0	10	12	2.9
207-08-9	Benzo(k)fluoranthene		50	1.0	10	12	3.8
50-32-8	Benzo(a)pyrene		63	1.0	10	12	4.0
193-39-5	Indeno(1,2,3-cd)pyrene		42	1.0	10	12	2.3
53-70-3	Dibenzo(a,h)anthracene		18	1.0	10	12	2.2
191-24-2	Benzo(g,h,i)perylene		68	1.0	10	12	2.4
118-74-1	Hexachlorobenzene	U	12	1.0	10	12	2.2
87-68-3	Hexachlorobutadiene	U	12	1.0	10	12	2.8
77-47-4	Hexachlorocyclopentadiene	U	12	1.0	10	12	1.8
7297-45-2	2-Methylnaphthalene-D10		38%				
367-12-4	2,4-Dibromophenol		103%				
81103-79-9	Fluorene-d10		72%				
1718-51-1	Pyrene-D10		117%				

lew
6/19/09

14

KATAHDIN ANALYTICAL SERVICES
Report of Analytical Results

Client: CH2MHill
Project: TO-009 Lejeune
PO No:
Sample Date: 01/25/09
Received Date: 01/27/09
Extraction Date: 02/02/09
Analysis Date: 18-FEB-2009 01:24
Report Date: 02/25/2009
Matrix: SOIL
% Solids: 82.4

Lab ID: SC0411-28
Client ID: MR08-SS371-09A
SDG: TO9-46
Extracted by: CB
Extraction Method: SW846 3550
Analyst: JCG
Analysis Method: SW846 M8270C
Lab Prep Batch: WG60396
Units: ug/Kgdrywt

CAS#	Compound	Flags	Results	DF	PQL	Adj.PQL	Adj.MDL
91-20-3	Naphthalene	~~U~~ UJ	12	1.0	10	12	3.2 CCH
91-57-6	2-Methylnaphthalene	U	12	1.0	10	12	2.7
86-73-7	Fluorene	U	12	1.0	10	12	3.9
85-01-8	Phenanthrene		27	1.0	10	12	2.2
206-44-0	Fluoranthene		100	1.0	10	12	2.2
129-00-0	Pyrene		100	1.0	10	12	2.5
56-55-3	Benzo(a)anthracene		76	1.0	10	12	2.3
205-99-2	Benzo(b)fluoranthene		160	1.0	10	12	2.9
207-08-9	Benzo(k)fluoranthene		51	1.0	10	12	3.8
50-32-8	Benzo(a)pyrene		74	1.0	10	12	4.0
193-39-5	Indeno(1,2,3-cd)pyrene		190	1.0	10	12	2.3
53-70-3	Dibenzo(a,h)anthracene		20	1.0	10	12	2.2
191-24-2	Benzo(g,h,i)perylene		68	1.0	10	12	2.4
118-74-1	Hexachlorobenzene	U	12	1.0	10	12	2.2
87-68-3	Hexachlorobutadiene	U	12	1.0	10	12	2.8
77-47-4	Hexachlorocyclopentadiene	U	12	1.0	10	12	1.8
7297-45-2	2-Methylnaphthalene-D10		42%				
367-12-4	2,4-Dibromophenol		110%				
81103-79-9	Fluorene-d10		75%				
1718-51-1	Pyrene-D10		109%				

lw 4/19/09

15

KATAHDIN ANALYTICAL SERVICES
Report of Analytical Results

Client: CH2MHill
Project: TO-009 Lejeune
PO No:
Sample Date: 01/25/09
Received Date: 01/27/09
Extraction Date: 02/02/09
Analysis Date: 18-FEB-2009 23:38
Report Date: 02/24/2009
Matrix: SOIL
% Solids: 87.3

Lab ID: SC0411-30
Client ID: MR08-IS371-1-2-09A
SDG: TO9-46
Extracted by: CB
Extraction Method: SW846 3550
Analyst: JCG
Analysis Method: SW846 M8270C
Lab Prep Batch: WG60396
Units: ug/Kgdrywt

CAS#	Compound	Flags	Results	DF	PQL	Adj.PQL	Adj.MDL
91-20-3	Naphthalene	~~J~~ J	4.2	1.0	10	11	3.0 BSH
91-57-6	2-Methylnaphthalene	U	11	1.0	10	11	2.5
86-73-7	Fluorene	U	11	1.0	10	11	3.7
85-01-8	Phenanthrene	U	11	1.0	10	11	2.1
206-44-0	Fluoranthene	J	5.5	1.0	10	11	2.1
129-00-0	Pyrene	J	3.8	1.0	10	11	2.4
56-55-3	Benzo(a)anthracene	J	3.2	1.0	10	11	2.2
205-99-2	Benzo(b)fluoranthene	U	11	1.0	10	11	2.7
207-08-9	Benzo(k)fluoranthene	U	11	1.0	10	11	3.5
50-32-8	Benzo(a)pyrene	U	11	1.0	10	11	3.8
193-39-5	Indeno(1,2,3-cd)pyrene	J	3.1	1.0	10	11	2.2
53-70-3	Dibenzo(a,h)anthracene	U	11	1.0	10	11	2.1
191-24-2	Benzo(g,h,i)perylene	U	11	1.0	10	11	2.3
118-74-1	Hexachlorobenzene	U	11	1.0	10	11	2.1
87-68-3	Hexachlorobutadiene	U	11	1.0	10	11	2.6
77-47-4	Hexachlorocyclopentadiene	U	11	1.0	10	11	1.7
7297-45-2	2-Methylnaphthalene-D10		110%				
367-12-4	2,4-Dibromophenol		88%				
81103-79-9	Fluorene-d10		69%				
1718-51-1	Pyrene-D10		86%				

kw
4/19/09

14

KATAHDIN ANALYTICAL SERVICES
Report of Analytical Results

Client: CH2MHill
Project: TO-009 Lejeune
PO No:
Sample Date: 01/25/09
Received Date: 01/27/09
Extraction Date: 02/03/09
Analysis Date: 18-FEB-2009 16:05
Report Date: 02/25/2009
Matrix: SOIL
% Solids: 90.6

Lab ID: SC0411-32
Client ID: 08-IS372-1-2-09A
SDG: TO9-46
Extracted by: CB
Extraction Method: SW846 3550
Analyst: JLP
Analysis Method: SW846 M8270C
Lab Prep Batch: WG60436
Units: ug/Kgdrywt

CAS#	Compound	Flags	Results	DF	PQL	Adj.PQL	Adj.MDL	
91-20-3	Naphthalene	U	11	1.0	10	11	2.9	
91-57-6	2-Methylnaphthalene	U	11	1.0	10	11	2.4	
86-73-7	Fluorene	U	11	1.0	10	11	3.5	
85-01-8	Phenanthrene	J	2.9	1.0	10	11	2.0	
206-44-0	Fluoranthene		18	1.0	10	11	2.0	
129-00-0	Pyrene		15	1.0	10	11	2.3	
56-55-3	Benzo(a)anthracene		13	1.0	10	11	2.1	
205-99-2	Benzo(b)fluoranthene		19	1.0	10	11	2.6	
207-08-9	Benzo(k)fluoranthene	J	9.3	1.0	10	11	3.4	
50-32-8	Benzo(a)pyrene	J	10	1.0	10	11	3.6	
193-39-5	Indeno(1,2,3-cd)pyrene	J	7.4	1.0	10	11	2.1	
53-70-3	Dibenzo(a,h)anthracene	J	3.4	1.0	10	11	2.0	
191-24-2	Benzo(g,h,i)perylene	J	7.8	1.0	10	11	2.2	
118-74-1	Hexachlorobenzene	U	11	1.0	10	11	2.0	
87-68-3	Hexachlorobutadiene	U	11	1.0	10	11	2.5	
77-47-4	Hexachlorocyclopentadiene	~~U~~ UJ	11	1.0	10	11	1.6	MSL
7297-45-2	2-Methylnaphthalene-D10		80%					
367-12-4	2,4-Dibromophenol		100%					
81103-79-9	Fluorene-d10		82%					
1718-51-1	Pyrene-D10		112%					

MW 4/29/09

17

KATAHDIN ANALYTICAL SERVICES
Report of Analytical Results

Client: CH2MHill
Project: TO-009 Lejeune
PO No:
Sample Date: 01/25/09
Received Date: 01/27/09
Extraction Date: 02/03/09
Analysis Date: 18-FEB-2009 20:26
Report Date: 02/25/2009
Matrix: SOIL
% Solids: 85.9

Lab ID: SC0411-34
Client ID: MR08-SS373-09A
SDG: TO9-46
Extracted by: CB
Extraction Method: SW846 3550
Analyst: JCG
Analysis Method: SW846 M8270C
Lab Prep Batch: WG60436
Units: ug/Kgdrywt

CAS#	Compound	Flags	Results	DF	PQL	Adj.PQL	Adj.MDL
91-20-3	Naphthalene	U	12	1.0	10	12	3.0
91-57-6	2-Methylnaphthalene	J	6.1	1.0	10	12	2.6
86-73-7	Fluorene	U	12	1.0	10	12	3.7
85-01-8	Phenanthrene		73	1.0	10	12	2.1
206-44-0	Fluoranthene		240	1.0	10	12	2.1
129-00-0	Pyrene		180	1.0	10	12	2.4
56-55-3	Benzo(a)anthracene		95	1.0	10	12	2.2
205-99-2	Benzo(b)fluoranthene		180	1.0	10	12	2.8
207-08-9	Benzo(k)fluoranthene		91	1.0	10	12	3.6
50-32-8	Benzo(a)pyrene		100	1.0	10	12	3.8
193-39-5	Indeno(1,2,3-cd)pyrene		84	1.0	10	12	2.2
53-70-3	Dibenzo(a,h)anthracene		30	1.0	10	12	2.1
191-24-2	Benzo(g,h,i)perylene		81	1.0	10	12	2.3
118-74-1	Hexachlorobenzene	U	12	1.0	10	12	2.1
87-68-3	Hexachlorobutadiene	U	12	1.0	10	12	2.7
77-47-4	Hexachlorocyclopentadiene	U	12	1.0	10	12	1.7
7297-45-2	2-Methylnaphthalene-D10		81%				
367-12-4	2,4-Dibromophenol		98%				
81103-79-9	Fluorene-d10		84%				
1718-51-1	Pyrene-D10		97%				

Lw
4/1/09

18

KATAHDIN ANALYTICAL SERVICES
Report of Analytical Results

Client: CH2MHill
Project: TO-009 Lejeune
PO No:
Sample Date: 01/25/09
Received Date: 01/27/09
Extraction Date: 02/03/09
Analysis Date: 18-FEB-2009 21:07
Report Date: 02/25/2009
Matrix: SOIL
% Solids: 84.7

Lab ID: SC0411-36
Client ID: MR08-SS373D-09A
SDG: TO9-46
Extracted by: CB
Extraction Method: SW846 3550
Analyst: JCG
Analysis Method: SW846 M8270C
Lab Prep Batch: WG60436
Units: ug/Kgdrywt

CAS#	Compound	Flags	Results	DF	PQL	Adj.PQL	Adj.MDL
91-20-3	Naphthalene	~~J~~ J	3.2	1.0	10	12	3.1 BSH
91-57-6	2-Methylnaphthalene	J	6.5	1.0	10	12	2.6
86-73-7	Fluorene	U	12	1.0	10	12	3.8
85-01-8	Phenanthrene		98	1.0	10	12	2.1
206-44-0	Fluoranthene	~~E~~ 270	~~350~~ 2 ~~1.0~~		10	24 ~~12~~	~~4.2~~ ~~1~~ R DL
129-00-0	Pyrene		280	1.0	10	12	2.5
56-55-3	Benzo(a)anthracene		130	1.0	10	12	2.2
205-99-2	Benzo(b)fluoranthene		260	1.0	10	12	2.8
207-08-9	Benzo(k)fluoranthene		100	1.0	10	12	3.6
50-32-8	Benzo(a)pyrene		140	1.0	10	12	3.9
193-39-5	Indeno(1,2,3-cd)pyrene		120	1.0	10	12	2.2
53-70-3	Dibenzo(a,h)anthracene		41	1.0	10	12	2.1
191-24-2	Benzo(g,h,i)perylene		110	1.0	10	12	2.4
118-74-1	Hexachlorobenzene	U	12	1.0	10	12	2.1
87-68-3	Hexachlorobutadiene	U	12	1.0	10	12	2.7
77-47-4	Hexachlorocyclopentadiene	U	12	1.0	10	12	1.8
7297-45-2	2-Methylnaphthalene-D10		79%				
367-12-4	2,4-Dibromophenol		103%				
81103-79-9	Fluorene-d10		84%				
1718-51-1	Pyrene-D10		97%				

Lw
4/9/09

18DL

KATAHDIN ANALYTICAL SERVICES
Report of Analytical Results

Client: CH2MHill
Project: TO-009 Lejeune
PO No:
Sample Date: 01/25/09
Received Date: 01/27/09
Extraction Date: 02/03/09
Analysis Date: 19-FEB-2009 13:13
Report Date: 02/25/2009
Matrix: SOIL
% Solids: 84.7

Lab ID: SC0411-36DL
Client ID: MR08-SS373D-09A
SDG: TO9-46
Extracted by: CB
Extraction Method: SW846 3550
Analyst: JLP
Analysis Method: SW846 M8270C
Lab Prep Batch: WG60436
Units: ug/Kgdrywt

use 8ng.NAC

RDL

CAS#	Compound	Flags	Results	DF	PQL	Adj.PQL	Adj.MDL
91-20-3	Naphthalene	U	24	2.0	10	24	6.1
91-57-6	2-Methylnaphthalene	J	11	2.0	10	24	5.2
86-73-7	Fluorene	U	24	2.0	10	24	7.6
85-01-8	Phenanthrene		76	2.0	10	24	4.2
206-44-0	Fluoranthene		270	2.0	10	24	4.2
129-00-0	Pyrene	J	240	2.0	10	24	5.0 CCH
56-55-3	Benzo(a)anthracene		120	2.0	10	24	4.5
205-99-2	Benzo(b)fluoranthene		180	2.0	10	24	5.7
207-08-9	Benzo(k)fluoranthene		130	2.0	10	24	7.3
50-32-8	Benzo(a)pyrene		120	2.0	10	24	7.8
193-39-5	Indeno(1,2,3-cd)pyrene		110	2.0	10	24	4.5
53-70-3	Dibenzo(a,h)anthracene		43	2.0	10	24	4.2
191-24-2	Benzo(g,h,i)perylene		100	2.0	10	24	4.7
118-74-1	Hexachlorobenzene	U	24	2.0	10	24	4.2
87-68-3	Hexachlorobutadiene	U	24	2.0	10	24	5.4
77-47-4	Hexachlorocyclopentadiene	U	24	2.0	10	24	3.5
7297-45-2	2-Methylnaphthalene-D10		63%				
367-12-4	2,4-Dibromophenol		85%				
81103-79-9	Fluorene-d10		69%				
1718-51-1	Pyrene-D10		87%				

Rev
4/19/09

KATAHDIN ANALYTICAL SERVICES
Report of Analytical Results

Client: CH2MHill
Project: TO-009 Lejeune
PO No:
Sample Date: 01/25/09
Received Date: 01/27/09
Extraction Date: 02/03/09
Analysis Date: 18-FEB-2009 21:49
Report Date: 02/25/2009
Matrix: SOIL
% Solids: 85.5

Lab ID: SC0411-38
Client ID: MR08-IS373-2-3-09A
SDG: TO9-46
Extracted by: CB
Extraction Method: SW846 3550
Analyst: JCG
Analysis Method: SW846 M8270C
Lab Prep Batch: WG60436
Units: ug/Kgdrywt

CAS#	Compound	Flags	Results	DF	PQL	Adj.PQL	Adj.MDL
91-20-3	Naphthalene	U	12	1.0	10	12	3.0
91-57-6	2-Methylnaphthalene	U	12	1.0	10	12	2.6
86-73-7	Fluorene	U	12	1.0	10	12	3.7
85-01-8	Phenanthrene	U	12	1.0	10	12	2.1
206-44-0	Fluoranthene	U	12	1.0	10	12	2.1
129-00-0	Pyrene	U	12	1.0	10	12	2.4
56-55-3	Benzo(a)anthracene	J	6.3	1.0	10	12	2.2
205-99-2	Benzo(b)fluoranthene	U	12	1.0	10	12	2.8
207-08-9	Benzo(k)fluoranthene	U	12	1.0	10	12	3.6
50-32-8	Benzo(a)pyrene	U	12	1.0	10	12	3.8
193-39-5	Indeno(1,2,3-cd)pyrene	U	12	1.0	10	12	2.2
53-70-3	Dibenzo(a,h)anthracene	U	12	1.0	10	12	2.1
191-24-2	Benzo(g,h,i)perylene	U	12	1.0	10	12	2.3
118-74-1	Hexachlorobenzene	U	12	1.0	10	12	2.1
87-68-3	Hexachlorobutadiene	U	12	1.0	10	12	2.7
77-47-4	Hexachlorocyclopentadiene	U	12	1.0	10	12	1.8
7297-45-2	2-Methylnaphthalene-D10		75%				
367-12-4	2,4-Dibromophenol		97%				
81103-79-9	Fluorene-d10		85%				
1718-51-1	Pyrene-D10		89%				

MW
4/19/09

20

KATAHDIN ANALYTICAL SERVICES
Report of Analytical Results

Client: CH2MHill
Project: TO-009 Lejeune
PO No:
Sample Date: 01/25/09
Received Date: 01/27/09
Extraction Date: 02/03/09
Analysis Date: 18-FEB-2009 22:30
Report Date: 02/25/2009
Matrix: SOIL
% Solids: 85.8

Lab ID: SC0411-40
Client ID: MR08-IS373D-2-3-09A
SDG: T09-46
Extracted by: CB
Extraction Method: SW846 3550
Analyst: JCG
Analysis Method: SW846 M8270C
Lab Prep Batch: WG60436
Units: ug/Kgdrywt

CAS#	Compound	Flags	Results	DF	PQL	Adj.PQL	Adj.MDL
91-20-3	Naphthalene	U	12	1.0	10	12	3.0
91-57-6	2-Methylnaphthalene	J	7.3	1.0	10	12	2.6
86-73-7	Fluorene	U	12	1.0	10	12	3.7
85-01-8	Phenanthrene	J	2.6	1.0	10	12	2.1
206-44-0	Fluoranthene	J	3.0	1.0	10	12	2.1
129-00-0	Pyrene	U	12	1.0	10	12	2.4
56-55-3	Benzo(a)anthracene	J	8.2	1.0	10	12	2.2
205-99-2	Benzo(b)fluoranthene	U	12	1.0	10	12	2.8
207-08-9	Benzo(k)fluoranthene	U	12	1.0	10	12	3.6
50-32-8	Benzo(a)pyrene	U	12	1.0	10	12	3.8
193-39-5	Indeno(1,2,3-cd)pyrene	J	2.4	1.0	10	12	2.2
53-70-3	Dibenzo(a,h)anthracene	J	2.1	1.0	10	12	2.1
191-24-2	Benzo(g,h,i)perylene	J	3.2	1.0	10	12	2.3
118-74-1	Hexachlorobenzene	U	12	1.0	10	12	2.1
87-68-3	Hexachlorobutadiene	U	12	1.0	10	12	2.7
77-47-4	Hexachlorocyclopentadiene	U	12	1.0	10	12	1.7
7297-45-2	2-Methylnaphthalene-D10		88%				
367-12-4	2,4-Dibromophenol		110%				
81103-79-9	Fluorene-d10		92%				
1718-51-1	Pyrene-D10		101%				

KW
4/19/09

ENVIRONMENTAL
Data Services, Inc.

SEMIVOLATILE ORGANIC COMPOUNDS
USEPA Region IV - Level IV Review

Site: MCB Camp Lejeune, TO-09 SDG #: TO9-46

Client: CH2M HILL, Inc., Virginia Beach, Virginia Date: April 19, 2009

Laboratory: Katahdin Analytical Services, Scarborough, Maine Reviewer: Nancy Weaver

EDS ID	Client Sample ID	Laboratory Sample ID	Matrix
1	MR08-IS370-1-2-09A	SC0411-1	Soil
2	MR08-SS353-09A	SC0411-3	Soil
3	MR08-IS353-1-2-09A	SC0411-5	Soil
4	MR08-SS328-09A	SC0411-7	Soil
5	MR08-IS328-4-5-09A	SC0411-9	Soil
6	MR08-SS347-09A	SC0411-11	Soil
7	MR08-IS347-3-4-09A	SC0411-13	Soil
8	MR08-SS279-09A	SC0411-15	Soil
9	MR08-SS279D-09A	SC0411-17	Soil
10	MR08-IS279-1-2-09A	SC0411-19	Soil
11	MR08-IS279D-1-2-09A	SC0411-21	Soil
12	MR08-IS352-1-2-09A	SC0411-23	Soil
13	MR08-SS352-09A	SC0411-25	Soil
14	MR08-SS371-09A	SC0411-27	Soil
15	MR08-IS371-1-2-09A	SC0411-29	Soil
16	MR08-IS372-1-2-09A	SC0411-31	Soil
16MS	MR08-IS372-1-2-09AMS	SC0411-31MS	Soil
16MSD	MR08-IS372-1-2-09AMSD	SC0411-31MSD	Soil
17	MR08-SS373-09A	SC0411-33	Soil
18	MR08-SS373D-09A	SC0411-35	Soil
19	MR08-IS373-2-3-09A	SC0411-37	Soil
20	MR08-IS373D-2-3-09A	SC0411-39	Soil

The USEPA "Contract Laboratory Program National Functional Guidelines for Organic Data Review," October 1999, and professional judgment were used in evaluating the data in this summary report.

Holding Times - All samples were extracted within 14 days for soil samples and analyzed within 40 days for all samples.

GC/MS Tuning - All of the DFTPP tunes in the initial and continuing calibrations met the percent relative abundance criteria.

Initial Calibration - The initial calibrations exhibited acceptable %RSD and mean RRF values except the following.

ICAL Date	Compound	%RSD/RRF	Qualifier	Affected Samples
02/11/09	Benzaldehyde	37.85%	J/UJ	All samples
	4-Nitrophenol	30.97%	J/UJ	All samples

Continuing Calibration - The continuing calibrations exhibited acceptable %D and RRF values except the following.

CCAL Date	Compound	%D/RRF	Qualifier	Affected Samples
02/15/09	Benzaldehyde	93.27%	None	Already qualified due to ICAL
02/16/09	Benzaldehyde	88.67%	None	Already qualified due to ICAL
	Di-n-octylphthalate	34.13%	J/UJ	10-14
02/17/09	Benzaldehyde	40.67%	None	Already qualified due to ICAL
	Di-n-octylphthalate	31.54%	J/UJ	9, 15-19
02/18/09	Benzaldehyde	89.53%	None	Already qualified due to ICAL

Surrogates - All samples exhibited acceptable surrogate recoveries.

MS/MSD - The MS/MSD sample exhibited acceptable %R and RPD values except the following.

MS/MSD Sample ID	Compound	MS/MSD %R/RPD	Qualifier
16	Dimethylphthalate	116%/114%/Ok	None - Sample ND

Laboratory Control Sample - The LCS samples exhibited acceptable %R values except the following.

LCS ID	Compound	%R	Qualifier	Affected Samples
WG60435-LCS	Dimethylphthalate	115%	None	All ND

Internal Standard (IS) Area Performance - All internal standards met response and retention time (RT) criteria.

Method Blank - The method blanks were free of contamination.

Field, Equipment Blank - Field QC results are summarized below.

Blank ID	Compound	Conc. ug/L	Action Level ug/L	Qualifier	Affected Samples
MR08-FB012609	None - ND	-	-	-	-
MR08-EB012409	None - ND	-	-	-	-
MR08-EB012509	None - ND	-	-	-	-

Field Duplicates - Field duplicate results are summarized below.

Compound	MR08-SS279-09A ug/kg	MR08-SS279D-09A ug/kg	RPD	Qualifier
bis (2-Ethylhexyl) phthalate	130	120	8%	None

Compound	MR08-IS279-1-2-09A ug/kg	MR08-IS279D-1-2-09A ug/kg	RPD	Qualifier
bis (2-Ethylhexyl) phthalate	390 U	170	NC	None

Compound	MR08-SS373-09A ug/kg	MR08-SS373D-09A ug/kg	RPD	Qualifier
Chrysene	160	230	36%	None
bis (2-Ethylhexyl) phthalate	520	510	2%	None

Compound	MR08-IS373-2-3-09A ug/kg	MR08-IS373D-2-3-09A ug/kg	RPD	Qualifier
None	ND	ND	-	-

Tentatively Identified Compounds (TICs) - TICs were not reported.

Compound Quantitation - No discrepancies were identified.

KATAHDIN ANALYTICAL SERVICES
Report of Analytical Results

Client: CH2MHill
Project: TO-009 Lejeune
PO No:
Sample Date: 01/24/09
Received Date: 01/27/09
Extraction Date: 02/02/09
Analysis Date: 15-FEB-2009 18:44
Report Date: 02/20/2009
Matrix: SOIL
% Solids: 90.1

Lab ID: SC0411-1
Client ID: MR08-IS370-1-2-09A
SDG: TO9-46
Extracted by: CB
Extraction Method: SW846 3550
Analyst: JLP
Analysis Method: SW846 8270C
Lab Prep Batch: WG60395
Units: ug/Kgdrywt

CAS#	Compound	Flags	Results	DF	PQL	Adj.PQL	Adj.MDL	
100-52-7	Benzaldehyde	~~U~~ UJ	550	1.0	500	550	130	J CB
108-95-2	Phenol	U	550	1.0	500	550	170	
111-44-4	Bis(2-Chloroethyl)ether	U	370	1.0	330	370	90	
95-57-8	2-Chlorophenol	U	550	1.0	500	550	180	
95-48-7	2-Methylphenol	U	660	1.0	600	660	220	
108-60-1	2,2'-Oxybis(1-chloropropane)	U	370	1.0	330	370	99	
98-86-2	Acetophenone	U	660	1.0	600	660	200	
621-64-7	N-Nitroso-di-n-propylamine	U	370	1.0	330	370	92	
65794-96-9	3&4-Methylphenol	U	660	1.0	600	660	210	
67-72-1	Hexachloroethane	U	370	1.0	330	370	110	
98-95-3	Nitrobenzene	U	370	1.0	330	370	100	
78-59-1	Isophorone	U	370	1.0	330	370	83	
88-75-5	2-Nitrophenol	U	660	1.0	600	660	180	
105-67-9	2,4-Dimethylphenol	U	550	1.0	500	550	180	
111-91-1	Bis(2-Chloroethoxy)methane	U	370	1.0	330	370	110	
120-83-2	2,4-Dichlorophenol	U	550	1.0	500	550	170	
106-47-8	4-Chloroaniline	U	550	1.0	500	550	130	
105-60-2	Caprolactam	U	550	1.0	500	550	160	
59-50-7	4-Chloro-3-Methylphenol	U	550	1.0	500	550	180	
88-06-2	2,4,6-Trichlorophenol	U	550	1.0	500	550	170	
95-95-4	2,4,5-Trichlorophenol	U	550	1.0	500	550	170	
91-58-7	2-Chloronaphthalene	U	370	1.0	330	370	96	
92-52-4	1,1'-Biphenyl	U	370	1.0	330	370	81	
88-74-4	2-Nitroaniline	U	550	1.0	500	550	83	
131-11-3	Dimethyl Phthalate	U	370	1.0	330	370	86	
606-20-2	2,6-Dinitrotoluene	U	370	1.0	330	370	88	
208-96-8	Acenaphthylene	U	370	1.0	330	370	78	
99-09-2	3-Nitroaniline	U	550	1.0	500	550	100	
83-32-9	Acenaphthene	U	370	1.0	330	370	72	
51-28-5	2,4-Dinitrophenol	U	1300	1.0	1200	1300	420	
132-64-9	Dibenzofuran	U	370	1.0	330	370	88	
100-02-7	4-Nitrophenol	~~U~~ UJ	1300	1.0	1200	1300	340	JCB
121-14-2	2,4-Dinitrotoluene	U	370	1.0	330	370	94	
84-66-2	Diethylphthalate	U	370	1.0	330	370	89	
7005-72-3	4-Chlorophenyl-phenylether	U	370	1.0	330	370	86	
100-01-6	4-Nitroaniline	U	550	1.0	500	550	150	
534-52-1	4,6-Dinitro-2-Methylphenol	U	1300	1.0	1200	1300	370	
86-30-6	N-Nitrosodiphenylamine	U	730	1.0	660	730	240	
101-55-3	4-Bromophenyl-phenylether	U	370	1.0	330	370	94	
1912-24-9	Atrazine	U	370	1.0	330	370	100	
87-86-5	Pentachlorophenol	U	910	1.0	820	910	260	
120-12-7	Anthracene	U	370	1.0	330	370	93	
86-74-8	Carbazole	U	550	1.0	500	550	120	

lw
4/19/09

KATAHDIN ANALYTICAL SERVICES
Report of Analytical Results

Client: CH2MHill
Project: TO-009 Lejeune
PO No:
Sample Date: 01/24/09
Received Date: 01/27/09
Extraction Date: 02/02/09
Analysis Date: 15-FEB-2009 18:44
Report Date: 02/20/2009
Matrix: SOIL
% Solids: 90.1

Lab ID: SC0411-1
Client ID: MR08-IS370-1-2-09A
SDG: TO9-46
Extracted by: CB
Extraction Method: SW846 3550
Analyst: JLP
Analysis Method: SW846 8270C
Lab Prep Batch: WG60395
Units: ug/Kgdrywt

CAS#	Compound	Flags	Results	DF	PQL	Adj.PQL	Adj.MDL
84-74-2	Di-n-butylphthalate	U	370	1.0	330	370	110
85-68-7	Butylbenzylphthalate	U	370	1.0	330	370	100
91-94-1	3,3'-Dichlorobenzidine	U	550	1.0	500	550	130
218-01-9	Chrysene	U	370	1.0	330	370	100
117-81-7	bis(2-Ethylhexyl)phthalate	J	170	1.0	330	370	110
117-84-0	Di-n-octylphthalate	U	370	1.0	330	370	230
367-12-4	2-Fluorophenol		69%				
13127-88-3	Phenol-D6		72%				
4165-60-0	Nitrobenzene-D5		66%				
321-60-8	2-Fluorobiphenyl		71%				
118-79-6	2,4,6-Tribromophenol		69%				
1718-51-0	Terphenyl-D14		73%				

kw
4/19/09

2

KATAHDIN ANALYTICAL SERVICES
Report of Analytical Results

Client: CH2MHill
Project: TO-009 Lejeune
PO No:
Sample Date: 01/24/09
Received Date: 01/27/09
Extraction Date: 02/02/09
Analysis Date: 15-FEB-2009 22:12
Report Date: 02/20/2009
Matrix: SOIL
% Solids: 93.1

Lab ID: SC0411-3
Client ID: MR08-SS353-09A
SDG: TO9-46
Extracted by: CB
Extraction Method: SW846 3550
Analyst: JLP
Analysis Method: SW846 8270C
Lab Prep Batch: WG60395
Units: ug/Kgdrywt

CAS#	Compound	Flags	Results	DF	PQL	Adj.PQL	Adj.MDL	
100-52-7	Benzaldehyde	U UJ	540	1.0	500	540	130	JCB
108-95-2	Phenol	U	540	1.0	500	540	170	
111-44-4	Bis(2-Chloroethyl)ether	U	350	1.0	330	350	87	
95-57-8	2-Chlorophenol	U	540	1.0	500	540	180	
95-48-7	2-Methylphenol	U	640	1.0	600	640	210	
108-60-1	2,2'-Oxybis(1-chloropropane)	U	350	1.0	330	350	96	
98-86-2	Acetophenone	U	640	1.0	600	640	190	
621-64-7	N-Nitroso-di-n-propylamine	U	350	1.0	330	350	89	
65794-96-9	3&4-Methylphenol	U	640	1.0	600	640	200	
67-72-1	Hexachloroethane	U	350	1.0	330	350	100	
98-95-3	Nitrobenzene	U	350	1.0	330	350	98	
78-59-1	Isophorone	U	350	1.0	330	350	80	
88-75-5	2-Nitrophenol	U	640	1.0	600	640	180	
105-67-9	2,4-Dimethylphenol	U	540	1.0	500	540	180	
111-91-1	Bis(2-Chloroethoxy)methane	U	350	1.0	330	350	100	
120-83-2	2,4-Dichlorophenol	U	540	1.0	500	540	160	
106-47-8	4-Chloroaniline	U	540	1.0	500	540	130	
105-60-2	Caprolactam	U	540	1.0	500	540	150	
59-50-7	4-Chloro-3-Methylphenol	U	540	1.0	500	540	180	
88-06-2	2,4,6-Trichlorophenol	U	540	1.0	500	540	170	
95-95-4	2,4,5-Trichlorophenol	U	540	1.0	500	540	170	
91-58-7	2-Chloronaphthalene	U	350	1.0	330	350	93	
92-52-4	1,1'-Biphenyl	U	350	1.0	330	350	78	
88-74-4	2-Nitroaniline	U	540	1.0	500	540	80	
131-11-3	Dimethyl Phthalate	U	350	1.0	330	350	84	
606-20-2	2,6-Dinitrotoluene	U	350	1.0	330	350	85	
208-96-8	Acenaphthylene	U	350	1.0	330	350	75	
99-09-2	3-Nitroaniline	U	540	1.0	500	540	100	
83-32-9	Acenaphthene	U	350	1.0	330	350	70	
51-28-5	2,4-Dinitrophenol	U	1300	1.0	1200	1300	400	
132-64-9	Dibenzofuran	U	350	1.0	330	350	85	
100-02-7	4-Nitrophenol	U UJ	1300	1.0	1200	1300	330	JCB
121-14-2	2,4-Dinitrotoluene	U	350	1.0	330	350	91	
84-66-2	Diethylphthalate	U	350	1.0	330	350	86	
7005-72-3	4-Chlorophenyl-phenylether	U	350	1.0	330	350	84	
100-01-6	4-Nitroaniline	U	540	1.0	500	540	140	
534-52-1	4,6-Dinitro-2-Methylphenol	U	1300	1.0	1200	1300	360	
86-30-6	N-Nitrosodiphenylamine	U	710	1.0	660	710	240	
101-55-3	4-Bromophenyl-phenylether	U	350	1.0	330	350	91	
1912-24-9	Atrazine	U	350	1.0	330	350	98	
87-86-5	Pentachlorophenol	U	880	1.0	820	880	250	
120-12-7	Anthracene	U	350	1.0	330	350	90	
86-74-8	Carbazole	U	540	1.0	500	540	120	

LW 4/19/09

2

KATAHDIN ANALYTICAL SERVICES
Report of Analytical Results

Client: CH2MHill
Project: TO-009 Lejeune
PO No:
Sample Date: 01/24/09
Received Date: 01/27/09
Extraction Date: 02/02/09
Analysis Date: 15-FEB-2009 22:12
Report Date: 02/20/2009
Matrix: SOIL
% Solids: 93.1

Lab ID: SC0411-3
Client ID: MR08-SS353-09A
SDG: TO9-46
Extracted by: CB
Extraction Method: SW846 3550
Analyst: JLP
Analysis Method: SW846 8270C
Lab Prep Batch: WG60395
Units: ug/Kgdrywt

CAS#	Compound	Flags	Results	DF	PQL	Adj.PQL	Adj.MDL
84-74-2	Di-n-butylphthalate	U	350	1.0	330	350	110
85-68-7	Butylbenzylphthalate	U	350	1.0	330	350	100
91-94-1	3,3'-Dichlorobenzidine	U	540	1.0	500	540	120
218-01-9	Chrysene	U	350	1.0	330	350	100
117-81-7	bis(2-Ethylhexyl)phthalate		560	1.0	330	350	100
117-84-0	Di-n-octylphthalate	U	350	1.0	330	350	230
367-12-4	2-Fluorophenol		67%				
13127-88-3	Phenol-D6		73%				
4165-60-0	Nitrobenzene-D5		64%				
321-60-8	2-Fluorobiphenyl		71%				
118-79-6	2,4,6-Tribromophenol		75%				
1718-51-0	Terphenyl-D14		70%				

MW 4/17/09

3

KATAHDIN ANALYTICAL SERVICES
Report of Analytical Results

Client: CH2MHill
Project: TO-009 Lejeune
PO No:
Sample Date: 01/24/09
Received Date: 01/27/09
Extraction Date: 02/02/09
Analysis Date: 15-FEB-2009 19:25
Report Date: 02/20/2009
Matrix: SOIL
% Solids: 82.0

Lab ID: SC0411-5
Client ID: MR08-IS353-1-2-09A
SDG: TO9-46
Extracted by: CB
Extraction Method: SW846 3550
Analyst: JLP
Analysis Method: SW846 8270C
Lab Prep Batch: WG60395
Units: ug/Kgdrywt

CAS#	Compound	Flags	Results	DF	PQL	Adj.PQL	Adj.MDL	
100-52-7	Benzaldehyde	~~U~~ UJ	610	1.0	500	610	150	JCB
108-95-2	Phenol	U	610	1.0	500	610	190	
111-44-4	Bis(2-Chloroethyl)ether	U	400	1.0	330	400	99	
95-57-8	2-Chlorophenol	U	610	1.0	500	610	200	
95-48-7	2-Methylphenol	U	730	1.0	600	730	240	
108-60-1	2,2'-Oxybis(1-chloropropane)	U	400	1.0	330	400	110	
98-86-2	Acetophenone	U	730	1.0	600	730	220	
621-64-7	N-Nitroso-di-n-propylamine	U	400	1.0	330	400	100	
65794-96-9	3&4-Methylphenol	U	730	1.0	600	730	230	
67-72-1	Hexachloroethane	U	400	1.0	330	400	120	
98-95-3	Nitrobenzene	U	400	1.0	330	400	110	
78-59-1	Isophorone	U	400	1.0	330	400	91	
88-75-5	2-Nitrophenol	U	730	1.0	600	730	200	
105-67-9	2,4-Dimethylphenol	U	610	1.0	500	610	200	
111-91-1	Bis(2-Chloroethoxy)methane	U	400	1.0	330	400	120	
120-83-2	2,4-Dichlorophenol	U	610	1.0	500	610	180	
106-47-8	4-Chloroaniline	U	610	1.0	500	610	140	
105-60-2	Caprolactam	U	610	1.0	500	610	180	
59-50-7	4-Chloro-3-Methylphenol	U	610	1.0	500	610	200	
88-06-2	2,4,6-Trichlorophenol	U	610	1.0	500	610	190	
95-95-4	2,4,5-Trichlorophenol	U	610	1.0	500	610	190	
91-58-7	2-Chloronaphthalene	U	400	1.0	330	400	110	
92-52-4	1,1'-Biphenyl	U	400	1.0	330	400	89	
88-74-4	2-Nitroaniline	U	610	1.0	500	610	91	
131-11-3	Dimethyl Phthalate	U	400	1.0	330	400	95	
606-20-2	2,6-Dinitrotoluene	U	400	1.0	330	400	96	
208-96-8	Acenaphthylene	U	400	1.0	330	400	85	
99-09-2	3-Nitroaniline	U	610	1.0	500	610	110	
83-32-9	Acenaphthene	U	400	1.0	330	400	79	
51-28-5	2,4-Dinitrophenol	U	1500	1.0	1200	1500	460	
132-64-9	Dibenzofuran	U	400	1.0	330	400	96	
100-02-7	4-Nitrophenol	~~U~~ UJ	1500	1.0	1200	1500	380	JCB
121-14-2	2,4-Dinitrotoluene	U	400	1.0	330	400	100	
84-66-2	Diethylphthalate	U	400	1.0	330	400	98	
7005-72-3	4-Chlorophenyl-phenylether	U	400	1.0	330	400	95	
100-01-6	4-Nitroaniline	U	610	1.0	500	610	160	
534-52-1	4,6-Dinitro-2-Methylphenol	U	1500	1.0	1200	1500	410	
86-30-6	N-Nitrosodiphenylamine	U	800	1.0	660	800	270	
101-55-3	4-Bromophenyl-phenylether	U	400	1.0	330	400	100	
1912-24-9	Atrazine	U	400	1.0	330	400	110	
87-86-5	Pentachlorophenol	U	1000	1.0	820	1000	290	
120-12-7	Anthracene	U	400	1.0	330	400	100	
86-74-8	Carbazole	U	610	1.0	500	610	140	

MW
4/17/09

3

KATAHDIN ANALYTICAL SERVICES
Report of Analytical Results

Client: CH2MHill
Project: TO-009 Lejeune
PO No:
Sample Date: 01/24/09
Received Date: 01/27/09
Extraction Date: 02/02/09
Analysis Date: 15-FEB-2009 19:25
Report Date: 02/20/2009
Matrix: SOIL
% Solids: 82.0

Lab ID: SC0411-5
Client ID: MR08-IS353-1-2-09A
SDG: TO9-46
Extracted by: CB
Extraction Method: SW846 3550
Analyst: JLP
Analysis Method: SW846 8270C
Lab Prep Batch: WG60395
Units: ug/Kgdrywt

CAS#	Compound	Flags	Results	DF	PQL	Adj.PQL	Adj.MDL
84-74-2	Di-n-butylphthalate	U	400	1.0	330	400	120
85-68-7	Butylbenzylphthalate	U	400	1.0	330	400	110
91-94-1	3,3'-Dichlorobenzidine	U	610	1.0	500	610	140
218-01-9	Chrysene	U	400	1.0	330	400	120
117-81-7	bis(2-Ethylhexyl)phthalate	J	120	1.0	330	400	120
117-84-0	Di-n-octylphthalate	U	400	1.0	330	400	260
367-12-4	2-Fluorophenol		65%				
13127-88-3	Phenol-D6		78%				
4165-60-0	Nitrobenzene-D5		59%				
321-60-8	2-Fluorobiphenyl		64%				
118-79-6	2,4,6-Tribromophenol		70%				
1718-51-0	Terphenyl-D14		75%				

lw
4/17/09

4

KATAHDIN ANALYTICAL SERVICES
Report of Analytical Results

Client: CH2MHill
Project: TO-009 Lejeune
PO No:
Sample Date: 01/24/09
Received Date: 01/27/09
Extraction Date: 02/02/09
Analysis Date: 15-FEB-2009 22:54
Report Date: 02/20/2009
Matrix: SOIL
% Solids: 86.8

Lab ID: SC0411-7
Client ID: MR08-SS328-09A
SDG: TO9-46
Extracted by: CB
Extraction Method: SW846 3550
Analyst: JLP
Analysis Method: SW846 8270C
Lab Prep Batch: WG60395
Units: ug/Kgdrywt

CAS#	Compound	Flags	Results	DF	PQL	Adj.PQL	Adj.MDL	
100-52-7	Benzaldehyde	~~U~~ UJ	580	1.0	500	580	140	JCB
108-95-2	Phenol	U	580	1.0	500	580	180	
111-44-4	Bis(2-Chloroethyl)ether	U	380	1.0	330	380	93	
95-57-8	2-Chlorophenol	U	580	1.0	500	580	190	
95-48-7	2-Methylphenol	U	690	1.0	600	690	230	
108-60-1	2,2'-Oxybis(1-chloropropane)	U	380	1.0	330	380	100	
98-86-2	Acetophenone	U	690	1.0	600	690	200	
621-64-7	N-Nitroso-di-n-propylamine	U	380	1.0	330	380	96	
65794-96-9	3&4-Methylphenol	U	690	1.0	600	690	220	
67-72-1	Hexachloroethane	U	380	1.0	330	380	110	
98-95-3	Nitrobenzene	U	380	1.0	330	380	100	
78-59-1	Isophorone	U	380	1.0	330	380	86	
88-75-5	2-Nitrophenol	U	690	1.0	600	690	190	
105-67-9	2,4-Dimethylphenol	U	580	1.0	500	580	190	
111-91-1	Bis(2-Chloroethoxy)methane	U	380	1.0	330	380	110	
120-83-2	2,4-Dichlorophenol	U	580	1.0	500	580	170	
106-47-8	4-Chloroaniline	U	580	1.0	500	580	140	
105-60-2	Caprolactam	U	580	1.0	500	580	160	
59-50-7	4-Chloro-3-Methylphenol	U	580	1.0	500	580	190	
88-06-2	2,4,6-Trichlorophenol	U	580	1.0	500	580	180	
95-95-4	2,4,5-Trichlorophenol	U	580	1.0	500	580	180	
91-58-7	2-Chloronaphthalene	U	380	1.0	330	380	100	
92-52-4	1,1'-Biphenyl	U	380	1.0	330	380	84	
88-74-4	2-Nitroaniline	U	580	1.0	500	580	86	
131-11-3	Dimethyl Phthalate	U	380	1.0	330	380	90	
606-20-2	2,6-Dinitrotoluene	U	380	1.0	330	380	91	
208-96-8	Acenaphthylene	U	380	1.0	330	380	80	
99-09-2	3-Nitroaniline	U	580	1.0	500	580	110	
83-32-9	Acenaphthene	U	380	1.0	330	380	75	
51-28-5	2,4-Dinitrophenol	U	1400	1.0	1200	1400	430	
132-64-9	Dibenzofuran	U	380	1.0	330	380	91	
100-02-7	4-Nitrophenol	~~U~~ UJ	1400	1.0	1200	1400	360	JCB
121-14-2	2,4-Dinitrotoluene	U	380	1.0	330	380	98	
84-66-2	Diethylphthalate	U	380	1.0	330	380	92	
7005-72-3	4-Chlorophenyl-phenylether	U	380	1.0	330	380	90	
100-01-6	4-Nitroaniline	U	580	1.0	500	580	150	
534-52-1	4,6-Dinitro-2-Methylphenol	U	1400	1.0	1200	1400	390	
86-30-6	N-Nitrosodiphenylamine	U	760	1.0	660	760	250	
101-55-3	4-Bromophenyl-phenylether	U	380	1.0	330	380	98	
1912-24-9	Atrazine	U	380	1.0	330	380	100	
87-86-5	Pentachlorophenol	U	940	1.0	820	940	270	
120-12-7	Anthracene	U	380	1.0	330	380	97	
86-74-8	Carbazole	U	580	1.0	500	580	130	

MW 4/17/09

KATAHDIN ANALYTICAL SERVICES
Report of Analytical Results

Client: CH2MHill
Project: TO-009 Lejeune
PO No:
Sample Date: 01/24/09
Received Date: 01/27/09
Extraction Date: 02/02/09
Analysis Date: 15-FEB-2009 22:54
Report Date: 02/20/2009
Matrix: SOIL
% Solids: 86.8

Lab ID: SC0411-7
Client ID: MR08-SS328-09A
SDG: TO9-46
Extracted by: CB
Extraction Method: SW846 3550
Analyst: JLP
Analysis Method: SW846 8270C
Lab Prep Batch: WG60395
Units: ug/Kgdrywt

CAS#	Compound	Flags	Results	DF	PQL	Adj.PQL	Adj.MDL
84-74-2	Di-n-butylphthalate	U	380	1.0	330	380	120
85-68-7	Butylbenzylphthalate	U	380	1.0	330	380	110
91-94-1	3,3'-Dichlorobenzidine	U	580	1.0	500	580	130
218-01-9	Chrysene		830	1.0	330	380	110
117-81-7	bis(2-Ethylhexyl)phthalate	U	380	1.0	330	380	110
117-84-0	Di-n-octylphthalate	U	380	1.0	330	380	240
367-12-4	2-Fluorophenol		66%				
13127-88-3	Phenol-D6		70%				
4165-60-0	Nitrobenzene-D5		62%				
321-60-8	2-Fluorobiphenyl		72%				
118-79-6	2,4,6-Tribromophenol		75%				
1718-51-0	Terphenyl-D14		73%				

kw 4/17/09

5

KATAHDIN ANALYTICAL SERVICES
Report of Analytical Results

Client: CH2MHill
Project: TO-009 Lejeune
PO No:
Sample Date: 01/24/09
Received Date: 01/27/09
Extraction Date: 02/02/09
Analysis Date: 15-FEB-2009 20:07
Report Date: 02/20/2009
Matrix: SOIL
% Solids: 92.0

Lab ID: SC0411-9
Client ID: MR08-IS328-4-5-09A
SDG: TO9-46
Extracted by: CB
Extraction Method: SW846 3550
Analyst: JLP
Analysis Method: SW846 8270C
Lab Prep Batch: WG60395
Units: ug/Kgdrywt

CAS#	Compound	Flags	Results	DF	PQL	Adj.PQL	Adj.MDL	
100-52-7	Benzaldehyde	~~U~~ UJ	540	1.0	500	540	130	JCB
108-95-2	Phenol	U	540	1.0	500	540	170	
111-44-4	Bis(2-Chloroethyl)ether	U	360	1.0	330	360	88	
95-57-8	2-Chlorophenol	U	540	1.0	500	540	180	
95-48-7	2-Methylphenol	U	650	1.0	600	650	220	
108-60-1	2,2'-Oxybis(1-chloropropane)	U	360	1.0	330	360	97	
98-86-2	Acetophenone	U	650	1.0	600	650	190	
621-64-7	N-Nitroso-di-n-propylamine	U	360	1.0	330	360	90	
65794-96-9	3&4-Methylphenol	U	650	1.0	600	650	200	
67-72-1	Hexachloroethane	U	360	1.0	330	360	100	
98-95-3	Nitrobenzene	U	360	1.0	330	360	99	
78-59-1	Isophorone	U	360	1.0	330	360	82	
88-75-5	2-Nitrophenol	U	650	1.0	600	650	180	
105-67-9	2,4-Dimethylphenol	U	540	1.0	500	540	180	
111-91-1	Bis(2-Chloroethoxy)methane	U	360	1.0	330	360	100	
120-83-2	2,4-Dichlorophenol	U	540	1.0	500	540	160	
106-47-8	4-Chloroaniline	U	540	1.0	500	540	130	
105-60-2	Caprolactam	U	540	1.0	500	540	160	
59-50-7	4-Chloro-3-Methylphenol	U	540	1.0	500	540	180	
88-06-2	2,4,6-Trichlorophenol	U	540	1.0	500	540	170	
95-95-4	2,4,5-Trichlorophenol	U	540	1.0	500	540	170	
91-58-7	2-Chloronaphthalene	U	360	1.0	330	360	94	
92-52-4	1,1'-Biphenyl	U	360	1.0	330	360	79	
88-74-4	2-Nitroaniline	U	540	1.0	500	540	82	
131-11-3	Dimethyl Phthalate	U	360	1.0	330	360	85	
606-20-2	2,6-Dinitrotoluene	U	360	1.0	330	360	86	
208-96-8	Acenaphthylene	U	360	1.0	330	360	76	
99-09-2	3-Nitroaniline	U	540	1.0	500	540	100	
83-32-9	Acenaphthene	U	360	1.0	330	360	71	
51-28-5	2,4-Dinitrophenol	U	1300	1.0	1200	1300	410	
132-64-9	Dibenzofuran	U	360	1.0	330	360	86	
100-02-7	4-Nitrophenol	~~U~~ UJ	1300	1.0	1200	1300	340	JCB
121-14-2	2,4-Dinitrotoluene	U	360	1.0	330	360	92	
84-66-2	Diethylphthalate	U	360	1.0	330	360	87	
7005-72-3	4-Chlorophenyl-phenylether	U	360	1.0	330	360	85	
100-01-6	4-Nitroaniline	U	540	1.0	500	540	140	
534-52-1	4,6-Dinitro-2-Methylphenol	U	1300	1.0	1200	1300	370	
86-30-6	N-Nitrosodiphenylamine	U	720	1.0	660	720	240	
101-55-3	4-Bromophenyl-phenylether	U	360	1.0	330	360	92	
1912-24-9	Atrazine	U	360	1.0	330	360	99	
87-86-5	Pentachlorophenol	U	890	1.0	820	890	260	
120-12-7	Anthracene	U	360	1.0	330	360	91	
86-74-8	Carbazole	U	540	1.0	500	540	120	

Aw 4/17/09

5

KATAHDIN ANALYTICAL SERVICES
Report of Analytical Results

Client: CH2MHill
Project: TO-009 Lejeune
PO No:
Sample Date: 01/24/09
Received Date: 01/27/09
Extraction Date: 02/02/09
Analysis Date: 15-FEB-2009 20:07
Report Date: 02/20/2009
Matrix: SOIL
% Solids: 92.0

Lab ID: SC0411-9
Client ID: MR08-IS328-4-5-09A
SDG: TO9-46
Extracted by: CB
Extraction Method: SW846 3550
Analyst: JLP
Analysis Method: SW846 8270C
Lab Prep Batch: WG60395
Units: ug/Kgdrywt

CAS#	Compound	Flags	Results	DF	PQL	Adj.PQL	Adj.MDL
84-74-2	Di-n-butylphthalate	U	360	1.0	330	360	110
85-68-7	Butylbenzylphthalate	U	360	1.0	330	360	100
91-94-1	3,3'-Dichlorobenzidine	U	540	1.0	500	540	120
218-01-9	Chrysene	U	360	1.0	330	360	100
117-81-7	bis(2-Ethylhexyl)phthalate	J	200	1.0	330	360	110
117-84-0	Di-n-octylphthalate	U	360	1.0	330	360	230
367-12-4	2-Fluorophenol		73%				
13127-88-3	Phenol-D6		94%				
4165-60-0	Nitrobenzene-D5		73%				
321-60-8	2-Fluorobiphenyl		85%				
118-79-6	2,4,6-Tribromophenol		63%				
1718-51-0	Terphenyl-D14		77%				

lw 4/17/09

KATAHDIN ANALYTICAL SERVICES
Report of Analytical Results

Client: CH2MHill
Project: TO-009 Lejeune
PO No:
Sample Date: 01/24/09
Received Date: 01/27/09
Extraction Date: 02/02/09
Analysis Date: 15-FEB-2009 20:49
Report Date: 02/20/2009
Matrix: SOIL
% Solids: 90.0

Lab ID: SC0411-11
Client ID: MR08-SS347-09A
SDG: TO9-46
Extracted by: CB
Extraction Method: SW846 3550
Analyst: JLP
Analysis Method: SW846 8270C
Lab Prep Batch: WG60395
Units: ug/Kgdrywt

CAS#	Compound	Flags	Results	DF	PQL	Adj.PQL	Adj.MDL	
100-52-7	Benzaldehyde	~~U~~ UJ	560	1.0	500	560	130	JCB
108-95-2	Phenol	U	560	1.0	500	560	170	
111-44-4	Bis(2-Chloroethyl)ether	U	370	1.0	330	370	90	
95-57-8	2-Chlorophenol	U	560	1.0	500	560	180	
95-48-7	2-Methylphenol	U	670	1.0	600	670	220	
108-60-1	2,2'-Oxybis(1-chloropropane)	U	370	1.0	330	370	99	
98-86-2	Acetophenone	U	670	1.0	600	670	200	
621-64-7	N-Nitroso-di-n-propylamine	U	370	1.0	330	370	92	
65794-96-9	3&4-Methylphenol	U	670	1.0	600	670	210	
67-72-1	Hexachloroethane	U	370	1.0	330	370	110	
98-95-3	Nitrobenzene	U	370	1.0	330	370	100	
78-59-1	Isophorone	U	370	1.0	330	370	83	
88-75-5	2-Nitrophenol	U	670	1.0	600	670	180	
105-67-9	2,4-Dimethylphenol	U	560	1.0	500	560	180	
111-91-1	Bis(2-Chloroethoxy)methane	U	370	1.0	330	370	110	
120-83-2	2,4-Dichlorophenol	U	560	1.0	500	560	170	
106-47-8	4-Chloroaniline	U	560	1.0	500	560	130	
105-60-2	Caprolactam	U	560	1.0	500	560	160	
59-50-7	4-Chloro-3-Methylphenol	U	560	1.0	500	560	180	
88-06-2	2,4,6-Trichlorophenol	U	560	1.0	500	560	170	
95-95-4	2,4,5-Trichlorophenol	U	560	1.0	500	560	170	
91-58-7	2-Chloronaphthalene	U	370	1.0	330	370	97	
92-52-4	1,1'-Biphenyl	U	370	1.0	330	370	81	
88-74-4	2-Nitroaniline	U	560	1.0	500	560	83	
131-11-3	Dimethyl Phthalate	U	370	1.0	330	370	87	
606-20-2	2,6-Dinitrotoluene	U	370	1.0	330	370	88	
208-96-8	Acenaphthylene	U	370	1.0	330	370	78	
99-09-2	3-Nitroaniline	U	560	1.0	500	560	100	
83-32-9	Acenaphthene	U	370	1.0	330	370	72	
51-28-5	2,4-Dinitrophenol	U	1300	1.0	1200	1300	420	
132-64-9	Dibenzofuran	U	370	1.0	330	370	88	
100-02-7	4-Nitrophenol	~~U~~ UJ	1300	1.0	1200	1300	340	JCB
121-14-2	2,4-Dinitrotoluene	U	370	1.0	330	370	94	
84-66-2	Diethylphthalate	U	370	1.0	330	370	89	
7005-72-3	4-Chlorophenyl-phenylether	U	370	1.0	330	370	87	
100-01-6	4-Nitroaniline	U	560	1.0	500	560	150	
534-52-1	4,6-Dinitro-2-Methylphenol	U	1300	1.0	1200	1300	370	
86-30-6	N-Nitrosodiphenylamine	U	730	1.0	660	730	240	
101-55-3	4-Bromophenyl-phenylether	U	370	1.0	330	370	94	
1912-24-9	Atrazine	U	370	1.0	330	370	100	
87-86-5	Pentachlorophenol	U	910	1.0	820	910	260	
120-12-7	Anthracene	U	370	1.0	330	370	93	
86-74-8	Carbazole	U	560	1.0	500	560	120	

4/17/09

KATAHDIN ANALYTICAL SERVICES
Report of Analytical Results

6

Client: CH2MHill
Project: TO-009 Lejeune
PO No:
Sample Date: 01/24/09
Received Date: 01/27/09
Extraction Date: 02/02/09
Analysis Date: 15-FEB-2009 20:49
Report Date: 02/20/2009
Matrix: SOIL
% Solids: 90.0

Lab ID: SC0411-11
Client ID: MR08-SS347-09A
SDG: TO9-46
Extracted by: CB
Extraction Method: SW846 3550
Analyst: JLP
Analysis Method: SW846 8270C
Lab Prep Batch: WG60395
Units: ug/Kgdrywt

CAS#	Compound	Flags	Results	DF	PQL	Adj.PQL	Adj.MDL
84-74-2	Di-n-butylphthalate	U	370	1.0	330	370	110
85-68-7	Butylbenzylphthalate	U	370	1.0	330	370	100
91-94-1	3,3'-Dichlorobenzidine	U	560	1.0	500	560	130
218-01-9	Chrysene	U	370	1.0	330	370	100
117-81-7	bis(2-Ethylhexyl)phthalate	U	370	1.0	330	370	110
117-84-0	Di-n-octylphthalate	U	370	1.0	330	370	230
367-12-4	2-Fluorophenol		66%				
13127-88-3	Phenol-D6		74%				
4165-60-0	Nitrobenzene-D5		56%				
321-60-8	2-Fluorobiphenyl		66%				
118-79-6	2,4,6-Tribromophenol		60%				
1718-51-0	Terphenyl-D14		67%				

fw
4/17/09

KATAHDIN ANALYTICAL SERVICES
Report of Analytical Results

7

Client: CH2MHill
Project: TO-009 Lejeune
PO No:
Sample Date: 01/24/09
Received Date: 01/27/09
Extraction Date: 02/02/09
Analysis Date: 15-FEB-2009 21:30
Report Date: 02/20/2009
Matrix: SOIL
% Solids: 88.6

Lab ID: SC0411-13
Client ID: MR08-IS347-3-4-09A
SDG: TO9-46
Extracted by: CB
Extraction Method: SW846 3550
Analyst: JLP
Analysis Method: SW846 8270C
Lab Prep Batch: WG60395
Units: ug/Kgdrywt

CAS#	Compound	Flags	Results	DF	PQL	Adj.PQL	Adj.MDL	
100-52-7	Benzaldehyde	~~U~~ UJ	560	1.0	500	560	140	JCB
108-95-2	Phenol	U	560	1.0	500	560	180	
111-44-4	Bis(2-Chloroethyl)ether	U	370	1.0	330	370	91	
95-57-8	2-Chlorophenol	U	560	1.0	500	560	180	
95-48-7	2-Methylphenol	U	680	1.0	600	680	220	
108-60-1	2,2'-Oxybis(1-chloropropane)	U	370	1.0	330	370	100	
98-86-2	Acetophenone	U	680	1.0	600	680	200	
621-64-7	N-Nitroso-di-n-propylamine	U	370	1.0	330	370	94	
65794-96-9	3&4-Methylphenol	U	680	1.0	600	680	210	
67-72-1	Hexachloroethane	U	370	1.0	330	370	110	
98-95-3	Nitrobenzene	U	370	1.0	330	370	100	
78-59-1	Isophorone	U	370	1.0	330	370	85	
88-75-5	2-Nitrophenol	U	680	1.0	600	680	190	
105-67-9	2,4-Dimethylphenol	U	560	1.0	500	560	190	
111-91-1	Bis(2-Chloroethoxy)methane	U	370	1.0	330	370	110	
120-83-2	2,4-Dichlorophenol	U	560	1.0	500	560	170	
106-47-8	4-Chloroaniline	U	560	1.0	500	560	130	
105-60-2	Caprolactam	U	560	1.0	500	560	160	
59-50-7	4-Chloro-3-Methylphenol	U	560	1.0	500	560	190	
88-06-2	2,4,6-Trichlorophenol	U	560	1.0	500	560	170	
95-95-4	2,4,5-Trichlorophenol	U	560	1.0	500	560	170	
91-58-7	2-Chloronaphthalene	U	370	1.0	330	370	98	
92-52-4	1,1'-Biphenyl	U	370	1.0	330	370	82	
88-74-4	2-Nitroaniline	U	560	1.0	500	560	85	
131-11-3	Dimethyl Phthalate	U	370	1.0	330	370	88	
606-20-2	2,6-Dinitrotoluene	U	370	1.0	330	370	89	
208-96-8	Acenaphthylene	U	370	1.0	330	370	79	
99-09-2	3-Nitroaniline	U	560	1.0	500	560	110	
83-32-9	Acenaphthene	U	370	1.0	330	370	73	
51-28-5	2,4-Dinitrophenol	U	1400	1.0	1200	1400	420	
132-64-9	Dibenzofuran	U	370	1.0	330	370	89	
100-02-7	4-Nitrophenol	~~U~~ UJ	1400	1.0	1200	1400	350	JCB
121-14-2	2,4-Dinitrotoluene	U	370	1.0	330	370	96	
84-66-2	Diethylphthalate	U	370	1.0	330	370	90	
7005-72-3	4-Chlorophenyl-phenylether	U	370	1.0	330	370	88	
100-01-6	4-Nitroaniline	U	560	1.0	500	560	150	
534-52-1	4,6-Dinitro-2-Methylphenol	U	1400	1.0	1200	1400	380	
86-30-6	N-Nitrosodiphenylamine	U	740	1.0	660	740	250	
101-55-3	4-Bromophenyl-phenylether	U	370	1.0	330	370	96	
1912-24-9	Atrazine	U	370	1.0	330	370	100	
87-86-5	Pentachlorophenol	U	920	1.0	820	920	270	
120-12-7	Anthracene	U	370	1.0	330	370	95	
86-74-8	Carbazole	U	560	1.0	500	560	120	

MW
4/17/09

7

KATAHDIN ANALYTICAL SERVICES
Report of Analytical Results

Client: CH2MHill
Project: TO-009 Lejeune
PO No:
Sample Date: 01/24/09
Received Date: 01/27/09
Extraction Date: 02/02/09
Analysis Date: 15-FEB-2009 21:30
Report Date: 02/20/2009
Matrix: SOIL
% Solids: 88.6

Lab ID: SC0411-13
Client ID: MR08-IS347-3-4-09A
SDG: TO9-46
Extracted by: CB
Extraction Method: SW846 3550
Analyst: JLP
Analysis Method: SW846 8270C
Lab Prep Batch: WG60395
Units: ug/Kgdrywt

CAS#	Compound	Flags	Results	DF	PQL	Adj.PQL	Adj.MDL
84-74-2	Di-n-butylphthalate	U	370	1.0	330	370	110
85-68-7	Butylbenzylphthalate	U	370	1.0	330	370	100
91-94-1	3,3'-Dichlorobenzidine	U	560	1.0	500	560	130
218-01-9	Chrysene	U	370	1.0	330	370	110
117-81-7	bis(2-Ethylhexyl)phthalate	U	370	1.0	330	370	110
117-84-0	Di-n-octylphthalate	U	370	1.0	330	370	240
367-12-4	2-Fluorophenol		68%				
13127-88-3	Phenol-D6		85%				
4165-60-0	Nitrobenzene-D5		65%				
321-60-8	2-Fluorobiphenyl		72%				
118-79-6	2,4,6-Tribromophenol		70%				
1718-51-0	Terphenyl-D14		66%				

llw
4/17/09

8

KATAHDIN ANALYTICAL SERVICES
Report of Analytical Results

Client: CH2MHill
Project: TO-009 Lejeune
PO No:
Sample Date: 01/25/09
Received Date: 01/27/09
Extraction Date: 02/02/09
Analysis Date: 18-FEB-2009 12:40
Report Date: 02/20/2009
Matrix: SOIL
% Solids: 89.6

Lab ID: SC0411-15
Client ID: MR08-SS279-09A
SDG: TO9-46
Extracted by: CB
Extraction Method: SW846 3550
Analyst: JLP
Analysis Method: SW846 8270C
Lab Prep Batch: WG60395
Units: ug/Kgdrywt

CAS#	Compound	Flags	Results	DF	PQL	Adj.PQL	Adj.MDL	
100-52-7	Benzaldehyde	~~B~~UJ	560	1.0	500	560	130	ICB
108-95-2	Phenol	U	560	1.0	500	560	170	
111-44-4	Bis(2-Chloroethyl)ether	U	370	1.0	330	370	90	
95-57-8	2-Chlorophenol	U	560	1.0	500	560	180	
95-48-7	2-Methylphenol	U	670	1.0	600	670	220	
108-60-1	2,2'-Oxybis(1-chloropropane)	U	370	1.0	330	370	99	
98-86-2	Acetophenone	U	670	1.0	600	670	200	
621-64-7	N-Nitroso-di-n-propylamine	U	370	1.0	330	370	93	
65794-96-9	3&4-Methylphenol	U	670	1.0	600	670	210	
67-72-1	Hexachloroethane	U	370	1.0	330	370	110	
98-95-3	Nitrobenzene	U	370	1.0	330	370	100	
78-59-1	Isophorone	U	370	1.0	330	370	84	
88-75-5	2-Nitrophenol	U	670	1.0	600	670	190	
105-67-9	2,4-Dimethylphenol	U	560	1.0	500	560	180	
111-91-1	Bis(2-Chloroethoxy)methane	U	370	1.0	330	370	110	
120-83-2	2,4-Dichlorophenol	U	560	1.0	500	560	170	
106-47-8	4-Chloroaniline	U	560	1.0	500	560	130	
105-60-2	Caprolactam	U	560	1.0	500	560	160	
59-50-7	4-Chloro-3-Methylphenol	U	560	1.0	500	560	180	
88-06-2	2,4,6-Trichlorophenol	U	560	1.0	500	560	170	
95-95-4	2,4,5-Trichlorophenol	U	560	1.0	500	560	170	
91-58-7	2-Chloronaphthalene	U	370	1.0	330	370	97	
92-52-4	1,1'-Biphenyl	U	370	1.0	330	370	82	
88-74-4	2-Nitroaniline	U	560	1.0	500	560	84	
131-11-3	Dimethyl Phthalate	U	370	1.0	330	370	87	
606-20-2	2,6-Dinitrotoluene	U	370	1.0	330	370	88	
208-96-8	Acenaphthylene	U	370	1.0	330	370	78	
99-09-2	3-Nitroaniline	U	560	1.0	500	560	100	
83-32-9	Acenaphthene	U	370	1.0	330	370	72	
51-28-5	2,4-Dinitrophenol	U	1300	1.0	1200	1300	420	
132-64-9	Dibenzofuran	U	370	1.0	330	370	88	
100-02-7	4-Nitrophenol	~~B~~UJ	1300	1.0	1200	1300	340	ICB
121-14-2	2,4-Dinitrotoluene	U	370	1.0	330	370	95	
84-66-2	Diethylphthalate	U	370	1.0	330	370	89	
7005-72-3	4-Chlorophenyl-phenylether	U	370	1.0	330	370	87	
100-01-6	4-Nitroaniline	U	560	1.0	500	560	150	
534-52-1	4,6-Dinitro-2-Methylphenol	U	1300	1.0	1200	1300	380	
86-30-6	N-Nitrosodiphenylamine	U	740	1.0	660	740	240	
101-55-3	4-Bromophenyl-phenylether	U	370	1.0	330	370	95	
1912-24-9	Atrazine	U	370	1.0	330	370	100	
87-86-5	Pentachlorophenol	U	920	1.0	820	920	260	
120-12-7	Anthracene	U	370	1.0	330	370	94	
86-74-8	Carbazole	U	560	1.0	500	560	120	

lw 4/17/09

8

KATAHDIN ANALYTICAL SERVICES
Report of Analytical Results

Client: CH2MHill
Project: TO-009 Lejeune
PO No:
Sample Date: 01/25/09
Received Date: 01/27/09
Extraction Date: 02/02/09
Analysis Date: 18-FEB-2009 12:40
Report Date: 02/20/2009
Matrix: SOIL
% Solids: 89.6

Lab ID: SC0411-15
Client ID: MR08-SS279-09A
SDG: TO9-46
Extracted by: CB
Extraction Method: SW846 3550
Analyst: JLP
Analysis Method: SW846 8270C
Lab Prep Batch: WG60395
Units: ug/Kgdrywt

CAS#	Compound	Flags	Results	DF	PQL	Adj.PQL	Adj.MDL
84-74-2	Di-n-butylphthalate	U	370	1.0	330	370	110
85-68-7	Butylbenzylphthalate	U	370	1.0	330	370	100
91-94-1	3,3'-Dichlorobenzidine	U	560	1.0	500	560	130
218-01-9	Chrysene	U	370	1.0	330	370	110
117-81-7	bis(2-Ethylhexyl)phthalate	J	130	1.0	330	370	110
117-84-0	Di-n-octylphthalate	U	370	1.0	330	370	240
367-12-4	2-Fluorophenol		63%				
13127-88-3	Phenol-D6		77%				
4165-60-0	Nitrobenzene-D5		67%				
321-60-8	2-Fluorobiphenyl		64%				
118-79-6	2,4,6-Tribromophenol		79%				
1718-51-0	Terphenyl-D14		71%				

Lew
4/17/09

9

KATAHDIN ANALYTICAL SERVICES
Report of Analytical Results

Client: CH2MHill
Project: TO-009 Lejeune
PO No:
Sample Date: 01/25/09
Received Date: 01/27/09
Extraction Date: 02/02/09
Analysis Date: 18-FEB-2009 03:05
Report Date: 02/20/2009
Matrix: SOIL
% Solids: 91.2

Lab ID: SC0411-17
Client ID: MR08-SS279D-09A
SDG: TO9-46
Extracted by: CB
Extraction Method: SW846 3550
Analyst: JCG
Analysis Method: SW846 8270C
Lab Prep Batch: WG60395
Units: ug/Kgdrywt

CAS#	Compound	Flags	Results	DF	PQL	Adj.PQL	Adj.MDL
100-52-7	Benzaldehyde	~~U~~ UJ	550	1.0	500	550	130 JCB
108-95-2	Phenol	U	550	1.0	500	550	170
111-44-4	Bis(2-Chloroethyl)ether	U	360	1.0	330	360	89
95-57-8	2-Chlorophenol	U	550	1.0	500	550	180
95-48-7	2-Methylphenol	U	660	1.0	600	660	220
108-60-1	2,2'-Oxybis(1-chloropropane)	U	360	1.0	330	360	98
98-86-2	Acetophenone	U	660	1.0	600	660	200
621-64-7	N-Nitroso-di-n-propylamine	U	360	1.0	330	360	91
65794-96-9	3&4-Methylphenol	U	660	1.0	600	660	200
67-72-1	Hexachloroethane	U	360	1.0	330	360	100
98-95-3	Nitrobenzene	U	360	1.0	330	360	100
78-59-1	Isophorone	U	360	1.0	330	360	82
88-75-5	2-Nitrophenol	U	660	1.0	600	660	180
105-67-9	2,4-Dimethylphenol	U	550	1.0	500	550	180
111-91-1	Bis(2-Chloroethoxy)methane	U	360	1.0	330	360	100
120-83-2	2,4-Dichlorophenol	U	550	1.0	500	550	160
106-47-8	4-Chloroaniline	U	550	1.0	500	550	130
105-60-2	Caprolactam	U	550	1.0	500	550	160
59-50-7	4-Chloro-3-Methylphenol	U	550	1.0	500	550	180
88-06-2	2,4,6-Trichlorophenol	U	550	1.0	500	550	170
95-95-4	2,4,5-Trichlorophenol	U	550	1.0	500	550	170
91-58-7	2-Chloronaphthalene	U	360	1.0	330	360	95
92-52-4	1,1'-Biphenyl	U	360	1.0	330	360	80
88-74-4	2-Nitroaniline	U	550	1.0	500	550	82
131-11-3	Dimethyl Phthalate	U	360	1.0	330	360	86
606-20-2	2,6-Dinitrotoluene	U	360	1.0	330	360	87
208-96-8	Acenaphthylene	U	360	1.0	330	360	77
99-09-2	3-Nitroaniline	U	550	1.0	500	550	100
83-32-9	Acenaphthene	U	360	1.0	330	360	71
51-28-5	2,4-Dinitrophenol	U	1300	1.0	1200	1300	410
132-64-9	Dibenzofuran	U	360	1.0	330	360	87
100-02-7	4-Nitrophenol	~~U~~ UJ	1300	1.0	1200	1300	340 JCB
121-14-2	2,4-Dinitrotoluene	U	360	1.0	330	360	93
84-66-2	Diethylphthalate	U	360	1.0	330	360	88
7005-72-3	4-Chlorophenyl-phenylether	U	360	1.0	330	360	86
100-01-6	4-Nitroaniline	U	550	1.0	500	550	150
534-52-1	4,6-Dinitro-2-Methylphenol	U	1300	1.0	1200	1300	370
86-30-6	N-Nitrosodiphenylamine	U	720	1.0	660	720	240
101-55-3	4-Bromophenyl-phenylether	U	360	1.0	330	360	93
1912-24-9	Atrazine	U	360	1.0	330	360	100
87-86-5	Pentachlorophenol	U	900	1.0	820	900	260
120-12-7	Anthracene	U	360	1.0	330	360	92
86-74-8	Carbazole	U	550	1.0	500	550	120

MW
4/7/09

9

KATAHDIN ANALYTICAL SERVICES
Report of Analytical Results

Client: CH2MHill
Project: TO-009 Lejeune
PO No:
Sample Date: 01/25/09
Received Date: 01/27/09
Extraction Date: 02/02/09
Analysis Date: 18-FEB-2009 03:05
Report Date: 02/20/2009
Matrix: SOIL
% Solids: 91.2

Lab ID: SC0411-17
Client ID: MR08-SS279D-09A
SDG: TO9-46
Extracted by: CB
Extraction Method: SW846 3550
Analyst: JCG
Analysis Method: SW846 8270C
Lab Prep Batch: WG60395
Units: ug/Kgdrywt

CAS#	Compound	Flags	Results	DF	PQL	Adj.PQL	Adj.MDL	
84-74-2	Di-n-butylphthalate	U	360	1.0	330	360	110	
85-68-7	Butylbenzylphthalate	U	360	1.0	330	360	100	
91-94-1	3,3'-Dichlorobenzidine	U	550	1.0	500	550	120	
218-01-9	Chrysene	U	360	1.0	330	360	100	
117-81-7	bis(2-Ethylhexyl)phthalate	J	120	1.0	330	360	110	
117-84-0	Di-n-octylphthalate	~~U~~ UJ	360	1.0	330	360	230	CCU
367-12-4	2-Fluorophenol		78%					
13127-88-3	Phenol-D6		93%					
4165-60-0	Nitrobenzene-D5		78%					
321-60-8	2-Fluorobiphenyl		82%					
118-79-6	2,4,6-Tribromophenol		96%					
1718-51-0	Terphenyl-D14		86%					

LW
4/17/09

KATAHDIN ANALYTICAL SERVICES
Report of Analytical Results

10

Client: CH2MHill
Project: TO-009 Lejeune
PO No:
Sample Date: 01/25/09
Received Date: 01/27/09
Extraction Date: 02/02/09
Analysis Date: 16-FEB-2009 13:31
Report Date: 02/20/2009
Matrix: SOIL
% Solids: 85.4

Lab ID: SC0411-19
Client ID: MR08-IS279-1-2-09A
SDG: TO9-46
Extracted by: CB
Extraction Method: SW846 3550
Analyst: JCG
Analysis Method: SW846 8270C
Lab Prep Batch: WG60395
Units: ug/Kgdrywt

CAS#	Compound	Flags	Results	DF	PQL	Adj.PQL	Adj.MDL	
100-52-7	Benzaldehyde	~~J~~ UJ	580	1.0	500	580	140	ICB
108-95-2	Phenol	U	580	1.0	500	580	180	
111-44-4	Bis(2-Chloroethyl)ether	U	390	1.0	330	390	95	
95-57-8	2-Chlorophenol	U	580	1.0	500	580	190	
95-48-7	2-Methylphenol	U	700	1.0	600	700	230	
108-60-1	2,2'-Oxybis(1-chloropropane)	U	390	1.0	330	390	100	
98-86-2	Acetophenone	U	700	1.0	600	700	210	
621-64-7	N-Nitroso-di-n-propylamine	U	390	1.0	330	390	97	
65794-96-9	3&4-Methylphenol	U	700	1.0	600	700	220	
67-72-1	Hexachloroethane	U	390	1.0	330	390	110	
98-95-3	Nitrobenzene	U	390	1.0	330	390	110	
78-59-1	Isophorone	U	390	1.0	330	390	88	
88-75-5	2-Nitrophenol	U	700	1.0	600	700	200	
105-67-9	2,4-Dimethylphenol	U	580	1.0	500	580	190	
111-91-1	Bis(2-Chloroethoxy)methane	U	390	1.0	330	390	110	
120-83-2	2,4-Dichlorophenol	U	580	1.0	500	580	180	
106-47-8	4-Chloroaniline	U	580	1.0	500	580	140	
105-60-2	Caprolactam	U	580	1.0	500	580	170	
59-50-7	4-Chloro-3-Methylphenol	U	580	1.0	500	580	190	
88-06-2	2,4,6-Trichlorophenol	U	580	1.0	500	580	180	
95-95-4	2,4,5-Trichlorophenol	U	580	1.0	500	580	180	
91-58-7	2-Chloronaphthalene	U	390	1.0	330	390	100	
92-52-4	1,1'-Biphenyl	U	390	1.0	330	390	85	
88-74-4	2-Nitroaniline	U	580	1.0	500	580	88	
131-11-3	Dimethyl Phthalate	U	390	1.0	330	390	91	
606-20-2	2,6-Dinitrotoluene	U	390	1.0	330	390	92	
208-96-8	Acenaphthylene	U	390	1.0	330	390	82	
99-09-2	3-Nitroaniline	U	580	1.0	500	580	110	
83-32-9	Acenaphthene	U	390	1.0	330	390	76	
51-28-5	2,4-Dinitrophenol	U	1400	1.0	1200	1400	440	
132-64-9	Dibenzofuran	U	390	1.0	330	390	92	
100-02-7	4-Nitrophenol	~~J~~ UJ	1400	1.0	1200	1400	360	ICB
121-14-2	2,4-Dinitrotoluene	U	390	1.0	330	390	99	
84-66-2	Diethylphthalate	U	390	1.0	330	390	94	
7005-72-3	4-Chlorophenyl-phenylether	U	390	1.0	330	390	91	
100-01-6	4-Nitroaniline	U	580	1.0	500	580	160	
534-52-1	4,6-Dinitro-2-Methylphenol	U	1400	1.0	1200	1400	390	
86-30-6	N-Nitrosodiphenylamine	U	770	1.0	660	770	260	
101-55-3	4-Bromophenyl-phenylether	U	390	1.0	330	390	99	
1912-24-9	Atrazine	U	390	1.0	330	390	110	
87-86-5	Pentachlorophenol	U	960	1.0	820	960	280	
120-12-7	Anthracene	U	390	1.0	330	390	98	
86-74-8	Carbazole	U	580	1.0	500	580	130	

MW
4/17/09

10

KATAHDIN ANALYTICAL SERVICES
Report of Analytical Results

Client: CH2MHill
Project: TO-009 Lejeune
PO No:
Sample Date: 01/25/09
Received Date: 01/27/09
Extraction Date: 02/02/09
Analysis Date: 16-FEB-2009 13:31
Report Date: 02/20/2009
Matrix: SOIL
% Solids: 85.4

Lab ID: SC0411-19
Client ID: MR08-IS279-1-2-09A
SDG: TO9-46
Extracted by: CB
Extraction Method: SW846 3550
Analyst: JCG
Analysis Method: SW846 8270C
Lab Prep Batch: WG60395
Units: ug/Kgdrywt

CAS#	Compound	Flags	Results	DF	PQL	Adj.PQL	Adj.MDL
84-74-2	Di-n-butylphthalate	U	390	1.0	330	390	120
85-68-7	Butylbenzylphthalate	U	390	1.0	330	390	110
91-94-1	3,3'-Dichlorobenzidine	U	580	1.0	500	580	130
218-01-9	Chrysene	U	390	1.0	330	390	110
117-81-7	bis(2-Ethylhexyl)phthalate	U	390	1.0	330	390	110
117-84-0	Di-n-octylphthalate	~~J~~ UJ	390	1.0	330	390	250 CCH
367-12-4	2-Fluorophenol		54%				
13127-88-3	Phenol-D6		60%				
4165-60-0	Nitrobenzene-D5		52%				
321-60-8	2-Fluorobiphenyl		52%				
118-79-6	2,4,6-Tribromophenol		62%				
1718-51-0	Terphenyl-D14		53%				

LW 4/17/09

11

KATAHDIN ANALYTICAL SERVICES
Report of Analytical Results

Client: CH2MHill
Project: TO-009 Lejeune
PO No:
Sample Date: 01/25/09
Received Date: 01/27/09
Extraction Date: 02/02/09
Analysis Date: 16-FEB-2009 14:14
Report Date: 02/20/2009
Matrix: SOIL
% Solids: 86.0

Lab ID: SC0411-21
Client ID: MR08-IS279D-1-2-09A
SDG: TO9-46
Extracted by: CB
Extraction Method: SW846 3550
Analyst: JCG
Analysis Method: SW846 8270C
Lab Prep Batch: WG60395
Units: ug/Kgdrywt

CAS#	Compound	Flags	Results	DF	PQL	Adj.PQL	Adj.MDL
100-52-7	Benzaldehyde	~~U~~ UJ	580	1.0	500	580	140 JCB
108-95-2	Phenol	U	580	1.0	500	580	180
111-44-4	Bis(2-Chloroethyl)ether	U	380	1.0	330	380	94
95-57-8	2-Chlorophenol	U	580	1.0	500	580	190
95-48-7	2-Methylphenol	U	700	1.0	600	700	230
108-60-1	2,2'-Oxybis(1-chloropropane)	U	380	1.0	330	380	100
98-86-2	Acetophenone	U	700	1.0	600	700	210
621-64-7	N-Nitroso-di-n-propylamine	U	380	1.0	330	380	96
65794-96-9	3&4-Methylphenol	U	700	1.0	600	700	220
67-72-1	Hexachloroethane	U	380	1.0	330	380	110
98-95-3	Nitrobenzene	U	380	1.0	330	380	100
78-59-1	Isophorone	U	380	1.0	330	380	87
88-75-5	2-Nitrophenol	U	700	1.0	600	700	190
105-67-9	2,4-Dimethylphenol	U	580	1.0	500	580	190
111-91-1	Bis(2-Chloroethoxy)methane	U	380	1.0	330	380	110
120-83-2	2,4-Dichlorophenol	U	580	1.0	500	580	170
106-47-8	4-Chloroaniline	U	580	1.0	500	580	140
105-60-2	Caprolactam	U	580	1.0	500	580	170
59-50-7	4-Chloro-3-Methylphenol	U	580	1.0	500	580	190
88-06-2	2,4,6-Trichlorophenol	U	580	1.0	500	580	180
95-95-4	2,4,5-Trichlorophenol	U	580	1.0	500	580	180
91-58-7	2-Chloronaphthalene	U	380	1.0	330	380	100
92-52-4	1,1'-Biphenyl	U	380	1.0	330	380	85
88-74-4	2-Nitroaniline	U	580	1.0	500	580	87
131-11-3	Dimethyl Phthalate	U	380	1.0	330	380	91
606-20-2	2,6-Dinitrotoluene	U	380	1.0	330	380	92
208-96-8	Acenaphthylene	U	380	1.0	330	380	81
99-09-2	3-Nitroaniline	U	580	1.0	500	580	110
83-32-9	Acenaphthene	U	380	1.0	330	380	76
51-28-5	2,4-Dinitrophenol	U	1400	1.0	1200	1400	440
132-64-9	Dibenzofuran	U	380	1.0	330	380	92
100-02-7	4-Nitrophenol	~~U~~ UJ	1400	1.0	1200	1400	360 JCB
121-14-2	2,4-Dinitrotoluene	U	380	1.0	330	380	99
84-66-2	Diethylphthalate	U	380	1.0	330	380	93
7005-72-3	4-Chlorophenyl-phenylether	U	380	1.0	330	380	91
100-01-6	4-Nitroaniline	U	580	1.0	500	580	160
534-52-1	4,6-Dinitro-2-Methylphenol	U	1400	1.0	1200	1400	390
86-30-6	N-Nitrosodiphenylamine	U	770	1.0	660	770	250
101-55-3	4-Bromophenyl-phenylether	U	380	1.0	330	380	99
1912-24-9	Atrazine	U	380	1.0	330	380	100
87-86-5	Pentachlorophenol	U	950	1.0	820	950	280
120-12-7	Anthracene	U	380	1.0	330	380	98
86-74-8	Carbazole	U	580	1.0	500	580	130

kw
4/15/09

11

KATAHDIN ANALYTICAL SERVICES
Report of Analytical Results

Client: CH2MHill
Project: TO-009 Lejeune
PO No:
Sample Date: 01/25/09
Received Date: 01/27/09
Extraction Date: 02/02/09
Analysis Date: 16-FEB-2009 14:14
Report Date: 02/20/2009
Matrix: SOIL
% Solids: 86.0

Lab ID: SC0411-21
Client ID: MR08-IS279D-1-2-09A
SDG: TO9-46
Extracted by: CB
Extraction Method: SW846 3550
Analyst: JCG
Analysis Method: SW846 8270C
Lab Prep Batch: WG60395
Units: ug/Kgdrywt

CAS#	Compound	Flags	Results	DF	PQL	Adj.PQL	Adj.MDL
84-74-2	Di-n-butylphthalate	U	380	1.0	330	380	120
85-68-7	Butylbenzylphthalate	U	380	1.0	330	380	110
91-94-1	3,3'-Dichlorobenzidine	U	580	1.0	500	580	130
218-01-9	Chrysene	U	380	1.0	330	380	110
117-81-7	bis(2-Ethylhexyl)phthalate	J	170	1.0	330	380	110
117-84-0	Di-n-octylphthalate	~~U~~ UJ	380	1.0	330	380	240 CY
367-12-4	2-Fluorophenol		69%				
13127-88-3	Phenol-D6		79%				
4165-60-0	Nitrobenzene-D5		66%				
321-60-8	2-Fluorobiphenyl		75%				
118-79-6	2,4,6-Tribromophenol		73%				
1718-51-0	Terphenyl-D14		61%				

lw
4/17/09

12

KATAHDIN ANALYTICAL SERVICES
Report of Analytical Results

Client: CH2MHill
Project: TO-009 Lejeune
PO No:
Sample Date: 01/25/09
Received Date: 01/27/09
Extraction Date: 02/02/09
Analysis Date: 16-FEB-2009 14:56
Report Date: 02/20/2009
Matrix: SOIL
% Solids: 90.9

Lab ID: SC0411-23
Client ID: MR08-IS352-1-2-09A
SDG: TO9-46
Extracted by: CB
Extraction Method: SW846 3550
Analyst: JCG
Analysis Method: SW846 8270C
Lab Prep Batch: WG60395
Units: ug/Kgdrywt

CAS#	Compound	Flags	Results	DF	PQL	Adj.PQL	Adj.MDL	
100-52-7	Benzaldehyde	~~U~~ UJ	550	1.0	500	550	130	ICB
108-95-2	Phenol	U	550	1.0	500	550	170	
111-44-4	Bis(2-Chloroethyl)ether	U	360	1.0	330	360	89	
95-57-8	2-Chlorophenol	U	550	1.0	500	550	180	
95-48-7	2-Methylphenol	U	660	1.0	600	660	220	
108-60-1	2,2'-Oxybis(1-chloropropane)	U	360	1.0	330	360	98	
98-86-2	Acetophenone	U	660	1.0	600	660	200	
621-64-7	N-Nitroso-di-n-propylamine	U	360	1.0	330	360	91	
65794-96-9	3&4-Methylphenol	U	660	1.0	600	660	200	
67-72-1	Hexachloroethane	U	360	1.0	330	360	100	
98-95-3	Nitrobenzene	U	360	1.0	330	360	100	
78-59-1	Isophorone	U	360	1.0	330	360	82	
88-75-5	2-Nitrophenol	U	660	1.0	600	660	180	
105-67-9	2,4-Dimethylphenol	U	550	1.0	500	550	180	
111-91-1	Bis(2-Chloroethoxy)methane	U	360	1.0	330	360	100	
120-83-2	2,4-Dichlorophenol	U	550	1.0	500	550	160	
106-47-8	4-Chloroaniline	U	550	1.0	500	550	130	
105-60-2	Caprolactam	U	550	1.0	500	550	160	
59-50-7	4-Chloro-3-Methylphenol	U	550	1.0	500	550	180	
88-06-2	2,4,6-Trichlorophenol	U	550	1.0	500	550	170	
95-95-4	2,4,5-Trichlorophenol	U	550	1.0	500	550	170	
91-58-7	2-Chloronaphthalene	U	360	1.0	330	360	96	
92-52-4	1,1'-Biphenyl	U	360	1.0	330	360	80	
88-74-4	2-Nitroaniline	U	550	1.0	500	550	82	
131-11-3	Dimethyl Phthalate	U	360	1.0	330	360	86	
606-20-2	2,6-Dinitrotoluene	U	360	1.0	330	360	87	
208-96-8	Acenaphthylene	U	360	1.0	330	360	77	
99-09-2	3-Nitroaniline	U	550	1.0	500	550	100	
83-32-9	Acenaphthene	U	360	1.0	330	360	72	
51-28-5	2,4-Dinitrophenol	U	1300	1.0	1200	1300	410	
132-64-9	Dibenzofuran	U	360	1.0	330	360	87	
100-02-7	4-Nitrophenol	~~U~~ UJ	1300	1.0	1200	1300	340	ICB
121-14-2	2,4-Dinitrotoluene	U	360	1.0	330	360	94	
84-66-2	Diethylphthalate	U	360	1.0	330	360	88	
7005-72-3	4-Chlorophenyl-phenylether	U	360	1.0	330	360	86	
100-01-6	4-Nitroaniline	U	550	1.0	500	550	150	
534-52-1	4,6-Dinitro-2-Methylphenol	U	1300	1.0	1200	1300	370	
86-30-6	N-Nitrosodiphenylamine	U	730	1.0	660	730	240	
101-55-3	4-Bromophenyl-phenylether	U	360	1.0	330	360	94	
1912-24-9	Atrazine	U	360	1.0	330	360	100	
87-86-5	Pentachlorophenol	U	900	1.0	820	900	260	
120-12-7	Anthracene	U	360	1.0	330	360	92	
86-74-8	Carbazole	U	550	1.0	500	550	120	

4/17/09

12

KATAHDIN ANALYTICAL SERVICES
Report of Analytical Results

Client: CH2MHill
Project: TO-009 Lejeune
PO No:
Sample Date: 01/25/09
Received Date: 01/27/09
Extraction Date: 02/02/09
Analysis Date: 16-FEB-2009 14:56
Report Date: 02/20/2009
Matrix: SOIL
% Solids: 90.9

Lab ID: SC0411-23
Client ID: MR08-IS352-1-2-09A
SDG: TO9-46
Extracted by: CB
Extraction Method: SW846 3550
Analyst: JCG
Analysis Method: SW846 8270C
Lab Prep Batch: WG60395
Units: ug/Kgdrywt

CAS#	Compound	Flags	Results	DF	PQL	Adj.PQL	Adj.MDL	
84-74-2	Di-n-butylphthalate	U	360	1.0	330	360	110	
85-68-7	Butylbenzylphthalate	U	360	1.0	330	360	100	
91-94-1	3,3'-Dichlorobenzidine	U	550	1.0	500	550	120	
218-01-9	Chrysene	U	360	1.0	330	360	100	
117-81-7	bis(2-Ethylhexyl)phthalate	U	360	1.0	330	360	110	
117-84-0	Di-n-octylphthalate	~~U~~ UJ	360	1.0	330	360	230	CC4
367-12-4	2-Fluorophenol		70%					
13127-88-3	Phenol-D6		85%					
4165-60-0	Nitrobenzene-D5		75%					
321-60-8	2-Fluorobiphenyl		76%					
118-79-6	2,4,6-Tribromophenol		75%					
1718-51-0	Terphenyl-D14		68%					

MW 4/19/09

KATAHDIN ANALYTICAL SERVICES
Report of Analytical Results

Client: CH2MHill
Project: TO-009 Lejeune
PO No:
Sample Date: 01/25/09
Received Date: 01/27/09
Extraction Date: 02/02/09
Analysis Date: 16-FEB-2009 15:39
Report Date: 02/20/2009
Matrix: SOIL
% Solids: 81.7

Lab ID: SC0411-25
Client ID: MR08-SS352-09A
SDG: TO9-46
Extracted by: CB
Extraction Method: SW846 3550
Analyst: JCG
Analysis Method: SW846 8270C
Lab Prep Batch: WG60395
Units: ug/Kgdrywt

CAS#	Compound	Flags	Results	DF	PQL	Adj.PQL	Adj.MDL	
100-52-7	Benzaldehyde	~~U~~ UJ	610	1.0	500	610	150	JCB
108-95-2	Phenol	U	610	1.0	500	610	190	
111-44-4	Bis(2-Chloroethyl)ether	U	400	1.0	330	400	99	
95-57-8	2-Chlorophenol	U	610	1.0	500	610	200	
95-48-7	2-Methylphenol	U	730	1.0	600	730	240	
108-60-1	2,2'-Oxybis(1-chloropropane)	U	400	1.0	330	400	110	
98-86-2	Acetophenone	U	730	1.0	600	730	220	
621-64-7	N-Nitroso-di-n-propylamine	U	400	1.0	330	400	100	
65794-96-9	3&4-Methylphenol	U	730	1.0	600	730	230	
67-72-1	Hexachloroethane	U	400	1.0	330	400	120	
98-95-3	Nitrobenzene	U	400	1.0	330	400	110	
78-59-1	Isophorone	U	400	1.0	330	400	92	
88-75-5	2-Nitrophenol	U	730	1.0	600	730	200	
105-67-9	2,4-Dimethylphenol	U	610	1.0	500	610	200	
111-91-1	Bis(2-Chloroethoxy)methane	U	400	1.0	330	400	120	
120-83-2	2,4-Dichlorophenol	U	610	1.0	500	610	180	
106-47-8	4-Chloroaniline	U	610	1.0	500	610	140	
105-60-2	Caprolactam	U	610	1.0	500	610	180	
59-50-7	4-Chloro-3-Methylphenol	U	610	1.0	500	610	200	
88-06-2	2,4,6-Trichlorophenol	U	610	1.0	500	610	190	
95-95-4	2,4,5-Trichlorophenol	U	610	1.0	500	610	190	
91-58-7	2-Chloronaphthalene	U	400	1.0	330	400	110	
92-52-4	1,1'-Biphenyl	U	400	1.0	330	400	89	
88-74-4	2-Nitroaniline	U	610	1.0	500	610	92	
131-11-3	Dimethyl Phthalate	U	400	1.0	330	400	95	
606-20-2	2,6-Dinitrotoluene	U	400	1.0	330	400	97	
208-96-8	Acenaphthylene	U	400	1.0	330	400	86	
99-09-2	3-Nitroaniline	U	610	1.0	500	610	120	
83-32-9	Acenaphthene	U	400	1.0	330	400	80	
51-28-5	2,4-Dinitrophenol	U	1500	1.0	1200	1500	460	
132-64-9	Dibenzofuran	U	400	1.0	330	400	97	
100-02-7	4-Nitrophenol	~~U~~ UJ	1500	1.0	1200	1500	380	JCB
121-14-2	2,4-Dinitrotoluene	U	400	1.0	330	400	100	
84-66-2	Diethylphthalate	U	400	1.0	330	400	98	
7005-72-3	4-Chlorophenyl-phenylether	U	400	1.0	330	400	95	
100-01-6	4-Nitroaniline	U	610	1.0	500	610	160	
534-52-1	4,6-Dinitro-2-Methylphenol	U	1500	1.0	1200	1500	410	
86-30-6	N-Nitrosodiphenylamine	U	810	1.0	660	810	270	
101-55-3	4-Bromophenyl-phenylether	U	400	1.0	330	400	100	
1912-24-9	Atrazine	U	400	1.0	330	400	110	
87-86-5	Pentachlorophenol	U	1000	1.0	820	1000	290	
120-12-7	Anthracene	U	400	1.0	330	400	100	
86-74-8	Carbazole	U	610	1.0	500	610	140	

RW
4/19/09

13

KATAHDIN ANALYTICAL SERVICES
Report of Analytical Results

Client: CH2MHill
Project: TO-009 Lejeune
PO No:
Sample Date: 01/25/09
Received Date: 01/27/09
Extraction Date: 02/02/09
Analysis Date: 16-FEB-2009 15:39
Report Date: 02/20/2009
Matrix: SOIL
% Solids: 81.7

Lab ID: SC0411-25
Client ID: MR08-SS352-09A
SDG: TO9-46
Extracted by: CB
Extraction Method: SW846 3550
Analyst: JCG
Analysis Method: SW846 8270C
Lab Prep Batch: WG60395
Units: ug/Kgdrywt

CAS#	Compound	Flags	Results	DF	PQL	Adj.PQL	Adj.MDL
84-74-2	Di-n-butylphthalate	U	400	1.0	330	400	120
85-68-7	Butylbenzylphthalate	U	400	1.0	330	400	110
91-94-1	3,3'-Dichlorobenzidine	U	610	1.0	500	610	140
218-01-9	Chrysene	U	400	1.0	330	400	120
117-81-7	bis(2-Ethylhexyl)phthalate	U	400	1.0	330	400	120
117-84-0	Di-n-octylphthalate	~~U~~ UJ	400	1.0	330	400	260 CCA
367-12-4	2-Fluorophenol		72%				
13127-88-3	Phenol-D6		83%				
4165-60-0	Nitrobenzene-D5		72%				
321-60-8	2-Fluorobiphenyl		77%				
118-79-6	2,4,6-Tribromophenol		92%				
1718-51-0	Terphenyl-D14		69%				

lw
4/19/09

14

KATAHDIN ANALYTICAL SERVICES
Report of Analytical Results

Client: CH2MHill
Project: TO-009 Lejeune
PO No:
Sample Date: 01/25/09
Received Date: 01/27/09
Extraction Date: 02/02/09
Analysis Date: 16-FEB-2009 16:21
Report Date: 02/20/2009
Matrix: SOIL
% Solids: 82.4

Lab ID: SC0411-27
Client ID: MR08-SS371-09A
SDG: TO9-46
Extracted by: CB
Extraction Method: SW846 3550
Analyst: JCG
Analysis Method: SW846 8270C
Lab Prep Batch: WG60395
Units: ug/Kgdrywt

CAS#	Compound	Flags	Results	DF	PQL	Adj.PQL	Adj.MDL	
100-52-7	Benzaldehyde	~~U~~ UJ	610	1.0	500	610	140	ICB
108-95-2	Phenol	U	610	1.0	500	610	190	
111-44-4	Bis(2-Chloroethyl)ether	U	400	1.0	330	400	98	
95-57-8	2-Chlorophenol	U	610	1.0	500	610	200	
95-48-7	2-Methylphenol	U	730	1.0	600	730	240	
108-60-1	2,2'-Oxybis(1-chloropropane)	U	400	1.0	330	400	110	
98-86-2	Acetophenone	U	730	1.0	600	730	220	
621-64-7	N-Nitroso-di-n-propylamine	U	400	1.0	330	400	100	
65794-96-9	3&4-Methylphenol	U	730	1.0	600	730	230	
67-72-1	Hexachloroethane	U	400	1.0	330	400	120	
98-95-3	Nitrobenzene	U	400	1.0	330	400	110	
78-59-1	Isophorone	U	400	1.0	330	400	91	
88-75-5	2-Nitrophenol	U	730	1.0	600	730	200	
105-67-9	2,4-Dimethylphenol	U	610	1.0	500	610	200	
111-91-1	Bis(2-Chloroethoxy)methane	U	400	1.0	330	400	120	
120-83-2	2,4-Dichlorophenol	U	610	1.0	500	610	180	
106-47-8	4-Chloroaniline	U	610	1.0	500	610	140	
105-60-2	Caprolactam	U	610	1.0	500	610	170	
59-50-7	4-Chloro-3-Methylphenol	U	610	1.0	500	610	200	
88-06-2	2,4,6-Trichlorophenol	U	610	1.0	500	610	190	
95-95-4	2,4,5-Trichlorophenol	U	610	1.0	500	610	190	
91-58-7	2-Chloronaphthalene	U	400	1.0	330	400	100	
92-52-4	1,1'-Biphenyl	U	400	1.0	330	400	88	
88-74-4	2-Nitroaniline	U	610	1.0	500	610	91	
131-11-3	Dimethyl Phthalate	U	400	1.0	330	400	95	
606-20-2	2,6-Dinitrotoluene	U	400	1.0	330	400	96	
208-96-8	Acenaphthylene	U	400	1.0	330	400	85	
99-09-2	3-Nitroaniline	U	610	1.0	500	610	110	
83-32-9	Acenaphthene	U	400	1.0	330	400	79	
51-28-5	2,4-Dinitrophenol	U	1400	1.0	1200	1400	460	
132-64-9	Dibenzofuran	U	400	1.0	330	400	96	
100-02-7	4-Nitrophenol	~~U~~ UJ	1400	1.0	1200	1400	370	ICB
121-14-2	2,4-Dinitrotoluene	U	400	1.0	330	400	100	
84-66-2	Diethylphthalate	U	400	1.0	330	400	97	
7005-72-3	4-Chlorophenyl-phenylether	U	400	1.0	330	400	95	
100-01-6	4-Nitroaniline	U	610	1.0	500	610	160	
534-52-1	4,6-Dinitro-2-Methylphenol	U	1400	1.0	1200	1400	410	
86-30-6	N-Nitrosodiphenylamine	U	800	1.0	660	800	260	
101-55-3	4-Bromophenyl-phenylether	U	400	1.0	330	400	100	
1912-24-9	Atrazine	U	400	1.0	330	400	110	
87-86-5	Pentachlorophenol	U	990	1.0	820	990	290	
120-12-7	Anthracene	U	400	1.0	330	400	100	
86-74-8	Carbazole	U	610	1.0	500	610	130	

MW 4/13/09

14

KATAHDIN ANALYTICAL SERVICES
Report of Analytical Results

Client: CH2MHill
Project: TO-009 Lejeune
PO No:
Sample Date: 01/25/09
Received Date: 01/27/09
Extraction Date: 02/02/09
Analysis Date: 16-FEB-2009 16:21
Report Date: 02/20/2009
Matrix: SOIL
% Solids: 82.4

Lab ID: SC0411-27
Client ID: MR08-SS371-09A
SDG: TO9-46
Extracted by: CB
Extraction Method: SW846 3550
Analyst: JCG
Analysis Method: SW846 8270C
Lab Prep Batch: WG60395
Units: ug/Kgdrywt

CAS#	Compound	Flags	Results	DF	PQL	Adj.PQL	Adj.MDL	
84-74-2	Di-n-butylphthalate	U	400	1.0	330	400	120	
85-68-7	Butylbenzylphthalate	U	400	1.0	330	400	110	
91-94-1	3,3'-Dichlorobenzidine	U	610	1.0	500	610	140	
218-01-9	Chrysene	J	120	1.0	330	400	120	
117-81-7	bis(2-Ethylhexyl)phthalate	U	400	1.0	330	400	120	
117-84-0	Di-n-octylphthalate	~~J~~ UJ	400	1.0	330	400	260	CCH
367-12-4	2-Fluorophenol		76%					
13127-88-3	Phenol-D6		87%					
4165-60-0	Nitrobenzene-D5		76%					
321-60-8	2-Fluorobiphenyl		84%					
118-79-6	2,4,6-Tribromophenol		98%					
1718-51-0	Terphenyl-D14		66%					

MW
4/17/09

KATAHDIN ANALYTICAL SERVICES
Report of Analytical Results

15

Client: CH2MHill
Project: TO-009 Lejeune
PO No:
Sample Date: 01/25/09
Received Date: 01/27/09
Extraction Date: 02/02/09
Analysis Date: 18-FEB-2009 03:47
Report Date: 02/20/2009
Matrix: SOIL
% Solids: 87.3

Lab ID: SC0411-29
Client ID: MR08-IS371-1-2-09A
SDG: TO9-46
Extracted by: CB
Extraction Method: SW846 3550
Analyst: JCG
Analysis Method: SW846 8270C
Lab Prep Batch: WG60395
Units: ug/Kgdrywt

CAS#	Compound	Flags	Results	DF	PQL	Adj.PQL	Adj.MDL
100-52-7	Benzaldehyde	~~U~~ UJ	570	1.0	500	570	140 JCB
108-95-2	Phenol	U	570	1.0	500	570	180
111-44-4	Bis(2-Chloroethyl)ether	U	380	1.0	330	380	93
95-57-8	2-Chlorophenol	U	570	1.0	500	570	190
95-48-7	2-Methylphenol	U	690	1.0	600	690	230
108-60-1	2,2'-Oxybis(1-chloropropane)	U	380	1.0	330	380	100
98-86-2	Acetophenone	U	690	1.0	600	690	200
621-64-7	N-Nitroso-di-n-propylamine	U	380	1.0	330	380	95
65794-96-9	3&4-Methylphenol	U	690	1.0	600	690	210
67-72-1	Hexachloroethane	U	380	1.0	330	380	110
98-95-3	Nitrobenzene	U	380	1.0	330	380	100
78-59-1	Isophorone	U	380	1.0	330	380	86
88-75-5	2-Nitrophenol	U	690	1.0	600	690	190
105-67-9	2,4-Dimethylphenol	U	570	1.0	500	570	190
111-91-1	Bis(2-Chloroethoxy)methane	U	380	1.0	330	380	110
120-83-2	2,4-Dichlorophenol	U	570	1.0	500	570	170
106-47-8	4-Chloroaniline	U	570	1.0	500	570	140
105-60-2	Caprolactam	U	570	1.0	500	570	160
59-50-7	4-Chloro-3-Methylphenol	U	570	1.0	500	570	190
88-06-2	2,4,6-Trichlorophenol	U	570	1.0	500	570	180
95-95-4	2,4,5-Trichlorophenol	U	570	1.0	500	570	180
91-58-7	2-Chloronaphthalene	U	380	1.0	330	380	100
92-52-4	1,1'-Biphenyl	U	380	1.0	330	380	84
88-74-4	2-Nitroaniline	U	570	1.0	500	570	86
131-11-3	Dimethyl Phthalate	U	380	1.0	330	380	89
606-20-2	2,6-Dinitrotoluene	U	380	1.0	330	380	90
208-96-8	Acenaphthylene	U	380	1.0	330	380	80
99-09-2	3-Nitroaniline	U	570	1.0	500	570	110
83-32-9	Acenaphthene	U	380	1.0	330	380	74
51-28-5	2,4-Dinitrophenol	U	1400	1.0	1200	1400	430
132-64-9	Dibenzofuran	U	380	1.0	330	380	90
100-02-7	4-Nitrophenol	~~U~~ UJ	1400	1.0	1200	1400	350 JCB
121-14-2	2,4-Dinitrotoluene	U	380	1.0	330	380	97
84-66-2	Diethylphthalate	U	380	1.0	330	380	92
7005-72-3	4-Chlorophenyl-phenylether	U	380	1.0	330	380	89
100-01-6	4-Nitroaniline	U	570	1.0	500	570	150
534-52-1	4,6-Dinitro-2-Methylphenol	U	1400	1.0	1200	1400	380
86-30-6	N-Nitrosodiphenylamine	U	760	1.0	660	760	250
101-55-3	4-Bromophenyl-phenylether	U	380	1.0	330	380	97
1912-24-9	Atrazine	U	380	1.0	330	380	100
87-86-5	Pentachlorophenol	U	940	1.0	820	940	270
120-12-7	Anthracene	U	380	1.0	330	380	96
86-74-8	Carbazole	U	570	1.0	500	570	130

MW
4/1/09

15

KATAHDIN ANALYTICAL SERVICES
Report of Analytical Results

Client: CH2MHill
Project: TO-009 Lejeune
PO No:
Sample Date: 01/25/09
Received Date: 01/27/09
Extraction Date: 02/02/09
Analysis Date: 18-FEB-2009 03:47
Report Date: 02/20/2009
Matrix: SOIL
% Solids: 87.3

Lab ID: SC0411-29
Client ID: MR08-IS371-1-2-09A
SDG: TO9-46
Extracted by: CB
Extraction Method: SW846 3550
Analyst: JCG
Analysis Method: SW846 8270C
Lab Prep Batch: WG60395
Units: ug/Kgdrywt

CAS#	Compound	Flags	Results	DF	PQL	Adj.PQL	Adj.MDL
84-74-2	Di-n-butylphthalate	U	380	1.0	330	380	120
85-68-7	Butylbenzylphthalate	U	380	1.0	330	380	110
91-94-1	3,3'-Dichlorobenzidine	U	570	1.0	500	570	130
218-01-9	Chrysene	U	380	1.0	330	380	110
117-81-7	bis(2-Ethylhexyl)phthalate	U	380	1.0	330	380	110
117-84-0	Di-n-octylphthalate	~~U~~ UJ	380	1.0	330	380	240 CCH
367-12-4	2-Fluorophenol		74%				
13127-88-3	Phenol-D6		87%				
4165-60-0	Nitrobenzene-D5		75%				
321-60-8	2-Fluorobiphenyl		77%				
118-79-6	2,4,6-Tribromophenol		87%				
1718-51-0	Terphenyl-D14		77%				

MW 4/7/09

16

KATAHDIN ANALYTICAL SERVICES
Report of Analytical Results

Client: CH2MHill
Project: TO-009 Lejeune
PO No:
Sample Date: 01/25/09
Received Date: 01/27/09
Extraction Date: 02/03/09
Analysis Date: 18-FEB-2009 04:29
Report Date: 02/20/2009
Matrix: SOIL
% Solids: 90.6

Lab ID: SC0411-31
Client ID: 08-IS372-1-2-09A
SDG: TO9-46
Extracted by: CB
Extraction Method: SW846 3550
Analyst: JCG
Analysis Method: SW846 8270C
Lab Prep Batch: WG60435
Units: ug/Kgdrywt

CAS#	Compound	Flags	Results	DF	PQL	Adj.PQL	Adj.MDL	
100-52-7	Benzaldehyde	~~U~~ UJ	550	1.0	500	550	130	JCB
108-95-2	Phenol	U	550	1.0	500	550	170	
111-44-4	Bis(2-Chloroethyl)ether	U	360	1.0	330	360	89	
95-57-8	2-Chlorophenol	U	550	1.0	500	550	180	
95-48-7	2-Methylphenol	U	660	1.0	600	660	220	
108-60-1	2,2'-Oxybis(1-chloropropane)	U	360	1.0	330	360	98	
98-86-2	Acetophenone	U	660	1.0	600	660	200	
621-64-7	N-Nitroso-di-n-propylamine	U	360	1.0	330	360	92	
65794-96-9	3&4-Methylphenol	U	660	1.0	600	660	210	
67-72-1	Hexachloroethane	U	360	1.0	330	360	100	
98-95-3	Nitrobenzene	U	360	1.0	330	360	100	
78-59-1	Isophorone	U	360	1.0	330	360	83	
88-75-5	2-Nitrophenol	U	660	1.0	600	660	180	
105-67-9	2,4-Dimethylphenol	U	550	1.0	500	550	180	
111-91-1	Bis(2-Chloroethoxy)methane	U	360	1.0	330	360	100	
120-83-2	2,4-Dichlorophenol	U	550	1.0	500	550	160	
106-47-8	4-Chloroaniline	U	550	1.0	500	550	130	
105-60-2	Caprolactam	U	550	1.0	500	550	160	
59-50-7	4-Chloro-3-Methylphenol	U	550	1.0	500	550	180	
88-06-2	2,4,6-Trichlorophenol	U	550	1.0	500	550	170	
95-95-4	2,4,5-Trichlorophenol	U	550	1.0	500	550	170	
91-58-7	2-Chloronaphthalene	U	360	1.0	330	360	96	
92-52-4	1,1'-Biphenyl	U	360	1.0	330	360	80	
88-74-4	2-Nitroaniline	U	550	1.0	500	550	83	
131-11-3	Dimethyl Phthalate	U	360	1.0	330	360	86	
606-20-2	2,6-Dinitrotoluene	U	360	1.0	330	360	87	
208-96-8	Acenaphthylene	U	360	1.0	330	360	77	
99-09-2	3-Nitroaniline	U	550	1.0	500	550	100	
83-32-9	Acenaphthene	U	360	1.0	330	360	72	
51-28-5	2,4-Dinitrophenol	U	1300	1.0	1200	1300	420	
132-64-9	Dibenzofuran	U	360	1.0	330	360	87	
100-02-7	4-Nitrophenol	~~U~~ UJ	1300	1.0	1200	1300	340	JCB
121-14-2	2,4-Dinitrotoluene	U	360	1.0	330	360	94	
84-66-2	Diethylphthalate	U	360	1.0	330	360	88	
7005-72-3	4-Chlorophenyl-phenylether	U	360	1.0	330	360	86	
100-01-6	4-Nitroaniline	U	550	1.0	500	550	150	
534-52-1	4,6-Dinitro-2-Methylphenol	U	1300	1.0	1200	1300	370	
86-30-6	N-Nitrosodiphenylamine	U	730	1.0	660	730	240	
101-55-3	4-Bromophenyl-phenylether	U	360	1.0	330	360	94	
1912-24-9	Atrazine	U	360	1.0	330	360	100	
87-86-5	Pentachlorophenol	U	900	1.0	820	900	260	
120-12-7	Anthracene	U	360	1.0	330	360	93	
86-74-8	Carbazole	U	550	1.0	500	550	120	

MW 4/17/09

KATAHDIN ANALYTICAL SERVICES
Report of Analytical Results

16

Client: CH2MHill
Project: TO-009 Lejeune
PO No:
Sample Date: 01/25/09
Received Date: 01/27/09
Extraction Date: 02/03/09
Analysis Date: 18-FEB-2009 04:29
Report Date: 02/20/2009
Matrix: SOIL
% Solids: 90.6

Lab ID: SC0411-31
Client ID: 08-IS372-1-2-09A
SDG: TO9-46
Extracted by: CB
Extraction Method: SW846 3550
Analyst: JCG
Analysis Method: SW846 8270C
Lab Prep Batch: WG60435
Units: ug/Kgdrywt

CAS#	Compound	Flags	Results	DF	PQL	Adj.PQL	Adj.MDL	
84-74-2	Di-n-butylphthalate	U	360	1.0	330	360	110	
85-68-7	Butylbenzylphthalate	U	360	1.0	330	360	100	
91-94-1	3,3'-Dichlorobenzidine	U	550	1.0	500	550	120	
218-01-9	Chrysene	U	360	1.0	330	360	100	
117-81-7	bis(2-Ethylhexyl)phthalate	U	360	1.0	330	360	110	
117-84-0	Di-n-octylphthalate	~~U~~ UJ	360	1.0	330	360	230	CCH
367-12-4	2-Fluorophenol		75%					
13127-88-3	Phenol-D6		89%					
4165-60-0	Nitrobenzene-D5		74%					
321-60-8	2-Fluorobiphenyl		84%					
118-79-6	2,4,6-Tribromophenol		95%					
1718-51-0	Terphenyl-D14		83%					

hw
4/17/09

17

KATAHDIN ANALYTICAL SERVICES
Report of Analytical Results

Client: CH2MHill
Project: TO-009 Lejeune
PO No:
Sample Date: 01/25/09
Received Date: 01/27/09
Extraction Date: 02/03/09
Analysis Date: 18-FEB-2009 05:10
Report Date: 02/20/2009
Matrix: SOIL
% Solids: 85.9

Lab ID: SC0411-33
Client ID: MR08-SS373-09A
SDG: TO9-46
Extracted by: CB
Extraction Method: SW846 3550
Analyst: JCG
Analysis Method: SW846 8270C
Lab Prep Batch: WG60435
Units: ug/Kgdrywt

CAS#	Compound	Flags	Results	DF	PQL	Adj.PQL	Adj.MDL
100-52-7	Benzaldehyde	~~B~~ UJ	580	1.0	500	580	140 JCB
108-95-2	Phenol	U	580	1.0	500	580	180
111-44-4	Bis(2-Chloroethyl)ether	U	380	1.0	330	380	94
95-57-8	2-Chlorophenol	U	580	1.0	500	580	190
95-48-7	2-Methylphenol	U	700	1.0	600	700	230
108-60-1	2,2'-Oxybis(1-chloropropane)	U	380	1.0	330	380	100
98-86-2	Acetophenone	U	700	1.0	600	700	210
621-64-7	N-Nitroso-di-n-propylamine	U	380	1.0	330	380	97
65794-96-9	3&4-Methylphenol	U	700	1.0	600	700	220
67-72-1	Hexachloroethane	U	380	1.0	330	380	110
98-95-3	Nitrobenzene	U	380	1.0	330	380	100
78-59-1	Isophorone	U	380	1.0	330	380	87
88-75-5	2-Nitrophenol	U	700	1.0	600	700	190
105-67-9	2,4-Dimethylphenol	U	580	1.0	500	580	190
111-91-1	Bis(2-Chloroethoxy)methane	U	380	1.0	330	380	110
120-83-2	2,4-Dichlorophenol	U	580	1.0	500	580	170
106-47-8	4-Chloroaniline	U	580	1.0	500	580	140
105-60-2	Caprolactam	U	580	1.0	500	580	170
59-50-7	4-Chloro-3-Methylphenol	U	580	1.0	500	580	190
88-06-2	2,4,6-Trichlorophenol	U	580	1.0	500	580	180
95-95-4	2,4,5-Trichlorophenol	U	580	1.0	500	580	180
91-58-7	2-Chloronaphthalene	U	380	1.0	330	380	100
92-52-4	1,1'-Biphenyl	U	380	1.0	330	380	85
88-74-4	2-Nitroaniline	U	580	1.0	500	580	87
131-11-3	Dimethyl Phthalate	U	380	1.0	330	380	91
606-20-2	2,6-Dinitrotoluene	U	380	1.0	330	380	92
208-96-8	Acenaphthylene	U	380	1.0	330	380	82
99-09-2	3-Nitroaniline	U	580	1.0	500	580	110
83-32-9	Acenaphthene	U	380	1.0	330	380	76
51-28-5	2,4-Dinitrophenol	U	1400	1.0	1200	1400	440
132-64-9	Dibenzofuran	U	380	1.0	330	380	92
100-02-7	4-Nitrophenol	~~U~~ UJ	1400	1.0	1200	1400	360 JCB
121-14-2	2,4-Dinitrotoluene	U	380	1.0	330	380	99
84-66-2	Diethylphthalate	U	380	1.0	330	380	93
7005-72-3	4-Chlorophenyl-phenylether	U	380	1.0	330	380	91
100-01-6	4-Nitroaniline	U	580	1.0	500	580	160
534-52-1	4,6-Dinitro-2-Methylphenol	U	1400	1.0	1200	1400	390
86-30-6	N-Nitrosodiphenylamine	U	770	1.0	660	770	260
101-55-3	4-Bromophenyl-phenylether	U	380	1.0	330	380	99
1912-24-9	Atrazine	U	380	1.0	330	380	100
87-86-5	Pentachlorophenol	U	950	1.0	820	950	280
120-12-7	Anthracene	U	380	1.0	330	380	98
86-74-8	Carbazole	U	580	1.0	500	580	130

MW
4/13/09

KATAHDIN ANALYTICAL SERVICES
Report of Analytical Results

17

Client: CH2MHill
Project: TO-009 Lejeune
PO No:
Sample Date: 01/25/09
Received Date: 01/27/09
Extraction Date: 02/03/09
Analysis Date: 18-FEB-2009 05:10
Report Date: 02/20/2009
Matrix: SOIL
% Solids: 85.9

Lab ID: SC0411-33
Client ID: MR08-SS373-09A
SDG: TO9-46
Extracted by: CB
Extraction Method: SW846 3550
Analyst: JCG
Analysis Method: SW846 8270C
Lab Prep Batch: WG60435
Units: ug/Kgdrywt

CAS#	Compound	Flags	Results	DF	PQL	Adj.PQL	Adj.MDL
84-74-2	Di-n-butylphthalate	U	380	1.0	330	380	120
85-68-7	Butylbenzylphthalate	U	380	1.0	330	380	110
91-94-1	3,3'-Dichlorobenzidine	U	580	1.0	500	580	130
218-01-9	Chrysene	J	160	1.0	330	380	110
117-81-7	bis(2-Ethylhexyl)phthalate		520	1.0	330	380	110
117-84-0	Di-n-octylphthalate	~~J~~ UJ	380	1.0	330	380	240 CH
367-12-4	2-Fluorophenol		72%				
13127-88-3	Phenol-D6		89%				
4165-60-0	Nitrobenzene-D5		79%				
321-60-8	2-Fluorobiphenyl		86%				
118-79-6	2,4,6-Tribromophenol		89%				
1718-51-0	Terphenyl-D14		76%				

MW
4/13/09

18

KATAHDIN ANALYTICAL SERVICES
Report of Analytical Results

Client: CH2MHill
Project: TO-009 Lejeune
PO No:
Sample Date: 01/25/09
Received Date: 01/27/09
Extraction Date: 02/03/09
Analysis Date: 18-FEB-2009 05:52
Report Date: 02/20/2009
Matrix: SOIL
% Solids: 84.7

Lab ID: SC0411-35
Client ID: MR08-SS373D-09A
SDG: TO9-46
Extracted by: CB
Extraction Method: SW846 3550
Analyst: JCG
Analysis Method: SW846 8270C
Lab Prep Batch: WG60435
Units: ug/Kgdrywt

CAS#	Compound	Flags	Results	DF	PQL	Adj.PQL	Adj.MDL	
100-52-7	Benzaldehyde	~~U~~ UJ	590	1.0	500	590	140	JCB
108-95-2	Phenol	U	590	1.0	500	590	180	
111-44-4	Bis(2-Chloroethyl)ether	U	390	1.0	330	390	96	
95-57-8	2-Chlorophenol	U	590	1.0	500	590	190	
95-48-7	2-Methylphenol	U	710	1.0	600	710	240	
108-60-1	2,2'-Oxybis(1-chloropropane)	U	390	1.0	330	390	100	
98-86-2	Acetophenone	U	710	1.0	600	710	210	
621-64-7	N-Nitroso-di-n-propylamine	U	390	1.0	330	390	98	
65794-96-9	3&4-Methylphenol	U	710	1.0	600	710	220	
67-72-1	Hexachloroethane	U	390	1.0	330	390	110	
98-95-3	Nitrobenzene	U	390	1.0	330	390	110	
78-59-1	Isophorone	U	390	1.0	330	390	88	
88-75-5	2-Nitrophenol	U	710	1.0	600	710	200	
105-67-9	2,4-Dimethylphenol	U	590	1.0	500	590	190	
111-91-1	Bis(2-Chloroethoxy)methane	U	390	1.0	330	390	110	
120-83-2	2,4-Dichlorophenol	U	590	1.0	500	590	180	
106-47-8	4-Chloroaniline	U	590	1.0	500	590	140	
105-60-2	Caprolactam	U	590	1.0	500	590	170	
59-50-7	4-Chloro-3-Methylphenol	U	590	1.0	500	590	200	
88-06-2	2,4,6-Trichlorophenol	U	590	1.0	500	590	180	
95-95-4	2,4,5-Trichlorophenol	U	590	1.0	500	590	180	
91-58-7	2-Chloronaphthalene	U	390	1.0	330	390	100	
92-52-4	1,1'-Biphenyl	U	390	1.0	330	390	86	
88-74-4	2-Nitroaniline	U	590	1.0	500	590	88	
131-11-3	Dimethyl Phthalate	U	390	1.0	330	390	92	
606-20-2	2,6-Dinitrotoluene	U	390	1.0	330	390	93	
208-96-8	Acenaphthylene	U	390	1.0	330	390	83	
99-09-2	3-Nitroaniline	U	590	1.0	500	590	110	
83-32-9	Acenaphthene	U	390	1.0	330	390	77	
51-28-5	2,4-Dinitrophenol	U	1400	1.0	1200	1400	440	
132-64-9	Dibenzofuran	U	390	1.0	330	390	93	
100-02-7	4-Nitrophenol	~~U~~ UJ	1400	1.0	1200	1400	360	JCB
121-14-2	2,4-Dinitrotoluene	U	390	1.0	330	390	100	
84-66-2	Diethylphthalate	U	390	1.0	330	390	94	
7005-72-3	4-Chlorophenyl-phenylether	U	390	1.0	330	390	92	
100-01-6	4-Nitroaniline	U	590	1.0	500	590	160	
534-52-1	4,6-Dinitro-2-Methylphenol	U	1400	1.0	1200	1400	400	
86-30-6	N-Nitrosodiphenylamine	U	780	1.0	660	780	260	
101-55-3	4-Bromophenyl-phenylether	U	390	1.0	330	390	100	
1912-24-9	Atrazine	U	390	1.0	330	390	110	
87-86-5	Pentachlorophenol	U	970	1.0	820	970	280	
120-12-7	Anthracene	U	390	1.0	330	390	99	
86-74-8	Carbazole	U	590	1.0	500	590	130	

lw
4/7/09

KATAHDIN ANALYTICAL SERVICES
Report of Analytical Results

18

Client: CH2MHill
Project: TO-009 Lejeune
PO No:
Sample Date: 01/25/09
Received Date: 01/27/09
Extraction Date: 02/03/09
Analysis Date: 18-FEB-2009 05:52
Report Date: 02/20/2009
Matrix: SOIL
% Solids: 84.7

Lab ID: SC0411-35
Client ID: MR08-SS373D-09A
SDG: TO9-46
Extracted by: CB
Extraction Method: SW846 3550
Analyst: JCG
Analysis Method: SW846 8270C
Lab Prep Batch: WG60435
Units: ug/Kgdrywt

CAS#	Compound	Flags	Results	DF	PQL	Adj.PQL	Adj.MDL
84-74-2	Di-n-butylphthalate	U	390	1.0	330	390	120
85-68-7	Butylbenzylphthalate	U	390	1.0	330	390	110
91-94-1	3,3'-Dichlorobenzidine	U	590	1.0	500	590	130
218-01-9	Chrysene	J	230	1.0	330	390	110
117-81-7	bis(2-Ethylhexyl)phthalate		510	1.0	330	390	120
117-84-0	Di-n-octylphthalate	~~U~~ UJ	390	1.0	330	390	250 CCH
367-12-4	2-Fluorophenol		76%				
13127-88-3	Phenol-D6		93%				
4165-60-0	Nitrobenzene-D5		74%				
321-60-8	2-Fluorobiphenyl		79%				
118-79-6	2,4,6-Tribromophenol		97%				
1718-51-0	Terphenyl-D14		81%				

MW
4/17/09

19

KATAHDIN ANALYTICAL SERVICES
Report of Analytical Results

Client: CH2MHill
Project: TO-009 Lejeune
PO No:
Sample Date: 01/25/09
Received Date: 01/27/09
Extraction Date: 02/03/09
Analysis Date: 18-FEB-2009 06:34
Report Date: 02/20/2009
Matrix: SOIL
% Solids: 85.5

Lab ID: SC0411-37
Client ID: MR08-IS373-2-3-09A
SDG: TO9-46
Extracted by: CB
Extraction Method: SW846 3550
Analyst: JCG
Analysis Method: SW846 8270C
Lab Prep Batch: WG60435
Units: ug/Kgdrywt

CAS#	Compound	Flags	Results	DF	PQL	Adj.PQL	Adj.MDL
100-52-7	Benzaldehyde	~~U~~ UJ	580	1.0	500	580	140 ICB
108-95-2	Phenol	U	580	1.0	500	580	180
111-44-4	Bis(2-Chloroethyl)ether	U	380	1.0	330	380	95
95-57-8	2-Chlorophenol	U	580	1.0	500	580	190
95-48-7	2-Methylphenol	U	700	1.0	600	700	230
108-60-1	2,2'-Oxybis(1-chloropropane)	U	380	1.0	330	380	100
98-86-2	Acetophenone	U	700	1.0	600	700	210
621-64-7	N-Nitroso-di-n-propylamine	U	380	1.0	330	380	97
65794-96-9	3&4-Methylphenol	U	700	1.0	600	700	220
67-72-1	Hexachloroethane	U	380	1.0	330	380	110
98-95-3	Nitrobenzene	U	380	1.0	330	380	110
78-59-1	Isophorone	U	380	1.0	330	380	88
88-75-5	2-Nitrophenol	U	700	1.0	600	700	200
105-67-9	2,4-Dimethylphenol	U	580	1.0	500	580	190
111-91-1	Bis(2-Chloroethoxy)methane	U	380	1.0	330	380	110
120-83-2	2,4-Dichlorophenol	U	580	1.0	500	580	180
106-47-8	4-Chloroaniline	U	580	1.0	500	580	140
105-60-2	Caprolactam	U	580	1.0	500	580	170
59-50-7	4-Chloro-3-Methylphenol	U	580	1.0	500	580	190
88-06-2	2,4,6-Trichlorophenol	U	580	1.0	500	580	180
95-95-4	2,4,5-Trichlorophenol	U	580	1.0	500	580	180
91-58-7	2-Chloronaphthalene	U	380	1.0	330	380	100
92-52-4	1,1'-Biphenyl	U	380	1.0	330	380	85
88-74-4	2-Nitroaniline	U	580	1.0	500	580	88
131-11-3	Dimethyl Phthalate	U	380	1.0	330	380	91
606-20-2	2,6-Dinitrotoluene	U	380	1.0	330	380	92
208-96-8	Acenaphthylene	U	380	1.0	330	380	82
99-09-2	3-Nitroaniline	U	580	1.0	500	580	110
83-32-9	Acenaphthene	U	380	1.0	330	380	76
51-28-5	2,4-Dinitrophenol	U	1400	1.0	1200	1400	440
132-64-9	Dibenzofuran	U	380	1.0	330	380	92
100-02-7	4-Nitrophenol	~~U~~ UJ	1400	1.0	1200	1400	360 ICB
121-14-2	2,4-Dinitrotoluene	U	380	1.0	330	380	99
84-66-2	Diethylphthalate	U	380	1.0	330	380	94
7005-72-3	4-Chlorophenyl-phenylether	U	380	1.0	330	380	91
100-01-6	4-Nitroaniline	U	580	1.0	500	580	160
534-52-1	4,6-Dinitro-2-Methylphenol	U	1400	1.0	1200	1400	390
86-30-6	N-Nitrosodiphenylamine	U	770	1.0	660	770	260
101-55-3	4-Bromophenyl-phenylether	U	380	1.0	330	380	99
1912-24-9	Atrazine	U	380	1.0	330	380	110
87-86-5	Pentachlorophenol	U	960	1.0	820	960	280
120-12-7	Anthracene	U	380	1.0	330	380	98
86-74-8	Carbazole	U	580	1.0	500	580	130

lw 4/21/09

KATAHDIN ANALYTICAL SERVICES
Report of Analytical Results

19

Client: CH2MHill
Project: TO-009 Lejeune
PO No:
Sample Date: 01/25/09
Received Date: 01/27/09
Extraction Date: 02/03/09
Analysis Date: 18-FEB-2009 06:34
Report Date: 02/20/2009
Matrix: SOIL
% Solids: 85.5

Lab ID: SC0411-37
Client ID: MR08-IS373-2-3-09A
SDG: TO9-46
Extracted by: CB
Extraction Method: SW846 3550
Analyst: JCG
Analysis Method: SW846 8270C
Lab Prep Batch: WG60435
Units: ug/Kgdrywt

CAS#	Compound	Flags	Results	DF	PQL	Adj.PQL	Adj.MDL
84-74-2	Di-n-butylphthalate	U	380	1.0	330	380	120
85-68-7	Butylbenzylphthalate	U	380	1.0	330	380	110
91-94-1	3,3'-Dichlorobenzidine	U	580	1.0	500	580	130
218-01-9	Chrysene	U	380	1.0	330	380	110
117-81-7	bis(2-Ethylhexyl)phthalate	U	380	1.0	330	380	110
117-84-0	Di-n-octylphthalate	~~U~~ UJ	380	1.0	330	380	250 CC4
367-12-4	2-Fluorophenol		73%				
13127-88-3	Phenol-D6		86%				
4165-60-0	Nitrobenzene-D5		72%				
321-60-8	2-Fluorobiphenyl		74%				
118-79-6	2,4,6-Tribromophenol		88%				
1718-51-0	Terphenyl-D14		81%				

MW 4/19/09

KATAHDIN ANALYTICAL SERVICES
Report of Analytical Results

20

Client: CH2MHill
Project: TO-009 Lejeune
PO No:
Sample Date: 01/25/09
Received Date: 01/27/09
Extraction Date: 02/03/09
Analysis Date: 18-FEB-2009 11:15
Report Date: 02/20/2009
Matrix: SOIL
% Solids: 85.8

Lab ID: SC0411-39
Client ID: MR08-IS373D-2-3-09A
SDG: TO9-46
Extracted by: CB
Extraction Method: SW846 3550
Analyst: JLP
Analysis Method: SW846 8270C
Lab Prep Batch: WG60435
Units: ug/Kgdrywt

CAS#	Compound	Flags	Results	DF	PQL	Adj.PQL	Adj.MDL
100-52-7	Benzaldehyde	~~U~~ UJ	580	1.0	500	580	140 JCB
108-95-2	Phenol	U	580	1.0	500	580	180
111-44-4	Bis(2-Chloroethyl)ether	U	380	1.0	330	380	94
95-57-8	2-Chlorophenol	U	580	1.0	500	580	190
95-48-7	2-Methylphenol	U	700	1.0	600	700	230
108-60-1	2,2'-Oxybis(1-chloropropane)	U	380	1.0	330	380	100
98-86-2	Acetophenone	U	700	1.0	600	700	210
621-64-7	N-Nitroso-di-n-propylamine	U	380	1.0	330	380	97
65794-96-9	3&4-Methylphenol	U	700	1.0	600	700	220
67-72-1	Hexachloroethane	U	380	1.0	330	380	110
98-95-3	Nitrobenzene	U	380	1.0	330	380	110
78-59-1	Isophorone	U	380	1.0	330	380	87
88-75-5	2-Nitrophenol	U	700	1.0	600	700	190
105-67-9	2,4-Dimethylphenol	U	580	1.0	500	580	190
111-91-1	Bis(2-Chloroethoxy)methane	U	380	1.0	330	380	110
120-83-2	2,4-Dichlorophenol	U	580	1.0	500	580	170
106-47-8	4-Chloroaniline	U	580	1.0	500	580	140
105-60-2	Caprolactam	U	580	1.0	500	580	170
59-50-7	4-Chloro-3-Methylphenol	U	580	1.0	500	580	190
88-06-2	2,4,6-Trichlorophenol	U	580	1.0	500	580	180
95-95-4	2,4,5-Trichlorophenol	U	580	1.0	500	580	180
91-58-7	2-Chloronaphthalene	U	380	1.0	330	380	100
92-52-4	1,1'-Biphenyl	U	380	1.0	330	380	85
88-74-4	2-Nitroaniline	U	580	1.0	500	580	87
131-11-3	Dimethyl Phthalate	U	380	1.0	330	380	91
606-20-2	2,6-Dinitrotoluene	U	380	1.0	330	380	92
208-96-8	Acenaphthylene	U	380	1.0	330	380	82
99-09-2	3-Nitroaniline	U	580	1.0	500	580	110
83-32-9	Acenaphthene	U	380	1.0	330	380	76
51-28-5	2,4-Dinitrophenol	U	1400	1.0	1200	1400	440
132-64-9	Dibenzofuran	U	380	1.0	330	380	92
100-02-7	4-Nitrophenol	~~U~~ UJ	1400	1.0	1200	1400	360 JCB
121-14-2	2,4-Dinitrotoluene	U	380	1.0	330	380	99
84-66-2	Diethylphthalate	U	380	1.0	330	380	93
7005-72-3	4-Chlorophenyl-phenylether	U	380	1.0	330	380	91
100-01-6	4-Nitroaniline	U	580	1.0	500	580	160
534-52-1	4,6-Dinitro-2-Methylphenol	U	1400	1.0	1200	1400	390
86-30-6	N-Nitrosodiphenylamine	U	770	1.0	660	770	260
101-55-3	4-Bromophenyl-phenylether	U	380	1.0	330	380	99
1912-24-9	Atrazine	U	380	1.0	330	380	110
87-86-5	Pentachlorophenol	U	960	1.0	820	960	280
120-12-7	Anthracene	U	380	1.0	330	380	98
86-74-8	Carbazole	U	580	1.0	500	580	130

MW
4/17/09

KATAHDIN ANALYTICAL SERVICES
Report of Analytical Results

20

Client: CH2MHill
Project: TO-009 Lejeune
PO No:
Sample Date: 01/25/09
Received Date: 01/27/09
Extraction Date: 02/03/09
Analysis Date: 18-FEB-2009 11:15
Report Date: 02/20/2009
Matrix: SOIL
% Solids: 85.8

Lab ID: SC0411-39
Client ID: MR08-IS373D-2-3-09A
SDG: TO9-46
Extracted by: CB
Extraction Method: SW846 3550
Analyst: JLP
Analysis Method: SW846 8270C
Lab Prep Batch: WG60435
Units: ug/Kgdrywt

CAS#	Compound	Flags	Results	DF	PQL	Adj.PQL	Adj.MDL
84-74-2	Di-n-butylphthalate	U	380	1.0	330	380	120
85-68-7	Butylbenzylphthalate	U	380	1.0	330	380	110
91-94-1	3,3'-Dichlorobenzidine	U	580	1.0	500	580	130
218-01-9	Chrysene	U	380	1.0	330	380	110
117-81-7	bis(2-Ethylhexyl)phthalate	U	380	1.0	330	380	110
117-84-0	Di-n-octylphthalate	U	380	1.0	330	380	240
367-12-4	2-Fluorophenol		80%				
13127-88-3	Phenol-D6		95%				
4165-60-0	Nitrobenzene-D5		84%				
321-60-8	2-Fluorobiphenyl		79%				
118-79-6	2,4,6-Tribromophenol		101%				
1718-51-0	Terphenyl-D14		85%				

kw
4/17/09

ENVIRONMENTAL
Data Services, Inc.

POLYNUCLEAR AROMATIC COMPOUNDS BY 8270SIM

USEPA Region IV - Level IV Review

Site: MCB Camp Lejeune, TO-09 SDG #: TO9-47

Client: CH2M HILL, Inc., Virginia Beach, Virginia Date: April 18, 2009

Laboratory: Katahdin Analytical Services, Scarborough, Maine Reviewer: Nancy Weaver

EDS ID	Client Sample ID	Laboratory Sample ID	Matrix
1	MR08-IS350-3-4-09A	SC0412-2	Soil
2	MR08-SS350-09A	SC0412-4	Soil
2DL	MR08-SS350-09ADL	SC0412-4DL	Soil
3	MR08-SS349-09A	SC0412-6	Soil
4	MR08-IS349-3-4-09A	SC0412-8	Soil
5	MR08-SS326-09A	SC0412-10	Soil
5DL	MR08-SS326-09ADL	SC0412-10DL	Soil
6	MR08-IS326-4-5-09A	SC0412-12	Soil
7	MR08-SS327-09A	SC0412-14	Soil
7DL	MR08-SS327-09ADL	SC0412-14DL	Soil
8	MR08-IS327-2-3-09A	SC0412-16	Soil
9	MR08-SS324-09A	SC0412-18	Soil
9DL	MR08-SS324-09ADL	SC0412-18DL	Soil
10	MR08-IS324-3-4-09A	SC0412-20	Soil
11	MR08-SS325-09A	SC0412-22	Soil
11DL	MR08-SS325-09ADL	SC0412-22DL	Soil
12	MR08-IS325-3-4-09A	SC0412-24	Soil
13	MR08-SS323-09A	SC0412-26	Soil
13DL	MR08-SS323-09ADL	SC0412-26DL	Soil
14	MR08-IS323-2-3-06A	SC0412-28	Soil
15	MR08-SS321-09A	SC0412-30	Soil
16	MR08-IS321-2-3-09A	SC0412-32	Soil
17	MR08-SS322-09A	SC0412-34	Soil
18	MR08-IS322-2-3-09A	SC0412-36	Soil
19	MR08-SS320-09A	SC0412-38	Soil
19DL	MR08-SS320-09ADL	SC0412-38DL	Soil
20	MR08-SS351-09A	SC0412-40	Soil
20MS	MR08-SS351-09AMS	SC0412-40MS	Soil
20MSD	MR08-SS351-09AMSD	SC0412-40MSD	Soil

The USEPA "Contract Laboratory Program National Functional Guidelines for Organic Data Review," October 1999, and professional judgment were used in evaluating the data in this summary report.

Holding Times - All samples were extracted within 14 days for soil samples and analyzed within 40 days for all samples.

Sample	Date Sampled	Date Analyzed	# of Days	Qualifier
2	01/25/09	02/12/09	18	J/UJ
2DL	01/25/09	02/12/09	18	J/UJ

GC/MS Tuning - All of the DFTPP tunes in the initial and continuing calibrations met the percent relative abundance criteria.

Initial Calibration - The initial calibrations exhibited acceptable %RSD and mean RRF values.

Continuing Calibration - The continuing calibrations exhibited acceptable %D and RRF values except the following.

CCAL Date	Compound	%D/RRF	Qualifier	Affected Samples
02/19/09	Pyrene	32.33%	J/UJ	7DL, 5DL, 9DL, 14, 15

Surrogates - Several samples were diluted out and flagged "0D". No action was taken on this basis.

MS/MSD - The MS/MSD sample exhibited acceptable %R and RPD values except the following.

MS/MSD Sample ID	Compound	MS/MSD %R/RPD	Qualifier
20	Phenanthrene	Ok/166%/Ok	J
	Fluoranthene	179%/247%/Ok	J
	Pyrene	134%/233%/Ok	J
	Benzo (a) pyrene	0%/35%/Ok	J/R
	Hexachlorocyclopentadiene	18%/17%/Ok	J/UJ

Laboratory Control Sample - The LCS samples exhibited acceptable %R values.

Internal Standard (IS) Area Performance - All internal standards met response and retention time (RT) criteria.

Method Blank - The method blanks were free of contamination.

Field, Equipment Blank - Field QC results are summarized below.

Blank ID	Compound	Conc. ug/L	Action Level ug/L	Qualifier	Affected Samples
MR08-FB012609	None - ND	-	-	-	-
MR08-EB012509	Phenanthrene	0.099	16.5	U	8, 12
MR08-EB012609	None - ND	-	-	-	-

Field Duplicates - Field duplicate samples were not included in this data package.

Compound Quantitation - Several samples exhibited high concentrations of target compounds and were flagged (E) by the laboratory. The samples were diluted and reanalyzed and the dilution results for these compounds should be used for reporting.

KATAHDIN ANALYTICAL SERVICES
Report of Analytical Results

Client: CH2MHill
Project: TO-009 Lejeune
PO No:
Sample Date: 01/25/09
Received Date: 01/27/09
Extraction Date: 02/03/09
Analysis Date: 18-FEB-2009 11:16
Report Date: 02/25/2009
Matrix: SOIL
% Solids: 81.1

Lab ID: SC0412-2
Client ID: MR08-IS350-3-4-09A
SDG: TO9-47
Extracted by: CB
Extraction Method: SW846 3550
Analyst: JLP
Analysis Method: SW846 M8270C
Lab Prep Batch: WG60436
Units: ug/Kgdrywt

CAS#	Compound	Flags	Results	DF	PQL	Adj.PQL	Adj.MDL
91-20-3	Naphthalene	U	12	1.0	10	12	3.2
91-57-6	2-Methylnaphthalene	J	6.2	1.0	10	12	2.7
86-73-7	Fluorene	U	12	1.0	10	12	3.9
85-01-8	Phenanthrene	U	12	1.0	10	12	2.2
206-44-0	Fluoranthene	U	12	1.0	10	12	2.2
129-00-0	Pyrene	J	4.6	1.0	10	12	2.6
56-55-3	Benzo(a)anthracene	J	8.1	1.0	10	12	2.3
205-99-2	Benzo(b)fluoranthene	J	9.7	1.0	10	12	3.0
207-08-9	Benzo(k)fluoranthene	J	2.9	1.0	10	12	3.8
50-32-8	Benzo(a)pyrene	U	12	1.0	10	12	4.1
193-39-5	Indeno(1,2,3-cd)pyrene	U	12	1.0	10	12	2.3
53-70-3	Dibenzo(a,h)anthracene	U	12	1.0	10	12	2.2
191-24-2	Benzo(g,h,i)perylene	U	12	1.0	10	12	2.5
118-74-1	Hexachlorobenzene	U	12	1.0	10	12	2.2
87-68-3	Hexachlorobutadiene	U	12	1.0	10	12	2.8
77-47-4	Hexachlorocyclopentadiene	J	8.6	1.0	10	12	1.8
7297-45-2	2-Methylnaphthalene-D10		74%				
367-12-4	2,4-Dibromophenol		85%				
81103-79-9	Fluorene-d10		77%				
1718-51-1	Pyrene-D10		91%				

LW
4/18/09

2

KATAHDIN ANALYTICAL SERVICES
Report of Analytical Results

Client: CH2MHill
Project: TO-009 Lejeune
PO No:
Sample Date: 01/25/09
Received Date: 01/27/09
Extraction Date: 02/12/09
Analysis Date: 18-FEB-2009 05:12
Report Date: 02/25/2009
Matrix: SOIL
% Solids: 77.8

Lab ID: SC0412-4RE
Client ID: MR08-SS350-09A
SDG: TO9-47
Extracted by: CB
Extraction Method: SW846 3550
Analyst: JCG
Analysis Method: SW846 M8270C
Lab Prep Batch: WG60727
Units: ug/Kgdrywt

CAS#	Compound	Flags	Results	DF	PQL	Adj.PQL	Adj.MDL
91-20-3	Naphthalene	~~U~~ UJ	13	1.0	10	13	3.3 HT
91-57-6	2-Methylnaphthalene	~~J~~ J	7.2	1.0	10	13	2.8
86-73-7	Fluorene	~~J~~	5.5	1.0	10	13	4.1
85-01-8	Phenanthrene		200	1.0	10	13	2.3
206-44-0	Fluoranthene	~~E~~	800 J ~~530~~ 8	1.0 HT	10	100 ~~13~~ 18	~~2.3~~ R DL
129-00-0	Pyrene	~~E~~	590 J ~~690~~ 8	1.0 HT	10	100 ~~13~~ 22	~~2.7~~ R DL
56-55-3	Benzo(a)anthracene		J 270	1.0	10	13	2.4 HT
205-99-2	Benzo(b)fluoranthene	~~E~~	560 J 430 8	1.0 HT	10	100 ~~13~~ 25	~~3.1~~ R DL
207-08-9	Benzo(k)fluoranthene	~~E~~	290 J 350 8	1.0 HT	10	100 ~~13~~ 32	~~4.0~~ R DL
50-32-8	Benzo(a)pyrene		J 330	1.0	10	13	4.2 HT
193-39-5	Indeno(1,2,3-cd)pyrene		240	1.0	10	13	2.4
53-70-3	Dibenzo(a,h)anthracene		110	1.0	10	13	2.3
191-24-2	Benzo(g,h,i)perylene		210	1.0	10	13	2.6
118-74-1	Hexachlorobenzene	~~U~~ UJ	13	1.0	10	13	2.3
87-68-3	Hexachlorobutadiene	~~U~~	13	1.0	10	13	3.0
77-47-4	Hexachlorocyclopentadiene	~~U~~	13	1.0	10	13	1.9
7297-45-2	2-Methylnaphthalene-D10		82%				
367-12-4	2,4-Dibromophenol		113%				
81103-79-9	Fluorene-d10		92%				
1718-51-1	Pyrene-D10		129%				

2DL

KATAHDIN ANALYTICAL SERVICES
Report of Analytical Results

Client: CH2MHill
Project: TO-009 Lejeune
PO No:
Sample Date: 01/25/09
Received Date: 01/27/09
Extraction Date: 02/12/09
Analysis Date: 18-FEB-2009 19:44
Report Date: 02/25/2009
Matrix: SOIL
% Solids: 77.8

Lab ID: SC0412-4REDL
Client ID: MR08-SS350-09A
SDG: TO9-47
Extracted by: CB
Extraction Method: SW846 3550
Analyst: JCG
Analysis Method: SW846 M8270C
Lab Prep Batch: WG60727
Units: ug/Kgdrywt

Use original

CAS#	Compound	Flags		Results	DF	PQL	Adj.PQL	Adj.MDL	
91-20-3	Naphthalene	U	UJ	100	8.0	10	100	27	HT
91-57-6	2-Methylnaphthalene	U		100	8.0	10	100	23	
86-73-7	Fluorene	U		100	8.0	10	100	33	
85-01-8	Phenanthrene		J	250	8.0	10	100	18	
206-44-0	Fluoranthene			800	8.0	10	100	18	
129-00-0	Pyrene			590	8.0	10	100	22	
56-55-3	Benzo(a)anthracene			310	8.0	10	100	20	
205-99-2	Benzo(b)fluoranthene			560	8.0	10	100	25	
207-08-9	Benzo(k)fluoranthene			290	8.0	10	100	32	
50-32-8	Benzo(a)pyrene			350	8.0	10	100	34	
193-39-5	Indeno(1,2,3-cd)pyrene			270	8.0	10	100	20	
53-70-3	Dibenzo(a,h)anthracene	J		98	8.0	10	100	18	
191-24-2	Benzo(g,h,i)perylene			270	8.0	10	100	20	
118-74-1	Hexachlorobenzene	U	UJ	100	8.0	10	100	18	
87-68-3	Hexachlorobutadiene	U		100	8.0	10	100	24	
77-47-4	Hexachlorocyclopentadiene	U		100	8.0	10	100	15	
7297-45-2	2-Methylnaphthalene-D10			82%					
367-12-4	2,4-Dibromophenol			92%					
81103-79-9	Fluorene-d10			117%					
1718-51-1	Pyrene-D10			107%					

R DL

LW 4/23/09

3

KATAHDIN ANALYTICAL SERVICES
Report of Analytical Results

Client: CH2MHill
Project: TO-009 Lejeune
PO No:
Sample Date: 01/25/09
Received Date: 01/27/09
Extraction Date: 02/03/09
Analysis Date: 18-FEB-2009 11:57
Report Date: 02/25/2009
Matrix: SOIL
% Solids: 86.2

Lab ID: SC0412-6
Client ID: MR08-SS349-09A
SDG: T09-47
Extracted by: CB
Extraction Method: SW846 3550
Analyst: JLP
Analysis Method: SW846 M8270C
Lab Prep Batch: WG60436
Units: ug/Kgdrywt

CAS#	Compound	Flags	Results	DF	PQL	Adj.PQL	Adj.MDL
91-20-3	Naphthalene	J	5.6	1.0	10	12	3.0
91-57-6	2-Methylnaphthalene	J	6.9	1.0	10	12	2.6
86-73-7	Fluorene	J	5.8	1.0	10	12	3.7
85-01-8	Phenanthrene		99	1.0	10	12	2.1
206-44-0	Fluoranthene		200	1.0	10	12	2.1
129-00-0	Pyrene		190	1.0	10	12	2.4
56-55-3	Benzo(a)anthracene		89	1.0	10	12	2.2
205-99-2	Benzo(b)fluoranthene		170	1.0	10	12	2.8
207-08-9	Benzo(k)fluoranthene		72	1.0	10	12	3.6
50-32-8	Benzo(a)pyrene		91	1.0	10	12	3.8
193-39-5	Indeno(1,2,3-cd)pyrene		71	1.0	10	12	2.2
53-70-3	Dibenzo(a,h)anthracene		22	1.0	10	12	2.1
191-24-2	Benzo(g,h,i)perylene		66	1.0	10	12	2.3
118-74-1	Hexachlorobenzene	U	12	1.0	10	12	2.1
87-68-3	Hexachlorobutadiene	U	12	1.0	10	12	2.7
77-47-4	Hexachlorocyclopentadiene	U	12	1.0	10	12	1.7
7297-45-2	2-Methylnaphthalene-D10		82%				
367-12-4	2,4-Dibromophenol		103%				
81103-79-9	Fluorene-d10		87%				
1718-51-1	Pyrene-D10		113%				

LW 4/18/09

4

KATAHDIN ANALYTICAL SERVICES
Report of Analytical Results

Client: CH2MHill
Project: TO-009 Lejeune
PO No:
Sample Date: 01/25/09
Received Date: 01/27/09
Extraction Date: 02/03/09
Analysis Date: 18-FEB-2009 12:39
Report Date: 02/25/2009
Matrix: SOIL
% Solids: 85.6

Lab ID: SC0412-8
Client ID: MR08-IS349-3-4-09A
SDG: TO9-47
Extracted by: CB
Extraction Method: SW846 3550
Analyst: JLP
Analysis Method: SW846 M8270C
Lab Prep Batch: WG60436
Units: ug/Kgdrywt

CAS#	Compound	Flags	Results	DF	PQL	Adj.PQL	Adj.MDL
91-20-3	Naphthalene	U	12	1.0	10	12	3.0
91-57-6	2-Methylnaphthalene	U	12	1.0	10	12	2.6
86-73-7	Fluorene	U	12	1.0	10	12	3.7
85-01-8	Phenanthrene	U	12	1.0	10	12	2.1
206-44-0	Fluoranthene	U	12	1.0	10	12	2.1
129-00-0	Pyrene	U	12	1.0	10	12	2.4
56-55-3	Benzo(a)anthracene	J	6.0	1.0	10	12	2.2
205-99-2	Benzo(b)fluoranthene	U	12	1.0	10	12	2.8
207-08-9	Benzo(k)fluoranthene	U	12	1.0	10	12	3.6
50-32-8	Benzo(a)pyrene	U	12	1.0	10	12	3.8
193-39-5	Indeno(1,2,3-cd)pyrene	U	12	1.0	10	12	2.2
53-70-3	Dibenzo(a,h)anthracene	U	12	1.0	10	12	2.1
191-24-2	Benzo(g,h,i)perylene	U	12	1.0	10	12	2.3
118-74-1	Hexachlorobenzene	U	12	1.0	10	12	2.1
87-68-3	Hexachlorobutadiene	U	12	1.0	10	12	2.7
77-47-4	Hexachlorocyclopentadiene	J	8.1	1.0	10	12	1.8
7297-45-2	2-Methylnaphthalene-D10		78%				
367-12-4	2,4-Dibromophenol		97%				
81103-79-9	Fluorene-d10		80%				
1718-51-1	Pyrene-D10		105%				

fw
4/18/09

5

KATAHDIN ANALYTICAL SERVICES
Report of Analytical Results

Client: CH2MHill
Project: TO-009 Lejeune
PO No:
Sample Date: 01/24/09
Received Date: 01/27/09
Extraction Date: 02/03/09
Analysis Date: 19-FEB-2009 06:03
Report Date: 02/25/2009
Matrix: SOIL
% Solids: 88.2

Lab ID: SC0412-10
Client ID: MR08-SS326-09A
SDG: TO9-47
Extracted by: CB
Extraction Method: SW846 3550
Analyst: JCG
Analysis Method: SW846 M8270C
Lab Prep Batch: WG60436
Units: ug/Kgdrywt

CAS#	Compound	Flags	Results	DF	PQL	Adj.PQL	Adj.MDL
91-20-3	Naphthalene	J	3.9	1.0	10	11	2.9
91-57-6	2-Methylnaphthalene	J	8.7	1.0	10	11	2.5
86-73-7	Fluorene	J	4.9	1.0	10	11	3.6
85-01-8	Phenanthrene		200	1.0	10	11	2.0
206-44-0	Fluoranthene	~~E~~ 870	~~700~~ 5	1.0	10 57	11 10	~~2.0~~ R DL
129-00-0	Pyrene	~~E~~ 770J	~~640~~	1.0 CCH	10	11 12	2.1
56-55-3	Benzo(a)anthracene	~~E~~ 380	~~360~~	1.0	10	11 11	2.2
205-99-2	Benzo(b)fluoranthene	~~E~~ 710	~~650~~	1.0	10	11 14	2.7
207-08-9	Benzo(k)fluoranthene	~~E~~ 270	~~330~~	1.0	10	11 18	3.5
50-32-8	Benzo(a)pyrene	~~E~~ 400	~~380~~	1.0	10	11 19	3.7
193-39-5	Indeno(1,2,3-cd)pyrene		230	1.0	10	11	2.2
53-70-3	Dibenzo(a,h)anthracene		110	1.0	10	11	2.0
191-24-2	Benzo(g,h,i)perylene		200	1.0	10	11	2.3
118-74-1	Hexachlorobenzene	U	11	1.0	10	11	2.0
87-68-3	Hexachlorobutadiene	U	11	1.0	10	11	2.6
77-47-4	Hexachlorocyclopentadiene	U	11	1.0	10	11	1.7
7297-45-2	2-Methylnaphthalene-D10		84%				
367-12-4	2,4-Dibromophenol		115%				
81103-79-9	Fluorene-d10		96%				
1718-51-1	Pyrene-D10		117%				

RW 4/18/09

5DL

KATAHDIN ANALYTICAL SERVICES
Report of Analytical Results

Client: CH2MHill
Project: TO-009 Lejeune
PO No:
Sample Date: 01/25/09
Received Date: 01/27/09
Extraction Date: 02/03/09
Analysis Date: 19-FEB-2009 12:32
Report Date: 02/25/2009
Matrix: SOIL
% Solids: 88.1

Lab ID: SC0412-10DL
Client ID: MR08-SS326-09A
SDG: TO9-47
Extracted by: CB
Extraction Method: SW846 3550
Analyst: JLP
Analysis Method: SW846 M8270C
Lab Prep Batch: WG60436
Units: ug/Kgdrywt

Use original

R DL

CAS#	Compound	Flags	Results	DF	PQL	Adj.PQL	Adj.MDL
91-20-3	Naphthalene	U	57	5.0	10	57	15
91-57-6	2-Methylnaphthalene	J	27	5.0	10	57	12
86-73-7	Fluorene	U	57	5.0	10	57	18
85-01-8	Phenanthrene		180	5.0	10	57	10
206-44-0	Fluoranthene		870	5.0	10	57	10
129-00-0	Pyrene	J	770	5.0	10	57	12
56-55-3	Benzo(a)anthracene		380	5.0	10	57	11
205-99-2	Benzo(b)fluoranthene		710	5.0	10	57	14
207-08-9	Benzo(k)fluoranthene		270	5.0	10	57	18
50-32-8	Benzo(a)pyrene		400	5.0	10	57	19
193-39-5	Indeno(1,2,3-cd)pyrene		300	5.0	10	57	11
53-70-3	Dibenzo(a,h)anthracene		110	5.0	10	57	10
191-24-2	Benzo(g,h,i)perylene		280	5.0	10	57	11
118-74-1	Hexachlorobenzene	U	57	5.0	10	57	10
87-68-3	Hexachlorobutadiene	U	57	5.0	10	57	13
77-47-4	Hexachlorocyclopentadiene	U	57	5.0	10	57	8.5
7297-45-2	2-Methylnaphthalene-D10		85%				
367-12-4	2,4-Dibromophenol		127%				
81103-79-9	Fluorene-d10		108%				
1718-51-1	Pyrene-D10		129%				

CCH

lcw 4/18/09

6

KATAHDIN ANALYTICAL SERVICES
Report of Analytical Results

Client: CH2MHill
Project: TO-009 Lejeune
PO No:
Sample Date: 01/25/09
Received Date: 01/27/09
Extraction Date: 02/03/09
Analysis Date: 18-FEB-2009 23:53
Report Date: 02/25/2009
Matrix: SOIL
% Solids: 91.0

Lab ID: SC0412-12
Client ID: MR08-IS326-4-5-09A
SDG: T09-47
Extracted by: CB
Extraction Method: SW846 3550
Analyst: JCG
Analysis Method: SW846 M8270C
Lab Prep Batch: WG60436
Units: ug/Kgdrywt

CAS#	Compound	Flags	Results	DF	PQL	Adj.PQL	Adj.MDL
91-20-3	Naphthalene	U	11	1.0	10	11	2.8
91-57-6	2-Methylnaphthalene	U	11	1.0	10	11	2.4
86-73-7	Fluorene	U	11	1.0	10	11	3.5
85-01-8	Phenanthrene	U	11	1.0	10	11	2.0
206-44-0	Fluoranthene	U	11	1.0	10	11	2.0
129-00-0	Pyrene	U	11	1.0	10	11	2.3
56-55-3	Benzo(a)anthracene	J	6.0	1.0	10	11	2.1
205-99-2	Benzo(b)fluoranthene	U	11	1.0	10	11	2.6
207-08-9	Benzo(k)fluoranthene	U	11	1.0	10	11	3.4
50-32-8	Benzo(a)pyrene	U	11	1.0	10	11	3.6
193-39-5	Indeno(1,2,3-cd)pyrene	U	11	1.0	10	11	2.1
53-70-3	Dibenzo(a,h)anthracene	U	11	1.0	10	11	2.0
191-24-2	Benzo(g,h,i)perylene	U	11	1.0	10	11	2.2
118-74-1	Hexachlorobenzene	U	11	1.0	10	11	2.0
87-68-3	Hexachlorobutadiene	U	11	1.0	10	11	2.5
77-47-4	Hexachlorocyclopentadiene	U	11	1.0	10	11	1.6
7297-45-2	2-Methylnaphthalene-D10		80%				
367-12-4	2,4-Dibromophenol		104%				
81103-79-9	Fluorene-d10		87%				
1718-51-1	Pyrene-D10		106%				

LW 4/18/09

7

KATAHDIN ANALYTICAL SERVICES
Report of Analytical Results

Client: CH2MHill
Project: TO-009 Lejeune
PO No:
Sample Date: 01/25/09
Received Date: 01/27/09
Extraction Date: 02/03/09
Analysis Date: 19-FEB-2009 02:38
Report Date: 02/25/2009
Matrix: SOIL
% Solids: 71.7

Lab ID: SC0412-14
Client ID: MR08-SS327-09A
SDG: TO9-47
Extracted by: CB
Extraction Method: SW846 3550
Analyst: JCG
Analysis Method: SW846 M8270C
Lab Prep Batch: WG60436
Units: ug/Kgdrywt

CAS#	Compound	Flags	Results	DF	PQL	Adj.PQL	Adj.MDL
91-20-3	Naphthalene	J	4.9	1.0	10	14	3.6
91-57-6	2-Methylnaphthalene	J	8.5	1.0	10	14	3.1
86-73-7	Fluorene	J	10	1.0	10	14	4.5
85-01-8	Phenanthrene		370	1.0	10	14	2.5
206-44-0	Fluoranthene	~~E~~	1600 ~~1200~~	10 1.0	10	140 14	25 2.5 R DL
129-00-0	Pyrene	~~E~~	1900J ~~1100~~	1.0 CCH	10	14	29 2.9
56-55-3	Benzo(a)anthracene	~~E~~	690 ~~570~~	1.0	10	14	26 2.6
205-99-2	Benzo(b)fluoranthene	~~E~~	1000 ~~1100~~	1.0	10	14	33 3.3
207-08-9	Benzo(k)fluoranthene	~~E~~	780 ~~470~~	1.0	10	14	43 4.3
50-32-8	Benzo(a)pyrene	~~E~~	760 ~~610~~	1.0	10	14	46 4.6
193-39-5	Indeno(1,2,3-cd)pyrene	~~E~~	610 ~~480~~	1.0	10	14	26 2.6
53-70-3	Dibenzo(a,h)anthracene		190	1.0	10	14	2.5
191-24-2	Benzo(g,h,i)perylene	~~E~~	580 ~~420~~	10 ~~1.0~~	10	140 ~~14~~	28 ~~2.8~~ R DL
118-74-1	Hexachlorobenzene	U	14	1.0	10	14	2.5
87-68-3	Hexachlorobutadiene	U	14	1.0	10	14	3.2
77-47-4	Hexachlorocyclopentadiene	U	14	1.0	10	14	2.1
7297-45-2	2-Methylnaphthalene-D10		76%				
367-12-4	2,4-Dibromophenol		102%				
81103-79-9	Fluorene-d10		82%				
1718-51-1	Pyrene-D10		100%				

Rev 4/18/09

7DL

KATAHDIN ANALYTICAL SERVICES
Report of Analytical Results

Client: CH2MHill
Project: TO-009 Lejeune
PO No:
Sample Date: 01/25/09
Received Date: 01/27/09
Extraction Date: 02/03/09
Analysis Date: 19-FEB-2009 11:09
Report Date: 02/25/2009
Matrix: SOIL
% Solids: 71.7

Lab ID: SC0412-14DL
Client ID: MR08-SS327-09A
SDG: TO9-47
Extracted by: CB
Extraction Method: SW846 3550
Analyst: JLP
Analysis Method: SW846 M8270C
Lab Prep Batch: WG60436
Units: ug/Kgdrywt

Uol mg.Nal

R DL

CAS#	Compound	Flags	Results	DF	PQL	Adj.PQL	Adj.MDL
91-20-3	Naphthalene	U	140	10	10	140	36
91-57-6	2-Methylnaphthalene	U	140	10	10	140	31
86-73-7	Fluorene	U	140	10	10	140	45
85-01-8	Phenanthrene		370	10	10	140	25
206-44-0	Fluoranthene		1600	10	10	140	25
129-00-0	Pyrene		J 1400	10	10	140	29 CCH
56-55-3	Benzo(a)anthracene		690	10	10	140	26
205-99-2	Benzo(b)fluoranthene		1000	10	10	140	33
207-08-9	Benzo(k)fluoranthene		780	10	10	140	43
50-32-8	Benzo(a)pyrene		760	10	10	140	46
193-39-5	Indeno(1,2,3-cd)pyrene		610	10	10	140	26
53-70-3	Dibenzo(a,h)anthracene		230	10	10	140	25
191-24-2	Benzo(g,h,i)perylene		580	10	10	140	28
118-74-1	Hexachlorobenzene	U	140	10	10	140	25
87-68-3	Hexachlorobutadiene	U	140	10	10	140	32
77-47-4	Hexachlorocyclopentadiene	U	140	10	10	140	21
7297-45-2	2-Methylnaphthalene-D10		D				
367-12-4	2,4-Dibromophenol		D				
81103-79-9	Fluorene-d10		D				
1718-51-1	Pyrene-D10		D				

lew 4/18/09

8

KATAHDIN ANALYTICAL SERVICES
Report of Analytical Results

Client: CH2MHill
Project: TO-009 Lejeune
PO No:
Sample Date: 01/25/09
Received Date: 01/27/09
Extraction Date: 02/03/09
Analysis Date: 19-FEB-2009 00:34
Report Date: 02/25/2009
Matrix: SOIL
% Solids: 89.7

Lab ID: SC0412-16
Client ID: MR08-IS327-2-3-09A
SDG: TO9-47
Extracted by: CB
Extraction Method: SW846 3550
Analyst: JCG
Analysis Method: SW846 M8270C
Lab Prep Batch: WG60436
Units: ug/Kgdrywt

CAS#	Compound	Flags	Results	DF	PQL	Adj.PQL	Adj.MDL
91-20-3	Naphthalene	U	11	1.0	10	11	2.9
91-57-6	2-Methylnaphthalene	U	11	1.0	10	11	2.4
86-73-7	Fluorene	U	11	1.0	10	11	3.6
85-01-8	Phenanthrene	~~J~~	11u ~~8.3~~	1.0	10	11	2.0 BL
206-44-0	Fluoranthene		25	1.0	10	11	2.0
129-00-0	Pyrene		18	1.0	10	11	2.3
56-55-3	Benzo(a)anthracene		12	1.0	10	11	2.1
205-99-2	Benzo(b)fluoranthene		15	1.0	10	11	2.7
207-08-9	Benzo(k)fluoranthene	J	8.6	1.0	10	11	3.4
50-32-8	Benzo(a)pyrene	J	8.2	1.0	10	11	3.7
193-39-5	Indeno(1,2,3-cd)pyrene	J	6.6	1.0	10	11	2.1
53-70-3	Dibenzo(a,h)anthracene	J	3.3	1.0	10	11	2.0
191-24-2	Benzo(g,h,i)perylene	J	6.0	1.0	10	11	2.2
118-74-1	Hexachlorobenzene	U	11	1.0	10	11	2.0
87-68-3	Hexachlorobutadiene	U	11	1.0	10	11	2.6
77-47-4	Hexachlorocyclopentadiene	U	11	1.0	10	11	1.7
7297-45-2	2-Methylnaphthalene-D10		74%				
367-12-4	2,4-Dibromophenol		90%				
81103-79-9	Fluorene-d10		79%				
1718-51-1	Pyrene-D10		100%				

fw 4/18/09

9

KATAHDIN ANALYTICAL SERVICES
Report of Analytical Results

Client: CH2MHill
Project: TO-009 Lejeune
PO No:
Sample Date: 01/25/09
Received Date: 01/27/09
Extraction Date: 02/03/09
Analysis Date: 19-FEB-2009 03:19
Report Date: 02/25/2009
Matrix: SOIL
% Solids: 87.5

Lab ID: SC0412-18
Client ID: MR08-SS324-09A
SDG: TO9-47
Extracted by: CB
Extraction Method: SW846 3550
Analyst: JCG
Analysis Method: SW846 M8270C
Lab Prep Batch: WG60436
Units: ug/Kgdrywt

CAS#	Compound	Flags	Results	DF	PQL	Adj.PQL	Adj.MDL
91-20-3	Naphthalene	U	11	1.0	10	11	3.0
91-57-6	2-Methylnaphthalene	J	5.5	1.0	10	11	2.5
86-73-7	Fluorene		18	1.0	10	11	3.6
85-01-8	Phenanthrene	~~E~~	1900 ~~1500~~	20 ~~1.0~~	10	230 ~~11~~ 41	~~2.0~~
206-44-0	Fluoranthene	~~E~~	3400 ~~2700~~	~~1.0~~	10	~~11~~ 41	~~2.0~~
129-00-0	Pyrene	~~E~~	3100 J ~~2400~~	~~1.0~~ CCH	10	~~11~~ 48	2.4
56-55-3	Benzo(a)anthracene	~~E~~	1000 ~~750~~	~~1.0~~	10	~~11~~ 43	~~2.2~~
205-99-2	Benzo(b)fluoranthene	~~E~~	1600 ~~990~~	~~1.0~~	10	~~11~~ 55	~~2.7~~
207-08-9	Benzo(k)fluoranthene	~~E~~	640 ~~880~~	~~1.0~~	10	~~11~~ 71	~~3.5~~
50-32-8	Benzo(a)pyrene	~~E~~	840 ~~680~~	~~1.0~~	10	~~11~~ 75	~~3.8~~
193-39-5	Indeno(1,2,3-cd)pyrene	~~E~~	610 ~~390~~	~~1.0~~	10	~~11~~ 43	~~2.2~~
53-70-3	Dibenzo(a,h)anthracene		230	1.0	10	11	2.0
191-24-2	Benzo(g,h,i)perylene	~~E~~	750 ~~410~~	20 ~~1.0~~	10	230 ~~11~~ 46	~~2.3~~
118-74-1	Hexachlorobenzene	U	11	1.0	10	11	2.0
87-68-3	Hexachlorobutadiene	U	11	1.0	10	11	2.6
77-47-4	Hexachlorocyclopentadiene	U	11	1.0	10	11	1.7
7297-45-2	2-Methylnaphthalene-D10		84%				
367-12-4	2,4-Dibromophenol		107%				
81103-79-9	Fluorene-d10		89%				
1718-51-1	Pyrene-D10		108%				

JW 4/18/09

9DL

KATAHDIN ANALYTICAL SERVICES
Report of Analytical Results

Client: CH2MHill
Project: TO-009 Lejeune
PO No:
Sample Date: 01/25/09
Received Date: 01/27/09
Extraction Date: 02/03/09
Analysis Date: 19-FEB-2009 11:50
Report Date: 02/25/2009
Matrix: SOIL
% Solids: 87.5

Lab ID: SC0412-18DL
Client ID: MR08-SS324-09A
SDG: TO9-47
Extracted by: CB
Extraction Method: SW846 3550
Analyst: JLP
Analysis Method: SW846 M8270C
Lab Prep Batch: WG60436
Units: ug/Kgdrywt

Use original

R DL

CAS#	Compound	Flags	Results	DF	PQL	Adj.PQL	Adj.MDL
91-20-3	Naphthalene	U	230	20	10	230	59
91-57-6	2-Methylnaphthalene	U	230	20	10	230	50
86-73-7	Fluorene	U	230	20	10	230	73
85-01-8	Phenanthrene		1900	20	10	230	41
206-44-0	Fluoranthene		3400	20	10	230	41
129-00-0	Pyrene	J	3100	20	10	230	48 CCH
56-55-3	Benzo(a)anthracene		1000	20	10	230	43
205-99-2	Benzo(b)fluoranthene		1600	20	10	230	55
207-08-9	Benzo(k)fluoranthene		640	20	10	230	71
50-32-8	Benzo(a)pyrene		840	20	10	230	75
193-39-5	Indeno(1,2,3-cd)pyrene		610	20	10	230	43
53-70-3	Dibenzo(a,h)anthracene		290	20	10	230	41
191-24-2	Benzo(g,h,i)perylene		750	20	10	230	46
118-74-1	Hexachlorobenzene	U	230	20	10	230	41
87-68-3	Hexachlorobutadiene	U	230	20	10	230	52
77-47-4	Hexachlorocyclopentadiene	U	230	20	10	230	34
7297-45-2	2-Methylnaphthalene-D10		D				
367-12-4	2,4-Dibromophenol		D				
81103-79-9	Fluorene-d10		D				
1718-51-1	Pyrene-D10		D				

4/18/09

KATAHDIN ANALYTICAL SERVICES
Report of Analytical Results

10

Client: CH2MHill
Project: TO-009 Lejeune
PO No:
Sample Date: 01/25/09
Received Date: 01/27/09
Extraction Date: 02/03/09
Analysis Date: 19-FEB-2009 01:15
Report Date: 02/25/2009
Matrix: SOIL
% Solids: 87.1

Lab ID: SC0412-20
Client ID: MR08-IS324-3-4-09A
SDG: TO9-47
Extracted by: CB
Extraction Method: SW846 3550
Analyst: JCG
Analysis Method: SW846 M8270C
Lab Prep Batch: WG60436
Units: ug/Kgdrywt

CAS#	Compound	Flags	Results	DF	PQL	Adj.PQL	Adj.MDL
91-20-3	Naphthalene	U	11	1.0	10	11	3.0
91-57-6	2-Methylnaphthalene	U	11	1.0	10	11	2.5
86-73-7	Fluorene	U	11	1.0	10	11	3.7
85-01-8	Phenanthrene	U	11	1.0	10	11	2.1
206-44-0	Fluoranthene	J	2.7	1.0	10	11	2.1
129-00-0	Pyrene	U	11	1.0	10	11	2.4
56-55-3	Benzo(a)anthracene	J	6.4	1.0	10	11	2.2
205-99-2	Benzo(b)fluoranthene	U	11	1.0	10	11	2.8
207-08-9	Benzo(k)fluoranthene	U	11	1.0	10	11	3.6
50-32-8	Benzo(a)pyrene	U	11	1.0	10	11	3.8
193-39-5	Indeno(1,2,3-cd)pyrene	U	11	1.0	10	11	2.2
53-70-3	Dibenzo(a,h)anthracene	U	11	1.0	10	11	2.1
191-24-2	Benzo(g,h,i)perylene	U	11	1.0	10	11	2.3
118-74-1	Hexachlorobenzene	U	11	1.0	10	11	2.1
87-68-3	Hexachlorobutadiene	U	11	1.0	10	11	2.6
77-47-4	Hexachlorocyclopentadiene	U	11	1.0	10	11	1.7
7297-45-2	2-Methylnaphthalene-D10		78%				
367-12-4	2,4-Dibromophenol		107%				
81103-79-9	Fluorene-d10		92%				
1718-51-1	Pyrene-D10		111%				

dw
4/18/09

11

KATAHDIN ANALYTICAL SERVICES
Report of Analytical Results

Client: CH2MHill
Project: TO-009 Lejeune
PO No:
Sample Date: 01/25/09
Received Date: 01/27/09
Extraction Date: 02/03/09
Analysis Date: 19-FEB-2009 13:55
Report Date: 02/25/2009
Matrix: SOIL
% Solids: 85.9

Lab ID: SC0412-22DL
Client ID: MR08-SS325-09A
SDG: TO9-47
Extracted by: CB
Extraction Method: SW846 3550
Analyst: JLP
Analysis Method: SW846 M8270C
Lab Prep Batch: WG60436
Units: ug/Kgdrywt

CAS#	Compound	Flags	Results	DF	PQL	Adj.PQL	Adj.MDL
91-20-3	Naphthalene		110	2.0	10	23	6.0
91-57-6	2-Methylnaphthalene		67	2.0	10	23	5.1
86-73-7	Fluorene	~~E~~ J	980 LR	2.0	10	23	7.4
85-01-8	Phenanthrene	E	35000 ~~15000~~ 5800	2.0	10	5800 23	1000 ~~4.9~~ R DL
206-44-0	Fluoranthene	E	80000 ~~25000~~	2.0	10	23	1000 4.2
129-00-0	Pyrene	E	52000 ~~23000~~	2.0	10	23	1200 4.9
56-55-3	Benzo(a)anthracene	E	25000 ~~19000~~	2.0	10	23	1100 4.4
205-99-2	Benzo(b)fluoranthene	E	32000 ~~25000~~	2.0	10	23	1400 5.6
207-08-9	Benzo(k)fluoranthene	E	26000 ~~7800~~	2.0	10	23	1800 7.2
50-32-8	Benzo(a)pyrene	E	26000 ~~14000~~	2.0	10	23	1900 7.7
193-39-5	Indeno(1,2,3-cd)pyrene	E	19000 ~~7600~~	2.0	10	23	1100 4.4
53-70-3	Dibenzo(a,h)anthracene	E	9400 ~~4400~~	2.0	10	23	1000 4.2
191-24-2	Benzo(g,h,i)perylene	E	19000 ~~5800~~	2.0	10	23	1200 4.8
118-74-1	Hexachlorobenzene	U	23	2.0	10	23	4.2
87-68-3	Hexachlorobutadiene	U	23	2.0	10	23	5.4
77-47-4	Hexachlorocyclopentadiene	U	23	2.0	10	23	3.5
7297-45-2	2-Methylnaphthalene-D10		76%				
367-12-4	2,4-Dibromophenol		99%				
81103-79-9	Fluorene-d10		94%				
1718-51-1	Pyrene-D10		113%				

LW
4/29/09

11 DL

KATAHDIN ANALYTICAL SERVICES
Report of Analytical Results

Client: CH2MHill
Project: TO-009 Lejeune
PO No:
Sample Date: 01/25/09
Received Date: 01/27/09
Extraction Date: 02/03/09
Analysis Date: 20-FEB-2009 14:36
Report Date: 02/25/2009
Matrix: SOIL
% Solids: 85.9

Lab ID: SC0412-22DL3
Client ID: MR08-SS325-09A
SDG: TO9-47
Extracted by: CB
Extraction Method: SW846 3550
Analyst: JCG
Analysis Method: SW846 8270C
Lab Prep Batch: WG60436
Units: ug/Kgdrywt

use original

R DL

CAS#	Compound	Flags	Results	DF	PQL	Adj.PQL	Adj.MDL
91-20-3	Naphthalene	U	5800	500	10	5800	1500
91-57-6	2-Methylnaphthalene	U	5800	500	10	5800	1300
86-73-7	Fluorene	U	5800	500	10	5800	1900
85-01-8	Phenanthrene		35000	500	10	5800	1000
206-44-0	Fluoranthene		80000	500	10	5800	1000
129-00-0	Pyrene		52000	500	10	5800	1200
56-55-3	Benzo(a)anthracene		25000	500	10	5800	1100
205-99-2	Benzo(b)fluoranthene		32000	500	10	5800	1400
207-08-9	Benzo(k)fluoranthene		26000	500	10	5800	1800
50-32-8	Benzo(a)pyrene		26000	500	10	5800	1900
193-39-5	Indeno(1,2,3-cd)pyrene		19000	500	10	5800	1100
53-70-3	Dibenzo(a,h)anthracene		9400	500	10	5800	1000
191-24-2	Benzo(g,h,i)perylene		19000	500	10	5800	1200
118-74-1	Hexachlorobenzene	U	5800	500	10	5800	1000
87-68-3	Hexachlorobutadiene	U	5800	500	10	5800	1300
77-47-4	Hexachlorocyclopentadiene	U	5800	500	10	5800	870
7297-45-2	2-Methylnaphthalene-D10		D				
367-12-4	2,4-Dibromophenol		D				
81103-79-9	Fluorene-d10		D				
1718-51-1	Pyrene-D10		D				

lcw 4/18/09

12

KATAHDIN ANALYTICAL SERVICES
Report of Analytical Results

Client: CH2MHill
Project: TO-009 Lejeune
PO No:
Sample Date: 01/25/09
Received Date: 01/27/09
Extraction Date: 02/03/09
Analysis Date: 19-FEB-2009 01:56
Report Date: 02/25/2009
Matrix: SOIL
% Solids: 87.7

Lab ID: SC0412-24
Client ID: MR08-IS325-3-4-09A
SDG: TO9-47
Extracted by: CB
Extraction Method: SW846 3550
Analyst: JCG
Analysis Method: SW846 M8270C
Lab Prep Batch: WG60436
Units: ug/Kgdrywt

CAS#	Compound	Flags	Results	DF	PQL	Adj.PQL	Adj.MDL
91-20-3	Naphthalene	U	11	1.0	10	11	3.0
91-57-6	2-Methylnaphthalene	U	11	1.0	10	11	2.5
86-73-7	Fluorene	U	11	1.0	10	11	3.6
85-01-8	Phenanthrene	~~J~~	11u ~~6.1~~	1.0	10	11	2.0 BL
206-44-0	Fluoranthene	J	10	1.0	10	11	2.0
129-00-0	Pyrene	J	6.9	1.0	10	11	2.4
56-55-3	Benzo(a)anthracene	J	7.9	1.0	10	11	2.2
205-99-2	Benzo(b)fluoranthene	J	9.9	1.0	10	11	2.7
207-08-9	Benzo(k)fluoranthene	J	2.9	1.0	10	11	3.5
50-32-8	Benzo(a)pyrene	U	11	1.0	10	11	3.8
193-39-5	Indeno(1,2,3-cd)pyrene	J	2.6	1.0	10	11	2.2
53-70-3	Dibenzo(a,h)anthracene	U	11	1.0	10	11	2.0
191-24-2	Benzo(g,h,i)perylene	J	2.4	1.0	10	11	2.3
118-74-1	Hexachlorobenzene	U	11	1.0	10	11	2.0
87-68-3	Hexachlorobutadiene	U	11	1.0	10	11	2.6
77-47-4	Hexachlorocyclopentadiene	U	11	1.0	10	11	1.7
7297-45-2	2-Methylnaphthalene-D10		75%				
367-12-4	2,4-Dibromophenol		94%				
81103-79-9	Fluorene-d10		78%				
1718-51-1	Pyrene-D10		99%				

4/18/09

13

KATAHDIN ANALYTICAL SERVICES
Report of Analytical Results

Client: CH2MHill
Project: TO-009 Lejeune
PO No:
Sample Date: 01/25/09
Received Date: 01/27/09
Extraction Date: 02/03/09
Analysis Date: 19-FEB-2009 15:18
Report Date: 02/25/2009
Matrix: SOIL
% Solids: 87.9

Lab ID: SC0412-26
Client ID: MR08-SS323-09A
SDG: TO9-47
Extracted by: CB
Extraction Method: SW846 3550
Analyst: JLP
Analysis Method: SW846 M8270C
Lab Prep Batch: WG60436
Units: ug/Kgdrywt

CAS#	Compound	Flags	Results	DF	PQL	Adj.PQL	Adj.MDL
91-20-3	Naphthalene	U	11	1.0	10	11	3.0
91-57-6	2-Methylnaphthalene	J	6.2	1.0	10	11	2.5
86-73-7	Fluorene	U	11	1.0	10	11	3.6
85-01-8	Phenanthrene		120	1.0	10	11	2.0
206-44-0	Fluoranthene	~~E~~ 610	~~610~~ 5	1.0	10 57	~~11~~ 10	~~2.0~~ R DL
129-00-0	Pyrene	~~E~~ 590	~~600~~	1.0	10	~~11~~ 12	~~2.4~~
56-55-3	Benzo(a)anthracene	~~E~~ 300	~~350~~	1.0	10	~~11~~ 11	~~2.2~~
205-99-2	Benzo(b)fluoranthene	~~E~~ 570	~~900~~	1.0	10	~~11~~ 14	~~2.7~~
207-08-9	Benzo(k)fluoranthene	~~E~~ 410	~~320~~	1.0	10	~~11~~ 18	~~3.5~~
50-32-8	Benzo(a)pyrene	~~E~~ 450	~~490~~	1.0	10	~~11~~ 19	~~3.8~~
193-39-5	Indeno(1,2,3-cd)pyrene	~~E~~ 390	~~360~~	1.0	10	~~11~~ 11	~~2.2~~
53-70-3	Dibenzo(a,h)anthracene		130	1.0	10	11	2.0
191-24-2	Benzo(g,h,i)perylene	~~E~~ 430	~~320~~ 5	1.0	10 57	~~11~~ 11	2.3 R DL
118-74-1	Hexachlorobenzene	U	11	1.0	10	11	2.0
87-68-3	Hexachlorobutadiene	U	11	1.0	10	11	2.6
77-47-4	Hexachlorocyclopentadiene	U	11	1.0	10	11	1.7
7297-45-2	2-Methylnaphthalene-D10		66%				
367-12-4	2,4-Dibromophenol		113%				
81103-79-9	Fluorene-d10		94%				
1718-51-1	Pyrene-D10		105%				

RW 4/18/09

13DL

KATAHDIN ANALYTICAL SERVICES
Report of Analytical Results

Client: CH2MHill
Project: TO-009 Lejeune
PO No:
Sample Date: 01/25/09
Received Date: 01/27/09
Extraction Date: 02/03/09
Analysis Date: 20-FEB-2009 01:06
Report Date: 02/25/2009
Matrix: SOIL
% Solids: 87.9

Lab ID: SC0412-26DL
Client ID: MR08-SS323-09A
SDG: TO9-47
Extracted by: CB
Extraction Method: SW846 3550
Analyst: JCG
Analysis Method: SW846 M8270C
Lab Prep Batch: WG60436
Units: ug/Kgdrywt

use original

R DL

CAS#	Compound	Flags	Results	DF	PQL	Adj.PQL	Adj.MDL
91-20-3	Naphthalene	U	57	5.0	10	57	15
91-57-6	2-Methylnaphthalene	U	57	5.0	10	57	12
86-73-7	Fluorene	U	57	5.0	10	57	18
85-01-8	Phenanthrene		160	5.0	10	57	10
206-44-0	Fluoranthene		610	5.0	10	57	10
129-00-0	Pyrene		590	5.0	10	57	12
56-55-3	Benzo(a)anthracene		300	5.0	10	57	11
205-99-2	Benzo(b)fluoranthene		570	5.0	10	57	14
207-08-9	Benzo(k)fluoranthene		400	5.0	10	57	18
50-32-8	Benzo(a)pyrene		450	5.0	10	57	19
193-39-5	Indeno(1,2,3-cd)pyrene		390	5.0	10	57	11
53-70-3	Dibenzo(a,h)anthracene		140	5.0	10	57	10
191-24-2	Benzo(g,h,i)perylene		430	5.0	10	57	11
118-74-1	Hexachlorobenzene	U	57	5.0	10	57	10
87-68-3	Hexachlorobutadiene	U	57	5.0	10	57	13
77-47-4	Hexachlorocyclopentadiene	U	57	5.0	10	57	8.5
7297-45-2	2-Methylnaphthalene-D10		81%				
367-12-4	2,4-Dibromophenol		94%				
81103-79-9	Fluorene-d10		79%				
1718-51-1	Pyrene-D10		105%				

MW 4/18/09

KATAHDIN ANALYTICAL SERVICES
Report of Analytical Results

Client: CH2MHill
Project: TO-009 Lejeune
PO No:
Sample Date: 01/25/09
Received Date: 01/27/09
Extraction Date: 02/03/09
Analysis Date: 19-FEB-2009 14:36
Report Date: 02/25/2009
Matrix: SOIL
% Solids: 88.4

Lab ID: SC0412-28
Client ID: MR08-IS323-2-3-09A
SDG: TO9-47
Extracted by: CB
Extraction Method: SW846 3550
Analyst: JLP
Analysis Method: SW846 M8270C
Lab Prep Batch: WG60436
Units: ug/Kgdrywt

CAS#	Compound	Flags	Results	DF	PQL	Adj.PQL	Adj.MDL
91-20-3	Naphthalene	U	11	1.0	10	11	2.9
91-57-6	2-Methylnaphthalene	J	5.6	1.0	10	11	2.5
86-73-7	Fluorene	J	5.3	1.0	10	11	3.6
85-01-8	Phenanthrene		63	1.0	10	11	2.0
206-44-0	Fluoranthene		78	1.0	10	11	2.0
129-00-0	Pyrene	J	62	1.0	10	11	2.4 CCH
56-55-3	Benzo(a)anthracene		41	1.0	10	11	2.1
205-99-2	Benzo(b)fluoranthene		48	1.0	10	11	2.7
207-08-9	Benzo(k)fluoranthene		19	1.0	10	11	3.5
50-32-8	Benzo(a)pyrene		29	1.0	10	11	3.7
193-39-5	Indeno(1,2,3-cd)pyrene		18	1.0	10	11	2.1
53-70-3	Dibenzo(a,h)anthracene	J	7.5	1.0	10	11	2.0
191-24-2	Benzo(g,h,i)perylene		15	1.0	10	11	2.3
118-74-1	Hexachlorobenzene	U	11	1.0	10	11	2.0
87-68-3	Hexachlorobutadiene	U	11	1.0	10	11	2.6
77-47-4	Hexachlorocyclopentadiene	U	11	1.0	10	11	1.7
7297-45-2	2-Methylnaphthalene-D10		68%				
367-12-4	2,4-Dibromophenol		93%				
81103-79-9	Fluorene-d10		75%				
1718-51-1	Pyrene-D10		89%				

RW 4/18/09

15

KATAHDIN ANALYTICAL SERVICES
Report of Analytical Results

Client: CH2MHill
Project: TO-009 Lejeune
PO No:
Sample Date: 01/26/09
Received Date: 01/27/09
Extraction Date: 02/03/09
Analysis Date: 19-FEB-2009 15:59
Report Date: 02/25/2009
Matrix: SOIL
% Solids: 88.8

Lab ID: SC0412-30
Client ID: MR08-SS321-09A
SDG: TO9-47
Extracted by: CB
Extraction Method: SW846 3550
Analyst: JLP
Analysis Method: SW846 M8270C
Lab Prep Batch: WG60436
Units: ug/Kgdrywt

CAS#	Compound	Flags	Results	DF	PQL	Adj.PQL	Adj.MDL
91-20-3	Naphthalene	U	11	1.0	10	11	2.9
91-57-6	2-Methylnaphthalene	U	11	1.0	10	11	2.5
86-73-7	Fluorene	U	11	1.0	10	11	3.6
85-01-8	Phenanthrene	J	1.4	1.0	10	11	2.0
206-44-0	Fluoranthene	J	7.8	1.0	10	11	2.0
129-00-0	Pyrene	~~J~~ J	8.4	1.0	10	11	2.4 CCM
56-55-3	Benzo(a)anthracene	J	8.2	1.0	10	11	2.1
205-99-2	Benzo(b)fluoranthene		13	1.0	10	11	2.7
207-08-9	Benzo(k)fluoranthene	J	4.9	1.0	10	11	3.5
50-32-8	Benzo(a)pyrene	J	5.4	1.0	10	11	3.7
193-39-5	Indeno(1,2,3-cd)pyrene	J	4.0	1.0	10	11	2.1
53-70-3	Dibenzo(a,h)anthracene	U	11	1.0	10	11	2.0
191-24-2	Benzo(g,h,i)perylene	J	4.0	1.0	10	11	2.2
118-74-1	Hexachlorobenzene	U	11	1.0	10	11	2.0
87-68-3	Hexachlorobutadiene	U	11	1.0	10	11	2.6
77-47-4	Hexachlorocyclopentadiene	U	11	1.0	10	11	1.7
7297-45-2	2-Methylnaphthalene-D10		70%				
367-12-4	2,4-Dibromophenol		100%				
81103-79-9	Fluorene-d10		92%				
1718-51-1	Pyrene-D10		104%				

4/18/09

16

KATAHDIN ANALYTICAL SERVICES
Report of Analytical Results

Client: CH2MHill
Project: TO-009 Lejeune
PO No:
Sample Date: 01/26/09
Received Date: 01/27/09
Extraction Date: 02/05/09
Analysis Date: 17-FEB-2009 23:43
Report Date: 02/25/2009
Matrix: SOIL
% Solids: 88.8

Lab ID: SC0412-32
Client ID: MR08-IS321-2-3-09A
SDG: TO9-47
Extracted by: CB
Extraction Method: SW846 3550
Analyst: JCG
Analysis Method: SW846 M8270C
Lab Prep Batch: WG60481
Units: ug/Kgdrywt

CAS#	Compound	Flags	Results	DF	PQL	Adj.PQL	Adj.MDL
91-20-3	Naphthalene	U	11	1.0	10	11	2.9
91-57-6	2-Methylnaphthalene	J	5.3	1.0	10	11	2.5
86-73-7	Fluorene	U	11	1.0	10	11	3.6
85-01-8	Phenanthrene	U	11	1.0	10	11	2.0
206-44-0	Fluoranthene	J	3.6	1.0	10	11	2.0
129-00-0	Pyrene	J	2.5	1.0	10	11	2.4
56-55-3	Benzo(a)anthracene	J	6.5	1.0	10	11	2.1
205-99-2	Benzo(b)fluoranthene	U	11	1.0	10	11	2.7
207-08-9	Benzo(k)fluoranthene	U	11	1.0	10	11	3.5
50-32-8	Benzo(a)pyrene	U	11	1.0	10	11	3.7
193-39-5	Indeno(1,2,3-cd)pyrene	U	11	1.0	10	11	2.1
53-70-3	Dibenzo(a,h)anthracene	U	11	1.0	10	11	2.0
191-24-2	Benzo(g,h,i)perylene	U	11	1.0	10	11	2.2
118-74-1	Hexachlorobenzene	U	11	1.0	10	11	2.0
87-68-3	Hexachlorobutadiene	U	11	1.0	10	11	2.6
77-47-4	Hexachlorocyclopentadiene	U	11	1.0	10	11	1.7
7297-45-2	2-Methylnaphthalene-D10		75%				
367-12-4	2,4-Dibromophenol		86%				
81103-79-9	Fluorene-d10		74%				
1718-51-1	Pyrene-D10		90%				

fw 4/18/09

KATAHDIN ANALYTICAL SERVICES
Report of Analytical Results

Client: CH2MHill
Project: TO-009 Lejeune
PO No:
Sample Date: 01/26/09
Received Date: 01/27/09
Extraction Date: 02/05/09
Analysis Date: 18-FEB-2009 01:47
Report Date: 02/25/2009
Matrix: SOIL
% Solids: 91.7

Lab ID: SC0412-34
Client ID: MR08-SS322-09A
SDG: TO9-47
Extracted by: CB
Extraction Method: SW846 3550
Analyst: JCG
Analysis Method: SW846 M8270C
Lab Prep Batch: WG60481
Units: ug/Kgdrywt

CAS#	Compound	Flags	Results	DF	PQL	Adj.PQL	Adj.MDL
91-20-3	Naphthalene	U	11	1.0	10	11	2.8
91-57-6	2-Methylnaphthalene	U	11	1.0	10	11	2.4
86-73-7	Fluorene	U	11	1.0	10	11	3.5
85-01-8	Phenanthrene		13	1.0	10	11	2.0
206-44-0	Fluoranthene		32	1.0	10	11	2.0
129-00-0	Pyrene		26	1.0	10	11	2.3
56-55-3	Benzo(a)anthracene		16	1.0	10	11	2.1
205-99-2	Benzo(b)fluoranthene		32	1.0	10	11	2.6
207-08-9	Benzo(k)fluoranthene		16	1.0	10	11	3.4
50-32-8	Benzo(a)pyrene		16	1.0	10	11	3.6
193-39-5	Indeno(1,2,3-cd)pyrene		16	1.0	10	11	2.1
53-70-3	Dibenzo(a,h)anthracene	J	6.2	1.0	10	11	2.0
191-24-2	Benzo(g,h,i)perylene		16	1.0	10	11	2.2
118-74-1	Hexachlorobenzene	U	11	1.0	10	11	2.0
87-68-3	Hexachlorobutadiene	U	11	1.0	10	11	2.5
77-47-4	Hexachlorocyclopentadiene	U	11	1.0	10	11	1.6
7297-45-2	2-Methylnaphthalene-D10		71%				
367-12-4	2,4-Dibromophenol		92%				
81103-79-9	Fluorene-d10		81%				
1718-51-1	Pyrene-D10		107%				

JCW
4/18/09

KATAHDIN ANALYTICAL SERVICES
Report of Analytical Results

Client: CH2MHill
Project: TO-009 Lejeune
PO No:
Sample Date: 01/26/09
Received Date: 01/27/09
Extraction Date: 02/05/09
Analysis Date: 18-FEB-2009 00:24
Report Date: 02/25/2009
Matrix: SOIL
% Solids: 88.5

Lab ID: SC0412-36
Client ID: MR08-IS322-2-3-09A
SDG: TO9-47
Extracted by: CB
Extraction Method: SW846 3550
Analyst: JCG
Analysis Method: SW846 M8270C
Lab Prep Batch: WG60481
Units: ug/Kgdrywt

CAS#	Compound	Flags	Results	DF	PQL	Adj.PQL	Adj.MDL
91-20-3	Naphthalene	U	11	1.0	10	11	2.9
91-57-6	2-Methylnaphthalene	J	5.9	1.0	10	11	2.5
86-73-7	Fluorene	U	11	1.0	10	11	3.6
85-01-8	Phenanthrene	U	11	1.0	10	11	2.0
206-44-0	Fluoranthene	J	2.4	1.0	10	11	2.0
129-00-0	Pyrene	U	11	1.0	10	11	2.4
56-55-3	Benzo(a)anthracene	J	7.0	1.0	10	11	2.1
205-99-2	Benzo(b)fluoranthene	U	11	1.0	10	11	2.7
207-08-9	Benzo(k)fluoranthene	U	11	1.0	10	11	3.5
50-32-8	Benzo(a)pyrene	U	11	1.0	10	11	3.7
193-39-5	Indeno(1,2,3-cd)pyrene	U	11	1.0	10	11	2.1
53-70-3	Dibenzo(a,h)anthracene	U	11	1.0	10	11	2.0
191-24-2	Benzo(g,h,i)perylene	U	11	1.0	10	11	2.2
118-74-1	Hexachlorobenzene	U	11	1.0	10	11	2.0
87-68-3	Hexachlorobutadiene	U	11	1.0	10	11	2.6
77-47-4	Hexachlorocyclopentadiene	U	11	1.0	10	11	1.7
7297-45-2	2-Methylnaphthalene-D10		71%				
367-12-4	2,4-Dibromophenol		80%				
81103-79-9	Fluorene-d10		75%				
1718-51-1	Pyrene-D10		90%				

JCW 4/18/09

KATAHDIN ANALYTICAL SERVICES
Report of Analytical Results

Client: CH2MHill
Project: TO-009 Lejeune
PO No:
Sample Date: 01/26/09
Received Date: 01/27/09
Extraction Date: 02/05/09
Analysis Date: 18-FEB-2009 02:28
Report Date: 02/25/2009
Matrix: SOIL
% Solids: 78.2

Lab ID: SC0412-38
Client ID: MR08-SS320-09A
SDG: TO9-47
Extracted by: CB
Extraction Method: SW846 3550
Analyst: JCG
Analysis Method: SW846 M8270C
Lab Prep Batch: WG60481
Units: ug/Kgdrywt

CAS#	Compound	Flags	Results	DF	PQL	Adj.PQL	Adj.MDL
91-20-3	Naphthalene	U	13	1.0	10	13	3.3
91-57-6	2-Methylnaphthalene	J	7.2	1.0	10	13	2.8
86-73-7	Fluorene	U	13	1.0	10	13	4.1
85-01-8	Phenanthrene		97	1.0	10	13	2.3
206-44-0	Fluoranthene	~~E~~ 450	~~430~~	3 ~~1.0~~	10	38 ~~13~~	6.9 ~~2.3~~ R DL
129-00-0	Pyrene	~~E~~ 320	~~390~~	3 ~~1.0~~	10	38 ~~13~~	8.0 ~~2.7~~ R DL
56-55-3	Benzo(a)anthracene		190	1.0	10	13	2.4
205-99-2	Benzo(b)fluoranthene	~~E~~ 310	~~350~~	3 ~~1.0~~	10	38 ~~13~~	9.2 ~~3.1~~ R DL
207-08-9	Benzo(k)fluoranthene		270	1.0	10	13	4.0
50-32-8	Benzo(a)pyrene		240	1.0	10	13	4.2
193-39-5	Indeno(1,2,3-cd)pyrene		210	1.0	10	13	2.4
53-70-3	Dibenzo(a,h)anthracene		93	1.0	10	13	2.3
191-24-2	Benzo(g,h,i)perylene		200	1.0	10	13	2.6
118-74-1	Hexachlorobenzene	U	13	1.0	10	13	2.3
87-68-3	Hexachlorobutadiene	U	13	1.0	10	13	2.9
77-47-4	Hexachlorocyclopentadiene	U	13	1.0	10	13	1.9
7297-45-2	2-Methylnaphthalene-D10		79%				
367-12-4	2,4-Dibromophenol		104%				
81103-79-9	Fluorene-d10		92%				
1718-51-1	Pyrene-D10		118%				

4/18/09

19DL

KATAHDIN ANALYTICAL SERVICES
Report of Analytical Results

Client: CH2MHill
Project: TO-009 Lejeune
PO No:
Sample Date: 01/26/09
Received Date: 01/27/09
Extraction Date: 02/05/09
Analysis Date: 18-FEB-2009 19:03
Report Date: 02/25/2009
Matrix: SOIL
% Solids: 78.2

Lab ID: SC0412-38DL
Client ID: MR08-SS320-09A
SDG: TO9-47
Extracted by: CB
Extraction Method: SW846 3550
Analyst: JCG
Analysis Method: SW846 M8270C
Lab Prep Batch: WG60481
Units: ug/Kgdrywt

use original

R DL

CAS#	Compound	Flags	Results	DF	PQL	Adj.PQL	Adj.MDL
91-20-3	Naphthalene	U	38	3.0	10	38	10
91-57-6	2-Methylnaphthalene	J	18	3.0	10	38	8.4
86-73-7	Fluorene	U	38	3.0	10	38	12
85-01-8	Phenanthrene		120	3.0	10	38	6.9
206-44-0	Fluoranthene		450	3.0	10	38	6.9
129-00-0	Pyrene		320	3.0	10	38	8.0
56-55-3	Benzo(a)anthracene		180	3.0	10	38	7.3
205-99-2	Benzo(b)fluoranthene		310	3.0	10	38	9.2
207-08-9	Benzo(k)fluoranthene		260	3.0	10	38	12
50-32-8	Benzo(a)pyrene		230	3.0	10	38	13
193-39-5	Indeno(1,2,3-cd)pyrene		220	3.0	10	38	7.3
53-70-3	Dibenzo(a,h)anthracene		67	3.0	10	38	6.9
191-24-2	Benzo(g,h,i)perylene		220	3.0	10	38	7.7
118-74-1	Hexachlorobenzene	U	38	3.0	10	38	6.9
87-68-3	Hexachlorobutadiene	U	38	3.0	10	38	8.8
77-47-4	Hexachlorocyclopentadiene	U	38	3.0	10	38	5.8
7297-45-2	2-Methylnaphthalene-D10		79%				
367-12-4	2,4-Dibromophenol		92%				
81103-79-9	Fluorene-d10		86%				
1718-51-1	Pyrene-D10		96%				

MW 4/8/09

KATAHDIN ANALYTICAL SERVICES
Report of Analytical Results

Client: CH2MHill
Project: TO-009 Lejeune
PO No:
Sample Date: 01/26/09
Received Date: 01/27/09
Extraction Date: 02/05/09
Analysis Date: 18-FEB-2009 04:31
Report Date: 02/25/2009
Matrix: SOIL
% Solids: 90.4

Lab ID: SC0412-40
Client ID: MR08-SS351-09A
SDG: TO9-47
Extracted by: CB
Extraction Method: SW846 3550
Analyst: JCG
Analysis Method: SW846 M8270C
Lab Prep Batch: WG60481
Units: ug/Kgdrywt

CAS#	Compound	Flags		Results	DF	PQL	Adj.PQL	Adj.MDL	
91-20-3	Naphthalene	J		3.0	1.0	10	11	2.9	
91-57-6	2-Methylnaphthalene	J		11	1.0	10	11	2.4	
86-73-7	Fluorene	J		3.8	1.0	10	11	3.5	
85-01-8	Phenanthrene		J	85	1.0	10	11	2.0	MSH
206-44-0	Fluoranthene		J	110	1.0	10	11	2.0	↓
129-00-0	Pyrene		J	180	1.0	10	11	2.3	↓
56-55-3	Benzo(a)anthracene			54	1.0	10	11	2.1	
205-99-2	Benzo(b)fluoranthene			95	1.0	10	11	2.6	
207-08-9	Benzo(k)fluoranthene			34	1.0	10	11	3.4	
50-32-8	Benzo(a)pyrene		J	110	1.0	10	11	3.6	MSL
193-39-5	Indeno(1,2,3-cd)pyrene			40	1.0	10	11	2.1	
53-70-3	Dibenzo(a,h)anthracene	U		11	1.0	10	11	2.0	
191-24-2	Benzo(g,h,i)perylene			170	1.0	10	11	2.2	
118-74-1	Hexachlorobenzene	U		11	1.0	10	11	2.0	
87-68-3	Hexachlorobutadiene	U		11	1.0	10	11	2.5	
77-47-4	Hexachlorocyclopentadiene	~~U~~	UJ	11	1.0	10	11	1.6	MSL
7297-45-2	2-Methylnaphthalene-D10			81%					
367-12-4	2,4-Dibromophenol			109%					
81103-79-9	Fluorene-d10			83%					
1718-51-1	Pyrene-D10			132%					

fw 4/18/09

ENVIRONMENTAL
Data Services, Inc.

SEMIVOLATILE ORGANIC COMPOUNDS

USEPA Region IV - Level IV Review

Site: MCB Camp Lejeune, TO-09 SDG #: TO9-47

Client: CH2M HILL, Inc., Virginia Beach, Virginia Date: April 18, 2009

Laboratory: Katahdin Analytical Services, Scarborough, Maine Reviewer: Nancy Weaver

EDS ID	Client Sample ID	Laboratory Sample ID	Matrix
1	MR08-IS350-3-4-09A	SC0412-1	Soil
2	MR08-SS350-09A	SC0412-3	Soil
3	MR08-SS349-09A	SC0412-5	Soil
4	MR08-IS349-3-4-09A	SC0412-7	Soil
5	MR08-SS326-09A	SC0412-9	Soil
6	MR08-IS326-4-5-09A	SC0412-11	Soil
7	MR08-SS327-09A	SC0412-13	Soil
8	MR08-IS327-2-3-09A	SC0412-15	Soil
9	MR08-SS324-09A	SC0412-17	Soil
9RE	MR08-SS324-09ARE	SC0412-17RE	Soil
10	MR08-IS324-3-4-09A	SC0412-19	Soil
11	MR08-SS325-09A	SC0412-21	Soil
11DL	MR08-SS325-09ADL	SC0412-21DL	Soil
12	MR08-IS325-3-4-09A	SC0412-23	Soil
13	MR08-SS323-09A	SC0412-25	Soil
14	MR08-IS323-2-3-06A	SC0412-27	Soil
15	MR08-SS321-09A	SC0412-29	Soil
16	MR08-IS321-2-3-09A	SC0412-31	Soil
17	MR08-SS322-09A	SC0412-33	Soil
18	MR08-IS322-2-3-09A	SC0412-35	Soil
19	MR08-SS320-09A	SC0412-37	Soil
20	MR08-SS351-09A	SC0412-39	Soil
20MS	MR08-SS351-09AMS	SC0412-39MS	Soil
20MSD	MR08-SS351-09AMSD	SC0412-39MSD	Soil

The USEPA "Contract Laboratory Program National Functional Guidelines for Organic Data Review," October 1999, and professional judgment were used in evaluating the data in this summary report.

Holding Times - All samples were extracted within 14 days for soil samples and analyzed within 40 days for all samples except the following.

Sample	Date Sampled	Date Extracted	# of Days	Qualifier
2	01/25/09	02/12/09	18	J/UJ

GC/MS Tuning - All of the DFTPP tunes in the initial and continuing calibrations met the percent relative abundance criteria.

Initial Calibration - The initial calibrations exhibited acceptable %RSD and mean RRF values except the following.

ICAL Date	Compound	%RSD/RRF	Qualifier	Affected Samples
02/11/09	Benzaldehyde	37.85%	J/UJ	16, 20
	4-Nitrophenol	30.97%	J/UJ	16, 20
02/19/09	Benzaldehyde	51.16%	J/UJ	1, 3-15, 17-19, 9RE, 11DL

Continuing Calibration - The continuing calibratio5ns exhibited acceptable %D and RRF values except the following.

CCAL Date	Compound	%D/RRF	Qualifier	Affected Samples
02/17/09	4-Nitrophenol	44.22%	J/UJ	1, 3, 4, 6, 17-19
02/18/09	Benzaldehyde	92.08%	None	Already qualified due to ICAL
	Di-n-octylphthalate	36.56%	J/UJ	16, 20
02/20/09	Benzaldehyde	41.89%	None	Already qualified due to ICAL
	4-Nitrophenol	46.62%	J/UJ	5, 7-15
02/22/09	Benzaldehyde	39.62%	J/UJ	Already qualified due to ICAL

Surrogates - All samples exhibited acceptable surrogate recoveries except the following.

Sample ID	Surrogate	%R	Qualifier
5	S2-Phenol-d6	101%	None for 1 out
11	S2-Phenol-d6	104%	None for 1 out per fraction
	S6-Terphenyl-d14	172%	None for 1 out per fraction

MS/MSD - The MS/MSD sample exhibited acceptable %R and RPD values except the following.

MS/MSD Sample ID	Compound	MS/MSD %R/RPD	Qualifier
20	3, 3'-Dichlorobenzidine	6%/12%/Ok	J/R

Laboratory Control Sample - The LCS samples exhibited acceptable %R values except the following.

LCS ID	Compound	%R	Qualifier	Affected Samples
WG60435-LCS	Dimethylphthalate	115%	None	All ND
WG60726-LCS	Dimethylphthalate	119%	None	All ND

Internal Standard (IS) Area Performance - All internal standards met response and retention time (RT) criteria except the following.

Sample ID	Internal Standard	Area Count	Qualifier
9	IS6-Perylene-D12	Low	J/UJ
9RE*	IS6-Perylene-D12	Low	J/UJ
11	IS5-Chrysene-D12	Low	J/UJ
	IS6-Perylene-D12	Low	J/UJ

*-This sample should be used for reporting purposes

Method Blank - The method blanks were free of contamination.

Field, Equipment Blank - Field QC results are summarized below.

Blank ID	Compound	Conc. ug/L	Action Level ug/L	Qualifier	Affected Samples
MR08-FB012609	None - ND	-	-	-	-
MR08-EB012509	None - ND	-	-	-	-

Field Duplicates - Field duplicate samples were not included in this data package.

Tentatively Identified Compounds (TICs) - TICs were not reported.

Compound Quantitation - EDS Sample ID #11 exhibited a high concentration of chrysene and was flagged (E) by the laboratory. The sample was diluted and reanalyzed and the dilution result for chrysene should be used for reporting.

KATAHDIN ANALYTICAL SERVICES
Report of Analytical Results

Client: CH2MHill
Project: TO-009 Lejeune
PO No:
Sample Date: 01/25/09
Received Date: 01/27/09
Extraction Date: 02/03/09
Analysis Date: 20-FEB-2009 02:03
Report Date: 02/26/2009
Matrix: SOIL
% Solids: 81.1

Lab ID: SC0412-1
Client ID: MR08-IS350-3-4-09A
SDG: TO9-47
Extracted by: CB
Extraction Method: SW846 3550
Analyst: JCG
Analysis Method: SW846 8270C
Lab Prep Batch: WG60435
Units: ug/Kgdrywt

CAS#	Compound	Flags	Results	DF	PQL	Adj.PQL	Adj.MDL
100-52-7	Benzaldehyde	~~U~~ UJ	620	1.0	500	620	150 JCB
108-95-2	Phenol	U	620	1.0	500	620	190
111-44-4	Bis(2-Chloroethyl)ether	U	410	1.0	330	410	100
95-57-8	2-Chlorophenol	U	620	1.0	500	620	200
95-48-7	2-Methylphenol	U	740	1.0	600	740	250
108-60-1	2,2'-Oxybis(1-chloropropane)	U	410	1.0	330	410	110
98-86-2	Acetophenone	U	740	1.0	600	740	220
621-64-7	N-Nitroso-di-n-propylamine	U	410	1.0	330	410	100
65794-96-9	3&4-Methylphenol	U	740	1.0	600	740	230
67-72-1	Hexachloroethane	U	410	1.0	330	410	120
98-95-3	Nitrobenzene	U	410	1.0	330	410	110
78-59-1	Isophorone	U	410	1.0	330	410	92
88-75-5	2-Nitrophenol	U	740	1.0	600	740	210
105-67-9	2,4-Dimethylphenol	U	620	1.0	500	620	200
111-91-1	Bis(2-Chloroethoxy)methane	U	410	1.0	330	410	120
120-83-2	2,4-Dichlorophenol	U	620	1.0	500	620	180
106-47-8	4-Chloroaniline	U	620	1.0	500	620	150
105-60-2	Caprolactam	U	620	1.0	500	620	180
59-50-7	4-Chloro-3-Methylphenol	U	620	1.0	500	620	200
88-06-2	2,4,6-Trichlorophenol	U	620	1.0	500	620	190
95-95-4	2,4,5-Trichlorophenol	U	620	1.0	500	620	190
91-58-7	2-Chloronaphthalene	U	410	1.0	330	410	110
92-52-4	1,1'-Biphenyl	U	410	1.0	330	410	90
88-74-4	2-Nitroaniline	U	620	1.0	500	620	92
131-11-3	Dimethyl Phthalate	U	410	1.0	330	410	96
606-20-2	2,6-Dinitrotoluene	U	410	1.0	330	410	97
208-96-8	Acenaphthylene	U	410	1.0	330	410	86
99-09-2	3-Nitroaniline	U	620	1.0	500	620	120
83-32-9	Acenaphthene	U	410	1.0	330	410	80
51-28-5	2,4-Dinitrophenol	U	1500	1.0	1200	1500	460
132-64-9	Dibenzofuran	U	410	1.0	330	410	97
100-02-7	4-Nitrophenol	~~U~~ UJ	1500	1.0	1200	1500	380 CH
121-14-2	2,4-Dinitrotoluene	U	410	1.0	330	410	100
84-66-2	Diethylphthalate	U	410	1.0	330	410	99
7005-72-3	4-Chlorophenyl-phenylether	U	410	1.0	330	410	96
100-01-6	4-Nitroaniline	U	620	1.0	500	620	160
534-52-1	4,6-Dinitro-2-Methylphenol	U	1500	1.0	1200	1500	420
86-30-6	N-Nitrosodiphenylamine	U	810	1.0	660	810	270
101-55-3	4-Bromophenyl-phenylether	U	410	1.0	330	410	100
1912-24-9	Atrazine	U	410	1.0	330	410	110
87-86-5	Pentachlorophenol	U	1000	1.0	820	1000	290
120-12-7	Anthracene	U	410	1.0	330	410	100
86-74-8	Carbazole	U	620	1.0	500	620	140

KATAHDIN ANALYTICAL SERVICES
Report of Analytical Results

Client: CH2MHill
Project: TO-009 Lejeune
PO No:
Sample Date: 01/25/09
Received Date: 01/27/09
Extraction Date: 02/03/09
Analysis Date: 20-FEB-2009 02:03
Report Date: 02/26/2009
Matrix: SOIL
% Solids: 81.1

Lab ID: SC0412-1
Client ID: MR08-IS350-3-4-09A
SDG: TO9-47
Extracted by: CB
Extraction Method: SW846 3550
Analyst: JCG
Analysis Method: SW846 8270C
Lab Prep Batch: WG60435
Units: ug/Kgdrywt

CAS#	Compound	Flags	Results	DF	PQL	Adj.PQL	Adj.MDL
84-74-2	Di-n-butylphthalate	U	410	1.0	330	410	120
85-68-7	Butylbenzylphthalate	U	410	1.0	330	410	110
91-94-1	3,3'-Dichlorobenzidine	U	620	1.0	500	620	140
218-01-9	Chrysene	U	410	1.0	330	410	120
117-81-7	bis(2-Ethylhexyl)phthalate	U	410	1.0	330	410	120
117-84-0	Di-n-octylphthalate	U	410	1.0	330	410	260
367-12-4	2-Fluorophenol		69%				
13127-88-3	Phenol-D6		87%				
4165-60-0	Nitrobenzene-D5		77%				
321-60-8	2-Fluorobiphenyl		81%				
118-79-6	2,4,6-Tribromophenol		68%				
1718-51-0	Terphenyl-D14		90%				

2

KATAHDIN ANALYTICAL SERVICES
Report of Analytical Results

Client: CH2MHill
Project: TO-009 Lejeune
PO No:
Sample Date: 01/25/09
Received Date: 01/27/09
Extraction Date: 02/12/09
Analysis Date: 18-FEB-2009 13:23
Report Date: 02/27/2009
Matrix: SOIL
% Solids: 77.8

Lab ID: SC0412-3RE
Client ID: MR08-SS350-09A
SDG: TO9-47
Extracted by: CB
Extraction Method: SW846 3550
Analyst: JLP
Analysis Method: SW846 8270C
Lab Prep Batch: WG60726
Units: ug/Kgdrywt

CAS#	Compound	Flags	Results	DF	PQL	Adj.PQL	Adj.MDL
100-52-7	Benzaldehyde	U UJ	640	1.0	500	640	150 HT
108-95-2	Phenol	U	640	1.0	500	640	200
111-44-4	Bis(2-Chloroethyl)ether	U	420	1.0	330	420	100
95-57-8	2-Chlorophenol	U	640	1.0	500	640	210
95-48-7	2-Methylphenol	U	770	1.0	600	770	260
108-60-1	2,2'-Oxybis(1-chloropropane)	U	420	1.0	330	420	110
98-86-2	Acetophenone	U	770	1.0	600	770	230
621-64-7	N-Nitroso-di-n-propylamine	U	420	1.0	330	420	110
65794-96-9	3&4-Methylphenol	U	770	1.0	600	770	240
67-72-1	Hexachloroethane	U	420	1.0	330	420	120
98-95-3	Nitrobenzene	U	420	1.0	330	420	120
78-59-1	Isophorone	U	420	1.0	330	420	96
88-75-5	2-Nitrophenol	U	770	1.0	600	770	210
105-67-9	2,4-Dimethylphenol	U	640	1.0	500	640	210
111-91-1	Bis(2-Chloroethoxy)methane	U	420	1.0	330	420	120
120-83-2	2,4-Dichlorophenol	U	640	1.0	500	640	190
106-47-8	4-Chloroaniline	U	640	1.0	500	640	150
105-60-2	Caprolactam	U	640	1.0	500	640	180
59-50-7	4-Chloro-3-Methylphenol	U	640	1.0	500	640	210
88-06-2	2,4,6-Trichlorophenol	U	640	1.0	500	640	200
95-95-4	2,4,5-Trichlorophenol	U	640	1.0	500	640	200
91-58-7	2-Chloronaphthalene	U	420	1.0	330	420	110
92-52-4	1,1'-Biphenyl	U	420	1.0	330	420	94
88-74-4	2-Nitroaniline	U	640	1.0	500	640	96
131-11-3	Dimethyl Phthalate	U	420	1.0	330	420	100
606-20-2	2,6-Dinitrotoluene	U	420	1.0	330	420	100
208-96-8	Acenaphthylene	U	420	1.0	330	420	90
99-09-2	3-Nitroaniline	U	640	1.0	500	640	120
83-32-9	Acenaphthene	U	420	1.0	330	420	83
51-28-5	2,4-Dinitrophenol	U	1500	1.0	1200	1500	480
132-64-9	Dibenzofuran	U	420	1.0	330	420	100
100-02-7	4-Nitrophenol	U	1500	1.0	1200	1500	400
121-14-2	2,4-Dinitrotoluene	U	420	1.0	330	420	110
84-66-2	Diethylphthalate	U	420	1.0	330	420	100
7005-72-3	4-Chlorophenyl-phenylether	U	420	1.0	330	420	100
100-01-6	4-Nitroaniline	U	640	1.0	500	640	170
534-52-1	4,6-Dinitro-2-Methylphenol	U	1500	1.0	1200	1500	430
86-30-6	N-Nitrosodiphenylamine	U	850	1.0	660	850	280
101-55-3	4-Bromophenyl-phenylether	U	420	1.0	330	420	110
1912-24-9	Atrazine	U	420	1.0	330	420	120
87-86-5	Pentachlorophenol	U	1000	1.0	820	1000	300
120-12-7	Anthracene	U	420	1.0	330	420	110
86-74-8	Carbazole	U	640	1.0	500	640	140

2

KATAHDIN ANALYTICAL SERVICES
Report of Analytical Results

Client: CH2MHill
Project: TO-009 Lejeune
PO No:
Sample Date: 01/25/09
Received Date: 01/27/09
Extraction Date: 02/12/09
Analysis Date: 18-FEB-2009 13:23
Report Date: 02/27/2009
Matrix: SOIL
% Solids: 77.8

Lab ID: SC0412-3RE
Client ID: MR08-SS350-09A
SDG: TO9-47
Extracted by: CB
Extraction Method: SW846 3550
Analyst: JLP
Analysis Method: SW846 8270C
Lab Prep Batch: WG60726
Units: ug/Kgdrywt

CAS#	Compound	Flags	Results	DF	PQL	Adj.PQL	Adj.MDL	
84-74-2	Di-n-butylphthalate	U UJ	420	1.0	330	420	130	HT
85-68-7	Butylbenzylphthalate	U	420	1.0	330	420	120	
91-94-1	3,3'-Dichlorobenzidine	U	640	1.0	500	640	150	
218-01-9	Chrysene	J	440	1.0	330	420	120	
117-81-7	bis(2-Ethylhexyl)phthalate	J	460	1.0	330	420	120	
117-84-0	Di-n-octylphthalate	U UJ	420	1.0	330	420	270	
367-12-4	2-Fluorophenol		77%					
13127-88-3	Phenol-D6		91%					
4165-60-0	Nitrobenzene-D5		73%					
321-60-8	2-Fluorobiphenyl		69%					
118-79-6	2,4,6-Tribromophenol		92%					
1718-51-0	Terphenyl-D14		76%					

KATAHDIN ANALYTICAL SERVICES
Report of Analytical Results

3

Client: CH2MHill
Project: TO-009 Lejeune
PO No:
Sample Date: 01/25/09
Received Date: 01/27/09
Extraction Date: 02/03/09
Analysis Date: 20-FEB-2009 02:45
Report Date: 02/26/2009
Matrix: SOIL
% Solids: 86.2

Lab ID: SC0412-5
Client ID: MR08-SS349-09A
SDG: TO9-47
Extracted by: CB
Extraction Method: SW846 3550
Analyst: JCG
Analysis Method: SW846 8270C
Lab Prep Batch: WG60435
Units: ug/Kgdrywt

CAS#	Compound	Flags	Results	DF	PQL	Adj.PQL	Adj.MDL	
100-52-7	Benzaldehyde	~~U~~ UJ	580	1.0	500	580	140	JCB
108-95-2	Phenol	U	580	1.0	500	580	180	
111-44-4	Bis(2-Chloroethyl)ether	U	380	1.0	330	380	94	
95-57-8	2-Chlorophenol	U	580	1.0	500	580	190	
95-48-7	2-Methylphenol	U	700	1.0	600	700	230	
108-60-1	2,2'-Oxybis(1-chloropropane)	U	380	1.0	330	380	100	
98-86-2	Acetophenone	U	700	1.0	600	700	210	
621-64-7	N-Nitroso-di-n-propylamine	U	380	1.0	330	380	96	
65794-96-9	3&4-Methylphenol	U	700	1.0	600	700	220	
67-72-1	Hexachloroethane	U	380	1.0	330	380	110	
98-95-3	Nitrobenzene	U	380	1.0	330	380	100	
78-59-1	Isophorone	U	380	1.0	330	380	87	
88-75-5	2-Nitrophenol	U	700	1.0	600	700	190	
105-67-9	2,4-Dimethylphenol	U	580	1.0	500	580	190	
111-91-1	Bis(2-Chloroethoxy)methane	U	380	1.0	330	380	110	
120-83-2	2,4-Dichlorophenol	U	580	1.0	500	580	170	
106-47-8	4-Chloroaniline	U	580	1.0	500	580	140	
105-60-2	Caprolactam	U	580	1.0	500	580	170	
59-50-7	4-Chloro-3-Methylphenol	U	580	1.0	500	580	190	
88-06-2	2,4,6-Trichlorophenol	U	580	1.0	500	580	180	
95-95-4	2,4,5-Trichlorophenol	U	580	1.0	500	580	180	
91-58-7	2-Chloronaphthalene	U	380	1.0	330	380	100	
92-52-4	1,1'-Biphenyl	U	380	1.0	330	380	85	
88-74-4	2-Nitroaniline	U	580	1.0	500	580	87	
131-11-3	Dimethyl Phthalate	U	380	1.0	330	380	90	
606-20-2	2,6-Dinitrotoluene	U	380	1.0	330	380	92	
208-96-8	Acenaphthylene	U	380	1.0	330	380	81	
99-09-2	3-Nitroaniline	U	580	1.0	500	580	110	
83-32-9	Acenaphthene	U	380	1.0	330	380	75	
51-28-5	2,4-Dinitrophenol	U	1400	1.0	1200	1400	440	
132-64-9	Dibenzofuran	U	380	1.0	330	380	92	
100-02-7	4-Nitrophenol	~~U~~ UJ	1400	1.0	1200	1400	360	CCH
121-14-2	2,4-Dinitrotoluene	U	380	1.0	330	380	99	
84-66-2	Diethylphthalate	U	380	1.0	330	380	93	
7005-72-3	4-Chlorophenyl-phenylether	U	380	1.0	330	380	90	
100-01-6	4-Nitroaniline	U	580	1.0	500	580	160	
534-52-1	4,6-Dinitro-2-Methylphenol	U	1400	1.0	1200	1400	390	
86-30-6	N-Nitrosodiphenylamine	U	760	1.0	660	760	250	
101-55-3	4-Bromophenyl-phenylether	U	380	1.0	330	380	99	
1912-24-9	Atrazine	U	380	1.0	330	380	100	
87-86-5	Pentachlorophenol	U	950	1.0	820	950	280	
120-12-7	Anthracene	U	380	1.0	330	380	97	
86-74-8	Carbazole	U	580	1.0	500	580	130	

KATAHDIN ANALYTICAL SERVICES
Report of Analytical Results

3

Client: CH2MHill
Project: TO-009 Lejeune
PO No:
Sample Date: 01/25/09
Received Date: 01/27/09
Extraction Date: 02/03/09
Analysis Date: 20-FEB-2009 02:45
Report Date: 02/26/2009
Matrix: SOIL
% Solids: 86.2

Lab ID: SC0412-5
Client ID: MR08-SS349-09A
SDG: TO9-47
Extracted by: CB
Extraction Method: SW846 3550
Analyst: JCG
Analysis Method: SW846 8270C
Lab Prep Batch: WG60435
Units: ug/Kgdrywt

CAS#	Compound	Flags	Results	DF	PQL	Adj.PQL	Adj.MDL
84-74-2	Di-n-butylphthalate	U	380	1.0	330	380	120
85-68-7	Butylbenzylphthalate	U	380	1.0	330	380	110
91-94-1	3,3'-Dichlorobenzidine	U	580	1.0	500	580	130
218-01-9	Chrysene	J	150	1.0	330	380	110
117-81-7	bis(2-Ethylhexyl)phthalate	J	200	1.0	330	380	110
117-84-0	Di-n-octylphthalate	U	380	1.0	330	380	240
367-12-4	2-Fluorophenol		84%				
13127-88-3	Phenol-D6		93%				
4165-60-0	Nitrobenzene-D5		81%				
321-60-8	2-Fluorobiphenyl		82%				
118-79-6	2,4,6-Tribromophenol		91%				
1718-51-0	Terphenyl-D14		95%				

KATAHDIN ANALYTICAL SERVICES
Report of Analytical Results

4

Client: CH2MHill
Project: TO-009 Lejeune
PO No:
Sample Date: 01/25/09
Received Date: 01/27/09
Extraction Date: 02/03/09
Analysis Date: 20-FEB-2009 03:27
Report Date: 02/26/2009
Matrix: SOIL
% Solids: 85.6

Lab ID: SC0412-7
Client ID: MR08-IS349-3-4-09A
SDG: TO9-47
Extracted by: CB
Extraction Method: SW846 3550
Analyst: JCG
Analysis Method: SW846 8270C
Lab Prep Batch: WG60435
Units: ug/Kgdrywt

CAS#	Compound	Flags	Results	DF	PQL	Adj.PQL	Adj.MDL
100-52-7	Benzaldehyde	~~U~~ UJ	580	1.0	500	580	140 JCB
108-95-2	Phenol	U	580	1.0	500	580	180
111-44-4	Bis(2-Chloroethyl)ether	U	380	1.0	330	380	94
95-57-8	2-Chlorophenol	U	580	1.0	500	580	190
95-48-7	2-Methylphenol	U	700	1.0	600	700	230
108-60-1	2,2'-Oxybis(1-chloropropane)	U	380	1.0	330	380	100
98-86-2	Acetophenone	U	700	1.0	600	700	210
621-64-7	N-Nitroso-di-n-propylamine	U	380	1.0	330	380	97
65794-96-9	3&4-Methylphenol	U	700	1.0	600	700	220
67-72-1	Hexachloroethane	U	380	1.0	330	380	110
98-95-3	Nitrobenzene	U	380	1.0	330	380	110
78-59-1	Isophorone	U	380	1.0	330	380	88
88-75-5	2-Nitrophenol	U	700	1.0	600	700	200
105-67-9	2,4-Dimethylphenol	U	580	1.0	500	580	190
111-91-1	Bis(2-Chloroethoxy)methane	U	380	1.0	330	380	110
120-83-2	2,4-Dichlorophenol	U	580	1.0	500	580	180
106-47-8	4-Chloroaniline	U	580	1.0	500	580	140
105-60-2	Caprolactam	U	580	1.0	500	580	170
59-50-7	4-Chloro-3-Methylphenol	U	580	1.0	500	580	190
88-06-2	2,4,6-Trichlorophenol	U	580	1.0	500	580	180
95-95-4	2,4,5-Trichlorophenol	U	580	1.0	500	580	180
91-58-7	2-Chloronaphthalene	U	380	1.0	330	380	100
92-52-4	1,1'-Biphenyl	U	380	1.0	330	380	85
88-74-4	2-Nitroaniline	U	580	1.0	500	580	88
131-11-3	Dimethyl Phthalate	U	380	1.0	330	380	91
606-20-2	2,6-Dinitrotoluene	U	380	1.0	330	380	92
208-96-8	Acenaphthylene	U	380	1.0	330	380	82
99-09-2	3-Nitroaniline	U	580	1.0	500	580	110
83-32-9	Acenaphthene	U	380	1.0	330	380	76
51-28-5	2,4-Dinitrophenol	U	1400	1.0	1200	1400	440
132-64-9	Dibenzofuran	U	380	1.0	330	380	92
100-02-7	4-Nitrophenol	~~U~~ UJ	1400	1.0	1200	1400	360 CCH
121-14-2	2,4-Dinitrotoluene	U	380	1.0	330	380	99
84-66-2	Diethylphthalate	U	380	1.0	330	380	93
7005-72-3	4-Chlorophenyl-phenylether	U	380	1.0	330	380	91
100-01-6	4-Nitroaniline	U	580	1.0	500	580	160
534-52-1	4,6-Dinitro-2-Methylphenol	U	1400	1.0	1200	1400	390
86-30-6	N-Nitrosodiphenylamine	U	770	1.0	660	770	260
101-55-3	4-Bromophenyl-phenylether	U	380	1.0	330	380	99
1912-24-9	Atrazine	U	380	1.0	330	380	110
87-86-5	Pentachlorophenol	U	960	1.0	820	960	280
120-12-7	Anthracene	U	380	1.0	330	380	98
86-74-8	Carbazole	U	580	1.0	500	580	130

KATAHDIN ANALYTICAL SERVICES
Report of Analytical Results

4

Client: CH2MHill
Project: TO-009 Lejeune
PO No:
Sample Date: 01/25/09
Received Date: 01/27/09
Extraction Date: 02/03/09
Analysis Date: 20-FEB-2009 03:27
Report Date: 02/26/2009
Matrix: SOIL
% Solids: 85.6

Lab ID: SC0412-7
Client ID: MR08-IS349-3-4-09A
SDG: TO9-47
Extracted by: CB
Extraction Method: SW846 3550
Analyst: JCG
Analysis Method: SW846 8270C
Lab Prep Batch: WG60435
Units: ug/Kgdrywt

CAS#	Compound	Flags	Results	DF	PQL	Adj.PQL	Adj.MDL
84-74-2	Di-n-butylphthalate	U	380	1.0	330	380	120
85-68-7	Butylbenzylphthalate	U	380	1.0	330	380	110
91-94-1	3,3'-Dichlorobenzidine	U	580	1.0	500	580	130
218-01-9	Chrysene	U	380	1.0	330	380	110
117-81-7	bis(2-Ethylhexyl)phthalate	J	200	1.0	330	380	110
117-84-0	Di-n-octylphthalate	U	380	1.0	330	380	250
367-12-4	2-Fluorophenol		79%				
13127-88-3	Phenol-D6		92%				
4165-60-0	Nitrobenzene-D5		81%				
321-60-8	2-Fluorobiphenyl		84%				
118-79-6	2,4,6-Tribromophenol		88%				
1718-51-0	Terphenyl-D14		93%				

KATAHDIN ANALYTICAL SERVICES
Report of Analytical Results

5

Client: CH2MHill
Project: TO-009 Lejeune
PO No:
Sample Date: 01/25/09
Received Date: 01/27/09
Extraction Date: 02/03/09
Analysis Date: 20-FEB-2009 22:26
Report Date: 02/26/2009
Matrix: SOIL
% Solids: 88.1

Lab ID: SC0412-9
Client ID: MR08-SS326-09A
SDG: TO9-47
Extracted by: CB
Extraction Method: SW846 3550
Analyst: JCG
Analysis Method: SW846 8270C
Lab Prep Batch: WG60435
Units: ug/Kgdrywt

CAS#	Compound	Flags	Results	DF	PQL	Adj.PQL	Adj.MDL	
100-52-7	Benzaldehyde	~~U~~ UJ	570	1.0	500	570	140	JCB
108-95-2	Phenol	U	570	1.0	500	570	180	
111-44-4	Bis(2-Chloroethyl)ether	U	370	1.0	330	370	92	
95-57-8	2-Chlorophenol	U	570	1.0	500	570	190	
95-48-7	2-Methylphenol	U	680	1.0	600	680	230	
108-60-1	2,2'-Oxybis(1-chloropropane)	U	370	1.0	330	370	100	
98-86-2	Acetophenone	U	680	1.0	600	680	200	
621-64-7	N-Nitroso-di-n-propylamine	U	370	1.0	330	370	94	
65794-96-9	3&4-Methylphenol	U	680	1.0	600	680	210	
67-72-1	Hexachloroethane	U	370	1.0	330	370	110	
98-95-3	Nitrobenzene	U	370	1.0	330	370	100	
78-59-1	Isophorone	U	370	1.0	330	370	85	
88-75-5	2-Nitrophenol	U	680	1.0	600	680	190	
105-67-9	2,4-Dimethylphenol	U	570	1.0	500	570	190	
111-91-1	Bis(2-Chloroethoxy)methane	U	370	1.0	330	370	110	
120-83-2	2,4-Dichlorophenol	U	570	1.0	500	570	170	
106-47-8	4-Chloroaniline	U	570	1.0	500	570	140	
105-60-2	Caprolactam	U	570	1.0	500	570	160	
59-50-7	4-Chloro-3-Methylphenol	U	570	1.0	500	570	190	
88-06-2	2,4,6-Trichlorophenol	U	570	1.0	500	570	180	
95-95-4	2,4,5-Trichlorophenol	U	570	1.0	500	570	180	
91-58-7	2-Chloronaphthalene	U	370	1.0	330	370	99	
92-52-4	1,1'-Biphenyl	U	370	1.0	330	370	83	
88-74-4	2-Nitroaniline	U	570	1.0	500	570	85	
131-11-3	Dimethyl Phthalate	U	370	1.0	330	370	88	
606-20-2	2,6-Dinitrotoluene	U	370	1.0	330	370	90	
208-96-8	Acenaphthylene	U	370	1.0	330	370	79	
99-09-2	3-Nitroaniline	U	570	1.0	500	570	110	
83-32-9	Acenaphthene	U	370	1.0	330	370	74	
51-28-5	2,4-Dinitrophenol	U	1400	1.0	1200	1400	430	
132-64-9	Dibenzofuran	U	370	1.0	330	370	90	
100-02-7	4-Nitrophenol	~~U~~ UJ	1400	1.0	1200	1400	350	CCH
121-14-2	2,4-Dinitrotoluene	U	370	1.0	330	370	96	
84-66-2	Diethylphthalate	U	370	1.0	330	370	91	
7005-72-3	4-Chlorophenyl-phenylether	U	370	1.0	330	370	88	
100-01-6	4-Nitroaniline	U	570	1.0	500	570	150	
534-52-1	4,6-Dinitro-2-Methylphenol	U	1400	1.0	1200	1400	380	
86-30-6	N-Nitrosodiphenylamine	U	750	1.0	660	750	250	
101-55-3	4-Bromophenyl-phenylether	U	370	1.0	330	370	96	
1912-24-9	Atrazine	U	370	1.0	330	370	100	
87-86-5	Pentachlorophenol	U	930	1.0	820	930	270	
120-12-7	Anthracene	U	370	1.0	330	370	95	
86-74-8	Carbazole	U	570	1.0	500	570	130	

5

KATAHDIN ANALYTICAL SERVICES
Report of Analytical Results

Client: CH2MHill
Project: TO-009 Lejeune
PO No:
Sample Date: 01/25/09
Received Date: 01/27/09
Extraction Date: 02/03/09
Analysis Date: 20-FEB-2009 22:26
Report Date: 02/26/2009
Matrix: SOIL
% Solids: 88.1

Lab ID: SC0412-9
Client ID: MR08-SS326-09A
SDG: TO9-47
Extracted by: CB
Extraction Method: SW846 3550
Analyst: JCG
Analysis Method: SW846 8270C
Lab Prep Batch: WG60435
Units: ug/Kgdrywt

CAS#	Compound	Flags	Results	DF	PQL	Adj.PQL	Adj.MDL
84-74-2	Di-n-butylphthalate	U	370	1.0	330	370	110
85-68-7	Butylbenzylphthalate	U	370	1.0	330	370	100
91-94-1	3,3'-Dichlorobenzidine	U	570	1.0	500	570	130
218-01-9	Chrysene		500	1.0	330	370	110
117-81-7	bis(2-Ethylhexyl)phthalate	J	190	1.0	330	370	110
117-84-0	Di-n-octylphthalate	U	370	1.0	330	370	240
367-12-4	2-Fluorophenol		84%				
13127-88-3	Phenol-D6		*101%				
4165-60-0	Nitrobenzene-D5		78%				
321-60-8	2-Fluorobiphenyl		87%				
118-79-6	2,4,6-Tribromophenol		85%				
1718-51-0	Terphenyl-D14		101%				

KATAHDIN ANALYTICAL SERVICES
Report of Analytical Results

6

Client: CH2MHill
Project: TO-009 Lejeune
PO No:
Sample Date: 01/25/09
Received Date: 01/27/09
Extraction Date: 02/03/09
Analysis Date: 20-FEB-2009 04:09
Report Date: 02/26/2009
Matrix: SOIL
% Solids: 91.0

Lab ID: SC0412-11
Client ID: MR08-IS326-4-5-09A
SDG: TO9-47
Extracted by: CB
Extraction Method: SW846 3550
Analyst: JCG
Analysis Method: SW846 8270C
Lab Prep Batch: WG60435
Units: ug/Kgdrywt

CAS#	Compound	Flags	Results	DF	PQL	Adj.PQL	Adj.MDL
100-52-7	Benzaldehyde	~~U~~ UJ	550	1.0	500	550	130 JCB
108-95-2	Phenol	U	550	1.0	500	550	170
111-44-4	Bis(2-Chloroethyl)ether	U	360	1.0	330	360	89
95-57-8	2-Chlorophenol	U	550	1.0	500	550	180
95-48-7	2-Methylphenol	U	660	1.0	600	660	220
108-60-1	2,2'-Oxybis(1-chloropropane)	U	360	1.0	330	360	98
98-86-2	Acetophenone	U	660	1.0	600	660	200
621-64-7	N-Nitroso-di-n-propylamine	U	360	1.0	330	360	91
65794-96-9	3&4-Methylphenol	U	660	1.0	600	660	200
67-72-1	Hexachloroethane	U	360	1.0	330	360	100
98-95-3	Nitrobenzene	U	360	1.0	330	360	100
78-59-1	Isophorone	U	360	1.0	330	360	82
88-75-5	2-Nitrophenol	U	660	1.0	600	660	180
105-67-9	2,4-Dimethylphenol	U	550	1.0	500	550	180
111-91-1	Bis(2-Chloroethoxy)methane	U	360	1.0	330	360	100
120-83-2	2,4-Dichlorophenol	U	550	1.0	500	550	160
106-47-8	4-Chloroaniline	U	550	1.0	500	550	130
105-60-2	Caprolactam	U	550	1.0	500	550	160
59-50-7	4-Chloro-3-Methylphenol	U	550	1.0	500	550	180
88-06-2	2,4,6-Trichlorophenol	U	550	1.0	500	550	170
95-95-4	2,4,5-Trichlorophenol	U	550	1.0	500	550	170
91-58-7	2-Chloronaphthalene	U	360	1.0	330	360	96
92-52-4	1,1'-Biphenyl	U	360	1.0	330	360	80
88-74-4	2-Nitroaniline	U	550	1.0	500	550	82
131-11-3	Dimethyl Phthalate	U	360	1.0	330	360	86
606-20-2	2,6-Dinitrotoluene	U	360	1.0	330	360	87
208-96-8	Acenaphthylene	U	360	1.0	330	360	77
99-09-2	3-Nitroaniline	U	550	1.0	500	550	100
83-32-9	Acenaphthene	U	360	1.0	330	360	71
51-28-5	2,4-Dinitrophenol	U	1300	1.0	1200	1300	410
132-64-9	Dibenzofuran	U	360	1.0	330	360	87
100-02-7	4-Nitrophenol	~~U~~ UJ	1300	1.0	1200	1300	340 CCN
121-14-2	2,4-Dinitrotoluene	U	360	1.0	330	360	93
84-66-2	Diethylphthalate	U	360	1.0	330	360	88
7005-72-3	4-Chlorophenyl-phenylether	U	360	1.0	330	360	86
100-01-6	4-Nitroaniline	U	550	1.0	500	550	150
534-52-1	4,6-Dinitro-2-Methylphenol	U	1300	1.0	1200	1300	370
86-30-6	N-Nitrosodiphenylamine	U	720	1.0	660	720	240
101-55-3	4-Bromophenyl-phenylether	U	360	1.0	330	360	93
1912-24-9	Atrazine	U	360	1.0	330	360	100
87-86-5	Pentachlorophenol	U	900	1.0	820	900	260
120-12-7	Anthracene	U	360	1.0	330	360	92
86-74-8	Carbazole	U	550	1.0	500	550	120

KATAHDIN ANALYTICAL SERVICES
Report of Analytical Results

Client: CH2MHill
Project: TO-009 Lejeune
PO No:
Sample Date: 01/25/09
Received Date: 01/27/09
Extraction Date: 02/03/09
Analysis Date: 20-FEB-2009 04:09
Report Date: 02/26/2009
Matrix: SOIL
% Solids: 91.0

Lab ID: SC0412-11
Client ID: MR08-IS326-4-5-09A
SDG: TO9-47
Extracted by: CB
Extraction Method: SW846 3550
Analyst: JCG
Analysis Method: SW846 8270C
Lab Prep Batch: WG60435
Units: ug/Kgdrywt

CAS#	Compound	Flags	Results	DF	PQL	Adj.PQL	Adj.MDL
84-74-2	Di-n-butylphthalate	U	360	1.0	330	360	110
85-68-7	Butylbenzylphthalate	U	360	1.0	330	360	100
91-94-1	3,3'-Dichlorobenzidine	U	550	1.0	500	550	120
218-01-9	Chrysene	U	360	1.0	330	360	100
117-81-7	bis(2-Ethylhexyl)phthalate	U	360	1.0	330	360	110
117-84-0	Di-n-octylphthalate	U	360	1.0	330	360	230
367-12-4	2-Fluorophenol		72%				
13127-88-3	Phenol-D6		85%				
4165-60-0	Nitrobenzene-D5		76%				
321-60-8	2-Fluorobiphenyl		80%				
118-79-6	2,4,6-Tribromophenol		73%				
1718-51-0	Terphenyl-D14		93%				

KATAHDIN ANALYTICAL SERVICES
Report of Analytical Results

7

Client: CH2MHill
Project: TO-009 Lejeune
PO No:
Sample Date: 01/25/09
Received Date: 01/27/09
Extraction Date: 02/03/09
Analysis Date: 20-FEB-2009 23:08
Report Date: 02/26/2009
Matrix: SOIL
% Solids: 71.7

Lab ID: SC0412-13
Client ID: MR08-SS327-09A
SDG: TO9-47
Extracted by: CB
Extraction Method: SW846 3550
Analyst: JCG
Analysis Method: SW846 8270C
Lab Prep Batch: WG60435
Units: ug/Kgdrywt

CAS#	Compound	Flags	Results	DF	PQL	Adj.PQL	Adj.MDL	
100-52-7	Benzaldehyde	~~U~~ UJ	700	1.0	500	700	170	JEB
108-95-2	Phenol	U	700	1.0	500	700	220	
111-44-4	Bis(2-Chloroethyl)ether	U	460	1.0	330	460	110	
95-57-8	2-Chlorophenol	U	700	1.0	500	700	230	
95-48-7	2-Methylphenol	U	840	1.0	600	840	280	
108-60-1	2,2'-Oxybis(1-chloropropane)	U	460	1.0	330	460	120	
98-86-2	Acetophenone	U	840	1.0	600	840	250	
621-64-7	N-Nitroso-di-n-propylamine	U	460	1.0	330	460	120	
65794-96-9	3&4-Methylphenol	U	840	1.0	600	840	260	
67-72-1	Hexachloroethane	U	460	1.0	330	460	130	
98-95-3	Nitrobenzene	U	460	1.0	330	460	130	
78-59-1	Isophorone	U	460	1.0	330	460	100	
88-75-5	2-Nitrophenol	U	840	1.0	600	840	230	
105-67-9	2,4-Dimethylphenol	U	700	1.0	500	700	230	
111-91-1	Bis(2-Chloroethoxy)methane	U	460	1.0	330	460	130	
120-83-2	2,4-Dichlorophenol	U	700	1.0	500	700	210	
106-47-8	4-Chloroaniline	U	700	1.0	500	700	160	
105-60-2	Caprolactam	U	700	1.0	500	700	200	
59-50-7	4-Chloro-3-Methylphenol	U	700	1.0	500	700	230	
88-06-2	2,4,6-Trichlorophenol	U	700	1.0	500	700	220	
95-95-4	2,4,5-Trichlorophenol	U	700	1.0	500	700	220	
91-58-7	2-Chloronaphthalene	U	460	1.0	330	460	120	
92-52-4	1,1'-Biphenyl	U	460	1.0	330	460	100	
88-74-4	2-Nitroaniline	U	700	1.0	500	700	100	
131-11-3	Dimethyl Phthalate	U	460	1.0	330	460	110	
606-20-2	2,6-Dinitrotoluene	U	460	1.0	330	460	110	
208-96-8	Acenaphthylene	U	460	1.0	330	460	98	
99-09-2	3-Nitroaniline	U	700	1.0	500	700	130	
83-32-9	Acenaphthene	U	460	1.0	330	460	90	
51-28-5	2,4-Dinitrophenol	U	1700	1.0	1200	1700	520	
132-64-9	Dibenzofuran	U	460	1.0	330	460	110	
100-02-7	4-Nitrophenol	~~U~~ UJ	1700	1.0	1200	1700	430	CH
121-14-2	2,4-Dinitrotoluene	U	460	1.0	330	460	120	
84-66-2	Diethylphthalate	U	460	1.0	330	460	110	
7005-72-3	4-Chlorophenyl-phenylether	U	460	1.0	330	460	110	
100-01-6	4-Nitroaniline	U	700	1.0	500	700	190	
534-52-1	4,6-Dinitro-2-Methylphenol	U	1700	1.0	1200	1700	470	
86-30-6	N-Nitrosodiphenylamine	U	920	1.0	660	920	300	
101-55-3	4-Bromophenyl-phenylether	U	460	1.0	330	460	120	
1912-24-9	Atrazine	U	460	1.0	330	460	130	
87-86-5	Pentachlorophenol	U	1100	1.0	820	1100	330	
120-12-7	Anthracene	U	460	1.0	330	460	120	
86-74-8	Carbazole	U	700	1.0	500	700	150	

KATAHDIN ANALYTICAL SERVICES
Report of Analytical Results

7

Client: CH2MHill
Project: TO-009 Lejeune
PO No:
Sample Date: 01/25/09
Received Date: 01/27/09
Extraction Date: 02/03/09
Analysis Date: 20-FEB-2009 23:08
Report Date: 02/26/2009
Matrix: SOIL
% Solids: 71.7

Lab ID: SC0412-13
Client ID: MR08-SS327-09A
SDG: TO9-47
Extracted by: CB
Extraction Method: SW846 3550
Analyst: JCG
Analysis Method: SW846 8270C
Lab Prep Batch: WG60435
Units: ug/Kgdrywt

CAS#	Compound	Flags	Results	DF	PQL	Adj.PQL	Adj.MDL
84-74-2	Di-n-butylphthalate	U	460	1.0	330	460	140
85-68-7	Butylbenzylphthalate	U	460	1.0	330	460	130
91-94-1	3,3'-Dichlorobenzidine	U	700	1.0	500	700	160
218-01-9	Chrysene		930	1.0	330	460	130
117-81-7	bis(2-Ethylhexyl)phthalate	U	460	1.0	330	460	140
117-84-0	Di-n-octylphthalate	U	460	1.0	330	460	290
367-12-4	2-Fluorophenol		77%				
13127-88-3	Phenol-D6		94%				
4165-60-0	Nitrobenzene-D5		70%				
321-60-8	2-Fluorobiphenyl		79%				
118-79-6	2,4,6-Tribromophenol		88%				
1718-51-0	Terphenyl-D14		93%				

KATAHDIN ANALYTICAL SERVICES
Report of Analytical Results

8

Client: CH2MHill
Project: TO-009 Lejeune
PO No:
Sample Date: 01/25/09
Received Date: 01/27/09
Extraction Date: 02/03/09
Analysis Date: 20-FEB-2009 18:14
Report Date: 02/26/2009
Matrix: SOIL
% Solids: 89.7

Lab ID: SC0412-15
Client ID: MR08-IS327-2-3-09A
SDG: TO9-47
Extracted by: CB
Extraction Method: SW846 3550
Analyst: JCG
Analysis Method: SW846 8270C
Lab Prep Batch: WG60435
Units: ug/Kgdrywt

CAS#	Compound	Flags	Results	DF	PQL	Adj.PQL	Adj.MDL
100-52-7	Benzaldehyde	~~J~~ UJ	560	1.0	500	560	130 JCB
108-95-2	Phenol	U	560	1.0	500	560	170
111-44-4	Bis(2-Chloroethyl)ether	U	370	1.0	330	370	90
95-57-8	2-Chlorophenol	U	560	1.0	500	560	180
95-48-7	2-Methylphenol	U	670	1.0	600	670	220
108-60-1	2,2'-Oxybis(1-chloropropane)	U	370	1.0	330	370	99
98-86-2	Acetophenone	U	670	1.0	600	670	200
621-64-7	N-Nitroso-di-n-propylamine	U	370	1.0	330	370	92
65794-96-9	3&4-Methylphenol	U	670	1.0	600	670	210
67-72-1	Hexachloroethane	U	370	1.0	330	370	110
98-95-3	Nitrobenzene	U	370	1.0	330	370	100
78-59-1	Isophorone	U	370	1.0	330	370	84
88-75-5	2-Nitrophenol	U	670	1.0	600	670	190
105-67-9	2,4-Dimethylphenol	U	560	1.0	500	560	180
111-91-1	Bis(2-Chloroethoxy)methane	U	370	1.0	330	370	110
120-83-2	2,4-Dichlorophenol	U	560	1.0	500	560	170
106-47-8	4-Chloroaniline	U	560	1.0	500	560	130
105-60-2	Caprolactam	U	560	1.0	500	560	160
59-50-7	4-Chloro-3-Methylphenol	U	560	1.0	500	560	180
88-06-2	2,4,6-Trichlorophenol	U	560	1.0	500	560	170
95-95-4	2,4,5-Trichlorophenol	U	560	1.0	500	560	170
91-58-7	2-Chloronaphthalene	U	370	1.0	330	370	97
92-52-4	1,1'-Biphenyl	U	370	1.0	330	370	81
88-74-4	2-Nitroaniline	U	560	1.0	500	560	84
131-11-3	Dimethyl Phthalate	U	370	1.0	330	370	87
606-20-2	2,6-Dinitrotoluene	U	370	1.0	330	370	88
208-96-8	Acenaphthylene	U	370	1.0	330	370	78
99-09-2	3-Nitroaniline	U	560	1.0	500	560	100
83-32-9	Acenaphthene	U	370	1.0	330	370	72
51-28-5	2,4-Dinitrophenol	U	1300	1.0	1200	1300	420
132-64-9	Dibenzofuran	U	370	1.0	330	370	88
100-02-7	4-Nitrophenol	~~J~~ UJ	1300	1.0	1200	1300	340 CCH
121-14-2	2,4-Dinitrotoluene	U	370	1.0	330	370	95
84-66-2	Diethylphthalate	U	370	1.0	330	370	89
7005-72-3	4-Chlorophenyl-phenylether	U	370	1.0	330	370	87
100-01-6	4-Nitroaniline	U	560	1.0	500	560	150
534-52-1	4,6-Dinitro-2-Methylphenol	U	1300	1.0	1200	1300	380
86-30-6	N-Nitrosodiphenylamine	U	740	1.0	660	740	240
101-55-3	4-Bromophenyl-phenylether	U	370	1.0	330	370	95
1912-24-9	Atrazine	U	370	1.0	330	370	100
87-86-5	Pentachlorophenol	U	910	1.0	820	910	260
120-12-7	Anthracene	U	370	1.0	330	370	94
86-74-8	Carbazole	U	560	1.0	500	560	120

KATAHDIN ANALYTICAL SERVICES
Report of Analytical Results

8

Client: CH2MHill
Project: TO-009 Lejeune
PO No:
Sample Date: 01/25/09
Received Date: 01/27/09
Extraction Date: 02/03/09
Analysis Date: 20-FEB-2009 18:14
Report Date: 02/26/2009
Matrix: SOIL
% Solids: 89.7

Lab ID: SC0412-15
Client ID: MR08-IS327-2-3-09A
SDG: TO9-47
Extracted by: CB
Extraction Method: SW846 3550
Analyst: JCG
Analysis Method: SW846 8270C
Lab Prep Batch: WG60435
Units: ug/Kgdrywt

CAS#	Compound	Flags	Results	DF	PQL	Adj.PQL	Adj.MDL
84-74-2	Di-n-butylphthalate	U	370	1.0	330	370	110
85-68-7	Butylbenzylphthalate	U	370	1.0	330	370	100
91-94-1	3,3'-Dichlorobenzidine	U	560	1.0	500	560	130
218-01-9	Chrysene	U	370	1.0	330	370	100
117-81-7	bis(2-Ethylhexyl)phthalate	J	110	1.0	330	370	110
117-84-0	Di-n-octylphthalate	U	370	1.0	330	370	240
367-12-4	2-Fluorophenol		74%				
13127-88-3	Phenol-D6		83%				
4165-60-0	Nitrobenzene-D5		74%				
321-60-8	2-Fluorobiphenyl		77%				
118-79-6	2,4,6-Tribromophenol		66%				
1718-51-0	Terphenyl-D14		91%				

KATAHDIN ANALYTICAL SERVICES
Report of Analytical Results

9

Client: CH2MHill
Project: TO-009 Lejeune
PO No:
Sample Date: 01/25/09
Received Date: 01/27/09
Extraction Date: 02/03/09
Analysis Date: 20-FEB-2009 23:50
Report Date: 02/26/2009
Matrix: SOIL
% Solids: 87.5

Lab ID: SC0412-17
Client ID: MR08-SS324-09A
SDG: TO9-47
Extracted by: CB
Extraction Method: SW846 3550
Analyst: JCG
Analysis Method: SW846 8270C
Lab Prep Batch: WG60435
Units: ug/Kgdrywt

Use reanalysis

RE

CAS#	Compound	Flags	Results	DF	PQL	Adj.PQL	Adj.MDL
100-52-7	Benzaldehyde	~~J~~ J	170	1.0	500	570	140 JCB
108-95-2	Phenol	U	570	1.0	500	570	180
111-44-4	Bis(2-Chloroethyl)ether	U	380	1.0	330	380	92
95-57-8	2-Chlorophenol	U	570	1.0	500	570	190
95-48-7	2-Methylphenol	U	680	1.0	600	680	230
108-60-1	2,2'-Oxybis(1-chloropropane)	U	380	1.0	330	380	100
98-86-2	Acetophenone	U	680	1.0	600	680	200
621-64-7	N-Nitroso-di-n-propylamine	U	380	1.0	330	380	95
65794-96-9	3&4-Methylphenol	U	680	1.0	600	680	210
67-72-1	Hexachloroethane	U	380	1.0	330	380	110
98-95-3	Nitrobenzene	U	380	1.0	330	380	100
78-59-1	Isophorone	U	380	1.0	330	380	86
88-75-5	2-Nitrophenol	U	680	1.0	600	680	190
105-67-9	2,4-Dimethylphenol	U	570	1.0	500	570	190
111-91-1	Bis(2-Chloroethoxy)methane	U	380	1.0	330	380	110
120-83-2	2,4-Dichlorophenol	U	570	1.0	500	570	170
106-47-8	4-Chloroaniline	U	570	1.0	500	570	140
105-60-2	Caprolactam	U	570	1.0	500	570	160
59-50-7	4-Chloro-3-Methylphenol	U	570	1.0	500	570	190
88-06-2	2,4,6-Trichlorophenol	U	570	1.0	500	570	180
95-95-4	2,4,5-Trichlorophenol	U	570	1.0	500	570	180
91-58-7	2-Chloronaphthalene	U	380	1.0	330	380	99
92-52-4	1,1'-Biphenyl	U	380	1.0	330	380	83
88-74-4	2-Nitroaniline	U	570	1.0	500	570	86
131-11-3	Dimethyl Phthalate	U	380	1.0	330	380	89
606-20-2	2,6-Dinitrotoluene	U	380	1.0	330	380	90
208-96-8	Acenaphthylene	U	380	1.0	330	380	80
99-09-2	3-Nitroaniline	U	570	1.0	500	570	110
83-32-9	Acenaphthene	U	380	1.0	330	380	74
51-28-5	2,4-Dinitrophenol	U	1400	1.0	1200	1400	430
132-64-9	Dibenzofuran	U	380	1.0	330	380	90
100-02-7	4-Nitrophenol	~~J~~ UJ	1400	1.0	1200	1400	350 CCH
121-14-2	2,4-Dinitrotoluene	U	380	1.0	330	380	97
84-66-2	Diethylphthalate	U	380	1.0	330	380	91
7005-72-3	4-Chlorophenyl-phenylether	U	380	1.0	330	380	89
100-01-6	4-Nitroaniline	U	570	1.0	500	570	150
534-52-1	4,6-Dinitro-2-Methylphenol	U	1400	1.0	1200	1400	380
86-30-6	N-Nitrosodiphenylamine	U	750	1.0	660	750	250
101-55-3	4-Bromophenyl-phenylether	U	380	1.0	330	380	97
1912-24-9	Atrazine	U	380	1.0	330	380	100
87-86-5	Pentachlorophenol	U	940	1.0	820	940	270
120-12-7	Anthracene	U	380	1.0	330	380	96
86-74-8	Carbazole	J	140	1.0	500	570	130

KATAHDIN ANALYTICAL SERVICES
Report of Analytical Results

9

Client: CH2MHill
Project: TO-009 Lejeune
PO No:
Sample Date: 01/25/09
Received Date: 01/27/09
Extraction Date: 02/03/09
Analysis Date: 20-FEB-2009 23:50
Report Date: 02/26/2009
Matrix: SOIL
% Solids: 87.5

Lab ID: SC0412-17
Client ID: MR08-SS324-09A
SDG: TO9-47
Extracted by: CB
Extraction Method: SW846 3550
Analyst: JCG
Analysis Method: SW846 8270C
Lab Prep Batch: WG60435
Units: ug/Kgdrywt

use reanalysis

CAS#	Compound	Flags	Results	DF	PQL	Adj.PQL	Adj.MDL
84-74-2	Di-n-butylphthalate	U	380	1.0	330	380	120
85-68-7	Butylbenzylphthalate	U	380	1.0	330	380	110
91-94-1	3,3'-Dichlorobenzidine	U	570	1.0	500	570	130
218-01-9	Chrysene		1300	1.0	330	380	110
117-81-7	bis(2-Ethylhexyl)phthalate	U	380	1.0	330	380	110
117-84-0	Di-n-octylphthalate	~~U~~ UJ	380	1.0	330	380	240 ISL
367-12-4	2-Fluorophenol		74%				
13127-88-3	Phenol-D6		94%				
4165-60-0	Nitrobenzene-D5		73%				
321-60-8	2-Fluorobiphenyl		85%				
118-79-6	2,4,6-Tribromophenol		76%				
1718-51-0	Terphenyl-D14		100%				

9RE

KATAHDIN ANALYTICAL SERVICES
Report of Analytical Results

Client: CH2MHill
Project: TO-009 Lejeune
PO No:
Sample Date: 01/25/09
Received Date: 01/27/09
Extraction Date: 02/03/09
Analysis Date: 22-FEB-2009 22:53
Report Date: 02/26/2009
Matrix: SOIL
% Solids: 87.5

Lab ID: SC0412-17RA
Client ID: MR08-SS324-09A
SDG: TO9-47
Extracted by: CB
Extraction Method: SW846 3550
Analyst: JLP
Analysis Method: SW846 8270C
Lab Prep Batch: WG60435
Units: ug/Kgdrywt

CAS#	Compound	Flags	Results	DF	PQL	Adj.PQL	Adj.MDL
100-52-7	Benzaldehyde	~~J~~ J	190	1.0	500	570	140 JCB
108-95-2	Phenol	U	570	1.0	500	570	180
111-44-4	Bis(2-Chloroethyl)ether	U	380	1.0	330	380	92
95-57-8	2-Chlorophenol	U	570	1.0	500	570	190
95-48-7	2-Methylphenol	U	680	1.0	600	680	230
108-60-1	2,2'-Oxybis(1-chloropropane)	U	380	1.0	330	380	100
98-86-2	Acetophenone	U	680	1.0	600	680	200
621-64-7	N-Nitroso-di-n-propylamine	U	380	1.0	330	380	95
65794-96-9	3&4-Methylphenol	U	680	1.0	600	680	210
67-72-1	Hexachloroethane	U	380	1.0	330	380	110
98-95-3	Nitrobenzene	U	380	1.0	330	380	100
78-59-1	Isophorone	U	380	1.0	330	380	86
88-75-5	2-Nitrophenol	U	680	1.0	600	680	190
105-67-9	2,4-Dimethylphenol	U	570	1.0	500	570	190
111-91-1	Bis(2-Chloroethoxy)methane	U	380	1.0	330	380	110
120-83-2	2,4-Dichlorophenol	U	570	1.0	500	570	170
106-47-8	4-Chloroaniline	U	570	1.0	500	570	140
105-60-2	Caprolactam	U	570	1.0	500	570	160
59-50-7	4-Chloro-3-Methylphenol	U	570	1.0	500	570	190
88-06-2	2,4,6-Trichlorophenol	U	570	1.0	500	570	180
95-95-4	2,4,5-Trichlorophenol	U	570	1.0	500	570	180
91-58-7	2-Chloronaphthalene	U	380	1.0	330	380	99
92-52-4	1,1'-Biphenyl	U	380	1.0	330	380	83
88-74-4	2-Nitroaniline	U	570	1.0	500	570	86
131-11-3	Dimethyl Phthalate	U	380	1.0	330	380	89
606-20-2	2,6-Dinitrotoluene	U	380	1.0	330	380	90
208-96-8	Acenaphthylene	U	380	1.0	330	380	80
99-09-2	3-Nitroaniline	U	570	1.0	500	570	110
83-32-9	Acenaphthene	U	380	1.0	330	380	74
51-28-5	2,4-Dinitrophenol	U	1400	1.0	1200	1400	430
132-64-9	Dibenzofuran	U	380	1.0	330	380	90
100-02-7	4-Nitrophenol	U	1400	1.0	1200	1400	350
121-14-2	2,4-Dinitrotoluene	U	380	1.0	330	380	97
84-66-2	Diethylphthalate	U	380	1.0	330	380	91
7005-72-3	4-Chlorophenyl-phenylether	U	380	1.0	330	380	89
100-01-6	4-Nitroaniline	U	570	1.0	500	570	150
534-52-1	4,6-Dinitro-2-Methylphenol	U	1400	1.0	1200	1400	380
86-30-6	N-Nitrosodiphenylamine	U	750	1.0	660	750	250
101-55-3	4-Bromophenyl-phenylether	U	380	1.0	330	380	97
1912-24-9	Atrazine	U	380	1.0	330	380	100
87-86-5	Pentachlorophenol	U	940	1.0	820	940	270
120-12-7	Anthracene	U	380	1.0	330	380	96
86-74-8	Carbazole	U	570	1.0	500	570	130

KATAHDIN ANALYTICAL SERVICES
Report of Analytical Results

9RE

Client: CH2MHill
Project: TO-009 Lejeune
PO No:
Sample Date: 01/25/09
Received Date: 01/27/09
Extraction Date: 02/03/09
Analysis Date: 22-FEB-2009 22:53
Report Date: 02/26/2009
Matrix: SOIL
% Solids: 87.5

Lab ID: SC0412-17RA
Client ID: MR08-SS324-09A
SDG: TO9-47
Extracted by: CB
Extraction Method: SW846 3550
Analyst: JLP
Analysis Method: SW846 8270C
Lab Prep Batch: WG60435
Units: ug/Kgdrywt

CAS#	Compound	Flags	Results	DF	PQL	Adj.PQL	Adj.MDL
84-74-2	Di-n-butylphthalate	U	380	1.0	330	380	120
85-68-7	Butylbenzylphthalate	U	380	1.0	330	380	110
91-94-1	3,3'-Dichlorobenzidine	U	570	1.0	500	570	130
218-01-9	Chrysene		1400	1.0	330	380	110
117-81-7	bis(2-Ethylhexyl)phthalate	U	380	1.0	330	380	110
117-84-0	Di-n-octylphthalate	~~U~~ UJ	380	1.0	330	380	240 ISL
367-12-4	2-Fluorophenol		78%				
13127-88-3	Phenol-D6		95%				
4165-60-0	Nitrobenzene-D5		75%				
321-60-8	2-Fluorobiphenyl		81%				
118-79-6	2,4,6-Tribromophenol		69%				
1718-51-0	Terphenyl-D14		102%				

KATAHDIN ANALYTICAL SERVICES
Report of Analytical Results

10

Client: CH2MHill
Project: TO-009 Lejeune
PO No:
Sample Date: 01/25/09
Received Date: 01/27/09
Extraction Date: 02/03/09
Analysis Date: 20-FEB-2009 19:38
Report Date: 02/26/2009
Matrix: SOIL
% Solids: 87.1

Lab ID: SC0412-19
Client ID: MR08-IS324-3-4-09A
SDG: TO9-47
Extracted by: CB
Extraction Method: SW846 3550
Analyst: JCG
Analysis Method: SW846 8270C
Lab Prep Batch: WG60435
Units: ug/Kgdrywt

CAS#	Compound	Flags	Results	DF	PQL	Adj.PQL	Adj.MDL	
100-52-7	Benzaldehyde	~~U~~ UJ	570	1.0	500	570	140	ICB
108-95-2	Phenol	U	570	1.0	500	570	180	
111-44-4	Bis(2-Chloroethyl)ether	U	380	1.0	330	380	93	
95-57-8	2-Chlorophenol	U	570	1.0	500	570	190	
95-48-7	2-Methylphenol	U	690	1.0	600	690	230	
108-60-1	2,2'-Oxybis(1-chloropropane)	U	380	1.0	330	380	100	
98-86-2	Acetophenone	U	690	1.0	600	690	200	
621-64-7	N-Nitroso-di-n-propylamine	U	380	1.0	330	380	95	
65794-96-9	3&4-Methylphenol	U	690	1.0	600	690	210	
67-72-1	Hexachloroethane	U	380	1.0	330	380	110	
98-95-3	Nitrobenzene	U	380	1.0	330	380	100	
78-59-1	Isophorone	U	380	1.0	330	380	86	
88-75-5	2-Nitrophenol	U	690	1.0	600	690	190	
105-67-9	2,4-Dimethylphenol	U	570	1.0	500	570	190	
111-91-1	Bis(2-Chloroethoxy)methane	U	380	1.0	330	380	110	
120-83-2	2,4-Dichlorophenol	U	570	1.0	500	570	170	
106-47-8	4-Chloroaniline	U	570	1.0	500	570	140	
105-60-2	Caprolactam	U	570	1.0	500	570	160	
59-50-7	4-Chloro-3-Methylphenol	U	570	1.0	500	570	190	
88-06-2	2,4,6-Trichlorophenol	U	570	1.0	500	570	180	
95-95-4	2,4,5-Trichlorophenol	U	570	1.0	500	570	180	
91-58-7	2-Chloronaphthalene	U	380	1.0	330	380	100	
92-52-4	1,1'-Biphenyl	U	380	1.0	330	380	84	
88-74-4	2-Nitroaniline	U	570	1.0	500	570	86	
131-11-3	Dimethyl Phthalate	U	380	1.0	330	380	90	
606-20-2	2,6-Dinitrotoluene	U	380	1.0	330	380	91	
208-96-8	Acenaphthylene	U	380	1.0	330	380	80	
99-09-2	3-Nitroaniline	U	570	1.0	500	570	110	
83-32-9	Acenaphthene	U	380	1.0	330	380	75	
51-28-5	2,4-Dinitrophenol	U	1400	1.0	1200	1400	430	
132-64-9	Dibenzofuran	U	380	1.0	330	380	91	
100-02-7	4-Nitrophenol	~~U~~ UJ	1400	1.0	1200	1400	350	CCH
121-14-2	2,4-Dinitrotoluene	U	380	1.0	330	380	98	
84-66-2	Diethylphthalate	U	380	1.0	330	380	92	
7005-72-3	4-Chlorophenyl-phenylether	U	380	1.0	330	380	90	
100-01-6	4-Nitroaniline	U	570	1.0	500	570	150	
534-52-1	4,6-Dinitro-2-Methylphenol	U	1400	1.0	1200	1400	390	
86-30-6	N-Nitrosodiphenylamine	U	760	1.0	660	760	250	
101-55-3	4-Bromophenyl-phenylether	U	380	1.0	330	380	98	
1912-24-9	Atrazine	U	380	1.0	330	380	100	
87-86-5	Pentachlorophenol	U	940	1.0	820	940	270	
120-12-7	Anthracene	U	380	1.0	330	380	96	
86-74-8	Carbazole	U	570	1.0	500	570	130	

KATAHDIN ANALYTICAL SERVICES
Report of Analytical Results

10

Client: CH2MHill
Project: TO-009 Lejeune
PO No:
Sample Date: 01/25/09
Received Date: 01/27/09
Extraction Date: 02/03/09
Analysis Date: 20-FEB-2009 19:38
Report Date: 02/26/2009
Matrix: SOIL
% Solids: 87.1

Lab ID: SC0412-19
Client ID: MR08-IS324-3-4-09A
SDG: TO9-47
Extracted by: CB
Extraction Method: SW846 3550
Analyst: JCG
Analysis Method: SW846 8270C
Lab Prep Batch: WG60435
Units: ug/Kgdrywt

CAS#	Compound	Flags	Results	DF	PQL	Adj.PQL	Adj.MDL
84-74-2	Di-n-butylphthalate	U	380	1.0	330	380	120
85-68-7	Butylbenzylphthalate	U	380	1.0	330	380	110
91-94-1	3,3'-Dichlorobenzidine	U	570	1.0	500	570	130
218-01-9	Chrysene	U	380	1.0	330	380	110
117-81-7	bis(2-Ethylhexyl)phthalate	U	380	1.0	330	380	110
117-84-0	Di-n-octylphthalate	U	380	1.0	330	380	240
367-12-4	2-Fluorophenol		76%				
13127-88-3	Phenol-D6		86%				
4165-60-0	Nitrobenzene-D5		77%				
321-60-8	2-Fluorobiphenyl		78%				
118-79-6	2,4,6-Tribromophenol		94%				
1718-51-0	Terphenyl-D14		91%				

KATAHDIN ANALYTICAL SERVICES
Report of Analytical Results

11

Client: CH2MHill
Project: TO-009 Lejeune
PO No:
Sample Date: 01/25/09
Received Date: 01/27/09
Extraction Date: 02/03/09
Analysis Date: 21-FEB-2009 00:32
Report Date: 02/27/2009
Matrix: SOIL
% Solids: 85.9

Lab ID: SC0412-21
Client ID: MR08-SS325-09A
SDG: TO9-47
Extracted by: CB
Extraction Method: SW846 3550
Analyst: JCG
Analysis Method: SW846 8270C
Lab Prep Batch: WG60435
Units: ug/Kgdrywt

CAS#	Compound	Flags	Results	DF	PQL	Adj.PQL	Adj.MDL	
100-52-7	Benzaldehyde	~~J~~ J	340	1.0	500	580	140	ICB
108-95-2	Phenol	U	580	1.0	500	580	180	
111-44-4	Bis(2-Chloroethyl)ether	U	380	1.0	330	380	94	
95-57-8	2-Chlorophenol	U	580	1.0	500	580	190	
95-48-7	2-Methylphenol	U	700	1.0	600	700	230	
108-60-1	2,2'-Oxybis(1-chloropropane)	U	380	1.0	330	380	100	
98-86-2	Acetophenone	U	700	1.0	600	700	210	
621-64-7	N-Nitroso-di-n-propylamine	U	380	1.0	330	380	97	
65794-96-9	3&4-Methylphenol	U	700	1.0	600	700	220	
67-72-1	Hexachloroethane	U	380	1.0	330	380	110	
98-95-3	Nitrobenzene	U	380	1.0	330	380	100	
78-59-1	Isophorone	U	380	1.0	330	380	87	
88-75-5	2-Nitrophenol	U	700	1.0	600	700	190	
105-67-9	2,4-Dimethylphenol	U	580	1.0	500	580	190	
111-91-1	Bis(2-Chloroethoxy)methane	U	380	1.0	330	380	110	
120-83-2	2,4-Dichlorophenol	U	580	1.0	500	580	170	
106-47-8	4-Chloroaniline	U	580	1.0	500	580	140	
105-60-2	Caprolactam	U	580	1.0	500	580	170	
59-50-7	4-Chloro-3-Methylphenol	U	580	1.0	500	580	190	
88-06-2	2,4,6-Trichlorophenol	U	580	1.0	500	580	180	
95-95-4	2,4,5-Trichlorophenol	U	580	1.0	500	580	180	
91-58-7	2-Chloronaphthalene	U	380	1.0	330	380	100	
92-52-4	1,1'-Biphenyl	J	140	1.0	330	380	85	
88-74-4	2-Nitroaniline	U	580	1.0	500	580	87	
131-11-3	Dimethyl Phthalate	U	380	1.0	330	380	91	
606-20-2	2,6-Dinitrotoluene	U	380	1.0	330	380	92	
208-96-8	Acenaphthylene	U	380	1.0	330	380	81	
99-09-2	3-Nitroaniline	U	580	1.0	500	580	110	
83-32-9	Acenaphthene		1400	1.0	330	380	76	
51-28-5	2,4-Dinitrophenol	U	1400	1.0	1200	1400	440	
132-64-9	Dibenzofuran		530	1.0	330	380	92	
100-02-7	4-Nitrophenol	~~J~~ UJ	1400	1.0	1200	1400	360	CCH
121-14-2	2,4-Dinitrotoluene	U	380	1.0	330	380	99	
84-66-2	Diethylphthalate	U	380	1.0	330	380	93	
7005-72-3	4-Chlorophenyl-phenylether	U	380	1.0	330	380	91	
100-01-6	4-Nitroaniline	U	580	1.0	500	580	160	
534-52-1	4,6-Dinitro-2-Methylphenol	U	1400	1.0	1200	1400	390	
86-30-6	N-Nitrosodiphenylamine	U	770	1.0	660	770	250	
101-55-3	4-Bromophenyl-phenylether	U	380	1.0	330	380	99	
1912-24-9	Atrazine	U	380	1.0	330	380	100	
87-86-5	Pentachlorophenol	J	350	1.0	820	950	280	
120-12-7	Anthracene		3300	1.0	330	380	98	
86-74-8	Carbazole		5000	1.0	500	580	130	

11

KATAHDIN ANALYTICAL SERVICES
Report of Analytical Results

Client: CH2MHill
Project: TO-009 Lejeune
PO No:
Sample Date: 01/25/09
Received Date: 01/27/09
Extraction Date: 02/03/09
Analysis Date: 21-FEB-2009 00:32
Report Date: 02/27/2009
Matrix: SOIL
% Solids: 85.9

Lab ID: SC0412-21
Client ID: MR08-SS325-09A
SDG: TO9-47
Extracted by: CB
Extraction Method: SW846 3550
Analyst: JCG
Analysis Method: SW846 8270C
Lab Prep Batch: WG60435
Units: ug/Kgdrywt

CAS#	Compound	Flags	Results	DF	PQL	Adj.PQL	Adj.MDL
84-74-2	Di-n-butylphthalate	U UJ	380	1.0	330	380	120 ISL
85-68-7	Butylbenzylphthalate	U	380	1.0	330	380	110
91-94-1	3,3'-Dichlorobenzidine	U	580	1.0	500	580	130
218-01-9	Chrysene	~~B~~ J	38000 ~~29000~~	10 ~~1.0~~	330 380 ~~380~~	1100 ~~110~~	R DL
117-81-7	bis(2-Ethylhexyl)phthalate		1300	1.0	330	380	110 ISL
117-84-0	Di-n-octylphthalate	UJ	380	1.0	330	380	240 ISL
367-12-4	2-Fluorophenol		83%				
13127-88-3	Phenol-D6		*104%				
4165-60-0	Nitrobenzene-D5		79%				
321-60-8	2-Fluorobiphenyl		98%				
118-79-6	2,4,6-Tribromophenol		74%				
1718-51-0	Terphenyl-D14		*172%				

11DL

KATAHDIN ANALYTICAL SERVICES
Report of Analytical Results

Client: CH2MHill
Project: TO-009 Lejeune
PO No:
Sample Date: 01/25/09
Received Date: 01/27/09
Extraction Date: 02/03/09
Analysis Date: 22-FEB-2009 22:11
Report Date: 02/26/2009
Matrix: SOIL
% Solids: 85.9

Lab ID: SC0412-21DL2
Client ID: MR08-SS325-09A
SDG: TO9-47
Extracted by: CB
Extraction Method: SW846 3550
Analyst: JLP
Analysis Method: SW846 8270C
Lab Prep Batch: WG60435
Units: ug/Kgdrywt

Use original

CAS#	Compound	Flags	Results	DF	PQL	Adj.PQL	Adj.MDL
100-52-7	Benzaldehyde	~~U~~ UJ	5800	10	500	5800	1400 ICB
108-95-2	Phenol	U	5800	10	500	5800	1800
111-44-4	Bis(2-Chloroethyl)ether	U	3800	10	330	3800	940
95-57-8	2-Chlorophenol	U	5800	10	500	5800	1900
95-48-7	2-Methylphenol	U	7000	10	600	7000	2300
108-60-1	2,2'-Oxybis(1-chloropropane)	U	3800	10	330	3800	1000
98-86-2	Acetophenone	U	7000	10	600	7000	2100
621-64-7	N-Nitroso-di-n-propylamine	U	3800	10	330	3800	970
65794-96-9	3&4-Methylphenol	U	7000	10	600	7000	2200
67-72-1	Hexachloroethane	U	3800	10	330	3800	1100
98-95-3	Nitrobenzene	U	3800	10	330	3800	1000
78-59-1	Isophorone	U	3800	10	330	3800	870
88-75-5	2-Nitrophenol	U	7000	10	600	7000	1900
105-67-9	2,4-Dimethylphenol	U	5800	10	500	5800	1900
111-91-1	Bis(2-Chloroethoxy)methane	U	3800	10	330	3800	1100
120-83-2	2,4-Dichlorophenol	U	5800	10	500	5800	1700
106-47-8	4-Chloroaniline	U	5800	10	500	5800	1400
105-60-2	Caprolactam	U	5800	10	500	5800	1700
59-50-7	4-Chloro-3-Methylphenol	U	5800	10	500	5800	1900
88-06-2	2,4,6-Trichlorophenol	U	5800	10	500	5800	1800
95-95-4	2,4,5-Trichlorophenol	U	5800	10	500	5800	1800
91-58-7	2-Chloronaphthalene	U	3800	10	330	3800	1000
92-52-4	1,1'-Biphenyl	U	3800	10	330	3800	850
88-74-4	2-Nitroaniline	U	5800	10	500	5800	870
131-11-3	Dimethyl Phthalate	U	3800	10	330	3800	910
606-20-2	2,6-Dinitrotoluene	U	3800	10	330	3800	920
208-96-8	Acenaphthylene	U	3800	10	330	3800	810
99-09-2	3-Nitroaniline	U	5800	10	500	5800	1100
83-32-9	Acenaphthene	U	3800	10	330	3800	760
51-28-5	2,4-Dinitrophenol	U	14000	10	1200	14000	4400
132-64-9	Dibenzofuran	U	3800	10	330	3800	920
100-02-7	4-Nitrophenol	U	14000	10	1200	14000	3600
121-14-2	2,4-Dinitrotoluene	U	3800	10	330	3800	990
84-66-2	Diethylphthalate	U	3800	10	330	3800	930
7005-72-3	4-Chlorophenyl-phenylether	U	3800	10	330	3800	910
100-01-6	4-Nitroaniline	U	5800	10	500	5800	1600
534-52-1	4,6-Dinitro-2-Methylphenol	U	14000	10	1200	14000	3900
86-30-6	N-Nitrosodiphenylamine	U	7700	10	660	7700	2500
101-55-3	4-Bromophenyl-phenylether	U	3800	10	330	3800	990
1912-24-9	Atrazine	U	3800	10	330	3800	1000
87-86-5	Pentachlorophenol	U	9500	10	820	9500	2800
120-12-7	Anthracene	J	2400	10	330	3800	980
86-74-8	Carbazole	J	4000	10	500	5800	1300

11DL

KATAHDIN ANALYTICAL SERVICES
Report of Analytical Results

Client: CH2MHill
Project: TO-009 Lejeune
PO No:
Sample Date: 01/25/09
Received Date: 01/27/09
Extraction Date: 02/03/09
Analysis Date: 22-FEB-2009 22:11
Report Date: 02/26/2009
Matrix: SOIL
% Solids: 85.9

Lab ID: SC0412-21DL2
Client ID: MR08-SS325-09A
SDG: TO9-47
Extracted by: CB
Extraction Method: SW846 3550
Analyst: JLP
Analysis Method: SW846 8270C
Lab Prep Batch: WG60435
Units: ug/Kgdrywt

use ORIGINAL

CAS#	Compound	Flags	Results	DF	PQL	Adj.PQL	Adj.MDL
84-74-2	Di-n-butylphthalate	U	3800	10	330	3800	1200
85-68-7	Butylbenzylphthalate	U	3800	10	330	3800	1100
91-94-1	3,3'-Dichlorobenzidine	U	5800	10	500	5800	1300
218-01-9	Chrysene		38000	10	330	3800	1100
117-81-7	bis(2-Ethylhexyl)phthalate	J	1200	10	330	3800	1100
117-84-0	Di-n-octylphthalate	U	3800	10	330	3800	2400
367-12-4	2-Fluorophenol		D				
13127-88-3	Phenol-D6		D				
4165-60-0	Nitrobenzene-D5		D				
321-60-8	2-Fluorobiphenyl		D				
118-79-6	2,4,6-Tribromophenol		D				
1718-51-0	Terphenyl-D14		D				

R DL

KATAHDIN ANALYTICAL SERVICES
Report of Analytical Results

12

Client: CH2MHill
Project: TO-009 Lejeune
PO No:
Sample Date: 01/25/09
Received Date: 01/27/09
Extraction Date: 02/03/09
Analysis Date: 20-FEB-2009 18:56
Report Date: 02/26/2009
Matrix: SOIL
% Solids: 87.7

Lab ID: SC0412-23
Client ID: MR08-IS325-3-4-09A
SDG: TO9-47
Extracted by: CB
Extraction Method: SW846 3550
Analyst: JCG
Analysis Method: SW846 8270C
Lab Prep Batch: WG60435
Units: ug/Kgdrywt

CAS#	Compound	Flags	Results	DF	PQL	Adj.PQL	Adj.MDL	
100-52-7	Benzaldehyde	~~U~~ US	570	1.0	500	570	140	JCB
108-95-2	Phenol	U	570	1.0	500	570	180	
111-44-4	Bis(2-Chloroethyl)ether	U	380	1.0	330	380	92	
95-57-8	2-Chlorophenol	U	570	1.0	500	570	190	
95-48-7	2-Methylphenol	U	680	1.0	600	680	230	
108-60-1	2,2'-Oxybis(1-chloropropane)	U	380	1.0	330	380	100	
98-86-2	Acetophenone	U	680	1.0	600	680	200	
621-64-7	N-Nitroso-di-n-propylamine	U	380	1.0	330	380	95	
65794-96-9	3&4-Methylphenol	U	680	1.0	600	680	210	
67-72-1	Hexachloroethane	U	380	1.0	330	380	110	
98-95-3	Nitrobenzene	U	380	1.0	330	380	100	
78-59-1	Isophorone	U	380	1.0	330	380	86	
88-75-5	2-Nitrophenol	U	680	1.0	600	680	190	
105-67-9	2,4-Dimethylphenol	U	570	1.0	500	570	190	
111-91-1	Bis(2-Chloroethoxy)methane	U	380	1.0	330	380	110	
120-83-2	2,4-Dichlorophenol	U	570	1.0	500	570	170	
106-47-8	4-Chloroaniline	U	570	1.0	500	570	140	
105-60-2	Caprolactam	U	570	1.0	500	570	160	
59-50-7	4-Chloro-3-Methylphenol	U	570	1.0	500	570	190	
88-06-2	2,4,6-Trichlorophenol	U	570	1.0	500	570	180	
95-95-4	2,4,5-Trichlorophenol	U	570	1.0	500	570	180	
91-58-7	2-Chloronaphthalene	U	380	1.0	330	380	99	
92-52-4	1,1'-Biphenyl	U	380	1.0	330	380	83	
88-74-4	2-Nitroaniline	U	570	1.0	500	570	86	
131-11-3	Dimethyl Phthalate	U	380	1.0	330	380	89	
606-20-2	2,6-Dinitrotoluene	U	380	1.0	330	380	90	
208-96-8	Acenaphthylene	U	380	1.0	330	380	80	
99-09-2	3-Nitroaniline	U	570	1.0	500	570	110	
83-32-9	Acenaphthene	U	380	1.0	330	380	74	
51-28-5	2,4-Dinitrophenol	U	1400	1.0	1200	1400	430	
132-64-9	Dibenzofuran	U	380	1.0	330	380	90	
100-02-7	4-Nitrophenol	~~U~~ US	1400	1.0	1200	1400	350	CCH
121-14-2	2,4-Dinitrotoluene	U	380	1.0	330	380	97	
84-66-2	Diethylphthalate	U	380	1.0	330	380	91	
7005-72-3	4-Chlorophenyl-phenylether	U	380	1.0	330	380	89	
100-01-6	4-Nitroaniline	U	570	1.0	500	570	150	
534-52-1	4,6-Dinitro-2-Methylphenol	U	1400	1.0	1200	1400	380	
86-30-6	N-Nitrosodiphenylamine	U	750	1.0	660	750	250	
101-55-3	4-Bromophenyl-phenylether	U	380	1.0	330	380	97	
1912-24-9	Atrazine	U	380	1.0	330	380	100	
87-86-5	Pentachlorophenol	U	940	1.0	820	940	270	
120-12-7	Anthracene	U	380	1.0	330	380	96	
86-74-8	Carbazole	U	570	1.0	500	570	130	

KATAHDIN ANALYTICAL SERVICES
Report of Analytical Results

Client: CH2MHill
Project: TO-009 Lejeune
PO No:
Sample Date: 01/25/09
Received Date: 01/27/09
Extraction Date: 02/03/09
Analysis Date: 20-FEB-2009 18:56
Report Date: 02/26/2009
Matrix: SOIL
% Solids: 87.7

Lab ID: SC0412-23
Client ID: MR08-IS325-3-4-09A
SDG: TO9-47
Extracted by: CB
Extraction Method: SW846 3550
Analyst: JCG
Analysis Method: SW846 8270C
Lab Prep Batch: WG60435
Units: ug/Kgdrywt

CAS#	Compound	Flags	Results	DF	PQL	Adj.PQL	Adj.MDL
84-74-2	Di-n-butylphthalate	U	380	1.0	330	380	120
85-68-7	Butylbenzylphthalate	U	380	1.0	330	380	110
91-94-1	3,3'-Dichlorobenzidine	U	570	1.0	500	570	130
218-01-9	Chrysene	U	380	1.0	330	380	110
117-81-7	bis(2-Ethylhexyl)phthalate	U	380	1.0	330	380	110
117-84-0	Di-n-octylphthalate	U	380	1.0	330	380	240
367-12-4	2-Fluorophenol		76%				
13127-88-3	Phenol-D6		88%				
4165-60-0	Nitrobenzene-D5		80%				
321-60-8	2-Fluorobiphenyl		81%				
118-79-6	2,4,6-Tribromophenol		70%				
1718-51-0	Terphenyl-D14		96%				

KATAHDIN ANALYTICAL SERVICES
Report of Analytical Results

Client: CH2MHill
Project: TO-009 Lejeune
PO No:
Sample Date: 01/25/09
Received Date: 01/27/09
Extraction Date: 02/03/09
Analysis Date: 20-FEB-2009 21:02
Report Date: 02/26/2009
Matrix: SOIL
% Solids: 87.9

Lab ID: SC0412-25
Client ID: MR08-SS323-09A
SDG: TO9-47
Extracted by: CB
Extraction Method: SW846 3550
Analyst: JCG
Analysis Method: SW846 8270C
Lab Prep Batch: WG60435
Units: ug/Kgdrywt

CAS#	Compound	Flags	Results	DF	PQL	Adj.PQL	Adj.MDL
100-52-7	Benzaldehyde	~~U~~ UJ	570	1.0	500	570	140 JCB
108-95-2	Phenol	U	570	1.0	500	570	180
111-44-4	Bis(2-Chloroethyl)ether	U	380	1.0	330	380	92
95-57-8	2-Chlorophenol	U	570	1.0	500	570	190
95-48-7	2-Methylphenol	U	680	1.0	600	680	230
108-60-1	2,2'-Oxybis(1-chloropropane)	U	380	1.0	330	380	100
98-86-2	Acetophenone	U	680	1.0	600	680	200
621-64-7	N-Nitroso-di-n-propylamine	U	380	1.0	330	380	94
65794-96-9	3&4-Methylphenol	U	680	1.0	600	680	210
67-72-1	Hexachloroethane	U	380	1.0	330	380	110
98-95-3	Nitrobenzene	U	380	1.0	330	380	100
78-59-1	Isophorone	U	380	1.0	330	380	85
88-75-5	2-Nitrophenol	U	680	1.0	600	680	190
105-67-9	2,4-Dimethylphenol	U	570	1.0	500	570	190
111-91-1	Bis(2-Chloroethoxy)methane	U	380	1.0	330	380	110
120-83-2	2,4-Dichlorophenol	U	570	1.0	500	570	170
106-47-8	4-Chloroaniline	U	570	1.0	500	570	140
105-60-2	Caprolactam	U	570	1.0	500	570	160
59-50-7	4-Chloro-3-Methylphenol	U	570	1.0	500	570	190
88-06-2	2,4,6-Trichlorophenol	U	570	1.0	500	570	180
95-95-4	2,4,5-Trichlorophenol	U	570	1.0	500	570	180
91-58-7	2-Chloronaphthalene	U	380	1.0	330	380	99
92-52-4	1,1'-Biphenyl	U	380	1.0	330	380	83
88-74-4	2-Nitroaniline	U	570	1.0	500	570	85
131-11-3	Dimethyl Phthalate	U	380	1.0	330	380	89
606-20-2	2,6-Dinitrotoluene	U	380	1.0	330	380	90
208-96-8	Acenaphthylene	U	380	1.0	330	380	80
99-09-2	3-Nitroaniline	U	570	1.0	500	570	110
83-32-9	Acenaphthene	U	380	1.0	330	380	74
51-28-5	2,4-Dinitrophenol	U	1400	1.0	1200	1400	430
132-64-9	Dibenzofuran	U	380	1.0	330	380	90
100-02-7	4-Nitrophenol	~~U~~ UJ	1400	1.0	1200	1400	350 CCH
121-14-2	2,4-Dinitrotoluene	U	380	1.0	330	380	97
84-66-2	Diethylphthalate	U	380	1.0	330	380	91
7005-72-3	4-Chlorophenyl-phenylether	U	380	1.0	330	380	89
100-01-6	4-Nitroaniline	U	570	1.0	500	570	150
534-52-1	4,6-Dinitro-2-Methylphenol	U	1400	1.0	1200	1400	380
86-30-6	N-Nitrosodiphenylamine	U	750	1.0	660	750	250
101-55-3	4-Bromophenyl-phenylether	U	380	1.0	330	380	97
1912-24-9	Atrazine	U	380	1.0	330	380	100
87-86-5	Pentachlorophenol	U	930	1.0	820	930	270
120-12-7	Anthracene	U	380	1.0	330	380	96
86-74-8	Carbazole	U	570	1.0	500	570	130

KATAHDIN ANALYTICAL SERVICES
Report of Analytical Results

Client: CH2MHill
Project: TO-009 Lejeune
PO No:
Sample Date: 01/25/09
Received Date: 01/27/09
Extraction Date: 02/03/09
Analysis Date: 20-FEB-2009 21:02
Report Date: 02/26/2009
Matrix: SOIL
% Solids: 87.9

Lab ID: SC0412-25
Client ID: MR08-SS323-09A
SDG: TO9-47
Extracted by: CB
Extraction Method: SW846 3550
Analyst: JCG
Analysis Method: SW846 8270C
Lab Prep Batch: WG60435
Units: ug/Kgdrywt

CAS#	Compound	Flags	Results	DF	PQL	Adj.PQL	Adj.MDL
84-74-2	Di-n-butylphthalate	U	380	1.0	330	380	110
85-68-7	Butylbenzylphthalate	U	380	1.0	330	380	100
91-94-1	3,3'-Dichlorobenzidine	U	570	1.0	500	570	130
218-01-9	Chrysene		490	1.0	330	380	110
117-81-7	bis(2-Ethylhexyl)phthalate	U	380	1.0	330	380	110
117-84-0	Di-n-octylphthalate	U	380	1.0	330	380	240
367-12-4	2-Fluorophenol		70%				
13127-88-3	Phenol-D6		82%				
4165-60-0	Nitrobenzene-D5		66%				
321-60-8	2-Fluorobiphenyl		77%				
118-79-6	2,4,6-Tribromophenol		82%				
1718-51-0	Terphenyl-D14		100%				

KATAHDIN ANALYTICAL SERVICES
Report of Analytical Results

14

Client: CH2MHill
Project: TO-009 Lejeune
PO No:
Sample Date: 01/25/09
Received Date: 01/27/09
Extraction Date: 02/03/09
Analysis Date: 20-FEB-2009 20:20
Report Date: 02/26/2009
Matrix: SOIL
% Solids: 88.4

Lab ID: SC0412-27
Client ID: MR08-IS323-2-3-09A
SDG: TO9-47
Extracted by: CB
Extraction Method: SW846 3550
Analyst: JCG
Analysis Method: SW846 8270C
Lab Prep Batch: WG60435
Units: ug/Kgdrywt

CAS#	Compound	Flags	Results	DF	PQL	Adj.PQL	Adj.MDL	
100-52-7	Benzaldehyde	~~U~~ UJ	560	1.0	500	560	140	ICB
108-95-2	Phenol	U	560	1.0	500	560	180	
111-44-4	Bis(2-Chloroethyl)ether	U	370	1.0	330	370	92	
95-57-8	2-Chlorophenol	U	560	1.0	500	560	180	
95-48-7	2-Methylphenol	U	680	1.0	600	680	230	
108-60-1	2,2'-Oxybis(1-chloropropane)	U	370	1.0	330	370	100	
98-86-2	Acetophenone	U	680	1.0	600	680	200	
621-64-7	N-Nitroso-di-n-propylamine	U	370	1.0	330	370	94	
65794-96-9	3&4-Methylphenol	U	680	1.0	600	680	210	
67-72-1	Hexachloroethane	U	370	1.0	330	370	110	
98-95-3	Nitrobenzene	U	370	1.0	330	370	100	
78-59-1	Isophorone	U	370	1.0	330	370	85	
88-75-5	2-Nitrophenol	U	680	1.0	600	680	190	
105-67-9	2,4-Dimethylphenol	U	560	1.0	500	560	190	
111-91-1	Bis(2-Chloroethoxy)methane	U	370	1.0	330	370	110	
120-83-2	2,4-Dichlorophenol	U	560	1.0	500	560	170	
106-47-8	4-Chloroaniline	U	560	1.0	500	560	130	
105-60-2	Caprolactam	U	560	1.0	500	560	160	
59-50-7	4-Chloro-3-Methylphenol	U	560	1.0	500	560	190	
88-06-2	2,4,6-Trichlorophenol	U	560	1.0	500	560	180	
95-95-4	2,4,5-Trichlorophenol	U	560	1.0	500	560	180	
91-58-7	2-Chloronaphthalene	U	370	1.0	330	370	98	
92-52-4	1,1'-Biphenyl	U	370	1.0	330	370	82	
88-74-4	2-Nitroaniline	U	560	1.0	500	560	85	
131-11-3	Dimethyl Phthalate	U	370	1.0	330	370	88	
606-20-2	2,6-Dinitrotoluene	U	370	1.0	330	370	89	
208-96-8	Acenaphthylene	U	370	1.0	330	370	79	
99-09-2	3-Nitroaniline	U	560	1.0	500	560	110	
83-32-9	Acenaphthene	U	370	1.0	330	370	73	
51-28-5	2,4-Dinitrophenol	U	1400	1.0	1200	1400	430	
132-64-9	Dibenzofuran	U	370	1.0	330	370	89	
100-02-7	4-Nitrophenol	~~U~~ UJ	1400	1.0	1200	1400	350	CCH
121-14-2	2,4-Dinitrotoluene	U	370	1.0	330	370	96	
84-66-2	Diethylphthalate	U	370	1.0	330	370	90	
7005-72-3	4-Chlorophenyl-phenylether	U	370	1.0	330	370	88	
100-01-6	4-Nitroaniline	U	560	1.0	500	560	150	
534-52-1	4,6-Dinitro-2-Methylphenol	U	1400	1.0	1200	1400	380	
86-30-6	N-Nitrosodiphenylamine	U	750	1.0	660	750	250	
101-55-3	4-Bromophenyl-phenylether	U	370	1.0	330	370	96	
1912-24-9	Atrazine	U	370	1.0	330	370	100	
87-86-5	Pentachlorophenol	U	930	1.0	820	930	270	
120-12-7	Anthracene	U	370	1.0	330	370	95	
86-74-8	Carbazole	U	560	1.0	500	560	120	

KATAHDIN ANALYTICAL SERVICES
Report of Analytical Results

Client: CH2MHill
Project: TO-009 Lejeune
PO No:
Sample Date: 01/25/09
Received Date: 01/27/09
Extraction Date: 02/03/09
Analysis Date: 20-FEB-2009 20:20
Report Date: 02/26/2009
Matrix: SOIL
% Solids: 88.4

Lab ID: SC0412-27
Client ID: MR08-IS323-2-3-09A
SDG: TO9-47
Extracted by: CB
Extraction Method: SW846 3550
Analyst: JCG
Analysis Method: SW846 8270C
Lab Prep Batch: WG60435
Units: ug/Kgdrywt

CAS#	Compound	Flags	Results	DF	PQL	Adj.PQL	Adj.MDL
84-74-2	Di-n-butylphthalate	U	370	1.0	330	370	110
85-68-7	Butylbenzylphthalate	U	370	1.0	330	370	100
91-94-1	3,3'-Dichlorobenzidine	U	560	1.0	500	560	130
218-01-9	Chrysene	U	370	1.0	330	370	110
117-81-7	bis(2-Ethylhexyl)phthalate	U	370	1.0	330	370	110
117-84-0	Di-n-octylphthalate	U	370	1.0	330	370	240
367-12-4	2-Fluorophenol		70%				
13127-88-3	Phenol-D6		78%				
4165-60-0	Nitrobenzene-D5		64%				
321-60-8	2-Fluorobiphenyl		73%				
118-79-6	2,4,6-Tribromophenol		71%				
1718-51-0	Terphenyl-D14		86%				

KATAHDIN ANALYTICAL SERVICES
Report of Analytical Results

Client: CH2MHill
Project: TO-009 Lejeune
PO No:
Sample Date: 01/26/09
Received Date: 01/27/09
Extraction Date: 02/03/09
Analysis Date: 20-FEB-2009 21:44
Report Date: 02/26/2009
Matrix: SOIL
% Solids: 88.8

Lab ID: SC0412-29
Client ID: MR08-SS321-09A
SDG: TO9-47
Extracted by: CB
Extraction Method: SW846 3550
Analyst: JCG
Analysis Method: SW846 8270C
Lab Prep Batch: WG60435
Units: ug/Kgdrywt

CAS#	Compound	Flags	Results	DF	PQL	Adj.PQL	Adj.MDL	
100-52-7	Benzaldehyde	~~U~~ UJ	560	1.0	500	560	140	JCB
108-95-2	Phenol	U	560	1.0	500	560	180	
111-44-4	Bis(2-Chloroethyl)ether	U	370	1.0	330	370	91	
95-57-8	2-Chlorophenol	U	560	1.0	500	560	180	
95-48-7	2-Methylphenol	U	680	1.0	600	680	220	
108-60-1	2,2'-Oxybis(1-chloropropane)	U	370	1.0	330	370	100	
98-86-2	Acetophenone	U	680	1.0	600	680	200	
621-64-7	N-Nitroso-di-n-propylamine	U	370	1.0	330	370	93	
65794-96-9	3&4-Methylphenol	U	680	1.0	600	680	210	
67-72-1	Hexachloroethane	U	370	1.0	330	370	110	
98-95-3	Nitrobenzene	U	370	1.0	330	370	100	
78-59-1	Isophorone	U	370	1.0	330	370	84	
88-75-5	2-Nitrophenol	U	680	1.0	600	680	190	
105-67-9	2,4-Dimethylphenol	U	560	1.0	500	560	180	
111-91-1	Bis(2-Chloroethoxy)methane	U	370	1.0	330	370	110	
120-83-2	2,4-Dichlorophenol	U	560	1.0	500	560	170	
106-47-8	4-Chloroaniline	U	560	1.0	500	560	130	
105-60-2	Caprolactam	U	560	1.0	500	560	160	
59-50-7	4-Chloro-3-Methylphenol	U	560	1.0	500	560	190	
88-06-2	2,4,6-Trichlorophenol	U	560	1.0	500	560	170	
95-95-4	2,4,5-Trichlorophenol	U	560	1.0	500	560	170	
91-58-7	2-Chloronaphthalene	U	370	1.0	330	370	98	
92-52-4	1,1'-Biphenyl	U	370	1.0	330	370	82	
88-74-4	2-Nitroaniline	U	560	1.0	500	560	84	
131-11-3	Dimethyl Phthalate	U	370	1.0	330	370	88	
606-20-2	2,6-Dinitrotoluene	U	370	1.0	330	370	89	
208-96-8	Acenaphthylene	U	370	1.0	330	370	79	
99-09-2	3-Nitroaniline	U	560	1.0	500	560	100	
83-32-9	Acenaphthene	U	370	1.0	330	370	73	
51-28-5	2,4-Dinitrophenol	U	1400	1.0	1200	1400	420	
132-64-9	Dibenzofuran	U	370	1.0	330	370	89	
100-02-7	4-Nitrophenol	~~U~~ UJ	1400	1.0	1200	1400	350	CCH
121-14-2	2,4-Dinitrotoluene	U	370	1.0	330	370	96	
84-66-2	Diethylphthalate	U	370	1.0	330	370	90	
7005-72-3	4-Chlorophenyl-phenylether	U	370	1.0	330	370	88	
100-01-6	4-Nitroaniline	U	560	1.0	500	560	150	
534-52-1	4,6-Dinitro-2-Methylphenol	U	1400	1.0	1200	1400	380	
86-30-6	N-Nitrosodiphenylamine	U	740	1.0	660	740	250	
101-55-3	4-Bromophenyl-phenylether	U	370	1.0	330	370	96	
1912-24-9	Atrazine	U	370	1.0	330	370	100	
87-86-5	Pentachlorophenol	U	920	1.0	820	920	270	
120-12-7	Anthracene	U	370	1.0	330	370	94	
86-74-8	Carbazole	U	560	1.0	500	560	120	

KATAHDIN ANALYTICAL SERVICES
Report of Analytical Results

Client: CH2MHill
Project: TO-009 Lejeune
PO No:
Sample Date: 01/26/09
Received Date: 01/27/09
Extraction Date: 02/03/09
Analysis Date: 20-FEB-2009 21:44
Report Date: 02/26/2009
Matrix: SOIL
% Solids: 88.8

Lab ID: SC0412-29
Client ID: MR08-SS321-09A
SDG: TO9-47
Extracted by: CB
Extraction Method: SW846 3550
Analyst: JCG
Analysis Method: SW846 8270C
Lab Prep Batch: WG60435
Units: ug/Kgdrywt

CAS#	Compound	Flags	Results	DF	PQL	Adj.PQL	Adj.MDL
84-74-2	Di-n-butylphthalate	U	370	1.0	330	370	110
85-68-7	Butylbenzylphthalate	U	370	1.0	330	370	100
91-94-1	3,3'-Dichlorobenzidine	U	560	1.0	500	560	130
218-01-9	Chrysene	U	370	1.0	330	370	110
117-81-7	bis(2-Ethylhexyl)phthalate	J	150	1.0	330	370	110
117-84-0	Di-n-octylphthalate	U	370	1.0	330	370	240
367-12-4	2-Fluorophenol		75%				
13127-88-3	Phenol-D6		89%				
4165-60-0	Nitrobenzene-D5		71%				
321-60-8	2-Fluorobiphenyl		84%				
118-79-6	2,4,6-Tribromophenol		74%				
1718-51-0	Terphenyl-D14		101%				

KATAHDIN ANALYTICAL SERVICES
Report of Analytical Results

16

Client: CH2MHill
Project: TO-009 Lejeune
PO No:
Sample Date: 01/26/09
Received Date: 01/27/09
Extraction Date: 02/05/09
Analysis Date: 18-FEB-2009 22:08
Report Date: 02/26/2009
Matrix: SOIL
% Solids: 88.8

Lab ID: SC0412-31
Client ID: MR08-IS321-2-3-09A
SDG: TO9-47
Extracted by: CB
Extraction Method: SW846 3550
Analyst: JCG
Analysis Method: SW846 8270C
Lab Prep Batch: WG60480
Units: ug/Kgdrywt

CAS#	Compound	Flags	Results	DF	PQL	Adj.PQL	Adj.MDL
100-52-7	Benzaldehyde	~~U~~ UJ	560	1.0	500	560	140 JCB
108-95-2	Phenol	U	560	1.0	500	560	180
111-44-4	Bis(2-Chloroethyl)ether	U	370	1.0	330	370	91
95-57-8	2-Chlorophenol	U	560	1.0	500	560	180
95-48-7	2-Methylphenol	U	680	1.0	600	680	220
108-60-1	2,2'-Oxybis(1-chloropropane)	U	370	1.0	330	370	100
98-86-2	Acetophenone	U	680	1.0	600	680	200
621-64-7	N-Nitroso-di-n-propylamine	U	370	1.0	330	370	94
65794-96-9	3&4-Methylphenol	U	680	1.0	600	680	210
67-72-1	Hexachloroethane	U	370	1.0	330	370	110
98-95-3	Nitrobenzene	U	370	1.0	330	370	100
78-59-1	Isophorone	U	370	1.0	330	370	84
88-75-5	2-Nitrophenol	U	680	1.0	600	680	190
105-67-9	2,4-Dimethylphenol	U	560	1.0	500	560	180
111-91-1	Bis(2-Chloroethoxy)methane	U	370	1.0	330	370	110
120-83-2	2,4-Dichlorophenol	U	560	1.0	500	560	170
106-47-8	4-Chloroaniline	U	560	1.0	500	560	130
105-60-2	Caprolactam	U	560	1.0	500	560	160
59-50-7	4-Chloro-3-Methylphenol	U	560	1.0	500	560	190
88-06-2	2,4,6-Trichlorophenol	U	560	1.0	500	560	170
95-95-4	2,4,5-Trichlorophenol	U	560	1.0	500	560	170
91-58-7	2-Chloronaphthalene	U	370	1.0	330	370	98
92-52-4	1,1'-Biphenyl	U	370	1.0	330	370	82
88-74-4	2-Nitroaniline	U	560	1.0	500	560	84
131-11-3	Dimethyl Phthalate	U	370	1.0	330	370	88
606-20-2	2,6-Dinitrotoluene	U	370	1.0	330	370	89
208-96-8	Acenaphthylene	U	370	1.0	330	370	79
99-09-2	3-Nitroaniline	U	560	1.0	500	560	100
83-32-9	Acenaphthene	U	370	1.0	330	370	73
51-28-5	2,4-Dinitrophenol	U	1400	1.0	1200	1400	420
132-64-9	Dibenzofuran	U	370	1.0	330	370	89
100-02-7	4-Nitrophenol	~~U~~ UJ	1400	1.0	1200	1400	350 JCB
121-14-2	2,4-Dinitrotoluene	U	370	1.0	330	370	96
84-66-2	Diethylphthalate	U	370	1.0	330	370	90
7005-72-3	4-Chlorophenyl-phenylether	U	370	1.0	330	370	88
100-01-6	4-Nitroaniline	U	560	1.0	500	560	150
534-52-1	4,6-Dinitro-2-Methylphenol	U	1400	1.0	1200	1400	380
86-30-6	N-Nitrosodiphenylamine	U	740	1.0	660	740	250
101-55-3	4-Bromophenyl-phenylether	U	370	1.0	330	370	96
1912-24-9	Atrazine	U	370	1.0	330	370	100
87-86-5	Pentachlorophenol	U	920	1.0	820	920	270
120-12-7	Anthracene	U	370	1.0	330	370	95
86-74-8	Carbazole	U	560	1.0	500	560	120

16

KATAHDIN ANALYTICAL SERVICES
Report of Analytical Results

Client: CH2MHill
Project: TO-009 Lejeune
PO No:
Sample Date: 01/26/09
Received Date: 01/27/09
Extraction Date: 02/05/09
Analysis Date: 18-FEB-2009 22:08
Report Date: 02/26/2009
Matrix: SOIL
% Solids: 88.8

Lab ID: SC0412-31
Client ID: MR08-IS321-2-3-09A
SDG: TO9-47
Extracted by: CB
Extraction Method: SW846 3550
Analyst: JCG
Analysis Method: SW846 8270C
Lab Prep Batch: WG60480
Units: ug/Kgdrywt

CAS#	Compound	Flags	Results	DF	PQL	Adj.PQL	Adj.MDL	
84-74-2	Di-n-butylphthalate	U	370	1.0	330	370	110	
85-68-7	Butylbenzylphthalate	U	370	1.0	330	370	100	
91-94-1	3,3'-Dichlorobenzidine	U	560	1.0	500	560	130	
218-01-9	Chrysene	U	370	1.0	330	370	110	
117-81-7	bis(2-Ethylhexyl)phthalate	U	370	1.0	330	370	110	
117-84-0	Di-n-octylphthalate	~~U~~ UJ	370	1.0	330	370	240	CCH
367-12-4	2-Fluorophenol		71%					
13127-88-3	Phenol-D6		84%					
4165-60-0	Nitrobenzene-D5		78%					
321-60-8	2-Fluorobiphenyl		72%					
118-79-6	2,4,6-Tribromophenol		79%					
1718-51-0	Terphenyl-D14		67%					

KATAHDIN ANALYTICAL SERVICES
Report of Analytical Results

17

Client: CH2MHill
Project: TO-009 Lejeune
PO No:
Sample Date: 01/26/09
Received Date: 01/27/09
Extraction Date: 02/05/09
Analysis Date: 19-FEB-2009 23:56
Report Date: 02/26/2009
Matrix: SOIL
% Solids: 91.7

Lab ID: SC0412-33
Client ID: MR08-SS322-09A
SDG: TO9-47
Extracted by: CB
Extraction Method: SW846 3550
Analyst: JCG
Analysis Method: SW846 8270C
Lab Prep Batch: WG60480
Units: ug/Kgdrywt

CAS#	Compound	Flags	Results	DF	PQL	Adj.PQL	Adj.MDL	
100-52-7	Benzaldehyde	~~U~~ UJ	540	1.0	500	540	130	ICB
108-95-2	Phenol	U	540	1.0	500	540	170	
111-44-4	Bis(2-Chloroethyl)ether	U	360	1.0	330	360	88	
95-57-8	2-Chlorophenol	U	540	1.0	500	540	180	
95-48-7	2-Methylphenol	U	650	1.0	600	650	220	
108-60-1	2,2'-Oxybis(1-chloropropane)	U	360	1.0	330	360	97	
98-86-2	Acetophenone	U	650	1.0	600	650	190	
621-64-7	N-Nitroso-di-n-propylamine	U	360	1.0	330	360	90	
65794-96-9	3&4-Methylphenol	U	650	1.0	600	650	200	
67-72-1	Hexachloroethane	U	360	1.0	330	360	100	
98-95-3	Nitrobenzene	U	360	1.0	330	360	99	
78-59-1	Isophorone	U	360	1.0	330	360	82	
88-75-5	2-Nitrophenol	U	650	1.0	600	650	180	
105-67-9	2,4-Dimethylphenol	U	540	1.0	500	540	180	
111-91-1	Bis(2-Chloroethoxy)methane	U	360	1.0	330	360	100	
120-83-2	2,4-Dichlorophenol	U	540	1.0	500	540	160	
106-47-8	4-Chloroaniline	U	540	1.0	500	540	130	
105-60-2	Caprolactam	U	540	1.0	500	540	160	
59-50-7	4-Chloro-3-Methylphenol	U	540	1.0	500	540	180	
88-06-2	2,4,6-Trichlorophenol	U	540	1.0	500	540	170	
95-95-4	2,4,5-Trichlorophenol	U	540	1.0	500	540	170	
91-58-7	2-Chloronaphthalene	U	360	1.0	330	360	95	
92-52-4	1,1'-Biphenyl	U	360	1.0	330	360	80	
88-74-4	2-Nitroaniline	U	540	1.0	500	540	82	
131-11-3	Dimethyl Phthalate	U	360	1.0	330	360	85	
606-20-2	2,6-Dinitrotoluene	U	360	1.0	330	360	86	
208-96-8	Acenaphthylene	U	360	1.0	330	360	76	
99-09-2	3-Nitroaniline	U	540	1.0	500	540	100	
83-32-9	Acenaphthene	U	360	1.0	330	360	71	
51-28-5	2,4-Dinitrophenol	U	1300	1.0	1200	1300	410	
132-64-9	Dibenzofuran	U	360	1.0	330	360	86	
100-02-7	4-Nitrophenol	~~U~~ UJ	1300	1.0	1200	1300	340	CCH
121-14-2	2,4-Dinitrotoluene	U	360	1.0	330	360	93	
84-66-2	Diethylphthalate	U	360	1.0	330	360	87	
7005-72-3	4-Chlorophenyl-phenylether	U	360	1.0	330	360	85	
100-01-6	4-Nitroaniline	U	540	1.0	500	540	150	
534-52-1	4,6-Dinitro-2-Methylphenol	U	1300	1.0	1200	1300	370	
86-30-6	N-Nitrosodiphenylamine	U	720	1.0	660	720	240	
101-55-3	4-Bromophenyl-phenylether	U	360	1.0	330	360	93	
1912-24-9	Atrazine	U	360	1.0	330	360	99	
87-86-5	Pentachlorophenol	U	890	1.0	820	890	260	
120-12-7	Anthracene	U	360	1.0	330	360	92	
86-74-8	Carbazole	U	540	1.0	500	540	120	

KATAHDIN ANALYTICAL SERVICES
Report of Analytical Results

17

Client: CH2MHill
Project: TO-009 Lejeune
PO No:
Sample Date: 01/26/09
Received Date: 01/27/09
Extraction Date: 02/05/09
Analysis Date: 19-FEB-2009 23:56
Report Date: 02/26/2009
Matrix: SOIL
% Solids: 91.7

Lab ID: SC0412-33
Client ID: MR08-SS322-09A
SDG: TO9-47
Extracted by: CB
Extraction Method: SW846 3550
Analyst: JCG
Analysis Method: SW846 8270C
Lab Prep Batch: WG60480
Units: ug/Kgdrywt

CAS#	Compound	Flags	Results	DF	PQL	Adj.PQL	Adj.MDL
84-74-2	Di-n-butylphthalate	U	360	1.0	330	360	110
85-68-7	Butylbenzylphthalate	U	360	1.0	330	360	100
91-94-1	3,3'-Dichlorobenzidine	U	540	1.0	500	540	120
218-01-9	Chrysene	U	360	1.0	330	360	100
117-81-7	bis(2-Ethylhexyl)phthalate	U	360	1.0	330	360	110
117-84-0	Di-n-octylphthalate	U	360	1.0	330	360	230
367-12-4	2-Fluorophenol		72%				
13127-88-3	Phenol-D6		90%				
4165-60-0	Nitrobenzene-D5		79%				
321-60-8	2-Fluorobiphenyl		81%				
118-79-6	2,4,6-Tribromophenol		73%				
1718-51-0	Terphenyl-D14		103%				

KATAHDIN ANALYTICAL SERVICES
Report of Analytical Results

18

Client: CH2MHill
Project: TO-009 Lejeune
PO No:
Sample Date: 01/26/09
Received Date: 01/27/09
Extraction Date: 02/05/09
Analysis Date: 20-FEB-2009 00:38
Report Date: 02/26/2009
Matrix: SOIL
% Solids: 88.5

Lab ID: SC0412-35
Client ID: MR08-IS322-2-3-09A
SDG: TO9-47
Extracted by: CB
Extraction Method: SW846 3550
Analyst: JCG
Analysis Method: SW846 8270C
Lab Prep Batch: WG60480
Units: ug/Kgdrywt

CAS#	Compound	Flags	Results	DF	PQL	Adj.PQL	Adj.MDL	
100-52-7	Benzaldehyde	~~U~~ WS	560	1.0	500	560	140	JCB
108-95-2	Phenol	U	560	1.0	500	560	180	
111-44-4	Bis(2-Chloroethyl)ether	U	370	1.0	330	370	91	
95-57-8	2-Chlorophenol	U	560	1.0	500	560	180	
95-48-7	2-Methylphenol	U	680	1.0	600	680	220	
108-60-1	2,2'-Oxybis(1-chloropropane)	U	370	1.0	330	370	100	
98-86-2	Acetophenone	U	680	1.0	600	680	200	
621-64-7	N-Nitroso-di-n-propylamine	U	370	1.0	330	370	94	
65794-96-9	3&4-Methylphenol	U	680	1.0	600	680	210	
67-72-1	Hexachloroethane	U	370	1.0	330	370	110	
98-95-3	Nitrobenzene	U	370	1.0	330	370	100	
78-59-1	Isophorone	U	370	1.0	330	370	85	
88-75-5	2-Nitrophenol	U	680	1.0	600	680	190	
105-67-9	2,4-Dimethylphenol	U	560	1.0	500	560	190	
111-91-1	Bis(2-Chloroethoxy)methane	U	370	1.0	330	370	110	
120-83-2	2,4-Dichlorophenol	U	560	1.0	500	560	170	
106-47-8	4-Chloroaniline	U	560	1.0	500	560	130	
105-60-2	Caprolactam	U	560	1.0	500	560	160	
59-50-7	4-Chloro-3-Methylphenol	U	560	1.0	500	560	190	
88-06-2	2,4,6-Trichlorophenol	U	560	1.0	500	560	180	
95-95-4	2,4,5-Trichlorophenol	U	560	1.0	500	560	180	
91-58-7	2-Chloronaphthalene	U	370	1.0	330	370	98	
92-52-4	1,1'-Biphenyl	U	370	1.0	330	370	82	
88-74-4	2-Nitroaniline	U	560	1.0	500	560	85	
131-11-3	Dimethyl Phthalate	U	370	1.0	330	370	88	
606-20-2	2,6-Dinitrotoluene	U	370	1.0	330	370	89	
208-96-8	Acenaphthylene	U	370	1.0	330	370	79	
99-09-2	3-Nitroaniline	U	560	1.0	500	560	110	
83-32-9	Acenaphthene	U	370	1.0	330	370	73	
51-28-5	2,4-Dinitrophenol	U	1400	1.0	1200	1400	420	
132-64-9	Dibenzofuran	U	370	1.0	330	370	89	
100-02-7	4-Nitrophenol	~~U~~ WS	1400	1.0	1200	1400	350	CCH
121-14-2	2,4-Dinitrotoluene	U	370	1.0	330	370	96	
84-66-2	Diethylphthalate	U	370	1.0	330	370	90	
7005-72-3	4-Chlorophenyl-phenylether	U	370	1.0	330	370	88	
100-01-6	4-Nitroaniline	U	560	1.0	500	560	150	
534-52-1	4,6-Dinitro-2-Methylphenol	U	1400	1.0	1200	1400	380	
86-30-6	N-Nitrosodiphenylamine	U	740	1.0	660	740	250	
101-55-3	4-Bromophenyl-phenylether	U	370	1.0	330	370	96	
1912-24-9	Atrazine	U	370	1.0	330	370	100	
87-86-5	Pentachlorophenol	U	930	1.0	820	930	270	
120-12-7	Anthracene	U	370	1.0	330	370	95	
86-74-8	Carbazole	U	560	1.0	500	560	120	

KATAHDIN ANALYTICAL SERVICES
Report of Analytical Results

Client: CH2MHill
Project: TO-009 Lejeune
PO No:
Sample Date: 01/26/09
Received Date: 01/27/09
Extraction Date: 02/05/09
Analysis Date: 20-FEB-2009 00:38
Report Date: 02/26/2009
Matrix: SOIL
% Solids: 88.5

Lab ID: SC0412-35
Client ID: MR08-IS322-2-3-09A
SDG: TO9-47
Extracted by: CB
Extraction Method: SW846 3550
Analyst: JCG
Analysis Method: SW846 8270C
Lab Prep Batch: WG60480
Units: ug/Kgdrywt

CAS#	Compound	Flags	Results	DF	PQL	Adj.PQL	Adj.MDL
84-74-2	Di-n-butylphthalate	U	370	1.0	330	370	110
85-68-7	Butylbenzylphthalate	U	370	1.0	330	370	100
91-94-1	3,3'-Dichlorobenzidine	U	560	1.0	500	560	130
218-01-9	Chrysene	U	370	1.0	330	370	110
117-81-7	bis(2-Ethylhexyl)phthalate	U	370	1.0	330	370	110
117-84-0	Di-n-octylphthalate	U	370	1.0	330	370	240
367-12-4	2-Fluorophenol		67%				
13127-88-3	Phenol-D6		75%				
4165-60-0	Nitrobenzene-D5		68%				
321-60-8	2-Fluorobiphenyl		70%				
118-79-6	2,4,6-Tribromophenol		58%				
1718-51-0	Terphenyl-D14		79%				

19

KATAHDIN ANALYTICAL SERVICES
Report of Analytical Results

Client: CH2MHill
Project: TO-009 Lejeune
PO No:
Sample Date: 01/26/09
Received Date: 01/27/09
Extraction Date: 02/05/09
Analysis Date: 20-FEB-2009 01:20
Report Date: 02/26/2009
Matrix: SOIL
% Solids: 78.2

Lab ID: SC0412-37
Client ID: MR08-SS320-09A
SDG: TO9-47
Extracted by: CB
Extraction Method: SW846 3550
Analyst: JCG
Analysis Method: SW846 8270C
Lab Prep Batch: WG60480
Units: ug/Kgdrywt

CAS#	Compound	Flags	Results	DF	PQL	Adj.PQL	Adj.MDL	
100-52-7	Benzaldehyde	~~U~~ UJ	640	1.0	500	640	150	ICB
108-95-2	Phenol	U	640	1.0	500	640	200	
111-44-4	Bis(2-Chloroethyl)ether	U	420	1.0	330	420	100	
95-57-8	2-Chlorophenol	U	640	1.0	500	640	210	
95-48-7	2-Methylphenol	U	770	1.0	600	770	260	
108-60-1	2,2'-Oxybis(1-chloropropane)	U	420	1.0	330	420	110	
98-86-2	Acetophenone	U	770	1.0	600	770	230	
621-64-7	N-Nitroso-di-n-propylamine	U	420	1.0	330	420	110	
65794-96-9	3&4-Methylphenol	U	770	1.0	600	770	240	
67-72-1	Hexachloroethane	U	420	1.0	330	420	120	
98-95-3	Nitrobenzene	U	420	1.0	330	420	120	
78-59-1	Isophorone	U	420	1.0	330	420	96	
88-75-5	2-Nitrophenol	U	770	1.0	600	770	210	
105-67-9	2,4-Dimethylphenol	U	640	1.0	500	640	210	
111-91-1	Bis(2-Chloroethoxy)methane	U	420	1.0	330	420	120	
120-83-2	2,4-Dichlorophenol	U	640	1.0	500	640	190	
106-47-8	4-Chloroaniline	U	640	1.0	500	640	150	
105-60-2	Caprolactam	U	640	1.0	500	640	180	
59-50-7	4-Chloro-3-Methylphenol	U	640	1.0	500	640	210	
88-06-2	2,4,6-Trichlorophenol	U	640	1.0	500	640	200	
95-95-4	2,4,5-Trichlorophenol	U	640	1.0	500	640	200	
91-58-7	2-Chloronaphthalene	U	420	1.0	330	420	110	
92-52-4	1,1'-Biphenyl	U	420	1.0	330	420	93	
88-74-4	2-Nitroaniline	U	640	1.0	500	640	96	
131-11-3	Dimethyl Phthalate	U	420	1.0	330	420	100	
606-20-2	2,6-Dinitrotoluene	U	420	1.0	330	420	100	
208-96-8	Acenaphthylene	U	420	1.0	330	420	89	
99-09-2	3-Nitroaniline	U	640	1.0	500	640	120	
83-32-9	Acenaphthene	U	420	1.0	330	420	83	
51-28-5	2,4-Dinitrophenol	U	1500	1.0	1200	1500	480	
132-64-9	Dibenzofuran	U	420	1.0	330	420	100	
100-02-7	4-Nitrophenol	~~U~~ UJ	1500	1.0	1200	1500	390	CCH
121-14-2	2,4-Dinitrotoluene	U	420	1.0	330	420	110	
84-66-2	Diethylphthalate	U	420	1.0	330	420	100	
7005-72-3	4-Chlorophenyl-phenylether	U	420	1.0	330	420	100	
100-01-6	4-Nitroaniline	U	640	1.0	500	640	170	
534-52-1	4,6-Dinitro-2-Methylphenol	U	1500	1.0	1200	1500	430	
86-30-6	N-Nitrosodiphenylamine	U	840	1.0	660	840	280	
101-55-3	4-Bromophenyl-phenylether	U	420	1.0	330	420	110	
1912-24-9	Atrazine	U	420	1.0	330	420	120	
87-86-5	Pentachlorophenol	U	1000	1.0	820	1000	300	
120-12-7	Anthracene	U	420	1.0	330	420	110	
86-74-8	Carbazole	U	640	1.0	500	640	140	

KATAHDIN ANALYTICAL SERVICES
Report of Analytical Results

Client: CH2MHill
Project: TO-009 Lejeune
PO No:
Sample Date: 01/26/09
Received Date: 01/27/09
Extraction Date: 02/05/09
Analysis Date: 20-FEB-2009 01:20
Report Date: 02/26/2009
Matrix: SOIL
% Solids: 78.2

Lab ID: SC0412-37
Client ID: MR08-SS320-09A
SDG: TO9-47
Extracted by: CB
Extraction Method: SW846 3550
Analyst: JCG
Analysis Method: SW846 8270C
Lab Prep Batch: WG60480
Units: ug/Kgdrywt

CAS#	Compound	Flags	Results	DF	PQL	Adj.PQL	Adj.MDL
84-74-2	Di-n-butylphthalate	U	420	1.0	330	420	130
85-68-7	Butylbenzylphthalate	U	420	1.0	330	420	120
91-94-1	3,3'-Dichlorobenzidine	U	640	1.0	500	640	140
218-01-9	Chrysene	J	310	1.0	330	420	120
117-81-7	bis(2-Ethylhexyl)phthalate	U	420	1.0	330	420	120
117-84-0	Di-n-octylphthalate	U	420	1.0	330	420	270
367-12-4	2-Fluorophenol		80%				
13127-88-3	Phenol-D6		92%				
4165-60-0	Nitrobenzene-D5		76%				
321-60-8	2-Fluorobiphenyl		79%				
118-79-6	2,4,6-Tribromophenol		90%				
1718-51-0	Terphenyl-D14		100%				

20

KATAHDIN ANALYTICAL SERVICES
Report of Analytical Results

Client: CH2MHill
Project: TO-009 Lejeune
PO No:
Sample Date: 01/26/09
Received Date: 01/27/09
Extraction Date: 02/05/09
Analysis Date: 19-FEB-2009 06:34
Report Date: 02/26/2009
Matrix: SOIL
% Solids: 90.4

Lab ID: SC0412-39
Client ID: MR08-SS351-09A
SDG: TO9-47
Extracted by: CB
Extraction Method: SW846 3550
Analyst: JCG
Analysis Method: SW846 8270C
Lab Prep Batch: WG60480
Units: ug/Kgdrywt

CAS#	Compound	Flags	Results	DF	PQL	Adj.PQL	Adj.MDL
100-52-7	Benzaldehyde	~~U~~ UJ	550	1.0	500	550	130 ICB
108-95-2	Phenol	U	550	1.0	500	550	170
111-44-4	Bis(2-Chloroethyl)ether	U	360	1.0	330	360	90
95-57-8	2-Chlorophenol	U	550	1.0	500	550	180
95-48-7	2-Methylphenol	U	660	1.0	600	660	220
108-60-1	2,2'-Oxybis(1-chloropropane)	U	360	1.0	330	360	98
98-86-2	Acetophenone	U	660	1.0	600	660	200
621-64-7	N-Nitroso-di-n-propylamine	U	360	1.0	330	360	92
65794-96-9	3&4-Methylphenol	U	660	1.0	600	660	210
67-72-1	Hexachloroethane	U	360	1.0	330	360	110
98-95-3	Nitrobenzene	U	360	1.0	330	360	100
78-59-1	Isophorone	U	360	1.0	330	360	83
88-75-5	2-Nitrophenol	U	660	1.0	600	660	180
105-67-9	2,4-Dimethylphenol	U	550	1.0	500	550	180
111-91-1	Bis(2-Chloroethoxy)methane	U	360	1.0	330	360	110
120-83-2	2,4-Dichlorophenol	U	550	1.0	500	550	160
106-47-8	4-Chloroaniline	U	550	1.0	500	550	130
105-60-2	Caprolactam	U	550	1.0	500	550	160
59-50-7	4-Chloro-3-Methylphenol	U	550	1.0	500	550	180
88-06-2	2,4,6-Trichlorophenol	U	550	1.0	500	550	170
95-95-4	2,4,5-Trichlorophenol	U	550	1.0	500	550	170
91-58-7	2-Chloronaphthalene	U	360	1.0	330	360	96
92-52-4	1,1'-Biphenyl	U	360	1.0	330	360	81
88-74-4	2-Nitroaniline	U	550	1.0	500	550	83
131-11-3	Dimethyl Phthalate	U	360	1.0	330	360	86
606-20-2	2,6-Dinitrotoluene	U	360	1.0	330	360	87
208-96-8	Acenaphthylene	U	360	1.0	330	360	77
99-09-2	3-Nitroaniline	U	550	1.0	500	550	100
83-32-9	Acenaphthene	U	360	1.0	330	360	72
51-28-5	2,4-Dinitrophenol	U	1300	1.0	1200	1300	420
132-64-9	Dibenzofuran	U	360	1.0	330	360	87
100-02-7	4-Nitrophenol	~~U~~ UJ	1300	1.0	1200	1300	340 ICB
121-14-2	2,4-Dinitrotoluene	U	360	1.0	330	360	94
84-66-2	Diethylphthalate	U	360	1.0	330	360	88
7005-72-3	4-Chlorophenyl-phenylether	U	360	1.0	330	360	86
100-01-6	4-Nitroaniline	U	550	1.0	500	550	150
534-52-1	4,6-Dinitro-2-Methylphenol	U	1300	1.0	1200	1300	370
86-30-6	N-Nitrosodiphenylamine	U	730	1.0	660	730	240
101-55-3	4-Bromophenyl-phenylether	U	360	1.0	330	360	94
1912-24-9	Atrazine	U	360	1.0	330	360	100
87-86-5	Pentachlorophenol	U	910	1.0	820	910	260
120-12-7	Anthracene	U	360	1.0	330	360	93
86-74-8	Carbazole	U	550	1.0	500	550	120

KATAHDIN ANALYTICAL SERVICES
Report of Analytical Results

Client: CH2MHill
Project: TO-009 Lejeune
PO No:
Sample Date: 01/26/09
Received Date: 01/27/09
Extraction Date: 02/05/09
Analysis Date: 19-FEB-2009 06:34
Report Date: 02/26/2009
Matrix: SOIL
% Solids: 90.4

Lab ID: SC0412-39
Client ID: MR08-SS351-09A
SDG: TO9-47
Extracted by: CB
Extraction Method: SW846 3550
Analyst: JCG
Analysis Method: SW846 8270C
Lab Prep Batch: WG60480
Units: ug/Kgdrywt

CAS#	Compound	Flags	Results	DF	PQL	Adj.PQL	Adj.MDL
84-74-2	Di-n-butylphthalate	U	360	1.0	330	360	110
85-68-7	Butylbenzylphthalate	U	360	1.0	330	360	100
91-94-1	3,3'-Dichlorobenzidine	~~J~~ R	550	1.0	500	550	130 MSL
218-01-9	Chrysene	J	110	1.0	330	360	100
117-81-7	bis(2-Ethylhexyl)phthalate	U	360	1.0	330	360	110
117-84-0	Di-n-octylphthalate	~~J~~ UJ	360	1.0	330	360	230 CCU
367-12-4	2-Fluorophenol		71%				
13127-88-3	Phenol-D6		92%				
4165-60-0	Nitrobenzene-D5		76%				
321-60-8	2-Fluorobiphenyl		81%				
118-79-6	2,4,6-Tribromophenol		87%				
1718-51-0	Terphenyl-D14		77%				

ENVIRONMENTAL
Data Services, Inc.

POLYNUCLEAR AROMATIC COMPOUNDS BY 8270SIM

USEPA Region IV - Level IV Review

Site: MCB Camp Lejeune, TO-09 SDG #: TO9-48

Client: CH2M HILL, Inc., Virginia Beach, Virginia Date: April 19, 2009

Laboratory: Katahdin Analytical Services, Scarborough, Maine Reviewer: Nancy Weaver

EDS ID	Client Sample ID	Laboratory Sample ID	Matrix
1	MR08-IS320-2-3-09A	SC0413-2	Soil
2	MR08-IS351-2-3-09A	SC0413-4	Soil
2MS	MR08-IS351-2-3-09AMS	SC0413-4MS	Soil
2MSD	MR08-IS351-2-3-09AMSD	SC0413-4MSD	Soil
3	MR08-SS348-09A	SC0413-6	Soil
4	MR08-IS348-2-3-09A	SC0413-8	Soil

The USEPA "Contract Laboratory Program National Functional Guidelines for Organic Data Review," October 1999, and professional judgement were used in evaluating the data in this summary report.

Holding Times - All samples were extracted within 14 days for soil samples and analyzed within 40 days for all samples.

GC/MS Tuning - All of the DFTPP tunes in the initial and continuing calibrations met the percent relative abundance criteria.

Initial Calibration - The initial calibrations exhibited acceptable %RSD and mean RRF values.

Continuing Calibration - The continuing calibrations exhibited acceptable %D and RRF values except the following.

CCAL Date	Compound	%D/RRF	Qualifier	Affected Samples
02/16/09	Hexachlorobutadiene	28.91%	J/UJ	1-4
	Hexachlorocyclopentadiene	30.37%	J/UJ	1-4
02/17/09	Benzo (b) fluoranthene	25.27%	J/UJ	3RE

Surrogates - All samples exhibited acceptable surrogate recoveries except the following.

Sample ID	Surrogate	%R	Qualifier
3	S4-Pyrene-d10	188%	None for 1 out
3RE	S4-Pyrene-d10	204%	None for 1 out

MS/MSD - The MS/MSD sample exhibited acceptable %R and RPD values.

Laboratory Control Sample - The LCS samples exhibited acceptable %R values.

Internal Standard (IS) Area Performance - All internal standards met response and retention time (RT) criteria.

Method Blank - The method blanks exhibited the following contamination.

Blank ID	Compound	Conc. ug/kg	Action Level ug/kg	Qualifier	Affected Samples
WG60481-BLANK	Benzo (a) anthracene	5.1	25.5	U	1-3, 3RE, 4

Field, Equipment Blank - Field QC results are summarized below.

Blank ID	Compound	Conc. ug/L	Action Level ug/kg	Qualifier	Affected Samples
MR08-FB012609	None - ND	-	-	-	-
MR08-EB012609	None - ND	-	-	-	-

Field Duplicates - Field duplicate samples were not analyzed.

Compound Quantitation - No discrepancies were identified.

KATAHDIN ANALYTICAL SERVICES
Report of Analytical Results

Client: CH2MHill
Project: TO-009 Lejeune
PO No:
Sample Date: 01/26/09
Received Date: 01/27/09
Extraction Date: 02/05/09
Analysis Date: 16-FEB-2009 13:13
Report Date: 02/20/2009
Matrix: SOIL
% Solids: 89.0

Lab ID: SC0413-2
Client ID: MR08-IS320-2-3-09A
SDG: TO9-48
Extracted by: CB
Extraction Method: SW846 3550
Analyst: JCG
Analysis Method: SW846 M8270C
Lab Prep Batch: WG60481
Units: ug/Kgdrywt

CAS#	Compound	Flags	Results	DF	PQL	Adj.PQL	Adj.MDL	
91-20-3	Naphthalene	U	11	1.0	10	11	2.9	
91-57-6	2-Methylnaphthalene	U	11	1.0	10	11	2.5	
86-73-7	Fluorene	U	11	1.0	10	11	3.6	
85-01-8	Phenanthrene	U	11	1.0	10	11	2.0	
206-44-0	Fluoranthene	U	11	1.0	10	11	2.0	
129-00-0	Pyrene	U	11	1.0	10	11	2.4	
56-55-3	Benzo(a)anthracene	~~JB~~ 11U	~~5.9~~	1.0	10	11	2.1	BL
205-99-2	Benzo(b)fluoranthene	U	11	1.0	10	11	2.7	
207-08-9	Benzo(k)fluoranthene	U	11	1.0	10	11	3.5	
50-32-8	Benzo(a)pyrene	U	11	1.0	10	11	3.7	
193-39-5	Indeno(1,2,3-cd)pyrene	U	11	1.0	10	11	2.1	
53-70-3	Dibenzo(a,h)anthracene	U	11	1.0	10	11	2.0	
191-24-2	Benzo(g,h,i)perylene	U	11	1.0	10	11	2.2	
118-74-1	Hexachlorobenzene	U	11	1.0	10	11	2.0	
87-68-3	Hexachlorobutadiene	~~U~~ UJ	11	1.0	10	11	2.6	CCH
77-47-4	Hexachlorocyclopentadiene	~~U~~ UJ	11	1.0	10	11	1.7	CCH
7297-45-2	2-Methylnaphthalene-D10		76%					
367-12-4	2,4-Dibromophenol		89%					
81103-79-9	Fluorene-d10		76%					
1718-51-1	Pyrene-D10		98%					

MW
4/19/09

2

KATAHDIN ANALYTICAL SERVICES
Report of Analytical Results

Client: CH2MHill
Project: TO-009 Lejeune
PO No:
Sample Date: 01/26/09
Received Date: 01/27/09
Extraction Date: 02/05/09
Analysis Date: 16-FEB-2009 13:54
Report Date: 02/20/2009
Matrix: SOIL
% Solids: 87.0

Lab ID: SC0413-4
Client ID: 08-IS351-2-3-09A
SDG: TO9-48
Extracted by: CB
Extraction Method: SW846 3550
Analyst: JCG
Analysis Method: SW846 M8270C
Lab Prep Batch: WG60481
Units: ug/Kgdrywt

CAS#	Compound	Flags	Results	DF	PQL	Adj.PQL	Adj.MDL	
91-20-3	Naphthalene	U	11	1.0	10	11	3.0	
91-57-6	2-Methylnaphthalene	U	11	1.0	10	11	2.5	
86-73-7	Fluorene	U	11	1.0	10	11	3.7	
85-01-8	Phenanthrene	U	11	1.0	10	11	2.1	
206-44-0	Fluoranthene	J	2.4	1.0	10	11	2.1	
129-00-0	Pyrene	U	11	1.0	10	11	2.4	
56-55-3	Benzo(a)anthracene	~~JB~~ 11U	~~6.4~~	1.0	10	11	2.2	BL
205-99-2	Benzo(b)fluoranthene	U	11	1.0	10	11	2.8	
207-08-9	Benzo(k)fluoranthene	U	11	1.0	10	11	3.6	
50-32-8	Benzo(a)pyrene	U	11	1.0	10	11	3.8	
193-39-5	Indeno(1,2,3-cd)pyrene	U	11	1.0	10	11	2.2	
53-70-3	Dibenzo(a,h)anthracene	U	11	1.0	10	11	2.1	
191-24-2	Benzo(g,h,i)perylene	U	11	1.0	10	11	2.3	
118-74-1	Hexachlorobenzene	U	11	1.0	10	11	2.1	
87-68-3	Hexachlorobutadiene	~~U~~ UJ	11	1.0	10	11	2.6	CCH
77-47-4	Hexachlorocyclopentadiene	~~U~~ UJ	11	1.0	10	11	1.7	CCH
7297-45-2	2-Methylnaphthalene-D10		82%					
367-12-4	2,4-Dibromophenol		100%					
81103-79-9	Fluorene-d10		99%					
1718-51-1	Pyrene-D10		108%					

CW 4/19/09

3

KATAHDIN ANALYTICAL SERVICES
Report of Analytical Results

Client: CH2MHill
Project: TO-009 Lejeune
PO No:
Sample Date: 01/26/09
Received Date: 01/27/09
Extraction Date: 02/05/09
Analysis Date: 16-FEB-2009 21:29
Report Date: 02/20/2009
Matrix: SOIL
% Solids: 93.8

Lab ID: SC0413-6
Client ID: MR08-SS348-09A
SDG: TO9-48
Extracted by: CB
Extraction Method: SW846 3550
Analyst: JCG
Analysis Method: SW846 M8270C
Lab Prep Batch: WG60481
Units: ug/Kgdrywt

CAS#	Compound	Flags	Results	DF	PQL	Adj.PQL	Adj.MDL	
91-20-3	Naphthalene	J	8.7	1.0	10	11	2.8	
91-57-6	2-Methylnaphthalene		17	1.0	10	11	2.3	
86-73-7	Fluorene	J	3.9	1.0	10	11	3.4	
85-01-8	Phenanthrene		85	1.0	10	11	1.9	
206-44-0	Fluoranthene		79	1.0	10	11	1.9	
129-00-0	Pyrene		66	1.0	10	11	2.2	
56-55-3	Benzo(a)anthracene	~~U~~ U	22	1.0	10	11	2.0	BL
205-99-2	Benzo(b)fluoranthene	U	11	1.0	10	11	2.6	
207-08-9	Benzo(k)fluoranthene	U	11	1.0	10	11	3.3	
50-32-8	Benzo(a)pyrene		25	1.0	10	11	3.5	
193-39-5	Indeno(1,2,3-cd)pyrene		15	1.0	10	11	2.0	
53-70-3	Dibenzo(a,h)anthracene	U	11	1.0	10	11	1.9	
191-24-2	Benzo(g,h,i)perylene		52	1.0	10	11	2.1	
118-74-1	Hexachlorobenzene	U	11	1.0	10	11	1.9	
87-68-3	Hexachlorobutadiene	~~U~~ UJ	11	1.0	10	11	2.4	CCH
77-47-4	Hexachlorocyclopentadiene	~~U~~ UJ	11	1.0	10	11	1.6	CCH
7297-45-2	2-Methylnaphthalene-D10		76%					
367-12-4	2,4-Dibromophenol		104%					
81103-79-9	Fluorene-d10		88%					
1718-51-1	Pyrene-D10		*188%					

LW 4/19/09

3RE

KATAHDIN ANALYTICAL SERVICES
Report of Analytical Results

Client: CH2MHill
Project: TO-009 Lejeune
PO No:
Sample Date: 01/26/09
Received Date: 01/27/09
Extraction Date: 02/05/09
Analysis Date: 17-FEB-2009 13:13
Report Date: 02/20/2009
Matrix: SOIL
% Solids: 93.8

Lab ID: SC0413-6RA
Client ID: MR08-SS348-09A
SDG: TO9-48
Extracted by: CB
Extraction Method: SW846 3550
Analyst: JLP
Analysis Method: SW846 M8270C
Lab Prep Batch: WG60481
Units: ug/Kgdrywt

Use original

CAS#	Compound	Flags	Results	DF	PQL	Adj.PQL	Adj.MDL	
91-20-3	Naphthalene	J	9.1	1.0	10	11	2.8	
91-57-6	2-Methylnaphthalene		17	1.0	10	11	2.3	
86-73-7	Fluorene	J	3.7	1.0	10	11	3.4	
85-01-8	Phenanthrene		69	1.0	10	11	1.9	
206-44-0	Fluoranthene		76	1.0	10	11	1.9	
129-00-0	Pyrene		66	1.0	10	11	2.2	
56-55-3	Benzo(a)anthracene	~~J~~ U	21	1.0	10	11	2.0	BL
205-99-2	Benzo(b)fluoranthene	~~J~~ UJ	11	1.0	10	11	2.6	CCH
207-08-9	Benzo(k)fluoranthene	U	11	1.0	10	11	3.3	
50-32-8	Benzo(a)pyrene		25	1.0	10	11	3.5	
193-39-5	Indeno(1,2,3-cd)pyrene		14	1.0	10	11	2.0	
53-70-3	Dibenzo(a,h)anthracene	U	11	1.0	10	11	1.9	
191-24-2	Benzo(g,h,i)perylene		56	1.0	10	11	2.1	
118-74-1	Hexachlorobenzene	U	11	1.0	10	11	1.9	
87-68-3	Hexachlorobutadiene	U	11	1.0	10	11	2.4	
77-47-4	Hexachlorocyclopentadiene	J	7.5	1.0	10	11	1.6	
7297-45-2	2-Methylnaphthalene-D10		89%					
367-12-4	2,4-Dibromophenol		110%					
81103-79-9	Fluorene-d10		89%					
1718-51-1	Pyrene-D10		*204%					

R RE

CW 4/19/09

4

KATAHDIN ANALYTICAL SERVICES
Report of Analytical Results

Client: CH2MHill
Project: TO-009 Lejeune
PO No:
Sample Date: 01/26/09
Received Date: 01/27/09
Extraction Date: 02/05/09
Analysis Date: 16-FEB-2009 14:35
Report Date: 02/20/2009
Matrix: SOIL
% Solids: 88.4

Lab ID: SC0413-8
Client ID: MR08-IS348-2-3-09A
SDG: TO9-48
Extracted by: CB
Extraction Method: SW846 3550
Analyst: JCG
Analysis Method: SW846 M8270C
Lab Prep Batch: WG60481
Units: ug/Kgdrywt

CAS#	Compound	Flags	Results	DF	PQL	Adj.PQL	Adj.MDL	
91-20-3	Naphthalene	U	11	1.0	10	11	2.9	
91-57-6	2-Methylnaphthalene	U	11	1.0	10	11	2.5	
86-73-7	Fluorene	U	11	1.0	10	11	3.6	
85-01-8	Phenanthrene	U	11	1.0	10	11	2.0	
206-44-0	Fluoranthene	U	11	1.0	10	11	2.0	
129-00-0	Pyrene	U	11	1.0	10	11	2.4	
56-55-3	Benzo(a)anthracene	~~JB~~	11u ~~5.8~~	1.0	10	11	2.1	BL
205-99-2	Benzo(b)fluoranthene	U	11	1.0	10	11	2.7	
207-08-9	Benzo(k)fluoranthene	U	11	1.0	10	11	3.5	
50-32-8	Benzo(a)pyrene	U	11	1.0	10	11	3.7	
193-39-5	Indeno(1,2,3-cd)pyrene	U	11	1.0	10	11	2.1	
53-70-3	Dibenzo(a,h)anthracene	U	11	1.0	10	11	2.0	
191-24-2	Benzo(g,h,i)perylene	U	11	1.0	10	11	2.3	
118-74-1	Hexachlorobenzene	U	11	1.0	10	11	2.0	
87-68-3	Hexachlorobutadiene	~~U~~ UJ	11	1.0	10	11	2.6	CCH
77-47-4	Hexachlorocyclopentadiene	~~U~~ UJ	11	1.0	10	11	1.7	CCH
7297-45-2	2-Methylnaphthalene-D10		68%					
367-12-4	2,4-Dibromophenol		82%					
81103-79-9	Fluorene-d10		80%					
1718-51-1	Pyrene-D10		83%					

4/19/09

ENVIRONMENTAL
Data Services, Inc.

SEMIVOLATILE ORGANIC COMPOUNDS
USEPA Region IV - Level IV Review

Site: MCB Camp Lejeune, TO-09 SDG #: TO9-48

Client: CH2M HILL, Inc., Virginia Beach, Virginia Date: April 19, 2009

Laboratory: Katahdin Analytical Services, Scarborough, Maine Reviewer: Nancy Weaver

EDS ID	Client Sample ID	Laboratory Sample ID	Matrix
1	MR08-IS320-2-3-09A	SC0413-1	Soil
2	MR08-IS351-2-3-09A	SC0413-3	Soil
2MS	MR08-IS351-2-3-09AMS	SC0413-3MS	Soil
2MSD	MR08-IS351-2-3-09AMSD	SC0413-3MSD	Soil
3	MR08-SS348-09A	SC0413-5	Soil
4	MR08-IS348-2-3-09A	SC0413-7	Soil

The USEPA "Contract Laboratory Program National Functional Guidelines for Organic Data Review," October 1999, and professional judgement were used in evaluating the data in this summary report.

Holding Times - All samples were extracted within 14 days for soil samples and analyzed within 40 days for all samples.

GC/MS Tuning - All of the DFTPP tunes in the initial and continuing calibrations met the percent relative abundance criteria.

Initial Calibration - The initial calibrations exhibited acceptable %RSD and mean RRF values except the following.

ICAL Date	Compound	%RSD/RRF	Qualifier	Affected Samples
02/19/09	Benzaldehyde	51.16%	J/UJ	All Samples

Continuing Calibration - The continuing calibrations exhibited acceptable %D and RRF values except the following.

CCAL Date	Compound	%D/RRF	Qualifier	Affected Samples
02/22/09	Benzaldehyde	39.62%	None	Already qualified due to ICAL

Surrogates - All samples exhibited acceptable surrogate recoveries except the following.

MS/MSD - The MS/MSD sample exhibited acceptable %R and RPD values except the following.

MS/MSD Sample ID	Compound	MS/MSD %R/RPD	Qualifier
2	Benzaldehyde	532%/499%/Ok	None - All ND
	n-Nitrosodiphenylamine	Ok/48%/Ok	J/UJ

Laboratory Control Sample - The LCS samples exhibited acceptable %R values.

Internal Standard (IS) Area Performance - All internal standards met response and retention time (RT) criteria.

Method Blank - The method blanks were free of contamination.

Field, Equipment Blank - Field QC results are summarized below.

Blank ID	Compound	Conc. ug/L	Action Level ug/kg	Qualifier	Affected Samples
MR08-FB012609	None - ND	-	-	-	-
MR08-EB012609	None - ND	-	-	-	-

Field Duplicates - Field duplicate samples were not analyzed.

Tentatively Identified Compounds (TICs) - TICs were not reported.

Compound Quantitation - No discrepancies were identified.

KATAHDIN ANALYTICAL SERVICES
Report of Analytical Results

Client: CH2MHill
Project: TO-009 Lejeune
PO No:
Sample Date: 01/26/09
Received Date: 01/27/09
Extraction Date: 02/05/09
Analysis Date: 22-FEB-2009 18:41
Report Date: 02/24/2009
Matrix: SOIL
% Solids: 89.0

Lab ID: SC0413-1
Client ID: MR08-IS320-2-3-09A
SDG: TO9-48
Extracted by: CB
Extraction Method: SW846 3550
Analyst: JLP
Analysis Method: SW846 8270C
Lab Prep Batch: WG60480
Units: ug/Kgdrywt

CAS#	Compound	Flags	Results	DF	PQL	Adj.PQL	Adj.MDL
100-52-7	Benzaldehyde	~~U~~ UJ	560	1.0	500	560	130 JCB
108-95-2	Phenol	U	560	1.0	500	560	180
111-44-4	Bis(2-Chloroethyl)ether	U	370	1.0	330	370	91
95-57-8	2-Chlorophenol	U	560	1.0	500	560	180
95-48-7	2-Methylphenol	U	670	1.0	600	670	220
108-60-1	2,2'-Oxybis(1-chloropropane)	U	370	1.0	330	370	100
98-86-2	Acetophenone	U	670	1.0	600	670	200
621-64-7	N-Nitroso-di-n-propylamine	U	370	1.0	330	370	93
65794-96-9	3&4-Methylphenol	U	670	1.0	600	670	210
67-72-1	Hexachloroethane	U	370	1.0	330	370	110
98-95-3	Nitrobenzene	U	370	1.0	330	370	100
78-59-1	Isophorone	U	370	1.0	330	370	84
88-75-5	2-Nitrophenol	U	670	1.0	600	670	190
105-67-9	2,4-Dimethylphenol	U	560	1.0	500	560	180
111-91-1	Bis(2-Chloroethoxy)methane	U	370	1.0	330	370	110
120-83-2	2,4-Dichlorophenol	U	560	1.0	500	560	170
106-47-8	4-Chloroaniline	U	560	1.0	500	560	130
105-60-2	Caprolactam	U	560	1.0	500	560	160
59-50-7	4-Chloro-3-Methylphenol	U	560	1.0	500	560	190
88-06-2	2,4,6-Trichlorophenol	U	560	1.0	500	560	170
95-95-4	2,4,5-Trichlorophenol	U	560	1.0	500	560	170
91-58-7	2-Chloronaphthalene	U	370	1.0	330	370	98
92-52-4	1,1'-Biphenyl	U	370	1.0	330	370	82
88-74-4	2-Nitroaniline	U	560	1.0	500	560	84
131-11-3	Dimethyl Phthalate	U	370	1.0	330	370	88
606-20-2	2,6-Dinitrotoluene	U	370	1.0	330	370	89
208-96-8	Acenaphthylene	U	370	1.0	330	370	79
99-09-2	3-Nitroaniline	U	560	1.0	500	560	100
83-32-9	Acenaphthene	U	370	1.0	330	370	73
51-28-5	2,4-Dinitrophenol	U	1300	1.0	1200	1300	420
132-64-9	Dibenzofuran	U	370	1.0	330	370	89
100-02-7	4-Nitrophenol	U	1300	1.0	1200	1300	350
121-14-2	2,4-Dinitrotoluene	U	370	1.0	330	370	95
84-66-2	Diethylphthalate	U	370	1.0	330	370	90
7005-72-3	4-Chlorophenyl-phenylether	U	370	1.0	330	370	88
100-01-6	4-Nitroaniline	U	560	1.0	500	560	150
534-52-1	4,6-Dinitro-2-Methylphenol	U	1300	1.0	1200	1300	380
86-30-6	N-Nitrosodiphenylamine	U	740	1.0	660	740	250
101-55-3	4-Bromophenyl-phenylether	U	370	1.0	330	370	95
1912-24-9	Atrazine	U	370	1.0	330	370	100
87-86-5	Pentachlorophenol	U	920	1.0	820	920	270
120-12-7	Anthracene	U	370	1.0	330	370	94
86-74-8	Carbazole	U	560	1.0	500	560	120

MW 4/9/09

KATAHDIN ANALYTICAL SERVICES
Report of Analytical Results

Client: CH2MHill
Project: TO-009 Lejeune
PO No:
Sample Date: 01/26/09
Received Date: 01/27/09
Extraction Date: 02/05/09
Analysis Date: 22-FEB-2009 18:41
Report Date: 02/24/2009
Matrix: SOIL
% Solids: 89.0

Lab ID: SC0413-1
Client ID: MR08-IS320-2-3-09A
SDG: TO9-48
Extracted by: CB
Extraction Method: SW846 3550
Analyst: JLP
Analysis Method: SW846 8270C
Lab Prep Batch: WG60480
Units: ug/Kgdrywt

CAS#	Compound	Flags	Results	DF	PQL	Adj.PQL	Adj.MDL
84-74-2	Di-n-butylphthalate	U	370	1.0	330	370	110
85-68-7	Butylbenzylphthalate	U	370	1.0	330	370	100
91-94-1	3,3'-Dichlorobenzidine	U	560	1.0	500	560	130
218-01-9	Chrysene	U	370	1.0	330	370	110
117-81-7	bis(2-Ethylhexyl)phthalate	U	370	1.0	330	370	110
117-84-0	Di-n-octylphthalate	U	370	1.0	330	370	240
367-12-4	2-Fluorophenol		66%				
13127-88-3	Phenol-D6		78%				
4165-60-0	Nitrobenzene-D5		74%				
321-60-8	2-Fluorobiphenyl		71%				
118-79-6	2,4,6-Tribromophenol		61%				
1718-51-0	Terphenyl-D14		80%				

LW
4/19/09

KATAHDIN ANALYTICAL SERVICES
Report of Analytical Results

2

Client: CH2MHill
Project: TO-009 Lejeune
PO No:
Sample Date: 01/26/09
Received Date: 01/27/09
Extraction Date: 02/05/09
Analysis Date: 22-FEB-2009 19:23
Report Date: 02/24/2009
Matrix: SOIL
% Solids: 87.0

Lab ID: SC0413-3
Client ID: 08-IS351-2-3-09A
SDG: TO9-48
Extracted by: CB
Extraction Method: SW846 3550
Analyst: JLP
Analysis Method: SW846 8270C
Lab Prep Batch: WG60480
Units: ug/Kgdrywt

CAS#	Compound	Flags	Results	DF	PQL	Adj.PQL	Adj.MDL	
100-52-7	Benzaldehyde	~~J~~ UJ	570	1.0	500	570	140	ICB
108-95-2	Phenol	U	570	1.0	500	570	180	
111-44-4	Bis(2-Chloroethyl)ether	U	380	1.0	330	380	93	
95-57-8	2-Chlorophenol	U	570	1.0	500	570	190	
95-48-7	2-Methylphenol	U	690	1.0	600	690	230	
108-60-1	2,2'-Oxybis(1-chloropropane)	U	380	1.0	330	380	100	
98-86-2	Acetophenone	U	690	1.0	600	690	200	
621-64-7	N-Nitroso-di-n-propylamine	U	380	1.0	330	380	95	
65794-96-9	3&4-Methylphenol	U	690	1.0	600	690	210	
67-72-1	Hexachloroethane	U	380	1.0	330	380	110	
98-95-3	Nitrobenzene	U	380	1.0	330	380	100	
78-59-1	Isophorone	U	380	1.0	330	380	86	
88-75-5	2-Nitrophenol	U	690	1.0	600	690	190	
105-67-9	2,4-Dimethylphenol	U	570	1.0	500	570	190	
111-91-1	Bis(2-Chloroethoxy)methane	U	380	1.0	330	380	110	
120-83-2	2,4-Dichlorophenol	U	570	1.0	500	570	170	
106-47-8	4-Chloroaniline	U	570	1.0	500	570	140	
105-60-2	Caprolactam	U	570	1.0	500	570	160	
59-50-7	4-Chloro-3-Methylphenol	U	570	1.0	500	570	190	
88-06-2	2,4,6-Trichlorophenol	U	570	1.0	500	570	180	
95-95-4	2,4,5-Trichlorophenol	U	570	1.0	500	570	180	
91-58-7	2-Chloronaphthalene	U	380	1.0	330	380	100	
92-52-4	1,1'-Biphenyl	U	380	1.0	330	380	84	
88-74-4	2-Nitroaniline	U	570	1.0	500	570	86	
131-11-3	Dimethyl Phthalate	U	380	1.0	330	380	90	
606-20-2	2,6-Dinitrotoluene	U	380	1.0	330	380	91	
208-96-8	Acenaphthylene	U	380	1.0	330	380	80	
99-09-2	3-Nitroaniline	U	570	1.0	500	570	110	
83-32-9	Acenaphthene	U	380	1.0	330	380	75	
51-28-5	2,4-Dinitrophenol	U	1400	1.0	1200	1400	430	
132-64-9	Dibenzofuran	U	380	1.0	330	380	91	
100-02-7	4-Nitrophenol	U	1400	1.0	1200	1400	360	
121-14-2	2,4-Dinitrotoluene	U	380	1.0	330	380	98	
84-66-2	Diethylphthalate	U	380	1.0	330	380	92	
7005-72-3	4-Chlorophenyl-phenylether	U	380	1.0	330	380	90	
100-01-6	4-Nitroaniline	U	570	1.0	500	570	150	
534-52-1	4,6-Dinitro-2-Methylphenol	U	1400	1.0	1200	1400	390	
86-30-6	N-Nitrosodiphenylamine	~~J~~ UJ	760	1.0	660	760	250	MSL
101-55-3	4-Bromophenyl-phenylether	U	380	1.0	330	380	98	
1912-24-9	Atrazine	U	380	1.0	330	380	100	
87-86-5	Pentachlorophenol	U	940	1.0	820	940	270	
120-12-7	Anthracene	U	380	1.0	330	380	96	
86-74-8	Carbazole	U	570	1.0	500	570	130	

DW
4/9/09

2

KATAHDIN ANALYTICAL SERVICES
Report of Analytical Results

Client: CH2MHill
Project: TO-009 Lejeune
PO No:
Sample Date: 01/26/09
Received Date: 01/27/09
Extraction Date: 02/05/09
Analysis Date: 22-FEB-2009 19:23
Report Date: 02/24/2009
Matrix: SOIL
% Solids: 87.0

Lab ID: SC0413-3
Client ID: 08-IS351-2-3-09A
SDG: TO9-48
Extracted by: CB
Extraction Method: SW846 3550
Analyst: JLP
Analysis Method: SW846 8270C
Lab Prep Batch: WG60480
Units: ug/Kgdrywt

CAS#	Compound	Flags	Results	DF	PQL	Adj.PQL	Adj.MDL
84-74-2	Di-n-butylphthalate	U	380	1.0	330	380	120
85-68-7	Butylbenzylphthalate	U	380	1.0	330	380	110
91-94-1	3,3'-Dichlorobenzidine	U	570	1.0	500	570	130
218-01-9	Chrysene	U	380	1.0	330	380	110
117-81-7	bis(2-Ethylhexyl)phthalate	U	380	1.0	330	380	110
117-84-0	Di-n-octylphthalate	U	380	1.0	330	380	240
367-12-4	2-Fluorophenol		70%				
13127-88-3	Phenol-D6		83%				
4165-60-0	Nitrobenzene-D5		80%				
321-60-8	2-Fluorobiphenyl		76%				
118-79-6	2,4,6-Tribromophenol		70%				
1718-51-0	Terphenyl-D14		78%				

LW
4/19/09

3

KATAHDIN ANALYTICAL SERVICES
Report of Analytical Results

Client: CH2MHill
Project: TO-009 Lejeune
PO No:
Sample Date: 01/26/09
Received Date: 01/27/09
Extraction Date: 02/05/09
Analysis Date: 22-FEB-2009 20:47
Report Date: 02/24/2009
Matrix: SOIL
% Solids: 93.8

Lab ID: SC0413-5
Client ID: MR08-SS348-09A
SDG: TO9-48
Extracted by: CB
Extraction Method: SW846 3550
Analyst: JLP
Analysis Method: SW846 8270C
Lab Prep Batch: WG60480
Units: ug/Kgdrywt

CAS#	Compound	Flags	Results	DF	PQL	Adj.PQL	Adj.MDL
100-52-7	Benzaldehyde	~~J~~ UJ	530	1.0	500	530	130 JCB
108-95-2	Phenol	U	530	1.0	500	530	170
111-44-4	Bis(2-Chloroethyl)ether	U	350	1.0	330	350	86
95-57-8	2-Chlorophenol	U	530	1.0	500	530	170
95-48-7	2-Methylphenol	U	640	1.0	600	640	210
108-60-1	2,2'-Oxybis(1-chloropropane)	U	350	1.0	330	350	95
98-86-2	Acetophenone	U	640	1.0	600	640	190
621-64-7	N-Nitroso-di-n-propylamine	U	350	1.0	330	350	88
65794-96-9	3&4-Methylphenol	U	640	1.0	600	640	200
67-72-1	Hexachloroethane	U	350	1.0	330	350	100
98-95-3	Nitrobenzene	U	350	1.0	330	350	97
78-59-1	Isophorone	U	350	1.0	330	350	80
88-75-5	2-Nitrophenol	U	640	1.0	600	640	180
105-67-9	2,4-Dimethylphenol	U	530	1.0	500	530	180
111-91-1	Bis(2-Chloroethoxy)methane	U	350	1.0	330	350	100
120-83-2	2,4-Dichlorophenol	U	530	1.0	500	530	160
106-47-8	4-Chloroaniline	U	530	1.0	500	530	130
105-60-2	Caprolactam	U	530	1.0	500	530	150
59-50-7	4-Chloro-3-Methylphenol	U	530	1.0	500	530	180
88-06-2	2,4,6-Trichlorophenol	U	530	1.0	500	530	160
95-95-4	2,4,5-Trichlorophenol	U	530	1.0	500	530	160
91-58-7	2-Chloronaphthalene	U	350	1.0	330	350	93
92-52-4	1,1'-Biphenyl	U	350	1.0	330	350	78
88-74-4	2-Nitroaniline	U	530	1.0	500	530	80
131-11-3	Dimethyl Phthalate	U	350	1.0	330	350	83
606-20-2	2,6-Dinitrotoluene	U	350	1.0	330	350	84
208-96-8	Acenaphthylene	U	350	1.0	330	350	75
99-09-2	3-Nitroaniline	U	530	1.0	500	530	100
83-32-9	Acenaphthene	U	350	1.0	330	350	69
51-28-5	2,4-Dinitrophenol	U	1300	1.0	1200	1300	400
132-64-9	Dibenzofuran	U	350	1.0	330	350	84
100-02-7	4-Nitrophenol	U	1300	1.0	1200	1300	330
121-14-2	2,4-Dinitrotoluene	U	350	1.0	330	350	91
84-66-2	Diethylphthalate	U	350	1.0	330	350	85
7005-72-3	4-Chlorophenyl-phenylether	U	350	1.0	330	350	83
100-01-6	4-Nitroaniline	U	530	1.0	500	530	140
534-52-1	4,6-Dinitro-2-Methylphenol	U	1300	1.0	1200	1300	360
86-30-6	N-Nitrosodiphenylamine	U	700	1.0	660	700	230
101-55-3	4-Bromophenyl-phenylether	U	350	1.0	330	350	91
1912-24-9	Atrazine	U	350	1.0	330	350	97
87-86-5	Pentachlorophenol	U	870	1.0	820	870	250
120-12-7	Anthracene	U	350	1.0	330	350	90
86-74-8	Carbazole	U	530	1.0	500	530	120

MW 4/19/09

3

KATAHDIN ANALYTICAL SERVICES
Report of Analytical Results

Client: CH2MHill
Project: TO-009 Lejeune
PO No:
Sample Date: 01/26/09
Received Date: 01/27/09
Extraction Date: 02/05/09
Analysis Date: 22-FEB-2009 20:47
Report Date: 02/24/2009
Matrix: SOIL
% Solids: 93.8

Lab ID: SC0413-5
Client ID: MR08-SS348-09A
SDG: TO9-48
Extracted by: CB
Extraction Method: SW846 3550
Analyst: JLP
Analysis Method: SW846 8270C
Lab Prep Batch: WG60480
Units: ug/Kgdrywt

CAS#	Compound	Flags	Results	DF	PQL	Adj.PQL	Adj.MDL
84-74-2	Di-n-butylphthalate	U	350	1.0	330	350	110
85-68-7	Butylbenzylphthalate	U	350	1.0	330	350	99
91-94-1	3,3'-Dichlorobenzidine	U	530	1.0	500	530	120
218-01-9	Chrysene	U	350	1.0	330	350	100
117-81-7	bis(2-Ethylhexyl)phthalate	J	110	1.0	330	350	100
117-84-0	Di-n-octylphthalate	U	350	1.0	330	350	220
367-12-4	2-Fluorophenol		72%				
13127-88-3	Phenol-D6		86%				
4165-60-0	Nitrobenzene-D5		73%				
321-60-8	2-Fluorobiphenyl		75%				
118-79-6	2,4,6-Tribromophenol		69%				
1718-51-0	Terphenyl-D14		94%				

lw
4/19/09

4

KATAHDIN ANALYTICAL SERVICES
Report of Analytical Results

Client: CH2MHill
Project: TO-009 Lejeune
PO No:
Sample Date: 01/26/09
Received Date: 01/27/09
Extraction Date: 02/05/09
Analysis Date: 22-FEB-2009 20:05
Report Date: 02/24/2009
Matrix: SOIL
% Solids: 88.4

Lab ID: SC0413-7
Client ID: MR08-IS348-2-3-09A
SDG: TO9-48
Extracted by: CB
Extraction Method: SW846 3550
Analyst: JLP
Analysis Method: SW846 8270C
Lab Prep Batch: WG60480
Units: ug/Kgdrywt

CAS#	Compound	Flags	Results	DF	PQL	Adj.PQL	Adj.MDL
100-52-7	Benzaldehyde	~~J~~ UJ	560	1.0	500	560	140 JCB
108-95-2	Phenol	U	560	1.0	500	560	180
111-44-4	Bis(2-Chloroethyl)ether	U	370	1.0	330	370	92
95-57-8	2-Chlorophenol	U	560	1.0	500	560	180
95-48-7	2-Methylphenol	U	680	1.0	600	680	230
108-60-1	2,2'-Oxybis(1-chloropropane)	U	370	1.0	330	370	100
98-86-2	Acetophenone	U	680	1.0	600	680	200
621-64-7	N-Nitroso-di-n-propylamine	U	370	1.0	330	370	94
65794-96-9	3&4-Methylphenol	U	680	1.0	600	680	210
67-72-1	Hexachloroethane	U	370	1.0	330	370	110
98-95-3	Nitrobenzene	U	370	1.0	330	370	100
78-59-1	Isophorone	U	370	1.0	330	370	85
88-75-5	2-Nitrophenol	U	680	1.0	600	680	190
105-67-9	2,4-Dimethylphenol	U	560	1.0	500	560	190
111-91-1	Bis(2-Chloroethoxy)methane	U	370	1.0	330	370	110
120-83-2	2,4-Dichlorophenol	U	560	1.0	500	560	170
106-47-8	4-Chloroaniline	U	560	1.0	500	560	130
105-60-2	Caprolactam	U	560	1.0	500	560	160
59-50-7	4-Chloro-3-Methylphenol	U	560	1.0	500	560	190
88-06-2	2,4,6-Trichlorophenol	U	560	1.0	500	560	180
95-95-4	2,4,5-Trichlorophenol	U	560	1.0	500	560	180
91-58-7	2-Chloronaphthalene	U	370	1.0	330	370	98
92-52-4	1,1'-Biphenyl	U	370	1.0	330	370	82
88-74-4	2-Nitroaniline	U	560	1.0	500	560	85
131-11-3	Dimethyl Phthalate	U	370	1.0	330	370	88
606-20-2	2,6-Dinitrotoluene	U	370	1.0	330	370	89
208-96-8	Acenaphthylene	U	370	1.0	330	370	79
99-09-2	3-Nitroaniline	U	560	1.0	500	560	110
83-32-9	Acenaphthene	U	370	1.0	330	370	73
51-28-5	2,4-Dinitrophenol	U	1400	1.0	1200	1400	430
132-64-9	Dibenzofuran	U	370	1.0	330	370	89
100-02-7	4-Nitrophenol	U	1400	1.0	1200	1400	350
121-14-2	2,4-Dinitrotoluene	U	370	1.0	330	370	96
84-66-2	Diethylphthalate	U	370	1.0	330	370	90
7005-72-3	4-Chlorophenyl-phenylether	U	370	1.0	330	370	88
100-01-6	4-Nitroaniline	U	560	1.0	500	560	150
534-52-1	4,6-Dinitro-2-Methylphenol	U	1400	1.0	1200	1400	380
86-30-6	N-Nitrosodiphenylamine	U	750	1.0	660	750	250
101-55-3	4-Bromophenyl-phenylether	U	370	1.0	330	370	96
1912-24-9	Atrazine	U	370	1.0	330	370	100
87-86-5	Pentachlorophenol	U	930	1.0	820	930	270
120-12-7	Anthracene	U	370	1.0	330	370	95
86-74-8	Carbazole	U	560	1.0	500	560	120

MW 4/19/09

KATAHDIN ANALYTICAL SERVICES
Report of Analytical Results

Client: CH2MHill
Project: TO-009 Lejeune
PO No:
Sample Date: 01/26/09
Received Date: 01/27/09
Extraction Date: 02/05/09
Analysis Date: 22-FEB-2009 20:05
Report Date: 02/24/2009
Matrix: SOIL
% Solids: 88.4

Lab ID: SC0413-7
Client ID: MR08-IS348-2-3-09A
SDG: TO9-48
Extracted by: CB
Extraction Method: SW846 3550
Analyst: JLP
Analysis Method: SW846 8270C
Lab Prep Batch: WG60480
Units: ug/Kgdrywt

CAS#	Compound	Flags	Results	DF	PQL	Adj.PQL	Adj.MDL
84-74-2	Di-n-butylphthalate	U	370	1.0	330	370	110
85-68-7	Butylbenzylphthalate	U	370	1.0	330	370	100
91-94-1	3,3'-Dichlorobenzidine	U	560	1.0	500	560	130
218-01-9	Chrysene	U	370	1.0	330	370	110
117-81-7	bis(2-Ethylhexyl)phthalate	U	370	1.0	330	370	110
117-84-0	Di-n-octylphthalate	U	370	1.0	330	370	240
367-12-4	2-Fluorophenol		56%				
13127-88-3	Phenol-D6		70%				
4165-60-0	Nitrobenzene-D5		65%				
321-60-8	2-Fluorobiphenyl		63%				
118-79-6	2,4,6-Tribromophenol		52%				
1718-51-0	Terphenyl-D14		65%				

MW 4/19/09

Appendix F
Soil Boring Logs

Boring Number: MR08-IS21

Client: NAVFAC
Project: UXO-08
Location: MCB Camp Lejeune
Project Number: 358852

Driller: Probe Tech
Drilling Method: Ingersoll Rand A-200 (DPT)
Sampling Method: Macro-core
Logged by: J. Frank
Start/Finish Date: 1/10/2007

Depth (ft)	Sample Information: Sample #	Sample Type	Recovery (%)	SPT (6"-6"-6")	Soil Log	Soil Description	Depth / Elev (ft)	Comments
						Ground Surface	0	
0	HA	HA	100	NM		**Silty Sand (SM)** Dark brown-black, highly organic silty fine sand **Clayey Sand (SC)** Yellow-orange, clayey, fine grained sand	0	Hand auger 0-4 ft
5	DP-1	DP	NM	NM				
10	DP-2	DP	NM	NM			-12	Collect MR08-IS21-9-11 from 9'-11' bgs at 1250 on 1/10/07
						End of Log	12	
15								
20								

Boring Number: MR08-IS22

Client: NAVFAC
Project: UXO-08
Location: MCB Camp Lejeune
Project Number: 330966

Driller: Probe Tech
Drilling Method: Ingersoll Rand A-200 (DPT)
Sampling Method: Macro-core
Logged by: J. Frank
Start/Finish Date: 1/10/2007

Depth (ft)	Sample Information: Sample #	Sample Type	Recovery (%)	SPT (6"-6"-6")	Soil Log	Soil Description	Depth / Elev (ft)	Comments
						Ground Surface	0	
0						**Clayey Sand (SC)** Tan-yellow, clayey fine sand	0 -1	Hand auger 0-4 ft
	HA	HA	100	NM		**Sandy Clay (CL)** Tan -yellow-orange, sandy clay	1	
5	DP-1	DP	NM	NM			-8	Collect MR08-IS22-5-7 from 5'-7' bgs at 1315 on 1/10/07
						End of Log	8	
10								
15								
20								

Boring Number: MR08-IS23

Client: NAVFAC
Project: UXO-08
Location: MCB Camp Lejeune
Project Number: 330966

Driller: Probe Tech
Drilling Method: Ingersoll Rand A-200 (DPT)
Sampling Method: Macro-core
Logged by: J. Frank
Start/Finish Date: 1/09/2007

Depth (ft)	Sample Information: Sample #	Sample Type	Recovery (%)	SPT (6"-6"-6")	Soil Log	Soil Description	Depth / Elev (ft)	Comments
						Ground Surface	0	Hand auger 0-4 ft
0	HA	HA	100	NM		**Fill** Tan, silty cemented sand, soft to hard, moist	0	
						Silty Sand (SM) Dark brown-black, highly organic silty sand, moist	-2 2	
5	DP-1	DP	NM	NM			-8 8	
						End of Log		
10								
15								
20								

Boring Number: MR08-IS24

Client: NAVFAC
Project: UXO-08
Location: MCB Camp Lejeune
Project Number: 330966

Driller: Probe Tech
Drilling Method: Ingersoll Rand A-200 (DPT)
Sampling Method: Macro-core
Logged by: J. Frank
Start/Finish Date: 1/10/2007

Depth (ft)	Sample Information: Sample #	Sample Type	Recovery (%)	SPT (6"-6"-6")	Soil Log	Soil Description	Depth / Elev (ft)	Comments
						Ground Surface	0	
0						**Fill Material** Light brown, silty sand	0 -1	Hand auger 0-4 ft
	HA	HA	100	NM		**Sand (SP)** Light brown, fine sand	1 -3	Collect MR08-IS24-2-4 from 2'-4' bgs at 0850 on 1/10/07
						Silty Sand (SM) Light brown to light grey, silty, fine grained sand	3 -4	
						End of Log	4	
5								
10								
15								
20								

Boring Number: MR08-IS25

Client: NAVFAC
Project: UXO-08
Location: MCB Camp Lejeune
Project Number: 330966

Driller: Probe Tech
Drilling Method: Ingersoll Rand A-200 (DPT)
Sampling Method: Macro-core
Logged by: J. Frank
Start/Finish Date: 1/10/2007

Depth (ft)	Sample Information: Sample #	Sample Type	Recovery (%)	SPT (6"-6"-6")	Soil Log	Soil Description	Depth / Elev (ft)	Comments
						Ground Surface	0	
0						**Silty Sand (SM)** Dark brown-black, highly organic, silty sand	0	Hand auger 0-4 ft
	HA	HA	100	NM				Collect MR08-IS25-4-6 from 4'-6' bgs at 1100 on 1/10/07
						Sandy Clay (CL) Orange, gray fine grained, sandy clay	-3 3	
						Sandy Clay (CL) Dark brown- gray fine grained sandy clay	-4 4	
5							-6 6	
						End of Log		
10								
15								
20								

Boring Number: MR08-IS26

Client: NAVFAC
Project: UXO-08
Location: MCB Camp Lejeune
Project Number: 330966

Driller: Probe Tech
Drilling Method: Ingersoll Rand A-200 (DPT)
Sampling Method: Macro-core
Logged by: J. Frank
Start/Finish Date: 1/10/2007

Depth (ft)	Sample Information: Sample #	Sample Type	Recovery (%)	SPT (6"-6"-6")	Soil Log	Soil Description	Depth / Elev (ft)	Comments
						Ground Surface	0	
0	HA	HA	100	NM		**Fill Material** Light brown silty sand	0 -1	Hand auger 0-4 ft
						Sand (SP) Light tan - light gray, fine grained sand	1	
						Silty Sand (SM) Dark brown- black, highly organic, silty sand	-3 3	Collect MR08-IS26-2-4 from 2'-4' bgs at 0900 on 1/10/07
						Silty Sand (SM) Brown - light gray, silty, fine grained sand	-4 4	
						End of Log		
5								
10								
15								
20								

Boring Number: MR08-IS27

Client: NAVFAC
Project: UXO-08
Location: MCB Camp Lejeune
Project Number: 330966

Driller: Probe Tech
Drilling Method: Ingersoll Rand A-200 (DPT)
Sampling Method: Macro-core
Logged by: J. Frank
Start/Finish Date: 1/10/2007

Depth (ft)	Sample Information: Sample #	Sample Type	Recovery (%)	SPT (6"-6"-6")	Soil Log	Soil Description	Depth / Elev (ft)	Comments
						Ground Surface	0	
0	HA	HA	100	NM		**Silty Sand (SM)** Dark brown-black, highly organic, silty, fine grained sand	0 / -1	Hand auger 0-4 ft
						Silty Sand (SM) Yellow-tan, silty, fine grained sand	1	
						Sand (SP) Brown-dark brown, fine grained sand	-3 / 3	
						Sand (SP) Brown - light gray, fine grained sand	-4 / 4	
5	DP-1	MC	NM	NM				
10	DP-2	MC	NM	NM			-12 / 12	
						End of Log		
15								
20								

Boring Number: MR08-IS28

Client: NAVFAC
Project: UXO-08
Location: MCB Camp Lejeune
Project Number: 330966

Driller: Probe Tech
Drilling Method: Ingersoll Rand A-200 (DPT)
Sampling Method: Macro-core
Logged by: J. Frank
Start/Finish Date: 1/10/2007

Depth (ft)	Sample Information: Sample #	Sample Type	Recovery (%)	SPT (6"-6"-6")	Soil Log	Soil Description	Depth / Elev (ft)	Comments
						Ground Surface	0	
0						**Sand (SP)** Light yellow- light brown, fine grained sand	0	Hand auger 0-4 ft
	HA	HA	100	NM				Collect MR08-IS28-2-4 from 2'-4' bgs at 1155 on 1/10/07
						Sand (SP) Light brown- light gray, fine grained sand	-3 3	
						End of Log	-4 4	
5								
10								
15								
20								

Boring Number: MR08-IS38

Client: NAVFAC
Project: CTO-168; UXO-08
Location: MCB Camp Lejeune
Project Number: 358852

Driller: Parratt Wolff
Drilling Method: Power Probe 9600T
Sampling Method: Macro-core
Logged by: S. Kline
Start/Finish Date: 7/28/08

Depth (ft)	Sample Information: Sample #	Sample Type	Recovery (%)	SPT (6"-6"-6")	Soil Log	Soil Description	Depth / Elev (ft)	Comments
						Ground Surface	0	
0						**Grass/soil**	0	Hand auger 0-4 ft
	HA	HA	100	NM		**Sandy silt (ML)** Reddish brown sandy silt, low plasticity, stiff	-4	PID = 0.0 ppm
5	DP-1	DP	92	NM		**Sandy silt (ML)** Same as above grading in to medium gray coloration, stiff, roots (organic matter)	4 -7	0.0 ppm
10	DP-2	DP	88	NM		**Sandy silt (ML)** White sandy silt, low plasticity, less stiff, saturated at 10 ft	7 -11	0.0 ppm
						Sandy silt (ML) White sandy silt, silt 20%, loose, saturated	11 -12	
						End of Log	12	Boring terminated at 12 ft
15								
20								

Boring Number: MR08-IS39

Client: NAVFAC
Project: CTO-168; UXO-08
Location: MCB Camp Lejeune
Project Number: 358852

Driller: Parratt Wolff
Drilling Method: Power Probe 9600T
Sampling Method: Macro-core
Logged by: S. Kline
Start/Finish Date: 7/28/08

Depth (ft)	Sample Information: Sample #	Sample Type	Recovery (%)	SPT (6"-6"-6")	Soil Log	Soil Description	Depth / Elev (ft)	Comments
						Ground Surface	0	
0						**Grass/Sand** Grass and black sand, poorly sorted	0	
						Fill Gravel fill		PID = 0.0 ppm
	DP-1	DP	100	NM		**Sandy silt (ML)** Yellowish brown sandy silt, very dense/stiff, damp, fine-medium grain sand 20%		
5							-5 5	0.0 ppm
	DP-2	DP	88	NM		**Sandy silt (ML)** Light gray/white sandy silt, stiff, wet at 7ft		
							-8 8	Boring terminated at 8 ft
						End of Log		
10								
15								
20								

CH2MHILL

Boring Number: MR08-IS40

Client: NAVFAC
Project: CTO-168; UXO-08
Location: MCB Camp Lejeune
Project Number: 358852

Driller: Parratt Wolff
Drilling Method: Power Probe 9600T
Sampling Method: Macro-core
Logged by: S. Kline
Start/Finish Date: 7/29/08

Depth (ft)	Sample Information: Sample #	Sample Type	Recovery (%)	SPT (6"-6"-6")	Soil Log	Soil Description	Depth / Elev (ft)	Comments
						Ground Surface	0	
0						**Grass/Sod**	0	
						Fill Very well graded sand/silt, fine gravel mix	-2	
	DP-1	DP	100	NM		**Sandy silt (ML)** Gray brown sandy silt, dry/damp, 20% sand content (fine-gravel), low plasticity, medium stiff to low stiff	2	PID = 0.0 ppm
5								0.0 ppm
	DP-2	DP	100	NM			-7	
						Sandy silt (ML) White sandy silt, wet, fine grained,, soft	7	
							-8	Boring terminated at 8 ft
						End of Log	8	
10								
15								
20								

Boring Number: MR08-IS41

Client: NAVFAC
Project: CTO-168; UXO-08
Location: MCB Camp Lejeune
Project Number: 358852

Driller: Parratt Wolff
Drilling Method: Power Probe 9600T
Sampling Method: Macro-core
Logged by: S. Kline
Start/Finish Date: 7/29/08

Depth (ft)	Sample Information: Sample #	Sample Type	Recovery (%)	SPT (6"-6"-6")	Soil Log	Soil Description	Depth / Elev (ft)	Comments
						Ground Surface	0	
0						**Grass/Sod**	0	
	DP-1	DP	100	NM		**Sandy silt (ML)** Gray brown sandy silt, damp/moist, 10% sand content, low plasticity, medium stiff to low stiff, saturated at 6'		PID = 0.0 ppm
5	DP-2	DP	100	NM				0.0 ppm
							-7	
						Silty sand (SM) White/gray sandy silt, wet, fine grained, soft	7	
							-8	Boring terminated at 8 ft
						End of Log	8	
10								
15								
20								

Boring Number: MR08-IS42

Client: NAVFAC
Project: CTO-168; UXO-08
Location: MCB Camp Lejeune
Project Number: 358852

Driller: Parratt Wolff
Drilling Method: Power Probe 9600T
Sampling Method: Macro-core
Logged by: S. Kline
Start/Finish Date: 7/29/08

Depth (ft)	Sample Information: Sample #	Sample Type	Recovery (%)	SPT (6"-6"-6")	Soil Log	Soil Description	Depth / Elev (ft)	Comments
						Ground Surface	0	
0						**Grass/Sod**	0	
	DP-1	DP	100	NM		**Sandy silt (ML)** Gray with brown speckling sandy silt, low plasticity, sand content 10-20%,cracking, damp/moist, low stiff		PID = 0.0 ppm
5								0.0 ppm
	DP-2	DP	100	NM			-6	
						Silty sand (SM) White/gray sandy silt, fine grained, soft, poorly graded, wet at 7ft	6	
							-8	Boring terminated at 8 ft
						End of Log	8	
10								
15								
20								

Boring Number: MR08-IS43

Client: NAVFAC
Project: CTO-168; UXO-08
Location: MCB Camp Lejeune
Project Number: 358852

Driller: Parratt Wolff
Drilling Method: Power Probe 9600T
Sampling Method: Macro-core
Logged by: S. Kline
Start/Finish Date: 7/28/08

Depth (ft)	Sample Information: Sample #	Sample Type	Recovery (%)	SPT (6"-6"-6")	Soil Log	Soil Description	Depth / Elev (ft)	Comments
						Ground Surface	0	
0						**Grass/Sod**	0	
	DP-1	DP	96	NM		**Sandy silt (ML)** Reddish brown to black sandy silt, sand at 20%, stiff, damp, low plasticity, rounded quartz clasts at 3' 3" diameter	-4	PID = 0.0 ppm
5	DP-2	DP	96	NM		**Sandy silt (ML)** Gray brown sandy silt, moist, stiff	4	0.0 ppm
						Sandy silt (ML) Gray/white sandy silt, soft, saturated at 7ft	-7 7	
							-8 8	Boring terminated at 8 ft
10								
15								
20								

CH2MHILL

Boring Number: MR08-IS21

Client: NAVFAC
Project: CTO-168; UXO-08
Location: MCB Camp Lejeune
Project Number: 358852

Driller: Probe Technology
Drilling Method: Ingersoll Rand A-200 (DPT)
Sampling Method: Macro-core
Logged by: J. Frank
Start/Finish Date: 1/9/2007 - 1/10/2007

Depth (ft)	Sample Information: Sample #	Sample Type	Recovery (%)	SPT (6"-6"-6")	Soil Log	Soil Description	Comments
0						Ground Surface	Hand auger 0-4 ft
	HA	HA	100	NM		**Silty Sand (SM)** Dark brown-black, highly organic silty fine sand, medium dense, moist	
						Poorly Graded Sand (SP) Yellow-orange, clayey, very fine to fine grained sand, trace clay, medium dense, moist	
5	DP-1	DP	NM	NM			
10	DP-2	DP	NM	NM			Collect MRO8-IS21-9-11 from 9-11 ft bgs on 1/10/2007
						End of Log	Boring terminated at 12 ft bgs
15							
20							

CH2MHILL

Boring Number: MR08-IS22

Client: NAVFAC
Project: CTO-168; UXO-08
Location: MCB Camp Lejeune
Project Number: 330966

Driller: Probe Technology
Drilling Method: Ingersoll Rand A-200 (DPT)
Sampling Method: Macro-core
Logged by: J. Frank
Start/Finish Date: 1/9/2007 - 1/10/2007

Depth (ft)	Sample Information: Sample #	Sample Type	Recovery (%)	SPT (6"-6"-6")	Soil Log	Soil Description	Comments
						Ground Surface	
0	HA	HA	100	NM		**Clayey Sand (SC)** Tan-yellow, clayey,silty, fine sand, medium dense, moist **Sandy Clay (CL)** Tan -yellow-orange, sandy clay, low plasticity, soft, moist	Hand auger 0-4 ft
5	DP-1	DP	NM	NM			Collect MRO8-IS22-5-7 from 5-7 ft bgs on 1/10/2007
						End of Log	Boring terminated at 8 ft bgs
10							
15							
20							

CH2MHILL

Boring Number: MR08-IS23

Client: NAVFAC
Project: CTO-168; UXO-08
Location: MCB Camp Lejeune
Project Number: 330966

Driller: Probe Technology
Drilling Method: Ingersoll Rand A-200 (DPT)
Sampling Method: Macro-core
Logged by: J. Frank
Start/Finish Date: 1/09/2007 - 1/10/2007

Depth (ft)	Sample Information: Sample #	Sample Type	Recovery (%)	SPT (6"-6"-6")	Soil Log	Soil Description	Comments
0						Ground Surface	Hand auger 0-4 ft
						Fill Tan, silty cemented sand, soft to hard, moist	
	HA	HA	100	NM		**Silty Sand (SM)** Dark brown-black, highly organic silty sand, moist	
5	DP-1	DP	NM	NM			Collect MRO8-IS23-6-8 and MRO8-IS23D-6-8 from 6-8 ft bgs on 1/10/2007
						End of Log	Boring terminated at 8 ft bgs
10							
15							
20							

CH2MHILL

Boring Number: MR08-IS24

Client: NAVFAC
Project: CTO-168; UXO-08
Location: MCB Camp Lejeune
Project Number: 330966

Driller: Probe Technology
Drilling Method: Ingersoll Rand A-200 (DPT)
Sampling Method: Macro-core
Logged by: J. Frank
Start/Finish Date: 1/09/2007 - 1/10/2007

Depth (ft)	Sample Information: Sample #	Sample Type	Recovery (%)	SPT (6"-6"-6")	Soil Log	Soil Description	Comments
0						Ground Surface	
						Fill Material Light brown-tan, silty sand, soft to hard, moist	Hand auger 0-4 ft
						Sand (SP) Tan, fine sand	
	HA	HA	100	NM			Collect MRO8-IS24-2-4 from 2-4 ft bgs on 1/10/2007
						Silty Sand (SM) Light brown to light grey, silty, fine grained sand, moist to wet	Boring terminated at 4 ft bgs
						End of Log	
5							
10							
15							
20							

CH2MHILL

Boring Number: MR08-IS25

Client: NAVFAC
Project: CTO-168; UXO-08
Location: MCB Camp Lejeune
Project Number: 330966

Driller: Probe Technology
Drilling Method: Ingersoll Rand A-200 (DPT)
Sampling Method: Macro-core
Logged by: J. Frank
Start/Finish Date: 1/09/2007 - 1/10/2007

Depth (ft)	Sample Information: Sample #	Sample Type	Recovery (%)	SPT (6"-6"-6")	Soil Log	Soil Description	Comments
0						Ground Surface	Hand auger 0-4 ft
	HA	HA	100	NM		**Silty Sand (SM)** Dark brown-black, highly organic, silty sand	
						Sandy Clay (CL) Orange, gray fine grained, sandy clay Dark brown- gray fine grained sandy clay	
5	DP-1	DP					Collect MRO8-IS25-4-6 from 4-6 ft bgs on 1/10/2007
						End of Log	Boring terminated at 6 ft bgs
10							
15							
20							

CH2MHILL

Boring Number: MR08-IS26

Client: NAVFAC
Project: CTO-168; UXO-08
Location: MCB Camp Lejeune
Project Number: 330966

Driller: Probe Technology
Drilling Method: Ingersoll Rand A-200 (DPT)
Sampling Method: Macro-core
Logged by: J. Frank
Start/Finish Date: 1/09/2007 - 1/10/2007

Depth (ft)	Sample Information: Sample #	Sample Type	Recovery (%)	SPT (6"-6"-6")	Soil Log	Soil Description	Comments
0						Ground Surface	Hand auger 0-4 ft
						Fill Material Light brown, silty sand, soft to hard, moist	
						Silty Sand (SM) Tan - light gray, siltyfine grained sand	
	HA	HA	100	NM		Dark brown- black, highly organic, silty sand, moist	Collect MRO8-IS26-2-4 from 2-4 ft bgs
						Brown - light gray, silty, fine grained sand, medium dense, moist	
						End of Log	Boring terminated at 4 ft bgs
5							
10							
15							
20							

CH2MHILL

Boring Number: MR08-IS27

Client: NAVFAC
Project: CTO-168; UXO-08
Location: MCB Camp Lejeune
Project Number: 330966

Driller: Probe Technology
Drilling Method: Ingersoll Rand A-200 (DPT)
Sampling Method: Macro-core
Logged by: J. Frank
Start/Finish Date: 1/09/2007 - 1/10/2007

Depth (ft)	Sample Information: Sample #	Sample Type	Recovery (%)	SPT (6"-6"-6")	Soil Log	Soil Description	Comments
0						Ground Surface	Hand auger 0-4 ft
	HA	HA	100	NM		**Silty Sand (SM)** Dark brown-black, highly organic, silty, fine grained sand, moist	
						Yellow-tan, silty, fine grained sand, trace silt, moist	
						Sand (SP) Brown-dark brown, very fine to fine grained sand, trace silt, moist	No subsurface soil sample collected
	DP-1	MC	NM	NM		Brown - light gray, very fine to fine grained sand, trace silt, moist	
5						Struck terra cotta pipe at 5 ft bgs.	Boring terminated at 5 ft bgs
						End of Log	
10							
15							
20							

CH2MHILL

Boring Number: MR08-IS28

Client: NAVFAC
Project: CTO-168; UXO-08
Location: MCB Camp Lejeune
Project Number: 330966

Driller: Probe Technology
Drilling Method: Ingersoll Rand A-200 (DPT)
Sampling Method: Macro-core
Logged by: J. Frank
Start/Finish Date: 1/09/2007 - 1/10/2007

Depth (ft)	Sample Information: Sample #	Sample Type	Recovery (%)	SPT (6"-6"-6")	Soil Log	Soil Description	Comments
0						Ground Surface	
	HA	HA	100	NM		**Sand (SP)** Light yellow- light brown, very fine to fine grained sand, soft, moist	Hand auger 0-4 ft
						Light brown- light gray, very fine to fine grained sand, soft, moist	Collect MRO8-IS28-2-4 and MRO8-IS28D-2-4 from 2-4 ft bgs
						End of Log	Boring terminated at 4 ft bgs
5							
10							
15							
20							

CH2MHILL

Boring Number: MR08-IS29

Client: NAVFAC
Project: CTO-168; UXO-08
Location: MCB Camp Lejeune
Project Number: 330966

Driller: Probe Technology
Drilling Method: Ingersoll Rand A-200 (DPT)
Sampling Method: Macro-core
Logged by: J. Frank
Start/Finish Date: 1/09/2007 - 1/10/2007

Depth (ft)	Sample Information: Sample #	Sample Type	Recovery (%)	SPT (6"-6"-6")	Soil Log	Soil Description	Comments
0						Ground Surface	Hand auger 0-4 ft
						No information provided	
	HA	HA	100	NM			Collect MRO8-IS29-2-4 from 2-4 ft bgs
							Boring terminated at 4 ft bgs
						End of Log	
5							
10							
15							
20							

CH2MHILL

Boring Number: MR08-IS38

Client: NAVFAC
Project: CTO-168; UXO-08
Location: MCB Camp Lejeune
Project Number: 358852

Driller: Parratt Wolff
Drilling Method: DPT
Sampling Method: Macro-core
Logged by: S. Kline
Start/Finish Date: 7/28/08

Depth (ft)	Sample Information: Sample #	Sample Type	Recovery (%)	SPT (6"-6"-6")	Soil Log	Soil Description	Comments
						Ground Surface	
0						**Grass/soil**	Hand auger 0-4 ft
	HA	HA	100	NM		**Sandy silt (ML)** Reddish brown sandy silt, low plasticity, stiff	PID = 0.0 ppm
						Gray, sandy silt, stiff, roots (organic matter)	
5	DP-1	DP	92	NM			PID = 0.0 ppm Collect MRO8-IS38-5-6 sample from 5-6' bgs
						White sandy silt, low plasticity, less stiff, saturated at 10 ft	
10	DP-2	DP	88	NM			PID = 0.0 ppm
						White sandy silt, silt 20%, loose, saturated	
						End of Log	Boring terminated at 12 ft bgs
15							
20							

CH2MHILL

Boring Number: MR08-IS39

Client: NAVFAC
Project: CTO-168; UXO-08
Location: MCB Camp Lejeune
Project Number: 358852

Driller: Parratt Wolff
Drilling Method: Power Probe 9600T
Sampling Method: Macro-core
Logged by: S. Kline
Start/Finish Date: 7/28/08

Depth (ft)	Sample Information: Sample #	Sample Type	Recovery (%)	SPT (6"-6"-6")	Soil Log	Soil Description	Comments
0						Ground Surface	
						Grass/Sand Grass and black sand, poorly sorted	PID = 0.0 ppm
						Fill Gravel fill	
	DP-1	DP	100	NM		**Sandy silt (ML)** Yellowish brown sandy silt, very dense/stiff, damp, fine-medium grain sand 20%	
5						Light gray/white sandy silt, stiff, wet at 7ft	0.0 ppm
	DP-2	DP	88	NM			Collect sample MR08-IS39-5-6 from 5-6 ft bgs
						End of Log	Boring terminated at 8 ft
10							
15							
20							

CH2MHILL

Boring Number: MR08-IS40

Client: NAVFAC
Project: CTO-168; UXO-08
Location: MCB Camp Lejeune
Project Number: 358852

Driller: Parratt Wolff
Drilling Method: Power Probe 9600T
Sampling Method: Macro-core
Logged by: S. Kline
Start/Finish Date: 7/29/08

Depth (ft)	Sample Information: Sample #	Sample Type	Recovery (%)	SPT (6"-6"-6")	Soil Log	Soil Description	Comments
0						Ground Surface	
						Grass/Sod	
						Fill Very well graded sand/silt, fine gravel mix	
	DP-1	DP	100	NM		**Sandy silt (ML)** Gray brown sandy silt, dry/damp, 20% sand content (fine-gravel), low plasticity, medium stiff to low stiff	PID = 0.0 ppm
5							PID = 0.0 ppm
	DP-2	DP	100	NM			Collect sample MRO8-IS40-5-6 from 5-6 ft bgs
						White sandy silt, wet, fine grained, soft	
						End of Log	Boring terminated at 8 ft
10							
15							
20							

CH2MHILL

Boring Number: MR08-IS41

Client: NAVFAC
Project: CTO-168; UXO-08
Location: MCB Camp Lejeune
Project Number: 358852

Driller: Parratt Wolff
Drilling Method: Power Probe 9600T
Sampling Method: Macro-core
Logged by: S. Kline
Start/Finish Date: 7/29/08

Depth (ft)	Sample Information: Sample #	Sample Type	Recovery (%)	SPT (6"-6"-6")	Soil Log	Soil Description	Comments
						Ground Surface	
0						**Grass/Sod**	
	DP-1	DP	100	NM		**Sandy silt (ML)** Gray brown sandy silt, damp/moist, 10% sand content, low plasticity, medium stiff to low stiff, saturated at 6'	PID = 0.0 ppm
5							0.0 ppm
	DP-2	DP	100	NM			Collect MRO8-IS41-5-6 from 5-6 ft bgs
						Silty sand (SM) White/gray, silty sand, wet, fine grained, soft	Boring terminated at 8 ft
						End of Log	
10							
15							
20							

CH2MHILL

Boring Number: MR08-IS42

Client: NAVFAC
Project: CTO-168; UXO-08
Location: MCB Camp Lejeune
Project Number: 358852

Driller: Parratt Wolff
Drilling Method: Power Probe 9600T
Sampling Method: Macro-core
Logged by: S. Kline
Start/Finish Date: 7/29/08

Depth (ft)	Sample Information: Sample #	Sample Type	Recovery (%)	SPT (6"-6"-6")	Soil Log	Soil Description	Comments
						Ground Surface	
0						**Grass/Sod**	
						Sandy silt (ML) Gray with brown speckling sandy silt, low plasticity, sand content 10-20%,cracking, damp/moist, low stiff	PID = 0.1 ppm
	DP-1	DP	100	NM			PID = 0.0 ppm
5							PID = 0.2 ppm
	DP-2	DP	100	NM		**Silty sand (SM)** White/gray, siltysand, fine grained, soft, poorly graded, wet at 7ft	Collect samples MRO8-IS42-5-6 and MRO8-IS42D-5-6 from 5-6 ft bgs
						End of Log	Boring terminated at 8 ft
10							
15							
20							

CH2MHILL

Boring Number: MR08-IS43

Client: NAVFAC
Project: CTO-168; UXO-08
Location: MCB Camp Lejeune
Project Number: 358852

Driller: Parratt Wolff
Drilling Method: Power Probe 9600T
Sampling Method: Macro-core
Logged by: S. Kline
Start/Finish Date: 7/28/08

Depth (ft)	Sample Information: Sample #	Sample Type	Recovery (%)	SPT (6"-6"-6")	Soil Log	Soil Description	Comments
0						Ground Surface	
						Grass/Sod	
	DP-1	DP	96	NM		**Sandy silt (ML)** Reddish brown to black sandy silt, sand at 20%, stiff, damp, low plasticity, rounded quartz clasts at 3' 3" diameter	PID = 0.0 ppm
						Gray brown sandy silt, moist, stiff	
5							PID = 0.0 ppm
	DP-2	DP	96	NM			Collect MRO8-IS43-5-6 from 5-6 ft bgs
						Gray/white sandy silt, soft, saturated at 7ft	
							Boring terminated at 8 ft
						End of Log	
10							
15							
20							

CH2MHILL

Boring Number: MR08-SB050

Client: NAVFAC
Project: HPCA, POIA, and FC PA/SI Report
Location: MCB Camp Lejeune
Project Number: 363366

Driller: Parratt Wolff
Drilling Method: DPT (Power Probe 9600T)
Sampling Method: 48" macrocore
Logged by: S. Kline/RDU
Start/Finish Date: 12/2/08

Depth (ft)	Sample #	Sample Type	Recovery (%)	SPT (6"-6"-6-6")	Soil Log	Soil Description	Depth / Elev (ft)	Comments
						Ground Surface	0	
0	HA	HA	100	N A		**Silty Sand (SM)** Black, fine grained, loose, damp, 30% silt	0	Headspace screened by PID 0.0 ppm
						Sandy Silt (ML) Brown, very plastic, 10% sand, soft to medium stiff, damp	-3 3	0.0 ppm
						No Recovery	-4 4	
5	DP-1	DP	75	N A			-5 5	Collect MR08-IS50-5-6 at 5ft bgs
						Silty Sand (SM) Light gray, fine grained, loose, wet	-7 7	
						End of Log	-8 8	Terminate boring at 8ft
10								
15								
20								

Boring Number: MR08-SB051

Client: NAVFAC
Project: HPCA, POIA, and FC PA/SI Report
Location: MCB Camp Lejeune
Project Number: 363366

Driller: Parratt Wolff
Drilling Method: DPT (Power Probe 9600T)
Sampling Method: 48" macrocore
Logged by: S. Kline/RDU
Start/Finish Date: 12/2/08

Depth (ft)	Sample #	Sample Type	Recovery (%)	SPT (6"-6"-6-6")	Soil Log	Soil Description	Depth / Elev (ft)	Comments
						Ground Surface	0	
0	HA	HA	100	N A		**Silty Sand (SM)** Black, fine grained, loose, moist, 10-20% silt	0	Headspace screened by PID 0.0 ppm 0.0 ppm
5	DP-1	DP	75	N A		**Silty Sand (SM)** Light gray, loose, wet, fine grained Saturated at 7' **No Recovery**	-5 5 -7 7 -8 8	Collect MR08-IS51-5-6 at 5ft bgs Terminate boring at 8ft
						End of Log		
10								
15								
20								

Boring Number: MR08-SB052

Client: NAVFAC
Project: HPCA, POIA, and FC PA/SI Report
Location: MCB Camp Lejeune
Project Number: 363366

Driller: Parratt Wolff
Drilling Method: DPT (Power Probe 9600T)
Sampling Method: 48" macrocore
Logged by: S. Kline/RDU
Start/Finish Date: 12/2/08

Depth (ft)	Sample Information: Sample #	Sample Type	Recovery (%)	SPT (6"-6"-6-6")	Soil Log	Soil Description	Depth / Elev (ft)	Comments
						Ground Surface	0	
0	HA	HA	100	N A		**Silty Sand (SM)** Tan-brown, 10-20% silt, fine grained, loose, damp	0	Headspace screened by PID 0.0 ppm 0.0 ppm
							-4	
	DP-1	DP	75	N A		**No Recovery**	4	
5						**Silty Sand (SM)** Light gray, loose to medium dense, moist to wet, fine grained Saturated at 7.5'	-5 5	Collect MR08-IS52-5-6 at 5ft bgs
							-8 8	Terminate boring at 8ft
						End of Log		
10								
15								
20								

CH2MHILL

Boring Number: MR08-SB053

Client: NAVFAC
Project: HPCA, POIA, and FC PA/SI Report
Location: MCB Camp Lejeune
Project Number: 363366

Driller: Parratt Wolff
Drilling Method: DPT (Power Probe 9600T)
Sampling Method: 48" macrocore
Logged by: S. Kline/RDU
Start/Finish Date: 12/2/08

Depth (ft)	Sample Information: Sample #	Sample Type	Recovery (%)	SPT (6"-6"-6-6")	Soil Log	Soil Description	Depth / Elev (ft)	Comments
						Ground Surface	0	
0	HA	HA	100	N A		**Silty Sand (SM)** Light brown, fine grained, 20% silt, loose, damp	0	Headspace screened by PID 0.0 ppm 0.0 ppm
							-4	
						No Recovery	4	
5	DP-1	DP	75	N A		**Silty Sand (SM)** Light gray, loose to medium dense, wet, fine grained	-5 5 -6 6	Collect MR08-IS53-5-6 at 5ft bgs
							-8	Terminate boring at 8ft
						End of Log	8	
10								
15								
20								

Boring Number: MR08-SB054

Client: NAVFAC
Project: HPCA, POIA, and FC PA/SI Report
Location: MCB Camp Lejeune
Project Number: 363366

Driller: Parratt Wolff
Drilling Method: DPT (Power Probe 9600T)
Sampling Method: 48" macrocore
Logged by: S. Kline/RDU
Start/Finish Date: 12/2/08

Depth (ft)	Sample #	Sample Type	Recovery (%)	SPT (6"-6"-6-6")	Soil Log	Soil Description	Depth / Elev (ft)	Comments
						Ground Surface	0	
0	HA	HA	100	N A		**Silty Sand (SM)** Black/brown, fine grained, organic material (roots), 20-30% silt, loose, damp	0	Headspace screened by PID 0.0 ppm 0.0 ppm
						No Recovery	-4 4	
5	DP-1	DP	75	N A			-5 5	Collect MR08-IS54-6-7 at 6ft bgs
						Silty Sand (SM) Light gray, loose, wet, fine grained	-7 7	
						End of Log	-8 8	Terminate boring at 8ft
10								
15								
20								

Boring Number: MR08-SB055

Client: NAVFAC
Project: HPCA, POIA, and FC PA/SI Report
Location: MCB Camp Lejeune
Project Number: 363366

Driller: Parratt Wolff
Drilling Method: DPT (Power Probe 9600T)
Sampling Method: 48" macrocore
Logged by: S. Kline/RDU
Start/Finish Date: 12/2/08

Depth (ft)	Sample Information: Sample #	Sample Type	Recovery (%)	SPT (6"-6"-6-6")	Soil Log	Soil Description	Depth / Elev (ft)	Comments
						Ground Surface	0	
0	HA	HA	100	N A		**Silty Sand (SM)** Black/brown, fine grained, 20-30% silt, loose to semi-loose, damp	0	Headspace screened by PID 0.0 ppm 0.0 ppm Collect MR08-IS55-4-5 at 4ft bgs
5	DP-1	DP	75	N A		**Sandy Silt (ML)** Gray/brown, soft to medium stiff, low plasticity, wet	-5 5	
						No Recovery	-7 7	
						End of Log	-8 8	Terminate boring at 8ft
10								
15								
20								

CH2MHILL

Boring Number: MR08-SB056

Client: NAVFAC
Project: HPCA, POIA, and FC PA/SI Report
Location: MCB Camp Lejeune
Project Number: 363366

Driller: Parratt Wolff
Drilling Method: DPT (Power Probe 9600T)
Sampling Method: 48" macrocore
Logged by: S. Kline/RDU
Start/Finish Date: 12/6/08

Depth (ft)	Sample Information: Sample #	Sample Type	Recovery (%)	SPT (6"-6"-6-6")	Soil Log	Soil Description	Depth / Elev (ft)	Comments
						Ground Surface	0	
0	HA	HA	100	N A		**Silty Sand (SM)** Black-brown, loose, fine grained, 20-30% silt, organic material present, damp to moist	0	Headspace screened by PID 0.0 ppm Collect MR08-IS56-2-3 at 2ft bgs
						End of Log	-4 4	Terminate boring at 4'
5								
10								
15								
20								

Boring Number: MR08-SB057

Client: NAVFAC
Project: HPCA, POIA, and FC PA/SI Report
Location: MCB Camp Lejeune
Project Number: 363366

Driller: Parratt Wolff
Drilling Method: DPT (Power Probe 9600T)
Sampling Method: 48" macrocore
Logged by: S. Kline/RDU
Start/Finish Date: 12/6/08

Depth (ft)	Sample Information: Sample #	Sample Type	Recovery (%)	SPT (6"-6"-6-6")	Soil Log	Soil Description	Depth / Elev (ft)	Comments
						Ground Surface	0	
0						**Silty Sand (SM)** Black, fine grained, loose, moist, 10-20% silt	0	Headspace screened by PID
						Silty Sand (SM) Light gray/brown, fine grained, medium dense, 10-20% silt, trace gravel up to 1", moist	-1 1	0.0 ppm
	HA	HA	100	N A		Saturated at 7'		Collect MR08-IS57-2-3 at 2ft bgs
							-4 4	Terminate boring at 4'
						End of Log		
5								
10								
15								
20								

CH2MHILL

Boring Number: MR08-SB058

Client: NAVFAC
Project: HPCA, POIA, and FC PA/SI Report
Location: MCB Camp Lejeune
Project Number: 363366

Driller: Parratt Wolff
Drilling Method: DPT (Power Probe 9600T)
Sampling Method: 48" macrocore
Logged by: S. Kline/RDU
Start/Finish Date: 12/6/08

Depth (ft)	Sample Information: Sample #	Sample Type	Recovery (%)	SPT (6"-6"-6-6")	Soil Log	Soil Description	Depth / Elev (ft)	Comments
						Ground Surface	0	
0	HA	HA	100	N A		**Silty Sand (SM)** Black, fine grained, loose, damp	0	Headspace screened by PID 0.0 ppm Collect MR08-IS58-2-3 at 2ft bgs
						Silty Sand (SM) Black, loose, moist, fine grained	-3 / 3	
						End of Log	-4 / 4	Terminate boring at 4'
5								
10								
15								
20								

Boring Number: MR08-SB059

Client: NAVFAC
Project: HPCA, POIA, and FC PA/SI Report
Location: MCB Camp Lejeune
Project Number: 363366

Driller: Parratt Wolff
Drilling Method: DPT (Power Probe 9600T)
Sampling Method: 48" macrocore
Logged by: S. Kline/RDU
Start/Finish Date: 12/6/08

Depth (ft)	Sample #	Sample Type	Recovery (%)	SPT (6"-6"-6-6")	Soil Log	Soil Description	Depth / Elev (ft)	Comments
						Ground Surface	0	
0	HA	HA	100	N A		**Silty Sand (SM)** Dark gray, fine grained, loose to medium density, damp	0	Headspace screened by PID 0.0 ppm 0.0 ppm Collect MR08-IS59-3-4 at 3ft bgs
							-4	
	DP-1	DP	88	N A		**No Recovery** Saturated at 6'	4	0.0 ppm
5								
							-8	Terminate boring at 8'
						End of Log	8	
10								
15								
20								

CH2MHILL

Boring Number: MR08-SB060

Client: NAVFAC
Project: HPCA, POIA, and FC PA/SI Report
Location: MCB Camp Lejeune
Project Number: 363366

Driller: Parratt Wolff
Drilling Method: DPT (Power Probe 9600T)
Sampling Method: 48" macrocore
Logged by: S. Kline/RDU
Start/Finish Date: 12/6/08

Depth (ft)	Sample Information: Sample #	Sample Type	Recovery (%)	SPT (6"-6"-6-6")	Soil Log	Soil Description	Depth / Elev (ft)	Comments
						Ground Surface	0	
0	HA	HA	100	N A		**Silty Sand (SM)** Black/gray, fine grained, loose, damp	0	Headspace screened by PID 0.0 ppm Collect MR08-IS60-2-3 at 2ft bgs
						Sandy Silt (ML) Gray, fine grained, moist 10-20% sand, medium plasticity, soft to stiff, moist to wet	-3 3 -4 4	Terminate boring at 4'
						End of Log		
5								
10								
15								
20								

Boring Number: MR08-SB061

Client: NAVFAC
Project: HPCA, POIA, and FC PA/SI Report
Location: MCB Camp Lejeune
Project Number: 363366

Driller: Parratt Wolff
Drilling Method: DPT (Power Probe 9600T)
Sampling Method: 48" macrocore
Logged by: S. Kline/RDU
Start/Finish Date: 12/6/08

Depth (ft)	Sample #	Sample Type	Recovery (%)	SPT (6"-6"-6-6")	Soil Log	Soil Description	Depth / Elev (ft)	Comments
						Ground Surface	0	
0	HA	HA	100	N A		**Silty Sand (SM)** Black-gray, fine grained, loose, damp	0	Headspace screened by PID 0.0 ppm Collect MR08-IS61-2-3 at 2ft bgs
						Sandy Silt (ML) Brown-gray, fine grained sand, stiff, medium plasticity, moist to wet	-3 3	
						End of Log	-4 4	Terminate boring at 4'
5								
10								
15								
20								

Boring Number: MR08-SB062

Client: NAVFAC
Project: HPCA, POIA, and FC PA/SI Report
Location: MCB Camp Lejeune
Project Number: 363366

Driller: Parratt Wolff
Drilling Method: DPT (Power Probe 9600T)
Sampling Method: 48" macrocore
Logged by: S. Kline/RDU
Start/Finish Date: 12/6/08

Depth (ft)	Sample #	Sample Type	Recovery (%)	SPT (6"-6"-6-6")	Soil Log	Soil Description	Depth / Elev (ft)	Comments
						Ground Surface	0	
0	HA	HA	100	N A		**Silty Sand (SM)** Black/gray, fine grained, 10-20% silt, loose to medium dense, damp	0	Headspace screened by PID 0.0 ppm Collect MR08-IS62-2-3 at 2ft bgs
						Sandy Silt (ML) Gray, fine grained, moist 10-20% sand, medium plasticity, stiff, moist to wet	-3 3 -4 4	Terminate boring at 4'
						End of Log		
5								
10								
15								
20								

Boring Number: MR08-SB063

Client: NAVFAC
Project: HPCA, POIA, and FC PA/SI Report
Location: MCB Camp Lejeune
Project Number: 363366

Driller: Parratt Wolff
Drilling Method: DPT (Power Probe 9600T)
Sampling Method: 48" macrocore
Logged by: S. Kline/RDU
Start/Finish Date: 12/6/08

Depth (ft)	Sample Information: Sample #	Sample Type	Recovery (%)	SPT (6"-6"-6-6")	Soil Log	Soil Description	Depth / Elev (ft)	Comments
						Ground Surface	0	
0						**Turf Grass/Topsoil**	0	Headspace screened by PID
							-1	
						Silty Sand (SM) Light gray-brown, medium dense, fine grained, 10-20% silt, moist to wet	1	0.0 ppm
	HA	HA	100	N A				Collect MR08-IS63-2-3 at 2ft bgs
							-4	
						End of Log	4	Terminate boring at 4'
5								
10								
15								
20								

Boring Number: MR08-SB064

Client: NAVFAC
Project: HPCA, POIA, and FC PA/SI Report
Location: MCB Camp Lejeune
Project Number: 363366

Driller: Parratt Wolff
Drilling Method: DPT (Power Probe 9600T)
Sampling Method: 48" macrocore
Logged by: S. Kline/RDU
Start/Finish Date: 12/6/08

Depth (ft)	Sample Information: Sample #	Sample Type	Recovery (%)	SPT (6"-6"-6-6")	Soil Log	Soil Description	Depth / Elev (ft)	Comments
						Ground Surface	0	
0	HA	HA	100	N A		**Silty Sand (SM)** Gray-brown, damp to moist, fine grained, 10-20% silt, dense	0	Headspace screened by PID 0.0 ppm Collect MR08-IS64-2-3 at 2ft bgs
						End of Log	-4 4	Terminate boring at 4'
5								
10								
15								
20								

CH2MHILL

Boring Number: MR08-SB065

Client: NAVFAC
Project: HPCA, POIA, and FC PA/SI Report
Location: MCB Camp Lejeune
Project Number: 363366

Driller: Parratt Wolff
Drilling Method: DPT (Power Probe 9600T)
Sampling Method: 48" macrocore
Logged by: S. Kline/RDU
Start/Finish Date: 12/6/08

Depth (ft)	Sample Information: Sample #	Sample Type	Recovery (%)	SPT (6"-6"-6-6")	Soil Log	Soil Description	Depth / Elev (ft)	Comments
						Ground Surface	0	
0	HA	HA	100	N A		**Silty Sand (SM)** Black/dark gray, fine grained, loose, 30-40% silt moist,	0	Headspace screened by PID Collect MR08-IS65-1-2 at 1 ft bgs 0.0 ppm
						Sandy Silt (ML) Black/gray, soft, fine grained, moist to wet	-3 3 -4 4	Terminate boring at 4'
						End of Log		
5								
10								
15								
20								

Boring Number: MR08-SB066

Client: NAVFAC
Project: HPCA, POIA, and FC PA/SI Report
Location: MCB Camp Lejeune
Project Number: 363366

Driller: Parratt Wolff
Drilling Method: DPT (Power Probe 9600T)
Sampling Method: 48" macrocore
Logged by: S. Kline/RDU
Start/Finish Date: 12/6/08

Depth (ft)	Sample #	Sample Type	Recovery (%)	SPT (6"-6"-6-6")	Soil Log	Soil Description	Depth / Elev (ft)	Comments
						Ground Surface	0	
0	HA	HA	100	NA		**Silty Sand (SM)** Black/dark gray, fine grained, loose, 20-30% silt damp	0	Headspace screened by PID 0.0 ppm Collect MR08-IS66-2-3 at 2ft bgs
						Sandy Silt (ML) Gray-brown, moist, high plasticity, 10-20% sand, stiff	-3 3	0.0 ppm
5	DP-1	DP	88	NA		**No Recovery**	-5 5	0.0 ppm
						End of Log	-8 8	Terminate boring at 8'
10								
15								
20								

Boring Number: MR08-SB067

Client: NAVFAC
Project: HPCA, POIA, and FC PA/SI Report
Location: MCB Camp Lejeune
Project Number: 363366

Driller: Parratt Wolff
Drilling Method: DPT (Power Probe 9600T)
Sampling Method: 48" macrocore
Logged by: S. Kline/RDU
Start/Finish Date: 12/3/08

Depth (ft)	Sample #	Sample Type	Recovery (%)	SPT (6"-6"-6-6")	Soil Log	Soil Description	Depth / Elev (ft)	Comments
						Ground Surface	0	
0	HA	HA	100	N A		**Sandy Silt (ML)** Gray, medium plasticity, 10-20% fine grained sand, soft to medium stiff, damp	0	Headspace screened by PID 0.0 ppm
						Silty Sand (SM) Gray, fine grained, loose, moist, 20% silt	-3 3	0.0 ppm
5	DP-1	DP	75	N A		**No Recovery**	-5 5	Collect MR08-IS67-6-7 at 6ft bgs
						wet	-7 7	Water
						End of Log	-8 8	Terminate boring at 8ft
10								
15								
20								

CH2MHILL

Boring Number: MR08-SB068

Client: NAVFAC
Project: HPCA, POIA, and FC PA/SI Report
Location: MCB Camp Lejeune
Project Number: 363366

Driller: Parratt Wolff
Drilling Method: DPT (Power Probe 9600T)
Sampling Method: 48" macrocore
Logged by: S. Kline/RDU
Start/Finish Date: 12/3/08

Depth (ft)	Sample #	Sample Type	Recovery (%)	SPT (6"-6"-6-6")	Soil Log	Soil Description	Depth / Elev (ft)	Comments
						Ground Surface	0	
0	HA	HA	100	NA		**Silty Sand (SM)** Black-gray, fine grained, 10-20% silt, dry to damp, loose to medium density	0	Headspace screened by PID 0.0 ppm 0.0 ppm
5	DP-1	DP	100	NA			-7	0.0 ppm
						Silty Sand (SM) Gray-brown, fine grained, medium dense, moist, 20% silt	7	Collect MR08-IS68-8-9 at 8 ft bgs
						No Recovery	-9 9	
10	DP-2	DP	75	NA		**Sandy Silt (ML)** Gray, medium plasticity, fine sand, wet, soft	-10 10	
						End of Log	-12 12	Terminate boring at 12'
15								
20								

CH2MHILL

Boring Number: MR08-SB069

Client: NAVFAC
Project: HPCA, POIA, and FC PA/SI Report
Location: MCB Camp Lejeune
Project Number: 363366

Driller: Parratt Wolff
Drilling Method: DPT (Power Probe 9600T)
Sampling Method: 48" macrocore
Logged by: S. Kline/RDU
Start/Finish Date: 12/3/08

Depth (ft)	Sample Information: Sample #	Sample Type	Recovery (%)	SPT (6"-6"-6-6")	Soil Log	Soil Description	Depth / Elev (ft)	Comments
						Ground Surface	0	
0	HA	HA	100	N A		**Silty Sand (SM)** Black, fine grained, loose, 20% silt increasing to 30-40% with depth, damp	0	Headspace screened by PID 0.0 ppm 0.0 ppm
5	DP-1	DP	100	N A		**Sandy Silt (ML)** Gray, moderate plasticity, medium stiff, 10% sand, moist saturated	-6 6	0.0 ppm Collect MR08-IS69-6-7 at 6ft bgs
						End of Log	-8 8	Terminate boring at 8'
10								
15								
20								

CH2MHILL

Boring Number: MR08-SB070

Client: NAVFAC
Project: HPCA, POIA, and FC PA/SI Report
Location: MCB Camp Lejeune
Project Number: 363366

Driller: Parratt Wolff
Drilling Method: DPT (Power Probe 9600T)
Sampling Method: 48" macrocore
Logged by: S. Kline/RDU
Start/Finish Date: 12/3/08

Depth (ft)	Sample Information: Sample #	Sample Type	Recovery (%)	SPT (6"-6"-6-6")	Soil Log	Soil Description	Depth / Elev (ft)	Comments
						Ground Surface	0	
0						**Silty Sand (SM)** Black-gray, fine grained, loose, 10-20% silt, damp	0	Headspace screened by PID
	HA	HA	100	N A				0.0 ppm 0.0 ppm
5						**Silty Sand (SM)** Light gray, fine grained, loose, 20% silt, damp to wet, medium dense	-5 5	
	DP-1	DP	100	N A				0.0 ppm Collect MR08-IS70-8-9 at 8ft bgs
10	DP-2	DP	100	N A		wet		
						End of Log	-12 12	Terminate boring at 12'
15								
20								

CH2MHILL

Boring Number: MR08-SB071

Client: NAVFAC
Project: HPCA, POIA, and FC PA/SI Report
Location: MCB Camp Lejeune
Project Number: 363366

Driller: Parratt Wolff
Drilling Method: DPT (Power Probe 9600T)
Sampling Method: 48" macrocore
Logged by: S. Kline/RDU
Start/Finish Date: 12/3/08

Depth (ft)	Sample Information: Sample #	Sample Type	Recovery (%)	SPT (6"-6"-6-6")	Soil Log	Soil Description	Depth / Elev (ft)	Comments
						Ground Surface	0	
0	HA	HA	100	N A		**Silty Sand (SM)** Black-gray, fine grained, loose, 10-20% silt, damp	0	Headspace screened by PID 0.0 ppm 0.0 ppm
5	DP-1	DP	100	N A		**Silty Sand (SM)** Light gray, fine grained, loose to medium dense, 10% silt, moist wet	-6 6	Collect MR08-IS71-6-7 at 6ft bgs
						End of Log	-8 8	Terminate boring at 8'
10								
15								
20								

CH2MHILL

Boring Number: MR08-SB072

Client: NAVFAC
Project: HPCA, POIA, and FC PA/SI Report
Location: MCB Camp Lejeune
Project Number: 363366

Driller: Parratt Wolff
Drilling Method: DPT (Power Probe 9600T)
Sampling Method: 48" macrocore
Logged by: S. Kline/RDU
Start/Finish Date: 12/3/08

Depth (ft)	Sample Information: Sample #	Sample Type	Recovery (%)	SPT (6"-6"-6-6")	Soil Log	Soil Description	Depth / Elev (ft)	Comments
						Ground Surface	0	
0						**Silty Sand (SM)** Black-gray, fine grained, loose, damp	0	Headspace screened by PID 0.0 ppm
	HA	HA	100	N A				0.0 ppm
5							-5	
	DP-1	DP	100	N A		**Silty Sand (SM)** Light gray, fine grained, loose, moist to wet wet	5	Collect MR08-IS72-6-7 at 6ft bgs
							-8	Terminate boring at 8'
						End of Log	8	
10								
15								
20								

CH2MHILL

Boring Number: MR08-SB073

Client: NAVFAC
Project: HPCA, POIA, and FC PA/SI Report
Location: MCB Camp Lejeune
Project Number: 363366

Driller: Parratt Wolff
Drilling Method: DPT (Power Probe 9600T)
Sampling Method: 48" macrocore
Logged by: S. Kline/RDU
Start/Finish Date: 12/3/08

Depth (ft)	Sample Information: Sample #	Sample Type	Recovery (%)	SPT (6"-6"-6-6")	Soil Log	Soil Description	Depth / Elev (ft)	Comments
						Ground Surface	0	
0	HA	HA	100	N A		**Silty Sand (SM)** Black-gray, fine grained, loose, damp, 10% silt	0	Headspace screened by PID 0.0 ppm 0.0 ppm
5	DP-1	DP	100	N A		**Silty Sand (SM)** Light gray, fine grained, loose, moist	-5 5	Collect MR08-IS73-6-7 at 6ft bgs
						Sand (SP) Light gray, fine grained, wet	-7 7	Water
						End of Log	-8 8	Terminate boring at 8'
10								
15								
20								

CH2MHILL

Boring Number: MR08-SB074

Client: NAVFAC
Project: HPCA, POIA, and FC PA/SI Report
Location: MCB Camp Lejeune
Project Number: 363366

Driller: Parratt Wolff
Drilling Method: DPT (Power Probe 9600T)
Sampling Method: 48" macrocore
Logged by: S. Kline/RDU
Start/Finish Date: 12/4/08

Depth (ft)	Sample Information: Sample #	Sample Type	Recovery (%)	SPT (6"-6"-6-6")	Soil Log	Soil Description	Depth / Elev (ft)	Comments
						Ground Surface	0	
0	HA	HA	100	N A		**Silty Sand (SM)** Light gray/yellow, fine grained, 20-30% silt, loose, damp	0	Headspace screened by PID 0.0 ppm
							-4	
	DP-1	DP	75	N A		**Sand (SP)** Light gray, fine grained, loose, trace silt, moist to wet	4	0.0 ppm 0.0 ppm
5								
							-8	
	DP-2	DP	100	N A		**No Recovery** wet	8 -9 9	Collect MR08-IS74-7-8-08D @ 8 ft bgs 0.0 ppm
10								
							-12	
						End of Log	12	Terminate boring at 12'
15								
20								

CH2MHILL

Boring Number: MR08-SB075

Client: NAVFAC
Project: HPCA, POIA, and FC PA/SI Report
Location: MCB Camp Lejeune
Project Number: 363366

Driller: Parratt Wolff
Drilling Method: DPT (Power Probe 9600T)
Sampling Method: 48" macrocore
Logged by: S. Kline/RDU
Start/Finish Date: 12/3/08

Depth (ft)	Sample Information: Sample #	Sample Type	Recovery (%)	SPT (6"-6"-6-6")	Soil Log	Soil Description	Depth / Elev (ft)	Comments
						Ground Surface	0	
0						**Silty Sand (SM)** Green , fine grained, 20% silt, loose, damp	0 -1	Headspace screened by PID
	HA	HA	100	N A		**Sand (SP)** Light gray, loose, fine grained, damp to moist, trace silt	1	0.0 ppm
								0.0 ppm
5	DP-1	DP	100	N A				Collect MR08-IS75-6-7 at 6ft bgs
							-8	Terminate boring at 8ft
						End of Log	8	
10								
15								
20								

Boring Number: MR08-SB076

Client: NAVFAC
Project: HPCA, POIA, and FC PA/SI Report
Location: MCB Camp Lejeune
Project Number: 363366

Driller: Parratt Wolff
Drilling Method: DPT (Power Probe 9600T)
Sampling Method: 48" macrocore
Logged by: S. Kline/RDU
Start/Finish Date: 12/4/08

Depth (ft)	Sample #	Sample Type	Recovery (%)	SPT (6"-6"-6-6")	Soil Log	Soil Description	Depth / Elev (ft)	Comments
						Ground Surface	0	
0						**Silty Sand (SM)** Green-gray, fine grained, 20-30% silt, loose to medium dense, damp to moist	0	Headspace screened by PID
	HA	HA	100	NA				0.0 ppm
								0.0 ppm
5	DP-1	DP	100	NA				Collect MR08-IS76-6-7 at 6ft bgs
						wet	-8	
						End of Log	8	Terminate boring at 8ft
10								
15								
20								

Boring Number: MR08-SB077

Client: NAVFAC
Project: HPCA, POIA, and FC PA/SI Report
Location: MCB Camp Lejeune
Project Number: 363366

Driller: Parratt Wolff
Drilling Method: DPT (Power Probe 9600T)
Sampling Method: 48" macrocore
Logged by: S. Kline/RDU
Start/Finish Date: 12/4/08

Depth (ft)	Sample Information: Sample #	Sample Type	Recovery (%)	SPT (6"-6"-6-6")	Soil Log	Soil Description	Depth / Elev (ft)	Comments
						Ground Surface	0	
0						**Silty Sand (SM)** Light gray/brown, fine grained, loose, 30% silt, damp to moist, iron staining at 7.5'	0	Headspace screened by PID
	HA	HA	100	NA				0.0 ppm
								0.0 ppm
5	DP-1	DP	100	NA				Collect MR08-IS77-6-7 at 6 ft bgs
						wet	-8	
						End of Log	8	Terminate boring at 8ft
10								
15								
20								

Boring Number: MR08-SB078

Client: NAVFAC
Project: HPCA, POIA, and FC PA/SI Report
Location: MCB Camp Lejeune
Project Number: 363366

Driller: Parratt Wolff
Drilling Method: DPT (Power Probe 9600T)
Sampling Method: 48" macrocore
Logged by: S. Kline/RDU
Start/Finish Date: 12/4/08

Depth (ft)	Sample Information: Sample #	Sample Type	Recovery (%)	SPT (6"-6"-6-6")	Soil Log	Soil Description	Depth / Elev (ft)	Comments
						Ground Surface	0	
0						**Silty Sand (SM)** Light gray, fine grained, loose to medium dense, 30% silt, damp to moist	0	Headspace screened by PID
	HA	HA	100	N A				0.0 ppm
								0.0 ppm
5	DP-1	DP	100	N A				Collect MR08-IS78-6-7 at 6ft bgs
						wet	-8	
						End of Log	8	Terminate boring at 8ft
10								
15								
20								

Boring Number: MR08-SB079

Client: NAVFAC
Project: HPCA, POIA, and FC PA/SI Report
Location: MCB Camp Lejeune
Project Number: 363366

Driller: Parratt Wolff
Drilling Method: DPT (Power Probe 9600T)
Sampling Method: 48" macrocore
Logged by: S. Kline/RDU
Start/Finish Date: 12/4/08

Depth (ft)	Sample #	Sample Type	Recovery (%)	SPT (6"-6"-6-6")	Soil Log	Soil Description	Depth / Elev (ft)	Comments
						Ground Surface	0	
0	HA	HA	100	N A		**Silty Sand (SM)** Black/brown, fine grained, 20% silt, loose, damp	0	Headspace screened by PID 0.0 ppm 0.0 ppm
5	DP-1	DP	100	N A		**Silty Sand (SM)** Light gray, fine grained, medium dense, moist to wet wet	-5 5	Collect MR08-IS79-6-7 at 6ft bgs
						End of Log	-8 8	Terminate boring at 8ft
10								
15								
20								

Boring Number: MR08-SB080

Client: NAVFAC
Project: HPCA, POIA, and FC PA/SI Report
Location: MCB Camp Lejeune
Project Number: 363366

Driller: Parratt Wolff
Drilling Method: DPT (Power Probe 9600T)
Sampling Method: 48" macrocore
Logged by: S. Kline/RDU
Start/Finish Date: 12/07/08

Depth (ft)	Sample #	Sample Type	Recovery (%)	SPT (6"-6"-6-6")	Soil Log	Soil Description	Depth / Elev (ft)	Comments
						Ground Surface	0	
0						**Leaf litter, roots**	0	Headspace screened by PID Ambient Air PID = 0.0 ppm
							-1	
	HA	HA	100	NA		**Silty Sand (SM)** black/dark grey, damp/moist, loose, fine grained, 20% silt content	1	PID = 0.0 ppm
							-4	
						No Recovery	4	
5	DP-1	DP	96	NA		saturated at 6.5'		PID = 0.0 ppm
							-8	PID = 0.0 ppm
						End of Log	8	Water table at 6.5' Sample MR08-IS080-5-6-08D
10								
15								
20								

Boring Number: MR08-SB081

Client: NAVFAC
Project: HPCA, POIA, and FC PA/SI Report
Location: MCB Camp Lejeune
Project Number: 363366

Driller: Parratt Wolff
Drilling Method: DPT (Power Probe 9600T)
Sampling Method: 48" macrocore
Logged by: D. Brown/CLT
Start/Finish Date: 12/07/08

Depth (ft)	Sample #	Sample Type	Recovery (%)	SPT (6"-6"-6-6")	Soil Log	Soil Description	Depth / Elev (ft)	Comments
						Ground Surface	0	
0						**Leaf litter/roots/topsoil**	0	Headspace screened by PID Ambient Air PID = 0.0 ppm
							-2	
	HA	HA	100	NA		**Silty Sand (SM)** light yellow/dark grey, moist, loose, very fine grained, poorly graded	2	PID = 0.0 ppm
5								PID = 0.0 ppm
	DP-1	DP	100	NA		medium dense iron staining at 7' saturated at 8'		
							-8	PID = 0.0 ppm
						End of Log	8	Water table at 8' Sample MR08-IS081-6-7-08D
10								
15								
20								

CH2MHILL

Boring Number: MR08-SB082

Client: NAVFAC
Project: HPCA, POIA, and FC PA/SI Report
Location: MCB Camp Lejeune
Project Number: 363366

Driller: Parratt Wolff
Drilling Method: DPT (Power Probe 9600T)
Sampling Method: 48" macrocore
Logged by: D. Brown/CLT
Start/Finish Date: 12/07/08

Depth (ft)	Sample #	Sample Type	Recovery (%)	SPT (6"-6"-6-6")	Soil Log	Soil Description	Depth / Elev (ft)	Comments
						Ground Surface	0	
0						**Leaf litter, roots**	0	Headspace screened by PID Ambient Air PID = 0.0 ppm
							-1	
	HA	HA	100	NA		**Silty Sand (SM)** gray, moist, fine grained, loose, poorly graded	1	PID = 0.0 ppm
							-4	
						No Recovery	4	
5	DP-1	DP	87.5	NA		**Silty Sand (SM)** light yellow/light gray, moist, very fine grained, loose, silt lenses, poorly graded		PID = 0.0 ppm
							-8	
						Silty Clay (CL) dark yellow/gray, wet, very fine grained, soft, orange iron stains, medium plasticity	8	PID = 0.0 ppm
						End of Log		Water table at 7.5-8' Sample MR08-IS082-5-6-08D
10								
15								
20								

Boring Number: MR08-SB083

Client: NAVFAC
Project: HPCA, POIA, and FC PA/SI Report
Location: MCB Camp Lejeune
Project Number: 363366

Driller: Parratt Wolff
Drilling Method: DPT (Power Probe 9600T)
Sampling Method: 48" macrocore
Logged by: D. Brown/CLT
Start/Finish Date: 12/07/08

Depth (ft)	Sample #	Sample Type	Recovery (%)	SPT (6"-6"-6-6")	Soil Log	Soil Description	Depth / Elev (ft)	Comments
						Ground Surface	0	
0						**Leaf litter, roots**	0	Headspace screened by PID Ambient Air PID = 0.0 ppm
							-1	
	HA	HA	100	NA		**Silty Sand (SM)** black, moist, fine grained, loose, poorly graded	1	PID = 0.0 ppm
							-4	
						No Recovery	4	
5							-6	
	DP-1	DP	63	NA		**Silty Sand (SM)** dark gray/light tan, moist, fine grained, poorly graded	6	PID = 0.0 ppm
							-8	
						Silty Clay (CL) dark gray, fine grained sand, moist, stiff, orange iron stains, medium plasticity	8	PID = 0.0 ppm
						End of Log		Water table at 8' Sample MR08-IS083-6-7-08D
10								
15								
20								

Boring Number: MR08-SB084

Client: NAVFAC
Project: HPCA, POIA, and FC PA/SI Report
Location: MCB Camp Lejeune
Project Number: 363366

Driller: Parratt Wolff
Drilling Method: DPT (Power Probe 9600T)
Sampling Method: 48" macrocore
Logged by: D. Brown/CLT
Start/Finish Date: 12/07/08

Depth (ft)	Sample #	Sample Type	Recovery (%)	SPT (6"-6"-6-6")	Soil Log	Soil Description	Depth / Elev (ft)	Comments
						Ground Surface	0	
0						**Roots/grass**	0	Headspace screened by PID Ambient Air PID = 0.0 ppm
							-1	
						Silty Sand (SM) dark gray, moist, loose, fine grained, poorly graded	1	PID = 0.0 ppm
	HA	HA	100	NA				PID = 0.0 ppm
							-4	
						Silty Sand (SM) dark gray/light gray, moist, loose, fine grained, poorly graded, some silt, orange iron stains	4	
5							-6	PID = 0.0 ppm
	DP-1	DP	87.5	NA		**Silty Clay (CL)** dark gray, wet, firm, medium plasticity	6	
							-7	
						No recovery	7	PID = 0.0 ppm
							-8	
						End of Log	8	Water table at 7.5-8' Sample MR08-IS084-4-5-08D
10								
15								
20								

CH2MHILL

Boring Number: MR08-SB085

Client: NAVFAC
Project: HPCA, POIA, and FC PA/SI Report
Location: MCB Camp Lejeune
Project Number: 363366

Driller: Parratt Wolff
Drilling Method: DPT (Power Probe 9600T)
Sampling Method: 48" macrocore
Logged by: D. Brown/CLT
Start/Finish Date: 12/07/08

Depth (ft)	Sample Information: Sample #	Sample Type	Recovery (%)	SPT (6"-6"-6-6")	Soil Log	Soil Description	Depth / Elev (ft)	Comments
						Ground Surface	0	
0						**Silty Sand (SM)** black, moist, dense, fine grained, poorly graded	0	Headspace screened by PID Ambient Air PID = 0.0 ppm
						color change light gray/yellow		PID = 0.0 ppm
	HA	HA	100	NA				PID = 0.0 ppm
							-3 3	
						Silty Clay (CL) light to dark gray, wet, stiff, medium plasticity, orange iron stains	-4 4	
						End of Log		
5								Water table at 4' Sample MR08-IS085-1-2-08D
10								
15								
20								

CH2MHILL

Boring Number: MR08-SB086

Client: NAVFAC
Project: HPCA, POIA, and FC PA/SI Report
Location: MCB Camp Lejeune
Project Number: 363366

Driller: Parratt Wolff
Drilling Method: DPT (Power Probe 9600T)
Sampling Method: 48" macrocore
Logged by: S. Kline/RDU
Start/Finish Date: 12/08/08

Depth (ft)	Sample Information: Sample #	Sample Type	Recovery (%)	SPT (6"-6"-6-6")	Soil Log	Soil Description	Depth / Elev (ft)	Comments
						Ground Surface	0	
0						**Asphalt, engineered fill (GM)** gray, dense, damp, gravel with 2" clasts, silt 20%	0	Headspace screened by PID Ambient Air PID = 0.0 ppm
							-1 1	PID = 0.0 ppm
	HA	HA	100	NA		**Silty Sand (SM)** Black, dense, fine grained, 20% silt		PID = 0.0 ppm
							-3 3	PID = 0.1 ppm
						Sandy Silt (ML) black, stiff, moist, sulfurous odor, sheen	-4 4	PID = 0.0 ppm
						End of Log		
5								Water table at 4' Sample MR08-IS086-2-3-08D
10								
15								
20								

Boring Number: MR08-SB087

Client: NAVFAC
Project: HPCA, POIA, and FC PA/SI Report
Location: MCB Camp Lejeune
Project Number: 363366

Driller: Parratt Wolff
Drilling Method: DPT (Power Probe 9600T)
Sampling Method: 48" macrocore
Logged by: S. Kline/RDU
Start/Finish Date: 12/08/08

Depth (ft)	Sample #	Sample Type	Recovery (%)	SPT (6"-6"-6-6")	Soil Log	Soil Description	Depth / Elev (ft)	Comments
						Ground Surface	0	
0						**Asphalt, engineered fill (GM)** gray, damp, dense, rounded gravel clasts up to 2", silt 20-30%	0	Headspace screened by PID Ambient Air PID = 0.0 ppm
								PID = 0.0 ppm
	HA	HA	100	NA				PID = 0.0 ppm
							-3	PID = 0.1 ppm
						Silty Sand (SM) Black, medium dense, fine grained, 20% silt, sulfurous odor	3	
							-4	PID = 2.1 ppm
							4	
						End of Log		
5								Water table at 3.75-4' Sample MR08-IS087-2-3-08D
10								
15								
20								

CH2MHILL

Boring Number: MR08-SB088

Client: NAVFAC
Project: HPCA, POIA, and FC PA/SI Report
Location: MCB Camp Lejeune
Project Number: 363366

Driller: Parratt Wolff
Drilling Method: DPT (Power Probe 9600T)
Sampling Method: 48" macrocore
Logged by: S. Kline/RDU
Start/Finish Date: 12/09/08

Depth (ft)	Sample Information: Sample #	Sample Type	Recovery (%)	SPT (6"-6"-6-6")	Soil Log	Soil Description	Depth / Elev (ft)	Comments
						Ground Surface	0	
0						**Asphalt, engineered fill (GM)** gray, dense, damp, gravel up to 2" clasts, silt 20%, well graded	0	Headspace screened by PID Ambient Air PID = 0.1 ppm
	HA	HA	100	NA		**Silty Sand (SM)** black, damp, dense, fine grained, 30-40% silt	-2 2	PID = 0.1 ppm
						Sandy Silt (ML) gray, stiff, yellow mottling	-3 3	PID = 0.2 ppm
						End of Log	-4 4	PID = 0.1 ppm
5								Water table at 3.75-4' Sample MR08-IS088-2-3-08D
10								
15								
20								

CH2MHILL

Boring Number: MR08-SB089

Client: NAVFAC
Project: HPCA, POIA, and FC PA/SI Report
Location: MCB Camp Lejeune
Project Number: 363366

Driller: Parratt Wolff
Drilling Method: DPT (Power Probe 9600T)
Sampling Method: 48" macrocore
Logged by: S. Kline/RDU
Start/Finish Date: 12/9/08

Depth (ft)	Sample Information: Sample #	Sample Type	Recovery (%)	SPT (6"-6"-6-6")	Soil Log	Soil Description	Depth / Elev (ft)	Comments
						Ground Surface	0	
0						**Asphalt, engineered fill (GM)** gray, damp, dense, gravel up to 2" clasts, silt 20-30%	0	Headspace screened by PID Ambient Air PID = 0.1 ppm PID = 0.0 ppm
	HA	HA	100	NA		**Silty Sand (SM)** gray/black, moist, dense, fine grained, with 20% silt, poorly graded increase to 40% silt with depth orange staining at 3-4'	-2 2	PID = 0.1 ppm PID = 0.1 ppm
						End of Log	-4 4	PID = 0.0 ppm
5								Water table at 3.75' Sample MR08-IS089-2-3-08D
10								
15								
20								

CH2MHILL

Boring Number: MR08-SB090

Client: NAVFAC
Project: HPCA, POIA, and FC PA/SI Report
Location: MCB Camp Lejeune
Project Number: 363366

Driller: Parratt Wolff
Drilling Method: DPT (Power Probe 9600T)
Sampling Method: 48" macrocore
Logged by: S. Kline/RDU
Start/Finish Date: 12/9/08

Depth (ft)	Sample Information: Sample #	Sample Type	Recovery (%)	SPT (6"-6"-6-6")	Soil Log	Soil Description	Depth / Elev (ft)	Comments
						Ground Surface	0	
0	HA	HA	100	NA		**Asphalt, engineered fill (GM)** gray, damp, dense, gravel up to 2" clasts, silt 20-30%	0	Headspace screened by PID Ambient Air PID = 0.0 ppm PID = 0.0 ppm
						Silty Sand (SM) black with orange mottling, damp, loose, fine grained, with 20% silt	-2 2	PID = 0.0 ppm PID = 0.0 ppm
						End of Log	-4 4	PID = 0.1 ppm
5								Water table at 3.5-3.75' Sample MR08-IS090-2-3-08D
10								
15								
20								

CH2MHILL

Boring Number: MR08-SB091

Client: NAVFAC
Project: HPCA, POIA, and FC PA/SI Report
Location: MCB Camp Lejeune
Project Number: 363366

Driller: Parratt Wolff
Drilling Method: DPT (Power Probe 9600T)
Sampling Method: 48" macrocore
Logged by: S. Kline/RDU
Start/Finish Date: 12/5/08

Depth (ft)	Sample Information: Sample #	Sample Type	Recovery (%)	SPT (6"-6"-6-6")	Soil Log	Soil Description	Depth / Elev (ft)	Comments
						Ground Surface	0	
0						**Silty Sand (SM)** Black, fine grained, loose	0	Headspace screened by PID
						Sandy Silt (ML) Dark gray, medium stiff, medium plasticity, 10-20% fine sand, moist	-1 1	0.0 ppm
	HA	HA	100	N A		wet		Collect MR08-IS91-2-3 at 2ft bgs
						End of Log	-4 4	Terminate boring @ 4 ft
5								
10								
15								
20								

CH2MHILL

Boring Number: MR08-SB092

Client: NAVFAC
Project: HPCA, POIA, and FC PA/SI Report
Location: MCB Camp Lejeune
Project Number: 363366

Driller: Parratt Wolff
Drilling Method: DPT (Power Probe 9600T)
Sampling Method: 48" macrocore
Logged by: S. Kline/RDU
Start/Finish Date: 12/4/08

Depth (ft)	Sample Information: Sample #	Sample Type	Recovery (%)	SPT (6"-6"-6-6")	Soil Log	Soil Description	Depth / Elev (ft)	Comments
						Ground Surface	0	
0						**Peat (PT)** Black	0	Headspace screened by PID
	HA	HA	100	N A		**Silty Sand (SM)** Black/dark gray, fine grained, loose, moist, 20% silt	-2 2	0.0 ppm Collect MR08-IS92-4-5 at 4ft bgs
5	DP-1	DP	75	N A		**Silty Sand (SM)** Light gray, loose, fine grained, wet	-5 5	
						No Recovery	-7 7	
						End of Log	-8 8	Terminate boring at 8ft
10								
15								
20								

CH2MHILL

Boring Number: MR08-SB093

Client: NAVFAC
Project: HPCA, POIA, and FC PA/SI Report
Location: MCB Camp Lejeune
Project Number: 363366

Driller: Parratt Wolff
Drilling Method: DPT (Power Probe 9600T)
Sampling Method: 48" macrocore
Logged by: S. Kline/RDU
Start/Finish Date: 12/5/08

Depth (ft)	Sample Information: Sample #	Sample Type	Recovery (%)	SPT (6"-6"-6-6")	Soil Log	Soil Description	Depth / Elev (ft)	Comments
						Ground Surface	0	
0						**SM (Silty Sand)** Black, fine grained, loose to medium dense, moist, 20-30% silt	0	Headspace screened by PID
								0.0 ppm
	HA	HA	100	N A				Collect MR08-IS93-2-3 at 2ft bgs
						wet		
							-4	Terminate boring @ 4 ft
						End of Log	4	
5								
10								
15								
20								

CH2MHILL

Boring Number: MR08-SB094

Client: NAVFAC
Project: HPCA, POIA, and FC PA/SI Report
Location: MCB Camp Lejeune
Project Number: 363366

Driller: Parratt Wolff
Drilling Method: DPT (Power Probe 9600T)
Sampling Method: 48" macrocore
Logged by: S. Kline/RDU
Start/Finish Date: 12/4/08

Depth (ft)	Sample Information: Sample #	Sample Type	Recovery (%)	SPT (6"-6"-6-6")	Soil Log	Soil Description	Depth / Elev (ft)	Comments
						Ground Surface	0	
0	HA	HA	100	N A		**Silty Sand (SM)** Black/dark gray, fine grained, loose, damp, 20% silt	0	Headspace screened by PID 0.0 ppm
						Silty Sand (SM) Light gray, loose, fine grained, moist	-3 3	0.0 ppm
						No Recovery	-4 4	
5	DP-1	DP	75	N A		wet	-5 5	Collect MR08-IS94-5-6 at 5ft bgs
						End of Log	-8 8	Terminate boring at 8ft
10								
15								
20								

Boring Number: MR08-SB095

Client: NAVFAC
Project: HPCA, POIA, and FC PA/SI Report
Location: MCB Camp Lejeune
Project Number: 363366

Driller: Parratt Wolff
Drilling Method: DPT (Power Probe 9600T)
Sampling Method: 48" macrocore
Logged by: S. Kline/RDU
Start/Finish Date: 12/4/08

Depth (ft)	Sample #	Sample Type	Recovery (%)	SPT (6"-6"-6-6")	Soil Log	Soil Description	Depth / Elev (ft)	Comments
						Ground Surface	0	
0	HA	HA	100	N A		**Silty Sand (SM)** Black, fine grained, loose, damp, 20-30% silt	0	Headspace screened by PID 0.0 ppm
						Silty Sand (SM) Light gray, loose, fine grained, moist	-3 3	0.0 ppm
						No Recovery	-4 4	
5	DP-1	DP	75	N A		**Silty Sand (SM0** Orange, fine grained, loose, moist wet	-6 6	Collect MR08-IS95-6-7 at 6 ft bgs
						End of Log	-8 8	Terminate boring at 8ft
10								
15								
20								

Boring Number: MR08-SB096

Client: NAVFAC
Project: HPCA, POIA, and FC PA/SI Report
Location: MCB Camp Lejeune
Project Number: 363366

Driller: Parratt Wolff
Drilling Method: DPT (Power Probe 9600T)
Sampling Method: 48" macrocore
Logged by: S. Kline/RDU
Start/Finish Date: 12/4/08

Depth (ft)	Sample #	Sample Type	Recovery (%)	SPT (6"-6"-6-6")	Soil Log	Soil Description	Depth / Elev (ft)	Comments
						Ground Surface	0	
0	HA	HA	100	N A		**Silty Sand (SM)** Black, fine grained, loose, damp, 20% silt	0	Headspace screened by PID 0.0 ppm 0.0 ppm
5	DP-1	DP	75	N A		**Silty Sand (SM)** Light gray, loose, fine grained, moist	-5 / 5	Collect MR08-IS96-6-7 at 6ft bgs
						Peat (PT) Black, moist	-7 / 7	Water
						Silty Sand (SM) Same as 5-5.5'	-8 / 8	Terminate boring at 8ft
						No Recovery		
						End of Log		
10								
15								
20								

Boring Number: MR08-SB097

Client: NAVFAC
Project: HPCA, POIA, and FC PA/SI Report
Location: MCB Camp Lejeune
Project Number: 363366

Driller: Parratt Wolff
Drilling Method: DPT (Power Probe 9600T)
Sampling Method: 48" macrocore
Logged by: S. Kline/RDU
Start/Finish Date: 12/4/08

Depth (ft)	Sample #	Sample Type	Recovery (%)	SPT (6"-6"-6-6")	Soil Log	Soil Description	Depth / Elev (ft)	Comments
						Ground Surface	0	
0	HA	HA	100	N A		**Silty Sand (SM)** Black, fine grained, loose, damp, 20-30% silt	0	Headspace screened by PID 0.0 ppm 0.0 ppm
							-4	
	DP-1	DP	75	N A		**No Recovery**	4	Collect MR08-IS97-6-7 at 6ft bgs
5							-7	
						Silty Sand (SM) Orange, fine grained, loose, moist to wet	7	
							-8	Terminate boring at 8ft
						End of Log	8	
10								
15								
20								

Boring Number: MR08-SB098

Client: NAVFAC
Project: HPCA, POIA, and FC PA/SI Report
Location: MCB Camp Lejeune
Project Number: 363366

Driller: Parratt Wolff
Drilling Method: DPT (Power Probe 9600T)
Sampling Method: 48" macrocore
Logged by: S. Kline/RDU
Start/Finish Date: 12/9/08

Depth (ft)	Sample Information: Sample #	Sample Type	Recovery (%)	SPT (6"-6"-6-6")	Soil Log	Soil Description	Depth / Elev (ft)	Comments
						Ground Surface	0	
0						**Asphalt, engineered fill (GM)** gray, damp, dense, gravel up to 2" clasts, silt 20-30%	0	Headspace screened by PID Ambient Air PID = 0.1 ppm PID = 0.1 ppm
	HA	HA	100	NA		**Silty Sand (SM)** brown, damp, loose with fine grained sand, poorly graded silt 10-20%	-2 2	PID = 0.0 ppm PID = 0.0 ppm
							-4 4	PID = 0.0 ppm
5	DP-1	DP	96	NA		**No Recovery** orange iron staining at 5-6 ft. decrease in silt to 10% @ 8'		PID = 0.0 ppm PID = 0.0 ppm PID = 0.0 ppm PID = 0.0 ppm
						End of Log	-8 8	PID = 0.0 ppm Water table at 4.5-5' Sample MR08-IS098-3-4-08D
10								
15								
20								

Boring Number: MR08-SB099

Client: NAVFAC
Project: HPCA, POIA, and FC PA/SI Report
Location: MCB Camp Lejeune
Project Number: 363366

Driller: Parratt Wolff
Drilling Method: DPT (Power Probe 9600T)
Sampling Method: 48" macrocore
Logged by: S. Kline/RDU
Start/Finish Date: 12/10/08

Depth (ft)	Sample Information: Sample #	Sample Type	Recovery (%)	SPT (6"-6"-6-6")	Soil Log	Soil Description	Depth / Elev (ft)	Comments
						Ground Surface	0	
0	HA	HA	100	NA		**Asphalt, engineered fill (GM)** gray, dense, damp, grave up to 2" clasts, silt 20% - 30%	0	Headspace screened by PID Ambient Air PID = 0.1 ppm PID = 0.0 ppm
						Silty Sand (SM) brown, medium dense, moist, fine grained, poorly graded	-2 2	PID = 0.0 ppm PID = 0.0 ppm
						End of Log	-4 4	PID = 0.0 ppm Water table at 4' Sample MR08-IS099-2-3-08D
5								
10								
15								
20								

CH2MHILL

Boring Number: MR08-SB100

Client: NAVFAC
Project: HPCA, POIA, and FC PA/SI Report
Location: MCB Camp Lejeune
Project Number: 363366

Driller: Parratt Wolff
Drilling Method: DPT (Power Probe 9600T)
Sampling Method: 48" macrocore
Logged by: S. Kline/RDU
Start/Finish Date: 12/10/08

Depth (ft)	Sample Information: Sample #	Sample Type	Recovery (%)	SPT (6"-6"-6-6")	Soil Log	Soil Description	Depth / Elev (ft)	Comments
						Ground Surface	0	
0						**Asphalt, engineered fill (GM)** damp, moist, dense	0	Headspace screened by PID Ambient Air PID = 0.0 ppm PID = 0.1 ppm
	HA	HA	100	NA		**Silty Sand (SM)** orange/brown, moist, dense, fine grained, poorly graded	-2 2	PID = 0.0 ppm PID = 0.0 ppm
						End of Log	-4 4	PID = 0.0 ppm
5								Water table at 3.5-4' Sample MR08-IS100-2-3-08D
10								
15								
20								

Boring Number: MR08-SB101

Client: NAVFAC
Project: HPCA, POIA, and FC PA/SI Report
Location: MCB Camp Lejeune
Project Number: 363366

Driller: Parratt Wolff
Drilling Method: DPT (Power Probe 9600T)
Sampling Method: 48" macrocore
Logged by: S. Kline/RDU
Start/Finish Date: 12/10/08

Depth (ft)	Sample Information: Sample #	Sample Type	Recovery (%)	SPT (6"-6"-6-6")	Soil Log	Soil Description	Depth / Elev (ft)	Comments
						Ground Surface	0	
0						**Asphalt, engineered fill (GM)** gray, dense, gravel up to 2" clasts, silt 10%	0	Headspace screened by PID Ambient Air PID = 0.0 ppm PID = 0.0 ppm
	HA	HA	100	NA		**Silty Sand (SM)** brown, dense, fine grained, poorly graded, silt content 10-20%	-2 2	PID = 0.0 ppm PID = 0.1 ppm
						End of Log	-4 4	PID = 0.0 ppm Water table at 4' Sample MR08-IS101-2-3-08D
5								
10								
15								
20								

CH2MHILL

Boring Number: MR08-SB102

Client: NAVFAC
Project: HPCA, POIA, and FC PA/SI Report
Location: MCB Camp Lejeune
Project Number: 363366

Driller: Parratt Wolff
Drilling Method: DPT (Power Probe 9600T)
Sampling Method: 48" macrocore
Logged by: B. Propst/CLT
Start/Finish Date: 12/15/08

Depth (ft)	Sample #	Sample Type	Recovery (%)	SPT (6"-6"-6-6")	Soil Log	Soil Description	Depth / Elev (ft)	Comments
						Ground Surface	0	
0						**Asphalt**	0	Headspace screened by PID
						Silty Sand (SM) Brown, fine grained, medium dense, dry		
	HA	HA	100	N A			-2 2	0.0 ppm Collect MR08-IS102-2-3-08D @ 2-3 ft
						Silty Sand (SM) Light gray/brown, fine grained, medium dense, dry	-3 3	
						Sand (SP) Light tan, fine grained, poorly graded, wet	-4 4	Terminate boring at 4 ft
						End of Log		
5								
10								
15								
20								

CH2MHILL

Boring Number: MR08-SB103

Client: NAVFAC
Project: HPCA, POIA, and FC PA/SI Report
Location: MCB Camp Lejeune
Project Number: 363366

Driller: Parratt Wolff
Drilling Method: DPT (Power Probe 9600T)
Sampling Method: 48" macrocore
Logged by: S. Kline/RDU
Start/Finish Date: 12/5/08

Depth (ft)	Sample Information: Sample #	Sample Type	Recovery (%)	SPT (6"-6"-6-6")	Soil Log	Soil Description	Depth / Elev (ft)	Comments
						Ground Surface	0	
0						**Silty Sand (SM)** Black/brown, fine grained, medium dense to loose, moist to wet, 20-30% silt	0	Headspace screened by PID
								0.0 ppm
	HA	HA	100	N A				Collect MR08-IS103-2-3 at 2ft bgs
						wet	-4	
						End of Log	4	Terminate boring @ 4 ft
5								
10								
15								
20								

CH2MHILL

Boring Number: MR08-SB104

Client: NAVFAC
Project: HPCA, POIA, and FC PA/SI Report
Location: MCB Camp Lejeune
Project Number: 363366

Driller: Parratt Wolff
Drilling Method: DPT (Power Probe 9600T)
Sampling Method: 48" macrocore
Logged by: S. Kline/RDU
Start/Finish Date: 12/08/08

Depth (ft)	Sample Information: Sample #	Sample Type	Recovery (%)	SPT (6"-6"-6-6")	Soil Log	Soil Description	Depth / Elev (ft)	Comments
						Ground Surface	0	
0						**Turf Grass**	0	Headspace screened by PID Ambient Air PID = 0.0 ppm
	HA	HA	100	NA		**Silty Sand (SM)** Black, moist, medium dense, fine grained, poorly graded, 20-30% silt gray coloration from 3-4', wet		PID = 0.0 ppm PID = 0.1 ppm PID = 1.2 ppm
							-4	PID = 0.2 ppm
						End of Log	4	
5								Water table at 3.5' Sample MR08-IS104-1-2-08D
10								
15								
20								

Boring Number: MR08-SB105

Client: NAVFAC
Project: HPCA, POIA, and FC PA/SI Report
Location: MCB Camp Lejeune
Project Number: 363366

Driller: Parratt Wolff
Drilling Method: DPT (Power Probe 9600T)
Sampling Method: 48" macrocore
Logged by: S. Kline/RDU
Start/Finish Date: 12/08/08

Depth (ft)	Sample Information: Sample #	Sample Type	Recovery (%)	SPT (6"-6"-6-6")	Soil Log	Soil Description	Depth / Elev (ft)	Comments
						Ground Surface	0	
0						**Asphalt, engineered fill (GM)** light gray, damp, loose, gravel clasts up to 2", 20-30% silt	0	Headspace screened by PID Ambient Air PID = 0.0 ppm
								PID = 0.0 ppm
	HA	HA	100	NA			-2	PID = 0.0 ppm
						Silty Sand (SM) dark brown/black, moist, fine grained, 10-20% silt	2	
								PID = 0.0 ppm
							-4	PID = 0.2 ppm
						End of Log	4	
5								Water table at 3.75-4' Sample MR08-IS105-2-3-08D
10								
15								
20								

CH2MHILL

Boring Number: MR08-SB106

Client: NAVFAC
Project: HPCA, POIA, and FC PA/SI Report
Location: MCB Camp Lejeune
Project Number: 363366

Driller: Parratt Wolff
Drilling Method: DPT (Power Probe 9600T)
Sampling Method: 48" macrocore
Logged by: S. Kline/RDU
Start/Finish Date: 12/08/08

Depth (ft)	Sample Information: Sample #	Sample Type	Recovery (%)	SPT (6"-6"-6-6")	Soil Log	Soil Description	Depth / Elev (ft)	Comments
						Ground Surface	0	
0						**Asphalt, engineered fill (GM)** gray, damp, dense, gravel with rounded clasts up to 1", 20% silt	0	Headspace screened by PID Ambient Air PID = 0.0 ppm PID = 0.0 ppm
	HA	HA	100	NA		**Silty Sand (SM)** Black, moist, medium dense, fine grained, poorly graded	-2 2	PID = 0.0 ppm PID = 1.2 ppm
						End of Log	-4 4	PID = 2.1 ppm Water table at 3.75-4' Sample MR08-IS106-2-3-08D
5								
10								
15								
20								

Boring Number: MR08-SB107

Client: NAVFAC
Project: HPCA, POIA, and FC PA/SI Report
Location: MCB Camp Lejeune
Project Number: 363366

Driller: Parratt Wolff
Drilling Method: DPT (Power Probe 9600T)
Sampling Method: 48" macrocore
Logged by: S. Kline/RDU
Start/Finish Date: 12/07/08

Depth (ft)	Sample Information: Sample #	Sample Type	Recovery (%)	SPT (6"-6"-6-6")	Soil Log	Soil Description	Depth / Elev (ft)	Comments
						Ground Surface	0	
0						**Asphalt, engineered fill (GM)**	0	Ambient Air PID = 0.0 ppm
							-1	
	HA	HA	100	NA		**Silty Sand (SM)** black, damp/moist, dense, fine grained, with 10% silt, slight odor, no sheen, black staining present	1	PID = 2.1 ppm PID = 3.7 ppm
							-3	PID = 2.2 ppm
						End of Log	3	Water table at 3.5-4' Sample MR08-IS107-2-3-08D
5								
10								
15								
20								

CH2MHILL

Boring Number: MR08-SB108

Client: NAVFAC
Project: HPCA, POIA, and FC PA/SI Report
Location: MCB Camp Lejeune
Project Number: 363366

Driller: Parratt Wolff
Drilling Method: DPT (Power Probe 9600T)
Sampling Method: 48" macrocore
Logged by: S. Kline/RDU
Start/Finish Date: 12/07/08

Depth (ft)	Sample Information: Sample #	Sample Type	Recovery (%)	SPT (6"-6"-6-6")	Soil Log	Soil Description	Depth / Elev (ft)	Comments
						Ground Surface	0	
0						**Asphalt, engineered fill (GW)** gray, dense, damp, poorly sorted	0	Headspace screened by PID Ambient Air PID = 0.0 ppm PID = 0.0 ppm
	HA	HA	100	NA		**Silty Sand (SM)** brown, moist, fine grained, 10-20% silt	-2 2	PID = 0.0 ppm PID = 0.0 ppm
						End of Log	-4 4	PID = 0.0 ppm
5								Water table at 4' Sample MR08-IS108-2-3-08D
10								
15								
20								

CH2MHILL

Boring Number: MR08-SB109

Client: NAVFAC
Project: HPCA, POIA, and FC PA/SI Report
Location: MCB Camp Lejeune
Project Number: 363366

Driller: Parratt Wolff
Drilling Method: DPT (Power Probe 9600T)
Sampling Method: 48" macrocore
Logged by: S. Kline/RDU
Start/Finish Date: 12/07/08

Depth (ft)	Sample Information: Sample #	Sample Type	Recovery (%)	SPT (6"-6"-6-6")	Soil Log	Soil Description	Depth / Elev (ft)	Comments
						Ground Surface	0	
0						**Asphalt, engineered fill (GM)** gray, dense, well graded with gravel clasts to 1", 10-20% silt	0	Headspace screened by PID Ambient Air PID = 0.0 ppm
								PID = 0.0 ppm
	HA	HA	100	NA				PID = 0.0 ppm
							-3	PID = 0.0 ppm
						Sandy Silt (ML) gray/black, low to medium plasticity, 10-20% sand	3	
							-4	PID = 0.0 ppm
							4	
						End of Log		
5								Water table at 3.5-4' Sample MR08-IS109-2-3-08D
10								
15								
20								

CH2MHILL

Boring Number: MR08-SB110

Client: NAVFAC
Project: HPCA, POIA, and FC PA/SI Report
Location: MCB Camp Lejeune
Project Number: 363366

Driller: Parratt Wolff
Drilling Method: DPT (Power Probe 9600T)
Sampling Method: 48" macrocore
Logged by: J. Albano/CLT
Start/Finish Date: 12/17/08

Depth (ft)	Sample #	Sample Type	Recovery (%)	SPT (6"-6"-6-6")	Soil Log	Soil Description	Depth / Elev (ft)	Comments
						Ground Surface	0	
0	HA	HA	100	N A		**Sandy Gravel (GP)** Tan, sandy gravel, very fine to fine grained sand, fine gravel, loose	0 -1	Headspace screened by PID
						Silty Sand (SM) Black, organic, slightly moist, loose to medium dense	1 -2	0.0 ppm Collect MR08-SB110-1-2-08D at 1ft
						Sandy Gravel (GP) Same as 0-0.8	2 -4	0.0 ppm
						Silty Sand (SM) Tan, moist, medium dense, wet	4	Terminate boring @ 4ft
						End of Log		
5								
10								
15								
20								

Boring Number: MR08-SB111

Client: NAVFAC
Project: HPCA, POIA, and FC PA/SI Report
Location: MCB Camp Lejeune
Project Number: 363366

Driller: Parratt Wolff
Drilling Method: DPT (Power Probe 9600T)
Sampling Method: 48" macrocore
Logged by: J. Albano/CLT
Start/Finish Date: 12/16/08

Depth (ft)	Sample Information: Sample #	Sample Type	Recovery (%)	SPT (6"-6"-6-6")	Soil Log	Soil Description	Depth / Elev (ft)	Comments
						Ground Surface	0	
0	HA	HA	100	N A		**Sandy Gravel (GP)** Tan, very fine to fine grained sand, fine sized gravel, loose	0	Headspace screened by PID
						Sand (SP) Tan, moist to very moist, loose to medium dense		0.0 ppm Collect MR08-IS111-1-2-08D @ 1ft
						End of Log	-3 3	Terminate boring @ 3 ft
5								
10								
15								
20								

CH2MHILL

Boring Number: MR08-SB112

Client: NAVFAC
Project: HPCA, POIA, and FC PA/SI Report
Location: MCB Camp Lejeune
Project Number: 363366

Driller: Parratt Wolff
Drilling Method: DPT (Power Probe 9600T)
Sampling Method: 48" macrocore
Logged by: J. Albano/CLT
Start/Finish Date: 12/16/08

Depth (ft)	Sample Information: Sample #	Sample Type	Recovery (%)	SPT (6"-6"-6-6")	Soil Log	Soil Description	Depth / Elev (ft)	Comments
						Ground Surface	0	
0						**Sandy Gravel** Tan, sandy gravel, very fine to fine grained sand, fine gravel, loose	0	Headspace screened by PID
							-1 1	0.0 ppm
	HA	HA	100	N A		**Sand (SP)** Black, organic, fine grained, medium dense, wet at 2.5'		Collect MR08-IS112-1-2-08D @1ft wet 0.0 ppm
							-4 4	Terminate boring at 4'
						End of Log		
5								
10								
15								
20								

CH2MHILL

Boring Number: MR08-SB113

Client: NAVFAC
Project: HPCA, POIA, and FC PA/SI Report
Location: MCB Camp Lejeune
Project Number: 363366

Driller: Parratt Wolff
Drilling Method: DPT (Power Probe 9600T)
Sampling Method: 48" macrocore
Logged by: S. Kline/RDU
Start/Finish Date: 12/9/08

Depth (ft)	Sample Information: Sample #	Sample Type	Recovery (%)	SPT (6"-6"-6-6")	Soil Log	Soil Description	Depth / Elev (ft)	Comments
						Ground Surface	0	
0						**Asphalt, engineered fill (GM)** gray, dense	0	Headspace screened by PID Ambient Air PID = 0.0 ppm
	HA	HA	100	NA		**Sandy Silt (ML)** brown/gray, hard, moist, low plasticity, 20-40% fine grained sand	-2 2	PID = 0.1 ppm PID = 0.0 ppm
						End of Log	-4 4	PID = 0.2 ppm
5								Water table at 3.75' Sample MR08-IS113-3-4-08D
10								
15								
20								

Boring Number: MR08-SB114

Client: NAVFAC
Project: HPCA, POIA, and FC PA/SI Report
Location: MCB Camp Lejeune
Project Number: 363366

Driller: Parratt Wolff
Drilling Method: DPT (Power Probe 9600T)
Sampling Method: 48" macrocore
Logged by: S. Kline/RDU
Start/Finish Date: 12/9/08

Depth (ft)	Sample #	Sample Type	Recovery (%)	SPT (6"-6"-6-6")	Soil Log	Soil Description	Depth / Elev (ft)	Comments
						Ground Surface	0	
0						**Asphalt**	0	Headspace screened by PID Ambient Air PID = 0.0 ppm
							-1	PID = 0.0 ppm
						Engineered fill (GM) gray, dense, gravel 70%, 30% silt	1	
	HA	HA	100	NA			-2	PID = 0.2 ppm
						Silty Sand (SM) orange/brown, moist, dense, fine grained, poorly graded, 20% silt, increases to 40% silt with depth	2	PID = 0.1 ppm
							-4	PID = 0.0 ppm
						End of Log	4	
5								Water table at 3.75-4' Sample MR08-IS114-2-3-08D
10								
15								
20								

Boring Number: MR08-SB115

Client: NAVFAC
Project: HPCA, POIA, and FC PA/SI Report
Location: MCB Camp Lejeune
Project Number: 363366

Driller: Parratt Wolff
Drilling Method: DPT (Power Probe 9600T)
Sampling Method: 48" macrocore
Logged by: S. Kline/RDU
Start/Finish Date: 12/9/08

Depth (ft)	Sample Information: Sample #	Sample Type	Recovery (%)	SPT (6"-6"-6-6")	Soil Log	Soil Description	Depth / Elev (ft)	Comments
						Ground Surface	0	
0						**Asphalt, engineered fill (GM)** gray, damp, gravel up to 2" clasts, 20-30% silt	0	Headspace screened by PID Ambient Air PID = 0.0 ppm
	HA	HA	100	NA		**Silty Sand (SM)** orange/brown, moist, dense, fine grained, 20% silt	-2 2	PID = 0.0 ppm PID = 0.0 ppm
						End of Log	-4 4	PID = 0.0 ppm
5								Water table at 3.5' Sample MR08-IS115-2-3-08D
10								
15								
20								

Boring Number: MR08-SB116

Client: NAVFAC
Project: HPCA, POIA, and FC PA/SI Report
Location: MCB Camp Lejeune
Project Number: 363366

Driller: Parratt Wolff
Drilling Method: DPT (Power Probe 9600T)
Sampling Method: 48" macrocore
Logged by: S. Kline/RDU
Start/Finish Date: 12/5/08

Depth (ft)	Sample Information: Sample #	Sample Type	Recovery (%)	SPT (6"-6"-6-6")	Soil Log	Soil Description	Depth / Elev (ft)	Comments
						Ground Surface	0	
0						**Silty Sand (SM)** Black/brown, fine grained, loose, moist, 20-30% silt	0	Headspace screened by PID
								0.0 ppm
	HA	HA	100	N A				Collect MR08-IS116-3-4 at 3ft bgs
						wet		
							-4	Terminate boring @ 4 ft bgs
						End of Log	4	
5								
10								
15								
20								

Boring Number: MR08-SB117

Client: NAVFAC
Project: HPCA, POIA, and FC PA/SI Report
Location: MCB Camp Lejeune
Project Number: 363366

Driller: Parratt Wolff
Drilling Method: DPT (Power Probe 9600T)
Sampling Method: 48" macrocore
Logged by: S. Kline/RDU
Start/Finish Date: 12/5/08

Depth (ft)	Sample Information: Sample #	Sample Type	Recovery (%)	SPT (6"-6"-6-6")	Soil Log	Soil Description	Depth / Elev (ft)	Comments
						Ground Surface	0	
0	HA	HA	100	N A		**Silty Sand (SM)** Brown, fine grained, loose, moist to wet, 20-30% silt	0	Headspace screened by PID 0.0 ppm Collect MR08-IS117-2-3 at 2ft bgs
						End of Log	-4 4	Terminate boring @ 4 ft bgs
5								
10								
15								
20								

CH2MHILL

Boring Number: MR08-SB118

Client: NAVFAC
Project: HPCA, POIA, and FC PA/SI Report
Location: MCB Camp Lejeune
Project Number: 363366

Driller: Parratt Wolff
Drilling Method: DPT (Power Probe 9600T)
Sampling Method: 48" macrocore
Logged by: B. Propst/CLT
Start/Finish Date: 12/15/08

Depth (ft)	Sample Information: Sample #	Sample Type	Recovery (%)	SPT (6"-6"-6-6")	Soil Log	Soil Description	Depth / Elev (ft)	Comments
						Ground Surface	0	
0						**Asphalt**	0	Headspace screened by PID
						Fill Tan, silty sand and gravel, dense, dry		
	HA	HA	100	N A		**SM (Silty Sand)** Yellow-orange grading to white, fine grained, medium dense, wet at 3.5'		1.4 ppm Collect MR08-IS118-3-4 @ 3 ft bgs
							-4	Terminate boring at 4 ft
						End of Log	4	
5								
10								
15								
20								

Boring Number: MR08-SB119

Client: NAVFAC
Project: HPCA, POIA, and FC PA/SI Report
Location: MCB Camp Lejeune
Project Number: 363366

Driller: Parratt Wolff
Drilling Method: DPT (Power Probe 9600T)
Sampling Method: 48" macrocore
Logged by: B. Propst/CLT
Start/Finish Date: 12/15/08

Depth (ft)	Sample #	Sample Type	Recovery (%)	SPT (6"-6"-6-6")	Soil Log	Soil Description	Depth / Elev (ft)	Comments
						Ground Surface	0	
0						**Asphalt**	0	Headspace screened by PID
						Fill Tan, silty sand and gravel, dense, dry		0.0 ppm
	HA	HA	100	N A		**Sand (SP)** Tan, fine grained, poorly graded, loose, dry		
						Silty Sand (SM) Light brown/yellow-orange, dense, fine grained, dry	-4	
						No recovery	4	Collect MR08-IS119-4.5-5.5 @ 4.5 ft bgs
5						**Silty Sand (SM)** Orange-red, fine grained, dense	-6	0.0 ppm
	DP-1	DP	87.5	N A		**Silty Sand (SM)** Light gray, dense, fine grained, damp to moist	6 -7	
						Sand (SP0 Light gray, fine grained, dense, wet	7 -8	
						End of Log	8	Terminate boring at 8 ft
10								
15								
20								

Boring Number: MR08-SB120

Client: NAVFAC
Project: HPCA, POIA, and FC PA/SI Report
Location: MCB Camp Lejeune
Project Number: 363366

Driller: Parratt Wolff
Drilling Method: DPT (Power Probe 9600T)
Sampling Method: 48" macrocore
Logged by: B. Propst/CLT
Start/Finish Date: 12/15/08

Depth (ft)	Sample #	Sample Type	Recovery (%)	SPT (6"-6"-6-6")	Soil Log	Soil Description	Depth / Elev (ft)	Comments
						Ground Surface	0	
0						**Asphalt**	0	Headspace screened by PID
	HA	HA	100	N A		**Fill** Tan and dark gray, sand and gravel, loose, dry, fine grained	-2 2	0.0 ppm CollectMR08-IS120-1.5-2.5 at 1.5ft bgs
						Silty Sand (SM) Yellow-orange, fine grained, medium dense to dense, moist at 3'		0.0 ppm
						End of Log	-4 4	Terminate boring at 4 ft
5								
10								
15								
20								

CH2MHILL

Boring Number: MR08-SB121

Client: NAVFAC
Project: HPCA, POIA, and FC PA/SI Report
Location: MCB Camp Lejeune
Project Number: 363366

Driller: Parratt Wolff
Drilling Method: DPT (Power Probe 9600T)
Sampling Method: 48" macrocore
Logged by: S. Kline/RDU
Start/Finish Date: 12/10/08

Depth (ft)	Sample Information: Sample #	Sample Type	Recovery (%)	SPT (6"-6"-6-6")	Soil Log	Soil Description	Depth / Elev (ft)	Comments
						Ground Surface	0	
0						**Asphalt, engineered fill (GM)** dense	0	Headspace screened by PID Ambient Air PID = 0.0 ppm PID = 0.1 ppm
	HA	HA	100	NA		**Silty Sand (SM)** medium brown, damp/moist, dense, fine grained, silt content 20%	-2 2	PID = 0.0 ppm PID = 0.0 ppm
						End of Log	-4 4	PID = 0.0 ppm
5								Water table at 3.75 - 4' Sample MR08-IS121-2-3-08D
10								
15								
20								

Boring Number: MR08-SB122

Client: NAVFAC
Project: HPCA, POIA, and FC PA/SI Report
Location: MCB Camp Lejeune
Project Number: 363366

Driller: Parratt Wolff
Drilling Method: DPT (Power Probe 9600T)
Sampling Method: 48" macrocore
Logged by: J. Albano/CLT
Start/Finish Date: 12/15/08

Depth (ft)	Sample #	Sample Type	Recovery (%)	SPT (6"-6"-6-6")	Soil Log	Soil Description	Depth / Elev (ft)	Comments
						Ground Surface	0	
0						**Sand (SW)** Tan, gravelly, slightly moist, loose	0	Headspace screened by PID 0.0 ppm
							-2	
	HA	HA	100	N A		**Silty Sand (SW)** Tan, moist, medium dense	2	0.0 ppm
							-4	
						Sand (SP) Tan, fine grained, loose to medium dense	4	
5							-6	0.0 ppm
	DP-1	DP	75	N A		**Sand (SP)** White, fine grained, moist, medium dense	6	Collect MR08-IS122-6.5-8-08D at 6.5-8 ft
							-7	
						No recovery	7	
							-8	Terminate boring at 8 ft
						End of Log	8	
10								
15								
20								

Boring Number: MR08-SB123

Client: NAVFAC
Project: HPCA, POIA, and FC PA/SI Report
Location: MCB Camp Lejeune
Project Number: 363366

Driller: Parratt Wolff
Drilling Method: DPT (Power Probe 9600T)
Sampling Method: 48" macrocore
Logged by: S. Kline/RDU
Start/Finish Date: 12/5/08

Depth (ft)	Sample #	Sample Type	Recovery (%)	SPT (6"-6"-6-6")	Soil Log	Soil Description	Depth / Elev (ft)	Comments
						Ground Surface	0	
0						**Silty Sand (SM)** Tan/brown, fine grained, loose to medium dense, 20-30% silt, damp	0	Headspace screened by PID
	HA	HA	100	N A				0.0 ppm
								0.0 ppm
5								0.0 ppm
	DP-1	DP	88	N A				Collect MR08-IS123-6-7 at 6ft bgs
							-8	Water
						No Recovery	8	Terminate boring at 8'
						End of Log		
10								
15								
20								

Boring Number: MR08-SB124

Client: NAVFAC
Project: HPCA, POIA, and FC PA/SI Report
Location: MCB Camp Lejeune
Project Number: 363366

Driller: Parratt Wolff
Drilling Method: DPT (Power Probe 9600T)
Sampling Method: 48" macrocore
Logged by: S. Kline/RDU
Start/Finish Date: 12/10/08

Depth (ft)	Sample Information: Sample #	Sample Type	Recovery (%)	SPT (6"-6"-6-6")	Soil Log	Soil Description	Depth / Elev (ft)	Comments
						Ground Surface	0	
0						**Asphalt, engineered fill (GM)** gray/black, dense, damp, gravel up to 2" clasts, silt 20%	0	Headspace screened by PID Ambient Air PID = 0.0 ppm PID = 0.0 ppm
	HA	HA	100	NA		**Silty Sand (SM)** brown, dense, moist, fine grained, poorly graded, 10-20% silt	-2 2	PID = 0.0 ppm PID = 0.1 ppm
						End of Log	-4 4	PID = 0.1 ppm
5								Water table at 3.5-4' Sample MR08-IS124-2-3-08D
10								
15								
20								

Boring Number: MR08-SB125

Client: NAVFAC
Project: HPCA, POIA, and FC PA/SI Report
Location: MCB Camp Lejeune
Project Number: 363366

Driller: Parratt Wolff
Drilling Method: DPT (Power Probe 9600T)
Sampling Method: 48" macrocore
Logged by: S. Kline/RDU
Start/Finish Date: 12/5/08

Depth (ft)	Sample #	Sample Type	Recovery (%)	SPT (6"-6"-6-6")	Soil Log	Soil Description	Depth / Elev (ft)	Comments
						Ground Surface	0	
0	HA	HA	100	N A		**Silty Sand (SM)** Light gray, fine grained, loose to medium dense, 20-30% silt, damp to moist	0	Headspace screened by PID 0.0 ppm 0.0 ppm
							-4	Collect MR08-IS125-4-5 at 4ft bgs
5	DP-1	DP	88	N A		**No Recovery**	4	0.0 ppm
						Silty Sand (SM) Orange, fine grained, moist, medium dense	-7 7	
						Silty Sand (SM) Light gray, fine grained, loose to medium dense, 20-30% silt, moist to wet	-8 8	Terminate boring at 8'
						End of Log		
10								
15								
20								

Boring Number: MR08-SB126

Client: NAVFAC
Project: HPCA, POIA, and FC PA/SI Report
Location: MCB Camp Lejeune
Project Number: 363366

Driller: Parratt Wolff
Drilling Method: DPT (Power Probe 9600T)
Sampling Method: 48" macrocore
Logged by: B. Propst/CLT
Start/Finish Date: 12/16/08

Depth (ft)	Sample #	Sample Type	Recovery (%)	SPT (6"-6"-6-6")	Soil Log	Soil Description	Depth / Elev (ft)	Comments
						Ground Surface	0	
0						**Asphalt**	0	Headspace screened by PID
						Fill Tan, gravel, silty sand		0.0 ppm
	HA	HA	100	N A		**Silty Sand (SM)** Yellow-orange, trace clay, fine grained, dense, wet at 3.5		Collect MR08-IS126-1.5-2.5-08D @ 1.5 ft 0.0 ppm
							-4	Terminate boring at 4 ft
						End of Log	4	
5								
10								
15								
20								

Boring Number: MR08-SB127

Client: NAVFAC
Project: HPCA, POIA, and FC PA/SI Report
Location: MCB Camp Lejeune
Project Number: 363366

Driller: Parratt Wolff
Drilling Method: DPT (Power Probe 9600T)
Sampling Method: 48" macrocore
Logged by: J. Albano/CLT
Start/Finish Date: 12/16/08

Depth (ft)	Sample #	Sample Type	Recovery (%)	SPT (6"-6"-6-6")	Soil Log	Soil Description	Depth / Elev (ft)	Comments
						Ground Surface	0	
0						**Sandy Gravel (GP)** Tan, loose, slightly moist to dry	0	Headspace screened by PID 0.0 ppm
	HA	HA	100	N A		**Sand (SP)** Black, organic, loose to medium dense, damp	-1 1	Collect MR08-IS127-1.5-2.5-08D @1.5 ft
5							-6	
	DP-1	DP	37	NA		wood debris **No recovery**	6	0.0 ppm
							-8 8	Terminate boring @8 ft
						End of Log		
10								
15								
20								

CH2MHILL

Boring Number: MR08-SB128

Client: NAVFAC
Project: HPCA, POIA, and FC PA/SI Report
Location: MCB Camp Lejeune
Project Number: 363366

Driller: Parratt Wolff
Drilling Method: DPT (Power Probe 9600T)
Sampling Method: 48" macrocore
Logged by: S. Kline/RDU
Start/Finish Date: 12/9/08

Depth (ft)	Sample Information: Sample #	Sample Type	Recovery (%)	SPT (6"-6"-6-6")	Soil Log	Soil Description	Depth / Elev (ft)	Comments
						Ground Surface	0	
0						**Asphalt, engineered fill (GM)** gray, dense, gravel up to 2" clasts, silt 20-30%	0	Headspace screened by PID Ambient Air PID = 0.0 ppm PID = 0.0 ppm
	HA	HA	100	NA		**Silty Sand (SM) - (SP)** brown, moist, fine grained, poorly graded, silt 10% moist to wet at 4'	-2 2	PID = 0.0 ppm PID = 0.0 ppm PID = 0.2 ppm
						End of Log	-4 4	
5								Water table at 4' Sample MR08-IS128-2-3-08D
10								
15								
20								

CH2MHILL

Boring Number: MR08-SB129

Client: NAVFAC
Project: HPCA, POIA, and FC PA/SI Report
Location: MCB Camp Lejeune
Project Number: 363366

Driller: Parratt Wolff
Drilling Method: DPT (Power Probe 9600T)
Sampling Method: 48" macrocore
Logged by: S. Kline/RDU
Start/Finish Date: 12/9/08

Depth (ft)	Sample Information: Sample #	Sample Type	Recovery (%)	SPT (6"-6"-6-6")	Soil Log	Soil Description	Depth / Elev (ft)	Comments
						Ground Surface	0	
0						**Asphalt, engineered fill (GM)** gray, very dense, silt 20-30%	0	Headspace screened by PID Ambient Air PID = 0.0 ppm PID = 0.0 ppm
	HA	HA	100	NA		**Silty Sand (SM)** medium brown, moist, fine grained, poorly graded, silt 10-20%	-2 2	PID = 0.0 ppm PID = 0.0 ppm
						End of Log	-4 4	PID = 0.2 ppm
5								Water table at 3.75' Sample MR08-IS129-2-3-08D
10								
15								
20								

CH2MHILL

Boring Number: MR08-SB130

Client: NAVFAC
Project: HPCA, POIA, and FC PA/SI Report
Location: MCB Camp Lejeune
Project Number: 363366

Driller: Parratt Wolff
Drilling Method: DPT (Power Probe 9600T)
Sampling Method: 48" macrocore
Logged by: J. Albano/CLT
Start/Finish Date: 12/16/08

Depth (ft)	Sample Information: Sample #	Sample Type	Recovery (%)	SPT (6"-6"-6-6")	Soil Log	Soil Description	Depth / Elev (ft)	Comments
						Ground Surface	0	
0	HA	HA	100	N A		**Sand (SW)** Tan, loose, dry to slightly moist	0 -2	Headspace screened by PID 0.0 ppm
						Sand (SP) Orange to tan, medium dense, moist to very moist, fine grained	2 -3	Collect MR08-IS126-1.5-2.5-08D @ 1.5 ft 0.0 ppm
						End of Log	3	Terminate boring @ 3 ft
5								
10								
15								
20								

CH2MHILL

Boring Number: MR08-SB131

Client: NAVFAC
Project: HPCA, POIA, and FC PA/SI Report
Location: MCB Camp Lejeune
Project Number: 363366

Driller: Parratt Wolff
Drilling Method: DPT (Power Probe 9600T)
Sampling Method: 48" macrocore
Logged by: B. Propst/CLT
Start/Finish Date: 12/16/08

Depth (ft)	Sample Information: Sample #	Sample Type	Recovery (%)	SPT (6"-6"-6-6")	Soil Log	Soil Description	Depth / Elev (ft)	Comments
						Ground Surface	0	
0	HA	HA	100	N A		**Sand (SP)** Dark gray, fine grained, poorly graded, loose	0	Headspace screened by PID
						Silty Sand (SM) Tan, fine grained, medium dense, moist	-1 1	0.0 ppm
						Silty Sand (SM) Tan to light gray, fine grained, medium dense, wet	-2 2	Wet
						End of Log	-3 3	Terminate boring @ 3 ft
5								No subsurface soil sample collected due to shallow water table
10								
15								
20								

CH2MHILL

Boring Number: MR08-SB132

Client: NAVFAC
Project: HPCA, POIA, and FC PA/SI Report
Location: MCB Camp Lejeune
Project Number: 363366

Driller: Parratt Wolff
Drilling Method: DPT (Power Probe 9600T)
Sampling Method: 48" macrocore
Logged by: J. Albano/CLT
Start/Finish Date: 12/16/08

Depth (ft)	Sample Information: Sample #	Sample Type	Recovery (%)	SPT (6"-6"-6-6")	Soil Log	Soil Description	Depth / Elev (ft)	Comments
						Ground Surface	0	
0						**Asphalt**	0	Headspace screened by PID
	HA	HA	100	N A		**Sand (SW)** Tan, gravelly, loose, moist		0.0 ppm
						Sand (SP) Tan with orange, fine grained, moist to very moist		Collect MR08-IS132-1.5-3-08D @1.5ft
							-3	Terminate boring @ 3 ft
						End of Log	3	
5								
10								
15								
20								

Boring Number: MR08-SB133

Client: NAVFAC
Project: HPCA, POIA, and FC PA/SI Report
Location: MCB Camp Lejeune
Project Number: 363366

Driller: Parratt Wolff
Drilling Method: DPT (Power Probe 9600T)
Sampling Method: 48" macrocore
Logged by: J. Albano/CLT
Start/Finish Date: 12/17/08

Depth (ft)	Sample Information: Sample #	Sample Type	Recovery (%)	SPT (6"-6"-6-6")	Soil Log	Soil Description	Depth / Elev (ft)	Comments
						Ground Surface	0	
0						**Sand (SP)** Black, organic, moist, grass/roots, loose, fine grained	0	Headspace screened by PID
							-1	
						Silty Sand (SM) Tan, loose to medium dense, moist	1	0.0 ppm
	HA	HA	100	N A				Collect MR08-IS133-1-2 @1ft bgs
								0.0 ppm
							-4	Terminate boring @ 4ft
						End of Log	4	
5								
10								
15								
20								

Boring Number: MR08-SB374

Client: NAVFAC
Project: HPCA, POIA, and FC PA/SI Report
Location: MCB Camp Lejeune
Project Number: 363366

Driller: Parratt Wolff
Drilling Method: DPT (Ingersoll Rand A300)
Sampling Method: 48" macrocore
Logged by: E. Must/RDU
Start/Finish Date: 11/16/08

Depth (ft)	Sample #	Sample Type	Recovery (%)	SPT (6"-6"-6-6")	Soil Log	Soil Description	Depth / Elev (ft)	Comments
						Ground Surface	0	
0	HA	HA	100	NA		**Silty Sand (SM)** Light brown/grey, very fine grained sand, loose, moist	0	Hand auger 0-5 ft PID: 0.0 ppm from bucket Headspace screened by PID PID: 0.0 ppm
5	DP-1	DP	100	NA				PID: 0.1 ppm
							-9	
10	DP-2	DP	100	NA		**Interbedded Sand (SP) and Silty Sand (SM)** Light tan, very fine grained, poorly graded, loose moist sand. Light brown/grey, very fine grained, loose moist silty sand.	9 -11	PID: 0.1 ppm
						Sand (SP) Tan/white, very fine grained, poorly graded, loose, moist to dry	11	
15	DP-3	DP	100	NA			-15	PID: 0.1 ppm
						Interbedded Sand (SP) and Silty Sand (SM) Light tan, very fine grained, poorly graded, loose moist sand. Light brown/grey, very fine grained, loose moist silty sand.	15 -17	Collected sample MR08-IS374-08D and MR08-IS374D-08D (16 to 20 ft bgs)
	DP-4	DP	100	NA		**Sand (SP)** Orange/tan, fine grained, moist, wet at 18 ft bgs, loose	17 -20	PID: 0.1 ppm Installed temporary well MR08-TW01 set to 26 ft bgs, screened from 16 to 26 ft bgs
20						End of Log	20	

Boring Number: MR08-SB375

Client: NAVFAC
Project: HPCA, POIA, and FC PA/SI Report
Location: MCB Camp Lejeune
Project Number: 363366

Driller: Parratt Wolff
Drilling Method: DPT (Ingersoll Rand A300)
Sampling Method: 48" macrocore
Logged by: E. Must/RDU
Start/Finish Date: 11/16/08

Depth (ft)	Sample #	Sample Type	Recovery (%)	SPT (6"-6"-6-6")	Soil Log	Soil Description	Depth / Elev (ft)	Comments
						Ground Surface	0	
0	HA	HA	100	NA		**Silty Sand (SM)** Light brown, very fine grained, loose, moist	0	Hand auger 0-5 ft PID: 0.1 ppm in bucket PID: 0.1 ppm in breathing zone
5	DP-1	DP	100	NA				PID: 0.1 ppm above macrocore
10	DP-2	DP	100	NA			-10	PID: 0.0 ppm above macrocore
						Sand (SP) Tan/white very fine grained, loose, dry to moist	10	
	DP-3	DP	100	NA			-14 14	PID: 0.0 ppm above macrocore
15						**Sand (SP)** Tan/white, very fine grained, poorly graded, loose, dry to moist, thin beds of soft grey clay (CL)	-16 16	Collected sample MR08-IS375-08D (15 to 17 ft bgs)
	DP-4	DP	100	NA		**Sand (SP)** Tan/white very fine grained, loose, dry to moist, wet at 18 ft bgs		PID: 0.0 ppm above macrocore Installed temporary well MR08-TW02 set to 26 ft bgs, screened from 16 to 26 ft bgs
20							-20 20	
						End of Log		

Boring Number: MR08-SB376

Client: NAVFAC
Project: HPCA, POIA, and FC PA/SI Report
Location: MCB Camp Lejeune
Project Number: 363366

Driller: Parratt Wolff
Drilling Method: DPT (Ingersoll Rand A300)
Sampling Method: 48" macrocore
Logged by: E. Must/RDU
Start/Finish Date: 11/16/08

Depth (ft)	Sample #	Sample Type	Recovery (%)	SPT (6"-6"-6-6")	Soil Log	Soil Description	Depth / Elev (ft)	Comments
						Ground Surface	0	
0						**Silty Sand (SM)** Light brown/tan, very fine grained, loose, moist	0	Hand auger 0-5 ft PID:0.0 ppm in bucket
	HA	HA	100	NA				
5								
	DP-1	DP	100	NA				PID:0.0 ppm above macrocore
							-10	
10	DP-2	DP	100	NA		**Sand (SP)** White/tan, very fine grained, poorly graded, loose, moist, thin orange laminations, wet at 18 ft bgs	10	PID:0.2 ppm above macrocore
	DP-3	DP	100	NA				PID:0.2 ppm above macrocore
15								
	DP-4	DP	90	NA				Collected sample MR08-IS376-08D MS/MSD (16 to 18 ft bgs) PID:0.0 ppm above macrocore Installed temporary well MR08-TW03 set to 27 ft bgs, screened from 17 to 27 ft bgs
							-20	
20						End of Log	20	

Boring Number: MR08-SB377

Client: NAVFAC
Project: HPCA, POIA, and FC PA/SI Report
Location: MCB Camp Lejeune
Project Number: 363366

Driller: Parratt Wolff
Drilling Method: DPT (Ingersoll Rand A300)
Sampling Method: 48" macrocore
Logged by: D. Lubell/RDU
Start/Finish Date: 11/17/08

Depth (ft)	Sample #	Sample Type	Recovery (%)	SPT (6"-6"-6-6")	Soil Log	Soil Description	Depth / Elev (ft)	Comments
						Ground Surface	0	
0						Brown, loamy soil	0	Hand auger 0-5 ft Headspace screened by PID
	HA	HA	100	NA		**Silty Sand (SM)** Brown, dry, loose	-2 2	
5								PID: 0.0 ppm
	DP-1	DP	75	NA		**Sand (SP)** Tan/brown, very fine grained, dry, loose	-7 7	PID: 0.0 ppm
	DP-2	DP	100	NA		**Sand (SP)** Very fine grained, trace silt, dry to moist, loose	-9 9	
10								PID: 0.0 ppm
	DP-3	DP	100	NA		**Sand (SP)** Very fine grained, trace silt, dry, tan/light brown, loose	-12 12	PID: 0.1 ppm PID: 0.0 ppm
						Clayey Sand (SC) Tan/light brown, dry	-14 14	
15						**Sand (SP)** Tan/light brown, very fine grained, loose, dry	-15 15	PID: 0.1 ppm Collected sample MR08-IS377-08D and MR08-IS377D-08D (16 to 18 ft bgs)
	DP-4	DP	100	NA		**Clayey Sand (SC)** Brown, 16-16.4 ft bgs, dry	-16 16	
						Sand (SP) Tan, very fine grained, loose, moist to wet at 20 ft bgs		PID: 0.0 ppm Installed temporary well MR08-TW04 at 27.5 ft bgs, screened from 17.5 to 27.5 ft bgs
20						End of Log	-20 20	

CH2MHILL

Boring Number: MR08-SB389

Client: NAVFAC
Project: HPCA, POIA, and FC PA/SI Report
Location: MCB Camp Lejeune
Project Number: 363366

Driller: Parratt Wolff
Drilling Method: DPT (Ingersoll Rand A300)
Sampling Method: 48" macrocore
Logged by: D. Lubell/RDU
Start/Finish Date: 11/19/08

Depth (ft)	Sample #	Sample Type	Recovery (%)	SPT (6"-6"-6-6")	Soil Log	Soil Description	Depth / Elev (ft)	Comments
						Ground Surface	0	
0						**Asphalt**	0	Headspace screened by PID
						Not Logged		
	HA	HA	100	NA				Background PID: 0.2 ppm
5							-5	PID: 0.4 ppm
						Sand (SP) Light brown, fine grained, loose, dry	5	
	DP-1	DP	60	NA			-7 7	
						No Recovery		PID: 0.6 ppm
							-9 9	
10	DP-2	DP	65	NA		**Sand (SP)** Light brown, fine to very fine grained, moist		
							-11 11	PID: 0.4 ppm
						Silty Sand (SM) Light brown, moist	-12 12	PID: 0.8 ppm
						No Recovery		
						Sand (SP) Light brown/tan, moist, very fine grained		
	DP-3	DP	95	NA			-14 14	
						Sandy Clay (CL) Brown, medium stiff, moist from 15.25 to 15.5		
15							-16 16	PID: 0.6 ppm
						Sand (SP) Tan, very fine grained, moist, loose		PID: 0.9 ppm Collected sample MR08-IS389-08D and MR08-IS389D-08D (16 to 18 ft bgs)
	DP-4	DP	100	NA			-19 19	PID: 0.4 ppm
						Sandy Clay (CL) Tan/brown, fine grained, soft, saturated, plastic		
20							-20 20	Installed temporary well MR08-TW16 set to 27 ft bgs, screened from 17 to 27 ft bgs
						End of Log		

Boring Number: MR08-SB390

Client: NAVFAC
Project: HPCA, POIA, and FC PA/SI Report
Location: MCB Camp Lejeune
Project Number: 363366

Driller: Parratt Wolff
Drilling Method: DPT (Ingersoll Rand A300)
Sampling Method: 48" macrocore
Logged by: D. Lubell/RDU
Start/Finish Date: 11/18/08

Depth (ft)	Sample #	Sample Type	Recovery (%)	SPT (6"-6"-6-6")	Soil Log	Soil Description	Depth / Elev (ft)	Comments
						Ground Surface	0	
0	HA	HA	100	NA		**Clayey Sand (SC) to Fine Sand (SP)** Dark brown, loamy topsoil, clayey sand grading to fine sand (at 2 ft bgs)	0	Headspace screened by PID Installed temporary well MR08-TW17 set to 26 ft bgs, screened from 16 to 26 ft bgs
						Clayey Sand (SC) Brown, moist, loose	-4 4	
5	DP-1	DP	75	NA		**Sand (SP)** Light brown/tan, fine grained, little clays, moist, loose	-5 5	PID: 1.1 ppm
						No Recovery	-7 7	
10	DP-2	DP	75	NA		**Sand (SP)** Light brown/tan, fine grained, little fines, moist, loose	-9 9	PID: 0.5 ppm PID: 0.7 ppm
	DP-3	DP	100	NA				PID: 1.0 ppm Collected sample MR08-IS390-08D (14 to 15 ft bgs)
15						**Clayey Sand (SC)** Brown, moist	-15 15	PID: 1.0 ppm
						Sandy Clay (CL) Dark brown, wet at 15.5 ft bgs	-16 16	Installed temporary well MR08-TW17 set to 26 ft bgs, screened from 16 to 26 ft bgs
						End of Log		
20								

CH2MHILL

Boring Number: MR08-SB391

Client: NAVFAC
Project: HPCA, POIA, and FC PA/SI Report
Location: MCB Camp Lejeune
Project Number: 363366

Driller: Parratt Wolff
Drilling Method: DPT (Ingersoll Rand A300)
Sampling Method: 48" macrocore
Logged by: D. Lubell/RDU
Start/Finish Date: 11/18/08

Depth (ft)	Sample Information: Sample #	Sample Type	Recovery (%)	SPT (6"-6"-6-6")	Soil Log	Soil Description	Depth / Elev (ft)	Comments
						Ground Surface	0	
0	HA	HA	100	NA		**Clayey Sand (SC)** Dark brown, loamy topsoil grading to clayey sand, brown, moist	0	Headspace screened by PID Background PID: 0.5 ppm
5							-6	PID: 0.8 ppm
	DP-1	DP	85	NA		**Sand (SP)** White, very fine grained, loose	6 -8	
						No Recovery	8	PID: 0.8 ppm
10	DP-2	DP	100	NA		**Interbedded Silty Sand (SM) and Very Fine Sand (SP)** Moist, loose	-11	
						Clayey Sand (SC) Brown, moist	11 -12	PID: 0.8 ppm
15	DP-3	DP	100	NA		**Sand (SP)** Tan/brown, fine to very fine grained, moist, loose	12 -16	PID: 1.1 ppm PID: 1.1 ppm
						Clayey Sand (SC) Brown, fine grained	16	PID: 0.9 ppm
	DP-4	DP	100	NA		**Sand (SP)** Light brown/tan, fine grained, moist	-18	Collected sample MR08-IS391-08D (16 to 17.5 ft bgs)
						Sandy Clay (CL) Brown/gray, wet, soft	18 -20	Installed temporary well MR08-TW18 set to 26 ft bgs, screened from 16 to 26 ft bgs
20						End of Log	20	PID: 1.1 ppm

CH2MHILL

Boring Number: MR08-SB392

Client: NAVFAC
Project: HPCA, POIA, and FC PA/SI Report
Location: MCB Camp Lejeune
Project Number: 363366

Driller: Parratt Wolff
Drilling Method: DPT (Ingersoll Rand A300)
Sampling Method: 48" macrocore
Logged by: D. Lubell/RDU
Start/Finish Date: 11/18/08

Depth (ft)	Sample Information: Sample #	Sample Type	Recovery (%)	SPT (6"-6"-6-6")	Soil Log	Soil Description	Depth / Elev (ft)	Comments
						Ground Surface	0	
0	HA	HA	100	NA		Dark brown, loamy soil, organics	0	Headspace screened by PID
							-5	
5						**No Recovery**	5	PID: 0.4 ppm
	DP-1	DP	75	NA		**Silty Sand (SM)** Brown, moist, loose	-7	
						Sand (SP) Tan, fine grained, loose, moist	7 -8	PID: 0.4 ppm
						No Recovery	8	
10	DP-2	DP	90	NA		**Sand (SP)** Brown/tan, fine to very fine grained, moist, loose	-12	PID: 0.3 ppm
	DP-3	DP	100	NA		**Sand (SP)** Tan/light brown, very fine grained	12 -14	PID: 1.1 ppm
						Silty Sand (SM) Brown/orange	14 -15	PID: 0.4 ppm
15						**Sandy Clay (CL)**	15	Collected sample MR08-IS392-08D (15 to 16 ft bgs)
	DP-4	DP	100	NA		**Silty Sand (SM)** Brown/orange, very fine grained, moist	-17	PID: 0.8 ppm
						Sand (SP) Brown/tan/orange mottled, very fine grained, moist, loose	17	Installed temporary well MR08-TW19 set to 25.5 ft bgs, screened from 15.5 to 25.5 ft bgs
						Sandy Clay (CL) Orange/brown, soft, saturated, fine to very fine grained	-20	
20						End of Log	20	PID: 0.4 ppm

CH2MHILL

Boring Number: MR08-SB393

Client: NAVFAC
Project: HPCA, POIA, and FC PA/SI Report
Location: MCB Camp Lejeune
Project Number: 363366

Driller: Parratt Wolff
Drilling Method: DPT (Ingersoll Rand A300)
Sampling Method: 48" macrocore
Logged by: D. Lubell/RDU
Start/Finish Date: 11/18/08

Depth (ft)	Sample #	Sample Type	Recovery (%)	SPT (6"-6"-6-6")	Soil Log	Soil Description	Depth / Elev (ft)	Comments
						Ground Surface	0	
0	HA	HA	100	NA		**Silty Sand (SM)** Dark brown, loamy topsoil, grading to brown, dry silty sand	0	Headspace screened by PID Background PID: 0.3 ppm
5	DP-1	DP	75	NA		**Silty Sand (SM)** Brown, dry, dense	-5 5	PID: 0.6 ppm
						Sand (SP) Tan/light brown, fine grained, loose, dry	-7 7	
						No Recovery	-8 8	PID: 1.0 ppm
10	DP-2	DP	95	NA		**Sand (SP)** Tan/light brown, very fine grained, loose, dry, sandy clay lense at 10.5 to 11 ft bgs	-12 12	PID: 0.8 ppm PID: 1.0 ppm
15	DP-3	DP	100	NA		**Sand (SP)** Tan/light brown, fine to very fine grained, little fines, dry, loose	-16 16	PID: 0.8 ppm Collected sample MR08-IS393-08D (16 to 18 ft bgs)
	DP-4	DP	100	NA		**Sand (SP)** Tan/light brown, fine grained, moist, loose	-18 18	PID: 0.8 ppm Installed temporary well MR08-TW20 set to 26 ft bgs, screened from 16 to 26 ft bgs
						Clayey Sand (SC) Tan/light brown, wet	-19 19	
20						**Sandy Clay (CL)** Tan/light brown, wet	-20 20	PID: 1.0 ppm
						End of Log		

Boring Number: MR08-SB394

Client: NAVFAC
Project: HPCA, POIA, and FC PA/SI Report
Location: MCB Camp Lejeune
Project Number: 363366

Driller: Parratt Wolff
Drilling Method: DPT (Ingersoll Rand A300)
Sampling Method: 48" macrocore
Logged by: D. Lubell/RDU
Start/Finish Date: 11/18/08

Depth (ft)	Sample #	Sample Type	Recovery (%)	SPT (6"-6"-6-6")	Soil Log	Soil Description	Depth / Elev (ft)	Comments
						Ground Surface	0	
0	HA	HA	100	NA		**Clayey Sand (SC)** Brown, moist, loose	0 -5	Headspace screened by PID Background PID: 0.5 ppm
5	DP-1	DP	75	NA		No recovery **Sand (SP)** Light brown, fine grained, little silt, loose, moist	5 -6 6 -8	PID: 0.6 ppm
10	DP-2	DP	100	NA		**Sand (SP)** Light brown/tan, fine to very fine grained, medium dense to loose, moist, trace fines	8 -12	PID: 0.5 ppm PID: 0.5 ppm
15	DP-3	DP	80	NA		**No Recovery** **Sand (SP)** Light brown/tan, very fine grained, medium density, moist, trace fines	12	PID: 1.1 ppm PID: 0.8 ppm Collected sample MR08-IS394-08D (16 to 18 ft bgs)
	DP-4	DP	100	NA			-19	PID: 0.8 ppm Installed temporary well MR08-TW21 set to 27 ft bgs, screened from 17 to 27 ft bgs
20						**Clayey Sand (SC)** Light brown, wet **Sandy Clay (CL)** Olive brown, wet, soft End of Log	19	PID: 0.7 ppm

CH2MHILL

Boring Number: MR08-SB395

Client: NAVFAC
Project: HPCA, POIA, and FC PA/SI Report
Location: MCB Camp Lejeune
Project Number: 363366

Driller: Parratt Wolff
Drilling Method: DPT (Ingersoll Rand A300)
Sampling Method: 48" macrocore
Logged by: D. Lubell/RDU
Start/Finish Date: 11/18/08

Depth (ft)	Sample #	Sample Type	Recovery (%)	SPT (6"-6"-6-6")	Soil Log	Soil Description	Depth / Elev (ft)	Comments
						Ground Surface	0	
0	HA	HA	100	NA		**Clayey Sand (SC)** Dark brown, loamy topsoil grading to brown/tan clayey sand, moist	0 -5	Headspace screened by PID Background PID: 0.4 ppm
5						**No Recovery**	5 -6	PID: 0.8 ppm
	DP-1	DP	75	NA		**Sand (SP)** Tan, very fine grained, loose to medium dense moist	6 -8	
	DP-2	DP	100	NA		**Sand (SP)** Tan, fine to very fine grained, loose to medium dense, moist	8 -12	PID: 0.8 ppm PID: 0.7 ppm
10								
	DP-3	DP	100	NA		**Sand (SP)** Light brown/tan, fine to very fine grained, loose, moist	12 -16	PID: 0.8 ppm PID: 0.8 ppm Collected sample MR08-IS395-08D (16 to 18 ft bgs)
15								
	DP-4	DP	100	NA		**Sand (SP)** Brown, fine to very fine grained, moist	16 -18	PID: 0.7 ppm
						Clay (CL) Olive brown, moist, soft	18	Installed temporary well MR08-TW22 set to 25 ft bgs, screened from 15 to 25 ft bgs
						Clayey Sand (SC) Tan/brown, wet, loose	-20	PID: 0.6 ppm
20						**Sandy Clay (CL)** Olive brown, wet, soft	20	
						End of Log		

Boring Number: MR08-SB396

Client: NAVFAC
Project: HPCA, POIA, and FC PA/SI Report
Location: MCB Camp Lejeune
Project Number: 363366

Driller: Parratt Wolff
Drilling Method: DPT (Ingersoll Rand A300)
Sampling Method: 48" macrocore
Logged by: D. Lubell/RDU
Start/Finish Date: 11/19/08

Depth (ft)	Sample #	Sample Type	Recovery (%)	SPT (6"-6"-6-6")	Soil Log	Soil Description	Depth / Elev (ft)	Comments
						Ground Surface	0	
0						**Topsoil** Dark brown, loamy	0	Headspace screened by PID Background PID: 0.3 ppm
	HA	HA	100	NA		**Clayey Sand (SC)** Brown, moist	-2 2	
5						**No Recovery**	-5 5	PID: 0.8 ppm
	DP-1	DP	75	NA		**Clayey Sand (SC)** Brown, fine grained, loose, moist		
						No Recovery	-8 8	PID: 1.1 ppm
	DP-2	DP	75	NA		**Clayey Sand (SC)** Brown, fine grained, loose, moist	-9 9	PID: 0.8 ppm
10						**No Recovery**	-12 12	PID: 0.9 ppm Collected sample MR08-IS396 (12.5 to 14 ft bgs)
	DP-3	DP	75	NA		**Sand (SP)** Light brown/tan, very fine grained, moist	-13 13	PID: 0.6 ppm
15						**Sandy Clay (CL)** Olive brown, soft, saturated	-16 16	
						Sand (SP) Light brown, very fine grained, wet		
						End of Log		Installed temporary well MR08-TW23 set to 24 ft bgs, screened from 14 to 24 ft bgs
20								

Boring Number: MR08-SB397

Client: NAVFAC
Project: HPCA, POIA, and FC PA/SI Report
Location: MCB Camp Lejeune
Project Number: 363366

Driller: Parratt Wolff
Drilling Method: DPT (Ingersoll Rand A300)
Sampling Method: 48" macrocore
Logged by: D. Lubell/RDU
Start/Finish Date: 11/17/08

Depth (ft)	Sample #	Sample Type	Recovery (%)	SPT (6"-6"-6-6")	Soil Log	Soil Description	Depth / Elev (ft)	Comments
						Ground Surface		
0	HA	HA	100	NA		**Silty Sand (SM)** Brown, fine grained, moist	0	Headspace screened by PID Background PID: 0.2 ppm
5	DP-1	MC	40	NA		**Sand (SP)** Brown/tan, moist, fine grained, loose **Clayey Sand (SC)** Brown/tan **No Recovery**	5 6	PID: 0.2 ppm
10	DP-2	MC	90	NA		**Silty Sand (SM) and Clayey Sand (SC)** Interbedded, brown, medium loose, moist **No Recovery**	8 12	PID: 0.2 ppm PID: 0.3 ppm PID: 0.2 ppm
15	DP-3	MC	90	NA		**Clayey Sand (SC)** Brown, moist **Sand (SP)** Tan, very fine grained, loose, moist **Clay (CL)** Brown/olive, moist	14 16	PID: 0.2 ppm PID: 0.4 ppm
	DP-4	MC	100	NA		**Sand (SP)** Brown, very fine grained, moist, loose **Sand (SP)** Tan, fine grained, moist, loose **Clayey Sand (SC)** Tan, wet **Sandy Clay (CL)** Olive brown, very fine grained, saturated, soft	17 18 20	Collected sample MR08-IS397-08D (15 to 16 ft bgs) Installed temporary well MR08-TW24 set to 26 ft bgs, screened from 16 to 26 ft bgs PID: 0.5 ppm
20						End of Log		

CH2MHILL

Boring Number: MR08-SB398

Client: NAVFAC
Project: HPCA, POIA, and FC PA/SI Report
Location: MCB Camp Lejeune
Project Number: 363366

Driller: Parratt Wolff
Drilling Method: DPT (Ingersoll Rand A300)
Sampling Method: 48" macrocore
Logged by: D. Lubell/RDU
Start/Finish Date: 11/18/08

Depth (ft)	Sample #	Sample Type	Recovery (%)	SPT (6"-6"-6-6")	Soil Log	Soil Description	Depth / Elev (ft)	Comments
						Ground Surface		
0	HA	HA	100	NA		**Topsoil** Dark brown, loamy, organic, little gravel	0	Headspace screened by PID
						Clayey Sand (SC) Brown, moist, loose	3	
5	DP-1	DP	50	NA		No recovery	5	PID: 0.1 ppm
						Clayey Sand (SC) Brown, moist, loose	7	PID: 0.1 ppm
						No Recovery	8	
10	DP-2	DP	75	NA		**Clayey Sand (SC)** Brown/gray, moist, loose, fine grained	9	PID: 0.3 ppm
	DP-3	DP	100	NA		**Clayey Sand (SC)** Dark brown/tan, fine grained, moist, loose	12	PID: 0.2 ppm Collected sample MR08-IS398-08D and MR08-IS398D-08D (13 to 15 ft bgs)
15						**Clayey Sand (SC)** Tan/brown, moist to wet	14	PID: 0.2 ppm
						Sandy Clay (CL) Tan/brown, saturated, fine grained sand, soft	16	
						End of Log		Installed temporary well MR08-TW25 set to 26 ft bgs, screened from 16 to 26 ft bgs
20								

Boring Number: MR08-SB399

Client: NAVFAC
Project: HPCA, POIA, and FC PA/SI Report
Location: MCB Camp Lejeune
Project Number: 363366

Driller: Parratt Wolff
Drilling Method: DPT (Ingersoll Rand A300)
Sampling Method: 48" macrocore
Logged by: D. Lubell/RDU
Start/Finish Date: 11/18/08

Depth (ft)	Sample #	Sample Type	Recovery (%)	SPT (6"-6"-6-6")	Soil Log	Soil Description	Depth / Elev (ft)	Comments
						Ground Surface		
0	HA	HA	100	NA		**Topsoil** Brown, loamy, organics	0	Headspace screened by PID
						Clayey Sand (SC) Brown, moist, loose	4	
5	DP-1	DP	75	NA		**No Recovery** **Sand (SP)** Brown/tan, fine grained, dry to moist, loose	5	PID: 0.3 ppm
10	DP-2	DP	90	NA		**No Recovery** **Sand (SP)** Light brown/tan, fine grained, dry, loose **Clayey Sand (SC)** Light brown/tan **Sand (SP)** Light tan, very fine grained, loose, dry	8	PID: 0.2 ppm PID: 0.3 ppm
15	DP-3	DP	100	NA		**Sand (SP)** Tan, very fine grained, loose, dry	12	PID: 0.5 ppm Collected sample MR08-IS399-08D (13 to 15 ft bgs)
						Clayey Sand (SC) Brown, fine grained, wet at 15.6 ft bgs, loose	15	PID: 0.3 ppm
						End of Log	16	
20								Installed temporary well MR08-TW26 set to 26 ft bgs, screened from 16 to 26 ft bgs

Appendix G
Groundwater Sampling Sheets

CH2MHILL

GROUNDWATER SAMPLING DATA SHEET

Client: NAVY CLEAN
Location: UXO-8
Event:
Date: 1-9-07
Weather: Clear 40°

Project Number:
Well ID: IR78 - MW02
Sample ID: MR08- GW02-07A
Sampling Team: M. Tiburzi
J. Frank

Total Depth: 32.15 FT.(BTOC)
Depth to water: (-) 6.47 FT.(BTOC)
Water Column: 25.68 FT.
(x) .163 GAL/FT.
Well Volume: 4.18 GAL.
Total Purge Vol. x3 12.5 GAL.

Purge Device: Geopump

Measuring Device: Heron
Date and Time: 805 1-9-07

Well Dia. (inches)	Volume (gallons/foot)
1	0.041
1.25	0.064
2	0.163
4	0.653

SAMPLE DATA

Date: 1-9-07 Time: 1030	Temp. °C	Cond. mS/cm	DO mg/L	pH SU	ORP mV	Turbidity NTU	Other: DTW	Color / Odor / Comments
Method:	19.22	.348	5.78	6.16	9	0.0	11.43	

FIELD PARAMETERS

Time	Purge Vol. (gals)	Temp. °C	Cond. mS/cm	DO mg/L	pH SU	ORP mV	Turbidity NTU	Other: DTW	Color / Odor / Comments
815	0	14.43	.012	9.08	5.33	246	593	6.40	
825	0.25	16.40	.488	3.87	6.55	179	21.3	7.94	*
840	2	17.73	.438	4.03	6.50	1.0	10.5	10.54	
855	3.5	17.81	.403	5.16	6.35	-6	0.0	11.20	
915	5.5	18.23	.348	5.18	6.07	13	0.0	11.26	
935	7.5	18.76	.320	4.75	5.98	13	0.0	11.13	
955	9.5	18.86	.333	5.35	6.07	7	0.0	11.31	
1015	11.5	19.13	.343	5.56	6.24	9	0.0	11.42	
1025	12.5	19.22	.348	5.78	6.16	9	0.0	11.43	

Sample information: method, container number, size, and type, preservative used.

Analysis	Preservative	Container requirements	No. of containers
See Chain			

Observations/Notes:

Tubing placed approximately 15' bgs
*825, >1 ft of drawdown at very low rate. Increase flow rate and collect 3 volumes

MS/MSD
Duplicate ID No.:

Signature(s): [illegible]

CH2MHILL

GROUNDWATER SAMPLING DATA SHEET

Client: Navy CLEAN
Location: UXO-8
Event: Groundwater Sample
Date: 1/8/07
Weather: clear, cool 55°

Project Number:
Well ID: MW04-1
Sample ID: MR08GW04-07A
Sampling Team: M. Tibvrzi
J. Frank

Total Depth: 24.50 FT.(BTOC)
Depth to water: (-) 18.22 FT.(BTOC)
Water Column: 6.28 FT.
(x) .163 GAL/FT.
Well Volume: 1.02 GAL.
Total Purge Vol.: x3 3.07 GAL.

Purge Device: Geo pump

Measuring Device: Heron
Date and Time: 1/8/07 1515

Well Dia. (inches)	Volume (gallons/foot)
1	0.041
1.25	0.064
2	0.163
4	0.653

SAMPLE DATA

Date: 1-8-07 Time: 1615	Temp. °C	Cond. mS/cm	DO mg/L	pH SU	ORP mV	Turbidity NTU	Other: DTW	Color / Odor / Comments
Method:	29.2	-15	0.38	5.84	.272	50.8	18.68	

FIELD PARAMETERS

Time	Purge Vol. (gals)	Temp. °C	Cond. mS/cm	DO mg/L	pH SU	ORP mV	Turbidity NTU	Other: DTW	Color / Odor / Comments
1530	0	28.9	33	3.18	5.63	.250	410	18.26	
1540	1L	29.5	34	1.27	5.71	.239	498	18.58	
1545	0.5gal	29.6	36	0.90	5.71	.236	405	18.64	
1550	0.75	29.6	32	0.62	5.72	.242	347	18.68	
1600	1.25	29.4	8	0.41	5.76	.256	135	18.68	
1605	2	29.4	-2	0.39	5.79	.259	88.4	18.68	
1615	3.2	29.2	-15	0.38	5.84	.272	50.8	18.68	

Sample information: method, container number, size, and type, preservative used.

Analysis	Preservative	Container requirements	No. of containers
		6 1L Ambers	6
see chain	HCl	5 40mL vials	5
	HCl	2 500-mL	2
	HNO_3	1 500-mL	1
perc		1	1

Observations/Notes:
Tubing placed at ~~15~~ 22' bgs

MS/MSD Duplicate ID No.: MR08-~~M~~GW04D-07A

Signature(s): M L Tibvrzi

CH2MHILL

GROUNDWATER SAMPLING DATA SHEET

Client:
Location: UXO-8
Event:
Date: 1-9-07
Weather: clear 60°

Project Number:
Well ID: 1R78-MW11
Sample ID: MR08-GW11-07A
Sampling Team: M. Tiburzi, J. Frank

Total Depth: 25 FT.(BTOC)
Depth to water: (-) 11.08 FT.(BTOC)
Water Column: 13.92 FT.
(x) .163 GAL/FT.
Well Volume: 2.3 GAL.
Total Purge Vol.: x3 6.9 GAL.

Purge Device: Geopump

Measuring Device: Heron
Date and Time: 1255 1-9-07

Well Dia. (inches)	Volume (gallons/foot)
1	0.041
1.25	0.064
2	0.163
4	0.653

SAMPLE DATA

Date: 1-9-07 Time: 1345	Temp. °C	Cond. mS/cm	DO mg/L	pH SU	ORP mV	Turbidity NTU	Other: DTW	Color / Odor / Comments
Method:	18.85	.145	8.04	5.33	252	0.0	11.14	

FIELD PARAMETERS

Time	Purge Vol. (gals)	Temp. °C	Cond. mS/cm	DO mg/L	pH SU	ORP mV	Turbidity NTU	Other: DTW	Color / Odor / Comments
1300	0	18.52	.146	10.07	6.60	160	13.2	11.02	
1310	1	18.86	.148	8.03	5.36	246	7.3	11.13	
1320	2	18.84	.146	8.01	5.33	251	0.0	11.13	
1325	2.5	18.94	.145	8.00	5.33	253	0.0	11.13	
1330	3.0	18.85	.145	8.04	5.33	252	0.0	11.14	

Sample information: method, container number, size, and type, preservative used.

Analysis	Preservative	Container requirements	No. of containers
see chain			

Observations/Notes:
tubing placed at approx 15' bgs.

MS/MSD
Duplicate ID No.:
Signature(s): [illegible]

CH2MHILL

GROUNDWATER SAMPLING DATA SHEET

Client:
Location: UXO-8
Event:
Date: 1-9-7
Weather: clear, 60°

Project Number:
Well ID: IR78-GW56
Sample ID: MR08-GW56-07A
Sampling Team: M. Tiburzi, J. Frank

Total Depth: 29.6 FT.(BTOC)
Depth to water: (-) 16.50 FT.(BTOC)
Water Column: 13.1 FT.
(x) .041 GAL/FT.
Well Volume: .54 GAL.
Total Purge Vol.: x3 1.61 GAL.

Purge Device: Geopump

Measuring Device: Heron
Date and Time: 1-9-07 1115

Well Dia. (inches)	Volume (gallons/foot)
1	0.041
1.25	0.064
2	0.163
4	0.653

SAMPLE DATA

Date: 1-9-7 Time: 1200	Temp. °C	Cond. mS/cm	DO mg/L	pH SU	ORP mV	Turbidity NTU	Other: DTW	Color / Odor / Comments
Method:								

FIELD PARAMETERS

Time	Purge Vol. (gals)	Temp. °C	Cond. mS/cm	DO mg/L	pH SU	ORP mV	Turbidity NTU	Other: DTW	Color / Odor / Comments
1125	0	22.03	.90	10.22	6.83	94	0.0	16.48	
1130	0.25	21.89	.699	3.95	6.79	75	0.0	16.51	
1135	0.5	21.93	.679	3.88	6.77	71	0.0	16.51	
1140	0.75	21.81	.668	3.82	6.79	64	0.0	16.50	
1145	1.0	21.43	.663	3.83	6.81	59	0.0	16.50	
1150	1.3	21.32	.659	3.73	6.82	54	0.0	16.51	
1155	1.6	21.40	.657	3.68	6.83	52	0.0	16.50	

Sample information: method, container number, size, and type, preservative used.

Analysis	Preservative	Container requirements	No. of containers
see chain			

Observations/Notes:

tubing placed at ~ 20 ft bgs

MS/MSD | Duplicate ID No.:

Signature(s): [illegible]

CH2MHILL

GROUNDWATER SAMPLING DATA SHEET

Client:	NAVFAC	Project Number:	330966
Location:	CAMP LEJEUNE UXO-08	Well ID:	78-MW01
Event:	SITE INVESTIGATION	Sample ID:	MR08-GW01-07A
Date:	1-8-07	Sampling Team:	J FRANK / RDM
Weather:	CLEAR 60's		

Total Depth:	25	FT.(BTOC)	Measuring Device:	HORIBA U-22 / DIPPER T
Depth to water:	(-) 9.35	FT.(BTOC)	Date and Time:	
Water Column:	15.65	FT.		
	(x) 0.163	GAL/FT.		
Well Volume:	2.55	GAL.		
Total Purge Vol.:		GAL.		
Purge Device:	PERISTALTIC GEOPUMP			

Well Dia. (inches)	Volume (gallons/foot)
1	0.041
1.25	0.064
2	0.163
4	0.653

SAMPLE DATA

Date: 1-8-07 / Time:	Temp. °C	Cond. mS/cm	DO mg/L	pH SU	ORP mV	Turbidity NTU	Other: DTW	Color / Odor / Comments
Method: Low flow								

FIELD PARAMETERS

Time	Purge Vol. (gals)	Temp. °C	Cond. mS/cm	DO mg/L	pH SU	ORP mV	Turbidity NTU	Other DTW	Color / Odor / Comments
1730	0	16.88	0.589	6.64	5.66	37	High	9.35	RED/CLOUDY
1740	1	16.96	0.596	6.10	5.65	36	599	9.41	PINK/CLOUDY
1750	2	16.96	0.583	5.08	5.68	32	102	9.42	LT PINK
1800	3	16.96	0.596	5.26	5.71	30	37.5	9.42	CLEAR
1810	4	17.31	0.580	5.21	5.74	28	0	9.42	CLEAR
1820	5	17.37	0.584	5.25	5.72	25	0	9.42	CLEAR

Sample information: method, container number, size, and type, preservative used.

Analysis	Preservative	Container requirements	No. of containers
VOA / GRO			
METALS TOTAL			
METALS FILTERED			
CYANIDE			
BNA, PEST/PCB, EXPL, DRO/ORO			
PERCHLORATE			

Observations/Notes:

PDB NOT ON TETHER; SIGNIFICANT Fe IN WELL
PERCHLORATE TO SIERRA FOOTHILLS LAB
ALL OTHERS TO EMPIRICAL
TUBING SET 3 ft ABOVE BOTTOM

MS/MSD YES | Duplicate ID No.:

Signature(s): James E. Frank 1-8-07

CH2MHILL

GROUNDWATER SAMPLING DATA SHEET

Client: NAVFAC
Project Number: 330966
Location: CAMP LEJEUNE UXO-08
Well ID: 78-MW42
Event: SITE INVESTIGATION
Sample ID: MR08-GW42-060
Date: 1-8-07
Sampling Team: J FRANK / RDM
Weather: CLEAR, 60's

Total Depth: 23 FT.(BTOC)
Depth to water: (-) 15.95 FT.(BTOC)
Water Column: 7.05 FT.
(x) 0.163 GAL/FT.
Well Volume: 1.15 GAL.
Total Purge Vol.: 5 GAL.

Purge Device: PERISTALTIC GEOPUMP

Measuring Device: HORIBA U-22 / DIPPERT
Date and Time:

Well Dia. (inches)	Volume (gallons/foot)
1	0.041
1.25	0.064
2	0.163
4	0.653

SAMPLE DATA

Date: 1-8-07 Time: 1620	Temp. °C	Cond. mS/cm	DO mg/L	pH SU	ORP mV	Turbidity NTU	Other: DTW	Color / Odor / Comments
Method: Low flow	19.09	0.541	4.87	5.85	26	0	16.01	CLEAR

FIELD PARAMETERS

Time	Purge Vol. (gals)	Temp. °C	Cond. mS/cm	DO mg/L	pH SU	ORP mV	Turbidity NTU	Other: DTW	Color / Odor / Comments
1530	0	19.06	0.575	5.81	5.61	47	2.2	15.95	CLEAR
1540	1	19.24	0.575	5.19	5.70	40	0 —	15.99	CLEAR
1550	2	19.29	0.543	5.18	5.82	32	5.3	16.01	CLEAR
1600	3	19.18	0.544	4.90	5.84	28	10.8	16.05	CLEAR
1610	4	19.10	0.540	4.91	5.85	26	0	16.02	CLEAR
1620	5	19.09	0.541	4.87	5.85	26	0	16.01	CLEAR

Sample information: method, container number, size, and type, preservative used.

Analysis	Preservative	Container requirements	No. of containers
VOA / GRO	HCl	40 mL	3
METALS TOTAL	HNO_3	500 mL	1
METALS FILTERED	"	"	1
CYANIDE	NaOH	500 mL	1
BNA PEST/PCB EXPL	DRO/ORO —	1 L AMB	6
PERCHLORATE	—	50 mL	1

Observations/Notes:

PERCHLORATE TO SIERRA FOOTHILLS LAB
ALL OTHERS TO EMPIRICAL
TUBING SET 3 ft ABOVE BOTTOM

MS/MSD
Duplicate ID No.:
Signature(s): James E Frank 1-8-07

Sierra Foothill Laboratory, Inc.
255 Scottsville Blvd
PO Box 1268
Jackson, CA 95642

Phone 209/223-2800
Fax 209/223-2747
Email info@sierralab.com

12/27/2006

Project Chain of Custody

EMPI
Empirical Laboratories,LLC(EL)
Marcia McGinnity
227 French Lndg #550
Nashville, TN 37228-
Phone: 615/345-1119 Fax: 615/846-5426

Camp Lejeune, NC/CH2MHILL/Jame LEJ

Additional Information

JAMES FRANK: Return samples directly to Sierra Foothill Lab (not to Empirical Labs). Fill to approximately 80ml, about the line marked on the side of the sterile sample container. Leave headspace. Immediately ice and ship. AVOID FRIDAY SHIPMENT. Ship directly to Sierra Foothill Lab, so that samples arrive <48h from time of collection and <10C.

Send sample kit for 13 sites to James Frank, CH2MHILL, 3125 Poplarwood Court, Suite 304, Raleigh, NC 27604.

Bottles Required for Requested Tests

_____Plastic sterile 125ml,mark to 80ml line
ECp Fil2
4 C: CLOD

Requested Laboratory Tests

Perchlorate LC/ESI/MS	CLOD	W	SOP82/EPA6850propose
EC,prep for ClO4 analysis	ECp	W	EPA120.1/SM2510B
.2u Sterile Filtration	Fil2	W	DOD ClO4 Handbook

SFL #	Sample ID	G/C	W/S	#Bot	By	Date/Time
	MR08-GW42-07A	G	W	1	MT/JF	1-8-07/1620
	MR08-GW01-07A	G	W	3 1 mod	MT/JF	1-8-07/1820
	MR08-GW04-07A	G	W	1	MT/JF	1-8-07/1615
	MR08-GW04D-07A	G	W	1	MT/JF	1-8-07/1620
	MR08 ~~GW8~~ mod ER10807	G	W	1	MT/JF	1-8-07/1820
	MR08-FB010907	G	W	1	MT/JF	1-9-07/1000
	~~MR08-FB01~~ mod					
	MR08-GW02-07A	G	W	1	MT/JF	1-9-07/1030
	MR08-GW56-07A	G	W	1	MT/JF	1-9-07/1200
	MR08-GW11-07A	G	W	1	MT/JF	1-9-07/1345
	~~MR08-GW01~~ mod					

Relinquished by	Date	Time	Received by	Date	Time
Monica L Lingi	1-9-07	1530			

Received on Ice? ☐ Yes ☐ No **Method of Shipment:** ☐ UPS ☐ FedEx ☐ Lone Star ☐ Hand ☐ Airborne ☐ Other

Cooler/Sample Secure? ☐ Yes ☐ No **Tracking or Shipping Number:**_____

Relinquished by	Date	Time	Received by	Date	Time
Monica L Lingi	1-9-07	1530			

Received on Ice? ☐ Yes ☐ No **Method of Shipment:** ☐ UPS ☐ FedEx ☐ Lone Star ☐ Hand ☐ Airborne ☐ Other

Cooler/Sample Secure? ☐ Yes ☐ No **Tracking or Shipping Number:** _____

CH2MHILL

GROUNDWATER SAMPLING DATA SHEET

Client: NAVFAC Mid-Atlantic
Location: UXO-08
Event: UXO-08 PA/SI
Date: 7/8/2008
Weather: 85 degrees

Project Number: 358852.SI.FQ
Well ID: IR78-GW68
Sample ID: IR78-GW68-08C
Sampling Team: D Seed/RDU
S Kline/RDU

Total Depth: 28 **FT.(BTOC)**
Depth to water: (-) 18.53 **FT.(BTOC)**
Water Column: 9.47 **FT.**
(x) 0.041 **GAL/FT.**
Well Volume: 0.39 **GAL.**
Total Purge Vol.: 1.00 **GAL.**

Purge Device: **Peristaltic Pump**

Measuring Device: U-22 Horiba
Date and Time: 7/8/08 1610

Well Dia. (inches)	Volume (gallons/foot)
1	0.041
1.25	0.064
2	0.163
4	0.653
6	1.469

SAMPLE DATA

Date: 7/8/08 **Time:** 1610	Temp. °C	Cond. mS/cm	DO mg/L	pH SU	ORP mV	Turbidity NTU	Other: DTW	Color / Odor / Comments
Method: Low flow	20.31	1.16	0.01	6.6	-32	22.1	18.7	clear/none

FIELD PARAMETERS

Time	Purge Vol. (gals)	Temp. °C	Cond. mS/cm	DO mg/L	pH SU	ORP mV	Turbidity NTU	Other: DTW	Color / Odor / Comments
Stabilization Criteria		Constant for 3 readings	**± 3%**	**± 10%**	**± 0.1**	**± 10 mV**	**± 10% or <10**		
1552	0.4	20.37	1.14	0.39	6.21	-1	24.00	18.80	start purge
1555		20.47	1.15	0.15	6.39	-18	19.10	18.72	
1558	0.6	20.51	1.160	0.03	6.49	-22	11.10	18.70	
1601		20.33	1.15	0.01	6.54	-27	18.10	18.70	
1604	0.8	20.27	1.15	0.00	6.58	-30	21.60	18.89	
1607		20.40	1.160	0.00	6.59	-34	22.00	18.71	
1610	1	20.31	1.16	0.01	6.60	-32	22.10	18.7	

Sample information: method, container number, size, and type, preservative used.

Analysis	Preservative	Container requirements	No. of containers
Total Metals	HNO3	1 L poly	1
Dissolved Metals	HNO3	1 L poly	1
Perchlorate	none	40mL vial	2
Explosives Residues	none	1 L Amber	1

Observations/Notes: obsturction in well only allows tube, not enough room for sounding device

MS/MSD	Duplicate ID No.:
Signature(s):	

CH2MHILL

GROUNDWATER SAMPLING DATA SHEET

Client: NAVFAC Mid-Atlantic
Location: UXO-08
Event: UXO-08 PA/SI
Date: 7/7/2008
Weather: 80 degrees

Project Number: 358852.SI.FQ
Well ID: IR78-GW66
Sample ID: IR78-GW66-08C
Sampling Team: D Seed/RDU
S Kline/RDU

Total Depth: 29.5 **FT.(BTOC)**
Depth to water: (-) 18.04 **FT.(BTOC)**
Water Column: 11.46 **FT.**
(x) 0.041 **GAL/FT.**
Well Volume: 0.47 **GAL.**
Total Purge Vol.: 1.50 **GAL.**

Purge Device: **Peristaltic Pump**

Measuring Device: U-22 Horiba
Date and Time: 7/7/08 1523

Well Dia. (inches)	Volume (gallons/foot)
1	0.041
1.25	0.064
2	0.163
4	0.653
6	1.469

SAMPLE DATA

Date: 7/7/08 Time: 1523	Temp. °C	Cond. mS/cm	DO mg/L	pH SU	ORP mV	Turbidity NTU	Other: DTW	Color / Odor / Comments
Method: Low flow	19.58	0.673	0.21	6.59	-115	25.9	18.08	slightly turbid/orderless

FIELD PARAMETERS

Time	Purge Vol. (gals)	Temp. °C	Cond. mS/cm	DO mg/L	pH SU	ORP mV	Turbidity NTU	Other: DTW	Color / Odor / Comments
Stabilization Criteria		Constant for 3 readings	± 3%	± 10%	± 0.1	± 10 mV	± 10% or <10		
1458									start purge
1505	0.5	19.85	0.654	0.20	6.19	-92	35.80	18.12	
1508		19.76	0.667	0.20	6.23	-96	36.20	18.09	
1501		19.71	0.674	0.21	6.34	-102	21.00	18.09	
1514	1	19.59	0.674	0.17	6.50	-110	22.80	18.09	
1517		19.56	0.674	0.16	6.53	-111	24.20	18.08	
1520		19.54	0.674	0.20	6.56	-113	25.30	18.08	
1523	1.5	19.58	0.673	0.21	6.59	-115	25.90	18.08	

Sample information: method, container number, size, and type, preservative used.

Analysis	Preservative	Container requirements	No. of containers
Total Metals	HNO3	1 L poly	1
Dissolved Metals	HNO3	1 L poly	1
Perchlorate	none	40mL vial	2
Explosives Residues	none	1 L Amber	1

Observations/Notes: obsturction in well only allows tube, not enough room for sounding device

MS/MSD | Duplicate ID No.:

Signature(s):

CH2MHILL

GROUNDWATER SAMPLING DATA SHEET

Client: NAVFAC Mid-Atlantic
Location: UXO-08
Event: UXO-08 PA/SI
Date: 7/8/2008
Weather: 80 degrees

Project Number: 358852.SI.FQ
Well ID: IR78-GW64
Sample ID: IR78-GW64-08C
Sampling Team: D Seed/RDU
S Kline/RDU

Total Depth: 28 **FT.(BTOC)**
Depth to water: (-) 18.53 **FT.(BTOC)**
Water Column: 9.47 **FT.**
(x) 0.041 **GAL/FT.**
Well Volume: 0.39 **GAL.**
Total Purge Vol.: 1.00 **GAL.**

Purge Device: **Peristaltic Pump**

Measuring Device: U-22 Horiba
Date and Time: 7/8/08 1716

Well Dia. (inches)	Volume (gallons/foot)
1	0.041
1.25	0.064
2	0.163
4	0.653
6	1.469

SAMPLE DATA

Date: 7/8/08 **Time:** 1716	Temp. °C	Cond. mS/cm	DO mg/L	pH SU	ORP mV	Turbidity NTU	Other: DTW	Color / Odor / Comments
Method: Low flow	19.51	0.612	0.03	6.17	-84	25.6		clear/oderless

FIELD PARAMETERS

Time	Purge Vol. (gals)	Temp. °C	Cond. mS/cm	DO mg/L	pH SU	ORP mV	Turbidity NTU	Other: DTW	Color / Odor / Comments
Stabilization Criteria		Constant for 3 readings	**± 3%**	**± 10%**	**± 0.1**	**± 10 mV**	**± 10% or <10**		
1701	0.4	19.34	0.603	0.62	5.75	-58	57.50		start purge
1704		19.50	0.609	0.16	5.88	-67	45.50	20.96	
1707	0.6	19.51	0.610	0.16	6.01	-74	37.80		
1710		19.54	0.611	0.06	6.10	-79	24.70		
1713	1	19.52	0.611	0.01	6.15	-81	25.10		
1716		19.51	0.612	0.03	6.17	-84	25.60		

Sample information: method, container number, size, and type, preservative used.

Analysis	Preservative	Container requirements	No. of containers
Total Metals	HNO3	1 L poly	1
Dissolved Metals	HNO3	1 L poly	1
Perchlorate	none	40mL vial	2
Explosives Residues	none	1 L Amber	1

Observations/Notes: obsturction in well only allows tube, not enough room for sounding device

MS/MSD | Duplicate ID No.:

Signature(s):

CH2MHILL

GROUNDWATER SAMPLING DATA SHEET

Client: NAVFAC Mid-Atlantic
Location: UXO-08
Event: UXO-08 PA/SI
Date: 7/7/2008
Weather: 85 degrees scattered showers

Project Number: 358852.SI.FQ
Well ID: IR78-GW65
Sample ID: IR78-GW65-08C
Sampling Team: D Seed/RDU
S Kline/RDU

Total Depth: 32 **FT.(BTOC)**
Depth to water: (-) 19.12 **FT.(BTOC)**
Water Column: 12.88 **FT.**
(x) 0.041 **GAL/FT.**
Well Volume: 0.53 **GAL.**
Total Purge Vol.: 2.00 **GAL.**

Purge Device: **Peristaltic Pump**

Measuring Device: U-22 Horiba
Date and Time: 7/7/08 1545

Well Dia. (inches)	Volume (gallons/foot)
1	0.041
1.25	0.064
2	0.163
4	0.653
6	1.469

SAMPLE DATA

Date: 7/7/08 **Time:** 1545	Temp. °C	Cond. mS/cm	DO mg/L	pH SU	ORP mV	Turbidity NTU	Other: DTW	Color / Odor / Comments
Method: 3 well volumes	19.88	0.655	0.00	6.69	-62	0	20.96	

FIELD PARAMETERS

Time	Purge Vol. (gals)	Temp. °C	Cond. mS/cm	DO mg/L	pH SU	ORP mV	Turbidity NTU	Other: DTW	Color / Odor / Comments
Stabilization Criteria		Constant for 3 readings	**± 3%**	**± 10%**	**± 0.1**	**± 10 mV**	**± 10% or <10**		
1525	0								start purge
1545	2	19.88	0.655	0	6.69	-62	0.00	20.96	

Sample information: method, container number, size, and type, preservative used.

Analysis	Preservative	Container requirements	No. of containers
Total Metals	HNO3	1 L poly	1
Dissolved Metals	HNO3	1 L poly	1
Perchlorate	none	40mL vial	2
Explosives Residues	none	1 L Amber	1

Observations/Notes:

MS/MSD	Duplicate ID No.:
Signature(s):	

CH2MHILL

GROUNDWATER SAMPLING DATA SHEET

Client:	NAVFAC Mid-Atlantic	**Project Number:**	358852.SI.FQ
Location:	UXO-08	**Well ID:**	IR78-GW63
Event:	UXO-08 PA/SI	**Sample ID:**	IR78-GW63-08C
Date:	7/8/2008	**Sampling Team:**	D Seed/RDU
Weather:	90 degrees		S Kline/RDU

Total Depth:	29	**FT.(BTOC)**	
Depth to water:	(-) 19.49	**FT.(BTOC)**	
Water Column:	9.51	**FT.**	
	(x) 0.041	**GAL/FT.**	
Well Volume:	0.39	**GAL.**	
Total Purge Vol.:	1.15	**GAL.**	

Measuring Device: U-22 Horiba

Date and Time: 7/8/08 1155

Purge Device: **Peristaltic Pump**

Well Dia. (inches)	Volume (gallons/foot)
1	0.041
1.25	0.064
2	0.163
4	0.653
6	1.469

SAMPLE DATA

Date: 7/8/08 **Time:** 1155	Temp. °C	Cond. mS/cm	DO mg/L	pH SU	ORP mV	Turbidity NTU	Other: DTW	Color / Odor / Comments
Method: 3 well volumes	25.79	0.491	0.00	5.88	7	0	9.79	

FIELD PARAMETERS

Time	Purge Vol. (gals)	Temp. °C	Cond. mS/cm	DO mg/L	pH SU	ORP mV	Turbidity NTU	Other: DTW	Color / Odor / Comments
Stabilization Criteria		Constant for 3 readings	**± 3%**	**± 10%**	**± 0.1**	**± 10 mV**	**± 10% or <10**		
1145	0								start purge
1155	1.15	25.79	0.491	0	5.88	7	0.00	9.79	

Sample information: method, container number, size, and type, preservative used.

Analysis	Preservative	Container requirements	No. of containers
Total Metals	HNO3	1 L poly	1
Dissolved Metals	HNO3	1 L poly	1
Perchlorate	none	40mL vial	2
Explosives Residues	none	1 L Amber	1

Observations/Notes:

MS/MSD	Duplicate ID No.: IR78-GW63D-08C
Signature(s):	

CH2MHILL

GROUNDWATER SAMPLING DATA SHEET

Client: NAVFAC Mid-Atlantic
Location: UXO-08
Event: UXO-08 PA/SI
Date: 7/8/2008
Weather: 89 degrees

Project Number: 358852.SI.FQ
Well ID: IR78-GW62
Sample ID: IR78-GW62-08C
Sampling Team: D Seed/RDU
S Kline/RDU

Total Depth: 30 **FT.(BTOC)**
Depth to water: (-) 18.25 **FT.(BTOC)**
Water Column: 11.75 **FT.**
(x) 0.041 **GAL/FT.**
Well Volume: 0.48 **GAL.**
Total Purge Vol.: 1.48 **GAL.**

Purge Device: **Peristaltic Pump**

Measuring Device: U-22 Horiba
Date and Time: 7/8/08 1330

Well Dia. (inches)	Volume (gallons/foot)
1	0.041
1.25	0.064
2	0.163
4	0.653
6	1.469

SAMPLE DATA

Date: 7/8/08 **Time:** 1330	Temp. °C	Cond. mS/cm	DO mg/L	pH SU	ORP mV	Turbidity NTU	Other: DTW	Color / Odor / Comments
Method: 3 well volumes	21.20	0.217	0.17	4.15	360	0.9		

FIELD PARAMETERS

Time	Purge Vol. (gals)	Temp. °C	Cond. mS/cm	DO mg/L	pH SU	ORP mV	Turbidity NTU	Other: DTW	Color / Odor / Comments
Stabilization Criteria		Constant for 3 readings	**± 3%**	**± 10%**	**± 0.1**	**± 10 mV**	**± 10% or <10**		
1315	0								
1330	1.48	21.20	0.217	0.17	4.15	360	0.90		

Sample information: method, container number, size, and type, preservative used.

Analysis	Preservative	Container requirements	No. of containers
Total Metals	HNO3	1 L poly	1
Dissolved Metals	HNO3	1 L poly	1
Perchlorate	none	40mL vial	2
Explosives Residues	none	1 L Amber	1

Observations/Notes:

MS/MSD | Duplicate ID No.:

Signature(s):

CH2MHILL

GROUNDWATER SAMPLING DATA SHEET

Client: NAVFAC Mid-Atlantic
Location: UXO-08
Event: UXO-08 PA/SI
Date: 7/8/2008
Weather: 89 degrees

Project Number: 358852.SI.FQ
Well ID: IR78-GW61
Sample ID: IR78-GW61-08C
Sampling Team: D Seed/RDU
S Kline/RDU

Total Depth: 29 **FT.(BTOC)**
Depth to water: (-) 15.02 **FT.(BTOC)**
Water Column: 13.98 **FT.**
(x) 0.041 **GAL/FT.**
Well Volume: 0.57 **GAL.**
Total Purge Vol.: 1.75 **GAL.**

Purge Device: **Peristaltic Pump**

Measuring Device: U-22 Horiba
Date and Time: 7/8/08 1435

Well Dia. (inches)	Volume (gallons/foot)
1	0.041
1.25	0.064
2	0.163
4	0.653
6	1.469

SAMPLE DATA

Date: 7/8/08 Time: 1435	Temp. °C	Cond. mS/cm	DO mg/L	pH SU	ORP mV	Turbidity NTU	Other: DTW	Color / Odor / Comments
Method: 3 well volumes	22.63	0.236	0.48	4.35	61	0		

FIELD PARAMETERS

Time	Purge Vol. (gals)	Temp. °C	Cond. mS/cm	DO mg/L	pH SU	ORP mV	Turbidity NTU	Other: DTW	Color / Odor / Comments
Stabilization Criteria		Constant for 3 readings	**± 3%**	**± 10%**	**± 0.1**	**± 10 mV**	**± 10% or <10**		
1415	0								
1435	1.75	22.63	0.236	0.48	4.35	61	0.00		

Sample information: method, container number, size, and type, preservative used.

Analysis	Preservative	Container requirements	No. of containers
Total Metals	HNO3	1 L poly	1
Dissolved Metals	HNO3	1 L poly	1
Perchlorate	none	40mL vial	2
Explosives Residues	none	1 L Amber	1

Observations/Notes:

MS/MSD | Duplicate ID No.:

Signature(s):

CH2MHILL

GROUNDWATER SAMPLING DATA SHEET

Client:	NAVFAC Mid-Atlantic	**Project Number:**	358852.SI.FQ
Location:	UXO-08	**Well ID:**	IR78-GW59
Event:	UXO-08 PA/SI	**Sample ID:**	IR78-GW59-08C
Date:	7/8/2008	**Sampling Team:**	D Seed/RDU
Weather:	85 degrees partly cloudy		S Kline/RDU

Total Depth:	25	**FT.(BTOC)**	
Depth to water:	(-) 18.91	**FT.(BTOC)**	
Water Column:	6.09	**FT.**	
	(x) 0.041	**GAL/FT.**	
Well Volume:	0.25	**GAL.**	
Total Purge Vol.:	1.0	**GAL.**	
Purge Device:	**Peristaltic Pump**		

Measuring Device: U-22 Horiba

Date and Time: 7/8/08 1232

Well Dia. (inches)	Volume (gallons/foot)
1	0.041
1.25	0.064
2	0.163
4	0.653
6	1.469

SAMPLE DATA

Date: 7/8/08 **Time:** 1232	Temp. °C	Cond. mS/cm	DO mg/L	pH SU	ORP mV	Turbidity NTU	Other: DTW	Color / Odor / Comments
Method: Low flow	19.76	0.575	0.08	6.68	-23	33.4	18.19	clear

FIELD PARAMETERS

Time	Purge Vol. (gals)	Temp. °C	Cond. mS/cm	DO mg/L	pH SU	ORP mV	Turbidity NTU	Other: DTW	Color / Odor / Comments
Stabilization Criteria		Constant for 3 readings	**± 3%**	**± 10%**	**± 0.1**	**± 10 mV**	**± 10% or <10**		
1217	0	19.76	0.578	0.20	6.48	-10	18.00	18.19	clear/none
1220		19.77	0.577	0.11	6.36	-15	18.60	18.20	
1223	0.6	19.81	0.577	0.09	6.62	-19	22.60	18.21	
1226		19.74	0.576	0.10	6.66	-21	32.70	18.21	
1229	1	19.86	0.575	0.09	6.67	-22	33.00	18.22	
1232		19.76	0.575	0.08	6.68	-23	33.40	18.22	

Sample information: method, container number, size, and type, preservative used.

Analysis	Preservative	Container requirements	No. of containers
Total Metals	HNO3	1 L poly	1
Dissolved Metals	HNO3	1 L poly	1
Perchlorate	none	40mL vial	2
Explosives Residues	none	1 L Amber	1

Observations/Notes:

MS/MSD	Duplicate ID No.:
Signature(s):	

CH2MHILL

GROUNDWATER SAMPLING DATA SHEET

Client:	NAVFAC Mid-Atlantic	**Project Number:**	358852.SI.FQ
Location:	UXO-08	**Well ID:**	IR78-GW56
Event:	UXO-08 PA/SI	**Sample ID:**	IR78-GW56-08C
Date:	7/9/2008	**Sampling Team:**	D Seed/RDU
Weather:	85 degrees		S Kline/RDU

Total Depth:	29.6 **FT.(BTOC)**	**Measuring Device:**	U-22 Horiba
Depth to water:	**(-)** 19 **FT.(BTOC)**	**Date and Time:**	7/9/08 1027
Water Column:	10.60 **FT.**		
	(x) 0.041 **GAL/FT.**		
Well Volume:	0.43 **GAL.**		
Total Purge Vol.:	1.3 **GAL.**		
Purge Device:	**Peristaltic Pump**		

Well Dia. (inches)	Volume (gallons/foot)
1	0.041
1.25	0.064
2	0.163
4	0.653
6	1.469

SAMPLE DATA

Date: 7/9/08 **Time:** 1027	Temp. °C	Cond. mS/cm	DO mg/L	pH SU	ORP mV	Turbidity NTU	Other: DTW	Color / Odor / Comments
Method: Low flow	22.68	0.774	0.41	6.64	153	68		

FIELD PARAMETERS

Time	Purge Vol. (gals)	Temp. °C	Cond. mS/cm	DO mg/L	pH SU	ORP mV	Turbidity NTU	Other: DTW	Color / Odor / Comments
Stabilization Criteria		Constant for 3 readings	**± 3%**	**± 10%**	**± 0.1**	**± 10 mV**	**± 10% or <10**		
1015	0								start purge
1027	1.3	22.68	0.774	0.41	6.64	153	68		

Sample information: method, container number, size, and type, preservative used.

Analysis	Preservative	Container requirements	No. of containers
Total Metals	HNO3	1 L poly	1
Dissolved Metals	HNO3	1 L poly	1
Perchlorate	none	40mL vial	2
Explosives Residues	none	1 L Amber	1

Observations/Notes:

MS/MSD	Duplicate ID No.:
Signature(s):	

CH2MHILL

GROUNDWATER SAMPLING DATA SHEET

Client:	NAVFAC Mid-Atlantic	**Project Number:**	358852.SI.FQ
Location:	UXO-08	**Well ID:**	IR78-GW55
Event:	UXO-08 PA/SI	**Sample ID:**	IR78-GW55-08C
Date:	7/8/2008	**Sampling Team:**	D Seed/RDU
Weather:	85 degrees cloudy		S Kline/RDU

Total Depth:	30	**FT.(BTOC)**	
Depth to water:	(-) 19.04	**FT.(BTOC)**	
Water Column:	10.96	**FT.**	
	(x) 0.041	**GAL/FT.**	
Well Volume:	0.45	**GAL.**	
Total Purge Vol.:	0.5	**GAL.**	
Purge Device:	**Peristaltic Pump**		

Measuring Device:	U-22 Horiba
Date and Time:	7/8/08 1355

Well Dia. (inches)	Volume (gallons/foot)
1	0.041
1.25	0.064
2	0.163
4	0.653
6	1.469

SAMPLE DATA

Date: 7/8/08 **Time:** 1355	Temp. °C	Cond. mS/cm	DO mg/L	pH SU	ORP mV	Turbidity NTU	Other: DTW	Color / Odor / Comments
Method: Low flow	20.96	0.88	0	6.55	-95	24.5	19.12	clear sulfur smell

FIELD PARAMETERS

Time	Purge Vol. (gals)	Temp. °C	Cond. mS/cm	DO mg/L	pH SU	ORP mV	Turbidity NTU	Other: DTW	Color / Odor / Comments
Stabilization Criteria		Constant for 3 readings	**± 3%**	**± 10%**	**± 0.1**	**± 10 mV**	**± 10% or <10**		
1340	0	20.80	0.874	0.18	6.09	-62	35.8	19.12	start purge
1343		20.87	0.877	0.04	6.17	-70	32.2	19.10	
1346		20.93	0.874	0.20	6.39	-84	30.4	19.10	
1349		21.00	0.875	0.00	6.47	-89	25.5	19.11	
1352		21.04	0.879	0.00	6.54	-94	25.2	19.10	
1355	0.5	20.96	0.880	0.00	6.55	-95	24.5	19.12	

Sample information: method, container number, size, and type, preservative used.

Analysis	Preservative	Container requirements	No. of containers
Total Metals	HNO3	1 L poly	1
Dissolved Metals	HNO3	1 L poly	1
Perchlorate	none	40mL vial	2
Explosives Residues	none	1 L Amber	1

Observations/Notes:

MS/MSD	Duplicate ID No.:
Signature(s):	

CH2MHILL

GROUNDWATER SAMPLING DATA SHEET

Client:	NAVFAC Mid-Atlantic	**Project Number:**	358852.SI.FQ
Location:	UXO-08	**Well ID:**	IR78-GW50
Event:	UXO-08 PA/SI	**Sample ID:**	IR78-GW50-08C
Date:	7/8/2008	**Sampling Team:**	D Seed/RDU
Weather:	95 degrees		S Kline/RDU

Total Depth:	23 **FT.(BTOC)**	**Measuring Device:**	U-22 Horiba
Depth to water:	**(-)** 18.88 **FT.(BTOC)**	**Date and Time:**	7/8/08 1617
Water Column:	4.12 **FT.**		
	(x) 0.041 **GAL/FT.**		
Well Volume:	0.16 **GAL.**		
Total Purge Vol.:	0.5 **GAL.**		
Purge Device:	**Peristaltic Pump**		

Well Dia. (inches)	Volume (gallons/foot)
1	0.041
1.25	0.064
2	0.163
4	0.653
6	1.469

SAMPLE DATA

Date: 7/8/08 **Time:** 1617	Temp. °C	Cond. mS/cm	DO mg/L	pH SU	ORP mV	Turbidity NTU	Other: _____	Color / Odor / Comments
Method: 3 well volumes	22.19	1.23	0.76	6.05	-59	0		

FIELD PARAMETERS

Time	Purge Vol. (gals)	Temp. °C	Cond. mS/cm	DO mg/L	pH SU	ORP mV	Turbidity NTU	Other: _____	Color / Odor / Comments
Stabilization Criteria		Constant for 3 readings	**± 3%**	**± 10%**	**± 0.1**	**± 10 mV**	**± 10% or <10**		
1610	0								start purge
1617	0.5	22.19	1.23	0.76	6.05	-59	0		

Sample information: method, container number, size, and type, preservative used.

Analysis	Preservative	Container requirements	No. of containers
Total Metals	HNO3	1 L poly	1
Dissolved Metals	HNO3	1 L poly	1
Perchlorate	none	40mL vial	2
Explosives Residues	none	1 L Amber	1

Observations/Notes:

MS/MSD	Duplicate ID No.: IR78-GW50D-08C
Signature(s):	

Attachment 5

CH2MHILL

GROUNDWATER SAMPLING DATA SHEET

Client: NAVFAC
Location: Camp Lejeune, NC
Event: TO-09
Date: 11/17/08
Weather: 60° Sunny

Project Number: 363366.08.01
Well ID: MR08-TW01
Sample ID: MR08-TW01-080
Sampling Team: K. Stokes/DFW
D. Brown/CLT

Total Depth: 27.59 FT.(BTOC)
Depth to water: (-)20.84 FT.(BTOC)
Water Column: 6.75 FT.
(x)0.023 GAL/FT.
Well Volume: 0.16 GAL. *3 = .48
Total Purge Vol.: 3.50 GAL.

Purge Device: Peristaltic Pump

Measuring Device: Horiba S/N 10287
Date and Time: 11/17/08

Well Dia. (inches)	Volume (gallons/foot)
1	0.041
1.25	0.064
2	0.163
4	0.653

3/4" 0.023

SAMPLE DATA

Date: 11/17/08 Time: 1610	Temp. °C	Cond. mS/cm	DO mg/L	pH SU	ORP mV	Turbidity NTU	Other: ____	Color / Odor / Comments
Method: Low Flow 3 Vol	22.4	.299	3.98	5.00	89	3.24		Clear

FIELD PARAMETERS

Time	Purge Vol. (gals)	Temp. °C	Cond. mS/cm	DO mg/L	pH SU	ORP mV	Turbidity NTU	Other: ____	Color / Odor / Comments
1505	0.25	22.0	.296	3.92	5.27	59	987		Cloudy
1510	0.50	22.1	.301	3.91	5.31	58	980		Cloudy
1515	0.75	22.3	.313	3.98	5.27	67	851		Cloudy
1520	1.00	22.2	.327	3.87	5.29	61	731		Cloudy
1525	1.10	22.3	.331	3.91	5.30	64	532		Cloudy
1530	1.35	22.5	.324	3.81	5.21	68	321		Cloudy
1535	1.60	22.5	.320	3.83	4.87	69	307		Cloudy
1540	1.85	22.6	.297	3.85	4.90	72	281		Cloudy
1545	2.10	22.7	.296	3.87	4.98	82	121		Clear
1550	2.35	22.7	.299	3.90	4.99	87	22.0		Clear

Sample information: method, container number, size, and type, preservative used

Analysis	Preservative	Container requirements	No. of containers
VOCs 826CB	HCl	40 ml VOA	~~3~~ 9
SVOCs 8270C PAH 8270 SIM	None	1 Liter Amber	~~2~~ 6
RCRA Metals, Antimony, Copper, Zinc	HNO_3	250 ml Poly	~~1~~
6010B 6020 7471A	↓	↓	~~1~~ 3
Nitroaromatics 8330	None	1 Liter [redacted] Glass	~~2~~ 6
Perchlorate 6850	None	250 ml Poly	~~1~~ 3

Observations/Notes: Started purging well at 1500. Tubing set at 25'. Stopped pump at 1520 for bathroom break. Sample taken at 1610

MS/MSD: Yes

Duplicate ID No.:

Signature(s):

Attachment 5

CH2MHILL

GROUNDWATER SAMPLING DATA SHEET

Client: See
Location: Sheet 1
Event:
Date:
Weather:

Project Number: 363366.08.01
Well ID: MR08-TW01
Sample ID: MR08-TW01-08D
Sampling Team: K. Stokes / DFW
D. Braun / CLT

Total Depth: See FT.(BTOC)
Depth to water: (-) See FT.(BTOC)
Water Column: See FT.
(x) GAL/FT.
Well Volume: See GAL.
Total Purge Vol.: See GAL.
Purge Device: Sheet 1

Measuring Device: See Sheet 1
Date and Time:

Well Dia. (inches)	Volume (gallons/foot)
1	0.041
1.25	0.064
2	0.163
4	0.653

SAMPLE DATA

Date: / Time:	Temp. °C	Cond. mS/cm	DO mg/L	pH SU	ORP mV	Turbidity NTU	Other: _____	Color / Odor / Comments
Method:								

FIELD PARAMETERS

Time	Purge Vol. (gals)	Temp. °C	Cond. mS/cm	DO mg/L	pH SU	ORP mV	Turbidity NTU	Other: _____	Color / Odor / Comments
1555	2.75	22.6	.295	4.01	5.01	93	18.3		Clear
1600	3.00	22.4	.297	3.97	5.00	90	4.42		
1605	3.25	22.4	.298	3.95	4.99	87	1.60		
1610	3.50	22.4	.299	3.98	5.00	89	3.24		

Sample information: method, container number, size, and type, preservative used.

Analysis	Preservative	Container requirements	No. of containers
See Sheet 1			

Observations/Notes:

MS/MSD Yes

Duplicate ID No.:

Signature(s):

Attachment 5

CH2MHILL

GROUNDWATER SAMPLING DATA SHEET

Client: NAVFAC
Location: Camp Lejeune, NC
Event: TO-09
Date: 11/18/08
Weather: 45° Sunny

Project Number: 363366.08.01
Well ID: MR08-TW02
Sample ID: MR08-TW02-08D
Sampling Team: K. Stokes/DFW
D. Brown/CLT

Total Depth: 27.14 FT.(BTOC)
Depth to water: (-) 20.53 FT.(BTOC)
Water Column: 6.61 FT.
(x) 0.023 GAL/FT.
Well Volume: 0.15 GAL. x 3 = 0.45
Total Purge Vol.: 1.75 GAL.

Purge Device: Peristaltic Pump

Measuring Device: Horiba S/N 10560
Date and Time: 11/18/08

Well Dia. (inches)	Volume (gallons/foot)
1	0.041
1.25	0.064
2	0.163
4	0.653

3/4" 0.023

SAMPLE DATA

Date: 11/18/08 Time: 0930	Temp. °C	Cond. mS/cm	DO mg/L	pH SU	ORP mV	Turbidity NTU	Other: _____	Color / Odor / Comments
Method: Low Flow 3 Vol	20.3	.392	5.26	5.34	75	2.8		Clear

FIELD PARAMETERS

Time	Purge Vol. (gals)	Temp. °C	Cond. mS/cm	DO mg/L	pH SU	ORP mV	Turbidity NTU	Other: _____	Color / Odor / Comments
0900	0.25	20.2	.395	5.08	5.31	73	851		Cloudy
0905	0.50	20.2	.392	5.21	5.33	76	321		Cloudy
0910	0.75	20.3	.390	5.32	5.35	79	134		Clear
0915	1.00	20.3	.391	5.26	5.32	73	43.2		Clear
0920	1.25	20.3	.394	5.25	5.33	74	8.3		Clear
0925	1.50	20.3	.392	5.28	5.33	78	4.5		Clear
0930	1.75	20.3	.392	5.26	5.34	75	2.8		Clear
0935									
0940									
0945									

Sample information: method, container number, size, and type, preservative used.

Analysis	Preservative	Container requirements	No. of containers
VOC 8260B	HCl	40 ml VOA	6
SVOCs 8270C PAH 8270 SIM	None	1 Liter Amber	4
RCRA Metals 6010B Antimony, Copper, Zinc 6020 7471A	HNO3	250 ml Poly	2
Nitroaromatics 8330	None	1000 ml Glass	4
Perchlorate 6850	None	250 ml Poly	2

Observations/Notes: Set up on well at 0850. Began purging at 0855
Tubing set at 25'
Sample taken at 0930
Dup taken at 0935

MS/MSD | Duplicate ID No.: MR08-TW02D-08D

Signature(s): [signature]

Attachment 5

CH2MHILL

GROUNDWATER SAMPLING DATA SHEET

Client: NAVFAC
Location: Camp Lejeune NC
Event: TO-09 202K
Date: 11/18/08
Weather: Sunny High 49 °F

Project Number: 363366.08.01
Well ID: MR08-TW03
Sample ID: MR08-TW03-08D
Sampling Team: ~~D~~ K Stokes / DFW

Total Depth: 27.92 FT.(BTOC)
Depth to water: (-) 21.10 FT.(BTOC)
Water Column: 6.82 FT.
(x) 0.023 GAL/FT.
Well Volume: 0.1569 GAL. x3 - 0.4706
Total Purge Vol.: 2.25 GAL.

Purge Device: Peristaltic pump

Measuring Device: Hanna H-22 # 05238
Date and Time: 11/18/08

Well Dia. (inches)	Volume (gallons/foot)
1	0.041
1.25	0.064
2	0.163
4	0.653

3/4 0.0230

SAMPLE DATA

Date: 11/18/08 Time: 9 45	Temp. °C	Cond. mS/cm	DO mg/L	pH SU	ORP mV	Turbidity NTU	Other: DTW	Color / Odor / Comments
Method: lowflow	19.33	0.322	5.47	5.47	-6	4.30	n/a	Clear/none

FIELD PARAMETERS

Time	Purge Vol. (gals)	Temp. °C	Cond. mS/cm	DO mg/L	pH SU	ORP mV	Turbidity NTU	Other: DTW	Color / Odor / Comments
9 15	0.75	20.82	0.356	5.36	5.37	-8	TOO TURBID	n/a	Cloudy/none
9 20	1.00	18.28	0.339	5.43	5.48	-4	40.0		" "
9 25	1.25	18.55	0.331	5.38	5.46	-9	24.0		Clear/none
9 30	1.50	18.78	0.329	5.34	5.47	-11	16.0		"
9 35	1.75	18.91	0.324	5.46	5.48	-11	9.90		"
9 40	2.00	19.05	0.325	5.45	5.48	-9	6.80		"
9 45	2.25	19.33	0.322	5.47	5.47	-6	4.30		"
9 50	—	—	SAMPLE	—	—	—	—	—	—

Sample information: method, container number, size, and type, preservative used.

Analysis	Preservative	Container requirements	No. of containers
8260B	HCl	40 mL vials	6
8270C / 8270SIM	none	1 L ambers	4
6010B / 6020 / 7471A	HNO_3	250 mL poly	2
Plus Antimony, Copper & Zinc	"	"	n/a
8300	none	1 L amber	4
6850	none	250 mL poly	2

Observations/Notes:
Turbidity - Hanna Instruments HI 98703
DUP taken
* UXO-08

MS/MSD	Duplicate ID No.:	MR08-TW03D-08D 955
Signature(s): Kimberly R. Stokes		MR08-TW03-08D 950

Attachment 5

CH2MHILL

GROUNDWATER SAMPLING DATA SHEET

Client: NAVFAC
Location: Camp Lejeune, NC
Event: To-09
Date: 11/20/08
Weather: 40° Sunny

Project Number: 363366.08.01
Well ID: MR08-TW04
Sample ID: MR08-TW04-08D
Sampling Team: D. Brown / CLT

Total Depth: 28.12 FT.(BTOC)
Depth to water: (-) 20.86 FT.(BTOC)
Water Column: 7.26 FT.
(x) 0.041 GAL/FT.
Well Volume: 0.3 GAL. x3=0.9
Total Purge Vol.: 3.40 GAL.

Purge Device: Peristaltic Pump

Measuring Device: Horiba S/N 10560
Date and Time: 11/20/08

Well Dia. (inches)	Volume (gallons/foot)
1	0.041
1.25	0.064
2	0.163
4	0.653

SAMPLE DATA

Date: 11/20/08 Time: 0925	Temp. °C	Cond. mS/cm	DO mg/L	pH SU	ORP mV	Turbidity NTU	Other: ____	Color / Odor / Comments
Method: Low Flow 3 Vol	20.3	.397	2.07	5.52	23	6.9		

FIELD PARAMETERS

Time	Purge Vol. (gals)	Temp. °C	Cond. mS/cm	DO mg/L	pH SU	ORP mV	Turbidity NTU	Other: DTW	Color / Odor / Comments
0845	0.25	20.6	.402	3.60	5.53	49	121	20.88	Clear
0850	0.50	20.5	.407	3.43	5.53	46	64.1	20.89	
0855	1.00	20.5	.409	3.41	5.52	43	32.2	20.93	
0900	1.50	20.6	.411	2.99	5.52	29	21.3	20.95	
0905	1.90	20.5	.411	2.84	5.53	27	13.4	20.96	
0910	2.30	20.4	.410	2.07	5.52	21	12.2	20.97	
0915	2.70	20.3	.398	2.05	5.52	18	8.4	20.99	
0920	3.10	20.3	.401	2.04	5.52	19	7.6	21.00	
0925	3.40	20.3	.397	2.07	5.52	23	6.9	21.00	

Sample information: method, container number, size, and type, preservative used.

Analysis	Preservative	Container requirements	No. of containers
VOCs 8260B	HCl	40 ml VOA	3
SVOCs 8270C PAH 8270 SIM	None	1 Liter Amber	2
RCRA Metals, Copper, Antimony, Zinc 6010B 6020 7471A	HNO3	250 ml poly	1
8330 Nitro Aeromatics	None	1000 ml glass	2
Perchlorate 6850	None	250 ml poly	1

Observations/Notes: Began purging at 0840.
Tubing set at 26'
Sample taken at 0925

MS/MSD | Duplicate ID No.:

Signature(s): [signature]

Attachment 5

CH2MHILL

GROUNDWATER SAMPLING DATA SHEET

Client: NAVFAC
Location: Camp Lejeune
Event: To 09
Date: 11/17/08
Weather: Clear, High 59 °F

Project Number: 363366.08.01
Well ID: MR08 - TW05
Sample ID: MR08 - TW05 - 08D
Sampling Team: Kim Stokes

Total Depth: 29.92 FT.(BTOC)
Depth to water: (-) 21.72 FT.(BTOC)
Water Column: 8.2 FT.
(x) 0.0230 GAL/FT.
Well Volume: 0.1886 GAL. x 3 = 0.5658
Total Purge Vol.: 1.25 GAL.

Purge Device: Peristaltic pump

Measuring Device: Horiba U-22 #10560
Date and Time: 11/17/08

Well Dia. (inches)	Volume (gallons/foot)
1	0.041
1.25	0.064
2	0.163
4	0.653

3/4 0.0230

SAMPLE DATA

Date: 11/17/08 Time: 0850	Temp. °C	Cond. mS/cm	DO mg/L	pH SU	ORP mV	Turbidity NTU	Other: DTW	Color / Odor / Comments
Method: Low flow	19.22	0.407	3.85	4.24	160	5.88	n/a	Clear/none

FIELD PARAMETERS

Time	Purge Vol. (gals)	Temp. °C	Cond. mS/cm	DO mg/L	pH SU	ORP mV	Turbidity NTU	Other: DTW	Color / Odor / Comments
0830	0.25	18.93	0.397	3.91	4.35	185	773	n/a	Cloudy/none
0835	0.50	19.31	0.408	3.81	4.30	181	131		" "
0840	0.75	19.22	0.412	3.85	4.27	170	12.6		" "
0845	1.00	19.51	0.409	3.85	4.24	164	5.47		Clear/none
0850	1.25	19.22	0.407	3.85	4.24	160	5.88		" "
0855	—	SAMPLE	—						

Sample information: method, container number, size, and type, preservative used.

Analysis	Preservative	Container requirements	No. of containers
8260B	HCl	40 mL VOAs	3
8270C / 8270SIM	none	1 L AMBER	2
6010B / 6020 / 7471A	HNO_3	250 mL poly	1

Observations/Notes:
Large military vehicle / backhoe idling w/in 10' of temporary well; stopped idling before sample collection.
Turbidity: Hanna Instruments HI 98703.

MS/MSD | Duplicate ID No.:

Signature(s): Kimberly S. Stokes 0855

Attachment 5

CH2MHILL

GROUNDWATER SAMPLING DATA SHEET

Client: NAVFAC
Location: To-09 Camp Lejeune
Event: To-09 363366.08.01
Date: 11/17/08
Weather: 50° Sunny

Project Number: 363366.08.01
Well ID: MR08-TW06
Sample ID: MR08-TW06-08D
Sampling Team: D. Brown/CLT
K. Stokes/DFW

Total Depth: 29.77 FT.(BTOC)
Depth to water: (-) 21.82 FT.(BTOC)
Water Column: 7.95 FT.
(x) .023 GAL/FT.
Well Volume: 0.18 GAL. * 3 = 0.54
Total Purge Vol.: 2.4 GAL.

Purge Device: Peristaltic Pump

Measuring Device: Horiba S/n 10287
Date and Time: 11/17/08 0900

Well Dia. (inches)	Volume (gallons/foot)
1	0.041
1.25	0.064
2	0.163
4	0.653

well Diam	Volume gal/foot
3/4"	0.023

SAMPLE DATA

Date: 11/17/08 Time: 0900	Temp. °C	Cond. mS/cm	DO mg/L	pH SU	ORP mV	Turbidity NTU	Other: ____	Color / Odor / Comments
Method: LowFlow	18.0	.379	2.72	4.33	185	7.21		

FIELD PARAMETERS

Time	Purge Vol. (gals)	Temp. °C	Cond. mS/cm	DO mg/L	pH SU	ORP mV	Turbidity NTU	Other: ____	Color / Odor / Comments
0825	0.3	18.6	.393	2.56	4.41	176	73.2		Cloudy
0830	0.6	18.5	.387	2.73	4.35	175	31.3		Clear
0835	0.9	18.2	.381	2.66	4.30	178	9.8		Clear
0840	1.2	18.3	.383	2.65	4.29	177	17.3		Clear
0845	1.5	18.0	.378	2.70	4.32	184	12.2		↓
0850	1.8	18.0	.381	2.72	4.33	185	9.20		↓
0855	2.1	18.0	.379	2.71	4.32	183	6.80		↓
0900	2.4	18.0	.379	2.72	4.33	185	7.21		↓

Sample information: method, container number, size, and type, preservative used.

Analysis	Preservative	Container requirements	No. of containers
VOCs 8260B	HCl	40 ml VOA	3
SVOCs 8270C PAH 8270 SIM	None	1 Liter Amber	2
RCRA metals 6010B	H_2SO_4 HNO_3 DB	250 ml Poly	1

Observations/Notes: Started Purging at 0820.
Tubing Set at 27'
Used Hanna turbiditymeter S/n 09915
Sample taken at 0900.

MS/MSD | Duplicate ID No.:

Signature(s): James Thomas

Attachment 5

CH2MHILL

GROUNDWATER SAMPLING DATA SHEET

Client: NAVFAC
Location: Camp Lejeune, NC
Event: TO-09
Date: 11/15/08
Weather: Sun, High 74 °F

Project Number: 363366.08.01
Well ID: MR08-TW07
Sample ID: MR08-TW07-08D
Sampling Team: K Stokes / DFW

Total Depth: 27.42 FT.(BTOC)
Depth to water: (-) 21.52 FT.(BTOC)
Water Column: 5.9 FT.
(x) 0.0230 GAL/FT.
Well Volume: 0.136 GAL.
Total Purge Vol.: GAL.

Purge Device: Pine Env peristaltic # UNMARKED

Measuring Device: Horiba U-22 # 10560
Date and Time:

Well Dia. (inches)	Volume (gallons/foot)
1	0.041
1.25	0.064
2	0.163
4	0.653

3/4" 0.0230

SAMPLE DATA

Date: / Time:	Temp. °C	Cond. mS/cm	DO mg/L	pH SU	ORP mV	Turbidity NTU	Other: ____	Color / Odor / Comments
Method:								

FIELD PARAMETERS

Time	Purge Vol. (gals)	Temp. °C	Cond. mS/cm	DO mg/L	pH SU	ORP mV	Turbidity NTU	Other: DTW	Color / Odor / Comments
1345	0.0	22.74	0.407	2.26	5.42	-157	306	n/a	Cloudy/none
1350	DTW-	26.73	- almost	dry	- recharging.				

Sample information: method, container number, size, and type, preservative used.

Analysis	Preservative	Container requirements	No. of containers
8260B	HCl	(3) 40 mL vials	3
8270C / 8270 Sim	none	1 L Amber Jars	2
6010B 6020 / 7471A	HNO_3	250 mL poly	1

Observations/Notes:
Well development 11/14 - well went dry 3 times, purging no longer necessary. Will attempt to collect sample volumes each time well recharges.

MS/MSD | Duplicate ID No.:

Signature(s): Lynsbeing Q Stokes 1440.

Attachment 5

CH2MHILL

GROUNDWATER SAMPLING DATA SHEET

Client: CH2M HILL/NAVFAC
Project Number: 363366.08.01
Location: Camp Lejeune TO-09
Well ID: MR08-TW08-
Event: TO-09
Sample ID: MR08-TW08-08D
Date: 11/15/08
Sampling Team: Dan Brown / CLT
Weather: Rain/Sun. High 74°F
Kim Stokes / DFW

Total Depth: 25.82 FT.(BTOC)
Depth to water: (-) 19.22 FT.(BTOC)
Water Column: 6.6 FT.
(x) GAL/FT.
Well Volume: 0.1518 GAL.
Total Purge Vol.: GAL.

Measuring Device: Horiba U-22 #10560
Date and Time: 11/15/08

Purge Device: Peristaltic

Well Dia. (inches)	Volume (gallons/foot)
1	0.041
1.25	0.064
2	0.163
4	0.653

3/4 0.023 ~~0.022~~

SAMPLE DATA

Date: 11/15/08 Time: 1200	Temp. °C	Cond. mS/cm	DO mg/L	pH SU	ORP mV	Turbidity NTU	Other: DTW	Color / Odor / Comments
Method: Low flow	22.08	0.249	3.15	4.78	-48	6.74	n/a	Clear / none

FIELD PARAMETERS

Time	Purge Vol. (gals)	Temp. °C	Cond. mS/cm	DO mg/L	pH SU	ORP mV	Turbidity NTU	Other: DTW	Color / Odor / Comments
1020	0.0	21.98	0.366	3.52	5.39	-195	839	n/a	Cloudy/none
1025	0.50	21.89	0.310	1.79	5.29	-151	801		
1030	0.75	21.88	0.286	2.23	5.15	-127	252		
1035	1.00	21.86	0.276	2.39	5.14	-116	117		
1040	1.25	21.96	0.271	2.59	5.05	-107	56.3		
1045	1.50	22.06	0.266	2.71	5.03	-98	56.3		
1050	1.75	22.24	0.265	2.76	5.00	-93	22.8		
1055	2.00	22.11	0.263	2.85	4.96	-89	21.6		
1100	2.25	22.10	0.263	2.85	4.95	-88	19.8		
1105	2.50	22.06	0.262	2.88	4.94	-85	18.7		

Sample Information: method, container number, size, and type, preservative used.

Analysis	Preservative	Container requirements	No. of containers
8260B	HCl	40 mL vials	3
6020B / 6010 / 7471A	HNO_3	250 mL poly	1
8270C / 8270 SIM	none	1 L amber jars	2

Observations/Notes:

MS/MSD
Duplicate ID No.:
Signature(s): [signature] 1205

Attachment 5

CH2MHILL

GROUNDWATER SAMPLING DATA SHEET

Client: NAVFAC
Location: Camp Lejeune
Event: TO-09
Date: 11/15/08
Weather:

Project Number: 363366.08.01
Well ID: MR08-TW08
Sample ID: MR08-TW08-08D
Sampling Team: Dan Brown / CLT
Kim Stokes / DFW

Total Depth: FT.(BTOC)
Depth to water: (-) FT.(BTOC)
Water Column: FT.
(x) GAL/FT.
Well Volume: GAL.
Total Purge Vol.: GAL.

See pg 1

Measuring Device:
Date and Time:

Purge Device:

Well Dia. (inches)	Volume (gallons/foot)
1	0.041
1.25	0.064
2	0.163
4	0.653

SAMPLE DATA

Date: / Time:	Temp. °C	Cond. mS/cm	DO mg/L	pH SU	ORP mV	Turbidity NTU	Other: _____	Color / Odor / Comments
Method:								

FIELD PARAMETERS

Time	Purge Vol. (gals)	Temp. °C	Cond. mS/cm	DO mg/L	pH SU	ORP mV	Turbidity NTU	Other: DTW	Color / Odor / Comments
1110	2.75	22.00	0.259	2.92	4.91	-81	21.6	n/a	Clear/none
1115	3.00	22.09	0.259	2.95	4.92	-80	19.9		
1120	3.25	22.08	0.259	2.99	4.89	-75	23.8		
1125	3.50	22.09	0.259	3.00	4.89	-72	21.4		
1130	3.75	22.00	0.256	3.01	4.88	-71	21.4		
1135	4.00	21.93	0.257	3.02	4.85	-66	19.7		
1140	4.25	21.96	0.255	3.05	4.84	-64	24.4		
1145	4.50	22.40	0.237	2.50	4.92	-100	31.2		
1150	4.75	22.31	0.244	3.12	4.78	-41	17.4		
1155	5.00	22.22	0.249	3.09	4.78	-47	8.03		

Sample information: method, container number, size, and type, preservative used.

Analysis	Preservative	Container requirements	No. of containers

Observations/Notes:

MS/MSD | Duplicate ID No.:

Signature(s):

Attachment 5

CH2MHILL

GROUNDWATER SAMPLING DATA SHEET

Client:
Location:
Event:
Date: 11/15/08
Weather:

Project Number: 363366.08.01
Well ID: MR08-TW08
Sample ID: MR08-TW08-08D
Sampling Team: Dan Brown / CLT
Kim Stokes / DFW

Total Depth: FT.(BTOC)
Depth to water: (-) FT.(BTOC)
Water Column: FT.
(x) GAL/FT.
Well Volume: GAL.
Total Purge Vol.: GAL.

See pg. 3

Measuring Device:
Date and Time:

Well Dia. (inches)	Volume (gallons/foot)
1	0.041
1.25	0.064
2	0.163
4	0.653

Purge Device:

SAMPLE DATA

Date: / Time:	Temp. °C	Cond. mS/cm	DO mg/L	pH SU	ORP mV	Turbidity NTU	Other: ____	Color / Odor / Comments
Method:								

FIELD PARAMETERS

Time	Purge Vol. (gals)	Temp. °C	Cond. mS/cm	DO mg/L	pH SU	ORP mV	Turbidity NTU	Other: ____	Color / Odor / Comments
1200	5.25	22.08	0.249	3.15	4.78	-48	~~48~~	6.74	Clear / none
1205	—	SAMPLE							

Sample information: method, container number, size, and type, preservative used.

Analysis	Preservative	Container requirements	No. of containers

Observations/Notes:

MS/MSD | Duplicate ID No.:

Signature(s):

Attachment 5

CH2MHILL

GROUNDWATER SAMPLING DATA SHEET

Client: NAVFAC
Location: Camp Lejeune, NC
Event: TO-09
Date: 11/17/08
Weather: Sunny, High 59 °F

Project Number: 363366.08.01
Well ID: MR08-TW09
Sample ID: MR08-TW09-08D
Sampling Team: Kim Stokes

Total Depth: 24.68 FT.(BTOC)
Depth to water: (-) 17.76 FT.(BTOC)
Water Column: 6.92 FT.
(x) 0.0230 GAL/FT.
Well Volume: 0.1592 GAL. x 3 = 0.4775
Total Purge Vol.: 2.50 GAL.

Purge Device: Peristaltic pump

Measuring Device: Horiba U-22 #10560
Date and Time: 11/17/08

Well Dia. (inches)	Volume (gallons/foot)
1	0.041
1.25	0.064
2	0.163
4	0.653

3/4 0.0230

SAMPLE DATA

Date: 11/17/08 Time: 1515	Temp. °C	Cond. mS/cm	DO mg/L	pH SU	ORP mV	Turbidity NTU	Other: DTW	Color / Odor / Comments
Method: low flow	22.78	0.382	1.74	5.82	-157	9.07	N/A	Clear / none

FIELD PARAMETERS

Time	Purge Vol. (gals)	Temp. °C	Cond. mS/cm	DO mg/L	pH SU	ORP mV	Turbidity NTU	Other: DTW	Color / Odor / Comments
1435	0.50	23.48	0.381	2.25	5.86	-171	722	n/a	Cloudy / none
1440	0.75	23.57	0.392	1.87	5.86	-179	305		" "
1445	1.00	23.39	0.392	1.68	5.87	-178	156		" "
1450	1.25	23.42	0.389	1.66	5.85	-176	84.8		" "
1455	1.50	23.13	0.388	1.67	5.86	-171	51.0		" "
1500	1.75	22.91	0.386	1.69	5.83	-167	30.6		Clear / none
1505	2.00	22.79	0.383	1.70	5.83	-163	17.4		" "
1510	2.25	22.86	0.383	1.75	5.83	-160	11.8		" "
1515	2.50	22.78	0.382	1.74	5.82	-157	9.07		" "
1520			SAMPLE						

Sample information: method, container number, size, and type, preservative used

Analysis	Preservative	Container requirements	No. of containers
8260B	HCl	40 mL vials VOA	3
8270C / 8270SIM	none	1L Amber	2
6010B/6020/7471A	HNO_3	250 mL poly	1

Observations/Notes:
Turbidity - Hanna Instruments HI 98703
PID - 0.0 ppm

MS/MSD
Duplicate ID No.:

Signature(s): Kimberly R. Stokes 1520

Attachment 5

CH2MHILL

GROUNDWATER SAMPLING DATA SHEET

Client: NAVFAC
Location: Camp Lejeune, NC
Event: TO-09
Date: 11/17/08
Weather: Sunny, High 59°F

Project Number: 363366.08.01
Well ID: MR08-TW10-
Sample ID: MR08-TW10-08D
Sampling Team: Kim Stokes / DFW

Total Depth: 24.90 FT.(BTOC)
Depth to water: (-) 17.62 FT.(BTOC)
Water Column: 7.28 FT.
(x) 0.023 GAL/FT.
Well Volume: 0.1674 GAL. x3: 0.50
Total Purge Vol.: 2.50 GAL.

Purge Device: Peristaltic pump

Measuring Device: Horiba U-22 #10560
Date and Time: 11/17/08

Well Dia. (inches)	Volume (gallons/foot)
1	0.041
1.25	0.064
2	0.163
4	0.653

3/4 0.0230

SAMPLE DATA

Date: 11/17/08 Time: 1345	Temp. °C	Cond. mS/cm	DO mg/L	pH SU	ORP mV	Turbidity NTU	Other: DTW	Color / Odor / Comments
Method: low flow	23.32	0.214	2.95	5.08	-66	6.88	N/A	Clear / none

FIELD PARAMETERS

Time	Purge Vol. (gals)	Temp. °C	Cond. mS/cm	DO mg/L	pH SU	ORP mV	Turbidity NTU	Other: DTW	Color / Odor / Comments
1315	1.00	23.46	0.225	3.21	5.24	-54	392.0	N/A	Cloudy / none
1320	1.25	23.70	0.222	3.18	5.20	-58	65.6		" "
1325	1.50	23.83	0.220	3.10	5.18	-59	31.9		" "
1330	1.75	24.00	0.218	3.05	5.15	-61	23.1		Clear / none
1335	2.00	23.94	0.217	3.03	5.11	-64	19.0		" "
1340	2.25	23.63	0.216	3.00	5.10	-65	10.5		" "
1345	2.50	23.32	0.214	2.95	5.08	-66	6.88		" "
1350	SAMPLE								

Sample information: method, container number, size, and type, preservative used.

Analysis	Preservative	Container requirements	No. of containers
8260B	HCl	40 mL VOAs	3
8270C / 8270SIM	none	1 L Amber	2
6010B / 6020 / 7471A	HNO_3	250 mL poly	1

Observations/Notes:
Turbidity - Hanna Instruments HI 98703
PID - 0.0 ppm

MS/MSD | Duplicate ID No.:

Signature(s): Kimberly R Stokes 1350

Attachment 5

CH2MHILL

GROUNDWATER SAMPLING DATA SHEET

Client: NAVFAC
Location: Camp Lejeune, NC
Event: TO-09
Date: 11/17/08
Weather: 59° sunny

Project Number: 363366.08.01
Well ID: MR08-TW11
Sample ID: MR08-TW11-08D
Sampling Team: D. Brown/CLT
K. Stokes/DFW

Total Depth: 25.00 FT.(BTOC)
Depth to water: (-) 17.41 FT.(BTOC)
Water Column: 7.59 FT.
(x) 0.023 GAL/FT.
Well Volume: 0.17 GAL. * 3 = 0.52
Total Purge Vol.: 1.50 GAL.

Purge Device: Peristaltic Pump

Measuring Device: Horiba S/N 10287
Date and Time: 11/17/08

Well Dia. (inches)	Volume (gallons/foot)
1	0.041
1.25	0.064
2	0.163
4	0.653

3/4" 0.023

SAMPLE DATA

Date: 11/17/08 Time: 1325	Temp. °C	Cond. mS/cm	DO mg/L	pH SU	ORP mV	Turbidity NTU	Other: ____	Color / Odor / Comments
Method: Low Flow	22.3	.330	2.60	4.77	81	6.8		

FIELD PARAMETERS

Time	Purge Vol. (gals)	Temp. °C	Cond. mS/cm	DO mg/L	pH SU	ORP mV	Turbidity NTU	Other: ____	Color / Odor / Comments
1300	0.25	22.5	.336	2.61	4.94	80	227		Cloudy
1305	0.50	22.4	.338	2.64	4.91	85	40.0		Clear
1310	0.75	22.2	.332	2.59	4.82	79	21.0		↓
1315	1.00	22.3	.328	2.61	4.76	81	9.7		
1320	1.25	22.3	.329	2.60	4.78	80	7.3		
1325	1.50	22.3	.330	2.60	4.77	81	6.8		
1330									
1335									
1340									

Sample information: method, container number, size, and type, preservative used.

Analysis	Preservative	Container requirements	No. of containers
VOCs 8260B	HCl	40 ml VOA	3
SVOCs 8270C PAH 8270SIM	None	1 Liter Amber	2
RCRA metals 6010B	HNO_3	250 ml Poly	1

Observations/Notes: Started pumping at 1255.
Tubing set at 23'.
Sample taken at 1325.

MS/MSD
Duplicate ID No.:
Signature(s): [illegible]

Attachment 5

CH2MHILL

GROUNDWATER SAMPLING DATA SHEET

Client: NAVFAC
Location: Camp Lejeune, NC
Event: TO-09
Date: 11/17/08
Weather: 55°F Sunny

Project Number: 363366.08.01
Well ID: MR08-TW13
Sample ID: MR08-TW13-08D
Sampling Team: D. Brown / CLT
K. Stokes / DFW

Total Depth: 27.70 FT.(BTOC)
Depth to water: (-) 20.28 FT.(BTOC)
Water Column: 7.42 FT.
(x) 0.023 GAL/FT.
Well Volume: 0.17 GAL.
Total Purge Vol.: 3.75 GAL.

Measuring Device: Horiba S/n 10287
Date and Time: 11/17/08

Purge Device: Peristaltic Pump

Well Dia. (inches)	Volume (gallons/foot)
1	0.041
1.25	0.064
2	0.163
4	0.653

3/4" 0.023

SAMPLE DATA

Date: 11/17/08 Time: 1105	Temp. °C	Cond. mS/cm	DO mg/L	pH SU	ORP mV	Turbidity NTU	Other: ____	Color / Odor / Comments
Method: Low Flow 3 Vol	23.5	.364	4.86	4.32	160	5.9		

FIELD PARAMETERS

Time	Purge Vol. (gals)	Temp. °C	Cond. mS/cm	DO mg/L	pH SU	ORP mV	Turbidity NTU	Other: ____	Color / Odor / Comments
0955	0.25	22.1	.373	5.15	4.47	175	873		Cloudy
1000	0.50	23.2	.366	4.91	4.31	170	750		Cloudy
1005	0.75	23.1	.365	4.87	4.33	169	612		Cloudy
1010	1.00	23.2	.365	4.88	4.32	168	360		Clear
1015	1.25	23.1	.368	4.89	4.33	170	312		
1020	1.50	23.1	.369	4.90	4.32	172	140		
1025	1.75	23.2	.371	4.88	4.32	169	123		
1030	2.00	23.1	.373	4.89	4.33	171	98.3		
1035	2.25	23.2	.374	4.90	4.32	172	55.0		
1040	2.50	23.3	.369	4.88	4.33	170	47.1		

Sample information: method, container number, size, and type, preservative used.

Analysis	Preservative	Container requirements	No. of containers
VOC 8260B	HCl	40 ml VOA	3
SVOCS 8270C PAH 8270SIM	None	1 Liter Amber	2
RCRA Metals 6010B	HNO_3	250 ml Poly	1

Observations/Notes: Set up on well at 0945. Began Purging at 0950. Tubing Set at 25'
Sample taken at 1105

MS/MSD | Duplicate ID No.:

Signature(s): [illegible]

Attachment 5

CH2MHILL

GROUNDWATER SAMPLING DATA SHEET

Client:
Location: See
Event:
Date: Sheet 1
Weather:

Project Number: 363366.08.01
Well ID: MR08-TW13
Sample ID: MR08-TW13-08D
Sampling Team: D. Brown/CLT
K. Stokes/DFW

Total Depth: FT.(BTOC)
Depth to water: (-) See FT.(BTOC)
Water Column: FT.
(x) GAL/FT.
Well Volume: GAL.
Total Purge Vol.: GAL.
Sheet
Purge Device: /

Measuring Device: See Sheet 1
Date and Time:

Well Dia. (inches)	Volume (gallons/foot)
1	0.041
1.25	0.064
2	0.163
4	0.653

SAMPLE DATA

Date: / Time:	Temp. °C	Cond. mS/cm	DO mg/L	pH SU	ORP mV	Turbidity NTU	Other: ____	Color / Odor / Comments
Method:								

FIELD PARAMETERS

Time	Purge Vol. (gals)	Temp. °C	Cond. mS/cm	DO mg/L	pH SU	ORP mV	Turbidity NTU	Other: ____	Color / Odor / Comments
1045	2.75	23.4	.368	4.87	4.33	168	28.0		clear
1050	3.00	23.5	.362	4.86	4.31	158	12.0		↓
1055	3.25	23.5	.364	4.86	4.32	160	7.8		
1100	3.50	23.5	.363	4.87	4.33	159	6.7		
1105	3.75	23.5	.364	4.86	4.32	160	5.9		

Sample information: method, container number, size, and type, preservative used.

Analysis	Preservative	Container requirements	No. of containers
See	Sheet	1	

Observations/Notes:

MS/MSD
Duplicate ID No.:

Signature(s):

Attachment 5

CH2MHILL

GROUNDWATER SAMPLING DATA SHEET

Client: NAVFAC
Location: Camp Lejeune, NC
Event: TO-09
Date: 11/17/08
Weather: Sunny, High 59 °F

Project Number: 363366.08.01
Well ID: MR08-TW14
Sample ID: MR08-TW14-08D
Sampling Team: K Stokes

Total Depth: 27.06 FT.(BTOC)
Depth to water: (-) 20.31 FT.(BTOC)
Water Column: 6.75 FT.
(x) 0.0230 GAL/FT.
Well Volume: 0.1553 GAL. x 3 = 0.4658
Total Purge Vol.: 1.25 GAL.

Purge Device: Peristaltic pump

Measuring Device: Horiba U-22 #10560
Date and Time: 11/17/08

Well Dia. (inches)	Volume (gallons/foot)
1	0.041
1.25	0.064
2	0.163
4	0.653

3/4 0.0230

SAMPLE DATA

Date: 11/17/08 Time: 1020	Temp. °C	Cond. mS/cm	DO mg/L	pH SU	ORP mV	Turbidity NTU	Other: DTW	Color / Odor / Comments
Method: Low flow	24.40	0.210	4.73	4.77	88	8.96	N/A	Clear / none

FIELD PARAMETERS

Time	Purge Vol. (gals)	Temp. °C	Cond. mS/cm	DO mg/L	pH SU	ORP mV	Turbidity NTU	Other: DTW	Color / Odor / Comments
1000	0.25	23.96	0.204	4.87	4.85	123	9.08	N/A	Cloudy / none
1005	0.50	24.44	0.203	4.72	4.85	105	16.7		" "
1010	0.75	24.59	0.210	4.76	4.82	99	46.7		Clear / none
1015	1.00	24.41	0.210	4.76	4.80	95	19.2		" "
1020	1.25	24.40	0.210	4.73	4.73	88	8.96		" "
1025	—	SAMPLE							

Sample information: method, container number, size, and type, preservative used.

Analysis	Preservative	Container requirements	No. of containers
8260B	HCl	40 mL VOA	3
8270C / 8270SIM	none	1 L Amber	2
6010B / 6020 / 7471A	HNO_3	250 mL poly	1

Observations/Notes:
PID - 0.0 ppm
Turbidity - Hanna Instruments turbidometer HI 98703

MS/MSD
Duplicate ID No.:
Signature(s): Kimberly R Stokes 1025

Attachment 5

CH2MHILL

GROUNDWATER SAMPLING DATA SHEET

Client: NAVFAC
Location: HPCA / POTA / FC
Event: TO-09
Date: 11/21/08
Weather:

Project Number: 363366.08.01
Well ID: TW15
Sample ID: MR08-TW15-08D @ 0800
Sampling Team: D. LUBELL / RDU

Total Depth: 27.73 FT.(BTOC)
Depth to water: (-) 20.05 FT.(BTOC)
Water Column: 7.68 FT.
(x) 0.041 GAL/FT.
Well Volume: 0.31 GAL.
Total Purge Vol.: 3.5 GAL.

Purge Device: Peristaltic Pump

Measuring Device: HORRIBA U-22
Date and Time: 11.21.08

Well Dia. (inches)	Volume (gallons/foot)
1	0.041
1.25	0.064
2	0.163
4	0.653

SAMPLE DATA

Date: 11.21.08 Time: 0753	Temp. °C	Cond. mS/cm	DO mg/L	pH SU	ORP mV	Turbidity NTU	Other: ____	Color / Odor / Comments
Method: LOW FLOW	19.8	0.239	3.77	4.85	56	3.40	250	

FIELD PARAMETERS

Time	Purge Vol. (gals)	Temp. °C	Cond. mS/cm	DO mg/L	pH SU	ORP mV	Turbidity NTU	Other: FLOW RATE	Color / Odor / Comments
0707		19.3	0.268	1.95	5.22	-17	650	250	LT BROWN
0712		19.8	0.265	2.53	5.20	-5	280	250	
0717		20.0	0.264	2.90	5.19	4	90.0	250	CLEARING
0722		20.1	0.261	3.13	5.15	11	50.0	250	"
0727		20.2	0.256	3.25	5.09	21	26.0	250	"
0732		20.1	0.252	3.45	5.01	27	18.0	250	"
0737		20.1	0.247	3.53	4.98	31	10.0	250	"
0743		20.0	0.244	3.65	4.94	39	6.30	250	"
0748		19.9	0.240	3.71	4.88	50	4.70	250	"
0753		19.8	0.239	3.77	4.85	56	3.40	250	"

Sample information: method, container number, size, and type, preservative used.

Analysis	Preservative	Container requirements	No. of containers

Observations/Notes: TUBING SET @ 23'

MS/MSD | Duplicate ID No.: MR08-TW15D-08D @ 0805

Signature(s): D. Lubell

Attachment 5

CH2MHILL

GROUNDWATER SAMPLING DATA SHEET

Client: NAVFAC
Location: Camp Lejeune, NC
Event: TO-09
Date: 11/21/08
Weather: 40° cloudy

Project Number: 363366.08.01
Well ID: MR08-TW16
Sample ID: MR08-TW16-08D
Sampling Team: D. Brown/CLT

Total Depth: 28.00 FT.(BTOC)
Depth to water: (-)19.81 FT.(BTOC)
Water Column: 8.19 FT.
(x) .041 GAL/FT.
Well Volume: 0.34 GAL.
Total Purge Vol.: 2.4 GAL.

Purge Device: Peristaltic Pump

Measuring Device: Horiba S/N 10560
Date and Time: 11/21/08

Well Dia. (inches)	Volume (gallons/foot)
1	0.041
1.25	0.064
2	0.163
4	0.653

SAMPLE DATA

Date: 11/21/08 Time: 0845	Temp. °C	Cond. mS/cm	DO mg/L	pH SU	ORP mV	Turbidity NTU	Other: DTW	Color / Odor / Comments
Method: 3 Vol Low Flow	21.4	.230	1.69	4.83	57	4.32	20.06	

FIELD PARAMETERS

Time	Purge Vol. (gals)	Temp. °C	Cond. mS/cm	DO mg/L	pH SU	ORP mV	Turbidity NTU	Other: _____	Color / Odor / Comments
0815	0.5	21.6	0.294	2.10	5.10	72	321	19.97	Cloudy
0820	0.8	21.5	0.279	2.02	4.91	68	187	19.99	Clear
0825	1.1	21.4	0.271	1.93	4.87	61	98.2	20.03	Clear
0830	1.5	21.4	0.233	1.57	4.82	56	43.1	20.04	Clear
0835	1.8	21.4	.230	1.68	4.84	60	9.87	20.05	↓
0840	2.1	21.4	.232	1.64	4.82	58	7.21	20.05	↓
0845	2.4	21.4	.230	1.69	4.83	57	4.32	20.06	↓

Sample information: method, container number, size, and type, preservative used.

Analysis	Preservative	Container requirements	No. of containers
VOCs 8260 B	HCl	40 ml VOA	3
VOC 8270 C PAH 8270 SIM	None	1 Liter Amber	2
Nitroaeromatics 8330	None	1000 ml Glass	2
Perchlorate 6850	None	250 ml poly	1
RCRA Metals Cu, Zn, Pb	HNO_3	250 ml poly	1
6010B 6020 7471A			

Observations/Notes: Started purging at 0800
Tubing set at 26'
Sample taken at 0845.

MS/MSD | Duplicate ID No.:

Signature(s): [illegible]

Attachment 5

CH2MHILL

GROUNDWATER SAMPLING DATA SHEET

Client:
Location: HPCA / POIA / FC
Event:
Date: 11/20/08
Weather:

Project Number: 363366.08.01
Well ID: TW17
Sample ID: MR08-TW17-08D
Sampling Team: D LUBELL

Total Depth: 27.70 FT.(BTOC)
Depth to water: (-) 19.60 FT.(BTOC)
Water Column: 8.10 FT.
(x) 0.041 GAL/FT.
Well Volume: 0.33 GAL.
Total Purge Vol.: GAL.

Purge Device: PERISTALTIC

Measuring Device: HORRIBA U-22
Date and Time: 11/20/08

Well Dia. (inches)	Volume (gallons/foot)
1	0.041
1.25	0.064
2	0.163
4	0.653

1 OF 2

SAMPLE DATA

Date: / Time:	Temp. °C	Cond. mS/cm	DO mg/L	pH SU	ORP mV	Turbidity NTU	Other: ____	Color / Odor / Comments
Method:								

FIELD PARAMETERS

Time	Purge Vol. (gals)	Temp. °C	Cond. mS/cm	DO mg/L	pH SU	ORP mV	Turbidity NTU	Other: FLOW mL/min	Color / Odor / Comments
1438		20.2	0.334	1.77	5.28	-54	650	200	LT Brown
1442		20.4	0.447	0.64	5.33	-125	360	200	"
1446		20.5	0.477	0.52	5.28	-146	170	200	
1450		20.2	0.481	0.52	5.26	-150	130	200	
1454		20.2	0.481	0.51	5.22	-153	92.0	250	
1458		20.4	0.479	0.52	5.20	-155	60.0	250	
1508		20.4	0.469	0.62	5.15	-141	38.0	250	
1512		20.4	0.467	0.66	5.15	-136	27.0	250	
1516		20.5	0.465	0.68	5.11	-131	23.0	250	CLEAR
1520		20.4	0.462	0.68	5.11	-129	22.0	250	"

Sample information: method, container number, size, and type, preservative used.

Analysis	Preservative	Container requirements	No. of containers

Observations/Notes:

TUBING SET @ 23'

MS/MSD
Duplicate ID No.: MR08-TW~~17~~ 17D -08D
Signature(s): David Lubell

Attachment 5

CH2MHILL

GROUNDWATER SAMPLING DATA SHEET

Client:
Location: HPCA/POIA/FC
Event:
Date: 11/20/08
Weather:

Project Number:
Well ID: TW17 CONTINUED
Sample ID: MR08-TW17-08D @ 1540
Sampling Team: DLUBELL

Total Depth: FT.(BTOC)
Depth to water: (-) FT.(BTOC)
Water Column: FT.
(x) GAL/FT.
Well Volume: GAL.
Total Purge Vol.: GAL.

Measuring Device:
Date and Time:

Purge Device:

Well Dia. (inches)	Volume (gallons/foot)
1	0.041
1.25	0.064
2	0.163
4	0.653

2 OF 2

SAMPLE DATA

Date: 11/20/08 Time: 1540	Temp. °C	Cond. mS/cm	DO mg/L	pH SU	ORP mV	Turbidity NTU	Other:	Color / Odor / Comments
Method:	20.3	0.458	0.66	5.09	-118	7.60		

FIELD PARAMETERS

J	Time	Purge Vol. (gals)	Temp. °C	Cond. mS/cm	DO mg/L	pH SU	ORP mV	Turbidity NTU	Other: FLOW	Color / Odor / Comments
2	1524		20.4	0.468	0.69	5.10	-126	20.0	250	CLEAR
2	1528		20.4	0.462	0.70	5.11	-123	17.0	250	
12	1533		20.4	0.460	0.72	5.09	-117	9.40	250	
2	1536		20.2	0.460	0.72	5.08	-115	8.40	250	
2	1539	3.5GAL	20.3	0.458	0.66	5.09	-118	7.60	250	

Sample information: method, container number, size, and type, preservative used.

Analysis	Preservative	Container requirements	No. of containers
VOC	HCL	(3) 40mL VOA	3
SVOC	—	1L Amber	2
EXPLOSIVE	—	1L Amber	2
PERCHLORATE	—	250 mL Plastic (UNPR.)	1
RCRA METALS + ANT. + Zn + Cu	HNO_3	250mL Plastic	1

Observations/Notes: TUBING SET @ 25'

MS/MSD
Signature(s): Dan Lubell

Duplicate ID No.: MR08-TW17D ~~@~~ 08D @ 1545

Attachment 5

CH2MHILL

GROUNDWATER SAMPLING DATA SHEET

Client: NAVFAC
Location: Camp Lejeune, NC
Event: TO-09
Date: 11/20/08
Weather: 55° Sunny

Project Number: 363366.08.01
Well ID: MR08-TW18
Sample ID: MR08-TW18-08D
Sampling Team: D. Brown / CLT

Total Depth: 28.06 FT.(BTOC)
Depth to water: (-) 19.57 FT.(BTOC)
Water Column: 8.49 FT.
(x) .041 GAL/FT.
Well Volume: 0.35 GAL.
Total Purge Vol.: 4.3 GAL.

Purge Device: Peristaltic Pump

Measuring Device: Horiba s/n 10560
Date and Time: 11/20/08

Well Dia. (inches)	Volume (gallons/foot)
1	0.041
1.25	0.064
2	0.163
4	0.653

SAMPLE DATA

Date: 11/20/08 Time: 1450	Temp. °C	Cond. mS/cm	DO mg/L	pH SU	ORP mV	Turbidity NTU	Other: DTW	Color / Odor / Comments
Method: 3 vol Low Flow	21.6	.648	0.00	5.52	-297	7.2	19.74	Clear

FIELD PARAMETERS

Time	Purge Vol. (gals)	Temp. °C	Cond. mS/cm	DO mg/L	pH SU	ORP mV	Turbidity NTU	Other: DTW	Color / Odor / Comments
1350	0.5	22.1	.786	0.03	5.70	-290	294	19.63	Cloudy
1355	0.8	22.0	.543	0.03	5.63	-286	173	19.65	Cloudy
1400	1.1	22.0	.479	0.02	5.62	-288	179	19.68	Clear
1405	1.4	22.0	.513	0.00	5.57	-295	143	19.69	Clear
1410	1.7	21.9	.545	0.00	5.60	-298	87.2	19.70	Clear
1415	2.0	21.7	.561	0.00	5.54	-305	64.2	19.71	Clear
1420	2.3	21.8	.589	0.00	5.56	-301	30.3	19.71	Clear
1425	2.6	21.7	.603	0.00	5.59	-297	24.8	19.71	Clear
1430	2.9	21.6	.646	0.00	5.51	-300	16.5	19.73	Clear
1435	3.2	21.6	.643	0.00	5.53	-303	11.4	19.73	Clear

Sample information: method, container number, size, and type, preservative used

Analysis	Preservative	Container requirements	No. of containers
VOCS 8260B	HCl	40 ml VOA	3
SVOCS 8270C PAHs 8270SIM	None	1 Liter amber	2
Nitroaromatics 8330	None	1000 ml Glass	2
Perchlorate 6850	None	250 ml Poly	1
RCRA Metals Cu, Zn, As	HNO3	250 ml Poly	1
6010B 6020 7471A			

Observations/Notes: Set up on well at 1340.
Tubing set at 26'
Collected sample at 1450.

MS/MSD
Duplicate ID No.:
Signature(s): [illegible]

Attachment 5

CH2MHILL

Page 2 of 2

GROUNDWATER SAMPLING DATA SHEET

Client: NAVFAC
Location: Camp Lejeune, NC
Event: To-09
Date: 11/20/08
Weather: 55° Sunny

Project Number: 363366.08.01
Well ID: MRC8-TW18
Sample ID: MRC8-TW18-080
Sampling Team: D. Braun/CLT

Total Depth: FT.(BTOC)
Depth to water: (-) FT.(BTOC)
Water Column: FT.
(x) GAL/FT.
Well Volume: GAL.
Total Purge Vol.: GAL.
Purge Device:

See Sheet 1

Measuring Device: Horiba S/N 10560
Date and Time:

Well Dia. (inches)	Volume (gallons/foot)
1	0.041
1.25	0.064
2	0.163
4	0.653

SAMPLE DATA

Date: / Time:	Temp. °C	Cond. mS/cm	DO mg/L	pH SU	ORP mV	Turbidity NTU	Other: _____	Color / Odor / Comments
Method:								

FIELD PARAMETERS

Time	Purge Vol. (gals)	Temp. °C	Cond. mS/cm	DO mg/L	pH SU	ORP mV	Turbidity NTU	Other: DTW	Color / Odor / Comments
1440	3.6	21.6	.647	0.00	5.52	-299	8.7	19.74	Clear
1445	3.9	21.6	.649	0.00	5.51	-300	9.3	19.74	Clear
1450	4.3	21.6	.648	0.00	5.52	-297	7.2	19.74	Clear

Sample information: method, container number, size, and type, preservative used.

Analysis	Preservative	Container requirements	No. of containers
See	Sheet	1	

Observations/Notes:

MS/MSD
Duplicate ID No.:
Signature(s): [signature]

Attachment 5

CH2MHILL

Sheet 1 of 2

GROUNDWATER SAMPLING DATA SHEET

Client: NAVFAC
Location: To-09 Camp Lejeune, NC
Event: To-09 Camp Lejeune, NC
Date: 11/20/08
Weather: 50° sunny

Project Number: 363366.08.01
Well ID: MR08-TW19
Sample ID: MR08-TW19-08D
Sampling Team: D. Braun / CLT

Total Depth: 28.00 FT.(BTOC)
Depth to water: (-) 19.35 FT.(BTOC)
Water Column: 8.65 FT.
(x) .041 GAL/FT.
Well Volume: .35 GAL.*3
Total Purge Vol.: 3.6 GAL.

Purge Device: Peristaltic Pump

Measuring Device: Horiba S/N 10560
Date and Time: 11/20/08

Well Dia. (inches)	Volume (gallons/foot)
1	0.041
1.25	0.064
2	0.163
4	0.653

SAMPLE DATA

Date: 11/20/08 Time: 1305	Temp. °C	Cond. mS/cm	DO mg/L	pH SU	ORP mV	Turbidity NTU	Other: _____	Color / Odor / Comments
Method: Low Flow, 3 Vol	19.9	.255	0.05	4.64	-134	7.6	19.53	

FIELD PARAMETERS

Time	Purge Vol. (gals)	Temp. °C	Cond. mS/cm	DO mg/L	pH SU	ORP mV	Turbidity NTU	Other: DTW	Color / Odor / Comments
1205	0.2	19.4	.261	0.92	4.68	-30	593	19.41	cloudy
1210	0.5	19.7	.259	0.68	4.79	-47	132	19.42	Clear
1215	0.8	19.6	.263	.67	4.80	-49	72.1	19.43	Clear
1220	1.2	19.6	.261	.69	4.71	-52	43.7	19.47	|
1230	1.5	19.7	.264	0.57	4.73	-50	39.1	19.48	|
1235	1.8	19.7	.260	0.56	4.65	-49	28.6	19.49	|
1240	2.1	19.6	.269	0.48	4.68	-42	16.8	19.50	
1245	2.4	19.6	.263	0.52	4.68	-41	11.2	19.51	
1250	2.7	19.9	.258	0.04	4.64	-132	10.4	19.53	
1255	3.0	19.9	.256	0.05	4.64	-133	8.6	19.53	

Sample information: method, container number, size, and type, preservative used.

Analysis	Preservative	Container requirements	No. of containers
VOCS 8260B	HCl	40 ml VOA	3
SVOCS 8270C PAH 8270 SIM	None	1 Liter Amber	2
Nitro Aeromatics 8330	None	1000 ml Glass	2
Perchlorate 6850	None	250 ml Poly	1
RCRA metals, Cu, An, Zn	HNO3	250 ml Poly	1
6010B 6020 7471A			

Observations/Notes: Started purging at 1200.
Tubing set at 26'
Sample taken at 1305

MS/MSD | Duplicate ID No.:

Signature(s): [signature]

Attachment 5

CH2MHILL

Sheet 2 of 2

GROUNDWATER SAMPLING DATA SHEET

Client: NAVFAC
Location: Camp Lejeune, NC
Event: TO-09
Date: 11/24/08 See Sheet 1
Weather:

Project Number: 363366.08.01
Well ID: MRC8-TW19
Sample ID: MRC8-TW19-08D
Sampling Team: D. Brown/CLT

Measuring Device: Horiba S/n 10560
Date and Time:

Total Depth: FT.(BTOC)
Depth to water: (-) See FT.(BTOC)
Water Column: FT.
(x) GAL/FT.
Well Volume: Sheet GAL.
Total Purge Vol.: GAL.
Purge Device: /

Well Dia. (inches)	Volume (gallons/foot)
1	0.041
1.25	0.064
2	0.163
4	0.653

SAMPLE DATA

Date: / Time:	Temp. °C	Cond. mS/cm	DO mg/L	pH SU	ORP mV	Turbidity NTU	Other: _____	Color / Odor / Comments
Method:								

FIELD PARAMETERS

Time	Purge Vol. (gals)	Temp. °C	Cond. mS/cm	DO mg/L	pH SU	ORP mV	Turbidity NTU	Other: _____	Color / Odor / Comments
1300	3.3	19.9	.259	0.04	4.65	-130	8.1	19.53	Clear
1305	3.6	19.9	.255	0.05	4.64	-134	7.6	19.53	Clear

Sample information: method, container number, size, and type, preservative used.

Analysis	Preservative	Container requirements	No. of containers
See Sheet 1			

Observations/Notes:

MS/MSD
Duplicate ID No.:
Signature(s): [illegible]

Attachment 5

CH2MHILL

GROUNDWATER SAMPLING DATA SHEET

Client: NAVFAC
Location: HPCA/POIA FC
Event: TO-09
Date: 11.20.08
Weather:

Project Number: 363366.DS.01
Well ID: TW20
Sample ID: MR08-TW20-08D
Sampling Team: D. LUBELL

Total Depth: 27.80 FT.(BTOC)
Depth to water: (-) 20.22 FT.(BTOC)
Water Column: 7.58 FT.
(x) 0.041 GAL/FT.
Well Volume: 0.31 GAL. ~ 1 GAL
Total Purge Vol.: GAL.

Purge Device: PERISTALTIC

Measuring Device: HORRIBA U-22 #11857 SERIAL# 70100 PINE
Date and Time:

Well Dia. (inches)	Volume (gallons/foot)
1	0.041
1.25	0.064
2	0.163
4	0.653

* SWITCH TO HORRIBA #605082 @ 1250 and continue LOW FLOW

SAMPLE DATA

Date: 11/20/08 Time: 1315	Temp. °C	Cond. mS/cm	DO mg/L	pH SU	ORP mV	Turbidity NTU	Other:	Color / Odor / Comments
Method:	18.9	0.346	0.26	4.65	-219	6.20		

FIELD PARAMETERS

Time	Purge Vol. (gals)	Temp. °C	Cond. mS/cm	DO mg/L	pH SU	ORP mV	Turbidity NTU	Other: DTW	Color / Odor / Comments
1154		~~18.84~~ ~~5.136~~	99.9	1.17	5.14	-36	500	20.41	BROWN
1159			99.9	0.56	5.11	-73	250	20.41	SPOT / REGAL SW.12 + HORRIBA
1250**		18.9	0.370	0.52	4.80	-120	29.0	20.40	CLEAR
1300		18.9	0.358	0.52	4.75	-157	15.0	20.40	CLEAR
1304		18.9	0.354	0.40	4.73	-187	12.0	20.40	"
1308		19.1	0.348	0.34	4.70	-203	9.60	20.40	"
1312		18.9	0.347	0.28	4.66	-212	8.10	20.40	"
1315	2.5 gal	18.9	0.346	0.26	4.65	-219	6.20	20.40	"

Sample information: method, container number, size, and type, preservative used.

Analysis	Preservative	Container requirements	No. of containers
VOC	HCL	40 mL	~~3~~ 2
SVOC	—	1L Amber	2
METALS	HNO3	250 mL POLY	1
PERCHLORATE	—	250 mL POLY	1
EXPLOSIVES	—	1L Amber	2

Observations/Notes:
** First reading w/Horriba U-22 SERIAL# 605082
CONTINUED PURGING BETWEEN SWITCH OUT OF HORRIBA'S TO REDUCE TURBIDITY;
TUBING SET @ 23'

MS/MSD
Duplicate ID No.:
Signature(s): David Lubell

Attachment 5

CH2MHILL

GROUNDWATER SAMPLING DATA SHEET

Client: NAVFAC
Location: Camp Lejeune, NC
Event: To-09
Date: 11/21/08
Weather: 40° cloudy

Project Number: 363366.08.01
Well ID: MR08-TW21
Sample ID: MR08-TW21-08D
Sampling Team: D. Braun/CLT

Total Depth: 28.00 FT.(BTOC)
Depth to water: (-) 20.18 FT.(BTOC)
Water Column: 7.82 FT.
(x) .041 GAL/FT.
Well Volume: 0.32 GAL.
Total Purge Vol.: 3.8 GAL.

Purge Device: Peristaltic Pump

Measuring Device: Horiba S/n 10560
Date and Time: 11/21/08

Well Dia. (inches)	Volume (gallons/foot)
1	0.041
1.25	0.064
2	0.163
4	0.653

SAMPLE DATA

Date: 11/21/08 Time: 1040	Temp. °C	Cond. mS/cm	DO mg/L	pH SU	ORP mV	Turbidity NTU	Other: DTW	Color / Odor / Comments
Method: 3 Vol Low Flow	22.5	.162	0.00	5.30	-297	6.9	20.33	Clear

FIELD PARAMETERS

Time	Purge Vol. (gals)	Temp. °C	Cond. mS/cm	DO mg/L	pH SU	ORP mV	Turbidity NTU	Other: DTW	Color / Odor / Comments
0940	0.2	22.5	.293	1.10	5.42	-10	138.2	20.21	Clear
0945	0.5	22.5	.280	0.73	5.40	-132	110.1	20.24	↓
0950	0.8	22.6	.198	0.09	5.38	-194	122.3	20.31	↓
0955	1.1	22.6	.187	0.05	5.31	-204	94.1	20.33	↓
1000	1.4	22.6	.165	0.04	5.32	-209	80.2	20.33	↓
1005	1.7	22.6	.140	0.04	5.31	-278	86.1	20.33	↓
1010	2.0	22.5	.158	0.00	5.29	-293	32.7	20.33	↓
1015	2.3	22.5	.153	0.00	5.28	-295	10.3	20.33	↓
1020	2.6	22.5	.155	0.00	5.29	-295	8.7	20.33	↓
1025	2.9	22.5	.159	0.00	5.29	-299	11.2	20.33	↓

Sample information: method, container number, size, and type, preservative used.

Analysis	Preservative	Container requirements	No. of containers
VOCs 8260B	HCl	40 ml VOA	3
SVOC 8270C PAH 8270 SIM	None	1 Liter Amber	2
Nitroaromatics 8330	None	1000 ml Glass	2
Perchlorate 6850.	None	250 ml poly	1
RCRA Metals Cu, An, Zn	HNO_3	250 ml Poly	1
6010B 6020 7471A			

Observations/Notes: Set up on well at 0930
Tubing set at 26'
Sample taken at 1040

MS/MSD
Duplicate ID No.:
Signature(s): Darin Braun

Attachment 5

CH2MHILL

Page 2 of 2

GROUNDWATER SAMPLING DATA SHEET

Client: NAVFAC
Location: Camp Lejeune, NC
Event: TO-09
Date: 11/21/08
Weather: 40° Cloudy

Project Number: 363366.08.01
Well ID: MR08-TW21
Sample ID: MR08-TW21-08D
Sampling Team: D. Brown/CLT

Total Depth: See FT.(BTOC)
Depth to water: (-) FT.(BTOC)
Water Column: FT.
(x) GAL/FT.
Well Volume: Sheet 1 GAL.
Total Purge Vol.: GAL.
Purge Device:

Measuring Device: Horiba S/N 10560
Date and Time:

Well Dia. (inches)	Volume (gallons/foot)
1	0.041
1.25	0.064
2	0.163
4	0.653

SAMPLE DATA

Date: / Time:	Temp. °C	Cond. mS/cm	DO mg/L	pH SU	ORP mV	Turbidity NTU	Other: _____	Color / Odor / Comments
Method:								

FIELD PARAMETERS

Time	Purge Vol. (gals)	Temp. °C	Cond. mS/cm	DO mg/L	pH SU	ORP mV	Turbidity NTU	Other: _____	Color / Odor / Comments
1030	3.2	22.5	.160	0.00	5.30	-298	9.3	20.33	Clear
1035	3.5	22.5	.159	0.00	5.29	-300	7.2	20.33	↓
1040	3.8	22.5	.162	0.00	5.30	-297	6.9	20.33	

Sample information: method, container number, size, and type, preservative used.

Analysis	Preservative	Container requirements	No. of containers
See	Sheet 1		

Observations/Notes:

MS/MSD
Duplicate ID No.:
Signature(s): [signature]

Attachment 5

CH2MHILL

GROUNDWATER SAMPLING DATA SHEET

Client: NAVFAC
Location: HPCA / POTA / FC
Event: TO-09
Date: 11.21.08
Weather: 30-45°, CLOUDY, SNOW FLURRIES

Project Number: 363366.08.01
Well ID: TW22
Sample ID: MR08-TW22-080D @ 1100
Sampling Team: D. LUBELL

Total Depth: 27.27 FT.(BTOC)
Depth to water: (-) 20.33 FT.(BTOC)
Water Column: 6.94 FT.
(x) 0.041 GAL/FT.
Well Volume: 0.29 GAL.
Total Purge Vol.: 3 GAL.

Purge Device: Peristaltic Pump

Measuring Device: HORIBA U-22
Date and Time:

Well Dia. (inches)	Volume (gallons/foot)
1	0.041
1.25	0.064
2	0.163
4	0.653

SAMPLE DATA

Date: 11.21.08 Time: 1100	Temp. °C	Cond. mS/cm	DO mg/L	pH SU	ORP mV	Turbidity NTU	Other: ____	Color / Odor / Comments
Method: LOW FLOW	21.1	0.168	0.41	4.73	-106	4.60		

FIELD PARAMETERS

	Time	Purge Vol. (gals)	Temp. °C	Cond. mS/cm	DO mg/L	pH SU	ORP mV	Turbidity NTU	Other: FLOW	Color / Odor / Comments
3	1004		20.1	0.192	0.60	5.13	-123	450	250	Lt Brown
B	1008		20.5	0.183	0.58	5.12	-121	110	250	"
3	1013		20.6	0.178	0.49	4.99	-125	60.0	250	CLEARING
3	1018	4L	20.9	0.176	0.46	4.94	-126	37.0	250	"
3	1023	5L	20.6	0.177	0.43	4.92	-131	34.0	250	"
3	1028	6.5L	20.9	0.172	0.41	4.85	-124	15.0	250	"
3	1033	8L	20.9	0.170	0.42	4.81	-115	11.0	250	"
4	1038	9L	20.9	0.171	0.43	4.78	-113	6.70	250	CLEAR
4	1043	10L	20.9	0.169	0.43	4.78	-108	5.10	250	"
4	1048	11L	21.1	0.168	0.41	4.73	-106	4.60	250	"

Sample information: method, container number, size, and type, preservative used

Analysis	Preservative	Container requirements	No. of containers
TCL VOC - 8260B	HCL	40 mL	3
SVOCs	—	1 L Amber - Narrow	2
EXPLOSIVES	—	1 L Amber - Wide	2
Metals + Ant. + Cu + Zn	HNO_3	1 250mL POLY	1
PERCHLORATE	—	250mL POLY	1

Observations/Notes: TUBING SET @ 23'

MS/MSD
Signature(s): David Lubell

Duplicate ID No.:

Attachment 5

CH2MHILL

GROUNDWATER SAMPLING DATA SHEET

Client: NAVFAC
Location: Camp Lejeune, NC
Event: TO-09
Date: 11/21/08
Weather: 47° Cloudy

Project Number: 363366.08.01
Well ID: MR08-TW23
Sample ID: MR08-TW23-08D
Sampling Team: D. Brown/CLT

Total Depth: 23.88 FT.(BTOC)
Depth to water: (-) 16.12 FT.(BTOC)
Water Column: 7.76 FT.
(x) .041 GAL/FT.
Well Volume: 0.32 GAL.
Total Purge Vol.: 2.0 GAL.

Purge Device: Peristaltic Pump

Measuring Device: Horiba S/N 10560
Date and Time: 11/21/08

Well Dia. (inches)	Volume (gallons/foot)
1	0.041
1.25	0.064
2	0.163
4	0.653

SAMPLE DATA

Date: 11/21/08 Time: 1200	Temp. °C	Cond. mS/cm	DO mg/L	pH SU	ORP mV	Turbidity NTU	Other: DTW	Color / Odor / Comments
Method: 3 Vol Low Flow	20.2	.559	0.58	6.08	-90	3.91	16.34	Clear

FIELD PARAMETERS

Time	Purge Vol. (gals)	Temp. °C	Cond. mS/cm	DO mg/L	pH SU	ORP mV	Turbidity NTU	Other: DTW	Color / Odor / Comments
1130	0.2	19.6	.537	0.42	5.71	-107	652	16.20	Cloudy
1135	0.5	19.8	.559	0.00	5.95	-197	118	16.24	Clear
1140	0.8	20.3	.563	0.02	6.07	-172	44.3	16.30	
1145	1.1	20.4	.561	0.34	6.06	-105	20.1	16.33	
1150	1.4	20.2	.560	0.54	6.08	-89	5.64	16.34	
1155	1.7	20.2	.558	0.56	6.07	-92	4.83	16.34	
1200	2.0	20.2	.559	0.58	6.08	-90	3.91	16.34	
1205									
1210									

Sample information: method, container number, size, and type, preservative used.

Analysis	Preservative	Container requirements	No. of containers
VOCs 8260 B	HCl	40 ml VOA	3
SVOC 8270C PAH 8270 SIM	None	1 Liter Amber	2
NitroAeromatics 8330	None	1000 ml Glass	2
Perchlorate 6850	None	250 ml poly	1
RCRA metals Cu, An, Zn	HNO_3	250 ml poly	1
6010B 6020 7471A			

Observations/Notes: Began Purgin well at 1120.
Tubing set at 21'
Sample taken at 1200.

MS/MSD: N/A
Duplicate ID No.:
Signature(s): Dana Brown

Attachment 5

CH2MHILL

Page 1 of 2

GROUNDWATER SAMPLING DATA SHEET

Client: NAVFAC
Location: Camp Lejeune NC
Event: TO-09
Date: 11/20/08
Weather: 57° Sunny

Project Number: 363366.08.01
Well ID: MR08-TW24
Sample ID: MR08-TW24-08D
Sampling Team: D. Brown/CLT

Total Depth: 25.00 FT.(BTOC)
Depth to water: (-)19.53 FT.(BTOC)
Water Column: 5.47 FT.
(x) .041 GAL/FT.
Well Volume: 0.22 GAL.
Total Purge Vol.: 4.1 GAL.

Purge Device: Peristaltic Pump

Measuring Device: Horiba S/N 10560
Date and Time: 11/20/08

Well Dia. (inches)	Volume (gallons/foot)
1	0.041
1.25	0.064
2	0.163
4	0.653

SAMPLE DATA

Date: 11/20/08 Time: 1655	Temp. °C	Cond. mS/cm	DO mg/L	pH SU	ORP mV	Turbidity NTU	Other: ____	Color / Odor / Comments
Method: 3 Vol Low Flow	20.4	.339	0.00	5.57	-282	8.20	19.83	Clear

FIELD PARAMETERS

Time	Purge Vol. (gals)	Temp. °C	Cond. mS/cm	DO mg/L	pH SU	ORP mV	Turbidity NTU	Other: ____	Color / Odor / Comments
5 ~~1355~~	0.3	21.7	.492	1.30	5.51	43	732	19.68	Cloudy
1600	0.6	21.5	.486	0.71	5.47	-72	412	19.72	Cloudy
1605	1.0	21.0	.397	0.17	5.49	-109	178	19.79	Clear
1610	1.3	21.0	.339	0.03	5.50	-212	153	19.81	Clear
1615	1.6	20.7	.332	0.06	5.51	-272	45.9	19.82	Clear
1620	1.9	20.6	.334	0.00	5.51	-291	34.0	19.82	Clear
1625	2.2	20.5	.330	0.00	5.53	-283	34.4	19.82	Clear
1630	2.5	20.4	.342	0.00	5.52	-292	23.1	19.82	↓
1635	2.8	20.4	.340	0.00	5.52	-287	18.0	19.82	↓
1640	3.2	20.4	.338	0.00	5.52	-284	17.2	19.82	↓

Sample information: method, container number, size, and type, preservative used.

Analysis	Preservative	Container requirements	No. of containers
VOCs 8260B	HCl	40 ml VOA	3
SVOCs 8270C PAH 8270C	None	1 Liter Amber	2
Nitroaromatics	None	1000 ml Glass	2
Perchlorate	None	250 ml Poly	1
RCRA Metals Cu, An, Zn	HNO3	250 ml Poly	1
6010B 6020 7471A			

Observations/Notes: Started Purging well at 1550.
Tubing Set at 23'
Sample taken at 1655.

MS/MSD | Duplicate ID No.:

Signature(s): [signature]

Attachment 5

Page 2 of 2

CH2MHILL

GROUNDWATER SAMPLING DATA SHEET

Client: NAVFAC
Location: Camp Lejeune
Event: To-09
Date: 11/20/08
Weather: @ 57° Sunny

Project Number: 363366.08.01 DB
Well ID: MR08-TW24-~~08D~~
Sample ID: MR08-TW24-08D
Sampling Team: D. Brown / CLT

Total Depth: FT.(BTOC)
Depth to water: (-) See FT.(BTOC)
Water Column: FT.
(x) GAL/FT.
Well Volume: See GAL.
Total Purge Vol.: GAL.
Purge Device: Sheet 1

Measuring Device: Horiba S/N 10560
Date and Time: 11/20/08

Well Dia. (inches)	Volume (gallons/foot)
1	0.041
1.25	0.064
2	0.163
4	0.653

SAMPLE DATA

Date: / Time:	Temp. °C	Cond. mS/cm	DO mg/L	pH SU	ORP mV	Turbidity NTU	Other: _____	Color / Odor / Comments
Method:								

FIELD PARAMETERS

Time	Purge Vol. (gals)	Temp. °C	Cond. mS/cm	DO mg/L	pH SU	ORP mV	Turbidity NTU	Other: _____	Color / Odor / Comments
1645	3.5	20.4	.340	0.00	5.56	-281	7.90	19.83	Clear
1650	3.8	20.4	.342	0.00	5.56	-284	6.31	19.83	↓
1655	4.1	20.4	.339	0.00	5.57	-282	8.20	19.83	✓

Sample information: method, container number, size, and type, preservative used.

Analysis	Preservative	Container requirements	No. of containers
See	Sheet	1	

Observations/Notes:

MS/MSD
Duplicate ID No.:
Signature(s): [signature]

Attachment 5

CH2MHILL

GROUNDWATER SAMPLING DATA SHEET

Client: NAVFAC
Location: Camp Lejeune
Event: TO-89
Date: 11/20/08
Weather: Sunny High 57°F

Project Number: 363366.08.01
Well ID: MR08-TW25 ~~08D~~
Sample ID: MR08-TW25-08D
Sampling Team: K Stokes

Total Depth: 27.99 FT.(BTOC)
Depth to water: (-) 16.40 FT.(BTOC)
Water Column: (=) ~~27.99~~ FT. 11.59
(x) 0.041 GAL/FT.
Well Volume: 0.4752 GAL. x 3 = 1.4256
Total Purge Vol.: GAL.

Purge Device: Peristaltic

Measuring Device: Horiba U-22 #05238
Date and Time:

Well Dia. (inches)	Volume (gallons/foot)
1	0.041
1.25	0.064
2	0.163
4	0.653

SAMPLE DATA

Date: / Time:	Temp. °C	Cond. mS/cm	DO mg/L	pH SU	ORP mV	Turbidity NTU	Other: ____	Color / Odor / Comments
Method:								

FIELD PARAMETERS

Time	Purge Vol. (gals)	Temp. °C	Cond. mS/cm	DO mg/L	pH SU	ORP mV	Turbidity NTU	Other: DTW / N/A	Color / Odor / Comments
1240	1.00	19.90	0.405	0.10	5.86	-336	600		Cloudy / none -very turbi
1245	1.25	19.44	0.403	0.12	5.85	-332	471		" "
1250	1.50	19.57	0.390	0.13	5.85	-323	366		" "
1255	1.75	19.81	0.375	0.16	5.83	-311	281		" "
1300	2.00	19.76	0.373	0.16	5.83	-309	236		" "
1305	2.25	19.83	0.364	0.14	5.82	-312	192		" "
1310	2.50	19.66	0.356	0.09	5.81	-311	145		" "
1315	2.75	19.71	0.344	0.07	5.80	-314	107		" "
1320	3.00	19.96	0.332	0.05	5.78	-316	83.6		" "
1325	3.25	19.99	0.339	0.04	5.77	-312	70.6		" "

Sample information: method, container number, size, and type, preservative used.

Analysis	Preservative	Container requirements	No. of containers
8260B	HCl	40 mL VOA vials	3
8270C / 8270SIM	none	1L amber	2
6010B / 6020 / 7417A	HNO_3	250 mL poly	1
Antimony Copper Zinc	"	"	"
8330 Nitro	none	1L amber	2
6850 Perchlorate	none	250 mL poly	1

Observations/Notes: Very turbid after start-up; did not take readings until turbidity was readable / recordable.
Turbidometer - Hanna Instruments HI 98703
* Very difficult to take DTW readings in 1" diameter well.
MR08-TW25-08D 14.15 ** UXO-08

MS/MSD | Duplicate ID No.:

Signature(s): Kimberly R. Stokes

Attachment 5

CH2MHILL

pg. 2

GROUNDWATER SAMPLING DATA SHEET

Client: NAVFAC
Location: Camp Lejeune, NC
Event: TO-09
Date: 11/20/08
Weather: Sunny High 57°F

Project Number: 363366.08.01
Well ID: MR08-TW25
Sample ID: MR08-TW25-08D
Sampling Team: Kim Stokes

Total Depth: FT.(BTOC)
Depth to water: (-) FT.(BTOC)
Water Column: FT.
(x) GAL/FT.
Well Volume: GAL.
Total Purge Vol.: GAL.

See pg. 1

Measuring Device: Horiba U-22
Date and Time:

Purge Device: peristaltic

Well Dia. (inches)	Volume (gallons/foot)
1	0.041
1.25	0.064
2	0.163
4	0.653

SAMPLE DATA

Date: / Time:	Temp. °C	Cond. mS/cm	DO mg/L	pH SU	ORP mV	Turbidity NTU	Other: ____	Color / Odor / Comments
Method:								

FIELD PARAMETERS

Time	Purge Vol. (gals)	Temp. °C	Cond. mS/cm	DO mg/L	pH SU	ORP mV	Turbidity NTU	Other: DTW	Color / Odor / Comments
1330	3.50	20.07	0.321	0.04	5.77	-310	59.3	N/A	Clear/none
1335	3.75	19.97	0.318	0.04	5.77	-308	40.6		" "
1340	4.00	19.94	0.316	0.01	5.76	-308	40.2		" "
1345	4.25	19.89	0.314	0.04	5.74	-301	29.8		" "
1350	4.50	19.86	0.308	0.05	5.75	-296	24.8		" "
1355	4.75	19.80	0.303	0.02	5.73	-297	22.3		" "
1400	5.00	19.88	0.299	0.00	5.73	-294	19.1		" "
1405	5.25	19.84	0.297	0.00	5.72	-290	15.5		" "
1410	5.50	19.61	0.293	0.00	5.72	-286	9.71		" "
1415	—	— SAMPLE			—	—	—	—	—

Sample information: method, container number, size, and type, preservative used.

Analysis	Preservative	Container requirements	No. of containers
See pg. 1			

Observations/Notes:

MR08-TW25-08D 1415

MS/MSD | Duplicate ID No.:

Signature(s): Kimberly L Stokes

Attachment 5

CH2MHILL

GROUNDWATER SAMPLING DATA SHEET

Client: NAVFAC
Location: Camp Lejeune, NC
Event: TO-09
Date: 11/20/08
Weather: Sunny, High 57°F

Project Number: 363366.08.01
Well ID: MR08-TW26
Sample ID: MR08-TW26-08D
Sampling Team: K Stokes

Total Depth: 27.92 FT.(BTOC)
Depth to water: (-) 18.16 FT.(BTOC)
Water Column: 9.76 FT.
(x) 0.041 GAL/FT.
Well Volume: 0.4001 GAL. x 3 = 1.2 gals
Total Purge Vol.: 1.50 GAL.

Purge Device: Peristaltic

Measuring Device: Horiba U-22 # 05238
Date and Time:

Well Dia. (inches)	Volume (gallons/foot)
1	0.041
1.25	0.064
2	0.163
4	0.653

SAMPLE DATA

Date: 11/20/08 Time: 9 35	Temp. °C	Cond. mS/cm	DO mg/L	pH SU	ORP mV	Turbidity NTU	Other: ____	Color / Odor / Comments
Method: Lowflow	18.05	0.223	1.05	4.12	42	9.23	N/A	Clear/none

FIELD PARAMETERS

Time	Purge Vol. (gals)	Temp. °C	Cond. mS/cm	DO mg/L	pH SU	ORP mV	Turbidity NTU	Other: DTW	Color / Odor / Comments
905	0.01	17.13	0.238	2.42	3.79	127	264	N/A	Cloudy/none
910	0.25	18.07	0.226	1.30	3.97	70	260		" "
915	0.50	17.72	0.224	1.09	4.06	53	93.9		" "
920	0.75	17.98	0.222	1.20	4.10	45	43.8		" "
925	1.00	17.99	0.222	1.12	4.11	43	11.2		Clear/none
930	1.25	17.98	0.222	1.07	4.11	45	6.08		" "
935	1.50	18.05	0.223	1.05	4.12	42	9.23		" "
940		SAMPLE							

Sample information: method, container number, size, and type, preservative used.

Analysis	Preservative	Container requirements	No. of containers
8260B	HCl	40 mL VOAs	9
8270C/8270SIM	none	1 L amber	6
6010B/6020/7471A Antimony,	HNO3	250 mL poly	3
Copper & Zinc	↓		
8330 Nitro	none	1000 mL amber	6
6850 Perchlorate	none	250 mL poly	3

Observations/Notes:
*UXO: 08
** very difficult to take DTW readings on 1" diameter well.
Turbidometer: Hanna Instruments HI98703

MS/MSD MR08 TW26-08D | Duplicate ID No.:

Signature(s): Kimberly & Stokes 0940

Appendix H
Well Completion Diagrams

PROJECT NUMBER	WELL NUMBER	
363366	MR08-TW01	SHEET 1 OF 1

WELL COMPLETION DIAGRAM

PROJECT : TO-09 HPCA, POIA, and FC PA/SI LOCATION : Post Office Intersection Area

DRILLING CONTRACTOR : Parratt Wolff

DRILLING METHOD AND EQUIPMENT USED : Ingersol Rand A300 - DPT

WATER LEVELS : Depth to water = 20.84 feet START : 11/16/2008 END :11/16/2008 LOGGER : E. Must

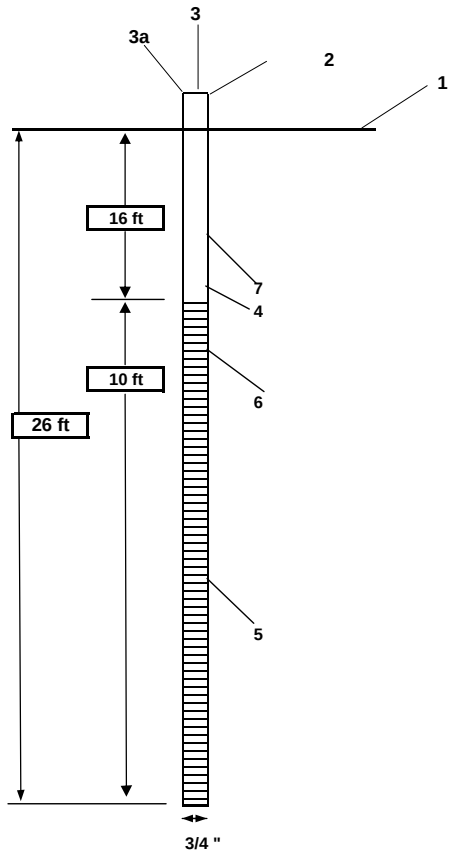

1- Ground elevation at well	25.40 ft
2- Top of casing elevation	27.33 ft
3- Wellhead protection cover type	None
a) locking expansion plug	yes
4- Dia./type of well casing	3/4 inch schedule 40 PVC
5- Type/slot size of screen	0.010 inch pre-packed screen
6- Type screen filter	#1 Sand
a) Quantity used	0.5 bag
7- Type of seal	Bentonite
a) Quantity used	0.25 bag
Development method	Pump and Surge

PROJECT NUMBER	WELL NUMBER	
363366	MR08-TW02	SHEET 1 OF 1

WELL COMPLETION DIAGRAM

PROJECT : TO-09 HPCA, POIA, and FC PA/SI LOCATION : Post Office Intersection Area

DRILLING CONTRACTOR : Parratt Wolff

DRILLING METHOD AND EQUIPMENT USED Ingersol Rand A300 - DPT

WATER LEVELS : Depth to water = 20.53 feet START : 11/16/2008 END :11/16/2008 LOGGER : E. Must

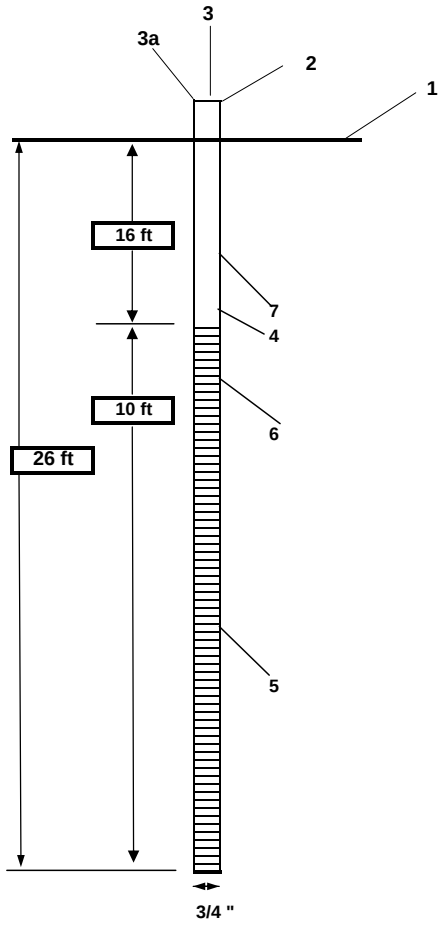

1- Ground elevation at well	25.35 ft
2- Top of casing elevation	26.98 ft
3- Wellhead protection cover type	None
a) locking expansion plug	yes
4- Dia./type of well casing	3/4 inch schedule 40 PVC
5- Type/slot size of screen	0.010 inch pre-packed screen
6- Type screen filter	#1 Sand
a) Quantity used	
7- Type of seal	Bentonite
a) Quantity used	
Development method	Pump and Surge

PROJECT NUMBER	WELL NUMBER	
363366	MR08-TW03	SHEET 1 OF 1

WELL COMPLETION DIAGRAM

PROJECT : TO-09 HPCA, POIA, and FC PA/SI LOCATION : Post Office Intersection Area

DRILLING CONTRACTOR : Parratt Wolff

DRILLING METHOD AND EQUIPMENT USED Ingersol Rand A300 - DPT

WATER LEVELS : Depth to water = 21.10 feet START : 11/16/2008 END :11/16/2008 LOGGER : E. Must

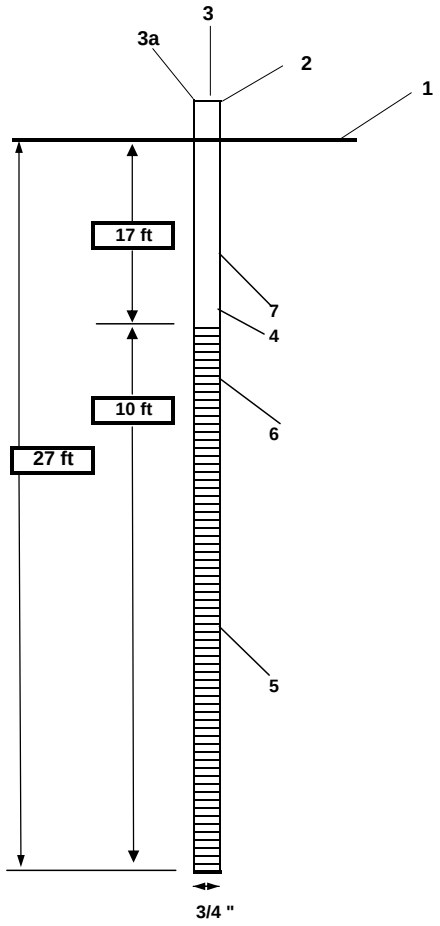

1- Ground elevation at well	25.64 ft
2- Top of casing elevation	27.40 ft
3- Wellhead protection cover type	None
a) locking expansion plug	yes
4- Dia./type of well casing	3/4 inch schedule 40 PVC
5- Type/slot size of screen	0.010 inch pre-packed screen
6- Type screen filter	#1 Sand
a) Quantity used	
7- Type of seal	Bentonite
a) Quantity used	
Development method	Pump and Surge

PROJECT NUMBER	WELL NUMBER	
363366	MR08-TW04	SHEET 1 OF 1

WELL COMPLETION DIAGRAM

PROJECT : TO-09 HPCA, POIA, and FC PA/SI LOCATION : Post Office Intersection Area

DRILLING CONTRACTOR : Parratt Wolff

DRILLING METHOD AND EQUIPMENT USED Truck Mount Ingersol Rand

WATER LEVELS : Depth to water = 20.86 feet START : 11/17/2008 END :11/17/2008 LOGGER : D. Lubell

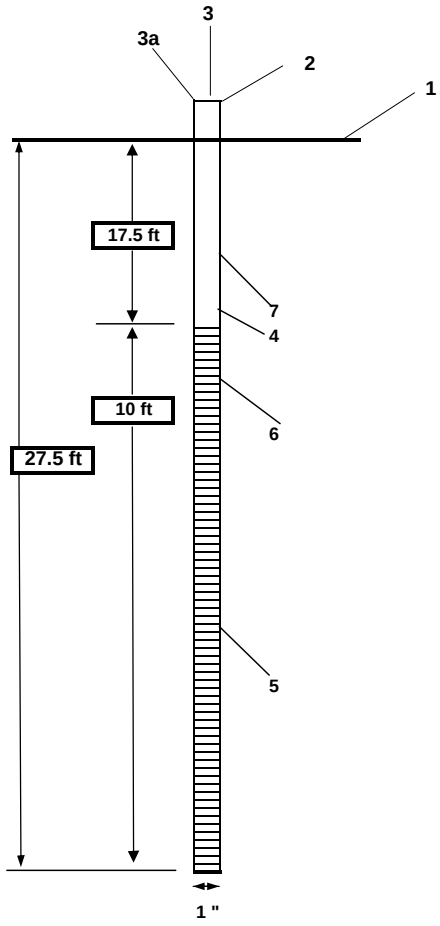

1- Ground elevation at well	25.75 ft
2- Top of casing elevation	26.88 ft
3- Wellhead protection cover type	None
a) locking expansion plug	yes
4- Dia./type of well casing	1 inch schedule 40 PVC
5- Type/slot size of screen	0.010 inch pre-packed screen
6- Type screen filter	#2 Sand
a) Quantity used	
7- Type of seal	Bentonite Pellets
a) Quantity used	
Development method	Pump and Surge

PROJECT NUMBER	WELL NUMBER	
363366	MR08-TW05	SHEET 1 OF 1

WELL COMPLETION DIAGRAM

PROJECT : TO-09 HPCA, POIA, and FC PA/SI LOCATION : Post Office Intersection Area

DRILLING CONTRACTOR : Parratt Wolff

DRILLING METHOD AND EQUIPMENT USED Truck Mount Ingersol Rand

WATER LEVELS : Depth to water = 21.72 feet START : 11/14/2008 END :11/14/2008 LOGGER : D. Lubell

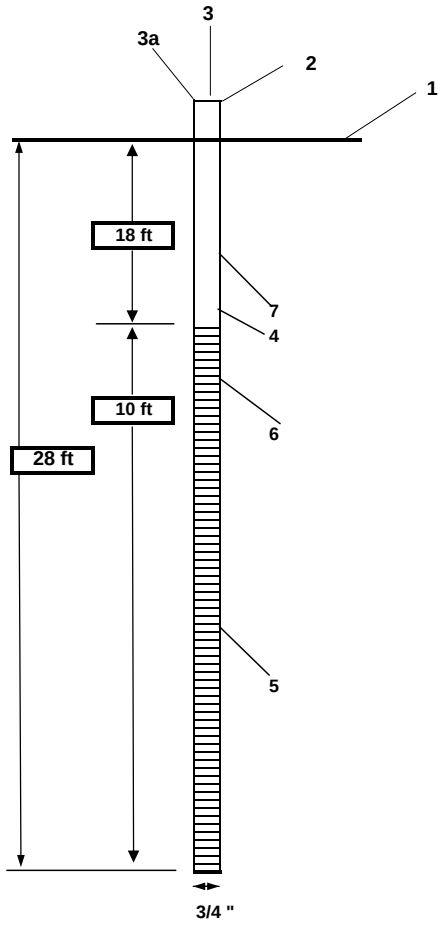

1- Ground elevation at well	25.34 ft
2- Top of casing elevation	27.70 ft
3- Wellhead protection cover type	None
a) locking expansion plug	yes
4- Dia./type of well casing	3/4 inch schedule 40 PVC
5- Type/slot size of screen	0.010 inch pre-packed screen
6- Type screen filter	#1 Sand
a) Quantity used	0.5 bag
7- Type of seal	Bentonite chips
a) Quantity used	0.25 bag
Development method	Pump and Surge

PROJECT NUMBER	WELL NUMBER	
363366	MR08-TW06	SHEET 1 OF 1

WELL COMPLETION DIAGRAM

PROJECT : TO-09 HPCA, POIA, and FC PA/SI LOCATION : Post Office Intersection Area

DRILLING CONTRACTOR : Parratt Wolff

DRILLING METHOD AND EQUIPMENT USED Truck Mount Ingersol Rand

WATER LEVELS : Depth to water = 21.82 feet START : 11/13/2008 END :11/13/2008 LOGGER : D. Lubell

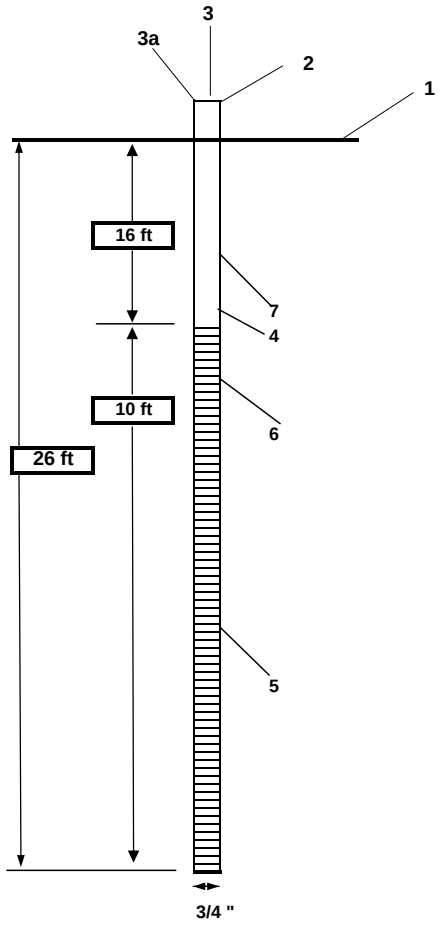

1- Ground elevation at well	25.57 ft
2- Top of casing elevation	27.70 ft
3- Wellhead protection cover type	None
a) locking expansion plug	yes
4- Dia./type of well casing	3/4 inch schedule 40 PVC
5- Type/slot size of screen	0.010 inch pre-packed screen
6- Type screen filter	#2 Sand
a) Quantity used	
7- Type of seal	Bentonite Pellets
a) Quantity used	
Development method	Pump and Surge

PROJECT NUMBER	WELL NUMBER	
363366	MR08-TW07	SHEET 1 OF 1

WELL COMPLETION DIAGRAM

PROJECT : TO-09 HPCA, POIA, and FC PA/SI LOCATION : Post Office Intersection Area

DRILLING CONTRACTOR : Parratt Wolff

DRILLING METHOD AND EQUIPMENT USED Truck Mount Ingersol Rand

WATER LEVELS : Depth to water = 21.52 feet START : 11/13/2008 END :11/13/2008 LOGGER : D. Lubell

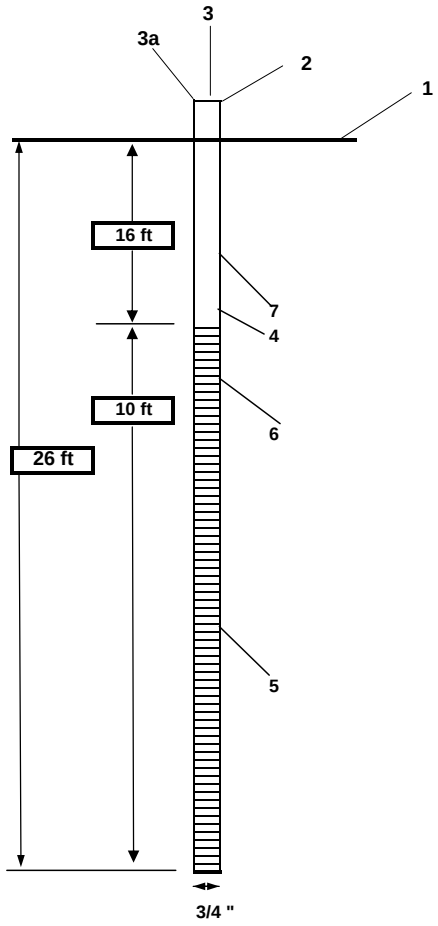

1- Ground elevation at well	25.16 ft
2- Top of casing elevation	27.39 ft
3- Wellhead protection cover type	None
a) locking expansion plug	yes
4- Dia./type of well casing	3/4 inch schedule 40 PVC
5- Type/slot size of screen	0.010 inch pre-packed screen
6- Type screen filter	#2 Sand
a) Quantity used	0.25 bag
7- Type of seal	Bentonite Pellets
a) Quantity used	0.675 bag
Development method	Pump and Surge

PROJECT NUMBER	WELL NUMBER	
363366	MR08-TW08	SHEET 1 OF 1

WELL COMPLETION DIAGRAM

PROJECT : TO-09 HPCA, POIA, and FC PA/SI LOCATION : Post Office Intersection Area

DRILLING CONTRACTOR : Parratt Wolff

DRILLING METHOD AND EQUIPMENT USED Truck Mount Ingersol Rand

WATER LEVELS : Depth to water = 19.22 feet START : 11/13/2008 END :11/13/2008 LOGGER : D. Lubell

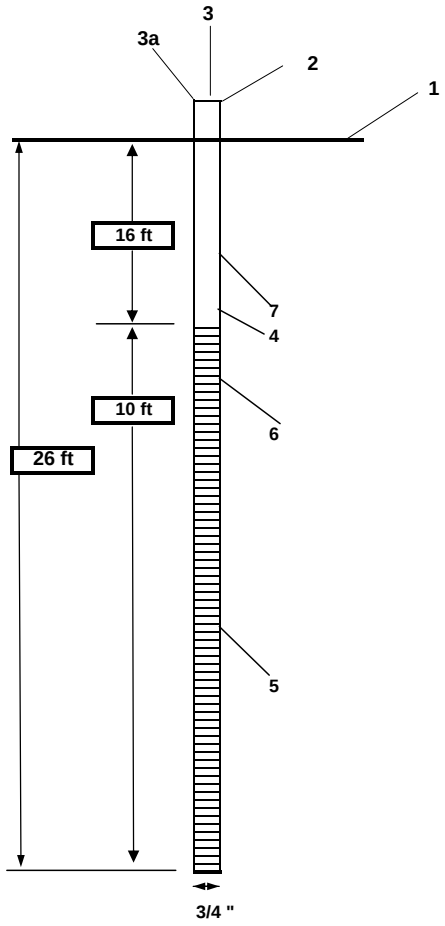

1- Ground elevation at well	24.83 ft
2- Top of casing elevation	25.00 ft
3- Wellhead protection cover type	None
a) locking expansion plug	yes
4- Dia./type of well casing	3/4 inch schedule 40 PVC
5- Type/slot size of screen	0.010 inch pre-packed screen
6- Type screen filter	#2 Sand
a) Quantity used	0.5 bag
7- Type of seal	Bentonite Pellets
a) Quantity used	0.5 bag
Development method	Pump and Surge

PROJECT NUMBER	WELL NUMBER	
363366	MR08-TW09	SHEET 1 OF 1

WELL COMPLETION DIAGRAM

PROJECT : TO-09 HPCA, POIA, and FC PA/SI LOCATION : Post Office Intersection Area

DRILLING CONTRACTOR : Parratt Wolff

DRILLING METHOD AND EQUIPMENT USED Ingersol Rand A300 - DPT

WATER LEVELS : Depth to water = 17.76 feet START : 11/16/2008 END :11/16/2008 LOGGER : E. Must

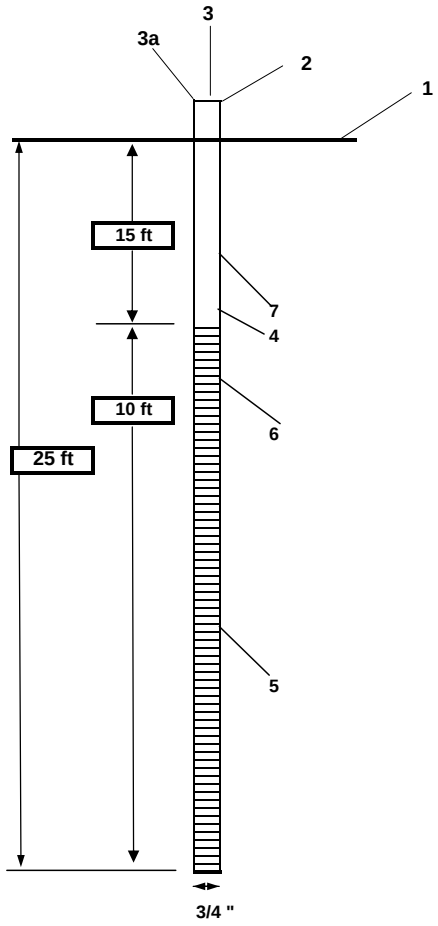

1- Ground elevation at well	23.35 ft
2- Top of casing elevation	23.68 ft
3- Wellhead protection cover type	None
a) locking expansion plug	yes
4- Dia./type of well casing	3/4 inch schedule 40 PVC
5- Type/slot size of screen	0.010 inch pre-packed screen
6- Type screen filter	#1 Sand
a) Quantity used	0.5 bag
7- Type of seal	Bentonite
a) Quantity used	0.25 bag
Development method	Pump and Surge

PROJECT NUMBER	WELL NUMBER	
363366	MR08-TW10	SHEET 1 OF 1

WELL COMPLETION DIAGRAM

PROJECT : TO-09 HPCA, POIA, and FC PA/SI LOCATION : Post Office Intersection Area

DRILLING CONTRACTOR : Parratt Wolff

DRILLING METHOD AND EQUIPMENT USED Ingersol Rand A300 / DPT

WATER LEVELS : Depth to water = 17.62 feet START : 11/15/2008 END :11/15/2008 LOGGER : E. Must

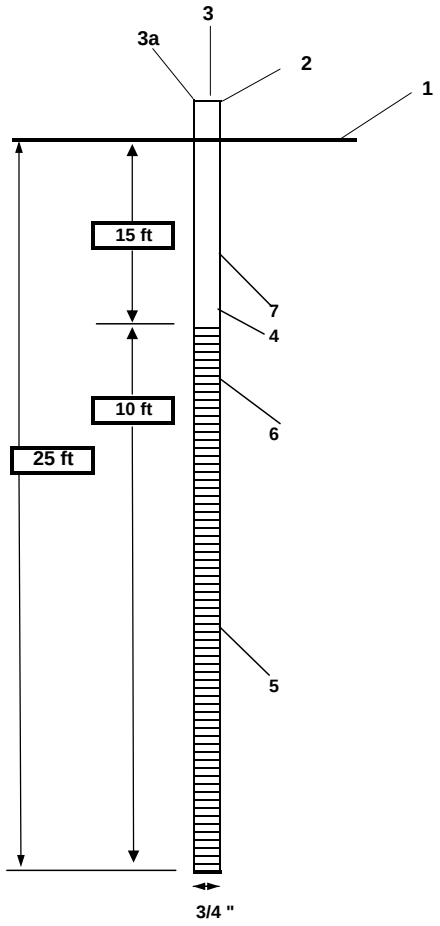

1- Ground elevation at well	23.70 ft
2- Top of casing elevation	23.82 ft
3- Wellhead protection cover type	None
a) locking expansion plug	yes
4- Dia./type of well casing	3/4 inch schedule 40 PVC
5- Type/slot size of screen	0.010 inch pre-packed screen
6- Type screen filter	#1 Sand
a) Quantity used	0.5 bag
7- Type of seal	Bentonite chips
a) Quantity used	0.25 bag
Development method	Pump and Surge

PROJECT NUMBER	WELL NUMBER	
363366	MR08-TW11	SHEET 1 OF 1

WELL COMPLETION DIAGRAM

PROJECT : TO-09 HPCA, POIA, and FC PA/SI LOCATION : Post Office Intersection Area

DRILLING CONTRACTOR : Parratt Wolff

DRILLING METHOD AND EQUIPMENT USED Ingersol Rand A300 / DPT

WATER LEVELS : Depth to water = 17.41 feet START : 11/15/2008 END :11/15/2008 LOGGER : E. Must

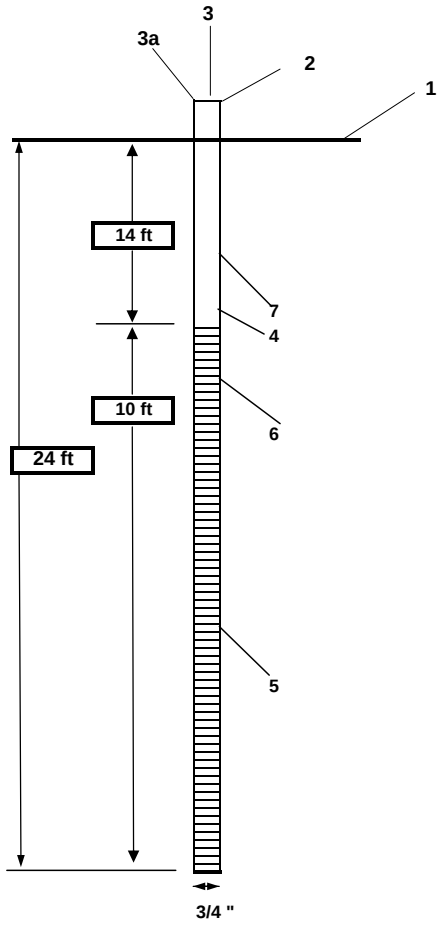

1- Ground elevation at well	22.58 ft
2- Top of casing elevation	23.73 ft
3- Wellhead protection cover type	None
a) locking expansion plug	yes
4- Dia./type of well casing	3/4 inch schedule 40 PVC
5- Type/slot size of screen	0.010 inch pre-packed screen
6- Type screen filter	#1 Sand
a) Quantity used	0.5 bag
7- Type of seal	Bentonite chips
a) Quantity used	0.25 bag
Development method	Pump and Surge

PROJECT NUMBER	WELL NUMBER	
363366	MR08-TW13	SHEET 1 OF 1

WELL COMPLETION DIAGRAM

PROJECT : TO-09 HPCA, POIA, and FC PA/SI LOCATION :Post Office Intersection Area

DRILLING CONTRACTOR : Parratt Wolff

DRILLING METHOD AND EQUIPMENT USED Ingersol Rand A300 / DPT

WATER LEVELS : Depth to water = 20.28 feet START : 11/15/2008 END :11/15/2008 LOGGER : E. Must

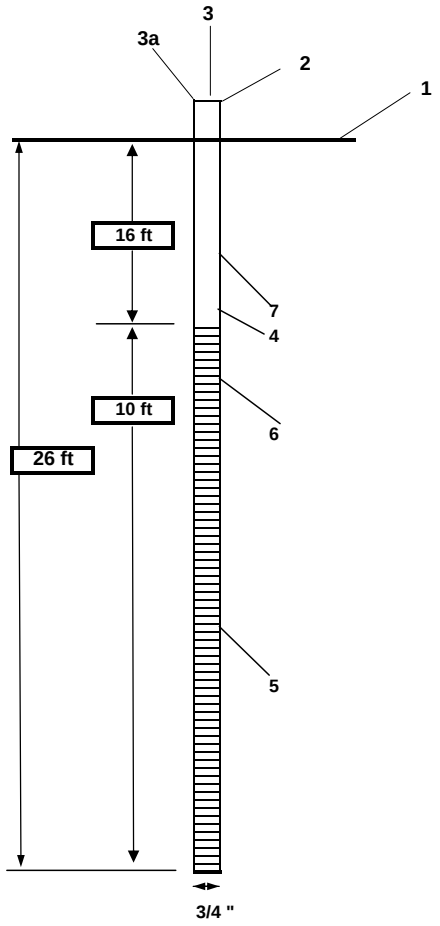

1- Ground elevation at well	24.80 ft
2- Top of casing elevation	26.88 ft
3- Wellhead protection cover type	None
a) locking expansion plug	yes
4- Dia./type of well casing	3/4 inch schedule 40 PVC
5- Type/slot size of screen	0.010 inch pre-packed screen
6- Type screen filter	#1 Sand
a) Quantity used	0.5 bag
7- Type of seal	Bentonite chips
a) Quantity used	0.25 bag
Development method	Pump and Surge

PROJECT NUMBER	WELL NUMBER	
363366	MR08-TW14	SHEET 1 OF 1

WELL COMPLETION DIAGRAM

PROJECT : TO-09 HPCA, POIA, and FC PA/SI LOCATION : Post Office Intersection Area

DRILLING CONTRACTOR : Parratt Wolff

DRILLING METHOD AND EQUIPMENT USED Ingersol Rand A300 / DPT

WATER LEVELS : Depth to water = 20.31 feet START : 11/15/2008 END :11/15/2008 LOGGER : E. Must

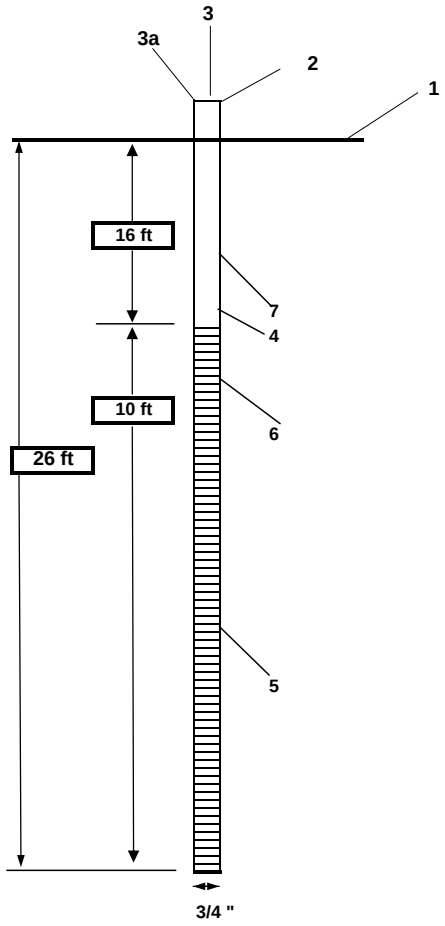

1- Ground elevation at well	25.50 ft
2- Top of casing elevation	27.80 ft
3- Wellhead protection cover type	None
a) locking expansion plug	yes
4- Dia./type of well casing	3/4 inch schedule 40 PVC
5- Type/slot size of screen	0.010 inch pre-packed screen
6- Type screen filter	#1 Sand
a) Quantity used	1 bag
7- Type of seal	Bentonite Pellets
a) Quantity used	0.25 bag
Development method	Pump and Surge

PROJECT NUMBER	WELL NUMBER	
363366	MR08-TW15	SHEET 1 OF 1

WELL COMPLETION DIAGRAM

PROJECT : TO-09 HPCA, POIA, and FC PA/SI LOCATION : Fitness Center

DRILLING CONTRACTOR : Parratt Wolff

DRILLING METHOD AND EQUIPMENT USED Ingersol Rand A300 / DPT

WATER LEVELS : Depth to water : 20.05 feet START : 11/19/2008 END : 11/19/2008 LOGGER : D. Lubell

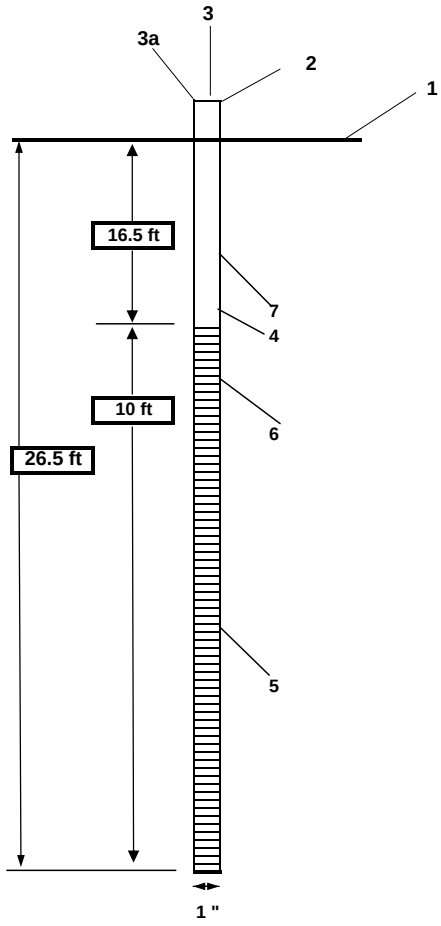

1- Ground elevation at well	24.89 ft
2- Top of casing elevation	26.93 ft
3- Wellhead protection cover type	None
a) locking expansion plug	yes
4- Dia./type of well casing	1 inch schedule 40 PVC
5- Type/slot size of screen	0.010 inch pre-packed screen
6- Type screen filter	#2 Sand
a) Quantity used	0.5 bag
7- Type of seal	Bentonite Pellets
a) Quantity used	0.5 bag
Development method	Pump and Surge

PROJECT NUMBER	WELL NUMBER	
363366	MR08-TW16	SHEET 1 OF 1

WELL COMPLETION DIAGRAM

PROJECT : TO-09 HPCA, POIA, and FC PA/SI LOCATION : Fitness Center

DRILLING CONTRACTOR : Parratt Wolff

DRILLING METHOD AND EQUIPMENT USED Ingersol Rand A300 / DPT

WATER LEVELS : Depth to water : 19.81 feet START : 11/19/2008 END : 11/19/2008 LOGGER : D. Lubell

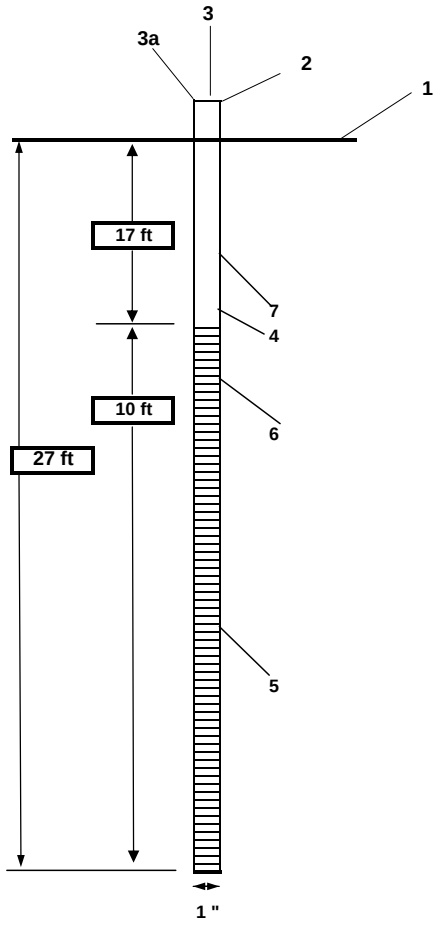

1- Ground elevation at well	25.47 ft
2- Top of casing elevation	26.76 ft
3- Wellhead protection cover type	None
a) locking expansion plug	yes
4- Dia./type of well casing	1 inch schedule 40 PVC
5- Type/slot size of screen	0.010 inch pre-packed screen
6- Type screen filter	#2 Sand
a) Quantity used	0.5 bag
7- Type of seal	Bentonite Pellets
a) Quantity used	0.5 bag
Development method	Pump and Surge

PROJECT NUMBER	WELL NUMBER	
363366	MR08-TW17	SHEET 1 OF 1

WELL COMPLETION DIAGRAM

PROJECT : TO-09 HPCA, POIA, and FC PA/SI LOCATION : Fitness Center

DRILLING CONTRACTOR : Parratt Wolff

DRILLING METHOD AND EQUIPMENT USED Ingersol Rand A300 / DPT

WATER LEVELS : Depth to water : 19.60 feet START : 11/18/2008 END : 11/18/2008 LOGGER : D. Lubell

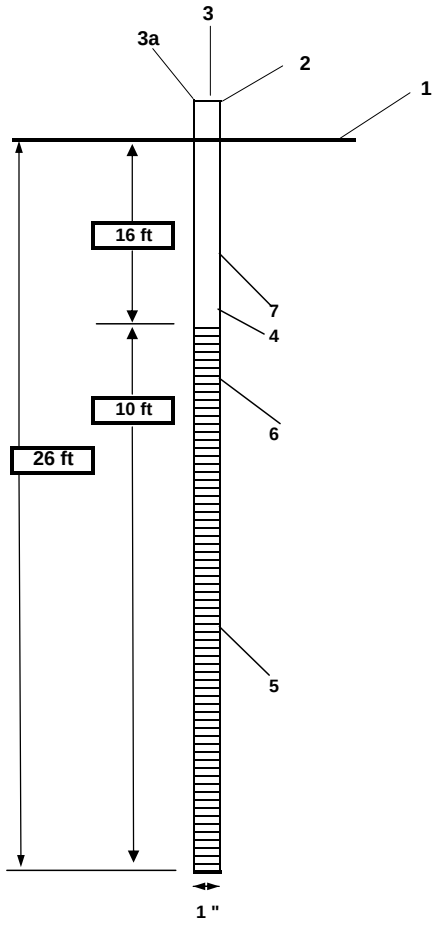

1- Ground elevation at well	24.97 ft
2- Top of casing elevation	26.94 ft
3- Wellhead protection cover type	None
a) locking expansion plug	yes
4- Dia./type of well casing	1 inch schedule 40 PVC
5- Type/slot size of screen	0.010 inch pre-packed screen
6- Type screen filter	#2 Sand
a) Quantity used	0.5 bag
7- Type of seal	Bentonite Pellets
a) Quantity used	0.5 bag
Development method	Pump and Surge

PROJECT NUMBER	WELL NUMBER	
363366	MR08-TW18	SHEET 1 OF 1

WELL COMPLETION DIAGRAM

PROJECT : TO-09 HPCA, POIA, and FC PA/SI LOCATION : Fitness Center

DRILLING CONTRACTOR : Parratt Wolff

DRILLING METHOD AND EQUIPMENT USEI Ingersol Rand A300 / DPT

WATER LEVELS : Depth to water = 19.57 feet START : 11/18/2008 END :11/18/2008 LOGGER : D. Lubell

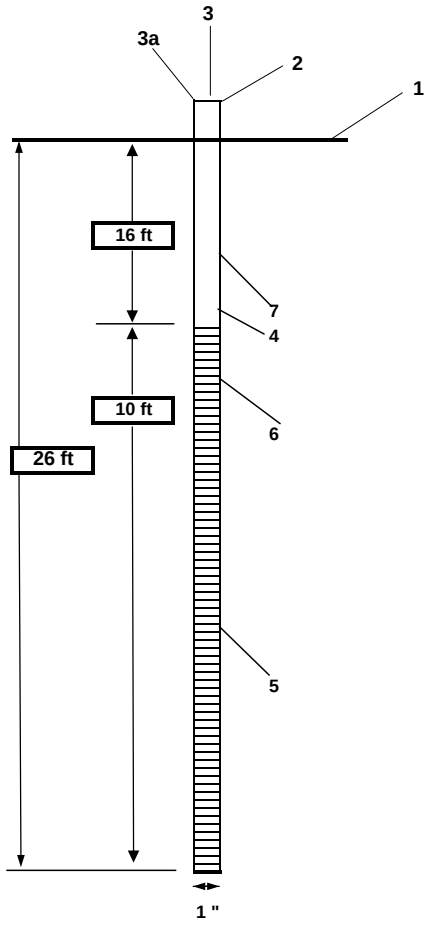

1- Ground elevation at well	25.13 ft
2- Top of casing elevation	26.92 ft
3- Wellhead protection cover type	None
a) locking expansion plug	yes
4- Dia./type of well casing	1 inch schedule 40 PVC
5- Type/slot size of screen	0.010 inch pre-packed screen
6- Type screen filter	#2 Sand
a) Quantity used	0.5 bag
7- Type of seal	Bentonite Pellets
a) Quantity used	0.25 bag
Development method	Pump and Surge

PROJECT NUMBER	WELL NUMBER	
363366	MR08-TW19	SHEET 1 OF 1

WELL COMPLETION DIAGRAM

PROJECT : TO-09 HPCA, POIA, and FC PA/SI LOCATION : Fitness Center

DRILLING CONTRACTOR : Parratt Wolff

DRILLING METHOD AND EQUIPMENT USED Ingersol Rand A300 / DPT

WATER LEVELS : Depth to water = 19.35 feet START : 11/18/2008 END :11/18/2008 LOGGER : D. Lubell

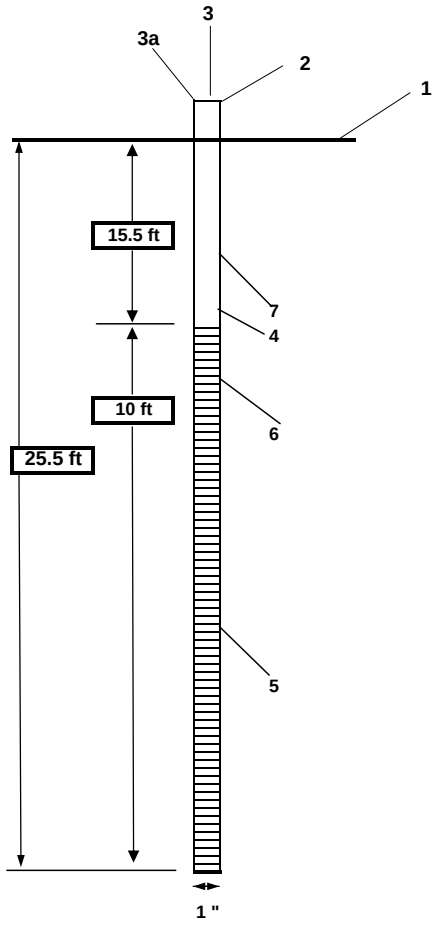

1- Ground elevation at well	24.28 ft
2- Top of casing elevation	26.72 ft
3- Wellhead protection cover type	None
a) locking expansion plug	yes
4- Dia./type of well casing	1 inch schedule 40 PVC
5- Type/slot size of screen	0.010 inch pre-packed screen
6- Type screen filter	#2 Sand
a) Quantity used	0.5 bag
7- Type of seal	Bentonite Pellets
a) Quantity used	0.25 bag
Development method	Pump and Surge

PROJECT NUMBER	WELL NUMBER	
363366	MR08-TW20	SHEET 1 OF 1

WELL COMPLETION DIAGRAM

PROJECT : TO-09 HPCA, POIA, and FC PA/SI LOCATION : Fitness Center

DRILLING CONTRACTOR : Parratt Wolff

DRILLING METHOD AND EQUIPMENT USED : Ingersol Rand A300 / DPT

WATER LEVELS : Depth to water : 20.22 feet START : 11/18/2008 END : 11/18/2008 LOGGER : D. Lubell

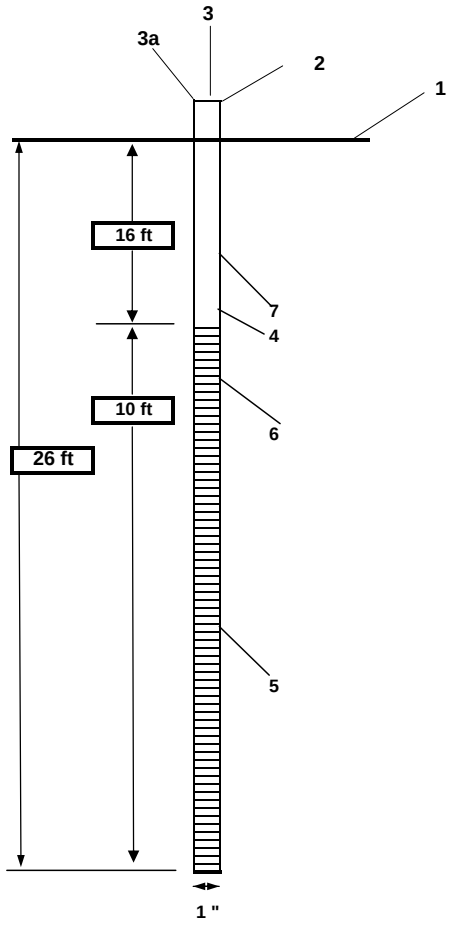

1- Ground elevation at well	25.84 ft
2- Top of casing elevation	27.47 ft
3- Wellhead protection cover type	None
a) locking expansion plug	yes
4- Dia./type of well casing	1 inch schedule 40 PVC
5- Type/slot size of screen	0.010 inch pre-packed screen
6- Type screen filter	#2 Sand
a) Quantity used	0.5 bag
7- Type of seal	Bentonite Pellets
a) Quantity used	0.5 bag
Development method	Pump and Surge

PROJECT NUMBER	WELL NUMBER	
363366	MR08-TW21	SHEET 1 OF 1

WELL COMPLETION DIAGRAM

PROJECT : TO-09 HPCA, POIA, and FC PA/SI LOCATION : Fitness Center

DRILLING CONTRACTOR : Parratt Wolff

DRILLING METHOD AND EQUIPMENT USED Ingersol Rand A300 / DPT

WATER LEVELS : Depth to water : 20.18 feet START : 11/19/2008 END : 11/19/2008 LOGGER : D. Lubell

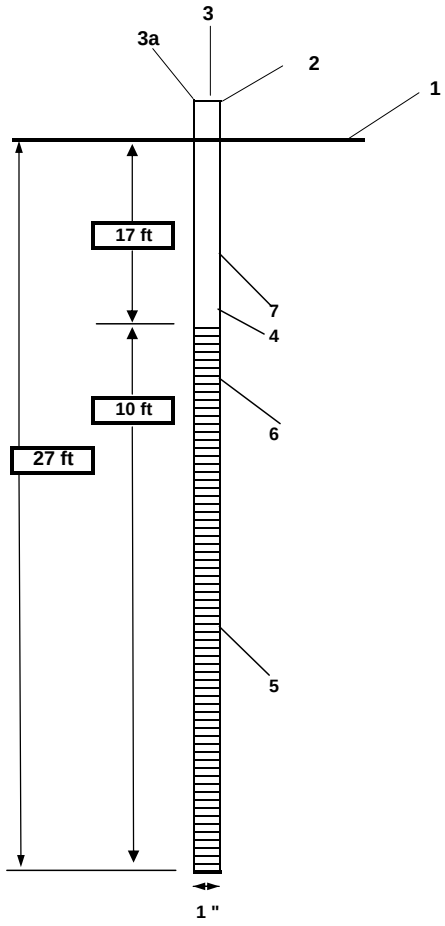

1- Ground elevation at well	25.86 ft
2- Top of casing elevation	27.08 ft
3- Wellhead protection cover type	None
a) locking expansion plug	yes
4- Dia./type of well casing	1 inch schedule 40 PVC
5- Type/slot size of screen	0.010 inch pre-packed screen
6- Type screen filter	#2 Sand
a) Quantity used	0.75 bag
7- Type of seal	Bentonite Pellets
a) Quantity used	0.25 bag
Development method	Pump and Surge

PROJECT NUMBER	WELL NUMBER	
363366	MR08-TW22	SHEET 1 OF 1

WELL COMPLETION DIAGRAM

PROJECT : TO-09 HPCA, POIA, and FC PA/SI LOCATION : Fitness Center

DRILLING CONTRACTOR : Parratt Wolff

DRILLING METHOD AND EQUIPMENT USED : Ingersol Rand A300 / DPT

WATER LEVELS : Depth to water = 20.33 feet START : 11/18/2008 END :11/18/2008 LOGGER : D. Lubell

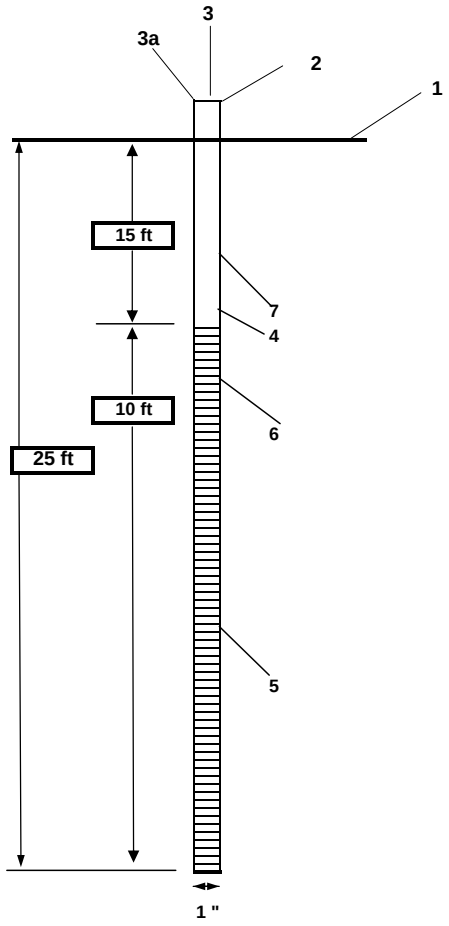

1- Ground elevation at well	24.50 ft
2- Top of casing elevation	27.21 ft
3- Wellhead protection cover type	None
a) locking expansion plug	yes
4- Dia./type of well casing	1 inch schedule 40 PVC
5- Type/slot size of screen	0.010 inch pre-packed screen
6- Type screen filter	#2 Sand
a) Quantity used	0.5 bag
7- Type of seal	Bentonite Pellets
a) Quantity used	0.5 bag
Development method	Pump and Surge

PROJECT NUMBER	WELL NUMBER	
363366	MR08-TW23	SHEET 1 OF 1

WELL COMPLETION DIAGRAM

PROJECT : TO-09 HPCA, POIA, and FC PA/SI LOCATION : Fitness Center

DRILLING CONTRACTOR : Parratt Wolff

DRILLING METHOD AND EQUIPMENT USEI Ingersol Rand A300 / DPT

WATER LEVELS : Depth to water : 16.12 feet START : 11/19/2008 END :11/19/2008 LOGGER : D. Lubell

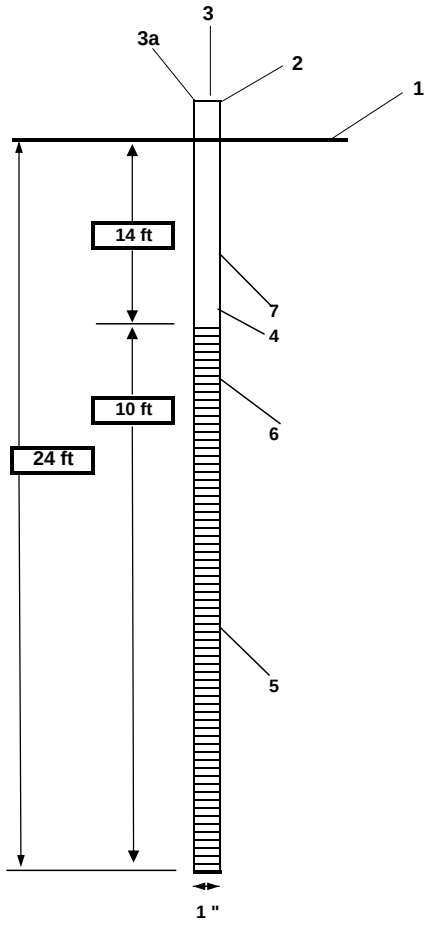

1- Ground elevation at well	22.61 ft
2- Top of casing elevation	23.23 ft
3- Wellhead protection cover type	None
a) locking expansion plug	yes
4- Dia./type of well casing	1 inch schedule 40 PVC
5- Type/slot size of screen	0.010 inch pre-packed screen
6- Type screen filter	#2 Sand
a) Quantity used	0.75 bag
7- Type of seal	Bentonite Pellets
a) Quantity used	0.5 bag
Development method	Pump and Surge

PROJECT NUMBER	WELL NUMBER	
363366	MR08-TW24	SHEET 1 OF 1

WELL COMPLETION DIAGRAM

PROJECT : TO-09 HPCA, POIA, and FC PA/SI LOCATION : Fitness Center

DRILLING CONTRACTOR : Parratt Wolff

DRILLING METHOD AND EQUIPMENT USED Ingersol Rand A300 - DPT

WATER LEVELS : Depth to water : 19.53 feet START : 11/17/2008 END : 11/17/2008 LOGGER : D. Lubell

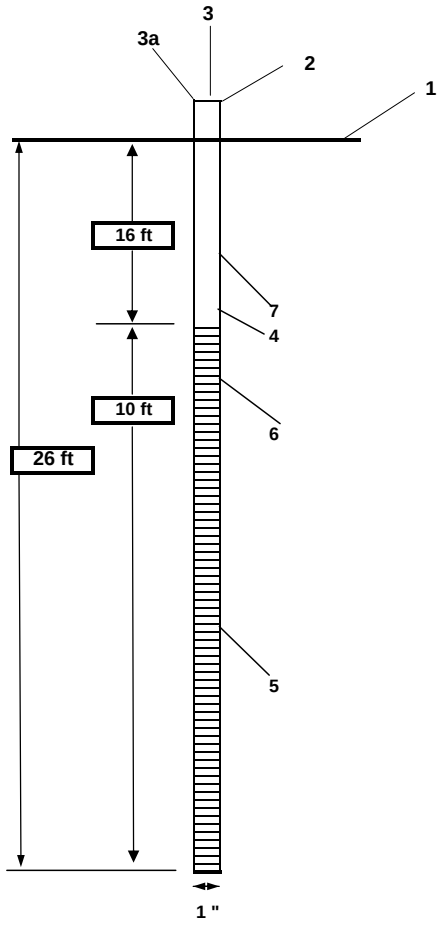

1- Ground elevation at well	25.47 ft
2- Top of casing elevation	26.62 ft
3- Wellhead protection cover type	None
a) locking expansion plug	yes
4- Dia./type of well casing	1 inch schedule 40 PVC
5- Type/slot size of screen	0.010 inch pre-packed screen
6- Type screen filter	#2 Sand
a) Quantity used	
7- Type of seal	Bentonite Pellets
a) Quantity used	
Development method	Pump and Surge

PROJECT NUMBER	WELL NUMBER	
363366	MR08-TW25	SHEET 1 OF 1

WELL COMPLETION DIAGRAM

PROJECT : TO-09 HPCA, POIA, and FC PA/SI LOCATION : Fitness Center

DRILLING CONTRACTOR : Parratt Wolff

DRILLING METHOD AND EQUIPMENT USED Ingersol Rand A300 / DPT

WATER LEVELS : Depth to water : 16.40 feet START : 11/18/2008 END : 11/18/2008 LOGGER : D. Lubell

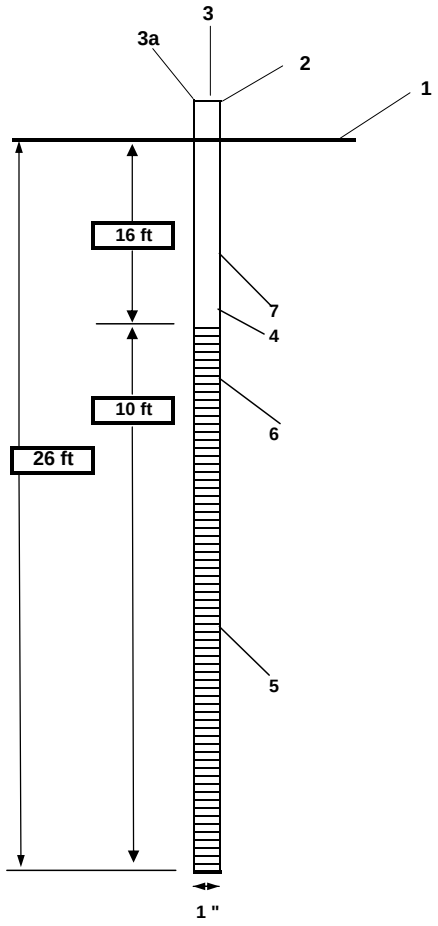

1- Ground elevation at well	21.91 ft
2- Top of casing elevation	23.94 ft
3- Wellhead protection cover type	None
a) locking expansion plug	yes
4- Dia./type of well casing	1 inch schedule 40 PVC
5- Type/slot size of screen	0.010 inch pre-packed screen
6- Type screen filter	#2 Sand
a) Quantity used	0.5 bag
7- Type of seal	Bentonite Pellets
a) Quantity used	0.25 bag
Development method	Pump and Surge

PROJECT NUMBER	WELL NUMBER	
363366	MR08-TW26	SHEET 1 OF 1

WELL COMPLETION DIAGRAM

PROJECT : TO-09 HPCA, POIA, and FC PA/SI LOCATION : Fitness Center

DRILLING CONTRACTOR : Parratt Wolff

DRILLING METHOD AND EQUIPMENT USED Ingersol Rand A300 / DPT

WATER LEVELS : Depth to water : 18.16 feet START : 11/18/2008 END : 11/18/2008 LOGGER : D. Lubell

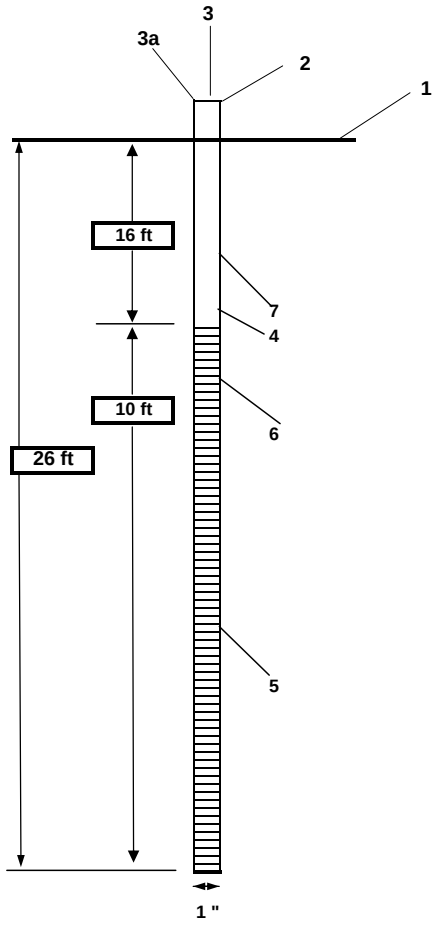

1- Ground elevation at well	24.17 ft
2- Top of casing elevation	26.16 ft
3- Wellhead protection cover type	None
a) locking expansion plug	yes
4- Dia./type of well casing	1 inch schedule 40 PVC
5- Type/slot size of screen	0.010 inch pre-packed screen
6- Type screen filter	#2 Sand
a) Quantity used	0.5 bag
7- Type of seal	Bentonite Pellets
a) Quantity used	0.25 bag
Development method	Pump and Surge

Appendix I
Data Tables and Raw Analytical Data

Appendix I
UXO-08 Surface Soil Raw Analytical Results
December 2008

Station ID	MR08-SS050	MR08-SS051	MR08-SS052	MR08-SS053	MR08-SS054	MR08-SS055	MR08-SS056	MR08-SS057	MR08-SS058	MR08-SS059		MR08-SS060	MR08-SS061	MR08-SS062	MR08-SS063	MR08-SS064	MR08-SS065	MR08-SS066	MR08-SS067
Sample ID	MR08-SS050-08D	MR08-SS051-08D	MR08-SS052-08D	MR08-SS053-08D	MR08-SS054-08D	MR08-SS055-08D	MR08-SS056-08D	MR08-SS057-08D	MR08-SS058-08D	MR08-SS059-08D	MR08-SS059D-08D	MR08-SS060-08D	MR08-SS061-08D	MR08-SS062-08D	MR08-SS063-08D	MR08-SS064-08D	MR08-SS065-08D	MR08-SS066-08D	MR08-SS067-08D
Sample Date	12/02/08	12/02/08	12/02/08	12/02/08	12/02/08	12/02/08	12/06/08	12/06/08	12/06/08	12/06/08	12/06/08	12/06/08	12/06/08	12/06/08	12/06/08	12/06/08	12/06/08	12/06/08	12/03/08
Chemical Name																			
Volatile Organic Compounds (UG/KG)	NA	NA	NA	NA	NA	NA	NA	NA	NA	NA	NA	NA	NA	NA	NA	NA	NA	NA	NA
1,1,1-Trichloroethane	12 U	19 UJ	19 UJ	14 UJ	30 UJ	24 UJ	19 UJ	19 U	14 U	33 U	15 UJ	20 U	12 UJ	9.7 UJ	11 U	11 U	15 U	13 U	910 U
1,1,2,2-Tetrachloroethane	12 U	19 UJ	860 R	14 UJ	30 UJ	24 UJ	19 UJ	19 UJ	14 U	33 U	15 UJ	20 U	12 UJ	9.7 UJ	11 U	11 U	15 U	13 U	910 U
1,1,2-Trichloro-1,2,2-trifluoroethane(Freon-113)	12 U	19 UJ	19 UJ	14 UJ	30 UJ	24 UJ	19 UJ	19 U	14 U	33 U	15 UJ	20 U	12 UJ	9.7 UJ	11 U	11 U	15 U	13 U	910 U
1,1,2-Trichloroethane	12 U	19 UJ	19 UJ	14 UJ	30 UJ	24 UJ	19 UJ	19 U	14 U	33 U	15 UJ	20 U	12 UJ	9.7 UJ	11 U	11 U	15 U	13 U	910 U
1,1-Dichloroethane	12 U	19 UJ	19 UJ	14 UJ	30 UJ	24 UJ	19 UJ	19 U	14 U	33 U	15 UJ	20 U	12 UJ	9.7 UJ	11 U	11 U	15 U	13 U	910 U
1,1-Dichloroethene	12 U	19 UJ	19 UJ	14 UJ	30 UJ	24 UJ	19 UJ	19 U	14 U	33 U	15 UJ	20 U	12 UJ	9.7 UJ	11 U	11 U	15 U	13 U	910 U
1,2,4-Trichlorobenzene	12 U	19 UJ	860 R	14 UJ	30 UJ	24 UJ	19 UJ	19 UJ	14 U	33 U	15 UJ	20 U	0.9 J	9.7 UJ	11 U	11 U	15 U	13 U	910 U
1,2-Dibromo-3-chloropropane	5.8 U	9.6 UJ	430 R	6.9 UJ	15 UJ	12 UJ	9.6 UJ	9.6 UJ	6.9 U	17 U	7.6 UJ	10 U	6.1 UJ	4.9 UJ	5.5 U	5.5 U	7.4 U	6.4 U	460 U
1,2-Dibromoethane	12 U	19 UJ	19 UJ	14 UJ	30 UJ	24 UJ	19 UJ	19 U	14 U	33 U	15 UJ	20 U	12 UJ	9.7 UJ	11 U	11 U	15 U	13 U	910 U
1,2-Dichlorobenzene	12 U	19 UJ	860 R	14 UJ	30 UJ	24 UJ	19 UJ	19 UJ	14 U	33 U	15 UJ	20 U	0.45 J	9.7 UJ	11 U	11 U	15 U	13 U	910 U
1,2-Dichloroethane	12 U	19 UJ	19 UJ	14 UJ	30 UJ	24 UJ	19 UJ	19 U	14 U	33 U	15 UJ	20 U	12 UJ	9.7 UJ	11 U	11 U	15 U	13 U	910 U
1,2-Dichloropropane	12 U	19 UJ	19 UJ	14 UJ	30 UJ	24 UJ	19 UJ	19 U	14 U	33 U	15 UJ	20 U	12 UJ	9.7 UJ	11 U	11 U	15 U	13 U	910 U
1,3-Dichlorobenzene	12 U	19 UJ	860 R	14 UJ	30 UJ	24 UJ	19 UJ	19 UJ	14 U	33 U	15 UJ	20 U	12 UJ	9.7 UJ	11 U	11 U	15 U	13 U	910 U
1,4-Dichlorobenzene	12 U	19 UJ	860 R	14 UJ	30 UJ	24 UJ	11 J	19 UJ	14 U	33 U	15 UJ	20 U	12 UJ	9.7 UJ	11 U	11 U	15 U	13 U	910 U
2-Butanone	7 J	12 J	17 J	4.4 J	15 J	37 J	36 J	19 U	5.2 J	33 U	15 UJ	3.1 J	7.7 J	9.7 UJ	11 U	11 U	16	13 U	910 U
2-Hexanone	12 U	19 UJ	19 UJ	14 UJ	30 UJ	24 UJ	5.6 J	19 U	14 U	33 U	15 UJ	20 U	12 UJ	9.7 UJ	11 U	11 U	15 U	13 U	910 U
4-Methyl-2-pentanone	0.96 J	19 UJ	19 UJ	14 UJ	30 UJ	24 UJ	19 UJ	19 U	14 U	33 U	15 UJ	20 U	12 UJ	9.7 UJ	11 U	11 U	15 U	13 U	910 U
Acetone	170	1,400	640 J	470 J	1,000 J	900 J	400 J	170	53	120	130 J	120	120 J	58 J	97	200	360	86	240 J
Benzene	0.76 J	19 UJ	19 UJ	14 UJ	30 UJ	24 UJ	0.99 J	19 U	14 U	33 U	15 UJ	20 U	12 UJ	9.7 UJ	11 U	11 U	15 U	13 U	910 U
Bromodichloromethane	12 U	19 UJ	19 UJ	14 UJ	30 UJ	24 UJ	2.5 J	19 U	14 U	33 U	15 UJ	20 U	12 UJ	9.7 UJ	11 U	11 U	15 U	13 U	910 U
Bromoform	12 U	19 UJ	19 UJ	14 UJ	30 UJ	24 UJ	19 UJ	19 U	14 U	33 U	15 UJ	20 U	12 UJ	9.7 UJ	11 U	11 U	15 U	13 U	910 U
Bromomethane	12 UJ	19 UJ	19 UJ	14 UJ	30 UJ	24 UJ	19 UJ	19 UJ	14 UJ	33 UJ	15 UJ	20 U	12 UJ	9.7 UJ	11 U	11 U	15 U	13 U	910 U
Carbon disulfide	4.6 J	19 UJ	19 UJ	14 UJ	30 UJ	24 UJ	6.4 J	19 U	14 U	33 U	15 UJ	20 U	12 UJ	9.7 UJ	11 U	11 U	15 U	13 U	910 U
Carbon tetrachloride	12 U	19 UJ	19 UJ	14 UJ	30 UJ	24 UJ	19 UJ	19 U	14 U	33 U	15 UJ	20 U	12 UJ	9.7 UJ	11 U	11 U	15 U	13 U	910 U
Chlorobenzene	12 U	19 UJ	19 UJ	14 UJ	30 UJ	24 UJ	11 J	19 U	14 U	33 U	15 UJ	20 U	12 UJ	9.7 UJ	11 U	11 U	15 U	13 U	910 U
Chloroethane	12 U	19 UJ	19 UJ	14 UJ	30 UJ	24 UJ	19 UJ	19 UJ	14 UJ	33 UJ	15 UJ	20 U	12 UJ	9.7 UJ	11 U	11 U	15 U	13 U	910 U
Chloroform	12 U	19 UJ	19 UJ	14 UJ	4.5 J	24 UJ	23 J	19 U	14 U	33 U	15 UJ	20 U	12 UJ	9.7 UJ	11 U	11 U	15 U	13 U	910 U
Chloromethane	12 U	19 UJ	19 UJ	14 UJ	30 UJ	24 UJ	19 UJ	19 U	14 U	33 U	15 UJ	20 U	12 UJ	9.7 UJ	11 U	11 U	15 U	13 U	910 U
Cyclohexane	12 U	19 UJ	19 UJ	14 UJ	30 UJ	24 UJ	19 UJ	19 U	14 U	33 U	15 UJ	20 U	12 UJ	9.7 UJ	11 U	11 U	15 U	13 U	910 U
Dibromochloromethane	12 U	19 UJ	19 UJ	14 UJ	30 UJ	24 UJ	19 UJ	19 U	14 U	33 U	15 UJ	20 U	12 UJ	9.7 UJ	11 U	11 U	15 U	13 U	910 U
Dichlorodifluoromethane (Freon-12)	12 U	19 UJ	19 UJ	14 UJ	30 UJ	24 UJ	19 UJ	19 U	14 U	33 U	15 UJ	20 U	12 UJ	9.7 UJ	11 U	11 U	15 U	13 UJ	910 UJ
Ethylbenzene	12 U	19 UJ	4.4 J	14 UJ	30 UJ	24 UJ	19 UJ	19 U	14 U	33 U	15 UJ	20 U	12 UJ	9.7 UJ	11 U	11 U	15 U	13 U	910 U
Isopropylbenzene	12 U	19 UJ	19 UJ	14 UJ	30 UJ	24 UJ	19 UJ	19 U	14 U	33 U	15 UJ	20 U	12 UJ	9.7 UJ	11 U	11 U	15 U	13 U	910 U
Methyl acetate	12 U	19 UJ	19 UJ	14 UJ	30 UJ	24 UJ	19 UJ	19 U	14 U	33 U	15 UJ	20 U	13 J	9.7 UJ	11 U	11 U	15 U	13 U	910 U
Methyl-tert-butyl ether (MTBE)	12 U	19 UJ	19 UJ	14 UJ	30 UJ	24 UJ	19 UJ	19 U	14 U	33 U	15 UJ	20 U	12 UJ	9.7 UJ	11 U	11 U	15 U	13 U	910 U
Methylcyclohexane	0.45 J	19 UJ	19 UJ	14 UJ	30 UJ	24 UJ	19 UJ	19 U	14 U	33 U	15 UJ	20 U	12 UJ	9.7 UJ	11 U	11 U	15 U	13 U	910 U
Methylene chloride	12 U	19 UJ	19 UJ	14 UJ	30 UJ	24 UJ	19 UJ	19 U	14 U	33 U	17 J	20 U	12 UJ	9.7 UJ	11 U	11 U	15 U	13 U	600 J
Styrene	12 U	1.4 J	16 J	14 UJ	30 UJ	24 UJ	19 UJ	19 U	14 U	33 U	0.91 J	20 U	12 UJ	9.7 UJ	11 U	11 U	15 U	13 U	910 U
Tetrachloroethene	12 U	19 UJ	19 UJ	14 UJ	30 UJ	24 UJ	2.2 J	19 U	14 U	33 U	15 UJ	20 U	12 UJ	9.7 UJ	11 U	11 U	15 U	13 U	910 U
Toluene	2.4 J	2.2 J	5.6 J	14 UJ	30 UJ	3.8 J	4.5 J	19 U	14 U	33 U	3.3 J	20 U	12 UJ	9.7 UJ	11 U	11 U	15 U	13 U	910 U
Trichloroethene	12 U	19 UJ	19 UJ	14 UJ	30 UJ	24 UJ	3.2 J	19 U	14 U	33 U	15 UJ	20 U	12 UJ	9.7 UJ	11 U	11 U	3.1 J	13 U	910 U
Trichlorofluoromethane(Freon-11)	12 U	19 UJ	19 UJ	14 UJ	30 UJ	24 UJ	19 UJ	19 U	14 U	33 U	15 UJ	20 U	12 UJ	9.7 UJ	11 U	11 U	15 U	13 U	910 U
Vinyl chloride	12 U	19 UJ	19 UJ	14 UJ	30 UJ	24 UJ	19 UJ	19 U	14 U	33 U	15 UJ	20 U	12 UJ	9.7 UJ	11 U	11 U	15 U	13 U	910 U
Xylene, total	12 U	19 UJ	19 UJ	14 UJ	30 UJ	24 UJ	19 UJ	19 U	14 U	33 U	15 UJ	20 U	12 UJ	9.7 UJ	11 U	11 U	15 U	13 U	910 U
cis-1,2-Dichloroethene	12 U	19 UJ	19 UJ	14 UJ	30 UJ	24 UJ	5.1 J	19 U	14 U	33 U	15 UJ	20 U	12 UJ	9.7 UJ	11 U	11 U	15 U	13 U	910 U
cis-1,3-Dichloropropene	12 U	19 UJ	19 UJ	14 UJ	30 UJ	24 UJ	19 UJ	19 U	14 U	33 U	15 UJ	20 U	12 UJ	9.7 UJ	11 U	11 U	15 U	13 U	910 U
trans-1,2-Dichloroethene	12 U	19 UJ	19 UJ	14 UJ	30 UJ	24 UJ	19 UJ	19 U	14 U	33 U	15 UJ	20 U	12 UJ	9.7 UJ	11 U	11 U	15 U	13 U	910 U
trans-1,3-Dichloropropene	12 U	19 UJ	19 UJ	14 UJ	30 UJ	24 UJ	19 UJ	19 U	14 U	33 U	15 UJ	20 U	12 UJ	9.7 UJ	11 U	11 U	15 U	13 U	910 U
Semivolatile Organic Compounds (UG/KG)																			
1,1-Biphenyl	410 U	550 U	470 U	440 U	530 U	580 U	490 U	440 U	380 U	380 U	380 U	370 U	430 U	380 U	380 U	380 U	440 U	410 U	460 U
2,2'-Oxybis(1-chloropropane)	410 U	550 U	470 U	440 U	530 U	580 U	490 U	440 U	380 U	380 U	380 U	370 U	430 U	380 U	380 U	380 U	440 U	410 U	460 U
2,4,5-Trichlorophenol	620 U	840 U	710 U	660 U	800 U	870 U	740 U	660 U	570 U	580 U	570 U	570 U	660 U	580 U	580 U	580 U	660 U	620 U	690 U
2,4,6-Trichlorophenol	620 U	840 U	710 U	660 U	800 U	870 U	740 U	660 U	570 U	580 U	570 U	570 U	660 U	580 U	580 U	580 U	660 U	620 U	690 U
2,4-Dichlorophenol	620 U	840 U	710 U	660 U	800 U	870 U	740 U	660 U	570 U	580 U	570 U	570 U	660 U	580 U	580 U	580 U	660 U	620 U	690 U
2,4-Dimethylphenol	620 U	840 U	710 U	660 U	800 U	870 U	740 U	660 U	570 U	580 U	570 U	570 U	660 U	580 U	580 U	580 U	660 U	620 U	690 U
2,4-Dinitrophenol	1,500 U	2,000 U	1,700 U	1,600 U	1,900 U	2,100 U	1,800 U	1,600 U	1,400 U	1,400 U	1,400 U	1,400 U	1,600 U	1,400 U	1,400 U	1,400 U	1,600 UJ	1,500 U	1,700 U
2,4-Dinitrotoluene	410 U	550 U	470 U	440 U	530 U	580 U	490 U	440 U	380 U	380 U	380 U	370 U	430 U	380 U	380 U	380 U	440 U	410 U	460 U
2,6-Dinitrotoluene	410 U	550 U	470 U	440 U	530 U	580 U	490 U	440 U	380 U	380 U	380 U	370 U	430 U	380 U	380 U	380 U	440 U	410 U	460 U
2-Chloronaphthalene	410 U	550 U	470 U	440 U	530 U	580 U	490 U	440 U	380 U	380 U	380 U	370 U	430 U	380 U	380 U	380 U	440 U	410 U	460 U
2-Chlorophenol	620 U	840 U	710 U	660 U	800 U	870 U	740 U	660 U	570 U	580 U	570 U	570 U	660 U	580 U	580 U	580 U	660 U	620 U	690 U
2-Methylnaphthalene	3.1 J	32 J	14 U	3.6 J	5.9 J	7 J	5.9 J	13 U	11 U	2.6 J	11 U	11 U	3 J	12 U	12 U	12 U	13 UJ	12 UJ	3.8 J
2-Methylphenol	740 U	1,000 U	860 U	800 U	960 U	1,000 U	880 U	800 U	690 U	690 U	690 U	680 U	790 U	700 U	690 U	690 U	790 U	740 U	830 U
2-Nitroaniline	620 U	840 U	710 U	660 U	800 U	870 U	740 U	660 U	570 U	580 U	570 U	570 U	660 U	580 U	580 U	580 U	660 U	620 U	690 U
2-Nitrophenol	740 U	1,000 U	860 U	800 U	960 U	1,000 U	880 U	800 U	690 U	690 U	690 U	680 U	790 U	700 U	690 U	690 U	790 U	740 U	830 U
3,3'-Dichlorobenzidine	620 U	840 U	710 U	660 U	800 U	870 U	740 U	660 UJ	570 U	580 U	570 U	570 U	660 U	580 UJ	580 UJ	580 UJ	660 U	620 U	690 U
3- and 4-Methylphenol	740 U	1,000 U	860 U	800 U	960 U	1,000 U	880 U	800 U	690 U	690 U	690 U	680 U	790 U	700 U	690 U	690 U	790 U	740 U	830 U
3-Nitroaniline	620 U	840 U	710 U	660 U	800 U	870 U	740 U	660 U	570 U	580 U	570 U	570 U	660 U	580 U	580 U	580 U	660 U	620 U	690 U
4,6-Dinitro-2-methylphenol	1,500 U	2,000 U	1,700 U	1,600 U	1,900 U	2,100 U	1,800 U	1,600 U	1,400 U	1,400 U	1,400 U	1,400 U	1,600 U	1,400 U	1,400 U	1,400 U	1,600 U	1,500 U	1,700 U
4-Bromophenyl-phenylether	410 U	550 U	470 U	440 U	530 U	580 U	490 U	440 U	380 U	380 U	380 U	370 U	430 U	380 U	380 U	380 U	440 U	410 U	460 U
4-Chloro-3-methylphenol	620 U	840 U	710 U	660 U	800 U	870 U	740 U	660 U	570 U	580 U	570 U	570 U	660 U	580 U	580 U	580 U	660 U	620 U	690 U
4-Chloroaniline	620 U	840 U	710 U	660 U	800 U	870 U	740 U	660 U	570 U	580 U	570 U	570 U	660 U	580 U	580 U	580 U	660 U	620 U	690 U
4-Chlorophenyl-phenylether	410 U	550 U	470 U	440 U	530 U	580 U	490 U	440 U	380 U	380 U	380 U	370 U	430 U	380 U	380 U	380 U	440 U	410 U	460 U
4-Nitroaniline	620 U	840 U	710 U	660 U	800 U	870 U	740 U	660 U	570 U	580 U	570 U	570 U	660 U	580 U	580 U	580 U	660 UJ	620 U	690 U
4-Nitrophenol	1,500 U	2,000 U	1,700 U	1,600 U	1,900 U	2,100 U	1,800 UJ	1,600 U	1,400 U	1,400 U	1,400 U	1,400 U	1,600 UJ	1,400 U	1,400 U	1,400 U	1,600 U	1,500 U	1,700 UJ
Acenaphthene	410 U	550 U	470 U	440 U	530 U	580 U	490 U	440 U	380 U	380 U	380 U	370 U	430 U	380 U	380 U	380 U	440 U	410 U	460 U
Acenaphthylene	410 U	550 U	470 U	440 U	530 U	580 U	490 U	440 U	380 U	380 U	380 U	370 U	430 U	380 U	380 U	380 U	440 U	410 U	460 U
Acetophenone	740 U	1,000 U	860 U	800 U	960 U	1,000 U	430 J	800 U	690 U	690 U	690 U	680 U	790 U	700 U	690 U	690 U	790 U	740 U	830 U
Anthracene	410 U	550 U	470 U	440 U	530 U	580 U	490 U	440 U	380 U	380 U	380 U	370 U	430 U	380 U	380 U	380 U	440 U	410 U	460 U

Appendix I
UXO-08 Surface Soil Raw Analytical Results
December 2008

Station ID	MR08-SS050	MR08-SS051	MR08-SS052	MR08-SS053	MR08-SS054	MR08-SS055	MR08-SS056	MR08-SS057	MR08-SS058	MR08-SS059		MR08-SS060	MR08-SS061	MR08-SS062	MR08-SS063	MR08-SS064	MR08-SS065	MR08-SS066	MR08-SS067
Sample ID	MR08-SS050-08D	MR08-SS051-08D	MR08-SS052-08D	MR08-SS053-08D	MR08-SS054-08D	MR08-SS055-08D	MR08-SS056-08D	MR08-SS057-08D	MR08-SS058-08D	MR08-SS059-08D	MR08-SS059D-08D	MR08-SS060-08D	MR08-SS061-08D	MR08-SS062-08D	MR08-SS063-08D	MR08-SS064-08D	MR08-SS065-08D	MR08-SS066-08D	MR08-SS067-08D
Sample Date	12/02/08	12/02/08	12/02/08	12/02/08	12/02/08	12/02/08	12/06/08	12/06/08	12/06/08	12/06/08	12/06/08	12/06/08	12/06/08	12/06/08	12/06/08	12/06/08	12/06/08	12/06/08	12/03/08
Chemical Name																			
Atrazine	410 U	550 U	470 U	440 U	530 U	580 U	490 U	440 U	380 U	380 U	380 U	370 U	430 U	380 U	380 U	380 U	440 U	410 U	460 U
Benzaldehyde	620 UJ	840 UJ	710 UJ	660 UJ	800 UJ	870 UJ	740 UJ	660 UJ	570 UJ	580 UJ	150 J	570 UJ	660 UJ	580 UJ	580 UJ	580 UJ	660 UJ	620 UJ	690 U
Benzo(a)anthracene	77	23	16	16	18	26	220	5.6 J	8 J	6 J	6.2 J	9.4 J	9.3 J	9.5 J	7.1 J	10 J	20	14 J	12 J
Benzo(a)pyrene	69	21	16 J	20 J	18 J	23 J	340	7.2 J	8.7 J	7.8 J	7.9 J	9.4 J	11 J	12 U	12 U	12 U	11 J	7.6 J	9.9 J
Benzo(b)fluoranthene	110	54	42 J	36 J	44 J	53 J	500	13 J	11 J	12	12	17	17	7.6 J	12 U	8.4 J	31 J	12 J	30 J
Benzo(g,h,i)perylene	43	18	12 J	9.9 J	12 J	15 J	350	7.7 J	6.4 J	6.7 J	7.8 J	6.8 J	10 J	12 U	12 U	12 U	8.5 J	6.1 J	8 J
Benzo(k)fluoranthene	48	24	17 J	16 J	21 J	30 J	380	9.8 J	11 J	9.6 J	11 J	14	15	5.3 J	12 U	4.9 J	14	8.2 J	10 J
Butylbenzylphthalate	410 U	550 U	470 U	440 U	530 U	580 U	200 J	440 U	380 U	380 U	380 U	370 U	430 U	380 U	380 U	380 U	440 UJ	410 U	460 U
Caprolactam	620 U	840 U	710 U	660 U	800 U	870 U	740 U	660 U	570 U	580 U	570 U	570 U	660 U	580 U	580 U	580 U	660 U	620 U	690 U
Carbazole	620 U	840 U	710 U	660 U	800 U	870 U	740 U	660 U	570 U	580 U	570 U	570 U	660 U	580 U	580 U	580 U	660 U	620 U	690 U
Chrysene	410 U	550 U	470 U	440 U	530 U	580 U	250 J	440 U	380 U	380 U	380 U	370 U	430 U	380 U	380 U	380 U	440 U	410 U	460 U
Di-n-butylphthalate	410 U	550 U	470 U	440 U	530 U	580 U	490 U	440 U	380 U	380 U	380 U	370 U	430 U	380 U	380 U	380 U	440 U	410 U	460 U
Di-n-octylphthalate	410 U	550 U	470 U	440 U	530 U	580 U	490 U	440 U	380 U	380 U	380 U	370 U	430 U	380 U	380 U	380 U	440 UJ	410 U	460 U
Dibenz(a,h)anthracene	19	17 U	14 UJ	13 UJ	16 UJ	17 UJ	75	13 U	11 U	2.8 J	2.4 J	2.2 J	3.3 J	12 U	12 U	12 U	13 UJ	12 UJ	14 UJ
Dibenzofuran	410 U	550 U	470 U	440 U	530 U	580 U	490 U	440 U	380 U	380 U	380 U	370 U	430 U	380 U	380 U	380 U	440 U	410 U	460 U
Diethylphthalate	410 U	550 U	470 U	440 U	530 U	580 U	490 U	440 U	380 U	380 U	380 U	370 U	430 U	380 U	380 U	380 U	440 U	410 U	460 U
Dimethyl phthalate	410 U	550 U	470 U	440 U	530 U	580 U	490 U	440 U	380 U	380 U	380 U	370 U	430 U	380 U	380 U	380 U	440 U	410 U	460 U
Fluoranthene	130	36	30	28	32	53	260	13 J	15	11 J	10 J	30	19	28	7.4 J	44	97	40	23
Fluorene	12 U	17 U	14 U	13 U	16 U	17 U	15 U	13 U	11 U	12 U	11 U	11 U	13 U	12 U	12 U	12 U	13 U	12 U	14 U
Hexachlorobenzene	12 U	17 U	14 UJ	13 UJ	16 UJ	17 UJ	5.8 J	13 U	11 U	12 U	11 U	11 U	5.6 J	12 U	12 U	12 U	13 U	12 U	14 UJ
Hexachlorobutadiene	12 U	17 U	14 UJ	13 UJ	16 UJ	17 UJ	15 U	13 U	11 U	12 U	11 U	11 U	13 U	12 U	12 U	12 U	13 U	12 U	14 UJ
Hexachlorocyclopentadiene	12 U	17 U	14 UJ	13 UJ	16 UJ	17 UJ	15 U	13 U	11 U	12 U	11 U	11 U	13 U	12 U	12 U	12 U	13 U	12 U	8.5 J
Hexachloroethane	410 U	550 U	470 U	440 U	530 U	580 U	490 U	440 U	380 U	380 U	380 U	370 U	430 U	380 U	380 U	380 U	440 U	410 U	460 U
Indeno(1,2,3-cd)pyrene	48	19	13 J	12 J	15 J	19 J	280	5.6 J	5.8 J	6.1 J	6.2 J	6.2 J	9.3 J	12 U	12 U	12 U	10 J	7.4 J	8.9 J
Isophorone	410 U	550 U	470 U	440 U	530 U	580 U	490 U	440 U	380 U	380 U	380 U	370 U	430 U	380 U	380 U	380 U	440 U	410 U	460 U
Naphthalene	12 UJ	14 J	14 UJ	13 UJ	16 UJ	17 UJ	3.9 J	13 UJ	11 UJ	12 UJ	11 UJ	11 UJ	13 UJ	12 U	12 U	12 U	13 UJ	12 UJ	14 U
Nitrobenzene	410 U	550 U	470 U	440 U	530 U	580 U	490 UJ	440 UJ	380 UJ	380 UJ	380 UJ	370 UJ	430 UJ	380 UJ	380 UJ	380 UJ	440 UJ	410 UJ	460 UJ
Pentachlorophenol	1,000 U	1,400 U	1,200 U	1,100 U	1,300 U	1,400 U	1,200 U	1,100 U	940 U	940 U	940 U	930 U	1,100 U	960 U	950 U	940 U	1,100 U	1,000 U	1,100 U
Phenanthrene	68	45	16	15	16 U	17 U	72	4.5 J	7.5 J	5.8 J	5.3 J	11 J	9.2 J	17	2.1 J	25	38	10 J	12 J
Phenol	620 U	840 U	710 U	660 U	800 U	870 U	740 U	660 U	570 U	580 U	570 U	570 U	660 U	580 U	580 U	580 U	660 U	620 U	690 U
Pyrene	120	40	31	31	44	84	300	11 J	15	10 J	11 J	26	20	15	2.8 J	24	35	15 J	25
bis(2-Chloroethoxy)methane	410 U	550 U	470 U	440 U	530 U	580 U	490 U	440 U	380 U	380 U	380 U	370 U	430 U	380 U	380 U	380 U	440 U	410 U	460 U
bis(2-Chloroethyl)ether	410 U	550 U	470 U	440 U	530 U	580 U	490 U	440 U	380 U	380 U	380 U	370 U	430 U	380 U	380 U	380 U	440 U	410 U	460 U
bis(2-Ethylhexyl)phthalate	410 U	550 U	470 U	440 U	530 U	580 U	3,900	440 U	120 J	190 J	110 J	370 U	430 U	380 U	380 U	380 U	140 J	410 U	460 U
n-Nitroso-di-n-propylamine	410 U	550 U	470 U	440 U	530 U	580 U	490 U	440 U	380 U	380 U	380 U	370 U	430 U	380 U	380 U	380 U	440 U	410 U	460 U
n-Nitrosodiphenylamine	820 U	1,100 U	940 U	880 U	1,000 U	1,200 U	970 U	880 U	750 U	760 U	760 U	750 U	870 U	770 U	760 U	760 U	870 U	820 U	920 U
Explosives (UG/KG)																			
% Solids	NA	NA	NA	NA	NA	NA	NA	NA	NA	NA	NA	NA	NA	NA	NA	NA	NA	NA	NA
1,3,5-Trinitrobenzene	98.9 U	99.4 U	97.6 U	98.9 U	97.4 U	99 U	99.9 U	99.4 U	99.8 U	97.1 U	98.3 U	99.4 U	98.5 U	98.7 U	99.7 U	99.9 U	99.5 U	99.3 U	97.1 U
1,3-Dinitrobenzene	98.9 U	99.4 U	97.6 U	98.9 U	97.4 U	99 U	99.9 U	99.4 U	99.8 U	97.1 U	98.3 U	99.4 U	98.5 U	98.7 U	99.7 U	99.9 U	99.5 U	99.3 U	97.1 U
2,4,6-Trinitrotoluene	98.9 U	99.4 U	97.6 U	98.9 U	97.4 U	99 U	99.9 U	99.4 U	99.8 U	97.1 U	98.3 U	99.4 U	98.5 U	98.7 U	99.7 U	99.9 U	99.5 U	99.3 U	97.1 U
2,4-Dinitrotoluene	98.9 U	99.4 U	97.6 U	98.9 U	97.4 U	99 U	99.9 U	99.4 U	99.8 U	97.1 U	98.3 U	99.4 U	98.5 U	98.7 U	99.7 U	99.9 U	99.5 U	99.3 U	97.1 U
2,6-Dinitrotoluene	98.9 U	99.4 U	97.6 U	98.9 U	97.4 U	99 U	99.9 U	99.4 U	99.8 U	97.1 U	98.3 U	99.4 U	98.5 U	98.7 U	99.7 U	99.9 U	99.5 U	99.3 U	97.1 U
2-Amino-4,6-dinitrotoluene	98.9 U	99.4 U	97.6 U	98.9 U	97.4 U	99 U	99.9 U	99.4 U	99.8 U	97.1 U	98.3 U	99.4 U	98.5 U	98.7 U	99.7 U	99.9 U	99.5 U	99.3 U	97.1 U
2-Nitrotoluene	98.9 U	99.4 U	97.6 U	98.9 U	97.4 U	99 U	99.9 U	99.4 U	99.8 U	97.1 U	98.3 U	99.4 U	98.5 U	98.7 U	99.7 U	99.9 U	99.5 U	99.3 U	97.1 U
3-Nitrotoluene	98.9 U	99.4 U	97.6 U	98.9 U	97.4 U	99 U	99.9 U	99.4 U	99.8 U	97.1 U	98.3 U	99.4 U	98.5 U	98.7 U	99.7 U	99.9 U	99.5 U	99.3 U	97.1 U
4-Amino-2,6-dinitrotoluene	98.9 U	99.4 U	97.6 U	98.9 U	97.4 UJ	99 UJ	99.9 U	99.4 U	99.8 U	97.1 U	98.3 U	99.4 U	98.5 U	98.7 U	99.7 U	99.9 U	99.5 U	99.3 U	97.1 UJ
4-Nitrotoluene	98.9 U	99.4 U	97.6 U	98.9 U	97.4 U	99 U	99.9 U	99.4 U	99.8 U	97.1 U	98.3 U	99.4 U	98.5 U	98.7 U	99.7 U	99.9 U	99.5 U	99.3 U	97.1 U
HMX	98.9 U	99.4 U	97.6 U	98.9 U	97.4 U	99 U	99.9 U	99.4 U	99.8 U	97.1 U	98.3 U	99.4 U	98.5 U	98.7 U	99.7 U	99.9 U	99.5 U	99.3 U	97.1 U
Nitrobenzene	98.9 U	99.4 U	97.6 U	98.9 U	97.4 U	99 U	99.9 U	99.4 U	99.8 U	97.1 U	98.3 U	99.4 U	98.5 U	98.7 U	99.7 U	99.9 U	99.5 U	99.3 U	97.1 U
Nitroglycerin	98.9 U	99.4 U	97.6 U	98.9 U	97.4 U	99 U	99.9 U	99.4 U	99.8 U	97.1 U	98.3 U	99.4 U	98.5 U	98.7 U	99.7 U	99.9 U	99.5 U	99.3 U	97.1 U
PETN	98.9 U	99.4 U	97.6 U	98.9 U	97.4 U	99 U	99.9 U	99.4 U	99.8 U	97.1 U	98.3 U	99.4 U	98.5 U	98.7 U	99.7 U	99.9 U	99.5 U	99.3 U	97.1 U
Perchlorate	4.2	3.4 U	2.8 U	2.6 U	1.5 J	3.4 U	2.7 J	2.9 U	2.3 U	2.3 U	2.3 U	26	17	73	1.1 J	5.1	1.4 J	2.4 U	1.3 J
RDX	98.9 U	99.4 U	97.6 U	98.9 U	97.4 U	99 U	99.9 U	99.4 U	99.8 U	97.1 U	98.3 U	99.4 U	98.5 U	98.7 U	99.7 U	99.9 U	99.5 U	99.3 U	97.1 U
Tetryl	98.9 U	99.4 U	97.6 U	98.9 U	97.4 U	99 U	99.9 U	99.4 U	99.8 U	97.1 U	98.3 U	99.4 U	98.5 U	98.7 U	99.7 U	99.9 U	99.5 U	99.3 U	97.1 U
Total Metals (MG/KG)																			
Antimony	1.38 J	1.25 J	0.643 J	0.447 U	1.28 J	1.33 J	7.59	0.603 U	0.535 J	0.499 J	0.435 J	0.627 J	0.496 U	0.429 U	0.406 U	0.416 U	0.714 J	0.427 U	0.896 J
Arsenic	1.43	2.27	8.79	10.6	15.3	15.5	7.92	1.65	1.78	1.15	0.98	2.44	3.77	1.11	0.625	1.22	1.8	1.49	1.33 J
Barium	16.9 J	26.1 J	33.4 J	16.8 J	34.7 J	46.4 J	910	22.9	22.1	39.5	36.7	16.5	33.2	11	5.99	8.55	16.2	8.86	20.8 J
Cadmium	0.518	0.144 J	0.274	0.101 J	0.112 J	0.302	11.3	0.236 J	0.397	0.452	0.413	0.188	0.375	0.0592 J	0.0406 U	0.0416 U	0.398	0.0793 J	0.191 J
Chromium	10.4	3.76	2.39	1.52	3.74	3.89	147 J	13.4	9.16	8.02	7.41	9.73	12.9	5.33	9.01	4.83	21.6	4.56	4.49 J
Copper	19.6	7	2.7	1.94	4.71	5.09	184	4.51	4.67	7.53	6.41	4.73	8.4	2.18	1.06 J	3.39	10.2	1.53 J	2.59
Lead	81.3	40.9	35.2	21.3	49.9	38.6	224	13.7	23.9	14.5	11.9	15.7	18.5	7.77	3.73	10.9	19.2	8.01	21.8 J
Mercury	0.263	0.0655 J	0.0629 J	0.0402 J	0.102 J	0.187	9.22	0.0918 J	0.202	0.224	0.209	0.0359 J	0.203	0.0213 U	0.0335 J	0.0225 U	0.0632 J	0.0289 J	0.0746 J
Selenium	0.34 J	0.692 J	0.432 J	0.284 J	1.87 J	1.61 J	2.39	0.412 J	0.236 J	0.301 J	0.295 J	0.39 J	0.647	0.396 J	0.307 J	0.346 J	0.968	0.443 J	1.22 J
Silver	1.28	0.312 U	0.261 U	0.223 U	0.297 U	0.36 J	108	0.925 J	0.952	2.13	1.97	0.233 U	1.4	0.214 U	0.203 U	0.208 U	0.249 U	0.213 U	0.261 U
Zinc	52.2	19.8	22.2	5.75	14.5	14.1	886 J	18.4	24.8	40.5	37.3	8.88	47.4	5.98	3.95	5.72	66.2	15.9	8.96 J
Wet Chemistry (PCT)	NA	NA	NA	NA	NA	NA	NA	NA	NA	NA	NA	NA	NA	NA	NA	NA	NA	NA	NA
% Solids	82.6	58.6	72.7	81.7	63.6	61.6	73.1	63.8	80.3	85.6	94.1	81.5	76.2	87	88.1	87.6	77.2	84.1	73.5

Notes:

J - Analyte present, value may or may not be accurate or precise
NA - Not analyzed
R - Unreliable Result
U - The material was analyed for, but not detected
UJ - Analyte not detected, quantitation limit may be inaccurate
Pct - Percent

Appendix I
UXO-08 Surface Soil Raw Analytical Results
December 2008

Station ID	MR08-SS068	MR08-SS069		MR08-SS070	MR08-SS071	MR08-SS072	MR08-SS073	MR08-SS074	MR08-SS075	MR08-SS076	MR08-SS077	MR08-SS078	MR08-SS079		MR08-SS080	MR08-SS081	MR08-SS082	MR08-SS083	MR08-SS084
Sample ID	MR08-SS068-08D	MR08-SS069-08D	MR08-SS069D-08D	MR08-SS070-08D	MR08-SS071-08D	MR08-SS072-08D	MR08-SS073-08D	MR08-SS074-08D	MR08-SS075-08D	MR08-SS076-08D	MR08-SS077-08D	MR08-SS078-08D	MR08-SS079-08D	MR08-SS079D-08D	MR08-SS080-08D	MR08-SS081-08D	MR08-SS082-08D	MR08-SS083-08D	MR08-SS084-08D
Sample Date	12/03/08	12/03/08	12/03/08	12/03/08	12/03/08	12/03/08	12/03/08	12/04/08	12/04/08	12/04/08	12/04/08	12/04/08	12/04/08	12/04/08	12/07/08	12/07/08	12/07/08	12/07/08	12/07/08
Chemical Name																			
Volatile Organic Compounds (UG/KG)	NA	NA	NA	NA	NA	NA	NA	NA	NA	NA	NA	NA	NA	NA	NA	NA	NA	NA	NA
1,1,1-Trichloroethane	48 UJ	24 UJ	26 UJ	14 UJ	12 UJ	12 UJ	730 U	14 UJ	12 U	14 U	11 U	10 UJ	11 UJ	12 UJ	27 U	30 UJ	17 U	19 R	16 U
1,1,2,2-Tetrachloroethane	48 UJ	23 R	26 R	14 UJ	12 UJ	12 UJ	730 U	14 UJ	12 U	14 UJ	11 U	10 UJ	11 UJ	12 UJ	27 UJ	30 R	17 U	19 R	16 UJ
1,1,2-Trichloro-1,2,2-trifluoroethane(Freon-113)	48 UJ	24 UJ	26 UJ	14 UJ	12 UJ	12 UJ	730 U	14 UJ	12 U	14 U	11 U	10 UJ	11 UJ	12 UJ	27 U	30 UJ	17 U	19 R	16 U
1,1,2-Trichloroethane	48 UJ	24 UJ	26 UJ	14 UJ	12 UJ	12 UJ	730 U	14 UJ	12 U	14 U	11 U	10 UJ	11 UJ	12 UJ	27 U	30 UJ	17 U	19 R	16 U
1,1-Dichloroethane	48 UJ	24 UJ	26 UJ	14 UJ	12 UJ	12 UJ	730 U	14 UJ	12 U	14 U	11 U	10 UJ	11 UJ	12 UJ	27 U	30 UJ	17 U	19 R	16 U
1,1-Dichloroethene	48 UJ	24 UJ	26 UJ	14 UJ	12 UJ	12 UJ	730 U	14 UJ	12 U	14 U	11 U	10 UJ	11 UJ	12 UJ	27 U	30 UJ	17 U	19 R	16 U
1,2,4-Trichlorobenzene	48 UJ	23 R	26 R	14 UJ	12 UJ	12 UJ	730 U	14 UJ	12 U	14 UJ	11 U	10 UJ	11 UJ	12 UJ	27 UJ	30 R	17 U	19 R	16 UJ
1,2-Dibromo-3-chloropropane	24 UJ	11 R	13 R	7.1 UJ	6.1 UJ	6 UJ	360 U	7 UJ	6 U	6.8 UJ	5.4 U	5.3 UJ	5.7 UJ	6.1 UJ	13 UJ	15 R	8.4 U	9.7 R	8.2 UJ
1,2-Dibromoethane	48 UJ	24 UJ	26 UJ	14 UJ	12 UJ	12 UJ	730 U	14 UJ	12 U	14 U	11 U	10 UJ	11 UJ	12 UJ	27 U	30 UJ	17 U	19 R	16 U
1,2-Dichlorobenzene	48 UJ	23 R	26 R	14 UJ	12 UJ	12 UJ	730 U	14 UJ	12 U	14 UJ	11 U	10 UJ	11 UJ	12 UJ	27 UJ	30 R	17 U	19 R	16 UJ
1,2-Dichloroethane	48 UJ	24 UJ	26 UJ	14 UJ	12 UJ	12 UJ	730 U	14 UJ	12 U	14 U	11 U	10 UJ	11 UJ	12 UJ	27 U	30 UJ	17 U	19 R	16 U
1,2-Dichloropropane	48 UJ	24 UJ	26 UJ	14 UJ	12 UJ	12 UJ	730 U	14 UJ	12 U	14 U	11 U	10 UJ	11 UJ	12 UJ	27 U	30 UJ	17 U	19 R	16 U
1,3-Dichlorobenzene	48 UJ	23 R	26 R	14 UJ	12 UJ	12 UJ	730 U	14 UJ	12 U	14 UJ	11 U	10 UJ	11 UJ	12 UJ	27 UJ	30 R	17 U	19 R	16 UJ
1,4-Dichlorobenzene	48 UJ	23 R	26 R	14 UJ	12 UJ	12 UJ	730 U	14 UJ	12 U	14 UJ	11 U	10 UJ	11 UJ	12 UJ	27 UJ	30 R	17 U	19 R	16 UJ
2-Butanone	46 J	19 J	21 J	4 J	3.8 J	5 J	730 U	7.2 J	4 J	4.1 J	5.7 J	3.2 J	4.2 J	3.6 J	10 J	15 J	6.8 J	19 R	2.4 J
2-Hexanone	48 UJ	24 UJ	26 UJ	14 UJ	12 UJ	12 UJ	730 U	14 UJ	12 U	14 U	11 U	10 UJ	11 UJ	12 UJ	27 U	30 UJ	17 U	19 R	16 U
4-Methyl-2-pentanone	48 UJ	24 UJ	26 UJ	14 UJ	12 UJ	12 UJ	730 U	14 UJ	12 U	14 U	11 U	10 UJ	11 UJ	12 UJ	27 U	30 UJ	17 U	19 R	16 U
Acetone	1,700 J	860 J	940 J	300 J	290 J	410 J	660 J	530 J	320	260 J	360	200 J	220 J	190 J	540 J	1,800 J	260	580 J	210
Benzene	48 UJ	24 UJ	26 UJ	14 UJ	12 UJ	12 UJ	730 U	14 UJ	12 U	14 U	11 U	10 UJ	11 UJ	12 UJ	27 U	30 UJ	17 U	19 R	16 U
Bromodichloromethane	48 UJ	24 UJ	26 UJ	14 UJ	12 UJ	12 UJ	730 U	14 UJ	12 U	14 U	11 U	10 UJ	11 UJ	12 UJ	27 U	30 UJ	17 U	19 R	16 U
Bromoform	48 UJ	24 UJ	26 UJ	14 UJ	12 UJ	12 UJ	730 U	14 UJ	12 U	14 U	11 U	10 UJ	11 UJ	12 UJ	27 U	30 UJ	17 U	19 R	16 U
Bromomethane	48 UJ	24 UJ	26 UJ	14 UJ	12 UJ	12 UJ	730 U	14 UJ	12 UJ	14 UJ	11 UJ	10 UJ	11 UJ	12 UJ	27 U	30 UJ	17 U	19 R	16 U
Carbon disulfide	48 UJ	24 UJ	26 UJ	14 UJ	12 UJ	12 UJ	730 U	14 UJ	12 U	14 U	11 U	10 UJ	11 UJ	12 UJ	27 U	30 UJ	17 U	19 R	16 U
Carbon tetrachloride	48 UJ	24 UJ	26 UJ	14 UJ	12 UJ	12 UJ	730 U	14 UJ	12 U	14 U	11 U	10 UJ	11 UJ	12 UJ	27 U	30 UJ	17 U	19 R	16 U
Chlorobenzene	48 UJ	24 UJ	26 UJ	14 UJ	12 UJ	12 UJ	730 U	14 UJ	12 U	14 U	11 U	10 UJ	11 UJ	12 UJ	27 U	30 UJ	17 U	19 R	16 U
Chloroethane	48 UJ	24 UJ	26 UJ	14 UJ	12 UJ	12 UJ	730 U	14 UJ	12 U	14 U	11 U	10 UJ	11 UJ	12 UJ	27 U	30 UJ	17 U	19 R	16 U
Chloroform	48 UJ	24 UJ	26 UJ	14 UJ	12 UJ	12 UJ	730 U	14 UJ	12 U	14 U	11 U	10 UJ	11 UJ	12 UJ	27 U	30 UJ	17 U	19 R	16 U
Chloromethane	48 UJ	24 UJ	26 UJ	14 UJ	12 UJ	12 UJ	730 U	14 UJ	12 U	14 U	11 U	10 UJ	11 UJ	12 UJ	27 U	2.2 J	17 U	19 R	16 U
Cyclohexane	48 UJ	24 UJ	26 UJ	14 UJ	12 UJ	12 UJ	730 U	14 UJ	12 U	14 U	11 U	10 UJ	11 UJ	12 UJ	27 U	30 UJ	17 U	19 R	16 U
Dibromochloromethane	48 UJ	24 UJ	26 UJ	14 UJ	12 UJ	12 UJ	730 U	14 UJ	12 U	14 U	11 U	10 UJ	11 UJ	12 UJ	27 U	30 UJ	17 U	19 R	16 U
Dichlorodifluoromethane (Freon-12)	48 UJ	24 UJ	26 UJ	14 UJ	12 UJ	12 UJ	730 UJ	14 UJ	12 U	14 UJ	11 U	10 UJ	11 UJ	12 UJ	27 UJ	30 UJ	17 UJ	19 R	16 UJ
Ethylbenzene	48 UJ	24 UJ	26 UJ	14 UJ	12 UJ	12 UJ	730 U	14 UJ	12 U	14 U	11 U	10 UJ	11 UJ	12 UJ	27 U	30 UJ	17 U	19 R	16 U
Isopropylbenzene	48 UJ	24 UJ	26 UJ	14 UJ	12 UJ	12 UJ	730 U	14 UJ	12 U	14 U	11 U	10 UJ	11 UJ	12 UJ	27 U	30 UJ	17 U	19 R	16 U
Methyl acetate	48 UJ	24 UJ	26 UJ	14 UJ	12 UJ	12 UJ	860	14 UJ	12 U	14 U	11 U	10 UJ	24 J	12 UJ	27 U	2,700 J	17 U	170 J	16 U
Methyl-tert-butyl ether (MTBE)	48 UJ	24 UJ	26 UJ	14 UJ	12 UJ	12 UJ	730 U	14 UJ	12 U	14 U	11 U	10 UJ	11 UJ	12 UJ	27 U	30 UJ	17 U	19 R	16 U
Methylcyclohexane	48 UJ	24 UJ	26 UJ	14 UJ	12 UJ	12 UJ	730 U	14 UJ	12 U	14 U	11 U	10 UJ	11 UJ	12 UJ	27 U	30 UJ	17 U	19 R	16 U
Methylene chloride	6.4 J	2.9 J	26 UJ	1.6 J	12 UJ	1.7 J	170 J	3 J	2.3 J	14 U	2 J	10 UJ	11 UJ	12 UJ	27 U	30 UJ	17 U	19 R	16 U
Styrene	48 UJ	3.2 J	0.93 J	14 UJ	12 UJ	12 UJ	730 U	14 UJ	12 U	14 U	11 U	10 UJ	11 UJ	12 UJ	27 U	30 UJ	17 U	19 R	16 U
Tetrachloroethene	48 UJ	24 UJ	26 UJ	14 UJ	12 UJ	12 UJ	730 U	14 UJ	12 U	14 U	11 U	10 UJ	11 UJ	12 UJ	27 U	30 UJ	17 U	19 R	16 U
Toluene	6.2 J	8.3 J	3.3 J	14 UJ	12 UJ	3 J	730 U	4.6 J	12 U	14 U	2.7 J	10 UJ	1.8 J	12 UJ	3.6 J	3.6 J	17 U	3.6 J	16 U
Trichloroethene	48 UJ	24 UJ	26 UJ	14 UJ	12 UJ	12 UJ	730 U	14 UJ	12 U	14 U	11 U	10 UJ	11 UJ	12 UJ	27 U	30 UJ	17 U	19 R	16 U
Trichlorofluoromethane(Freon-11)	48 UJ	24 UJ	26 UJ	14 UJ	12 UJ	12 UJ	730 U	14 UJ	12 U	14 U	11 U	10 UJ	11 UJ	12 UJ	27 U	30 UJ	17 U	19 R	16 U
Vinyl chloride	48 UJ	24 UJ	26 UJ	14 UJ	12 UJ	12 UJ	730 U	14 UJ	12 U	14 U	11 U	10 UJ	11 UJ	12 UJ	27 U	30 UJ	17 U	19 R	16 UJ
Xylene, total	48 UJ	24 UJ	26 UJ	14 UJ	12 UJ	12 UJ	730 U	14 UJ	12 U	14 U	11 U	10 UJ	11 UJ	12 UJ	27 U	30 UJ	17 U	19 R	16 U
cis-1,2-Dichloroethene	48 UJ	24 UJ	26 UJ	14 UJ	12 UJ	12 UJ	730 U	14 UJ	12 U	14 U	11 U	10 UJ	11 UJ	12 UJ	27 U	30 UJ	17 U	19 R	16 U
cis-1,3-Dichloropropene	48 UJ	24 UJ	26 UJ	14 UJ	12 UJ	12 UJ	730 U	14 UJ	12 U	14 U	11 U	10 UJ	11 UJ	12 UJ	27 U	30 UJ	17 U	19 R	16 U
trans-1,2-Dichloroethene	48 UJ	24 UJ	26 UJ	14 UJ	12 UJ	12 UJ	730 U	14 UJ	12 U	14 U	11 U	10 UJ	11 UJ	12 UJ	27 U	30 UJ	17 U	19 R	16 U
trans-1,3-Dichloropropene	48 UJ	24 UJ	26 UJ	14 UJ	12 UJ	12 UJ	730 U	14 UJ	12 U	14 U	11 U	10 UJ	11 UJ	12 UJ	27 U	30 UJ	17 U	19 R	16 U
Semivolatile Organic Compounds (UG/KG)																			
1,1-Biphenyl	690 U	530 U	530 U	410 U	410 U	430 U	430 U	410 U	410 U	390 U	390 U	390 U	410 U	420 U	450 U	520 U	420 U	390 U	380 U
2,2'-Oxybis(1-chloropropane)	690 U	530 U	530 U	410 U	410 U	430 U	430 U	410 U	410 U	390 U	390 U	390 U	410 U	420 U	450 U	520 U	420 U	390 U	380 U
2,4,5-Trichlorophenol	1,000 U	810 U	800 U	620 U	620 U	650 U	640 U	620 U	620 U	600 U	590 U	590 U	620 U	630 U	680 U	790 U	640 U	590 U	580 U
2,4,6-Trichlorophenol	1,000 U	810 U	800 U	620 U	620 U	650 U	640 U	620 U	620 U	600 U	590 U	590 U	620 U	630 U	680 U	790 U	640 U	590 U	580 U
2,4-Dichlorophenol	1,000 U	810 U	800 U	620 U	620 U	650 U	640 U	620 U	620 U	600 U	590 U	590 U	620 U	630 U	680 U	790 U	640 U	590 U	580 U
2,4-Dimethylphenol	1,000 U	810 U	800 U	620 U	620 U	650 U	640 U	620 U	620 U	600 U	590 U	590 U	620 U	630 U	680 U	790 U	640 U	590 U	580 U
2,4-Dinitrophenol	2,500 U	1,900 U	1,900 U	1,500 U	1,500 U	1,600 U	1,500 U	1,500 U	1,500 U	1,400 U	1,400 UJ	1,400 UJ	1,500 U	1,500 U	1,600 U	1,900 U	1,500 U	1,400 U	1,400 U
2,4-Dinitrotoluene	690 U	530 U	530 U	410 U	410 U	430 U	430 U	410 U	410 U	390 U	390 U	390 U	410 U	420 U	450 U	520 U	420 U	390 U	380 U
2,6-Dinitrotoluene	690 U	530 U	530 U	410 U	410 U	430 U	430 U	410 U	410 U	390 U	390 U	390 U	410 U	420 U	450 U	520 U	420 U	390 U	380 U
2-Chloronaphthalene	690 U	530 U	530 U	410 U	410 U	430 U	430 U	410 U	410 U	390 U	390 U	390 U	410 U	420 U	450 U	520 U	420 U	390 U	380 U
2-Chlorophenol	1,000 U	810 U	800 U	620 U	620 U	650 U	640 U	620 U	620 U	600 U	590 U	590 U	620 U	630 U	680 U	790 U	640 U	590 U	580 U
2-Methylnaphthalene	6.2 J	4 J	4.6 J	3.4 J	12 U	13 U	13 U	12 U	12 U	12 U	12 U	12 U	12 U	13 U	7.3 J	7.1 J	5.4 J	5.9 J	12 J
2-Methylphenol	1,200 U	970 U	960 U	750 U	750 U	780 U	770 U	750 U	750 U	710 U	710 U	710 U	750 U	760 U	820 U	950 U	760 U	700 U	700 U
2-Nitroaniline	1,000 UJ	810 U	800 U	620 U	620 U	650 U	640 U	620 U	620 U	600 U	590 U	590 U	620 U	630 U	680 U	790 U	640 U	590 U	580 U
2-Nitrophenol	1,200 U	970 U	960 U	750 U	750 U	780 U	770 U	750 U	750 U	710 U	710 U	710 U	750 U	760 U	820 U	950 U	760 U	700 U	700 U
3,3'-Dichlorobenzidine	1,000 R	810 U	800 U	620 U	620 U	650 U	640 U	620 UJ	620 UJ	600 UJ	590 UJ	590 UJ	620 UJ	630 UJ	680 U	790 U	640 U	590 U	580 U
3- and 4-Methylphenol	1,200 U	970 U	960 U	750 U	750 U	780 U	770 U	750 U	750 U	710 U	710 U	710 U	750 U	760 U	820 U	950 U	760 U	700 U	700 U
3-Nitroaniline	1,000 R	810 U	800 U	620 U	620 U	650 U	640 U	620 U	620 U	600 U	590 U	590 U	620 UJ	630 UJ	680 U	790 U	640 U	590 U	580 U
4,6-Dinitro-2-methylphenol	2,500 U	1,900 U	1,900 U	1,500 U	1,500 U	1,600 U	1,500 U	1,500 U	1,500 U	1,400 U	1,400 U	1,400 U	1,500 U	1,500 U	1,600 U	1,900 U	1,500 U	1,400 U	1,400 U
4-Bromophenyl-phenylether	690 U	530 U	530 U	410 U	410 U	430 U	430 U	410 U	410 U	390 U	390 U	390 U	410 U	420 U	450 U	520 U	420 U	390 U	380 U
4-Chloro-3-methylphenol	1,000 U	810 U	800 U	620 U	620 U	650 U	640 U	620 U	620 U	600 U	590 U	590 U	620 U	630 U	680 U	790 U	640 U	590 U	580 U
4-Chloroaniline	1,000 R	810 U	800 U	620 U	620 U	650 U	640 U	620 U	620 U	600 U	590 U	590 U	620 UJ	630 UJ	680 U	790 U	640 U	590 U	580 U
4-Chlorophenyl-phenylether	690 U	530 U	530 U	410 U	410 U	430 U	430 U	410 U	410 U	390 U	390 U	390 U	410 U	420 U	450 U	520 U	420 U	390 U	380 U
4-Nitroaniline	1,000 R	810 U	800 U	620 U	620 U	650 U	640 U	620 U	620 U	600 U	590 U	590 U	620 UJ	630 UJ	680 U	790 U	640 U	590 U	580 U
4-Nitrophenol	2,500 UJ	1,900 U	1,900 U	1,500 U	1,500 U	1,600 U	1,500 U	1,500 U	1,500 U	1,400 U	1,400 U	1,400 U	1,500 U	1,500 U	1,600 U	1,900 U	1,500 U	1,400 U	1,400 U
Acenaphthene	690 U	530 U	530 U	410 U	410 U	430 U	430 U	410 U	410 U	390 U	390 U	390 U	410 U	420 U	450 U	520 U	420 U	390 U	380 U
Acenaphthylene	690 U	530 U	530 U	410 U	410 U	430 U	430 U	410 U	410 U	390 U	390 U	390 U	410 U	420 U	450 U	520 U	420 U	390 U	380 U
Acetophenone	1,200 U	970 U	960 U	750 U	750 U	780 U	770 U	750 U	750 U	710 U	710 U	710 U	750 U	760 U	820 U	950 U	760 U	700 U	700 U
Anthracene	690 U	530 U	530 U	410 U	410 U	430 U	430 U	410 U	410 U	390 U	390 U	390 U	410 U	420 U	450 U	520 U	420 U	390 U	380 U

Appendix I
UXO-08 Surface Soil Raw Analytical Results
December 2008

Station ID	MR08-SS068	MR08-SS069		MR08-SS070	MR08-SS071	MR08-SS072	MR08-SS073	MR08-SS074	MR08-SS075	MR08-SS076	MR08-SS077	MR08-SS078	MR08-SS079		MR08-SS080	MR08-SS081	MR08-SS082	MR08-SS083	MR08-SS084
Sample ID	MR08-SS068-08D	MR08-SS069-08D	MR08-SS069D-08D	MR08-SS070-08D	MR08-SS071-08D	MR08-SS072-08D	MR08-SS073-08D	MR08-SS074-08D	MR08-SS075-08D	MR08-SS076-08D	MR08-SS077-08D	MR08-SS078-08D	MR08-SS079-08D	MR08-SS079D-08D	MR08-SS080-08D	MR08-SS081-08D	MR08-SS082-08D	MR08-SS083-08D	MR08-SS084-08D
Sample Date	12/03/08	12/03/08	12/03/08	12/03/08	12/03/08	12/03/08	12/03/08	12/04/08	12/04/08	12/04/08	12/04/08	12/04/08	12/04/08	12/04/08	12/07/08	12/07/08	12/07/08	12/07/08	12/07/08
Chemical Name																			
Atrazine	690 UJ	530 U	530 U	410 U	410 U	430 U	430 U	410 U	410 U	390 U	390 U	390 U	410 U	420 U	450 U	520 U	420 U	390 U	380 U
Benzaldehyde	1,000 U	810 U	800 U	620 U	620 UJ	650 UJ	640 UJ	620 UJ	620 UJ	600 UJ	590 UJ	590 UJ	620 UJ	630 UJ	680 UJ	790 UJ	640 UJ	590 UJ	580 UJ
Benzo(a)anthracene	30	15 J	13 J	11 J	9 J	3.3 J	17	21	4.7 J	5.7 J	130	9.3 J	5.6 J	4.2 J	24	41	27	13 J	18
Benzo(a)pyrene	21 J	13 J	15 J	9.5 J	8.4 J	13 U	6.5 J	19	7.5 J	6.4 J	100	9.6 J	12 U	13 U	18	38	22	10 J	12 U
Benzo(b)fluoranthene	49 J	34 J	38 J	21	21	13 U	13 U	39	19	18	410	25	19	13 U	37 J	86 J	44 J	19 J	21 J
Benzo(g,h,i)perylene	17 J	10 J	14 J	9.6 J	6.2 J	2.8 J	13 U	12 J	5.1 J	4.5 J	60	5 J	12 U	3.4 J	16 J	23 J	14 J	8.2 J	5.2 J
Benzo(k)fluoranthene	29 J	17 J	18 J	10 J	9.3 J	13 U	13 U	17	6.8 J	6.8 J	160	8.7 J	12 U	13 U	14	30	20	9.9 J	8.3 J
Butylbenzylphthalate	690 U	530 U	530 U	410 U	410 U	430 U	430 U	410 U	410 U	390 U	390 U	390 U	410 U	420 U	450 U	520 U	420 U	390 U	380 U
Caprolactam	1,000 U	810 U	800 U	620 U	620 U	650 U	640 U	620 U	620 U	600 U	590 U	590 U	620 UJ	630 UJ	680 U	790 U	640 U	590 U	580 U
Carbazole	1,000 U	810 U	800 U	620 U	620 U	650 U	640 U	620 U	620 U	600 U	590 U	590 U	620 UJ	630 UJ	680 U	790 U	640 U	590 U	580 U
Chrysene	690 U	530 U	530 U	410 U	410 U	430 U	430 U	410 U	410 U	390 U	340 J	390 U	410 U	420 U	450 U	520 U	420 U	390 U	380 U
Di-n-butylphthalate	690 U	530 U	530 U	410 U	410 U	430 U	430 U	410 U	410 U	390 U	390 U	390 U	410 U	420 U	450 U	520 U	420 U	390 U	380 U
Di-n-octylphthalate	690 U	530 U	530 U	410 U	410 U	430 U	430 U	410 U	410 U	390 U	390 U	390 U	410 U	420 U	450 U	520 U	420 U	390 U	380 U
Dibenz(a,h)anthracene	21 UJ	16 UJ	16 UJ	12 J	12 U	13 U	13 U	12 U	12 U	12 U	34	12 U	12 U	13 U	14 UJ	16 UJ	13 UJ	9.7 J	12 UJ
Dibenzofuran	690 U	530 U	530 U	410 U	410 U	430 U	430 U	410 U	410 U	390 U	390 U	390 U	410 U	420 U	450 U	520 U	420 U	390 U	380 U
Diethylphthalate	690 U	530 U	530 U	410 U	410 U	430 U	430 U	410 U	410 U	390 U	390 U	390 U	410 U	420 U	450 U	520 U	420 U	390 U	380 U
Dimethyl phthalate	690 U	530 U	530 U	410 U	410 U	430 U	430 U	410 U	410 U	390 U	390 U	390 U	410 U	420 U	450 U	520 U	420 U	390 U	380 U
Fluoranthene	58	27	27	18	20	6.4 J	28	31	11 J	13 J	630	23	10 J	13 U	46	94	64	31	40
Fluorene	21 U	16 U	16 U	12 U	12 U	13 U	13 U	12 U	12 U	12 U	12 U	12 U	12 U	13 U	14 U	16 U	13 U	12 U	12 U
Hexachlorobenzene	21 UJ	16 UJ	16 UJ	12 UJ	12 UJ	13 UJ	13 U	12 UJ	12 U	12 UJ	12 UJ	12 U	12 UJ	13 U	14 U	16 U	13 U	12 U	12 U
Hexachlorobutadiene	21 UJ	16 UJ	16 UJ	12 U	12 UJ	13 UJ	13 U	12 UJ	12 U	12 UJ	12 UJ	12 U	12 UJ	13 U	14 U	16 U	13 U	12 U	12 U
Hexachlorocyclopentadiene	12 J	16 UJ	9.6 J	8 J	12 U	13 U	13 U	12 U	12 UJ	12 U	12 U	12 UJ	12 U	13 UJ	14 U	16 U	13 U	12 U	12 U
Hexachloroethane	690 U	530 U	530 U	410 U	410 U	430 U	430 U	410 U	410 U	390 U	390 U	390 U	410 U	420 U	450 U	520 U	420 U	390 U	380 U
Indeno(1,2,3-cd)pyrene	18 J	13 J	16 J	8 J	6.7 J	13 U	13 U	14	5.8 J	5.2 J	86	5.7 J	12 U	13 U	19 J	34 J	18 J	10 J	7 J
Isophorone	690 U	530 U	530 U	410 U	410 U	430 U	430 U	410 U	410 U	390 U	390 U	390 U	410 U	420 U	450 U	520 U	420 U	390 U	380 U
Naphthalene	21 U	16 U	16 U	12 UJ	12 UJ	13 UJ	13 U	12 UJ	12 U	12 UJ	12 UJ	12 U	12 UJ	13 U	4.7 J	4.8 J	4.4 J	4.6 J	8.8 J
Nitrobenzene	690 UJ	530 U	530 U	410 U	410 U	430 U	430 U	410 U	410 U	390 U	390 U	390 U	410 U	420 U	450 UJ	520 UJ	420 UJ	390 UJ	380 UJ
Pentachlorophenol	1,700 U	1,300 U	1,300 U	1,000 U	1,000 UJ	1,000 UJ	1,000 UJ	1,000 U	1,000 U	980 U	960 U	970 U	1,000 U	1,000 U	1,100 U	1,300 U	1,000 U	960 U	960 U
Phenanthrene	21 U	16 U	16 U	10 J	7.6 J	3.1 J	13 U	14	3.9 J	6.1 J	120	11 J	4.4 J	13 U	19	41	24	16	43
Phenol	1,000 U	810 U	800 U	620 U	620 U	650 U	640 U	620 U	620 U	600 U	590 U	590 U	620 U	630 U	680 U	790 U	640 U	590 U	580 U
Pyrene	61	23	23	20	18	7.1 J	19	30	10 J	12	460	18	8.8 J	7.6 J	26	56	32	9.2 J	15
bis(2-Chloroethoxy)methane	690 U	530 U	530 U	410 U	410 U	430 U	430 U	410 U	410 U	390 U	390 U	390 U	410 U	420 U	450 U	520 U	420 U	390 U	380 U
bis(2-Chloroethyl)ether	690 U	530 U	530 U	410 U	410 U	430 U	430 U	410 U	410 U	390 U	390 U	390 U	410 U	420 U	450 U	520 U	420 U	390 U	380 U
bis(2-Ethylhexyl)phthalate	690 U	530 U	530 U	410 U	140 J	430 U	430 U	410 U	410 U	390 U	390 U	390 U	410 U	420 U	450 U	520 U	420 U	390 U	380 U
n-Nitroso-di-n-propylamine	690 U	530 U	530 U	410 U	410 U	430 U	430 U	410 U	410 U	390 U	390 U	390 U	410 U	420 U	450 U	520 U	420 U	390 U	380 U
n-Nitrosodiphenylamine	1,400 UJ	1,100 U	1,100 U	820 U	820 U	850 U	850 U	820 U	820 U	780 U	780 U	780 U	820 U	830 U	900 U	1,000 U	840 U	770 U	770 U
Explosives (UG/KG)																			
% Solids	NA	NA	NA	NA	NA	NA	NA	NA	NA	NA	NA	NA	NA	NA	NA	NA	NA	NA	NA
1,3,5-Trinitrobenzene	99 U	100 UJ	98.7 UJ	98.8 U	98.1 U	99.5 UJ	100 UJ	99.5 UJ	97.5 U	99.9 UJ	99.7 U	98.7 U	99.9 U	97.4 U	98.4 U	98.3 U	99 U	99.5 U	98.2 U
1,3-Dinitrobenzene	99 UJ	100 UJ	98.7 UJ	98.8 U	98.1 U	99.5 UJ	100 UJ	99.5 UJ	97.5 U	99.9 UJ	99.7 U	98.7 U	99.9 U	97.4 U	98.4 U	98.3 U	99 U	99.5 U	98.2 U
2,4,6-Trinitrotoluene	99 U	100 UJ	98.7 UJ	98.8 U	98.1 U	99.5 UJ	100 UJ	99.5 UJ	97.5 U	99.9 UJ	99.7 UJ	98.7 UJ	99.9 UJ	97.4 UJ	98.4 U	98.3 U	99 U	99.5 U	98.2 U
2,4-Dinitrotoluene	99 UJ	100 UJ	98.7 UJ	98.8 U	98.1 U	99.5 UJ	100 UJ	99.5 UJ	97.5 U	99.9 UJ	99.7 UJ	98.7 UJ	99.9 UJ	97.4 UJ	98.4 U	98.3 U	99 U	99.5 U	98.2 U
2,6-Dinitrotoluene	99 U	100 UJ	98.7 UJ	98.8 U	98.1 U	99.5 UJ	100 UJ	99.5 UJ	97.5 U	99.9 UJ	99.7 U	98.7 U	99.9 U	97.4 U	98.4 U	98.3 U	99 U	99.5 U	98.2 U
2-Amino-4,6-dinitrotoluene	99 UJ	100 UJ	98.7 UJ	98.8 U	98.1 U	99.5 UJ	100 UJ	99.5 UJ	97.5 U	99.9 UJ	99.7 U	98.7 U	99.9 U	97.4 U	98.4 U	98.3 U	99 U	99.5 U	98.2 U
2-Nitrotoluene	99 U	100 UJ	98.7 UJ	98.8 U	98.1 U	99.5 UJ	100 UJ	99.5 UJ	97.5 U	99.9 UJ	99.7 U	98.7 U	99.9 U	97.4 U	98.4 U	98.3 U	99 U	99.5 U	98.2 U
3-Nitrotoluene	99 UJ	100 UJ	98.7 UJ	98.8 U	98.1 U	99.5 UJ	100 UJ	99.5 UJ	97.5 U	99.9 UJ	99.7 U	98.7 U	99.9 U	97.4 U	98.4 U	98.3 U	99 U	99.5 U	98.2 U
4-Amino-2,6-dinitrotoluene	99 UJ	100 UJ	98.7 UJ	98.8 U	98.1 U	99.5 UJ	100 UJ	99.5 UJ	97.5 U	99.9 UJ	99.7 U	98.7 U	99.9 U	97.4 U	98.4 U	98.3 U	99 U	99.5 U	98.2 U
4-Nitrotoluene	99 U	100 UJ	98.7 UJ	98.8 U	98.1 U	99.5 UJ	100 UJ	99.5 UJ	97.5 U	99.9 UJ	99.7 U	98.7 U	99.9 U	97.4 U	98.4 U	98.3 U	99 U	99.5 U	98.2 U
HMX	99 U	100 UJ	98.7 UJ	98.8 U	98.1 U	99.5 UJ	100 UJ	99.5 UJ	97.5 U	99.9 UJ	99.7 U	98.7 U	99.9 U	97.4 U	98.4 U	98.3 U	99 U	99.5 U	98.2 U
Nitrobenzene	99 U	100 UJ	98.7 UJ	98.8 U	98.1 U	99.5 UJ	100 UJ	99.5 UJ	97.5 U	99.9 UJ	99.7 U	98.7 U	99.9 U	97.4 U	98.4 U	98.3 U	99 U	99.5 U	98.2 U
Nitroglycerin	99 U	100 UJ	98.7 UJ	98.8 U	98.1 U	99.5 UJ	100 UJ	99.5 UJ	97.5 U	99.9 UJ	99.7 U	98.7 U	99.9 U	97.4 U	98.4 U	98.3 U	99 U	99.5 U	98.2 U
PETN	99 U	100 U	98.7 U	98.8 U	98.1 U	99.5 U	100 U	99.5 U	97.5 U	99.9 U	99.7 U	98.7 U	99.9 U	97.4 U	98.4 U	98.3 U	99 U	99.5 U	98.2 U
Perchlorate	4.1 U	3.3 U	3.3 U	2.5 U	2.6 U	2.5 U	2.5 U	2.6 U	2.4 U	2.4 U	2.4 U	2.4 U	2.3 U	2.4 U	2.8 U	2.2 J	1.5 J	14	33
RDX	99 U	100 UJ	98.7 UJ	98.8 U	98.1 U	99.5 UJ	100 UJ	99.5 UJ	97.5 U	99.9 UJ	99.7 U	98.7 U	99.9 U	97.4 U	98.4 U	98.3 U	99 U	99.5 U	98.2 U
Tetryl	99 U	100 UJ	98.7 UJ	98.8 U	98.1 U	99.5 UJ	100 UJ	99.5 UJ	97.5 U	99.9 UJ	99.7 UJ	98.7 UJ	99.9 UJ	97.4 UJ	98.4 U	98.3 U	99 U	99.5 UJ	98.2 UJ
Total Metals (MG/KG)																			
Antimony	2.62 J	1.1 J	1.37 J	0.607 J	0.626 J	0.515 J	0.95 J	1.6 J	0.484 J	0.449 U	0.437 U	0.514 J	0.417 U	0.469 U	1.93 J	1.4 J	0.722 J	0.535 J	0.402 U
Arsenic	16.7 J	8.71 J	1.57 J	7.96 J	0.411 J	0.354 J	0.602 J	0.507	0.384	0.448	0.511	0.36	0.223 J	0.175 J	7.98	1.31	2.65	0.877	2.8
Barium	67.2 J	36.1 J	39.5 J	13 J	9.72 J	12.8 J	13.8 J	20.1 J	6.26 J	10.5 J	9.46 J	9.5 J	6.03 J	3.79 J	19.6	32.4	8.75	10.8	16.1
Cadmium	0.219 J	0.162 J	0.177 J	0.11 J	0.0795 J	0.0618 J	0.186 J	0.357	0.0493 J	0.181	0.0927 J	0.112 J	0.0417 UJ	0.0469 UJ	0.192 J	0.268	0.1 J	0.0925 J	0.112 J
Chromium	10.7 J	5.36 J	5.78 J	2.98 J	2.28 J	2.21 J	3.41 J	4.84 J	2.65 J	3.48 J	4.24 J	3.13 J	2.52 J	1.85 J	4.63	4.32	3.35	4.41	5.44
Copper	6.09	3.76	5.03	1.42 J	1.68 J	1.87	2.41	4.65	1.2 J	11.8	15.7	15.4	0.417 U	0.469 U	3.83	6.21	3.96	26.3	5.71
Lead	72.7 J	40.2 J	48.4 J	15.6 J	17.4 J	12.7 J	37.5 J	58.3	9.56	12.5	12.1	10.3	3.82	2.95	38	58.7	10.8	23.1	15.3
Mercury	0.281	0.154	0.188	0.0556 J	0.0364 J	0.0311 J	0.0883 J	0.0692 J	0.0221 U	0.0282 J	0.0356 J	0.0233 U	0.0259 J	0.0236 U	0.0805 J	0.0802 J	0.0213 U	0.0261 J	0.0249 J
Selenium	5.25 J	1.82 J	2.07 J	0.348 J	0.283 J	0.364 J	0.427 J	0.481 J	0.277 J	0.251 J	0.311 J	0.338 J	0.44 J	0.325 J	1.3 U	0.947 U	0.49 U	0.487 U	0.515 U
Silver	0.365 U	0.32 J	0.299 U	0.236 U	0.287 J	0.232 U	0.252 J	0.265 U	0.222 U	0.315 J	0.245 J	0.22 U	0.209 U	0.234 U	0.276 U	0.251 U	0.211 U	0.254 J	0.201 U
Zinc	13.6 J	10.2 J	11.2 J	8.66 J	6.15 J	7.95 J	19.5 J	33.4	8.11	14.9	15.9	116	1.14 J	0.634 J	17.3	22.3	11.5	7.05	3.8
Wet Chemistry (PCT)	NA	NA	NA	NA	NA	NA	NA	NA	NA	NA	NA	NA	NA	NA	NA	NA	NA	NA	NA
% Solids	51.8	64.1	62.3	80.4	81.8	81.2	80.5	71.3	85.1	84.6	85.7	85.7	86.3	81.2	69.3	75.6	87.9	88.1	89.1

Notes:

J - Analyte present, value may or may not be accurate or precise
NA - Not analyzed
R - Unreliable Result
U - The material was analyed for, but not detected
UJ - Analyte not detected, quantitation limit may be inaccurate
Pct - Percent

Appendix I
UXO-08 Surface Soil Raw Analytical Results
December 2008

Station ID	MR08-SS085	MR08-SS086	MR08-SS087	MR08-SS088	MR08-SS089		MR08-SS090	MR08-SS091	MR08-SS092	MR08-SS093	MR08-SS094	MR08-SS095	MR08-SS096	MR08-SS097	MR08-SS098	MR08-SS099		MR08-SS100	MR08-SS101
Sample ID	MR08-SS085-08D	MR08-SS086-08D	MR08-SS087-08D	MR08-SS088-08D	MR08-SS089-08D	MR08-SS089D-08D	MR08-SS090-08D	MR08-SS091-08D	MR08-SS092-08D	MR08-SS093-08D	MR08-SS094-08D	MR08-SS095-08D	MR08-SS096-08D	MR08-SS097-08D	MR08-SS098-08D	MR08-SS099-08D	MR08-SS099D-08D	MR08-SS100-08D	MR08-SS101-08D
Sample Date	12/07/08	12/08/08	12/08/08	12/09/08	12/09/08	12/09/08	12/09/08	12/05/08	12/04/08	12/05/08	12/04/08	12/04/08	12/04/08	12/04/08	12/10/08	12/10/08	12/10/08	12/10/08	12/10/08
Chemical Name																			
Volatile Organic Compounds (UG/KG)	NA	NA	NA	NA	NA	NA	NA	NA	NA	NA	NA								
1,1,1-Trichloroethane	15 UJ	10 UJ	11 U	9.9 U	10 U	12 U	11 U	16 U	8.8 UJ	8.9 U	12 UJ	14 UJ	17 UJ	10 UJ	15 U	20 U	8.2 U	20 UJ	22 U
1,1,2,2-Tetrachloroethane	15 UJ	10 UJ	11 U	9.9 U	10 U	12 U	11 U	16 U	8.8 UJ	8.9 U	12 UJ	14 UJ	17 UJ	10 UJ	15 U	20 U	8.2 UJ	20 UJ	22 U
1,1,2-Trichloro-1,2,2-trifluoroethane(Freon-113)	15 UJ	10 U	11 U	9.9 U	10 U	12 U	11 U	16 U	8.8 UJ	8.9 U	12 UJ	14 UJ	17 UJ	10 UJ	15 U	20 U	8.2 U	20 UJ	22 U
1,1,2-Trichloroethane	15 UJ	10 UJ	11 U	9.9 U	10 U	12 U	11 U	16 U	8.8 UJ	8.9 U	12 UJ	14 UJ	17 UJ	10 UJ	15 U	20 U	8.2 U	20 UJ	22 U
1,1-Dichloroethane	15 UJ	10 U	11 U	9.9 U	10 U	12 U	11 U	16 U	8.8 UJ	8.9 U	12 UJ	14 UJ	17 UJ	10 UJ	15 U	20 U	8.2 U	20 UJ	22 U
1,1-Dichloroethene	15 UJ	10 U	11 U	9.9 U	10 U	12 U	11 U	16 U	8.8 UJ	8.9 U	12 UJ	14 UJ	17 UJ	10 UJ	15 U	20 U	8.2 U	20 UJ	22 U
1,2,4-Trichlorobenzene	15 UJ	10 UJ	11 U	9.9 U	10 U	12 U	11 U	16 U	8.8 UJ	8.9 U	12 UJ	14 UJ	17 UJ	10 UJ	15 U	20 U	8.2 UJ	20 UJ	22 U
1,2-Dibromo-3-chloropropane	7.6 UJ	5.2 UJ	5.5 U	5 U	5.2 U	6 U	5.7 U	8.1 U	4.4 UJ	4.4 U	5.8 UJ	7.2 UJ	8.5 UJ	5.2 UJ	7.3 U	10 U	4.1 UJ	9.9 UJ	11 U
1,2-Dibromoethane	15 UJ	10 UJ	11 U	9.9 U	10 U	12 U	11 U	16 U	8.8 UJ	8.9 U	12 UJ	14 UJ	17 UJ	10 UJ	15 U	20 U	8.2 U	20 UJ	22 U
1,2-Dichlorobenzene	15 UJ	10 UJ	11 U	9.9 U	10 U	12 U	11 U	16 U	8.8 UJ	8.9 U	12 UJ	14 UJ	17 UJ	10 UJ	15 U	20 U	8.2 UJ	20 UJ	22 U
1,2-Dichloroethane	15 UJ	10 UJ	11 U	9.9 U	10 U	12 U	11 U	16 U	8.8 UJ	8.9 U	12 UJ	14 UJ	17 UJ	10 UJ	15 U	20 U	8.2 U	20 UJ	22 U
1,2-Dichloropropane	15 UJ	10 UJ	11 U	9.9 U	10 U	12 U	11 U	16 U	8.8 UJ	8.9 U	12 UJ	14 UJ	17 UJ	10 UJ	15 U	20 U	8.2 U	20 UJ	22 U
1,3-Dichlorobenzene	15 UJ	10 UJ	11 U	9.9 U	10 U	12 U	11 U	16 U	8.8 UJ	8.9 U	12 UJ	14 UJ	17 UJ	10 UJ	15 U	20 U	8.2 UJ	20 UJ	22 U
1,4-Dichlorobenzene	15 UJ	10 UJ	11 U	9.9 U	10 U	12 U	11 U	16 U	8.8 UJ	8.9 U	12 UJ	14 UJ	17 UJ	10 UJ	15 U	20 U	8.2 UJ	20 UJ	22 U
2-Butanone	11 J	10 UJ	11 U	9.9 U	1.5 J	12 U	2.9 J	18	21 J	8.9 U	14 J	9.9 J	17 UJ	8.6 J	15 U	7.4 J	3 J	20 UJ	22 U
2-Hexanone	15 UJ	10 U	11 U	9.9 U	10 U	12 U	11 U	16 U	4.8 J	8.9 UJ	12 UJ	14 UJ	7 J	10 UJ	15 U	20 U	8.2 U	20 UJ	22 U
4-Methyl-2-pentanone	15 UJ	10 UJ	11 U	9.9 U	10 U	12 U	1.8 J	2.1 J	1.5 J	8.9 U	12 UJ	14 UJ	2.1 J	10 UJ	15 U	20 U	0.53 J	20 UJ	22 U
Acetone	490 J	10 U	11 U	9.9 U	18 U	21 U	32 U	230	340 J	28 UJ	270 J	360 J	1,200 J	290 J	19 U	36 U	16 U	23 UJ	22 U
Benzene	15 UJ	0.8 J	0.54 J	0.58 J	10 U	0.7 J	0.68 J	1.5 J	1.6 J	8.9 U	12 UJ	14 UJ	3.3 J	0.64 J	1.4 J	2.2 J	0.64 J	20 UJ	1.2 J
Bromodichloromethane	15 UJ	10 UJ	11 U	9.9 U	10 U	12 U	11 U	16 U	8.8 UJ	8.9 U	12 UJ	14 UJ	17 UJ	10 UJ	15 U	20 U	8.2 U	20 UJ	22 U
Bromoform	15 UJ	10 U	11 U	9.9 U	10 U	12 U	11 U	16 U	8.8 UJ	8.9 U	12 UJ	14 UJ	17 UJ	10 UJ	15 U	20 U	8.2 U	20 UJ	22 U
Bromomethane	15 UJ	10 UJ	11 UJ	9.9 UJ	10 UJ	12 UJ	11 UJ	16 UJ	8.8 UJ	8.9 U	12 UJ	14 UJ	17 UJ	10 UJ	15 U	20 U	8.2 U	20 UJ	22 U
Carbon disulfide	15 UJ	10 U	11 U	9.9 U	10 U	12 U	11 U	16 U	3.4 J	2.2 J	12 UJ	14 UJ	5.8 J	1.7 J	15 U	20 U	8.2 U	4.6 J	22 U
Carbon tetrachloride	15 UJ	10 UJ	11 U	9.9 U	10 U	12 U	11 U	16 U	8.8 UJ	8.9 U	12 UJ	14 UJ	17 UJ	10 UJ	15 U	20 U	8.2 U	20 UJ	22 U
Chlorobenzene	15 UJ	10 UJ	11 U	9.9 U	10 U	12 U	11 U	16 U	8.8 UJ	8.9 U	12 UJ	14 UJ	17 UJ	10 UJ	15 U	20 U	8.2 U	20 UJ	22 U
Chloroethane	15 UJ	10 U	11 UJ	9.9 UJ	10 UJ	12 UJ	11 UJ	16 UJ	8.8 UJ	8.9 U	12 UJ	14 UJ	17 UJ	10 UJ	15 U	20 U	8.2 U	20 UJ	22 U
Chloroform	15 UJ	10 UJ	11 U	9.9 U	10 U	12 U	11 U	16 U	8.8 UJ	8.9 U	12 UJ	14 UJ	17 UJ	10 UJ	15 U	20 U	8.2 U	20 UJ	22 U
Chloromethane	15 UJ	10 U	11 UJ	9.9 UJ	10 UJ	12 UJ	11 UJ	16 U	8.8 UJ	8.9 U	12 UJ	14 UJ	17 UJ	10 UJ	15 U	20 U	8.2 U	20 UJ	22 U
Cyclohexane	15 UJ	0.72 J	11 U	9.9 U	10 U	12 U	11 U	1.5 J	8.8 UJ	8.9 U	12 UJ	14 UJ	17 UJ	10 UJ	15 U	20 U	8.2 U	20 UJ	22 U
Dibromochloromethane	15 UJ	10 UJ	11 U	9.9 U	10 U	12 U	11 U	16 U	8.8 UJ	8.9 U	12 UJ	14 UJ	17 UJ	10 UJ	15 U	20 U	8.2 U	20 UJ	22 U
Dichlorodifluoromethane (Freon-12)	15 UJ	10 U	11 UJ	9.9 UJ	10 UJ	12 UJ	11 UJ	16 U	8.8 UJ	8.9 U	12 UJ	14 UJ	17 UJ	10 UJ	15 U	20 U	8.2 U	20 UJ	22 U
Ethylbenzene	15 UJ	1.6 J	11 U	9.9 U	10 U	12 U	11 U	3.1 J	3.1 J	8.9 U	12 UJ	14 UJ	17 UJ	10 UJ	2.7 J	5.7 J	2.4 J	1.8 J	22 U
Isopropylbenzene	15 UJ	10 UJ	11 U	9.9 U	10 U	12 U	11 U	16 U	8.8 UJ	8.9 U	12 UJ	14 UJ	17 UJ	10 UJ	15 U	20 U	8.2 U	20 UJ	22 U
Methyl acetate	100 J	10 U	11 U	9.9 U	10 U	12 U	11 U	16 U	8.8 UJ	8.9 U	12 UJ	14 UJ	17 UJ	10 UJ	15 U	20 U	8.2 U	20 UJ	22 U
Methyl-tert-butyl ether (MTBE)	15 UJ	10 U	11 U	9.9 U	10 U	12 U	11 U	16 U	8.8 UJ	8.9 U	12 UJ	14 UJ	17 UJ	10 UJ	15 U	20 U	8.2 U	20 UJ	22 U
Methylcyclohexane	15 UJ	0.74 J	0.36 J	0.37 J	10 U	12 U	0.65 J	1.6 J	8.8 UJ	8.9 U	12 UJ	14 UJ	17 UJ	10 UJ	1.4 J	1.7 J	0.39 J	20 UJ	22 U
Methylene chloride	15 UJ	10 U	11 U	9.9 U	10 U	12 U	11 U	16 U	8.8 UJ	8.9 U	12 UJ	14 UJ	17 UJ	10 UJ	15 U	20 U	8.2 U	20 UJ	22 U
Styrene	15 UJ	10 UJ	11 U	9.9 U	10 U	12 U	11 U	16 U	8.8 UJ	8.9 U	12 UJ	14 UJ	17 UJ	10 UJ	15 U	20 U	8.2 U	20 UJ	22 U
Tetrachloroethene	15 UJ	10 UJ	11 U	9.9 U	10 U	12 U	11 U	16 U	8.8 UJ	8.9 U	12 UJ	14 UJ	17 UJ	10 UJ	15 U	20 U	8.2 U	20 UJ	22 U
Toluene	15 UJ	10 UJ	11 U	9.9 U	10 U	12 U	11 U	16 U	4 J	8.9 U	2 J	2.4 J	14 J	10 UJ	2 J	4 J	8.2 U	20 UJ	22 U
Trichloroethene	15 UJ	10 UJ	11 U	9.9 U	10 U	12 U	11 U	16 U	8.8 UJ	8.9 U	12 UJ	14 UJ	17 UJ	10 UJ	15 U	20 U	8.2 U	20 UJ	22 U
Trichlorofluoromethane(Freon-11)	15 UJ	10 U	11 U	9.9 U	10 U	12 U	11 U	16 U	8.8 UJ	8.9 U	12 UJ	14 UJ	17 UJ	10 UJ	15 U	20 U	8.2 U	20 UJ	22 U
Vinyl chloride	15 UJ	10 UJ	11 U	9.9 U	10 U	12 U	11 U	16 U	8.8 UJ	8.9 U	12 UJ	14 UJ	17 UJ	10 UJ	15 U	20 U	8.2 U	20 UJ	22 U
Xylene, total	15 UJ	10 UJ	11 U	9.9 U	10 U	12 U	11 U	16 U	2.3 J	8.9 U	12 UJ	14 UJ	3.1 J	10 UJ	15 U	20 U	8.2 U	20 UJ	22 U
cis-1,2-Dichloroethene	15 UJ	10 UJ	11 U	9.9 U	10 U	12 U	11 U	16 U	8.8 UJ	8.9 U	12 UJ	14 UJ	17 UJ	10 UJ	15 U	20 U	8.2 U	20 UJ	22 U
cis-1,3-Dichloropropene	15 UJ	10 UJ	11 U	9.9 U	10 U	12 U	11 U	16 U	8.8 UJ	8.9 U	12 UJ	14 UJ	17 UJ	10 UJ	15 U	20 U	8.2 U	20 UJ	22 U
trans-1,2-Dichloroethene	15 UJ	10 UJ	11 U	9.9 U	10 U	12 U	11 U	16 U	8.8 UJ	8.9 U	12 UJ	14 UJ	17 UJ	10 UJ	15 U	20 U	8.2 U	20 UJ	22 U
trans-1,3-Dichloropropene	15 UJ	10 UJ	11 U	9.9 U	10 U	12 U	11 U	16 U	8.8 UJ	8.9 U	12 UJ	14 UJ	17 UJ	10 UJ	15 U	20 U	8.2 U	20 UJ	22 U
Semivolatile Organic Compounds (UG/KG)																			
1,1-Biphenyl	410 U	380 U	360 U	360 U	370 U	440 U	380 U	480 U	380 U	370 U	430 U	520 U	490 U	390 U	350 U	350 U	350 U	370 U	370 U
2,2'-Oxybis(1-chloropropane)	410 U	380 U	360 U	360 U	370 U	440 U	380 U	480 U	380 U	370 U	430 U	520 U	490 U	390 U	350 U	350 U	350 U	370 U	370 U
2,4,5-Trichlorophenol	620 U	570 U	540 U	550 U	560 U	670 U	570 U	720 U	580 U	570 U	650 U	780 U	740 U	590 U	530 U	540 U	530 U	560 U	560 U
2,4,6-Trichlorophenol	620 U	570 U	540 U	550 U	560 U	670 U	570 U	720 U	580 U	570 U	650 U	780 U	740 U	590 U	530 U	540 U	530 U	560 U	560 U
2,4-Dichlorophenol	620 U	570 U	540 U	550 U	560 U	670 U	570 U	720 U	580 U	570 U	650 U	780 U	740 U	590 U	530 U	540 U	530 U	560 U	560 U
2,4-Dimethylphenol	620 U	570 U	540 U	550 U	560 U	670 U	570 U	720 U	580 U	570 U	650 U	780 U	740 U	590 U	530 U	540 U	530 U	560 U	560 U
2,4-Dinitrophenol	1,500 U	1,400 UJ	1,300 UJ	1,300 U	1,300 U	1,600 U	1,400 U	1,700 U	1,400 U	1,400 U	1,600 U	1,900 U	1,800 U	1,400 U	1,300 U	1,300 U	1,300 U	1,400 U	1,400 U
2,4-Dinitrotoluene	410 U	380 U	360 U	360 U	370 U	440 U	380 U	480 U	380 U	370 U	430 U	520 U	490 U	390 U	350 U	350 U	350 U	370 U	370 U
2,6-Dinitrotoluene	410 U	380 U	360 U	360 U	370 U	440 U	380 U	480 U	380 U	370 U	430 U	520 U	490 U	390 U	350 U	350 U	350 U	370 U	370 U
2-Chloronaphthalene	410 U	380 U	360 U	360 U	370 U	440 U	380 U	480 U	380 U	370 U	430 U	520 U	490 U	390 U	350 U	350 U	350 U	370 U	370 U
2-Chlorophenol	620 U	570 U	540 U	550 U	560 U	670 U	570 U	720 U	580 U	570 U	650 U	780 U	740 U	590 U	530 U	540 U	530 U	560 U	560 U
2-Methylnaphthalene	17	12	11 UJ	10 J	12	13 J	12	8.5 J	7.5 J	11 U	6 J	16 UJ	6.8 J	3.3 J	11 U	11 U	10 U	11 U	11 U
2-Methylphenol	740 U	680 U	650 U	660 U	670 U	810 U	680 U	870 U	690 U	680 U	780 U	940 U	880 U	710 U	640 U	640 U	630 U	680 U	680 U
2-Nitroaniline	620 U	570 U	540 U	550 U	560 U	670 U	570 U	720 U	580 U	570 U	650 U	780 U	740 U	590 U	530 U	540 U	530 U	560 U	560 U
2-Nitrophenol	740 U	680 U	650 U	660 U	670 U	810 U	680 U	870 U	690 U	680 U	780 U	940 U	880 U	710 U	640 U	640 U	630 U	680 U	680 U
3,3'-Dichlorobenzidine	620 U	570 UJ	540 UJ	550 UJ	560 UJ	670 UJ	570 UJ	720 U	580 U	570 U	650 U	780 U	740 U	590 U	530 U	540 U	530 U	560 U	560 U
3- and 4-Methylphenol	740 U	680 U	650 U	660 U	670 U	810 U	680 U	870 U	690 U	680 U	780 U	940 U	880 U	710 U	640 U	640 U	630 U	680 U	680 U
3-Nitroaniline	620 U	570 U	540 U	550 U	560 U	670 U	570 U	720 U	580 U	570 U	650 U	780 U	740 U	590 U	530 U	540 U	530 U	560 U	560 U
4,6-Dinitro-2-methylphenol	1,500 U	1,400 UJ	1,300 UJ	1,300 U	1,300 U	1,600 U	1,400 U	1,700 U	1,400 U	1,400 U	1,600 U	1,900 U	1,800 U	1,400 U	1,300 U	1,300 U	1,300 U	1,400 U	1,400 U
4-Bromophenyl-phenylether	410 U	380 U	360 U	360 U	370 U	440 U	380 U	480 U	380 U	370 U	430 U	520 U	490 U	390 U	350 U	350 U	350 U	370 U	370 U
4-Chloro-3-methylphenol	620 U	570 U	540 U	550 U	560 U	670 U	570 U	720 U	580 U	570 U	650 U	780 U	740 U	590 U	530 U	540 U	530 U	560 U	560 U
4-Chloroaniline	620 U	570 U	540 U	550 U	560 U	670 U	570 U	720 U	580 U	570 U	650 U	780 U	740 U	590 U	530 U	540 U	530 U	560 U	560 U
4-Chlorophenyl-phenylether	410 U	380 U	360 U	360 U	370 U	440 U	380 U	480 U	380 U	370 U	430 U	520 U	490 U	390 U	350 U	350 U	350 U	370 U	370 U
4-Nitroaniline	620 U	570 U	540 U	550 U	560 U	670 U	570 U	720 U	580 U	570 U	650 U	780 U	740 U	590 U	530 U	540 U	530 U	560 U	560 U
4-Nitrophenol	1,500 U	1,400 U	1,300 U	1,300 U	1,300 U	1,600 U	1,400 U	1,700 U	1,400 U	1,400 U	1,600 U	1,900 U	1,800 U	1,400 U	1,300 U	1,300 U	1,300 U	1,400 UJ	1,400 UJ
Acenaphthene	410 U	380 U	360 U	360 U	370 U	440 U	380 U	480 U	380 U	370 U	430 U	520 U	490 U	390 U	350 U	350 U	350 U	370 U	370 U
Acenaphthylene	410 U	380 U	360 U	360 U	370 U	440 U	380 U	480 U	380 U	370 U	430 U	520 U	490 U	390 U	350 U	350 U	350 U	370 U	370 U
Acetophenone	740 U	680 U	650 U	660 U	670 U	810 U	680 U	870 U	690 U	680 U	780 U	940 U	880 U	710 U	640 U	640 U	630 U	680 U	680 U
Anthracene	410 U	380 U	360 U	360 U	370 U	440 U	380 U	480 U	380 U	370 U	430 U	520 U	490 U	390 U	350 U	350 U	350 U	370 U	370 U

Appendix I
UXO-08 Surface Soil Raw Analytical Results
December 2008

Station ID	MR08-SS085	MR08-SS086	MR08-SS087	MR08-SS088	MR08-SS089		MR08-SS090	MR08-SS091	MR08-SS092	MR08-SS093	MR08-SS094	MR08-SS095	MR08-SS096	MR08-SS097	MR08-SS098	MR08-SS099		MR08-SS100	MR08-SS101
Sample ID	MR08-SS085-08D	MR08-SS086-08D	MR08-SS087-08D	MR08-SS088-08D	MR08-SS089-08D	MR08-SS089D-08D	MR08-SS090-08D	MR08-SS091-08D	MR08-SS092-08D	MR08-SS093-08D	MR08-SS094-08D	MR08-SS095-08D	MR08-SS096-08D	MR08-SS097-08D	MR08-SS098-08D	MR08-SS099-08D	MR08-SS099D-08D	MR08-SS100-08D	MR08-SS101-08D
Sample Date	12/07/08	12/08/08	12/08/08	12/09/08	12/09/08	12/09/08	12/09/08	12/05/08	12/04/08	12/05/08	12/04/08	12/04/08	12/04/08	12/04/08	12/10/08	12/10/08	12/10/08	12/10/08	12/10/08
Chemical Name																			
Atrazine	410 U	380 U	360 U	360 U	370 U	440 U	380 U	480 U	380 U	370 U	430 U	520 U	490 U	390 U	350 U	350 U	350 U	370 U	370 U
Benzaldehyde	620 U	570 UJ	540 UJ	550 UJ	560 UJ	670 UJ	570 UJ	720 UJ	580 UJ	570 UJ	650 UJ	780 UJ	740 UJ	590 UJ	530 UJ	540 UJ	530 UJ	560 UJ	560 UJ
Benzo(a)anthracene	21	92	11 U	1.6 J	11 J	3.6 J	5.9 J	42	16	11 U	18	9.9 J	31	12	11 UJ	11 UJ	10 UJ	11 UJ	11 UJ
Benzo(a)pyrene	14	11 U	11 U	11 U	15	5.8 J	6.2 J	51	18	11 U	26	13 J	48	17	11 U	11 U	10 U	11 U	11 U
Benzo(b)fluoranthene	26	200	11 U	8 J	27	12 J	12	74	26	11 U	32	18	62	24	11 UJ	11 UJ	10 UJ	11 UJ	11 UJ
Benzo(g,h,i)perylene	12 U	45	11 U	11 U	8.3 J	3.2 J	3.7 J	40	17	11 U	18	8.9 J	31	12	11 UJ	11 UJ	21 J	11 UJ	11 UJ
Benzo(k)fluoranthene	19	130	11 U	2.2 J	13	6.9 J	6.3 J	49	21	11 U	23	12 J	46 J	19 J	11 U	11 U	10 U	11 U	11 U
Butylbenzylphthalate	410 U	380 U	360 U	360 U	370 U	440 U	380 U	480 U	380 U	370 U	430 U	520 U	490 U	390 U	350 U	350 U	350 U	370 U	370 U
Caprolactam	620 U	570 U	540 U	550 U	560 U	670 U	570 U	720 U	580 U	570 U	650 U	780 U	740 U	590 U	530 U	540 U	530 U	560 U	560 U
Carbazole	620 U	570 U	540 U	550 U	560 U	670 U	570 U	720 U	580 U	570 U	650 U	780 U	740 U	590 U	530 U	540 U	530 U	560 U	560 U
Chrysene	410 U	180 J	360 U	360 U	370 U	440 U	380 U	480 U	380 U	370 U	430 U	520 U	490 U	390 U	350 U	350 U	350 U	370 U	370 U
Di-n-butylphthalate	410 U	380 U	360 U	360 U	370 U	440 U	380 U	480 U	380 U	370 U	430 U	520 U	490 U	390 U	350 U	350 U	350 U	370 U	370 U
Di-n-octylphthalate	410 U	380 U	360 U	360 U	370 U	440 U	380 U	480 U	380 U	370 U	430 U	520 U	490 U	390 U	350 U	350 U	350 U	370 U	370 U
Dibenz(a,h)anthracene	12 U	13	11 U	11 U	4.3 J	2.8 J	2.9 J	16	9.5 J	11 U	13 U	16 U	15 U	12 U	11 U	11 U	10 U	11 U	11 U
Dibenzofuran	410 U	380 U	360 U	360 U	370 U	440 U	380 U	480 U	380 U	370 U	430 U	520 U	490 U	390 U	350 U	350 U	350 U	370 U	370 U
Diethylphthalate	410 U	380 U	360 U	360 U	370 U	440 U	380 U	480 U	380 U	370 U	430 U	520 U	490 U	390 U	350 U	350 U	350 U	370 U	370 U
Dimethyl phthalate	410 U	380 U	360 U	360 U	370 U	440 U	380 U	480 U	380 U	370 U	430 U	520 U	490 U	390 U	350 U	350 U	350 U	370 U	370 U
Fluoranthene	32	490	2 J	5.3 J	33	30	13	84	38	3.2 J	47	25	80	32	11 U	11 U	10 U	11 U	11 U
Fluorene	12 U	11 U	11 U	11 U	11 U	13 U	11 U	14 U	12 U	11 U	13 U	16 U	15 U	12 U	11 U	11 U	10 U	11 U	11 U
Hexachlorobenzene	12 UJ	11 U	11 UJ	11 U	11 U	13 U	11 U	14 U	12 U	11 U	13 UJ	16 UJ	15 UJ	12 UJ	11 U	11 U	10 U	11 U	11 U
Hexachlorobutadiene	12 U	11 U	11 U	11 U	11 U	13 U	11 U	14 U	12 U	11 U	13 UJ	16 UJ	15 UJ	12 UJ	11 UJ	11 UJ	10 UJ	11 UJ	11 UJ
Hexachlorocyclopentadiene	12 UJ	11 U	11 U	11 U	11 U	13 U	11 U	14 UJ	12 UJ	11 UJ	13 U	16 U	15 U	12 U	11 U	11 U	10 U	11 U	11 U
Hexachloroethane	410 U	380 U	360 U	360 U	370 U	440 U	380 U	480 U	380 U	370 U	430 U	520 U	490 U	390 U	350 U	350 U	350 U	370 U	370 U
Indeno(1,2,3-cd)pyrene	7.2 J	8.4 J	11 U	2.1 J	11 J	4.3 J	4.2 J	40	16	11 U	19	9.7 J	32	13	11 UJ	11 UJ	10 UJ	11 UJ	11 UJ
Isophorone	410 U	380 U	360 U	360 U	370 U	440 U	380 U	480 U	380 U	370 U	430 U	520 U	490 U	390 U	350 U	350 U	350 U	370 U	370 U
Naphthalene	5.9 J	11 U	11 UJ	11 U	4.1 J	13 U	11 U	3.8 J	3.4 J	11 UJ	4 J	16 U	4.2 J	12 U	11 U	11 U	10 U	11 U	11 U
Nitrobenzene	410 UJ	380 UJ	360 UJ	360 UJ	370 UJ	440 UJ	380 UJ	480 U	380 U	370 U	430 U	520 U	490 U	390 U	350 UJ	350 UJ	350 UJ	370 UJ	370 UJ
Pentachlorophenol	1,000 U	930 U	890 U	900 U	920 U	1,100 U	940 U	1,200 U	950 U	930 U	1,100 U	1,300 U	1,200 U	970 U	880 U	880 U	860 U	920 U	930 U
Phenanthrene	30	25	11 U	3 J	16	25	6.1 J	24	14	11 U	15 J	7.9 J	25 J	8.1 J	11 UJ	11 UJ	6.8 J	4 J	11 UJ
Phenol	620 U	570 U	540 U	550 U	560 U	670 U	570 U	720 U	580 U	570 U	650 U	780 U	740 U	590 U	530 U	540 U	530 U	560 U	560 U
Pyrene	26	340	11 U	4.1 J	23	16	8.3 J	68	27	2.6 J	39	21 J	69 J	38 J	47	11 U	5.5 J	3.1 J	11 U
bis(2-Chloroethoxy)methane	410 U	380 U	360 U	360 U	370 U	440 U	380 U	480 U	380 U	370 U	430 U	520 U	490 U	390 U	350 U	350 U	350 U	370 U	370 U
bis(2-Chloroethyl)ether	410 U	380 U	360 U	360 U	370 U	440 U	380 U	480 U	380 U	370 U	430 U	520 U	490 U	390 U	350 U	350 U	350 U	370 U	370 U
bis(2-Ethylhexyl)phthalate	410 U	260 J	120 J	150 J	320 J	440 U	380 U	480 U	380 U	370 U	430 U	520 U	440 J	390 U	330 J	350 U	350 U	370 U	370 U
n-Nitroso-di-n-propylamine	410 U	380 U	360 U	360 U	370 U	440 U	380 U	480 U	380 U	370 U	430 U	520 U	490 U	390 U	350 U	350 U	350 U	370 U	370 U
n-Nitrosodiphenylamine	820 U	750 U	710 U	720 U	740 U	890 U	750 U	960 U	760 U	750 U	860 U	1,000 U	970 U	780 U	700 U	710 U	700 U	740 U	740 U
Explosives (UG/KG)																			
% Solids	NA	NA	NA	NA	NA	NA	NA	NA	NA	NA	NA	NA	NA	NA	NA	NA	NA	NA	NA
1,3,5-Trinitrobenzene	98.6 U	100 U	99.8 U	99.1 U	99.7 U	100 U	98 U	99.5 U	99.9 U	99.8 U	100 U	0.0994 U	99.6 U	100 U	98 U	97.5 U	100 U	98.4 U	99.8 U
1,3-Dinitrobenzene	98.6 U	100 U	99.8 U	99.1 U	99.7 U	100 U	98 U	99.5 U	99.9 U	99.8 U	100 U	0.0994 U	99.6 U	100 U	98 U	97.5 U	100 U	98.4 U	99.8 U
2,4,6-Trinitrotoluene	98.6 U	100 U	99.8 U	99.1 U	99.7 U	100 U	98 U	99.5 UJ	99.9 U	99.8 UJ	100 U	0.0994 U	99.6 U	100 U	98 U	97.5 U	100 U	98.4 U	99.8 U
2,4-Dinitrotoluene	98.6 U	100 U	99.8 U	99.1 U	99.7 U	100 U	98 U	99.5 U	99.9 UJ	99.8 U	100 UJ	0.0994 UJ	99.6 UJ	100 UJ	98 U	97.5 U	100 U	98.4 U	99.8 U
2,6-Dinitrotoluene	98.6 U	100 U	99.8 U	99.1 U	99.7 U	100 U	98 U	99.5 U	99.9 U	99.8 U	100 U	0.0994 U	99.6 U	100 U	98 U	97.5 U	100 U	98.4 U	99.8 U
2-Amino-4,6-dinitrotoluene	98.6 U	100 U	99.8 U	99.1 U	99.7 U	100 U	98 U	99.5 U	99.9 U	99.8 U	100 U	0.0994 U	99.6 U	100 U	98 U	97.5 U	100 U	98.4 U	99.8 U
2-Nitrotoluene	98.6 U	100 U	99.8 U	99.1 U	99.7 U	100 U	98 U	99.5 U	99.9 U	99.8 U	100 U	0.0994 U	99.6 U	100 U	98 U	97.5 U	100 U	98.4 U	99.8 U
3-Nitrotoluene	98.6 U	100 U	99.8 U	99.1 U	99.7 U	100 U	98 U	99.5 U	99.9 U	99.8 U	100 U	0.0994 U	99.6 U	100 U	98 U	97.5 U	100 U	98.4 U	99.8 U
4-Amino-2,6-dinitrotoluene	98.6 U	100 U	99.8 U	99.1 U	99.7 U	100 U	98 U	99.5 U	99.9 U	99.8 U	100 U	0.0994 U	99.6 U	100 U	98 U	97.5 U	100 U	98.4 U	99.8 U
4-Nitrotoluene	98.6 U	100 U	99.8 U	99.1 U	99.7 U	100 U	98 U	99.5 U	99.9 U	99.8 U	100 U	0.0994 U	99.6 U	100 U	98 U	97.5 U	100 U	98.4 U	99.8 U
HMX	98.6 U	100 U	99.8 U	99.1 U	99.7 U	100 U	98 U	99.5 U	99.9 U	99.8 U	100 U	0.0994 U	99.6 U	100 U	98 U	97.5 U	100 U	98.4 U	99.8 U
Nitrobenzene	98.6 U	100 U	99.8 U	99.1 U	99.7 U	100 U	98 U	99.5 U	99.9 U	99.8 U	100 U	0.0994 U	99.6 U	100 U	98 U	97.5 U	100 U	98.4 U	99.8 U
Nitroglycerin	98.6 U	100 U	99.8 U	99.1 U	99.7 U	100 U	98 U	99.5 U	99.9 U	99.8 U	100 U	0.0994 U	99.6 U	100 U	98 U	97.5 U	100 U	98.4 U	99.8 U
PETN	98.6 U	100 U	99.8 U	99.1 U	99.7 U	100 U	98 U	99.5 U	99.9 U	99.8 U	100 U	0.0994 U	99.6 U	100 U	98 U	97.5 U	100 U	98.4 U	99.8 U
Perchlorate	12	130	19	3.3	6.6	7.4	2.2 U	2.6 U	2.3 U	2.3 U	2.6 U	2.6 U	2.9 U	2.3 U	2.1 U	2.1 U	2.1 U	2.3 U	2.2 U
RDX	98.6 U	100 U	99.8 U	99.1 U	99.7 U	100 U	98 U	99.5 U	99.9 U	99.8 U	100 U	0.0994 U	99.6 U	100 U	98 U	97.5 U	100 U	98.4 U	99.8 U
Tetryl	98.6 UJ	100 U	99.8 U	99.1 U	99.7 U	100 U	98 U	99.5 UJ	99.9 U	99.8 UJ	100 U	0.0994 U	99.6 U	100 U	98 U	97.5 U	100 U	98.4 U	99.8 U
Total Metals (MG/KG)																			
Antimony	0.427 U	0.692 J	0.477 J	0.603 J	0.424 U	0.653 J	0.469 J	5.15	2.09	0.541 J	2.4	1.9 J	10.7	1.23 J	0.416 U	1.13 J	0.958 J	0.429 U	0.601 J
Arsenic	6.32	6.94	4.84	5.17	5.54	4.45	4.61	2.85	1.16	1.08	1.1	0.74	1.23	0.535	0.741	0.175 J	4.67	0.9	0.946
Barium	11.3	5.22	4.08	6.42	3.5 J	3.32 J	5.87 J	15.5	14.8 J	11.3	45 J	14.1 J	32.9 J	12.5 J	16.3 J	4.43 J	7.54	9.25	8.22
Cadmium	0.0803 J	0.985	0.721	0.726	0.825	0.923	1.01	1.55	0.616 J	0.421	1.11 J	3.01 J	0.889 J	0.41 J	0.0416 U	0.0392 U	0.227	0.0429 U	0.324
Chromium	5.21 J	5.29 J	4.82 J	4.39 J	2.12 J	1.82 J	2.92 J	12.1 J	13.4 J	8.73 J	11.3 J	5.1 J	11.5 J	7.15 J	5.56 J	3.99 J	6.65	7.86	8.41
Copper	3.86	2.79	1.84	2.47	3.17	3.81	4.69	30.4	3.78	3.67	7.48	2.94	7.72	3.37	0.416 U	0.825 J	1.49 J	0.429 U	1.31 J
Lead	11.8	2.22 J	1.57 J	2.23	2.62	2.77	2.96	87.3 J	108 J	13 J	105 J	60 J	122	54.2	3.57 J	2.47 J	21.4 J	3.79 J	9.22
Mercury	0.0219 U	0.0219 U	0.0203 U	0.0203 U	0.0216 U	0.0211 U	0.0212 U	0.0878 J	0.0409 J	0.0216 U	0.0995 J	0.0343 J	0.0688 J	0.0318 J	0.0212 U	0.0202 U	0.0206 U	0.0355 J	0.0211 U
Selenium	0.439 U	0.293 J	0.313 J	0.325 J	0.317 J	0.248 J	0.288 J	0.889	0.606	0.262 J	1.15	0.709	0.735	0.363 J	0.132 J	0.131 J	0.251 J	0.219 J	0.354 J
Silver	0.214 U	0.359 J	0.308 J	0.321 J	0.378 J	0.347 J	0.218 J	0.362 J	0.33 J	0.192 U	0.36 J	0.251 U	0.266 U	0.216 U	0.208 U	0.196 U	0.411 J	0.215 U	0.386 J
Zinc	7.86 J	26.7 J	28.5 J	30.9 J	28.4	28.6	34.5	454 J	42.7 J	98.2 J	45.1 J	24.2 J	72.5 J	30 J	1.14 J	3.2	8.44	0.833 J	8.68
Wet Chemistry (PCT)	NA	NA	NA	NA	NA	NA	NA	NA	NA	NA	NA	NA	NA	NA	NA	NA	NA	NA	NA
% Solids	89	91.1	92.4	92.2	90.3	91.2	92.1	75.9	85.8	88.3	78.4	NA	70.7	86.1	89.5	93.8	95	85.9	91.6

Notes:

J - Analyte present, value may or may not be accurate or precise
NA - Not analyzed
R - Unreliable Result
U - The material was analyed for, but not detected
UJ - Analyte not detected, quantitation limit may be inaccurate
Pct - Percent

Station ID	MR08-SS102	MR08-SS103	MR08-SS104	MR08-SS105	MR08-SS106	MR08-SS107	MR08-SS108	MR08-SS109		MR08-SS110	MR08-SS111	MR08-SS112	MR08-SS113	MR08-SS114	MR08-SS115	MR08-SS116	MR08-SS117	MR08-SS118	MR0
Sample ID	MR08-SS102-08D	MR08-SS103-08D	MR08-SS104-08D	MR08-SS105-08D	MR08-SS106-08D	MR08-SS107-08D	MR08-SS108-08D	MR08-SS109-08D	MR08-SS109D-08D	MR08-SS110-08D	MR08-SS111-08D	MR08-SS112-08D	MR08-SS113-08D	MR08-SS114-08D	MR08-SS115-08D	MR08-SS116-08D	MR08-SS117-08D	MR08-SS118-08D	MR08-SS119-08D
Sample Date	12/15/08	12/05/08	12/08/08	12/08/08	12/08/08	12/07/08	12/07/08	12/08/08	12/08/08	12/17/08	12/16/08	12/16/08	12/09/08	12/09/08	12/09/08	12/05/08	12/05/08	12/15/08	12/15/08
Chemical Name																			
Volatile Organic Compounds (UG/KG)																			
1,1,1-Trichloroethane	15 U	11 U	14 UJ	11 U	16 U	14 U	21 U	18 U	10 U	13 UJ	10 UJ	17 UJ	18 U	16 U	25 U	9.5 U	13 U	14 U	10 UJ
1,1,2,2-Tetrachloroethane	15 U	11 U	14 UJ	11 UJ	16 U	14 U	21 U	18 UJ	10 UJ	13 UJ	10 UJ	17 UJ	18 U	16 UJ	25 U	9.5 U	13 U	14 U	10 UJ
1,1,2-Trichloro-1,2,2-trifluoroethane(Freon-113)	15 U	11 U	14 UJ	11 U	16 U	14 U	21 U	18 U	10 U	13 UJ	10 UJ	17 UJ	18 U	16 U	25 U	9.5 U	13 U	14 U	10 UJ
1,1,2-Trichloroethane	15 U	11 U	14 UJ	11 UJ	16 U	14 U	21 U	18 UJ	10 UJ	13 UJ	10 UJ	17 UJ	18 U	16 U	25 U	9.5 U	13 U	14 U	10 UJ
1,1-Dichloroethane	15 U	11 U	14 UJ	11 U	16 U	14 U	21 U	18 U	10 U	13 UJ	10 UJ	17 UJ	18 U	16 U	25 U	9.5 U	13 U	14 U	10 UJ
1,1-Dichloroethene	15 U	11 U	14 UJ	11 U	16 U	14 U	21 U	18 U	10 U	13 UJ	10 UJ	17 UJ	18 U	16 U	25 U	9.5 U	13 U	14 U	10 UJ
1,2,4-Trichlorobenzene	15 U	11 U	14 UJ	11 U	16 U	14 U	21 U	18 U	10 U	13 UJ	10 UJ	17 UJ	18 U	16 UJ	25 U	9.5 U	13 U	14 U	10 UJ
1,2-Dibromo-3-chloropropane	7.5 U	5.4 U	7.1 UJ	5.4 UJ	7.9 U	7.2 U	10 U	8.9 UJ	5.1 UJ	6.7 UJ	5.1 UJ	8.7 UJ	8.9 U	7.8 UJ	13 U	4.8 U	6.3 U	7.3 U	5.1 UJ
1,2-Dibromoethane	15 U	11 U	14 UJ	11 UJ	16 U	14 U	21 U	18 UJ	10 UJ	13 UJ	10 UJ	17 UJ	18 U	16 U	25 U	9.5 U	13 U	14 U	10 UJ
1,2-Dichlorobenzene	15 U	11 U	14 UJ	11 UJ	16 U	14 U	21 U	18 UJ	10 UJ	13 UJ	10 UJ	17 UJ	18 U	16 UJ	25 U	9.5 U	13 U	14 U	10 UJ
1,2-Dichloroethane	15 U	11 U	14 UJ	11 U	16 U	14 U	21 U	18 U	10 U	13 UJ	10 UJ	17 UJ	18 U	16 U	25 U	9.5 U	13 U	14 U	10 UJ
1,2-Dichloropropane	15 U	11 U	14 UJ	11 UJ	16 U	14 U	21 U	18 UJ	10 UJ	13 UJ	10 UJ	17 UJ	18 U	16 U	25 U	9.5 U	13 U	14 U	10 UJ
1,3-Dichlorobenzene	15 U	11 U	14 UJ	11 U	16 U	14 U	21 U	18 U	10 U	13 UJ	10 UJ	17 UJ	18 U	16 UJ	25 U	9.5 U	13 U	14 U	10 UJ
1,4-Dichlorobenzene	15 U	11 U	14 UJ	11 UJ	16 U	14 U	21 U	18 UJ	10 UJ	13 UJ	10 UJ	17 UJ	18 U	16 UJ	25 U	9.5 U	13 U	14 U	10 UJ
2-Butanone	15 U	11 U	4.6 J	11 UJ	16 U	14 U	3.2 J	18 UJ	10 UJ	13 UJ	10 UJ	17 UJ	5.1 J	4.4 J	25 U	3.6 J	3.8 J	4 J	10 UJ
2-Hexanone	15 UJ	11 UJ	14 UJ	11 U	16 U	14 U	21 U	18 U	10 U	13 UJ	10 UJ	17 UJ	18 U	16 U	25 U	9.5 UJ	13 UJ	14 U	10 UJ
4-Methyl-2-pentanone	15 U	11 U	14 UJ	11 UJ	16 U	14 U	21 U	18 UJ	10 UJ	13 UJ	10 UJ	17 UJ	18 U	16 U	25 U	0.81 J	13 U	14 U	10 UJ
Acetone	16 U	26 UJ	140 J	11 U	16 U	14 U	21 U	18 U	10 U	13 UJ	6.9 J	56 J	28 U	22 U	31 U	26 UJ	33 UJ	16 U	10 UJ
Benzene	0.87 J	0.67 J	14 UJ	0.8 J	16 U	14 U	1.6 J	18 U	0.73 J	0.94 J	0.8 J	17 UJ	3 J	4.7 J	9.5 J	2.9 J	1.1 J	1.6 J	0.94 J
Bromodichloromethane	15 U	11 U	14 UJ	11 U	16 U	14 U	21 U	18 U	10 U	13 UJ	10 UJ	17 UJ	18 U	16 U	25 U	9.5 U	13 U	14 U	10 UJ
Bromoform	15 U	11 U	14 UJ	11 U	16 U	14 U	21 U	18 U	10 U	13 UJ	10 UJ	17 UJ	18 U	16 U	25 U	9.5 U	13 U	14 U	10 UJ
Bromomethane	15 U	11 U	14 UJ	11 U	16 UJ	14 U	21 U	18 U	10 U	13 UJ	10 UJ	17 UJ	18 U	16 UJ	25 UJ	9.5 U	13 U	14 U	10 UJ
Carbon disulfide	15 U	11 U	2.9 J	11 U	16 U	14 U	21 U	18 U	10 U	13 UJ	10 UJ	17 UJ	18 U	4 J	5.6 J	1.3 J	13 U	14 U	10 UJ
Carbon tetrachloride	15 U	11 U	14 UJ	11 U	16 U	14 U	21 U	18 U	10 U	13 UJ	10 UJ	17 UJ	18 U	16 U	25 U	9.5 U	13 U	14 U	10 UJ
Chlorobenzene	15 U	11 U	14 UJ	11 UJ	16 U	14 U	21 U	18 UJ	10 UJ	13 UJ	10 UJ	17 UJ	18 U	16 U	25 U	9.5 U	13 U	14 U	10 UJ
Chloroethane	15 U	11 U	14 UJ	11 U	16 UJ	14 U	21 U	18 U	10 U	13 UJ	10 UJ	17 UJ	18 U	16 UJ	25 UJ	9.5 U	13 U	14 U	10 UJ
Chloroform	15 U	11 U	14 UJ	11 U	16 U	14 U	21 U	18 U	10 U	13 UJ	10 UJ	17 UJ	18 U	16 U	25 U	9.5 U	13 U	14 U	10 UJ
Chloromethane	15 U	11 U	14 UJ	11 U	16 UJ	14 U	21 U	18 U	10 U	13 UJ	10 UJ	17 UJ	18 UJ	16 UJ	25 UJ	9.5 U	13 U	14 UJ	10 UJ
Cyclohexane	15 U	11 U	14 UJ	11 U	16 U	14 U	21 U	18 U	0.66 J	13 UJ	10 UJ	17 UJ	1.3 J	16 U	2.2 J	0.75 J	13 U	1.1 J	0.58 J
Dibromochloromethane	15 U	11 U	14 UJ	11 UJ	16 U	14 U	21 U	18 UJ	10 UJ	13 UJ	10 UJ	17 UJ	18 U	16 U	25 U	9.5 U	13 U	14 U	10 UJ
Dichlorodifluoromethane (Freon-12)	15 U	11 U	14 UJ	11 U	16 UJ	14 UJ	21 UJ	18 U	10 U	13 UJ	10 UJ	17 UJ	18 UJ	16 UJ	25 UJ	9.5 U	13 U	14 U	10 UJ
Ethylbenzene	4.7 J	1.1 J	14 UJ	1.3 J	16 U	14 U	2 J	1.7 J	1.9 J	13 UJ	2.3 J	17 UJ	3.4 J	5.2 J	7.7 J	3 J	1.4 J	3.5 J	1.8 J
Isopropylbenzene	15 U	11 U	14 UJ	11 UJ	16 U	14 U	21 U	18 UJ	10 UJ	13 UJ	10 UJ	17 UJ	18 U	16 U	25 U	9.5 U	13 U	14 U	10 UJ
Methyl acetate	15 U	11 U	5 J	11 U	16 U	14 U	21 U	18 U	10 U	13 UJ	10 UJ	17 UJ	18 U	16 U	25 U	9.5 U	13 U	14 U	10 UJ
Methyl-tert-butyl ether (MTBE)	15 U	11 U	14 UJ	11 U	16 U	14 U	21 U	18 U	10 U	13 UJ	10 UJ	17 UJ	18 U	16 U	25 U	9.5 U	13 U	14 U	10 UJ
Methylcyclohexane	0.77 J	11 U	14 UJ	0.64 J	16 U	14 U	1 J	0.87 J	0.84 J	0.86 J	0.63 J	17 UJ	1.9 J	0.82 J	2.4 J	0.8 J	0.96 J	1.4 J	0.85 J
Methylene chloride	15 U	11 U	14 UJ	11 U	1.1 J	14 U	21 U	18 U	10 U	13 UJ	10 UJ	17 UJ	18 U	16 U	25 U	9.5 U	13 U	14 U	10 UJ
Styrene	15 U	11 U	14 UJ	11 UJ	16 U	14 U	21 U	18 UJ	10 UJ	13 UJ	10 UJ	17 UJ	18 U	16 U	25 U	9.5 U	13 U	14 U	10 UJ
Tetrachloroethene	15 U	11 U	14 UJ	11 U	16 U	14 U	21 U	18 U	10 U	13 UJ	10 UJ	17 UJ	18 U	16 U	25 U	9.5 U	13 U	14 U	10 UJ
Toluene	2.2 J	3 J	5.1 J	11 UJ	16 U	14 U	2 J	18 UJ	10 UJ	13 UJ	1.3 J	17 UJ	3.1 J	8.1 J	13 J	3.7 J	13 U	2.2 J	10 UJ
Trichloroethene	15 U	11 U	14 UJ	11 U	16 U	14 U	21 U	18 U	10 U	13 UJ	10 UJ	17 UJ	18 U	16 U	25 U	9.5 U	13 U	14 U	10 UJ
Trichlorofluoromethane(Freon-11)	15 U	11 U	14 UJ	11 U	16 U	14 U	21 U	18 U	10 U	13 UJ	10 UJ	17 UJ	18 U	16 U	25 U	9.5 U	13 U	14 U	10 UJ
Vinyl chloride	15 U	11 U	14 UJ	11 U	16 U	14 UJ	21 UJ	18 U	10 U	13 UJ	10 UJ	17 UJ	18 UJ	16 U	25 U	9.5 U	13 U	14 UJ	10 UJ
Xylene, total	15 U	11 U	14 UJ	11 UJ	16 U	14 U	21 U	18 UJ	10 UJ	13 UJ	10 UJ	17 UJ	18 U	16 U	25 U	9.5 U	13 U	14 U	10 UJ
cis-1,2-Dichloroethene	15 U	11 U	14 UJ	11 U	16 U	14 U	21 U	18 U	10 U	13 UJ	10 UJ	17 UJ	18 U	16 U	25 U	9.5 U	13 U	14 U	10 UJ
cis-1,3-Dichloropropene	15 U	11 U	14 UJ	11 UJ	16 U	14 U	21 U	18 UJ	10 UJ	13 UJ	10 UJ	17 UJ	18 U	16 U	25 U	9.5 U	13 U	14 U	10 UJ
trans-1,2-Dichloroethene	15 U	11 U	14 UJ	11 U	16 U	14 U	21 U	18 U	10 U	13 UJ	10 UJ	17 UJ	18 U	16 U	25 U	9.5 U	13 U	14 U	10 UJ
trans-1,3-Dichloropropene	15 U	11 U	14 UJ	11 UJ	16 U	14 U	21 U	18 UJ	10 UJ	13 UJ	10 UJ	17 UJ	18 U	16 U	25 U	9.5 U	13 U	14 U	10 UJ
Semivolatile Organic Compounds (UG/KG)																			
1,1-Biphenyl	360 UJ	370 U	390 U	360 U	360 U	360 U	360 U	350 U	350 U	360 UJ	360 U	360 UJ	360 U	350 U	350 U	400 U	350 U	370 UJ	360 UJ
2,2'-Oxybis(1-chloropropane)	360 UJ	370 U	390 U	360 U	360 U	360 U	360 U	350 U	350 U	360 UJ	360 U	360 UJ	360 U	350 U	350 U	400 U	350 U	370 UJ	360 UJ
2,4,5-Trichlorophenol	540 UJ	560 U	590 U	550 U	540 U	550 U	540 U	530 U	530 U	550 UJ	540 UJ	540 UJ	540 U	530 U	540 U	610 U	540 U	570 UJ	540 UJ
2,4,6-Trichlorophenol	540 UJ	560 U	590 U	550 U	540 U	550 U	540 U	530 U	530 U	550 UJ	540 UJ	540 UJ	540 U	530 U	540 U	610 U	540 U	570 UJ	540 UJ
2,4-Dichlorophenol	540 UJ	560 U	590 U	550 U	540 U	550 U	540 U	530 U	530 U	550 UJ	540 UJ	540 UJ	540 U	530 U	540 U	610 U	540 U	570 UJ	540 UJ
2,4-Dimethylphenol	540 UJ	560 U	590 U	550 U	540 U	550 U	540 U	530 U	530 U	550 UJ	540 UJ	540 UJ	540 U	530 U	540 U	610 U	540 U	570 UJ	540 UJ
2,4-Dinitrophenol	1,300 UJ	1,300 U	1,400 U	1,300 U	1,300 U	1,300 U	1,300 U	1,300 U	1,300 U	1,300 UJ	1,300 UJ	1,300 UJ	1,300 U	1,300 U	1,300 U	1,400 U	1,300 U	1,400 UJ	1,300 UJ
2,4-Dinitrotoluene	360 UJ	370 U	390 U	360 U	360 U	360 U	360 U	350 U	350 U	360 UJ	360 U	360 UJ	360 U	350 U	350 U	400 U	350 U	370 UJ	360 UJ
2,6-Dinitrotoluene	360 UJ	370 U	390 U	360 U	360 U	360 U	360 U	350 U	350 U	360 UJ	360 U	360 UJ	360 U	350 U	350 U	400 U	350 U	370 UJ	360 UJ
2-Chloronaphthalene	360 UJ	370 U	390 U	360 U	360 U	360 U	360 U	350 U	350 U	360 UJ	360 U	360 UJ	360 U	350 U	350 U	400 U	350 U	370 UJ	360 UJ
2-Chlorophenol	540 UJ	560 U	590 U	550 U	540 U	550 U	540 U	530 U	530 U	550 UJ	540 UJ	540 UJ	540 U	530 U	540 U	610 U	540 U	570 UJ	540 UJ
2-Methylnaphthalene	11 U	11 U	3 J	11 UJ	11 UJ	11 UJ	11 U	11 UJ	5.8 J	11 UJ	2.8 J	7.2 J	14	10 U	20	12 U	11 U	11 U	11 U
2-Methylphenol	650 UJ	670 U	700 U	660 U	650 U	660 U	650 U	640 U	640 U	660 UJ	650 UJ	640 UJ	650 U	630 U	640 U	730 U	640 U	680 UJ	650 UJ
2-Nitroaniline	540 UJ	560 U	590 U	550 U	540 U	550 U	540 U	530 U	530 U	550 UJ	540 U	540 UJ	540 U	530 U	540 U	610 U	540 U	570 UJ	540 UJ
2-Nitrophenol	650 UJ	670 U	700 U	660 U	650 U	660 U	650 U	640 U	640 U	660 UJ	650 UJ	640 UJ	650 U	630 U	640 U	730 U	640 U	680 UJ	650 UJ
3,3'-Dichlorobenzidine	540 UJ	560 U	590 U	550 U	540 U	550 U	540 U	530 U	530 U	550 UJ	540 UJ	540 UJ	540 UJ	530 UJ	540 UJ	610 U	540 U	570 UJ	540 UJ
3- and 4-Methylphenol	650 UJ	670 U	700 U	660 U	650 U	660 U	650 U	640 U	640 U	660 UJ	650 UJ	640 UJ	650 U	630 U	640 U	730 U	640 U	680 UJ	650 UJ
3-Nitroaniline	540 UJ	560 U	590 U	550 U	540 U	550 U	540 U	530 U	530 U	550 UJ	540 UJ	540 UJ	540 U	530 U	540 U	610 U	540 U	570 UJ	540 UJ
4,6-Dinitro-2-methylphenol	1,300 UJ	1,300 U	1,400 U	1,300 U	1,300 U	1,300 U	1,300 U	1,300 U	1,300 U	1,300 UJ	1,300 UJ	1,300 UJ	1,300 U	1,300 U	1,300 U	1,400 U	1,300 U	1,400 UJ	1,300 UJ
4-Bromophenyl-phenylether	360 UJ	370 U	390 U	360 U	360 U	360 U	360 U	350 U	350 U	360 UJ	360 U	360 UJ	360 U	350 U	350 U	400 U	350 U	370 UJ	360 UJ
4-Chloro-3-methylphenol	540 UJ	560 U	590 U	550 U	540 U	550 U	540 U	530 U	530 U	550 UJ	540 UJ	540 UJ	540 U	530 U	540 U	610 U	540 U	570 UJ	540 UJ
4-Chloroaniline	540 UJ	560 U	590 U	550 U	540 U	550 U	540 U	530 U	530 U	550 UJ	540 U	540 UJ	540 U	530 U	540 U	610 U	540 U	570 UJ	540 UJ
4-Chlorophenyl-phenylether	360 UJ	370 U	390 U	360 U	360 U	360 U	360 U	350 U	350 U	360 UJ	360 U	360 UJ	360 U	350 U	350 U	400 U	350 U	370 UJ	360 UJ
4-Nitroaniline	540 UJ	560 U	590 U	550 U	540 U	550 U	540 U	530 U	530 U	550 UJ	540 UJ	540 UJ	540 U	530 U	540 U	610 U	540 U	570 UJ	540 UJ
4-Nitrophenol	1,300 UJ	1,300 U	1,400 U	1,300 U	1,300 U	1,300 U	1,300 U	1,300 U	1,300 U	1,300 UJ	1,300 UJ	1,300 UJ	1,300 U	1,300 U	1,300 U	1,400 U	1,300 UJ	1,400 UJ	1,300 UJ
Acenaphthene	360 UJ	370 U	390 U	360 U	360 U	360 U	360 U	350 U	350 U	360 UJ	360 U	360 UJ	360 U	350 U	350 U	400 U	350 U	370 UJ	360 UJ
Acenaphthylene	360 UJ	370 U	390 U	360 U	360 U	360 U	360 U	350 U	350 U	360 UJ	360 U	360 UJ	360 U	350 U	350 U	400 U	350 U	370 UJ	360 UJ
Acetophenone	650 UJ	670 U	700 U	660 U	650 U	660 U	650 U	640 U	640 U	660 UJ	650 U	640 UJ	650 U	630 U	640 U	730 U	640 U	680 UJ	650 UJ
Anthracene	360 UJ	370 U	390 U	360 U	360 U	360 U	360 U	350 U	350 U	360 UJ	360 U	360 UJ	360 U	350 U	350 U	400 U	350 U	370 UJ	360 UJ

Appendix I
UXO-08 Surface Soil Raw Analytical Results
December 2008

Station ID	MR08-SS102	MR08-SS103	MR08-SS104	MR08-SS105	MR08-SS106	MR08-SS107	MR08-SS108	MR08-SS109		MR08-SS110	MR08-SS111	MR08-SS112	MR08-SS113	MR08-SS114	MR08-SS115	MR08-SS116	MR08-SS117	MR08-SS118	MR08
Sample ID	MR08-SS102-08D	MR08-SS103-08D	MR08-SS104-08D	MR08-SS105-08D	MR08-SS106-08D	MR08-SS107-08D	MR08-SS108-08D	MR08-SS109-08D	MR08-SS109D-08D	MR08-SS110-08D	MR08-SS111-08D	MR08-SS112-08D	MR08-SS113-08D	MR08-SS114-08D	MR08-SS115-08D	MR08-SS116-08D	MR08-SS117-08D	MR08-SS118-08D	MR08-SS119-08D
Sample Date	12/15/08	12/05/08	12/08/08	12/08/08	12/08/08	12/07/08	12/07/08	12/08/08	12/08/08	12/17/08	12/16/08	12/16/08	12/09/08	12/09/08	12/09/08	12/05/08	12/05/08	12/15/08	12/15/08
Chemical Name																			
Atrazine	360 UJ	370 U	390 U	360 U	360 U	360 U	360 U	350 U	350 U	360 UJ	360 U	360 UJ	360 U	350 U	350 U	400 U	350 U	370 UJ	360 UJ
Benzaldehyde	540 UJ	560 UJ	590 UJ	550 U	540 U	550 U	540 U	530 U	530 U	550 UJ	540 UJ	540 UJ	540 UJ	530 UJ	540 UJ	610 UJ	540 UJ	570 UJ	540 UJ
Benzo(a)anthracene	11 U	11 U	58	2.5 J	2.6 J	11 U	28	48	16	11 U	30	11 U	7.5 J	10 U	11 U	12 U	11 U	11 U	2.9 J
Benzo(a)pyrene	11 U	11 U	52	4.1 J	4.6 J	11 U	28	52	20	11 U	24	42	11 U	10 U	11 U	12 U	11 U	11 U	11 U
Benzo(b)fluoranthene	11 U	11 U	95 J	11 U	8.3 J	11 U	42	130	48	11 U	11 U	11 U	11 U	10 U	11 U	12 U	11 U	11 U	11 U
Benzo(g,h,i)perylene	3.9 J	11 U	29 J	11 U	11 U	11 U	17	51	20	2.7 J	11 UJ	11 UJ	11 U	10 U	11 U	3.5 J	4.1 J	2.4 J	9.7 J
Benzo(k)fluoranthene	11 U	11 U	36 J	11 U	5.4 J	11 U	24	120	45	11 UJ	11 UJ	11 UJ	11 U	10 U	11 U	12 U	11 U	11 U	11 U
Butylbenzylphthalate	360 UJ	370 U	390 U	360 U	360 U	360 U	360 U	350 U	350 U	360 UJ	360 U	360 UJ	360 U	350 U	350 U	400 U	350 U	370 UJ	360 UJ
Caprolactam	540 UJ	560 U	590 U	550 U	540 U	550 U	540 U	530 U	530 U	550 UJ	540 U	540 UJ	540 U	530 U	540 U	610 U	540 U	570 UJ	540 UJ
Carbazole	540 UJ	560 U	590 U	550 U	540 U	550 U	540 U	530 U	530 U	550 UJ	540 UJ	540 UJ	540 U	530 U	540 U	610 U	540 U	570 UJ	540 UJ
Chrysene	360 UJ	370 U	390 U	360 U	360 U	360 U	360 U	110 J	350 U	360 UJ	360 U	360 UJ	360 U	350 U	350 U	400 U	350 U	370 UJ	360 UJ
Di-n-butylphthalate	360 UJ	370 U	390 U	360 U	360 U	360 U	360 U	350 U	350 U	360 UJ	360 U	360 UJ	360 U	350 U	350 U	400 U	350 U	370 UJ	360 UJ
Di-n-octylphthalate	360 UJ	370 U	390 U	360 U	360 U	360 U	360 U	350 U	350 U	360 UJ	360 U	360 UJ	360 U	350 U	350 U	400 U	350 U	370 UJ	360 UJ
Dibenz(a,h)anthracene	11 U	11 U	18 J	11 U	11 U	11 U	8.8 J	15	6.7 J	11 UJ	11 UJ	11 UJ	11 U	10 U	11 U	12 U	11 U	11 U	11 U
Dibenzofuran	360 UJ	370 U	390 U	360 U	360 U	360 U	360 U	350 U	350 U	360 UJ	360 U	360 UJ	360 U	350 U	350 U	400 U	350 U	370 UJ	360 UJ
Diethylphthalate	360 UJ	370 U	390 U	360 U	360 U	360 U	360 U	350 U	350 U	360 UJ	360 U	88 J	360 U	350 U	350 U	400 U	350 U	370 UJ	360 UJ
Dimethyl phthalate	360 UJ	370 U	390 U	360 U	360 U	360 U	360 U	350 U	350 U	360 UJ	360 U	360 UJ	360 U	350 U	350 U	400 U	350 U	370 UJ	360 UJ
Fluoranthene	11 U	2.7 J	91	5.8 J	7.6 J	3.9 J	39	210	150	4.2 J	11 U	11 U	10 J	10 U	11	3.3 J	11 U	11 U	11 U
Fluorene	11 U	11 U	12 U	11 U	11 U	11 U	11 U	11 U	11 U	11 U	11 U	4 J	11 U	10 U	5.2 J	12 U	11 U	11 U	11 U
Hexachlorobenzene	11 U	11 U	12 U	11 UJ	11 UJ	11 UJ	11 U	11 UJ	1.6 J	11 U	11 U	11 U	11 UJ	10 U	11 UJ	12 U	11 U	11 U	11 U
Hexachlorobutadiene	11 U	11 U	12 U	11 U	11 U	11 U	11 U	11 U	11 U	11 U	11 U	11 U	11 U	10 U	11 U	12 U	11 U	11 U	11 U
Hexachlorocyclopentadiene	11 UJ	11 UJ	12 UJ	11 U	11 U	11 U	11 U	11 U	11 U	11 UJ	11 UJ	11 UJ	11 UJ	10 U	11 UJ	12 UJ	11 UJ	11 U	11 UJ
Hexachloroethane	360 UJ	370 U	390 U	360 U	360 U	360 U	360 U	350 U	350 U	360 UJ	360 U	360 UJ	360 U	350 U	350 U	400 U	350 U	370 UJ	360 UJ
Indeno(1,2,3-cd)pyrene	11 U	11 U	37 J	11 U	11 U	11 U	17	50	19	11 UJ	11 UJ	11 UJ	11 U	10 U	11 U	2.6 J	11 U	11 U	11 U
Isophorone	360 UJ	370 U	390 U	360 U	360 U	360 U	360 U	350 U	350 U	360 UJ	360 U	360 UJ	360 U	350 U	350 U	400 U	350 U	370 UJ	360 UJ
Naphthalene	11 U	11 UJ	12 UJ	11 UJ	11 UJ	11 UJ	11 UJ	11 UJ	11 UJ	11 UJ	11 UJ	11 UJ	11 U	10 U	11 U	12 UJ	11 UJ	4 J	4 J
Nitrobenzene	360 UJ	370 U	390 UJ	360 UJ	360 UJ	360 UJ	360 UJ	350 UJ	350 UJ	360 UJ	360 U	360 UJ	360 UJ	350 UJ	350 UJ	400 U	350 UJ	370 UJ	360 UJ
Pentachlorophenol	890 UJ	920 U	960 U	900 U	880 U	900 U	880 U	870 U	870 U	900 UJ	890 UJ	880 UJ	890 U	870 U	880 U	990 U	880 U	930 UJ	890 UJ
Phenanthrene	11 U	11 U	9.3 J	11 U	2.6 J	2.9 J	5.8 J	26	50	11 U	19	38	25	10 U	42	12 U	11 U	2.4 J	3.4 J
Phenol	540 UJ	560 U	590 U	550 U	540 U	550 U	540 U	530 U	530 U	550 UJ	540 UJ	540 UJ	540 U	530 U	540 U	610 U	540 U	570 UJ	540 UJ
Pyrene	11 U	3.4 J	47	7 J	7.4 J	3.5 J	42	210	120	3.1 J	14	29	15	10 U	11 U	2.9 J	11 U	2.4 J	3 J
bis(2-Chloroethoxy)methane	360 UJ	370 U	390 U	360 U	360 U	360 U	360 U	350 U	350 U	360 UJ	360 U	360 UJ	360 U	350 U	350 U	400 U	350 U	370 UJ	360 UJ
bis(2-Chloroethyl)ether	360 UJ	370 U	390 U	360 U	360 U	360 U	360 U	350 U	350 U	360 UJ	360 U	360 UJ	360 U	350 U	350 U	400 U	350 U	370 UJ	360 UJ
bis(2-Ethylhexyl)phthalate	360 UJ	680	220 J	360 U	360 U	360 U	360 U	350 U	440	360 UJ	220 J	240 J	300 J	350 U	410	720	270 J	320 J	360 J
n-Nitroso-di-n-propylamine	360 UJ	370 U	390 U	360 U	360 U	360 U	360 U	350 U	350 U	360 UJ	360 U	360 UJ	360 U	350 U	350 U	400 U	350 U	370 UJ	360 UJ
n-Nitrosodiphenylamine	720 UJ	740 U	770 U	720 U	710 U	730 U	710 U	700 U	700 U	730 UJ	720 U	710 UJ	710 U	700 U	710 U	800 U	710 U	750 UJ	720 UJ
Explosives (UG/KG)																			
% Solids	NA	NA	NA	NA	NA	NA	NA	NA	NA	NA	NA	NA	NA	NA	NA	NA	NA	NA	NA
1,3,5-Trinitrobenzene	99.2 U	99.7 U	98.2 U	99.9 U	97.1 U	99.9 U	99.7 U	97.9 U	97.3 U	97.8 U	98.4 U	100 U	99.1 U	99.2 U	99.3 U	100 U	99.4 U	97.6 U	98.1 U
1,3-Dinitrobenzene	99.2 U	99.7 U	98.2 UJ	99.9 U	97.1 U	99.9 U	99.7 U	97.9 U	97.3 U	97.8 U	98.4 U	100 U	99.1 U	99.2 U	99.3 U	100 U	99.4 U	97.6 U	98.1 U
2,4,6-Trinitrotoluene	99.2 U	99.7 UJ	98.2 U	99.9 U	97.1 U	99.9 U	99.7 U	97.9 U	97.3 U	97.8 U	98.4 U	100 U	99.1 U	99.2 U	99.3 U	100 U	99.4 U	97.6 U	98.1 U
2,4-Dinitrotoluene	99.2 U	99.7 U	98.2 UJ	99.9 U	97.1 U	99.9 U	99.7 U	97.9 U	97.3 U	97.8 UJ	98.4 UJ	100 UJ	99.1 U	99.2 U	99.3 U	100 U	99.4 U	97.6 U	98.1 U
2,6-Dinitrotoluene	99.2 U	99.7 U	98.2 U	99.9 U	97.1 U	99.9 U	99.7 U	97.9 U	97.3 U	97.8 U	98.4 U	100 U	99.1 U	99.2 U	99.3 U	100 U	99.4 U	97.6 UJ	98.1 U
2-Amino-4,6-dinitrotoluene	99.2 U	99.7 U	98.2 U	99.9 U	97.1 U	99.9 U	99.7 U	97.9 U	97.3 U	97.8 U	98.4 U	100 U	99.1 U	99.2 U	99.3 U	100 U	99.4 U	97.6 U	98.1 U
2-Nitrotoluene	99.2 U	99.7 U	98.2 U	99.9 U	97.1 U	99.9 U	99.7 U	97.9 U	97.3 U	97.8 U	98.4 U	100 U	99.1 U	99.2 U	99.3 U	100 U	99.4 U	97.6 U	98.1 U
3-Nitrotoluene	99.2 U	99.7 U	98.2 U	99.9 U	97.1 U	99.9 U	99.7 U	97.9 U	97.3 U	97.8 U	98.4 U	100 U	99.1 U	99.2 U	99.3 U	100 U	99.4 U	97.6 U	98.1 U
4-Amino-2,6-dinitrotoluene	99.2 U	99.7 U	98.2 U	99.9 U	97.1 U	99.9 U	99.7 U	97.9 U	97.3 U	97.8 U	98.4 U	100 U	99.1 U	99.2 U	99.3 U	100 U	99.4 U	97.6 U	98.1 U
4-Nitrotoluene	99.2 U	99.7 U	98.2 U	99.9 U	97.1 U	99.9 U	99.7 U	97.9 U	97.3 U	97.8 U	98.4 U	100 U	99.1 U	99.2 U	99.3 U	100 U	99.4 U	97.6 U	98.1 U
HMX	99.2 U	99.7 U	98.2 U	99.9 U	97.1 U	99.9 U	99.7 U	97.9 U	97.3 U	97.8 U	98.4 U	100 U	99.1 U	99.2 U	99.3 U	100 U	99.4 U	97.6 U	98.1 U
Nitrobenzene	99.2 U	99.7 U	98.2 U	99.9 U	97.1 U	99.9 U	99.7 U	97.9 U	97.3 U	97.8 U	98.4 U	100 U	99.1 U	99.2 U	99.3 U	100 U	99.4 U	97.6 UJ	98.1 U
Nitroglycerin	99.2 U	99.7 U	98.2 U	99.9 U	97.1 U	99.9 U	99.7 U	97.9 U	97.3 U	97.8 U	98.4 U	100 U	99.1 U	99.2 U	99.3 U	100 U	99.4 U	97.6 U	98.1 U
PETN	99.2 U	99.7 U	98.2 U	99.9 U	97.1 U	99.9 U	99.7 U	97.9 U	97.3 U	97.8 U	98.4 U	100 U	99.1 U	99.2 U	99.3 U	100 U	99.4 U	97.6 U	98.1 U
Perchlorate	2.1 U	2.3 U	2.4 U	2.1 U	2.3 U	2.2 U	2.4	200	300	38	2.3 U	2.2 U	2.2 U	2.1 U	2.1 U	2.3 U	2.2 U	2.2 U	2.2 U
RDX	99.2 U	99.7 U	98.2 U	99.9 U	97.1 U	99.9 U	99.7 U	97.9 U	97.3 U	97.8 U	98.4 U	100 U	99.1 U	99.2 U	99.3 U	100 U	99.4 U	97.6 U	98.1 U
Tetryl	99.2 U	99.7 UJ	98.2 UJ	99.9 U	97.1 U	99.9 UJ	99.7 UJ	97.9 UJ	97.3 U	97.8 U	98.4 U	100 U	99.1 UJ	99.2 UJ	99.3 UJ	100 UJ	99.4 UJ	97.6 U	98.1 U
Total Metals (MG/KG)																			
Antimony	1.52 J	0.394 U	0.777 J	1.14 J	0.646 J	0.681 J	0.589 J	0.68 J	0.592 J	0.462 U	0.397 U	1.35 J	0.952 J	0.393 U	0.4 U	0.417 U	1.57 J	0.676 J	0.779 J
Arsenic	5.41	0.25 J	0.522	4.04	4.37	6.75	2.31	2.64	3.47	2.37	7.81	9.76	1.19	0.805	1.09	0.251 J	0.697	5.31	6.19
Barium	6.17	2.96	9.41	7.6	3.79	10.4	6.31	6.72	5.55	4.58	3.19	7.35	5.04 J	2.96 J	4.67 J	6.25	11.3	6.09	6.32
Cadmium	0.28 J	0.0394 U	0.322	0.757	0.748	1.38	0.415	0.549	0.557	0.488	0.135 J	0.695	0.424	0.143 J	0.322	0.05 J	0.252	0.0957 J	0.273 J
Chromium	6.49 U	3.53 J	6.41 J	6.85 J	6.08 J	4.87 J	4.23 J	5.99 J	5.83 J	4	3.22	6.1	5.48 J	3.17 J	4.42 J	2.3 J	9.39 J	7 U	4.73 U
Copper	1.97	0.394 U	42.6	5.21	2.27	2.17	2.06	2.12	2.05	1.58 J	0.653 J	2.38	2.23	0.873 J	1.73	0.417 U	1.63	3.25	6.59
Lead	28.4 J	2.85 J	27.5 J	14.2 J	3.37 J	1.82	6.49	3.78 J	3.65 J	4.12	2.92	31.7	22.6 J	3.02	16	3.93 J	16.8 J	10.5 J	18.5 J
Mercury	0.0224 J	0.0212 U	0.0265 J	0.0201 U	0.0212 U	0.0209 U	0.0212 U	0.0207 U	0.0257 J	0.0234 U	0.021 U	0.0209 U	0.0211 U	0.0199 U	0.0208 U	0.0216 U	0.0206 U	0.0224 U	0.033 J
Selenium	0.415 J	0.305 J	0.486	0.391 J	0.461	0.431 UJ	0.396 UJ	0.411	0.495	0.416 J	0.354 J	0.49 J	0.465	0.307 J	0.302 J	0.271 J	0.477	0.195 J	0.477
Silver	0.307 J	0.197 U	0.219 U	0.352 J	0.265 J	0.357 J	0.185 U	0.269 J	0.376 J	0.712 J	0.298 J	0.68 J	0.328 J	0.196 U	0.346 J	0.208 U	0.202 U	0.209 U	0.289 J
Zinc	12.4 U	1.79 J	65.9 J	47 J	33.5 J	28.4 J	15 J	20 J	21 J	12.9	3.39	15.5	12.8	2.82	19.1	2.37 J	11.2 J	6.97 U	12.6 U
Wet Chemistry (PCT)	NA	NA	NA	NA	NA	NA	NA	NA	NA	NA	NA	NA	NA	NA	NA	NA	NA	NA	NA
% Solids	93.4	87.2	86.1	94.2	93.4	91.9	93.6	94.9	94.8	83.3	93.6	92.8	92.9	93.4	93.9	88.6	91.2	89.1	92.8

Notes:

J - Analyte present, value may or may not be accurate or precise
NA - Not analyzed
R - Unreliable Result
U - The material was analyed for, but not detected
UJ - Analyte not detected, quantitation limit may be inaccurate
Pct - Percent

Appendix I
UXO-08 Surface Soil Raw Analytical Results
December 2008

Station ID	-SS119	MR08-SS120	MR08-SS121	MR08-SS122	MR08-SS123	MR08-SS124	MR08-SS125	MR08-SS126	MR08-SS127	MR08-SS128	MR08-SS129		MR08-SS130	MR08-SS131	MR08-SS132	MR08-SS133
Sample ID	MR08-SS119D-08D	MR08-SS120-08D	MR08-SS121-08D	MR08-SS122-08D	MR08-SS123-08D	MR08-SS124-08D	MR08-SS125-08D	MR08-SS126-08D	MR08-SS127-08D	MR08-SS128-08D	MR08-SS129-08D	MR08-SS129D-08D	MR08-SS130-08D	MR08-SS131-08D	MR08-SS132-08D	MR08-SS133-08D
Sample Date	12/15/08	12/15/08	12/10/08	12/15/08	12/05/08	12/10/08	12/05/08	12/16/08	12/16/08	12/09/08	12/09/08	12/09/08	12/16/08	12/16/08	12/16/08	12/17/08
Chemical Name																
Volatile Organic Compounds (UG/KG)																
1,1,1-Trichloroethane	12 U	14 U	14 U	7.9 U	10 U	11 U	9.3 UJ	12 UJ	14 U	24 U	11 U	21 U	10 UJ	11 UJ	9.8 UJ	11 U
1,1,2,2-Tetrachloroethane	12 U	14 U	14 UJ	7.9 UJ	10 U	11 U	9.3 UJ	12 UJ	14 U	24 U	11 U	21 U	10 UJ	11 UJ	9.8 UJ	11 U
1,1,2-Trichloro-1,2,2-trifluoroethane(Freon-113)	12 U	14 U	14 U	7.9 U	10 U	11 U	9.3 UJ	12 UJ	14 U	24 U	11 U	21 U	10 UJ	11 UJ	9.8 UJ	11 U
1,1,2-Trichloroethane	12 U	14 U	14 U	7.9 U	10 U	11 U	9.3 UJ	12 UJ	14 U	24 U	11 U	21 U	10 UJ	11 UJ	9.8 UJ	11 U
1,1-Dichloroethane	12 U	14 U	14 U	7.9 U	10 U	11 U	9.3 UJ	12 UJ	14 U	24 U	11 U	21 U	10 UJ	11 UJ	9.8 UJ	11 U
1,1-Dichloroethene	12 U	14 U	14 U	7.9 U	10 U	11 U	9.3 UJ	12 UJ	14 U	24 U	11 U	21 U	10 UJ	11 UJ	9.8 UJ	11 U
1,2,4-Trichlorobenzene	12 U	14 U	14 UJ	7.9 UJ	10 U	11 U	9.3 UJ	12 UJ	14 U	24 U	11 U	21 U	10 UJ	11 UJ	9.8 UJ	11 U
1,2-Dibromo-3-chloropropane	5.9 U	7.1 U	6.9 UJ	4 UJ	5.2 U	5.6 U	4.6 UJ	5.8 UJ	7.2 U	12 U	5.6 U	11 U	5 UJ	5.5 UJ	4.9 UJ	5.4 U
1,2-Dibromoethane	12 U	14 U	14 U	7.9 U	10 U	11 U	9.3 UJ	12 UJ	14 U	24 U	11 U	21 U	10 UJ	11 UJ	9.8 UJ	11 U
1,2-Dichlorobenzene	12 U	14 U	14 UJ	7.9 UJ	10 U	11 U	9.3 UJ	12 UJ	14 U	24 U	11 U	21 U	10 UJ	11 UJ	9.8 UJ	11 U
1,2-Dichloroethane	12 U	14 U	14 U	7.9 U	10 U	11 U	9.3 UJ	12 UJ	14 U	24 U	11 U	21 U	10 UJ	11 UJ	9.8 UJ	11 U
1,2-Dichloropropane	12 U	14 U	14 U	7.9 U	10 U	11 U	9.3 UJ	12 UJ	14 U	24 U	11 U	21 U	10 UJ	11 UJ	9.8 UJ	11 U
1,3-Dichlorobenzene	12 U	14 U	14 UJ	7.9 UJ	10 U	11 U	9.3 UJ	12 UJ	14 U	24 U	11 U	21 U	10 UJ	11 UJ	9.8 UJ	11 U
1,4-Dichlorobenzene	12 U	14 U	14 UJ	7.9 UJ	10 U	11 U	9.3 UJ	12 UJ	14 U	24 U	11 U	21 U	10 UJ	11 UJ	9.8 UJ	11 U
2-Butanone	1.9 J	14 U	4.8 J	4.1 J	10 U	3.5 J	3.5 J	12 UJ	2.1 J	24 U	1.7 J	21 U	10 UJ	1.7 J	9.8 UJ	11 U
2-Hexanone	12 U	14 U	14 U	7.9 U	10 U	11 U	9.3 UJ	12 UJ	14 U	24 U	11 U	21 U	10 UJ	11 UJ	9.8 UJ	11 U
4-Methyl-2-pentanone	12 U	14 U	14 U	0.85 J	0.83 J	11 U	9.3 UJ	12 UJ	14 U	24 U	11 U	21 U	10 UJ	11 UJ	9.8 UJ	11 U
Acetone	12 U	14 U	37 U	26 U	28 U	24 U	27 UJ	10 J	26 U	25 U	11 U	21 U	13 J	43 J	9.8 UJ	12 U
Benzene	12 U	14 U	1.4 J	1.2 J	1.9 J	2 J	3.6 J	12 UJ	14 U	2.2 J	0.96 J	21 U	1 J	11 UJ	9.8 UJ	11 U
Bromodichloromethane	12 U	14 U	14 U	7.9 U	10 U	11 U	9.3 UJ	12 UJ	14 U	24 U	11 U	21 U	10 UJ	11 UJ	9.8 UJ	11 U
Bromoform	12 U	14 U	14 U	7.9 U	10 U	11 U	9.3 UJ	12 UJ	14 U	24 U	11 U	21 U	10 UJ	11 UJ	9.8 UJ	11 U
Bromomethane	12 U	14 U	14 U	7.9 U	10 U	11 U	9.3 UJ	12 UJ	14 U	24 U	11 U	21 U	10 UJ	11 UJ	9.8 UJ	11 U
Carbon disulfide	12 U	14 U	14 U	1.6 J	10 U	11 U	1.8 J	12 UJ	14 U	9 J	1.7 J	21 U	10 UJ	11 UJ	9.8 UJ	11 U
Carbon tetrachloride	12 U	14 U	14 U	7.9 U	10 U	11 U	9.3 UJ	12 UJ	14 U	24 U	11 U	21 U	10 UJ	11 UJ	9.8 UJ	11 U
Chlorobenzene	12 U	14 U	14 U	7.9 UJ	10 U	11 U	9.3 UJ	12 UJ	14 U	24 U	11 U	21 U	10 UJ	11 UJ	9.8 UJ	11 U
Chloroethane	12 U	14 U	14 U	7.9 U	10 U	11 U	9.3 UJ	12 UJ	14 U	24 U	11 U	21 U	10 UJ	11 UJ	9.8 UJ	11 U
Chloroform	12 U	14 U	14 U	7.9 U	10 U	11 U	9.3 UJ	12 UJ	14 U	24 U	11 U	21 U	10 UJ	11 UJ	9.8 UJ	11 U
Chloromethane	12 UJ	14 UJ	14 U	7.9 UJ	10 U	11 U	9.3 UJ	12 UJ	14 U	24 UJ	11 UJ	21 UJ	10 UJ	11 UJ	9.8 UJ	11 U
Cyclohexane	12 U	14 U	14 U	0.48 J	0.86 J	11 U	0.51 J	12 UJ	14 U	24 U	11 U	21 U	0.71 J	11 UJ	9.8 UJ	11 U
Dibromochloromethane	12 U	14 U	14 U	7.9 U	10 U	11 U	9.3 UJ	12 UJ	14 U	24 U	11 U	21 U	10 UJ	11 UJ	9.8 UJ	11 U
Dichlorodifluoromethane (Freon-12)	12 U	14 U	14 U	7.9 U	10 U	11 U	9.3 UJ	12 UJ	14 U	24 UJ	11 UJ	21 UJ	10 UJ	11 UJ	9.8 UJ	11 U
Ethylbenzene	2.8 J	14 U	3.1 J	3.2 J	2.7 J	1.6 J	2.4 J	1.9 J	1.8 J	2.4 J	2.4 J	21 U	1.7 J	11 UJ	9.8 UJ	11 U
Isopropylbenzene	12 U	14 U	14 U	7.9 UJ	10 U	11 U	9.3 UJ	12 UJ	14 U	24 U	11 U	21 U	10 UJ	11 UJ	9.8 UJ	11 U
Methyl acetate	12 U	14 U	14 U	7.9 U	10 U	11 U	9.3 UJ	12 UJ	14 U	24 U	11 U	21 U	10 UJ	11 UJ	9.8 UJ	11 U
Methyl-tert-butyl ether (MTBE)	12 U	14 U	14 U	7.9 U	10 U	11 U	9.3 UJ	12 UJ	14 U	24 U	11 U	21 U	10 UJ	11 UJ	9.8 UJ	11 U
Methylcyclohexane	12 U	14 U	0.63 J	0.42 J	0.92 J	0.66 J	0.48 J	0.48 J	14 U	0.77 J	0.56 J	21 U	0.86 J	11 UJ	9.8 UJ	11 U
Methylene chloride	12 U	14 U	14 U	7.9 U	10 U	11 U	9.3 UJ	12 UJ	14 U	24 U	11 U	21 U	10 UJ	11 UJ	9.8 UJ	11 U
Styrene	12 U	14 U	14 U	7.9 UJ	10 U	11 U	9.3 UJ	12 UJ	14 U	24 U	11 U	21 U	10 UJ	11 UJ	9.8 UJ	11 U
Tetrachloroethene	12 U	14 U	14 U	7.9 UJ	10 U	11 U	9.3 UJ	12 UJ	14 U	24 U	11 U	21 U	10 UJ	11 UJ	9.8 UJ	11 U
Toluene	12 U	14 U	2.3 J	2.1 J	2.6 J	2.1 J	4.6 J	1.1 J	14 U	3.2 J	11 U	21 U	1.7 J	11 UJ	9.8 UJ	11 U
Trichloroethene	12 U	14 U	14 U	7.9 UJ	10 U	11 U	9.3 UJ	12 UJ	14 U	24 U	11 U	21 U	10 UJ	11 UJ	9.8 UJ	11 U
Trichlorofluoromethane(Freon-11)	12 U	14 U	14 U	7.9 U	10 U	11 U	9.3 UJ	12 UJ	14 U	24 U	11 U	21 U	10 UJ	11 UJ	9.8 UJ	11 U
Vinyl chloride	12 UJ	14 UJ	14 U	7.9 UJ	10 U	11 U	9.3 UJ	12 UJ	14 U	24 UJ	6.7 J	21 UJ	10 UJ	11 UJ	9.8 UJ	11 U
Xylene, total	12 U	14 U	14 U	7.9 UJ	10 U	11 U	9.3 UJ	12 UJ	14 U	24 U	11 U	21 U	10 UJ	11 UJ	9.8 UJ	11 U
cis-1,2-Dichloroethene	12 U	14 U	14 U	7.9 U	10 U	11 U	9.3 UJ	12 UJ	14 U	24 U	11 U	21 U	10 UJ	11 UJ	9.8 UJ	11 U
cis-1,3-Dichloropropene	12 U	14 U	14 U	7.9 U	10 U	11 U	9.3 UJ	12 UJ	14 U	24 U	11 U	21 U	10 UJ	11 UJ	9.8 UJ	11 U
trans-1,2-Dichloroethene	12 U	14 U	14 U	7.9 U	10 U	11 U	9.3 UJ	12 UJ	14 U	24 U	11 U	21 U	10 UJ	11 UJ	9.8 UJ	11 U
trans-1,3-Dichloropropene	12 U	14 U	14 U	7.9 U	10 U	11 U	9.3 UJ	12 UJ	14 U	24 U	11 U	21 U	10 UJ	11 UJ	9.8 UJ	11 U
Semivolatile Organic Compounds (UG/KG)																
1,1-Biphenyl	360 UJ	350 UJ	360 U	370 UJ	360 U	370 U	380 U	350 UJ	360 U	360 U	350 U	350 U	360 U	390 U	360 U	380 U
2,2'-Oxybis(1-chloropropane)	360 UJ	350 UJ	360 U	370 UJ	360 U	370 U	380 U	350 UJ	360 U	360 U	350 U	350 U	360 U	390 U	360 U	380 U
2,4,5-Trichlorophenol	540 UJ	530 UJ	540 U	560 UJ	550 U	560 U	580 U	540 UJ	550 U	540 U	530 U	530 U	540 U	590 U	550 U	580 U
2,4,6-Trichlorophenol	540 UJ	530 UJ	540 U	560 UJ	550 U	560 U	580 U	540 UJ	550 U	540 U	530 U	530 U	540 U	590 U	550 U	580 U
2,4-Dichlorophenol	540 UJ	530 UJ	540 U	560 UJ	550 U	560 U	580 U	540 UJ	550 U	540 U	530 U	530 U	540 U	590 U	550 U	580 U
2,4-Dimethylphenol	540 UJ	530 UJ	540 U	560 UJ	550 U	560 U	580 U	540 UJ	550 UJ	540 U	530 U	530 U	540 UJ	590 UJ	550 UJ	580 UJ
2,4-Dinitrophenol	1,300 UJ	1,300 UJ	1,300 U	1,300 UJ	1,300 U	1,300 U	1,400 UJ	1,300 UJ	1,300 U	1,300 UJ	1,300 U	1,300 U	1,300 U	1,400 U	1,300 U	1,400 UJ
2,4-Dinitrotoluene	360 UJ	350 UJ	360 U	370 UJ	360 U	370 U	380 U	350 UJ	360 U	360 U	350 U	350 U	360 U	390 U	360 U	380 U
2,6-Dinitrotoluene	360 UJ	350 UJ	360 U	370 UJ	360 U	370 U	380 U	350 UJ	360 U	360 U	350 U	350 U	360 U	390 U	360 U	380 U
2-Chloronaphthalene	360 UJ	350 UJ	360 U	370 UJ	360 U	370 U	380 U	350 UJ	360 U	360 U	350 U	350 U	360 U	390 U	360 U	380 U
2-Chlorophenol	540 UJ	530 UJ	540 U	560 UJ	550 U	560 U	580 U	540 UJ	550 U	540 U	530 U	530 U	540 U	590 U	550 U	580 U
2-Methylnaphthalene	11 U	7.5 J	11 U	6.6 J	11 U	11 U	12 U	11 U	6.9 J	18	9.8 J	8.3 J	11 U	4.4 J	3 J	14 J
2-Methylphenol	650 UJ	640 UJ	650 U	670 UJ	660 U	670 U	690 U	640 UJ	660 U	650 U	640 U	640 U	650 U	710 U	660 U	700 U
2-Nitroaniline	540 UJ	530 UJ	540 U	560 UJ	550 U	560 U	580 U	540 UJ	550 U	540 U	530 U	530 U	540 U	590 U	550 U	580 U
2-Nitrophenol	650 UJ	640 UJ	650 U	670 UJ	660 U	670 U	690 U	640 UJ	660 U	650 U	640 U	640 U	650 U	710 U	660 U	700 U
3,3'-Dichlorobenzidine	540 UJ	530 UJ	540 U	560 UJ	550 UJ	560 U	580 U	540 UJ	550 U	540 U	530 UJ	530 UJ	540 U	590 U	550 U	580 UJ
3- and 4-Methylphenol	650 UJ	640 UJ	650 U	670 UJ	660 U	670 U	690 U	640 UJ	660 U	650 U	640 U	640 U	650 U	710 U	660 U	700 U
3-Nitroaniline	540 UJ	530 UJ	540 U	560 UJ	550 U	560 U	580 U	540 UJ	550 U	540 U	530 U	530 U	540 U	590 U	550 U	580 UJ
4,6-Dinitro-2-methylphenol	1,300 UJ	1,300 UJ	1,300 U	1,300 UJ	1,300 U	1,300 U	1,400 U	1,300 UJ	1,300 U	1,300 U	1,300 U	1,300 U	1,300 U	1,400 U	1,300 U	1,400 UJ
4-Bromophenyl-phenylether	360 UJ	350 UJ	360 U	370 UJ	360 U	370 U	380 U	350 UJ	360 U	360 U	350 U	350 U	360 U	390 U	360 U	380 U
4-Chloro-3-methylphenol	540 UJ	530 UJ	540 U	560 UJ	550 U	560 U	580 U	540 UJ	550 U	540 U	530 U	530 U	540 U	590 U	550 U	580 U
4-Chloroaniline	540 UJ	530 UJ	540 U	560 UJ	550 U	560 U	580 U	540 UJ	550 U	540 UJ	530 U	530 U	540 U	590 R	550 R	580 U
4-Chlorophenyl-phenylether	360 UJ	350 UJ	360 U	370 UJ	360 U	370 U	380 U	350 UJ	360 U	360 U	350 U	350 U	360 U	390 U	360 U	380 U
4-Nitroaniline	540 UJ	530 UJ	540 U	560 UJ	550 U	560 U	580 UJ	540 UJ	550 U	540 UJ	530 U	530 U	540 U	590 U	550 U	580 UJ
4-Nitrophenol	1,300 UJ	1,300 UJ	1,300 U	1,300 UJ	1,300 U	1,300 U	1,400 U	1,300 UJ	1,300 U	1,300 U	1,300 U	1,300 U	1,300 U	1,400 U	1,300 U	1,400 UJ
Acenaphthene	360 UJ	350 UJ	360 U	370 UJ	360 U	370 U	380 U	350 UJ	360 U	360 U	350 U	350 U	360 U	390 U	360 U	380 U
Acenaphthylene	360 UJ	350 UJ	360 U	370 UJ	360 U	370 U	380 U	350 UJ	360 U	360 U	350 U	350 U	360 U	390 U	360 U	380 U
Acetophenone	650 UJ	640 UJ	650 U	670 UJ	660 U	670 U	690 U	640 UJ	660 U	650 U	640 U	640 U	650 U	710 U	660 U	700 U
Anthracene	360 UJ	350 UJ	360 U	370 UJ	360 U	370 U	380 U	350 UJ	360 U	360 U	350 U	350 U	360 U	390 U	360 U	380 U

Appendix I
UXO-08 Surface Soil Raw Analytical Results
December 2008

Station ID	SS119	MR08-SS120	MR08-SS121	MR08-SS122	MR08-SS123	MR08-SS124	MR08-SS125	MR08-SS126	MR08-SS127	MR08-SS128	MR08-SS129		MR08-SS130	MR08-SS131	MR08-SS132	MR08-SS133
Sample ID	MR08-SS119D-08D	MR08-SS120-08D	MR08-SS121-08D	MR08-SS122-08D	MR08-SS123-08D	MR08-SS124-08D	MR08-SS125-08D	MR08-SS126-08D	MR08-SS127-08D	MR08-SS128-08D	MR08-SS129-08D	MR08-SS129D-08D	MR08-SS130-08D	MR08-SS131-08D	MR08-SS132-08D	MR08-SS133-08D
Sample Date	12/15/08	12/15/08	12/10/08	12/15/08	12/05/08	12/10/08	12/05/08	12/16/08	12/16/08	12/09/08	12/09/08	12/09/08	12/16/08	12/16/08	12/16/08	12/17/08
Chemical Name																
Atrazine	360 UJ	350 UJ	360 U	370 UJ	360 U	370 U	380 U	350 UJ	360 U	360 U	350 U	350 U	360 U	390 U	360 U	380 U
Benzaldehyde	540 UJ	530 UJ	540 UJ	560 UJ	550 UJ	560 UJ	580 UJ	540 UJ	550 UJ	540 UJ	530 UJ	530 UJ	540 UJ	590 UJ	550 UJ	580 UJ
Benzo(a)anthracene	11 U	11 U	11 UJ	17	3.7 J	11 UJ	12 U	11 U	11 U	11 U	11 U	5.9 J	16	40	11 U	32
Benzo(a)pyrene	11 U	11 U	11 U	11 UJ	11 U	11 U	12 U	11 U	11 U	11 U	11 U	10 U	46 J	41	11 U	35
Benzo(b)fluoranthene	11 U	11 U	11 UJ	11 U	11 U	11 UJ	12 U	11 U	11 U	11 U	11 U	10 U	11 U	86	11 U	54
Benzo(g,h,i)perylene	11 J	16	11 UJ	20 J	5.3 J	20 J	5.6 J	24	35	17	11 U	10 U	37	33	11 U	18 J
Benzo(k)fluoranthene	11 U	11 U	11 U	11 U	11 U	11 U	12 U	11 U	11 U	11 U	11 U	10 U	11 U	71	11 U	61 J
Butylbenzylphthalate	360 UJ	350 UJ	360 U	370 UJ	360 U	370 U	380 UJ	350 UJ	360 U	360 UJ	350 U	350 U	360 U	390 U	360 U	380 U
Caprolactam	540 UJ	530 UJ	540 U	560 UJ	550 U	560 U	580 U	540 UJ	550 U	540 U	530 U	530 U	540 U	590 U	550 U	580 U
Carbazole	540 UJ	530 UJ	540 U	560 UJ	550 U	560 U	580 U	540 UJ	550 U	540 UJ	530 U	530 U	540 U	590 U	550 U	580 UJ
Chrysene	360 UJ	350 UJ	360 U	370 UJ	360 U	370 U	380 U	350 UJ	360 U	360 U	350 U	350 U	360 U	390 U	360 U	380 U
Di-n-butylphthalate	360 UJ	350 UJ	360 U	370 UJ	360 U	370 U	380 U	350 UJ	360 U	360 U	350 U	350 U	360 U	390 U	360 U	380 U
Di-n-octylphthalate	360 UJ	350 UJ	360 U	370 UJ	360 U	370 U	380 UJ	350 UJ	360 U	360 UJ	350 R	350 U	360 U	390 UJ	360 UJ	380 U
Dibenz(a,h)anthracene	11 U	11 U	11 U	11 U	11 U	11 U	12 U	11 U	11 U	11 U	11 U	10 U	11 U	16	11 U	6 J
Dibenzofuran	360 UJ	350 UJ	360 U	370 UJ	360 U	370 U	380 U	350 UJ	360 U	360 U	350 U	350 U	360 U	390 U	360 U	380 U
Diethylphthalate	360 UJ	350 UJ	360 U	370 UJ	360 U	370 U	380 U	350 UJ	360 U	360 U	350 U	350 U	360 U	100 J	93 J	380 U
Dimethyl phthalate	360 UJ	350 UJ	360 U	370 UJ	360 U	370 U	380 U	350 UJ	360 U	360 U	350 U	350 U	360 U	390 U	360 U	380 U
Fluoranthene	11 U	11 U	11 U	11 U	4.2 J	11 U	2.6 J	11 U	11 U	14	4.9 J	10 U	11 U	93	11 U	68
Fluorene	11 U	11 U	11 U	11 U	11 U	11 U	12 U	11 U	11 U	11 U	11 U	10 U	11 U	12 U	11 U	12 U
Hexachlorobenzene	11 U	11 U	11 U	11 U	11 U	11 U	12 U	11 U	11 U	11 UJ	11 UJ	10 UJ	11 U	12 U	11 U	12 U
Hexachlorobutadiene	11 U	11 U	11 UJ	11 U	11 U	11 UJ	12 U	11 U	11 U	11 U	11 U	10 U	11 U	12 U	11 U	12 U
Hexachlorocyclopentadiene	11 UJ	11 U	11 U	11 U	11 UJ	11 U	12 UJ	11 UJ	11 U	11 UJ	11 UJ	10 UJ	11 UJ	12 UJ	11 UJ	12 UJ
Hexachloroethane	360 UJ	350 UJ	360 U	370 UJ	360 U	370 U	380 U	350 UJ	360 U	360 U	350 U	350 U	360 U	390 U	360 U	380 U
Indeno(1,2,3-cd)pyrene	11 U	11 U	11 UJ	11 U	11 U	11 UJ	12 U	11 U	11 U	4.9 J	11 U	10 U	39	33	11 U	18 J
Isophorone	360 UJ	350 UJ	360 U	370 UJ	360 U	370 U	380 U	350 UJ	360 U	360 U	350 U	350 U	360 U	390 U	360 U	380 U
Naphthalene	11 U	11 U	11 U	11 U	11 UJ	11 U	12 UJ	4.5 J	11 U	11 U	11 U	10 U	3.8 J	5.7 J	11 U	7.9 J
Nitrobenzene	360 UJ	350 UJ	360 UJ	370 UJ	360 UJ	370 UJ	380 UJ	350 UJ	360 U	360 UJ	350 UJ	350 UJ	360 U	390 U	360 U	380 U
Pentachlorophenol	890 UJ	870 UJ	880 U	910 UJ	900 U	920 U	940 U	880 UJ	900 U	890 U	870 U	870 U	890 U	970 U	900 U	950 UJ
Phenanthrene	4.4 J	9.4 J	2.4 J	9.6 J	3.2 J	11 UJ	2.1 J	12 J	16 J	41	9.8 J	3.6 J	14 J	28	15 U	60
Phenol	540 UJ	530 UJ	540 U	560 UJ	550 U	560 U	580 U	540 UJ	550 U	540 U	530 U	530 U	540 U	590 U	550 U	580 U
Pyrene	3.8 J	3.7 J	11 U	28 J	4.1 J	11 U	2.8 J	6.5 J	38	26	7.1 J	6.6 J	29	82	11 U	56
bis(2-Chloroethoxy)methane	360 UJ	350 UJ	360 U	370 UJ	360 U	370 U	380 U	350 UJ	360 U	360 U	350 U	350 U	360 U	390 U	360 U	380 U
bis(2-Chloroethyl)ether	360 UJ	350 UJ	360 U	370 UJ	360 U	370 U	380 U	350 UJ	360 U	360 U	350 U	350 U	360 U	390 U	360 U	380 U
bis(2-Ethylhexyl)phthalate	220 J	180 J	360 U	340 J	350 J	370 U	380 UJ	180 J	360 U	180 J	540 J	300 J	270 J	150 J	120 J	380 U
n-Nitroso-di-n-propylamine	360 UJ	350 UJ	360 U	370 UJ	360 U	370 U	380 U	350 UJ	360 U	360 U	350 U	350 U	360 U	390 U	360 U	380 U
n-Nitrosodiphenylamine	720 UJ	700 UJ	710 U	730 UJ	720 U	740 U	760 U	710 UJ	720 U	710 U	700 U	700 U	720 U	780 U	730 U	770 U
Explosives (UG/KG)																
% Solids	NA	NA	NA	NA	NA	NA	NA	NA	NA	NA	NA	NA	NA	NA	NA	NA
1,3,5-Trinitrobenzene	100 U	100 U	99 U	99.9 U	99.5 U	99.2 U	98.7 U	100 U	99.9 U	99.6 U	99.7 U	100 U	98.8 U	97.9 U	99.9 U	99.7 U
1,3-Dinitrobenzene	100 U	100 U	99 U	99.9 U	99.5 U	99.2 U	98.7 U	100 U	99.9 U	99.6 U	99.7 U	100 U	98.8 U	97.9 U	99.9 U	99.7 U
2,4,6-Trinitrotoluene	100 U	100 U	99 U	99.9 U	99.5 U	99.2 U	98.7 U	100 U	99.9 U	99.6 U	99.7 U	100 U	98.8 U	97.9 U	99.9 U	99.7 U
2,4-Dinitrotoluene	100 U	100 U	99 U	99.9 U	99.5 U	99.2 U	98.7 U	100 U	99.9 U	99.6 U	99.7 U	100 U	98.8 UJ	97.9 UJ	99.9 UJ	99.7 UJ
2,6-Dinitrotoluene	100 U	100 U	99 U	99.9 UJ	99.5 U	99.2 U	98.7 U	100 UJ	99.9 UJ	99.6 U	99.7 U	100 U	98.8 U	97.9 U	99.9 U	99.7 U
2-Amino-4,6-dinitrotoluene	100 U	100 U	99 U	99.9 J	99.5 U	99.2 U	98.7 U	100 U	99.9 U	99.6 U	99.7 U	100 U	98.8 U	97.9 U	99.9 U	99.7 U
2-Nitrotoluene	100 U	100 U	99 U	99.9 U	99.5 U	99.2 U	98.7 U	100 U	99.9 U	99.6 U	99.7 U	100 U	98.8 U	97.9 U	99.9 U	99.7 U
3-Nitrotoluene	100 U	100 U	99 U	99.9 U	99.5 U	99.2 U	98.7 U	100 U	99.9 U	99.6 U	99.7 U	100 U	98.8 U	97.9 U	99.9 U	99.7 U
4-Amino-2,6-dinitrotoluene	100 U	100 U	99 U	99.9 U	99.5 U	99.2 U	98.7 U	100 U	99.9 U	99.6 U	99.7 U	100 U	98.8 U	97.9 U	99.9 U	99.7 U
4-Nitrotoluene	100 U	100 U	99 U	99.9 U	99.5 U	99.2 U	98.7 U	100 U	99.9 U	99.6 U	99.7 U	100 U	98.8 U	97.9 U	99.9 U	99.7 U
HMX	100 U	100 U	99 U	99.9 U	99.5 U	99.2 U	98.7 U	100 U	99.9 U	99.6 U	99.7 U	100 U	98.8 U	97.9 U	99.9 U	99.7 U
Nitrobenzene	100 U	100 U	99 U	99.9 UJ	99.5 U	99.2 U	98.7 U	100 UJ	99.9 UJ	99.6 U	99.7 U	100 U	98.8 U	97.9 U	99.9 U	99.7 U
Nitroglycerin	100 U	100 U	99 U	99.9 U	99.5 U	99.2 U	98.7 U	100 U	99.9 U	99.6 U	99.7 U	100 U	98.8 U	97.9 U	99.9 U	99.7 U
PETN	100 U	100 U	99 U	99.9 U	99.5 U	99.2 U	98.7 U	100 U	99.9 U	99.6 U	99.7 U	100 U	98.8 U	97.9 U	99.9 U	99.7 U
Perchlorate	2.2 U	2.2 U	2.2 U	2.3 U	2.2 U	2.1 U	2.3 U	2.1 U	2.2 U	2.1 U	2.1 U	2.1 U	3.1 U	2.5 U	2.3 U	2.5 U
RDX	100 U	100 U	99 U	99.9 U	99.5 U	99.2 U	98.7 U	100 U	99.9 U	99.6 U	99.7 U	100 U	98.8 U	97.9 U	99.9 U	99.7 U
Tetryl	100 U	100 U	99 U	99.9 U	99.5 UJ	99.2 U	98.7 UJ	100 U	99.9 U	99.6 UJ	99.7 UJ	100 UJ	98.8 U	97.9 U	99.9 U	99.7 U
Total Metals (MG/KG)																
Antimony	1.29 J	1.44 J	3.57	1.31 J	0.399 U	1.26 J	1.51 J	3.23	2.04	0.398 U	0.398 U	0.398 U	1.04 J	4.6	0.435 U	0.647 J
Arsenic	5.02	0.596	1.14	5.73	0.434	1.93	1.21	0.24 J	6.4	6.49	6.17 J	0.256 J	8.41	9.53	8.32	0.793
Barium	9.63	10.6	15.2 J	12.1	6.89	8.15 J	15.5	14.6	12.1	4.15 J	3.86 J	2.41 J	5.61	14.8	4.31	8.76
Cadmium	0.539	0.297	0.428	0.432 J	0.19	0.353	0.164 J	0.537	0.489	0.432	0.193	0.0398 U	0.497	0.909	0.0435 U	0.22
Chromium	6.41 U	5.71 U	10.8 J	8.46 U	6.41 J	6.34 J	14.2 J	12.8 U	11.8 U	4.92 J	3.5 J	2.45 J	6.27	9.54	4.16	3.96
Copper	4.93	6.25	3.52	2.84	1.31 J	1.89	2.23	5.63	2.71	1.23 J	0.621 J	0.398 U	2.76	10.8	0.867 J	7.6
Lead	29.3 J	26.8 J	45.3 J	33.2 J	4.29 J	22.3 J	27.4 J	8.79 J	67.3 J	1.13 J	1.64 J	1.4 J	30.6	114	1.75	32.4
Mercury	0.0204 U	0.0239 J	0.022 J	0.0215 U	0.021 U	0.0209 U	0.022 U	0.0212 U	0.0212 U	0.0208 U	0.0207 U	0.0211 U	0.0229 U	0.0231 U	0.0223 U	0.0299 J
Selenium	0.461	0.494	0.545	0.349 J	0.25 J	0.395 J	0.412 J	0.425	0.572	0.301 J	0.623	0.104 U	0.393 J	0.326 J	0.11 UJ	0.207 J
Silver	0.195 J	0.273 J	0.205 U	0.522 J	0.2 U	0.372 J	0.339 J	0.329 J	0.278 J	0.449 J	0.295 J	0.199 U	0.532 J	0.46 J	0.217 U	0.404 J
Zinc	18.7 U	18.2 U	26.1	18.9 U	5.79 J	12	12.6 J	29.2 U	21.2 U	10.3	3.18	0.432 J	13.7	60	1.23 J	31.2
Wet Chemistry (PCT)	NA	NA	NA	NA	NA	NA	NA	NA	NA	NA	NA	NA	NA	NA	NA	NA
% Solids	93.1	93.4	93.2	91.4	93.2	93.6	89.1	93.9	90.6	95	95.4	94.3	87.1	82.1	84.6	71.7

Notes:

J - Analyte present, value may or may not be accurate or precise
NA - Not analyzed
R - Unreliable Result
U - The material was analyed for, but not detected
UJ - Analyte not detected, quantitation limit may be inaccurate
Pct - Percent

Appendix I
UXO-08 Subsurface Soil Raw Analytical Results
December 2008

Station ID	MR08-IS050	MR08-IS051	MR08-IS052	MR08-IS053	MR08-IS054	MR08-IS055	MR08-IS056	MR08-IS057	MR08-IS058	MR08-IS059		MR08-IS060	MR08-IS061	MR08-IS062	MR08-IS063	MR08-IS064	MR08-IS065	MR08-IS066
Sample ID	MR08-IS050-5-6-08D	MR08-IS051-5-6-08D	MR08-IS052-5-6-08D	MR08-IS053-5-6-08D	MR08-IS054-6-7-08D	MR08-IS055-4-5-08D	MR08-IS056-2-3-08D	MR08-IS057-2-3-08D	MR08-IS058-2-3-08D	MR08-IS059-3-4-08D	MR08-IS059D-3-4-08D	MR08-IS060-2-3-08D	MR08-IS061-2-3-08D	MR08-IS062-2-3-08D	MR08-IS063-2-3-08D	MR08-IS064-2-3-08D	MR08-IS065-1-2-08D	MR08-IS066-2-3-08D
Sample Date	12/02/08	12/02/08	12/02/08	12/02/08	12/02/08	12/02/08	12/06/08	12/06/08	12/06/08	12/06/08	12/06/08	12/06/08	12/06/08	12/06/08	12/06/08	12/06/08	12/06/08	12/06/08
Chemical Name																		
Volatile Organic Compounds (UG/KG)																		
1,1,1-Trichloroethane	12 U	9.9 U	12 U	14 U	13 U	17 U	21 U	22 U	10 U	17 U	26 U	12 U	10 U	12 U	19 U	20 U	18 U	40 U
1,1,2,2-Tetrachloroethane	12 U	9.9 U	12 U	14 U	13 U	17 U	21 U	22 U	10 U	17 U	26 U	12 U	10 U	12 U	19 U	20 U	18 U	40 U
1,1,2-Trichloro-1,2,2-trifluoroethane(Freon-113)	12 U	9.9 U	12 U	14 U	13 U	17 U	21 U	22 U	10 U	17 U	26 U	12 U	10 U	12 U	19 U	20 U	18 U	40 U
1,1,2-Trichloroethane	12 U	9.9 U	12 U	14 U	13 U	17 U	21 U	22 U	10 U	17 U	26 U	12 U	10 U	12 U	19 U	20 U	18 U	40 U
1,1-Dichloroethane	12 U	9.9 U	12 U	14 U	13 U	17 U	21 U	22 U	10 U	17 U	26 U	12 U	10 U	12 U	19 U	20 U	18 U	40 U
1,1-Dichloroethene	12 U	9.9 U	12 U	14 U	13 U	17 U	21 U	22 U	10 U	17 U	26 U	12 U	10 U	12 U	19 U	20 U	18 U	40 U
1,2,4-Trichlorobenzene	12 U	9.9 U	12 U	14 U	13 U	17 U	21 U	22 U	10 U	17 U	26 U	12 U	10 U	12 U	19 U	20 U	18 U	40 UJ
1,2-Dibromo-3-chloropropane	5.8 U	4.9 U	5.9 U	7.1 U	6.6 U	8.7 U	10 U	11 U	5.2 U	8.7 U	13 U	5.9 U	5 U	5.8 U	9.5 U	10 U	9 U	20 UJ
1,2-Dibromoethane	12 U	9.9 U	12 U	14 U	13 U	17 U	21 U	22 U	10 U	17 U	26 U	12 U	10 U	12 U	19 U	20 U	18 U	40 U
1,2-Dichlorobenzene	12 U	9.9 U	12 U	14 U	13 U	17 U	21 U	22 U	10 U	17 U	26 U	12 U	10 U	12 U	19 U	20 U	18 U	40 UJ
1,2-Dichloroethane	12 U	9.9 U	12 U	14 U	13 U	17 U	21 U	22 U	10 U	17 U	26 U	12 U	10 U	12 U	19 U	20 U	18 U	40 U
1,2-Dichloropropane	12 U	9.9 U	12 U	14 U	13 U	17 U	21 U	22 U	10 U	17 U	26 U	12 U	10 U	12 U	19 U	20 U	18 U	40 U
1,3-Dichlorobenzene	12 U	9.9 U	12 U	14 U	13 U	17 U	21 U	22 U	10 U	17 U	26 U	12 U	10 U	12 U	19 U	20 U	18 U	40 UJ
1,4-Dichlorobenzene	12 U	9.9 U	12 U	14 U	13 U	17 U	21 U	22 U	10 U	17 U	26 U	12 U	10 U	12 U	19 U	20 U	18 U	40 UJ
2-Butanone	12 U	9.9 U	12 U	14 U	13 U	17 U	21 U	22 U	10 U	17 U	26 U	12 U	10 U	12 U	19 U	20 U	18 U	40 U
2-Hexanone	12 U	9.9 U	12 U	14 U	13 U	17 U	21 U	22 U	10 U	17 U	26 U	12 U	10 U	12 U	19 U	20 U	18 U	40 U
4-Methyl-2-pentanone	12 U	9.9 U	12 U	14 U	13 U	17 U	21 U	22 U	10 U	17 U	26 U	12 U	10 U	12 U	19 U	20 U	18 U	40 U
Acetone	46	9.9 U	18 U	16 U	62	21 U	50	22 U	12 U	17 U	26 U	12 U	10 U	12 U	19 U	20 U	31 U	100 J
Benzene	12 U	9.9 U	12 U	14 U	13 U	17 U	21 U	22 U	10 U	17 U	26 U	12 U	10 U	12 U	19 U	20 U	18 U	40 U
Bromodichloromethane	12 U	9.9 U	12 U	14 U	13 U	17 U	21 U	22 U	10 U	17 U	26 U	12 U	10 U	12 U	19 U	20 U	18 U	40 U
Bromoform	12 U	9.9 U	12 U	14 U	13 U	17 U	21 U	22 U	10 U	17 U	26 U	12 U	10 U	12 U	19 U	20 U	18 U	40 U
Bromomethane	12 UJ	9.9 UJ	12 UJ	14 UJ	13 UJ	17 UJ	21 UJ	22 UJ	10 UJ	17 U	26 U	12 U	10 U	12 U	19 U	20 U	18 U	40 U
Carbon disulfide	12 U	9.9 U	12 U	14 U	13 U	17 U	21 U	22 U	10 U	17 U	26 U	12 U	10 U	12 U	19 U	20 U	18 U	40 U
Carbon tetrachloride	12 U	9.9 U	12 U	14 U	13 U	17 U	21 U	22 U	10 U	17 U	26 U	12 U	10 U	12 U	19 U	20 U	18 U	40 U
Chlorobenzene	12 U	9.9 U	12 U	14 U	13 U	17 U	21 U	22 U	10 U	17 U	26 U	12 U	10 U	12 U	19 U	20 U	18 U	40 U
Chloroethane	12 U	9.9 U	12 U	14 U	13 U	17 U	21 UJ	22 UJ	10 UJ	17 U	26 U	12 U	10 U	12 U	19 U	20 U	18 U	40 U
Chloroform	12 U	9.9 U	12 U	2.4 J	3.9 J	17 U	21 U	22 U	10 U	17 U	26 U	12 U	10 U	12 U	19 U	20 U	18 U	40 U
Chloromethane	12 U	9.9 U	12 U	14 U	13 U	17 U	21 U	22 U	10 U	17 U	26 U	12 U	10 U	12 U	19 U	20 U	18 U	40 U
Cyclohexane	12 U	9.9 U	12 U	14 U	13 U	17 U	21 U	22 U	10 U	17 U	26 U	12 U	10 U	12 U	19 U	20 U	18 U	40 U
Dibromochloromethane	12 U	9.9 U	12 U	14 U	13 U	17 U	21 U	22 U	10 U	17 U	26 U	12 U	10 U	12 U	19 U	20 U	18 U	40 U
Dichlorodifluoromethane (Freon-12)	12 U	9.9 U	12 U	14 U	13 U	17 U	21 U	22 U	10 U	17 U	26 U	12 U	10 U	12 U	19 U	20 U	18 U	40 UJ
Ethylbenzene	12 U	9.9 U	12 U	14 U	13 U	17 U	21 U	22 U	10 U	17 U	26 U	12 U	10 U	12 U	19 U	20 U	18 U	40 U
Isopropylbenzene	12 U	9.9 U	12 U	14 U	13 U	17 U	21 U	22 U	10 U	17 U	26 U	12 U	10 U	12 U	19 U	20 U	18 U	40 U
Methyl acetate	12 U	9.9 U	12 U	14 U	13 U	17 U	21 U	22 U	10 U	17 U	26 U	12 U	10 U	12 U	19 U	20 U	18 U	40 U
Methyl-tert-butyl ether (MTBE)	12 U	9.9 U	12 U	14 U	13 U	17 U	21 U	22 U	10 U	17 U	26 U	12 U	10 U	12 U	19 U	20 U	18 U	40 U
Methylcyclohexane	12 U	9.9 U	12 U	14 U	13 U	17 U	21 U	22 U	10 U	17 U	26 U	12 U	10 U	12 U	19 U	20 U	18 U	40 U
Methylene chloride	12 U	9.9 U	12 U	14 U	13 U	17 U	21 U	22 U	10 U	17 U	26 U	12 U	10 U	12 U	19 U	20 U	18 U	40 U
Styrene	12 U	9.9 U	12 U	14 U	13 U	17 U	21 U	22 U	10 U	17 U	26 U	12 U	10 U	12 U	19 U	20 U	18 U	40 U
Tetrachloroethene	12 U	9.9 U	12 U	14 U	13 U	17 U	21 U	22 U	10 U	17 U	26 U	12 U	10 U	12 U	19 U	20 U	18 U	40 U
Toluene	12 U	9.9 U	12 U	14 U	13 U	17 U	21 U	22 U	10 U	17 U	26 U	12 U	10 U	12 U	19 U	20 U	18 U	40 U
Trichloroethene	12 U	9.9 U	12 U	14 U	13 U	17 U	21 U	22 U	10 U	17 U	26 U	12 U	10 U	12 U	19 U	20 U	18 U	40 U
Trichlorofluoromethane(Freon-11)	12 U	9.9 U	12 U	14 U	13 U	17 U	21 U	22 U	10 U	17 U	26 U	12 U	10 U	12 U	19 U	20 U	18 U	40 U
Vinyl chloride	12 U	9.9 U	12 U	14 U	13 U	17 U	21 U	22 U	10 U	17 U	26 U	12 U	10 U	12 U	19 U	20 U	18 U	40 U
Xylene, total	12 U	9.9 U	12 U	14 U	13 U	17 U	21 U	22 U	10 U	17 U	26 U	12 U	10 U	12 U	19 U	20 U	18 U	40 U
cis-1,2-Dichloroethene	12 U	9.9 U	12 U	14 U	13 U	17 U	21 U	22 U	10 U	17 U	26 U	12 U	10 U	12 U	19 U	20 U	18 U	40 U
cis-1,3-Dichloropropene	12 U	9.9 U	12 U	14 U	13 U	17 U	21 U	22 U	10 U	17 U	26 U	12 U	10 U	12 U	19 U	20 U	18 U	40 U
trans-1,2-Dichloroethene	12 U	9.9 U	12 U	14 U	13 U	17 U	21 U	22 U	10 U	17 U	26 U	12 U	10 U	12 U	19 U	20 U	18 U	40 U
trans-1,3-Dichloropropene	12 U	9.9 U	12 U	14 U	13 U	17 U	21 U	22 U	10 U	17 U	26 U	12 U	10 U	12 U	19 U	20 U	18 U	40 U
Semivolatile Organic Compounds (UG/KG)																		
1,1-Biphenyl	420 U	400 U	380 U	400 U	420 U	430 U	430 U	370 U	380 U	380 U	380 U	370 U	380 U	370 U	380 U	370 U	400 U	480 U
2,2'-Oxybis(1-chloropropane)	420 U	400 U	380 U	400 U	420 U	430 U	430 U	370 U	380 U	380 U	380 U	370 U	380 U	370 U	380 U	370 U	400 U	480 U
2,4,5-Trichlorophenol	640 U	600 U	580 U	600 U	630 U	640 U	650 U	570 U	570 U	570 U	570 U	560 U	580 U	560 U	570 U	560 U	610 U	730 U
2,4,6-Trichlorophenol	640 U	600 U	580 U	600 U	630 U	640 U	650 U	570 U	570 U	570 U	570 U	560 U	580 U	560 U	570 U	560 U	610 U	730 U
2,4-Dichlorophenol	640 U	600 U	580 U	600 U	630 U	640 U	650 U	570 U	570 U	570 U	570 U	560 U	580 U	560 U	570 U	560 U	610 U	730 U
2,4-Dimethylphenol	640 U	600 U	580 U	600 U	630 U	640 U	650 U	570 U	570 U	570 U	570 U	560 U	580 U	560 U	570 U	560 U	610 U	730 U
2,4-Dinitrophenol	1,500 U	1,400 U	1,400 U	1,400 U	1,500 U	1,500 U	1,600 UJ	1,400 U	1,400 U	1,400 U	1,400 U	1,400 U	1,400 U	1,400 U	1,400 U	1,300 UJ	1,500 UJ	1,700 U
2,4-Dinitrotoluene	420 U	400 U	380 U	400 U	420 U	430 U	430 U	370 U	380 U	380 U	380 U	370 U	380 U	370 U	380 U	370 U	400 U	480 U
2,6-Dinitrotoluene	420 U	400 U	380 U	400 U	420 U	430 U	430 U	370 U	380 U	380 U	380 U	370 U	380 U	370 U	380 U	370 U	400 U	480 U
2-Chloronaphthalene	420 U	400 U	380 U	400 U	420 U	430 U	430 U	370 U	380 U	380 U	380 U	370 U	380 U	370 U	380 U	370 U	400 U	480 U
2-Chlorophenol	640 U	600 U	580 U	600 U	630 U	640 U	650 U	570 U	570 U	570 U	570 U	560 U	580 U	560 U	570 U	560 U	610 U	730 U
2-Methylnaphthalene	13 U	12 U	12 U	12 U	12 U	13 U	13 U	11 U	11 U	11 U	11 U	11 U	12 U	11 U	11 U	11 U	12 U	14 UJ
2-Methylphenol	760 U	720 U	690 U	720 U	760 U	770 U	780 U	680 U	680 U	680 U	680 U	680 U	700 U	680 U	690 U	670 U	740 U	870 U
2-Nitroaniline	640 U	600 U	580 U	600 U	630 U	640 U	650 U	570 U	570 U	570 U	570 U	560 U	580 U	560 U	570 U	560 U	610 U	730 U
2-Nitrophenol	760 U	720 U	690 U	720 U	760 U	770 U	780 U	680 U	680 U	680 U	680 U	680 U	700 U	680 U	690 U	670 U	740 U	870 U
3,3'-Dichlorobenzidine	640 U	600 U	580 U	600 U	630 U	640 U	650 U	570 U	570 U	570 U	570 U	560 U	580 U	560 UJ	570 UJ	560 U	610 U	730 U
3- and 4-Methylphenol	760 U	720 U	690 U	720 U	760 U	770 U	780 U	680 U	680 U	680 U	680 U	680 U	700 U	680 U	690 U	670 U	740 U	870 U
3-Nitroaniline	640 U	600 U	580 U	600 U	630 U	640 U	650 U	570 U	570 U	570 U	570 U	560 U	580 U	560 U	570 U	560 U	610 U	730 U
4,6-Dinitro-2-methylphenol	1,500 U	1,400 U	1,400 U	1,400 U	1,500 U	1,500 U	1,600 U	1,400 U	1,400 U	1,400 U	1,400 U	1,400 U	1,400 U	1,400 U	1,400 U	1,300 U	1,500 U	1,700 U
4-Bromophenyl-phenylether	420 U	400 U	380 U	400 U	420 U	430 U	430 U	370 U	380 U	380 U	380 U	370 U	380 U	370 U	380 U	370 U	400 U	480 U
4-Chloro-3-methylphenol	640 U	600 U	580 U	600 U	630 U	640 U	650 U	570 U	570 U	570 U	570 U	560 U	580 U	560 U	570 U	560 U	610 U	730 U
4-Chloroaniline	640 U	600 U	580 U	600 U	630 U	640 U	650 U	570 U	570 U	570 U	570 U	560 U	580 U	560 U	570 U	560 U	610 U	730 U
4-Chlorophenyl-phenylether	420 U	400 U	380 U	400 U	420 U	430 U	430 U	370 U	380 U	380 U	380 U	370 U	380 U	370 U	380 U	370 U	400 U	480 U
4-Nitroaniline	640 U	600 U	580 U	600 U	630 U	640 U	650 UJ	570 U	570 U	570 U	570 U	560 U	580 U	560 U	570 U	560 UJ	610 UJ	730 U
4-Nitrophenol	1,500 U	1,400 U	1,400 U	1,400 U	1,500 U	1,500 U	1,600 U	1,400 U	1,400 U	1,400 U	1,400 U	1,400 UJ	1,400 UJ	1,400 U	1,400 U	1,300 U	1,500 U	1,700 U
Acenaphthene	420 U	400 U	380 U	400 U	420 U	430 U	430 U	370 U	380 U	380 U	380 U	370 U	380 U	370 U	380 U	370 U	400 U	480 U
Acenaphthylene	420 U	400 U	380 U	400 U	420 U	430 U	430 U	370 U	380 U	380 U	380 U	370 U	380 U	370 U	380 U	370 U	400 U	480 U
Acetophenone	760 U	720 U	690 U	720 U	760 U	770 U	780 U	680 U	680 U	680 U	680 U	680 U	700 U	680 U	690 U	670 U	740 U	870 U
Anthracene	420 U	400 U	380 U	400 U	420 U	430 U	430 U	370 U	380 U	380 U	380 U	370 U	380 U	370 U	380 U	370 U	400 U	480 U
Atrazine	420 U	400 U	380 U	400 U	420 U	430 U	430 U	370 U	380 U	380 U	380 U	370 U	380 U	370 U	380 U	370 U	400 U	480 U
Benzaldehyde	640 UJ	600 UJ	580 UJ	600 UJ	630 UJ	640 UJ	650 UJ	570 UJ	570 UJ	570 UJ	570 UJ	560 UJ	580 UJ	560 UJ	570 UJ	560 UJ	610 UJ	730 UJ

Station ID	MR08-IS050	MR08-IS051	MR08-IS052	MR08-IS053	MR08-IS054	MR08-IS055	MR08-IS056	MR08-IS057	MR08-IS058	MR08-IS059		MR08-IS060	MR08-IS061	MR08-IS062	MR08-IS063	MR08-IS064	MR08-IS065	MR08-IS066
Sample ID	MR08-IS050-5-6-08D	MR08-IS051-5-6-08D	MR08-IS052-5-6-08D	MR08-IS053-5-6-08D	MR08-IS054-6-7-08D	MR08-IS055-4-5-08D	MR08-IS056-2-3-08D	MR08-IS057-2-3-08D	MR08-IS058-2-3-08D	MR08-IS059-3-4-08D	MR08-IS059D-3-4-08D	MR08-IS060-2-3-08D	MR08-IS061-2-3-08D	MR08-IS062-2-3-08D	MR08-IS063-2-3-08D	MR08-IS064-2-3-08D	MR08-IS065-1-2-08D	MR08-IS066-2-3-08D
Sample Date	12/02/08	12/02/08	12/02/08	12/02/08	12/02/08	12/02/08	12/06/08	12/06/08	12/06/08	12/06/08	12/06/08	12/06/08	12/06/08	12/06/08	12/06/08	12/06/08	12/06/08	12/06/08
Chemical Name																		
Benzo(a)anthracene	13 U	12 U	12 U	12 U	12 U	13 U	44	11 U	11 U	11 U	2.6 J	11 U	12 U	11 U	11 U	11 U	7.6 J	8.2 J
Benzo(a)pyrene	13 U	12 U	12 U	12 U	12 U	13 U	80	11 U	11 U	11 U	11 U	11 U	12 U	11 U	11 U	11 U	12 U	14 U
Benzo(b)fluoranthene	13 U	12 U	12 U	12 U	12 U	13 U	100	11 U	11 U	11 U	4.8 J	11 U	12 U	11 U	11 U	11 U	12 U	14 UJ
Benzo(g,h,i)perylene	13 U	12 U	12 U	12 U	12 U	13 U	120	11 U	11 U	11 U	3.3 J	11 U	12 U	11 U	11 U	11 U	12 UJ	14 UJ
Benzo(k)fluoranthene	13 U	12 U	12 U	12 U	12 U	13 U	64	11 U	11 U	11 U	4.4 J	11 U	12 U	11 U	11 U	11 U	12 U	14 U
Butylbenzylphthalate	420 U	400 U	380 U	400 U	420 U	430 U	430 UJ	370 U	380 U	380 U	380 U	370 U	380 U	370 U	380 U	370 UJ	400 UJ	480 U
Caprolactam	640 U	600 U	580 U	600 U	630 U	640 U	650 U	570 U	570 U	570 U	570 U	560 U	580 U	560 U	570 U	560 U	610 U	730 U
Carbazole	640 U	600 U	580 U	600 U	630 U	640 U	650 U	570 U	570 U	570 U	570 U	560 U	580 U	560 U	570 U	560 U	610 U	730 U
Chrysene	420 U	400 U	380 U	400 U	420 U	430 U	430 U	370 U	380 U	380 U	380 U	370 U	380 U	370 U	380 U	370 U	400 U	480 U
Di-n-butylphthalate	420 U	400 U	380 U	400 U	420 U	430 U	430 U	370 U	380 U	380 U	380 U	370 U	380 U	370 U	380 U	370 U	400 U	480 U
Di-n-octylphthalate	420 U	400 U	380 U	400 U	420 U	430 U	430 UJ	370 U	380 U	380 U	380 U	370 U	380 U	370 U	380 U	370 UJ	400 UJ	480 U
Dibenz(a,h)anthracene	13 U	12 U	12 U	12 U	12 U	13 U	16	11 U	11 U	11 U	11 U	11 U	12 U	11 U	11 U	11 U	12 U	14 UJ
Dibenzofuran	420 U	400 U	380 U	400 U	420 U	430 U	430 U	370 U	380 U	380 U	380 U	370 U	380 U	370 U	380 U	370 U	400 U	480 U
Diethylphthalate	420 U	400 U	380 U	400 U	420 U	430 U	430 U	370 U	380 U	380 U	380 U	370 U	380 U	370 U	380 U	370 U	400 U	480 U
Dimethyl phthalate	420 U	400 U	380 U	400 U	420 U	430 U	430 U	370 U	380 U	380 U	380 U	370 U	380 U	370 U	380 U	370 U	400 U	480 U
Fluoranthene	13 U	12 U	12 U	12 U	12 U	13 U	62	11 U	11 U	11 U	5.8 J	11 U	12 U	11 U	11 U	11 U	7.1 J	6.6 J
Fluorene	13 U	12 U	12 U	12 U	12 U	13 U	13 U	11 U	11 U	11 U	11 U	11 U	12 U	11 U	11 U	11 U	12 U	14 U
Hexachlorobenzene	13 U	12 U	12 U	12 U	12 U	13 U	2.6 J	11 U	11 U	11 U	2.8 J	11 U	12 U	11 U	11 U	11 U	12 U	14 U
Hexachlorobutadiene	13 U	12 U	12 U	12 U	12 U	13 U	13 U	11 U	11 U	11 U	11 U	11 U	12 U	11 U	11 U	11 U	12 U	14 U
Hexachlorocyclopentadiene	13 U	12 U	12 U	12 U	12 U	13 U	13 U	11 U	11 U	11 U	11 U	11 U	12 U	11 U	11 U	11 U	12 U	14 U
Hexachloroethane	420 U	400 U	380 U	400 U	420 U	430 U	430 U	370 U	380 U	380 U	380 U	370 U	380 U	370 U	380 U	370 U	400 U	480 U
Indeno(1,2,3-cd)pyrene	13 U	12 U	12 U	12 U	12 U	13 U	80	11 U	11 U	11 U	2.9 J	11 U	12 U	11 U	11 U	11 U	12 UJ	14 UJ
Isophorone	420 U	400 U	380 U	400 U	420 U	430 U	430 U	370 U	380 U	380 U	380 U	370 U	380 U	370 U	380 U	370 U	400 U	480 U
Naphthalene	13 UJ	12 UJ	12 UJ	12 UJ	12 UJ	13 UJ	13 UJ	11 UJ	11 UJ	11 UJ	11 UJ	11 UJ	12 UJ	11 U	11 U	11 U	12 U	14 UJ
Nitrobenzene	420 U	400 U	380 U	400 U	420 U	430 U	430 UJ	370 UJ	380 UJ	380 UJ	380 UJ	370 UJ	380 UJ	370 UJ	380 UJ	370 UJ	400 UJ	480 UJ
Pentachlorophenol	1,000 U	980 U	940 U	990 U	1,000 U	1,000 U	1,100 U	930 U	940 U	940 U	940 U	920 U	950 U	920 U	940 U	910 U	1,000 U	1,200 U
Phenanthrene	13 U	12 U	12 U	12 U	12 U	13 U	26	11 U	11 U	11 U	2.6 J	11 U	12 U	11 U	11 U	11 U	12 U	14 U
Phenol	640 U	600 U	580 U	600 U	630 U	640 U	650 U	570 U	570 U	570 U	570 U	560 U	580 U	560 U	570 U	560 U	610 U	730 U
Pyrene	13 U	12 U	12 U	12 U	12 U	13 U	85	11 U	11 U	11 U	5.1 J	11 U	12 U	11 U	11 U	11 U	12 U	14 U
bis(2-Chloroethoxy)methane	420 U	400 U	380 U	400 U	420 U	430 U	430 U	370 U	380 U	380 U	380 U	370 U	380 U	370 U	380 U	370 U	400 U	480 U
bis(2-Chloroethyl)ether	420 U	400 U	380 U	400 U	420 U	430 U	430 U	370 U	380 U	380 U	380 U	370 U	380 U	370 U	380 U	370 U	400 U	480 U
bis(2-Ethylhexyl)phthalate	420 U	400 U	380 U	400 U	420 U	430 U	1,000 J	130 J	210 J	380 U	110 J	370 U	170 J	370 U	240 J	280 J	130 J	480 U
n-Nitroso-di-n-propylamine	420 U	400 U	380 U	400 U	420 U	430 U	430 U	370 U	380 U	380 U	380 U	370 U	380 U	370 U	380 U	370 U	400 U	480 U
n-Nitrosodiphenylamine	840 U	790 U	760 U	800 U	830 U	850 U	860 U	750 U	750 U	750 U	750 U	740 U	760 U	740 U	760 U	740 U	810 U	960 U
Explosives (UG/KG)																		
1,3,5-Trinitrobenzene	97.8 U	98.5 U	98.5 U	99.9 U	99.3 U	98.6 U	99.3 U	98.8 U	100 U	97 U	99.7 U	97.8 U	98.1 U	98.1 U	99.1 U	97.2 U	99 U	99.1 U
1,3-Dinitrobenzene	97.8 U	98.5 U	98.5 U	99.9 U	99.3 U	98.6 U	99.3 U	98.8 U	100 U	97 U	99.7 U	97.8 U	98.1 U	98.1 U	99.1 U	97.2 U	99 U	99.1 U
2,4,6-Trinitrotoluene	97.8 U	98.5 U	98.5 U	99.9 U	99.3 U	98.6 U	99.3 U	98.8 U	100 U	97 U	99.7 U	97.8 U	98.1 U	98.1 U	99.1 U	97.2 U	99 U	99.1 U
2,4-Dinitrotoluene	97.8 U	98.5 U	98.5 U	99.9 U	99.3 U	98.6 U	99.3 U	98.8 U	100 U	97 U	99.7 U	97.8 U	98.1 U	98.1 U	99.1 U	97.2 U	99 U	99.1 U
2,6-Dinitrotoluene	97.8 U	98.5 U	98.5 U	99.9 U	99.3 U	98.6 U	99.3 U	98.8 U	100 U	97 U	99.7 U	97.8 U	98.1 U	98.1 U	99.1 U	97.2 U	99 U	99.1 U
2-Amino-4,6-dinitrotoluene	97.8 U	98.5 U	98.5 U	99.9 U	99.3 U	98.6 U	99.3 U	98.8 U	100 U	97 U	99.7 U	97.8 U	98.1 U	98.1 U	99.1 U	97.2 U	99 U	99.1 U
2-Nitrotoluene	97.8 U	98.5 U	98.5 U	99.9 U	99.3 U	98.6 U	99.3 U	98.8 U	100 U	97 U	99.7 U	97.8 U	98.1 U	98.1 U	99.1 U	97.2 U	99 U	99.1 U
3-Nitrotoluene	97.8 U	98.5 U	98.5 U	99.9 U	99.3 U	98.6 U	99.3 U	98.8 U	100 U	97 U	99.7 U	97.8 U	98.1 U	98.1 U	99.1 U	97.2 U	99 U	99.1 U
4-Amino-2,6-dinitrotoluene	97.8 U	98.5 U	98.5 U	99.9 U	99.3 UJ	98.6 UJ	99.3 U	98.8 U	100 U	97 U	99.7 U	97.8 U	98.1 U	98.1 U	99.1 U	97.2 U	99 U	99.1 U
4-Nitrotoluene	97.8 U	98.5 U	98.5 U	99.9 U	99.3 U	98.6 U	99.3 U	98.8 U	100 U	97 U	99.7 U	97.8 U	98.1 U	98.1 U	99.1 U	97.2 U	99 U	99.1 U
HMX	97.8 U	98.5 U	98.5 U	99.9 U	99.3 U	98.6 U	99.3 U	98.8 U	100 U	97 U	99.7 U	97.8 U	98.1 U	98.1 U	99.1 U	97.2 U	99 U	99.1 U
Nitrobenzene	97.8 U	98.5 U	98.5 U	99.9 U	99.3 U	98.6 U	99.3 U	98.8 U	100 U	97 U	99.7 U	97.8 U	98.1 U	98.1 U	99.1 U	97.2 U	99 U	99.1 U
Nitroglycerin	97.8 U	98.5 U	98.5 U	99.9 U	99.3 U	98.6 U	99.3 U	98.8 U	100 U	97 U	99.7 U	97.8 U	98.1 U	98.1 U	99.1 U	97.2 U	99 U	99.1 U
PETN	97.8 U	98.5 U	98.5 U	99.9 U	99.3 U	98.6 U	99.3 U	98.8 U	100 U	97 U	99.7 U	97.8 U	98.1 U	98.1 U	99.1 U	97.2 U	99 U	99.1 U
Perchlorate	2.6 U	2.4 U	2.3 U	2.4 U	2.4 U	2.4 U	2.5	2.3 U	28	58	54	66	84	42	110	26	1.2 J	10
RDX	97.8 U	98.5 U	98.5 U	99.9 U	99.3 U	98.6 U	99.3 U	98.8 U	100 U	97 U	99.7 U	97.8 U	98.1 U	98.1 U	99.1 U	97.2 U	99 U	99.1 U
Tetryl	97.8 U	98.5 U	98.5 U	99.9 U	99.3 U	98.6 U	99.3 U	98.8 U	100 U	97 U	99.7 U	97.8 U	98.1 U	98.1 U	99.1 U	97.2 U	99 U	99.1 U
Total Metals (MG/KG)																		
Antimony	0.447 U	0.398 U	0.439 U	0.44 U	0.431 U	0.42 U	3.22	0.424 U	0.385 U	0.43 U	0.407 U	0.385 U	0.414 U	0.426 U	0.403 U	0.424 U	0.431 U	0.549 U
Arsenic	0.122 J	1.29	1.87	0.259 J	0.154 J	0.0886 U	0.93	0.53	0.474	0.217 J	1.21	0.14 J	0.501	0.459	0.108 J	0.417	0.461	0.917
Barium	11.5 J	2.78 J	3.15 J	4.14 J	3.94 J	2.38 J	231	9.81	5.6	5.05	13	8.06	8.34	7.03	6.14	7.18	5.86	25.3
Cadmium	0.0447 U	0.0398 U	0.0439 U	0.044 U	0.0431 U	0.042 U	2.56	0.0424 U	0.0385 U	0.043 U	0.063 J	0.0385 U	0.0576 J	0.0426 U	0.0403 U	0.0424 U	0.0431 U	0.0549 U
Chromium	5.79	3.02	4.21	5.09	4	2.07	35.3	8.04	8.39	6.56	4.98	7.63	9.16	7.85	6.62	7.99	5.74	11.6
Copper	1.37 J	0.456 J	0.471 J	0.527 J	0.624 J	1.09 J	46.9	1.28 J	0.385 U	0.43 U	1.53 J	0.385 U	0.414 U	0.426 U	0.403 U	0.424 U	0.498 J	0.603 J
Lead	7.53	1.84	3.86	2.38	2.17	3.63	64.8	3.15	3.24	7.12	4.87	3.79	4.74	3.92	3.36	3.52	3.16	11.2
Mercury	0.0441 J	0.0225 U	0.0227 U	0.0221 U	0.0229 U	0.0235 U	1.13	0.0222 U	0.02 J	0.0213 U	0.0304 J	0.0217 U	0.0225 U	0.0223 U	0.0214 U	0.0214 U	0.0234 U	0.0706 J
Selenium	0.418 J	0.118 UJ	0.114 UJ	0.113 UJ	0.243 J	0.245 J	0.982	0.111 U	0.172 J	0.128 J	0.28 J	0.112 U	0.285 J	0.225 J	0.112 U	0.109 U	0.335 J	2.35
Silver	0.274 J	0.238 J	0.22 U	0.22 U	0.215 U	0.21 U	25.6	0.212 U	0.193 U	0.215 U	0.256 J	0.193 U	0.207 U	0.213 U	0.202 U	0.212 U	0.216 U	0.274 U
Zinc	0.931 J	0.573 J	0.642 J	1.48 J	1.71 J	1.31 J	240	2.74	1.88	1.49 J	12.4 J	2.42	1.32 J	2.38	1.56 J	1.95	1.1 J	11.3
Wet Chemistry (PCT)																		
% Solids	83.3	84.7	85.6	85.1	85	84.6	90.6	89.9	97.4	87.6	92	89.3	86.3	88	88.6	90.3	84	67.3

Notes:

J - Analyte present, value may or may not be accurate or precise
NA - Not analyzed
R - Unreliable Result
U - The material was analyed for, but not detected
UJ - Analyte not detected, quantitation limit may be inaccurate
Pct - Percent

Station ID	MR08-IS067	MR08-IS068	MR08-IS069		MR08-IS070	MR08-IS071	MR08-IS072	MR08-IS073	MR08-IS074	MR08-IS075	MR08-IS076	MR08-IS077	MR08-IS078	MR08-IS079		MR08-IS080	MR08-IS081	MR08-IS082
Sample ID	MR08-IS067-6-7-08D	MR08-IS068-8-9-08D	MR08-IS069-6-7-08D	MR08-IS069D-6-7-08D	MR08-IS070-8-9-08D	MR08-IS071-6-7-08D	MR08-IS072-6-7-08D	MR08-IS073-6-7-08D	MR08-IS074-7-8-08D	MR08-IS075-6-7-08D	MR08-IS076-6-7-08D	MR08-IS077-6-7-08D	MR08-IS078-6-7-08D	MR08-IS079-6-7-08D	MR08-IS079D-6-7-08D	MR08-IS080-5-6-08D	MR08-IS081-6-7-08D	MR08-IS082-5-6-08D
Sample Date	12/03/08	12/03/08	12/03/08	12/03/08	12/03/08	12/03/08	12/03/08	12/03/08	12/04/08	12/04/08	12/04/08	12/04/08	12/04/08	12/04/08	12/04/08	12/07/08	12/07/08	12/07/08
Chemical Name																		
Volatile Organic Compounds (UG/KG)																		
1,1,1-Trichloroethane	16 U	9.3 U	17 U	11 U	11 U	9.7 U	10 U	12 U	12 U	9.1 U	9.4 U	9.6 U	12 U	11 U	8.6 U	26 R	13 U	15 U
1,1,2,2-Tetrachloroethane	16 U	9.3 U	17 U	11 U	11 U	9.7 U	10 U	12 U	12 U	9.1 U	9.4 U	9.6 U	12 U	11 U	8.6 U	26 R	13 U	15 U
1,1,2-Trichloro-1,2,2-trifluoroethane(Freon-113)	16 U	9.3 U	17 U	11 U	11 U	9.7 U	10 U	12 U	12 U	9.1 U	9.4 U	9.6 U	12 U	11 U	8.6 U	26 R	13 U	15 U
1,1,2-Trichloroethane	16 U	9.3 U	17 U	11 U	11 U	9.7 U	10 U	12 U	12 U	9.1 U	9.4 U	9.6 U	12 U	11 U	8.6 U	26 R	13 U	15 U
1,1-Dichloroethane	16 U	9.3 U	17 U	11 U	11 U	9.7 U	10 U	12 U	12 U	9.1 U	9.4 U	9.6 U	12 U	11 U	8.6 U	26 R	13 U	15 U
1,1-Dichloroethene	16 U	9.3 U	17 U	11 U	11 U	9.7 U	10 U	12 U	12 U	9.1 U	9.4 U	9.6 U	12 U	11 U	8.6 U	26 R	13 U	15 U
1,2,4-Trichlorobenzene	16 U	9.3 UJ	17 U	11 U	11 U	9.7 U	10 U	12 U	12 U	9.1 U	9.4 U	9.6 U	12 U	11 U	8.6 U	4.5 J	13 U	15 U
1,2-Dibromo-3-chloropropane	8.2 U	4.7 U	8.4 U	5.5 U	5.5 U	4.8 U	5.1 U	6 U	6 U	4.6 U	4.7 U	4.8 U	5.9 U	5.7 U	4.3 U	13 R	6.7 U	7.4 U
1,2-Dibromoethane	16 U	9.3 UJ	17 U	11 U	11 U	9.7 U	10 U	12 U	12 U	9.1 U	9.4 U	9.6 U	12 U	11 U	8.6 U	26 R	13 U	15 U
1,2-Dichlorobenzene	16 U	9.3 UJ	17 U	11 U	11 U	9.7 U	10 U	12 U	12 U	9.1 U	9.4 U	9.6 U	12 U	11 U	8.6 U	1.6 J	13 U	15 U
1,2-Dichloroethane	16 U	9.3 U	17 U	11 U	11 U	9.7 U	10 U	12 U	12 U	9.1 U	9.4 U	9.6 U	12 U	11 U	8.6 U	26 R	13 U	15 U
1,2-Dichloropropane	16 U	9.3 U	17 U	11 U	11 U	9.7 U	10 U	12 U	12 U	9.1 U	9.4 U	9.6 U	12 U	11 U	8.6 U	26 R	13 U	15 U
1,3-Dichlorobenzene	16 U	9.3 UJ	17 U	11 U	11 U	9.7 U	10 U	12 U	12 U	9.1 U	9.4 U	9.6 U	12 U	11 U	8.6 U	26 R	13 U	15 U
1,4-Dichlorobenzene	16 U	9.3 UJ	17 U	11 U	11 U	9.7 U	10 U	12 U	12 U	9.1 U	9.4 U	9.6 U	12 U	11 U	8.6 U	2 J	13 U	15 U
2-Butanone	16 U	9.3 U	17 U	11 U	11 U	9.7 U	10 U	12 U	12 U	9.1 U	9.4 U	9.6 UJ	12 UJ	11 UJ	5 J	26 R	13 U	15 U
2-Hexanone	16 U	9.3 U	17 U	11 U	11 U	9.7 U	10 U	12 U	12 U	9.1 U	9.4 U	9.6 UJ	12 UJ	11 UJ	8.6 UJ	26 R	13 U	15 U
4-Methyl-2-pentanone	16 U	9.3 U	17 U	11 U	11 U	9.7 U	10 U	12 U	12 U	9.1 U	9.4 U	9.6 U	12 U	11 U	8.6 U	1.8 J	13 U	15 U
Acetone	20 U	9.7 U	43 U	36 U	11 UJ	9.7 UJ	10 UJ	12 UJ	12 U	9.1 U	10 U	9.6 UJ	13 UJ	17 UJ	32 UJ	46 J	19 U	15 U
Benzene	16 U	9.3 U	17 U	11 U	11 U	9.7 U	10 U	12 U	12 U	9.1 U	9.4 U	9.6 U	12 U	11 U	8.6 U	1 J	13 U	15 U
Bromodichloromethane	16 U	9.3 U	17 U	11 U	11 U	9.7 U	10 U	12 U	12 U	9.1 U	9.4 U	9.6 U	12 U	11 U	8.6 U	26 R	13 U	15 U
Bromoform	16 U	9.3 U	17 U	11 U	11 U	9.7 U	10 U	12 U	12 U	9.1 U	9.4 U	9.6 U	12 U	11 U	8.6 U	26 R	13 U	15 U
Bromomethane	16 UJ	9.3 UJ	17 UJ	11 UJ	11 UJ	9.7 UJ	10 UJ	12 UJ	12 UJ	9.1 UJ	9.4 UJ	9.6 UJ	12 UJ	11 UJ	8.6 UJ	22 J	13 U	15 U
Carbon disulfide	16 U	9.3 U	17 U	11 U	11 U	9.7 U	10 U	12 U	12 U	9.1 U	9.4 U	9.6 U	12 U	11 U	8.6 U	26 R	13 U	15 U
Carbon tetrachloride	16 U	9.3 U	17 U	11 U	11 U	9.7 U	10 U	12 U	12 U	9.1 U	9.4 U	9.6 U	12 U	11 U	8.6 U	26 R	13 U	15 U
Chlorobenzene	16 U	9.3 UJ	17 U	11 U	11 U	9.7 U	10 U	12 U	12 U	9.1 U	9.4 U	9.6 U	12 U	11 U	8.6 U	26 R	13 U	15 U
Chloroethane	16 U	9.3 U	17 U	11 U	11 U	9.7 U	10 U	12 U	12 U	9.1 U	9.4 U	9.6 U	12 U	11 U	8.6 U	26 R	13 U	15 U
Chloroform	16 U	9.3 U	17 U	11 U	11 U	9.7 U	10 U	12 U	12 U	9.1 U	9.4 U	9.6 U	12 U	11 U	8.6 U	26 R	13 U	15 U
Chloromethane	16 U	9.3 U	17 U	11 U	11 U	9.7 U	10 U	12 U	12 U	9.1 U	9.4 U	9.6 UJ	12 UJ	11 UJ	0.6 J	12 J	7 J	15 U
Cyclohexane	16 U	9.3 U	17 U	11 U	11 U	9.7 U	10 U	12 U	12 U	9.1 U	9.4 U	9.6 U	12 U	11 U	8.6 U	26 R	13 U	15 U
Dibromochloromethane	16 U	9.3 U	17 U	11 U	11 U	9.7 U	10 U	12 U	12 U	9.1 U	9.4 U	9.6 U	12 U	11 U	8.6 U	26 R	13 U	15 U
Dichlorodifluoromethane (Freon-12)	16 U	9.3 U	17 U	11 U	11 U	9.7 U	10 U	12 U	12 U	9.1 U	9.4 U	9.6 U	12 U	11 U	8.6 U	26 R	13 UJ	15 UJ
Ethylbenzene	16 U	9.3 U	17 U	11 U	11 U	9.7 U	10 U	12 U	12 U	9.1 U	9.4 U	9.6 U	12 U	11 U	8.6 U	26 R	13 U	15 U
Isopropylbenzene	16 U	9.3 U	17 U	11 U	11 U	9.7 U	10 U	12 U	12 U	9.1 U	9.4 U	9.6 U	12 U	11 U	8.6 U	26 R	13 U	15 U
Methyl acetate	16 U	9.3 UJ	17 U	11 U	11 U	9.7 U	10 U	12 U	12 U	9.1 U	9.4 U	9.6 U	12 U	11 U	8.6 U	61 R	13 U	15 U
Methyl-tert-butyl ether (MTBE)	16 U	9.3 U	17 U	11 U	11 U	9.7 U	10 U	12 U	12 U	9.1 U	9.4 U	9.6 U	12 U	11 U	8.6 U	2.1 J	13 U	15 U
Methylcyclohexane	16 U	9.3 U	17 U	11 U	11 U	9.7 U	10 U	12 U	12 U	9.1 U	9.4 U	9.6 U	12 U	11 U	8.6 U	26 R	13 U	15 U
Methylene chloride	3.7 J	6.4 J	2.4 J	8.4 J	2 J	1.1 J	2.3 J	1.9 J	1.6 J	1 J	2.2 J	9.6 U	12 U	11 U	8.6 U	8.4 R	13 U	15 U
Styrene	16 U	9.3 UJ	17 U	11 U	11 U	9.7 U	10 U	12 U	12 U	9.1 U	9.4 U	9.6 U	12 U	11 U	8.6 U	0.92 J	13 U	15 U
Tetrachloroethene	16 U	9.3 U	17 U	11 U	11 U	9.7 U	10 U	12 U	12 U	9.1 U	9.4 U	9.6 U	12 U	11 U	8.6 U	26 R	13 U	15 U
Toluene	16 U	9.3 U	17 U	11 U	11 U	9.7 U	10 U	12 U	12 U	9.1 U	9.4 U	9.6 U	12 U	11 U	8.6 U	26 R	13 U	15 U
Trichloroethene	16 U	9.3 UJ	17 U	11 U	11 U	9.7 U	10 U	12 U	12 U	9.1 U	9.4 U	9.6 U	12 U	11 U	8.6 U	26 R	13 U	15 U
Trichlorofluoromethane(Freon-11)	16 U	9.3 U	17 U	11 U	11 U	9.7 U	10 U	12 U	12 U	9.1 U	9.4 U	9.6 U	12 U	11 U	8.6 U	26 R	13 U	15 U
Vinyl chloride	16 U	9.3 U	17 U	11 U	11 U	9.7 U	10 U	12 U	12 U	9.1 U	9.4 U	9.6 UJ	12 UJ	11 UJ	8.6 UJ	12 J	13 U	15 U
Xylene, total	16 U	9.3 U	17 U	11 U	11 U	9.7 U	10 U	12 U	12 U	9.1 U	9.4 U	9.6 U	12 U	11 U	8.6 U	26 R	13 U	15 U
cis-1,2-Dichloroethene	16 U	9.3 U	17 U	11 U	11 U	9.7 U	10 U	12 U	12 U	9.1 U	9.4 U	9.6 U	12 U	11 U	8.6 U	26 R	13 U	15 U
cis-1,3-Dichloropropene	16 U	9.3 U	17 U	11 U	11 U	9.7 U	10 U	12 U	12 U	9.1 U	9.4 U	9.6 U	12 U	11 U	8.6 U	26 R	13 U	15 U
trans-1,2-Dichloroethene	16 U	9.3 U	17 U	11 U	11 U	9.7 U	10 U	12 U	12 U	9.1 U	9.4 U	9.6 U	12 U	11 U	8.6 U	3.2 J	13 U	15 U
trans-1,3-Dichloropropene	16 U	9.3 U	17 U	11 U	11 U	9.7 U	10 U	12 U	12 U	9.1 U	9.4 U	9.6 U	12 U	11 U	8.6 U	26 R	13 U	15 U
Semivolatile Organic Compounds (UG/KG)																		
1,1-Biphenyl	380 U	380 U	440 U	450 U	390 U	380 U	360 U	NA	350 U	350 U	370 U	370 U	380 U	370 U	360 U	380 U	370 U	340 U
2,2'-Oxybis(1-chloropropane)	380 U	380 U	440 U	450 U	390 U	380 U	360 U	NA	350 U	350 U	370 U	370 U	380 U	370 U	360 U	380 U	370 U	340 U
2,4,5-Trichlorophenol	580 U	580 U	660 U	680 U	590 U	580 U	540 U	NA	530 U	530 U	560 U	570 U	570 U	560 U	550 U	580 U	570 U	520 U
2,4,6-Trichlorophenol	580 U	580 U	660 U	680 U	590 U	580 U	540 U	NA	530 U	530 U	560 U	570 U	570 U	560 U	550 U	580 U	570 U	520 U
2,4-Dichlorophenol	580 U	580 U	660 U	680 U	590 U	580 U	540 U	NA	530 U	530 U	560 U	570 U	570 U	560 U	550 U	580 U	570 U	520 U
2,4-Dimethylphenol	580 U	580 U	660 U	680 U	590 U	580 U	540 U	NA	530 U	530 U	560 U	570 U	570 U	560 U	550 U	580 U	570 U	520 U
2,4-Dinitrophenol	1,400 U	1,400 U	1,600 U	1,600 U	1,400 U	1,400 U	1,300 U	NA	1,300 U	1,300 U	1,400 U	1,400 U	1,400 U	1,300 U	1,300 U	1,400 UJ	1,400 U	1,200 U
2,4-Dinitrotoluene	380 U	380 U	440 U	450 U	390 U	380 U	360 U	NA	350 U	350 U	370 U	370 U	380 U	370 U	360 U	380 U	370 U	340 U
2,6-Dinitrotoluene	380 U	380 U	440 U	450 U	390 U	380 U	360 U	NA	350 U	350 U	370 U	370 U	380 U	370 U	360 U	380 U	370 U	340 U
2-Chloronaphthalene	380 U	380 U	440 U	450 U	390 U	380 U	360 U	NA	350 U	350 U	370 U	370 U	380 U	370 U	360 U	380 U	370 U	340 U
2-Chlorophenol	580 U	580 U	660 U	680 U	590 U	580 U	540 U	NA	530 U	530 U	560 U	570 U	570 U	560 U	550 U	580 U	570 U	520 U
2-Methylnaphthalene	12 U	12 U	13 U	14 U	12 U	12 U	11 U	11 U	11 U	11 U	11 U	11 U	11 U	11 UJ	11 UJ	12 U	11 UJ	10 U
2-Methylphenol	700 U	700 U	800 U	820 U	710 U	700 U	650 U	NA	640 U	640 U	680 U	680 U	690 U	670 U	660 U	700 U	680 U	620 U
2-Nitroaniline	580 U	580 UJ	660 U	680 U	590 U	580 U	540 U	NA	530 U	530 U	560 U	570 U	570 U	560 U	550 U	580 U	570 U	520 U
2-Nitrophenol	700 U	700 U	800 U	820 U	710 U	700 U	650 U	NA	640 U	640 U	680 U	680 U	690 U	670 U	660 U	700 U	680 U	620 U
3,3'-Dichlorobenzidine	580 U	580 R	660 U	680 U	590 U	580 U	540 U	NA	530 UJ	530 UJ	560 UJ	570 UJ	570 UJ	560 U	550 U	580 U	570 U	520 U
3- and 4-Methylphenol	700 U	700 U	800 U	820 U	710 U	700 U	650 U	NA	640 U	640 U	680 U	680 U	690 U	670 U	660 U	700 U	680 U	620 U
3-Nitroaniline	580 U	580 R	660 U	680 U	590 U	580 U	540 U	NA	530 U	530 U	560 U	570 U	570 U	560 U	550 U	580 U	570 U	520 U
4,6-Dinitro-2-methylphenol	1,400 U	1,400 R	1,600 U	1,600 U	1,400 U	1,400 U	1,300 U	NA	1,300 U	1,300 U	1,400 U	1,400 U	1,400 U	1,300 U	1,300 U	1,400 U	1,400 U	1,200 U
4-Bromophenyl-phenylether	380 U	380 U	440 U	450 U	390 U	380 U	360 U	NA	350 U	350 U	370 U	370 U	380 U	370 U	360 U	380 U	370 U	340 U
4-Chloro-3-methylphenol	580 U	580 U	660 U	680 U	590 U	580 U	540 U	NA	530 U	530 U	560 U	570 U	570 U	560 U	550 U	580 U	570 U	520 U
4-Chloroaniline	580 U	580 R	660 U	680 U	590 U	580 U	540 U	NA	530 U	530 U	560 U	570 U	570 U	560 U	550 U	580 UJ	570 U	520 U
4-Chlorophenyl-phenylether	380 U	380 U	440 U	450 U	390 U	380 U	360 U	NA	350 U	350 U	370 U	370 U	380 U	370 U	360 U	380 U	370 U	340 U
4-Nitroaniline	580 U	580 R	660 U	680 U	590 U	580 U	540 U	NA	530 U	530 U	560 U	570 U	570 U	560 U	550 U	580 UJ	570 U	520 U
4-Nitrophenol	1,400 UJ	1,400 U	1,600 U	1,600 U	1,400 U	1,400 U	1,300 U	NA	1,300 U	1,300 U	1,400 U	1,400 U	1,400 U	1,300 U	1,300 U	1,400 UJ	1,400 U	1,200 U
Acenaphthene	380 U	380 U	440 U	450 U	390 U	380 U	360 U	NA	350 U	350 U	370 U	370 U	380 U	370 U	360 U	380 U	370 U	340 U
Acenaphthylene	380 U	380 U	440 U	450 U	390 U	380 U	360 U	NA	350 U	350 U	370 U	370 U	380 U	370 U	360 U	380 U	370 U	340 U
Acetophenone	700 U	700 U	800 U	820 U	710 U	700 U	650 U	NA	640 U	640 U	680 U	680 U	690 U	670 U	660 U	700 U	680 U	620 U
Anthracene	380 U	380 U	440 U	450 U	390 U	380 U	360 U	NA	350 U	350 U	370 U	370 U	380 U	370 U	360 U	380 U	370 U	340 U
Atrazine	380 U	380 UJ	440 U	450 U	390 U	380 U	360 U	NA	350 U	350 U	370 U	370 U	380 U	370 U	360 U	380 U	370 U	340 U
Benzaldehyde	580 U	580 UJ	660 U	680 U	590 UJ	580 UJ	540 UJ	NA	530 UJ	530 UJ	560 UJ	570 UJ	570 UJ	560 UJ	550 UJ	580 UJ	570 UJ	520 UJ

Station ID	MR08-IS067	MR08-IS068	MR08-IS069		MR08-IS070	MR08-IS071	MR08-IS072	MR08-IS073	MR08-IS074	MR08-IS075	MR08-IS076	MR08-IS077	MR08-IS078	MR08-IS079		MR08-IS080	MR08-IS081	MR08-IS082
Sample ID	MR08-IS067-6-7-08D	MR08-IS068-8-9-08D	MR08-IS069-6-7-08D	MR08-IS069D-6-7-08D	MR08-IS070-8-9-08D	MR08-IS071-6-7-08D	MR08-IS072-6-7-08D	MR08-IS073-6-7-08D	MR08-IS074-7-8-08D	MR08-IS075-6-7-08D	MR08-IS076-6-7-08D	MR08-IS077-6-7-08D	MR08-IS078-6-7-08D	MR08-IS079-6-7-08D	MR08-IS079D-6-7-08D	MR08-IS080-5-6-08D	MR08-IS081-6-7-08D	MR08-IS082-5-6-08D
Sample Date	12/03/08	12/03/08	12/03/08	12/03/08	12/03/08	12/03/08	12/03/08	12/03/08	12/04/08	12/04/08	12/04/08	12/04/08	12/04/08	12/04/08	12/04/08	12/07/08	12/07/08	12/07/08
Chemical Name																		
Benzo(a)anthracene	12 U	12 U	13 U	14 U	12 U	12 U	11 U	11 U	11 U	11 U	11 U	11 U	11 U	11 U	11 U	12 U	11 U	10 U
Benzo(a)pyrene	12 U	12 U	13 U	14 U	12 U	12 U	11 U	11 U	11 U	11 U	11 U	11 U	11 U	11 U	11 U	12 U	11 U	10 U
Benzo(b)fluoranthene	12 U	12 U	13 U	14 U	12 U	12 U	11 U	11 U	11 U	11 U	11 U	11 U	11 U	11 U	11 U	12 U	11 UJ	10 U
Benzo(g,h,i)perylene	12 U	12 U	13 U	14 U	12 U	12 U	11 U	11 U	11 U	11 U	11 U	11 U	11 U	11 U	11 U	12 UJ	11 UJ	10 U
Benzo(k)fluoranthene	12 U	12 U	13 U	14 U	12 U	12 U	11 U	11 U	11 U	11 U	11 U	11 U	11 U	11 U	11 U	12 U	11 U	10 U
Butylbenzylphthalate	380 U	380 U	440 U	450 U	390 U	380 U	360 U	NA	350 U	350 U	370 U	370 U	380 U	370 U	360 U	380 UJ	370 U	340 U
Caprolactam	580 U	580 UJ	660 U	680 U	590 U	580 U	540 U	NA	530 U	530 U	560 U	570 U	570 U	560 U	550 U	580 U	570 U	520 U
Carbazole	580 U	580 U	660 U	680 U	590 U	580 U	540 U	NA	530 U	530 U	560 U	570 U	570 U	560 U	550 U	580 UJ	570 U	520 U
Chrysene	380 U	380 U	440 U	450 U	390 U	380 U	360 U	NA	350 U	350 U	370 U	370 U	380 U	370 U	360 U	380 U	370 U	340 U
Di-n-butylphthalate	380 U	380 U	440 U	450 U	390 U	380 U	360 U	NA	350 U	350 U	370 U	370 U	380 U	370 U	360 U	380 U	370 U	340 U
Di-n-octylphthalate	380 U	380 U	440 U	450 U	390 U	380 U	360 U	NA	350 U	350 U	370 U	370 U	380 U	370 U	360 U	380 UJ	370 U	340 U
Dibenz(a,h)anthracene	12 U	12 U	13 U	14 U	12 U	12 U	11 U	11 U	11 U	11 U	11 U	11 U	11 U	11 U	11 U	12 U	11 UJ	10 U
Dibenzofuran	380 U	380 U	440 U	450 U	390 U	380 U	360 U	NA	350 U	350 U	370 U	370 U	380 U	370 U	360 U	380 U	370 U	340 U
Diethylphthalate	380 U	380 U	440 U	450 U	390 U	380 U	360 U	NA	350 U	350 U	370 U	370 U	380 U	370 U	360 U	380 U	370 U	340 U
Dimethyl phthalate	380 U	380 U	440 U	450 U	390 U	380 U	360 U	NA	350 U	350 U	370 U	370 U	380 U	370 U	360 U	380 U	370 U	340 U
Fluoranthene	12 U	12 U	13 U	14 U	12 U	12 U	11 U	11 U	11 U	11 U	11 U	11 U	11 U	11 U	11 U	12 U	11 U	10 U
Fluorene	12 U	12 U	13 U	14 U	12 U	12 U	11 U	11 U	11 U	11 U	11 U	11 U	11 U	11 U	11 U	12 U	11 U	10 U
Hexachlorobenzene	12 UJ	12 UJ	13 U	14 UJ	12 UJ	12 UJ	11 U	11 UJ	11 UJ	11 U	11 U	11 U	11 U	11 UJ	11 UJ	12 U	11 U	10 U
Hexachlorobutadiene	12 U	12 UJ	13 U	14 U	12 UJ	12 UJ	11 U	11 UJ	11 U	11 U	11 U	11 U	11 U	11 UJ	11 UJ	12 U	11 U	10 U
Hexachlorocyclopentadiene	12 U	12 U	13 UJ	14 U	12 U	12 U	11 UJ	11 U	11 U	11 UJ	11 UJ	11 UJ	11 UJ	11 U	11 U	12 U	11 U	10 U
Hexachloroethane	380 U	380 U	440 U	450 U	390 U	380 U	360 U	NA	350 U	350 U	370 U	370 U	380 U	370 U	360 U	380 U	370 U	340 U
Indeno(1,2,3-cd)pyrene	12 U	12 U	13 U	14 U	12 U	12 U	11 U	11 U	11 U	11 U	11 U	11 U	11 U	11 U	11 U	12 UJ	11 UJ	10 U
Isophorone	380 U	380 U	440 U	450 U	390 U	380 U	360 U	NA	350 U	350 U	370 U	370 U	380 U	370 U	360 U	380 U	370 U	340 U
Naphthalene	12 UJ	12 UJ	13 U	14 UJ	12 UJ	12 UJ	11 U	11 UJ	11 UJ	11 U	11 U	11 U	11 U	11 U	11 U	12 U	11 UJ	10 U
Nitrobenzene	380 UJ	380 U	440 U	450 U	390 U	380 U	360 U	NA	350 U	350 U	370 U	370 U	380 U	370 U	360 U	380 UJ	370 UJ	340 UJ
Pentachlorophenol	950 U	950 UJ	1,100 U	1,100 U	970 UJ	960 UJ	890 UJ	NA	870 U	880 U	920 U	930 U	940 U	920 U	910 U	960 U	930 U	850 U
Phenanthrene	12 UJ	12 U	13 U	14 UJ	12 U	12 U	11 U	11 U	11 UJ	11 U	11 U	11 U	11 U	11 UJ	11 UJ	12 U	11 U	10 U
Phenol	580 U	580 U	660 U	680 U	590 U	580 U	540 U	NA	530 U	530 U	560 U	570 U	570 U	560 U	550 U	580 U	570 U	520 U
Pyrene	12 U	12 U	13 UJ	14 U	12 U	12 U	11 UJ	11 U	11 U	11 U	11 U	11 U	11 UJ	11 U	11 U	12 U	11 U	10 U
bis(2-Chloroethoxy)methane	380 U	380 U	440 U	450 U	390 U	380 U	360 U	NA	350 U	350 U	370 U	370 U	380 U	370 U	360 U	380 U	370 U	340 U
bis(2-Chloroethyl)ether	380 U	380 U	440 U	450 U	390 U	380 U	360 U	NA	350 U	350 U	370 U	370 U	380 U	370 U	360 U	380 U	370 U	340 U
bis(2-Ethylhexyl)phthalate	380 U	380 U	440 U	450 U	390 U	380 U	400	NA	350 U	350 U	370 U	370 U	380 U	370 U	360 U	380 UJ	370 U	340 U
n-Nitroso-di-n-propylamine	380 U	380 U	440 U	450 U	390 U	380 U	360 U	NA	350 U	350 U	370 U	370 U	380 U	370 U	360 U	380 U	370 U	340 U
n-Nitrosodiphenylamine	760 U	770 UJ	880 U	900 U	780 U	770 U	720 U	NA	700 U	700 U	740 U	750 U	760 U	740 U	730 U	770 U	750 U	690 U
Explosives (UG/KG)																		
1,3,5-Trinitrobenzene	97.5 U	98.3 UJ	99.9 UJ	97.9 UJ	99.7 U	96.8 UJ	99.7 UJ	99.6 UJ	98.4 UJ	99.7 UJ	100 UJ	97.7 U	99.5 U	100 U	97.1 U	99.8 U	98 U	99.7 U
1,3-Dinitrobenzene	97.5 U	98.3 UJ	99.9 UJ	97.9 UJ	99.7 U	96.8 UJ	99.7 UJ	99.6 UJ	98.4 UJ	99.7 UJ	100 UJ	97.7 U	99.5 U	100 U	97.1 U	99.8 U	98 U	99.7 U
2,4,6-Trinitrotoluene	97.5 U	98.3 UJ	99.9 UJ	97.9 UJ	99.7 U	96.8 UJ	99.7 UJ	99.6 UJ	98.4 UJ	99.7 UJ	100 UJ	97.7 UJ	99.5 UJ	100 UJ	97.1 U	99.8 U	98 U	99.7 U
2,4-Dinitrotoluene	97.5 U	98.3 UJ	99.9 UJ	97.9 UJ	99.7 U	96.8 UJ	99.7 UJ	99.6 UJ	98.4 UJ	99.7 UJ	100 UJ	97.7 UJ	99.5 UJ	100 UJ	97.1 UJ	99.8 U	98 U	99.7 U
2,6-Dinitrotoluene	97.5 U	98.3 UJ	99.9 UJ	97.9 UJ	99.7 U	96.8 UJ	99.7 UJ	99.6 UJ	98.4 UJ	99.7 UJ	100 UJ	97.7 U	99.5 U	100 U	97.1 U	99.8 U	98 U	99.7 U
2-Amino-4,6-dinitrotoluene	97.5 U	98.3 UJ	99.9 UJ	97.9 UJ	99.7 U	96.8 UJ	99.7 UJ	99.6 UJ	98.4 UJ	99.7 UJ	100 UJ	97.7 U	99.5 U	100 U	97.1 U	99.8 U	98 U	99.7 U
2-Nitrotoluene	97.5 U	98.3 UJ	99.9 UJ	97.9 UJ	99.7 U	96.8 UJ	99.7 UJ	99.6 UJ	98.4 UJ	99.7 UJ	100 UJ	97.7 U	99.5 U	100 U	97.1 U	99.8 U	98 U	99.7 U
3-Nitrotoluene	97.5 U	98.3 UJ	99.9 UJ	97.9 UJ	99.7 U	96.8 UJ	99.7 UJ	99.6 UJ	98.4 UJ	99.7 UJ	100 UJ	97.7 U	99.5 U	100 U	97.1 U	99.8 U	98 U	99.7 U
4-Amino-2,6-dinitrotoluene	97.5 UJ	98.3 UJ	99.9 UJ	97.9 UJ	99.7 U	96.8 UJ	99.7 UJ	99.6 UJ	98.4 UJ	99.7 UJ	100 UJ	97.7 U	99.5 U	100 U	97.1 U	99.8 U	98 U	99.7 U
4-Nitrotoluene	97.5 U	98.3 UJ	99.9 UJ	97.9 UJ	99.7 U	96.8 UJ	99.7 UJ	99.6 UJ	98.4 UJ	99.7 UJ	100 UJ	97.7 U	99.5 U	100 U	97.1 U	99.8 U	98 U	99.7 U
HMX	97.5 U	98.3 UJ	99.9 UJ	97.9 UJ	99.7 U	96.8 UJ	99.7 UJ	99.6 UJ	98.4 UJ	99.7 UJ	100 UJ	97.7 U	99.5 U	100 U	97.1 U	99.8 U	98 U	99.7 U
Nitrobenzene	97.5 U	98.3 UJ	99.9 UJ	97.9 UJ	99.7 U	96.8 UJ	99.7 UJ	99.6 UJ	98.4 UJ	99.7 UJ	100 UJ	97.7 U	99.5 U	100 U	97.1 U	99.8 U	98 U	99.7 U
Nitroglycerin	97.5 U	98.3 UJ	99.9 UJ	97.9 UJ	99.7 U	96.8 UJ	99.7 UJ	99.6 UJ	98.4 UJ	99.7 UJ	100 UJ	97.7 U	99.5 U	100 U	97.1 U	99.8 U	98 U	99.7 U
PETN	97.5 U	98.3 U	99.9 U	97.9 U	99.7 U	96.8 U	99.7 U	99.6 U	98.4 U	99.7 U	100 U	97.7 U	99.5 U	100 U	97.1 U	99.8 U	98 U	99.7 U
Perchlorate	2.4 U	2.5 U	2.8 U	2.7 U	2.1 U	2.3 U	2.2 U	2.2 U	2.1 U	2.2 U	2.1 U	2.3 U	2.3 U	2.3 U	2.4 U	2.2 U	2.2 U	2.1 U
RDX	97.5 U	98.3 UJ	99.9 UJ	97.9 UJ	99.7 U	96.8 UJ	99.7 UJ	99.6 UJ	98.4 UJ	99.7 UJ	100 UJ	97.7 U	99.5 U	100 U	97.1 U	99.8 U	98 U	99.7 U
Tetryl	97.5 U	98.3 UJ	99.9 UJ	97.9 UJ	99.7 U	96.8 UJ	99.7 UJ	99.6 UJ	98.4 UJ	99.7 UJ	100 UJ	97.7 UJ	99.5 UJ	100 UJ	97.1 U	99.8 U	98 U	99.7 UJ
Total Metals (MG/KG)																		
Antimony	0.394 U	0.456 U	0.485 U	0.61 J	0.449 U	0.434 J	0.406 U	0.39 U	0.388 U	0.424 U	0.399 U	0.434 U	0.4 U	0.399 U	0.431 U	0.487 U	0.447 U	0.383 U
Arsenic	0.0774 R	0.384 J	0.121 J	0.0984 J	0.164 J	0.159 J	0.0798 R	0.0797 R	0.0784 U	0.115 J	0.0798 U	0.168 J	0.08 U	0.0769 U	0.0846 J	0.0928 U	0.282 J	0.0823 U
Barium	5.37 J	5.69 J	12.5 J	16.4 J	10.9 J	3.34 J	6.01 J	5.34 J	2.16 J	5.41 J	5.64 J	7.47 J	2.67 J	4.7 J	7.54 J	2.04	13.1	0.519
Cadmium	0.0394 U	0.0456 U	0.0485 U	0.0488 U	0.0449 U	0.0418 U	0.0406 U	0.039 U	0.0388 U	0.0424 U	0.0399 U	0.0434 U	0.04 U	0.0399 UJ	0.0431 UJ	0.0487 U	0.0447 U	0.0383 U
Chromium	2.1 J	3.11 J	7.34 J	19.4 J	14.7 J	2.77 J	2.3 J	3.17 J	1.5 J	3.67 J	1.32 J	4.22 J	3.38 J	3.22 J	4.94 J	3.63	4.29	1.23
Copper	0.602 J	0.936 J	3.62	3.48	1.52 J	1.05 J	0.671 J	0.39 U	0.388 U	0.859 J	0.399 U	0.745 J	0.635 J	0.399 U	0.68 J	1.31 J	0.447 U	0.608 J
Lead	1.49 J	3.27 J	7.14 J	6.85 J	5.32 J	1.48 J	2.31 J	2.88 J	1.56	2.13	2.29	4.06	2.11	3.46	3.72	3.45	4.21	1
Mercury	0.0211 U	0.023 U	0.0245 U	0.0248 U	0.0235 U	0.0213 U	0.0212 U	0.0204 U	0.0195 U	0.022 U	0.0212 U	0.0216 U	0.0202 U	0.0213 U	0.0223 U	0.0247 U	0.0261 J	0.0218 U
Selenium	0.103 R	0.177 J	0.512 J	0.552 J	0.118 R	0.174 J	0.106 R	0.106 R	0.105 U	0.108 U	0.106 U	0.153 J	0.113 J	0.645	0.389 J	1.55	0.219 J	0.11 U
Silver	0.197 U	0.228 U	0.242 U	0.244 U	0.224 U	0.209 U	0.203 U	0.195 U	0.194 U	0.212 U	0.248 J	0.217 U	0.2 U	0.2 U	0.215 U	0.243 U	0.223 U	0.192 U
Zinc	0.668 J	1.57 J	4.51 J	8.97 J	3.43 J	1.16 J	0.907 J	0.558 J	0.479 J	1.33 J	0.399 U	1.89	1.17 J	1.36 J	2.15 J	0.611 J	3.4	0.781 J
Wet Chemistry (PCT)																		
% Solids	95	81.4	78.8	78.9	84	90.1	90.6	91.7	95	88.9	92.7	88.5	91.5	92.1	87.2	77.9	85.5	89

Notes:

J - Analyte present, value may or may not be accurate or precise

NA - Not analyzed

R - Unreliable Result

U - The material was analyed for, but not detected

UJ - Analyte not detected, quantitation limit may be inaccurate

Pct - Percent

Station ID	MR08-IS083	MR08-IS084	MR08-IS085	MR08-IS086	MR08-IS087	MR08-IS088	MR08-IS089		MR08-IS090	MR08-IS091	MR08-IS092	MR08-IS093	MR08-IS094	MR08-IS095	MR08-IS096	MR08-IS097	MR08-IS098
Sample ID	MR08-IS083-6-7-08D	MR08-IS084-4-5-08D	MR08-IS085-1-2-08D	MR08-IS086-2-3-08D	MR08-IS087-2-3-08D	MR08-IS088-2-3-08D	MR08-IS089-2-3-08D	MR08-IS089D-2-3-08D	MR08-IS090-2-3-08D	MR08-IS091-2-3-08D	MR08-IS092-4-5-08D	MR08-IS093-2-3-08D	MR08-IS094-5-6-08D	MR08-IS095-6-7-08D	MR08-IS096-6-7-08D	MR08-IS097-6-7-08D	MR08-IS098-3-4-08D
Sample Date	12/07/08	12/07/08	12/07/08	12/08/08	12/08/08	12/09/08	12/09/08	12/09/08	12/09/08	12/05/08	12/04/08	12/05/08	12/04/08	12/04/08	12/04/08	12/04/08	12/10/08
Chemical Name																	
Volatile Organic Compounds (UG/KG)																	
1,1,1-Trichloroethane	16 U	24 U	14 U	12 UJ	10 UJ	12 U	12 U	10 U	12 U	12 U	11 U	9.8 UJ	7.9 U	9.8 U	10 U	9.2 U	9.6 U
1,1,2,2-Tetrachloroethane	16 U	24 U	14 U	12 UJ	10 UJ	12 U	12 U	10 U	12 U	12 U	11 U	9.8 UJ	7.9 U	9.8 U	10 U	9.2 U	9.6 U
1,1,2-Trichloro-1,2,2-trifluoroethane(Freon-113)	16 U	24 U	14 U	12 U	10 UJ	12 U	12 U	10 U	12 U	12 U	11 U	9.8 UJ	7.9 U	9.8 U	10 U	9.2 U	9.6 U
1,1,2-Trichloroethane	16 U	24 U	14 U	12 UJ	10 UJ	12 U	12 U	10 U	12 U	12 U	11 U	9.8 UJ	7.9 U	9.8 U	10 U	9.2 U	9.6 U
1,1-Dichloroethane	16 U	24 U	14 U	12 U	10 UJ	12 U	12 U	10 U	12 U	12 U	11 U	9.8 UJ	7.9 U	9.8 U	10 U	9.2 U	9.6 U
1,1-Dichloroethene	16 U	24 U	14 U	12 UJ	10 UJ	12 U	12 U	10 U	12 U	12 U	11 U	9.8 UJ	7.9 U	9.8 U	10 U	9.2 U	9.6 U
1,2,4-Trichlorobenzene	16 U	24 U	14 U	12 UJ	10 UJ	12 U	12 U	10 U	12 U	12 U	11 U	9.8 UJ	7.9 U	9.8 U	10 U	9.2 U	9.6 U
1,2-Dibromo-3-chloropropane	8.2 U	12 U	7.1 U	6 UJ	5.2 UJ	5.8 U	6.3 U	5.1 U	5.9 U	6.2 U	5.4 U	4.9 UJ	4 U	4.9 U	5.2 U	4.6 U	4.8 U
1,2-Dibromoethane	16 U	24 U	14 U	12 UJ	10 UJ	12 U	12 U	10 U	12 U	12 U	11 U	9.8 UJ	7.9 U	9.8 U	10 U	9.2 U	9.6 U
1,2-Dichlorobenzene	16 U	24 U	14 U	12 UJ	10 UJ	12 U	12 U	10 U	12 U	12 U	11 U	9.8 UJ	7.9 U	9.8 U	10 U	9.2 U	9.6 U
1,2-Dichloroethane	16 U	24 U	14 U	12 UJ	10 UJ	12 U	12 U	10 U	12 U	12 U	11 U	9.8 UJ	7.9 U	9.8 U	10 U	9.2 U	9.6 U
1,2-Dichloropropane	16 U	24 U	14 U	12 UJ	10 UJ	12 U	12 U	10 U	12 U	12 U	11 U	9.8 UJ	7.9 U	9.8 U	10 U	9.2 U	9.6 U
1,3-Dichlorobenzene	16 U	24 U	14 U	12 UJ	10 UJ	12 U	12 U	10 U	12 U	12 U	11 U	9.8 UJ	7.9 U	9.8 U	10 U	9.2 U	9.6 U
1,4-Dichlorobenzene	16 U	24 U	14 U	12 UJ	10 UJ	12 U	12 U	10 U	12 U	12 U	11 U	9.8 UJ	7.9 U	9.8 U	10 U	9.2 U	9.6 U
2-Butanone	16 U	24 U	14 U	12 UJ	6.2 J	12 U	1.8 J	10 U	12 U	12 U	11 U	9.8 UJ	7.9 U	9.8 U	10 UJ	9.2 UJ	2.1 J
2-Hexanone	16 U	24 U	14 U	12 U	10 UJ	12 U	12 U	10 U	12 U	12 UJ	11 UJ	9.8 UJ	7.9 UJ	9.8 UJ	10 UJ	9.2 UJ	9.6 U
4-Methyl-2-pentanone	16 U	24 U	14 U	12 UJ	10 UJ	12 U	12 U	10 U	12 U	12 U	11 U	9.8 UJ	7.9 U	9.8 U	10 U	9.2 U	9.6 U
Acetone	16 U	24 U	14 U	30 U	85 J	12 U	32 U	18 U	12 U	40 UJ	20 UJ	26 UJ	10 UJ	9.8 UJ	32 UJ	18 UJ	25 U
Benzene	16 U	24 U	14 U	0.74 J	1.2 J	12 U	12 U	10 U	12 U	12 U	11 U	9.8 UJ	7.9 U	9.8 U	10 U	9.2 U	9.6 U
Bromodichloromethane	16 U	24 U	14 U	12 UJ	10 UJ	12 U	12 U	10 U	12 U	12 U	11 U	9.8 UJ	7.9 U	9.8 U	10 U	9.2 U	9.6 U
Bromoform	16 U	24 U	14 U	12 U	10 UJ	12 U	12 U	10 U	12 U	12 U	11 U	9.8 UJ	7.9 U	9.8 U	10 U	9.2 U	9.6 U
Bromomethane	16 U	24 U	14 U	12 UJ	10 UJ	12 UJ	12 UJ	10 UJ	12 UJ	12 U	11 U	9.8 UJ	7.9 U	9.8 U	10 UJ	9.2 UJ	9.6 U
Carbon disulfide	16 U	24 U	14 U	6.2 J	1.6 J	12 U	12 U	10 U	12 U	12 U	11 U	3.6 J	7.9 U	9.8 U	10 U	9.2 U	1.3 J
Carbon tetrachloride	16 U	24 U	14 U	12 UJ	10 UJ	12 U	12 U	10 U	12 U	12 U	11 U	9.8 UJ	7.9 U	9.8 U	10 U	9.2 U	9.6 U
Chlorobenzene	16 U	24 U	14 U	12 UJ	10 UJ	12 U	12 U	10 U	12 U	12 U	11 U	9.8 UJ	7.9 U	9.8 U	10 U	9.2 U	9.6 U
Chloroethane	16 U	24 U	14 U	12 U	10 UJ	12 UJ	12 UJ	10 UJ	12 UJ	12 U	11 U	9.8 UJ	7.9 U	9.8 U	10 U	9.2 U	9.6 U
Chloroform	16 U	24 U	14 U	12 UJ	10 UJ	12 U	12 U	10 U	12 U	12 U	11 U	9.8 UJ	7.9 U	9.8 U	10 U	9.2 U	9.6 U
Chloromethane	16 U	24 U	14 U	12 U	10 UJ	12 UJ	12 UJ	10 UJ	12 UJ	12 U	11 U	9.8 UJ	7.9 U	9.8 U	10 UJ	9.2 UJ	9.6 U
Cyclohexane	16 U	24 U	14 U	3.1 J	0.64 J	12 U	12 U	10 U	12 U	12 U	11 U	9.8 UJ	7.9 U	9.8 U	10 U	9.2 U	9.6 U
Dibromochloromethane	16 U	24 U	14 U	12 UJ	10 UJ	12 U	12 U	10 U	12 U	12 U	11 U	9.8 UJ	7.9 U	9.8 U	10 U	9.2 U	9.6 U
Dichlorodifluoromethane (Freon-12)	16 UJ	24 UJ	14 UJ	12 U	10 UJ	12 UJ	12 UJ	10 UJ	12 UJ	12 U	11 U	9.8 UJ	7.9 U	9.8 U	10 U	9.2 U	9.6 U
Ethylbenzene	16 U	24 U	14 U	3.2 J	1.6 J	12 U	12 U	10 U	12 U	12 U	11 U	9.8 UJ	7.9 U	9.8 U	10 U	9.2 U	9.6 U
Isopropylbenzene	16 U	24 U	14 U	2.6 J	10 UJ	12 U	12 U	10 U	12 U	12 U	11 U	9.8 UJ	7.9 U	9.8 U	10 U	9.2 U	9.6 U
Methyl acetate	16 U	24 U	14 U	12 UJ	10 UJ	12 U	12 U	10 U	12 U	12 U	11 U	9.8 UJ	7.9 U	9.8 U	10 U	9.2 U	9.6 U
Methyl-tert-butyl ether (MTBE)	16 U	24 U	14 U	12 U	10 UJ	12 U	12 U	10 U	12 U	12 U	11 U	9.8 UJ	7.9 U	9.8 U	10 U	9.2 U	9.6 U
Methylcyclohexane	16 U	24 U	14 U	7.6 J	10 UJ	12 U	12 U	10 U	12 U	12 U	11 U	2.7 J	7.9 U	9.8 U	10 U	9.2 U	9.6 U
Methylene chloride	16 U	24 U	14 U	12 U	10 UJ	12 U	12 U	10 U	12 U	12 U	11 U	9.8 UJ	7.9 U	9.8 U	10 U	9.2 U	1 J
Styrene	16 U	24 U	14 U	12 R	10 UJ	12 U	12 U	10 U	12 U	12 U	11 U	9.8 UJ	7.9 U	9.8 U	10 U	9.2 U	9.6 U
Tetrachloroethene	16 U	24 U	14 U	12 UJ	10 UJ	12 U	12 U	10 U	12 U	12 U	11 U	9.8 UJ	7.9 U	9.8 U	10 U	9.2 U	9.6 U
Toluene	16 U	24 U	14 U	12 UJ	3.2 J	12 U	12 U	10 U	12 U	12 U	11 U	9.8 UJ	7.9 U	9.8 U	10 U	9.2 U	9.6 U
Trichloroethene	16 U	24 U	14 U	12 UJ	10 UJ	12 U	2.2 J	1.4 J	12 U	12 U	11 U	9.8 UJ	7.9 U	9.8 U	10 U	9.2 U	9.6 U
Trichlorofluoromethane(Freon-11)	16 U	24 U	14 U	12 U	10 UJ	12 U	12 U	10 U	12 U	12 U	11 U	9.8 UJ	7.9 U	9.8 U	10 U	9.2 U	9.6 U
Vinyl chloride	16 UJ	24 UJ	14 UJ	12 UJ	10 UJ	12 U	12 U	10 U	12 U	12 U	11 U	9.8 UJ	7.9 U	9.8 U	10 UJ	9.2 UJ	9.6 U
Xylene, total	16 U	24 U	14 U	1.7 J	4.4 J	12 U	12 U	10 U	12 U	12 U	11 U	9.8 UJ	7.9 U	9.8 U	10 U	9.2 U	9.6 U
cis-1,2-Dichloroethene	16 U	24 U	14 U	12 UJ	2.9 J	12 U	12 U	10 U	12 U	12 U	11 U	9.8 UJ	7.9 U	9.8 U	10 U	9.2 U	9.6 U
cis-1,3-Dichloropropene	16 U	24 U	14 U	12 UJ	10 UJ	12 U	12 U	10 U	12 U	12 U	11 U	9.8 UJ	7.9 U	9.8 U	10 U	9.2 U	9.6 U
trans-1,2-Dichloroethene	16 U	24 U	14 U	12 UJ	10 UJ	12 U	12 U	10 U	12 U	12 U	11 U	9.8 UJ	7.9 U	9.8 U	10 U	9.2 U	9.6 U
trans-1,3-Dichloropropene	16 U	24 U	14 U	12 UJ	10 UJ	12 U	12 U	10 U	12 U	12 U	11 U	9.8 UJ	7.9 U	9.8 U	10 U	9.2 U	9.6 U
Semivolatile Organic Compounds (UG/KG)																	
1,1-Biphenyl	350 U	360 U	370 U	380 U	380 U	360 U	370 U	380 U	370 U	390 U	380 U	370 U	370 U	370 U	370 U	380 U	370 U
2,2'-Oxybis(1-chloropropane)	350 U	360 U	370 U	380 U	380 U	360 U	370 U	380 U	370 U	390 U	380 U	370 U	370 U	370 U	370 U	380 U	370 U
2,4,5-Trichlorophenol	530 U	550 U	570 U	570 U	570 U	550 U	550 U	570 U	560 U	590 U	580 U	560 U	550 U	560 U	550 U	580 U	570 U
2,4,6-Trichlorophenol	530 U	550 U	570 U	570 U	570 U	550 U	550 U	570 U	560 U	590 U	580 U	560 U	550 U	560 U	550 U	580 U	570 U
2,4-Dichlorophenol	530 U	550 U	570 U	570 U	570 U	550 U	550 U	570 U	560 U	590 U	580 U	560 U	550 U	560 U	550 U	580 U	570 U
2,4-Dimethylphenol	530 U	550 U	570 U	570 U	570 U	550 U	550 U	570 U	560 U	590 U	580 U	560 U	550 U	560 U	550 U	580 U	570 U
2,4-Dinitrophenol	1,300 U	1,300 U	1,400 U	1,400 UJ	1,400 UJ	1,300 U	1,300 U	1,400 U	1,300 U	1,400 U	1,400 U	1,300 U	1,300 U	1,300 U	1,300 U	1,400 U	1,400 U
2,4-Dinitrotoluene	350 U	360 U	370 U	380 U	380 U	360 U	370 U	380 U	370 U	390 U	380 U	370 U	370 U	370 U	370 U	380 U	370 U
2,6-Dinitrotoluene	350 U	360 U	370 U	380 U	380 U	360 U	370 U	380 U	370 U	390 U	380 U	370 U	370 U	370 U	370 U	380 U	370 U
2-Chloronaphthalene	350 U	360 U	370 U	380 U	380 U	360 U	370 U	380 U	370 U	390 U	380 U	370 U	370 U	370 U	370 U	380 U	370 U
2-Chlorophenol	530 U	550 U	570 U	570 U	570 U	550 U	550 U	570 U	560 U	590 U	580 U	560 U	550 U	560 U	550 U	580 U	570 U
2-Methylnaphthalene	10 UJ	11 U	11 U	11 J	11 UJ	11 U	11 U	9.4 J	8.6 J	12 U	12 U	11 U	11 UJ	11 UJ	11 UJ	12 UJ	11 U
2-Methylphenol	630 U	660 U	680 U	690 U	680 U	660 U	660 U	680 U	670 U	710 U	700 U	670 U	660 U	670 U	660 U	700 U	680 U
2-Nitroaniline	530 U	550 U	570 U	570 U	570 U	550 U	550 U	570 U	560 U	590 U	580 U	560 U	550 U	560 U	550 U	580 U	570 U
2-Nitrophenol	630 U	660 U	680 U	690 U	680 U	660 U	660 U	680 U	670 U	710 U	700 U	670 U	660 U	670 U	660 U	700 U	680 U
3,3'-Dichlorobenzidine	530 U	550 U	570 U	570 UJ	570 UJ	550 UJ	550 UJ	570 UJ	560 UJ	590 U	580 U	560 U	550 U	560 U	550 U	580 U	570 U
3- and 4-Methylphenol	630 U	660 U	680 U	690 U	680 U	660 U	660 U	680 U	670 U	710 U	700 U	670 U	660 U	670 U	660 U	700 U	680 U
3-Nitroaniline	530 U	550 U	570 U	570 U	570 U	550 U	550 U	570 U	560 U	590 U	580 U	560 U	550 U	560 U	550 U	580 U	570 U
4,6-Dinitro-2-methylphenol	1,300 U	1,300 U	1,400 U	1,400 UJ	1,400 UJ	1,300 U	1,300 U	1,400 U	1,300 U	1,400 U	1,400 U	1,300 U	1,300 U	1,300 U	1,300 U	1,400 U	1,400 U
4-Bromophenyl-phenylether	350 U	360 U	370 U	380 U	380 U	360 U	370 U	380 U	370 U	390 U	380 U	370 U	370 U	370 U	370 U	380 U	370 U
4-Chloro-3-methylphenol	530 U	550 U	570 U	570 U	570 U	550 U	550 U	570 U	560 U	590 U	580 U	560 U	550 U	560 U	550 U	580 U	570 U
4-Chloroaniline	530 U	550 U	570 U	570 U	570 U	550 U	550 U	570 U	560 U	590 U	580 U	560 U	550 U	560 U	550 U	580 U	570 U
4-Chlorophenyl-phenylether	350 U	360 U	370 U	380 U	380 U	360 U	370 U	380 U	370 U	390 U	380 U	370 U	370 U	370 U	370 U	380 U	370 U
4-Nitroaniline	530 U	550 U	570 U	570 U	570 U	550 U	550 U	570 U	560 U	590 U	580 U	560 U	550 U	560 U	550 U	580 U	570 U
4-Nitrophenol	1,300 U	1,300 U	1,400 U	1,400 U	1,400 U	1,300 U	1,300 U	1,400 U	1,300 U	1,400 U	1,400 U	1,300 U	1,300 U	1,300 U	1,300 U	1,400 U	1,400 UJ
Acenaphthene	350 U	360 U	370 U	380 U	380 U	360 U	370 U	380 U	370 U	390 U	380 U	370 U	370 U	370 U	370 U	380 U	370 U
Acenaphthylene	350 U	360 U	370 U	380 U	380 U	360 U	370 U	380 U	370 U	390 U	380 U	370 U	370 U	370 U	370 U	380 U	370 U
Acetophenone	630 U	660 U	680 U	690 U	680 U	660 U	660 U	680 U	670 U	710 U	700 U	670 U	660 U	670 U	660 U	700 U	680 U
Anthracene	350 U	360 U	370 U	380 U	380 U	360 U	370 U	380 U	370 U	390 U	380 U	370 U	370 U	370 U	370 U	380 U	370 U
Atrazine	350 U	360 U	370 U	380 U	380 U	360 U	370 U	380 U	370 U	390 U	380 U	370 U	370 U	370 U	370 U	380 U	370 U
Benzaldehyde	530 UJ	550 U	570 U	570 UJ	570 UJ	550 UJ	550 UJ	570 UJ	560 UJ	590 UJ	580 UJ	560 UJ	550 UJ	560 UJ	550 UJ	580 UJ	570 UJ

Station ID	MR08-IS083	MR08-IS084	MR08-IS085	MR08-IS086	MR08-IS087	MR08-IS088	MR08-IS089		MR08-IS090	MR08-IS091	MR08-IS092	MR08-IS093	MR08-IS094	MR08-IS095	MR08-IS096	MR08-IS097	MR08-IS098
Sample ID	MR08-IS083-6-7-08D	MR08-IS084-4-5-08D	MR08-IS085-1-2-08D	MR08-IS086-2-3-08D	MR08-IS087-2-3-08D	MR08-IS088-2-3-08D	MR08-IS089-2-3-08D	MR08-IS089D-2-3-08D	MR08-IS090-2-3-08D	MR08-IS091-2-3-08D	MR08-IS092-4-5-08D	MR08-IS093-2-3-08D	MR08-IS094-5-6-08D	MR08-IS095-6-7-08D	MR08-IS096-6-7-08D	MR08-IS097-6-7-08D	MR08-IS098-3-4-08D
Sample Date	12/07/08	12/07/08	12/07/08	12/08/08	12/08/08	12/09/08	12/09/08	12/09/08	12/09/08	12/05/08	12/04/08	12/05/08	12/04/08	12/04/08	12/04/08	12/04/08	12/10/08
Chemical Name																	
Benzo(a)anthracene	10 U	11 U	11 U	3.7 J	3.8 J	17	11 U	11 U	11 U	12 U	12 U	11 U	11 U	11 U	11 U	12 U	11 U
Benzo(a)pyrene	10 U	11 U	11 U	11 U	11 U	13	11 U	11 U	11 U	12 U	12 U	11 U	11 U	11 U	11 U	12 U	11 U
Benzo(b)fluoranthene	10 UJ	11 U	11 U	11 U	11 U	17	11 UJ	11 U	11 U	12 U	12 U	11 U	11 U	11 U	11 U	12 U	11 U
Benzo(g,h,i)perylene	10 UJ	11 U	11 U	11 U	11 U	5.3 J	11 U	11 U	11 U	12 U	12 U	2.3 J	11 U	11 U	11 U	12 U	11 U
Benzo(k)fluoranthene	10 U	11 U	11 U	11 U	11 U	13	11 U	11 U	11 U	12 U	12 U	11 U	11 U	11 U	11 U	12 U	11 U
Butylbenzylphthalate	350 U	360 U	370 U	380 U	380 U	360 U	370 U	380 U	370 U	390 U	380 U	370 U	370 U	370 U	370 U	380 U	370 UJ
Caprolactam	530 U	550 U	570 U	570 U	570 U	550 U	550 U	570 U	560 U	590 U	580 U	560 U	550 U	560 U	550 U	580 U	570 U
Carbazole	530 U	550 U	570 U	570 U	570 U	550 U	550 U	570 U	560 U	590 U	580 U	560 U	550 U	560 U	550 U	580 U	570 U
Chrysene	350 U	360 U	370 U	380 U	380 U	360 U	370 U	380 U	370 U	390 U	380 U	370 U	370 U	370 U	370 U	380 U	370 U
Di-n-butylphthalate	350 U	360 U	370 U	380 U	380 U	360 U	370 U	380 U	370 U	390 U	380 U	370 U	370 U	370 U	370 U	380 U	370 U
Di-n-octylphthalate	350 U	360 U	370 U	380 U	380 U	360 U	370 U	380 U	370 U	390 U	380 U	370 U	370 U	370 U	370 U	380 U	370 UJ
Dibenz(a,h)anthracene	10 UJ	11 U	11 U	11 U	11 U	4 J	11 U	11 U	11 U	12 U	12 U	11 U	11 U	11 U	11 U	12 U	11 U
Dibenzofuran	350 U	360 U	370 U	380 U	380 U	360 U	370 U	380 U	370 U	390 U	380 U	370 U	370 U	370 U	370 U	380 U	370 U
Diethylphthalate	350 U	360 U	370 U	380 U	380 U	360 U	370 U	380 U	370 U	390 U	380 U	370 U	370 U	370 U	370 U	380 U	370 U
Dimethyl phthalate	350 U	360 U	370 U	380 U	380 U	360 U	370 U	380 U	370 U	390 U	380 U	370 U	370 U	370 U	370 U	380 U	370 U
Fluoranthene	10 U	11 U	11 U	11 U	7 J	27	11 U	3.8 J	11 U	12 U	12 U	2.8 J	11 U	11 U	11 U	5.7 J	11 U
Fluorene	10 U	11 U	11 U	11 U	11 U	11 U	11 U	11 U	11 U	12 U	12 U	11 U	11 U	11 U	11 U	12 U	11 U
Hexachlorobenzene	10 U	11 U	11 U	11 U	0.41 J	11 U	11 UJ	11 U	11 U	12 U	12 U	11 U	11 UJ	11 UJ	11 UJ	12 UJ	11 U
Hexachlorobutadiene	10 U	11 U	11 U	11 U	11 U	11 U	11 U	11 U	11 U	12 U	12 U	11 U	11 UJ	11 UJ	11 UJ	12 UJ	11 U
Hexachlorocyclopentadiene	10 U	11 U	11 U	11 U	11 U	11 U	11 UJ	11 U	11 U	12 UJ	12 UJ	11 UJ	11 U	11 U	11 U	12 U	11 U
Hexachloroethane	350 U	360 U	370 U	380 U	380 U	360 U	370 U	380 U	370 U	390 U	380 U	370 U	370 U	370 U	370 U	380 U	370 U
Indeno(1,2,3-cd)pyrene	10 UJ	11 U	11 U	11 U	11 U	5.7 J	11 U	11 U	11 U	12 U	12 U	11 U	11 U	11 U	11 U	12 U	11 U
Isophorone	350 U	360 U	370 U	380 U	380 U	360 U	370 U	380 U	370 U	390 U	380 U	370 U	370 U	370 U	370 U	380 U	370 U
Naphthalene	10 UJ	11 UJ	11 UJ	11 U	11 UJ	11 U	11 U	11 U	11 U	12 UJ	12 UJ	11 UJ	11 U	11 U	11 U	12 U	11 U
Nitrobenzene	350 UJ	360 UJ	370 UJ	380 UJ	380 UJ	360 UJ	370 UJ	380 UJ	370 UJ	390 U	380 U	370 U	370 U	370 U	370 U	380 U	370 UJ
Pentachlorophenol	870 U	900 U	930 U	940 U	930 U	910 U	910 U	930 U	910 U	970 U	950 U	920 U	910 U	920 U	910 U	960 U	930 U
Phenanthrene	10 U	11 U	11 U	7.6 J	3.7 J	7.7 J	11 U	1.7 J	11 U	12 U	12 U	11 U	11 UJ	11 UJ	11 UJ	7.9 J	11 U
Phenol	530 U	550 U	570 U	570 U	570 U	550 U	550 U	570 U	560 U	590 U	580 U	560 U	550 U	560 U	550 U	580 U	570 U
Pyrene	10 U	11 U	11 U	11 U	6.5 J	20	11 U	11 U	11 U	12 U	12 U	2.7 J	11 U	11 U	11 U	8.1 J	11 U
bis(2-Chloroethoxy)methane	350 U	360 U	370 U	380 U	380 U	360 U	370 U	380 U	370 U	390 U	380 U	370 U	370 U	370 U	370 U	380 U	370 U
bis(2-Chloroethyl)ether	350 U	360 U	370 U	380 U	380 U	360 U	370 U	380 U	370 U	390 U	380 U	370 U	370 U	370 U	370 U	380 U	370 U
bis(2-Ethylhexyl)phthalate	140 J	360 U	160 J	310 J	380 U	160 J	370 U	380 U	370 U	390 U	380 U	220 J	140 J	370 U	370 U	800	400 J
n-Nitroso-di-n-propylamine	350 U	360 U	370 U	380 U	380 U	360 U	370 U	380 U	370 U	390 U	380 U	370 U	370 U	370 U	370 U	380 U	370 U
n-Nitrosodiphenylamine	700 U	720 U	750 U	760 U	750 U	730 U	730 U	750 U	740 U	780 U	770 U	740 U	730 U	740 U	730 U	770 U	750 U
Explosives (UG/KG)																	
1,3,5-Trinitrobenzene	98.3 U	99.9 U	97.8 U	99.8 U	98.2 U	99.8 U	99.3 U	100 U	99.1 U	99.2 U	96.9 U	99.1 U	98.1 U	99 U	97.3 U	99.8 U	99.6 U
1,3-Dinitrobenzene	98.3 U	99.9 U	97.8 U	99.8 UJ	98.2 U	99.8 U	99.3 U	100 U	99.1 U	99.2 U	96.9 U	99.1 U	98.1 U	99 U	97.3 U	99.8 U	99.6 U
2,4,6-Trinitrotoluene	98.3 U	99.9 U	97.8 U	99.8 U	98.2 U	99.8 U	99.3 U	100 U	99.1 U	99.2 UJ	96.9 U	99.1 UJ	98.1 U	99 U	97.3 U	99.8 U	99.6 U
2,4-Dinitrotoluene	98.3 U	99.9 U	97.8 U	99.8 UJ	98.2 U	99.8 U	99.3 U	100 U	99.1 U	99.2 U	96.9 U	99.1 U	98.1 UJ	99 UJ	97.3 UJ	99.8 UJ	99.6 U
2,6-Dinitrotoluene	98.3 U	99.9 U	97.8 U	99.8 U	98.2 U	99.8 U	99.3 U	100 U	99.1 U	99.2 U	96.9 U	99.1 U	98.1 U	99 U	97.3 U	99.8 U	99.6 U
2-Amino-4,6-dinitrotoluene	98.3 U	99.9 U	97.8 U	99.8 UJ	98.2 U	99.8 U	99.3 U	100 U	99.1 U	99.2 U	96.9 U	99.1 U	98.1 U	99 U	97.3 U	99.8 U	99.6 U
2-Nitrotoluene	98.3 U	99.9 U	97.8 U	99.8 U	98.2 U	99.8 U	99.3 U	100 U	99.1 U	99.2 U	96.9 U	99.1 U	98.1 U	99 U	97.3 U	99.8 U	99.6 U
3-Nitrotoluene	98.3 U	99.9 U	97.8 U	99.8 U	98.2 U	99.8 U	99.3 U	100 U	99.1 U	99.2 U	96.9 U	99.1 U	98.1 U	99 U	97.3 U	99.8 U	99.6 U
4-Amino-2,6-dinitrotoluene	98.3 U	99.9 U	97.8 U	99.8 UJ	98.2 U	99.8 U	99.3 U	100 U	99.1 U	99.2 U	96.9 U	99.1 U	98.1 U	99 U	97.3 U	99.8 U	99.6 U
4-Nitrotoluene	98.3 U	99.9 U	97.8 U	99.8 U	98.2 U	99.8 U	99.3 U	100 U	99.1 U	99.2 U	96.9 U	99.1 U	98.1 U	99 U	97.3 U	99.8 U	99.6 U
HMX	98.3 U	99.9 U	97.8 U	99.8 U	98.2 U	99.8 U	99.3 U	100 U	99.1 U	99.2 U	96.9 U	99.1 U	98.1 U	99 U	97.3 U	99.8 U	99.6 U
Nitrobenzene	98.3 U	99.9 U	97.8 U	99.8 U	98.2 U	99.8 U	99.3 U	100 U	99.1 U	99.2 U	96.9 U	99.1 U	98.1 U	99 U	97.3 U	99.8 U	99.6 U
Nitroglycerin	98.3 U	99.9 U	97.8 U	99.8 U	98.2 U	99.8 U	99.3 U	100 U	99.1 U	99.2 U	96.9 U	99.1 U	98.1 U	99 U	97.3 U	99.8 U	99.6 U
PETN	98.3 U	99.9 U	97.8 U	99.8 U	98.2 U	99.8 U	99.3 U	100 U	99.1 U	99.2 U	96.9 U	99.1 U	98.1 U	99 U	97.3 U	99.8 U	99.6 U
Perchlorate	2.1 U	2.2 U	350	2.4 U	2.3 U	1.4 J	2.2 U	2.3 U	2.2 U	2.7 U	2.3 U	2.4 U	2.2 U	2.4 U	2.3 U	2.5 U	2.2 U
RDX	98.3 U	99.9 U	97.8 U	99.8 U	98.2 U	99.8 U	99.3 U	100 U	99.1 U	99.2 U	96.9 U	99.1 U	98.1 U	99 U	97.3 U	99.8 U	99.6 U
Tetryl	98.3 UJ	99.9 UJ	97.8 UJ	99.8 U	98.2 U	99.8 U	99.3 U	100 U	99.1 UJ	99.2 UJ	96.9 U	99.1 UJ	98.1 U	99 U	97.3 U	99.8 U	99.6 U
Total Metals (MG/KG)																	
Antimony	0.381 U	0.406 U	0.418 U	0.417 U	0.788 J	0.421 U	0.411 U	0.394 U	0.384 U	1.05 J	0.418 J	0.408 U	0.406 U	0.401 U	0.414 U	0.512 J	0.392 U
Arsenic	0.166 J	0.123 J	0.41	0.566	0.954	0.335	0.218 J	0.186 J	1.05	0.444	0.157 J	0.959	0.141 J	0.081 U	0.0818 U	0.492	0.431
Barium	3.44	6.97	5.34	6.33	5.57	2.83 J	2.99 J	3.21 J	3.88 J	8.99	5.56 J	10.9	5.52 J	2.15 J	2.61 J	4.18 J	5.69 J
Cadmium	0.0381 U	0.0406 U	0.0418 U	0.0417 U	0.0727 J	0.0421 U	0.0411 U	0.0394 U	0.237	0.0432 U	0.0412 UJ	0.0654 J	0.0406 UJ	0.0401 UJ	0.0414 UJ	0.0416 UJ	0.0392 U
Chromium	3.61	5.03 J	5.16 J	4.67	3.57 J	2.45 J	3.08 J	3.1 J	5.53 J	4.98 J	7.1 J	6.28 J	6.97 J	3.51 J	4.6 J	5.5 J	6.98 J
Copper	0.381 U	0.715 J	0.418 U	0.417 U	0.771 J	0.421 U	0.411 U	0.394 U	1.69	1.99	0.412 U	1.55 J	0.406 U	0.449 J	0.414 U	0.416 U	0.449 J
Lead	1.6	1.76	3.6	3.32	3.86 J	2.54	3.55	3.57	10.4	11.9 J	3.91 J	5.57 J	3.75 J	2.26 J	1.86 J	2.69	1.8 J
Mercury	0.0227 U	0.0211 U	0.0218 U	0.0217 U	0.0221 U	0.021 U	0.0214 U	0.0211 U	0.0211 U	0.0274 J	0.0227 U	0.0212 U	0.0209 U	0.0227 U	0.0207 U	0.0232 U	0.0292 J
Selenium	0.481	0.114 U	0.281 J	0.723	0.672	0.229 J	0.205 J	0.103 UJ	0.219 J	0.536	0.314 J	0.202 J	0.343 J	0.108 U	0.109 U	0.114 U	0.154 J
Silver	0.19 U	0.203 U	0.209 U	0.208 U	0.263 J	0.211 U	0.205 U	0.197 U	0.289 J	0.216 U	0.206 U	0.204 U	0.203 U	0.2 U	0.207 U	0.208 U	0.196 U
Zinc	0.649 J	1.74 J	0.943 J	1.39 J	3.81 J	0.447 J	0.483 J	0.477 J	5.59	4.52 J	2.83 J	16.2 J	1.84 J	1.12 J	1.37 J	1.64 J	1.24 J
Wet Chemistry (PCT)																	
% Solids	87.8	87.6	86.4	90.4	87.3	90.9	90	89.3	91.6	84.3	85.3	88.4	92.8	88.1	90.9	83	90.2

Notes:

J - Analyte present, value may or may not be accurate or precise

NA - Not analyzed

R - Unreliable Result

U - The material was analyed for, but not detected

UJ - Analyte not detected, quantitation limit may be inaccurate

Pct - Percent

Station ID	MR08-IS099		MR08-IS100	MR08-IS101	MR08-IS102	MR08-IS103	MR08-IS104	MR08-IS105	MR08-IS106	MR08-IS107	MR08-IS108	MR08-IS109		MR08-IS110	MR08-IS113	MR08-IS114	MR08-IS115	MR08-IS116
Sample ID	MR08-IS099-2-3-08D	MR08-IS099D-2-3-08D	MR08-IS100-2-3-08D	MR08-IS101-2-3-08D	MR08-IS102-2-3-08D	MR08-IS103-3-4-08D	MR08-IS104-1-2-08D	MR08-IS105-2-3-08D	MR08-IS106-2-3-08D	MR08-IS107-2-3-08D	MR08-IS108-2-3-08D	MR08-IS109-2-3-08D	MR08-IS109D-2-3-08D	MR08-IS110-08D	MR08-IS113-2-3-08D	MR08-IS114-2-3-08D	MR08-IS115-2-3-08D	MR08-IS116-3-4-08D
Sample Date	12/10/08	12/10/08	12/10/08	12/10/08	12/15/08	12/05/08	12/08/08	12/08/08	12/08/08	12/07/08	12/07/08	12/07/08	12/07/08	12/17/08	12/09/08	12/09/08	12/09/08	12/05/08
Chemical Name																		
Volatile Organic Compounds (UG/KG)																		
1,1,1-Trichloroethane	14 U	9.6 U	18 UJ	12 U	8.7 U	7.6 U	12 U	15 U	9.9 U	12 U	22 U	22 U	16 UJ	8.5 U	10 U	12 U	11 U	8.7 U
1,1,2,2-Tetrachloroethane	14 U	9.6 U	18 UJ	12 U	8.7 U	7.6 U	12 UJ	15 UJ	9.9 UJ	12 U	22 U	22 U	16 UJ	8.5 U	10 U	12 U	11 U	8.7 U
1,1,2-Trichloro-1,2,2-trifluoroethane(Freon-113)	14 U	9.6 U	18 UJ	12 U	8.7 U	7.6 U	12 U	15 U	9.9 U	12 U	22 U	22 U	16 UJ	8.5 U	10 U	12 U	11 U	8.7 U
1,1,2-Trichloroethane	14 U	9.6 U	18 UJ	12 U	8.7 U	7.6 U	12 UJ	15 UJ	9.9 UJ	12 U	22 U	22 U	16 UJ	8.5 U	10 U	12 U	11 U	8.7 U
1,1-Dichloroethane	14 U	9.6 U	18 UJ	12 U	8.7 U	7.6 U	12 U	15 U	9.9 U	12 U	22 U	22 U	16 UJ	8.5 U	10 U	12 U	11 U	8.7 U
1,1-Dichloroethene	14 U	9.6 U	18 UJ	12 U	8.7 U	7.6 U	12 U	15 U	9.9 U	12 U	22 U	22 U	16 UJ	8.5 U	10 U	12 U	11 U	8.7 U
1,2,4-Trichlorobenzene	14 U	9.6 U	18 UJ	12 U	8.7 U	7.6 U	12 UJ	15 U	9.9 U	12 U	22 U	22 U	16 UJ	8.5 U	10 U	12 U	11 U	8.7 U
1,2-Dibromo-3-chloropropane	7.3 U	4.8 U	9.1 UJ	5.9 U	4.3 U	3.8 U	5.8 UJ	7.6 UJ	4.9 UJ	5.8 U	11 U	11 U	8.2 UJ	4.3 U	5.2 U	6 U	5.7 U	4.4 U
1,2-Dibromoethane	14 U	9.6 U	18 UJ	12 U	8.7 U	7.6 U	12 UJ	15 UJ	9.9 UJ	12 U	22 U	22 U	16 UJ	8.5 U	10 U	12 U	11 U	8.7 U
1,2-Dichlorobenzene	14 U	9.6 U	18 UJ	12 U	8.7 U	7.6 U	12 UJ	15 UJ	9.9 UJ	12 U	22 U	22 U	16 UJ	8.5 U	10 U	12 U	11 U	8.7 U
1,2-Dichloroethane	14 U	9.6 U	18 UJ	12 U	8.7 U	7.6 U	12 U	15 U	9.9 U	12 U	22 U	22 U	16 UJ	8.5 U	10 U	12 U	11 U	8.7 U
1,2-Dichloropropane	14 U	9.6 U	18 UJ	12 U	8.7 U	7.6 U	12 UJ	15 UJ	9.9 UJ	12 U	22 U	22 U	16 UJ	8.5 U	10 U	12 U	11 U	8.7 U
1,3-Dichlorobenzene	14 U	9.6 U	18 UJ	12 U	8.7 U	7.6 U	12 UJ	15 U	9.9 U	12 U	22 U	22 U	16 UJ	8.5 U	10 U	12 U	11 U	8.7 U
1,4-Dichlorobenzene	14 U	9.6 U	18 UJ	12 U	8.7 U	7.6 U	12 UJ	15 UJ	9.9 UJ	12 U	22 U	22 U	16 UJ	8.5 U	10 U	12 U	11 U	8.7 U
2-Butanone	14 U	9.6 U	18 UJ	12 U	8.7 U	7.6 U	12 UJ	15 UJ	2.6 J	12 U	22 U	22 U	11 J	8.5 U	10 U	12 U	11 U	8.7 U
2-Hexanone	14 U	9.6 U	18 UJ	12 U	8.7 UJ	7.6 UJ	12 U	15 U	9.9 U	12 U	22 U	22 U	16 UJ	8.5 U	10 U	12 U	11 U	8.7 UJ
4-Methyl-2-pentanone	14 U	9.6 U	18 UJ	12 U	8.7 U	7.6 U	12 UJ	15 UJ	9.9 UJ	12 U	22 U	22 U	16 UJ	8.5 U	10 U	12 U	11 U	8.7 U
Acetone	15 U	9.6 U	18 UJ	12 U	8.7 U	10 UJ	23 U	15 U	63	12 U	22 U	74	140 J	8.5 U	12 U	12 U	18 U	10 UJ
Benzene	14 U	9.6 U	18 UJ	12 U	8.7 U	7.6 U	12 U	15 U	9.9 U	12 U	22 U	1.2 J	10 J	8.5 U	10 U	12 U	11 U	8.7 U
Bromodichloromethane	14 U	9.6 U	18 UJ	12 U	8.7 U	7.6 U	12 U	15 U	9.9 U	12 U	22 U	22 U	16 UJ	8.5 U	10 U	12 U	11 U	8.7 U
Bromoform	14 U	9.6 U	18 UJ	12 U	8.7 U	7.6 U	12 U	15 U	9.9 U	12 U	22 U	22 U	16 UJ	8.5 U	10 U	12 U	11 U	8.7 U
Bromomethane	14 U	9.6 U	18 UJ	12 U	8.7 U	7.6 U	12 U	15 U	9.9 U	12 U	22 U	22 U	16 UJ	8.5 U	10 U	12 UJ	11 UJ	8.7 U
Carbon disulfide	14 U	9.6 U	18 UJ	12 U	8.7 U	7.6 U	12 U	15 U	9.9 U	12 U	22 U	22 U	16 UJ	8.5 U	10 U	12 U	11 U	8.7 U
Carbon tetrachloride	14 U	9.6 U	18 UJ	12 U	8.7 U	7.6 U	12 U	15 U	9.9 U	12 U	22 U	22 U	16 UJ	8.5 U	10 U	12 U	11 U	8.7 U
Chlorobenzene	14 U	9.6 U	18 UJ	12 U	8.7 U	7.6 U	12 UJ	15 UJ	9.9 UJ	12 U	22 U	22 U	16 UJ	8.5 U	10 U	12 U	11 U	8.7 U
Chloroethane	14 U	9.6 U	18 UJ	12 U	8.7 U	7.6 U	12 U	15 U	9.9 U	12 U	22 U	22 U	16 UJ	8.5 U	10 U	12 UJ	11 UJ	8.7 U
Chloroform	14 U	9.6 U	18 UJ	12 U	8.7 U	7.6 U	12 U	15 U	9.9 U	12 U	22 U	22 U	16 UJ	8.5 U	10 U	12 U	11 U	8.7 U
Chloromethane	14 U	9.6 U	18 UJ	12 U	8.7 U	7.6 U	12 U	15 U	9.9 U	12 U	22 U	22 U	16 UJ	8.5 U	10 UJ	12 UJ	11 UJ	8.7 U
Cyclohexane	14 U	9.6 U	18 UJ	12 U	8.7 U	7.6 U	12 U	15 U	9.9 U	12 U	22 U	22 U	16 UJ	8.5 U	10 U	12 U	11 U	8.7 U
Dibromochloromethane	14 U	9.6 U	18 UJ	12 U	8.7 U	7.6 U	12 UJ	15 UJ	9.9 UJ	12 U	22 U	22 U	16 UJ	8.5 U	10 U	12 U	11 U	8.7 U
Dichlorodifluoromethane (Freon-12)	14 U	9.6 U	18 UJ	12 U	8.7 U	7.6 U	12 U	15 U	9.9 U	12 UJ	22 UJ	22 UJ	16 UJ	8.5 U	10 UJ	12 UJ	11 UJ	8.7 U
Ethylbenzene	14 U	9.6 U	18 UJ	12 U	8.7 U	7.6 U	12 UJ	15 UJ	0.82 J	12 U	22 U	22 U	1.8 J	8.5 U	10 U	12 U	11 U	8.7 U
Isopropylbenzene	14 U	9.6 U	18 UJ	12 U	8.7 U	7.6 U	12 UJ	15 UJ	9.9 UJ	12 U	22 U	22 U	16 UJ	8.5 U	10 U	12 U	11 U	8.7 U
Methyl acetate	14 U	9.6 U	18 UJ	12 U	8.7 U	7.6 U	12 UJ	15 U	9.9 U	12 U	22 U	22 U	16 UJ	8.5 U	10 U	12 U	11 U	8.7 U
Methyl-tert-butyl ether (MTBE)	14 U	9.6 U	18 UJ	12 U	8.7 U	7.6 U	12 U	15 U	9.9 U	12 U	22 U	22 U	16 UJ	8.5 U	10 U	12 U	11 U	8.7 U
Methylcyclohexane	14 U	9.6 U	18 UJ	12 U	8.7 U	7.6 U	12 U	15 U	9.9 U	12 U	22 U	22 U	16 UJ	8.5 U	10 U	12 U	11 U	8.7 U
Methylene chloride	14 U	9.6 U	18 UJ	12 U	8.7 U	7.6 U	12 U	15 U	9.9 U	12 U	22 U	1.6 J	16 UJ	8.5 U	10 U	12 U	11 U	8.7 U
Styrene	14 U	9.6 U	18 UJ	12 U	8.7 U	7.6 U	12 UJ	15 UJ	9.9 UJ	12 U	22 U	22 U	16 UJ	8.5 U	10 U	12 U	11 U	8.7 U
Tetrachloroethene	14 U	9.6 U	18 UJ	12 U	8.7 U	7.6 U	12 U	15 U	9.9 U	12 U	22 U	22 U	16 UJ	8.5 U	10 U	12 U	11 U	8.7 U
Toluene	14 U	9.6 U	18 UJ	12 U	8.7 U	7.6 U	12 UJ	15 UJ	9.9 UJ	12 U	22 U	3 J	29 J	8.5 U	10 U	12 U	11 U	8.7 U
Trichloroethene	14 U	9.6 U	18 UJ	12 U	8.7 U	7.6 U	12 U	15 U	9.9 U	12 U	22 U	22 U	16 UJ	8.5 U	10 U	12 U	11 U	8.7 U
Trichlorofluoromethane(Freon-11)	14 U	9.6 U	18 UJ	12 U	8.7 U	7.6 U	12 U	6.8 J	9.9 U	12 U	22 U	22 U	16 UJ	8.5 U	10 U	12 U	11 U	8.7 U
Vinyl chloride	14 U	9.6 U	18 UJ	12 U	8.7 U	7.6 U	12 UJ	15 U	9.9 U	12 UJ	22 UJ	22 UJ	16 UJ	8.5 U	10 UJ	12 U	11 U	8.7 U
Xylene, total	14 U	9.6 U	18 UJ	12 U	8.7 U	7.6 U	12 UJ	15 UJ	9.9 UJ	12 U	22 U	22 U	16 UJ	8.5 U	10 U	12 U	11 U	8.7 U
cis-1,2-Dichloroethene	14 U	9.6 U	18 UJ	12 U	8.7 U	7.6 U	12 U	15 U	9.9 U	12 U	22 U	22 U	13 J	8.5 U	10 U	12 U	11 U	8.7 U
cis-1,3-Dichloropropene	14 U	9.6 U	18 UJ	12 U	8.7 U	7.6 U	12 UJ	15 UJ	9.9 UJ	12 U	22 U	22 U	16 UJ	8.5 U	10 U	12 U	11 U	8.7 U
trans-1,2-Dichloroethene	14 U	9.6 U	18 UJ	12 U	8.7 U	7.6 U	12 U	15 U	9.9 U	12 U	22 U	22 U	16 UJ	8.5 U	10 U	12 U	11 U	8.7 U
trans-1,3-Dichloropropene	14 U	9.6 U	18 UJ	12 U	8.7 U	7.6 U	12 UJ	15 UJ	9.9 UJ	12 U	22 U	22 U	16 UJ	8.5 U	10 U	12 U	11 U	8.7 U
Semivolatile Organic Compounds (UG/KG)																		
1,1-Biphenyl	380 U	380 U	380 U	370 U	380 U	380 U	390 U	380 U	370 U	370 U	370 U	380 U	390 U	370 U	380 U	360 U	360 U	380 U
2,2'-Oxybis(1-chloropropane)	380 U	380 U	380 U	370 U	380 U	380 U	390 U	380 U	370 U	370 U	370 U	380 U	390 U	370 U	380 U	360 U	360 U	380 U
2,4,5-Trichlorophenol	570 U	570 U	580 U	570 U	570 U	580 U	580 U	570 U	560 U	560 U	560 U	570 U	590 U	550 U	570 U	540 U	550 U	570 U
2,4,6-Trichlorophenol	570 U	570 U	580 U	570 U	570 U	580 U	580 U	570 U	560 U	560 U	560 U	570 U	590 U	550 U	570 U	540 U	550 U	570 U
2,4-Dichlorophenol	570 U	570 U	580 U	570 U	570 U	580 U	580 U	570 U	560 U	560 U	560 U	570 U	590 U	550 U	570 U	540 U	550 U	570 U
2,4-Dimethylphenol	570 U	570 U	580 U	570 U	570 UJ	580 U	580 U	570 U	560 U	560 U	560 U	570 U	590 U	550 UJ	570 U	540 U	550 U	570 U
2,4-Dinitrophenol	1,400 U	1,400 U	1,400 U	1,400 U	1,400 U	1,400 U	1,400 U	1,400 U	1,400 UJ	1,300 U	1,400 U	1,400 UJ	1,400 U	1,300 U	1,400 U	1,300 U	1,300 U	1,400 U
2,4-Dinitrotoluene	380 U	380 U	380 U	370 U	380 U	380 U	390 U	380 U	370 U	370 U	370 U	380 U	390 U	370 U	380 U	360 U	360 U	380 U
2,6-Dinitrotoluene	380 U	380 U	380 U	370 U	380 U	380 U	390 U	380 U	370 U	370 U	370 U	380 U	390 U	370 U	380 U	360 U	360 U	380 U
2-Chloronaphthalene	380 U	380 U	380 U	370 U	380 U	380 U	390 U	380 U	370 U	370 U	370 U	380 U	390 U	370 U	380 U	360 U	360 U	380 U
2-Chlorophenol	570 U	570 U	580 U	570 U	570 U	580 U	580 U	570 U	560 U	560 U	560 U	570 U	590 U	550 U	570 U	540 U	550 U	570 U
2-Methylnaphthalene	11 U	11 U	12 U	11 U	2.6 J	12 U	12 UJ	11 UJ	11 UJ	4.8 J	11 UJ	11 U	12 UJ	11 U	11 U	11 U	9.1 J	11 U
2-Methylphenol	680 U	680 U	700 U	680 U	680 U	700 U	700 U	690 U	680 U	670 U	680 U	680 U	710 U	660 U	680 U	660 U	660 U	680 U
2-Nitroaniline	570 U	570 U	580 U	570 U	570 U	580 U	580 U	570 U	560 U	560 U	560 U	570 U	590 U	550 U	570 U	540 U	550 U	570 U
2-Nitrophenol	680 U	680 U	700 U	680 U	680 U	700 U	700 U	690 U	680 U	670 U	680 U	680 U	710 U	660 U	680 U	660 U	660 U	680 U
3,3'-Dichlorobenzidine	570 U	570 U	580 U	570 U	570 U	580 U	580 U	570 U	560 UJ	560 U	560 U	570 UJ	590 U	550 U	570 UJ	540 UJ	550 UJ	570 U
3- and 4-Methylphenol	680 U	680 U	700 U	680 U	680 U	700 U	700 U	690 U	680 U	670 U	680 U	680 U	710 U	660 U	680 U	660 U	660 U	680 U
3-Nitroaniline	570 U	570 U	580 U	570 U	570 U	580 U	580 U	570 U	560 U	560 U	560 U	570 U	590 U	550 U	570 U	540 U	550 U	570 U
4,6-Dinitro-2-methylphenol	1,400 U	1,400 U	1,400 U	1,400 U	1,400 U	1,400 U	1,400 U	1,400 U	1,400 UJ	1,300 U	1,400 U	1,400 UJ	1,400 U	1,300 U	1,400 U	1,300 U	1,300 U	1,400 U
4-Bromophenyl-phenylether	380 U	380 U	380 U	370 U	380 U	380 U	390 U	380 U	370 U	370 U	370 U	380 U	390 U	370 U	380 U	360 U	360 U	380 U
4-Chloro-3-methylphenol	570 U	570 U	580 U	570 U	570 U	580 U	580 U	570 U	560 U	560 U	560 U	570 U	590 U	550 U	570 U	540 U	550 U	570 U
4-Chloroaniline	570 U	570 U	580 U	570 U	570 U	580 U	580 U	570 U	560 U	560 U	560 U	570 U	590 U	550 U	570 U	540 U	550 U	570 U
4-Chlorophenyl-phenylether	380 U	380 U	380 U	370 U	380 U	380 U	390 U	380 U	370 U	370 U	370 U	380 U	390 U	370 U	380 U	360 U	360 U	380 U
4-Nitroaniline	570 U	570 U	580 U	570 U	570 U	580 U	580 U	570 U	560 U	560 U	560 U	570 U	590 U	550 U	570 U	540 U	550 U	570 U
4-Nitrophenol	1,400 U	1,400 U	1,400 UJ	1,400 UJ	1,400 UJ	1,400 U	1,400 U	1,400 U	1,400 U	1,300 U	1,400 U	1,400 U	1,400 U	1,300 U	1,400 U	1,300 U	1,300 U	1,400 U
Acenaphthene	380 U	380 U	380 U	370 U	380 U	380 U	390 U	380 U	370 U	370 U	370 U	380 U	390 U	370 U	380 U	360 U	360 U	380 U
Acenaphthylene	380 U	380 U	380 U	370 U	380 U	380 U	390 U	380 U	370 U	370 U	370 U	380 U	390 U	370 U	380 U	360 U	360 U	380 U
Acetophenone	680 U	680 U	700 U	680 U	680 U	700 U	700 U	690 U	680 U	670 U	680 U	680 U	710 U	660 U	680 U	660 U	660 U	680 U
Anthracene	380 U	380 U	380 U	370 U	380 U	380 U	390 U	380 U	370 U	370 U	370 U	380 U	390 U	370 U	380 U	360 U	360 U	380 U
Atrazine	380 U	380 U	380 U	370 U	380 U	380 U	390 U	380 U	370 U	370 U	370 U	380 U	390 U	370 U	380 U	360 U	360 U	380 U
Benzaldehyde	570 UJ	570 UJ	580 UJ	570 UJ	570 UJ	580 UJ	580 U	570 U	560 UJ	560 U	560 U	570 UJ	590 U	550 UJ	570 UJ	540 UJ	550 UJ	570 UJ

Station ID	MR08-IS099		MR08-IS100	MR08-IS101	MR08-IS102	MR08-IS103	MR08-IS104	MR08-IS105	MR08-IS106	MR08-IS107	MR08-IS108	MR08-IS109		MR08-IS110	MR08-IS113	MR08-IS114	MR08-IS115	MR08-IS116
Sample ID	MR08-IS099-2-3-08D	MR08-IS099D-2-3-08D	MR08-IS100-2-3-08D	MR08-IS101-2-3-08D	MR08-IS102-2-3-08D	MR08-IS103-3-4-08D	MR08-IS104-1-2-08D	MR08-IS105-2-3-08D	MR08-IS106-2-3-08D	MR08-IS107-2-3-08D	MR08-IS108-2-3-08D	MR08-IS109-2-3-08D	MR08-IS109D-2-3-08D	MR08-IS110-08D	MR08-IS113-2-3-08D	MR08-IS114-2-3-08D	MR08-IS115-2-3-08D	MR08-IS116-3-4-08D
Sample Date	12/10/08	12/10/08	12/10/08	12/10/08	12/15/08	12/05/08	12/08/08	12/08/08	12/08/08	12/07/08	12/07/08	12/07/08	12/07/08	12/17/08	12/09/08	12/09/08	12/09/08	12/05/08
Chemical Name																		
Benzo(a)anthracene	11 U	11 U	12 UJ	11 U	3 J	12 U	2.8 J	11 U	11 U	11 U	11 U	11 U	12 U	11 U	11 U	11 U	11 U	11 U
Benzo(a)pyrene	11 U	11 U	12 U	11 U	11 U	12 U	12 U	11 U	11 U	11 U	11 U	11 U	12 U	11 U	11 U	11 U	11 U	11 U
Benzo(b)fluoranthene	11 U	11 U	12 UJ	11 U	9.9 J	12 U	7 J	11 U	11 U	11 U	11 U	11 U	12 U	11 UJ	11 U	11 UJ	11 U	11 U
Benzo(g,h,i)perylene	2.9 J	2.4 J	12 UJ	11 U	3.6 J	12 U	12 U	11 U	11 U	11 U	11 U	11 U	12 U	11 U	11 U	11 U	11 U	11 U
Benzo(k)fluoranthene	11 U	11 U	12 U	11 U	11 U	12 U	5.6 J	11 U	11 U	11 U	11 U	11 U	12 U	11 U	11 U	11 U	11 U	11 U
Butylbenzylphthalate	380 U	380 U	380 U	370 U	380 U	380 U	390 U	380 U	370 U	370 U	370 U	380 U	390 U	370 U	380 U	360 U	360 U	380 U
Caprolactam	570 U	570 U	580 U	570 U	570 U	580 U	580 U	570 U	560 U	560 U	560 U	570 U	590 U	550 U	570 U	540 U	550 U	570 U
Carbazole	570 U	570 U	580 U	570 U	570 U	580 U	580 U	570 U	560 U	560 U	560 U	570 U	590 U	550 U	570 U	540 U	550 U	570 U
Chrysene	380 U	380 U	380 U	370 U	380 U	380 U	390 U	380 U	370 U	370 U	370 U	380 U	390 U	370 U	380 U	360 U	360 U	380 U
Di-n-butylphthalate	380 U	380 U	380 U	370 U	380 U	380 U	390 U	380 U	370 U	370 U	370 U	380 U	390 U	370 U	380 U	360 U	360 U	380 U
Di-n-octylphthalate	380 U	380 U	380 U	370 U	380 U	380 U	390 U	380 U	370 U	370 U	370 U	380 U	390 U	370 U	380 U	360 U	360 U	380 U
Dibenz(a,h)anthracene	2.4 J	2.1 J	12 U	11 U	3.4 J	12 U	12 U	11 U	11 U	11 U	11 U	11 U	12 U	11 U	11 U	11 U	11 U	11 U
Dibenzofuran	380 U	380 U	380 U	370 U	380 U	380 U	390 U	380 U	370 U	370 U	370 U	380 U	390 U	370 U	380 U	360 U	360 U	380 U
Diethylphthalate	380 U	380 U	380 U	370 U	380 U	380 U	390 U	380 U	370 U	370 U	370 U	380 U	390 U	370 U	380 U	360 U	360 U	380 U
Dimethyl phthalate	380 U	380 U	380 U	370 U	380 U	380 U	390 U	380 U	370 U	370 U	370 U	380 U	390 U	370 U	380 U	360 U	360 U	380 U
Fluoranthene	11 U	11 U	12 U	11 U	3 J	2.9 J	3.8 J	11 U	11 U	6.4 J	11 U	11 U	4.2 J	11 U	11 U	11 U	3.2 J	11 U
Fluorene	11 U	11 U	12 U	11 U	11 U	12 U	12 U	11 U	11 U	5 J	11 U	11 U	12 U	11 U	11 U	11 U	11 U	11 U
Hexachlorobenzene	11 U	11 U	12 U	11 U	2.2 J	12 U	12 UJ	11 UJ	11 UJ	11 U	11 UJ	11 U	12 UJ	11 U	11 U	11 UJ	11 UJ	11 U
Hexachlorobutadiene	11 U	11 U	12 UJ	11 U	11 U	12 U	12 U	11 U	11 U	11 U	11 U	11 U	12 U	11 U	11 U	11 U	11 U	11 U
Hexachlorocyclopentadiene	11 U	11 U	12 U	11 U	5 J	12 UJ	12 U	11 U	11 U	11 U	11 U	11 U	12 U	11 U	11 U	11 UJ	11 UJ	11 UJ
Hexachloroethane	380 U	380 U	380 U	370 U	380 U	380 U	390 U	380 U	370 U	370 U	370 U	380 U	390 U	370 U	380 U	360 U	360 U	380 U
Indeno(1,2,3-cd)pyrene	2.7 J	11 U	12 UJ	11 U	2.8 J	12 U	12 U	11 U	11 U	11 U	11 U	11 U	12 U	11 U	11 U	11 U	11 U	11 U
Isophorone	380 U	380 U	380 U	370 U	380 U	380 U	390 U	380 U	370 U	370 U	370 U	380 U	390 U	370 U	380 U	360 U	360 U	380 U
Naphthalene	11 U	11 U	12 U	11 U	4.9 J	12 UJ	12 UJ	11 UJ	11 UJ	3.1 J	11 UJ	11 U	12 UJ	11 U	11 U	11 U	11 U	11 UJ
Nitrobenzene	380 UJ	380 UJ	380 UJ	370 UJ	380 UJ	380 U	390 UJ	380 UJ	370 UJ	370 UJ	370 UJ	380 UJ	390 UJ	370 U	380 UJ	360 UJ	360 UJ	380 U
Pentachlorophenol	940 U	940 U	960 U	930 U	930 U	960 U	960 U	940 U	920 U	920 U	920 U	930 U	970 U	910 U	930 U	900 U	900 U	940 U
Phenanthrene	11 U	11 U	12 UJ	11 U	3.4 J	12 U	12 U	11 U	11 U	9.2 J	11 U	11 U	12 U	11 U	11 U	11 U	4.5 J	11 U
Phenol	570 U	570 U	580 U	570 U	570 U	580 U	580 U	570 U	560 U	560 U	560 U	570 U	590 U	550 U	570 U	540 U	550 U	570 U
Pyrene	11 U	11 U	12 U	11 U	2.7 J	12 U	3.4 J	11 U	11 U	5.8 J	11 U	11 U	3.8 J	11 U	11 U	11 U	4.7 J	11 U
bis(2-Chloroethoxy)methane	380 U	380 U	380 U	370 U	380 U	380 U	390 U	380 U	370 U	370 U	370 U	380 U	390 U	370 U	380 U	360 U	360 U	380 U
bis(2-Chloroethyl)ether	380 U	380 U	380 U	370 U	380 U	380 U	390 U	380 U	370 U	370 U	370 U	380 U	390 U	370 U	380 U	360 U	360 U	380 U
bis(2-Ethylhexyl)phthalate	380 U	380 U	380 U	370 U	380 U	380 U	160 J	380 U	370 U	190 J	370 U	380 U	390 U	110 J	120 J	360 U	120 J	380 U
n-Nitroso-di-n-propylamine	380 U	380 U	380 U	370 U	380 U	380 U	390 U	380 U	370 U	370 U	370 U	380 U	390 U	370 U	380 U	360 U	360 U	380 U
n-Nitrosodiphenylamine	750 U	750 U	770 U	750 U	750 U	770 U	770 U	760 U	740 U	740 U	740 U	750 U	780 U	730 U	750 U	720 U	730 U	750 U
Explosives (UG/KG)																		
1,3,5-Trinitrobenzene	98.7 U	98.4 U	99.7 U	99.8 U	97.7 U	97.8 U	99.4 U	97.5 U	98.4 U	98.7 U	97.5 U	99.8 U	99.8 U	99.7 U	99.6 U	99.7 U	99.4 U	99.9 U
1,3-Dinitrobenzene	98.7 U	98.4 U	99.7 U	99.8 U	97.7 U	97.8 U	99.4 U	97.5 U	98.4 U	98.7 U	97.5 U	99.8 U	99.8 U	99.7 U	99.6 U	99.7 U	99.4 U	99.9 U
2,4,6-Trinitrotoluene	98.7 U	98.4 U	99.7 U	99.8 U	97.7 U	97.8 UJ	99.4 U	97.5 U	98.4 U	98.7 U	97.5 U	99.8 U	99.8 U	99.7 U	99.6 U	99.7 U	99.4 U	99.9 U
2,4-Dinitrotoluene	98.7 U	98.4 U	99.7 U	99.8 U	97.7 U	97.8 U	99.4 U	97.5 U	98.4 U	98.7 U	97.5 U	99.8 U	99.8 U	99.7 UJ	99.6 U	99.7 U	99.4 U	99.9 U
2,6-Dinitrotoluene	98.7 U	98.4 U	99.7 U	99.8 U	97.7 U	97.8 U	99.4 UJ	97.5 U	98.4 U	98.7 U	97.5 U	99.8 U	99.8 U	99.7 U	99.6 U	99.7 U	99.4 U	99.9 U
2-Amino-4,6-dinitrotoluene	98.7 U	98.4 U	99.7 U	99.8 U	97.7 U	97.8 U	99.4 UJ	97.5 U	98.4 U	98.7 U	97.5 U	99.8 U	99.8 U	99.7 U	99.6 U	99.7 U	99.4 U	99.9 U
2-Nitrotoluene	98.7 U	98.4 U	99.7 U	99.8 U	97.7 U	97.8 U	99.4 U	97.5 U	98.4 U	98.7 U	97.5 U	99.8 U	99.8 U	99.7 U	99.6 U	99.7 U	99.4 U	99.9 U
3-Nitrotoluene	98.7 U	98.4 U	99.7 U	99.8 U	97.7 U	97.8 U	99.4 U	97.5 U	98.4 U	98.7 U	97.5 U	99.8 U	99.8 U	99.7 U	99.6 U	99.7 U	99.4 U	99.9 U
4-Amino-2,6-dinitrotoluene	98.7 U	98.4 U	99.7 U	99.8 U	97.7 U	97.8 U	99.4 U	97.5 U	98.4 U	98.7 U	97.5 U	99.8 U	99.8 U	99.7 U	99.6 U	99.7 U	99.4 U	99.9 U
4-Nitrotoluene	98.7 U	98.4 U	99.7 U	99.8 U	97.7 U	97.8 U	99.4 U	97.5 U	98.4 U	98.7 U	97.5 U	99.8 U	99.8 U	99.7 U	99.6 U	99.7 U	99.4 U	99.9 U
HMX	98.7 U	98.4 U	99.7 U	99.8 U	97.7 U	97.8 U	99.4 U	97.5 U	98.4 U	98.7 U	97.5 U	99.8 U	99.8 U	99.7 U	99.6 U	99.7 U	99.4 U	99.9 U
Nitrobenzene	98.7 U	98.4 U	99.7 U	99.8 U	97.7 U	97.8 U	99.4 U	97.5 U	98.4 U	98.7 U	97.5 U	99.8 U	99.8 U	99.7 U	99.6 U	99.7 U	99.4 U	99.9 U
Nitroglycerin	98.7 U	98.4 U	99.7 U	99.8 U	97.7 U	97.8 U	99.4 U	97.5 U	98.4 U	98.7 U	97.5 U	99.8 U	99.8 U	99.7 U	99.6 U	99.7 U	99.4 U	99.9 U
PETN	98.7 U	98.4 U	99.7 U	99.8 U	97.7 U	97.8 U	99.4 U	97.5 U	98.4 U	98.7 U	97.5 U	99.8 U	99.8 U	99.7 U	99.6 U	99.7 U	99.4 U	99.9 U
Perchlorate	2.3 U	2.2 U	2.3 U	2.2 U	2.3 U	2.3 U	2.4 U	2.3 U	2.3 U	2.2 U	2.4 U	5.1	2.2 U	4	2.2 U	2.2 U	2.3 U	2.3 U
RDX	98.7 U	98.4 U	99.7 U	99.8 U	97.7 U	97.8 U	99.4 UJ	97.5 U	98.4 U	98.7 U	97.5 U	99.8 U	99.8 U	99.7 U	99.6 U	99.7 U	99.4 U	99.9 U
Tetryl	98.7 U	98.4 U	99.7 U	99.8 U	97.7 U	97.8 UJ	99.4 U	97.5 U	98.4 U	98.7 UJ	97.5 UJ	99.8 UJ	99.8 UJ	99.7 U	99.6 UJ	99.7 UJ	99.4 UJ	99.9 UJ
Total Metals (MG/KG)																		
Antimony	0.43 U	0.429 U	0.401 U	0.405 U	0.427 U	0.414 U	0.44 U	0.417 U	0.431 U	0.426 U	0.434 U	0.404 U	0.444 U	0.372 U	0.409 U	0.41 U	0.425 U	0.438 U
Arsenic	0.391	0.417	0.763	0.6	0.121 J	0.348	0.225 J	0.328	0.511	0.187 J	0.454	0.587	0.384	1.04	0.417	0.311 J	0.529	0.587
Barium	8.48	11.8	6.33	2.75	2.27	4.93	3.09	4.65	5.51	3.72	9.31	6.05	6.38	3.68	3.09 J	2.98 J	3.82 J	6.71
Cadmium	0.043 U	0.0429 U	0.0401 U	0.0405 U	0.0427 UJ	0.0414 U	0.044 U	0.0417 U	0.0431 U	0.0426 U	0.0434 U	0.148 J	0.0444 U	0.074 J	0.0409 U	0.041 U	0.0425 U	0.0438 U
Chromium	5.63	6.06	6.58	5.16	2.26	3.78 J	3.94 J	4.79 J	2.78 J	4.57 J	2.93 J	5.44 J	5.08 J	4.16	3.46 J	2.23 J	3.09 J	9.28 J
Copper	0.43 U	0.429 U	0.401 U	0.405 U	0.427 U	0.414 U	0.44 U	0.417 U	0.431 U	0.426 U	0.734 J	0.54 J	0.444 U	0.372 U	0.409 U	0.41 U	0.425 U	0.438 U
Lead	2.68 J	2.98 J	3.86 J	3.55	2.73 J	4.28 J	2.51 J	3.8 J	3.93 J	2.49	3.75	3.99	3.75	2.6	2.51 J	2.78	2.97	4.74 J
Mercury	0.0223 U	0.0218 U	0.0225 U	0.0215 U	0.022 U	0.0224 U	0.023 U	0.0206 U	0.0227 U	0.0219 U	0.0228 U	0.021 U	0.0236 U	0.0217 U	0.0227 U	0.0208 U	0.0229 U	0.0229 U
Selenium	0.112 U	0.124 J	0.249 J	0.24 J	0.351 J	0.107 U	0.514	0.242 J	0.457	0.284 J	0.994 J	0.449 J	0.459 J	0.328 J	0.107 U	0.108 UJ	0.152 J	0.185 J
Silver	0.215 U	0.214 U	0.2 U	0.203 U	0.213 U	0.207 U	0.22 U	0.208 U	0.215 U	0.213 U	0.217 U	0.292 J	0.222 U	0.236 J	0.204 U	0.205 U	0.213 U	0.219 U
Zinc	0.781 J	0.831 J	0.638 J	0.589 J	0.427 U	0.833 J	1.66 J	1.63 J	2.04 J	0.841 J	1.76 J	5.35 J	3.32 J	1.89	0.409 U	0.711 J	0.781 J	2.09 J
Wet Chemistry (PCT)																		
% Solids	88.5	88.7	86.8	90.4	88.2	86.6	85.8	91	86.5	88	86.4	88.4	84.4	90.8	87.9	92.4	87.2	87

Notes:

J - Analyte present, value may or may not be accurate or precise
NA - Not analyzed
R - Unreliable Result
U - The material was analyed for, but not detected
UJ - Analyte not detected, quantitation limit may be inaccurate
Pct - Percent

Appendix I
UXO-08 Subsurface Soil Raw Analytical Results
December 2008

Station ID	MR08-IS117	MR08-IS118	MR08-IS119		MR08-IS120	MR08-IS121	MR08-IS122	MR08-IS123	MR08-IS124	MR08-IS125	MR08-IS126	MR08-IS127	MR08-IS128	MR08-IS129		MR08-IS130	MR08-IS132	MR08-IS133
Sample ID	MR08-IS117-2-3-08D	MR08-IS118-08D	MR08-IS119-4.5-5.5-08D	MR08-IS119D-4.5-5.5-08D	MR08-IS120-1.5-2.5-08D	MR08-IS121-2-3-08D	MR08-IS122-6.5-8-08D	MR08-IS123-6-7-08D	MR08-IS124-2-3-08D	MR08-IS125-4-5-08D	MR08-IS126-1.5-2.5-08D	MR08-IS127-1.5-3-08D	MR08-IS128-2-3-08D	MR08-IS129-2-3-08D	MR08-IS129D-2-3-08D	MR08-IS130-1.5-3-08D	MR08-IS132-08D	MR08-IS133-08D
Sample Date	12/05/08	12/15/08	12/15/08	12/15/08	12/15/08	12/10/08	12/15/08	12/05/08	12/10/08	12/05/08	12/16/08	12/16/08	12/09/08	12/09/08	12/09/08	12/16/08	12/16/08	12/17/08
Chemical Name																		
Volatile Organic Compounds (UG/KG)																		
1,1,1-Trichloroethane	7.7 U	10 U	13 U	10 R	10 U	12 U	11 U	12 U	14 U	11 U	11 UJ	15 U	11 U	11 U	19 U	12 UJ	10 UJ	11 U
1,1,2,2-Tetrachloroethane	7.7 U	10 U	13 U	10 R	10 U	12 U	11 U	12 U	14 U	11 U	11 UJ	15 UJ	11 U	11 U	19 U	12 UJ	10 UJ	11 U
1,1,2-Trichloro-1,2,2-trifluoroethane(Freon-113)	7.7 U	10 U	13 U	10 R	10 U	12 U	11 U	12 U	14 U	11 U	11 UJ	15 U	11 U	11 U	19 U	12 UJ	10 UJ	11 U
1,1,2-Trichloroethane	7.7 U	10 U	13 U	10 R	10 U	12 U	11 U	12 U	14 U	11 U	11 UJ	15 U	11 U	11 U	19 U	12 UJ	10 UJ	11 U
1,1-Dichloroethane	7.7 U	10 U	13 U	10 R	10 U	12 U	11 U	12 U	14 U	11 U	11 UJ	15 U	11 U	11 U	19 U	12 UJ	10 UJ	11 U
1,1-Dichloroethene	7.7 U	10 U	13 U	10 R	10 U	12 U	11 U	12 U	14 U	11 U	11 UJ	15 U	11 U	11 U	19 U	12 UJ	10 UJ	11 U
1,2,4-Trichlorobenzene	7.7 U	10 U	13 U	2.2 J	10 U	12 U	11 UJ	12 U	14 U	11 U	11 UJ	15 UJ	11 U	11 U	19 U	12 UJ	10 UJ	11 U
1,2-Dibromo-3-chloropropane	3.9 U	5 U	6.6 U	5 R	5.2 U	5.9 U	5.7 U	5.8 U	7 U	5.5 U	5.6 UJ	7.5 UJ	5.5 U	5.7 U	9.3 U	6.2 UJ	5 UJ	5.6 U
1,2-Dibromoethane	7.7 U	10 U	13 U	10 R	10 U	12 U	11 U	12 U	14 U	11 U	11 UJ	15 U	11 U	11 U	19 U	12 UJ	10 UJ	11 U
1,2-Dichlorobenzene	7.7 U	10 U	13 U	0.98 J	10 U	12 U	11 UJ	12 U	14 U	11 U	11 UJ	15 UJ	11 U	11 U	19 U	12 UJ	10 UJ	11 U
1,2-Dichloroethane	7.7 U	10 U	13 U	10 R	10 U	12 U	11 U	12 U	14 U	11 U	11 UJ	15 U	11 U	11 U	19 U	12 UJ	10 UJ	11 U
1,2-Dichloropropane	7.7 U	10 U	13 U	10 R	10 U	12 U	11 U	12 U	14 U	11 U	11 UJ	15 U	11 U	11 U	19 U	12 UJ	10 UJ	11 U
1,3-Dichlorobenzene	7.7 U	10 U	13 U	10 R	10 U	12 U	11 UJ	12 U	14 U	11 U	11 UJ	15 UJ	11 U	11 U	19 U	12 UJ	10 UJ	11 U
1,4-Dichlorobenzene	7.7 U	10 U	13 U	2.1 J	10 U	12 U	11 UJ	12 U	14 U	11 U	11 UJ	15 UJ	11 U	11 U	19 U	12 UJ	10 UJ	11 U
2-Butanone	7.7 U	10 U	13 U	2.6 J	10 U	12 U	11 U	12 U	14 U	11 U	3.1 J	15 J	11 U	11 U	19 U	2.8 J	10 UJ	11 U
2-Hexanone	7.7 U	10 U	13 U	10 R	10 U	12 U	11 U	12 U	14 U	11 U	11 UJ	15 U	11 U	11 U	19 U	12 UJ	10 UJ	11 U
4-Methyl-2-pentanone	7.7 U	10 U	13 U	10 R	10 U	12 U	11 U	12 U	14 U	11 U	11 UJ	1.7 J	11 U	11 U	19 U	12 UJ	10 UJ	11 U
Acetone	7.8 U	10 U	13 U	53 R	16 U	16 U	11 U	12 U	14 U	11 U	14 J	120 UJ	11 U	11 U	19 U	27 J	7.3 J	11 U
Benzene	7.7 U	10 U	13 U	6.5 J	10 U	12 U	11 U	12 U	14 U	11 U	1.3 J	1.4 J	11 U	11 U	19 U	1.4 J	10 UJ	11 U
Bromodichloromethane	7.7 U	10 U	13 U	10 R	10 U	12 U	11 U	12 U	14 U	11 U	11 UJ	15 U	11 U	11 U	19 U	12 UJ	10 UJ	11 U
Bromoform	7.7 U	10 U	13 U	10 R	10 U	12 U	11 U	12 U	14 U	11 U	11 UJ	15 U	11 U	11 U	19 U	12 UJ	10 UJ	11 U
Bromomethane	7.7 U	10 U	13 U	10 R	10 U	12 U	11 U	12 U	14 U	11 U	11 UJ	15 U	11 U	11 U	19 U	12 UJ	10 UJ	11 U
Carbon disulfide	7.7 U	10 U	2.2 J	17 J	10 U	12 U	11 U	12 U	14 U	11 U	11 UJ	15 U	11 U	11 U	19 U	2.1 J	10 UJ	11 U
Carbon tetrachloride	7.7 U	10 U	13 U	10 R	10 U	12 U	11 U	12 U	14 U	11 U	11 UJ	15 U	11 U	11 U	19 U	12 UJ	10 UJ	11 U
Chlorobenzene	7.7 U	10 U	13 U	10 R	10 U	12 U	11 UJ	12 U	14 U	11 U	11 UJ	15 U	11 U	11 U	19 U	12 UJ	10 UJ	11 U
Chloroethane	7.7 U	10 U	13 U	10 R	10 U	12 U	11 U	12 U	14 U	11 U	11 UJ	15 U	11 U	11 U	19 U	12 UJ	10 UJ	11 U
Chloroform	7.7 U	10 U	13 U	10 R	10 U	12 U	11 U	12 U	14 U	11 U	11 UJ	15 U	11 U	11 U	19 U	12 UJ	10 UJ	11 U
Chloromethane	7.7 U	10 UJ	13 UJ	0.64 J	10 UJ	12 U	11 UJ	12 U	14 U	11 U	11 UJ	15 UJ	11 UJ	11 UJ	19 UJ	12 UJ	10 UJ	11 U
Cyclohexane	7.7 U	10 U	13 U	1.6 J	10 U	12 U	11 U	12 U	14 U	11 U	0.68 J	0.96 J	11 U	11 U	19 U	0.78 J	10 UJ	11 U
Dibromochloromethane	7.7 U	10 U	13 U	10 R	10 U	12 U	11 U	12 U	14 U	11 U	11 UJ	15 U	11 U	11 U	19 U	12 UJ	10 UJ	11 U
Dichlorodifluoromethane (Freon-12)	7.7 U	10 U	13 U	10 R	10 U	12 U	11 U	12 U	14 U	11 U	11 UJ	15 U	11 UJ	11 UJ	19 UJ	12 UJ	10 UJ	11 U
Ethylbenzene	7.7 U	10 U	13 U	3 J	10 U	12 U	11 U	12 U	14 U	11 U	3.4 J	6.8 J	11 U	11 U	19 U	2.2 J	10 UJ	11 U
Isopropylbenzene	7.7 U	10 U	13 U	10 R	10 U	12 U	11 U	12 U	14 U	11 U	11 UJ	15 U	11 U	11 U	19 U	12 UJ	10 UJ	11 U
Methyl acetate	7.7 U	10 U	13 U	10 R	10 U	12 U	11 R	12 U	14 U	11 U	11 UJ	15 U	11 U	11 U	19 U	12 UJ	10 UJ	11 U
Methyl-tert-butyl ether (MTBE)	7.7 U	10 U	13 U	10 R	10 U	12 U	11 U	12 U	14 U	11 U	11 UJ	15 U	11 U	11 U	19 U	12 UJ	10 UJ	11 U
Methylcyclohexane	7.7 U	10 U	13 U	1.4 J	10 U	12 U	11 U	12 U	14 U	11 U	0.86 J	0.87 J	11 U	11 U	19 U	0.96 J	10 UJ	11 U
Methylene chloride	7.7 U	10 U	13 U	10 R	10 U	12 U	11 U	12 U	14 U	11 U	11 UJ	15 U	11 U	11 U	19 U	12 UJ	10 UJ	11 U
Styrene	7.7 U	10 U	13 U	10 R	10 U	12 U	11 U	12 U	14 U	11 U	11 UJ	15 U	11 U	11 U	19 U	12 UJ	10 UJ	11 U
Tetrachloroethene	7.7 U	10 U	13 U	10 R	10 U	12 U	11 U	12 U	14 U	11 U	11 UJ	15 U	11 U	11 U	19 U	12 UJ	10 UJ	11 U
Toluene	7.7 U	10 U	13 U	6.8 J	10 U	12 U	11 U	12 U	14 U	11 U	2.1 J	3.6 J	11 U	11 U	19 U	2.1 J	10 UJ	11 U
Trichloroethene	7.7 U	10 U	13 U	10 R	10 U	12 U	11 U	12 U	14 U	11 U	11 UJ	15 U	11 U	11 U	19 U	12 UJ	10 UJ	11 U
Trichlorofluoromethane(Freon-11)	7.7 U	10 U	13 U	10 R	10 U	12 U	11 U	12 U	14 U	11 U	11 UJ	15 U	11 U	11 U	19 U	12 UJ	10 UJ	11 U
Vinyl chloride	7.7 U	10 UJ	13 UJ	10 R	10 UJ	12 U	11 UJ	12 U	14 U	11 U	11 UJ	15 UJ	11 UJ	11 UJ	19 UJ	12 UJ	10 UJ	11 U
Xylene, total	7.7 U	10 U	13 U	2.3 J	10 U	12 U	11 U	12 U	14 U	11 U	11 UJ	15 U	11 U	11 U	19 U	12 UJ	10 UJ	11 U
cis-1,2-Dichloroethene	7.7 U	10 U	13 U	10 R	10 U	12 U	11 U	12 U	14 U	11 U	11 UJ	15 U	11 U	11 U	19 U	12 UJ	10 UJ	11 U
cis-1,3-Dichloropropene	7.7 U	10 U	13 U	10 R	10 U	12 U	11 U	12 U	14 U	11 U	11 UJ	15 U	11 U	11 U	19 U	12 UJ	10 UJ	11 U
trans-1,2-Dichloroethene	7.7 U	10 U	13 U	10 R	10 U	12 U	11 U	12 U	14 U	11 U	11 UJ	15 U	11 U	11 U	19 U	12 UJ	10 UJ	11 U
trans-1,3-Dichloropropene	7.7 U	10 U	13 U	10 R	10 U	12 U	11 U	12 U	14 U	11 U	11 UJ	15 U	11 U	11 U	19 U	12 UJ	10 UJ	11 U
Semivolatile Organic Compounds (UG/KG)																		
1,1-Biphenyl	380 U	370 UJ	380 UJ	380 U	370 UJ	390 U	380 U	370 U	360 U	370 U	380 UJ	380 UJ	360 U	350 U	350 U	380 U	360 U	380 U
2,2'-Oxybis(1-chloropropane)	380 U	370 UJ	380 UJ	380 U	370 UJ	390 U	380 U	370 U	360 U	370 U	380 UJ	380 UJ	360 U	350 U	350 U	380 U	360 U	380 U
2,4,5-Trichlorophenol	570 U	560 UJ	570 UJ	570 U	560 UJ	590 U	570 U	560 U	550 U	560 U	570 UJ	580 UJ	550 U	540 U	540 U	570 U	540 U	580 U
2,4,6-Trichlorophenol	570 U	560 UJ	570 UJ	570 U	560 UJ	590 U	570 U	560 U	550 U	560 U	570 UJ	580 UJ	550 U	540 U	540 U	570 U	540 U	580 U
2,4-Dichlorophenol	570 U	560 UJ	570 UJ	570 U	560 UJ	590 U	570 U	560 U	550 U	560 U	570 UJ	580 UJ	550 U	540 U	540 U	570 U	540 U	580 U
2,4-Dimethylphenol	570 U	560 UJ	570 UJ	570 UJ	560 UJ	590 U	570 UJ	560 U	550 U	560 U	570 UJ	580 UJ	550 U	540 U	540 U	570 UJ	540 UJ	580 UJ
2,4-Dinitrophenol	1,400 U	1,400 UJ	1,400 UJ	1,400 U	1,300 UJ	1,400 U	1,400 U	1,400 U	1,300 U	1,300 U	1,400 UJ	1,400 UJ	1,300 U	1,300 U	1,300 U	1,400 U	1,300 U	1,400 UJ
2,4-Dinitrotoluene	380 U	370 UJ	380 UJ	380 U	370 UJ	390 U	380 U	370 U	360 U	370 U	380 UJ	380 UJ	360 U	350 U	350 U	380 U	360 U	380 U
2,6-Dinitrotoluene	380 U	370 UJ	380 UJ	380 U	370 UJ	390 U	380 U	370 U	360 U	370 U	380 UJ	380 UJ	360 U	350 U	350 U	380 U	360 U	380 U
2-Chloronaphthalene	380 U	370 UJ	380 UJ	380 U	370 UJ	390 U	380 U	370 U	360 U	370 U	380 UJ	380 UJ	360 U	350 U	350 U	380 U	360 U	380 U
2-Chlorophenol	570 U	560 UJ	570 UJ	570 U	560 UJ	590 U	570 U	560 U	550 U	560 U	570 UJ	580 UJ	550 U	540 U	540 U	570 U	540 U	580 U
2-Methylnaphthalene	11 U	11 U	11 U	11 U	11 U	12 U	7.7 J	11 U	11 U	11 U	11 U	12 U	11 U	11 U	11 U	11 U	3.5 J	12 UJ
2-Methylphenol	690 U	680 UJ	690 UJ	680 U	670 UJ	700 U	690 UJ	680 U	660 U	670 U	690 UJ	690 UJ	660 U	640 U	640 U	690 U	650 U	700 U
2-Nitroaniline	570 U	560 UJ	570 UJ	570 U	560 UJ	590 U	570 U	560 U	550 U	560 U	570 UJ	580 UJ	550 U	540 U	540 U	570 U	540 U	580 U
2-Nitrophenol	690 U	680 UJ	690 UJ	680 U	670 UJ	700 U	690 U	680 U	660 U	670 U	690 UJ	690 UJ	660 U	640 U	640 U	690 U	650 U	700 U
3,3'-Dichlorobenzidine	570 U	560 UJ	570 UJ	570 U	560 UJ	590 U	570 R	560 U	550 U	560 UJ	570 UJ	580 UJ	550 UJ	540 UJ	540 UJ	570 U	540 U	580 UJ
3- and 4-Methylphenol	690 U	680 UJ	690 UJ	680 U	670 UJ	700 U	690 UJ	680 U	660 U	670 U	690 UJ	690 UJ	660 U	640 U	640 U	690 U	650 U	700 U
3-Nitroaniline	570 U	560 UJ	570 UJ	570 U	560 UJ	590 U	570 R	560 U	550 U	560 U	570 UJ	580 UJ	550 U	540 U	540 U	570 U	540 U	580 UJ
4,6-Dinitro-2-methylphenol	1,400 U	1,400 UJ	1,400 UJ	1,400 U	1,300 UJ	1,400 U	1,400 U	1,400 U	1,300 U	1,300 U	1,400 UJ	1,400 UJ	1,300 U	1,300 U	1,300 U	1,400 U	1,300 U	1,400 UJ
4-Bromophenyl-phenylether	380 U	370 UJ	380 UJ	380 U	370 UJ	390 U	380 U	370 U	360 U	370 U	380 UJ	380 UJ	360 U	350 U	350 U	380 U	360 U	380 U
4-Chloro-3-methylphenol	570 U	560 UJ	570 UJ	570 U	560 UJ	590 U	570 U	560 U	550 U	560 U	570 UJ	580 UJ	550 U	540 U	540 U	570 U	540 U	580 U
4-Chloroaniline	570 U	560 UJ	570 UJ	570 U	560 UJ	590 U	570 R	560 U	550 U	560 U	570 UJ	580 UJ	550 U	540 U	540 U	570 R	540 R	580 U
4-Chlorophenyl-phenylether	380 U	370 UJ	380 UJ	380 U	370 UJ	390 U	380 U	370 U	360 U	370 U	380 UJ	380 UJ	360 U	350 U	350 U	380 U	360 U	380 U
4-Nitroaniline	570 U	560 UJ	570 UJ	570 U	560 UJ	590 U	570 UJ	560 U	550 U	560 U	570 UJ	580 UJ	550 U	540 U	540 U	570 U	540 U	580 UJ
4-Nitrophenol	1,400 UJ	1,400 UJ	1,400 UJ	1,400 UJ	1,300 UJ	1,400 UJ	1,400 U	1,400 U	1,300 U	1,300 U	1,400 UJ	1,400 UJ	1,300 U	1,300 U	1,300 U	1,400 U	1,300 U	1,400 UJ
Acenaphthene	380 U	370 UJ	380 UJ	380 U	370 UJ	390 U	380 U	370 U	360 U	370 U	380 UJ	380 UJ	360 U	350 U	350 U	380 U	360 U	380 U
Acenaphthylene	380 U	370 UJ	380 UJ	380 U	370 UJ	390 U	380 U	370 U	360 U	370 U	380 UJ	380 UJ	360 U	350 U	350 U	380 U	360 U	380 U
Acetophenone	690 U	680 UJ	690 UJ	680 U	670 UJ	700 U	690 U	680 U	660 U	670 U	690 UJ	690 UJ	660 U	640 U	640 U	690 U	650 U	700 U
Anthracene	380 U	370 UJ	380 UJ	380 U	370 UJ	390 U	380 U	370 U	360 U	370 U	380 UJ	380 UJ	360 U	350 U	350 U	380 U	360 U	380 U
Atrazine	380 U	370 UJ	380 UJ	380 U	370 UJ	390 U	380 U	370 U	360 U	370 U	380 UJ	380 UJ	360 U	350 U	350 U	380 U	360 U	380 U
Benzaldehyde	570 UJ	560 UJ	570 UJ	570 UJ	560 UJ	590 UJ	570 UJ	560 UJ	550 UJ	560 UJ	570 UJ	580 UJ	550 UJ	540 UJ	540 UJ	570 UJ	540 UJ	1,400 J

Station ID	MR08-IS117	MR08-IS118	MR08-IS119		MR08-IS120	MR08-IS121	MR08-IS122	MR08-IS123	MR08-IS124	MR08-IS125	MR08-IS126	MR08-IS127	MR08-IS128	MR08-IS129		MR08-IS130	MR08-IS132	MR08-IS133
Sample ID	MR08-IS117-2-3-08D	MR08-IS118-08D	MR08-IS119-4.5-5.5-08D	MR08-IS119D-4.5-5.5-08D	MR08-IS120-1.5-2.5-08D	MR08-IS121-2-3-08D	MR08-IS122-6.5-8-08D	MR08-IS123-6-7-08D	MR08-IS124-2-3-08D	MR08-IS125-4-5-08D	MR08-IS126-1.5-2.5-08D	MR08-IS127-1.5-3-08D	MR08-IS128-2-3-08D	MR08-IS129-2-3-08D	MR08-IS129D-2-3-08D	MR08-IS130-1.5-3-08D	MR08-IS132-08D	MR08-IS133-08D
Sample Date	12/05/08	12/15/08	12/15/08	12/15/08	12/15/08	12/10/08	12/15/08	12/05/08	12/10/08	12/05/08	12/16/08	12/16/08	12/09/08	12/09/08	12/09/08	12/16/08	12/16/08	12/17/08
Chemical Name																		
Benzo(a)anthracene	11 U	11 U	11 U	11 U	11 U	12 U	11 J	11 U	11 U	11 U	11 U	7.3 J	11 U	11 U	11 U	11 U	11 U	12 U
Benzo(a)pyrene	11 U	11 U	11 U	11 U	11 U	12 U	11 UJ	11 U	11 U	11 U	11 U	12 U	11 U	11 U	11 U	4.7 J	11 U	12 U
Benzo(b)fluoranthene	11 U	11 U	11 U	11 U	11 U	12 U	11 U	11 U	11 U	11 U	11 U	12 U	11 UJ	11 U	11 U	11 U	11 U	12 U
Benzo(g,h,i)perylene	11 U	11 U	11 U	11 U	11 U	3.1 J	3.2 J	11 U	5.3 J	11 U	11 U	12 U	11 U	11 U	11 U	5.7 J	11 U	12 UJ
Benzo(k)fluoranthene	11 U	11 U	11 U	11 U	11 U	12 U	11 U	11 U	11 U	11 U	11 U	12 U	11 U	11 U	11 U	11 U	11 U	12 UJ
Butylbenzylphthalate	380 U	370 UJ	380 UJ	380 U	370 UJ	390 UJ	380 U	370 U	360 U	370 U	380 UJ	380 UJ	360 U	350 U	350 U	380 U	360 U	380 U
Caprolactam	570 U	560 UJ	570 UJ	570 U	560 UJ	590 U	570 U	560 U	550 U	560 U	570 UJ	580 UJ	550 U	540 U	540 U	570 U	540 U	580 U
Carbazole	570 U	560 UJ	570 UJ	570 U	560 UJ	590 U	570 U	560 U	550 U	560 U	570 UJ	580 UJ	550 U	540 U	540 U	570 U	540 U	580 UJ
Chrysene	380 U	370 UJ	380 UJ	380 U	370 UJ	390 U	380 U	370 U	360 U	370 U	380 UJ	380 UJ	360 U	350 U	350 U	380 U	360 U	380 U
Di-n-butylphthalate	380 U	370 UJ	380 UJ	380 U	370 UJ	390 U	380 U	370 U	360 U	370 U	380 UJ	380 UJ	360 U	350 U	350 U	380 U	360 U	380 U
Di-n-octylphthalate	380 U	370 UJ	380 UJ	380 U	370 UJ	390 UJ	380 U	370 U	360 U	370 U	380 UJ	380 UJ	360 U	350 U	350 U	380 UJ	360 U	380 U
Dibenz(a,h)anthracene	11 U	11 U	11 U	11 U	11 U	2.7 J	11 U	11 U	3.6 J	11 U	11 U	12 U	11 U	11 U	3.3 J	11 U	11 U	12 UJ
Dibenzofuran	380 U	370 UJ	380 UJ	380 U	370 UJ	390 U	380 U	370 U	360 U	370 U	380 UJ	380 UJ	360 U	350 U	350 U	380 U	360 U	380 U
Diethylphthalate	380 U	370 UJ	380 UJ	380 U	370 UJ	390 U	380 U	370 U	360 U	370 U	380 UJ	380 UJ	360 U	350 U	350 U	380 U	91 J	380 U
Dimethyl phthalate	380 U	370 UJ	380 UJ	380 U	370 UJ	390 U	380 U	370 U	360 U	370 U	380 UJ	380 UJ	360 U	350 U	350 U	380 U	360 U	380 U
Fluoranthene	11 U	11 U	11 U	11 U	11 U	12 U	2.7 J	2.5 J	11 U	11 U	11 U	12 U	11 U	11 U	11 U	11 U	11 U	2.9 J
Fluorene	11 U	11 U	11 U	11 U	11 U	12 U	11 U	11 U	11 U	11 U	11 U	12 U	11 U	11 U	11 U	11 U	11 U	12 U
Hexachlorobenzene	11 U	11 U	11 U	11 U	11 U	12 U	11 U	11 U	11 U	11 U	11 U	12 U	11 UJ	11 UJ	11 U	11 U	11 U	12 U
Hexachlorobutadiene	11 U	11 U	11 U	11 U	11 U	12 U	11 U	11 U	11 U	11 U	11 U	12 U	11 U	11 U	11 U	11 U	11 U	12 U
Hexachlorocyclopentadiene	11 UJ	11 U	11 UJ	11 UJ	11 U	12 U	11 U	11 UJ	11 U	11 UJ	11 UJ	12 UJ	11 UJ	11 UJ	11 U	11 UJ	11 UJ	12 UJ
Hexachloroethane	380 U	370 UJ	380 UJ	380 U	370 UJ	390 U	380 U	370 U	360 U	370 U	380 UJ	380 UJ	360 U	350 U	350 U	380 U	360 U	380 U
Indeno(1,2,3-cd)pyrene	11 U	11 U	11 U	11 U	11 U	2.4 J	11 U	11 U	4.1 J	11 U	11 U	12 U	11 U	11 U	2.1 J	11 U	11 U	12 UJ
Isophorone	380 U	370 UJ	380 UJ	380 U	370 UJ	390 U	380 U	370 U	360 U	370 U	380 UJ	380 UJ	360 U	350 U	350 U	380 U	360 U	380 U
Naphthalene	11 UJ	3.9 J	11 U	11 U	11 U	12 U	11 U	11 UJ	11 U	11 UJ	11 U	12 U	11 U	11 U	11 U	3.9 J	11 U	12 UJ
Nitrobenzene	380 UJ	370 UJ	380 UJ	380 UJ	370 UJ	390 UJ	380 U	370 UJ	360 UJ	370 UJ	380 UJ	380 UJ	360 UJ	350 UJ	350 UJ	380 U	360 U	380 U
Pentachlorophenol	940 U	920 UJ	940 UJ	940 U	920 UJ	960 U	940 U	920 U	900 U	920 U	940 UJ	950 UJ	900 U	880 U	880 U	940 U	880 U	960 UJ
Phenanthrene	11 U	11 U	11 U	5 J	6.3 J	12 U	2.7 J	11 U	11 U	11 U	11 U	25 J	11 U	2.8 J	11 U	11 U	21	12 U
Phenol	570 U	560 UJ	570 UJ	570 U	560 UJ	590 U	570 U	560 U	550 U	560 U	570 UJ	580 UJ	550 U	540 U	540 U	570 U	540 U	580 U
Pyrene	11 U	11 U	11 U	11 U	11 U	12 U	2.5 J	11 U	11 U	11 U	11 U	16	11 U	11 U	11 U	11 U	11 U	12 U
bis(2-Chloroethoxy)methane	380 U	370 UJ	380 UJ	380 U	370 UJ	390 U	380 U	370 U	360 U	370 U	380 UJ	380 UJ	360 U	350 U	350 U	380 U	360 U	380 U
bis(2-Chloroethyl)ether	380 U	370 UJ	380 UJ	380 U	370 UJ	390 U	380 U	370 U	360 U	370 U	380 UJ	380 UJ	360 U	350 U	350 U	380 U	360 U	380 U
bis(2-Ethylhexyl)phthalate	180 J	690 J	130 J	320 J	460 J	390 UJ	380 U	350 J	360 U	150 J	140 J	240 J	360 U	250 J	350 U	170 J	590	380 U
n-Nitroso-di-n-propylamine	380 U	370 UJ	380 UJ	380 U	370 UJ	390 U	380 U	370 U	360 U	370 U	380 UJ	380 UJ	360 U	350 U	350 U	380 U	360 U	380 U
n-Nitrosodiphenylamine	760 U	740 UJ	760 UJ	750 U	740 UJ	780 U	760 UJ	740 U	720 U	740 U	760 UJ	760 UJ	720 U	710 U	710 U	760 U	710 U	770 U
Explosives (UG/KG)																		
1,3,5-Trinitrobenzene	99.8 U	98.9 U	98 U	98.2 U	99.1 U	100 U	99.5 U	99.2 U	97.8 U	98.8 U	97.6 U	98 U	98.1 U	99.4 U	99.3 U	99.1 U	99.6 U	99.4 U
1,3-Dinitrobenzene	99.8 U	98.9 U	98 U	98.2 U	99.1 U	100 U	99.5 U	99.2 U	97.8 U	98.8 U	97.6 U	98 U	98.1 U	99.4 U	99.3 U	99.1 U	99.6 U	99.4 U
2,4,6-Trinitrotoluene	99.8 U	98.9 U	98 U	98.2 U	99.1 U	100 U	99.5 U	99.2 U	97.8 U	98.8 U	97.6 U	98 U	98.1 U	99.4 U	99.3 U	99.1 U	99.6 U	99.4 U
2,4-Dinitrotoluene	99.8 U	98.9 U	98 U	98.2 U	99.1 U	100 U	99.5 U	99.2 U	97.8 U	98.8 U	97.6 U	98 U	98.1 U	99.4 U	99.3 U	99.1 UJ	99.6 UJ	99.4 UJ
2,6-Dinitrotoluene	99.8 U	98.9 UJ	98 U	98.2 U	99.1 U	100 U	99.5 UJ	99.2 U	97.8 U	98.8 U	97.6 UJ	98 UJ	98.1 U	99.4 U	99.3 U	99.1 U	99.6 U	99.4 U
2-Amino-4,6-dinitrotoluene	99.8 U	98.9 U	98 U	98.2 U	99.1 U	100 U	99.5 J	99.2 U	97.8 U	98.8 U	97.6 U	98 U	98.1 U	99.4 U	99.3 U	99.1 U	99.6 U	99.4 U
2-Nitrotoluene	99.8 U	98.9 U	98 U	98.2 U	99.1 U	100 U	99.5 U	99.2 U	97.8 U	98.8 U	97.6 U	98 U	98.1 U	99.4 U	99.3 U	99.1 U	99.6 U	99.4 U
3-Nitrotoluene	99.8 U	98.9 U	98 U	98.2 U	99.1 U	100 U	99.5 U	99.2 U	97.8 U	98.8 U	97.6 U	98 U	98.1 U	99.4 U	99.3 U	99.1 U	99.6 U	99.4 U
4-Amino-2,6-dinitrotoluene	99.8 U	98.9 U	98 U	98.2 U	99.1 U	100 U	99.5 U	99.2 U	97.8 U	98.8 U	97.6 U	98 U	98.1 U	99.4 U	99.3 U	99.1 U	99.6 U	99.4 U
4-Nitrotoluene	99.8 U	98.9 U	98 U	98.2 U	99.1 U	100 U	99.5 U	99.2 U	97.8 U	98.8 U	97.6 U	98 U	98.1 U	99.4 U	99.3 U	99.1 U	99.6 U	99.4 U
HMX	99.8 U	98.9 U	98 U	98.2 U	99.1 U	100 U	99.5 U	99.2 U	97.8 U	98.8 U	97.6 U	98 U	98.1 U	99.4 U	99.3 U	99.1 U	99.6 U	99.4 U
Nitrobenzene	99.8 U	98.9 UJ	98 U	98.2 U	99.1 U	100 U	99.5 UJ	99.2 U	97.8 U	98.8 U	97.6 UJ	98 UJ	98.1 U	99.4 U	99.3 U	99.1 U	99.6 U	99.4 U
Nitroglycerin	99.8 U	98.9 U	98 U	98.2 U	99.1 U	100 U	99.5 U	99.2 U	97.8 U	98.8 U	97.6 U	98 U	98.1 U	99.4 U	99.3 U	99.1 U	99.6 U	99.4 U
PETN	99.8 U	98.9 U	98 U	98.2 U	99.1 U	100 U	99.5 U	99.2 U	97.8 U	98.8 U	97.6 U	98 U	98.1 U	99.4 U	99.3 U	99.1 U	99.6 U	99.4 U
Perchlorate	2.3 U	2.3 U	2.4 U	2.3 U	2.2 U	2.2 U	2.2 U	2.3 U	2.2 U	2.3 U	2.3 U	2.3 U	2.3 U	2.1 U	2.1 U	2.4 U	2.2 U	2.2 U
RDX	99.8 U	98.9 U	98 U	98.2 U	99.1 U	100 U	99.5 U	99.2 U	97.8 U	98.8 U	97.6 U	98 U	98.1 U	99.4 U	99.3 U	99.1 U	99.6 U	99.4 U
Tetryl	99.8 UJ	98.9 U	98 U	98.2 U	99.1 U	100 U	99.5 U	99.2 UJ	97.8 U	98.8 UJ	97.6 U	98 U	98.1 UJ	99.4 UJ	99.3 UJ	99.1 U	99.6 U	99.4 U
Total Metals (MG/KG)																		
Antimony	0.428 U	0.422 U	0.436 U	0.415 U	0.409 U	0.436 U	0.408 U	0.404 U	0.405 U	0.413 U	0.817 J	0.442 U	0.394 U	0.418 U	0.402 U	0.631 J	0.456 U	0.415 U
Arsenic	0.447	0.126 J	1.33	0.697	0.751	0.299 J	0.15 J	0.444	0.333	0.0859 U	0.89	9.58	0.098 J	0.323 J	0.249 J	0.864	10.5	0.985
Barium	4.04	4.33	2.31	6.17	8.28	8.53 J	6.61	5.98	14.7 J	1.56	10.3	9.83	3.05 J	2.76 J	3.76 J	3.96	5	8.4
Cadmium	0.0428 U	0.0422 U	0.0436 UJ	0.0415 U	0.0409 U	0.0436 U	0.0408 U	0.0404 U	0.0405 U	0.0413 U	0.093 J	0.0791 J	0.0394 U	0.0418 U	0.0402 U	0.28	0.0902 J	0.0415 U
Chromium	4.54 J	4.73	3.61	5.5	7.2	9.48 J	5.76	5.25 J	5.3 J	2.24 J	6.82	2.92	2.73 J	2.69 J	2.4 J	5.92	4.07	3.54
Copper	0.428 U	0.422 U	0.436 U	0.503 J	0.646 J	0.575 J	0.687 J	0.404 U	0.818 J	0.413 U	0.694 J	0.554 J	0.394 U	0.543 J	0.496 J	1.5 J	1.22 J	0.547 J
Lead	3.47 J	2.15 J	2.2 J	2.54 J	4.29 J	2.58 J	1.81 J	5.23 J	2.92 J	2.02 J	13.2 J	94.6 J	1.34 J	1.72 J	1.45 J	9.62	4.66	4.01
Mercury	0.0223 U	0.0216 U	0.022 U	0.0227 U	0.0232 J	0.0218 U	0.0221 U	0.0225 U	0.0214 U	0.0215 U	0.023 U	0.0225 U	0.0204 U	0.0204 U	0.0214 U	0.022 U	0.025 U	0.0241 U
Selenium	0.299 J	0.113 U	0.114 U	0.156 J	0.293 J	0.111 U	0.112 U	0.112 U	0.109 U	0.115 U	0.445 J	0.726	0.102 U	0.135 J	0.12 J	0.584 J	0.305 J	0.124 UJ
Silver	0.214 U	0.211 U	0.218 U	0.207 U	0.204 U	0.218 U	0.204 U	0.202 U	0.203 U	0.206 U	0.215 U	0.221 U	0.197 U	0.209 U	0.201 U	0.546 J	0.464 J	0.208 U
Zinc	0.999 J	1.1 J	0.791 J	0.759 J	1.46 J	1.83	1.79	0.733 J	1.23 J	0.603 J	3.81	1.95	0.394 U	0.432 J	0.402 U	4.62	2.72	2.04
Wet Chemistry (PCT)																		
% Solids	89	88.9	87.3	84.8	89.1	86.1	89.2	88.5	90.9	86.5	87	86.3	92	91	93.5	86.7	79.4	80.7

Notes:

J - Analyte present, value may or may not be accurate or precise

NA - Not analyzed

R - Unreliable Result

U - The material was analyed for, but not detected

UJ - Analyte not detected, quantitation limit may be inaccurate

Pct - Percent

Appendix I
POIA Surface Soil Raw Analytical Results
November 2008

Station ID	MR08-SS374		MR08-SS375	MR08-SS376	MR08-SS377	
Sample ID	MR08-SS374-08D	MR08-SS374D-08D	MR08-SS375-08D	MR08-SS376-08D	MR08-SS377-08D	MR08-SS377D-08D
Sample Date	11/11/08	11/11/08	11/11/08	11/11/08	11/11/08	11/11/08
Chemical Name						
Volatile Organic Compounds (UG/KG)						
1,1,1-Trichloroethane	11 U	10 U	9.6 U	11 U	10 U	12 U
1,1,2,2-Tetrachloroethane	11 U	10 U	9.6 U	11 U	10 U	12 U
1,1,2-Trichloro-1,2,2-trifluoroethane(Freon-113)	11 U	10 U	9.6 U	11 U	10 U	12 U
1,1,2-Trichloroethane	11 U	10 U	9.6 U	11 U	10 U	12 U
1,1-Dichloroethane	11 U	10 U	9.6 UJ	11 U	10 U	12 U
1,1-Dichloroethene	11 U	10 U	9.6 U	11 U	10 U	12 U
1,2,4-Trichlorobenzene	11 U	10 U	9.6 UJ	11 U	10 U	12 U
1,2-Dibromo-3-chloropropane	5.4 U	5 U	4.8 U	5.3 U	5.2 U	6 U
1,2-Dibromoethane	11 U	10 U	9.6 U	11 U	10 U	12 U
1,2-Dichlorobenzene	11 U	10 U	9.6 UJ	11 U	10 U	12 U
1,2-Dichloroethane	11 U	10 U	9.6 U	11 U	10 U	12 U
1,2-Dichloropropane	11 U	10 U	9.6 U	11 U	10 U	12 U
1,3-Dichlorobenzene	11 U	10 U	9.6 UJ	11 U	10 U	12 U
1,4-Dichlorobenzene	11 U	10 U	9.6 UJ	11 U	10 U	12 U
2-Butanone	3.8 J	2.9 J	9.6 U	2.9 J	2.9 J	3.4 J
2-Hexanone	11 U	10 U	9.6 U	11 U	10 U	12 U
4-Methyl-2-pentanone	11 U	10 U	9.6 U	11 U	10 U	12 U
Acetone	69	49	25 U	11 U	68	79 J
Benzene	0.76 J	0.67 J	9.6 U	1.1 J	10 U	12 U
Bromodichloromethane	11 U	10 U	9.6 U	11 U	10 U	12 U
Bromoform	11 U	10 U	9.6 U	11 U	10 U	12 U
Bromomethane	11 U	10 U	9.6 U	11 U	10 U	12 U
Carbon disulfide	5.5 J	3.8 J	9.6 U	11 U	10 U	12 U
Carbon tetrachloride	11 U	10 U	9.6 U	11 U	10 U	12 U
Chlorobenzene	11 U	10 U	9.6 UJ	11 U	10 U	12 U
Chloroethane	11 U	10 U	9.6 U	11 U	10 U	12 U
Chloroform	11 U	10 U	9.6 U	11 U	10 U	12 U
Chloromethane	11 U	10 U	9.6 U	11 U	10 U	12 UJ
Cyclohexane	11 U	10 U	9.6 U	11 U	10 U	12 U
Dibromochloromethane	11 U	10 U	9.6 U	11 U	10 U	12 U
Dichlorodifluoromethane (Freon-12)	11 U	10 U	9.6 U	11 U	10 U	12 U
Ethylbenzene	11 U	0.8 J	9.6 UJ	2 J	10 U	12 U
Isopropylbenzene	11 U	10 U	9.6 UJ	11 U	10 U	12 U
Methyl acetate	11 U	10 U	9.6 U	11 U	10 U	12 U
Methyl-tert-butyl ether (MTBE)	11 U	10 U	9.6 U	11 U	10 U	12 U
Methylcyclohexane	0.5 J	10 U	9.6 U	1.2 J	10 U	12 U
Methylene chloride	11 U	10 U	9.6 U	11 U	10 U	12 U
Styrene	11 U	10 U	9.6 UJ	11 U	10 U	12 U
Tetrachloroethene	11 U	10 U	9.6 UJ	11 U	10 U	12 U
Toluene	11 U	10 U	9.6 U	11 U	10 U	12 U
Trichloroethene	11 U	10 U	9.6 UJ	11 U	10 U	12 U
Trichlorofluoromethane(Freon-11)	11 U	10 U	9.6 U	11 U	10 U	12 U
Vinyl chloride	11 U	10 U	9.6 U	11 U	10 U	12 U
Xylene, total	11 U	10 U	9.6 UJ	11 U	10 U	12 U
cis-1,2-Dichloroethene	11 U	10 U	9.6 U	11 U	10 U	12 U
cis-1,3-Dichloropropene	11 U	10 U	9.6 U	11 U	10 U	12 U
trans-1,2-Dichloroethene	11 U	10 U	9.6 U	11 U	10 U	12 U
trans-1,3-Dichloropropene	11 U	10 U	9.6 U	11 U	10 U	12 U
Semivolatile Organic Compounds (UG/KG)						
1,1-Biphenyl	360 U	370 U	360 U	350 U	370 U	370 U
2,2'-Oxybis(1-chloropropane)	360 U	370 U	360 U	350 U	370 U	370 U
2,4,5-Trichlorophenol	550 U	560 U	550 U	520 U	560 U	560 U
2,4,6-Trichlorophenol	550 U	560 U	550 U	520 U	560 U	560 U
2,4-Dichlorophenol	550 U	560 U	550 U	520 U	560 U	560 U
2,4-Dimethylphenol	550 U	560 U	550 U	520 U	560 U	560 U
2,4-Dinitrophenol	1,300 U	1,300 U	1,300 U	1,200 U	1,300 U	1,300 U
2,4-Dinitrotoluene	360 U	370 U	360 U	350 U	370 U	370 U
2,6-Dinitrotoluene	360 U	370 U	360 U	350 U	370 U	370 U
2-Chloronaphthalene	360 U	370 U	360 U	350 U	370 U	370 U
2-Chlorophenol	550 U	560 U	550 U	520 U	560 U	560 U
2-Methylnaphthalene	11 U	11 U	11 U	10 U	11 U	11 U
2-Methylphenol	660 U	670 U	660 U	630 U	670 U	670 U
2-Nitroaniline	550 U	560 U	550 U	520 U	560 U	560 U
2-Nitrophenol	660 U	670 U	660 U	630 U	670 U	670 U
3,3'-Dichlorobenzidine	550 U	560 U	550 U	520 U	560 U	560 U
3- and 4-Methylphenol	660 U	670 U	660 U	630 U	670 U	670 U
3-Nitroaniline	550 U	560 U	550 U	520 U	560 U	560 U

Appendix I
POIA Surface Soil Raw Analytical Results
November 2008

Station ID	MR08-SS374		MR08-SS375	MR08-SS376	MR08-SS377	
Sample ID	MR08-SS374-08D	MR08-SS374D-08D	MR08-SS375-08D	MR08-SS376-08D	MR08-SS377-08D	MR08-SS377D-08D
Sample Date	11/11/08	11/11/08	11/11/08	11/11/08	11/11/08	11/11/08
Chemical Name						
4,6-Dinitro-2-methylphenol	1,300 U	1,300 U	1,300 U	1,200 U	1,300 U	1,300 U
4-Bromophenyl-phenylether	360 U	370 U	360 U	350 U	370 U	370 U
4-Chloro-3-methylphenol	550 U	560 U	550 U	520 U	560 U	560 U
4-Chloroaniline	550 U	560 U	550 U	520 U	560 U	560 U
4-Chlorophenyl-phenylether	360 U	370 U	360 U	350 U	370 U	370 U
4-Nitroaniline	550 U	560 U	550 U	520 U	560 U	560 U
4-Nitrophenol	1,300 UJ	1,300 UJ	1,300 UJ	1,200 UJ	1,300 U	1,300 U
Acenaphthene	360 U	370 U	360 U	350 U	370 U	370 U
Acenaphthylene	360 U	370 U	360 U	350 U	370 U	370 U
Acetophenone	660 U	670 U	660 U	630 U	670 U	670 U
Anthracene	360 U	370 U	360 U	350 U	370 U	370 U
Atrazine	360 U	370 U	360 U	350 U	370 U	370 U
Benzaldehyde	550 U	560 U	550 U	520 U	560 UJ	560 UJ
Benzo(a)anthracene	14	14	3.3 J	4 J	2.4 J	11 U
Benzo(a)pyrene	25	24	11 U	6.3 J	11 U	11 U
Benzo(b)fluoranthene	35	33	4.2 J	13	11 U	11 U
Benzo(g,h,i)perylene	17	15	3.2 J	3.7 J	11 U	11 U
Benzo(k)fluoranthene	34	32	5 J	7.7 J	11 U	11 U
Butylbenzylphthalate	360 U	370 U	360 U	350 U	370 UJ	370 UJ
Caprolactam	550 U	560 U	550 U	520 U	560 U	560 U
Carbazole	550 U	560 U	550 U	520 U	560 U	560 U
Chrysene	360 U	370 U	360 U	350 U	370 U	370 U
Di-n-butylphthalate	360 U	370 U	360 U	350 U	370 U	370 U
Di-n-octylphthalate	360 U	370 U	360 U	350 U	370 UJ	370 UJ
Dibenz(a,h)anthracene	9.3 J	9.4 J	11 U	10 U	11 U	11 U
Dibenzofuran	360 U	370 U	360 U	350 U	370 U	370 U
Diethylphthalate	360 U	370 U	360 U	350 U	370 U	370 U
Dimethyl phthalate	360 U	370 U	360 U	350 U	370 U	370 U
Fluoranthene	15	16	5.5 J	6.6 J	4 J	11 U
Fluorene	11 U	11 U	11 U	10 U	11 U	11 U
Hexachlorobenzene	11 UJ	11 UJ	11 UJ	10 UJ	11 UJ	11 UJ
Hexachlorobutadiene	11 UJ	11 UJ	11 UJ	10 U	11 U	11 U
Hexachlorocyclopentadiene	11 UJ	11 UJ	11 UJ	10 UJ	11 UJ	11 UJ
Hexachloroethane	360 U	370 U	360 U	350 U	370 U	370 U
Indeno(1,2,3-cd)pyrene	17	16	3.3 J	3.6 J	11 U	11 U
Isophorone	360 U	370 U	360 U	350 U	370 U	370 U
Naphthalene	11 U	11 U	11 U	10 U	11 UJ	11 UJ
Nitrobenzene	360 U	370 U	360 U	350 U	370 U	370 U
Pentachlorophenol	910 U	910 U	910 U	860 U	920 U	920 U
Phenanthrene	4.2 J	5.3 J	11 U	2.3 J	11 U	11 U
Phenol	550 U	560 U	550 U	520 U	560 U	560 U
Pyrene	37 J	34 J	6 J	6.8 J	3.5 J	11 U
bis(2-Chloroethoxy)methane	360 U	370 U	360 U	350 U	370 U	370 U
bis(2-Chloroethyl)ether	360 U	370 U	360 U	350 U	370 U	370 U
bis(2-Ethylhexyl)phthalate	360 U	370 U	360 U	350 U	370 UJ	370 UJ
n-Nitroso-di-n-propylamine	360 U	370 U	360 U	350 U	370 U	370 U
n-Nitrosodiphenylamine	730 U	730 U	730 U	690 U	740 U	740 U
Explosives (UG/KG)						
1,3,5-Trinitrobenzene	99.9 U	99.8 U	98.8 UJ	97.7 U	99.8 U	98.8 U
1,3-Dinitrobenzene	99.9 U	99.8 U	98.8 UJ	97.7 U	99.8 U	98.8 U
2,4,6-Trinitrotoluene	99.9 U	99.8 U	98.8 UJ	97.7 U	99.8 U	98.8 U
2,4-Dinitrotoluene	99.9 U	99.8 U	98.8 UJ	97.7 U	99.8 U	98.8 U
2,6-Dinitrotoluene	99.9 U	99.8 U	98.8 UJ	97.7 U	99.8 U	98.8 U
2-Amino-4,6-dinitrotoluene	99.9 UJ	99.8 UJ	98.8 UJ	97.7 UJ	99.8 UJ	98.8 UJ
2-Nitrotoluene	99.9 U	99.8 U	98.8 UJ	97.7 U	99.8 U	98.8 U
3-Nitrotoluene	99.9 U	99.8 U	98.8 UJ	97.7 U	99.8 U	98.8 U
4-Amino-2,6-dinitrotoluene	99.9 U	99.8 U	98.8 UJ	97.7 U	99.8 U	98.8 U
4-Nitrotoluene	99.9 U	99.8 U	98.8 UJ	97.7 U	99.8 U	98.8 U
HMX	99.9 U	99.8 U	98.8 UJ	97.7 U	99.8 U	98.8 U
Nitrobenzene	99.9 U	99.8 U	98.8 U	97.7 U	99.8 U	98.8 U
Nitroglycerin	99.9 U	99.8 U	98.8 U	97.7 U	99.8 U	98.8 U
PETN	99.9 U	99.8 U	98.8 U	97.7 U	99.8 U	98.8 U
Perchlorate	1.6 J	2.4 U	2.2 U	2.1 U	2.3 U	2.4 U
RDX	99.9 U	99.8 U	98.8 UJ	97.7 U	99.8 U	98.8 U
Tetryl	99.9 U	99.8 U	98.8 UJ	97.7 U	99.8 U	98.8 U
Total Metals (MG/KG)						
Antimony	1.05 J	0.465 U	0.374 U	0.662 J	0.432 U	0.407 U

Appendix I
POIA Surface Soil Raw Analytical Results
November 2008

Station ID	MR08-SS374		MR08-SS375	MR08-SS376	MR08-SS377	
Sample ID	MR08-SS374-08D	MR08-SS374D-08D	MR08-SS375-08D	MR08-SS376-08D	MR08-SS377-08D	MR08-SS377D-08D
Sample Date	11/11/08	11/11/08	11/11/08	11/11/08	11/11/08	11/11/08
Chemical Name						
Arsenic	3.3	3.6	1.13	3.66	0.655	0.567
Barium	16.3	12.6	13.1	11.3	19	16.9
Cadmium	0.14 J	0.179 J	0.0572 J	0.344	0.0989 J	0.107 J
Chromium	10.3 J	6.19 J	10.1 J	8.36 J	6.51 J	5.98 J
Copper	2.52	2.51	1.24 J	2.53	0.779 J	0.637 J
Lead	49.2	56	9.04	22.6	6.33	4.72
Mercury	0.0261 J	0.0256 J	0.0222 U	0.0203 U	0.022 U	0.027 J
Selenium	0.294 J	0.283 J	0.163 J	0.403 J	0.536 J	0.525 J
Silver	0.21 U	0.232 U	0.187 U	0.2 U	0.216 U	0.203 U
Zinc	17.9	19.7	6.92	36.8	3.02	2.38
Wet Chemistry (%)	NA	NA	NA	NA	NA	NA
% Solids	89	75.1	90.1	94.1	88.9	86.9

Notes:

J - Analyte present, value may or may not be accurate or precise

NA - Not analyzed

U - The material was analyed for, but not detected

UJ - Analyte not detected, quantitation limit may be inaccurate

Appendix I
POIA Subsurface Soil Raw Analytical Results
November 2008

Station ID	MR08-IS374		MR08-IS375	MR08-IS376	MR08-IS377		MR08-IS378	MR08-IS379	MR08-IS380	MR08-IS381	MR08-IS382	MR08-IS383	MR08-IS384	MR08-IS386	MR08-IS387
Sample ID	MR08-IS374-08D	MR08-IS374D-08D	MR08-IS375-08D	MR08-IS376-08D	MR08-IS377-08D	MR08-IS377D-08D	MR08-IS378-08D	MR08-IS379-08D	MR08-IS380-08D	MR08-IS381-08D	MR08-IS382-08D	MR08-IS383-08D	MR08-IS384-08D	MR08-IS386-08D	MR08-IS387-08D
Sample Date	11/16/08	11/16/08	11/16/08	11/16/08	11/17/08	11/17/08	11/10/08	11/12/08	11/11/08	11/12/08	11/16/08	11/15/08	11/15/08	11/14/08	11/15/08
Chemical Name															
Volatile Organic Compounds (UG/KG)															
1,1,1-Trichloroethane	11 U	12 U	11 U	11 U	11 U	10 U	11 U	11 U	12 U	10 U	12 U	10 U	12 U	12 U	11 U
1,1,2,2-Tetrachloroethane	11 U	12 U	11 U	11 U	11 U	10 U	11 U	11 U	12 U	10 U	12 U	10 U	12 U	12 U	11 U
1,1,2-Trichloro-1,2,2-trifluoroethane(Freon-113)	11 U	12 U	11 U	11 U	11 U	10 U	11 U	11 U	12 U	10 U	12 U	10 U	12 U	12 U	11 U
1,1,2-Trichloroethane	11 U	12 U	11 U	11 U	11 U	10 U	11 U	11 U	12 U	10 U	12 U	10 U	12 U	12 U	11 U
1,1-Dichloroethane	11 U	12 U	11 U	11 U	11 U	10 U	11 U	11 U	12 U	10 U	12 U	10 U	12 U	12 U	11 U
1,1-Dichloroethene	11 U	12 U	11 U	11 U	11 U	10 U	11 U	11 U	12 U	10 U	12 U	10 U	12 U	12 U	11 U
1,2,4-Trichlorobenzene	11 U	12 U	11 U	11 U	11 U	10 U	11 UJ	11 U	12 UJ	10 U	12 U	10 U	12 U	12 U	11 U
1,2-Dibromo-3-chloropropane	5.7 U	6.2 U	5.4 U	5.3 U	5.4 U	5.1 U	5.4 U	5.5 U	5.9 U	5.2 U	6.2 U	5 U	6.2 U	5.8 U	5.6 U
1,2-Dibromoethane	11 U	12 U	11 U	11 U	11 U	10 U	11 U	11 U	12 U	10 U	12 U	10 U	12 U	12 U	11 U
1,2-Dichlorobenzene	11 U	12 U	11 U	11 U	11 U	10 U	11 U	11 U	12 U	10 U	12 U	10 U	12 U	12 U	11 U
1,2-Dichloroethane	11 U	12 U	11 U	11 U	11 U	10 U	11 U	11 U	12 U	10 U	12 U	10 U	12 U	12 U	11 U
1,2-Dichloropropane	11 U	12 U	11 U	11 U	11 U	10 U	11 U	11 U	12 U	10 U	12 U	10 U	12 U	12 U	11 U
1,3-Dichlorobenzene	11 U	12 U	11 U	11 U	11 U	10 U	11 U	11 U	12 U	10 U	12 U	10 U	12 U	12 U	11 U
1,4-Dichlorobenzene	11 U	12 U	11 U	11 U	11 U	10 U	11 U	11 U	12 U	10 U	12 U	10 U	12 U	12 U	11 U
2-Butanone	11 U	12 U	11 U	11 U	11 U	10 U	2.8 J	11 U	12 U	10 U	12 U	10 U	12 U	12 U	11 U
2-Hexanone	11 U	12 U	11 U	11 U	11 U	10 U	11 U	11 U	12 U	10 U	12 U	10 U	12 U	12 U	11 U
4-Methyl-2-pentanone	11 U	12 U	11 U	11 U	11 UJ	10 UJ	11 U	11 U	12 U	10 U	12 U	10 U	12 U	12 U	11 U
Acetone	11 U	12 U	11 U	11 U	11 UJ	10 UJ	14 U	13 U	12 U	13 U	12 U	10 U	12 U	12 U	11 U
Benzene	11 U	12 U	11 U	11 U	11 U	10 U	11 U	11 U	12 U	10 U	12 U	10 U	12 U	12 U	11 U
Bromodichloromethane	11 U	12 U	11 U	11 U	11 U	10 U	11 U	11 U	12 U	10 U	12 U	10 U	12 U	12 U	11 U
Bromoform	11 U	12 U	11 U	11 U	11 U	10 U	11 U	11 U	12 U	10 U	12 U	10 U	12 U	12 U	11 U
Bromomethane	11 U	12 U	11 U	11 U	11 U	10 U	11 UJ	11 U	12 UJ	10 U	12 U	10 U	12 U	12 U	11 U
Carbon disulfide	11 U	12 U	11 U	11 U	11 U	10 U	11 U	11 U	12 U	10 U	12 U	10 U	12 U	12 U	11 U
Carbon tetrachloride	11 U	12 U	11 U	11 U	11 U	10 U	11 U	11 U	12 U	10 U	12 U	10 U	12 U	12 U	11 U
Chlorobenzene	11 U	12 U	11 U	11 U	11 U	10 U	11 U	11 U	12 U	10 U	12 U	10 U	12 U	12 U	11 U
Chloroethane	11 U	12 U	11 U	11 U	11 U	10 U	11 U	11 U	12 U	10 U	12 U	10 U	12 U	12 U	11 U
Chloroform	11 U	12 U	11 U	11 U	11 U	10 U	11 U	11 U	12 U	10 U	12 U	10 U	12 U	12 U	11 U
Chloromethane	11 U	12 U	11 U	11 U	11 UJ	10 UJ	11 U	11 U	12 U	10 U	12 U	10 U	12 U	12 U	11 U
Cyclohexane	11 U	12 U	11 U	11 U	11 U	10 U	11 U	11 U	12 U	10 U	12 U	10 U	12 U	12 U	11 U
Dibromochloromethane	11 U	12 U	11 U	11 U	11 U	10 U	11 U	11 U	12 U	10 U	12 U	10 U	12 U	12 U	11 U
Dichlorodifluoromethane (Freon-12)	11 U	12 U	11 U	11 U	11 U	10 U	11 U	11 U	12 U	10 U	12 U	10 U	12 U	12 U	11 U
Ethylbenzene	11 U	12 U	11 U	11 U	11 U	10 U	11 U	11 U	12 U	10 U	12 U	10 U	12 U	12 U	11 U
Isopropylbenzene	11 U	12 U	11 U	11 U	11 U	10 U	11 U	11 U	12 U	10 U	12 U	10 U	12 U	12 U	11 U
Methyl acetate	11 U	12 U	11 U	11 UJ	11 UJ	10 UJ	11 U	11 U	12 U	10 U	12 U	10 U	12 U	12 U	11 U
Methyl-tert-butyl ether (MTBE)	11 U	12 U	11 U	11 U	11 U	10 U	11 U	11 U	12 U	10 U	12 U	10 U	12 U	12 U	11 U
Methylcyclohexane	11 U	12 U	11 U	11 U	11 U	10 U	11 U	11 U	12 U	10 U	12 U	10 U	12 U	12 U	11 U
Methylene chloride	11 U	12 U	11 U	11 U	11 U	10 U	11 U	11 U	12 U	10 U	12 U	10 U	12 U	12 U	11 U
Styrene	11 U	12 U	11 U	11 U	11 U	10 U	11 U	11 U	12 U	10 U	12 U	10 U	12 U	12 U	11 U
Tetrachloroethene	11 U	12 U	11 U	11 U	11 U	10 U	11 UJ	11 U	12 UJ	10 U	12 U	10 U	12 U	12 U	11 U
Toluene	11 U	12 U	11 U	11 U	11 U	10 U	11 U	11 U	12 U	10 U	12 U	10 U	12 U	12 U	11 U
Trichloroethene	11 U	12 U	11 U	11 U	11 U	10 U	11 U	11 U	12 U	10 U	12 U	10 U	12 U	12 U	11 U
Trichlorofluoromethane(Freon-11)	11 U	12 U	11 U	11 U	11 U	10 U	11 U	11 U	12 U	10 U	12 U	10 U	12 U	12 U	11 U
Vinyl chloride	11 U	12 U	11 U	11 U	11 UJ	10 UJ	11 UJ	11 U	12 UJ	10 U	12 U	10 U	12 U	12 U	11 U
Xylene, total	11 U	12 U	11 U	11 U	11 U	10 U	11 U	11 U	12 U	10 U	12 U	10 U	12 U	12 U	11 U
cis-1,2-Dichloroethene	11 U	12 U	11 U	11 U	11 U	10 U	11 U	11 U	12 U	10 U	12 U	10 U	12 U	12 U	11 U
cis-1,3-Dichloropropene	11 U	12 U	11 U	11 U	11 U	10 U	11 U	11 U	12 U	10 U	12 U	10 U	12 U	12 U	11 U
trans-1,2-Dichloroethene	11 U	12 U	11 U	11 U	11 U	10 U	11 U	11 U	12 U	10 U	12 U	10 U	12 U	12 U	11 U
trans-1,3-Dichloropropene	11 U	12 U	11 U	11 U	11 U	10 U	11 U	11 U	12 U	10 U	12 U	10 U	12 U	12 U	11 U
Semivolatile Organic Compounds (UG/KG)															
1,1-Biphenyl	380 U	360 U	390 U	360 U	350 U	340 U	360 U	360 U	350 U	360 U	360 U	360 U	370 U	380 U	360 U
2,2'-Oxybis(1-chloropropane)	380 U	360 U	390 U	360 U	350 U	340 U	360 U	360 U	350 U	360 U	360 U	360 U	370 U	380 U	360 U
2,4,5-Trichlorophenol	570 U	550 U	590 U	550 U	520 U	520 U	550 U	550 U	530 U	540 U	540 U	550 U	560 U	580 U	540 U
2,4,6-Trichlorophenol	570 U	550 U	590 U	550 U	520 U	520 U	550 U	550 U	530 U	540 U	540 U	550 U	560 U	580 U	540 U
2,4-Dichlorophenol	570 U	550 U	590 U	550 U	520 U	520 U	550 U	550 U	530 U	540 U	540 U	550 U	560 U	580 U	540 U

Appendix I
POIA Subsurface Soil Raw Analytical Results
November 2008

Station ID	MR08-IS374		MR08-IS375	MR08-IS376	MR08-IS377		MR08-IS378	MR08-IS379	MR08-IS380	MR08-IS381	MR08-IS382	MR08-IS383	MR08-IS384	MR08-IS386	MR08-IS387
Sample ID	MR08-IS374-08D	MR08-IS374D-08D	MR08-IS375-08D	MR08-IS376-08D	MR08-IS377-08D	MR08-IS377D-08D	MR08-IS378-08D	MR08-IS379-08D	MR08-IS380-08D	MR08-IS381-08D	MR08-IS382-08D	MR08-IS383-08D	MR08-IS384-08D	MR08-IS386-08D	MR08-IS387-08D
Sample Date	11/16/08	11/16/08	11/16/08	11/16/08	11/17/08	11/17/08	11/10/08	11/12/08	11/11/08	11/12/08	11/16/08	11/15/08	11/15/08	11/14/08	11/15/08
Chemical Name															
2,4-Dimethylphenol	570 U	550 U	590 U	550 U	520 U	520 U	550 U	550 U	530 U	540 U	540 U	550 U	560 U	580 U	540 U
2,4-Dinitrophenol	1,400 U	1,300 U	1,400 U	1,300 U	1,200 U	1,200 U	1,300 U	1,300 U	1,300 U	1,300 U	1,300 U	1,300 U	1,300 U	1,400 U	1,300 U
2,4-Dinitrotoluene	380 U	360 U	390 U	360 U	350 U	340 U	360 U	360 U	350 U	360 U	360 U	360 U	370 U	380 U	360 U
2,6-Dinitrotoluene	380 U	360 U	390 U	360 U	350 U	340 U	360 U	360 U	350 U	360 U	360 U	360 U	370 U	380 U	360 U
2-Chloronaphthalene	380 U	360 U	390 U	360 U	350 U	340 U	360 U	360 U	350 U	360 U	360 U	360 U	370 U	380 U	360 U
2-Chlorophenol	570 U	550 U	590 U	550 U	520 U	520 U	550 U	550 U	530 U	540 U	540 U	550 U	560 U	580 U	540 U
2-Methylnaphthalene	11 UJ	11 UJ	12 UJ	11 UJ	10 U	10 U	11 U	11 U	11 U	11 U	11 UJ	11 UJ	11 UJ	12 UJ	11 UJ
2-Methylphenol	680 U	660 U	710 U	660 U	630 U	630 U	660 U	660 U	640 U	650 U	650 U	660 U	670 U	700 U	650 U
2-Nitroaniline	570 U	550 U	590 U	550 U	520 U	520 U	550 U	550 U	530 U	540 U	540 U	550 U	560 U	580 U	540 U
2-Nitrophenol	680 U	660 U	710 U	660 U	630 U	630 U	660 U	660 U	640 U	650 U	650 U	660 U	670 U	700 U	650 U
3,3'-Dichlorobenzidine	570 U	550 U	590 U	550 U	520 U	520 U	550 U	550 U	530 U	540 U	540 U	550 U	560 U	580 U	540 U
3- and 4-Methylphenol	680 U	660 U	710 U	660 U	630 U	630 U	660 U	660 U	640 U	650 U	650 U	660 U	670 U	700 U	650 U
3-Nitroaniline	570 U	550 U	590 U	550 U	520 U	520 U	550 U	550 U	530 U	540 U	540 U	550 U	560 U	580 U	540 U
4,6-Dinitro-2-methylphenol	1,400 U	1,300 U	1,400 U	1,300 U	1,200 U	1,200 U	1,300 U	1,300 U	1,300 U	1,300 U	1,300 U	1,300 U	1,300 U	1,400 U	1,300 U
4-Bromophenyl-phenylether	380 U	360 U	390 U	360 U	350 U	340 U	360 U	360 U	350 U	360 U	360 U	360 U	370 U	380 U	360 U
4-Chloro-3-methylphenol	570 U	550 U	590 U	550 U	520 U	520 U	550 U	550 U	530 U	540 U	540 U	550 U	560 U	580 U	540 U
4-Chloroaniline	570 U	550 U	590 U	550 U	520 U	520 U	550 U	550 U	530 U	540 U	540 U	550 U	560 U	580 U	540 U
4-Chlorophenyl-phenylether	380 U	360 U	390 U	360 U	350 U	340 U	360 U	360 U	350 U	360 U	360 U	360 U	370 U	380 U	360 U
4-Nitroaniline	570 U	550 U	590 U	550 U	520 U	520 U	550 U	550 U	530 U	540 U	540 U	550 U	560 U	580 U	540 U
4-Nitrophenol	1,400 UJ	1,300 UJ	1,400 UJ	1,300 UJ	1,200 U	1,200 U	1,300 U	1,300 U	1,300 U	1,300 U	1,300 UJ	1,300 UJ	1,300 UJ	1,400 UJ	1,300 UJ
Acenaphthene	380 U	360 U	390 U	360 U	350 U	340 U	360 U	360 U	350 U	360 U	360 U	360 U	370 U	380 U	360 U
Acenaphthylene	380 U	360 U	390 U	360 U	350 U	340 U	360 U	360 U	350 U	360 U	360 U	360 U	370 U	380 U	360 U
Acetophenone	680 U	660 U	710 U	660 U	630 U	630 U	660 U	660 U	640 U	650 U	650 U	660 U	670 U	700 U	650 U
Anthracene	380 U	360 U	390 U	360 U	350 U	340 U	360 U	360 U	350 U	360 U	360 U	360 U	370 U	380 U	360 U
Atrazine	380 U	360 U	390 U	360 U	350 U	340 U	360 U	360 U	350 U	360 U	360 U	360 U	370 U	380 U	360 U
Benzaldehyde	570 U	550 U	590 U	550 U	520 U	520 U	550 U	550 UJ	530 U	540 U	540 U	550 U	560 U	580 U	540 U
Benzo(a)anthracene	11 UJ	11 U	12 UJ	11 UJ	10 U	10 U	11 U	11 U	11 U	11 U	11 UJ	11 U	11 UJ	12 U	11 UJ
Benzo(a)pyrene	11 U	11 U	12 U	11 U	10 U	10 U	11 U	11 U	11 U	11 U	11 U	11 U	11 U	12 U	11 U
Benzo(b)fluoranthene	11 UJ	11 U	12 UJ	11 UJ	10 U	10 U	11 U	11 U	11 U	11 U	11 UJ	11 U	11 UJ	12 U	11 UJ
Benzo(g,h,i)perylene	11 U	11 U	12 U	11 U	10 U	10 U	11 U	11 U	11 U	11 U	11 U	11 U	11 U	12 U	11 U
Benzo(k)fluoranthene	11 U	11 UJ	12 U	11 U	10 U	10 U	11 U	11 U	11 U	11 U	11 U	11 UJ	11 U	12 UJ	11 U
Butylbenzylphthalate	380 UJ	360 UJ	390 UJ	360 UJ	350 UJ	340 UJ	360 U	360 UJ	350 U	360 U	360 UJ	360 UJ	370 UJ	380 UJ	360 UJ
Caprolactam	570 U	550 U	590 U	550 U	520 U	520 U	550 U	550 U	530 U	540 U	540 U	550 U	560 U	580 U	540 U
Carbazole	570 U	550 U	590 U	550 U	520 U	520 U	550 U	550 U	530 U	540 U	540 U	550 U	560 U	580 U	540 U
Chrysene	380 U	360 U	390 U	360 U	350 U	340 U	360 U	360 U	350 U	360 U	360 U	360 U	370 U	380 U	360 U
Di-n-butylphthalate	380 U	360 U	390 U	360 U	350 U	340 U	360 U	360 U	350 U	360 U	360 U	360 U	370 U	380 U	360 U
Di-n-octylphthalate	380 UJ	360 UJ	390 UJ	360 UJ	350 UJ	340 UJ	360 UJ	360 UJ	350 UJ	360 UJ	360 UJ	360 UJ	370 UJ	380 UJ	360 UJ
Dibenz(a,h)anthracene	11 U	11 U	12 U	11 U	10 U	10 U	11 U	11 U	11 U	11 U	11 U	11 U	11 U	12 U	11 U
Dibenzofuran	380 U	360 U	390 U	360 U	350 U	340 U	360 U	360 U	350 U	360 U	360 U	360 U	370 U	380 U	360 U
Diethylphthalate	380 U	360 U	390 U	360 U	350 U	340 U	360 U	360 U	350 U	360 U	360 U	360 U	370 U	380 U	360 U
Dimethyl phthalate	380 U	360 U	390 U	360 U	350 U	340 U	360 U	360 U	350 U	360 U	360 U	360 U	370 U	380 U	360 U
Fluoranthene	11 U	11 U	12 U	11 U	10 U	10 U	11 U	11 U	11 U	11 U	11 U	11 U	11 U	12 U	11 U
Fluorene	11 U	11 U	12 U	11 U	10 U	10 U	11 U	11 U	11 U	11 U	11 U	11 U	11 U	12 U	11 U
Hexachlorobenzene	11 UJ	11 UJ	12 UJ	11 UJ	10 UJ	10 UJ	11 U	11 UJ	11 U	11 UJ	11 UJ	11 UJ	11 UJ	12 UJ	11 UJ
Hexachlorobutadiene	11 U	11 UJ	12 U	11 U	10 UJ	10 UJ	11 U	11 U	11 U	11 U	11 U	11 UJ	11 U	12 UJ	11 U
Hexachlorocyclopentadiene	11 U	11 UJ	12 U	11 U	10 UJ	10 UJ	11 U	11 UJ	11 U	11 UJ	11 U	11 UJ	11 U	12 UJ	11 U
Hexachloroethane	380 U	360 U	390 U	360 U	350 U	340 U	360 U	360 U	350 U	360 U	360 U	360 U	370 U	380 U	360 U
Indeno(1,2,3-cd)pyrene	11 UJ	11 U	12 UJ	11 UJ	10 U	10 U	11 U	11 U	11 U	11 U	11 UJ	11 U	11 UJ	12 U	11 UJ
Isophorone	380 U	360 U	390 U	360 U	350 U	340 U	360 U	360 U	350 U	360 U	360 U	360 U	370 U	380 U	360 U
Naphthalene	11 U	11 U	12 U	11 U	10 U	10 U	11 U	11 UJ	11 U	11 UJ	11 U	11 U	11 U	12 U	11 U
Nitrobenzene	380 UJ	360 UJ	390 UJ	360 UJ	350 UJ	340 UJ	360 U	360 U	350 U	360 U	360 UJ	360 UJ	370 UJ	380 UJ	360 UJ
Pentachlorophenol	930 U	900 U	970 U	900 U	860 U	860 U	900 U	900 U	870 U	890 U	880 U	910 U	920 U	960 U	890 U
Phenanthrene	11 U	11 U	12 U	11 U	10 U	10 U	11 U	11 U	11 U	11 U	11 U	11 U	11 U	12 U	11 U
Phenol	570 U	550 U	590 UJ	550 UJ	520 U	520 U	550 U	550 U	530 U	540 U	540 U	550 U	560 U	580 U	540 U
Pyrene	11 U	11 UJ	12 U	11 U	10 UJ	10 UJ	11 U	11 U	11 U	11 U	11 U	11 UJ	11 U	12 UJ	11 U
bis(2-Chloroethoxy)methane	380 U	360 U	390 U	360 U	350 U	340 U	360 U	360 U	350 U	360 U	360 U	360 U	370 U	380 U	360 U

Appendix I
POIA Subsurface Soil Raw Analytical Results
November 2008

Station ID	MR08-IS374		MR08-IS375	MR08-IS376	MR08-IS377		MR08-IS378	MR08-IS379	MR08-IS380	MR08-IS381	MR08-IS382	MR08-IS383	MR08-IS384	MR08-IS386	MR08-IS387
Sample ID	MR08-IS374-08D	MR08-IS374D-08D	MR08-IS375-08D	MR08-IS376-08D	MR08-IS377-08D	MR08-IS377D-08D	MR08-IS378-08D	MR08-IS379-08D	MR08-IS380-08D	MR08-IS381-08D	MR08-IS382-08D	MR08-IS383-08D	MR08-IS384-08D	MR08-IS386-08D	MR08-IS387-08D
Sample Date	11/16/08	11/16/08	11/16/08	11/16/08	11/17/08	11/17/08	11/10/08	11/12/08	11/11/08	11/12/08	11/16/08	11/15/08	11/15/08	11/14/08	11/15/08
Chemical Name															
bis(2-Chloroethyl)ether	380 U	360 U	390 UJ	360 UJ	350 U	340 U	360 U	360 U	350 U	360 U	360 U	360 U	370 U	380 U	360 U
bis(2-Ethylhexyl)phthalate	180 J	150 J	390 UJ	140 J	460 J	200 J	1,800 J	720 J	350 UJ	900 J	360 UJ	360 UJ	370 UJ	380 UJ	360 UJ
n-Nitroso-di-n-propylamine	380 U	360 U	390 U	360 U	350 U	340 U	360 U	360 U	350 U	360 U	360 U	360 U	370 U	380 U	360 U
n-Nitrosodiphenylamine	750 U	730 U	780 U	720 U	690 U	690 U	720 U	720 U	700 U	720 U	710 U	730 U	740 U	770 U	720 U
Explosives (UG/KG)															
1,3,5-Trinitrobenzene	99.1 U	99.5 U	98.2 U	99 U	98.6 U	99.5 U	NA	NA	NA	NA	NA	NA	NA	NA	NA
1,3-Dinitrobenzene	99.1 U	99.5 U	98.2 U	99 U	98.6 U	99.5 U	NA	NA	NA	NA	NA	NA	NA	NA	NA
2,4,6-Trinitrotoluene	99.1 U	99.5 U	98.2 U	99 U	98.6 U	99.5 U	NA	NA	NA	NA	NA	NA	NA	NA	NA
2,4-Dinitrotoluene	99.1 U	99.5 U	98.2 U	99 UJ	98.6 U	99.5 U	NA	NA	NA	NA	NA	NA	NA	NA	NA
2,6-Dinitrotoluene	99.1 U	99.5 U	98.2 U	99 U	98.6 U	99.5 U	NA	NA	NA	NA	NA	NA	NA	NA	NA
2-Amino-4,6-dinitrotoluene	99.1 U	99.5 U	98.2 U	99 U	98.6 U	99.5 U	NA	NA	NA	NA	NA	NA	NA	NA	NA
2-Nitrotoluene	99.1 U	99.5 U	98.2 U	99 U	98.6 U	99.5 U	NA	NA	NA	NA	NA	NA	NA	NA	NA
3-Nitrotoluene	99.1 U	99.5 U	98.2 U	99 U	98.6 U	99.5 U	NA	NA	NA	NA	NA	NA	NA	NA	NA
4-Amino-2,6-dinitrotoluene	99.1 U	99.5 U	98.2 U	99 U	98.6 U	99.5 U	NA	NA	NA	NA	NA	NA	NA	NA	NA
4-Nitrotoluene	99.1 U	99.5 U	98.2 U	99 U	98.6 U	99.5 U	NA	NA	NA	NA	NA	NA	NA	NA	NA
HMX	99.1 U	99.5 U	98.2 U	99 U	98.6 U	99.5 U	NA	NA	NA	NA	NA	NA	NA	NA	NA
Nitrobenzene	99.1 U	99.5 U	98.2 U	99 UJ	98.6 U	99.5 U	NA	NA	NA	NA	NA	NA	NA	NA	NA
Nitroglycerin	99.1 U	99.5 U	98.2 U	99 U	98.6 U	99.5 U	NA	NA	NA	NA	NA	NA	NA	NA	NA
PETN	99.1 U	99.5 U	98.2 U	99 U	98.6 U	99.5 U	NA	NA	NA	NA	NA	NA	NA	NA	NA
Perchlorate	2.3 U	2.6 U	2.6 U	2.5 U	2.1 U	2.1 U	NA	NA	NA	NA	NA	NA	NA	NA	NA
RDX	99.1 U	99.5 U	98.2 U	99 U	98.6 U	99.5 U	NA	NA	NA	NA	NA	NA	NA	NA	NA
Tetryl	99.1 U	99.5 U	98.2 U	99 U	98.6 U	99.5 U	NA	NA	NA	NA	NA	NA	NA	NA	NA
Total Metals (MG/KG)															
Antimony	0.384 U	0.385 U	0.386 U	0.401 U	0.384 U	0.394 U	NA	NA	NA	NA	0.491 U	NA	NA	NA	NA
Arsenic	0.337 U	0.341 U	0.327 U	0.327 U	0.0886 J	0.152 J	0.152 J	0.134 J	0.0875 U	0.229 J	0.394 U	0.39 U	0.543	0.367 U	0.357 U
Barium	5.54	5.39	6.04	3.98	3.97	4.27	7.57	5.38	2.39	6.66	9.15	4.62	6.74	2.99	2.33
Cadmium	0.0384 U	0.0385 U	0.0386 U	0.0401 U	0.0384 U	0.0394 U	0.0424 U	0.0402 U	0.0395 U	0.0378 U	0.0491 U	0.0465 U	0.0407 U	0.046 U	0.0428 U
Chromium	5.95	6.4	4.51	3.57	4.46	4.83	16.6	4.04 J	1.97	4.62 J	4.25	1.69	2.94	2.63	1.7
Copper	1.53 U	1.54 U	1.54 U	0.401 U	0.535 J	0.675 J	NA	NA	NA	NA	1.96 U	NA	NA	NA	NA
Lead	2.45	2.35	2.65	1.99	1.87	1.82	1.53	2.7	2	3.07	3.86	1.32	1.85	1.7	2.39
Mercury	0.022 U	0.0228 U	0.021 U	0.0214 U	0.0197 U	0.0197 U	0.0222 U	0.021 U	0.023 U	0.0215 U	0.0246 U	0.026 U	0.0209 U	0.0248 U	0.0241 U
Selenium	0.112 U	0.114 U	0.109 U	0.109 U	0.102 U	0.102 U	0.113 U	0.102 UJ	0.117 U	0.108 UJ	0.131 U	0.13 U	0.109 U	0.122 U	0.119 U
Silver	0.192 U	0.193 U	0.193 U	0.201 U	0.192 U	0.197 U	0.212 U	0.201 U	0.198 U	0.189 U	0.245 U	0.233 U	0.203 U	0.23 U	0.214 U
Zinc	1.68	1.8	1.61	1.23 J	0.875 J	0.883 J	NA	NA	NA	NA	1.71 J	NA	NA	NA	NA
Wet Chemistry (%)	NA	NA	NA	NA	NA	NA	NA	NA	NA	NA	NA	NA	NA	NA	NA
% Solids	87.9	87.1	91.6	91.2	95	95.9	87.9	94.3	85.2	91.8	75.9	76.4	91.3	80.4	83

Notes:

J - Analyte present, value may or may not be accurate or precise

NA - Not analyzed

U - The material was analyed for, but not detected

UJ - Analyte not detected, quantitation limit may be inaccurate

Appendix I
POIA Groundwater Raw Analytical Results
November 2008

Station ID	MR08-TW01	MR08-TW02		MR08-TW03		MR08-TW04	MR08-TW05	MR08-TW06	MR08-TW07	MR08-TW08	MR08-TW09	MR08-TW10	MR08-TW11	MR08-TW13	MR08-TW14
Sample ID	MR08-TW01-08D	MR08-TW02-08D	MR08-TW02D-08D	MR08-TW03-08D	MR08-TW03D-08D	MR08-TW04-08D	MR08-TW05-08D	MR08-TW06-08D	MR08-TW07-08D	MR08-TW08-08D	MR08-TW09-08D	MR08-TW10-08D	MR08-TW11-08D	MR08-TW13-08D	MR08-TW14-08D
Sample Date	11/17/08	11/18/08	11/18/08	11/18/08	11/18/08	11/20/08	11/17/08	11/17/08	11/15/08	11/15/08	11/17/08	11/17/08	11/17/08	11/17/08	11/17/08
Chemical Name															
Volatile Organic Compounds (UG/L)															
1,1,1-Trichloroethane	1 U	1 U	1 U	1 U	1 U	1 U	1 U	1 U	1 U	1 U	1 U	1 U	1 U	1 U	1 U
1,1,2,2-Tetrachloroethane	1 U	1 U	1 U	1 U	1 U	1 U	1 U	1 U	1 U	1 U	1 U	1 U	1 U	1 U	1 U
1,1,2-Trichloro-1,2,2-trifluoroethane(Freon-113)	1 U	1 U	1 U	1 U	1 U	1 U	1 U	1 U	1 U	1 U	1 U	1 U	1 U	1 U	1 U
1,1,2-Trichloroethane	1 U	1 U	1 U	1 U	1 U	1 U	1 U	1 U	1 U	1 U	1 U	1 U	1 U	1 U	1 U
1,1-Dichloroethane	1 U	1 U	1 U	1 U	1 U	1 U	1 U	1 U	1 U	1 U	1 U	1 U	1 U	1 U	1 U
1,1-Dichloroethene	1 U	1 U	1 U	1 U	1 U	1 U	1 U	1 U	1 U	1 U	1 U	1 U	1 U	1 U	1 U
1,2,4-Trichlorobenzene	1 U	1 U	1 U	1 U	1 U	1 U	1 U	1 U	1 U	1 U	1 U	1 U	1 U	1 U	1 U
1,2-Dibromo-3-chloropropane	1 U	1 U	1 U	1 U	1 U	1 U	1 U	1 U	1 U	1 U	1 U	1 U	1 U	1 U	1 U
1,2-Dibromoethane	1 U	1 U	1 U	1 U	1 U	1 U	1 U	1 U	1 U	1 U	1 U	1 U	1 U	1 U	1 U
1,2-Dichlorobenzene	1 U	1 U	1 U	1 U	1 U	1 U	1 U	1 U	1 U	1 U	1 U	1 U	1 U	1 U	1 U
1,2-Dichloroethane	1 U	1 U	1 U	1 U	1 U	1 U	1 U	1 U	1 U	1 U	1 U	1 U	1 U	1 U	1 U
1,2-Dichloropropane	1 U	1 U	1 U	1 U	1 U	1 U	1 U	1 U	1 U	1 U	1 U	1 U	1 U	1 U	1 U
1,3-Dichlorobenzene	1 U	1 U	1 U	1 U	1 U	1 U	1 U	1 U	1 U	1 U	1 U	1 U	1 U	1 U	1 U
1,4-Dichlorobenzene	1 U	1 U	1 U	1 U	1 U	1 U	1 U	1 U	1 U	1 U	1 U	1 U	1 U	1 U	1 U
2-Butanone	3 R	3 R	3 R	3 R	3 R	3 U	3 R	3 R	3 U	3 U	3 R	3 R	3 R	3 R	3 R
2-Hexanone	2 U	2 UJ	2 UJ	2 UJ	4 U	2 U	2 U	2 U	2 U	2 U	2 U	2 U	2 U	2 U	2 U
4-Methyl-2-pentanone	2 U	2 U	2 U	2 U	2 U	2 U	2 U	2 U	2 U	2 U	2 U	2 U	2 U	2 U	2 U
Acetone	2.5 U	2.5 UJ	2.5 UJ	2.5 UJ	2.5 U	2.5 U	2.5 U	2.5 U	8.1	2.5 U	2.5 U	2.5 U	2.5 U	2.5 U	2.5 U
Benzene	1 U	1 U	1 U	1 U	1 U	1 U	1 U	1 U	1 U	1 U	1 U	1 U	1 U	1 U	1 U
Bromodichloromethane	1 U	1 U	1 U	1 U	1 U	1 U	1 U	1 U	1 U	1 U	1 U	1 U	1 U	1 U	1 U
Bromoform	1 U	1 U	1 U	1 U	1 U	1 U	1 U	1 U	1 U	1 U	1 U	1 U	1 U	1 U	1 U
Bromomethane	1 UJ	1 U	1 U	1 U	1 U	1 U	1 UJ	1 UJ	1 UJ	1 UJ	1 UJ	1 UJ	1 UJ	1 UJ	1 UJ
Carbon disulfide	1 U	1 U	1 U	1 U	1 UJ	1 U	1 U	1 U	1 U	1 U	1 U	1 U	1 U	1 U	1 U
Carbon tetrachloride	1 U	1 UJ	1 UJ	1 UJ	1 U	1 U	1 U	1 U	1 U	1 U	1 U	1 U	1 U	1 U	1 U
Chlorobenzene	1 U	1 U	1 U	1 U	1 U	1 U	1 U	1 U	1 U	1 U	1 U	1 U	1 U	1 U	1 U
Chloroethane	1 U	1 U	1 U	1 U	1 U	1 U	1 U	1 U	1 U	1 U	1 U	1 U	1 U	1 U	1 U
Chloroform	1 U	1 U	1 U	1 U	1 U	1 U	1 U	1 U	1 U	1 U	1 U	1 U	1 U	1 U	1 U
Chloromethane	1 U	1 U	1 U	1 U	1 U	1 U	1 U	1 U	1 U	1 U	1 U	1 U	1 U	1 U	1 U
Cyclohexane	1 U	1 U	1 U	1 U	1 U	1 U	1 U	1 U	1 U	1 U	1 U	1 U	1 U	1 U	1 U
Dibromochloromethane	1 U	1 U	1 U	1 U	1 U	1 U	1 U	1 U	1 U	1 U	1 U	1 U	1 U	1 U	1 U
Dichlorodifluoromethane (Freon-12)	1 U	1 U	1 U	1 U	1 U	1 U	1 U	1 U	1 U	1 U	1 U	1 U	1 U	1 U	1 U
Ethylbenzene	1 U	1 U	1 U	1 U	1 U	1 U	1 U	1 U	1 U	1 U	1 U	1 U	1 U	1 U	1 U
Isopropylbenzene	1 U	1 U	1 U	1 U	1 U	1 U	1 U	1 U	1 U	1 U	1 U	1 U	1 U	1 U	1 U
Methyl acetate	1 U	1 U	1 U	1 U	2 U	1 U	1 U	1 U	1 U	1 U	1 U	1 U	1 U	1 U	1 U
Methyl-tert-butyl ether (MTBE)	1 U	1 U	1 U	1 U	1 UJ	1 U	1 U	1 U	1 U	1 U	1 U	1 U	1 U	1 U	1 U
Methylcyclohexane	1 U	1 U	1 U	1 U	1 U	1 U	1 U	1 U	1 U	1 U	1 U	1 U	1 U	1 U	1 U
Methylene chloride	1 U	1 U	1 U	1 U	1 U	1 U	1 U	1 U	1 U	1 U	1 U	1 U	1 U	1 U	1 U
Styrene	1 U	1 U	1 U	1 U	1 U	1 U	1 U	1 U	1 U	1 U	1 U	1 U	1 U	1 U	1 U
Tetrachloroethene	1 U	1 U	1 U	1 U	1 U	1 U	1 U	1 U	1 U	1 U	1 U	1 U	1 U	1 U	1 U
Toluene	1 U	1 U	1 U	1 U	1 U	12	1 U	1 U	2.6 U	1.4 U	2.7 U	16	1 U	5.1	1 U
Trichloroethene	1 U	1 U	1 U	1 U	1 U	1 U	1 U	1 U	1 U	1 U	1 U	1 U	1 U	1 U	1 U
Trichlorofluoromethane(Freon-11)	1 U	1 U	1 U	1 U	1 U	1 U	1 U	1 U	1 U	1 U	1 U	1 U	1 U	1 U	1 U
Vinyl chloride	1 U	1 U	1 U	1 U	1 U	1 U	1 U	1 U	1 U	1 U	1 U	1 U	1 U	1 U	1 U
Xylene, total	1 U	1 U	1 U	1 U	1 U	1 U	1 U	1 U	0.4 J	1 U	1 U	1 U	1 U	1 U	1 U
cis-1,2-Dichloroethene	1 U	1 U	1 U	1 U	1 U	1 U	1 U	1 U	1 U	1 U	1 U	1 U	1 U	1 U	1 U
cis-1,3-Dichloropropene	1 U	1 U	1 U	1 U	1 U	1 U	1 U	1 U	1 U	1 U	1 U	1 U	1 U	1 U	1 U
trans-1,2-Dichloroethene	1 U	1 U	1 U	1 U	1 U	1 U	1 U	1 U	1 U	1 U	1 U	1 U	1 U	1 U	1 U
trans-1,3-Dichloropropene	1 U	1 U	1 U	1 U	1 U	1 U	1 U	1 U	1 U	1 U	1 U	1 U	1 U	1 U	1 U
Semivolatile Organic Compounds (UG/L)															
1,1-Biphenyl	10 U	9 U	9 U	10 U	11 U	9 U	11 U	9 U	12 U	10 U	10 U	11 U	10 U	9 U	11 R
2,2'-Oxybis(1-chloropropane)	10 U	9 U	9 U	10 U	11 U	9 U	11 U	9 U	12 U	10 U	10 U	11 U	10 U	9 U	11 R
2,4,5-Trichlorophenol	25 U	24 U	24 U	26 U	27 U	24 U	27 U	24 U	31 U	26 U	26 U	27 U	24 U	24 U	27 R
2,4,6-Trichlorophenol	10 U	9 U	9 U	10 U	11 U	9 U	11 U	9 U	12 U	10 U	10 U	11 U	10 U	9 U	11 R
2,4-Dichlorophenol	12 U	11 U	11 U	12 U	13 U	11 U	13 U	11 U	15 U	12 U	12 U	13 U	11 U	11 U	13 R

Appendix I
POIA Groundwater Raw Analytical Results
November 2008

Station ID	MR08-TW01	MR08-TW02		MR08-TW03		MR08-TW04	MR08-TW05	MR08-TW06	MR08-TW07	MR08-TW08	MR08-TW09	MR08-TW10	MR08-TW11	MR08-TW13	MR08-TW14
Sample ID	MR08-TW01-08D	MR08-TW02-08D	MR08-TW02D-08D	MR08-TW03-08D	MR08-TW03D-08D	MR08-TW04-08D	MR08-TW05-08D	MR08-TW06-08D	MR08-TW07-08D	MR08-TW08-08D	MR08-TW09-08D	MR08-TW10-08D	MR08-TW11-08D	MR08-TW13-08D	MR08-TW14-08D
Sample Date	11/17/08	11/18/08	11/18/08	11/18/08	11/18/08	11/20/08	11/17/08	11/17/08	11/15/08	11/15/08	11/17/08	11/17/08	11/17/08	11/17/08	11/17/08
Chemical Name															
2,4-Dimethylphenol	12 U	11 U	11 U	12 U	13 U	11 U	13 U	11 U	15 U	12 U	12 U	13 U	11 U	11 U	13 R
2,4-Dinitrophenol	45 U	42 U	42 U	47 U	48 U	42 U	48 U	42 U	56 U	46 U	46 U	49 U	43 U	42 U	48 R
2,4-Dinitrotoluene	10 U	9 U	9 U	10 U	11 U	9 U	11 U	9 U	12 U	10 U	10 U	11 U	10 U	9 U	11 R
2,6-Dinitrotoluene	10 U	9 U	9 U	10 U	11 U	9 U	11 U	9 U	12 U	10 U	10 U	11 U	10 U	9 U	11 R
2-Chloronaphthalene	10 U	9 U	9 U	10 U	11 U	9 U	11 U	9 U	12 U	10 U	10 U	11 U	10 U	9 U	11 R
2-Chlorophenol	12 U	11 U	11 U	12 U	13 U	11 U	13 U	11 U	15 U	12 U	12 U	13 U	11 U	11 U	13 R
2-Methylnaphthalene	0.25 U	0.24 U	0.24 U	0.26 U	0.27 U	0.24 U	0.27 U	0.24 U	0.31 U	0.26 U	0.26 U	0.27 U	0.24 U	0.24 U	0.27 R
2-Methylphenol	12 U	11 U	11 U	12 U	13 U	11 U	13 U	11 U	15 U	12 U	12 U	13 U	11 U	11 U	13 R
2-Nitroaniline	25 U	24 U	24 U	26 U	27 U	24 U	27 U	24 U	31 U	26 U	26 U	27 U	24 U	24 U	27 R
2-Nitrophenol	10 U	9 U	9 U	10 U	11 U	9 U	11 U	9 U	12 U	10 U	10 U	11 U	10 U	9 U	11 R
3,3'-Dichlorobenzidine	10 U	9 U	9 U	10 U	11 U	9 U	11 U	9 U	12 U	10 U	10 U	11 U	10 U	9 U	11 R
3- and 4-Methylphenol	10 U	9 U	9 U	10 U	11 U	9 U	11 U	9 U	12 U	10 U	10 U	11 U	10 U	9 U	11 R
3-Nitroaniline	25 U	24 U	24 U	26 U	27 U	24 U	27 U	24 U	31 U	26 U	26 U	27 U	24 U	24 U	27 R
4,6-Dinitro-2-methylphenol	25 U	24 U	24 U	26 U	27 U	24 U	27 U	24 U	31 U	26 U	26 U	27 U	24 U	24 U	27 R
4-Bromophenyl-phenylether	10 U	9 U	9 U	10 U	11 U	9 U	11 U	9 U	12 U	10 U	10 U	11 U	10 U	9 U	11 R
4-Chloro-3-methylphenol	10 U	9 U	9 U	10 U	11 U	9 U	11 U	9 U	12 U	10 U	10 U	11 U	10 U	9 U	11 R
4-Chloroaniline	10 U	9 U	9 U	10 U	11 U	9 U	11 U	9 U	12 U	10 U	10 U	11 U	10 U	9 U	11 R
4-Chlorophenyl-phenylether	10 U	9 U	9 U	10 U	11 U	9 U	11 U	9 U	12 U	10 U	10 U	11 U	10 U	9 U	11 R
4-Nitroaniline	25 U	24 U	24 U	26 U	27 U	24 U	27 U	24 U	31 U	26 U	26 U	27 U	24 U	24 U	27 R
4-Nitrophenol	25 U	24 U	24 U	26 U	27 U	24 U	27 U	24 U	31 U	26 U	26 U	27 U	24 U	24 U	27 R
Acenaphthene	10 U	9 U	9 U	10 U	11 U	9 U	11 U	9 U	12 U	10 U	10 U	11 U	10 U	9 U	11 R
Acenaphthylene	10 U	9 U	9 U	10 U	11 U	9 U	11 U	9 U	12 U	10 U	10 U	11 U	10 U	9 U	11 R
Acetophenone	12 U	11 U	11 U	12 U	13 U	11 U	13 U	11 U	15 U	12 U	12 U	13 U	11 U	11 U	13 R
Anthracene	10 U	9 U	9 U	10 U	11 U	9 U	11 U	9 U	12 U	10 U	10 U	11 U	10 U	9 U	11 R
Atrazine	10 U	9 U	9 U	10 U	11 U	9 U	11 U	9 U	12 U	10 U	10 U	11 U	10 U	9 U	11 R
Benzaldehyde	10 U	9 U	9 U	10 U	11 U	9 U	11 U	9 U	12 UJ	10 UJ	10 U	11 UJ	10 UJ	9 UJ	11 R
Benzo(a)anthracene	0.25 U	0.24 U	0.24 U	0.26 U	0.27 U	0.24 U	0.27 U	0.24 U	0.31 U	0.26 U	0.26 U	0.27 U	0.24 U	0.24 U	0.27 R
Benzo(a)pyrene	0.25 U	0.24 U	0.24 U	0.26 U	0.27 U	0.24 U	0.27 U	0.24 U	0.31 U	0.26 U	0.26 U	0.27 U	0.24 U	0.24 U	0.27 R
Benzo(b)fluoranthene	0.27 U	0.25 UJ	0.25 UJ	0.28 UJ	0.29 UJ	0.25 UJ	0.29 U	0.25 U	0.34 U	0.28 U	0.28 U	0.3 U	0.26 U	0.25 U	0.29 R
Benzo(g,h,i)perylene	0.25 U	0.24 U	0.24 U	0.26 U	0.27 U	0.24 U	0.27 U	0.24 U	0.31 U	0.26 U	0.26 U	0.27 U	0.24 U	0.24 U	0.27 R
Benzo(k)fluoranthene	0.25 U	0.24 UJ	0.24 UJ	0.26 UJ	0.27 UJ	0.24 UJ	0.27 U	0.24 U	0.31 UJ	0.26 U	0.26 U	0.27 U	0.24 U	0.24 U	0.27 R
Butylbenzylphthalate	10 UJ	9 UJ	9 UJ	10 UJ	11 UJ	9 UJ	11 U	9 U	12 U	10 U	10 UJ	11 U	10 U	9 U	11 R
Caprolactam	10 UJ	9 U	9 U	10 U	11 U	9 U	11 U	9 U	12 UJ	10 UJ	10 U	11 UJ	10 UJ	9 UJ	11 R
Carbazole	10 U	9 U	9 U	10 U	11 U	9 U	11 U	9 U	12 U	10 U	10 U	11 U	10 U	9 U	11 R
Chrysene	10 U	9 U	9 U	10 U	11 U	9 U	11 U	9 U	12 U	10 U	10 U	11 U	10 U	9 U	11 R
Di-n-butylphthalate	10 U	9 U	9 U	10 U	11 U	9 U	11 U	9 U	12 U	10 U	10 U	11 U	10 U	9 U	11 R
Di-n-octylphthalate	10 UJ	9 UJ	9 UJ	10 UJ	11 UJ	9 UJ	11 U	9 U	12 U	10 U	10 UJ	11 U	10 U	9 U	11 R
Dibenz(a,h)anthracene	0.25 U	0.24 U	0.24 U	0.26 U	0.27 U	0.24 U	0.27 U	0.24 U	0.31 U	0.26 U	0.26 U	0.27 U	0.24 U	0.24 U	0.27 R
Dibenzofuran	10 U	9 U	9 U	10 U	11 U	9 U	11 U	9 U	12 U	10 U	10 U	11 U	10 U	9 U	11 R
Diethylphthalate	10 U	9 U	9 U	10 U	11 U	9 U	11 U	9 U	12 U	10 U	10 U	11 U	10 U	9 U	11 R
Dimethyl phthalate	10 U	9 U	9 U	10 U	11 U	9 U	11 U	9 U	12 U	10 U	10 U	11 U	10 U	9 U	11 R
Fluoranthene	0.25 U	0.24 U	0.24 U	0.26 U	0.27 U	0.24 U	0.27 U	0.24 U	0.31 U	0.26 UJ	0.26 U	0.27 U	0.24 U	0.24 U	0.27 R
Fluorene	0.25 U	0.24 U	0.24 U	0.26 U	0.27 U	0.24 U	0.27 U	0.24 U	0.31 U	0.26 U	0.26 U	0.27 U	0.24 U	0.24 U	0.27 R
Hexachlorobenzene	0.25 U	0.24 U	0.24 U	0.26 U	0.27 U	0.24 U	0.27 UJ	0.24 UJ	0.31 UJ	0.26 U	0.26 U	0.27 UJ	0.24 UJ	0.24 UJ	0.27 R
Hexachlorobutadiene	0.27 U	0.25 U	0.25 U	0.28 U	0.29 U	0.25 U	0.29 U	0.25 U	0.34 U	0.28 U	0.28 U	0.3 U	0.26 U	0.25 U	0.29 R
Hexachlorocyclopentadiene	0.25 U	0.24 UJ	0.24 UJ	0.26 UJ	0.27 UJ	0.24 UJ	0.27 U	0.24 U	0.31 U	0.26 U	0.18 J	0.27 U	0.24 U	0.24 U	0.27 R
Hexachloroethane	10 U	9 U	9 U	10 U	11 U	9 U	11 U	9 U	12 U	10 U	10 U	11 U	10 U	9 U	11 R
Indeno(1,2,3-cd)pyrene	0.25 U	0.24 U	0.24 U	0.26 U	0.27 U	0.24 U	0.27 U	0.24 U	0.31 U	0.26 U	0.26 U	0.27 U	0.24 U	0.24 U	0.27 R
Isophorone	10 U	9 U	9 U	10 U	11 U	9 U	11 U	9 U	12 U	10 U	10 U	11 U	10 U	9 U	11 R
Naphthalene	0.25 U	0.24 U	0.24 U	0.26 U	0.27 U	0.24 U	0.27 UJ	0.24 UJ	0.31 UJ	0.26 UJ	0.26 U	0.27 UJ	0.24 UJ	0.24 UJ	0.27 R
Nitrobenzene	10 UJ	9 U	9 U	10 U	11 U	9 U	11 U	9 U	12 U	10 U	10 UJ	11 U	10 U	9 U	11 R
Pentachlorophenol	25 U	24 U	24 U	26 U	27 U	24 U	27 U	24 U	31 U	26 U	26 U	27 U	24 U	24 U	27 R
Phenanthrene	0.25 U	0.24 U	0.24 U	0.26 U	0.27 U	0.24 U	0.27 U	0.24 U	0.31 U	0.26 U	0.26 U	0.27 U	0.24 U	0.24 U	0.27 R
Phenol	10 U	9 U	9 U	10 U	11 U	9 U	11 U	9 U	12 U	10 U	10 U	11 U	10 U	9 U	11 R
Pyrene	0.25 U	0.24 U	0.24 U	0.26 U	0.27 U	0.24 U	0.27 U	0.24 U	0.31 U	0.26 U	0.26 U	0.27 U	0.24 U	0.24 U	0.27 R
bis(2-Chloroethoxy)methane	10 U	9 U	9 U	10 U	11 U	9 U	11 U	9 U	12 U	10 U	10 U	11 U	10 U	9 U	11 R

Appendix I
POIA Groundwater Raw Analytical Results
November 2008

Station ID	MR08-TW01	MR08-TW02		MR08-TW03		MR08-TW04	MR08-TW05	MR08-TW06	MR08-TW07	MR08-TW08	MR08-TW09	MR08-TW10	MR08-TW11	MR08-TW13	MR08-TW14
Sample ID	MR08-TW01-08D	MR08-TW02-08D	MR08-TW02D-08D	MR08-TW03-08D	MR08-TW03D-08D	MR08-TW04-08D	MR08-TW05-08D	MR08-TW06-08D	MR08-TW07-08D	MR08-TW08-08D	MR08-TW09-08D	MR08-TW10-08D	MR08-TW11-08D	MR08-TW13-08D	MR08-TW14-08D
Sample Date	11/17/08	11/18/08	11/18/08	11/18/08	11/18/08	11/20/08	11/17/08	11/17/08	11/15/08	11/15/08	11/17/08	11/17/08	11/17/08	11/17/08	11/17/08
Chemical Name															
bis(2-Chloroethyl)ether	10 U	9 U	9 U	10 U	11 U	9 U	11 U	9 U	12 U	10 U	10 U	11 U	10 U	9 U	11 R
bis(2-Ethylhexyl)phthalate	10 UJ	9 UJ	9 UJ	10 UJ	11 UJ	9 UJ	11 U	9 U	12 U	10 U	10 UJ	11 U	10 U	9 U	11 R
n-Nitroso-di-n-propylamine	10 U	9 U	9 U	10 U	11 U	9 U	11 U	9 U	12 U	10 U	10 U	11 U	10 U	9 U	11 R
n-Nitrosodiphenylamine	10 U	9 U	9 U	10 U	11 U	9 U	11 U	9 U	12 U	10 U	10 U	11 U	10 U	9 U	11 R
Explosives (UG/L)															
1,3,5-Trinitrobenzene	0.258 U	0.255 U	0.25 U	0.263 U	0.263 U	0.255 U	NA	NA	NA	NA	NA	NA	NA	NA	NA
1,3-Dinitrobenzene	0.258 U	0.255 U	0.25 U	0.263 U	0.263 U	0.255 U	NA	NA	NA	NA	NA	NA	NA	NA	NA
2,4,6-Trinitrotoluene	0.258 U	0.255 U	0.25 U	0.263 U	0.263 U	0.255 U	NA	NA	NA	NA	NA	NA	NA	NA	NA
2,4-Dinitrotoluene	0.258 U	0.255 U	0.25 U	0.263 U	0.263 U	0.255 U	NA	NA	NA	NA	NA	NA	NA	NA	NA
2,6-Dinitrotoluene	0.258 U	0.255 U	0.25 U	0.263 U	0.263 U	0.255 U	NA	NA	NA	NA	NA	NA	NA	NA	NA
2-Amino-4,6-dinitrotoluene	0.258 U	0.255 U	0.25 U	0.263 U	0.263 U	0.255 U	NA	NA	NA	NA	NA	NA	NA	NA	NA
2-Nitrotoluene	0.258 U	0.255 U	0.25 U	0.263 U	0.263 U	0.255 U	NA	NA	NA	NA	NA	NA	NA	NA	NA
3-Nitrotoluene	0.258 U	0.255 U	0.25 U	0.263 U	0.263 U	0.255 U	NA	NA	NA	NA	NA	NA	NA	NA	NA
4-Amino-2,6-dinitrotoluene	0.258 U	0.255 U	0.25 U	0.263 U	0.263 U	0.255 U	NA	NA	NA	NA	NA	NA	NA	NA	NA
4-Nitrotoluene	0.258 U	0.255 U	0.25 U	0.263 U	0.263 U	0.255 U	NA	NA	NA	NA	NA	NA	NA	NA	NA
HMX	0.258 UJ	0.255 UJ	0.25 UJ	0.263 UJ	0.263 UJ	0.255 U	NA	NA	NA	NA	NA	NA	NA	NA	NA
Nitrobenzene	0.258 U	0.255 U	0.25 U	0.263 U	0.263 U	0.255 U	NA	NA	NA	NA	NA	NA	NA	NA	NA
Nitroglycerin	0.258 U	0.255 U	0.25 U	0.263 U	0.263 U	0.255 U	NA	NA	NA	NA	NA	NA	NA	NA	NA
PETN	0.258 U	0.255 U	0.25 U	0.263 U	0.263 U	0.255 U	NA	NA	NA	NA	NA	NA	NA	NA	NA
Perchlorate	0.87	0.38	0.37	0.43	0.46	0.6	NA	NA	NA	NA	NA	NA	NA	NA	NA
RDX	0.258 U	0.255 U	0.25 U	0.263 U	0.263 U	0.255 U	NA	NA	NA	NA	NA	NA	NA	NA	NA
Tetryl	0.258 UJ	0.255 UJ	0.25 UJ	0.263 UJ	0.263 UJ	0.255 U	NA	NA	NA	NA	NA	NA	NA	NA	NA
Total Metals (UG/L)															
Antimony	0.25 U	0.25 U	0.25 U	0.25 U	0.25 U	0.25 U	NA	NA	NA	NA	NA	NA	NA	NA	NA
Arsenic	0.25 U	0.25 U	0.25 U	0.25 U	0.282 J	0.279 J	0.33 J	0.377 J	45.1	0.564 J	0.25 U	0.255 J	0.297 J	0.329 J	0.25 U
Barium	96	12.4	13.3	19.3	18.8	44.5	55.3	55.6	55.7	137	54.8	51.7	74	129	117
Cadmium	0.25 U	0.25 U	0.25 U	0.25 U	0.25 U	0.25 U	0.25 U	0.25 U	0.25 U	0.25 U	0.25 U	0.25 U	0.25 U	0.25 U	0.25 U
Chromium	2.5 U	2.5 U	2.5 U	2.5 U	2.5 U	2.5 U	2.5 U	2.5 U	5.54 J	3.22 J	2.5 U	2.5 U	2.5 U	2.5 U	2.5 U
Copper	5 U	5 U	5 U	5 U	5 U	5 U	NA	NA	NA	NA	NA	NA	NA	NA	NA
Lead	0.25 U	0.25 U	0.25 U	0.25 U	0.25 U	0.276 J	0.25 U	0.25 U	9.24	0.391 J	0.25 U	0.25 U	0.25 U	0.316 J	0.25 U
Mercury	0.1 U	0.1 U	0.1 U	0.1 U	0.1 U	0.1 U	0.1 U	0.1 U	0.1 U	0.1 U	0.103 J	0.1 U	0.1 U	0.1 U	0.1 U
Selenium	2.05	1.66 J	1.47 J	5.03	4.82	3.34	4.29	3.57	3.94	2.44	1.43 J	2.41	4.65	3.47	1.81 J
Silver	2 U	2 U	2 U	2 U	2 U	2 U	2 U	2 U	2 U	2 U	2.29 J	2 U	2 U	2 U	2 U
Zinc	5 U	5 U	5 U	5 U	5 U	5 U	NA	NA	NA	NA	NA	NA	NA	NA	NA

Notes:

J - Analyte present, value may or may not be accurate or precise

NA - Not analyzed

R - Unreliable Result

U - The material was analyed for, but not detected

UJ - Analyte not detected, quantitation limit may be inaccurate

Appendix I
Fitness Center Surface Soil Raw Analytical Results
November 2008

Station ID	MR08-SS388	MR08-SS389	MR08-SS390	MR08-SS391		MR08-SS392	MR08-SS393	MR08-SS394	MR08-SS395		MR08-SS396	MR08-SS397	MR08-SS398	MR08-SS399
Sample ID	MR08-SS388-08D	MR08-SS389-08D	MR08-SS390-08D	MR08-SS391-08D	MR08-SS391D-08D	MR08-SS392-08D	MR08-SS393-08D	MR08-SS394-08D	MR08-SS395-08D	MR08-SS395D-08D	MR08-SS396-08D	MR08-SS397-08D	MR08-SS398-08D	MR08-SS399-08D
Sample Date	11/19/08	11/19/08	11/19/08	11/19/08	11/19/08	11/19/08	11/19/08	11/19/08	11/19/08	11/19/08	11/16/08	11/16/08	11/16/08	11/16/08
Chemical Name														
Volatile Organic Compounds (UG/KG)														
1,1,1-Trichloroethane	11 U	480 U	12 U	13 U	11 U	10 U	11 U	440 U	10 U	11 U	12 U	10 U	11 U	12 U
1,1,2,2-Tetrachloroethane	11 U	480 U	12 U	13 U	11 U	10 U	11 U	440 U	10 U	11 U	12 U	10 U	11 U	12 U
1,1,2-Trichloro-1,2,2-trifluoroethane(Freon-113)	11 U	480 U	12 U	13 U	11 U	10 U	11 U	440 U	10 U	11 U	12 U	10 U	11 U	12 U
1,1,2-Trichloroethane	11 U	480 U	12 U	13 U	11 U	10 U	11 U	440 U	10 U	11 U	12 U	10 U	11 U	12 U
1,1-Dichloroethane	11 U	480 U	12 U	13 U	11 U	10 U	11 U	440 U	10 U	11 U	12 U	10 U	11 U	12 U
1,1-Dichloroethene	11 U	480 U	12 U	13 U	11 U	10 U	11 U	440 U	10 U	11 U	12 U	10 U	11 U	12 U
1,2,4-Trichlorobenzene	11 U	480 U	12 U	13 U	11 U	10 U	11 U	440 U	10 U	11 U	12 U	10 U	11 U	12 U
1,2-Dibromo-3-chloropropane	5.3 U	240 U	6 U	6.4 U	5.7 U	5.3 U	5.6 U	220 U	5.2 U	5.4 U	5.8 U	5.2 U	5.6 U	6.2 U
1,2-Dibromoethane	11 U	480 U	12 U	13 U	11 U	10 U	11 U	440 U	10 U	11 U	12 U	10 U	11 U	12 U
1,2-Dichlorobenzene	11 U	480 U	12 U	13 U	11 U	10 U	11 U	440 U	10 U	11 U	12 U	10 U	11 U	12 U
1,2-Dichloroethane	11 U	480 U	12 U	13 U	11 U	10 U	11 U	440 U	10 U	11 U	12 U	10 U	11 U	12 U
1,2-Dichloropropane	11 U	480 U	12 U	13 U	11 U	10 U	11 U	440 U	10 U	11 U	12 U	10 U	11 U	12 U
1,3-Dichlorobenzene	11 U	480 U	12 U	13 U	11 U	10 U	11 U	440 U	10 U	11 U	12 U	10 U	11 U	12 U
1,4-Dichlorobenzene	11 U	480 U	12 U	13 U	11 U	10 U	11 U	440 U	10 U	11 U	12 U	10 U	11 U	12 U
2-Butanone	11 U	480 U	12 U	13 U	11 U	10 U	11 U	440 U	10 U	11 U	5.2 J	1.6 J	5.5 J	4.4 J
2-Hexanone	11 UJ	480 U	12 UJ	13 UJ	11 UJ	10 UJ	11 UJ	440 U	10 UJ	11 UJ	12 U	10 U	11 U	12 U
4-Methyl-2-pentanone	11 U	480 U	12 U	13 U	11 U	10 U	11 U	440 U	10 U	11 U	12 U	10 U	11 U	12 U
Acetone	150 J	480 U	110 J	330 J	240 J	120 J	170 J	440 U	110 J	120 J	120	89	92	160
Benzene	11 U	480 U	12 U	13 U	11 U	10 U	3.2 J	440 U	10 U	11 U	12 U	10 U	1.8 J	12 U
Bromodichloromethane	11 U	480 U	12 U	13 U	11 U	10 U	11 U	440 U	10 U	11 U	12 U	10 U	11 U	12 U
Bromoform	11 U	480 U	12 U	13 U	11 U	10 U	11 U	440 U	10 U	11 U	12 U	10 U	11 U	12 U
Bromomethane	11 U	480 U	12 U	13 U	11 U	10 U	11 U	440 U	10 U	11 U	12 U	10 U	11 U	12 U
Carbon disulfide	11 U	480 U	12 U	13 U	11 U	10 U	11 U	440 U	10 U	11 U	12 U	10 U	3.8 J	12 U
Carbon tetrachloride	11 UJ	480 U	12 UJ	13 UJ	11 UJ	10 UJ	11 UJ	440 U	10 UJ	11 UJ	12 U	10 U	11 U	12 U
Chlorobenzene	11 U	480 U	12 U	13 U	11 U	10 U	11 U	440 U	10 U	11 U	12 U	10 U	11 U	12 U
Chloroethane	11 U	480 U	12 U	13 U	11 U	10 U	11 U	440 U	10 U	11 U	12 U	10 U	11 U	12 U
Chloroform	11 U	480 U	12 U	13 U	11 U	10 U	11 U	440 U	10 U	11 U	12 U	10 U	11 U	12 U
Chloromethane	11 U	29 J	12 U	13 U	11 U	10 U	11 U	27 J	10 U	11 U	12 U	10 U	11 U	12 U
Cyclohexane	11 U	480 U	12 U	13 U	11 U	10 U	11 U	440 U	10 U	11 U	12 U	10 U	11 U	12 U
Dibromochloromethane	11 U	480 U	12 U	13 U	11 U	10 U	11 U	440 U	10 U	11 U	12 U	10 U	11 U	12 U
Dichlorodifluoromethane (Freon-12)	11 U	480 U	12 U	13 U	11 U	10 U	11 U	440 U	10 U	11 U	12 U	10 U	11 U	12 U
Ethylbenzene	11 U	480 U	12 U	13 U	11 U	10 U	11 U	440 U	10 U	11 U	12 U	10 U	1.1 J	12 U
Isopropylbenzene	11 U	480 U	12 U	13 U	11 U	10 U	11 U	440 U	10 U	11 U	12 U	10 U	11 U	12 U
Methyl acetate	32 J	480 U	33 J	13 U	11 U	22 J	22 J	440 U	32 J	11 U	17	10 U	12	28
Methyl-tert-butyl ether (MTBE)	11 U	480 U	12 U	13 U	11 U	10 U	11 U	440 U	10 U	11 U	12 U	10 U	11 U	12 U
Methylcyclohexane	11 U	480 U	12 U	13 U	11 U	10 U	11 U	440 U	10 U	11 U	12 U	10 U	11 U	12 U
Methylene chloride	11 U	91 J	12 U	13 U	11 U	10 U	11 U	130 J	10 U	11 U	12 U	10 U	11 U	12 U
Styrene	11 U	480 U	12 U	13 U	11 U	10 U	11 U	440 U	10 U	11 U	12 U	10 U	11 U	12 U
Tetrachloroethene	11 U	480 U	12 U	13 U	11 U	10 U	11 U	440 U	10 U	11 U	12 U	10 U	11 U	12 U
Toluene	11 U	480 U	12 U	13 U	11 U	10 U	11 U	440 U	10 U	11 U	12 U	10 U	11 U	12 U
Trichloroethene	11 U	480 U	12 U	13 U	11 U	10 U	11 U	440 U	10 U	11 U	12 U	10 U	11 U	12 U
Trichlorofluoromethane(Freon-11)	11 U	480 U	12 U	13 U	11 U	10 U	11 U	440 U	10 U	11 U	12 U	10 U	11 U	12 U
Vinyl chloride	11 U	480 U	12 U	13 U	11 U	10 U	11 U	440 U	10 U	11 U	12 U	10 U	11 U	12 U
Xylene, total	11 U	480 U	12 U	13 U	11 U	10 U	11 U	440 U	10 U	11 U	12 U	10 U	11 U	12 U
cis-1,2-Dichloroethene	11 U	480 U	12 U	13 U	11 U	10 U	11 U	440 U	10 U	11 U	12 U	10 U	11 U	12 U
cis-1,3-Dichloropropene	11 U	480 U	12 U	13 U	11 U	10 U	11 U	440 U	10 U	11 U	12 U	10 U	11 U	12 U
trans-1,2-Dichloroethene	11 U	480 U	12 U	13 U	11 U	10 U	11 U	440 U	10 U	11 U	12 U	10 U	11 U	12 U
trans-1,3-Dichloropropene	11 U	480 U	12 U	13 U	11 U	10 U	11 U	440 U	10 U	11 U	12 U	10 U	11 U	12 U
Semivolatile Organic Compounds (UG/KG)														
1,1-Biphenyl	390 U	360 U	410 U	380 U	380 U	400 U	390 U	360 U	380 U	390 U	380 U	370 U	400 U	400 U
2,2'-Oxybis(1-chloropropane)	390 U	360 U	410 U	380 U	380 U	400 U	390 U	360 U	380 U	390 U	380 U	370 U	400 U	400 U
2,4,5-Trichlorophenol	590 U	550 U	620 U	580 U	570 U	600 U	590 U	540 U	580 U	580 U	580 U	570 U	600 U	600 U
2,4,6-Trichlorophenol	590 U	550 U	620 U	580 U	570 U	600 U	590 U	540 U	580 U	580 U	580 U	570 U	600 U	600 U
2,4-Dichlorophenol	590 U	550 U	620 U	580 U	570 U	600 U	590 U	540 U	580 U	580 U	580 U	570 U	600 U	600 U
2,4-Dimethylphenol	590 U	550 UJ	620 U	580 U	570 U	600 U	590 U	540 U	580 U	580 U	580 U	570 U	600 U	600 U
2,4-Dinitrophenol	1,400 U	1,300 U	1,500 U	1,400 U	1,400 U	1,400 U	1,400 U	1,300 U	1,400 U	1,400 U	1,400 U	1,400 U	1,400 U	1,400 U
2,4-Dinitrotoluene	390 U	360 U	410 U	380 U	380 U	400 U	390 U	360 U	380 U	390 U	380 U	370 U	400 U	400 U
2,6-Dinitrotoluene	390 U	360 U	410 U	380 U	380 U	400 U	390 U	360 U	380 U	390 U	380 U	370 U	400 U	400 U

Appendix I
Fitness Center Surface Soil Raw Analytical Results
November 2008

Station ID	MR08-SS388	MR08-SS389	MR08-SS390	MR08-SS391		MR08-SS392	MR08-SS393	MR08-SS394	MR08-SS395		MR08-SS396	MR08-SS397	MR08-SS398	MR08-SS399
Sample ID	MR08-SS388-08D	MR08-SS389-08D	MR08-SS390-08D	MR08-SS391-08D	MR08-SS391D-08D	MR08-SS392-08D	MR08-SS393-08D	MR08-SS394-08D	MR08-SS395-08D	MR08-SS395D-08D	MR08-SS396-08D	MR08-SS397-08D	MR08-SS398-08D	MR08-SS399-08D
Sample Date	11/19/08	11/19/08	11/19/08	11/19/08	11/19/08	11/19/08	11/19/08	11/19/08	11/19/08	11/19/08	11/16/08	11/16/08	11/16/08	11/16/08
Chemical Name														
2-Chloronaphthalene	390 U	360 U	410 U	380 U	380 U	400 U	390 U	360 U	380 U	390 U	380 U	370 U	400 U	400 U
2-Chlorophenol	590 U	550 U	620 U	580 U	570 U	600 U	590 U	540 U	580 U	580 U	580 U	570 U	600 U	600 U
2-Methylnaphthalene	12 UJ	11 UJ	12 U	12 UJ	3.4 J	12 UJ	12 UJ	11 UJ	12 UJ	12 UJ	12 UJ	11 UJ	12 UJ	12 UJ
2-Methylphenol	710 U	660 U	740 U	700 U	690 U	720 U	710 U	650 U	690 U	700 U	690 U	680 U	720 U	720 U
2-Nitroaniline	590 U	550 U	620 U	580 U	570 U	600 U	590 U	540 U	580 U	580 U	580 U	570 U	600 U	600 U
2-Nitrophenol	710 U	660 U	740 U	700 U	690 U	720 U	710 U	650 U	690 U	700 U	690 U	680 U	720 U	720 U
3,3'-Dichlorobenzidine	590 U	550 U	620 U	580 U	570 U	600 U	590 U	540 U	580 U	580 U	580 U	570 U	600 U	600 U
3- and 4-Methylphenol	710 U	660 U	740 U	700 U	690 U	720 U	710 U	650 U	690 U	700 U	690 U	680 U	720 U	720 U
3-Nitroaniline	590 U	550 U	620 U	580 U	570 U	600 U	590 U	540 U	580 U	580 U	580 U	570 U	600 U	600 U
4,6-Dinitro-2-methylphenol	1,400 U	1,300 U	1,500 U	1,400 U	1,400 U	1,400 U	1,400 U	1,300 U	1,400 U	1,400 U	1,400 U	1,400 U	1,400 U	1,400 U
4-Bromophenyl-phenylether	390 U	360 U	410 U	380 U	380 U	400 U	390 U	360 U	380 U	390 U	380 U	370 U	400 U	400 U
4-Chloro-3-methylphenol	590 U	550 U	620 U	580 U	570 U	600 U	590 U	540 U	580 U	580 U	580 U	570 U	600 U	600 U
4-Chloroaniline	590 U	550 U	620 U	580 U	570 U	600 U	590 U	540 U	580 U	580 U	580 U	570 U	600 U	600 U
4-Chlorophenyl-phenylether	390 U	360 U	410 U	380 U	380 U	400 U	390 U	360 U	380 U	390 U	380 U	370 U	400 U	400 U
4-Nitroaniline	590 U	550 U	620 U	580 U	570 U	600 U	590 U	540 U	580 U	580 U	580 U	570 U	600 U	600 U
4-Nitrophenol	1,400 UJ	1,300 UJ	1,500 UJ	1,400 UJ	1,400 UJ	1,400 UJ	1,400 UJ	1,300 UJ	1,400 UJ	1,400 UJ	1,400 UJ	1,400 UJ	1,400 UJ	1,400 UJ
Acenaphthene	390 U	360 U	410 U	380 U	380 U	400 U	390 U	360 U	380 U	390 U	380 U	370 U	400 U	400 U
Acenaphthylene	390 U	360 U	410 U	380 U	380 U	400 U	390 U	360 U	380 U	390 U	380 U	370 U	400 U	400 U
Acetophenone	710 U	660 U	740 U	700 U	690 U	720 U	710 U	650 U	690 U	700 U	690 U	680 U	720 U	720 U
Anthracene	390 U	360 U	410 U	380 U	380 U	400 U	390 U	360 U	380 U	390 U	380 U	370 U	400 U	400 U
Atrazine	390 U	360 U	410 U	380 U	380 U	400 U	390 U	360 U	380 U	390 U	380 U	370 U	400 U	400 U
Benzaldehyde	590 U	550 U	620 U	580 U	570 U	600 U	590 U	540 U	580 U	580 U	580 U	570 U	600 U	600 U
Benzo(a)anthracene	170	130 J	230	120	120	73	52	46	170	110	53	45	110 J	120
Benzo(a)pyrene	180	66 J	290	160	150	100	70	22	160	130	76	59	150	180
Benzo(b)fluoranthene	320 J	110 J	760 J	290 J	300	140 J	95 J	11 UJ	240 J	190 J	110	83	140 J	240
Benzo(g,h,i)perylene	190	48	220	150	120	97	63	11 U	190	130	67	52	120	140
Benzo(k)fluoranthene	110 J	99 J	300	140 J	180	110	73 J	11 UJ	230 J	150 J	59 J	49 J	160	140 J
Butylbenzylphthalate	390 U	360 U	410 U	380 U	380 U	400 U	390 U	360 U	380 U	390 U	380 UJ	370 UJ	400 UJ	400 UJ
Caprolactam	590 U	550 U	620 U	580 U	570 U	600 U	590 U	540 U	580 U	580 U	580 U	570 U	600 U	600 U
Carbazole	590 U	550 U	620 U	580 U	570 U	600 U	590 U	540 U	580 U	580 U	580 U	570 U	600 U	600 U
Chrysene	230 J	140 J	320 J	180 J	170 J	120 J	390 U	360 U	250 J	150 J	380 U	370 U	450	160 J
Di-n-butylphthalate	390 U	360 U	410 U	380 U	380 U	400 U	390 U	360 U	380 U	390 U	380 U	370 U	400 U	400 U
Di-n-octylphthalate	390 U	360 U	410 U	380 U	380 U	400 U	390 U	360 U	380 U	390 U	380 UJ	370 UJ	400 UJ	400 UJ
Dibenz(a,h)anthracene	61	11 U	65	43	37	34	22	11 U	57	40	22	18	38	44
Dibenzofuran	390 U	360 U	410 U	380 U	380 U	400 U	390 U	360 U	380 U	390 U	380 U	370 U	400 U	400 U
Diethylphthalate	390 U	360 U	410 U	380 U	380 U	400 U	390 U	360 U	380 U	390 U	380 U	370 U	400 U	400 U
Dimethyl phthalate	390 U	360 U	410 U	380 U	380 U	400 U	390 U	360 U	380 U	390 U	380 U	370 U	400 U	400 U
Fluoranthene	550	560	520	370	260 J	230	160	120	550	350	130	110	330	390
Fluorene	12 U	11 U	12 U	12 U	11 U	12 U	12 U	11 U	12 U	12 U	12 U	11 U	12 U	12 U
Hexachlorobenzene	12 UJ	11 UJ	12 U	12 UJ	11 U	12 U	12 UJ	11 UJ	12 UJ	12 UJ	12 UJ	11 UJ	12 UJ	12 UJ
Hexachlorobutadiene	12 U	11 U	12 U	12 U	11 U	12 U	12 U	11 U	12 U	12 U	12 UJ	11 UJ	12 U	12 UJ
Hexachlorocyclopentadiene	12 UJ	11 UJ	12 U	12 UJ	11 U	12 UJ	12 UJ	11 UJ	12 UJ	12 UJ	12 UJ	11 UJ	12 U	12 UJ
Hexachloroethane	390 U	360 U	410 U	380 U	380 U	400 U	390 U	360 U	380 U	390 U	380 U	370 U	400 U	400 U
Indeno(1,2,3-cd)pyrene	210	55 J	220	150	120	100	65	11 U	210	140	66	52	130 J	140
Isophorone	390 U	360 U	410 U	380 U	380 U	400 U	390 U	360 U	380 U	390 U	380 U	370 U	400 U	400 U
Naphthalene	12 U	11 U	12 UJ	12 U	11 UJ	12 U	12 U	11 U	12 U	12 U	12 U	11 U	12 U	12 U
Nitrobenzene	390 UJ	360 UJ	410 UJ	380 UJ	380 UJ	400 UJ	390 UJ	360 UJ	380 UJ	390 UJ	380 UJ	370 UJ	400 UJ	400 UJ
Pentachlorophenol	970 U	900 U	1,000 U	950 U	940 U	980 U	970 U	890 U	950 U	960 U	950 U	930 U	990 U	990 U
Phenanthrene	90	140 J	130	85	100	48 J	36	7.5 J	95	58	22	21	84	92
Phenol	590 U	550 U	620 U	580 U	570 U	600 U	590 U	540 U	580 U	580 U	580 UJ	570 UJ	600 UJ	600 UJ
Pyrene	390	500	530	280 J	360	160	130 J	250 J	370	240 J	120 J	100 J	220 J	340 J
bis(2-Chloroethoxy)methane	390 U	360 U	410 U	380 U	380 U	400 U	390 U	360 U	380 U	390 U	380 U	370 U	400 U	400 U
bis(2-Chloroethyl)ether	390 U	360 U	410 U	380 U	380 U	400 U	390 U	360 U	380 U	390 U	380 UJ	370 UJ	400 UJ	400 UJ
bis(2-Ethylhexyl)phthalate	390 U	200 J	410 U	380 U	380 U	400 U	390 U	220 J	380 U	390 U	380 UJ	370 UJ	200 J	400 UJ
n-Nitroso-di-n-propylamine	390 U	360 U	410 U	380 U	380 U	400 U	390 U	360 U	380 U	390 U	380 U	370 U	400 U	400 U
n-Nitrosodiphenylamine	780 U	720 U	810 U	760 U	760 U	790 U	780 U	720 U	760 U	770 U	760 U	750 U	800 U	800 U
Explosives (UG/KG)														
1,3,5-Trinitrobenzene	99.1 U	98.8 U	98.8 U	100 U	99.9 U	98.9 U	96.6 U	97.1 U	96.3 U	98.9 U	97.6 U	99.1 U	98.8 U	97.8 U
1,3-Dinitrobenzene	99.1 U	98.8 U	98.8 U	100 U	99.9 U	98.9 U	96.6 U	97.1 U	96.3 U	98.9 U	97.6 U	99.1 U	98.8 U	97.8 U

Appendix I
Fitness Center Surface Soil Raw Analytical Results
November 2008

Station ID	MR08-SS388	MR08-SS389	MR08-SS390	MR08-SS391		MR08-SS392	MR08-SS393	MR08-SS394	MR08-SS395		MR08-SS396	MR08-SS397	MR08-SS398	MR08-SS399
Sample ID	MR08-SS388-08D	MR08-SS389-08D	MR08-SS390-08D	MR08-SS391-08D	MR08-SS391D-08D	MR08-SS392-08D	MR08-SS393-08D	MR08-SS394-08D	MR08-SS395-08D	MR08-SS395D-08D	MR08-SS396-08D	MR08-SS397-08D	MR08-SS398-08D	MR08-SS399-08D
Sample Date	11/19/08	11/19/08	11/19/08	11/19/08	11/19/08	11/19/08	11/19/08	11/19/08	11/19/08	11/19/08	11/16/08	11/16/08	11/16/08	11/16/08
Chemical Name														
2,4,6-Trinitrotoluene	99.1 U	98.8 U	98.8 U	100 U	99.9 U	98.9 U	96.6 U	97.1 U	96.3 U	98.9 U	97.6 U	99.1 U	98.8 U	97.8 U
2,4-Dinitrotoluene	99.1 UJ	98.8 UJ	98.8 UJ	100 UJ	99.9 UJ	98.9 UJ	96.6 UJ	97.1 UJ	96.3 UJ	98.9 UJ	97.6 U	99.1 U	98.8 U	97.8 U
2,6-Dinitrotoluene	99.1 U	98.8 U	98.8 U	100 U	99.9 U	98.9 U	96.6 U	97.1 U	96.3 U	98.9 U	97.6 U	99.1 U	98.8 U	97.8 U
2-Amino-4,6-dinitrotoluene	99.1 U	98.8 U	98.8 U	100 U	99.9 U	98.9 U	96.6 U	97.1 U	96.3 U	98.9 U	97.6 U	99.1 U	98.8 U	97.8 U
2-Nitrotoluene	99.1 U	98.8 U	98.8 U	100 U	99.9 U	98.9 U	96.6 U	97.1 U	96.3 U	98.9 U	97.6 U	99.1 U	98.8 U	97.8 U
3-Nitrotoluene	99.1 U	98.8 U	98.8 U	100 U	99.9 U	98.9 U	96.6 U	97.1 U	96.3 U	98.9 U	97.6 U	99.1 U	98.8 U	97.8 U
4-Amino-2,6-dinitrotoluene	99.1 U	98.8 U	98.8 U	100 U	99.9 U	98.9 U	96.6 U	97.1 U	96.3 U	98.9 U	97.6 U	99.1 U	98.8 U	97.8 U
4-Nitrotoluene	99.1 U	98.8 U	98.8 U	100 U	99.9 U	98.9 U	96.6 U	97.1 U	96.3 U	98.9 U	97.6 U	99.1 U	98.8 U	97.8 U
HMX	99.1 U	98.8 U	98.8 U	100 U	99.9 U	98.9 U	96.6 U	97.1 U	96.3 U	98.9 U	97.6 U	99.1 U	98.8 U	97.8 U
Nitrobenzene	99.1 U	98.8 U	98.8 U	100 U	99.9 U	98.9 U	96.6 U	97.1 U	96.3 U	98.9 U	97.6 U	99.1 U	98.8 U	97.8 U
Nitroglycerin	99.1 U	98.8 U	98.8 U	100 U	99.9 U	98.9 U	96.6 U	97.1 U	96.3 U	98.9 U	97.6 U	99.1 U	98.8 U	97.8 U
PETN	99.1 U	98.8 U	98.8 U	100 U	99.9 U	98.9 U	96.6 U	97.1 U	96.3 U	98.9 U	97.6 U	99.1 U	98.8 U	97.8 U
Perchlorate	2.4 U	2.2 U	2.5 U	2.3 U	2.3 U	2.3 U	2.3 U	2.2 U	2.4 U	2.3 U	2.4 U	1.2 J	2.4 U	2.4 U
RDX	99.1 U	98.8 U	98.8 U	100 U	99.9 U	98.9 U	96.6 U	97.1 U	96.3 U	98.9 U	97.6 U	99.1 U	98.8 U	97.8 U
Tetryl	99.1 U	98.8 U	98.8 U	100 U	99.9 U	98.9 U	96.6 U	97.1 U	96.3 U	98.9 U	97.6 U	99.1 U	98.8 U	97.8 U
Total Metals (MG/KG)														
Antimony	0.548 J	0.38 U	0.601 J	0.451 J	0.426 U	0.754 J	0.448 J	0.418 U	0.471 J	0.397 U	0.423 U	0.431 U	0.407 U	0.483 J
Arsenic	2.06	0.638	1.83	1.66	1.59	1.27	1.06	0.79	5.43	6.1	1.47	0.558	1.19	0.627
Barium	11.8	12	25.9	12.7	12.1	17.8	8.5	9.22	8.43	8.65	11.3	8.96	10.3	9.27
Cadmium	0.185	0.146 J	0.277	0.147 J	0.149 J	0.151 J	0.139 J	0.256	0.056 J	0.0706 J	0.0597 J	0.0431 U	0.131 J	0.0523 J
Chromium	4.22	5.67	7.65	5.55	5.47	7.95	3.37	5.72	3.57	3.26	6.2	5.92	6.45	3.28
Copper	5.55	0.922 J	6.29	4.91	4.58	6.63	5.96	1.05 J	3.52	3.75	6.8	1.72 U	61.1	1.93 U
Lead	59.1	3.1	24.7	39.8	36.4	64.6	27.4	4.48	16.2	21.2	22	7.09	17.2	21.5
Mercury	0.0234 J	0.0216 U	0.182	0.0228 U	0.0227 U	0.0372 J	0.0258 J	0.0206 U	0.0212 U	0.0232 U	0.023 U	0.0222 U	0.0232 U	0.0237 U
Selenium	0.184 J	0.333 J	0.223 J	0.297 J	0.269 J	0.295 J	0.168 J	0.328 J	0.135 J	0.141 J	0.175 J	0.111 U	0.21 J	0.256 J
Silver	0.394 J	0.444 J	1.92	0.317 J	0.213 U	0.334 J	0.272 J	0.532 J	0.262 J	0.265 J	0.212 U	0.215 U	0.204 U	0.218 U
Zinc	23.6	4.39	29.7	38.2	40.6	37.8	19.5	5.38	24.4	26.1	20.2	5.27	28.1	8.69
Wet Chemistry (%)	NA	NA	NA	NA	NA	NA	NA	NA	NA	NA	NA	NA	NA	NA
% Solids	84.3	91.7	80.7	87.6	87	83.2	87.8	90.9	87	85.7	86.1	88.4	84.9	83.2

Notes:

J - Analyte present, value may or may not be accurate or precise

NA - Not analyzed

U - The material was analyed for, but not detected

UJ - Analyte not detected, quantitation limit may be inaccurate

Appendix I
Fitness Center Subsurface Soil Raw Analytical Results
November 2008

Station ID	MR08-IS388	MR08-IS389		MR08-IS390	MR08-IS391	MR08-IS392	MR08-IS393	MR08-IS394	MR08-IS395	MR08-IS396	MR08-IS397	MR08-IS398		MR08-IS399
Sample ID	MR08-IS388-08D	MR08-IS389-08D	MR08-IS389D-08D	MR08-IS390-08D	MR08-IS391-08D	MR08-IS392-08D	MR08-IS393-08D	MR08-IS394-08D	MR08-IS395-08D	MR08-IS396-08D	MR08-IS397-08D	MR08-IS398-08D	MR08-IS398D-08D	MR08-IS399-08D
Sample Date	11/19/08	11/19/08	11/19/08	11/18/08	11/18/08	11/18/08	11/18/08	11/19/08	11/18/08	11/19/08	11/17/08	11/18/08	11/18/08	11/18/08
Chemical Name														
Volatile Organic Compounds (UG/KG)														
1,1,1-Trichloroethane	11 U	11 U	11 U	10 U	11 U	11 U	10 U	11 U	11 U	11 U	11 U	8.9 U	9.7 U	10 U
1,1,2,2-Tetrachloroethane	11 U	11 U	11 U	10 U	11 U	11 U	10 U	11 U	11 U	11 U	11 U	8.9 U	9.7 U	10 U
1,1,2-Trichloro-1,2,2-trifluoroethane(Freon-113)	11 U	11 U	11 U	10 U	11 U	11 U	10 U	11 U	11 U	11 U	11 U	8.9 U	9.7 U	10 U
1,1,2-Trichloroethane	11 U	11 U	11 U	10 U	11 U	11 U	10 U	11 U	11 U	11 U	11 U	8.9 U	9.7 U	10 U
1,1-Dichloroethane	11 U	11 U	11 U	10 U	11 U	11 U	10 U	11 U	11 U	11 U	11 U	8.9 U	9.7 U	10 U
1,1-Dichloroethene	11 U	11 U	11 U	10 U	11 U	11 U	10 U	11 U	11 U	11 U	11 U	8.9 U	9.7 U	10 U
1,2,4-Trichlorobenzene	11 U	11 U	11 U	10 U	11 U	11 U	10 U	11 UJ	11 U	11 U	11 U	8.9 U	9.7 U	10 U
1,2-Dibromo-3-chloropropane	5.4 U	5.6 U	5.4 U	5.2 U	5.5 U	5.4 U	5.2 U	5.6 U	5.6 U	5.7 U	5.4 U	4.4 U	4.9 U	5.1 U
1,2-Dibromoethane	11 U	11 U	11 U	10 U	11 U	11 U	10 U	11 U	11 U	11 U	11 U	8.9 U	9.7 U	10 U
1,2-Dichlorobenzene	11 U	11 U	11 U	10 U	11 U	11 U	10 U	11 U	11 U	11 U	11 U	8.9 U	9.7 U	10 U
1,2-Dichloroethane	11 U	11 U	11 U	10 U	11 U	11 U	10 U	11 U	11 U	11 U	11 U	8.9 U	9.7 U	10 U
1,2-Dichloropropane	11 U	11 U	11 U	10 U	11 U	11 U	10 U	11 U	11 U	11 U	11 U	8.9 U	9.7 U	10 U
1,3-Dichlorobenzene	11 U	11 U	11 U	10 U	11 U	11 U	10 U	11 U	11 U	11 U	11 U	8.9 U	9.7 U	10 U
1,4-Dichlorobenzene	11 U	11 U	11 U	10 U	11 U	11 U	10 U	11 UJ	11 U	11 U	11 U	8.9 U	9.7 U	10 U
2-Butanone	11 U	11 U	11 U	10 U	11 U	11 U	10 U	11 U	11 U	11 U	11 U	8.9 U	9.7 U	10 U
2-Hexanone	11 UJ	11 UJ	11 UJ	10 U	11 U	11 U	10 U	11 UJ	11 U	11 UJ	11 U	8.9 U	9.7 U	10 U
4-Methyl-2-pentanone	11 U	11 U	11 U	10 UJ	11 UJ	11 UJ	10 UJ	11 U	11 UJ	11 U	11 UJ	8.9 UJ	9.7 UJ	10 UJ
Acetone	60 J	35 UJ	44 UJ	10 UJ	14 UJ	11 UJ	17 UJ	22 UJ	12 UJ	11 UJ	14 UJ	31 UJ	30 UJ	10 UJ
Benzene	11 U	11 U	11 U	10 U	11 U	11 U	10 U	11 U	11 U	11 U	11 U	8.9 U	9.7 U	10 U
Bromodichloromethane	11 U	11 U	11 U	10 U	11 U	11 U	10 U	11 U	11 U	11 U	11 U	8.9 U	9.7 U	10 U
Bromoform	11 U	11 U	11 U	10 U	11 U	11 U	10 U	11 U	11 U	11 U	11 U	8.9 U	9.7 U	10 U
Bromomethane	11 U	11 U	11 U	10 U	11 U	11 U	10 U	11 U	11 U	11 U	11 U	8.9 U	9.7 U	10 U
Carbon disulfide	11 U	11 U	11 U	10 U	11 U	11 U	10 U	11 U	11 U	11 U	11 U	8.9 U	9.7 U	10 U
Carbon tetrachloride	11 UJ	11 UJ	11 UJ	10 U	11 U	11 U	10 U	11 UJ	11 U	11 UJ	11 U	8.9 U	9.7 U	10 U
Chlorobenzene	11 U	11 U	11 U	10 U	11 U	11 U	10 U	11 U	11 U	11 U	11 U	8.9 U	9.7 U	10 U
Chloroethane	11 U	11 U	11 U	10 U	11 U	11 U	10 U	11 U	11 U	11 U	11 U	8.9 U	9.7 U	10 U
Chloroform	11 U	11 U	11 U	10 U	11 U	11 U	10 U	11 U	11 U	11 U	11 U	8.9 U	9.7 U	10 U
Chloromethane	11 U	11 U	11 U	10 UJ	11 UJ	11 UJ	10 UJ	11 U	11 UJ	11 U	11 UJ	8.9 UJ	9.7 UJ	10 UJ
Cyclohexane	11 U	11 U	11 U	10 U	11 U	11 U	10 U	11 U	11 U	11 U	11 U	8.9 U	9.7 U	10 U
Dibromochloromethane	11 U	11 U	11 U	10 U	11 U	11 U	10 U	11 U	11 U	11 U	11 U	8.9 U	9.7 U	10 U
Dichlorodifluoromethane (Freon-12)	11 U	11 U	11 U	10 U	11 U	11 U	10 U	11 U	11 U	11 U	11 U	8.9 U	9.7 U	10 U
Ethylbenzene	11 U	11 U	11 U	10 U	11 U	11 U	10 U	11 U	11 U	11 U	11 U	8.9 U	9.7 U	10 U
Isopropylbenzene	11 U	11 U	11 U	10 U	11 U	11 U	10 U	11 U	11 U	11 U	11 U	8.9 U	9.7 U	10 U
Methyl acetate	11 U	11 U	11 U	10 UJ	11 UJ	11 UJ	10 UJ	11 UJ	11 UJ	11 U	11 UJ	8.9 UJ	9.7 UJ	10 UJ
Methyl-tert-butyl ether (MTBE)	11 U	11 U	11 U	10 U	11 U	11 U	10 U	11 U	11 U	11 U	11 U	8.9 U	9.7 U	10 U
Methylcyclohexane	11 U	11 U	11 U	10 U	11 U	11 U	10 U	11 U	11 U	11 U	11 U	8.9 U	9.7 U	10 U
Methylene chloride	11 U	11 U	11 U	10 U	11 U	11 U	10 U	11 U	11 U	11 U	11 U	8.9 U	9.7 U	10 U
Styrene	11 U	11 U	11 U	10 U	11 U	11 U	10 U	11 U	11 U	11 U	11 U	8.9 U	9.7 U	10 U
Tetrachloroethene	11 U	11 U	11 U	10 U	11 U	11 U	10 U	11 U	11 U	11 U	11 U	8.9 U	9.7 U	10 U
Toluene	11 U	11 U	11 U	10 U	11 U	11 U	10 U	11 U	11 U	11 U	11 U	8.9 U	9.7 U	10 U
Trichloroethene	11 U	11 U	11 U	10 U	11 U	11 U	10 U	11 U	11 U	11 U	11 U	8.9 U	9.7 U	10 U
Trichlorofluoromethane(Freon-11)	11 U	11 U	11 U	10 U	11 U	11 U	10 U	11 U	11 U	11 U	11 U	8.9 U	9.7 U	10 U
Vinyl chloride	11 U	11 U	11 U	10 UJ	11 UJ	11 UJ	10 UJ	11 U	11 UJ	11 U	11 UJ	8.9 UJ	9.7 UJ	10 UJ
Xylene, total	11 U	11 U	11 U	10 U	11 U	11 U	10 U	11 U	11 U	11 U	11 U	8.9 U	9.7 U	10 U
cis-1,2-Dichloroethene	11 U	11 U	11 U	10 U	11 U	11 U	10 U	11 U	11 U	11 U	11 U	8.9 U	9.7 U	10 U
cis-1,3-Dichloropropene	11 U	11 U	11 U	10 U	11 U	11 U	10 U	11 U	11 U	11 U	11 U	8.9 U	9.7 U	10 U
trans-1,2-Dichloroethene	11 U	11 U	11 U	10 U	11 U	11 U	10 U	11 U	11 U	11 U	11 U	8.9 U	9.7 U	10 U
trans-1,3-Dichloropropene	11 U	11 U	11 U	10 U	11 U	11 U	10 U	11 U	11 U	11 U	11 U	8.9 U	9.7 U	10 U
Semivolatile Organic Compounds (UG/KG)														
1,1-Biphenyl	360 U	360 U	360 U	360 U	350 U	580 U	350 U	350 U	350 U	360 U	370 U	390 U	390 U	340 U
2,2'-Oxybis(1-chloropropane)	360 U	360 U	360 U	360 U	350 U	580 U	350 U	350 U	350 U	360 U	370 U	390 U	390 U	340 U
2,4,5-Trichlorophenol	540 U	540 U	540 U	550 U	530 U	870 U	530 U	540 U	530 U	550 U	560 U	590 U	590 U	520 U

Appendix I
Fitness Center Subsurface Soil Raw Analytical Results
November 2008

Station ID	MR08-IS388	MR08-IS389		MR08-IS390	MR08-IS391	MR08-IS392	MR08-IS393	MR08-IS394	MR08-IS395	MR08-IS396	MR08-IS397	MR08-IS398		MR08-IS399
Sample ID	MR08-IS388-08D	MR08-IS389-08D	MR08-IS389D-08D	MR08-IS390-08D	MR08-IS391-08D	MR08-IS392-08D	MR08-IS393-08D	MR08-IS394-08D	MR08-IS395-08D	MR08-IS396-08D	MR08-IS397-08D	MR08-IS398-08D	MR08-IS398D-08D	MR08-IS399-08D
Sample Date	11/19/08	11/19/08	11/19/08	11/18/08	11/18/08	11/18/08	11/18/08	11/19/08	11/18/08	11/19/08	11/17/08	11/18/08	11/18/08	11/18/08
Chemical Name														
2,4,6-Trichlorophenol	540 U	540 U	540 U	550 U	530 U	870 U	530 U	540 U	530 U	550 U	560 U	590 U	590 U	520 U
2,4-Dichlorophenol	540 U	540 U	540 U	550 U	530 U	870 U	530 U	540 U	530 U	550 U	560 U	590 U	590 U	520 U
2,4-Dimethylphenol	540 U	540 U	540 U	550 U	530 U	870 U	530 U	540 UJ	530 U	550 U	560 U	590 U	590 U	520 U
2,4-Dinitrophenol	1,300 U	1,300 U	1,300 U	1,300 U	1,300 U	2,100 U	1,300 U	1,300 U	1,300 U	1,300 U	1,400 U	1,400 U	1,400 U	1,200 U
2,4-Dinitrotoluene	360 U	360 U	360 U	360 U	350 U	580 U	350 U	350 U	350 U	360 U	370 U	390 U	390 U	340 U
2,6-Dinitrotoluene	360 U	360 U	360 U	360 U	350 U	580 U	350 U	350 U	350 U	360 U	370 U	390 U	390 U	340 U
2-Chloronaphthalene	360 U	360 U	360 U	360 U	350 U	580 U	350 U	350 U	350 U	360 U	370 U	390 U	390 U	340 U
2-Chlorophenol	540 U	540 U	540 U	550 U	530 U	870 U	530 U	540 U	530 U	550 U	560 U	590 U	590 U	520 U
2-Methylnaphthalene	11 UJ	11 UJ	11 UJ	11 UJ	11 U	17 U	10 UJ	11 UJ	11 UJ	11 UJ	11 U	12 U	12 U	10 U
2-Methylphenol	650 U	650 U	650 U	660 U	640 U	1,000 U	630 U	640 U	640 U	660 U	680 U	710 U	700 U	630 U
2-Nitroaniline	540 U	540 U	540 U	550 U	530 U	870 U	530 U	540 U	530 U	550 U	560 U	590 U	590 U	520 U
2-Nitrophenol	650 U	650 U	650 U	660 U	640 U	1,000 U	630 U	640 U	640 U	660 U	680 U	710 U	700 U	630 U
3,3'-Dichlorobenzidine	540 U	540 U	540 U	550 U	530 U	870 U	530 U	540 U	530 U	550 U	560 U	590 U	590 U	520 U
3- and 4-Methylphenol	650 U	650 U	650 U	660 U	640 U	1,000 U	630 U	640 U	640 U	660 U	680 U	710 U	700 U	630 U
3-Nitroaniline	540 U	540 U	540 U	550 U	530 U	870 U	530 U	540 U	530 U	550 U	560 U	590 U	590 U	520 U
4,6-Dinitro-2-methylphenol	1,300 U	1,300 U	1,300 U	1,300 U	1,300 U	2,100 U	1,300 U	1,300 U	1,300 U	1,300 U	1,400 U	1,400 U	1,400 U	1,200 U
4-Bromophenyl-phenylether	360 U	360 U	360 U	360 U	350 U	580 U	350 U	350 U	350 U	360 U	370 U	390 U	390 U	340 U
4-Chloro-3-methylphenol	540 U	540 U	540 U	550 U	530 U	870 U	530 U	540 U	530 U	550 U	560 U	590 U	590 U	520 U
4-Chloroaniline	540 U	540 U	540 U	550 U	530 U	870 U	530 U	540 U	530 U	550 U	560 U	590 U	590 U	520 U
4-Chlorophenyl-phenylether	360 U	360 U	360 U	360 U	350 U	580 U	350 U	350 U	350 U	360 U	370 U	390 U	390 U	340 U
4-Nitroaniline	540 U	540 U	540 U	550 U	530 U	870 U	530 U	540 U	530 U	550 U	560 U	590 U	590 U	520 U
4-Nitrophenol	1,300 UJ	1,300 UJ	1,300 UJ	1,300 U	1,300 U	2,100 U	1,300 U	1,300 UJ	1,300 U	1,300 UJ	1,400 U	1,400 U	1,400 U	1,200 U
Acenaphthene	360 U	360 U	360 U	360 U	350 U	580 U	350 U	350 U	350 U	360 U	370 U	390 U	390 U	340 U
Acenaphthylene	360 U	360 U	360 U	360 U	350 U	580 U	350 U	350 U	350 U	360 U	370 U	390 U	390 U	340 U
Acetophenone	650 U	650 U	650 U	660 U	640 U	1,000 U	630 U	640 U	640 U	660 U	680 U	710 U	700 U	630 U
Anthracene	360 U	360 U	360 U	360 U	350 U	580 U	350 U	350 U	350 U	360 U	370 U	390 U	390 U	340 U
Atrazine	360 U	360 U	360 U	360 U	350 U	580 U	350 U	350 U	350 U	360 U	370 U	390 U	390 U	340 U
Benzaldehyde	540 U	540 U	540 U	550 U	530 U	870 U	530 U	540 U	530 U	550 U	560 U	590 U	590 U	520 U
Benzo(a)anthracene	11 U	11 U	11 U	11 U	11 U	17 U	3 J	11 U	11 U	11 U	11 U	12 U	12 U	10 U
Benzo(a)pyrene	11 U	11 U	11 U	11 U	11 U	17 U	10 U	11 U	11 U	11 U	11 U	12 U	12 U	10 U
Benzo(b)fluoranthene	11 UJ	11 UJ	11 UJ	11 U	3.5 J	17 U	10 UJ	11 UJ	11 U	11 UJ	11 U	12 U	12 U	10 U
Benzo(g,h,i)perylene	11 U	11 U	11 U	11 U	2.7 J	17 U	10 U	11 U	11 U	11 U	11 U	12 U	12 U	10 U
Benzo(k)fluoranthene	11 U	11 UJ	11 UJ	11 UJ	3.5 J	17 U	10 UJ	11 UJ	11 UJ	11 U	11 U	12 U	12 U	10 U
Butylbenzylphthalate	360 U	360 U	360 U	360 U	350 U	580 U	350 U	350 U	350 U	360 U	370 UJ	390 UJ	390 U	340 U
Caprolactam	540 U	540 U	540 U	550 U	530 U	870 U	530 U	540 U	530 U	550 U	560 U	590 U	590 U	520 U
Carbazole	540 U	540 U	540 U	550 U	530 U	870 U	530 U	540 U	530 U	550 U	560 U	590 U	590 U	520 U
Chrysene	360 U	360 U	360 U	360 U	350 U	580 U	350 U	350 U	350 U	360 U	370 U	390 U	390 U	340 U
Di-n-butylphthalate	360 U	360 U	360 U	360 U	350 U	580 U	350 U	350 U	350 U	360 U	370 U	390 U	390 U	340 U
Di-n-octylphthalate	360 U	360 U	360 U	360 U	350 U	580 U	350 U	350 U	350 U	360 U	370 UJ	390 UJ	390 U	340 U
Dibenz(a,h)anthracene	11 U	11 U	11 U	11 U	11 U	17 U	10 U	11 U	5.6 J	11 U	11 U	12 U	12 U	10 U
Dibenzofuran	360 U	360 U	360 U	360 U	350 U	580 U	350 U	350 U	350 U	360 U	370 U	390 U	390 U	340 U
Diethylphthalate	360 U	360 U	360 U	360 U	350 U	580 U	350 U	350 U	350 U	360 U	370 U	390 U	390 U	340 U
Dimethyl phthalate	360 U	360 U	360 U	360 U	350 U	580 U	350 U	350 U	350 U	360 U	370 U	390 U	390 U	340 U
Fluoranthene	2.2 J	3.5 J	3.8 J	11 U	6.3 J	17 U	4 J	11 U	11 U	2.4 J	11 U	3.6 J	3.1 J	10 U
Fluorene	11 U	11 U	11 U	11 U	11 U	17 U	10 U	11 U	11 U	11 U	11 U	12 U	12 U	10 U
Hexachlorobenzene	11 U	11 UJ	11 UJ	11 UJ	11 UJ	17 UJ	10 UJ	11 UJ	11 UJ	11 U	11 UJ	12 UJ	12 UJ	10 UJ
Hexachlorobutadiene	11 U	11 U	11 U	11 UJ	11 UJ	17 UJ	10 U	11 U	11 UJ	11 U	11 UJ	12 UJ	12 UJ	10 UJ
Hexachlorocyclopentadiene	11 UJ	11 UJ	11 UJ	11 UJ	11 UJ	17 UJ	10 UJ	11 UJ	11 UJ	11 UJ	11 UJ	12 UJ	12 UJ	10 UJ
Hexachloroethane	360 U	360 U	360 U	360 U	350 U	580 U	350 U	350 UJ	350 U	360 U	370 U	390 U	390 U	340 U
Indeno(1,2,3-cd)pyrene	11 U	11 U	11 U	11 U	2.8 J	17 U	2 J	11 U	11 U	11 U	11 U	12 U	12 U	10 U
Isophorone	360 U	360 U	360 U	360 U	350 U	580 U	350 U	350 U	350 U	360 U	370 U	390 U	390 U	340 U
Naphthalene	11 U	11 U	11 U	11 U	11 U	17 U	10 U	11 U	11 U	11 U	11 U	12 U	12 U	10 U
Nitrobenzene	360 UJ	360 UJ	360 UJ	360 U	350 U	580 U	350 U	350 UJ	350 U	360 UJ	370 UJ	390 UJ	390 U	340 U
Pentachlorophenol	890 U	890 U	890 U	910 U	870 U	1,400 U	860 U	880 U	880 U	900 U	930 U	960 U	960 U	860 U

Appendix I
Fitness Center Subsurface Soil Raw Analytical Results
November 2008

Station ID	MR08-IS388	MR08-IS389		MR08-IS390	MR08-IS391	MR08-IS392	MR08-IS393	MR08-IS394	MR08-IS395	MR08-IS396	MR08-IS397	MR08-IS398		MR08-IS399
Sample ID	MR08-IS388-08D	MR08-IS389-08D	MR08-IS389D-08D	MR08-IS390-08D	MR08-IS391-08D	MR08-IS392-08D	MR08-IS393-08D	MR08-IS394-08D	MR08-IS395-08D	MR08-IS396-08D	MR08-IS397-08D	MR08-IS398-08D	MR08-IS398D-08D	MR08-IS399-08D
Sample Date	11/19/08	11/19/08	11/19/08	11/18/08	11/18/08	11/18/08	11/18/08	11/19/08	11/18/08	11/19/08	11/17/08	11/18/08	11/18/08	11/18/08
Chemical Name														
Phenanthrene	11 UJ	11 U	11 U	11 U	11 U	17 U	10 U	11 U	11 U	11 UJ	11 U	12 U	12 U	10 U
Phenol	540 U	540 U	540 U	550 U	530 U	870 U	530 U	540 U	530 U	550 U	560 U	590 U	590 U	520 U
Pyrene	11 U	3.5 J	4.3 J	11 UJ	5.7 J	17 UJ	3 J	11 UJ	11 UJ	11 U	11 UJ	3.4 J	3.1 J	10 UJ
bis(2-Chloroethoxy)methane	360 U	360 U	360 U	360 U	350 U	580 U	350 U	350 U	350 U	360 U	370 U	390 U	390 U	340 U
bis(2-Chloroethyl)ether	360 U	360 U	360 U	360 U	350 U	580 U	350 U	350 U	350 U	360 U	370 U	390 U	390 U	340 U
bis(2-Ethylhexyl)phthalate	470	440	410	360 U	640 J	730 J	220 J	240 J	620 J	360 U	750 J	390 UJ	390 U	340 U
n-Nitroso-di-n-propylamine	360 U	360 U	360 U	360 U	350 U	580 U	350 U	350 U	350 U	360 U	370 U	390 U	390 U	340 U
n-Nitrosodiphenylamine	720 U	720 U	720 U	730 U	700 U	1,200 U	700 U	710 U	700 U	730 U	750 U	780 U	770 U	690 U
Explosives (UG/KG)														
1,3,5-Trinitrobenzene	99.2 U	99.9 U	99.3 U	100 U	99.9 U	99.4 U	98 U	97.6 U	98.2 U	99.4 U	99.6 U	98.8 U	99.9 U	97.5 U
1,3-Dinitrobenzene	99.2 U	99.9 U	99.3 U	100 U	99.9 U	99.4 U	98 U	97.6 U	98.2 U	99.4 U	99.6 U	98.8 U	99.9 U	97.5 U
2,4,6-Trinitrotoluene	99.2 U	99.9 U	99.3 U	100 U	99.9 U	99.4 U	98 U	97.6 U	98.2 U	99.4 U	99.6 U	98.8 U	99.9 U	97.5 U
2,4-Dinitrotoluene	99.2 UJ	99.9 UJ	99.3 UJ	100 U	99.9 U	99.4 U	98 U	97.6 UJ	98.2 U	99.4 UJ	99.6 U	98.8 U	99.9 U	97.5 U
2,6-Dinitrotoluene	99.2 U	99.9 U	99.3 U	100 U	99.9 U	99.4 U	98 U	97.6 U	98.2 U	99.4 U	99.6 U	98.8 U	99.9 U	97.5 U
2-Amino-4,6-dinitrotoluene	99.2 U	99.9 U	99.3 U	100 U	99.9 U	99.4 U	98 U	97.6 U	98.2 U	99.4 U	99.6 U	98.8 U	99.9 U	97.5 U
2-Nitrotoluene	99.2 U	99.9 U	99.3 U	100 U	99.9 U	99.4 U	98 U	97.6 U	98.2 U	99.4 U	99.6 U	98.8 U	99.9 U	97.5 U
3-Nitrotoluene	99.2 U	99.9 U	99.3 U	100 U	99.9 U	99.4 U	98 U	97.6 U	98.2 U	99.4 U	99.6 U	98.8 U	99.9 U	97.5 U
4-Amino-2,6-dinitrotoluene	99.2 U	99.9 U	99.3 U	100 U	99.9 U	99.4 U	98 U	97.6 U	98.2 U	99.4 U	99.6 U	98.8 U	99.9 U	97.5 U
4-Nitrotoluene	99.2 U	99.9 U	99.3 U	100 U	99.9 U	99.4 U	98 U	97.6 U	98.2 U	99.4 U	99.6 U	98.8 U	99.9 U	97.5 U
HMX	99.2 U	99.9 U	99.3 U	100 U	99.9 U	99.4 U	98 U	97.6 U	98.2 U	99.4 U	99.6 U	98.8 U	99.9 U	97.5 U
Nitrobenzene	99.2 U	99.9 U	99.3 U	100 U	99.9 U	99.4 U	98 U	97.6 UJ	98.2 U	99.4 U	99.6 U	98.8 U	99.9 U	97.5 U
Nitroglycerin	99.2 U	99.9 U	99.3 U	100 U	99.9 U	99.4 U	98 U	97.6 U	98.2 U	99.4 U	99.6 U	98.8 U	99.9 U	97.5 U
PETN	99.2 U	99.9 U	99.3 U	100 U	99.9 U	99.4 U	98 U	97.6 U	98.2 U	99.4 U	99.6 U	98.8 U	99.9 U	97.5 U
Perchlorate	2.2 U	2.2 U	2.3 U	2.2 U	2.1 U	2.2 U	2.1 U	2.2 U	2.2 U	2.2 U	2.2 U	2.4 U	2.3 U	2.1 U
RDX	99.2 U	99.9 U	99.3 U	100 U	99.9 U	99.4 U	98 U	97.6 U	98.2 U	99.4 U	99.6 U	98.8 U	99.9 U	97.5 U
Tetryl	99.2 U	99.9 U	99.3 U	100 U	99.9 U	99.4 U	98 U	97.6 U	98.2 U	99.4 U	99.6 U	98.8 U	99.9 U	97.5 U
Total Metals (MG/KG)														
Antimony	0.402 U	0.418 U	0.416 U	0.433 U	0.371 U	0.388 U	0.402 U	0.415 U	0.399 U	0.415 U	0.518 J	0.438 U	0.447 U	0.394 U
Arsenic	0.769	0.0984 J	0.17 J	1.15	0.212 J	5.91	0.262 J	0.883	0.302 J	0.216 J	1.51	0.173 J	0.21 J	0.386
Barium	3.51	2.27	3.62	1.87	3.96	6.05	2.98	3.63	4.18	4.24	8.75	14.3	15.4	3.47
Cadmium	0.0402 U	0.0418 U	0.0416 U	0.0433 U	0.0371 U	0.04 J	0.0402 U	0.0415 U	0.0399 U	0.0415 U	0.0436 U	0.0438 U	0.0447 U	0.0394 U
Chromium	11.9	5.36	7.63	3.58	10.5	12.6	7.85	6.76	11.2	3	11.6	6.64	6.31	6.11
Copper	1.72	0.705 J	0.963 J	0.433 U	1.2 J	1.62	0.951 J	0.727 J	1.33 J	0.634 J	3.17	1.27 J	0.814 J	1.1 J
Lead	1.59	1.45	1.51	1.49	2.05	2.54	3.06	2.71	2.65	0.867	3.2	4.04	4.26	1.72
Mercury	0.0213 U	0.021 U	0.022 U	0.0219 U	0.0207 U	0.0215 U	0.0197 U	0.0216 U	0.02 U	0.0215 U	0.023 U	0.0225 U	0.0235 U	0.0209 U
Selenium	0.104 U	0.108 U	0.108 U	0.453 J	0.102 U	0.248 J	0.101 U	0.116 U	0.106 U	0.107 U	0.341 J	0.12 J	0.113 U	0.145 J
Silver	0.264 J	0.231 J	0.208 U	0.216 U	0.185 U	0.194 U	0.253 J	0.29 J	0.199 U	0.227 J	0.218 U	0.219 U	0.223 U	0.197 U
Zinc	0.937 J	0.531 J	0.839 J	1.73 U	1.48 U	2.35 U	1.61 U	1.27 J	1.6 U	0.893 J	2.5	4.36 U	2.39 U	1.57 U
Wet Chemistry (%)	NA	NA	NA	NA	NA	NA	NA	NA	NA	NA	NA	NA	NA	NA
% Solids	92.7	92	90.5	87.2	94.3	90.3	94.7	86.4	93.9	90.5	86.9	85.4	84.4	94.9

Notes:

J - Analyte present, value may or may not be accurate or precise

NA - Not analyzed

U - The material was analyed for, but not detected

UJ - Analyte not detected, quantitation limit may be inaccurate

Appendix I
Fitness Center Groundwater Raw Analytical Results
November 2008

Station ID	MR08-TW15		MR08-TW16	MR08-TW17		MR08-TW18	MR08-TW19	MR08-TW20	MR08-TW21	MR08-TW22	MR08-TW23	MR08-TW24	MR08-TW25	MR08-TW26
Sample ID	MR08-TW15-08D	MR08-TW15D-08D	MR08-TW16-08D	MR08-TW17-08D	MR08-TW17D-08D	MR08-TW18-08D	MR08-TW19-08D	MR08-TW20-08D	MR08-TW21-08D	MR08-TW22-08D	MR08-TW23-08D	MR08-TW24-08D	MR08-TW25-08D	MR08-TW26-08D
Sample Date	11/21/08	11/21/08	11/21/08	11/20/08	11/20/08	11/20/08	11/20/08	11/20/08	11/21/08	11/21/08	11/21/08	11/20/08	11/20/08	11/20/08
Chemical Name														
Volatile Organic Compounds (UG/L)														
1,1,1-Trichloroethane	1 U	1 U	1 U	1 U	1 U	1 U	1 U	1 U	1 U	1 U	1 U	1 U	1 U	1 U
1,1,2,2-Tetrachloroethane	1 U	1 U	1 U	1 U	1 U	1 U	1 U	1 U	1 U	1 U	1 U	1 U	1 U	1 U
1,1,2-Trichloro-1,2,2-trifluoroethane(Freon-113)	1 U	1 U	1 U	1 U	1 U	1 U	1 U	1 U	1 U	1 U	1 U	1 U	1 U	1 U
1,1,2-Trichloroethane	1 U	1 U	1 U	1 U	1 U	1 U	1 U	1 U	1 U	1 U	1 U	1 U	1 U	1 U
1,1-Dichloroethane	1 U	1 U	1 U	1 U	1 U	1 U	1 U	1 U	1 U	1 U	1 U	1 U	1 U	1 U
1,1-Dichloroethene	1 U	1 U	1 U	1 U	1 U	1 U	1 U	1 U	1 U	1 U	1 U	1 U	1 U	1 U
1,2,4-Trichlorobenzene	1 UJ	1 UJ	1 UJ	1 UJ	1 UJ	1 U	1 U	1 U	1 UJ	1 UJ	1 UJ	1 UJ	1 U	1 U
1,2-Dibromo-3-chloropropane	1 U	1 U	1 U	1 U	1 U	1 U	1 U	1 U	1 U	1 U	1 U	1 U	1 U	1 U
1,2-Dibromoethane	1 U	1 U	1 U	1 U	1 U	1 U	1 U	1 U	1 U	1 U	1 U	1 U	1 U	1 U
1,2-Dichlorobenzene	1 U	1 U	1 U	1 U	1 U	1 U	1 U	1 U	1 U	1 U	1 U	1 U	1 U	1 U
1,2-Dichloroethane	1 U	1 U	1 U	1 U	1 U	1 U	1 U	1 U	1 U	1 U	1 U	1 U	1 U	1 U
1,2-Dichloropropane	1 U	1 U	1 U	1 U	1 U	1 U	1 U	1 U	1 U	1 U	1 U	1 U	1 U	1 U
1,3-Dichlorobenzene	1 U	1 U	1 U	1 U	1 U	1 U	1 U	1 U	1 U	1 U	1 U	1 U	1 U	1 U
1,4-Dichlorobenzene	1 U	1 U	1 U	1 U	1 U	1 U	1 U	1 U	1 U	1 U	1 U	1 U	1 U	1 U
2-Butanone	3 R	3 R	3 R	3 R	3 R	3 U	3 U	3 U	3 R	3 R	3 R	3 R	3 U	3 U
2-Hexanone	2 U	2 U	2 U	2 U	2 U	2 U	2 U	2 U	2 U	2 U	2 U	2 U	2 U	2 U
4-Methyl-2-pentanone	2 U	2 U	2 U	2 U	2 U	2 U	2 U	2 U	2 U	2 U	2 U	2 U	2 U	2 U
Acetone	6.2 U	2.5 U	2.5 U	2.5 U	2.5 U	2.5 U	2.5 U	2.5 U	2.5 U	2.5 U	6 U	2.5 U	2.5 U	2.5 U
Benzene	1 U	1 U	1 U	1 U	1 U	1 U	1 U	1 U	1 U	1 U	1 U	1 U	1 U	1 U
Bromodichloromethane	1 U	1 U	1 U	1 U	1 U	1 U	1 U	1 U	1 U	1 U	1 U	1 U	1 U	1 U
Bromoform	1 U	1 U	1 U	1 U	1 U	1 U	1 U	1 U	1 U	1 U	1 U	1 U	1 U	1 U
Bromomethane	1 U	1 U	1 U	1 U	1 U	1 U	1 U	1 U	1 U	1 U	1 U	1 U	1 U	1 U
Carbon disulfide	1 U	1 U	1 U	1 U	1 U	1 U	1 U	1 U	1 U	1 U	1 U	1 U	1 U	1 U
Carbon tetrachloride	1 UJ	1 UJ	1 UJ	1 UJ	1 UJ	1 U	1 U	1 U	1 UJ	1 UJ	1 UJ	1 UJ	1 U	1 U
Chlorobenzene	1 U	1 U	1 U	1 U	1 U	1 U	1 U	1 U	1 U	1 U	1 U	1 U	1 U	1 U
Chloroethane	1 U	1 U	1 U	1 U	1 U	1 U	1 U	1 U	1 U	1 U	1 U	1 U	1 U	1 U
Chloroform	1.1 U	1 U	1 U	1 U	1 U	1 U	1 U	1 U	1 U	1 U	1 U	1 U	1 U	1 U
Chloromethane	1 U	1 U	1 U	1 U	1 U	1 U	1 U	1 U	1 U	1 U	1 U	1 U	1 U	1 U
Cyclohexane	1 U	1 U	1 U	1 U	1 U	1 U	1 U	1 U	1 U	1 U	1 U	1 U	1 U	1 U
Dibromochloromethane	1 U	1 U	1 U	1 U	1 U	1 U	1 U	1 U	1 U	1 U	1 U	1 U	1 U	1 U
Dichlorodifluoromethane (Freon-12)	1 U	1 U	1 U	1 U	1 U	1 U	1 U	1 U	1 U	1 U	1 U	1 U	1 U	1 U
Ethylbenzene	1 U	1 U	1 U	1 U	1 U	1 U	1 U	1 U	1 U	1 U	0.36 J	1 U	1 U	1 U
Isopropylbenzene	1 U	1 U	1 U	1 U	1 U	1 U	1 U	1 U	1 U	1 U	1 U	1 U	1 U	1 U
Methyl acetate	1 U	1 U	1 U	1 U	1 U	1 U	1 U	1 U	1 U	1 U	1 U	1 U	1 U	1 U
Methyl-tert-butyl ether (MTBE)	1 U	1 U	1 U	1 U	1 U	1 U	1 U	1 U	1 U	1 U	1 U	1 U	1 U	1 U
Methylcyclohexane	1 U	1 U	1 U	1 U	1 U	1 U	1 U	1 U	1 U	1 U	1 U	1 U	1 U	1 U
Methylene chloride	1 U	1 U	1 U	1 U	1 U	1 U	1 U	1 U	1 U	1 U	1 U	1 U	1 U	1 U
Styrene	1 U	1 U	1 U	1 U	1 U	1 U	1 U	1 U	1 U	1 U	1 U	1 U	1 U	1 U
Tetrachloroethene	1 U	1 U	1 U	1 U	1 U	1 U	1 U	1 U	1 U	1 U	1 U	1 U	1 U	1 U
Toluene	2.3 U	3 U	9.5	1 U	1 U	1 U	1 U	4.8	15	1 U	40	3.2	1.7 U	7
Trichloroethene	1 U	1 U	1 U	1 U	1 U	1 U	1 U	1 U	1 U	1 U	1 U	1 U	1 U	1 U
Trichlorofluoromethane(Freon-11)	1 U	1 U	1 U	1 U	1 U	1 U	1 U	1 U	1 U	1 U	1 U	1 U	1 U	1 U
Vinyl chloride	1 U	1 U	1 U	1 U	1 U	1 U	1 U	1 U	1 U	1 U	1 U	1 U	1 U	1 U
Xylene, total	1 U	1 U	1 U	1 U	1 U	1 U	1 U	1 U	1 U	1 U	1 U	1 U	1 U	1 U
cis-1,2-Dichloroethene	1 U	1 U	1 U	1 U	1 U	1 U	1.9	1 U	1 U	1 U	1 U	1 U	1 U	1 U
cis-1,3-Dichloropropene	1 U	1 U	1 U	1 U	1 U	1 U	1 U	1 U	1 U	1 U	1 U	1 U	1 U	1 U
trans-1,2-Dichloroethene	1 U	1 U	1 U	1 U	1 U	1 U	1 U	1 U	1 U	1 U	1 U	1 U	1 U	1 U
trans-1,3-Dichloropropene	1 U	1 U	1 U	1 U	1 U	1 U	1 U	1 U	1 U	1 U	1 U	1 U	1 U	1 U
Semivolatile Organic Compounds (UG/L)														
1,1-Biphenyl	10 U	10 U	9 U	10 U	10 U	9 U	9 U	10 U	10 U	10 U	10 U	9 U	10 U	10 U
2,2'-Oxybis(1-chloropropane)	10 U	10 U	9 U	10 U	10 U	9 U	9 U	10 U	10 U	10 U	10 U	9 U	10 U	10 U
2,4,5-Trichlorophenol	24 U	24 U	24 U	24 U	25 U	24 U	24 U	25 U	24 U	26 U	25 U	24 U	24 U	25 U

Appendix I
Fitness Center Groundwater Raw Analytical Results
November 2008

Station ID	MR08-TW15		MR08-TW16	MR08-TW17		MR08-TW18	MR08-TW19	MR08-TW20	MR08-TW21	MR08-TW22	MR08-TW23	MR08-TW24	MR08-TW25	MR08-TW26
Sample ID	MR08-TW15-08D	MR08-TW15D-08D	MR08-TW16-08D	MR08-TW17-08D	MR08-TW17D-08D	MR08-TW18-08D	MR08-TW19-08D	MR08-TW20-08D	MR08-TW21-08D	MR08-TW22-08D	MR08-TW23-08D	MR08-TW24-08D	MR08-TW25-08D	MR08-TW26-08D
Sample Date	11/21/08	11/21/08	11/21/08	11/20/08	11/20/08	11/20/08	11/20/08	11/20/08	11/21/08	11/21/08	11/21/08	11/20/08	11/20/08	11/20/08
Chemical Name														
2,4,6-Trichlorophenol	10 U	10 U	9 U	10 U	10 U	9 U	9 U	10 U	10 U	10 U	10 U	9 U	10 U	10 U
2,4-Dichlorophenol	12 U	12 U	11 U	12 U	12 U	11 U	11 U	12 U	11 U	13 U	12 U	11 U	12 U	12 U
2,4-Dimethylphenol	12 U	12 U	11 U	12 U	12 U	11 U	11 U	12 U	11 U	13 U	12 U	11 U	12 U	12 U
2,4-Dinitrophenol	44 U	44 U	42 U	44 U	45 U	42 U	42 U	44 U	43 U	47 U	44 U	42 U	43 U	44 U
2,4-Dinitrotoluene	10 U	10 U	9 U	10 U	10 U	9 U	9 U	10 U	10 U	10 U	10 U	9 U	10 U	10 U
2,6-Dinitrotoluene	10 U	10 U	9 U	10 U	10 U	9 U	9 U	10 U	10 U	10 U	10 U	9 U	10 U	10 U
2-Chloronaphthalene	10 U	10 U	9 U	10 U	10 U	9 U	9 U	10 U	10 U	10 U	10 U	9 U	10 U	10 U
2-Chlorophenol	12 U	12 U	11 U	12 U	12 U	11 U	11 U	12 U	11 U	13 U	12 U	11 U	12 U	12 U
2-Methylnaphthalene	0.24 U	0.24 U	0.24 U	0.24 U	0.25 U	0.24 U	0.24 U	0.25 U	0.24 U	0.26 U	0.25 U	0.24 U	0.24 U	0.25 U
2-Methylphenol	12 U	12 U	11 U	12 U	12 U	11 U	11 U	12 U	11 U	13 U	12 U	11 U	12 U	12 U
2-Nitroaniline	24 U	24 U	24 U	24 U	25 U	24 U	24 U	25 U	24 U	26 U	25 U	24 U	24 U	25 U
2-Nitrophenol	10 U	10 U	9 U	10 U	10 U	9 U	9 U	10 U	10 U	10 U	10 U	9 U	10 U	10 U
3,3'-Dichlorobenzidine	10 U	10 U	9 U	10 U	10 U	9 U	9 U	10 U	10 U	10 U	10 U	9 U	10 U	10 U
3- and 4-Methylphenol	10 U	10 U	9 U	10 U	10 U	9 U	9 U	10 U	10 U	10 U	10 U	9 U	10 U	10 U
3-Nitroaniline	24 U	24 U	24 U	24 U	25 U	24 U	24 U	25 U	24 U	26 U	25 U	24 U	24 U	25 U
4,6-Dinitro-2-methylphenol	24 U	24 U	24 U	24 U	25 U	24 U	24 U	25 U	24 U	26 U	25 U	24 U	24 U	25 U
4-Bromophenyl-phenylether	10 U	10 U	9 U	10 U	10 U	9 U	9 U	10 U	10 U	10 U	10 U	9 U	10 U	10 U
4-Chloro-3-methylphenol	10 U	10 U	9 U	10 U	10 U	9 U	9 U	10 U	10 U	10 U	10 U	9 U	10 U	10 U
4-Chloroaniline	10 U	10 U	9 U	10 U	10 U	9 U	9 U	10 U	10 U	10 U	10 U	9 U	10 U	10 U
4-Chlorophenyl-phenylether	10 U	10 U	9 U	10 U	10 U	9 U	9 U	10 U	10 U	10 U	10 U	9 U	10 U	10 U
4-Nitroaniline	24 U	24 U	24 U	24 U	25 U	24 U	24 U	25 U	24 U	26 U	25 U	24 U	24 U	25 U
4-Nitrophenol	24 U	24 U	24 UJ	24 U	25 U	24 U	24 U	25 U	24 UJ	26 UJ	25 UJ	24 U	24 U	25 U
Acenaphthene	10 U	10 U	9 U	10 U	10 U	9 U	9 U	10 U	10 U	10 U	10 U	9 U	10 U	10 U
Acenaphthylene	10 U	10 U	9 U	10 U	10 U	9 U	9 U	10 U	10 U	10 U	10 U	9 U	10 U	10 U
Acetophenone	12 U	12 U	11 U	12 U	12 U	11 U	11 U	12 U	11 U	13 U	12 U	11 U	12 U	12 U
Anthracene	10 U	10 U	9 U	10 U	10 U	9 U	9 U	10 U	10 U	10 U	10 U	9 U	10 U	10 U
Atrazine	10 U	10 U	9 U	10 U	10 U	9 U	9 U	10 U	10 U	10 U	10 U	9 U	10 U	10 U
Benzaldehyde	10 U	10 U	9 U	10 U	10 U	9 U	9 U	10 U	10 U	10 U	10 U	9 U	10 U	10 U
Benzo(a)anthracene	0.24 U	0.24 U	0.24 U	0.24 U	0.25 U	0.24 U	0.24 U	0.25 U	0.24 U	0.26 U	0.25 U	0.24 U	0.24 U	0.25 U
Benzo(a)pyrene	0.24 U	0.24 U	0.24 U	0.24 U	0.25 U	0.24 U	0.24 U	0.25 U	0.24 U	0.26 U	0.25 U	0.24 U	0.24 U	0.25 U
Benzo(b)fluoranthene	0.26 U	0.26 U	0.25 U	0.26 U	0.27 U	0.25 UJ	0.25 UJ	0.27 UJ	0.26 U	0.28 U	0.27 U	0.25 U	0.26 UJ	0.27 UJ
Benzo(g,h,i)perylene	0.24 U	0.24 U	0.24 U	0.24 U	0.25 U	0.24 U	0.24 U	0.25 U	0.24 U	0.26 U	0.25 U	0.24 U	0.24 U	0.25 U
Benzo(k)fluoranthene	0.24 U	0.24 U	0.24 U	0.24 U	0.25 U	0.24 UJ	0.24 UJ	0.25 UJ	0.24 U	0.26 U	0.25 U	0.24 U	0.24 UJ	0.25 UJ
Butylbenzylphthalate	10 UJ	10 UJ	9 U	10 UJ	10 UJ	9 UJ	9 UJ	10 UJ	10 U	10 U	10 U	9 UJ	10 UJ	10 UJ
Caprolactam	10 U	10 U	9 U	10 U	10 U	9 U	9 U	10 U	10 U	10 U	10 U	9 U	10 U	10 U
Carbazole	10 U	10 U	9 U	10 U	10 U	9 U	9 U	10 U	10 U	10 U	10 U	9 U	10 U	10 U
Chrysene	10 U	10 U	9 U	10 U	10 U	9 U	9 U	10 U	10 U	10 U	10 U	9 U	10 U	10 U
Di-n-butylphthalate	10 U	10 U	9 U	10 U	10 U	9 U	9 U	10 U	10 U	10 U	10 U	9 U	10 U	10 U
Di-n-octylphthalate	10 UJ	10 UJ	9 U	10 UJ	10 UJ	9 UJ	9 UJ	10 UJ	10 U	10 U	10 U	9 UJ	10 UJ	10 UJ
Dibenz(a,h)anthracene	0.24 U	0.24 U	0.24 U	0.24 U	0.25 U	0.24 U	0.24 U	0.25 U	0.24 U	0.26 U	0.25 U	0.24 U	0.24 U	0.25 U
Dibenzofuran	10 U	10 U	9 U	10 U	10 U	9 U	9 U	10 U	10 U	10 U	10 U	9 U	10 U	10 U
Diethylphthalate	10 U	10 U	9 U	10 U	10 U	9 U	9 U	10 U	10 U	10 U	10 U	9 U	10 U	10 U
Dimethyl phthalate	10 U	10 U	9 U	10 U	10 U	9 U	9 U	10 U	10 U	10 U	10 U	9 U	10 U	10 U
Fluoranthene	0.24 U	0.24 U	0.24 UJ	0.24 U	0.25 U	0.24 U	0.24 U	0.25 U	0.24 UJ	0.26 UJ	0.25 UJ	0.24 U	0.24 U	0.25 U
Fluorene	0.24 U	0.24 U	0.24 U	0.24 U	0.25 U	0.24 U	0.24 U	0.25 U	0.24 U	0.26 U	0.25 U	0.24 U	0.24 U	0.25 U
Hexachlorobenzene	0.24 U	0.24 U	0.24 U	0.24 U	0.25 U	0.24 U	0.24 U	0.25 U	0.24 U	0.26 U	0.25 U	0.24 U	0.24 U	0.25 U
Hexachlorobutadiene	0.26 U	0.26 U	0.25 U	0.26 U	0.27 U	0.25 U	0.25 U	0.27 U	0.26 U	0.28 U	0.27 U	0.25 U	0.26 U	0.27 U
Hexachlorocyclopentadiene	0.24 U	0.24 U	0.24 UJ	0.24 U	0.25 U	0.24 UJ	0.24 UJ	0.25 UJ	0.24 UJ	0.26 UJ	0.25 UJ	0.24 U	0.24 UJ	0.25 UJ
Hexachloroethane	10 U	10 U	9 U	10 U	10 U	9 U	9 U	10 U	10 U	10 U	10 U	9 U	10 U	10 U
Indeno(1,2,3-cd)pyrene	0.24 U	0.24 U	0.24 U	0.24 U	0.25 U	0.24 U	0.24 U	0.25 U	0.24 U	0.26 U	0.25 U	0.24 U	0.24 U	0.25 U
Isophorone	10 U	10 U	9 U	10 U	10 U	9 U	9 U	10 U	10 U	10 U	10 U	9 U	10 U	10 U
Naphthalene	0.24 U	0.24 U	0.24 UJ	0.24 U	0.25 U	0.24 U	0.24 U	0.25 U	0.24 UJ	0.26 UJ	0.25 UJ	0.24 U	0.24 U	0.25 U
Nitrobenzene	10 U	10 U	9 UJ	10 U	10 U	9 U	9 U	10 U	10 UJ	10 UJ	10 UJ	9 U	10 U	10 U
Pentachlorophenol	24 U	24 U	24 U	24 U	25 U	24 U	24 U	25 U	24 U	26 U	25 U	24 U	24 U	25 U

Appendix I
Fitness Center Groundwater Raw Analytical Results
November 2008

Station ID	MR08-TW15		MR08-TW16	MR08-TW17		MR08-TW18	MR08-TW19	MR08-TW20	MR08-TW21	MR08-TW22	MR08-TW23	MR08-TW24	MR08-TW25	MR08-TW26
Sample ID	MR08-TW15-08D	MR08-TW15D-08D	MR08-TW16-08D	MR08-TW17-08D	MR08-TW17D-08D	MR08-TW18-08D	MR08-TW19-08D	MR08-TW20-08D	MR08-TW21-08D	MR08-TW22-08D	MR08-TW23-08D	MR08-TW24-08D	MR08-TW25-08D	MR08-TW26-08D
Sample Date	11/21/08	11/21/08	11/21/08	11/20/08	11/20/08	11/20/08	11/20/08	11/20/08	11/21/08	11/21/08	11/21/08	11/20/08	11/20/08	11/20/08
Chemical Name														
Phenanthrene	0.24 U	0.24 U	0.24 U	0.24 U	0.25 U	0.24 U	0.24 U	0.25 U	0.24 U	0.26 U	0.25 U	0.24 U	0.24 U	0.25 U
Phenol	10 U	10 U	9 U	10 U	10 U	9 U	9 U	10 U	10 U	10 U	10 U	9 U	10 U	10 U
Pyrene	0.24 U	0.24 U	0.24 U	0.24 U	0.25 U	0.24 U	0.24 U	0.25 U	0.24 U	0.26 U	0.25 U	0.24 U	0.24 U	0.25 U
bis(2-Chloroethoxy)methane	10 U	10 U	9 U	10 U	10 U	9 U	9 U	10 U	10 U	10 U	10 U	9 U	10 U	10 U
bis(2-Chloroethyl)ether	10 U	10 U	9 U	10 U	10 U	9 U	9 U	10 U	10 U	10 U	10 U	9 U	10 U	10 U
bis(2-Ethylhexyl)phthalate	10 UJ	10 UJ	9 U	10 UJ	10 UJ	9 UJ	9 UJ	10 UJ	10 U	10 U	10 U	9 UJ	10 UJ	10 UJ
n-Nitroso-di-n-propylamine	10 U	10 U	9 U	10 U	10 U	9 U	9 U	10 U	10 U	10 U	10 U	9 U	10 U	10 U
n-Nitrosodiphenylamine	10 U	10 U	9 U	10 U	10 U	9 U	9 U	10 U	10 U	10 U	10 U	9 U	10 U	10 U
Explosives (UG/L)														
1,3,5-Trinitrobenzene	0.258 U	0.258 U	0.255 U	0.258 U	0.263 U	0.263 U	0.258 U	0.263 U	0.255 U	0.26 U	0.263 U	0.255 U	0.258 U	0.263 U
1,3-Dinitrobenzene	0.258 U	0.258 U	0.255 U	0.258 U	0.263 U	0.263 U	0.258 U	0.263 U	0.255 U	0.26 U	0.263 U	0.255 U	0.258 U	0.263 U
2,4,6-Trinitrotoluene	0.258 U	0.258 U	0.255 U	0.258 U	0.263 U	0.263 U	0.258 U	0.263 U	0.255 U	0.26 U	0.263 U	0.255 U	0.258 U	0.263 U
2,4-Dinitrotoluene	0.258 U	0.258 U	0.255 U	0.258 U	0.263 U	0.263 U	0.258 U	0.263 U	0.255 U	0.26 U	0.263 U	0.255 U	0.258 U	0.263 U
2,6-Dinitrotoluene	0.258 U	0.258 U	0.255 U	0.258 U	0.263 U	0.263 U	0.258 U	0.263 U	0.255 U	0.26 U	0.263 U	0.255 U	0.258 U	0.263 U
2-Amino-4,6-dinitrotoluene	0.258 U	0.258 U	0.255 U	0.258 U	0.263 U	0.263 U	0.258 U	0.263 U	0.255 U	0.26 U	0.263 U	0.255 U	0.258 U	0.263 U
2-Nitrotoluene	0.258 U	0.258 U	0.255 U	0.258 U	0.263 U	0.263 U	0.258 U	0.263 U	0.255 U	0.26 U	0.263 U	0.255 U	0.258 U	0.263 U
3-Nitrotoluene	0.258 U	0.258 U	0.255 U	0.258 U	0.263 U	0.263 U	0.258 U	0.263 U	0.255 U	0.26 U	0.263 U	0.255 U	0.258 U	0.263 U
4-Amino-2,6-dinitrotoluene	0.258 U	0.258 U	0.255 U	0.258 U	0.263 U	0.263 U	0.258 U	0.263 U	0.255 U	0.26 U	0.263 U	0.255 U	0.258 U	0.263 U
4-Nitrotoluene	0.258 U	0.258 U	0.255 U	0.258 U	0.263 U	0.263 U	0.258 U	0.263 U	0.255 U	0.26 U	0.263 U	0.255 U	0.258 U	0.263 U
HMX	0.258 U	0.258 U	0.255 U	0.258 U	0.263 U	0.263 U	0.258 U	0.263 U	0.255 U	0.26 U	0.263 U	0.255 U	0.258 U	0.263 U
Nitrobenzene	0.258 U	0.258 U	0.255 U	0.258 U	0.263 U	0.263 U	0.258 U	0.263 U	0.255 U	0.26 U	0.263 U	0.255 U	0.258 U	0.263 U
Nitroglycerin	0.258 U	0.258 U	0.255 U	0.258 U	0.263 U	0.263 U	0.258 U	0.263 U	0.255 U	0.26 U	0.263 U	0.255 U	0.258 U	0.263 U
PETN	0.258 U	0.258 U	0.255 U	0.258 U	0.263 U	0.263 U	0.258 U	0.263 U	0.255 U	0.26 U	0.263 U	0.255 U	0.258 U	0.263 U
Perchlorate	0.4	0.4	0.48	0.4	0.4	0.2 U	0.1 J	0.18 J	0.2 U	0.13 J	0.2 U	0.12 J	0.6	0.47
RDX	0.258 U	0.258 U	0.255 U	0.258 U	0.263 U	0.263 U	0.258 U	0.263 U	0.255 U	0.26 U	0.263 U	0.255 U	0.258 U	0.263 U
Tetryl	0.258 U	0.258 U	0.255 U	0.258 U	0.263 U	0.263 U	0.258 U	0.263 U	0.255 U	0.26 U	0.263 U	0.255 U	0.258 U	0.263 U
Total Metals (UG/L)														
Antimony	0.25 U	0.25 U	0.25 U	0.25 U	0.25 U	0.25 U	0.25 U	0.25 U	1.72	0.25 U	0.25 U	0.25 U	0.25 U	0.25 U
Arsenic	0.473 J	0.41 J	0.495 J	0.854 J	0.779 J	0.467 J	0.468 J	1.21	31.8	0.383 J	0.978 J	0.25 U	1.23	0.406 J
Barium	155	151	170	61.9	58.9	33.4	133	151	71.8	92	33.2	124	50.8	30.3
Cadmium	0.25 U	0.25 U	1 U	1 U	0.25 U	0.25 U	0.25 U	0.25 U	1 U	0.25 U	0.25 U	0.25 U	0.25 U	0.25 U
Chromium	2.5 U	2.5 U	4.67 J	5.42 J	5.03 J	2.5 U	2.5 U	3.36 J	18.9	2.62 J	2.5 U	3.4 J	2.5 U	3.73 J
Copper	13.4 J	14.1 J	5 U	5 U	5 U	5 U	5 U	5 U	5 U	5 U	5 U	5 U	5 U	5 U
Lead	0.311 J	0.342 J	0.42 J	0.25 U	0.25 U	0.478 J	0.527 J	0.465 J	7.74	0.25 U	0.337 J	0.25 U	0.256 J	1.16
Mercury	0.1 U	0.1 U	0.1 U	0.1 U	0.1 U	0.1 U	0.1 U	0.1 U	0.1 U	0.1 U	0.1 U	0.1 U	0.1 U	0.1 U
Selenium	1.53 J	1.43 J	1.96 J	1.74 J	1.79 J	1.2 J	1.52 J	2.01	0.9 J	1.09 J	0.557 J	0.675 J	1.13 J	1.78 J
Silver	6 U	6 U	6 U	6 U	6 U	2 U	2 U	2 U	6 U	6 U	6 U	6 U	2 U	2 U
Zinc	20.7	21	13.3 J	14 J	14.2 J	5.92 J	8.53 J	5 U	12.8 J	9.31 J	36	10.2 J	5 U	9.18 J

Notes:

J - Analyte present, value may or may not be accurate or precise
NA - Not analyzed
R - Unreliable Result
U - The material was analyed for, but not detected
UJ - Analyte not detected, quantitation limit may be inaccurate

Camp Lejeune
UXO - 08
Groundwater Raw Analytical Results
January 2007

Station ID	IR78-GW01	IR78-GW02	IR78-GW04-1		IR78-GW11	IR78-GW42	IR78-GW56
Sample ID	MR08-GW01-07A	MR08-GW02-07A	MR08-GW04-1-07A	MR08-GW04-1D-07A	MR08-GW11-07A	MR08-GW42-07A	MR08-GW56-07A
Sample Date	01/08/07	01/09/07	01/08/07	01/08/07	01/09/07	01/08/07	01/09/06
Chemical Name							
Volatile Organic Compounds (UG/L)							
1,1,1-Trichloroethane	10 U	10 U	10 U	10 U	10 U	10 U	10 U
1,1,2,2-Tetrachloroethane	10 U	10 U	10 U	10 U	10 U	10 U	10 U
1,1,2-Trichloro-1,2,2-trifluoroethane(Freon-113)	10 U	10 U	10 U	10 U	10 U	10 U	10 U
1,1,2-Trichloroethane	10 U	10 U	10 U	10 U	10 U	10 U	10 U
1,1-Dichloroethane	10 U	10 U	10 U	10 U	10 U	110	10 U
1,1-Dichloroethene	10 U	10 U	10 U	10 U	10 U	11	10 U
1,2,4-Trichlorobenzene	10 U	10 U	10 U	10 U	10 U	10 U	10 U
1,2-Dibromo-3-chloropropane	10 U	10 U	10 U	10 U	10 U	10 U	10 U
1,2-Dibromoethane	10 U	10 U	10 U	10 U	10 U	10 U	10 U
1,2-Dichlorobenzene	10 U	10 U	10 U	10 U	10 U	10 U	10 U
1,2-Dichloroethane	10 U	10 U	10 U	10 U	10 U	10 U	10 U
1,2-Dichloropropane	10 U	10 U	10 U	10 U	10 U	10 U	10 U
1,3-Dichlorobenzene	10 U	10 U	10 U	10 U	10 U	10 U	10 U
1,4-Dichlorobenzene	10 U	10 U	10 U	10 U	10 U	10 U	10 U
2-Butanone	10 U	10 U	10 U	10 U	10 U	10 U	10 U
2-Hexanone	10 U	10 U	10 U	10 U	10 U	10 U	10 U
4-Methyl-2-pentanone	10 U	10 U	10 U	10 U	10 U	10 U	10 U
Acetone	11 U	3.2 U	10 U	10 U	10 U	2.8 U	10 U
Benzene	10 U	10 U	10 U	10 U	10 U	2.1 J	10 U
Bromodichloromethane	10 U	10 U	10 U	10 U	10 U	10 U	10 U
Bromoform	10 U	10 U	10 U	10 U	10 U	10 U	10 U
Bromomethane	10 U	10 U	10 U	10 U	10 U	10 U	10 U
Carbon disulfide	10 U	10 U	10 U	10 U	10 U	10 U	10 U
Carbon tetrachloride	10 U	10 U	10 U	10 U	10 U	10 U	10 U
Chlorobenzene	10 U	10 U	10 U	10 U	10 U	10 U	10 U
Chloroethane	10 U	10 U	10 U	10 U	10 U	10 U	10 U
Chloroform	10 U	10 U	10 U	10 U	10 U	10 U	10 U
Chloromethane	10 U	10 U	10 U	10 U	10 U	10 U	10 U
Cyclohexane	10 U	10 U	10 U	10 U	10 U	10 U	10 U
Dibromochloromethane	10 U	10 U	10 U	10 U	10 U	10 U	10 U
Dichlorodifluoromethane (Freon-12)	10 U	10 U	10 U	10 U	10 U	10 U	10 U
Ethylbenzene	10 U	10 U	10 U	10 U	10 U	10 U	10 U
Isopropylbenzene	10 U	10 U	10 U	10 U	10 U	10 U	10 U
Methyl acetate	10 U	10 U	10 U	10 U	10 U	10 U	10 U
Methyl-tert-butyl ether (MTBE)	10 U	10 U	2.2 J	2.6 J	10 U	10 U	10 U
Methylcyclohexane	10 U	10 U	10 U	10 U	10 U	10 U	10 U
Methylene chloride	10 U	10 U	10 U	10 U	10 U	1.9 U	10 U
Styrene	10 U	10 U	10 U	10 U	10 U	10 U	10 U
Tetrachloroethene	10 U	10 U	10 U	10 U	10 U	10 U	10 U
Toluene	10 U	10 U	10 U	10 U	10 U	1.7 J	10 U
Trichloroethene	8 J	10 U	10 U	10 U	10 U	120	3.6 J
Trichlorofluoromethane(Freon-11)	10 U	10 U	10 U	10 U	10 U	10 U	10 U
Vinyl chloride	10 U	10 U	10 U	10 U	10 U	110	10 U
Xylene, total	10 U	10 U	10 U	10 U	10 U	10 U	10 U
cis-1,2-Dichloroethene	5.7 J	10 U	10 U	10 U	10 U	580	1.8 J
cis-1,3-Dichloropropene	10 U	10 U	10 U	10 U	10 U	10 U	10 U
trans-1,2-Dichloroethene	10 U	10 U	10 U	10 U	10 U	1.2 J	10 U
trans-1,3-Dichloropropene	10 U	10 U	10 U	10 U	10 U	10 U	10 U
Semivolatile Organic Compounds (UG/L)							
1,1-Biphenyl	11 U	11 U	11 U	11 U	11 U	10 U	11 U
2,2'-Oxybis(1-chloropropane)	11 U	11 U	11 U	11 U	11 U	10 U	11 U
2,4,5-Trichlorophenol	11 U	11 U	11 U	11 U	11 U	10 U	11 U
2,4,6-Trichlorophenol	11 U	11 U	11 U	11 U	11 U	10 U	11 U
2,4-Dichlorophenol	11 U	11 U	11 U	11 U	11 U	10 U	11 U
2,4-Dimethylphenol	11 U	11 U	11 U	11 U	11 U	10 U	11 U
2,4-Dinitrophenol	11 U	11 U	11 U	11 U	11 U	10 U	11 U
2,4-Dinitrotoluene	11 U	11 U	11 U	11 U	11 U	10 U	11 U
2,6-Dinitrotoluene	11 U	11 U	11 U	11 U	11 U	10 U	11 U
2-Chloronaphthalene	11 U	11 U	11 U	11 U	11 U	10 U	11 U
2-Chlorophenol	11 U	11 U	11 U	11 U	11 U	10 U	11 U
2-Methylnaphthalene	11 U	11 U	11 U	11 U	11 U	10 U	11 U
2-Methylphenol	11 U	11 U	11 U	11 U	11 U	10 U	11 U
2-Nitroaniline	11 U	11 U	11 U	11 U	11 U	10 U	11 U
2-Nitrophenol	11 U	11 U	11 U	11 U	11 U	10 U	11 U
3,3'-Dichlorobenzidine	11 U	11 U	11 U	11 U	11 U	10 U	11 U
3-Nitroaniline	11 U	11 U	11 U	11 U	11 U	10 U	11 U

Camp Lejeune
UXO - 08
Groundwater Raw Analytical Results
January 2007

Station ID	IR78-GW01	IR78-GW02	IR78-GW04-1		IR78-GW11	IR78-GW42	IR78-GW56
Sample ID	MR08-GW01-07A	MR08-GW02-07A	MR08-GW04-1-07A	MR08-GW04-1D-07A	MR08-GW11-07A	MR08-GW42-07A	MR08-GW56-07A
Sample Date	01/08/07	01/09/07	01/08/07	01/08/07	01/09/07	01/08/07	01/09/06
Chemical Name							
4,6-Dinitro-2-methylphenol	11 U	11 U	11 U	11 U	11 U	10 U	11 U
4-Bromophenyl-phenylether	11 U	11 U	11 U	11 U	11 U	10 U	11 U
4-Chloro-3-methylphenol	11 U	11 U	11 U	11 U	11 U	10 U	11 U
4-Chloroaniline	11 U	11 U	11 U	11 U	11 U	10 U	11 U
4-Chlorophenyl-phenylether	11 U	11 U	11 U	11 U	11 U	10 U	11 U
4-Methylphenol	11 U	11 U	11 U	11 U	11 U	10 U	11 U
4-Nitroaniline	11 U	11 U	11 U	11 U	11 U	10 U	11 U
4-Nitrophenol	11 U	11 U	11 U	11 U	11 U	10 U	11 U
Acenaphthene	11 U	11 U	11 U	11 U	11 U	10 U	11 U
Acenaphthylene	11 U	11 U	11 U	11 U	11 U	10 U	11 U
Acetophenone	11 U	11 U	11 U	11 U	11 U	10 U	11 U
Anthracene	11 U	11 U	11 U	11 U	11 U	10 U	11 U
Atrazine	11 U	11 U	11 U	11 U	11 U	10 U	11 U
Benzaldehyde	11 U	11 U	11 U	11 U	11 U	10 U	11 U
Benzo(a)anthracene	11 U	11 U	11 U	11 U	11 U	10 U	11 U
Benzo(a)pyrene	11 U	11 U	11 U	11 U	11 U	10 U	11 U
Benzo(b)fluoranthene	11 U	11 U	11 U	11 U	11 U	10 U	11 U
Benzo(g,h,i)perylene	11 U	11 U	11 U	11 U	11 U	10 U	11 U
Benzo(k)fluoranthene	11 U	11 U	11 U	11 U	11 U	10 U	11 U
Butylbenzylphthalate	11 U	11 U	11 U	11 U	11 U	10 U	11 U
Caprolactam	4.2 J	4.3 J	11 U	11 U	11 U	10 U	11 U
Carbazole	11 U	11 U	11 U	11 U	11 U	10 U	11 U
Chrysene	11 U	11 U	11 U	11 U	11 U	10 U	11 U
Di-n-butylphthalate	5 U	4.3 U	2.9 U	4.5 U	3 U	5.9 U	4.6 U
Di-n-octylphthalate	11 U	11 U	11 U	11 U	11 U	10 U	11 U
Dibenz(a,h)anthracene	11 U	11 U	11 U	11 U	11 U	10 U	11 U
Dibenzofuran	11 U	11 U	11 U	11 U	11 U	10 U	11 U
Diethylphthalate	11 U	11 U	11 U	11 U	11 U	10 U	11 U
Dimethyl phthalate	11 U	11 U	11 U	11 U	11 U	10 U	11 U
Fluoranthene	11 U	11 U	11 U	11 U	11 U	10 U	11 U
Fluorene	11 U	11 U	11 U	11 U	11 U	10 U	11 U
Hexachlorobenzene	11 U	11 U	11 U	11 U	11 U	10 U	11 U
Hexachlorobutadiene	11 U	11 U	11 U	11 U	11 U	10 U	11 U
Hexachlorocyclopentadiene	11 U	11 U	11 U	11 U	11 U	10 U	11 U
Hexachloroethane	11 U	11 U	11 U	11 U	11 U	10 U	11 U
Indeno(1,2,3-cd)pyrene	11 U	11 U	11 U	11 U	11 U	10 U	11 U
Isophorone	11 U	11 U	11 U	11 U	11 U	10 U	11 U
Naphthalene	11 U	11 U	11 U	11 U	11 U	10 U	11 U
Nitrobenzene	11 U	11 U	11 U	11 U	11 U	10 U	11 U
Pentachlorophenol	11 U	11 U	11 U	11 U	11 U	10 U	11 U
Phenanthrene	11 U	11 U	11 U	11 U	11 U	10 U	11 U
Phenol	11 U	11 U	11 U	11 U	11 U	10 U	11 U
Pyrene	11 U	11 U	11 U	11 U	11 U	10 U	11 U
bis(2-Chloroethoxy)methane	11 U	11 U	11 U	11 U	11 U	10 U	11 U
bis(2-Chloroethyl)ether	11 U	11 U	11 U	11 U	11 U	10 U	11 U
bis(2-Ethylhexyl)phthalate	3.4 U	11 U	2.8 U	11 U	2.3 U	10 U	11 U
n-Nitroso-di-n-propylamine	11 U	11 U	11 U	11 U	11 U	10 U	11 U
n-Nitrosodiphenylamine	11 U	11 U	11 U	11 U	11 U	10 U	11 U
Pesticide/Polychlorinated Biphenyls (UG/L)							
4,4'-DDD	0.1 U	0.1 U	0.1 U	0.11 U	0.1 U	0.11 U	0.1 U
4,4'-DDE	0.1 U	0.1 U	0.1 U	0.11 U	0.1 U	0.11 U	0.1 U
4,4'-DDT	0.1 U	0.1 U	0.1 U	0.11 U	0.1 U	0.11 U	0.1 U
Aldrin	0.051 U	0.052 U	0.053 U	0.053 U	0.05 U	0.054 U	0.05 U
Aroclor-1016	1 U	1 U	1 U	1.1 U	1 U	1.1 U	1 U
Aroclor-1221	2 U	2.1 U	2.1 U	2.1 U	2 U	2.2 U	2 U
Aroclor-1232	1 U	1 U	1 U	1.1 U	1 U	1.1 U	1 U
Aroclor-1242	1 U	1 U	1 U	1.1 U	1 U	1.1 U	1 U
Aroclor-1248	1 U	1 U	1 U	1.1 U	1 U	1.1 U	1 U
Aroclor-1254	1 U	1 U	1 U	1.1 U	1 U	1.1 U	1 U
Aroclor-1260	1 U	1 U	1 U	1.1 U	1 U	1.1 U	1 U
Dieldrin	0.1 U	0.1 U	0.1 U	0.11 U	0.1 U	0.11 U	0.1 U
Endosulfan I	0.051 U	0.052 U	0.053 U	0.053 U	0.05 U	0.054 U	0.05 U
Endosulfan II	0.1 U	0.1 U	0.1 U	0.11 U	0.1 U	0.11 U	0.1 U
Endosulfan sulfate	0.1 U	0.1 U	0.1 U	0.11 U	0.1 U	0.11 U	0.1 U
Endrin	0.1 U	0.1 U	0.1 U	0.11 U	0.1 U	0.11 U	0.1 U
Endrin aldehyde	0.1 U	0.1 U	0.1 U	0.11 U	0.1 U	0.11 U	0.1 U
Endrin ketone	0.1 U	0.1 U	0.1 U	0.11 U	0.1 U	0.11 U	0.1 U
Heptachlor	0.051 U	0.052 U	0.053 U	0.053 U	0.05 U	0.054 U	0.05 U

Camp Lejeune
UXO - 08
Groundwater Raw Analytical Results
January 2007

Station ID	IR78-GW01	IR78-GW02	IR78-GW04-1		IR78-GW11	IR78-GW42	IR78-GW56
Sample ID	MR08-GW01-07A	MR08-GW02-07A	MR08-GW04-1-07A	MR08-GW04-1D-07A	MR08-GW11-07A	MR08-GW42-07A	MR08-GW56-07A
Sample Date	01/08/07	01/09/07	01/08/07	01/08/07	01/09/07	01/08/07	01/09/06
Chemical Name							
Heptachlor epoxide	0.051 U	0.052 U	0.053 U	0.053 U	0.05 U	0.054 U	0.05 U
Methoxychlor	0.51 U	0.52 U	0.53 U	0.53 U	0.5 U	0.54 U	0.5 U
Toxaphene	5.1 U	5.2 U	5.3 U	5.3 U	5 U	5.4 U	5 U
alpha-BHC	0.051 U	0.052 U	0.053 U	0.053 U	0.05 U	0.054 U	0.05 U
alpha-Chlordane	0.051 U	0.052 U	0.053 U	0.053 U	0.05 U	0.054 U	0.05 U
beta-BHC	0.051 U	0.052 U	0.053 U	0.053 U	0.05 U	0.054 U	0.05 U
delta-BHC	0.051 U	0.052 U	0.053 U	0.053 U	0.05 U	0.054 U	0.05 U
gamma-BHC (Lindane)	0.051 U	0.052 U	0.053 U	0.053 U	0.05 U	0.054 U	0.05 U
technical-Chlordane	0.051 U	0.052 U	0.053 U	0.053 U	0.05 U	0.054 U	0.05 U
Explosives (UG/L)							
1,3,5-Trinitrobenzene	0.43 U	0.42 UJ	0.46 UJ	0.42 UJ	0.41 UJ	0.45 U	0.41 UJ
1,3-Dinitrobenzene	0.12 J	0.42 UJ	0.46 UJ	0.39 J	0.41 UJ	0.13 J	0.41 UJ
2,4,6-Trinitrotoluene	0.43 U	0.42 UJ	0.46 UJ	0.42 UJ	0.41 UJ	0.45 U	0.41 UJ
2,4-Dinitrotoluene	0.43 U	0.42 UJ	0.46 UJ	0.42 UJ	0.41 UJ	0.45 U	0.41 UJ
2,6-Dinitrotoluene	0.43 U	0.42 UJ	0.46 UJ	0.42 UJ	0.41 UJ	0.45 U	0.41 UJ
2-Amino-4,6-dinitrotoluene	0.43 U	0.42 UJ	0.46 UJ	0.42 UJ	0.41 UJ	0.45 U	0.41 UJ
2-Nitrotoluene	0.43 U	0.42 UJ	0.46 UJ	0.42 UJ	0.41 UJ	0.45 U	0.41 UJ
3-Nitrotoluene	0.43 U	0.42 UJ	0.46 UJ	0.42 UJ	0.41 UJ	0.45 U	0.41 UJ
4-Amino-2,6-dinitrotoluene	0.43 U	0.42 UJ	0.12 J	0.12 J	0.41 UJ	0.38 J	0.41 UJ
4-Nitrotoluene	0.43 U	0.42 UJ	0.46 UJ	0.42 UJ	0.41 UJ	0.45 U	0.41 UJ
HMX	0.43 U	0.42 UJ	0.46 UJ	0.42 UJ	0.41 UJ	0.45 U	0.41 UJ
Nitrobenzene	0.43 U	0.42 UJ	0.46 UJ	0.42 UJ	0.41 UJ	0.45 U	0.41 UJ
Nitroglycerin	2.1 U	2.1 UJ	2.3 UJ	2.1 UJ	2.1 UJ	2.7 NJ	2.1 UJ
PETN	2.1 U	2.1 UJ	2.3 UJ	2.1 UJ	2.1 UJ	2.2 U	2.1 UJ
Perchlorate	0.4 U	0.13	0.4 U	0.4 U	0.05	0.18	0.4 U
RDX	0.43 U	0.42 UJ	0.46 UJ	0.42 UJ	0.41 UJ	0.45 U	0.41 UJ
Tetryl	0.43 U	0.42 UJ	0.46 UJ	0.42 UJ	0.41 UJ	0.45 U	0.41 UJ
Total Metals (UG/L)							
Aluminum	3,120	69 J	613	573	619	200 U	200 U
Antimony	60 U	60 U	60 U	60 U	60 U	60 U	60 U
Arsenic	16.4	10 U	3.8 J	3.1 J	10 U	10 U	10 U
Barium	35.4 J	53.9 J	55.8 J	55 J	21.5 J	92.2 J	37.4 J
Beryllium	5 U	5 U	5 U	5 U	5 U	5 U	5 U
Cadmium	5 U	5 U	5 U	5 U	5 U	5 U	5 U
Calcium	62,200	56,500	32,800	32,600	17,700	89,400	130,000
Chromium	3.7 J	10 U	10 U	2.4 J	10 U	10 U	10 U
Cobalt	50 U	50 U	50 U	50 U	50 U	50 U	50 U
Copper	25 U	25 U	25 U	25 U	25 U	25 U	25 U
Cyanide	10 U	10 U	10 U	10 U	10 U	10 U	10 U
Iron	71,300	3,490	6,140	6,080	183	8,550	100 U
Lead	10 U	10 U	10 U	10 U	10 U	10 U	10 U
Magnesium	2,770 J	3,440 J	2,600 J	2,570 J	1,440 J	3,570 J	3,470 J
Manganese	28.7	70	74.4	74	15 U	71.7	14.3 J
Mercury	0.2 UJ	0.2 UJ	0.2 UJ	0.2 UJ	0.2 UJ	0.2 UJ	0.2 UJ
Nickel	40 U	40 U	40 U	40 U	40 U	40 U	40 U
Potassium	5,000 U	1,290 J	3,970 J	3,910 J	5,000 U	1,830 J	1,510 J
Selenium	35 U	35 U	35 U	35 U	35 U	35 U	35 U
Silver	10 U	10 U	10 U	10 U	10 U	10 U	10 U
Sodium	12,300	6,130	8,530	8,310	1,500 J	11,500	8,310
Thallium	25 U	25 U	25 U	25 U	25 U	25 U	25 U
Vanadium	34.5 J	50 U	50 U	50 U	50 U	8.8 J	50 U
Zinc	60 U	60 U	60 U	60 U	60 U	60 U	60 U
Dissolved Metals (UG/L)							
Aluminum	200 U	200 U	200 U	200 U	118 J	200 U	200 U
Antimony	60 U	60 U	60 U	60 U	60 U	60 U	60 U
Arsenic	10 U	10 U	10 U	10 U	10 U	10 U	10 U
Barium	33.8 J	55.2 J	54.5 J	53.5 J	21.4 J	93.4 J	37.8 J
Beryllium	5 U	5 U	5 U	5 U	5 U	5 U	5 U
Cadmium	5 U	5 U	5 U	5 U	5 U	5 U	5 U
Calcium	61,900	55,400	32,100	31,900	17,700	92,100	130,000
Chromium	10 U	10 U	10 U	10 U	10 U	10 U	10 U
Cobalt	50 U	50 U	50 U	50 U	50 U	50 U	50 U
Copper	25 U	25 U	25 U	25 U	25 U	25 U	25 U
Iron	35,300	2,900	5,840	5,800	100 U	8,580	100 U
Lead	10 U	10 U	10 U	10 U	10 U	10 U	10 U
Magnesium	2,770 J	3,390 J	2,530 J	2,510 J	1,450 J	3,670 J	3,470 J

Camp Lejeune
UXO - 08
Groundwater Raw Analytical Results
January 2007

Station ID	IR78-GW01	IR78-GW02	IR78-GW04-1		IR78-GW11	IR78-GW42	IR78-GW56
Sample ID	MR08-GW01-07A	MR08-GW02-07A	MR08-GW04-1-07A	MR08-GW04-1D-07A	MR08-GW11-07A	MR08-GW42-07A	MR08-GW56-07A
Sample Date	01/08/07	01/09/07	01/08/07	01/08/07	01/09/07	01/08/07	01/09/06
Chemical Name							
Manganese	29	67.9	73.4	72.5	15 U	75.6	13.3 J
Mercury	0.2 UJ	0.2 UJ	0.2 UJ	0.2 UJ	0.2 UJ	0.2 UJ	0.2 UJ
Nickel	40 U	40 U	40 U	40 U	40 U	40 U	40 U
Potassium	5,000 U	1,370 J	3,980 J	3,930 J	5,000 U	1,850 J	1,610 J
Selenium	35 U	35 U	35 U	35 U	35 U	35 U	35 U
Silver	10 U	10 U	10 U	10 U	10 U	10 U	10 U
Sodium	12,300	6,380	8,560	8,350	1,550 J	11,700	8,690
Thallium	25 U	25 U	25 U	25 U	25 U	25 U	25 U
Vanadium	50 U	50 U	50 U	50 U	50 U	8.7 J	50 U
Zinc	60 U	60 U	60 U	60 U	60 U	5.8 J	60 U
Total Petroleum Hydrocarbons (UG/L)							
TPH-gas range	100 U	100 U	100 U	100 U	100 U	210	100 U
Total Petroleum Hydrocarbons, C10-C40	220	100 U	770	960	110 U	690	100 U

Notes:

J - Analyte present, value may or may not be accurate or precise

NA - Not analyzed

NJ - Qualitative identification questionable due to poor resolution, presumptively present at approximate quantity

U - The material was analyed for, but not detected

UG/L - Micrograms per liter

UJ - Analyte not detected, quantitation limit may be inaccurate

Station ID	MR08-SS21	MR08-SS22	MR08-SS23		MR08-SS24	MR08-SS25	MR08-SS26	MR08-SS28	MR08-SS29
Sample ID	MR08-IS21-9-11-07A	MR08-IS22-5-7-07A	MR08-IS23-6-8-07A	MR08-IS23D-6-8-07A	MR08-IS24-2-4-07A	MR08-IS25-4-6-07A	MR08-IS26-2-4-07A	MR08-IS28-2-4-07A	MR08-IS29-2-4-07A
Sample Date	01/10/07	01/10/07	01/10/07	01/10/07	01/10/07	01/10/07	01/10/07	01/10/07	01/10/07
Chemical Name									
Volatile Organic Compounds (UG/KG)									
1,1,1-Trichloroethane	14 U	12 U	12 U	12 U	13 U	22 U	12 U	10 U	13 U
1,1,2,2-Tetrachloroethane	14 U	12 U	12 U	12 U	13 U	22 U	12 U	10 U	13 U
1,1,2-Trichloro-1,2,2-trifluoroethane(Freon-113)	14 U	12 U	12 U	12 U	13 U	22 U	12 U	10 U	13 U
1,1,2-Trichloroethane	14 U	12 U	12 U	12 U	13 U	22 U	12 U	10 U	13 U
1,1-Dichloroethane	14 U	12 U	12 U	12 U	13 U	22 U	12 U	10 U	13 U
1,1-Dichloroethene	14 U	12 U	12 U	12 U	13 U	22 U	12 U	10 U	13 U
1,2,4-Trichlorobenzene	14 U	12 U	12 U	12 U	13 U	22 U	12 U	10 U	13 U
1,2-Dibromo-3-chloropropane	14 U	12 U	12 U	12 U	13 U	22 U	12 U	10 U	13 U
1,2-Dibromoethane	14 U	12 U	12 U	12 U	13 U	22 U	12 U	10 U	13 U
1,2-Dichlorobenzene	14 U	12 U	12 U	12 U	13 U	22 U	12 U	10 U	13 U
1,2-Dichloroethane	14 U	12 U	12 U	12 U	13 U	22 U	12 U	10 U	13 U
1,2-Dichloropropane	14 U	12 U	12 U	12 U	13 U	22 U	12 U	10 U	13 U
1,3-Dichlorobenzene	14 U	12 U	12 U	12 U	13 U	22 U	12 U	10 U	13 U
1,4-Dichlorobenzene	14 U	12 U	12 U	12 U	13 U	22 U	12 U	10 U	13 U
2-Butanone	14 U	12 U	12 U	12 U	13 U	22 U	12 U	10 U	13 U
2-Hexanone	14 U	12 U	12 U	12 U	13 U	22 U	12 U	10 U	13 U
4-Methyl-2-pentanone	14 U	12 U	12 U	12 U	13 U	22 U	12 U	10 U	13 U
Acetone	18 U	15 U	20 U	25 U	24 U	24 U	11 U	56 U	16 U
Benzene	14 U	12 U	12 U	12 U	13 U	22 U	12 U	10 U	13 U
Bromodichloromethane	14 U	12 U	12 U	12 U	13 U	22 U	12 U	10 U	13 U
Bromoform	14 U	12 U	12 U	12 U	13 U	22 U	12 U	10 U	13 U
Bromomethane	14 U	12 U	12 U	12 U	13 U	22 U	12 U	10 U	13 U
Carbon disulfide	14 U	12 U	12 U	12 U	2.5 U	22 U	12 U	10 U	13 U
Carbon tetrachloride	14 U	12 U	12 U	12 U	13 U	22 U	12 U	10 U	13 U
Chlorobenzene	14 U	12 U	12 U	12 U	13 U	22 U	12 U	10 U	13 U
Chloroethane	14 U	12 U	12 U	12 U	13 U	22 U	12 U	10 U	13 U
Chloroform	14 U	12 U	12 U	12 U	13 U	22 U	12 U	10 U	13 U
Chloromethane	14 U	12 U	12 U	12 U	13 U	22 U	12 U	10 U	13 U
Cyclohexane	14 U	12 U	12 U	12 U	13 U	22 U	12 U	10 U	13 U
Dibromochloromethane	14 U	12 U	12 U	12 U	13 U	22 U	12 U	10 U	13 U
Dichlorodifluoromethane (Freon-12)	14 U	12 U	12 U	12 U	13 U	22 U	12 U	10 U	13 U
Ethylbenzene	14 U	12 U	12 U	12 U	13 U	22 U	12 U	10 U	13 U
Isopropylbenzene	14 U	12 U	12 U	12 U	13 U	22 U	12 U	10 U	13 U
Methyl acetate	14 U	12 U	12 U	12 U	13 U	22 U	12 U	10 U	13 U
Methyl-tert-butyl ether (MTBE)	14 U	12 U	12 U	12 U	13 U	22 U	12 U	10 U	13 U
Methylcyclohexane	14 U	12 U	12 U	12 U	13 U	22 U	12 U	10 U	13 U
Methylene chloride	19 U	21 U	16 U	22 U	17 U	31 U	16 U	18 U	18 U
Styrene	14 U	12 U	12 U	12 U	13 U	22 U	12 U	10 U	13 U
Tetrachloroethene	14 U	12 U	12 U	12 U	13 U	22 U	12 U	10 U	13 U
Toluene	14 U	12 U	12 U	12 U	13 U	22 U	12 U	10 U	13 U
Trichloroethene	14 U	12 U	12 U	12 U	13 U	22 U	12 U	10 U	13 U
Trichlorofluoromethane(Freon-11)	14 U	12 U	12 U	12 U	13 U	22 U	12 U	10 U	13 U
Vinyl chloride	14 U	12 U	12 U	12 U	13 U	22 U	12 U	10 U	13 U
Xylene, total	14 U	12 U	12 U	12 U	13 U	22 U	12 U	10 U	13 U
cis-1,2-Dichloroethene	14 U	12 U	12 U	12 U	13 U	22 U	12 U	10 U	13 U
cis-1,3-Dichloropropene	14 U	12 U	12 U	12 U	13 U	22 U	12 U	10 U	13 U
trans-1,2-Dichloroethene	14 U	12 U	12 U	12 U	13 U	22 U	12 U	10 U	13 U
trans-1,3-Dichloropropene	14 U	12 U	12 U	12 U	13 U	22 U	12 U	10 U	13 U
Semivolatile Organic Compounds (UG/KG)									
1,1-Biphenyl	350 U	380 U	390 U	390 U	370 U	420 U	360 U	370 U	350 U
2,2'-Oxybis(1-chloropropane)	350 U	380 U	390 U	390 U	370 U	420 U	360 U	370 U	350 U
2,4,5-Trichlorophenol	350 U	380 U	390 U	390 U	370 U	420 U	360 U	370 U	350 U
2,4,6-Trichlorophenol	350 U	380 U	390 U	390 U	370 U	420 U	360 U	370 U	350 U
2,4-Dichlorophenol	350 U	380 U	390 U	390 U	370 U	420 U	360 U	370 U	350 U
2,4-Dimethylphenol	350 U	380 U	390 U	390 U	370 U	420 U	360 U	370 U	350 U
2,4-Dinitrophenol	690 UJ	760 UJ	780 UJ	770 UJ	740 UJ	840 UJ	720 UJ	740 UJ	700 UJ
2,4-Dinitrotoluene	350 U	380 U	390 U	390 U	370 U	420 U	360 U	370 U	350 U
2,6-Dinitrotoluene	350 U	380 U	390 U	390 U	370 U	420 U	360 U	370 U	350 U
2-Chloronaphthalene	350 U	380 U	390 U	390 U	370 U	420 U	360 U	370 U	350 U
2-Chlorophenol	350 U	380 U	390 U	390 U	370 U	420 U	360 U	370 U	350 U
2-Methylnaphthalene	350 U	380 U	390 U	390 U	370 U	420 U	360 U	370 U	350 U
2-Methylphenol	350 U	380 U	390 U	390 U	370 U	420 U	360 U	370 U	350 U
2-Nitroaniline	350 U	380 U	390 U	390 U	370 U	420 U	360 U	370 U	350 U
2-Nitrophenol	350 U	380 U	390 U	390 U	370 U	420 U	360 U	370 U	350 U
3,3'-Dichlorobenzidine	350 U	380 U	390 U	390 U	370 U	420 U	360 U	370 U	350 U
3-Nitroaniline	350 U	380 U	390 U	390 U	370 U	420 U	360 U	370 U	350 U
4,6-Dinitro-2-methylphenol	690 U	760 U	780 U	770 U	740 U	840 U	720 U	740 U	700 U
4-Bromophenyl-phenylether	350 U	380 U	390 U	390 U	370 U	420 U	360 U	370 U	350 U
4-Chloro-3-methylphenol	350 U	380 U	390 U	390 U	370 U	420 U	360 U	370 U	350 U
4-Chloroaniline	350 U	380 U	390 U	390 U	370 U	420 U	360 U	370 U	350 U
4-Chlorophenyl-phenylether	350 U	380 U	390 U	390 U	370 U	420 U	360 U	370 U	350 U
4-Methylphenol	690 U	760 U	780 U	770 U	740 U	840 U	720 U	740 U	700 U
4-Nitroaniline	350 U	380 U	390 U	390 U	370 U	420 U	360 U	370 U	350 U
4-Nitrophenol	690 U	760 U	780 U	770 U	740 U	840 U	720 U	740 U	700 U
Acenaphthene	350 U	380 U	390 U	390 U	370 U	420 U	360 U	370 U	350 U
Acenaphthylene	350 U	380 U	390 U	390 U	370 U	420 U	360 U	370 U	350 U

Station ID	MR08-SS21	MR08-SS22	MR08-SS23		MR08-SS24	MR08-SS25	MR08-SS26	MR08-SS28	MR08-SS29
Sample ID	MR08-IS21-9-11-07A	MR08-IS22-5-7-07A	MR08-IS23-6-8-07A	MR08-IS23D-6-8-07A	MR08-IS24-2-4-07A	MR08-IS25-4-6-07A	MR08-IS26-2-4-07A	MR08-IS28-2-4-07A	MR08-IS29-2-4-07A
Sample Date	01/10/07	01/10/07	01/10/07	01/10/07	01/10/07	01/10/07	01/10/07	01/10/07	01/10/07
Chemical Name									
Acetophenone	350 U	380 U	390 U	390 U	370 U	420 U	360 U	370 U	350 U
Anthracene	350 U	380 U	390 U	390 U	370 U	420 U	360 U	370 U	350 U
Atrazine	350 U	380 U	390 U	390 U	370 U	420 U	360 U	370 U	350 U
Benzaldehyde	350 U	380 U	390 U	390 U	370 U	420 U	360 U	370 U	350 U
Benzo(a)anthracene	350 U	380 U	390 U	390 U	370 U	420 U	1,000	370 U	350 U
Benzo(a)pyrene	350 U	380 U	390 U	390 U	370 U	420 U	2,500 J	370 U	350 U
Benzo(b)fluoranthene	350 U	380 U	390 U	390 U	370 U	420 U	3,300 J	370 U	350 U
Benzo(g,h,i)perylene	350 U	380 U	390 U	390 U	370 U	420 U	2,200 J	370 U	350 U
Benzo(k)fluoranthene	350 U	380 U	390 U	390 U	370 U	420 U	1,400 J	370 U	350 U
Butylbenzylphthalate	350 U	380 U	390 U	390 U	370 U	420 U	360 U	370 U	350 U
Caprolactam	350 U	380 U	390 U	390 U	370 U	420 U	360 U	370 U	350 U
Carbazole	350 U	380 U	390 U	390 U	370 U	420 U	360 U	370 U	350 U
Chrysene	350 U	380 U	390 U	390 U	370 U	420 U	1,600 J	370 U	350 U
Di-n-butylphthalate	350 U	380 U	390 U	390 U	370 U	420 U	360 U	370 U	350 U
Di-n-octylphthalate	690 U	760 U	780 U	770 U	740 U	840 U	720 U	740 U	700 U
Dibenz(a,h)anthracene	350 U	380 U	390 U	390 U	370 U	420 U	600 J	370 U	350 U
Dibenzofuran	350 U	380 U	390 U	390 U	370 U	420 U	360 U	370 U	350 U
Diethylphthalate	350 U	380 U	390 U	390 U	370 U	420 U	360 U	370 U	350 U
Dimethyl phthalate	350 U	380 U	390 U	390 U	370 U	420 U	360 U	370 U	350 U
Fluoranthene	350 U	380 U	390 U	390 U	370 U	420 U	1,100	370 U	350 U
Fluorene	350 U	380 U	390 U	390 U	370 U	420 U	360 U	370 U	350 U
Hexachlorobenzene	350 U	380 U	390 U	390 U	370 U	420 U	360 U	370 U	350 U
Hexachlorobutadiene	350 U	380 U	390 U	390 U	370 U	420 U	360 U	370 U	350 U
Hexachlorocyclopentadiene	350 U	380 U	390 U	390 U	370 U	420 U	360 U	370 U	350 U
Hexachloroethane	350 U	380 U	390 U	390 U	370 U	420 U	360 U	370 U	350 U
Indeno(1,2,3-cd)pyrene	350 U	380 U	390 U	390 U	370 U	420 U	2,500 J	370 U	350 U
Isophorone	350 U	380 U	390 U	390 U	370 U	420 U	360 U	370 U	350 U
Naphthalene	350 U	380 U	390 U	390 U	370 U	420 U	360 U	370 U	350 U
Nitrobenzene	350 U	380 U	390 U	390 U	370 U	420 U	360 U	370 U	350 U
Pentachlorophenol	690 U	760 U	780 U	770 U	740 U	840 U	720 U	740 U	700 U
Phenanthrene	350 U	380 U	390 U	390 U	370 U	420 U	360 U	370 U	350 U
Phenol	690 U	760 U	780 U	770 U	740 U	840 U	720 U	740 U	700 U
Pyrene	350 U	380 U	390 U	390 U	370 U	420 U	940	370 U	350 U
bis(2-Chloroethoxy)methane	350 U	380 U	390 U	390 U	370 U	420 U	360 U	370 U	350 U
bis(2-Chloroethyl)ether	350 U	380 U	390 U	390 U	370 U	420 U	360 U	370 U	350 U
bis(2-Ethylhexyl)phthalate	350 U	380 U	390 U	390 U	370 U	420 U	360 U	370 U	350 U
n-Nitroso-di-n-propylamine	350 U	380 U	390 U	390 U	370 U	420 U	360 U	370 U	350 U
n-Nitrosodiphenylamine	350 U	380 U	390 U	390 U	370 U	420 U	360 U	370 U	350 U
Pesticide/Polychlorinated Biphenyls (UG/KG)									
4,4'-DDD	3.5 U	3.7 U	4 U	3.9 U	4.6	160	6.4	17 J	3.6 U
4,4'-DDE	3.5 U	3.7 U	4 U	3.9 U	8.2	4.3 U	23	3.7 U	3.6 U
4,4'-DDT	3.5 U	3.7 U	4 U	3.9 U	9.8	4.3 U	38	3.7 U	3.6 U
Aldrin	1.7 U	1.8 U	2 U	1.9 U	1.8 U	2.1 U	1.8 U	1.9 U	1.8 U
Aroclor-1016	35 U	37 U	40 U	39 U	37 U	43 U	37 U	37 U	36 U
Aroclor-1221	70 U	73 U	79 U	78 U	73 U	86 U	74 U	75 U	72 U
Aroclor-1232	35 U	37 U	40 U	39 U	37 U	43 U	37 U	37 U	36 U
Aroclor-1242	35 U	37 U	40 U	39 U	37 U	43 U	37 U	37 U	36 U
Aroclor-1248	35 U	37 U	40 U	39 U	37 U	43 U	37 U	37 U	36 U
Aroclor-1254	35 U	37 U	40 U	39 U	37 U	43 U	37 U	37 U	36 U
Aroclor-1260	35 U	37 U	40 U	39 U	37 U	43 U	37 U	37 U	36 U
Dieldrin	3.5 U	3.7 U	4 U	3.9 U	3.7 U	4.3 U	3.7 U	2.9 J	3.6 U
Endosulfan I	1.7 U	1.8 U	2 U	1.9 U	1.8 U	2.1 U	1.2 J	1.9 U	1.8 U
Endosulfan II	3.5 U	3.7 U	4 U	3.9 U	3.7 U	4.3 U	2 J	3.7 U	3.6 U
Endosulfan sulfate	3.5 U	3.7 U	4 U	3.9 U	3.7 U	4.3 U	2.2 J	3.7 U	3.6 U
Endrin	3.5 U	3.7 U	4 U	3.9 U	2.8 J	4.3 U	7.9	3.7 U	3.6 U
Endrin aldehyde	3.5 U	3.7 U	4 U	3.9 U	3.7 U	4.3 U	3.7 U	3.7 U	3.6 U
Endrin ketone	3.5 U	3.7 U	4 U	3.9 U	3.7 U	4.3 U	3.7 U	3.7 U	3.6 U
Heptachlor	1.7 U	1.8 U	2 U	1.9 U	1.8 U	2.1 U	1.8 U	1.9 U	1.8 U
Heptachlor epoxide	1.7 U	1.8 U	2 U	1.9 U	1.8 U	2.1 U	1.8 U	1.9 U	1.8 U
Methoxychlor	17 U	18 U	20 U	19 U	18 U	21 U	18 U	19 U	18 U
Toxaphene	170 U	180 U	200 U	190 U	180 U	210 U	180 U	190 U	180 U
alpha-BHC	1.7 U	1.8 U	2 U	1.9 U	1.8 U	2.1 U	1.8 U	1.9 U	1.8 U
alpha-Chlordane	1.7 U	1.8 U	2 U	1.9 U	1 J	2.1 U	1.8 U	1 J	1.8 U
beta-BHC	1.7 U	1.8 U	2 U	1.9 U	1.8 U	2.1 U	1.8 U	1.9 U	1.8 U
delta-BHC	1.7 U	1.8 U	2 U	1.9 U	1.8 U	2.1 U	1.8 U	1.9 U	1.8 U
gamma-BHC (Lindane)	1.7 U	1.8 U	2 U	1.9 U	1.8 U	2.1 U	1.8 U	1.9 U	1.8 U
technical-Chlordane	1.7 U	1.8 U	2 U	1.9 U	1.8 U	1.4 J	0.96 J	1.4 J	1.8 U
Explosives (UG/KG)									
1,3,5-Trinitrobenzene	420 U	430 U	480 U	430 U	480 U	430 U	480 U	500 U	430 U
1,3-Dinitrobenzene	420 U	430 U	480 U	430 U	480 U	430 U	480 U	500 U	430 U
2,4,6-Trinitrotoluene	420 U	430 U	480 U	430 U	480 U	430 U	480 U	500 U	430 U
2,4-Dinitrotoluene	420 U	430 U	480 U	430 U	480 U	430 U	480 U	500 U	430 U
2,6-Dinitrotoluene	420 U	430 U	480 U	430 U	480 U	430 U	480 U	500 U	430 U
2-Amino-4,6-dinitrotoluene	420 U	430 U	480 U	430 U	480 U	430 U	480 U	500 U	430 U
2-Nitrotoluene	420 U	430 U	480 U	430 U	480 U	430 U	480 U	500 U	430 U
3-Nitrotoluene	420 U	430 U	480 U	430 U	480 U	430 U	480 U	500 U	430 U
4-Amino-2,6-dinitrotoluene	420 U	430 U	480 U	430 U	480 U	430 U	480 U	500 U	430 U

Station ID	MR08-SS21	MR08-SS22	MR08-SS23		MR08-SS24	MR08-SS25	MR08-SS26	MR08-SS28	MR08-SS29
Sample ID	MR08-IS21-9-11-07A	MR08-IS22-5-7-07A	MR08-IS23-6-8-07A	MR08-IS23D-6-8-07A	MR08-IS24-2-4-07A	MR08-IS25-4-6-07A	MR08-IS26-2-4-07A	MR08-IS28-2-4-07A	MR08-IS29-2-4-07A
Sample Date	01/10/07	01/10/07	01/10/07	01/10/07	01/10/07	01/10/07	01/10/07	01/10/07	01/10/07
Chemical Name									
4-Nitrotoluene	420 U	430 U	480 U	430 U	480 U	430 U	480 U	500 U	430 U
HMX	420 U	430 U	480 U	430 U	480 U	430 U	480 U	500 U	430 U
Nitrobenzene	420 U	430 U	480 U	430 U	480 U	430 U	480 U	500 U	430 U
Nitroglycerin	2,100 U	2,200 U	2,400 U	2,200 U	2,400 U	2,200 U	2,400 U	2,500 U	2,200 U
PETN	2,100 U	2,200 U	2,400 U	2,200 U	2,400 U	2,200 U	2,400 U	2,500 U	2,200 U
RDX	420 U	430 U	480 U	430 U	480 U	430 U	480 U	500 U	430 U
Tetryl	420 U	430 U	480 U	430 U	480 U	430 U	480 U	500 U	430 U
Total Metals (MG/KG)									
Aluminum	1,960	15,000	3,910	3,880	12,000	6,780	5,290	9,690	3,750
Antimony	7.1 R	7.6 R	6.5 R	7.1 R	3.8 J-	6.7 R	3.6 J-	7.3 R	6.1 R
Arsenic	0.59 J	1.5	0.37 J	0.94 J	2.8	1.9	1.8	0.97 J	1 U
Barium	2.4 J	16.7 J	4.5 J	6.6 J	38.8	12.1 J	10.7 J	15.8 J	4.4 J
Beryllium	0.59 U	0.63 U	0.54 U	0.59 U	0.29 J	0.18 J	0.55 U	0.61 U	0.51 U
Cadmium	0.59 U	0.2 J	0.54 U	0.59 U	0.99	0.56 U	0.21 J	0.61 U	0.51 U
Calcium	591 UL	630 UL	435 J-	1,180 J-	103,000 J-	915 J-	67,900 J-	1,200 J-	339 J-
Chromium	5 J	16 J	5.5 J	5.9 J	21.9 J	9.2 J	9.4 J	10.2 J	5.3 J
Cobalt	5.9 U	6.3 U	5.4 U	5.9 U	1.6 J	1.4 J	1 J	6.1 U	5.1 U
Copper	0.68 J	1.9 J	0.56 J	1.4 J	23.7	1.1 J	4.5	1.5 J	0.57 J
Cyanide	0.3 U	0.32 U	0.3 U	0.3 U	0.28 U	0.28 U	0.28 U	0.3 U	0.27 U
Iron	3,200 J	8,380 J	908 J	1,260 J	7,780 J	4,070 J	2,430 J	3,050 J	1,010 J
Lead	2.5	6.1	3.1	4.8	248	5.2	14.7	6	3.1
Magnesium	591 U	444 J	145 J	158 J	1,860	378 J	1,080	288 J	125 J
Manganese	2.2 J	6 J	4.4 J	7.3 J	39.5 J	12.8 J	52.5 J	8.2 J	2.9 J
Mercury	0.03 U	0.04 U	0.04 U	0.03 U	0.02 J	0.02 J	0.04	0.02 J	0.04 U
Nickel	4.7 U	2 J	0.63 J	0.89 J	7.2	2.5 J	4 J	1.7 J	4.1 U
Potassium	123 J	430 J	201 J	261 J	665	530 J	369 J	324 J	111 J
Selenium	4.1 U	4.4 U	3.8 U	4.2 U	0.93 J	3.9 U	3.9 U	4.3 U	3.6 U
Silver	1.2 U	1.3 U	1.1 U	1.2 U	1.1 U	1.1 U	1.1 U	1.2 U	1 U
Sodium	591 U	630 U	544 U	594 U	246 J	560 U	135 J	610 U	507 U
Thallium	3 U	3.1 U	2.7 U	3 U	2.8 U	2.8 U	2.8 U	3 U	2.5 U
Vanadium	5.2 J	22.7	7	8.1	20.9	12.3	12.1	12.1	4.5 J
Zinc	2 U	11.8	2.4 U	2.8 U	233	11.3	21	4.2 U	2 U
Wet Chemistry (MG/KG)									
Carbon	1,600 UJ	1,250 J	584 J	580 J	3,190 J	4,380 J	3,780 J	10,700 J	2,140 J
Total Petroleum Hydrocarbons (MG/KG)									
TPH-gas range	7.2 U	5.4 U	10 U	6.3 U	6.2 U	6.3 U	6 U	5.1 U	5.4 U
Total Petroleum Hydrocarbons, C10-C40	4.2 U	4.6 U	4.7 U	4.7 U	29	40	140	21	6.3

Notes:

J- - Analyte present, value may be biased low, actual value may be highes

J - Analyte present, value may or may not be accurate or precise

MG/KG - Milligrams per kilogram

NA - Not analyzed

R - Unreliable Result

U - The material was analyed for, but not detected

UG/KG - Micrograms per kilogram

UJ - Analyte not detected, quantitation limit may be inaccurate

UL - Analyte not detected, quantitation limit is probably higher

Camp Lejeune
UXO - 08
Surface Soil Raw Analytical Results
January 2007

Station ID	MR08-SS01	MR08-SS02	MR08-SS03	MR08-SS04	MR08-SS05	MR08-SS06		MR08-SS07	MR08-SS08	MR08-SS09	MR08-SS10	MR08-SS11	MR08-SS12	MR08-SS13	MR08-SS14	MR08-SS15
Sample ID	MR08-SS01-0-1-07A	MR08-SS02-0-1-07A	MR08-SS03-0-1-07A	MR08-SS04-0-1-07A	MR08-SS05-0-1-07A	MR08-SS06-0-1-07A	MR08-SS06D-0-1-07A	MR08-SS07-0-1-07A	MR08-SS08-0-1-07A	MR08-SS09-0-1-07A	MR08-SS10-0-1-07A	MR08-SS11-0-1-07A	MR08-SS12-0-1-07A	MR08-SS13-0-1-07A	MR08-SS14-0-1-07A	MR08-SS15-0-1-07A
Sample Date	01/10/07	01/10/07	01/10/07	01/10/07	01/10/07	01/10/07	01/10/07	01/10/07	01/10/07	01/10/07	01/10/07	01/10/07	01/10/07	01/10/07	01/10/07	01/10/07
Chemical Name																
Explosives (UG/KG)																
1,3,5-Trinitrobenzene	430 U	450 U	480 U	430 U	500 U	450 U	430 U	450 U	480 U	450 U	430 U	500 U	450 U	450 U	450 U	450 U
1,3-Dinitrobenzene	430 U	450 U	480 U	430 U	500 U	450 U	430 U	450 U	480 U	450 U	430 U	500 U	450 U	450 U	450 U	450 U
2,4,6-Trinitrotoluene	430 U	450 U	480 U	430 U	500 U	450 U	430 U	450 U	480 U	450 U	430 U	500 U	450 U	450 U	450 U	450 U
2,4-Dinitrotoluene	430 U	450 U	480 U	430 U	500 U	450 U	430 U	450 U	480 U	450 U	430 U	500 U	450 U	450 U	450 U	450 U
2,6-Dinitrotoluene	430 U	450 U	480 U	430 U	500 U	450 U	430 U	450 U	480 U	450 U	430 U	500 U	450 U	450 U	450 U	450 U
2-Amino-4,6-dinitrotoluene	430 U	450 U	480 U	430 U	500 U	450 U	430 U	450 U	480 U	450 U	430 U	500 U	450 U	450 U	450 U	450 U
2-Nitrotoluene	430 U	450 U	480 U	430 U	500 U	450 U	430 U	450 U	480 U	450 U	430 U	200 J	450 U	450 U	450 U	450 U
3-Nitrotoluene	430 U	450 U	390 J	430 U	500 U	450 U	430 U	450 U	480 U	450 U	430 U	500 U	450 U	450 U	450 U	450 U
4-Amino-2,6-dinitrotoluene	430 U	450 U	480 U	430 U	500 U	450 U	430 U	450 U	480 U	450 U	430 U	500 U	450 U	450 U	450 U	450 U
4-Nitrotoluene	430 U	450 U	480 U	430 U	500 U	450 U	430 U	450 U	480 U	450 U	430 U	500 U	450 U	450 U	450 U	450 U
HMX	430 U	450 U	480 U	430 U	500 U	450 U	430 U	450 U	480 U	450 U	430 U	500 U	450 U	450 U	450 U	450 U
Nitrobenzene	430 U	450 U	480 U	430 U	500 U	450 U	430 U	450 U	480 U	450 U	430 U	500 U	450 U	450 U	450 U	450 U
Nitroglycerin	2,200 U	2,300 U	2,400 U	2,200 U	2,500 U	2,300 U	2,200 U	2,300 U	2,400 U	2,300 U	2,200 U	2,500 U	2,300 U	2,300 U	2,300 U	2,300 U
PETN	2,200 U	2,300 U	2,400 U	2,200 U	2,500 U	2,300 U	2,200 U	2,300 U	2,400 U	2,300 U	2,200 U	2,500 U	2,300 U	2,300 U	2,300 U	2,300 U
RDX	430 U	450 U	480 U	430 U	500 U	450 U	430 U	450 U	480 U	450 U	130 J	500 U	450 U	450 U	450 U	320 J
Tetryl	430 U	450 U	480 U	430 U	500 U	450 U	430 U	450 U	480 U	450 U	430 U	500 U	450 U	450 U	450 U	450 U

Notes:

J - Analyte present, value may or may not be accurate or precise
NA - Not analyzed
U - The material was analyed for, but not detected
UG/KG - Micrograms per kilogram

Camp Lejeune
UXO - 08
Surface Soil Raw Analytical Results
January 2007

Station ID	MR08-SS16	MR08-SS17	MR08-SS18		MR08-SS19	MR08-SS20	MR08-SS21		MR08-SS22	MR08-SS23	MR08-SS24	MR08-SS25	MR08-SS26	MR08-SS27	MR08-SS28	MR08-SS29
Sample ID	MR08-SS16-0-1-07A	MR08-SS17-0-1-07A	MR08-SS18-0-1-07A	MR08-SS18D-0-1-07A	MR08-SS19-0-1-07A	MR08-SS20-0-1-07A	MR08-SS21-0-1-07A	MR08-SS21D-0-1-07A	MR08-SS22-0-1-07A	MR08-SS23-0-1-07A	MR08-SS24-0-1-07A	MR08-SS25-0-1-07A	MR08-SS26-0-1-07A	MR08-SS27-0-1-07A	MR08-SS28-0-1-07A	MR08-SS29-0-1-07A
Sample Date	01/10/07	01/10/07	01/10/07	01/10/07	01/10/07	01/10/07	01/10/07	01/10/07	01/10/07	01/10/07	01/10/07	01/10/07	01/10/07	01/10/07	01/10/07	01/10/07
Chemical Name																
Explosives (UG/KG)																
1,3,5-Trinitrobenzene	500 U	420 U	500 U	450 U	450 U	420 U	430 U	500 U	480 U	480 U	400 U	480 U	430 U	400 U	420 U	480 U
1,3-Dinitrobenzene	500 U	420 U	500 U	450 U	450 U	420 U	430 U	500 U	480 U	480 U	400 U	480 U	430 U	400 U	420 U	480 U
2,4,6-Trinitrotoluene	500 U	420 U	500 U	450 U	450 U	420 U	430 U	500 U	480 U	480 U	400 U	480 U	430 U	400 U	420 U	480 U
2,4-Dinitrotoluene	500 U	420 U	500 U	450 U	450 U	420 U	430 U	500 U	480 U	480 U	400 U	480 U	430 U	400 U	420 U	480 U
2,6-Dinitrotoluene	500 U	420 U	500 U	450 U	450 U	420 U	430 U	500 U	480 U	480 U	400 U	480 U	430 U	400 U	420 U	480 U
2-Amino-4,6-dinitrotoluene	500 U	420 U	500 U	450 U	450 U	420 U	430 U	500 U	480 U	480 U	400 U	480 U	430 U	400 U	420 U	480 U
2-Nitrotoluene	500 U	420 U	500 U	450 U	450 U	420 U	360 J	500 U	480 U	480 U	400 U	480 U	430 U	400 U	420 U	480 U
3-Nitrotoluene	500 U	420 U	500 U	450 U	450 U	420 U	430 U	500 U	480 U	480 U	400 U	480 U	430 U	400 U	420 U	480 U
4-Amino-2,6-dinitrotoluene	500 U	420 U	500 U	450 U	450 U	420 U	430 U	500 U	480 U	480 U	400 U	480 U	430 U	400 U	420 U	480 U
4-Nitrotoluene	500 U	420 U	500 U	450 U	450 U	420 U	430 U	500 U	480 U	480 U	400 U	480 U	430 U	400 U	420 U	480 U
HMX	500 U	420 U	500 U	450 U	450 U	420 U	430 U	500 U	480 U	480 U	400 U	480 U	430 U	400 U	420 U	480 U
Nitrobenzene	500 U	420 U	500 U	450 U	450 U	420 U	430 U	500 U	480 U	480 U	400 U	480 U	430 U	400 U	420 U	480 U
Nitroglycerin	2,500 U	2,100 U	2,500 U	2,300 U	2,300 U	2,100 U	2,200 U	2,500 U	2,400 U	2,400 U	2,000 U	2,400 U	2,200 U	2,000 U	2,100 U	2,400 U
PETN	2,500 U	2,100 U	2,500 U	2,300 U	2,300 U	2,100 U	2,200 U	2,500 U	2,400 U	2,400 U	2,000 U	2,400 U	2,200 U	2,000 U	2,100 U	2,400 U
RDX	500 U	420 U	500 U	95 J	450 U	420 U	430 U	500 U	480 U	480 U	400 U	480 U	430 U	400 U	420 U	480 U
Tetryl	500 U	420 U	500 U	450 U	450 U	420 U	430 U	500 U	480 U	480 U	400 U	480 U	430 U	400 U	420 U	480 U

Notes:

J - Analyte present, value may or may not be accurate or precise
NA - Not analyzed
U - The material was analyed for, but not detected
UG/KG - Micrograms per kilogram

Station ID	IR78-GW04		IR78-GW50		IR78-GW54	IR78-GW55	IR78-GW56	IR78-GW59
Sample ID	IR78-GW04-08C	IR78-GW04D-08C	IR78-GW50-08C	IR78-GW50D-08C	IR78-GW54-08C	IR78-GW55-08C	IR78-GW56-08C	IR78-GW59-08C
Sample Date	08/25/08	08/25/08	07/08/08	07/08/08	08/22/08	07/08/08	07/09/08	07/08/08
Chemical Name								
Explosives (UG/L)								
1,3,5-Trinitrobenzene	0.2 U	0.2 U	0.2 U	0.2 U	0.2 U	0.2 U	0.2 UJ	0.2 U
1,3-Dinitrobenzene	0.2 U	0.2 U	0.2 U	0.2 U	0.2 U	0.2 U	0.2 UJ	0.2 U
2,4,6-Trinitrotoluene	0.2 U	0.2 U	0.2 U	0.2 U	0.2 U	0.2 U	0.2 UJ	0.2 U
2,4-Dinitrotoluene	0.34	0.2 U	0.2 U	0.2 U	0.2 U	0.2 U	0.2 UJ	0.083 J
2,6-Dinitrotoluene	0.2 U	0.2 U	0.2 U	0.2 U	0.2 U	0.2 U	0.2 UJ	0.2 U
2-Amino-4,6-dinitrotoluene	0.2 U	0.2 U	0.2 U	0.2 U	0.2 U	0.2 U	0.2 UJ	0.2 U
2-Nitrotoluene	0.4 U	0.4 U	0.4 U	0.4 U	0.4 U	0.4 U	0.4 UJ	0.4 U
3-Nitrotoluene	0.4 U	0.4 U	0.4 U	0.4 U	0.4 U	0.4 U	0.4 UJ	0.4 U
4-Amino-2,6-dinitrotoluene	0.71	0.65	0.2 U	0.2 U	0.2 U	0.2 U	0.2 UJ	0.2 U
4-Nitrotoluene	0.4 U	0.4 U	0.4 U	0.4 U	0.4 U	0.4 U	0.4 UJ	0.4 U
HMX	0.4 U	0.4 U	0.4 U	0.4 U	0.4 U	0.4 U	0.4 UJ	0.4 U
Nitrobenzene	0.2 U	0.2 U	0.2 U	0.2 U	0.2 U	0.2 U	0.2 UJ	0.2 U
Perchlorate	0.2 U	0.2 U	0.2 U	0.2 U	0.915	0.2 U	0.2 U	0.2 U
RDX	0.4 U	0.4 U	0.4 U	0.4 U	0.4 U	0.4 U	0.4 UJ	0.4 U
Tetryl	0.4 U	0.4 U	0.4 U	0.4 U	0.4 U	0.4 U	0.4 UJ	0.4 U
Total Metals (UG/L)								
Aluminum	1,320	1,610	200 U	200 U	200 U	200 U	200 U	200 U
Antimony	60 U	60 U	60 U	60 U	60 U	60 U	7.8 J	60 U
Arsenic	4.8 J	5.6 J	10 U	10 U	10 U	10 U	10 U	10 U
Barium	82 J	87.3 J	200 U	200 U	119 J	200 U	200 U	200 U
Beryllium	0.33 J	0.43 J	5 U	5 U	5 U	5 U	5 U	5 U
Cadmium	5 U	5 U	5 U	5 U	5 U	5 U	5 U	5 U
Calcium	35,900	36,200	182,000	172,000	151,000	179,000	117,000	117,000
Chromium	1.6 J	2.1 J	0.98 J	1.9 J	10 U	10 U	10 U	10 U
Cobalt	50 U	50 U	50 U	50 U	2.7 J	50 U	50 U	50 U
Copper	25 U	25 U	25 U	25 U	25 U	25 U	25 U	25 U
Iron	8,910	9,250	29,200 J	28,200 J	4,670	1,760 J	155	100 U
Lead	10 U	10 U	10 U	10 U	10 U	10 U	10 U	10 U
Magnesium	5,000 U	5,000 U	15,200 J	14,700 J	7,240	11,600 J	5,000 U	5,000 U
Manganese	112	113	500 J	488 J	286	267 J	15.1	1,330 J
Mercury	0.024 J	0.2 U	0.067 J	0.087 J	0.2 U	0.081 J	0.2 U	0.12 J
Nickel	1.5 J	1.4 J	40 U	40 U	5.5 J	40 U	40 U	40 U
Potassium	5,000 U	5,000 U	4,580 J	4,520 J	6,780	2,440 J	1,410 J	1,270 J
Selenium	35 U	35 U	35 U	35 U	35 U	35 U	35 U	35 U

Station ID	IR78-GW04		IR78-GW50		IR78-GW54	IR78-GW55	IR78-GW56	IR78-GW59
Sample ID	IR78-GW04-08C	IR78-GW04D-08C	IR78-GW50-08C	IR78-GW50D-08C	IR78-GW54-08C	IR78-GW55-08C	IR78-GW56-08C	IR78-GW59-08C
Sample Date	08/25/08	08/25/08	07/08/08	07/08/08	08/22/08	07/08/08	07/09/08	07/08/08
Chemical Name								
Silver	10 U	10 U	10 U	10 U	10 U	10 U	10 U	10 U
Sodium	8,280	8,680	16,100 J	16,000 J	11,600	10,200 J	6,120	7,840 J
Thallium	25 U	25 U	25 U	25 U	25 U	25 U	25 U	25 U
Vanadium	4.5 J	5.5 J	50 U	50 U	50 U	50 U	50 U	50 U
Zinc	60 U	60 U	14.6 J	12.4 J	194	26.5 J	60 U	7.7 J
Dissolved Metals (UG/L)								
Aluminum	200 U	200 U	200 U	200 U	200 U	200 U	200 U	200 U
Antimony	60 U	60 U	60 U	60 U	60 U	60 U	60 U	60 U
Arsenic	10 U	10 U	10 U	10 U	10 U	10 U	10 U	10 U
Barium	88.5 J	85.3 J	200 U	200 U	118 J	200 U	200 U	200 U
Beryllium	0.23 J	0.24 J	5 U	5 U	5 U	5 U	5 U	5 U
Cadmium	5 U	5 U	5 U	5 U	5 U	5 U	5 U	5 U
Calcium	42,500	38,900	185,000	181,000	156,000	177,000	116,000	113,000
Chromium	10 U	10 U	1.2 J	1.1 J	10 U	10 U	10 U	10 U
Cobalt	50 U	50 U	50 U	50 U	3.3 J	50 U	50 U	50 U
Copper	25 U	25 U	25 U	25 U	25 U	25 U	25 U	25 U
Iron	9,620	8,970	28,900 J	28,600 J	7,540	1,390 J	100 U	100 U
Lead	10 U	10 U	10 U	10 U	10 U	10 U	10 U	10 U
Magnesium	5,000 U	5,000 U	14,600 J	14,600 J	7,390	11,400 J	5,000 U	5,000 U
Manganese	129	119	477 J	474 J	414	255 J	15 U	1,290 J
Mercury	0.2 U	0.2 U	0.11 J	0.072 J	0.2 U	0.061 J	0.2 U	0.039 J
Nickel	40 U	40 U	40 U	40 U	6.8 J	40 U	40 U	40 U
Potassium	5,000 U	5,000 U	4,410 J	4,390 J	5,760	2,460 J	1,430 J	1,250 J
Selenium	35 U	35 U	35 U	35 U	35 U	35 U	35 U	35 U
Silver	10 U	10 U	10 U	10 U	10 U	10 U	10 U	10 U
Sodium	8,750	8,310	15,900 J	15,400 J	11,900	11,000 J	6,620	7,780 J
Thallium	25 U	25 U	25 U	25 U	25 U	25 U	25 U	25 U
Vanadium	50 U	50 U	50 U	50 U	50 U	50 U	50 U	50 U
Zinc	60 U	60 U	7 J	5 J	216	35.3 J	60 U	5.1 J

Notes:

J - Analyte present, value may or may not be accurate or precise

NA - Not analyzed

U - The material was analyed for, but not detected

UJ - Analyte not detected, quantitation limit may be inaccurate

Station ID	IR78-GW61	IR78-GW62	IR78-GW63		IR78-GW64	IR78-GW65	IR78-GW66	IR78-GW68
Sample ID	IR78-GW61-08C	IR78-GW62-08C	IR78-GW63-08C	IR78-GW63D-08C	IR78-GW64-08C	IR78-GW65-08C	IR78-GW66-08C	IR78-GW68-08C
Sample Date	07/08/08	07/08/08	07/08/08	07/08/08	07/08/08	07/07/08	07/07/08	07/08/08
Chemical Name								
Explosives (UG/L)								
1,3,5-Trinitrobenzene	0.2 U	0.2 U	0.2 U	0.2 U	0.2 U	0.2 U	0.2 U	0.2 U
1,3-Dinitrobenzene	0.2 U	0.2 U	0.2 U	0.2 U	0.2 U	0.2 U	0.2 U	0.2 U
2,4,6-Trinitrotoluene	0.2 U	0.2 U	0.2 U	0.2 U	0.2 U	0.2 U	0.2 U	0.2 U
2,4-Dinitrotoluene	0.2 U	0.2 U	0.2 U	0.2 U	0.2 U	0.2 U	0.2 U	0.2 U
2,6-Dinitrotoluene	0.2 U	0.2 U	0.2 U	0.2 U	0.2 U	0.2 U	0.2 U	0.2 U
2-Amino-4,6-dinitrotoluene	0.2 U	0.2 U	0.2 U	0.2 U	0.2 U	0.2 U	0.2 U	0.2 U
2-Nitrotoluene	0.4 U	0.4 U	0.4 U	0.4 U	0.4 U	0.4 U	0.4 U	0.4 U
3-Nitrotoluene	0.4 U	0.4 U	0.4 U	0.4 U	0.4 U	0.4 U	0.4 U	0.4 U
4-Amino-2,6-dinitrotoluene	0.2 U	0.2 U	0.2 U	0.2 U	0.2 U	0.2 U	0.2 U	0.2 U
4-Nitrotoluene	0.4 U	0.4 U	0.4 U	0.4 U	0.4 U	0.4 U	0.4 U	0.11 J
HMX	0.4 U	0.4 U	0.4 U	0.4 U	0.4 U	0.4 U	0.4 U	0.4 U
Nitrobenzene	0.2 U	0.2 U	0.2 U	0.2 U	0.2 U	0.2 U	0.2 U	0.2 U
Perchlorate	0.2 U	0.2 U	0.2 U	0.2 U	0.2 U	0.2 U	0.2 U	0.2 U
RDX	0.4 U	0.4 U	0.4 U	0.4 U	0.4 U	0.4 U	0.4 U	0.4 U
Tetryl	0.4 U	0.4 U	0.4 U	0.4 U	0.4 U	0.4 U	0.4 U	0.4 U
Total Metals (UG/L)								
Aluminum	200 U	1,940	308	474	200 U	200 U	386	200 U
Antimony	60 U	60 U	60 U	60 U	60 U	60 U	60 U	60 U
Arsenic	10 U	2.4 J	7.8 J	9 J	11.8	10 U	10 U	10 U
Barium	200 U	200 U	200 U	200 U	200 U	200 U	200 U	200 U
Beryllium	5 U	0.55 J	0.94 J	1.3 J	5 U	5 U	5 U	5 U
Cadmium	5 U	5 U	5 U	5 U	5 U	5 U	5 U	5 U
Calcium	5,650	9,120	71,600	73,300	107,000	138,000	128,000	197,000
Chromium	10 U	1.5 J	10 U	1.8 J	10 U	10 U	10 U	10 U
Cobalt	50 U	7 J	15.5 J	16.4 J	50 U	50 U	50 U	3.3 J
Copper	25 U	6 J	25 U	2.9 J	25 U	25 U	25 U	25 U
Iron	2,630 J	208 J	3,470 J	3,870 J	6,080	1,250	1,730	271
Lead	10 U	10 U	10 U	10 U	10 U	10 U	10 U	10 U
Magnesium	5,000 U	6,820 J	6,890 J	7,190 J	5,000 U	5,000 U	5,710	8,800
Manganese	79.6 J	102 J	171 J	171 J	54.1	292	246	51.2
Mercury	0.11 J	0.2 U	0.2 U	0.2 U	0.1 J	0.2 U	0.2 U	0.08 J
Nickel	40 U	6.1 J	13.8 J	15.7 J	40 U	40 U	40 U	40 U
Potassium	1,560 J	5,000 U	5,000 U	5,000 U	1,820 J	1,400 J	2,670 J	2,530 J
Selenium	35 U	35 U	35 U	35 U	35 U	35 U	35 U	35 U

Station ID	IR78-GW61	IR78-GW62	IR78-GW63		IR78-GW64	IR78-GW65	IR78-GW66	IR78-GW68
Sample ID	IR78-GW61-08C	IR78-GW62-08C	IR78-GW63-08C	IR78-GW63D-08C	IR78-GW64-08C	IR78-GW65-08C	IR78-GW66-08C	IR78-GW68-08C
Sample Date	07/08/08	07/08/08	07/08/08	07/08/08	07/08/08	07/07/08	07/07/08	07/08/08
Chemical Name								
Silver	10 U	10 U	10 U	10 U	10 U	10 U	10 U	10 U
Sodium	23,700 J	10,400 J	12,900 J	13,300 J	13,100	9,560	8,110	25,400
Thallium	25 U	4.8 J	25 U	25 U	25 U	25 U	25 U	25 U
Vanadium	50 U	50 U	50 U	50 U	50 U	50 U	50 U	50 U
Zinc	16.1 J	60 U	60 U	69.2	19.4 J	60 U	60 U	12.7 J
Dissolved Metals (UG/L)								
Aluminum	200 U	1,600	200 U	200 U	200 U	200 U	200 U	200 U
Antimony	60 U	60 U	60 U	60 U	60 U	60 U	3.5 J	60 U
Arsenic	10 U	10 U	10 U	10.3	11.2	10 U	10 U	10 U
Barium	200 U	200 U	200 U	200 U	200 U	200 U	200 U	200 U
Beryllium	5 U	5 U	0.71 J	0.72 J	5 U	5 U	5 U	5 U
Cadmium	5 U	5 U	5 U	5 U	5 U	5 U	5 U	5 U
Calcium	5,450	8,820	73,900	73,600	103,000	134,000	131,000	193,000
Chromium	10 U	10 U	10 U	10 U	10 U	10 U	10 U	10 U
Cobalt	50 U	6.4 J	17 J	15.5 J	50 U	50 U	50 U	2.9 J
Copper	25 U	25 U	2.3 J	1.9 J	25 U	25 U	25 U	25 U
Iron	2,450 J	100 U	3,430 J	3,310 J	5,680	398	899	185
Lead	10 U	10 U	10 U	10 U	10 U	10 U	10 U	10 U
Magnesium	5,000 U	6,710 J	7,140 J	6,990 J	5,000 U	5,000 U	5,840	8,810
Manganese	78.8 J	101 J	183 J	179 J	76.1	302	244	49.4
Mercury	0.065 J	0.047 J	0.2 U	0.2 U	0.042 J	0.2 U	0.2 U	0.095 J
Nickel	40 U	40 U	16.1 J	15.2 J	40 U	40 U	40 U	40 U
Potassium	1,530 J	2,780 J	5,000 U	5,000 U	1,760 J	1,370 J	2,520 J	2,480 J
Selenium	35 U	35 U	35 U	35 U	35 U	35 U	35 U	35 U
Silver	10 U	10 U	10 U	10 U	10 U	10 U	10 U	10 U
Sodium	22,500 J	9,310 J	13,000 J	12,700 J	12,500	9,430	8,300	25,100
Thallium	25 U	25 U	25 U	25 U	25 U	25 U	25 U	25 U
Vanadium	50 U	50 U	50 U	50 U	50 U	50 U	50 U	50 U
Zinc	11.1 J	14.6 J	60 U	60 U	16.5 J	60 U	60 U	8.1 J

Notes:

J - Analyte present, value may or may not be accurate or precise

NA - Not analyzed

U - The material was analyed for, but not detected

UJ - Analyte not detected, quantitation limit may be inaccurate

Station ID	MR08-SS30	MR08-SS31	MR08-SS32	MR08-SS33	MR08-SS34	MR08-SS35		MR08-SS36
Sample ID	MR08-SS30-08B	MR08-SS31-08B	MR08-SS32-08B	MR08-SS33-08B	MR08-SS34-08B	MR08-SS35-08B	MR08-SS35D-08B	MR08-SS36-08B
Sample Date	06/22/08	06/22/08	06/22/08	06/22/08	06/22/08	06/22/08	06/22/08	06/22/08
Chemical Name								
Semivolatile Organic Compounds (UG/KG)								
1,1-Biphenyl	390 UJ	490 UJ	380 UJ	480 UJ	440 UJ	390 UJ	400 UJ	370 UJ
2,2'-Oxybis(1-chloropropane)	390 UJ	490 UJ	380 UJ	480 UJ	440 UJ	390 UJ	400 UJ	370 UJ
2,4,5-Trichlorophenol	970 UJ	1,200 UJ	950 UJ	1,200 UJ	1,100 UJ	980 UJ	990 UJ	930 UJ
2,4,6-Trichlorophenol	390 UJ	490 UJ	380 UJ	480 UJ	440 UJ	390 UJ	400 UJ	370 UJ
2,4-Dichlorophenol	390 UJ	490 UJ	380 UJ	480 UJ	440 UJ	390 UJ	400 UJ	370 UJ
2,4-Dimethylphenol	390 UJ	490 UJ	380 UJ	480 UJ	440 UJ	390 UJ	400 UJ	370 UJ
2,4-Dinitrophenol	970 UJ	1,200 UJ	950 UJ	1,200 UJ	1,100 UJ	980 UJ	990 UJ	930 UJ
2,4-Dinitrotoluene	390 UJ	490 UJ	380 UJ	480 UJ	440 UJ	390 UJ	400 UJ	370 UJ
2,6-Dinitrotoluene	390 UJ	490 UJ	380 UJ	480 UJ	440 UJ	390 UJ	400 UJ	370 UJ
2-Chloronaphthalene	390 UJ	490 UJ	380 UJ	480 UJ	440 UJ	390 UJ	400 UJ	370 UJ
2-Chlorophenol	390 UJ	490 UJ	380 UJ	480 UJ	440 UJ	390 UJ	400 UJ	370 UJ
2-Methylnaphthalene	390 UJ	490 UJ	380 UJ	480 UJ	440 UJ	390 UJ	400 UJ	370 UJ
2-Methylphenol	390 UJ	490 UJ	380 UJ	480 UJ	440 UJ	390 UJ	400 UJ	370 UJ
2-Nitroaniline	970 UJ	1,200 UJ	950 UJ	1,200 UJ	1,100 UJ	980 UJ	990 UJ	930 UJ
2-Nitrophenol	390 UJ	490 UJ	380 UJ	480 UJ	440 UJ	390 UJ	400 UJ	370 UJ
3,3'-Dichlorobenzidine	390 UJ	490 UJ	380 UJ	480 UJ	440 UJ	390 UJ	400 UJ	370 UJ
3-Nitroaniline	970 UJ	1,200 UJ	950 UJ	1,200 UJ	1,100 UJ	980 UJ	990 UJ	930 UJ
4,6-Dinitro-2-methylphenol	970 UJ	1,200 UJ	950 UJ	1,200 UJ	1,100 UJ	980 UJ	990 UJ	930 UJ
4-Bromophenyl-phenylether	390 UJ	490 UJ	380 UJ	480 UJ	440 UJ	390 UJ	400 UJ	370 UJ
4-Chloro-3-methylphenol	390 UJ	490 UJ	380 UJ	480 UJ	440 UJ	390 UJ	400 UJ	370 UJ
4-Chloroaniline	390 UJ	490 UJ	380 UJ	480 UJ	440 UJ	390 UJ	400 UJ	370 UJ
4-Chlorophenyl-phenylether	390 UJ	490 UJ	380 UJ	480 UJ	440 UJ	390 UJ	400 UJ	370 UJ
4-Methylphenol	390 UJ	490 UJ	380 UJ	69 J	440 UJ	390 UJ	400 UJ	370 UJ
4-Nitrophenol	970 UJ	1,200 UJ	950 UJ	1,200 UJ	1,100 UJ	980 UJ	990 UJ	930 UJ
Acenaphthene	390 UJ	490 UJ	380 UJ	480 UJ	440 UJ	390 UJ	400 UJ	370 UJ
Acenaphthylene	390 UJ	490 UJ	380 UJ	480 UJ	440 UJ	390 UJ	400 UJ	370 UJ
Acetophenone	390 UJ	490 UJ	380 UJ	480 UJ	440 UJ	390 UJ	400 UJ	370 UJ
Anthracene	390 UJ	490 UJ	380 UJ	60 J	440 UJ	390 UJ	400 UJ	370 UJ
Atrazine	390 UJ	490 UJ	380 UJ	480 UJ	440 UJ	390 UJ	400 UJ	370 UJ
Benzaldehyde	390 UJ	490 UJ	380 UJ	480 UJ	440 UJ	390 UJ	400 UJ	370 UJ
Benzo(a)anthracene	390 UJ	97 J	380 UJ	150 J	440 UJ	390 UJ	400 UJ	370 UJ
Benzo(a)pyrene	50 J	140 J	380 UJ	140 J	440 UJ	390 UJ	400 UJ	370 UJ
Benzo(b)fluoranthene	390 UJ	180 J	380 UJ	480 UJ	440 UJ	390 UJ	400 UJ	370 UJ
Benzo(g,h,i)perylene	42 J	170 J	380 UJ	110 J	440 UJ	390 UJ	400 UJ	370 UJ
Benzo(k)fluoranthene	390 UJ	160 J	380 UJ	480 UJ	440 UJ	390 UJ	400 UJ	370 UJ

Station ID	MR08-SS30	MR08-SS31	MR08-SS32	MR08-SS33	MR08-SS34	MR08-SS35		MR08-SS36
Sample ID	MR08-SS30-08B	MR08-SS31-08B	MR08-SS32-08B	MR08-SS33-08B	MR08-SS34-08B	MR08-SS35-08B	MR08-SS35D-08B	MR08-SS36-08B
Sample Date	06/22/08	06/22/08	06/22/08	06/22/08	06/22/08	06/22/08	06/22/08	06/22/08
Chemical Name								
Butylbenzylphthalate	390 UJ	490 UJ	380 UJ	480 UJ	440 UJ	390 UJ	400 UJ	370 UJ
Caprolactam	52 J	490 UJ	380 UJ	480 UJ	440 UJ	390 UJ	400 UJ	370 UJ
Carbazole	390 UJ	490 UJ	380 UJ	480 UJ	440 UJ	390 UJ	400 UJ	370 UJ
Chrysene	58 J	190 J	380 UJ	180 J	440 UJ	390 UJ	400 UJ	370 UJ
Di-n-butylphthalate	280 J	51 J	380 UJ	480 UJ	47 J	390 UJ	400 UJ	370 UJ
Di-n-octylphthalate	390 UJ	490 UJ	380 UJ	480 UJ	440 UJ	390 UJ	400 UJ	370 UJ
Dibenz(a,h)anthracene	390 UJ	490 UJ	380 UJ	480 UJ	440 UJ	390 UJ	400 UJ	370 UJ
Dibenzofuran	390 UJ	490 UJ	380 UJ	480 UJ	440 UJ	390 UJ	400 UJ	370 UJ
Diethylphthalate	390 UJ	490 UJ	380 UJ	480 UJ	440 UJ	390 UJ	400 UJ	370 UJ
Dimethyl phthalate	390 UJ	490 UJ	380 UJ	480 U	440 UJ	390 UJ	400 UJ	370 UJ
Fluoranthene	100 J	300 J	380 UJ	400 J	440 UJ	390 UJ	400 UJ	370 UJ
Fluorene	390 UJ	490 UJ	380 UJ	480 UJ	440 UJ	390 UJ	400 UJ	370 UJ
Hexachlorobenzene	390 UJ	490 UJ	380 UJ	480 UJ	440 UJ	390 UJ	400 UJ	370 UJ
Hexachlorobutadiene	390 UJ	490 UJ	380 UJ	480 UJ	440 UJ	390 UJ	400 UJ	370 UJ
Hexachlorocyclopentadiene	390 UJ	490 UJ	380 UJ	480 UJ	440 UJ	390 UJ	400 UJ	370 UJ
Hexachloroethane	390 UJ	490 UJ	380 UJ	480 UJ	440 UJ	390 UJ	400 UJ	370 UJ
Indeno(1,2,3-cd)pyrene	390 UJ	140 J	380 UJ	100 J	440 UJ	390 UJ	400 UJ	370 UJ
Isophorone	390 UJ	490 UJ	380 UJ	480 UJ	440 UJ	390 UJ	400 UJ	370 UJ
Naphthalene	390 UJ	490 UJ	380 UJ	480 UJ	440 UJ	390 UJ	400 UJ	370 UJ
Nitrobenzene	390 UJ	490 UJ	380 UJ	480 UJ	440 UJ	390 UJ	400 UJ	370 UJ
Pentachlorophenol	970 UJ	1,200 UJ	950 UJ	1,200 UJ	1,100 UJ	980 UJ	990 UJ	930 UJ
Phenanthrene	390 UJ	60 J	380 UJ	300 J	440 UJ	390 UJ	400 UJ	370 UJ
Phenol	390 UJ	490 UJ	380 UJ	480 UJ	440 UJ	390 UJ	400 UJ	370 UJ
Pyrene	76 J	230 J	380 UJ	320 J	440 UJ	390 UJ	400 UJ	370 UJ
bis(2-Chloroethoxy)methane	390 UJ	490 UJ	380 UJ	480 UJ	440 UJ	390 UJ	400 UJ	370 UJ
bis(2-Chloroethyl)ether	390 UJ	490 UJ	380 UJ	480 UJ	440 UJ	390 UJ	400 UJ	370 UJ
bis(2-Ethylhexyl)phthalate	82 J	66 J	380 UJ	63 J	53 J	390 UJ	52 J	75 J
n-Nitroso-di-n-propylamine	390 UJ	490 UJ	380 UJ	480 UJ	440 UJ	390 UJ	400 UJ	370 UJ
n-Nitrosodiphenylamine	390 UJ	490 UJ	380 UJ	480 UJ	440 UJ	390 UJ	400 UJ	370 UJ
Pesticide/Polychlorinated Biphenyls (UG/KG)								
4,4'-DDD	3.9 UJ	4.9 UJ	3.8 UJ	0.49 J	4.4 UJ	0.49 J	4 UJ	0.87 J
4,4'-DDE	1.4 J	3.4 J	0.74 J	0.65 J	1.3 J	4.9 J	3.8 J	1.5 J
4,4'-DDT	1.7 J	2.4 J	0.61 J	0.76 J	0.76 J	1.3 J	0.97 J	2.2 J
Aldrin	1.9 UJ	2.5 UJ	1.9 UJ	2.4 UJ	2.2 UJ	2 UJ	2 UJ	1.9 UJ
Aroclor-1016	39 UJ	49 UJ	38 UJ	48 UJ	44 UJ	39 UJ	40 UJ	37 UJ
Aroclor-1221	78 UJ	98 UJ	76 UJ	96 UJ	88 UJ	78 UJ	79 UJ	74 UJ

Station ID	MR08-SS30	MR08-SS31	MR08-SS32	MR08-SS33	MR08-SS34	MR08-SS35		MR08-SS36
Sample ID	MR08-SS30-08B	MR08-SS31-08B	MR08-SS32-08B	MR08-SS33-08B	MR08-SS34-08B	MR08-SS35-08B	MR08-SS35D-08B	MR08-SS36-08B
Sample Date	06/22/08	06/22/08	06/22/08	06/22/08	06/22/08	06/22/08	06/22/08	06/22/08
Chemical Name								
Aroclor-1232	39 UJ	49 UJ	38 UJ	48 UJ	44 UJ	39 UJ	40 UJ	37 UJ
Aroclor-1242	39 UJ	49 UJ	38 UJ	48 UJ	44 UJ	39 UJ	40 UJ	37 UJ
Aroclor-1248	39 UJ	49 UJ	38 UJ	48 UJ	44 UJ	39 UJ	40 UJ	37 UJ
Aroclor-1254	39 UJ	49 UJ	38 UJ	48 UJ	44 UJ	39 UJ	40 UJ	37 UJ
Aroclor-1260	39 UJ	49 UJ	38 UJ	48 UJ	44 UJ	39 UJ	40 UJ	37 UJ
Dieldrin	3.9 UJ	0.69 J	3.8 UJ	4.8 UJ	1.1 J	49 J	49 J	3.7 UJ
Endosulfan I	1.9 UJ	2.5 UJ	1.9 UJ	2.4 UJ	2.2 UJ	2 UJ	2 UJ	1.9 UJ
Endosulfan II	2 J	4.9 UJ	3.8 UJ	4.8 UJ	4.4 UJ	3.9 UJ	4 UJ	3.7 UJ
Endosulfan sulfate	3.9 UJ	4.9 UJ	3.8 UJ	4.8 UJ	4.4 UJ	3.9 UJ	4 UJ	3.7 UJ
Endrin	3.9 UJ	4.9 UJ	3.8 UJ	4.8 UJ	4.4 UJ	3.9 UJ	4 UJ	3.7 UJ
Endrin aldehyde	0.56 J	4.9 UJ	0.95 J	4.8 UJ	4.4 UJ	3.9 UJ	4 UJ	3.7 UJ
Endrin ketone	3.9 UJ	4.9 UJ	3.8 UJ	4.8 UJ	4.4 UJ	3.9 UJ	4 UJ	3.7 UJ
Heptachlor	1.9 UJ	2.5 UJ	1.9 UJ	2.4 UJ	2.2 UJ	2 UJ	2 UJ	1.9 UJ
Heptachlor epoxide	1.9 UJ	2.5 UJ	1.9 UJ	2.4 UJ	2.2 UJ	2 UJ	2 UJ	1.9 UJ
Methoxychlor	19 UJ	25 UJ	19 UJ	24 UJ	22 UJ	20 UJ	20 UJ	19 UJ
Toxaphene	190 UJ	250 U	190 UJ	240 UJ	220 UJ	200 UJ	200 UJ	190 UJ
alpha-BHC	1.9 UJ	2.5 UJ	1.9 UJ	2.4 UJ	2.2 UJ	2 UJ	2 UJ	1.9 UJ
alpha-Chlordane	0.57 J	2.5 UJ	0.24 J	0.71 J	2.2 UJ	2 UJ	2 UJ	1.9 UJ
beta-BHC	1.9 UJ	2.5 UJ	1.9 UJ	2.4 UJ	2.2 UJ	2 UJ	2 UJ	1.9 UJ
delta-BHC	1.9 UJ	2.5 UJ	1.9 UJ	2.4 UJ	2.2 UJ	2 UJ	2 UJ	1.9 UJ
gamma-BHC (Lindane)	1.9 UJ	2.5 UJ	1.9 UJ	2.4 UJ	2.2 UJ	2 UJ	2 UJ	1.9 UJ
gamma-Chlordane	1.9 UJ	2.5 UJ	0.44 J	0.62 J	2.2 UJ	2 UJ	2 UJ	1.9 UJ
Explosives (UG/KG)								
1,3,5-Trinitrobenzene	100 UJ	100 UJ	100 UJ	100 UJ	100 UJ	100 UJ	100 UJ	100 UJ
1,3-Dinitrobenzene	100 UJ	100 UJ	100 UJ	100 UJ	100 UJ	100 UJ	100 UJ	100 UJ
2,4,6-Trinitrotoluene	100 UJ	100 UJ	100 UJ	100 UJ	100 UJ	100 UJ	100 UJ	100 UJ
2,4-Dinitrotoluene	100 UJ	100 UJ	100 UJ	100 UJ	100 UJ	100 UJ	100 UJ	100 UJ
2,6-Dinitrotoluene	100 UJ	100 UJ	100 UJ	100 UJ	100 UJ	100 UJ	100 UJ	100 UJ
2-Amino-4,6-dinitrotoluene	100 UJ	100 UJ	100 UJ	100 UJ	100 UJ	100 UJ	100 UJ	100 UJ
2-Nitrotoluene	200 UJ	200 UJ	200 UJ	200 UJ	200 UJ	200 UJ	200 UJ	200 UJ
3-Nitrotoluene	200 UJ	200 UJ	200 UJ	200 UJ	200 UJ	200 UJ	200 UJ	200 UJ
4-Amino-2,6-dinitrotoluene	100 UJ	100 UJ	100 UJ	100 UJ	100 UJ	100 UJ	100 UJ	100 UJ
4-Nitrotoluene	200 UJ	200 UJ	200 UJ	200 UJ	200 UJ	200 UJ	200 UJ	200 UJ
HMX	200 UJ	200 UJ	200 UJ	200 UJ	200 UJ	200 UJ	200 UJ	200 UJ
Nitrobenzene	100 UJ	100 UJ	100 UJ	100 UJ	100 UJ	100 UJ	100 UJ	100 UJ
Perchlorate	2.33 U	2.95 U	2.27 U	6.33	2.69	2.35 U	1.62 J	2.22 U

Station ID	MR08-SS30	MR08-SS31	MR08-SS32	MR08-SS33	MR08-SS34	MR08-SS35		MR08-SS36
Sample ID	MR08-SS30-08B	MR08-SS31-08B	MR08-SS32-08B	MR08-SS33-08B	MR08-SS34-08B	MR08-SS35-08B	MR08-SS35D-08B	MR08-SS36-08B
Sample Date	06/22/08	06/22/08	06/22/08	06/22/08	06/22/08	06/22/08	06/22/08	06/22/08
Chemical Name								
RDX	200 UJ	200 UJ	200 UJ	200 UJ	200 UJ	200 UJ	200 UJ	200 UJ
Tetryl	200 UJ	200 UJ	200 UJ	200 UJ	200 UJ	200 UJ	200 UJ	200 UJ
Total Metals (MG/KG)								
Aluminum	4,900	4,170	3,990	5,050	5,530	5,470	5,680	2,240
Antimony	4.9 UJ	6.4 UJ	4.9 UJ	5.9 UJ	5.6 UJ	4.8 UJ	4.9 UJ	4.7 UJ
Arsenic	1.7	2.7	3.2	3.2	1.7	1.9	2.3	8 J
Barium	17.8	21.4 U	16.2 U	19.6 U	22.8	18.2	19.1	15.6 U
Beryllium	0.12 J	0.15 J	0.096 J	0.13 J	0.14 J	0.18 J	0.17 J	0.25 J
Cadmium	0.096 J	0.13 J	0.07 J	0.25 J	0.13 J	0.13 J	0.1 J	0.96
Calcium	1,380	1,520	532	2,380	762	2,080	2,120	297,000
Chromium	6.1	5.2	4.8	9.1	5.8	7.8	7.9	9
Cobalt	0.28 J	0.33 J	0.22 J	0.47 J	0.31 J	0.49 J	41.1 U	7.9
Copper	4.6	5	2.4	4.8	7.4	7	5,260	39.1 U
Iron	2,680	2,150	2,390	2,800	3,410	2,890	3,090	5,000
Lead	24.2	40.3	14.9	33.8	12.5	12.4	12	3.7 J
Magnesium	411 U	535 U	405 U	489 U	471 U	872	947	3,790
Manganese	23.7	16.2	21.3	14.5	20.1	21	17.4	351
Mercury	0.036 U	0.044 U	0.034 U	0.043 U	0.04 U	0.034 U	0.034 U	0.032 U
Nickel	1.5 J	1.9 J	1 J	2.2 J	1.6 J	2.1 J	2.3 J	33.7
Potassium	411 U	535 U	405 U	489 U	471 U	399 U	411 U	7,820 U
Selenium	2.9 U	3.7 U	0.41 J	3.4 U	0.73 J	0.42 J	2.9 U	2.7 U
Silver	0.82 U	1.1 U	0.81 U	0.98 U	0.94 U	0.8 U	0.12 J	0.78 U
Sodium	411 U	535 U	405 U	489 U	471 U	399 U	411 U	391 U
Thallium	2.1 UJ	2.7 UJ	2 UJ	2.4 UJ	2.4 UJ	2 UJ	2.1 UJ	39.1 UJ
Vanadium	9.7	9.9	7.8	11	10.8	14.7	15.4	14.5
Zinc	26.1 J	27.1 J	15 J	34.9 J	18.9 J	20 J	96.9 J	41.4 J
Wet Chemistry (MG/KG)	NA	NA	NA	NA	NA	NA	NA	NA
% Solids	86	68	88	70	76	85	84	90
pH	5.2	6	4.7	6	4.7	6.5	6.7	7.8

Notes:

J - Analyte present, value may or may not be accurate or precise

NA - Not analyzed

U - The material was analyed for, but not detected

UJ - Analyte not detected, quantitation limit may be inaccurate

Station ID	MR08-SS37	MR08-SS38	MR08-SS39	MR08-SS40	MR08-SS41	
Sample ID	MR08-SS37-08B	MR08-SS38-08B	MR08-SS39-08B	MR08-SS40-08B	MR08-SS41-08B	MR08-SS41D-08B
Sample Date	06/22/08	06/22/08	06/22/08	06/22/08	06/22/08	06/22/08
Chemical Name						
Semivolatile Organic Compounds (UG/KG)						
1,1-Biphenyl	360 UJ	380 UJ	430 UJ	440 UJ	360 UJ	390 UJ
2,2'-Oxybis(1-chloropropane)	360 UJ	380 UJ	430 UJ	440 UJ	360 UJ	390 UJ
2,4,5-Trichlorophenol	900 UJ	940 UJ	1,100 UJ	1,100 UJ	910 UJ	990 UJ
2,4,6-Trichlorophenol	360 UJ	380 UJ	430 UJ	440 UJ	360 UJ	390 UJ
2,4-Dichlorophenol	360 UJ	380 UJ	430 UJ	440 UJ	360 UJ	390 UJ
2,4-Dimethylphenol	360 UJ	380 UJ	430 UJ	440 UJ	360 UJ	390 UJ
2,4-Dinitrophenol	900 UJ	940 UJ	1,100 UJ	1,100 UJ	910 UJ	990 UJ
2,4-Dinitrotoluene	360 UJ	380 UJ	430 UJ	440 UJ	360 UJ	390 UJ
2,6-Dinitrotoluene	360 UJ	380 UJ	430 UJ	440 UJ	360 UJ	390 UJ
2-Chloronaphthalene	360 UJ	380 UJ	430 UJ	440 UJ	360 UJ	390 UJ
2-Chlorophenol	360 UJ	380 UJ	430 UJ	440 UJ	360 UJ	390 UJ
2-Methylnaphthalene	360 UJ	380 UJ	430 UJ	440 UJ	360 UJ	390 UJ
2-Methylphenol	360 UJ	380 UJ	430 UJ	440 UJ	360 UJ	390 UJ
2-Nitroaniline	900 UJ	940 UJ	1,100 UJ	1,100 UJ	910 UJ	990 UJ
2-Nitrophenol	360 UJ	380 UJ	430 UJ	440 UJ	360 UJ	390 UJ
3,3'-Dichlorobenzidine	360 UJ	380 UJ	430 UJ	440 UJ	360 UJ	390 UJ
3-Nitroaniline	900 UJ	940 UJ	1,100 UJ	1,100 UJ	910 UJ	990 UJ
4,6-Dinitro-2-methylphenol	900 UJ	940 UJ	1,100 UJ	1,100 UJ	910 UJ	990 UJ
4-Bromophenyl-phenylether	360 UJ	380 UJ	430 UJ	440 UJ	360 UJ	390 UJ
4-Chloro-3-methylphenol	360 UJ	380 UJ	430 UJ	440 UJ	360 UJ	390 UJ
4-Chloroaniline	360 UJ	380 UJ	430 UJ	440 UJ	360 UJ	390 UJ
4-Chlorophenyl-phenylether	360 UJ	380 UJ	430 UJ	440 UJ	360 UJ	390 UJ
4-Methylphenol	360 UJ	380 UJ	430 UJ	440 UJ	360 UJ	390 UJ
4-Nitrophenol	900 UJ	940 UJ	1,100 UJ	1,100 UJ	910 UJ	990 UJ
Acenaphthene	360 UJ	380 UJ	430 UJ	440 UJ	360 UJ	390 UJ
Acenaphthylene	360 UJ	380 UJ	430 UJ	440 UJ	360 UJ	390 UJ
Acetophenone	360 UJ	380 UJ	430 UJ	440 UJ	360 UJ	390 UJ
Anthracene	360 UJ	53 J	430 UJ	440 UJ	360 UJ	390 UJ
Atrazine	360 UJ	380 UJ	430 UJ	440 UJ	360 UJ	390 UJ
Benzaldehyde	360 UJ	380 UJ	430 UJ	440 UJ	360 UJ	390 UJ
Benzo(a)anthracene	360 UJ	71 J	430 UJ	440 UJ	360 UJ	390 UJ
Benzo(a)pyrene	360 UJ	110 J	430 UJ	440 UJ	360 UJ	390 UJ
Benzo(b)fluoranthene	360 UJ	380 UJ	430 UJ	440 UJ	360 UJ	390 UJ
Benzo(g,h,i)perylene	360 UJ	93 J	430 UJ	440 UJ	360 UJ	390 UJ
Benzo(k)fluoranthene	360 UJ	380 UJ	49 J	440 UJ	360 UJ	390 UJ

Station ID	MR08-SS37	MR08-SS38	MR08-SS39	MR08-SS40	MR08-SS41	
Sample ID	MR08-SS37-08B	MR08-SS38-08B	MR08-SS39-08B	MR08-SS40-08B	MR08-SS41-08B	MR08-SS41D-08B
Sample Date	06/22/08	06/22/08	06/22/08	06/22/08	06/22/08	06/22/08
Chemical Name						
Butylbenzylphthalate	360 UJ	380 UJ	430 UJ	440 UJ	360 UJ	390 UJ
Caprolactam	360 UJ	380 UJ	430 UJ	440 UJ	360 UJ	390 UJ
Carbazole	360 UJ	380 UJ	430 UJ	440 UJ	360 UJ	390 UJ
Chrysene	360 UJ	120 J	430 UJ	440 UJ	360 UJ	390 UJ
Di-n-butylphthalate	360 UJ	380 UJ	430 UJ	440 UJ	360 UJ	390 UJ
Di-n-octylphthalate	360 UJ	380 UJ	430 UJ	440 UJ	360 UJ	390 UJ
Dibenz(a,h)anthracene	360 UJ	380 UJ	430 UJ	440 UJ	360 UJ	390 UJ
Dibenzofuran	360 UJ	380 UJ	430 UJ	440 UJ	360 UJ	390 UJ
Diethylphthalate	360 UJ	380 UJ	430 UJ	440 UJ	360 UJ	390 UJ
Dimethyl phthalate	360 UJ	380 UJ	430 UJ	440 UJ	360 UJ	390 UJ
Fluoranthene	360 UJ	220 J	430 UJ	51 J	360 UJ	390 UJ
Fluorene	360 UJ	380 UJ	430 UJ	440 UJ	360 UJ	390 UJ
Hexachlorobenzene	360 UJ	380 UJ	430 UJ	440 UJ	360 UJ	390 UJ
Hexachlorobutadiene	360 UJ	380 UJ	430 UJ	440 UJ	360 UJ	390 UJ
Hexachlorocyclopentadiene	360 UJ	380 UJ	430 UJ	440 UJ	360 UJ	390 UJ
Hexachloroethane	360 UJ	380 UJ	430 UJ	440 UJ	360 UJ	390 UJ
Indeno(1,2,3-cd)pyrene	360 UJ	84 J	430 UJ	440 UJ	360 UJ	390 UJ
Isophorone	360 UJ	380 UJ	430 UJ	440 UJ	360 UJ	390 UJ
Naphthalene	360 UJ	380 UJ	430 UJ	440 UJ	360 UJ	390 UJ
Nitrobenzene	360 UJ	380 UJ	430 UJ	440 UJ	360 UJ	390 UJ
Pentachlorophenol	900 UJ	940 UJ	1,100 UJ	1,100 UJ	910 UJ	990 UJ
Phenanthrene	360 UJ	53 J	430 UJ	440 UJ	360 UJ	390 UJ
Phenol	360 UJ	380 UJ	430 UJ	440 UJ	360 UJ	390 UJ
Pyrene	360 UJ	160 J	430 UJ	440 UJ	360 UJ	390 UJ
bis(2-Chloroethoxy)methane	360 UJ	380 UJ	430 UJ	440 UJ	360 UJ	390 UJ
bis(2-Chloroethyl)ether	360 UJ	380 UJ	430 UJ	440 UJ	360 UJ	390 UJ
bis(2-Ethylhexyl)phthalate	360 UJ	100 J	46 J	520 J	46 J	390 UJ
n-Nitroso-di-n-propylamine	360 UJ	380 UJ	430 UJ	440 UJ	360 UJ	390 UJ
n-Nitrosodiphenylamine	360 UJ	380 UJ	430 UJ	440 UJ	360 UJ	390 UJ
Pesticide/Polychlorinated Biphenyls (UG/KG)						
4,4'-DDD	3.6 UJ	3.8 UJ	4.3 UJ	4.4 UJ	3.6 UJ	3.9 UJ
4,4'-DDE	0.67 J	0.7 J	4.3 UJ	1.8 J	0.36 J	0.81 J
4,4'-DDT	0.51 J	0.5 J	4.3 UJ	0.44 J	3.6 UJ	3.9 UJ
Aldrin	1.8 UJ	1.9 UJ	2.2 UJ	2.2 UJ	1.8 UJ	2 UJ
Aroclor-1016	36 UJ	38 UJ	43 UJ	44 UJ	36 UJ	39 UJ
Aroclor-1221	72 UJ	75 UJ	86 UJ	89 UJ	72 UJ	79 UJ

Station ID	MR08-SS37	MR08-SS38	MR08-SS39	MR08-SS40	MR08-SS41	
Sample ID	MR08-SS37-08B	MR08-SS38-08B	MR08-SS39-08B	MR08-SS40-08B	MR08-SS41-08B	MR08-SS41D-08B
Sample Date	06/22/08	06/22/08	06/22/08	06/22/08	06/22/08	06/22/08
Chemical Name						
Aroclor-1232	36 UJ	38 UJ	43 UJ	44 UJ	36 UJ	39 UJ
Aroclor-1242	36 UJ	38 UJ	43 UJ	44 UJ	36 UJ	39 UJ
Aroclor-1248	36 UJ	38 UJ	43 UJ	44 UJ	36 UJ	39 UJ
Aroclor-1254	36 UJ	38 UJ	43 UJ	44 UJ	36 UJ	39 UJ
Aroclor-1260	36 UJ	38 UJ	43 UJ	44 UJ	36 UJ	39 UJ
Dieldrin	0.05 J	0.27 J	4.3 UJ	2 J	0.36 J	3.9 UJ
Endosulfan I	1.8 UJ	1.9 UJ	2.2 UJ	2.2 UJ	1.8 UJ	2 UJ
Endosulfan II	3.6 UJ	3.8 UJ	4.3 UJ	4.4 UJ	3.6 UJ	3.9 UJ
Endosulfan sulfate	3.6 UJ	3.8 UJ	4.3 UJ	4.4 UJ	3.6 UJ	3.9 UJ
Endrin	3.6 UJ	3.8 UJ	4.3 UJ	4.4 UJ	3.6 UJ	3.9 UJ
Endrin aldehyde	3.6 UJ	0.57 J	4.3 UJ	4.4 UJ	3.6 UJ	3.9 UJ
Endrin ketone	3.6 UJ	3.8 UJ	4.3 UJ	4.4 UJ	3.6 UJ	3.9 UJ
Heptachlor	1.8 UJ	1.9 UJ	2.2 UJ	2.2 UJ	1.8 UJ	2 UJ
Heptachlor epoxide	1.8 UJ	1.9 UJ	2.2 UJ	2.2 UJ	1.8 UJ	2 UJ
Methoxychlor	18 UJ	19 UJ	22 UJ	22 UJ	18 UJ	20 UJ
Toxaphene	180 UJ	190 UJ	220 UJ	220 UJ	180 UJ	200 UJ
alpha-BHC	1.8 UJ	1.9 UJ	2.2 UJ	2.2 UJ	1.8 UJ	2 UJ
alpha-Chlordane	1.8 UJ	0.44 J	2.2 UJ	0.47 J	1.8 UJ	2 UJ
beta-BHC	1.8 UJ	1.9 UJ	2.2 UJ	2.2 UJ	1.8 UJ	2 UJ
delta-BHC	1.8 UJ	1.9 UJ	2.2 UJ	2.2 UJ	1.8 UJ	2 UJ
gamma-BHC (Lindane)	1.8 UJ	1.9 UJ	2.2 UJ	2.2 UJ	1.8 UJ	2 UJ
gamma-Chlordane	1.8 UJ	0.35 J	2.2 UJ	2.2 UJ	1.8 UJ	2 UJ
Explosives (UG/KG)						
1,3,5-Trinitrobenzene	100 UJ	100 UJ	100 UJ	100 UJ	100 UJ	100 UJ
1,3-Dinitrobenzene	100 UJ	100 UJ	100 UJ	100 UJ	100 UJ	100 UJ
2,4,6-Trinitrotoluene	100 UJ	100 UJ	100 UJ	100 UJ	100 UJ	100 UJ
2,4-Dinitrotoluene	100 UJ	100 UJ	100 UJ	100 UJ	100 UJ	100 UJ
2,6-Dinitrotoluene	100 UJ	100 UJ	100 UJ	100 UJ	100 UJ	100 UJ
2-Amino-4,6-dinitrotoluene	100 UJ	100 UJ	100 UJ	100 UJ	100 UJ	100 UJ
2-Nitrotoluene	200 UJ	200 UJ	200 UJ	200 UJ	200 UJ	200 UJ
3-Nitrotoluene	200 UJ	200 UJ	200 UJ	200 UJ	200 UJ	200 UJ
4-Amino-2,6-dinitrotoluene	100 UJ	100 UJ	100 UJ	100 UJ	100 UJ	100 UJ
4-Nitrotoluene	200 UJ	200 UJ	200 UJ	200 UJ	200 UJ	200 UJ
HMX	200 UJ	200 UJ	200 UJ	200 UJ	200 UJ	200 UJ
Nitrobenzene	100 UJ	100 UJ	100 UJ	100 UJ	100 UJ	100 UJ
Perchlorate	2.16 U	2.26 U	2.58 U	25.7	2.18 U	2.36 U

Station ID	MR08-SS37	MR08-SS38	MR08-SS39	MR08-SS40	MR08-SS41	
Sample ID	MR08-SS37-08B	MR08-SS38-08B	MR08-SS39-08B	MR08-SS40-08B	MR08-SS41-08B	MR08-SS41D-08B
Sample Date	06/22/08	06/22/08	06/22/08	06/22/08	06/22/08	06/22/08
Chemical Name						
RDX	200 UJ	200 UJ	200 UJ	200 UJ	200 UJ	200 UJ
Tetryl	200 UJ	200 UJ	200 UJ	200 UJ	200 UJ	200 UJ
Total Metals (MG/KG)						
Aluminum	3,670	4,330	1,960	4,270	4,450	4,950
Antimony	4.4 UJ	4.6 UJ	5.3 UJ	5.6 UJ	4.7 UJ	4.9 UJ
Arsenic	0.83	1	3.3 J	4.1	1.1	0.77 J
Barium	14.8 U	15.3 U	17.7 U	18.7 U	15.8 U	16.3 U
Beryllium	0.072 J	0.095 J	0.2 J	0.13 J	0.12 J	0.12 J
Cadmium	0.28 J	0.071 J	0.52	0.12 J	0.038 J	0.04 J
Calcium	5,140	1,620	152,000	2,480	394 U	408 U
Chromium	9.1	5.7	11.7	5.6	5.7	5.3
Cobalt	0.26 J	0.27 J	2.3 J	0.32 J	0.28 J	0.32 J
Copper	3.9	5.1	11 U	4.8	2	2.1
Iron	1,610	2,030	3,630	1,840	3,470	2,180
Lead	37.4	12.3	6.8	12.1	6.6	5.9
Magnesium	369 U	381 U	2,250	539	394 U	408 U
Manganese	6.8	21.4	148	13.9	14.2	15.1
Mercury	0.033 U	0.035 U	0.039 U	0.038 U	0.033 U	0.037 U
Nickel	0.96 J	1.3 J	11.4	1.6 J	1.2 J	1.3 J
Potassium	369 U	381 U	2,210 U	467 U	394 U	408 U
Selenium	2.6 U	2.7 U	3.1 U	3.3 U	0.46 J	2.9 U
Silver	0.74 U	0.76 U	0.88 U	0.1 J	0.79 U	0.82 U
Sodium	369 U	381 U	441 U	467 U	394 U	408 U
Thallium	1.8 UJ	1.9 UJ	1.1 J	2.3 UJ	2 UJ	2 UJ
Vanadium	5.6	7.8	10	8.4	8	7.6
Zinc	32.4 J	18.2 J	66.6 J	13.6 J	7.8 J	11 J
Wet Chemistry (MG/KG)	NA	NA	NA	NA	NA	NA
% Solids	93	88	78	75	92	85
pH	7.6	7.2	7.3	6.7	5	5.1

Notes:

J - Analyte present, value may or may not be accurate or precise

NA - Not analyzed

U - The material was analyed for, but not detected

UJ - Analyte not detected, quantitation limit may be inaccurate

Station ID	MR08-IS38	MR08-IS39	MR08-IS40	MR08-IS41	MR08-IS42		MR08-IS43
Sample ID	MR08-IS38-5-6-08C	MR08-IS39-5-6-08C	MR08-IS40-5-6-08C	MR08-IS41-5-6-08C	MR08-IS42-5-6-08C	MR08-IS42D-5-6-08C	MR08-IS43-5-6-08C
Sample Date	07/28/08	07/28/08	07/29/08	07/29/08	07/29/08	07/29/08	07/28/08
Chemical Name							
Semivolatile Organic Compounds (UG/KG)							
1,1-Biphenyl	410 U	420 U	430 U	440 U	430 U	410 U	430 U
2,2'-Oxybis(1-chloropropane)	410 U	420 U	430 U	440 U	430 U	410 U	430 U
2,4,5-Trichlorophenol	1,000 U	1,100 U	1,100 U	1,100 U	1,100 U	1,000 U	1,100 U
2,4,6-Trichlorophenol	410 U	420 U	430 U	440 U	430 U	410 U	430 U
2,4-Dichlorophenol	410 U	420 U	430 U	440 U	430 U	410 U	430 U
2,4-Dimethylphenol	410 U	420 U	430 U	440 U	430 U	410 U	430 U
2,4-Dinitrophenol	1,000 U	1,100 U	1,100 U	1,100 U	1,100 U	1,000 U	1,100 U
2,4-Dinitrotoluene	410 U	420 U	430 U	440 U	430 U	410 U	430 U
2,6-Dinitrotoluene	410 U	420 U	430 U	440 U	430 U	410 U	430 U
2-Chloronaphthalene	410 U	420 U	430 U	440 U	430 U	410 U	430 U
2-Chlorophenol	410 U	420 U	430 U	440 U	430 U	410 U	430 U
2-Methylnaphthalene	410 U	420 U	430 U	440 U	430 U	410 U	430 U
2-Methylphenol	410 U	420 U	430 U	440 U	430 U	410 U	430 U
2-Nitroaniline	1,000 U	1,100 U	1,100 U	1,100 U	1,100 U	1,000 U	1,100 U
2-Nitrophenol	410 U	420 U	430 U	440 U	430 U	410 U	430 U
3,3'-Dichlorobenzidine	410 U	420 U	430 U	440 U	430 U	410 U	430 U
3-Nitroaniline	1,000 U	1,100 U	1,100 U	1,100 U	1,100 U	1,000 U	1,100 U
4,6-Dinitro-2-methylphenol	1,000 U	1,100 U	1,100 U	1,100 U	1,100 U	1,000 U	1,100 U
4-Bromophenyl-phenylether	410 U	420 U	430 U	440 U	430 U	410 U	430 U
4-Chloro-3-methylphenol	410 U	420 U	430 U	440 U	430 U	410 U	430 U
4-Chloroaniline	410 U	420 U	430 U	440 U	430 U	410 U	430 U
4-Chlorophenyl-phenylether	410 U	420 U	430 U	440 U	430 U	410 U	430 U
4-Methylphenol	410 U	420 U	430 U	440 U	430 U	410 U	430 U
4-Nitroaniline	1,000 U	1,100 U	1,100 U	1,100 U	1,100 U	1,000 U	1,100 U
4-Nitrophenol	1,000 U	1,100 U	1,100 U	1,100 U	1,100 U	1,000 U	1,100 U
Acenaphthene	410 U	420 U	430 U	440 U	430 U	410 U	430 U
Acenaphthylene	410 U	420 U	430 U	440 U	430 U	410 U	430 U
Acetophenone	410 U	420 U	430 U	440 U	430 U	410 U	430 U
Anthracene	410 U	420 U	430 U	440 U	430 U	410 U	430 U
Atrazine	410 U	420 U	430 U	440 U	430 U	410 U	430 U
Benzaldehyde	410 UJ	420 UJ	430 UJ	440 UJ	430 UJ	410 UJ	430 UJ
Benzo(a)anthracene	410 U	420 U	430 U	440 U	430 U	410 U	430 U
Benzo(a)pyrene	410 U	420 U	430 U	440 U	430 U	410 U	430 U
Benzo(b)fluoranthene	410 U	420 U	430 U	440 U	430 U	410 U	430 U
Benzo(g,h,i)perylene	410 U	420 U	430 U	440 U	430 U	410 U	430 U

Station ID	MR08-IS38	MR08-IS39	MR08-IS40	MR08-IS41	MR08-IS42		MR08-IS43
Sample ID	MR08-IS38-5-6-08C	MR08-IS39-5-6-08C	MR08-IS40-5-6-08C	MR08-IS41-5-6-08C	MR08-IS42-5-6-08C	MR08-IS42D-5-6-08C	MR08-IS43-5-6-08C
Sample Date	07/28/08	07/28/08	07/29/08	07/29/08	07/29/08	07/29/08	07/28/08
Chemical Name							
Benzo(k)fluoranthene	410 U	420 U	430 U	440 U	430 U	410 U	430 U
Butylbenzylphthalate	410 U	420 U	430 U	440 U	430 U	410 U	430 U
Caprolactam	410 U	420 U	430 U	440 U	430 U	410 U	430 U
Carbazole	410 U	420 U	430 U	440 U	430 U	410 U	430 U
Chrysene	410 U	420 U	430 U	440 U	430 U	410 U	430 U
Di-n-butylphthalate	410 U	420 U	430 U	440 U	430 U	410 U	430 U
Di-n-octylphthalate	410 UJ	420 UJ	430 UJ	440 UJ	430 UJ	410 UJ	430 UJ
Dibenz(a,h)anthracene	410 U	420 U	430 U	440 U	430 U	410 U	430 U
Dibenzofuran	410 U	420 U	430 U	440 U	430 U	410 U	430 U
Diethylphthalate	410 U	420 U	79 J	440 U	430 U	410 U	430 U
Dimethyl phthalate	410 U	420 U	430 U	440 U	430 U	410 U	430 U
Fluoranthene	410 U	420 U	430 U	440 U	430 U	410 U	430 U
Fluorene	410 U	420 U	430 U	440 U	430 U	410 U	430 U
Hexachlorobenzene	410 U	420 U	430 U	440 U	430 U	410 U	430 U
Hexachlorobutadiene	410 U	420 U	430 U	440 U	430 U	410 U	430 U
Hexachlorocyclopentadiene	410 U	420 U	430 U	440 U	430 U	410 U	430 U
Hexachloroethane	410 U	420 U	430 U	440 U	430 U	410 U	430 U
Indeno(1,2,3-cd)pyrene	410 U	420 U	430 U	440 U	430 U	410 U	430 U
Isophorone	410 U	420 U	430 U	440 U	430 U	410 U	430 U
Naphthalene	410 U	420 U	430 U	440 U	430 U	410 U	430 U
Nitrobenzene	410 U	420 U	430 U	440 U	430 U	410 U	430 U
Pentachlorophenol	1,000 U	1,100 U	1,100 U	1,100 U	1,100 U	1,000 U	1,100 U
Phenanthrene	410 U	420 U	430 U	440 U	430 U	410 U	430 U
Phenol	410 U	420 U	430 U	440 U	430 U	410 U	430 U
Pyrene	410 U	420 U	430 U	440 U	430 U	410 U	430 U
bis(2-Chloroethoxy)methane	410 U	420 U	430 U	440 U	430 U	410 U	430 U
bis(2-Chloroethyl)ether	410 U	420 U	430 U	440 U	430 U	410 U	430 U
bis(2-Ethylhexyl)phthalate	68 J	46 J	430 U	440 U	430 U	410 U	430 U
n-Nitroso-di-n-propylamine	410 U	420 U	430 U	440 U	430 U	410 U	430 U
n-Nitrosodiphenylamine	410 U	420 U	430 U	440 U	430 U	410 U	430 U
Pesticide/Polychlorinated Biphenyls (UG/KG)							
4,4'-DDD	4.1 U	0.5 J	2.6 J	4.4 U	4.3 U	4.1 U	4.3 U
4,4'-DDE	4.1 U	4.2 U	0.71 J	4.4 U	4.3 U	4.1 U	4.3 U
4,4'-DDT	4.1 U	4.2 U	1.7 J	4.4 U	4.3 U	4.1 U	4.3 U
Aldrin	2.1 U	2.1 U	2.2 U	2.2 U	2.2 U	2 U	2.2 U
Aroclor-1016	41 U	42 U	43 U	44 U	43 U	41 U	43 U

Station ID	MR08-IS38	MR08-IS39	MR08-IS40	MR08-IS41	MR08-IS42		MR08-IS43
Sample ID	MR08-IS38-5-6-08C	MR08-IS39-5-6-08C	MR08-IS40-5-6-08C	MR08-IS41-5-6-08C	MR08-IS42-5-6-08C	MR08-IS42D-5-6-08C	MR08-IS43-5-6-08C
Sample Date	07/28/08	07/28/08	07/29/08	07/29/08	07/29/08	07/29/08	07/28/08
Chemical Name							
Aroclor-1221	82 U	84 U	87 U	88 U	86 U	81 U	87 U
Aroclor-1232	41 U	42 U	43 U	44 U	43 U	41 U	43 U
Aroclor-1242	41 U	42 U	43 U	44 U	43 U	41 U	43 U
Aroclor-1248	41 U	42 U	43 U	44 U	43 U	41 U	43 U
Aroclor-1254	41 U	42 U	43 U	44 U	43 U	41 U	43 U
Aroclor-1260	41 U	42 U	43 U	44 U	43 U	41 U	43 U
Dieldrin	4.1 U	4.1 J	1.1 J	0.26 J	4.3 U	4.1 U	4.3 U
Endosulfan I	2.1 U	2.1 U	2.2 U	2.2 U	2.2 U	2 U	2.2 U
Endosulfan II	4.1 U	4.2 U	4.3 U	4.4 U	4.3 U	4.1 U	4.3 U
Endosulfan sulfate	4.1 U	4.2 U	4.3 U	4.4 U	4.3 U	4.1 U	4.3 U
Endrin	4.1 U	4.2 U	4.3 U	4.4 U	4.3 U	4.1 U	4.3 U
Endrin aldehyde	4.1 U	4.2 U	4.3 U	4.4 U	4.3 U	4.1 U	4.3 U
Endrin ketone	4.1 U	4.2 U	4.3 U	4.4 U	4.3 U	4.1 U	4.3 U
Heptachlor	2.1 U	2.1 U	2.2 U	2.2 U	2.2 U	2 U	2.2 U
Heptachlor epoxide	2.1 U	2.1 U	2.2 U	0.57 J	2.2 U	2 U	2.2 U
Methoxychlor	21 U	21 U	22 U	22 U	22 U	20 U	22 U
Toxaphene	210 U	210 U	220 U	220 U	220 U	200 U	220 U
alpha-BHC	2.1 U	2.1 U	2.2 U	2.2 U	2.2 U	2 U	2.2 U
alpha-Chlordane	2.1 U	2.1 U	3.8	2.2 U	2.2 U	2 U	2.2 U
beta-BHC	2.1 U	2.1 U	2.2 U	2.2 U	2.2 U	2 U	2.2 U
delta-BHC	2.1 U	2.1 U	2.2 U	2.2 U	2.2 U	2 U	2.2 U
gamma-BHC (Lindane)	2.1 U	2.1 U	2.2 U	2.2 U	2.2 U	2 U	2.2 U
gamma-Chlordane	2.1 U	2.1 U	3.6	2.2 U	2.2 U	2 U	2.2 U
Explosives (UG/KG)							
1,3,5-Trinitrobenzene	100 U	100 U	100 U	100 U	100 U	100 U	100 U
1,3-Dinitrobenzene	100 U	100 U	100 U	100 U	100 U	100 U	100 U
2,4,6-Trinitrotoluene	100 U	100 U	100 U	100 U	100 U	100 U	100 U
2,4-Dinitrotoluene	100 U	100 U	100 U	100 U	100 U	100 U	100 U
2,6-Dinitrotoluene	100 U	100 U	100 U	100 U	100 U	100 U	100 U
2-Amino-4,6-dinitrotoluene	100 U	100 U	100 U	100 U	100 U	100 U	100 U
2-Nitrotoluene	200 U	200 U	200 U	200 U	200 U	200 U	200 U
3-Nitrotoluene	200 U	200 U	200 U	200 U	200 U	200 U	200 U
4-Amino-2,6-dinitrotoluene	100 U	100 U	100 U	100 U	100 U	100 U	100 U
4-Nitrotoluene	200 U	200 U	200 U	200 U	200 U	200 U	200 U
HMX	200 U	200 U	200 U	200 U	200 U	200 U	200 U
Nitrobenzene	100 U	100 U	100 U	100 U	100 U	100 U	100 U

Station ID	MR08-IS38	MR08-IS39	MR08-IS40	MR08-IS41	MR08-IS42		MR08-IS43
Sample ID	MR08-IS38-5-6-08C	MR08-IS39-5-6-08C	MR08-IS40-5-6-08C	MR08-IS41-5-6-08C	MR08-IS42-5-6-08C	MR08-IS42D-5-6-08C	MR08-IS43-5-6-08C
Sample Date	07/28/08	07/28/08	07/29/08	07/29/08	07/29/08	07/29/08	07/28/08
Chemical Name							
Perchlorate	2.46 U	2.51 U	2.6 U	2.65 U	2.59 U	2.44 U	2.6 U
RDX	200 U	200 U	200 U	200 U	200 U	200 U	200 U
Tetryl	200 U	200 U	200 U	200 U	200 U	200 U	200 U
Total Metals (MG/KG)							
Aluminum	11,000	4,760	8,490	2,820	7,510	5,270	12,400
Antimony	5.3 UJ	5.4 UJ	5.6 UJ	0.25 J	5.6 UJ	4.9 UJ	5.3 UJ
Arsenic	0.39 J	0.9 U	0.5 J	0.95 U	0.65 J	0.82 U	3.2
Barium	17.7 U	17.9 U	18.6 U	19.1 U	18.8 U	16.5 U	17.7 U
Beryllium	0.092 J	0.044 J	0.12 J	0.036 J	0.073 J	0.048 J	0.075 J
Cadmium	0.44 U	0.45 U	0.46 U	0.48 U	0.47 U	0.41 U	0.44 U
Calcium	442 U	448 U	464 U	477 U	469 U	411 U	443 U
Chromium	16.9	5.7	10.2	4.7	11.4	7.3	13.5
Cobalt	0.3 J	0.08 J	0.2 J	4.8 U	0.11 J	0.11 J	0.28 J
Copper	2.2 U	2.2 U	2.3 U	2.4 U	2.3 U	2.1 U	2.2 U
Iron	3,280	897	1,540	880	3,130	1,190	9,190
Lead	6.1 J	3.3 J	6.2 J	2.9 J	5.3 J	3.9 J	6.2 J
Magnesium	442 U	448 U	464 U	477 U	469 U	411 U	443 U
Manganese	7.4	3.3 U	5.8	3.4 J	5	4 U	5
Mercury	0.038 U	0.04 U	0.04 U	0.041 U	0.038 U	0.039 U	0.054
Nickel	2.1 J	0.68 J	1.1 J	0.24 J	1.4 J	0.8 J	1.3 J
Potassium	442 U	448 U	464 U	477 U	469 U	411 U	443 U
Selenium	3.1 U	3.1 U	3.2 U	3.3 U	3.3 U	2.9 U	3.1 U
Silver	0.88 U	0.9 U	0.93 U	0.055 J	0.94 U	0.82 U	0.89 U
Sodium	442 U	448 U	464 U	477 U	469 U	411 U	443 U
Thallium	2.2 U	2.2 U	2.3 U	2.4 U	2.3 U	2.1 U	2.2 U
Vanadium	15.5	5.8	9	4.6 J	10.6	9	18
Zinc	5.3 U	5.4 U	5.6 U	5.7 U	5.6 U	4.9 U	5.3 U
Wet Chemistry (MG/KG)	NA	NA	NA	NA	NA	NA	NA
% Solids	81	80	77	75	77	82	77
pH	6.3	6.9	4.8	4.6	4.5	4.5	4.8

Notes:

J - Analyte present, value may or may not be accurate or precise

NA - Not analyzed

U - The material was analyed for, but not detected

UJ - Analyte not detected, quantitation limit may be inaccurate

Appendix J
Human Health Risk Assessment Tables

TABLE 1

Selection of Exposure Pathways

Site UXO-08 Former Lejeune Cantonment Bazooka Range, Base CS Chamber, and NBC Training Trail

Camp Lejeune, North Carolina

Scenario Timeframe	Medium	Exposure Medium	Exposure Point	Receptor Population	Receptor Age	Exposure Route	On-Site/ Off-Site	Type of Analysis	Rationale for Selection or Exclusion of Exposure Pathway
Current	Groundwater	Groundwater	Tap Water	Resident	Adult	Dermal Absorption	On-site	None	Groundwater not currently used on site as a water supply.
						Ingestion	On-site	None	Groundwater not currently used on site as a water supply.
					Child	Dermal Absorption	On-site	None	Groundwater not currently used on site as a water supply.
						Ingestion	On-site	None	Groundwater not currently used on site as a water supply.
	Surface Soil	Surface Soil	Surface Soil	Resident	Adult	Dermal	On-site	None	No residents currently live on site.
						Ingestion	On-site	None	No residents currently live on site.
					Child	Dermal	On-site	None	No residents currently live on site.
						Ingestion	On-site	None	No residents currently live on site.
Current/Future	Surface Soil	Surface Soil	Surface Soil	Industrial Worker	Adult	Dermal	On-site	Quant	Site workers may contact surface soil.
						Ingestion	On-site	Quant	Site workers may contact surface soil.
				Trespasser/ Visitor	Adult	Dermal	On-site	Quant	Nearby residents may trespass/visit on site and contact surface soil.
						Ingestion	On-site	Quant	Nearby residents may trespass/visit on site and contact surface soil.
					Youth	Dermal	On-site	Quant	Nearby residents may trespass/visit on site and contact surface soil.
						Ingestion	On-site	Quant	Nearby residents may trespass/visit on site and contact surface soil.
					Child	Dermal	On-site	Quant	Nearby residents may trespass/visit on site and contact surface soil.
						Ingestion	On-site	Quant	Nearby residents may trespass/visit on site and contact surface soil.
		Air	Emissions from Surface Soil	Industrial Worker	Adult	Inhalation	On-site	Quant	Site workers may contact surface soil.
					Adult	Inhalation	On-site	Quant	Nearby residents may trespass/visit on site and contact surface soil.
					Youth	Inhalation	On-site	Quant	Nearby residents may trespass/visit on site and contact surface soil.
					Child	Inhalation	On-site	Quant	Nearby residents may trespass/visit on site and contact surface soil.

TABLE 1

Selection of Exposure Pathways

Site UXO-08 Former Lejeune Cantonment Bazooka Range, Base CS Chamber, and NBC Training Trail

Camp Lejeune, North Carolina

Scenario Timeframe	Medium	Exposure Medium	Exposure Point	Receptor Population	Receptor Age	Exposure Route	On-Site/ Off-Site	Type of Analysis	Rationale for Selection or Exclusion of Exposure Pathway
Current/Future	Surface Water	Surface Water	Surface Water	Industrial Worker	Adult	Dermal	On-site	Quant	Site workers may contact surface water.
						Ingestion	On-site	Quant	Site workers may contact surface water.
				Trespasser/ Visitor	Adult	Dermal	On-site	Quant	Nearby residents may trespass/visit on site and contact surface water.
						Ingestion	On-site	Quant	Nearby residents may trespass/visit on site and contact surface water.
					Youth	Dermal	On-site	Quant	Nearby residents may trespass/visit on site and contact surface water.
						Ingestion	On-site	Quant	Nearby residents may trespass/visit on site and contact surface water.
					Child	Dermal	On-site	Quant	Nearby residents may trespass/visit on site and contact surface water.
						Ingestion	On-site	Quant	Nearby residents may trespass/visit on site and contact surface water.
	Sediment	Sediment	Sediment	Industrial Worker	Adult	Dermal	On-site	Quant	Site workers may contact sediment.
						Ingestion	On-site	Quant	Site workers may contact sediment.
				Trespasser/ Visitor	Adult	Dermal	On-site	Quant	Nearby residents may trespass/visit on site and contact sediment.
						Ingestion	On-site	Quant	Nearby residents may trespass/visit on site and contact sediment.
					Youth	Dermal	On-site	Quant	Nearby residents may trespass/visit on site and contact sediment.
						Ingestion	On-site	Quant	Nearby residents may trespass/visit on site and contact sediment.
					Child	Dermal	On-site	Quant	Nearby residents may trespass/visit on site and contact sediment.
						Ingestion	On-site	Quant	Nearby residents may trespass/visit on site and contact sediment.
Future	Groundwater	Groundwater	Tap Water	Resident	Adult	Dermal Absorption	On-site	None[1]	Groundwater is being addressed in accordance with the selected site remedy. Therefore, evaluation was not performed for groundwater
						Ingestion	On-site	None[1]	Groundwater is being addressed in accordance with the selected site remedy. Therefore, evaluation was not performed for groundwater
					Child	Dermal Absorption	On-site	None[1]	Groundwater is being addressed in accordance with the selected site remedy. Therefore, evaluation was not performed for groundwater
						Ingestion	On-site	None[1]	Groundwater is being addressed in accordance with the selected site remedy. Therefore, evaluation was not performed for groundwater
					Child/Adult	Dermal Absorption	On-site	None[1]	Groundwater is being addressed in accordance with the selected site remedy. Therefore, evaluation was not performed for groundwater
						Ingestion	On-site	None[1]	Groundwater is being addressed in accordance with the selected site remedy. Therefore, evaluation was not performed for groundwater

TABLE 1

Selection of Exposure Pathways

Site UXO-08 Former Lejeune Cantonment Bazooka Range, Base CS Chamber, and NBC Training Trail

Camp Lejeune, North Carolina

Scenario Timeframe	Medium	Exposure Medium	Exposure Point	Receptor Population	Receptor Age	Exposure Route	On-Site/ Off-Site	Type of Analysis	Rationale for Selection or Exclusion of Exposure Pathway
Future	Groundwater	Groundwater	Tap Water	Industrial Worker	Adult	Dermal Absorption	On-site	None[1]	Groundwater is being addressed in accordance with the selected site remedy. Therefore, evaluation was not performed for groundwater
						Ingestion	On-site	None[1]	Groundwater is being addressed in accordance with the selected site remedy. Therefore, evaluation was not performed for groundwater
			Excavation Pit	Construction Worker	Adult	Dermal Absorption	On-site	None[1]	Groundwater is being addressed in accordance with the selected site remedy. Therefore, evaluation was not performed for groundwater
						Ingestion	On-site	None[1]	Groundwater is being addressed in accordance with the selected site remedy. Therefore, evaluation was not performed for groundwater
		Air	Shower	Resident	Adult	Inhalation	On-site	None[1]	Groundwater is being addressed in accordance with the selected site remedy. Therefore, evaluation was not performed for groundwater
					Child	Inhalation	On-site	None[1]	Groundwater is being addressed in accordance with the selected site remedy. Therefore, evaluation was not performed for groundwater
					Child/Adult	Inhalation	On-site	None[1]	Groundwater is being addressed in accordance with the selected site remedy. Therefore, evaluation was not performed for groundwater
			Excavation Pit	Construction Worker	Adult	Inhalation	On-site	None[1]	Groundwater is being addressed in accordance with the selected site remedy. Therefore, evaluation was not performed for groundwater
	Combined Surface and Subsurface Soil	Surface and Subsurface Soil	Soil	Resident	Adult	Dermal	On-site	Quant	On-site residents may contact soil on site.
						Ingestion	On-site	Quant	On-site residents may contact soil on site.
					Child	Dermal	On-site	Quant	On-site residents may contact soil on site.
						Ingestion	On-site	Quant	On-site residents may contact soil on site.
				Industrial Worker	Adult	Dermal	On-site	Quant	Site workers may contact soil on site.
						Ingestion	On-site	Quant	Site workers may contact soil on site.
				Construction Worker	Adult	Dermal	On-site	Quant	Construction workers may contact soil on site.
						Ingestion	On-site	Quant	Construction workers may contact soil on site.

TABLE 1

Selection of Exposure Pathways

Site UXO-08 Former Lejeune Cantonment Bazooka Range, Base CS Chamber, and NBC Training Trail

Camp Lejeune, North Carolina

Scenario Timeframe	Medium	Exposure Medium	Exposure Point	Receptor Population	Receptor Age	Exposure Route	On-Site/ Off-Site	Type of Analysis	Rationale for Selection or Exclusion of Exposure Pathway
Future	Combined Surface and Subsurface Soil	Air	Emissions from Soil	Resident	Adult	Inhalation	On-site	Quant	On-site residents may contact soil on site.
					Child	Inhalation	On-site	Quant	On-site residents may contact soil on site.
				Industrial Worker	Adult	Inhalation	On-site	Quant	Site workers may contact soil on site.
				Construction Worker	Adult	Inhalation	On-site	Quant	Construction workers may contact soil on site.
	Surface Water	Surface Water	Surface Water	Construction Worker	Adult	Dermal	On-site	Quant	Construction workers may contact surface water.
						Ingestion	On-site	Quant	Construction workers may contact surface water.
	Sediment	Sediment	Sediment	Construction Worker	Adult	Dermal	On-site	Quant	Construction workers may contact sediment.
						Ingestion	On-site	Quant	Construction workers may contact sediment.

1. Screening level human health risk assessment performed for groundwater

TABLE 2.1

Occurrence, Distribution, and Selection of Chemicals of Potential Concern

Site UXO-08 Former Lejeune Cantonment Bazooka Range, Base CS Chamber, and NBC Training Trail

MCB Camp Lejeune, North Carolina

Scenario Timeframe: Current/Future
Medium: Surface Soil
Exposure Medium: Surface Soil

Exposure Point	CAS Number	Chemical	Minimum [1] Concentration Qualifier	Maximum [1] Concentration Qualifier	Units	Location of Maximum Concentration	Detection Frequency	Range of Detection Limits	Concentration [2] Used for Screening	Background [3] Value	Screening [4] Toxicity Value	Potential ARAR/TBC Value	Potential ARAR/TBC Source	COPC Flag	Rationale for [5] Contaminant Deletion or Selection
Surface Soil	71-55-6	1,1,1-Trichloroethane	ND	ND	MG/KG		0/100	0.0079 - 0.91	9.1E-01		6.4E+02 NS	1.2E+00	NCSSL	NO	DLBSL
	79-34-5	1,1,2,2-Tetrachloroethane	ND	ND	MG/KG		0/100	0.0079 - 0.91	9.1E-01		5.6E-01 C	1.2E-03	NCSSL	YES	DLASL
	76-13-1	1,1,2-Trichloro-1,2,2-trifluoroethane (Freon-113)	ND	ND	MG/KG		0/100	0.0079 - 0.91	9.1E-01		9.1E+02 NS	9.2E+03	NCSSL	NO	DLBSL
	79-00-5	1,1,2-Trichloroethane	ND	ND	MG/KG		0/100	0.0079 - 0.91	9.1E-01		1.1E+00 C			NO	DLBSL
	75-34-3	1,1-Dichloroethane	ND	ND	MG/KG		0/100	0.0079 - 0.91	9.1E-01		3.3E+00 C	3.0E-02	NCSSL	NO	DLBSL
	75-35-4	1,1-Dichloroethene	ND	ND	MG/KG		0/100	0.0079 - 0.91	9.1E-01		2.4E+01 N	4.6E-02	NCSSL	NO	DLBSL
	120-82-1	1,2,4-Trichlorobenzene	9.0E-04 J	9.0E-04 J	MG/KG	MR08-SS061-08D	1/100	0.0079 - 0.91	9.0E-04		6.2E+00 C**	2.2E+00	NCSSL	NO	BSL
	96-12-8	1,2-Dibromo-3-chloropropane	ND	ND	MG/KG		0/100	0.004 - 0.46	4.6E-01		5.4E-03 C	2.5E-04	NCSSL	YES	DLASL
	106-93-4	1,2-Dibromoethane	ND	ND	MG/KG		0/100	0.0079 - 0.91	9.1E-01		3.4E-02 C	9.7E-05	NCSSL	YES	DLASL
	95-50-1	1,2-Dichlorobenzene	4.5E-04 J	4.5E-04 J	MG/KG	MR08-SS061-08D	1/100	0.0079 - 0.91	4.5E-04		1.9E+02 N	2.4E-01	NCSSL	NO	BSL
	107-06-2	1,2-Dichloroethane	ND	ND	MG/KG		0/100	0.0079 - 0.91	9.1E-01		4.3E-01 C	2.0E-03	NCSSL	YES	DLASL
	78-87-5	1,2-Dichloropropane	ND	ND	MG/KG		0/100	0.0079 - 0.91	9.1E-01		8.9E-01 C*	3.3E-03	NCSSL	YES	DLASL
	541-73-1	1,3-Dichlorobenzene	ND	ND	MG/KG		0/100	0.0079 - 0.91	9.1E-01		2.4E+00 C	7.6E+00	NCSSL	NO	DLBSL
	106-46-7	1,4-Dichlorobenzene	1.1E-02 J	1.1E-02 J	MG/KG	MR08-SS056-08D	1/100	0.0079 - 0.91	1.1E-02		2.4E+00 C	7.0E-02	NCSSL	NO	BSL
	78-93-3	2-Butanone	1.5E-03 J	4.6E-02 J	MG/KG	MR08-SS068-08D	57/100	0.0089 - 0.91	4.6E-02		2.8E+03 N	1.6E+01	NCSSL	NO	BSL
	591-78-6	2-Hexanone	4.8E-03 J	7.0E-03 J	MG/KG	MR08-SS096-08D	3/100	0.0079 - 0.91	7.0E-03		2.1E+01 N	1.2E+00	NCSSL	NO	BSL
	108-10-1	4-Methyl-2-pentanone	5.3E-04 J	2.1E-03 J	MG/KG	MR08-SS091-08D : MR08-SS096-08D	9/100	0.0089 - 0.91	2.1E-03		5.3E+02 N			NO	BSL
	67-64-1	Acetone	6.9E-03 J	1.8E+00 J	MG/KG	MR08-SS081-08D	60/100	0.0098 - 0.48	1.8E+00		6.1E+03 N	2.4E+01	NCSSL	NO	BSL
	71-43-2	Benzene	5.4E-04 J	9.5E-03 J	MG/KG	MR08-SS115-08D	40/100	0.0089 - 0.91	9.5E-03		1.1E+00 C*	7.3E-03	NCSSL	NO	BSL
	75-27-4	Bromodichloromethane	2.5E-03 J	2.5E-03 J	MG/KG	MR08-SS056-08D	1/100	0.0079 - 0.91	2.5E-03		2.7E-01 C	2.9E-03	NCSSL	NO	BSL
	75-25-2	Bromoform	ND	ND	MG/KG		0/100	0.0079 - 0.91	9.1E-01		6.1E+01 C*	1.9E-02	NCSSL	NO	DLBSL
	74-83-9	Bromomethane	ND	ND	MG/KG		0/100	0.0079 - 0.91	9.1E-01		7.3E-01 N			YES	DLASL
	75-15-0	Carbon disulfide	1.3E-03 J	9.0E-03 J	MG/KG	MR08-SS128-08D	17/100	0.0079 - 0.91	9.0E-03		8.2E+01 N	3.8E+00	NCSSL	NO	BSL
	56-23-5	Carbon tetrachloride	ND	ND	MG/KG		0/100	0.0079 - 0.91	9.1E-01		6.1E-01 C	2.0E-03	NCSSL	YES	DLASL
	108-90-7	Chlorobenzene	1.1E-02 J	1.1E-02 J	MG/KG	MR08-SS056-08D	1/100	0.0079 - 0.91	1.1E-02		2.9E+01 N	4.5E-01	NCSSL	NO	BSL
	75-00-3	Chloroethane	ND	ND	MG/KG		0/100	0.0079 - 0.91	9.1E-01		1.5E+03 N	1.6E+01	NCSSL	NO	DLBSL
	67-66-3	Chloroform	4.5E-03 J	2.3E-02 J	MG/KG	MR08-SS056-08D	2/100	0.0079 - 0.91	2.3E-02		2.9E-01 C	3.4E-01	NCSSL	NO	BSL
	74-87-3	Chloromethane	2.2E-03 J	2.9E-02 J	MG/KG	MR08-SS389-08D	3/100	0.0079 - 0.91	2.9E-02		1.2E+01 N	1.5E-02	NCSSL	NO	BSL
	156-59-2	cis-1,2-Dichloroethene	5.1E-03 J	5.1E-03 J	MG/KG	MR08-SS056-08D	1/100	0.0079 - 0.91	5.1E-03		1.6E+01 N	3.6E-01	NCSSL	NO	BSL
	10061-01-5	cis-1,3-Dichloropropene	ND	ND	MG/KG		0/100	0.0079 - 0.91	9.1E-01		1.7E+00 C*	2.3E-03	NCSSL	NO	DLBSL
	110-82-7	Cyclohexane	4.8E-04 J	2.2E-03 J	MG/KG	MR08-SS115-08D	12/100	0.0079 - 0.91	2.2E-03		1.2E+02 NS			NO	BSL
	124-48-1	Dibromochloromethane	ND	ND	MG/KG		0/100	0.0079 - 0.91	9.1E-01		6.8E-01 C	1.9E-03	NCSSL	YES	DLASL
	75-71-8	Dichlorodifluoromethane (Freon-12)	ND	ND	MG/KG		0/100	0.0079 - 0.91	9.1E-01		1.8E+01 N	2.9E+01	NCSSL	NO	DLBSL
	100-41-4	Ethylbenzene	8.0E-04 J	7.7E-03 J	MG/KG	MR08-SS115-08D	33/100	0.0089 - 0.91	7.7E-03		5.4E+00 C	8.1E+00	NCSSL	NO	BSL

TABLE 2.1

Occurrence, Distribution, and Selection of Chemicals of Potential Concern

Site UXO-08 Former Lejeune Cantonment Bazooka Range, Base CS Chamber, and NBC Training Trail

MCB Camp Lejeune, North Carolina

Scenario Timeframe: Current/Future
Medium: Surface Soil
Exposure Medium: Surface Soil

Exposure Point	CAS Number	Chemical	Minimum [1] Concentration Qualifier	Maximum [1] Concentration Qualifier	Units	Location of Maximum Concentration	Detection Frequency	Range of Detection Limits	Concentration [2] Used for Screening	Background [3] Value	Screening [4] Toxicity Value	Potential ARAR/TBC Value	Potential ARAR/TBC Source	COPC Flag	Rationale for [5] Contaminant Deletion or Selection
	98-82-8	Isopropylbenzene	ND	ND	MG/KG		0/100	0.0079 - 0.91	9.1E-01		2.1E+02 N	1.3E+00	NCSSL	NO	DLBSL
	79-20-9	Methyl acetate	5.0E-03 J	2.7E+00 J	MG/KG	MR08-SS081-08D	15/100	0.0079 - 0.91	2.7E+00		7.8E+03 N			NO	BSL
	108-87-2	Methylcyclohexane	3.6E-04 J	2.4E-03 J	MG/KG	MR08-SS115-08D	32/100	0.0088 - 0.91	2.4E-03		N/A			NO	NTX
	75-09-2	Methylene chloride	1.1E-03 J	6.0E-01 J	MG/KG	MR08-SS067-08D	13/100	0.0079 - 0.91	6.0E-01		1.1E+01 C	2.3E-02	NCSSL	NO	BSL
	1634-04-4	Methyl-tert-butyl ether (MTBE)	ND	ND	MG/KG		0/100	0.0079 - 0.91	9.1E-01		4.3E+01 C	8.5E-02	NCSSL	NO	DLBSL
	100-42-5	Styrene	9.1E-04 J	1.6E-02 J	MG/KG	MR08-SS052-08D	4/100	0.0079 - 0.91	1.6E-02		6.3E+02 N	9.2E-01	NCSSL	NO	BSL
	127-18-4	Tetrachloroethene	2.2E-03 J	2.2E-03 J	MG/KG	MR08-SS056-08D	1/100	0.0079 - 0.91	2.2E-03		5.5E-01 C	5.0E-03	NCSSL	NO	BSL
	108-88-3	Toluene	1.1E-03 J	1.4E-02 J	MG/KG	MR08-SS096-08D	39/100	0.0082 - 0.91	1.4E-02		5.0E+02 N	5.5E+00	NCSSL	NO	BSL
	156-60-5	trans-1,2-Dichloroethene	ND	ND	MG/KG		0/100	0.0079 - 0.91	9.1E-01		1.5E+01 N	5.1E-01	NCSSL	NO	DLBSL
	10061-02-6	trans-1,3-Dichloropropene	ND	ND	MG/KG		0/100	0.0079 - 0.91	9.1E-01		1.7E+00 C*	2.3E-03	NCSSL	NO	DLBSL
	79-01-6	Trichloroethene	3.1E-03 J	3.2E-03 J	MG/KG	MR08-SS056-08D	2/100	0.0079 - 0.91	3.2E-03		2.8E+00 C	1.8E-02	NCSSL	NO	BSL
	75-69-4	Trichlorofluoromethane (Freon-11)	ND	ND	MG/KG		0/100	0.0079 - 0.91	9.1E-01		7.9E+01 N	2.4E+01	NCSSL	NO	DLBSL
	75-01-4	Vinyl chloride	6.7E-03 J	6.7E-03 J	MG/KG	MR08-SS129-08D	1/100	0.0079 - 0.91	6.7E-03		6.0E-02 C	1.9E-04	NCSSL	NO	BSL
	1330-20-7	Xylene, total	2.3E-03 J	3.1E-03 J	MG/KG	MR08-SS096-08D	2/100	0.0079 - 0.91	3.1E-03		6.3E+01 N	6.0E+00	NCSSL	NO	BSL
	92-52-4	1,1-Biphenyl	ND	ND	MG/KG		0/112	0.35 - 0.69	6.9E-01		2.1E+02 NS	4.3E+01	NCSSL	NO	DLBSL
	108-60-1	2,2'-Oxybis(1-chloropropane)	ND	ND	MG/KG		0/112	0.35 - 0.69	6.9E-01		4.6E+00 C			NO	DLBSL
	95-95-4	2,4,5-Trichlorophenol	ND	ND	MG/KG		0/112	0.52 - 1.2	1.2E+00		6.1E+02 N			NO	DLBSL
	88-06-2	2,4,6-Trichlorophenol	ND	ND	MG/KG		0/112	0.36 - 1	1.0E+00		6.1E+00 C**			NO	DLBSL
	120-83-2	2,4-Dichlorophenol	ND	ND	MG/KG		0/112	0.36 - 1	1.0E+00		1.8E+01 N			NO	DLBSL
	105-67-9	2,4-Dimethylphenol	ND	ND	MG/KG		0/112	0.36 - 1	1.0E+00		1.2E+02 N	1.4E+00	NCSSL	NO	DLBSL
	51-28-5	2,4-Dinitrophenol	ND	ND	MG/KG		0/112	0.9 - 2.5	2.5E+00		1.2E+01 N			NO	DLBSL
	121-14-2	2,4-Dinitrotoluene	ND	ND	MG/KG		0/141	0.0971 - 0.69	6.9E-01		1.6E+00 C*			NO	DLBSL
	606-20-2	2,6-Dinitrotoluene	ND	ND	MG/KG		0/141	0.0963 - 0.53	5.3E-01		6.1E+00 N			NO	DLBSL
	91-58-7	2-Chloronaphthalene	ND	ND	MG/KG		0/112	0.35 - 0.69	6.9E-01		1.8E+02 NS			NO	DLBSL
	95-57-8	2-Chlorophenol	ND	ND	MG/KG		0/112	0.36 - 1	1.0E+00		3.9E+01 N	4.1E-03	NCSSL	NO	DLBSL
	91-57-6	2-Methylnaphthalene	2.6E-03 J	3.2E-02 J	MG/KG	MR08-SS051-08D	42/112	0.01 - .49	3.2E-02		3.1E+01 N	1.6E+00	NCSSL	NO	BSL
	95-48-7	2-Methylphenol	ND	ND	MG/KG		0/112	0.36 - 1.2	1.2E+00		3.1E+02 N			NO	DLBSL
	88-74-4	2-Nitroaniline	ND	ND	MG/KG		0/112	0.52 - 1.2	1.2E+00		6.1E+01 N			NO	DLBSL
	88-75-5	2-Nitrophenol	ND	ND	MG/KG		0/112	0.36 - 1.2	1.2E+00		3.9E+01 N			NO	DLBSL
	m&pCRESOL	3- and 4-Methylphenol	ND	ND	MG/KG		0/100	0.63 - 1.2	1.2E+00		3.1E+01 N			NO	DLBSL
	91-94-1	3,3'-Dichlorobenzidine	ND	ND	MG/KG		0/112	0.36 - 0.87	8.7E-01		1.1E+00 C			NO	DLBSL
	99-09-2	3-Nitroaniline	ND	ND	MG/KG		0/112	0.52- 1.2	1.2E+00		N/A			NO	NTX
	534-52-1	4,6-Dinitro-2-methylphenol	ND	ND	MG/KG		0/112	0.9 - 2.5	2.5E+00		4.9E-01 N			YES	DLASL
	101-55-3	4-Bromophenyl-phenylether	ND	ND	MG/KG		0/112	0.35 - 0.69	6.9E-01		N/A			NO	NTX
	59-50-7	4-Chloro-3-methylphenol	ND	ND	MG/KG		0/112	0.36 - 1	1.0E+00		6.1E+02 N			NO	DLBSL

TABLE 2.1

Occurrence, Distribution, and Selection of Chemicals of Potential Concern

Site UXO-08 Former Lejeune Cantonment Bazooka Range, Base CS Chamber, and NBC Training Trail

MCB Camp Lejeune, North Carolina

Scenario Timeframe: Current/Future
Medium: Surface Soil
Exposure Medium: Surface Soil

Exposure Point	CAS Number	Chemical	Minimum [1] Concentration Qualifier	Maximum [1] Concentration Qualifier	Units	Location of Maximum Concentration	Detection Frequency	Range of Detection Limits	Concentration [2] Used for Screening	Background [3] Value	Screening [4] Toxicity Value	Potential ARAR/TBC Value	Potential ARAR/TBC Source	COPC Flag	Rationale for [5] Contaminant Deletion or Selection
	106-47-8	4-Chloroaniline	ND	ND	MG/KG		0/112	0.36 - 0.87	8.7E-01		2.4E+00 C			NO	DLBSL
	7005-72-3	4-Chlorophenyl-phenylether	ND	ND	MG/KG		0/112	0.35 - 0.69	6.9E-01		3.1E+01 N			NO	DLBSL
	106-44-5	4-Methylphenol	6.9E-02 J	6.9E-02 J	MG/KG	MR08-SS33-08B	1/12	0.36 - 0.49	6.9E-02		3.1E+01 N	4.0E-01	NCSSL	NO	BSL
	100-01-6	4-Nitroaniline	ND	ND	MG/KG		0/100	0.52 - 0.87	8.7E-01		2.4E+01 C*			NO	DLBSL
	100-02-7	4-Nitrophenol	ND	ND	MG/KG		0/112	0.9 - 2.5	2.5E+00		4.8E+00 C*			NO	DLBSL
	83-32-9	Acenaphthene	ND	ND	MG/KG		0/112	0.35 - 0.69	6.9E-01		3.4E+02 N	8.4E+00	NCSSL	NO	DLBSL
	208-96-8	Acenaphthylene	ND	ND	MG/KG		0/112	0.35 - 0.69	6.9E-01		3.4E+02 N	1.1E+01	NCSSL	NO	DLBSL
	98-86-2	Acetophenone	4.3E-01 J	4.3E-01 J	MG/KG	MR08-SS056-08D	1/112	0.36 - 1.2	4.3E-01		7.8E+02 N			NO	BSL
	120-12-7	Anthracene	5.3E-02 J	6.0E-02 J	MG/KG	MR08-SS33-08B	2/112	0.35 - 0.69	6.0E-02		1.7E+03 N	6.6E+02	NCSSL	NO	BSL
	1912-24-9	Atrazine	ND	ND	MG/KG		0/112	0.35 - 0.69	6.9E-01		2.1E+00 C	2.5E-02	NCSSL	NO	DLBSL
	100-52-7	Benzaldehyde	1.5E-01 J	1.5E-01 J	MG/KG	MR08-SS059D-08D	1/112	0.36 - 1	1.5E-01		7.8E+02 N			NO	BSL
	56-55-3	**Benzo(a)anthracene**	**1.6E-03 J**	**2.3E-01**	**MG/KG**	**MR08-SS390-08D**	**79/112**	**0.01 - 0.44**	**2.3E-01**		**1.5E-01 C**	**1.8E-01**	**NCSSL**	**YES**	**ASL**
	50-32-8	**Benzo(a)pyrene**	**4.1E-03 J**	**3.4E-01**	**MG/KG**	**MR08-SS056-08D**	**66/112**	**0.01 - 0.44**	**3.4E-01**		**1.5E-02 C**	**5.9E-02**	**NCSSL**	**YES**	**ASL**
	205-99-2	**Benzo(b)fluoranthene**	**4.2E-03 J**	**7.6E-01 J**	**MG/KG**	**MR08-SS390-08D**	**64/112**	**0.01 - 0.48**	**7.6E-01**		**1.5E-01 C**	**6.0E-01**	**NCSSL**	**YES**	**ASL**
	191-24-2	Benzo(g,h,i)perylene	2.4E-03 J	3.5E-01	MG/KG	MR08-SS056-08D	79/112	0.01 - 0.44	3.5E-01		1.7E+02 N	3.6E+02	NCSSL	NO	BSL
	207-08-9	**Benzo(k)fluoranthene**	**2.2E-03 J**	**3.8E-01**	**MG/KG**	**MR08-SS056-08D**	**64/112**	**0.01 - 0.48**	**3.8E-01**		**1.5E+00 C**	**5.9E+00**	**NCSSL**	**YES**	**CC**
	111-91-1	bis(2-Chloroethoxy)methane	ND	ND	MG/KG		0/112	0.35 - 0.69	6.9E-01		1.8E+01 N			NO	DLBSL
	111-44-4	bis(2-Chloroethyl)ether	ND	ND	MG/KG		0/112	0.35 - 0.69	6.9E-01		2.1E-01 C	1.4E-04	NCSSL	YES	DLASL
	117-81-7	bis(2-Ethylhexyl)phthalate	4.6E-02 J	3.9E+00	MG/KG	MR08-SS056-08D	44/112	0.35 - 0.69	3.9E+00		3.5E+01 C*	7.2E+00	NCSSL	NO	BSL
	85-68-7	Butylbenzylphthalate	2.0E-01 J	2.0E-01 J	MG/KG	MR08-SS056-08D	1/112	0.35 - 0.69	2.0E-01		2.6E+02 C*	1.5E+02	NCSSL	NO	BSL
	105-60-2	Caprolactam	5.2E-02 J	5.2E-02 J	MG/KG	MR08-SS30-08B	1/112	0.36 - 1	5.2E-02		3.1E+03 N	1.8E+01	NCSSL	NO	BSL
	86-74-8	Carbazole	ND	ND	MG/KG		0/112	0.36 - 1	1.0E+00		N/A			NO	NTX
	218-01-9	**Chrysene**	**5.8E-02 J**	**4.5E-01**	**MG/KG**	**MR08-SS398-08D**	**16/112**	**0.35 - 0.69**	**4.5E-01**		**1.5E+01 C**	**1.8E+01**	**NCSSL**	**YES**	**CC**
	53-70-3	**Dibenz(a,h)anthracene**	**2.2E-03 J**	**7.5E-02**	**MG/KG**	**MR08-SS056-08D**	**29/112**	**0.01 - 0.49**	**7.5E-02**		**1.5E-02 C**	**1.9E-01**	**NCSSL**	**YES**	**ASL**
	132-64-9	Dibenzofuran	ND	ND	MG/KG		0/112	0.35 - 0.69	6.9E-01		7.8E+00 N	4.7E+00	NCSSL	NO	DLBSL
	84-66-2	Diethylphthalate	8.8E-02 J	1.0E-01 J	MG/KG	MR08-SS131-08D	3/112	0.35 - 0.69	1.0E-01		4.9E+03 N	3.7E+01	NCSSL	NO	BSL
	131-11-3	Dimethyl phthalate	ND	ND	MG/KG		0/112	0.35 - 0.69	6.9E-01		N/A			NO	NTX
	84-74-2	Di-n-butylphthalate	4.7E-02 J	2.8E-01 J	MG/KG	MR08-SS30-08B	3/112	0.35 - 0.69	2.8E-01		6.1E+02 N	1.9E+01	NCSSL	NO	BSL
	117-84-0	Di-n-octylphthalate	ND	ND	MG/KG		0/112	0.35 - 0.69	6.9E-01		3.5E+01 C*	3.8E+01	NCSSL	NO	DLBSL
	206-44-0	Fluoranthene	2.0E-03 J	6.3E-01	MG/KG	MR08-SS077-08D	86/112	0.01 - 0.44	6.3E-01		2.3E+02 N	3.3E+02	NCSSL	NO	BSL
	86-73-7	Fluorene	4.0E-03 J	5.2E-03 J	MG/KG	MR08-SS115-08D	2/112	0.01 - 0.49	5.2E-03		2.3E+02 N	5.6E+01	NCSSL	NO	BSL
	118-74-1	Hexachlorobenzene	1.6E-03 J	5.8E-03 J	MG/KG	MR08-SS056-08D	3/112	0.01 - 0.49	5.8E-03		3.0E-01 C	2.6E-03	NCSSL	NO	BSL
	87-68-3	Hexachlorobutadiene	ND	ND	MG/KG		0/112	0.01 - 0.49	4.9E-01		6.1E+00 C**	8.7E-03	NCSSL	NO	DLBSL
	77-47-4	Hexachlorocyclopentadiene	8.0E-03 J	1.2E-02 J	MG/KG	MR08-SS068-08D	4/112	0.01 - 0.49	1.2E-02		3.7E+01 N			NO	BSL
	67-72-1	Hexachloroethane	ND	ND	MG/KG		0/112	0.35 - 0.69	6.9E-01		6.1E+00 C**			NO	DLBSL

TABLE 2.1

Occurrence, Distribution, and Selection of Chemicals of Potential Concern

Site UXO-08 Former Lejeune Cantonment Bazooka Range, Base CS Chamber, and NBC Training Trail

MCB Camp Lejeune, North Carolina

Scenario Timeframe: Current/Future
Medium: Surface Soil
Exposure Medium: Surface Soil

Exposure Point	CAS Number	Chemical	Minimum [1] Concentration Qualifier	Maximum [1] Concentration Qualifier	Units	Location of Maximum Concentration	Detection Frequency	Range of Detection Limits	Concentration [2] Used for Screening	Background [3] Value	Screening [4] Toxicity Value	Potential ARAR/TBC Value	Potential ARAR/TBC Source	COPC Flag	Rationale for [5] Contaminant Deletion or Selection
	193-39-5	**Indeno(1,2,3-cd)pyrene**	**2.1E-03 J**	**2.8E-01**	**MG/KG**	**MR08-SS056-08D**	**65/112**	**0.01 - 0.44**	**2.8E-01**		**1.5E-01 C**	**2.0E+00**	**NCSSL**	**YES**	**ASL**
	78-59-1	Isophorone	ND	ND	MG/KG		0/112	0.35 - 0.69	6.9E-01		5.1E+02 C*	2.1E-01	NCSSL	NO	DLBSL
	91-20-3	Naphthalene	3.4E-03 J	1.4E-02 J	MG/KG	MR08-SS051-08D	19/112	0.01 - 0.49	1.4E-02		3.6E+00 C*	2.1E-01	NCSSL	NO	BSL
	621-64-7	n-Nitroso-di-n-propylamine	ND	ND	MG/KG		0/112	0.35 - 0.69	6.9E-01		6.9E-02 C			YES	DLASL
	86-30-6	n-Nitrosodiphenylamine	ND	ND	MG/KG		0/112	0.36 - 1.4	1.4E+00		9.9E+01 C			NO	DLBSL
	98-95-3	Nitrobenzene	ND	ND	MG/KG		0/141	0.0963 - 0.53	5.3E-01		4.8E+00 C*			NO	DLBSL
	87-86-5	Pentachlorophenol	ND	ND	MG/KG		0/112	0.86 - 1.7	1.7E+00		8.9E-01 C	3.1E-02	NCSSL	YES	DLASL
	85-01-8	Phenanthrene	2.1E-03 J	3.0E-01 J	MG/KG	MR08-SS33-08B	83/112	0.01 - 0.44	3.0E-01		1.7E+03 N	5.7E+01	NCSSL	NO	BSL
	108-95-2	Phenol	ND	ND	MG/KG		0/112	0.36 - 1	1.0E+00		1.8E+03 N	2.3E-01	NCSSL	NO	DLBSL
	129-00-0	Pyrene	2.4E-03 J	5.3E-01	MG/KG	MR08-SS390-08D	95/112	0.01 - 0.44	5.3E-01		1.7E+02 N	2.2E+02	NCSSL	NO	BSL
	72-54-8	4,4'-DDD	4.9E-04 J	8.7E-04 J	MG/KG	MR08-SS36-08B	3/12	0.0036 - 0.0049	8.7E-04		2.0E+00 C	2.4E-01	NCSSL	NO	BSL
	72-55-9	4,4'-DDE	3.6E-04 J	4.9E-03 J	MG/KG	MR08-SS35-08B	11/12	0.0043 - 0.0043	4.9E-03		1.4E+00 C			NO	BSL
	50-29-3	4,4'-DDT	4.4E-04 J	2.4E-03 J	MG/KG	MR08-SS31-08B	10/12	0.0036 - 0.0043	2.4E-03		1.7E+00 C*	3.4E-01	NCSSL	NO	BSL
	309-00-2	Aldrin	ND	ND	MG/KG		0/12	0.0018 - 0.0025	2.5E-03		2.9E-02 C*			NO	DLBSL
	319-84-6	alpha-BHC	ND	ND	MG/KG		0/12	0.0018 - 0.0025	2.5E-03		7.7E-02 C	1.2E-03	NCSSL	NO	DLBSL
	5103-71-9	alpha-Chlordane	2.4E-04 J	7.1E-04 J	MG/KG	MR08-SS33-08B	5/12	0.0018 - 0.0025	7.1E-04		1.6E+00 C*	6.8E-02	NCSSL	NO	BSL
	12674-11-2	Aroclor-1016	ND	ND	MG/KG		0/12	0.036 - 0.049	4.9E-02		3.9E-01 N			NO	DLBSL
	11104-28-2	Aroclor-1221	ND	ND	MG/KG		0/12	0.072 - 0.098	9.8E-02		1.4E-01 C			NO	DLBSL
	11141-16-5	Aroclor-1232	ND	ND	MG/KG		0/12	0.036 - 0.049	4.9E-02		1.4E-01 C			NO	DLBSL
	53469-21-9	Aroclor-1242	ND	ND	MG/KG		0/12	0.036 - 0.049	4.9E-02		2.2E-01 C			NO	DLBSL
	12672-29-6	Aroclor-1248	ND	ND	MG/KG		0/12	0.036 - 0.049	4.9E-02		2.2E-01 C			NO	DLBSL
	11097-69-1	Aroclor-1254	ND	ND	MG/KG		0/12	0.036 - 0.049	4.9E-02		1.1E-01 C**			NO	DLBSL
	11096-82-5	Aroclor-1260	ND	ND	MG/KG		0/12	0.036 - 0.049	4.9E-02		2.2E-01 C			NO	DLBSL
	319-85-7	beta-BHC	ND	ND	MG/KG		0/12	0.0018 - 0.0025	2.5E-03		2.7E-01 C	1.2E-03	NCSSL	NO	DLBSL
	319-86-8	delta-BHC	ND	ND	MG/KG		0/12	0.0018 - 0.0025	2.5E-03		2.7E-01 C	1.2E-03	NCSSL	NO	DLBSL
	60-57-1	**Dieldrin**	**5.0E-05 J**	**4.9E-02 J**	**MG/KG**	**MR08-SS35-08B**	**7/12**	**0.0037 - 0.0048**	**4.9E-02**		**3.0E-02 C**	**8.1E-04**	**NCSSL**	**YES**	**ASL**
	959-98-8	Endosulfan I	ND	ND	MG/KG		0/12	0.0018 - 0.0025	2.5E-03		3.7E+01 N	5.6E+00	NCSSL	NO	DLBSL
	33213-65-9	Endosulfan II	2.0E-03 J	2.0E-03 J	MG/KG	MR08-SS30-08B	1/12	0.0036 - 0.0049	2.0E-03		3.7E+01 N	5.6E+00	NCSSL	NO	BSL
	1031-07-8	Endosulfan sulfate	ND	ND	MG/KG		0/12	0.0036 - 0.0049	4.9E-03		3.7E+01 N	5.6E+00	NCSSL	NO	DLBSL
	72-20-8	Endrin	ND	ND	MG/KG		0/12	0.0036 - 0.0049	4.9E-03		1.8E+00 N	8.1E-01	NCSSL	NO	DLBSL
	7421-93-4	Endrin aldehyde	5.6E-04 J	9.5E-04 J	MG/KG	MR08-SS32-08B	3/12	0.0036 - 0.0049	9.5E-04		1.8E+00 N	8.1E-01	NCSSL	NO	BSL
	53494-70-5	Endrin ketone	ND	ND	MG/KG		0/12	0.0036 - 0.0049	4.9E-03		1.8E+00 N	8.1E-01	NCSSL	NO	DLBSL
	58-89-9	gamma-BHC (Lindane)	ND	ND	MG/KG		0/12	0.0018 - 0.0025	2.5E-03		5.2E-01 C*	1.8E-03	NCSSL	NO	DLBSL
	5103-74-2	gamma-Chlordane	3.5E-04 J	6.2E-04 J	MG/KG	MR08-SS33-08B	3/12	0.0018 - 0.0025	6.2E-04		1.6E+00 C*	6.8E-02	NCSSL	NO	BSL
	76-44-8	Heptachlor	ND	ND	MG/KG		0/12	0.0018 - 0.0025	2.5E-03		1.1E-01 C	6.6E-03	NCSSL	NO	DLBSL

TABLE 2.1

Occurrence, Distribution, and Selection of Chemicals of Potential Concern

Site UXO-08 Former Lejeune Cantonment Bazooka Range, Base CS Chamber, and NBC Training Trail

MCB Camp Lejeune, North Carolina

Scenario Timeframe: Current/Future
Medium: Surface Soil
Exposure Medium: Surface Soil

Exposure Point	CAS Number	Chemical	Minimum [1] Concentration Qualifier	Maximum [1] Concentration Qualifier	Units	Location of Maximum Concentration	Detection Frequency	Range of Detection Limits	Concentration [2] Used for Screening	Background [3] Value	Screening [4] Toxicity Value	Potential ARAR/TBC Value	Potential ARAR/TBC Source	COPC Flag	Rationale for [5] Contaminant Deletion or Selection
	1024-57-3	Heptachlor epoxide	ND	ND	MG/KG		0/12	0.0018 - 0.0025	2.5E-03		5.3E-02 C*	8.2E-04	NCSSL	NO	DLBSL
	72-43-5	Methoxychlor	ND	ND	MG/KG		0/12	0.018 - 0.025	2.5E-02		3.1E+01 N	2.2E+01	NCSSL	NO	DLBSL
	8001-35-2	Toxaphene	ND	ND	MG/KG		0/12	0.18 - 0.25	2.5E-01		4.4E-01 C	4.6E-02	NCSSL	NO	DLBSL
	99-35-4	1,3,5-Trinitrobenzene	ND	ND	MG/KG		0/141	0.0963 - 0.5	5.0E-01		2.2E+02 N			NO	DLBSL
	99-65-0	1,3-Dinitrobenzene	ND	ND	MG/KG		0/141	0.0963 - 0.5	5.0E-01		6.1E-01 N			NO	DLBSL
	118-96-7	2,4,6-Trinitrotoluene	ND	ND	MG/KG		0/141	0.0963 - 0.5	5.0E-01		3.6E+00 C**			NO	DLBSL
	35572-78-2	2-Amino-4,6-dinitrotoluene	1.0E-01 J	1.0E-01 J	MG/KG	MR08-SS122-08D	1/141	0.0963 - 0.5	1.0E-01		1.5E+01 N			NO	BSL
	88-72-2	2-Nitrotoluene	2.0E-01 J	3.6E-01 J	MG/KG	MR08-SS21-0-1-07A	2/141	0.0963 - 0.5	3.6E-01		2.9E+00 C*			NO	BSL
	99-08-1	3-Nitrotoluene	3.9E-01 J	3.9E-01 J	MG/KG	MR08-SS03-0-1-07A	1/141	0.0963 - 0.5	3.9E-01		6.1E-01 N			NO	BSL
	19406-51-0	4-Amino-2,6-dinitrotoluene	ND	ND	MG/KG		0/141	0.0963 - 0.5	5.0E-01		1.5E+01 N			NO	DLBSL
	99-99-0	4-Nitrotoluene	ND	ND	MG/KG		0/141	0.0963 - 0.5	5.0E-01		2.4E+01 C**			NO	DLBSL
	2691-41-0	HMX	ND	ND	MG/KG		0/141	0.0963 - 0.5	5.0E-01		3.8E+02 N			NO	DLBSL
	55-63-0	Nitroglycerin	ND	ND	MG/KG		0/129	0.0963 - 2.5	2.5E+00		6.1E-01 N			YES	DLASL
	14797-73-0	Perchlorate	1.1E-03 J	3.0E-01	MG/KG		28/112	0.0021 - 0.0041	3.0E-01		5.5E+00 N			NO	BSL
	78-11-5	PETN	ND	ND	MG/KG		0/129	0.0963 - 2.5	2.5E+00		N/A			NO	NTX
	121-82-4	RDX	9.5E-02 J	3.2E-01 J	MG/KG	MR08-SS15-0-1-07A	3/141	0.0963 - 0.5	3.2E-01		5.5E+00 C*			NO	BSL
	479-45-8	Tetryl	ND	ND	MG/KG		0/141	0.0963 - 0.5	5.0E-01		2.4E+01 N			NO	DLBSL
	7429-90-5	Aluminum	2.0E+03	5.7E+03	MG/KG	MR08-SS35D-08B	12/12	14.8 - 21.4	5.7E+03	5.5E+03	7.7E+03 N			NO	BSL
	7440-36-0	**Antimony**	**4.4E-01 J**	**1.1E+01**	**MG/KG**	**MR08-SS096-08D**	**62/112**	**0.374 - 6.4**	**1.1E+01**	**4.5E-01**	**3.1E+00 N**			**YES**	**ASL**
	7440-38-2	**Arsenic**	**1.8E-01 J**	**1.7E+01 J**	**MG/KG**	**MR08-SS068-08D**	**111/112**	**0.081 - 15.6**	**1.7E+01**	**6.3E-01**	**3.9E-01 C***	**5.8E+00**	**NCSSL**	**YES**	**ASL**
	7440-39-3	Barium	2.2E+00 J	9.1E+02	MG/KG	MR08-SS056-08D	103/112	14.8 - 21.4	9.1E+02	1.5E+01	1.5E+03 N	5.8E+02	NCSSL	NO	BSL
	7440-41-7	Beryllium	7.2E-01 J	2.5E-01 J	MG/KG	MR08-SS36-08B	12/12	0.37 - 0.54	2.5E-01	1.0E-01	1.6E+01 N			NO	BSL
	7440-43-9	**Cadmium**	**3.8E-02 J**	**1.1E+01**	**MG/KG**	**MR08-SS056-08D**	**103/112**	**0.0392 - 0.54**	**1.1E+01**	**3.3E-02**	**7.0E+00 N**	**3.0E+00**	**NCSSL**	**YES**	**ASL**
	7440-70-2	Calcium	5.3E+02	3.0E+05	MG/KG	MR08-SS36-08B	11/12	369 - 7820	3.0E+05	6.4E+03	N/A			NO	NUT
	7440-47-3	**Chromium**	**1.5E+00**	**1.5E+02 J**	**MG/KG**	**MR08-SS056-08D**	**105/112**	**0.74 - 12.8**	**1.5E+02**	**6.1E+00**	**2.9E-01 C**	**3.8E+00**	**NCSSL**	**YES**	**ASL**
	7440-48-4	**Cobalt**	**2.2E-01 J**	**7.9E+00**	**MG/KG**	**MR08-SS36-08B**	**12/12**	**3.7 - 41.1**	**7.9E+00**	**2.9E-01**	**2.3E+00 N**			**YES**	**ASL**
	7440-50-8	**Copper**	**4.5E-01 J**	**5.3E+03**	**MG/KG**	**MR08-SS35D-08B**	**103/112**	**0.394- 39.1**	**5.3E+03**	**4.8E+00**	**3.1E+02 N**	**7.0E+02**	**NCSSL**	**YES**	**ASL**
	7439-89-6	Iron	1.6E+03	5.0E+03	MG/KG	MR08-SS36-08B	12/12	7.4 - 10.7	5.0E+03	3.2E+03	5.5E+03 N	1.5E+02	NCSSL	NO	BSL
	7439-92-1	Lead	1.1E+00 J	2.2E+02	MG/KG	MR08-SS056-08D	112/112	0.74 - 15.6	2.2E+02	1.2E+01	4.0E+02 N	2.7E+02	NCSSL	NO	BSL
	7439-95-4	Magnesium	5.4E+02	3.8E+03	MG/KG	MR08-SS36-08B	4/12	369 - 535	3.8E+03	2.4E+02	N/A			NO	NUT
	7439-96-5	**Manganese**	**6.8E+00**	**3.5E+02**	**MG/KG**	**MR08-SS36-08B**	**12/12**	**1.1 - 1.6**	**3.5E+02**	**1.4E+01**	**1.8E+02 N**	**6.5E+01**	**NCSSL**	**YES**	**ASL**
	7439-97-6	**Mercury**	**2.2E-02 J**	**9.2E+00**	**MG/KG**	**MR08-SS056-08D**	**49/112**	**0.0199 - 0.044**	**9.2E+00**	**8.1E-02**	**2.3E+00 N**	**1.0E+00**	**NCSSL**	**YES**	**ASL**
	7440-02-0	Nickel	9.6E-01 J	3.4E+01	MG/KG	MR08-SS36-08B	12/12	3 - 4.3	3.4E+01	1.2E+00	1.5E+02 N	1.3E+02	NCSSL	NO	BSL
	7440-09-7	Potassium	ND	ND	MG/KG		0/12	369 - 7820	7.8E+03	1.2E+02	N/A			NO	NUT
	7782-49-2	Selenium	1.3E-01 J	5.3E+00 J	MG/KG	MR08-SS068-08D	93/112	0.104 - 3.7	5.3E+00	5.6E-01	3.9E+01 N	2.1E+00	NCSSL	NO	BSL

TABLE 2.1

Occurrence, Distribution, and Selection of Chemicals of Potential Concern

Site UXO-08 Former Lejeune Cantonment Bazooka Range, Base CS Chamber, and NBC Training Trail

MCB Camp Lejeune, North Carolina

Scenario Timeframe: Current/Future
Medium: Surface Soil
Exposure Medium: Surface Soil

Exposure Point	CAS Number	Chemical	Minimum [1] Concentration Qualifier	Maximum [1] Concentration Qualifier	Units	Location of Maximum Concentration	Detection Frequency	Range of Detection Limits	Concentration [2] Used for Screening	Background [3] Value	Screening [4] Toxicity Value	Potential ARAR/TBC Value	Potential ARAR/TBC Source	COPC Flag	Rationale for [5] Contaminant Deletion or Selection
	7440-22-4	**Silver**	**1.0E-01 J**	**1.1E+02**	**MG/KG**	**MR08-SS056-08D**	**55/112**	**0.185 - 1.1**	**1.1E+02**	**1.4E-01**	**3.9E+01 N**	**3.4E+00**	**NCSSL**	**YES**	**ASL**
	7440-23-5	Sodium	ND	ND	MG/KG		0/12	369 - 535	5.4E+02	8.1E+01	N/A			NO	NUT
	7440-28-0	Thallium	1.1E+00 J	1.1E+00 J	MG/KG	MR08-SS39-08B	1/12	1.8 - 39.1	1.1E+00	3.6E-01	N/A			NO	NTX
	7440-62-2	Vanadium	5.6E+00	1.5E+01	MG/KG	MR08-SS35D-08B	12/12	3.7 - 5.4	1.5E+01	8.9E+00	3.9E+01 N			NO	BSL
	7440-66-6	Zinc	4.3E-01 J	8.9E+02 J	MG/KG	MR08-SS056-08D	105/112	4.4 - 29.2	8.9E+02	1.1E+01	2.3E+03 N	1.2E+03	NCSSL	NO	BSL

[1] Minimum/Maximum detected concentrations.

[2] Maximum concentration is used for screening.

[3] Background values are two times the arithmetic mean basewide background soil concentrations.
Background values are from *Final Base Background Soil Study Report, Marine Corps Base Camp Lejeune, North Carolina*, Baker Environmental, April 25, 2001.

[4] Oak Ridge National Laboratory (ORNL). November, 2010. Regional Screening Levels for Chemical Contaminants at Superfund Sites.
http://www.epa.gov/reg3hwmd/risk/human/rb-concentration_table/index.htm. Residential soil RSLs. RSLs based on noncarcinogenic effects divided by 10 to account for exposure to more than on constituent that effects the same target organ.
RSL for 1,4-Dichlorobenzene used as surrogate for 1,3-Dichlorobenzene
RSL value for p-Cresol (4-Methylphenol) used as surrogate for 3- and 4-Methylphenol.
RSL value for Methoxychlor used as surrogate for 4-Chlorophenyl-phenylether.
RSL value for Nitrobenzene used as surrogate for 4-Nitrophenol.
RSL value for Acenaphthene used as surrogate for Acenaphthylene.
RSL value for Pyrene used as surrogate for Benzo(g,h,i)perylene.
RSL value for Anthracene used as surrogate for Phenanthrene.
RSL value for technical Chlordane used as surrogate for alpha-Chlordane and gamma-Chlordane.
RSL value for technical-HCH used as surrogate for delta-BHC.
RSL value for Chromium(VI) used as surrogate for Chromium.
The soil value of 400 mg/kg for lead is from the Revised Interim Soil Lead Guidance for CERCLA Sites and RCRA Corrective Action Facilities, USEPA, July 14, 1994.
RSL value for Manganese (water) used as surrogate for Manganese.
RSL value for Mercury (inorganic salts) used as surrogate for Mercury.
RSL value for 1,3-Dichloropropene used as a surrogate for cis-1,3-Dichloropropene and trans-1,3-Dichloropropene.
RSL value for Endosulfan used as surrogate for Endosulfan I, Endosulfan II, and Endosulfan sulfate.
RSL value for Endrin used as surrogate for Endrin aldehyde and Endrin ketone.
RSL value for 2-Chlorophenol used as surrogate for 4-Chloro-3-methylphenol and 2-Nitrophenol.

[5] Rationale Codes

Selection Reason:	Above Screening Levels (ASL)
	Chemical in same chemical class as a chemical selected as a COPC because ASL (CC)
	Detection Limit Above Screening Level (DLASL), not quantitatively evaluated in HHRA
Deletion Reason:	No Toxicity Information (NTX)
	Essential Nutrient (NUT)
	Below Screening Level (BSL)
	Detection Limit Below Screening Level (DLBSL)

COPC = Chemical of Potential Concern
ARAR/TBC = Applicable or Relevant and Appropriate Requirement/ To Be Considered
J = Estimated Value
C* = N screening level < 100x C screening level, therefore N screening value/10 used as screening level
C** = N screening level < 10x C screening level, therefore N screening value/10 used as screening level
N = Noncarcinogenic
N/A = Not available
NCSSL = North Carolina Soil Screening Levels (NCDENR, 2010
NS = RSL exceeds Csat, soil saturation concentration. Therefore, Csat used as screening level

TABLE 2.1a

Risk Ratio Screening for Surface Soil, Maximum Detected Concentration

Site UXO-08 Former Lejeune Cantonment Bazooka Range, Base CS Chamber, and NBC Training Trail

MCB Camp Lejeune, North Carolina

Analyte	Detection Frequency	Maximum Detected Concentration (Qualifier)	Sample Location of Maximum Detected Concentration	Residential Soil RSL	Acceptable Risk Level	Corresponding Hazard Index[a]	Corresponding Cancer Risk[b]	Target Organ
Semivolatile Organic Compounds (mg/kg)								
Benzo(a)anthracene	**79 / 112**	**2.3E-01**	**MR08-SS390-08D**	**1.5E-01**	**1.E-06**	**NA**	**2E-06**	**NA**
Benzo(a)pyrene	**66 / 112**	**3.4E-01**	**MR08-SS056-08D**	**1.5E-02**	**1.E-06**	**NA**	**2E-05**	**NA**
Benzo(b)fluoranthene	**64 / 112**	**7.6E-01 J**	**MR08-SS390-08D**	**1.5E-01**	**1.E-06**	**NA**	**5E-06**	**NA**
Benzo(k)fluoranthene	**64 / 112**	**3.8E-01**	**MR08-SS056-08D**	**1.5E+00**	**1.E-06**	**NA**	**3E-07**	**NA**
Chrysene	**16 / 112**	**4.5E-01**	**MR08-SS398-08D**	**1.5E+01**	**1.E-06**	**NA**	**3E-08**	**NA**
Dibenz(a,h)anthracene	**29 / 112**	**7.5E-02**	**MR08-SS056-08D**	**1.5E-02**	**1.E-06**	**NA**	**5E-06**	**NA**
Indeno(1,2,3-cd)pyrene	**65 / 112**	**2.8E-01**	**MR08-SS056-08D**	**1.5E-01**	**1.E-06**	**NA**	**2E-06**	**NA**
Pesticides/PCBs (mg/kg)								
Dieldrin	**7 / 12**	**4.9E-02 J**	**MR08-SS35-08B**	**3.0E-02**	**1.E-06**	**NA**	**2E-06**	**NA**
Metals (mg/kg)								
Antimony	62 / 112	1.1E+01	MR08-SS096-08D	3.1E+01	1	0.3	NA	Longevity, Blood
Arsenic	**111 / 112**	**1.7E+01 J**	**MR08-SS068-08D**	**3.9E-01**	**1E-06**	**NA**	**4E-05**	**NA**
Cadmium	103 / 112	1.1E+01	MR08-SS056-08D	7.0E+01	1	0.2	NA	Kidney
Chromium	**105 / 112**	**1.5E+02 J**	**MR08-SS056-08D**	**2.9E-01**	**1E-06**	**NA**	**5E-04**	**NA**
Cobalt	12 / 12	7.9E+00	MR08-SS36-08B	2.3E+01	1	0.3	NA	Thyroid
Copper	**103 / 112**	**5.3E+03**	**MR08-SS35D-08B**	**3.1E+03**	**1**	**1.7**	**NA**	**Gastrointestinal**
Manganese	12 / 12	3.5E+02	MR08-SS36-08B	1.8E+03	1	0.2	NA	CNS
Mercury	49 / 112	9.2E+00	MR08-SS056-08D	2.3E+01	1	0.4	NA	Autoimmune System
Silver	55 / 112	1.1E+02	MR08-SS056-08D	3.9E+02	1	0.3	NA	Skin
Cumulative Corresponding Hazard Index[c]						**3.4**		
Cumulative Corresponding Cancer Risk[d]							**6E-04**	

Total Autoimmune HI =	0.4
Total Blood HI =	0.3
Total CNS HI =	0.2
Total Gastrointestinal HI =	1.7
Total Kidney HI =	0.2
Total Longevity HI =	0.3
Total Skin HI =	0.3
Total Thyroid HI =	0.3

Notes:

a Corresponding Hazard Index equals maximum detected concentration divided by the RSL divided by the acceptable risk level.

b Corresponding Cancer Risk equals maximum detected concentration divided by the RSL divided by the acceptable risk level.

c Cumulative Corresponding Hazard Index equals sum of Corresponding Hazard Indices for each constituent.

d Cumulative Corresponding Cancer Risk equals sum of Corresponding Cancer Risks for each constituent.

Constituent selected as COPC if it contributes to an overall Hazard Index by target organ greater than 0.5 or Cumulative Corresponding Cancer Risk greater than 5E-05, otherwise, constituent not selected as COPC.

Constituents selected as COPCs are indicated by shading.

CNS = Central nervous System

COPC = Constituent of Potential Concern

HI = Hazard Index

J = Estimated Value

mg/kg = micrograms per kilogram

NA = Not available/not applicable.

TABLE 2.2b

Risk Ratio Screening for Subsurface Soil, 95% UCL Concentration

Site UXO-08 Former Lejeune Cantonment Bazooka Range, Base CS Chamber, and NBC Training Trail

MCB Camp Lejeune, North Carolina

Analyte	Detection Frequency	95% UCL		95% UCL Rationale	Residential Soil RSL	Acceptable Risk Level	Corresponding Hazard Index[a]	Corresponding Cancer Risk[b]	Target Organ
Semivolatile Organic Compounds (mg/kg)									
Benzo(a)anthracene	13 / 111	5.5E-02	4	95% KM-c	1.5E-01	1.E-06	NA	4E-07	NA
Benzo(a)pyrene	4 / 111	7.1E-02	1, 3	95% KM-t	1.5E-02	1.E-06	NA	5E-06	NA
Benzo(b)fluoranthene	7 / 111	2.4E-01	1	97.5% KM-c	1.5E-01	1.E-06	NA	2E-06	NA
Benzo(k)fluoranthene	6 / 111	4.1E-02	1, 3	95% KM-t	1.5E+00	1.E-06	NA	3E-08	NA
Chrysene	1 / 110	1.6E+00	5	Max	1.5E+01	1.E-06	NA	1E-07	NA
Dibenz(a,h)anthracene	9 / 111	3.4E-02	4	95% KM-c	1.5E-02	1.E-06	NA	2E-06	NA
Indeno(1,2,3-cd)pyrene	11 / 111	1.7E-01	4	97.5% KM-c	1.5E-01	1.E-06	NA	1E-06	NA
Metals (mg/kg)									
Arsenic	93 / 107	1.1E+00	1	95% KM-BCA	3.9E-01	1.E-06	NA	3E-06	NA
Chromium	110 / 110	7.0E+00	1	95% H-UCL	2.9E-01	1.E-06	NA	2E-05	NA
Cumulative Corresponding Hazard Index[c]							**NA**	**4E-05**	
Cumulative Corresponding Cancer Risk[d]									

Notes:

a Corresponding Hazard Index equals 95% UCL concentration divided by the RSL divided by the acceptable risk level.

b Corresponding Cancer Risk equals 95% UCL concentration divided by the RSL divided by the acceptable risk level

c Cumulative Corresponding Hazard Index equals sum of Corresponding Hazard Indices for each constituent.

d Cumulative Corresponding Cancer Risk equals sum of Corresponding Cancer Risks for each constituent.

Constituent selected as COPC if it contributes to an overall Hazard Index by target organ greater than 0.5 or Cumulative Corresponding Cancer Risk greater than 5E-05,

Constituents selected as COPCs are indicated by shading.

mg/kg = micrograms per kilogram

HI = Hazard Index

NA = Not available/not applicable.

ProUCL, Version 4.00.05 used to determine distribution of data and calculate 95% UCL, following recommendations

in users guide (USEPA. May 2010. ProUCL, Version 4.00.05. Prepared by Lockheed Martin Environmental Services).

Options: 95% KM (Chebyshev) UCL (95% KM-c); 95% Kaplan-Meier (t) UCL (95% KM-t); 97.5% Kaplan-Meier (Chebyshev) (97.5% KM-c); 95% KM (BCA) UCL (95% KM-BCA);
lognormal distribution 95% UCL (95% H-UCL); Maximum Detected Concentration (Max)

UCL Rationale:

(1) Shapiro-Wilk W Test/Lilliefors test indicates data are log-normally distributed.

(2) Shapiro-Wilk W Test/Lilliefors indicates data are normally distributed.

(3) Test indicates data are gamma distributed.

(4) Distribution tests are inconclusive.

(5) Max value used because only detected in one sample.

TABLE 2.2

Occurrence, Distribution, and Selection of Chemicals of Potential Concern

Site UXO-08 Former Lejeune Cantonment Bazooka Range, Base CS Chamber, and NBC Training Trail

MCB Camp Lejeune, North Carolina

Scenario Timeframe: Future
Medium: Subsurface Soil
Exposure Medium: Subsurface Soil

Exposure Point	CAS Number	Chemical	Minimum [1] Concentration Qualifier	Maximum [1] Concentration Qualifier	Units	Location of Maximum Concentration	Detection Frequency	Range of Detection Limits	Concentration [2] Used for Screening	Background [3] Value	Screening [4] Toxicity Value	Potential ARAR/TBC Value	Potential ARAR/TBC Source	COPC Flag	Rationale for [5] Contaminant Deletion or Selection
Subsurface Soil	71-55-6	1,1,1-Trichloroethane	ND	ND	MG/KG		0/104	0.0076 - 0.04	4.0E-02		6.4E+02 NS	1.2E+00	NCSSL	NO	DLBSL
	79-34-5	1,1,2,2-Tetrachloroethane	ND	ND	MG/KG		0/104	0.0076 - 0.04	4.0E-02		5.6E-01 C	1.2E-03	NCSSL	NO	DLBSL
	76-13-1	1,1,2-Trichloro-1,2,2-trifluoroethane (Freon-113)	ND	ND	MG/KG		0/104	0.0076 - 0.04	4.0E-02		9.1E+02 NS	9.2E+03	NCSSL	NO	DLBSL
	79-00-5	1,1,2-Trichloroethane	ND	ND	MG/KG		0/104	0.0076 - 0.04	4.0E-02		1.1E+00 C			NO	DLBSL
	75-34-3	1,1-Dichloroethane	ND	ND	MG/KG		0/104	0.0076 - 0.04	4.0E-02		3.3E+00 C	3.0E-02	NCSSL	NO	DLBSL
	75-35-4	1,1-Dichloroethene	ND	ND	MG/KG		0/104	0.0076 - 0.04	4.0E-02		2.4E+01 N	4.6E-02	NCSSL	NO	DLBSL
	120-82-1	1,2,4-Trichlorobenzene	2.2E-03 J	4.5E-03 J	MG/KG	MR08-IS080-5-6-08D	2/105	0.0076 - 0.04	4.5E-03		6.2E+00 C**	2.2E+00	NCSSL	NO	BSL
	96-12-8	1,2-Dibromo-3-chloropropane	ND	ND	MG/KG		0/104	0.0038 - 0.022	2.2E-02		5.4E-03 C	2.5E-04	NCSSL	YES	DLASL
	106-93-4	1,2-Dibromoethane	ND	ND	MG/KG		0/104	0.0076 - 0.04	4.0E-02		3.4E-02 C	9.7E-05	NCSSL	YES	DLASL
	95-50-1	1,2-Dichlorobenzene	9.8E-04 J	1.6E-03 J	MG/KG	MR08-IS080-5-6-08D	2/105	0.0076 - 0.04	1.6E-03		1.9E+02 N	2.4E-01	NCSSL	NO	BSL
	107-06-2	1,2-Dichloroethane	ND	ND	MG/KG		0/104	0.0076 - 0.04	4.0E-02		4.3E-01 C	2.0E-03	NCSSL	NO	DLBSL
	78-87-5	1,2-Dichloropropane	ND	ND	MG/KG		0/104	0.0076 - 0.04	4.0E-02		8.9E-01 C*	3.3E-03	NCSSL	NO	DLBSL
	541-73-1	1,3-Dichlorobenzene	ND	ND	MG/KG		0/104	0.0076 - 0.04	4.0E-02		2.4E+00 C	7.6E+00	NCSSL	NO	DLBSL
	106-46-7	1,4-Dichlorobenzene	2.0E-03 J	2.1E-03 J	MG/KG	MR08-IS119D-4_5-5_5-08D	2/105	0.0076 - 0.04	2.1E-03		2.4E+00 C	7.0E-02	NCSSL	NO	BSL
	78-93-3	2-Butanone	1.8E-03 J	1.5E-02 J	MG/KG	MR08-IS127-1_5-3-08D	10/104	0.0076 - 0.04	1.5E-02		2.8E+03 N	1.6E+01	NCSSL	NO	BSL
	591-78-6	2-Hexanone	ND	ND	MG/KG		0/104	0.0076 - 0.04	4.0E-02		2.1E+01 N	1.2E+00	NCSSL	NO	DLBSL
	108-10-1	4-Methyl-2-pentanone	1.7E-03 J	1.8E-03 J	MG/KG	MR08-IS080-5-6-08D	2/105	0.0076 - 0.04	1.8E-03		5.3E+02 N			NO	BSL
	67-64-1	Acetone	7.3E-03 J	1.4E-01 J	MG/KG	MR08-IS109D-2-3-08D	12/105	0.0076 - 0.04	1.4E-01		6.1E+03 N	2.4E+01	NCSSL	NO	BSL
	71-43-2	Benzene	ND	1.0E-02 J	MG/KG	MR08-IS109D-2-3-08D	8/105	0.0076 - 0.04	1.0E-02		1.1E+00 C*	7.3E-03	NCSSL	NO	BSL
	75-27-4	Bromodichloromethane	ND	ND	MG/KG		0/104	0.0076 - 0.04	4.0E-02		2.7E-01 C	2.9E-03	NCSSL	NO	DLBSL
	75-25-2	Bromoform	ND	ND	MG/KG		0/104	0.0076 - 0.04	4.0E-02		6.1E+01 C*	1.9E-02	NCSSL	NO	DLBSL
	74-83-9	Bromomethane	2.2E-02 J	2.2E-02 J	MG/KG	MR08-IS080-5-6-08D	1/105	0.0076 - 0.04	2.2E-02		7.3E-01 N			NO	BSL
	75-15-0	Carbon disulfide	1.3E-03 J	1.7E-02 J	MG/KG	MR08-IS119D-4_5-5_5-08D	6/104	0.0076 - 0.04	1.7E-02		8.2E+01 N	3.8E+00	NCSSL	NO	BSL
	56-23-5	Carbon tetrachloride	ND	ND	MG/KG		0/104	0.0076 - 0.04	4.0E-02		6.1E-01 C	2.0E-03	NCSSL	NO	DLBSL
	108-90-7	Chlorobenzene	ND	ND	MG/KG		0/104	0.0076 - 0.04	4.0E-02		2.9E+01 N	4.5E-01	NCSSL	NO	DLBSL
	75-00-3	Chloroethane	ND	ND	MG/KG		0/104	0.0076 - 0.04	4.0E-02		1.5E+03 N	1.6E+01	NCSSL	NO	DLBSL
	67-66-3	Chloroform	2.4E-03 J	3.9E-03 J	MG/KG	MR08-IS054-6-7-08D	2/104	0.0076 - 0.04	3.9E-03		2.9E-01 C	3.4E-01	NCSSL	NO	BSL
	74-87-3	Chloromethane	6.0E-04 J	1.2E-02 J	MG/KG	MR08-IS080-5-6-08D	4/105	0.0076 - 0.04	1.2E-02		1.2E+01 N	1.5E-02	NCSSL	NO	BSL
	156-59-2	cis-1,2-Dichloroethene	2.9E-03 J	1.3E-02 J	MG/KG	MR08-IS109D-2-3-08D	2/104	0.0076 - 0.04	1.3E-02		1.6E+01 N	3.6E-01	NCSSL	NO	BSL
	10061-01-5	cis-1,3-Dichloropropene	ND	ND	MG/KG		0/104	0.0076 - 0.04	4.0E-02		1.7E+00 C*	2.3E-03	NCSSL	NO	DLBSL
	110-82-7	Cyclohexane	6.4E-04 J	3.1E-03 J	MG/KG	MR08-IS086-2-3-08D	6/104	0.0076 - 0.04	3.1E-03		1.2E+02 NS			NO	BSL
	124-48-1	Dibromochloromethane	ND	ND	MG/KG		0/104	0.0076 - 0.04	4.0E-02		6.8E-01 C	1.9E-03	NCSSL	NO	DLBSL
	75-71-8	Dichlorodifluoromethane (Freon-12)	ND	ND	MG/KG		0/104	0.0076 - 0.04	4.0E-02		1.8E+01 N	2.9E+01	NCSSL	NO	DLBSL
	100-41-4	Ethylbenzene	8.2E-04 J	6.8E-03 J	MG/KG	MR08-IS127-1_5-3-08D	8/104	0.0076 - 0.04	6.8E-03		5.4E+00 C	8.1E+00	NCSSL	NO	BSL

TABLE 2.2

Occurrence, Distribution, and Selection of Chemicals of Potential Concern

Site UXO-08 Former Lejeune Cantonment Bazooka Range, Base CS Chamber, and NBC Training Trail

MCB Camp Lejeune, North Carolina

Scenario Timeframe: Future
Medium: Subsurface Soil
Exposure Medium: Subsurface Soil

Exposure Point	CAS Number	Chemical	Minimum [1] Concentration Qualifier	Maximum [1] Concentration Qualifier	Units	Location of Maximum Concentration	Detection Frequency	Range of Detection Limits	Concentration [2] Used for Screening	Background [3] Value	Screening [4] Toxicity Value	Potential ARAR/TBC Value	Potential ARAR/TBC Source	COPC Flag	Rationale for [5] Contaminant Deletion or Selection
	98-82-8	Isopropylbenzene	2.6E-03 J	2.6E-03 J	MG/KG	MR08-IS086-2-3-08D	1/104	0.0076 - 0.04	2.6E-03		2.1E+02 N	1.3E+00	NCSSL	NO	BSL
	79-20-9	Methyl acetate	ND	ND	MG/KG		0/103	0.0076 - 0.04	4.0E-02		7.8E+03 N			NO	DLBSL
	108-87-2	Methylcyclohexane	8.6E-04 J	7.6E-03 J	MG/KG	MR08-IS086-2-3-08D	6/104	0.0076 - 0.04	7.6E-03		N/A			NO	NTX
	75-09-2	Methylene chloride	1.0E-03 J	8.4E-03 J	MG/KG	MR08-IS069D-6-7-08D	12/104	0.0076 - 0.04	8.4E-03		1.1E+01 C	2.3E-02	NCSSL	NO	BSL
	1634-04-4	Methyl-tert-butyl ether (MTBE)	2.1E-03 J	2.1E-03 J	MG/KG	MR08-IS080-5-6-08D	1/105	0.0076 - 0.04	2.1E-03		4.3E+01 C	8.5E-02	NCSSL	NO	BSL
	100-42-5	Styrene	9.2E-04 J	9.2E-04 J	MG/KG	MR08-IS080-5-6-08D	1/104	0.0076 - 0.04	9.2E-04		6.3E+02 N	9.2E-01	NCSSL	NO	BSL
	127-18-4	Tetrachloroethene	ND	ND	MG/KG		0/104	0.0076 - 0.04	4.0E-02		5.5E-01 C	5.0E-03	NCSSL	NO	DLBSL
	108-88-3	Toluene	2.1E-03 J	2.9E-02 J	MG/KG	MR08-IS109D-2-3-08D	6/104	0.0076 - 0.04	2.9E-02		5.0E+02 N	5.5E+00	NCSSL	NO	BSL
	156-60-5	trans-1,2-Dichloroethene	3.2E-03 J	3.2E-03 J	MG/KG	MR08-IS080-5-6-08D	1/105	0.0076 - 0.04	3.2E-03		1.5E+01 N	5.1E-01	NCSSL	NO	BSL
	10061-02-6	trans-1,3-Dichloropropene	ND	ND	MG/KG		0/104	0.0076 - 0.04	4.0E-02		1.7E+00 C*	2.3E-03	NCSSL	NO	DLBSL
	79-01-6	Trichloroethene	2.2E-03 J	2.2E-03 J	MG/KG	MR08-IS089-2-3-08D	1/104	0.0076 - 0.04	2.2E-03		2.8E+00 C	1.8E-02	NCSSL	NO	BSL
	75-69-4	Trichlorofluoromethane (Freon-11)	6.8E-03 J	6.8E-03 J	MG/KG	MR08-IS105-2-3-08D	1/104	0.0076 - 0.04	6.8E-03		7.9E+01 N	2.4E+01	NCSSL	NO	BSL
	75-01-4	Vinyl chloride	1.2E-02 J	1.2E-02 J	MG/KG	MR08-IS080-5-6-08D	1/105	0.0076 - 0.04	1.2E-02		6.0E-02 C	1.9E-04	NCSSL	NO	BSL
	1330-20-7	Xylene, total	1.7E-03 J	4.4E-03 J	MG/KG	MR08-IS087-2-3-08D	3/104	0.0076 - 0.04	4.4E-03		6.3E+01 N	6.0E+00	NCSSL	NO	BSL
	92-52-4	1,1-Biphenyl	ND	ND	MG/KG		0/110	0.34 - 0.58	5.8E-01		2.1E+02 NS	4.3E+01	NCSSL	NO	DLBSL
	108-60-1	2,2'-Oxybis(1-chloropropane)	ND	ND	MG/KG		0/110	0.34 - 0.58	5.8E-01		4.6E+00 C			NO	DLBSL
	95-95-4	2,4,5-Trichlorophenol	ND	ND	MG/KG		0/110	0.35 - 1.1	1.1E+00		6.1E+02 N			NO	DLBSL
	88-06-2	2,4,6-Trichlorophenol	ND	ND	MG/KG		0/110	0.35 - 0.87	8.7E-01		6.1E+00 C**			NO	DLBSL
	120-83-2	2,4-Dichlorophenol	ND	ND	MG/KG		0/110	0.35 - 0.87	8.7E-01		1.8E+01 N			NO	DLBSL
	105-67-9	2,4-Dimethylphenol	ND	ND	MG/KG		0/110	0.35 - 0.87	8.7E-01		1.2E+02 N	1.4E+00	NCSSL	NO	DLBSL
	51-28-5	2,4-Dinitrophenol	ND	ND	MG/KG		0/110	0.69 - 2.1	2.1E+00		1.2E+01 N			NO	DLBSL
	121-14-2	2,4-Dinitrotoluene	ND	ND	MG/KG		0/111	0.1 - 0.45	4.5E-01		1.6E+00 C*			NO	DLBSL
	606-20-2	2,6-Dinitrotoluene	ND	ND	MG/KG		0/111	0.1 - 0.45	4.5E-01		6.1E+00 N			NO	DLBSL
	91-58-7	2-Chloronaphthalene	ND	ND	MG/KG		0/110	0.34 - 0.58	5.8E-01		1.8E+02 NS			NO	DLBSL
	95-57-8	2-Chlorophenol	ND	ND	MG/KG		0/110	0.35 - 0.87	8.7E-01		3.9E+01 N	4.1E-03	NCSSL	NO	DLBSL
	91-57-6	2-Methylnaphthalene	2.6E-03 J	1.1E-02 J	MG/KG	MR08-IS086-2-3-08D	8/111	0.01 - 0.44	1.1E-02		3.1E+01 N	1.6E+00	NCSSL	NO	BSL
	95-48-7	2-Methylphenol	ND	ND	MG/KG		0/110	0.35 - 1	1.0E+00		3.1E+02 N			NO	DLBSL
	88-74-4	2-Nitroaniline	ND	ND	MG/KG		0/110	0.35 - 1.1	1.1E+00		6.1E+01 N			NO	DLBSL
	88-75-5	2-Nitrophenol	ND	ND	MG/KG		0/110	0.35 - 1	1.0E+00		3.9E+01 N			NO	DLBSL
	m&pCRESOL	3- and 4-Methylphenol	ND	ND	MG/KG		0/96	0.62 - 1	1.0E+00		3.1E+01 N			NO	BSL
	91-94-1	3,3'-Dichlorobenzidine	ND	ND	MG/KG		0/108	0.35 - 0.87	8.7E-01		1.1E+00 C			NO	DLBSL
	99-09-2	3-Nitroaniline	ND	ND	MG/KG		0/108	0.35 - 1.1	1.1E+00		N/A			NO	NTX
	534-52-1	4,6-Dinitro-2-methylphenol	ND	ND	MG/KG		0/109	0.69 - 2.1	2.1E+00		4.9E-01 N			YES	DLASL
	101-55-3	4-Bromophenyl-phenylether	ND	ND	MG/KG		0/110	0.34 - 0.58	5.8E-01		N/A			NO	NTX
	59-50-7	4-Chloro-3-methylphenol	ND	ND	MG/KG		0/110	0.35 - 0.87	8.7E-01		6.1E+02 N			NO	DLBSL

TABLE 2.2

Occurrence, Distribution, and Selection of Chemicals of Potential Concern

Site UXO-08 Former Lejeune Cantonment Bazooka Range, Base CS Chamber, and NBC Training Trail

MCB Camp Lejeune, North Carolina

Scenario Timeframe: Future
Medium: Subsurface Soil
Exposure Medium: Subsurface Soil

Exposure Point	CAS Number	Chemical	Minimum [1] Concentration Qualifier	Maximum [1] Concentration Qualifier	Units	Location of Maximum Concentration	Detection Frequency	Range of Detection Limits	Concentration [2] Used for Screening	Background [3] Value	Screening [4] Toxicity Value	Potential ARAR/TBC Value	Potential ARAR/TBC Source	COPC Flag	Rationale for [5] Contaminant Deletion or Selection
	106-47-8	4-Chloroaniline	ND	ND	MG/KG		0/106	0.35 - 0.87	8.7E-01		2.4E+00 C			NO	DLBSL
	7005-72-3	4-Chlorophenyl-phenylether	ND	ND	MG/KG		0/110	0.34 - 0.58	5.8E-01		3.1E+01 N			NO	DLBSL
	106-44-5	4-Methylphenol	ND	ND	MG/KG		0/14	0.41 - 0.84	8.4E-01		3.1E+01 N	4.0E-01	NCSSL	NO	DLBSL
	100-01-6	4-Nitroaniline	ND	ND	MG/KG		0/109	0.35 - 1.1	1.1E+00		2.4E+01 C*			NO	DLBSL
	100-02-7	4-Nitrophenol	ND	ND	MG/KG		0/110	0.69 - 2.1	2.1E+00		4.8E+00 C*			NO	DLBSL
	83-32-9	Acenaphthene	ND	ND	MG/KG		0/110	0.34 - 0.58	5.8E-01		3.4E+02 N	8.4E+00	NCSSL	NO	DLBSL
	208-96-8	Acenaphthylene	ND	ND	MG/KG		0/110	0.34 - 0.58	5.8E-01		3.4E+02 N	1.1E+01	NCSSL	NO	DLBSL
	98-86-2	Acetophenone	ND	ND	MG/KG		0/110	0.35 - 1	1.0E+00		7.8E+02 N			NO	DLBSL
	120-12-7	Anthracene	ND	ND	MG/KG		0/110	0.34 - 0.58	5.8E-01		1.7E+03 N	6.6E+02	NCSSL	NO	DLBSL
	1912-24-9	Atrazine	ND	ND	MG/KG		0/110	0.34 - 0.58	5.8E-01		2.1E+00 C	2.5E-02	NCSSL	NO	DLBSL
	100-52-7	Benzaldehyde	1.4E+00 J	1.4E+00 J	MG/KG	MR08-IS133-08D	1/110	0.35 - 0.87	1.4E+00		7.8E+02 N			NO	BSL
	56-55-3	**Benzo(a)anthracene**	**2.6E-03 J**	**1.0E+00**	**MG/KG**	**MR08-IS26-2-4-07A**	**13/111**	**0.01 - 0.44**	**1.0E+00**		**1.5E-01 C**	**1.8E-01**	**NCSSL**	**YES**	**ASL**
	50-32-8	**Benzo(a)pyrene**	**4.7E-03 J**	**2.5E+00 J**	**MG/KG**	**MR08-IS26-2-4-07A**	**4/111**	**0.01 - 0.44**	**2.5E+00**		**1.5E-02 C**	**5.9E-02**	**NCSSL**	**YES**	**ASL**
	205-99-2	**Benzo(b)fluoranthene**	**3.5E-03 J**	**3.3E+00 J**	**MG/KG**	**MR08-IS26-2-4-07A**	**7/111**	**0.01 - 0.44**	**3.3E+00**		**1.5E-01 C**	**6.0E-01**	**NCSSL**	**YES**	**ASL**
	191-24-2	Benzo(g,h,i)perylene	2.3E-03 J	2.2E+00 J	MG/KG	MR08-IS26-2-4-07A	12/111	0.01 - 0.44	2.2E+00		1.7E+02 N	3.6E+02	NCSSL	NO	BSL
	207-08-9	**Benzo(k)fluoranthene**	**3.5E-03 J**	**1.4E+00 J**	**MG/KG**	**MR08-IS26-2-4-07A**	**6/111**	**0.01 - 0.44**	**1.4E+00**		**1.5E+00 C**	**5.9E+00**	**NCSSL**	**YES**	**CC**
	111-91-1	bis(2-Chloroethoxy)methane	ND	ND	MG/KG		0/110	0.34 - 0.58	5.8E-01		1.8E+01 N			NO	DLBSL
	111-44-4	bis(2-Chloroethyl)ether	ND	ND	MG/KG		0/110	0.34 - 0.58	5.8E-01		2.1E-01 C	1.4E-04	NCSSL	YES	DLASL
	117-81-7	bis(2-Ethylhexyl)phthalate	4.6E-02 J	1.0E+00 J	MG/KG	MR08-IS056-2-3-08D	46/110	0.34 - 0.58	1.0E+00		3.5E+01 C*	7.2E+00	NCSSL	NO	BSL
	85-68-7	Butylbenzylphthalate	ND	ND	MG/KG		0/110	0.34 - 0.58	5.8E-01		2.6E+02 C*	1.5E+02	NCSSL	NO	DLBSL
	105-60-2	Caprolactam	ND	ND	MG/KG		0/110	0.35 - 0.87	8.7E-01		3.1E+03 N	1.8E+01	NCSSL	NO	DLBSL
	86-74-8	Carbazole	ND	ND	MG/KG		0/110	0.35 - 0.87	8.7E-01		N/A			NO	NTX
	218-01-9	**Chrysene**	**1.6E+00 J**	**1.6E+00 J**	**MG/KG**	**MR08-IS26-2-4-07A**	**1/110**	**0.34 - 0.58**	**1.6E+00**		**1.5E+01 C**	**1.8E+01**	**NCSSL**	**YES**	**CC**
	53-70-3	**Dibenz(a,h)anthracene**	**2.1E-03 J**	**6.0E-01 J**	**MG/KG**	**MR08-IS26-2-4-07A**	**9/111**	**0.01 - 0.44**	**6.0E-01**		**1.5E-02 C**	**1.9E-01**	**NCSSL**	**YES**	**ASL**
	132-64-9	Dibenzofuran	ND	ND	MG/KG		0/110	0.34 - 0.58	5.8E-01		7.8E+00 N	4.7E+00	NCSSL	NO	DLBSL
	84-66-2	Diethylphthalate	7.9E-02 J	9.1E-02 J	MG/KG	MR08-IS132-08D	2/110	0.34 - 0.58	9.1E-02		4.9E+03 N	3.7E+01	NCSSL	NO	BSL
	131-11-3	Dimethyl phthalate	ND	ND	MG/KG		0/110	0.34 - 0.58	5.8E-01					YES	DLASL
	84-74-2	Di-n-butylphthalate	ND	ND	MG/KG		0/110	0.34 - 0.58	5.8E-01		6.1E+02 N	1.9E+01	NCSSL	NO	DLBSL
	117-84-0	Di-n-octylphthalate	ND	ND	MG/KG		0/110	0.34 - 0.84	8.4E-01		3.5E+01 C*	3.8E+01	NCSSL	NO	DLBSL
	206-44-0	Fluoranthene	2.2E-03 J	1.1E+00	MG/KG	MR08-IS26-2-4-07A	25/111	0.01 - 0.44	1.1E+00		2.3E+02 N	3.3E+02	NCSSL	NO	BSL
	86-73-7	Fluorene	5.0E-03 J	5.0E-03 J	MG/KG	MR08-IS107-2-3-08D	1/111	0.01 - 0.44	5.0E-03		2.3E+02 N	5.6E+01	NCSSL	NO	BSL
	118-74-1	Hexachlorobenzene	4.1E-04 J	2.8E-03 J	MG/KG	MR08-IS059D-3-4-08D	4/111	0.01 - 0.44	2.8E-03		3.0E-01 C	2.6E-03	NCSSL	NO	BSL
	87-68-3	Hexachlorobutadiene	ND	ND	MG/KG		0/111	0.01 - 0.44	4.4E-01		6.1E+00 C**	8.7E-03	NCSSL	NO	DLBSL
	77-47-4	Hexachlorocyclopentadiene	5.0E-03 J	5.0E-03 J	MG/KG	MR08-IS102-2-3-08D	1/111	0.01 - 0.44	5.0E-03		3.7E+01 N			NO	BSL
	67-72-1	Hexachloroethane	ND	ND	MG/KG		0/110	0.34 - 0.58	5.8E-01		6.1E+00 C**			NO	DLBSL

TABLE 2.2

Occurrence, Distribution, and Selection of Chemicals of Potential Concern

Site UXO-08 Former Lejeune Cantonment Bazooka Range, Base CS Chamber, and NBC Training Trail

MCB Camp Lejeune, North Carolina

Scenario Timeframe: Future
Medium: Subsurface Soil
Exposure Medium: Subsurface Soil

Exposure Point	CAS Number	Chemical	Minimum [1] Concentration Qualifier	Maximum [1] Concentration Qualifier	Units	Location of Maximum Concentration	Detection Frequency	Range of Detection Limits	Concentration [2] Used for Screening	Background [3] Value	Screening [4] Toxicity Value	Potential ARAR/TBC Value	Potential ARAR/TBC Source	COPC Flag	Rationale for [5] Contaminant Deletion or Selection
	193-39-5	**Indeno(1,2,3-cd)pyrene**	**2.0E-03 J**	**2.5E+00 J**	**MG/KG**	**MR08-IS26-2-4-07A**	**11/111**	**0.01 - 0.44**	**2.5E+00**		**1.5E-01 C**	**2.0E+00**	**NCSSL**	**YES**	**ASL**
	78-59-1	Isophorone	ND	ND	MG/KG		0/110	0.34 - 0.58	5.8E-01		5.1E+02 C*	2.1E-01	NCSSL	NO	DLBSL
	91-20-3	Naphthalene	3.1E-03 J	4.9E-03 J	MG/KG	MR08-IS102-2-3-08D	4/111	0.01 - 0.44	4.9E-03		3.6E+00 C*	2.1E-01	NCSSL	NO	BSL
	621-64-7	n-Nitroso-di-n-propylamine	ND	ND	MG/KG		0/110	0.34 - 0.58	5.8E-01		6.9E-02 C			YES	DLASL
	86-30-6	n-Nitrosodiphenylamine	ND	ND	MG/KG		0/110	0.35 - 1.2	1.2E+00		9.9E+01 C			NO	DLBSL
	98-95-3	Nitrobenzene	ND	ND	MG/KG		0/111	0.1 - 0.45	4.5E-01		4.8E+00 C*			NO	DLBSL
	87-86-5	Pentachlorophenol	ND	ND	MG/KG		0/110	0.69 - 1.4	1.4E+00		8.9E-01 C	3.1E-02	NCSSL	YES	DLASL
	85-01-8	Phenanthrene	1.7E-03 J	2.6E-02	MG/KG	MR08-IS056-2-3-08D	16/111	0.01 - 0.44	2.6E-02		1.7E+03 N	5.7E+01	NCSSL	NO	BSL
	108-95-2	Phenol	ND	ND	MG/KG		0/110	0.41 - 0.87	8.7E-01		1.8E+03 N	2.3E-01	NCSSL	NO	DLBSL
	129-00-0	Pyrene	2.5E-03 J	9.4E-01	MG/KG	MR08-IS26-2-4-07A	18/111	0.01 - 0.44	9.4E-01		1.7E+02 N	2.2E+02	NCSSL	NO	BSL
	72-54-8	4,4'-DDD	5.0E-04 J	1.6E-01	MG/KG	MR08-IS25-4-6-07A	6/14	0.0035 - 0.0044	1.6E-01		2.0E+00 C	2.4E-01	NCSSL	NO	BSL
	72-55-9	4,4'-DDE	7.1E-04 J	2.3E-02	MG/KG	MR08-IS26-2-4-07A	3/14	0.0035 - 0.0044	2.3E-02		1.4E+00 C			NO	BSL
	50-29-3	4,4'-DDT	1.7E-03 J	3.8E-02	MG/KG	MR08-IS26-2-4-07A	3/14	0.0035 - 0.0044	3.8E-02		1.7E+00 C*	3.4E-01	NCSSL	NO	BSL
	309-00-2	Aldrin	ND	ND	MG/KG		0/14	0.0017 - 0.0022	2.2E-03		2.9E-02 C*			NO	DLBSL
	319-84-6	alpha-BHC	ND	ND	MG/KG		0/14	0.0017 - 0.0022	2.2E-03		7.7E-02 C	1.2E-03	NCSSL	NO	DLBSL
	5103-71-9	alpha-Chlordane	1.0E-03 J	3.8E-03	MG/KG	MR08-IS40-5-6-08C	3/14	0.0017 - 0.0022	3.8E-03		1.6E+00 C*	6.8E-02	NCSSL	NO	BSL
	12674-11-2	Aroclor-1016	ND	ND	MG/KG		0/14	0.035 - 0.044	4.4E-02		3.9E-01 N			NO	DLBSL
	11104-28-2	Aroclor-1221	ND	ND	MG/KG		0/14	0.07 - 0.088	8.8E-02		1.4E-01 C			NO	DLBSL
	11141-16-5	Aroclor-1232	ND	ND	MG/KG		0/14	0.035 - 0.044	4.4E-02		1.4E-01 C			NO	DLBSL
	53469-21-9	Aroclor-1242	ND	ND	MG/KG		0/14	0.035 - 0.044	4.4E-02		2.2E-01 C			NO	DLBSL
	12672-29-6	Aroclor-1248	ND	ND	MG/KG		0/14	0.035 - 0.044	4.4E-02		2.2E-01 C			NO	DLBSL
	11097-69-1	Aroclor-1254	ND	ND	MG/KG		0/14	0.035 - 0.044	4.4E-02		1.1E-01 C**			NO	DLBSL
	11096-82-5	Aroclor-1260	ND	ND	MG/KG		0/14	0.035 - 0.044	4.4E-02		2.2E-01 C			NO	DLBSL
	319-85-7	beta-BHC	ND	ND	MG/KG		0/14	0.0017 - 0.0022	2.2E-03		2.7E-01 C	1.2E-03	NCSSL	NO	DLBSL
	319-86-8	delta-BHC	ND	ND	MG/KG		0/14	0.0017 - 0.0022	2.2E-03		2.7E-01 C	1.2E-03	NCSSL	NO	DLBSL
	60-57-1	Dieldrin	2.6E-04 J	4.1E-03 J	MG/KG	MR08-IS39-5-6-08C	4/14	0.0035 - 0.0044	4.1E-03		3.0E-02 C	8.1E-04	NCSSL	NO	BSL
	959-98-8	Endosulfan I	1.2E-03 J	1.2E-03 J	MG/KG	MR08-IS26-2-4-07A	1/14	0.0017 - 0.0022	1.2E-03		3.7E+01 N	5.6E+00	NCSSL	NO	BSL
	33213-65-9	Endosulfan II	2.0E-03 J	2.0E-03 J	MG/KG	MR08-IS26-2-4-07A	1/14	0.0035 - 0.0044	2.0E-03		3.7E+01 N	5.6E+00	NCSSL	NO	BSL
	1031-07-8	Endosulfan sulfate	2.2E-03 J	2.2E-03 J	MG/KG	MR08-IS26-2-4-07A	1/14	0.0035 - 0.0044	2.2E-03		3.7E+01 N	5.6E+00	NCSSL	NO	BSL
	72-20-8	Endrin	2.8E-03 J	7.9E-03	MG/KG	MR08-IS26-2-4-07A	2/14	0.0035 - 0.0044	7.9E-03		1.8E+00 N	8.1E-01	NCSSL	NO	BSL
	7421-93-4	Endrin aldehyde	ND	ND	MG/KG		0/14	0.0035 - 0.0044	4.4E-03		1.8E+00 N	8.1E-01	NCSSL	NO	DLBSL
	53494-70-5	Endrin ketone	ND	ND	MG/KG		0/14	0.0035 - 0.0044	4.4E-03		1.8E+00 N	8.1E-01	NCSSL	NO	DLBSL
	58-89-9	gamma-BHC (Lindane)	ND	ND	MG/KG		0/14	0.0017 - 0.0022	2.2E-03		5.2E-01 C*	1.8E-03	NCSSL	NO	DLBSL
	5103-74-2	gamma-Chlordane	3.6E-03	3.6E-03	MG/KG	MR08-IS40-5-6-08C	1/6	0.002 - 0.0022	3.6E-03		1.6E+00 C*	6.8E-02	NCSSL	NO	BSL
	76-44-8	Heptachlor	ND	ND	MG/KG		0/14	0.0017 - 0.0022	2.2E-03		1.1E-01 C	6.6E-03	NCSSL	NO	DLBSL

TABLE 2.2

Occurrence, Distribution, and Selection of Chemicals of Potential Concern

Site UXO-08 Former Lejeune Cantonment Bazooka Range, Base CS Chamber, and NBC Training Trail

MCB Camp Lejeune, North Carolina

Scenario Timeframe: Future
Medium: Subsurface Soil
Exposure Medium: Subsurface Soil

Exposure Point	CAS Number	Chemical	Minimum [1] Concentration Qualifier	Maximum [1] Concentration Qualifier	Units	Location of Maximum Concentration	Detection Frequency	Range of Detection Limits	Concentration [2] Used for Screening	Background [3] Value	Screening [4] Toxicity Value	Potential ARAR/TBC Value	Potential ARAR/TBC Source	COPC Flag	Rationale for [5] Contaminant Deletion or Selection
	1024-57-3	Heptachlor epoxide	5.7E-04 J	5.7E-04 J	MG/KG	MR08-IS41-5-6-08C	1/14	0.0017 - 0.0022	5.7E-04		5.3E-02 C*	8.2E-04	NCSSL	NO	BSL
	72-43-5	Methoxychlor	ND	ND	MG/KG		0/14	0.017 - 0.022	2.2E-02		3.1E+01 N	2.2E+01	NCSSL	NO	DLBSL
	12789-03-6	technical-Chlordane	9.6E-04 J	1.4E-03 J	MG/KG	MR08-IS25-4-6-07A : MR08-IS28-2-4-07A	3/8	0.0017 - 0.0021	1.4E-03		1.6E+00 C*	6.8E-02	NCSSL	NO	BSL
	8001-35-2	Toxaphene	ND	ND	MG/KG		0/14	0.17 - 0.22	2.2E-01		4.4E-01 C	4.6E-02	NCSSL	NO	DLBSL
	99-35-4	1,3,5-Trinitrobenzene	ND	ND	MG/KG		0/110	0.1 - 0.5	5.0E-01		2.2E+02 N			NO	DLBSL
	99-65-0	1,3-Dinitrobenzene	ND	ND	MG/KG		0/110	0.1 - 0.5	5.0E-01		6.1E-01 N			NO	DLBSL
	118-96-7	2,4,6-Trinitrotoluene	ND	ND	MG/KG		0/110	0.1 - 0.5	5.0E-01		3.6E+00 C**			NO	DLBSL
	35572-78-2	2-Amino-4,6-dinitrotoluene	1.0E-01 J	1.0E-01 J	MG/KG	MR08-IS122-6_5-8-08D	1/110	0.1 - 0.5	1.0E-01		1.5E+01 N			NO	BSL
	88-72-2	2-Nitrotoluene	ND	ND	MG/KG		0/110	0.2 - 0.5	5.0E-01		2.9E+00 C*			NO	DLBSL
	99-08-1	3-Nitrotoluene	ND	ND	MG/KG		0/110	0.2 - 0.5	5.0E-01		6.1E-01 N			NO	DLBSL
	19406-51-0	4-Amino-2,6-dinitrotoluene	ND	ND	MG/KG		0/110	0.1 - 0.5	5.0E-01		1.5E+01 N			NO	DLBSL
	99-99-0	4-Nitrotoluene	ND	ND	MG/KG		0/110	0.2 - 0.5	5.0E-01		2.4E+01 C**			NO	DLBSL
	2691-41-0	HMX	ND	ND	MG/KG		0/110	0.2 - 0.5	5.0E-01		3.8E+02 N			NO	DLBSL
	55-63-0	Nitroglycerin	ND	ND	MG/KG		0/104	0.29 - 2.5	2.5E+00		6.1E-01 N			YES	DLASL
	14797-73-0	Perchlorate	1.2E-03 J	3.5E-01	MG/KG	MR08-IS085-1-2-08D	14/103	0.0021 - 0.023	3.5E-01		5.5E+00 N			NO	BSL
	78-11-5	PETN	ND	ND	MG/KG		0/104	0.29 - 2.5	2.5E+00		N/A			NO	NTX
	121-82-4	RDX	ND	ND	MG/KG		0/110	0.2 - 0.5	5.0E-01		5.5E+00 C*			NO	DLBSL
	479-45-8	Tetryl	ND	ND	MG/KG		0/110	0.2 - 0.5	5.0E-01		2.4E+01 N			NO	DLBSL
	7429-90-5	**Aluminum**	**2.0E+03**	**1.5E+04**	**MG/KG**	**MR08-IS22-5-7-07A**	**15/15**	**16.5 - 25.2**	**1.5E+04**	**1.0E+04**	**7.7E+03 N**			**YES**	**ASL**
	7440-36-0	**Antimony**	**2.5E-01 J**	**3.8E+00 J-**	**MG/KG**	**MR08-IS24-2-4-07A**	**13/104**	**1.48 - 6.6**	**3.8E+00**	**3.6E-01**	**3.1E+00 N**			**YES**	**ASL**
	7440-38-2	**Arsenic**	**8.5E-02 J**	**1.1E+01**	**MG/KG**	**MR08-IS132-08D**	**93/107**	**0.302 - 1.3**	**1.1E+01**	**2.1E+00**	**3.9E-01 C***	**5.8E+00**	**NCSSL**	**YES**	**ASL**
	7440-39-3	Barium	5.2E-01	2.3E+02	MG/KG	MR08-IS056-2-3-08D	104/110	0.371 - 25.2	2.3E+02	1.7E+01	1.5E+03 N	5.8E+02	NCSSL	NO	BSL
	7440-41-7	Beryllium	3.6E-02 J	2.9E-01 J	MG/KG	MR08-IS24-2-4-07A	8/14	0.41 - 0.63	2.9E-01	1.7E-01	1.6E+01 N			NO	BSL
	7440-43-9	Cadmium	4.0E-02 J	2.6E+00	MG/KG	MR08-IS056-2-3-08D	16/110	0.148 - 0.63	2.6E+00	2.3E-02	7.0E+00 N	3.0E+00	NCSSL	NO	BSL
	7440-70-2	Calcium	3.4E+02 J-	1.0E+05 J-	MG/KG	MR08-IS24-2-4-07A	6/14	411 - 5530	1.0E+05	4.4E+02	N/A			NO	NUT
	7440-47-3	**Chromium**	**1.2E+00**	**3.5E+01**	**MG/KG**	**MR08-IS056-2-3-08D**	**110/110**	**0.741 - 1.3**	**3.5E+01**	**1.5E+01**	**2.9E-01 C**	**3.8E+00**	**NCSSL**	**YES**	**ASL**
	7440-48-4	Cobalt	8.0E-02 J	1.6E+00 J	MG/KG	MR08-IS24-2-4-07A	8/14	4.1 - 6.3	1.6E+00	8.2E-01	2.3E+00 N			NO	BSL
	7440-50-8	Copper	4.5E-01 J	4.7E+01	MG/KG	MR08-IS056-2-3-08D	62/110	1.48 - 16.7	4.7E+01	2.6E+00	3.1E+02 N	7.0E+02	NCSSL	NO	BSL
	57-12-5	Cyanide	ND	ND	MG/KG		0/8	0.27 - 0.32	3.2E-01	N/A	1.6E+02 N	2.8E-01	NCSSL	NO	DLBSL
	7439-89-6	**Iron**	**8.8E+02**	**9.2E+03**	**MG/KG**	**MR08-IS43-5-6-08C**	**14/14**	**8.2 - 12.6**	**9.2E+03**	**5.4E+03**	**5.5E+03 N**	**1.5E+02**	**NCSSL**	**YES**	**ASL**
	7439-92-1	Lead	1.0E+00	2.5E+02	MG/KG	MR08-IS24-2-4-07A	110/110	0.403 - 4.61	2.5E+02	8.5E+00	4.0E+02 N	2.7E+02	NCSSL	NO	BSL
	7439-95-4	Magnesium	1.3E+02 J	1.9E+03	MG/KG	MR08-IS24-2-4-07A	7/14	411 - 630	1.9E+03	3.6E+02	N/A			NO	NUT
	7439-96-5	Manganese	2.2E+00 J	5.3E+01 J	MG/KG	MR08-IS26-2-4-07A	13/14	1.2 - 1.9	5.3E+01	9.3E+00	1.8E+02 N	6.5E+01	NCSSL	NO	BSL
	7439-97-6	Mercury	2.0E-02 J	1.1E+00	MG/KG	MR08-IS056-2-3-08D	14/110	0.03 - 0.218	1.1E+00	7.1E-02	2.3E+00 N	1.0E+00	NCSSL	NO	BSL
	7440-02-0	Nickel	2.4E-01 J	7.2E+00	MG/KG	MR08-IS24-2-4-07A	12/14	3.3 - 5	7.2E+00	2.3E+00	1.5E+02 N	1.3E+02	NCSSL	NO	BSL

TABLE 2.2

Occurrence, Distribution, and Selection of Chemicals of Potential Concern

Site UXO-08 Former Lejeune Cantonment Bazooka Range, Base CS Chamber, and NBC Training Trail

MCB Camp Lejeune, North Carolina

Scenario Timeframe: Future
Medium: Subsurface Soil
Exposure Medium: Subsurface Soil

Exposure Point	CAS Number	Chemical	Minimum [1] Concentration Qualifier	Maximum [1] Concentration Qualifier	Units	Location of Maximum Concentration	Detection Frequency	Range of Detection Limits	Concentration [2] Used for Screening	Background [3] Value	Screening [4] Toxicity Value	Potential ARAR/TBC Value	Potential ARAR/TBC Source	COPC Flag	Rationale for [5] Contaminant Deletion or Selection
	7440-09-7	Potassium	1.1E+02 J	6.7E+02	MG/KG	MR08-IS24-2-4-07A	8/14	411 - 630	6.7E+02	3.6E+02	N/A			NO	NUT
	7782-49-2	Selenium	1.1E-01 J	2.4E+00	MG/KG	MR08-IS066-2-3-08D	57/106	0.403 - 4.4	2.4E+00	5.1E-01	3.9E+01 N	2.1E+00	NCSSL	NO	BSL
	7440-22-4	Silver	2.3E-01 J	2.6E+01	MG/KG	MR08-IS056-2-3-08D	17/110	0.741 - 1.3	2.6E+01	1.3E-01	3.9E+01 N	3.4E+00	NCSSL	NO	BSL
	7440-23-5	Sodium	1.4E+02 J	2.5E+02 J	MG/KG	MR08-IS24-2-4-07A	2/14	411 - 630	2.5E+02	6.8E+01	N/A			NO	NUT
	7440-28-0	Thallium	ND	ND	MG/KG		0/14	2.1 - 3.1	3.1E+00	3.8E-01	N/A			NO	NTX
	7440-62-2	Vanadium	4.5E+00 J	2.3E+01	MG/KG	MR08-IS22-5-7-07A	14/14	4.1 - 6.3	2.3E+01	1.7E+01	3.9E+01 N			NO	BSL
	7440-66-6	Zinc	4.5E-01 J	2.4E+02	MG/KG	MR08-IS056-2-3-08D	89/110	1.48 - 16.7	2.4E+02	6.6E+00	2.3E+03 N	1.2E+03	NCSSL	NO	BSL

[1] Minimum/Maximum detected concentrations.

[2] Maximum concentration is used for screening.

[3] Background values are two times the arithmetic mean basewide background soil concentrations.
Background values are from *Final Base Background Soil Study Report, Marine Corps Base Camp Lejeune, North Carolina* , Baker Environmental, April 25, 2001.

[4] Oak Ridge National Laboratory (ORNL). November, 2010. Regional Screening Levels for Chemical Contaminants at Superfund Sites.
http://www.epa.gov/reg3hwmd/risk/human/rb-concentration_table/index.htm. Residential soil RSLs. RSLs based on noncarcinogenic effects divided by 10 to account for exposure to more than on constituent that effects the same target organ.
RSL for 1,4-Dichlorobenzene used as surrogate for 1,3-Dichlorobenzene
RSL value for p-Cresol (4-Methylphenol) used as surrogate for 3- and 4-Methylphenol.
RSL value for Methoxychlor used as surrogate for 4-Chlorophenyl-phenylether.
RSL value for Nitrobenzene used as surrogate for 4-Nitrophenol.
RSL value for Acenaphthene used as surrogate for Acenaphthylene.
RSL value for Pyrene used as surrogate for Benzo(g,h,i)perylene.
RSL value for Anthracene used as surrogate for Phenanthrene.
RSL value for technical Chlordane used as surrogate for alpha-Chlordane and gamma-Chlordane.
RSL value for technical-HCH used as surrogate for delta-BHC.
RSL value for Chromium(VI) used as surrogate for Chromium.
The soil value of 400 mg/kg for lead is from the Revised Interim Soil Lead Guidance for CERCLA Sites and RCRA Corrective Action Facilities, USEPA, July 14, 1994.
RSL value for Manganese (water) used as surrogate for Manganese.
RSL value for Mercury (inorganic salts) used as surrogate for Mercury.
RSL value for 1,3-Dichloropropene used as a surrogate for cis-1,3-Dichloropropene and trans-1,3-Dichloropropene.
RSL value for Endosulfan used as surrogate for Endosulfan I, Endosulfan II, and Endosulfan sulfate.
RSL value for Endrin used as surrogate for Endrin aldehyde and Endrin ketone.
RSL value for 2-Chlorophenol used as surrogate for 4-Chloro-3-methylphenol and 2-Nitrophenol.

COPC = Chemical of Potential Concern
ARAR/TBC = Applicable or Relevant and Appropriate Requirement/ To Be Considered
J = Estimated Value
J- = Analyte present, value may be biased low, actual value may be higher
C* = N screening level < 100x C screening level, therefore N screening value/10 used as screening level
C** = N screening level < 10x C screening level, therefore N screening value/10 used as screening level
N = Noncarcinogenic
N/A = Not available
NCSSL = North Carolina Soil Screening Levels (NCDENR, 2010
NS = RSL exceeds Csat, soil saturation concentration. Therefore, Csat used as screening level

TABLE 2.2

Occurrence, Distribution, and Selection of Chemicals of Potential Concern

Site UXO-08 Former Lejeune Cantonment Bazooka Range, Base CS Chamber, and NBC Training Trail

MCB Camp Lejeune, North Carolina

Scenario Timeframe: Future
Medium: Subsurface Soil
Exposure Medium: Subsurface Soil

Exposure Point	CAS Number	Chemical	Minimum [1] Concentration Qualifier	Maximum [1] Concentration Qualifier	Units	Location of Maximum Concentration	Detection Frequency	Range of Detection Limits	Concentration [2] Used for Screening	Background [3] Value	Screening [4] Toxicity Value	Potential ARAR/TBC Value	Potential ARAR/TBC Source	COPC Flag	Rationale for [5] Contaminant Deletion or Selection

[5] Rationale Codes

Selection Reason: Above Screening Levels (ASL)
Chemical in same chemical class as a chemical selected as a COPC because ASL (CC)
Detection Limit Above Screening Level (DLASL), not quantitatively evaluated in HHRA

Deletion Reason: No Toxicity Information (NTX)
Essential Nutrient (NUT)
Below Screening Level (BSL)
Detection Limit Below Screening Level (DLBSL)

TABLE 2.2a

Risk Ratio Screening for Subsurface Soil, Maximum Detected Concentration

Site UXO-08 Former Lejeune Cantonment Bazooka Range, Base CS Chamber, and NBC Training Trail

MCB Camp Lejeune, North Carolina

Analyte	Detection Frequency	Maximum Detected Concentration (Qualifier)	Sample Location of Maximum Detected Concentration	Residential Soil RSL	Acceptable Risk Level	Corresponding Hazard Index[a]	Corresponding Cancer Risk[b]	Target Organ
Semivolatile Organic Compounds (mg/kg)								
Benzo(a)anthracene	**13 / 111**	**1.0E+00**	**MR08-IS26-2-4-07A**	**1.5E-01**	**1.E-06**	**NA**	**7E-06**	**NA**
Benzo(a)pyrene	**4 / 111**	**2.5E+00 J**	**MR08-IS26-2-4-07A**	**1.5E-02**	**1.E-06**	**NA**	**2E-04**	**NA**
Benzo(b)fluoranthene	**7 / 111**	**3.3E+00 J**	**MR08-IS26-2-4-07A**	**1.5E-01**	**1.E-06**	**NA**	**2E-05**	**NA**
Benzo(k)fluoranthene	**6 / 111**	**1.4E+00 J**	**MR08-IS26-2-4-07A**	**1.5E+00**	**1.E-06**	**NA**	**9E-07**	**NA**
Chrysene	**1 / 110**	**1.6E+00 J**	**MR08-IS26-2-4-07A**	**1.5E+01**	**1.E-06**	**NA**	**1E-07**	**NA**
Dibenz(a,h)anthracene	**9 / 111**	**6.0E-01 J**	**MR08-IS26-2-4-07A**	**1.5E-02**	**1.E-06**	**NA**	**4E-05**	**NA**
Indeno(1,2,3-cd)pyrene	**11 / 111**	**2.5E+00 J**	**MR08-IS26-2-4-07A**	**1.5E-01**	**1.E-06**	**NA**	**2E-05**	**NA**
Metals (mg/kg)								
Aluminum	15 / 15	1.5E+04	MR08-IS22-5-7-07A	7.7E+04	1	0.2	NA	Neurological
Antimony	13 / 104	3.8E+00 J-	MR08-IS24-2-4-07A	3.1E+01	1	0.1	NA	Longevity, Blood
Arsenic	**93 / 107**	**1.1E+01 J**	**MR08-IS132-08D**	**3.9E-01**	**1E-06**	**NA**	**3E-05**	**NA**
Chromium	**110 / 110**	**3.5E+01**	**MR08-IS056-2-3-08D**	**2.9E-01**	**1E-06**	**NA**	**1E-04**	**NA**
Iron	14 / 14	9.2E+03	MR08-IS43-5-6-08C	5.5E+04	1	0.2	NA	Gastrointestinal
Cumulative Corresponding Hazard Index[c]						**0.5**		
Cumulative Corresponding Cancer Risk[d]							**4E-04**	

Total Blood HI =	0.1
Total Gastrointestinal HI =	0.2
Total Longevity HI =	0.1
Total Neurological HI =	0.2

Notes:

a Corresponding Hazard Index equals maximum detected concentration divided by the RSL divided by the acceptable risk level.

b Corresponding Cancer Risk equals maximum detected concentration divided by the RSL divided by the acceptable risk level.

c Cumulative Corresponding Hazard Index equals sum of Corresponding Hazard Indices for each constituent.

d Cumulative Corresponding Cancer Risk equals sum of Corresponding Cancer Risks for each constituent.

Constituent selected as COPC if it contributes to an overall Hazard Index by target organ greater than 0.5 or Cumulative Corresponding Cancer Risk greater than 5E-05, otherwise, constituent not selected as COPC.

Constituents selected as COPCs are indicated by shading.

CNS = Central nervous System

COPC = Constituent of Potential Concern

HI = Hazard Index

J = Estimated Value

J- = Analyte present, value may be biased low, actual value may be higher

mg/kg = micrograms per kilogram

NA = Not available/not applicable.

TABLE 2.3

Occurrence, Distribution, and Selection of Chemicals of Potential Concern

Site UXO-08 Former Lejeune Cantonment Bazooka Range, Base CS Chamber, and NBC Training Trail

MCB Camp Lejeune, North Carolina

Scenario Timeframe: Future
Medium: Groundwater
Exposure Medium: Groundwater

Exposure Point	CAS Number	Chemical	Minimum [1] Concentration Qualifier	Maximum [1] Concentration Qualifier	Units	Location of Maximum Concentration	Detection Frequency	Range of Detection Limits	Concentration [2] Used for Screening	Background [3] Value	Screening [4] Toxicity Value	Potential ARAR/TBC Value	Potential ARAR/TBC Source	COPC Flag	Rationale for [5] Contaminant Deletion or Selection
Groundwater	71-55-6	1,1,1-Trichloroethane	ND	ND	UG/L		0/24	0.5 - 25	2.5E+01		9.1E+02 N	2.0E+02	MCL, NC2LGW	NO	DLBSL
	79-34-5	1,1,2,2-Tetrachloroethane	ND	ND	UG/L		0/24	0.5 - 25	2.5E+01		6.7E-02 C	2.0E-01	NC2LGW	YES	DLASL
	76-13-1	1,1,2-Trichloro-1,2,2-trifluoroethane (Freon-113)	ND	ND	UG/L		0/24	0.5 - 25	2.5E+01		5.9E+03 N	2.0E+05	NC2LGW	NO	DLBSL
	79-00-5	1,1,2-Trichloroethane	ND	ND	UG/L		0/24	0.5 - 25	2.5E+01		2.4E-01 C	5.0E+00	MCL	YES	DLASL
	75-34-3	**1,1-Dichloroethane**	**1.5E+00**	**1.9E+02**	**UG/L**	**IR78-GW42-08C**	**6/24**	**0.5 - 25**	**1.9E+02**		**2.4E+00 C**	**6.0E+00**	**NC2LGW**	**YES**	**ASL**
	75-35-4	1,1-Dichloroethene	2.7E-01 J	2.7E+01 J	UG/L	IR78-GW42-08C	7/24	0.5 - 25	2.7E+01		3.4E+01 N	7.0E+00	MCL, NC2LGW	NO	BSL
	563-58-6	1,1-Dichloropropene	ND	ND	UG/L		0/1	1 - 1	1.0E+00		N/A			NO	NTX
	87-61-6	1,2,3-Trichlorobenzene	ND	ND	UG/L		0/11	0.5 - 25	2.5E+01		2.9E+00 N			YES	DLASL
	120-82-1	1,2,4-Trichlorobenzene	1.4E-01 J	1.4E-01 J	UG/L	IR78-GW56-08D	1/24	0.5 - 25	1.4E-01		4.1E-01 C**	7.0E+01	MCL, NC2LGW	NO	BSL
	96-12-8	1,2-Dibromo-3-chloropropane	ND	ND	UG/L		0/24	0.5 - 25	2.5E+01		3.2E-04 C	2.0E-01	MCL	YES	DLASL
												4.0E-02	NC2LGW		
	106-93-4	1,2-Dibromoethane	ND	ND	UG/L		0/24	0.5 - 25	2.5E+01		6.5E-03 C	5.0E-02	MCL	YES	DLASL
												2.0E-02	NC2LGW		
	95-50-1	1,2-Dichlorobenzene	ND	ND	UG/L		0/24	0.5 - 25	2.5E+01		3.7E+01 N	6.0E+02	MCL	NO	DLBSL
												2.0E+01	NC2LGW		
	107-06-2	**1,2-Dichloroethane**	**8.2E-01 J**	**8.2E-01 J**	**UG/L**	**IR78-GW42-08D-2**	**1/24**	**0.5 - 25**	**8.2E-01**		**1.5E-01 C**	**5.0E+00**	**MCL**	**YES**	**ASL**
												4.0E-01	**NC2LGW**		
	78-87-5	1,2-Dichloropropane	ND	ND	UG/L		0/24	0.5 - 25	2.5E+01		3.9E-01 C*	5.0E+00	MCL	YES	DLASL
												6.0E-01	NC2LGW		
	541-73-1	1,3-Dichlorobenzene	ND	ND	UG/L		0/24	0.5 - 25	2.5E+01		4.3E-01 C	2.0E+02	NC2LGW	YES	DLASL
	106-46-7	1,4-Dichlorobenzene	ND	ND	UG/L		0/24	0.5 - 25	2.5E+01		4.3E-01 C	7.5E+01	MCL	YES	DLASL
												6.0E+00	NC2LGW		
	78-93-3	2-Butanone	ND	ND	UG/L		0/24	3 - 250	2.5E+02		7.1E+02 N	4.0E+03	NC2LGW	NO	DLBSL
	591-78-6	2-Hexanone	ND	ND	UG/L		0/24	2 - 250	2.5E+02		4.7E+00 N			YES	DLASL
	108-10-1	4-Methyl-2-pentanone	ND	ND	UG/L		0/24	2 - 250	2.5E+02		2.0E+02 N			YES	DLASL
	67-64-1	Acetone	2.7E+00	2.7E+00	UG/L	IR78-GW01-08D	1/24	2.5 - 250	2.7E+00		2.2E+03 N	6.0E+03	NC2LGW	NO	BSL
	71-43-2	**Benzene**	**1.6E-01 J**	**5.2E+00**	**UG/L**	**IR78-GW04-2-08D**	**7/24**	**0.5 - 25**	**5.2E+00**		**4.1E-01 C**	**5.0E+00**	**MCL**	**YES**	**ASL**
												1.0E+00	**NC2LGW**		
	74-97-5	Bromochloromethane	ND	ND	UG/L		0/11	0.5 - 25	2.5E+01		N/A			NO	NTX
	75-27-4	Bromodichloromethane	ND	ND	UG/L		0/24	0.5 - 25	2.5E+01		1.2E-01 C	8.0E+01	MCL	YES	DLASL
												6.0E-01	NC2LGW		
	75-25-2	Bromoform	ND	ND	UG/L		0/24	0.5 - 25	2.5E+01		8.5E+00 C*	8.0E+01	MCL	YES	DLASL
												4.0E+00	NC2LGW		
	74-83-9	Bromomethane	ND	ND	UG/L		0/24	0.5 - 25	2.5E+01		8.7E-01 N			YES	DLASL
	75-15-0	Carbon disulfide	ND	ND	UG/L		0/24	0.5 - 25	2.5E+01		1.0E+02 N	7.0E+02	NC2LGW	NO	DLBSL
	56-23-5	Carbon tetrachloride	ND	ND	UG/L		0/24	0.5 - 25	2.5E+01		4.4E-01 C	5.0E+00	MCL	YES	DLASL
												3.0E-01	NC2LGW		

TABLE 2.3

Occurrence, Distribution, and Selection of Chemicals of Potential Concern

Site UXO-08 Former Lejeune Cantonment Bazooka Range, Base CS Chamber, and NBC Training Trail

MCB Camp Lejeune, North Carolina

Scenario Timeframe: Future
Medium: Groundwater
Exposure Medium: Groundwater

Exposure Point	CAS Number	Chemical	Minimum [1] Concentration Qualifier	Maximum [1] Concentration Qualifier	Units	Location of Maximum Concentration	Detection Frequency	Range of Detection Limits	Concentration [2] Used for Screening	Background [3] Value	Screening [4] Toxicity Value	Potential ARAR/TBC Value	Potential ARAR/TBC Source	COPC Flag	Rationale for [5] Contaminant Deletion or Selection
	108-90-7	Chlorobenzene	ND	ND	UG/L		0/24	0.5 - 25	2.5E+01		9.1E+00 N	1.0E+02	MCL	YES	DLASL
												5.0E+01	NC2LGW		
	75-00-3	Chloroethane	1.2E+00	1.2E+00	UG/L	IR78-GW42-08D-2	1/24	0.5 - 25	1.2E+00		2.1E+03 N	3.0E+03	NC2LGW	NO	BSL
	67-66-3	Chloroform	ND	ND	UG/L		0/24	0.5 - 25	2.5E+01		1.9E-01 C	8.0E+01	MCL	YES	DLASL
												7.0E+01	NC2LGW		
	74-87-3	Chloromethane	ND	ND	UG/L		0/24	0.5 - 25	2.5E+01		1.9E+01 N	3.0E+00	NC2LGW	YES	DLASL
	156-59-2	**cis-1,2-Dichloroethene**	**3.8E-01 J**	**8.7E+02**	**UG/L**	**IR78-GW42-08C**	**17/24**	**0.5 - 50**	**8.7E+02**		**7.3E+00 N**	**7.0E+01**	**MCL, NC2LGW**	**YES**	**ASL**
	10061-01-5	cis-1,3-Dichloropropene	ND	ND	UG/L		0/24	0.5 - 25	2.5E+01		4.3E-01 C*	4.0E-01	NC2LGW	YES	DLASL
	110-82-7	Cyclohexane	3.3E-01 J	1.2E+01	UG/L	IR78-GW57D-08D	3/24	0.5 - 25	1.2E+01		1.3E+03 N			NO	BSL
	124-48-1	Dibromochloromethane	ND	ND	UG/L		0/24	0.5 - 25	2.5E+01		1.5E-01 C	8.0E+01	MCL	YES	DLASL
												4.0E-01	NC2LGW		
	75-71-8	Dichlorodifluoromethane (Freon-12)	2.7E-01 J	2.7E-01 J	UG/L	IR78-GW61-08D	1/24	0.5 - 25	2.7E-01		3.9E+01 N	1.0E+03	NC2LGW	NO	BSL
	100-41-4	Ethylbenzene	2.5E-01 J	2.5E-01 J	UG/L	IR78-GW42-08D-2	1/24	0.5 - 25	2.5E-01		1.5E+00 C	7.0E+02	MCL	NO	BSL
												6.0E+02	NC2LGW		
	98-82-8	Isopropylbenzene	2.3E-01 J	3.4E-01 J	UG/L	IR78-GW01-08D	2/24	0.5 - 25	3.4E-01		6.8E+01 N	7.0E+01	NC2LGW	NO	BSL
	79-20-9	Methyl acetate	ND	ND	UG/L		0/24	0.5 - 25	2.5E+01		3.7E+03 N			NO	DLBSL
	108-87-2	Methylcyclohexane	ND	ND	UG/L		0/24	0.5 - 25	2.5E+01		N/A			NO	NTX
	75-09-2	Methylene chloride	ND	ND	UG/L		0/24	0.5 - 25	2.5E+01		4.8E+00 C	5.0E+00	MCL, NC2LGW	YES	DLASL
	1634-04-4	Methyl-tert-butyl ether (MTBE)	3.2E-01 J	2.6E+00 J	UG/L	MR08-GW04-1D-07A	3/24	0.5 - 25	2.6E+00		1.2E+01 C	2.0E+01	NC2LGW	NO	BSL
	100-42-5	Styrene	ND	ND	UG/L		0/24	0.5 - 25	2.5E+01		1.6E+02 N	1.0E+02	MCL	NO	DLBSL
												7.0E+01	NC2LGW		
	127-18-4	Tetrachloroethene	ND	ND	UG/L		0/24	0.5 - 25	2.5E+01		1.1E-01 C	5.0E+00	MCL	YES	DLASL
												7.0E-01	NC2LGW		
	108-88-3	Toluene	1.7E+00 J	1.7E+00 J	UG/L	MR08-GW42-07A	1/24	0.5 - 25	1.7E+00		2.3E+02 N	1.0E+03	MCL	NO	BSL
												6.0E+02	NC2LGW		
	156-60-5	trans-1,2-Dichloroethene	3.7E-01 J	1.7E+00	UG/L	IR78-GW42-08D-2	6/24	0.5 - 25	1.7E+00		1.1E+01 N	1.0E+02	MCL, NC2LGW	NO	BSL
	10061-02-6	trans-1,3-Dichloropropene	ND	ND	UG/L		0/24	0.5 - 25	2.5E+01		4.3E-01 C*	4.0E-01	NC2LGW	YES	DLASL
	79-01-6	**Trichloroethene**	**6.9E-01 J**	**1.3E+02**	**UG/L**	**IR78-GW42-08C**	**12/24**	**0.5 - 25**	**1.3E+02**		**2.0E+00 C**	**5.0E+00**	**MCL**	**YES**	**ASL**
												3.0E+00	**NC2LGW**		
	75-69-4	Trichlorofluoromethane (Freon-11)	1.0E-01 J	1.7E+00	UG/L	IR78-GW61-08D	4/24	0.5 - 25	1.7E+00		1.3E+02 N	2.0E+03	NC2LGW	NO	BSL
	75-01-4	**Vinyl chloride**	**3.4E-01 J**	**1.8E+02**	**UG/L**	**IR78-GW42-08D-2**	**7/24**	**0.5 - 25**	**1.8E+02**		**1.6E-02 C**	**2.0E+00**	**MCL**	**YES**	**ASL**
												3.0E-02	**NC2LGW**		
	1330-20-7	Xylene, total	2.7E-01 J	2.3E+00	UG/L	IR78-GW42-08D-2	2/24	1 - 75	2.3E+00		2.0E+01 N	1.0E+04	MCL	NO	BSL
												5.0E+02	NC2LGW		
	92-52-4	1,1-Biphenyl	ND	ND	UG/L		0/13	9 - 11	1.1E+01		1.8E+02 N	4.0E+02	NC2LGW	NO	DLBSL
	108-60-1	2,2'-Oxybis(1-chloropropane)	ND	ND	UG/L		0/13	9 - 11	1.1E+01		3.2E-01 C			YES	DLASL
	95-95-4	2,4,5-Trichlorophenol	ND	ND	UG/L		0/12	10 - 26	2.6E+01		3.7E+02 N			NO	DLBSL
	88-06-2	2,4,6-Trichlorophenol	ND	ND	UG/L		0/12	9 - 11	1.1E+01		3.7E+00 C**			YES	DLASL

TABLE 2.3

Occurrence, Distribution, and Selection of Chemicals of Potential Concern

Site UXO-08 Former Lejeune Cantonment Bazooka Range, Base CS Chamber, and NBC Training Trail

MCB Camp Lejeune, North Carolina

Scenario Timeframe: Future
Medium: Groundwater
Exposure Medium: Groundwater

Exposure Point	CAS Number	Chemical	Minimum [1] Concentration Qualifier	Maximum [1] Concentration Qualifier	Units	Location of Maximum Concentration	Detection Frequency	Range of Detection Limits	Concentration [2] Used for Screening	Background [3] Value	Screening [4] Toxicity Value	Potential ARAR/TBC Value	Potential ARAR/TBC Source	COPC Flag	Rationale for [5] Contaminant Deletion or Selection
	120-83-2	2,4-Dichlorophenol	ND	ND	UG/L		0/12	10 - 13	1.3E+01		1.1E+01 N			YES	DLASL
	105-67-9	2,4-Dimethylphenol	ND	ND	UG/L		0/12	10 - 13	1.3E+01		7.3E+01 N	1.0E+02	NC2LGW	NO	DLBSL
	51-28-5	2,4-Dinitrophenol	ND	ND	UG/L		0/12	10 - 48	4.8E+01		7.3E+00 N			YES	DLASL
	121-14-2	**2,4-Dinitrotoluene**	**8.3E-02 J**	**3.4E-01**	**UG/L**	**IR78-GW04-08C**	**2/26**	**0.2 - 11**	**3.4E-01**		**2.2E-01 C**			**YES**	**ASL**
	606-20-2	2,6-Dinitrotoluene	ND	ND	UG/L		0/26	0.2 - 11	1.1E+01		3.7E+00 N			YES	DLASL
	91-58-7	2-Chloronaphthalene	ND	ND	UG/L		0/13	9 - 11	1.1E+01		2.9E+02 N			NO	DLBSL
	95-57-8	2-Chlorophenol	ND	ND	UG/L		0/12	10 - 13	1.3E+01		1.8E+01 N	4.0E-01	NC2LGW	NO	DLBSL
	91-57-6	2-Methylnaphthalene	ND	ND	UG/L		0/13	0.24 - 11	1.1E+01		1.5E+01 N	3.0E+01	NC2LGW	NO	DLBSL
	95-48-7	2-Methylphenol	ND	ND	UG/L		0/12	10 - 13	1.3E+01		1.8E+02 N			NO	DLBSL
	88-74-4	2-Nitroaniline	ND	ND	UG/L		0/13	10 - 26	2.6E+01		3.7E+01 N			NO	DLBSL
	88-75-5	2-Nitrophenol	ND	ND	UG/L		0/12	9 - 11	1.1E+01		1.8E+01 N			NO	DLBSL
	m&pCRESOL	3- and 4-Methylphenol	ND	ND	UG/L		0/8	9 - 11	1.1E+01		1.8E+01 N			NO	DLBSL
	91-94-1	3,3'-Dichlorobenzidine	ND	ND	UG/L		0/12	9 - 11	1.1E+01		1.5E-01 C			YES	DLASL
	99-09-2	3-Nitroaniline	ND	ND	UG/L		0/13	10 - 26	2.6E+01		3.4E+00 C*			YES	DLASL
	534-52-1	4,6-Dinitro-2-methylphenol	ND	ND	UG/L		0/12	10 - 26	2.6E+01		2.9E-01 N			YES	DLASL
	101-55-3	4-Bromophenyl-phenylether	ND	ND	UG/L		0/13	9 - 11	1.1E+01		N/A			NO	NTX
	59-50-7	4-Chloro-3-methylphenol	ND	ND	UG/L		0/12	9 - 11	1.1E+01		3.7E+02 N			NO	DLBSL
	106-47-8	4-Chloroaniline	ND	ND	UG/L		0/13	9 - 11	1.1E+01		3.4E-01 C			YES	DLASL
	7005-72-3	4-Chlorophenyl-phenylether	ND	ND	UG/L		0/13	9 - 11	1.1E+01		1.8E+01 N			NO	DLBSL
	106-44-5	4-Methylphenol	ND	ND	UG/L		0/4	10 - 11	1.1E+01		1.8E+01 N	4.0E+01	NC2LGW	NO	DLBSL
	100-01-6	4-Nitroaniline	ND	ND	UG/L		0/13	10 - 26	2.6E+01		3.4E+00 C*			YES	DLASL
	100-02-7	4-Nitrophenol	ND	ND	UG/L		0/12	10 - 26	2.6E+01		1.2E-01 C			YES	DLASL
	83-32-9	Acenaphthene	ND	ND	UG/L		0/13	9 - 11	1.1E+01		2.2E+02 N	8.0E+01	NC2LGW	NO	DLBSL
	208-96-8	Acenaphthylene	ND	ND	UG/L		0/13	9 - 11	1.1E+01		2.2E+02 N	2.0E+02	NC2LGW	NO	DLBSL
	98-86-2	Acetophenone	ND	ND	UG/L		0/13	10 - 13	1.3E+01		3.7E+02 N			NO	DLBSL
	120-12-7	Anthracene	ND	ND	UG/L		0/13	9 - 11	1.1E+01		1.1E+03 N	2.0E+03	NC2LGW	NO	DLBSL
	1912-24-9	Atrazine	ND	ND	UG/L		0/11	9 - 11	1.1E+01		2.9E-01 C	3.0E+00	MCL, NC2LGW	YES	DLASL
	100-52-7	Benzaldehyde	ND	ND	UG/L		0/11	9 - 11	1.1E+01		3.7E+02 N			NO	DLBSL
	56-55-3	Benzo(a)anthracene	ND	ND	UG/L		0/13	0.24 - 11	1.1E+01		2.9E-02 C	5.0E-02	NC2LGW	YES	DLASL
	50-32-8	Benzo(a)pyrene	ND	ND	UG/L		0/13	0.24 - 11	1.1E+01		2.9E-03 C	2.0E-01	MCL	YES	DLASL
												5.0E-03	NC2LGW		
	205-99-2	Benzo(b)fluoranthene	ND	ND	UG/L		0/13	0.25 - 11	1.1E+01		2.9E-02 C	5.0E-02	NC2LGW	YES	DLASL
	191-24-2	Benzo(g,h,i)perylene	ND	ND	UG/L		0/13	0.24 - 11	1.1E+01		1.1E+02 N	2.0E+02	NC2LGW	NO	DLBSL
	207-08-9	Benzo(k)fluoranthene	ND	ND	UG/L		0/13	0.24 - 11	1.1E+01		2.9E-01 C	5.0E-01	NC2LGW	YES	DLASL
	111-91-1	bis(2-Chloroethoxy)methane	ND	ND	UG/L		0/13	9 - 11	1.1E+01		1.1E+01 N			YES	DLASL
	111-44-4	bis(2-Chloroethyl)ether	ND	ND	UG/L		0/13	9 - 11	1.1E+01		1.2E-02 C	3.0E-02	NC2LGW	YES	DLASL
	117-81-7	**bis(2-Ethylhexyl)phthalate**	**4.0E+00 J**	**6.0E+00 J**	**UG/L**	**IR78-GW01-08D, IR78-GW57D-08D**	**3/13**	**9 - 11**	**6.0E+00**		**4.8E+00 C**	**6.0E+00**	**MCL**	**YES**	**ASL**
												3.0E+00	**NC2LGW**		

TABLE 2.3

Occurrence, Distribution, and Selection of Chemicals of Potential Concern

Site UXO-08 Former Lejeune Cantonment Bazooka Range, Base CS Chamber, and NBC Training Trail

MCB Camp Lejeune, North Carolina

Scenario Timeframe: Future
Medium: Groundwater
Exposure Medium: Groundwater

Exposure Point	CAS Number	Chemical	Minimum [1] Concentration Qualifier	Maximum [1] Concentration Qualifier	Units	Location of Maximum Concentration	Detection Frequency	Range of Detection Limits	Concentration [2] Used for Screening	Background [3] Value	Screening [4] Toxicity Value	Potential ARAR/TBC Value	Potential ARAR/TBC Source	COPC Flag	Rationale for [5] Contaminant Deletion or Selection
	85-68-7	Butylbenzylphthalate	ND	ND	UG/L		0/13	9 - 11	1.1E+01		3.5E+01 C	1.0E+03	NC2LGW	NO	DLBSL
	105-60-2	Caprolactam	4.2E+00 J	4.3E+00 J	UG/L	MR08-GW02-07A	2/13	9 - 11	4.3E+00		1.8E+03 N	4.0E+03	NC2LGW	NO	BSL
	86-74-8	Carbazole	ND	ND	UG/L		0/13	9 - 11	1.1E+01		N/A			NO	NTX
	218-01-9	Chrysene	ND	ND	UG/L		0/13	9 - 11	1.1E+01		2.9E+00 C	5.0E+00	NC2LGW	YES	DLASL
	53-70-3	Dibenz(a,h)anthracene	ND	ND	UG/L		0/13	0.24 - 11	1.1E+01		2.9E-03 C	5.0E-03	NC2LGW	YES	DLASL
	132-64-9	Dibenzofuran	ND	ND	UG/L		0/13	9 - 11	1.1E+01		3.7E+00 N			YES	DLASL
	84-66-2	Diethylphthalate	ND	ND	UG/L		0/13	9 - 11	1.1E+01		2.9E+03 N	6.0E+03	NC2LGW	NO	DLBSL
	131-11-3	Dimethyl phthalate	ND	ND	UG/L		0/13	9 - 11	1.1E+01		N/A			NO	NTX
	84-74-2	Di-n-butylphthalate	ND	ND	UG/L		0/13	9 - 11	1.1E+01		3.7E+02 N	7.0E+02	NC2LGW	NO	DLBSL
	117-84-0	Di-n-octylphthalate	ND	ND	UG/L		0/13	9 - 11	1.1E+01		N/A	1.0E+02	NC2LGW	NO	NTX
	206-44-0	Fluoranthene	ND	ND	UG/L		0/13	0.24 - 11	1.1E+01		1.5E+02 N	3.0E+02	NC2LGW	NO	DLBSL
	86-73-7	Fluorene	ND	ND	UG/L		0/13	0.24 - 11	1.1E+01		1.5E+02 N	3.0E+02	NC2LGW	NO	DLBSL
	118-74-1	Hexachlorobenzene	ND	ND	UG/L		0/13	0.24 - 11	1.1E+01		4.2E-02 C	1.0E+00	MCL	YES	DLASL
												2.0E-02	NC2LGW		
	87-68-3	Hexachlorobutadiene	ND	ND	UG/L		0/13	0.25 - 11	1.1E+01		8.6E-01 C*	4.0E-01	NC2LGW	YES	DLASL
	77-47-4	Hexachlorocyclopentadiene	ND	ND	UG/L		0/13	0.24 - 11	1.1E+01		2.2E+01 N	5.0E+01	MCL	NO	DLBSL
	67-72-1	Hexachloroethane	ND	ND	UG/L		0/13	9 - 11	1.1E+01		3.7E+00 C**			YES	DLASL
	193-39-5	Indeno(1,2,3-cd)pyrene	ND	ND	UG/L		0/13	0.24 - 11	1.1E+01		2.9E-02 C	5.0E-02	NC2LGW	YES	DLASL
	78-59-1	Isophorone	ND	ND	UG/L		0/13	9 - 11	1.1E+01		7.1E+01 C	4.0E+01	NC2LGW	NO	DLBSL
	91-20-3	**Naphthalene**	**3.1E+00 J**	**3.1E+00 J**	**UG/L**	**IR78-GW01-08D**	**1/13**	**0.24 - 11**	**3.1E+00**		**1.4E-01 C***	**6.0E+00**	**NC2LGW**	**YES**	**ASL**
	621-64-7	n-Nitroso-di-n-propylamine	ND	ND	UG/L		0/13	9 - 11	1.1E+01		9.6E-03 C			YES	DLASL
	86-30-6	n-Nitrosodiphenylamine	ND	ND	UG/L		0/13	9 - 11	1.1E+01		1.4E+01 C			NO	DLBSL
	98-95-3	Nitrobenzene	ND	ND	UG/L		0/26	0.2 - 11	1.1E+01		1.2E-01 C			YES	DLASL
	87-86-5	Pentachlorophenol	ND	ND	UG/L		0/12	10 - 26	2.6E+01		1.7E-01 C	1.0E+00	MCL	YES	DLASL
												3.0E-01	NC2LGW		
	85-01-8	Phenanthrene	ND	ND	UG/L		0/13	0.24 - 11	1.1E+01		1.1E+03 N	2.0E+02	NC2LGW	NO	DLBSL
	108-95-2	Phenol	ND	ND	UG/L		0/12	9 - 11	1.1E+01		1.1E+03 N	3.0E+01	NC2LGW	NO	DLBSL
	129-00-0	Pyrene	ND	ND	UG/L		0/13	0.24 - 11	1.1E+01		1.1E+02 N	2.0E+02	NC2LGW	NO	DLBSL
	72-54-8	4,4'-DDD	ND	ND	UG/L		0/4	0.1 - 0.11	1.1E-01		2.8E-01 C	1.0E-01	NC2LGW	NO	DLBSL
	72-55-9	4,4'-DDE	ND	ND	UG/L		0/4	0.1 - 0.11	1.1E-01		2.0E-01 C			NO	DLBSL
	50-29-3	4,4'-DDT	ND	ND	UG/L		0/4	0.1 - 0.11	1.1E-01		2.0E-01 C*	1.0E-01	NC2LGW	NO	DLBSL
	309-00-2	Aldrin	ND	ND	UG/L		0/4	0.051 - 0.054	5.4E-02		4.0E-03 C			YES	DLASL
	319-84-6	alpha-BHC	ND	ND	UG/L		0/4	0.051 - 0.054	5.4E-02		1.1E-02 C	2.0E-02	NC2LGW	YES	DLASL
	5103-71-9	alpha-Chlordane	ND	ND	UG/L		0/4	0.051 - 0.054	5.4E-02		1.9E-01 C*	2.0E+00	MCL	NO	DLBSL
												1.0E-01	NC2LGW		
	12674-11-2	Aroclor-1016	ND	ND	UG/L		0/4	1 - 1.1	1.1E+00		2.6E-01 C**	5.0E-01	NC2LGW	YES	DLASL
	11104-28-2	Aroclor-1221	ND	ND	UG/L		0/4	2 - 2.2	2.2E+00		6.8E-03 C	5.0E-01	NC2LGW	YES	DLASL
	11141-16-5	Aroclor-1232	ND	ND	UG/L		0/4	1 - 1.1	1.1E+00		6.8E-03 C	5.0E-01	NC2LGW	YES	DLASL

TABLE 2.3

Occurrence, Distribution, and Selection of Chemicals of Potential Concern

Site UXO-08 Former Lejeune Cantonment Bazooka Range, Base CS Chamber, and NBC Training Trail

MCB Camp Lejeune, North Carolina

Scenario Timeframe: Future
Medium: Groundwater
Exposure Medium: Groundwater

Exposure Point	CAS Number	Chemical	Minimum [1] Concentration Qualifier	Maximum [1] Concentration Qualifier	Units	Location of Maximum Concentration	Detection Frequency	Range of Detection Limits	Concentration [2] Used for Screening	Background [3] Value	Screening [4] Toxicity Value	Potential ARAR/TBC Value	Potential ARAR/TBC Source	COPC Flag	Rationale for [5] Contaminant Deletion or Selection
	53469-21-9	Aroclor-1242	ND	ND	UG/L		0/4	1 - 1.1	1.1E+00		3.4E-02 C	5.0E-01	NC2LGW	YES	DLASL
	12672-29-6	Aroclor-1248	ND	ND	UG/L		0/4	1 - 1.1	1.1E+00		3.4E-02 C	5.0E-01	NC2LGW	YES	DLASL
	11097-69-1	Aroclor-1254	ND	ND	UG/L		0/4	1 - 1.1	1.1E+00		3.4E-02 C*	5.0E-01	NC2LGW	YES	DLASL
	11096-82-5	Aroclor-1260	ND	ND	UG/L		0/4	1 - 1.1	1.1E+00		3.4E-02 C	5.0E-01	NC2LGW	YES	DLASL
	319-85-7	beta-BHC	ND	ND	UG/L		0/4	0.051 - 0.054	5.4E-02		3.7E-02 C	2.0E-02	NC2LGW	YES	DLASL
	319-86-8	delta-BHC	ND	ND	UG/L		0/4	0.051 - 0.054	5.4E-02		3.7E-02 C	2.0E-02	NC2LGW	YES	DLASL
	60-57-1	Dieldrin	ND	ND	UG/L		0/4	0.1 - 0.11	1.1E-01		4.2E-03 C	2.0E-03	NC2LGW	YES	DLASL
	959-98-8	Endosulfan I	ND	ND	UG/L		0/4	0.051 - 0.054	5.4E-02		2.2E+01 N	4.0E+01	NC2LGW	NO	DLBSL
	33213-65-9	Endosulfan II	ND	ND	UG/L		0/4	0.1 - 0.11	1.1E-01		2.2E+01 N	4.0E+01	NC2LGW	NO	DLBSL
	1031-07-8	Endosulfan sulfate	ND	ND	UG/L		0/4	0.1 - 0.11	1.1E-01		2.2E+01 N	4.0E+01	NC2LGW	NO	DLBSL
	72-20-8	Endrin	ND	ND	UG/L		0/4	0.1 - 0.11	1.1E-01		1.1E+00 N	2.0E+00	MCL, NC2LGW	NO	DLBSL
	7421-93-4	Endrin aldehyde	ND	ND	UG/L		0/4	0.1 - 0.11	1.1E-01		1.1E+00 N	2.0E+00	MCL, NC2LGW	NO	DLBSL
	53494-70-5	Endrin ketone	ND	ND	UG/L		0/4	0.1 - 0.11	1.1E-01		1.1E+00 N	2.0E+00	MCL, NC2LGW	NO	DLBSL
	58-89-9	gamma-BHC (Lindane)	ND	ND	UG/L		0/4	0.051 - 0.054	5.4E-02		6.1E-02 C	2.0E-01	MCL	NO	DLBSL
												3.0E-02	NC2LGW		
	76-44-8	Heptachlor	ND	ND	UG/L		0/4	0.051 - 0.054	5.4E-02		1.5E-02 C	4.0E-01	MCL	YES	DLASL
												8.0E-03	NC2LGW		
	1024-57-3	Heptachlor epoxide	ND	ND	UG/L		0/4	0.051 - 0.054	5.4E-02		7.4E-03 C*	2.0E-01	MCL	YES	DLASL
												4.0E-03	NC2LGW		
	72-43-5	Methoxychlor	ND	ND	UG/L		0/4	0.51 - 0.54	5.4E-01		1.8E+01 N	4.0E+01	MCL, NC2LGW	NO	DLBSL
	12789-03-6	technical-Chlordane	ND	ND	UG/L		0/4	0.051 - 0.054	5.4E-02		1.9E-01 C*	2.0E+00	MCL	NO	DLBSL
												1.0E-01	NC2LGW		
	8001-35-2	Toxaphene	ND	ND	UG/L		0/4	5.1 - 5.4	5.4E+00		6.1E-02 C	3.0E+00	MCL	YES	DLASL
												3.0E-02	NC2LGW		
	99-35-4	1,3,5-Trinitrobenzene	ND	ND	UG/L		0/26	0.2 - 1.02	1.0E+00		1.1E+02 N			NO	DLBSL
	99-65-0	**1,3-Dinitrobenzene**	**1.2E-01 J**	**3.9E-01 J**	**UG/L**	**MR08-GW04-1D-07A**	**3/26**	**0.2 - 1.02**	**3.9E-01**		**3.7E-01 N**			**YES**	**ASL**
	118-96-7	2,4,6-Trinitrotoluene	ND	ND	UG/L		0/26	0.2 - 1.02	1.0E+00		1.8E+00 C**			NO	DLBSL
	35572-78-2	2-Amino-4,6-dinitrotoluene	ND	ND	UG/L		0/26	0.2 - 1.02	1.0E+00		7.3E+00 N			NO	DLBSL
	88-72-2	2-Nitrotoluene	ND	ND	UG/L		0/26	0.4 - 1.02	1.0E+00		3.1E-01 C			YES	DLASL
	99-08-1	3-Nitrotoluene	ND	ND	UG/L		0/26	0.4 - 1.02	1.0E+00		3.7E-01 N			YES	DLASL
	19406-51-0	4-Amino-2,6-dinitrotoluene	1.2E-01 J	7.1E-01	UG/L	IR78-GW04-08C	3/26	0.2 - 1.02	7.1E-01		7.3E+00 N			NO	BSL
	99-99-0	4-Nitrotoluene	1.1E-01 J	1.1E-01 J	UG/L	IR78-GW68-08C	1/26	0.4 - 1.02	1.1E-01		4.2E+00 C*			NO	BSL
	2691-41-0	HMX	ND	ND	UG/L		0/26	0.4 - 1.02	1.0E+00		1.8E+02 N			NO	DLBSL
	55-63-0	**Nitroglycerin**	**2.7E+00 NJ**	**2.7E+00 NJ**	**UG/L**	**MR08-GW42-07A**	**1/13**	**1 - 2.7**	**2.7E+00**		**3.7E-01 N**			**YES**	**ASL**
	14797-73-0	Perchlorate	8.0E-02 J	9.2E-01	UG/L	IR78-GW54-08C	4/26	0.2 - 0.4	9.2E-01		2.6E+00 N			NO	BSL
	78-11-5	PETN	ND	ND	UG/L		0/13	1 - 2.3	2.3E+00		N/A			NO	NTX
	121-82-4	RDX	ND	ND	UG/L		0/26	0.4 - 1.02	1.0E+00		6.1E-01 C			YES	DLASL
	479-45-8	Tetryl	ND	ND	UG/L		0/26	0.4 - 1.02	1.0E+00		1.5E+01 N			NO	DLBSL

TABLE 2.3

Occurrence, Distribution, and Selection of Chemicals of Potential Concern

Site UXO-08 Former Lejeune Cantonment Bazooka Range, Base CS Chamber, and NBC Training Trail

MCB Camp Lejeune, North Carolina

Scenario Timeframe: Future
Medium: Groundwater
Exposure Medium: Groundwater

Exposure Point	CAS Number	Chemical	Minimum [1] Concentration Qualifier	Maximum [1] Concentration Qualifier	Units	Location of Maximum Concentration	Detection Frequency	Range of Detection Limits	Concentration [2] Used for Screening	Background [3] Value	Screening [4] Toxicity Value	Potential ARAR/TBC Value	Potential ARAR/TBC Source	COPC Flag	Rationale for [5] Contaminant Deletion or Selection
	7429-90-5	Aluminum	6.9E+01 J	3.1E+03	UG/L	MR08-GW01-07A	7/17	200 - 200	3.1E+03	1.9E+03	3.7E+03 N			NO	BSL
	7440-36-0	**Antimony**	**1.5E+00**	**7.8E+00 J**	**UG/L**	**IR78-GW56-08C**	**3/26**	**1 - 60**	**7.8E+00**	**3.3E+00**	**1.5E+00 N**	**6.0E+00**	**MCL**	**YES**	**ASL**
	7440-38-2	**Arsenic**	**4.0E-01 J**	**1.6E+01**	**UG/L**	**MR08-GW01-07A**	**15/26**	**1 - 10**	**1.6E+01**	**5.8E+00**	**4.5E-02 C**	**1.0E+01**	**MCL, NC2LGW**	**YES**	**ASL**
	7440-39-3	Barium	2.6E+01	1.2E+02	UG/L	IR78-GW59-08D	15/26	10 - 200	1.2E+02	8.6E+01	7.3E+02 N	2.0E+03 7.0E+02	MCL NC2LGW	NO	BSL
	7440-41-7	Beryllium	4.3E-01 J	1.3E+00 J	UG/L	IR78-GW63D-08C	3/17	5 - 5	1.3E+00	3.1E-01	7.3E+00 N	4.0E+00	MCL	NO	BSL
	7440-43-9	Cadmium	ND	ND	UG/L		0/26	1 - 5	5.0E+00	3.6E-01	1.8E+00 N	5.0E+00 2.0E+00	MCL NC2LGW	YES	DLASL
	7440-70-2	Calcium	5.7E+03	2.0E+05	UG/L	IR78-GW68-08C	17/17	5000 - 5000	2.0E+05	6.9E+04	N/A			NO	NUT
	7440-47-3	**Chromium**	**1.5E+00 J**	**3.7E+00 J**	**UG/L**	**MR08-GW01-07A**	**6/26**	**10 - 10**	**3.7E+00**	**3.1E+00**	**4.3E-02 C**	**1.0E+02** **1.0E+01**	**MCL** **NC2LGW**	**YES**	**ASL**
	7440-48-4	**Cobalt**	**2.7E+00 J**	**1.6E+01 J**	**UG/L**	**IR78-GW63D-08C**	**4/17**	**50 - 50**	**1.6E+01**	**3.4E+00**	**1.1E+00 N**			**YES**	**ASL**
	7440-50-8	Copper	2.9E+00 J	6.0E+00 J	UG/L	IR78-GW62-08C	2/26	20 - 25	6.0E+00	2.8E+00	1.5E+02 N	1.3E+03 1.0E+03	MCL NC2LGW	NO	BSL
	57-12-5	Cyanide	ND	ND	UG/L		0/4	10 - 10	1.0E+01	N/A	7.3E+01 N	2.0E+02 7.0E+01	MCL NC2LGW	NO	DLBSL
	7439-89-6	**Iron**	**1.6E+02**	**7.1E+04**	**UG/L**	**MR08-GW01-07A**	**16/17**	**100 - 100**	**7.1E+04**	**6.0E+03**	**2.6E+03 N**	**3.0E+02**	**NC2LGW**	**YES**	**ASL**
	7439-92-1	Lead	ND	ND	UG/L		0/26	1 - 10	1.0E+01	2.8E+00	1.5E+01 N	1.5E+01	MCL, NC2LGW	NO	DLBSL
	7439-95-4	Magnesium	2.6E+03 J	1.5E+04 J	UG/L	IR78-GW50-08C	11/17	5000 - 5000	1.5E+04	6.4E+03	N/A			NO	NUT
	7439-96-5	**Manganese**	**1.5E+01**	**1.3E+03 J**	**UG/L**	**IR78-GW59-08C**	**17/17**	**15 - 15**	**1.3E+03**	**2.1E+02**	**8.8E+01 N**	**5.0E+01**	**NC2LGW**	**YES**	**ASL**
	7439-97-6	Mercury	2.4E-02 J	1.2E-01 J	UG/L	IR78-GW59-08C	8/26	0.2 - 0.4	1.2E-01	1.0E-01	1.1E+00 N	2.0E+00 1.0E+00	MCL NC2LGW	NO	BSL
	7440-02-0	Nickel	1.5E+00 J	1.6E+01 J	UG/L	IR78-GW63D-08C	4/17	40 - 40	1.6E+01	8.0E+00	7.3E+01 N	1.0E+02	NC2LGW	NO	BSL
	7440-09-7	Potassium	1.3E+03 J	6.8E+03	UG/L	IR78-GW54-08C	13/17	5000 - 5000	6.8E+03	3.3E+03	N/A			NO	NUT
	7782-49-2	Selenium	5.1E-01 J	3.7E+00	UG/L	IR78-GW03-08D	6/26	2 - 35	3.7E+00	3.1E+00	1.8E+01 N	5.0E+01 2.0E+01	MCL NC2LGW	NO	BSL
	7440-22-4	Silver	ND	ND	UG/L		0/26	6 - 10	1.0E+01	7.7E-01	1.8E+01 N	2.0E+01	NC2LGW	NO	DLBSL
	7440-23-5	Sodium	6.1E+03	2.5E+04	UG/L	IR78-GW68-08C	17/17	5000 - 5000	2.5E+04	2.3E+04	N/A			NO	NUT
	7440-28-0	Thallium	4.8E+00 J	4.8E+00 J	UG/L	IR78-GW62-08C	1/17	25 - 25	4.8E+00	3.8E+00	N/A	2.0E+00	MCL	NO	NTX
	7440-62-2	**Vanadium**	**5.5E+00 J**	**3.5E+01 J**	**UG/L**	**MR08-GW01-07A**	**3/17**	**50 - 50**	**3.5E+01**	**4.7E+00**	**1.8E+01 N**			**YES**	**ASL**
	7440-66-6	Zinc	5.5E+00 J	1.9E+02	UG/L	IR78-GW54-08C	12/26	20 - 60	1.9E+02	4.2E+01	1.1E+03 N	1.0E+03	NC2LGW	NO	BSL

[1] Minimum/Maximum detected concentrations.

[2] Maximum concentration is used for screening.

[3] Background values are two times the arithmetic mean basewide background shallow groundwater concentrations.
Background values are from *Final Base Background Soil Study Report, Marine Corps Base Camp Lejeune, North Carolina* , Baker Environmental, April 25, 2001.

MCL = Maximum Contaminant Level from EPA's National Primary Drinking Water Standards

NC2LGW = North Carolina Classifications and Groundwater Quality Standards, January, 2010.

COPC = Chemical of Potential Concern

TABLE 2.3

Occurrence, Distribution, and Selection of Chemicals of Potential Concern

Site UXO-08 Former Lejeune Cantonment Bazooka Range, Base CS Chamber, and NBC Training Trail

MCB Camp Lejeune, North Carolina

Scenario Timeframe: Future
Medium: Groundwater
Exposure Medium: Groundwater

Exposure Point	CAS Number	Chemical	Minimum [1] Concentration Qualifier	Maximum [1] Concentration Qualifier	Units	Location of Maximum Concentration	Detection Frequency	Range of Detection Limits	Concentration [2] Used for Screening	Background [3] Value	Screening [4] Toxicity Value	Potential ARAR/TBC Value	Potential ARAR/TBC Source	COPC Flag	Rationale for [5] Contaminant Deletion or Selection

[4] Oak Ridge National Laboratory (ORNL). November, 2010. Regional Screening Levels for Chemical Contaminants at Superfund Sites.
http://www.epa.gov/reg3hwmd/risk/human/rb-concentration_table/index.htm. Tap water RSLs. RSLs based on noncarcinogenic effects divided by 10 to account for exposure to more than on constituent that effects the same target organ.
RSL value for 1,4-Dichlorobenzene used as surrogate for 1,3-Dichlorobenzene.
RSL value for p-Cresol used for 3- and 4-Methylphenol.
RSL for 4-Nitroaniline used as surrogate for 3-Nitroaniline.
RSL value for Methoxychlor used as surrogate for 4-Chlorophenyl-phenylether.
RSL value for Nitrobenzene used as surrogate for 4-Nitrophenol.
RSL value for Acenaphthene used as surrogate for Acenaphthylene.
RSL value for Pyrene used as surrogate for Benzo(g,h,i)perylene.
RSL value for Anthracene used as surrogate for Phenanthrene.
RSL value for Chlordane used for alpha-Chlordane and technical Chlordane.
RSL value for technical-HCH used for delta-BHC.
RSL value for Chromium(VI) used for Chromium.
RSL value for 1,3-Dichloropropene used for cis-1,3-Dichloropropene and trans-1,3-Dichloropropene.
RSL value for Endosulfan used as for Endosulfan I, Endosulfan II, and Endosulfan sulfate.
RSL value for Endrin used for Endrin aldehyde and Endrin ketone.
RSL value for 2-Chlorophenol used as surrogate for 2-Nitrophenol.

[5] Rationale Codes

Selection Reason:	Above Screening Levels (ASL)
	Chemical in same chemical class as a chemical selected as a COPC because ASL (CC)
	Detection Limit Above Screening Level (DLASL), not quantitatively evaluated in HHRA
Deletion Reason:	No Toxicity Information (NTX)
	Essential Nutrient (NUT)
	Below Screening Level (BSL)
	Detection Limit Below Screening Level (DLBSL)

ARAR/TBC = Applicable or Relevant and Appropriate Requirement/ To Be Considered
J = Estimated Value
NJ = Qualitative identification questionable due to poor resolution, presumptively present at approximate quantity
C* = N screening level < 100x C screening level, therefore N screening value/10 used as screening level
C** = N screening level < 10x C screening level, therefore N screening value/10 used as screening level
N = Noncarcinogenic
N/A = Not available

TABLE 2.3a

Risk Ratio Screening for Groundwater, Maximum Detected Concentration

Site UXO-08 Former Lejeune Cantonment Bazooka Range, Base CS Chamber, and NBC Training Trail

MCB Camp Lejeune, North Carolina

Analyte	Detection Frequency	Maximum Detected Concentration (Qualifier)		Sample Location of Maximum Detected Concentration	Tap Water RSL	Acceptable Risk Level	Corresponding Hazard Index[a]	Corresponding Cancer Risk[b]	Target Organ
Volatile Organic Compounds (ug/L)									
1,1-Dichloroethane	**6 / 24**	**1.9E+02**		**IR78-GW42-08C**	**2.4E+00**	**1.E-06**	**NA**	**8E-05**	**NA**
1,2-Dichloroethane	**1 / 24**	**8.2E-01**	**J**	**IR78-GW42-08D-2**	**1.5E-01**	**1.E-06**	**NA**	**5E-06**	**NA**
Benzene	**7 / 24**	**5.2E+00**		**IR78-GW04-2-08D**	**4.1E-01**	**1.E-06**	**NA**	**1E-05**	**NA**
cis-1,2-Dichloroethene	**17 / 24**	**8.7E+02**		**IR78-GW42-08C**	**7.3E+01**	**1**	**11.9**	**NA**	**Kidney**
Trichloroethene	**12 / 24**	**1.3E+02**		**IR78-GW42-08C**	**2.0E+00**	**1.E-06**	**NA**	**7E-05**	**NA**
Vinyl chloride	**7 / 24**	**1.8E+02**		**IR78-GW42-08D-2**	**1.6E-02**	**1.E-06**	**NA**	**1E-02**	**NA**
Semivolatile Organic Compounds (ug/L)									
bis(2-Ethylhexyl)phthalate	**3 / 13**	**6.0E+00**	**J**	**IR78-GW01-08D, IR78-GW57D-08D**	**4.8E+00**	**1.E-06**	**NA**	**1E-06**	**NA**
Naphthalene	**1 / 13**	**3.1E+00**	**J**	**IR78-GW01-08D**	**1.4E-01**	**1.E-06**	**NA**	**2E-05**	**NA**
Explosives (ug/L)									
2,4-Dinitrotoluene	**2 / 26**	**3.4E-01**	**J**	**IR78-GW04-08C**	**2.2E-01**	**1.E-06**	**NA**	**2E-06**	**NA**
1,3-Dinitrobenzene	3 / 26	3.9E-01	J	MR08-GW04-1D-07A	3.7E+00	1	0.1	NA	Spleen
Nitroglycerin	**1 / 13**	**2.7E+00**	**NJ**	**MR08-GW42-07A**	**3.7E+00**	**1**	**0.7**	**NA**	**Vascular System**
Metals (ug/L)									
Antimony	3 / 26	7.8E+00	J	IR78-GW56-08C	1.5E+01	1	0.5	NA	Longevity, Blood
Arsenic	**15 / 26**	**1.6E+01**		**MR08-GW01-07A**	**4.5E-02**	**1E-06**	**NA**	**4E-04**	**NA**
Chromium	**6 / 26**	**3.7E+00**	**J**	**MR08-GW01-07A**	**4.3E-02**	**1E-06**	**NA**	**9E-05**	**NA**
Cobalt	**4 / 17**	**1.6E+01**	**J**	**IR78-GW63D-08C**	**1.1E+01**	**1**	**1.5**	**NA**	**Thyroid**
Iron	**16 / 17**	**7.1E+04**		**MR08-GW01-07A**	**2.6E+04**	**1**	**2.7**	**NA**	**Gastrointestinal**
Manganese	**17 / 17**	**1.3E+03**	**J**	**IR78-GW59-08C**	**8.8E+02**	**1**	**1.5**	**NA**	**CNS**
Vanadium	**3 / 17**	**3.5E+01**	**J**	**MR08-GW01-07A**	**1.8E+02**	**1**	**0.2**	**NA**	**Kidney**
Cumulative Corresponding Hazard Index[c]							**19.2**		
Cumulative Corresponding Cancer Risk[d]								**1E-02**	

Total Longevity HI =	0.5
Total Spleen HI =	0.1
Total Blood HI =	0.5
Total Vascular System HI =	0.7
Total Thyroid HI =	1.5
Total Gastrointestinal HI =	2.7
Total CNS/Neurological HI =	1.5
Total Kidney HI =	12.1

Notes:

[a] Corresponding Hazard Index equals maximum detected concentration divided by the RSL divided by the acceptable risk level.

[b] Corresponding Cancer Risk equals maximum detected concentration divided by the RSL divided by the acceptable risk level.

[c] Cumulative Corresponding Hazard Index equals sum of Corresponding Hazard Indices for each constituent.

[d] Cumulative Corresponding Cancer Risk equals sum of Corresponding Cancer Risks for each constituent.

Constituent selected as COPC if it contributes to an overall Hazard Index by target organ greater than 0.5 or Cumulative Corresponding Cancer Risk greater than 5E-05, otherwise, constituent not selected as COPC.

Constituents selected as COPCs are indicated by shading.

CNS = Central nervous System

COPC = Constituent of Potential Concern

HI = Hazard Index

J = Estimated Value

NJ = Qualitative identification questionable due to poor resolution, presumptively present at approximate quantity

µg/L = micrograms per liter

NA = Not available/not applicable.

TABLE 2.3b

Risk Ratio Screening for Groundwater, 95% UCL Concentration

Site UXO-08 Former Lejeune Cantonment Bazooka Range, Base CS Chamber, and NBC Training Trail

MCB Camp Lejeune, North Carolina

Analyte	Detection Frequency	95% UCL		95% UCL Rationale	Tap Water RSL	Acceptable Risk Level	Corresponding Hazard Index[a]	Corresponding Cancer Risk[b]	Target Organ
Volatile Organic Compounds (ug/L)									
1,1-Dichloroethane	**6 / 24**	**4.6E+01**	**95% KM-t**	**2**	**2.4E+00**	**1.E-06**	**NA**	**2E-05**	**NA**
1,2-Dichloroethane	**1 / 24**	**8.2E-01**	**Max**	**5**	**1.5E-01**	**1.E-06**	**NA**	**5E-06**	**NA**
Benzene	**7 / 24**	**1.5E+00**	**95% KM-t**	**1, 2, 3**	**4.1E-01**	**1.E-06**	**NA**	**4E-06**	**NA**
cis-1,2-Dichloroethene	**17 / 24**	**5.8E+02**	**99% KM-c**	**1**	**7.3E+01**	**1**	**7.9**	**NA**	**Kidney**
Trichloroethene	**12 / 24**	**1.1E+02**	**99% KM-c**	**4**	**2.0E+00**	**1.E-06**	**NA**	**5E-05**	**NA**
Vinyl chloride	**7 / 24**	**4.7E+01**	**95% KM-t**	**1, 2, 3**	**1.6E-02**	**1.E-06**	**NA**	**3E-03**	**NA**
Semivolatile Organic Compounds (ug/L)									
bis(2-Ethylhexyl)phthalate	**3 / 13**	**5.8E+00**	**95% KM-t**	**4**	**4.8E+00**	**1.E-06**	**NA**	**1E-06**	**NA**
Naphthalene	**1 / 13**	**3.1E+00**	**Max**	**5**	**1.4E-01**	**1.E-06**	**NA**	**2E-05**	**NA**
Explosives (ug/L)									
2,4-Dinitrotoluene	**2 / 26**	**1.2E-01**	**95% KM-t**	**4**	**2.2E-01**	**1.E-06**	**NA**	**6E-07**	**NA**
Nitroglycerin	**1 / 13**	**2.7E+00**	**Max**	**5**	**3.7E+00**	**1**	**0.7**	**NA**	**Vascular System**
Metals (ug/L)									
Arsenic	**15 / 26**	**5.6E+00**	**95% KM-BCA**	**1, 3**	**4.5E-02**	**1.E-06**	**NA**	**1E-04**	**NA**
Chromium	**6 / 26**	**2.4E+00**	**95% KM-t**	**1, 2, 3**	**4.3E-02**	**1.E-06**	**NA**	**6E-05**	**NA**
Cobalt	**4 / 17**	**1.3E+01**	**95% KM-t**	**1, 2, 3**	**1.1E+01**	**1**	**1.2**	**NA**	**Thyroid**
Iron	**16 / 17**	**2.7E+04**	**95% KM-c**	**1, 3**	**2.6E+04**	**1**	**1.1**	**NA**	**Gastrointestinal**
Manganese	17 / 17	3.6E+02	95% App-G	1, 3	8.8E+02	1	0.4	NA	CNS
Vanadium	**3 / 17**	**3.2E+01**	**95% KM-t**	**1, 2**	**1.8E+02**	**1**	**0.2**	**NA**	**Kidney**
Cumulative Corresponding Hazard Index[c]							11.5	3E-03	
Cumulative Corresponding Cancer Risk[d]									

Total Gastrointestinal HI =	1.1
Total CNS/Neurological HI =	0.4
Total Kidney HI =	8.1
Total Vascular HI =	0.7
Total Thyroid HI =	1.2

Notes:

[a] Corresponding Hazard Index equals 95% UCL concentration divided by the RSL divided by the acceptable risk level.

[b] Corresponding Cancer Risk equals 95% UCL concentration divided by the RSL divided by the acceptable risk level

[c] Cumulative Corresponding Hazard Index equals sum of Corresponding Hazard Indices for each constituent.

[d] Cumulative Corresponding Cancer Risk equals sum of Corresponding Cancer Risks for each constituent.

Constituent selected as COPC if it contributes to an overall Hazard Index by target organ greater than 0.5 or Cumulative Corresponding Cancer Risk greater than 5E-05,
Constituents selected as COPCs are indicated by shading.

µg/L = micrograms per liter

HI = Hazard Index

NA = Not available/not applicable.

ProUCL, Version 4.00.05 used to determine distribution of data and calculate 95% UCL, following recommendations
in users guide (USEPA. May 2010. ProUCL, Version 4.00.05. Prepared by Lockheed Martin Environmental Services).

Statstics: 95% Kaplan-Meier (t) UCL (95% KM-t); 99% Kaplan-Meier (Chebyshev) (99% KM-c); 95% KM (BCA) UCL (95% KM-BCA); 95% Approximate Gamma UCL (95% App-G)
95% Kaplan-Meier Chebyshev (95% KM-c); Maximum Detected Concentration (Max)

UCL Rationale:

(1) Shapiro-Wilk W Test/Lilliefors test indicates data are log-normally distributed.

(2) Shapiro-Wilk W Test/Lilliefors indicates data are normally distributed.

(3) Test indicates data are gamma distributed.

(4) Distribution tests are inconclusive

(5) Max used because COPC only detected in one sample.

TABLE 2.4

Occurrence, Distribution, and Selection of Chemicals of Potential Concern

Site UXO-08 Former Lejeune Cantonment Bazooka Range, Base CS Chamber, and NBC Training Trail

MCB Camp Lejeune, North Carolina

Scenario Timeframe: Current/Future
Medium: Surface Water
Exposure Medium: Surface Water

Exposure Point	CAS Number	Chemical	Minimum [1] Concentration Qualifier	Maximum [1] Concentration Qualifier	Units	Location of Maximum Concentration	Detection Frequency	Range of Detection Limits	Concentration [2] Used for Screening	Background [3] Value	Screening [4] Toxicity Value		Potential ARAR/TBC Value	Potential ARAR/TBC Source	COPC Flag	Rationale for [5] Contaminant Deletion or Selection
Surface Water	71-55-6	1,1,1-Trichloroethane	ND	ND	UG/L		0/3	1 - 1	1.0E+00		2.0E+02	A	9.1E+02	R-n	NO	DLBSL
	79-34-5	1,1,2,2-Tetrachloroethane	ND	ND	UG/L		0/3	1 - 1	1.0E+00		4.0E+00	NC, A	6.7E-02	R-c	NO	DLBSL
	76-13-1	1,1,2-Trichloro-1,2,2-trifluoroethane (Freon-113)	ND	ND	UG/L		0/3	1 - 1	1.0E+00		2.2E+06	NC-2	5.9E+03	R-n	NO	DLBSL
	79-00-5	1,1,2-Trichloroethane	ND	ND	UG/L		0/3	1 - 1	1.0E+00		1.6E+01	A	2.4E-01	R-c	NO	DLBSL
	75-34-3	1,1-Dichloroethane	ND	ND	UG/L		0/3	1 - 1	1.0E+00		1.7E+05	NC-2	2.4E+00	R-c	NO	DLBSL
	75-35-4	1,1-Dichloroethene	ND	ND	UG/L		0/3	1 - 1	1.0E+00		7.1E+03	A	3.4E+01	R-n	NO	DLBSL
	120-82-1	1,2,4-Trichlorobenzene	ND	ND	UG/L		0/3	1 - 1	1.0E+00		4.9E+02	NC	7.0E+01	A	NO	DLBSL
													4.1E-01	R-n		
	96-12-8	1,2-Dibromo-3-chloropropane	ND	ND	UG/L		0/3	1 - 1	1.0E+00		1.3E-01	NC-2	3.2E-04	R-c	YES	DLASL
	106-93-4	1,2-Dibromoethane	ND	ND	UG/L		0/3	1 - 1	1.0E+00		3.1E-01	NC-2	6.5E-03	R-c	YES	DLASL
	95-50-1	1,2-Dichlorobenzene	ND	ND	UG/L		0/3	1 - 1	1.0E+00		4.9E+02	NC	1.3E+03	A	NO	DLBSL
													3.7E+01	R-n		
	107-06-2	1,2-Dichloroethane	ND	ND	UG/L		0/3	1 - 1	1.0E+00		3.7E+01	A	1.5E-01	R-c	NO	DLBSL
	78-87-5	1,2-Dichloropropane	ND	ND	UG/L		0/3	1 - 1	1.0E+00		1.5E+01	A	3.9E-01	R-c	NO	DLBSL
	541-73-1	1,3-Dichlorobenzene	ND	ND	UG/L		0/3	1 - 1	1.0E+00		4.9E+02	NC	9.6E+02	A	NO	DLBSL
	106-46-7	1,4-Dichlorobenzene	ND	ND	UG/L		0/3	1 - 1	1.0E+00		4.9E+02	NC	1.9E+02	A	NO	DLBSL
													4.3E-01	R-c		
	78-93-3	2-Butanone	ND	ND	UG/L		0/3	3 - 3	3.0E+00		2.0E+04	NC-2	7.1E+02	R-n	NO	DLBSL
	591-78-6	2-Hexanone	ND	ND	UG/L		0/3	2 - 2	2.0E+00		4.7E+00	R-n			NO	DLBSL
	108-10-1	4-Methyl-2-pentanone	ND	ND	UG/L		0/3	2 - 2	2.0E+00		1.6E+05	NC-2	2.0E+02	R-n	NO	DLBSL
	67-64-1	Acetone	3.8E+00	1.5E+01	UG/L	MR08-SW03-08D	3/3	2.5 - 2.5	1.5E+01		2.2E+03	R-n			NO	BSL
	71-43-2	Benzene	ND	ND	UG/L		0/3	1 - 1	1.0E+00		5.1E+01	NC, A	4.1E-01	R-c	NO	DLBSL
	75-27-4	Bromodichloromethane	ND	ND	UG/L		0/3	1 - 1	1.0E+00		1.7E+01	A	1.2E-01	R-c	NO	DLBSL
	75-25-2	Bromoform	ND	ND	UG/L		0/3	1 - 1	1.0E+00		1.4E+02	A	8.5E+00	R-c	NO	DLBSL
	74-83-9	Bromomethane	ND	ND	UG/L		0/3	1 - 1	1.0E+00		1.5E+03	A	8.7E-01	R-n	NO	DLBSL
	75-15-0	Carbon disulfide	ND	ND	UG/L		0/3	1 - 1	1.0E+00		1.0E+02	R-n			NO	DLBSL
	56-23-5	Carbon tetrachloride	ND	ND	UG/L		0/3	1 - 1	1.0E+00		1.6E+00	NC, A	1.6E+00	A	NO	DLBSL
	108-90-7	Chlorobenzene	ND	ND	UG/L		0/3	1 - 1	1.0E+00		4.9E+02	NC	1.6E+03	A	NO	DLBSL
													9.1E+00	R-n		
	75-00-3	Chloroethane	ND	ND	UG/L		0/3	1 - 1	1.0E+00		5.5E+02	A	2.1E+03	R-n	NO	DLBSL
	67-66-3	Chloroform	ND	ND	UG/L		0/3	1 - 1	1.0E+00		4.7E+02	A	1.9E-01	R-c	NO	DLBSL

TABLE 2.4
Occurrence, Distribution, and Selection of Chemicals of Potential Concern
Site UXO-08 Former Lejeune Cantonment Bazooka Range, Base CS Chamber, and NBC Training Trail
MCB Camp Lejeune, North Carolina

Scenario Timeframe: Current/Future
Medium: Surface Water
Exposure Medium: Surface Water

Exposure Point	CAS Number	Chemical	Minimum [1] Concentration Qualifier	Maximum [1] Concentration Qualifier	Units	Location of Maximum Concentration	Detection Frequency	Range of Detection Limits	Concentration [2] Used for Screening	Background [3] Value	Screening [4] Toxicity Value		Potential ARAR/TBC Value	Potential ARAR/TBC Source	COPC Flag	Rationale for [5] Contaminant Deletion or Selection
	74-87-3	Chloromethane	ND	ND	UG/L		0/3	1 - 1	1.0E+00		9.6E+01	NC-2	1.9E+01	R-n	NO	DLBSL
	156-59-2	cis-1,2-Dichloroethene	ND	ND	UG/L		0/3	1 - 1	1.0E+00		4.9E+03	NC-2	7.3E+00	R-n	NO	DLBSL
	10061-01-5	cis-1,3-Dichloropropene	ND	ND	UG/L		0/3	1 - 1	1.0E+00		2.1E+01	A	4.3E-01	R-c	NO	DLBSL
	110-82-7	Cyclohexane	ND	ND	UG/L		0/3	1 - 1	1.0E+00		1.3E+03	R-n			NO	DLBSL
	124-48-1	Dibromochloromethane	ND	ND	UG/L		0/3	1 - 1	1.0E+00		1.3E+01	A	1.5E-01	R-c	NO	DLBSL
	75-71-8	Dichlorodifluoromethane (Freon-12)	ND	ND	UG/L		0/3	1 - 1	1.0E+00		3.9E+01	R-n			NO	DLBSL
	100-41-4	Ethylbenzene	ND	ND	UG/L		0/3	1 - 1	1.0E+00		2.1E+03	A	1.5E+00	R-c	NO	DLBSL
	98-82-8	Isopropylbenzene	ND	ND	UG/L		0/3	1 - 1	1.0E+00		3.1E+03	NC-2	6.8E+01	R-n	NO	DLBSL
	79-20-9	Methyl acetate	ND	ND	UG/L		0/3	1 - 1	1.0E+00		3.7E+03	R-n			NO	DLBSL
	108-87-2	Methylcyclohexane	ND	ND	UG/L		0/3	1 - 1	1.0E+00		N/A				NO	NTX
	75-09-2	Methylene chloride	ND	ND	UG/L		0/3	1 - 1	1.0E+00		5.9E+02	A	4.8E+00	R-c	NO	DLBSL
	1634-04-4	Methyl-tert-butyl ether (MTBE)	ND	ND	UG/L		0/3	1 - 1	1.0E+00		1.5E+03	NC-2	1.2E+01	R-c	NO	DLBSL
	100-42-5	Styrene	ND	ND	UG/L		0/3	1 - 1	1.0E+00		1.6E+02	R-n			NO	DLBSL
	127-18-4	Tetrachloroethene	ND	ND	UG/L		0/3	1 - 1	1.0E+00		3.3E+00	NC, A	1.1E-01	R-c	NO	DLBSL
	108-88-3	Toluene	ND	ND	UG/L		0/3	1 - 1	1.0E+00		1.5E+04	A	2.3E+02	R-n	NO	DLBSL
	156-60-5	trans-1,2-Dichloroethene	ND	ND	UG/L		0/3	1 - 1	1.0E+00		1.0E+04	A	1.1E+01	R-n	NO	DLBSL
	10061-02-6	trans-1,3-Dichloropropene	ND	ND	UG/L		0/3	1 - 1	1.0E+00		2.1E+01	A	4.3E-01	R-c	NO	DLBSL
	79-01-6	Trichloroethene	ND	ND	UG/L		0/3	1 - 1	1.0E+00		3.0E+01	NC, A	2.0E+00	R-c	NO	DLBSL
	75-69-4	Trichlorofluoromethane (Freon-11)	ND	ND	UG/L		0/3	1 - 1	1.0E+00		6.7E+04	NC-2	1.3E+02	R-n	NO	DLBSL
	75-01-4	Vinyl chloride	ND	ND	UG/L		0/3	1 - 1	1.0E+00		2.4E+00	NC, A	1.6E-02	R-c	NO	DLBSL
	1330-20-7	Xylene, total	ND	ND	UG/L		0/3	1 - 1	1.0E+00		2.0E+01	R-n			NO	DLBSL
	92-52-4	1,1-Biphenyl	ND	ND	UG/L		0/3	10 - 13	1.3E+01		1.8E+02	R-n			NO	DLBSL
	108-60-1	2,2'-Oxybis(1-chloropropane)	ND	ND	UG/L		0/3	10 - 13	1.3E+01		3.2E-01	R-c			YES	DLASL
	95-95-4	2,4,5-Trichlorophenol	ND	ND	UG/L		0/3	24 - 33	3.3E+01		1.0E+00	NC	3.7E+02	R-n	YES	DLASL
	88-06-2	2,4,6-Trichlorophenol	ND	ND	UG/L		0/3	10 - 13	1.3E+01		1.0E+00	NC	6.1E+00	R-c	YES	DLASL
	120-83-2	2,4-Dichlorophenol	ND	ND	UG/L		0/3	11 - 16	1.6E+01		1.0E+00	NC	3.0E-01	A	YES	DLASL
													1.1E+01	R-n		
	105-67-9	2,4-Dimethylphenol	ND	ND	UG/L		0/3	11 - 16	1.6E+01		4.0E+02	A	7.3E+01	R-n	NO	DLBSL
	51-28-5	2,4-Dinitrophenol	ND	ND	UG/L		0/3	43 - 60	6.0E+01		5.3E+03	A	7.3E+00	R-n	NO	DLBSL
	121-14-2	2,4-Dinitrotoluene	ND	ND	UG/L		0/3	1.02 - 1.06	1.1E+00		3.4E+00	A	2.2E-01	R-c	NO	DLBSL
	606-20-2	2,6-Dinitrotoluene	ND	ND	UG/L		0/3	1.02 - 1.06	1.1E+00		7.1E-01	NC-2	3.7E+00	R-n	YES	DLASL
	91-58-7	2-Chloronaphthalene	ND	ND	UG/L		0/3	10 - 13	1.3E+01		1.6E+03	A	2.9E+02	R-n	NO	DLBSL

TABLE 2.4
Occurrence, Distribution, and Selection of Chemicals of Potential Concern
Site UXO-08 Former Lejeune Cantonment Bazooka Range, Base CS Chamber, and NBC Training Trail
MCB Camp Lejeune, North Carolina

Scenario Timeframe: Current/Future
Medium: Surface Water
Exposure Medium: Surface Water

Exposure Point	CAS Number	Chemical	Minimum [1] Concentration Qualifier	Maximum [1] Concentration Qualifier	Units	Location of Maximum Concentration	Detection Frequency	Range of Detection Limits	Concentration [2] Used for Screening	Background [3] Value	Screening [4] Toxicity Value		Potential ARAR/TBC Value	Potential ARAR/TBC Source	COPC Flag	Rationale for [5] Contaminant Deletion or Selection
	95-57-8	2-Chlorophenol	ND	ND	UG/L		0/3	11 - 16	1.6E+01		1.0E+00	NC	1.0E-01	A	YES	DLASL
													1.8E+01	R-n		
	91-57-6	2-Methylnaphthalene	ND	ND	UG/L		0/3	0.24 - 0.33	3.3E-01		8.0E+01	A	1.5E+01	R-n	NO	DLBSL
	95-48-7	2-Methylphenol	ND	ND	UG/L		0/3	11 - 16	1.6E+01		1.8E+02	R-n			NO	DLBSL
	88-74-4	2-Nitroaniline	ND	ND	UG/L		0/3	24 - 33	3.3E+01		3.7E+01	R-n			NO	DLBSL
	88-75-5	2-Nitrophenol	ND	ND	UG/L		0/3	10 - 13	1.3E+01		1.8E+01	R-n			NO	DLBSL
	m&pCRESOL	3- and 4-Methylphenol	ND	ND	UG/L		0/3	10 - 13	1.3E+01		1.8E+01	R-n			NO	DLBSL
	91-94-1	3,3'-Dichlorobenzidine	ND	ND	UG/L		0/3	10 - 13	1.3E+01		2.8E-02	A	1.5E-01	R-c	YES	DLASL
	99-09-2	3-Nitroaniline	ND	ND	UG/L		0/3	24 - 33	3.3E+01		3.4E+00	R-c			YES	DLASL
	534-52-1	4,6-Dinitro-2-methylphenol	ND	ND	UG/L		0/3	24 - 33	3.3E+01		2.8E+02	A	2.9E-01	R-n	NO	DLBSL
	101-55-3	4-Bromophenyl-phenylether	ND	ND	UG/L		0/3	10 - 13	1.3E+01		N/A				NO	NTX
	59-50-7	4-Chloro-3-methylphenol	ND	ND	UG/L		0/3	10 - 13	1.3E+01		1.0E+00	NC	3.0E+03	A	YES	DLASL
													3.7E+02	R-n		
	106-47-8	4-Chloroaniline	ND	ND	UG/L		0/3	10 - 13	1.3E+01		3.4E-01	R-c			YES	DLASL
	7005-72-3	4-Chlorophenyl-phenylether	ND	ND	UG/L		0/3	10 - 13	1.3E+01		1.8E+01	R-n			NO	DLBSL
	100-01-6	4-Nitroaniline	ND	ND	UG/L		0/3	24 - 33	3.3E+01		3.4E+00	R-c			YES	DLASL
	100-02-7	4-Nitrophenol	ND	ND	UG/L		0/3	24 - 33	3.3E+01		2.7E+02	NC-2	1.2E-01	R-c	NO	DLBSL
	83-32-9	Acenaphthene	ND	ND	UG/L		0/3	10 - 13	1.3E+01		9.9E+02	A	2.2E+02	R-c	NO	DLBSL
	208-96-8	Acenaphthylene	ND	ND	UG/L		0/3	10 - 13	1.3E+01		2.2E+02	R-n			NO	DLBSL
	98-86-2	Acetophenone	ND	ND	UG/L		0/3	11 - 16	1.6E+01		8.5E+05	NC-2	3.7E+02	R-n	NO	DLBSL
	120-12-7	Anthracene	ND	ND	UG/L		0/3	10 - 13	1.3E+01		4.0E+04	A	1.1E+03	R-n	NO	DLBSL
	56-55-3	Benzo(a)anthracene	ND	ND	UG/L		0/3	0.24 - 0.33	3.3E-01		3.1E-02	NC	1.8E-02	A	YES	DLASL
													2.9E-02	R-c		
	50-32-8	Benzo(a)pyrene	ND	ND	UG/L		0/3	0.24 - 0.33	3.3E-01		3.1E-02	NC	1.8E-02	A	YES	DLASL
													2.9E-03	R-c		
	205-99-2	Benzo(b)fluoranthene	ND	ND	UG/L		0/3	0.26 - 0.36	3.6E-01		3.1E-02	NC	1.8E-02	A	YES	DLASL
													2.9E-02	R-c		
	191-24-2	Benzo(g,h,i)perylene	ND	ND	UG/L		0/3	0.24 - 0.33	3.3E-01		1.1E+02	R-n			NO	DLBSL
	207-08-9	Benzo(k)fluoranthene	ND	ND	UG/L		0/3	0.24 - 0.33	3.3E-01		3.1E-02	NC	1.8E-02	A	YES	DLASL
													2.9E-01	R-c		
	111-91-1	bis(2-Chloroethoxy)methane	ND	ND	UG/L		0/3	10 - 13	1.3E+01		6.0E+03	NC-2	1.1E+01	R-n	NO	DLBSL
	111-44-4	bis(2-Chloroethyl)ether	ND	ND	UG/L		0/3	10 - 13	1.3E+01		5.3E-01	A	1.2E-02	R-c	YES	DLASL
	117-81-7	bis(2-Ethylhexyl)phthalate	2.0E+00 J	2.0E+00 J	UG/L	MR08-SW03-08D	1/3	10 - 13	2.0E+00		2.2E+00	A	4.8E+00	R-c	NO	BSL

TABLE 2.4
Occurrence, Distribution, and Selection of Chemicals of Potential Concern
Site UXO-08 Former Lejeune Cantonment Bazooka Range, Base CS Chamber, and NBC Training Trail
MCB Camp Lejeune, North Carolina

Scenario Timeframe: Current/Future
Medium: Surface Water
Exposure Medium: Surface Water

Exposure Point	CAS Number	Chemical	Minimum [1] Concentration Qualifier	Maximum [1] Concentration Qualifier	Units	Location of Maximum Concentration	Detection Frequency	Range of Detection Limits	Concentration [2] Used for Screening	Background [3] Value	Screening [4] Toxicity Value		Potential ARAR/TBC Value	Potential ARAR/TBC Source	COPC Flag	Rationale for [5] Contaminant Deletion or Selection
	85-68-7	Butylbenzylphthalate	ND	ND	UG/L		0/3	10 - 13	1.3E+01		1.9E+03	A	3.5E+01	R-c	NO	DLBSL
	105-60-2	Caprolactam	ND	ND	UG/L		0/3	10 - 13	1.3E+01		1.8E+03	R-n			NO	DLBSL
	86-74-8	Carbazole	ND	ND	UG/L		0/3	10 - 13	1.3E+01		1.3E+00	NC-2			YES	DLASL
	218-01-9	Chrysene	ND	ND	UG/L		0/3	10 - 13	1.3E+01		3.1E-02	NC	1.8E-02	A	YES	DLASL
													2.9E+00	R-c		
	53-70-3	Dibenz(a,h)anthracene	ND	ND	UG/L		0/3	0.24 - 0.33	3.3E-01		3.1E-02	NC	1.8E-02	A	YES	DLASL
													2.9E-03	R-c		
	132-64-9	Dibenzofuran	ND	ND	UG/L		0/3	10 - 13	1.3E+01		3.7E+00	R-n			YES	DLASL
	84-66-2	Diethylphthalate	ND	ND	UG/L		0/3	10 - 13	1.3E+01		4.4E+04	A	2.9E+03	R-n	NO	DLBSL
	131-11-3	Dimethyl phthalate	ND	ND	UG/L		0/3	10 - 13	1.3E+01		1.1E+06	A			NO	DLBSL
	84-74-2	Di-n-butylphthalate	ND	ND	UG/L		0/3	10 - 13	1.3E+01		4.5E+03	A	3.7E+02	R-n	NO	DLBSL
	117-84-0	Di-n-octylphthalate	ND	ND	UG/L		0/3	10 - 13	1.3E+01		2.5E+03	NC-2	4.8E+00	R-c	NO	DLBSL
	206-44-0	Fluoranthene	ND	ND	UG/L		0/3	0.24 - 0.33	3.3E-01		1.4E+02	A	1.5E+02	R-n	NO	DLBSL
	86-73-7	Fluorene	ND	ND	UG/L		0/3	0.24 - 0.33	3.3E-01		5.3E+03	N	1.5E+02	R-n	NO	DLBSL
	118-74-1	Hexachlorobenzene	ND	ND	UG/L		0/3	0.24 - 0.33	3.3E-01		2.9E-04	A	4.2E-02	R-c	YES	DLASL
	87-68-3	Hexachlorobutadiene	ND	ND	UG/L		0/3	0.26 - 0.36	3.6E-01		1.8E+01	NC, A	8.6E-01	R-c	NO	DLBSL
	77-47-4	Hexachlorocyclopentadiene	ND	ND	UG/L		0/3	0.26 - 0.36	3.6E-01		1.1E+03	A	2.2E+01	R-n	NO	DLBSL
	67-72-1	Hexachloroethane	ND	ND	UG/L		0/3	10 - 13	1.3E+01		3.3E+00	A	3.7E+00	R-c	YES	DLASL
	193-39-5	Indeno(1,2,3-cd)pyrene	ND	ND	UG/L		0/3	0.24 - 0.33	3.3E-01		3.1E-02	NC	1.8E-02	A	YES	DLASL
													2.9E-02	R-C		
	78-59-1	Isophorone	ND	ND	UG/L		0/3	10 - 13	1.3E+01		9.6E+02	A	7.1E+01	R-c	NO	DLBSL
	91-20-3	Naphthalene	ND	ND	UG/L		0/3	0.24 - 0.33	3.3E-01		1.4E-01	R-c			YES	DLASL
	621-64-7	n-Nitroso-di-n-propylamine	ND	ND	UG/L		0/3	10 - 13	1.3E+01		5.1E-01	A	9.6E-03	R-c	YES	DLASL
	86-30-6	n-Nitrosodiphenylamine	ND	ND	UG/L		0/3	10 - 13	1.3E+01		6.0E+00	A	1.4E+01	R-c	YES	DLASL
	98-95-3	Nitrobenzene	ND	ND	UG/L		0/3	1.02 - 1.06	1.1E+00		6.9E+02	A	1.2E-01	R-c	NO	DLBSL
	87-86-5	Pentachlorophenol	ND	ND	UG/L		0/3	24 - 33	3.3E+01		3.0E+00	A	1.7E-01	R-c	YES	DLASL
	85-01-8	Phenanthrene	7.2E-02 J	7.2E-02 J	UG/L	MR08-SW03-08D	1/3	0.24 - 0.33	7.2E-02		1.1E+03	R-n			NO	BSL
	108-95-2	Phenol	ND	ND	UG/L		0/3	10 - 13	1.3E+01		3.0E+02	A	1.1E+03	R-n	NO	DLBSL
	129-00-0	Pyrene	ND	ND	UG/L		0/3	0.24 - 0.33	3.3E-01		4.0E+03	NC-2	1.1E+02	N	NO	DLBSL
	99-35-4	1,3,5-Trinitrobenzene	ND	ND	UG/L		0/3	1.02 - 1.06	1.1E+00		1.1E+02	R-n			NO	DLBSL
	99-65-0	1,3-Dinitrobenzene	ND	ND	UG/L		0/3	1.02 - 1.06	1.1E+00		1.4E+02	NC-2	3.7E-01	R-n	NO	DLBSL
	118-96-7	2,4,6-Trinitrotoluene	ND	ND	UG/L		0/3	1.02 - 1.06	1.1E+00		3.9E+01	NC-2	1.8E+00	R-c	NO	DLBSL
	35572-78-2	2-Amino-4,6-dinitrotoluene	ND	ND	UG/L		0/3	1.02 - 1.06	1.1E+00		1.5E+02	NC-2	7.3E+00	R-n	NO	DLBSL

TABLE 2.4

Occurrence, Distribution, and Selection of Chemicals of Potential Concern

Site UXO-08 Former Lejeune Cantonment Bazooka Range, Base CS Chamber, and NBC Training Trail

MCB Camp Lejeune, North Carolina

Scenario Timeframe: Current/Future
Medium: Surface Water
Exposure Medium: Surface Water

Exposure Point	CAS Number	Chemical	Minimum [1] Concentration Qualifier	Maximum [1] Concentration Qualifier	Units	Location of Maximum Concentration	Detection Frequency	Range of Detection Limits	Concentration [2] Used for Screening	Background [3] Value	Screening [4] Toxicity Value		Potential ARAR/TBC Value	Potential ARAR/TBC Source	COPC Flag	Rationale for [5] Contaminant Deletion or Selection
	88-72-2	2-Nitrotoluene	ND	ND	UG/L		0/3	1.02 - 1.06	1.1E+00		1.5E+00	NC-2	3.1E-01	R-c	NO	DLBSL
	99-08-1	3-Nitrotoluene	ND	ND	UG/L		0/3	1.02 - 1.06	1.1E+00		5.3E+03	NC-2	3.7E-01	R-n	NO	DLBSL
	19406-51-0	4-Amino-2,6-dinitrotoluene	ND	ND	UG/L		0/3	1.02 - 1.06	1.1E+00		1.5E+02	NC-2	7.3E+00	R-n	NO	DLBSL
	99-99-0	4-Nitrotoluene	ND	ND	UG/L		0/3	1.02 - 1.06	1.1E+00		1.8E+01	NC-2	4.2E+00	R-c	NO	DLBSL
	2691-41-0	HMX	ND	ND	UG/L		0/3	1.02 - 1.06	1.1E+00		6.3E+01	NC-2	1.8E+02	R-n	NO	DLBSL
	55-63-0	Nitroglycerin	ND	ND	UG/L		0/3	1.02 - 1.06	1.1E+00		6.7E+01	NC-2	3.7E-01	R-n	NO	DLBSL
	14797-73-0	**Perchlorate**	**4.9E+00**	**6.3E+00**	**UG/L**	**MR08-SW02-08D**	**3/3**	**0.2 - 0.4**	**6.3E+00**		**2.8E+00**	**NC-2**	**2.6E+00**	**R-n**	**YES**	**ASL**
	78-11-5	PETN	ND	ND	UG/L		0/3	1.02 - 1.06	1.1E+00		N/A				NO	NTX
	121-82-4	RDX	ND	ND	UG/L		0/3	1.02 - 1.06	1.1E+00		1.1E+01	NC-2	6.1E-01	R-c	NO	DLBSL
	479-45-8	Tetryl	ND	ND	UG/L		0/3	1.02 - 1.06	1.1E+00		1.5E+01	R-n			NO	DLBSL
	7440-36-0	Antimony	ND	ND	UG/L		0/3	1 - 1	1.0E+00		6.4E+02	A	1.5E+00	N	NO	DLBSL
	7440-38-2	Arsenic	8.1E-01 J	3.3E+00	UG/L	MR08-SW03-08D	3/3	1 - 1	3.3E+00		1.0E+01	NC	1.4E-01	A	NO	BSL
													4.5E-02	C		
	7440-39-3	Barium	2.4E+01	3.9E+01	UG/L	MR08-SW03-08D	3/3	10 - 10	3.9E+01		2.0E+05	A	7.3E+02	N	NO	BSL
	7440-43-9	Cadmium	1.4E+00	2.0E+00	UG/L	MR08-SW03-08D	3/3	1 - 1	2.0E+00		5.0E+00	A	1.8E+00	R-n	NO	BSL
	7440-47-3	Chromium	9.7E+00 J	1.7E+01	UG/L	MR08-SW02-08D	3/3	10 - 10	1.7E+01		1.0E+02	A	4.3E-02	R-c	NO	BSL
	7440-50-8	Copper	1.2E+02	1.6E+02	UG/L	MR08-SW02-08D	3/3	20 - 20	1.6E+02		1.3E+03	A	1.5E+02	R-n	NO	BSL
	7439-92-1	Lead	1.6E+00	3.6E+00	UG/L	MR08-SW03-08D	3/3	1 - 1	3.6E+00		1.5E+01	AL			NO	BSL
	7439-97-6	Mercury	ND	ND	UG/L		0/3	0.4 - 0.4	4.0E-01		1.1E+00	R-n			NO	DLBSL
	7782-49-2	Selenium	3.9E+00	6.5E+00	UG/L	MR08-SW02-08D	3/3	2 - 2	6.5E+00		4.2E+03	A	1.8E+01	R-n	NO	BSL
	7440-22-4	Silver	ND	ND	UG/L		0/3	6 - 6	6.0E+00		1.8E+01	R-n			NO	DLBSL
	7440-66-6	Zinc	5.5E+02	6.3E+02	UG/L	MR08-SW02-08D	3/3	20 - 20	6.3E+02		2.6E+04	A	1.1E+03	R-n	NO	BSL

[1] Minimum/Maximum detected concentrations.

[2] Maximum concentration is used for screening.

[3] Background values not available.

[4] Used North Carolina WQS for Human Health (or Water Supply if Human Health not available) or Federal Ambient Water Quality Criteria, Consumption of Organisms (or Water and Organisms, if Organisms not available). When North Carolina WQS or Federal Ambient Water Quality Criteria are not available, used the Tap Water RSL, Nov. 2010, (based on 1x10-6 for carcinogens and HQ of 0.1 for noncarcinogens).

RSL value for Anthracene used as surrogate for Phenanthrene.

[5] Rationale Codes

Selection Reason: Above Screening Levels (ASL)
Detection Limit Above Screening Level (DLASL), not quantitatively evaluated in HHRA but discussed in uncertainty assessment

Deletion Reason: Below Screening Level (BSL)
Detection Limit Below Screening Level (DLBSL)
No Toxicity Information (NTX)
Essential Nutrient (NUT)

COPC = Chemical of Potential Concern

ARAR/TBC = Applicable or Relevant and Appropriate Requirement/ To Be Considered

J = Estimated Value

NC = 15A NCAC 2B standards, North Carolina WQS for Human Health and Water Supply, from NC and EPA Criteria Table, Feb. 2010. http://portal.ncdenr.org/web/wq/ps/csu/swstandards

NC-2 = from NC and EPA Criteria Table, Feb. 2010, but not a NCAC 2B standard.

A = Federal Ambient Water Quality Criteria, Consumption of Organisms, or Consumption of Water Organisms (if Organisms alone not available), from NC and EPA Criteria Table, Feb. 5, 2010, or National Recommended Water Quality Criteria, 2009. http://www.epa.gov/ost/criteria/wqctable/

R-n = RSL, based on noncarcinogenic effects, RSL divided by 10.

R-c = RSL, based on carcinogenic effects.

AL = drinking water action level for lead.

TABLE 2.4a

Occurrence, Distribution, and Selection of Chemicals of Potential Concern

Site UXO-08 Former Lejeune Cantonment Bazooka Range, Base CS Chamber, and NBC Training Trail

MCB Camp Lejeune, North Carolina

Scenario Timeframe: Future
Medium: Surface Water
Exposure Medium: Surface Water

Exposure Point	CAS Number	Chemical	Minimum [1] Concentration Qualifier	Maximum [1] Concentration Qualifier	Units	Location of Maximum Concentration	Detection Frequency	Range of Detection Limits	Concentration [2] Used for Screening	Background [3] Value	Screening [4] Toxicity Value	Potential ARAR/TBC Value	Potential ARAR/TBC Source	COPC Flag	Rationale for [5] Contaminant Deletion or Selection
Surface Water	14797-73-0	Perchlorate	4.9E+00	6.3E+00	ug/L	MR08-SW02-08D, MR08-SW02D-08D	3/3	0.2 - 0.4	6.3E+00	NA	2.6E+01 N	NA	NA	NO	BSL

[1] Minimum/Maximum detected concentrations.
[2] Maximum concentration is used for screening.
[3] Background values not available.
[4] Oak Ridge National Laboratory (ORNL). November 2010. Tap Water Regional Screening Levels for Chemical Contaminants at Superfund Sites. [Online].
[5] Rationale Codes
Selection Reason: Above Screening Levels (ASL)
Deletion Reason: Below Screening Level (BSL)

COPC = Chemical of Potential Concern
ARAR/TBC = Applicable or Relevant and Appropriate Requirement/ To Be Considered
J = Estimated Value
C = Carcinogenic
N = Noncarcinogenic
ug/L = microgram per liter

TABLE 2.5
Occurrence, Distribution, and Selection of Chemicals of Potential Concern
Site UXO-08 Former Lejeune Cantonment Bazooka Range, Base CS Chamber, and NBC Training Trail
MCB Camp Lejeune, North Carolina

Scenario Timeframe: Current/Future
Medium: Sediment
Exposure Medium: Sediment

Exposure Point	CAS Number	Chemical	Minimum [1] Concentration Qualifier	Maximum [1] Concentration Qualifier	Units	Location of Maximum Concentration	Detection Frequency	Range of Detection Limits	Concentration [2] Used for Screening	Background [3] Value	Screening [4] Toxicity Value	Potential ARAR/TBC Value	Potential ARAR/TBC Source	COPC Flag	Rationale for [5] Contaminant Deletion or Selection
Sediment	71-55-6	1,1,1-Trichloroethane	ND	ND	MG/KG		0/3	0.014 - 0.033	3.3E-02		6.4E+02 NS			NO	DLBSL
	79-34-5	1,1,2,2-Tetrachloroethane	ND	ND	MG/KG		0/3	0.014 - 0.03	3.0E-02		5.6E-01 C			NO	DLBSL
	76-13-1	1,1,2-Trichloro-1,2,2-trifluoroethane (Freon-113)	ND	ND	MG/KG		0/3	0.014 - 0.033	3.3E-02		9.1E+02 NS			NO	DLBSL
	79-00-5	1,1,2-Trichloroethane	ND	ND	MG/KG		0/3	0.014 - 0.03	3.0E-02		1.1E+00 C			NO	DLBSL
	75-34-3	1,1-Dichloroethane	ND	ND	MG/KG		0/3	0.014 - 0.033	3.3E-02		3.3E+00 C			NO	DLBSL
	75-35-4	1,1-Dichloroethene	ND	ND	MG/KG		0/3	0.014 - 0.033	3.3E-02		2.4E+01 N			NO	DLBSL
	120-82-1	1,2,4-Trichlorobenzene	ND	ND	MG/KG		0/3	0.014 - 0.03	3.0E-02		6.2E+00 C**			NO	DLBSL
	96-12-8	1,2-Dibromo-3-chloropropane	ND	ND	MG/KG		0/3	0.0069 - 0.015	1.5E-02		5.4E-03 C			YES	DLASL
	106-93-4	1,2-Dibromoethane	ND	ND	MG/KG		0/3	0.014 - 0.03	3.0E-02		3.4E-02 C			NO	DLBSL
	95-50-1	1,2-Dichlorobenzene	ND	ND	MG/KG		0/3	0.014 - 0.03	3.0E-02		1.9E+02 N			NO	DLBSL
	107-06-2	1,2-Dichloroethane	ND	ND	MG/KG		0/3	0.014 - 0.033	3.3E-02		4.3E-01 C			NO	DLBSL
	78-87-5	1,2-Dichloropropane	ND	ND	MG/KG		0/3	0.014 - 0.033	3.3E-02		8.9E-01 C*			NO	DLBSL
	541-73-1	1,3-Dichlorobenzene	ND	ND	MG/KG		0/3	0.014 - 0.03	3.0E-02		2.4E+00 C			NO	DLBSL
	106-46-7	1,4-Dichlorobenzene	ND	ND	MG/KG		0/3	0.014 - 0.03	3.0E-02		2.4E+00 C			NO	DLBSL
	78-93-3	2-Butanone	2.4E-03 J	1.4E-02 J	MG/KG	MR08-SD01-08D	3/3	0.014 - 0.033	1.4E-02		2.8E+03 N			NO	BSL
	591-78-6	2-Hexanone	ND	ND	MG/KG		0/3	0.014 - 0.03	3.0E-02		2.1E+01 N			NO	DLBSL
	108-10-1	4-Methyl-2-pentanone	ND	ND	MG/KG		0/3	0.014 - 0.033	3.3E-02		5.3E+02 N			NO	DLBSL
	67-64-1	Acetone	3.3E-02	1.4E-01	MG/KG	MR08-SD01-08D	2/3	0.014 - 0.033	1.4E-01		6.1E+03 N			NO	BSL
	71-43-2	Benzene	ND	ND	MG/KG		0/3	0.014 - 0.033	3.3E-02		1.1E+00 C*			NO	DLBSL
	75-27-4	Bromodichloromethane	ND	ND	MG/KG		0/3	0.014 - 0.03	3.0E-02		2.7E-01 C			NO	DLBSL
	75-25-2	Bromoform	ND	ND	MG/KG		0/3	0.014 - 0.03	3.0E-02		6.1E+01 C*			NO	DLBSL
	74-83-9	Bromomethane	ND	ND	MG/KG		0/3	0.014 - 0.03	3.0E-02		7.3E-01 N			NO	DLBSL
	75-15-0	Carbon disulfide	ND	ND	MG/KG		0/3	0.014 - 0.033	3.3E-02		8.2E+01 N			NO	DLBSL
	56-23-5	Carbon tetrachloride	ND	ND	MG/KG		0/3	0.014 - 0.033	3.3E-02		6.1E-01 C			NO	DLBSL
	108-90-7	Chlorobenzene	ND	ND	MG/KG		0/3	0.014 - 0.03	3.0E-02		2.9E+01 N			NO	DLBSL
	75-00-3	Chloroethane	ND	ND	MG/KG		0/3	0.014 - 0.033	3.3E-02		1.5E+03 N			NO	DLBSL
	67-66-3	Chloroform	ND	ND	MG/KG		0/3	0.014 - 0.033	3.3E-02		2.9E-01 C			NO	DLBSL
	74-87-3	Chloromethane	ND	ND	MG/KG		0/3	0.014 - 0.033	3.3E-02		1.2E+01 N			NO	DLBSL
	156-59-2	cis-1,2-Dichloroethene	ND	ND	MG/KG		0/3	0.014 - 0.033	3.3E-02		1.6E+01 N			NO	DLBSL
	10061-01-5	cis-1,3-Dichloropropene	ND	ND	MG/KG		0/3	0.014 - 0.033	3.3E-02		1.7E+00 C*			NO	DLBSL
	110-82-7	Cyclohexane	ND	ND	MG/KG		0/3	0.014 - 0.033	3.3E-02		1.2E+02 NS			NO	DLBSL
	124-48-1	Dibromochloromethane	ND	ND	MG/KG		0/3	0.014 - 0.03	3.0E-02		6.8E-01 C			NO	DLBSL
	75-71-8	Dichlorodifluoromethane (Freon-12)	ND	ND	MG/KG		0/3	0.014 - 0.033	3.3E-02		1.8E+01 N			NO	DLBSL

TABLE 2.5
Occurrence, Distribution, and Selection of Chemicals of Potential Concern
Site UXO-08 Former Lejeune Cantonment Bazooka Range, Base CS Chamber, and NBC Training Trail
MCB Camp Lejeune, North Carolina

Scenario Timeframe: Current/Future
Medium: Sediment
Exposure Medium: Sediment

Exposure Point	CAS Number	Chemical	Minimum [1] Concentration Qualifier	Maximum [1] Concentration Qualifier	Units	Location of Maximum Concentration	Detection Frequency	Range of Detection Limits	Concentration [2] Used for Screening	Background [3] Value	Screening [4] Toxicity Value	Potential ARAR/TBC Value	Potential ARAR/TBC Source	COPC Flag	Rationale for [5] Contaminant Deletion or Selection
	100-41-4	Ethylbenzene	ND	ND	MG/KG		0/3	0.014 - 0.03	3.0E-02		5.4E+00 C			NO	DLBSL
	98-82-8	Isopropylbenzene	ND	ND	MG/KG		0/3	0.014 - 0.03	3.0E-02		2.1E+02 N			NO	DLBSL
	79-20-9	Methyl acetate	ND	ND	MG/KG		0/3	0.014 - 0.033	3.3E-02		7.8E+03 N			NO	DLBSL
	108-87-2	Methylcyclohexane	ND	ND	MG/KG		0/3	0.014 - 0.033	3.3E-02		N/A			NO	NTX
	75-09-2	Methylene chloride	ND	ND	MG/KG		0/3	0.014 - 0.033	3.3E-02		1.1E+01 C			NO	DLBSL
	1634-04-4	Methyl-tert-butyl ether (MTBE)	ND	ND	MG/KG		0/3	0.014 - 0.033	3.3E-02		4.3E+01 C			NO	DLBSL
	100-42-5	Styrene	ND	ND	MG/KG		0/3	0.014 - 0.03	3.0E-02		6.3E+02 N			NO	DLBSL
	127-18-4	Tetrachloroethene	ND	ND	MG/KG		0/3	0.014 - 0.03	3.0E-02		5.5E-01 C			NO	DLBSL
	108-88-3	Toluene	ND	ND	MG/KG		0/3	0.014 - 0.03	3.0E-02		5.0E+02 N			NO	DLBSL
	156-60-5	trans-1,2-Dichloroethene	ND	ND	MG/KG		0/3	0.014 - 0.033	3.3E-02		1.5E+01 N			NO	DLBSL
	10061-02-6	trans-1,3-Dichloropropene	ND	ND	MG/KG		0/3	0.014 - 0.03	3.0E-02		1.7E+00 C*			NO	DLBSL
	79-01-6	Trichloroethene	ND	ND	MG/KG		0/3	0.014 - 0.033	3.3E-02		2.8E+00 C			NO	DLBSL
	75-69-4	Trichlorofluoromethane (Freon-11)	ND	ND	MG/KG		0/3	0.014 - 0.033	3.3E-02		7.9E+01 N			NO	DLBSL
	75-01-4	Vinyl chloride	ND	ND	MG/KG		0/3	0.014 - 0.03	3.0E-02		6.0E-02 C			NO	DLBSL
	1330-20-7	Xylene, total	ND	ND	MG/KG		0/3	0.014 - 0.03	3.0E-02		6.3E+01 N			NO	DLBSL
	92-52-4	1,1-Biphenyl	ND	ND	MG/KG		0/3	0.41 - 0.85	8.5E-01		2.1E+02 NS			NO	DLBSL
	108-60-1	2,2'-Oxybis(1-chloropropane)	ND	ND	MG/KG		0/3	0.41 - 0.85	8.5E-01		4.6E+00 C			NO	DLBSL
	95-95-4	2,4,5-Trichlorophenol	ND	ND	MG/KG		0/3	0.62 - 1.3	1.3E+00		6.1E+02 N			NO	DLBSL
	88-06-2	2,4,6-Trichlorophenol	ND	ND	MG/KG		0/3	0.62 - 1.3	1.3E+00		6.1E+00 C**			NO	DLBSL
	120-83-2	2,4-Dichlorophenol	ND	ND	MG/KG		0/3	0.62 - 1.3	1.3E+00		1.8E+01 N			NO	DLBSL
	105-67-9	2,4-Dimethylphenol	ND	ND	MG/KG		0/3	0.62 - 1.3	1.3E+00		1.2E+02 N			NO	DLBSL
	51-28-5	2,4-Dinitrophenol	ND	ND	MG/KG		0/3	1.5 - 3.1	3.1E+00		1.2E+01 N			NO	DLBSL
	121-14-2	2,4-Dinitrotoluene	ND	ND	MG/KG		0/3	0.295 - 0.45	4.5E-01		1.6E+00 C*			NO	DLBSL
	606-20-2	2,6-Dinitrotoluene	ND	ND	MG/KG		0/3	0.295 - 0.45	4.5E-01		6.1E+00 N			NO	DLBSL
	91-58-7	2-Chloronaphthalene	ND	ND	MG/KG		0/3	0.41 - 0.85	8.5E-01		1.8E+02 NS			NO	DLBSL
	95-57-8	2-Chlorophenol	ND	ND	MG/KG		0/3	0.62 - 1.3	1.3E+00		3.9E+01 N			NO	DLBSL
	91-57-6	2-Methylnaphthalene	5.2E-03 J	2.3E-01 J	MG/KG	MR08-SD01-08D	3/3	0.012 - 0.026	2.3E-01		3.1E+01 N			NO	BSL
	95-48-7	2-Methylphenol	ND	ND	MG/KG		0/3	0.75 - 1.5	1.5E+00		3.1E+02 N			NO	DLBSL
	88-74-4	2-Nitroaniline	ND	ND	MG/KG		0/3	0.62 - 1.3	1.3E+00		6.1E+01 N			NO	DLBSL
	88-75-5	2-Nitrophenol	ND	ND	MG/KG		0/3	0.75 - 1.5	1.5E+00		3.9E+01 N			NO	DLBSL
	m&pCRESOL	3- and 4-Methylphenol	ND	ND	MG/KG		0/3	0.75 - 1.5	1.5E+00		3.1E+01 N			NO	DLBSL
	91-94-1	3,3'-Dichlorobenzidine	ND	ND	MG/KG		0/2	0.62 - 1.3	1.3E+00		1.1E+00 C			YES	DLASL
	99-09-2	3-Nitroaniline	ND	ND	MG/KG		0/3	0.62 - 1.3	1.3E+00		N/A			NO	NTX
	534-52-1	4,6-Dinitro-2-methylphenol	ND	ND	MG/KG		0/3	1.5 - 3.1	3.1E+00		4.9E-01 N			YES	DLASL

TABLE 2.5
Occurrence, Distribution, and Selection of Chemicals of Potential Concern
Site UXO-08 Former Lejeune Cantonment Bazooka Range, Base CS Chamber, and NBC Training Trail
MCB Camp Lejeune, North Carolina

Scenario Timeframe: Current/Future
Medium: Sediment
Exposure Medium: Sediment

Exposure Point	CAS Number	Chemical	Minimum [1] Concentration Qualifier	Maximum [1] Concentration Qualifier	Units	Location of Maximum Concentration	Detection Frequency	Range of Detection Limits	Concentration [2] Used for Screening	Background [3] Value	Screening [4] Toxicity Value	Potential ARAR/TBC Value	Potential ARAR/TBC Source	COPC Flag	Rationale for [5] Contaminant Deletion or Selection
	101-55-3	4-Bromophenyl-phenylether	ND	ND	MG/KG		0/3	0.41 - 0.85	8.5E-01		N/A			NO	NTX
	59-50-7	4-Chloro-3-methylphenol	ND	ND	MG/KG		0/3	0.62 - 1.3	1.3E+00		6.1E+02 N			NO	DLBSL
	106-47-8	4-Chloroaniline	ND	ND	MG/KG		0/2	0.62 - 1.3	1.3E+00		2.4E+00 C			NO	DLBSL
	7005-72-3	4-Chlorophenyl-phenylether	ND	ND	MG/KG		0/3	0.41 - 0.85	8.5E-01		3.1E+01 N			NO	DLBSL
	100-01-6	4-Nitroaniline	ND	ND	MG/KG		0/3	0.62 - 1.3	1.3E+00		2.4E+01 C*			NO	DLBSL
	100-02-7	4-Nitrophenol	ND	ND	MG/KG		0/3	1.5 - 3.1	3.1E+00		4.8E+00 C*			NO	DLBSL
	83-32-9	Acenaphthene	ND	ND	MG/KG		0/3	0.41 - 0.85	8.5E-01		3.4E+02 N			NO	DLBSL
	208-96-8	Acenaphthylene	ND	ND	MG/KG		0/3	0.41 - 0.85	8.5E-01		3.4E+02 N			NO	DLBSL
	98-86-2	Acetophenone	ND	ND	MG/KG		0/3	0.75 - 1.5	1.5E+00		7.8E+02 N			NO	DLBSL
	120-12-7	Anthracene	ND	ND	MG/KG		0/3	0.41 - 0.85	8.5E-01		1.7E+03 N			NO	DLBSL
	1912-24-9	Atrazine	ND	ND	MG/KG		0/3	0.41 - 0.85	8.5E-01		2.1E+00 C			NO	DLBSL
	100-52-7	Benzaldehyde	ND	ND	MG/KG		0/3	0.62 - 1.3	1.3E+00		7.8E+02 N			NO	DLBSL
	56-55-3	**Benzo(a)anthracene**	**3.9E-03 J**	**7.6E-02**	**MG/KG**	**MR08-SD01-08D**	**3/3**	**0.012 - 0.026**	**7.6E-02**		**1.5E-01 C**			**YES**	**CC**
	50-32-8	**Benzo(a)pyrene**	**2.9E-02 J**	**6.2E-02**	**MG/KG**	**MR08-SD01-08D**	**2/3**	**0.012 - 0.026**	**6.2E-02**		**1.5E-02 C**			**YES**	**ASL**
	205-99-2	**Benzo(b)fluoranthene**	**5.7E-02 J**	**1.5E-01**	**MG/KG**	**MR08-SD01-08D**	**2/3**	**0.012 - 0.026**	**1.5E-01**		**1.5E-01 C**			**YES**	**ASL**
	191-24-2	Benzo(g,h,i)perylene	3.4E-03 J	4.1E-02	MG/KG	MR08-SD01-08D	3/3	0.012 - 0.026	4.1E-02		1.7E+02 N			NO	BSL
	207-08-9	**Benzo(k)fluoranthene**	**2.4E-02 J**	**6.6E-02 J**	**MG/KG**	**MR08-SD01-08D**	**2/3**	**0.012 - 0.026**	**6.6E-02**		**1.5E+00 C**			**YES**	**CC**
	111-91-1	bis(2-Chloroethoxy)methane	ND	ND	MG/KG		0/3	0.41 - 0.85	8.5E-01		1.8E+01 N			NO	DLBSL
	111-44-4	bis(2-Chloroethyl)ether	ND	ND	MG/KG		0/3	0.41 - 0.85	8.5E-01		2.1E-01 C			YES	DLASL
	117-81-7	bis(2-Ethylhexyl)phthalate	1.2E-01 J	1.2E+00 J	MG/KG	MR08-SD01-08D	3/3	0.41 - 0.87	1.2E+00		3.5E+01 C*			NO	BSL
	85-68-7	Butylbenzylphthalate	ND	ND	MG/KG		0/3	0.41 - 0.85	8.5E-01		2.6E+02 C*			NO	DLBSL
	105-60-2	Caprolactam	ND	ND	MG/KG		0/3	0.62 - 1.3	1.3E+00		3.1E+03 N			NO	DLBSL
	86-74-8	Carbazole	ND	ND	MG/KG		0/3	0.62 - 1.3	1.3E+00		N/A			NO	NTX
	218-01-9	Chrysene	ND	ND	MG/KG		0/3	0.41 - 0.85	8.5E-01		1.5E+01 C			NO	DLBSL
	53-70-3	Dibenz(a,h)anthracene	ND	ND	MG/KG		0/3	0.012 - 0.026	2.6E-02		1.5E-02 C			YES	DLASL
	132-64-9	Dibenzofuran	ND	ND	MG/KG		0/3	0.41 - 0.85	8.5E-01		7.8E+00 N			NO	DLBSL
	84-66-2	Diethylphthalate	ND	ND	MG/KG		0/3	0.41 - 0.85	8.5E-01		4.9E+03 N			NO	DLBSL
	131-11-3	Dimethyl phthalate	ND	ND	MG/KG		0/3	0.41 - 0.85	8.5E-01		N/A			NO	NTX
	84-74-2	Di-n-butylphthalate	ND	ND	MG/KG		0/3	0.41 - 0.85	8.5E-01		6.1E+02 N			NO	DLBSL
	117-84-0	Di-n-octylphthalate	ND	ND	MG/KG		0/3	0.41 - 0.85	8.5E-01		3.5E+01 C*			NO	DLBSL
	206-44-0	Fluoranthene	3.0E-02	2.1E-01	MG/KG	MR08-SD01D-08D	3/3	0.012 - 0.026	2.1E-01		2.3E+02 N			NO	BSL
	86-73-7	Fluorene	1.8E-02	3.3E-02	MG/KG	MR08-SD01-08D	2/3	0.012 - 0.026	3.3E-02		2.3E+02 N			NO	BSL
	118-74-1	Hexachlorobenzene	3.4E-03 J	9.2E-03 J	MG/KG	MR08-SD01D-08D	2/3	0.012 - 0.026	9.2E-03		3.0E-01 C			NO	BSL
	87-68-3	Hexachlorobutadiene	ND	ND	MG/KG		0/3	0.012 - 0.026	2.6E-02		6.1E+00 C**			NO	DLBSL

TABLE 2.5
Occurrence, Distribution, and Selection of Chemicals of Potential Concern
Site UXO-08 Former Lejeune Cantonment Bazooka Range, Base CS Chamber, and NBC Training Trail
MCB Camp Lejeune, North Carolina

Scenario Timeframe: Current/Future
Medium: Sediment
Exposure Medium: Sediment

Exposure Point	CAS Number	Chemical	Minimum [1] Concentration Qualifier	Maximum [1] Concentration Qualifier	Units	Location of Maximum Concentration	Detection Frequency	Range of Detection Limits	Concentration [2] Used for Screening	Background [3] Value	Screening [4] Toxicity Value	Potential ARAR/TBC Value	Potential ARAR/TBC Source	COPC Flag	Rationale for [5] Contaminant Deletion or Selection
	77-47-4	Hexachlorocyclopentadiene	ND	ND	MG/KG		0/3	0.012 - 0.026	2.6E-02		3.7E+01 N			NO	DLBSL
	67-72-1	Hexachloroethane	ND	ND	MG/KG		0/3	0.41 - 0.85	8.5E-01		6.1E+00 C**			NO	DLBSL
	193-39-5	**Indeno(1,2,3-cd)pyrene**	**1.3E-02 J**	**3.2E-02**	**MG/KG**	**MR08-SD01-08D**	**2/3**	**0.012 - 0.026**	**3.2E-02**		**1.5E-01 C**			**YES**	**CC**
	78-59-1	Isophorone	ND	ND	MG/KG		0/3	0.41 - 0.85	8.5E-01		5.1E+02 C*			NO	DLBSL
	91-20-3	Naphthalene	1.1E-01 J	1.7E-01 J	MG/KG	MR08-SD01-08D	2/3	0.012 - 0.026	1.7E-01		3.6E+00 C*			NO	BSL
	621-64-7	n-Nitroso-di-n-propylamine	ND	ND	MG/KG		0/3	0.41 - 0.85	8.5E-01		6.9E-02 C			YES	DLASL
	86-30-6	n-Nitrosodiphenylamine	ND	ND	MG/KG		0/3	0.82 - 1.7	1.7E+00		9.9E+01 C			NO	DLBSL
	98-95-3	Nitrobenzene	ND	ND	MG/KG		0/3	0.295 - 0.299	3.0E-01		4.8E+00 C*			NO	DLBSL
	87-86-5	Pentachlorophenol	ND	ND	MG/KG		0/3	1 - 2.1	2.1E+00		8.9E-01 C			YES	DLASL
	85-01-8	Phenanthrene	1.6E-02	3.8E-01	MG/KG	MR08-SD01-08D	3/3	0.012 - 0.026	3.8E-01		1.7E+03 N			NO	BSL
	108-95-2	Phenol	ND	ND	MG/KG		0/3	0.62 - 1.3	1.3E+00		1.8E+03 N			NO	DLBSL
	129-00-0	Pyrene	2.0E-02	1.4E-01	MG/KG	MR08-SD01-08D	3/3	0.012 - 0.026	1.4E-01		1.7E+02 N			NO	BSL
	99-35-4	1,3,5-Trinitrobenzene	ND	ND	MG/KG		0/3	0.295 - 0.299	3.0E-01		2.2E+02 N			NO	DLBSL
	99-65-0	1,3-Dinitrobenzene	ND	ND	MG/KG		0/3	0.295 - 0.299	3.0E-01		6.1E-01 N			NO	DLBSL
	118-96-7	2,4,6-Trinitrotoluene	ND	ND	MG/KG		0/3	0.295 - 0.299	3.0E-01		3.6E+00 C**			NO	DLBSL
	35572-78-2	2-Amino-4,6-dinitrotoluene	ND	ND	MG/KG		0/3	0.295 - 0.299	3.0E-01		1.5E+01 N			NO	DLBSL
	88-72-2	2-Nitrotoluene	ND	ND	MG/KG		0/3	0.295 - 0.299	3.0E-01		2.9E+00 C*			NO	DLBSL
	99-08-1	3-Nitrotoluene	ND	ND	MG/KG		0/3	0.295 - 0.299	3.0E-01		6.1E-01 N			NO	DLBSL
	19406-51-0	4-Amino-2,6-dinitrotoluene	ND	ND	MG/KG		0/3	0.295 - 0.299	3.0E-01		1.5E+01 N			NO	DLBSL
	99-99-0	4-Nitrotoluene	ND	ND	MG/KG		0/3	0.295 - 0.299	3.0E-01		2.4E+01 C**			NO	DLBSL
	2691-41-0	HMX	ND	ND	MG/KG		0/3	0.295 - 0.299	3.0E-01		3.8E+02 N			NO	DLBSL
	55-63-0	Nitroglycerin	ND	ND	MG/KG		0/3	0.295 - 0.299	3.0E-01		6.1E-01 N			NO	DLBSL
	14797-73-0	Perchlorate	9.7E-04 J	9.7E-04 J	MG/KG	MR08-SD02-08D	1/3	0.0027 - 0.005	9.7E-04		5.5E+00 N			NO	BSL
	78-11-5	PETN	ND	ND	MG/KG		0/3	0.295 - 0.299	3.0E-01		N/A			NO	NTX
	121-82-4	RDX	ND	ND	MG/KG		0/3	0.295 - 0.299	3.0E-01		5.5E+00 C*			NO	DLBSL
	479-45-8	Tetryl	ND	ND	MG/KG		0/3	0.295 - 0.299	3.0E-01		2.4E+01 N			NO	DLBSL
	7440-36-0	**Antimony**	**6.5E-01 J**	**9.6E+00**	**MG/KG**	**MR08-SD01D-08D**	**3/3**	**1.77 - 4.56**	**9.6E+00**		**3.1E+00 N**			**YES**	**ASL**
	7440-38-2	**Arsenic**	**9.8E+00 J**	**2.3E+02 J**	**MG/KG**	**MR08-SD01D-08D**	**3/3**	**0.373 - 9.09**	**2.3E+02**		**3.9E-01 C***			**YES**	**ASL**
	7440-39-3	Barium	3.1E+00	3.1E+02	MG/KG	MR08-SD01-08D	3/3	0.481 - 7.26	3.1E+02		1.5E+03 N			NO	BSL
	7440-43-9	Cadmium	4.0E-01 J	2.8E+00 J	MG/KG	MR08-SD01D-08D	3/3	0.177 - 0.456	2.8E+00		7.0E+00 N			NO	BSL
	7440-47-3	**Chromium**	**2.3E+00 J**	**4.7E+01 J**	**MG/KG**	**MR08-SD01D-08D**	**3/3**	**0.883 - 2.28**	**4.7E+01**		**2.9E-01 C**			**YES**	**ASL**
	7440-50-8	Copper	1.2E+01 J	1.4E+02 J	MG/KG	MR08-SD01D-08D	3/3	1.77 - 45.6	1.4E+02		3.1E+02 N			NO	BSL
	7439-92-1	Lead	1.6E+01 J	6.2E+01 J	MG/KG	MR08-SD01D-08D	3/3	0.497 - 12.1	6.2E+01		4.0E+02 N			NO	BSL
	7439-97-6	Mercury	5.4E-02 J	2.1E-01	MG/KG	MR08-SD01-08D	2/3	0.124 - 0.189	2.1E-01		2.3E+00 N			NO	BSL

TABLE 2.5

Occurrence, Distribution, and Selection of Chemicals of Potential Concern

Site UXO-08 Former Lejeune Cantonment Bazooka Range, Base CS Chamber, and NBC Training Trail

MCB Camp Lejeune, North Carolina

Scenario Timeframe: Current/Future
Medium: Sediment
Exposure Medium: Sediment

Exposure Point	CAS Number	Chemical	Minimum [1] Concentration Qualifier	Maximum [1] Concentration Qualifier	Units	Location of Maximum Concentration	Detection Frequency	Range of Detection Limits	Concentration [2] Used for Screening	Background [3] Value	Screening [4] Toxicity Value	Potential ARAR/TBC Value	Potential ARAR/TBC Source	COPC Flag	Rationale for [5] Contaminant Deletion or Selection
	7782-49-2	Selenium	3.9E-01 J	1.7E+01 J	MG/KG	MR08-SD01D-08D	3/3	0.497 - 12.1	1.7E+01		3.9E+01 N			NO	BSL
	7440-22-4	Silver	2.5E-01 J	4.3E-01 J	MG/KG	MR08-SD01-08D	2/3	0.883 - 1.45	4.3E-01		3.9E+01 N			NO	BSL
	7440-66-6	Zinc	5.5E+01 J	2.6E+02 J	MG/KG	MR08-SD01D-08D	3/3	1.77 - 45.6	2.6E+02		2.3E+03 N			NO	BSL

[1] Minimum/Maximum detected concentrations.

[2] Maximum concentration is used for screening.

[3] Background values not available.

[4] Oak Ridge National Laboratory (ORNL). November, 2010. Regional Screening Levels for Chemical Contaminants at Superfund Sites. [Online]. Available: http://www.epa.gov/reg3hwmd/risk/hum
Residential soil RSLs. RSLs based on noncarcinogenic effects divided by 10 to account for exposure to more than on constituent that effects the same target organ.
RSL for 1,4-Dichlorobenzene used as surrogate for 1,3-Dichlorobenzene
RSL value for p-Cresol (4-Methylphenol) used as surrogate for 3- and 4-Methylphenol.
RSL value for Methoxychlor used as surrogate for 4-Chlorophenyl-phenylether.
RSL value for Nitrobenzene used as surrogate for 4-Nitrophenol.
RSL value for Acenaphthene used as surrogate for Acenaphthylene.
RSL value for Pyrene used as surrogate for Benzo(g,h,i)perylene.
RSL value for Anthracene used as surrogate for Phenanthrene.
RSL value for Chromium(VI) used as surrogate for Chromium.
The soil value of 400 mg/kg for lead is from the Revised Interim Soil Lead Guidance for CERCLA Sites and RCRA Corrective Action Facilities, USEPA, July 14, 1994.
RSL value for Mercury (inorganic salts) used as surrogate for Mercury.
RSL value for 1,3-Dichloropropene used as a surrogate for cis-1,3-Dichloropropene and trans-1,3-Dichloropropene.
RSL value for 2-Chlorophenol used as surrogate for 4-Chloro-3-methylphenol and 2-Nitrophenol.

[5] Rationale Codes

Selection Reason:
- Above Screening Levels (ASL)
- Chemical in same chemical class as a chemical selected as a COPC because ASL (CC)
- Detection Limit Above Screening Level (DLASL), not quantitatively evaluated in HHRA but discussed in uncertainty assessment

Deletion Reason:
- Below Screening Level (BSL)
- Detection Limit Below Screening Level (DLBSL)
- No Toxicity Information (NTX)
- Essential Nutrient (NUT)

COPC = Chemical of Potential Concern
ARAR/TBC = Applicable or Relevant and Appropriate Requirement/ To Be Considered
J = Estimated Value
C* = N screening level < 100x C screening level, therefore N screening value/10 used as screening level
C** = N screening level < 10x C screening level, therefore N screening value/10 used as screening level
N = Noncarcinogenic
NS = RSL exceeds Csat, soil saturation concentration. Therefore, Csat used as screening level
N/A = Not available

TABLE 2.5a

Risk Ratio Screening for Sediment, Maximum Detected Concentration

Site UXO-08 Former Lejeune Cantonment Bazooka Range, Base CS Chamber, and NBC Training Trail

MCB Camp Lejeune, North Carolina

Analyte	Detection Frequency	Maximum Detected Concentration (Qualifier)	Sample	Screening Level	Acceptable Risk Level	Corresponding Hazard Index[a]	Corresponding Cancer Index[b]	Target Organ
SVOA (mg/kg)								
Benzo(a)anthracene	3 / 3	7.6E-02	MR08-SD01-08D	1.5E-01	1.0E-06		5.1E-07	
Benzo(a)pyrene	2 / 3	6.2E-02	MR08-SD01-08D	1.5E-02	1.0E-06		4.1E-06	
Benzo(b)fluoranthene	2 / 3	1.5E-01	MR08-SD01-08D	1.5E-01	1.0E-06		1.0E-06	
Benzo(k)fluoranthene	2 / 3	6.6E-02 J	MR08-SD01-08D	1.5E+00	1.0E-06		4.4E-08	
Indeno(1,2,3-cd)pyrene	2 / 3	3.2E-02	MR08-SD01-08D	1.5E-01	1.0E-06		2.1E-07	
METAL (mg/kg)								
Antimony	**3** / **3**	9.6E+00	MR08-SD01D-08D	3.1E+01	1.0E+00	3.1E-01		Blood
Arsenic	3 / 3	2.3E+02 J	MR08-SD01D-08D	3.9E-01	1.0E-06		5.9E-04	
Chromium	3 / 3	4.7E+01 J	MR08-SD01D-08D	2.9E-01	1.0E-06		1.6E-04	
Cumulative Corresponding Hazard Index[c]						**0.3**		
Cumulative Corresponding Cancer Risk[d]							**7.6E-04**	
							Total Blood HI =	0.3

Screening level used is North Carolina WQS for Human Health followed by Water Supply or Federal Ambient Water Quality Criteria, Consumption of Water and Organisms.

Where North Carolina WQS or Federal Ambient Water Quality Criteria are not available, used the Tap Water RSL, Sept. 2008, (based on $1x10^{6}$ for carcinogens and HQ of 0.1 for noncarcinogens).

[a] Corresponding Hazard Index equals maximum detected concentration divided by the SL divided by the acceptable risk level.

[b] Corresponding Cancer Risk equals maximum detected concentration divided by the SL divided by the acceptable risk level.

[c] Cumulative Corresponding Hazard Index equals sum of Corresponding Hazard Indices for each constituent.

[d] Cumulative Corresponding Cancer Risk equals sum of Corresponding Cancer Risks for each constituent.

Constituent selected as COPC if it contributes to an overall Hazard Index by target organ greater than 0.5 or Cumulative Corresponding Cancer Risk greater than 5E-05, otherwise, constituent not selected as COPC.

Constituents selected as COPCs are indicated by shading.

COPC = Constituent of Potential Concern

HI = Hazard Index

mg/kg = milligrams per kilogram

TABLE 2.6

Occurrence, Distribution, and Selection of Chemicals of Potential Concern

Site UXO-08 Former Lejeune Cantonment Bazooka Range, Base CS Chamber, and NBC Training Trail

MCB Camp Lejeune, North Carolina

Scenario Timeframe: Current/Future
Medium: Surface Soil
Exposure Medium: Surface Soil

Exposure Point	CAS Number	Chemical	Minimum [1] Concentration Qualifier	Maximum [1] Concentration Qualifier	Units	Location of Maximum Concentration	Detection Frequency	Range of Detection Limits	Concentration [2] Used for Screening	Background [3] Value	Screening [4] Toxicity Value	Potential ARAR/TBC Value	Potential ARAR/TBC Source	COPC Flag	Rationale for [5] Contaminant Deletion or Selection
Post Detonation															
Surface Soil	121-14-2	2,4-Dinitrotoluene	ND	ND	MG/KG		0/2	0.121 - 0.129	1.3E-01		1.6E+00 C*			NO	DLBSL
	606-20-2	2,6-Dinitrotoluene	ND	ND	MG/KG		0/2	0.121 - 0.129	1.3E-01		6.1E+00 N			NO	DLBSL
	98-95-3	Nitrobenzene	1.4E-01 PM	1.4E-01 PM	MG/KG	MR08-SS02-10D	1/2	0.121 - 0.129	1.4E-01		4.8E+00 C*			NO	BSL
	99-35-4	1,3,5-Trinitrobenzene	ND	ND	MG/KG		0/2	0.121 - 0.129	1.3E-01		2.2E+02 N			NO	DLBSL
	99-65-0	1,3-Dinitrobenzene	4.2E-02 J	2.3E-01 P	MG/KG	MR08-SS02-10D	2/2	0.121 - 0.129	2.3E-01		6.1E-01 N			NO	BSL
	118-96-7	2,4,6-Trinitrotoluene	1.7E-01 PM	1.7E-01 PM	MG/KG	MR08-SS02-10D	1/2	0.121 - 0.129	1.7E-01		3.6E+00 C**			NO	BSL
	35572-78-2	2-Amino-4,6-dinitrotoluene	ND	ND	MG/KG		0/2	0.121 - 0.129	1.3E-01		1.5E+01 N			NO	DLBSL
	88-72-2	2-Nitrotoluene	ND	ND	MG/KG		0/2	0.121 - 0.129	1.3E-01		2.9E+00 C*			NO	DLBSL
	99-08-1	3-Nitrotoluene	ND	ND	MG/KG		0/2	0.121 - 0.129	1.3E-01		6.1E-01 N			NO	DLBSL
	19406-51-0	4-Amino-2,6-dinitrotoluene	ND	ND	MG/KG		0/2	0.121 - 0.129	1.3E-01		1.5E+01 N			NO	DLBSL
	99-99-0	4-Nitrotoluene	ND	ND	MG/KG		0/2	0.121 - 0.129	1.3E-01		2.4E+01 C**			NO	DLBSL
	2691-41-0	HMX	ND	ND	MG/KG		0/2	0.121 - 0.129	1.3E-01		3.8E+02 N			NO	DLBSL
	55-63-0	Nitroglycerin	ND	ND	MG/KG		0/2	0.303 - 0.323	3.2E-01		6.1E-01 N			NO	DLBSL
	14797-73-0	Perchlorate	1.1E-03 -01, J	1.6E-02	MG/KG	MR08-SS01D-10D	2/2	0.00582 - 0.00622	1.6E-02		5.5E+00 N			NO	BSL
	78-11-5	PETN	ND	ND	MG/KG		0/2	0.303 - 0.323	3.2E-01		N/A			NO	NTX
	121-82-4	RDX	1.1E-01 JP	2.0E-01	MG/KG	MR08-SS01-10D	2/2	0.121 - 0.129	2.0E-01		5.5E+00 C*			NO	BSL
	479-45-8	Tetryl	5.3E-02 JPM	5.3E-02 JPM	MG/KG	MR08-SS02-10D	1/2	0.121 - 0.129	5.3E-02		2.4E+01 N			NO	BSL
	7429-90-5	**Aluminum**	**7.6E+03**	**9.3E+03**	**MG/KG**	**MR08-SS01D-10D**	**2/2**	**11.5 - 12.2**	**9.3E+03**	**5.5E+03**	**7.7E+03 N**			**YES**	**ASL**
	7440-36-0	Antimony	ND	ND	MG/KG		0/2	0.864 - 0.915	9.2E-01	4.5E-01	3.1E+00 N			NO	DLBSL
	7440-38-2	**Arsenic**	**1.3E+00**	**1.4E+00**	**MG/KG**	**MR08-SS02-10D**	**2/2**	**0.576 - 0.61**	**1.4E+00**	**6.3E-01**	**3.9E-01 C***	**5.8E+00**	**NCSSL**	**YES**	**ASL**
	7440-39-3	Barium	1.7E+01	1.7E+01	MG/KG	MR08-SS01D-10D : MR08-SS02-10D	2/2	2.31 - 2.44	1.7E+01	1.5E+01	1.5E+03 N	5.8E+02	NCSSL	NO	BSL
	7440-41-7	Beryllium	7.4E-02 J	8.1E-02 J	MG/KG	MR08-SS02-10D	2/2	0.288 - 0.305	8.1E-02	1.0E-01	1.6E+01 N			NO	BSL
	7440-43-9	Cadmium	ND	ND	MG/KG		0/2	0.288 - 0.305	3.1E-01	3.3E-02	7.0E+00 N	3.0E+00	NCSSL	NO	DLBSL
	7440-47-3	**Chromium**	**9.5E+00**	**1.1E+01**	**MG/KG**	**MR08-SS01-10D**	**2/2**	**0.576 - 0.61**	**1.1E+01**	**6.1E+00**	**2.90E-01 C**	**3.8E+00**	**NCSSL**	**YES**	**ASL**
	7440-48-4	Cobalt	3.3E-01 J	3.4E-01 J	MG/KG	MR08-SS02-10D	2/2	0.72 - 0.763	3.4E-01	2.9E-01	2.3E+00 N			NO	BSL
	7440-50-8	Copper	2.9E+00 N	4.2E+00 N	MG/KG	MR08-SS01D-10D	2/2	0.576 - 0.61	4.2E+00	4.8E+00	3.1E+02 N	7.0E+02	NCSSL	NO	BSL
	7439-89-6	**Iron**	**4.8E+03**	**6.0E+03**	**MG/KG**	**MR08-SS01D-10D**	**2/2**	**5.76 - 6.1**	**6.0E+03**	**3.2E+03**	**5.50E+03 N**	**1.5E+02**	**NCSSL**	**YES**	**ASL**
	7439-92-1	Lead	7.4E+00	1.2E+01	MG/KG	MR08-SS02-10D	2/2	0.173 - 0.183	1.2E+01	1.2E+01	4.0E+02 N	2.7E+02	NCSSL	NO	BSL
	7439-96-5	Manganese	3.8E+00 N	1.5E+01 N	MG/KG	MR08-SS02-10D	2/2	0.864 - 0.915	1.5E+01	1.4E+01	1.8E+02 N	6.5E+01	NCSSL	NO	BSL
	7439-97-6	Mercury	2.7E-02 J	2.9E-02 J	MG/KG	MR08-SS02-10D	2/2	0.033 - 0.0385	2.9E-02	8.1E-02	2.3E+00 N	1.0E+00	NCSSL	NO	BSL
	7440-02-0	Nickel	1.7E+00	2.3E+00	MG/KG	MR08-SS02-10D	2/2	0.576 - 0.61	2.3E+00	1.2E+00	1.5E+02 N	1.3E+02	NCSSL	NO	BSL
	7782-49-2	Selenium	6.0E-01	6.3E-01	MG/KG	MR08-SS02-10D	2/2	0.576 - 0.61	6.3E-01	5.6E-01	3.9E+01 N	2.1E+00	NCSSL	NO	BSL
	7440-22-4	Silver	ND	ND	MG/KG		0/3	0.576 - 0.61	6.1E-01	1.4E-01	3.9E+01 N	3.4E+00	NCSSL	NO	DLBSL
	7440-28-0	Thallium	ND	ND	MG/KG		0/2	0.461 - 0.488	4.9E-01	3.6E-01	N/A			NO	NTX
	7440-62-2	Vanadium	1.3E+01	1.5E+01	MG/KG	MR08-SS01-10D : MR08-SS01D-10D	2/2	0.72 - 0.763	1.5E+01	8.9E+00	3.9E+01 N			NO	BSL
	7440-66-6	Zinc	5.0E+00 N	8.5E+00 N	MG/KG	MR08-SS02-10D	2/2	1.15 - 1.22	8.5E+00	1.1E+01	2.3E+03 N	1.2E+03	NCSSL	NO	BSL

TABLE 2.6

Occurrence, Distribution, and Selection of Chemicals of Potential Concern

Site UXO-08 Former Lejeune Cantonment Bazooka Range, Base CS Chamber, and NBC Training Trail

MCB Camp Lejeune, North Carolina

Scenario Timeframe: Current/Future
Medium: Surface Soil
Exposure Medium: Surface Soil

Exposure Point	CAS Number	Chemical	Minimum [1] Concentration Qualifier	Maximum [1] Concentration Qualifier	Units	Location of Maximum Concentration	Detection Frequency	Range of Detection Limits	Concentration [2] Used for Screening	Background [3] Value	Screening [4] Toxicity Value	Potential ARAR/TBC Value	Potential ARAR/TBC Source	COPC Flag	Rationale for [5] Contaminant Deletion or Selection

[1] Minimum/Maximum detected concentrations.

[2] Maximum concentration is used for screening.

[3] Background values are two times the arithmetic mean basewide background soil concentrations.
Background values are from *Final Base Background Soil Study Report, Marine Corps Base Camp Lejeune, North Carolina* , Baker Environmental, April 25, 2001.

[4] Oak Ridge National Laboratory (ORNL). November, 2010. Regional Screening Levels for Chemical Contaminants at Superfund Sites.
http://www.epa.gov/reg3hwmd/risk/human/rb-concentration_table/index.htm. Residential soil RSLs. RSLs based on noncarcinogenic effects divided by 10 to account for exposure to more than on constituent that effects the same target organ.
RSL value for Chromium(VI) used as surrogate for Chromium.
The soil value of 400 mg/kg for lead is from the Revised Interim Soil Lead Guidance for CERCLA Sites and RCRA Corrective Action Facilities, USEPA, July 14, 1994.
RSL value for Manganese (water) used as surrogate for Manganese.
RSL value for Mercury (inorganic salts) used as surrogate for Mercury.

[5] Rationale Codes

Selection Reason:
- Above Screening Levels (ASL)
- Chemical in same chemical class as a chemical selected as a COPC because ASL (CC)
- Detection Limit Above Screening Level (DLASL), not quantitatively evaluated in HHRA

Deletion Reason:
- No Toxicity Information (NTX)
- Essential Nutrient (NUT)
- Below Screening Level (BSL)
- Detection Limit Below Screening Level (DLBSL)

COPC = Chemical of Potential Concern
ARAR/TBC = Applicable or Relevant and Appropriate Requirement/ To Be Considered
C* = N screening level < 100x C screening level, therefore N screening value/10 used as screening level
C** = N screening level < 10x C screening level, therefore N screening value/10 used as screening level
N = Noncarcinogenic
N/A = Not available
NCSSL = North Carolina Soil Screening Levels (NCDENR, 2010
NS = RSL exceeds Csat, soil saturation concentration. Therefore, Csat used as screening level
U - The material was analyzed for, but not detected
J - Analyte present, value may or may not be accurate or precise
P - Associated numerical value is an estimated quantity
M - Sample matrix interfered with analyte quantitation
N - Tentative Identification, consider present, special methods may be needed to confirm its presence or absence in future sampling efforts
Z-01 - Ion ratio did not meet criteria

TABLE 2.6a

Risk Ratio Screening for Post Detonation Surface Soil, Maximum Detected Concentration

Site UXO-08 Former Lejeune Cantonment Bazooka Range, Base CS Chamber, and NBC Training Trail

MCB Camp Lejeune, North Carolina

Analyte	Detection Frequency	Maximum Detected Concentration (Qualifier)	Sample Location of Maximum Detected Concentration	Residential Soil RSL	Acceptable Risk Level	Corresponding Hazard Index[a]	Corresponding Cancer Risk[b]	Target Organ
Metals (mg/kg)								
Aluminum	2 / 2	9.3E+03	MR08-SS01D-10D	7.7E+04	1	0.1	NA	Neurological
Arsenic	2 / 2	1.4E+00	MR08-SS02-10D	3.9E-01	1E-06	NA	3E-06	NA
Chromium	2 / 2	1.1E+01	MR08-SS01-10D	2.9E-01	1E-06	NA	4E-05	NA
Iron	2 / 2	6.0E+03	MR08-SS01D-10D	5.5E+04	1	0.1	NA	Gastrointestinal
Cumulative Corresponding Hazard Index[c]						**0.2**		
Cumulative Corresponding Cancer Risk[d]							**4E-05**	
							Total Neurological HI =	0.1
							Total Gastrointestinal HI =	0.1

Notes:

a Corresponding Hazard Index equals maximum detected concentration divided by the RSL divided by the acceptable risk level.

b Corresponding Cancer Risk equals maximum detected concentration divided by the RSL divided by the acceptable risk level.

c Cumulative Corresponding Hazard Index equals sum of Corresponding Hazard Indices for each constituent.

d Cumulative Corresponding Cancer Risk equals sum of Corresponding Cancer Risks for each constituent.

Constituent selected as COPC if it contributes to an overall Hazard Index by target organ greater than 0.5 or Cumulative Corresponding Cancer Risk greater than 5E-05, otherwise, constituent not selected as COPC.

Constituents selected as COPCs are indicated by shading.

COPC = Constituent of Potential Concern

HI = Hazard Index

mg/kg = micrograms per kilogram

NA = Not available/not applicable.

TABLE 3.1.RME

Medium-Specific Exposure Point Concentration Summary

Site UXO-08 Former Lejeune Cantonment Bazooka Range, Base CS Chamber, and NBC Training Trail

MCB Camp Lejeune, North Carolina

Scenario Timeframe: Current/Future
Medium: Sediment
Exposure Medium: Sediment

Exposure Point	Chemical of Potential Concern	Units	Arithmetic Mean	95% UCL (Distribution)	Maximum Concentration (Qualifier)		Exposure Point Concentration			
							Value	Units	Statistic	Rationale
Sediment										
	Benzo(a)anthracene	mg/kg	3.9E-02	NA	7.6E-02		7.6E-02	mg/kg	Max	1
	Benzo(a)pyrene	mg/kg	3.2E-02	NA	6.2E-02		6.2E-02	mg/kg	Max	1
	Benzo(b)fluoranthene	mg/kg	7.1E-02	NA	1.5E-01		1.5E-01	mg/kg	Max	1
	Benzo(k)fluoranthene	mg/kg	3.2E-02	NA	6.6E-02	J	6.6E-02	mg/kg	Max	1
	Indeno(1,2,3-cd)pyrene	mg/kg	1.7E-02	NA	3.2E-02		3.2E-02	mg/kg	Max	1
	Antimony	mg/kg	4.4E+00	NA	9.6E+00		9.6E+00	mg/kg	Max	1
	Arsenic	mg/kg	9.7E+01	NA	2.3E+02	J	2.3E+02	mg/kg	Max	1
	Chromium	mg/kg	2.1E+01	NA	4.7E+01	J	4.7E+01	mg/kg	Max	1

Options: Max (Maximum detected concentration)

UCL Rationale:

(1) Only three sediment samples. Maximum detected concentration used as EPC.

Qualifier and Distribution Definitions

NA = Not applicable, only 3 samples

J = Estimated

TABLE 4.1.RME

Values Used For Daily Intake Calculations: Reasonable Maximum Exposure

Site UXO-08 Former Lejeune Cantonment Bazooka Range, Base CS Chamber, and NBC Training Trail
MCB Camp Lejeune, North Carolina

Scenario Timeframe: Current/Future
Medium: Sediment
Exposure Medium: Sediment

Exposure Route	Receptor Population	Receptor Age	Exposure Point	Parameter Code	Parameter Definition	Value	Units	Rationale/ Reference	Intake Equation/ Model Name
Ingestion	Trespasser/Visitor	Adult	Sediment	CSed	Chemical Concentration in Soil	see Table 3.1.RME	mg/kg	see Table 3.1.RME	Chronic Daily Intake (CDI) (mg/kg-day) =
				IR-Sed	Ingestion Rate of Sediment	50	mg/day	Prof. Judgment (1)	CSed x IR-Sed x EF x ED x CF x 1/BW x 1/AT
				EF	Exposure Frequency	45	days/year	EPA, 2000	
				ED	Exposure Duration	24	years	EPA, 1991	
				CF	Conversion Factor	0.000001	kg/mg	- -	
				BW	Body Weight	70	kg	EPA, 1991	
				AT-C	Averaging Time (Cancer)	25,550	days	EPA, 1989	
				AT-N	Averaging Time (Non-Cancer)	8,760	days	EPA, 1989	
		Youth	Sediment	CSed	Chemical Concentration in Soil	see Table 3.1.RME	mg/kg	see Table 3.1.RME	Chronic Daily Intake (CDI) (mg/kg-day) =
				IR-Sed	Ingestion Rate of Sediment	50	mg/day	Prof. Judgment (1)	CSed x IR-Sed x EF x ED x CF x 1/BW x 1/AT
				EF	Exposure Frequency	45	days/year	EPA, 2000	
				ED	Exposure Duration	10	years	EPA, 1991	
				CF	Conversion Factor	0.000001	kg/mg	- -	
				BW	Body Weight	45	kg	EPA, 2004	
				AT-C	Averaging Time (Cancer)	25,550	days	EPA, 1989	
				AT-N	Averaging Time (Non-Cancer)	3,650	days	EPA, 1989	
		Child	Sediment	CSed	Chemical Concentration in Soil	see Table 3.1.RME	mg/kg	see Table 3.1.RME	Chronic Daily Intake (CDI) (mg/kg-day) =
				IR-Sed	Ingestion Rate of Sediment	100	mg/day	Prof. Judgment (1)	CSed x IR-Sed x EF x ED x CF x 1/BW x 1/AT
				EF	Exposure Frequency	45	days/year	EPA, 2000	
				ED	Exposure Duration	6	years	EPA, 1991	
				CF	Conversion Factor	0.000001	kg/mg	- -	
				BW	Body Weight	15	kg	EPA, 1991	
				AT-C	Averaging Time (Cancer)	25,550	days	EPA, 1989	
				AT-N	Averaging Time (Non-Cancer)	2,190	days	EPA, 1989	
	Industrial Worker	Adult	Sediment	CSed	Chemical Concentration in Soil	see Table 3.1.RME	mg/kg	see Table 3.1.RME	Chronic Daily Intake (CDI) (mg/kg-day) =
				IR-Sed	Ingestion Rate of Sediment	50	mg/day	Prof. Judgment (1)	CSed x IR-Sed x EF x ED x CF x 1/BW x 1/AT
				EF	Exposure Frequency	10	days/year	Prof. Judgment (2)	
				ED	Exposure Duration	25	years	EPA, 1991	
				CF	Conversion Factor	0.000001	kg/mg	- -	
				BW	Body Weight	70	kg	EPA, 1991	
				AT-C	Averaging Time (Cancer)	25,550	days	EPA, 1989	
				AT-N	Averaging Time (Non-Cancer)	9,125	days	EPA, 1989	

TABLE 4.1.RME

Values Used For Daily Intake Calculations: Reasonable Maximum Exposure

Site UXO-08 Former Lejeune Cantonment Bazooka Range, Base CS Chamber, and NBC Training Trail
MCB Camp Lejeune, North Carolina

Scenario Timeframe: Current/Future
Medium: Sediment
Exposure Medium: Sediment

Exposure Route	Receptor Population	Receptor Age	Exposure Point	Parameter Code	Parameter Definition	Value	Units	Rationale/ Reference	Intake Equation/ Model Name
Dermal	Trespasser/Visitor	Adult	Sediment	CSed	Chemical Concentration in Soil	see Table 3.1.RME	mg/kg	see Table 3.1.RME	CDI (mg/kg-day) =
				SA	Skin Surface Area Available for Contact	5,700	cm^2	EPA, 2004	CSed x SA x SSAF x DABS x CF x EF x
				SSAF	Soil to Skin Adherence Factor	0.6	mg/cm^2-day	EPA, 2004 (5)	ED x 1/BW x 1/AT
				DABS	Dermal Absorption Factor Solids	chem specific	--	EPA, 2004	
				CF	Conversion Factor	0.000001	kg/mg	- -	
				EF	Exposure Frequency	45	days/year	EPA, 2000	
				ED	Exposure Duration	24	years	EPA, 1991	
				BW	Body Weight	70	kg	EPA, 1991	
				AT-C	Averaging Time (Cancer)	25,550	days	EPA, 1989	
				AT-N	Averaging Time (Non-Cancer)	8,760	days	EPA, 1989	
		Youth	Sediment	CSed	Chemical Concentration in Soil	see Table 3.1.RME	mg/kg	see Table 3.1.RME	CDI (mg/kg-day) =
				SA	Skin Surface Area Available for Contact	4,200	cm^2	EPA, 2004 (4)	CSed x SA x SSAF x DABS x CF x EF x
				SSAF	Soil to Skin Adherence Factor	0.6	mg/cm^2-day	EPA, 2004 (5)	ED x 1/BW x 1/AT
				DABS	Dermal Absorption Factor Solids	chem specific	--	EPA, 2004	
				CF	Conversion Factor	0.000001	kg/mg	- -	
				EF	Exposure Frequency	45	days/year	EPA, 2000	
				ED	Exposure Duration	10	years	EPA, 1991	
				BW	Body Weight	45	kg	EPA, 2004	
				AT-C	Averaging Time (Cancer)	25,550	days	EPA, 1989	
				AT-N	Averaging Time (Non-Cancer)	3,650	days	EPA, 1989	
		Child	Sediment	CSed	Chemical Concentration in Soil	see Table 3.1.RME	mg/kg	see Table 3.1.RME	CDI (mg/kg-day) =
				SA	Skin Surface Area Available for Contact	2,800	cm^2	EPA, 2004	CSed x SA x SSAF x DABS x CF x EF x
				SSAF	Soil to Skin Adherence Factor	0.2	mg/cm^2-day	EPA, 2004 (6)	ED x 1/BW x 1/AT
				DABS	Dermal Absorption Factor Solids	chem specific	--	EPA, 2004	
				CF	Conversion Factor	0.000001	kg/mg	- -	
				EF	Exposure Frequency	45	days/year	EPA, 2000	
				ED	Exposure Duration	6	years	EPA, 1991	
				BW	Body Weight	15	kg	EPA, 1991	
				AT-C	Averaging Time (Cancer)	25,550	days	EPA, 1989	
				AT-N	Averaging Time (Non-Cancer)	2,190	days	EPA, 1989	

TABLE 4.1.RME

Values Used For Daily Intake Calculations: Reasonable Maximum Exposure

Site UXO-08 Former Lejeune Cantonment Bazooka Range, Base CS Chamber, and NBC Training Trail
MCB Camp Lejeune, North Carolina

Scenario Timeframe: Current/Future
Medium: Sediment
Exposure Medium: Sediment

Exposure Route	Receptor Population	Receptor Age	Exposure Point	Parameter Code	Parameter Definition	Value	Units	Rationale/ Reference	Intake Equation/ Model Name
Dermal	Industrial Worker	Adult	Sediment	CSed	Chemical Concentration in Soil	see Table 3.1.RME	mg/kg	see Table 3.1.RME	CDI (mg/kg-day) =
				SA	Skin Surface Area Available for Contact	3,300	cm^2	EPA, 2004	CSed x SA x SSAF x DABS x CF x EF x
				SSAF	Soil to Skin Adherence Factor	0.6	mg/cm^2-day	EPA, 2004 (5)	ED x 1/BW x 1/AT
				DABS	Dermal Absorption Factor Solids	chem specific	--	EPA, 2004	
				CF	Conversion Factor	0.000001	kg/mg	- -	
				EF	Exposure Frequency	10	days/year	EPA, 1991	
				ED	Exposure Duration	25	days/year	Prof. Judgment (2)	
				BW	Body Weight	70	kg	EPA, 1991	
				AT-C	Averaging Time (Cancer)	25,550	days	EPA, 1989	
				AT-N	Averaging Time (Non-Cancer)	9,125	days	EPA, 1989	

Notes:

1. One-half of soil ingestion rate (soil ingestion rate for adult and youth is 100 mg/kg, and for child is 200 mg/kg, from EPA, 1991).
2. Assume base worker/industrial worker would contact sediment two weeks per year.
3. Assume one-quarter of duration of construction project (250 days/year) would involve contact with sediment.
4. SA is the total of the head, hands, forearms and lower legs for the 7 through 16 year olds.
5. Average adherence factor for pipe layers in wet soil.
6. Average adherence factor for children in wet soil.

Sources:

EPA, 1989: Risk Assessment Guidance for Superfund. Vol.1: Human Health Evaluation Manual, Part A. OERR. EPA/540/1-89/002.

EPA, 1991: Risk Assessment Guidance for Superfund. Vol.1: Human Health Evaluation Manual - Supplemental Guidance, Standard Default Exposure Factors. Interim Final. OSWER Directive 9285.6-03.

EPA, 2000: Supplemental Guidance to RAGS: Region 4 Bulletins, Human Health Risk Assessment Bulletins. www.epa.gov/region4/waste/oftecser/healtbul.htm.

EPA, 2004: Risk Assessment Guidance for Superfund. Vol.1: Human Health Evaluation Manual (Part E, Supplemental Guidance for Dermal Risk Assessment) Final. EPA/540/R/99/005.

TABLE 4.2.RME

Values Used For Daily Intake Calculations: Reasonable Maximum Exposure

Site UXO-08 Former Lejeune Cantonment Bazooka Range, Base CS Chamber, and NBC Training Trail
MCB Camp Lejeune, North Carolina

Scenario Timeframe: Future
Medium: Sediment
Exposure Medium: Sediment

Exposure Route	Receptor Population	Receptor Age	Exposure Point	Parameter Code	Parameter Definition	Value	Units	Rationale/ Reference	Intake Equation/ Model Name
Ingestion	Construction Worker	Adult	Sediment	CSed	Chemical Concentration in Soil	see Table 3.1.RME	mg/kg	see Table 3.1.RME	Chronic Daily Intake (CDI) (mg/kg-day) =
				IR-Sed	Ingestion Rate of Sediment	240	mg/day	Prof. Judgment (1)	CSed x IR-Sed x EF x ED x CF x 1/BW x 1/AT
				EF	Exposure Frequency	62	days/year	Prof. Judgment (2)	
				ED	Exposure Duration	1	years	EPA, 1991	
				CF	Conversion Factor	0.000001	kg/mg	- -	
				BW	Body Weight	70	kg	EPA, 1991	
				AT-C	Averaging Time (Cancer)	25,550	days	EPA, 1989	
				AT-N	Averaging Time (Non-Cancer)	365	days	EPA, 1989	
Dermal	Construction Worker	Adult	Sediment	CSed	Chemical Concentration in Soil	see Table 3.1.RME	mg/kg	see Table 3.1.RME	CDI (mg/kg-day) =
				SA	Skin Surface Area Available for Contact	3,300	cm^2	EPA, 2004	CSed x SA x SSAF x DABS x CF x EF x
				SSAF	Soil to Skin Adherence Factor	0.6	mg/cm^2-day	EPA, 2004 (3)	ED x 1/BW x 1/AT
				DABS	Dermal Absorption Factor Solids	chem specific	--	EPA, 2004	
				CF	Conversion Factor	0.000001	kg/mg	- -	
				EF	Exposure Frequency	62	days/year	Prof. Judgment (2)	
				ED	Exposure Duration	1	years	EPA, 1991	
				BW	Body Weight	70	kg	EPA, 1991	
				AT-C	Averaging Time (Cancer)	25,550	days	EPA, 1989	
				AT-N	Averaging Time (Non-Cancer)	365	days	EPA, 1989	

Notes:

1. One-half of soil ingestion rate (ingestion rate of soil for construction worker is 480 mg/kg from EPA, 1991).
2. Assume one-quarter of duration of construction project (250 days/year) would involve contact with sediment.
3. Average adherence factor for pipe layers in wet soil.

Sources:

EPA, 1989: Risk Assessment Guidance for Superfund. Vol.1: Human Health Evaluation Manual, Part A. OERR. EPA/540/1-89/002.

EPA, 1991: Risk Assessment Guidance for Superfund. Vol.1: Human Health Evaluation Manual - Supplemental Guidance, Standard Default Exposure Factors. Interim Final. OSWER Directive 9285.6-03.

EPA, 2000: Supplemental Guidance to RAGS: Region 4 Bulletins, Human Health Risk Assessment Bulletins. www.epa.gov/region4/waste/oftecser/healtbul.htm.

EPA, 2004: Risk Assessment Guidance for Superfund. Vol.1: Human Health Evaluation Manual (Part E, Supplemental Guidance for Dermal Risk Assessment) Final. EPA/540/R/99/005.

TABLE 5.1

Non-Cancer Toxicity Data -- Oral/Dermal

Site UXO-08 Former Lejeune Cantonment Bazooka Range, Base CS Chamber, and NBC Training Trail

MCB Camp Lejeune, North Carolina

Chemical of Potential Concern	Chronic/ Subchronic	Oral RfD Value	Oral RfD Units	Oral to Dermal Adjustment Factor (1)	Adjusted Dermal RfD (2)	Units	Primary Target Organ	Combined Uncertainty/Modifying Factors	Sources of RfD: Target Organ	Dates of RfD: Target Organ (3) (MM/DD/YY)
Benzo(a)anthracene	Chronic	NA			NA					
	Subchronic	NA			NA					
Benzo(a)pyrene	Chronic	NA			NA					
	Subchronic	NA			NA					
Benzo(b)fluoranthene	Chronic	NA			NA					
	Subchronic	NA			NA					
Benzo(k)fluoranthene	Chronic	NA			NA					
	Subchronic	NA			NA					
Indeno(1,2,3-cd)pyrene	Chronic	NA			NA					
	Subchronic	NA			NA					
Antimony	Chronic	4.0E-04	mg/kg-day	15%	6.0E-05	mg/kg-day	Longevity, Blood	1000/1	IRIS	2/28/2011
	Subchronic	4.0E-04	mg/kg-day	15%	6.0E-05	mg/kg-day	Whole Body, Blood	1000/1	PPRTV	7/29/2008
Arsenic	Chronic	3.0E-04	mg/kg-day	95%	3.0E-04	mg/kg-day	Skin, Vascular	3/1	IRIS	2/28/2011
	Subchronic	3.0E-04	mg/kg-day	95%	3.0E-04	mg/kg-day	Skin, Vascular	3	HEAST	7/01/1997
Chromium (VI)	Chronic	3.0E-03	mg/kg-day	2.5%	7.5E-05	mg/kg-day	Not identified	300/3	IRIS	2/28/2011
	Subchronic	2.0E-02	mg/kg-day	2.5%	5.0E-04	mg/kg-day	Not identified	100	HEAST	7/01/1997

(1) Source: Risk Assessment Guidance for Superfund. Volume 1: Human Health Evalution Manual (Part E, Supplemetnal Guidance for Dermal Risk Assessment (Interim). Section 4.2 and Exhibit 4-1. USEPA recommends that the oral RfD should not be adjusted to estimate the absorbed dose for compounds when the absorption efficiency is greater than 50%. Constituents that do not have oral absorption efficiencies reported on this table were assumed to have an oral absorption efficiency of 100%.

(2) Adjusted dermal RfD = oral RfD x oral to dermal adjustment factor

(3) For IRIS values, the date IRIS was searched.
For PPRTV values, the date of the article provided.
For HEAST values, the date of HEAST document.

Definitions:
NA = Not Available
IRIS = Integrated Risk Information System
HEAST = Health Effects Assessment Summary Tables
PPRTV = Provisional Peer-Reviewed Toxicity Values

TABLE 5.2

Non-Cancer Toxicity Data -- Inhalation

Site UXO-08 Former Lejeune Cantonment Bazooka Range, Base CS Chamber, and NBC Training Trail

MCB Camp Lejeune, North Carolina

Chemical of Potential Concern	Chronic/ Subchronic	Value Inhalation RfC	Units	Primary Target Organ	Combined Uncertainty/Modifying Factors	Sources of RfC:RfD: Target Organ (1)	Dates (2) (MM/DD/YY)
Benzo(a)anthracene	Chronic Subchronic	NA NA					
Benzo(a)pyrene	Chronic Subchronic	NA NA					
Benzo(b)fluoranthene	Chronic Subchronic	NA NA					
Benzo(k)fluoranthene	Chronic Subchronic	NA NA					
Indeno(1,2,3-cd)pyrene	Chronic Subchronic	NA NA					
Antimony	Chronic Subchronic	NA NA					
Arsenic	Chronic Subchronic	1.5E-05 N/A	mg/m^3 N/A	Developmental, Cardiovascular, Nervous System N/A	3/1 N/A	Cal EPA N/A	6/16/09 N/A
Chromium	Chronic Subchronic	1.0E-04 NA	mg/m^3 NA	Respiratory System NA	300/1 NA	IRIS NA	02/28/11 NA

(1) HEAST, Alternative Methods used as source of barium values.

(2) For IRIS values, provide the date IRIS was searched.

For HEAST values, the date of HEAST document.

For Cal EPA values, the date Cal EPA database was searched.

NA = Not Available

IRIS = Integrated Risk Information System

Cal EPA = California EPA

TABLE 6.1

Cancer Toxicity Data -- Oral/Dermal

Site UXO-08 Former Lejeune Cantonment Bazooka Range, Base CS Chamber, and NBC Training Trail

MCB Camp Lejeune, North Carolina

Chemical of Potential Concern	Oral Cancer Slope Factor	Oral to Dermal Adjustment Factor	Adjusted Dermal Cancer Slope Factor (1)	Units	EPA Carcinogen Group	Source	Date (2) (MM/DD/YY)
Benzo(a)anthracene	7.3E-01	58-89%	7.3E-01	$(mg/kg\text{-}day)^{-1}$	B2	IRIS	2/28/2011
Benzo(a)pyrene	7.3E+00	58-89%	7.3E+00	$(mg/kg\text{-}day)^{-1}$	B2	IRIS	2/28/2011
Benzo(b)fluoranthene	7.3E-01	58-89%	7.3E-01	$(mg/kg\text{-}day)^{-1}$	B2	IRIS	2/28/2011
Benzo(k)fluoranthene	7.3E-02	58-89%	7.3E-02	$(mg/kg\text{-}day)^{-1}$	B2	IRIS	2/28/2011
Indeno(1,2,3-cd)pyrene	7.3E-01	58-89%	7.3E-01	$(mg/kg\text{-}day)^{-1}$	B2	IRIS	2/28/2011
Antimony	NA		NA				
Arsenic	1.5E+00	95%	1.5E+00	$(mg/kg\text{-}day)^{-1}$	A	IRIS	2/28/2011
Chromium (VI)	5.0E-01	2.5%	2.0E+01	$(mg/kg\text{-}day)^{-1}$	D	New Jersey	2/28/2011

NA = Not available/not applicable
IRIS = Integrated Risk Information System
New Jersey = New Jersey EPA
Toxicity values for m-xylene used as surrogate for m- and p-Xylenes.
Toxicity values for hexavalent chromium used for chromium.

(1) Dermal Cancer Slope Factor = Oral Cancer Slope factor divided by Oral to Dermal Adjustment factor. If not available or greater than 50%, assumed Adjusment Factor of 100%.
(2) For IRIS values, the date IRIS was searched.
For New Jersey values, provide data New Jersey EPA website accessed.

EPA Carcinogen Group:
A - Human carcinogen
A2 - Suspected human carcinogen
B1 - Probable human carcinogen - indicates that limited human data are available
B2 - Probable human carcinogen - indicates sufficient evidence in animals and inadequate or no evidence in humans
C - Possible human carcinogen
D - Not classifiable as a human carcinogen
E - Evidence of noncarcinogenicity

TABLE 6.2

Cancer Toxicity Data -- Inhalation

Site UXO-08 Former Lejeune Cantonment Bazooka Range, Base CS Chamber, and NBC Training Trail

MCB Camp Lejeune, North Carolina

Chemical of Potential Concern	Unit Risk	Units	Weight of Evidence/ Cancer Guidance Description	Source	Date (1) (MM/DD/YY)
Benzo(a)anthracene	1.1E-04	$(\mu g/m^3)^{-1}$	2A	Cal EPA	2/28/2011
Benzo(a)pyrene	1.1E-03	$(\mu g/m^3)^{-1}$	2A	Cal EPA	2/28/2011
Benzo(b)fluoranthene	1.1E-04	$(\mu g/m^3)^{-1}$	2B	Cal EPA	2/28/2011
Benzo(k)fluoranthene	1.1E-04	$(\mu g/m^3)^{-1}$	2B	Cal EPA	2/28/2011
Indeno(1,2,3-cd)pyrene	1.1E-04	$(\mu g/m^3)^{-1}$	B2	Cal EPA	2/28/2011
Antimony	NA				
Arsenic	4.3E-03	$(\mu g/m^3)^{-1}$	A	IRIS	2/28/2011
Chromium (VI)	8.4E-02	$(\mu g/m^3)^{-1}$	A	IRIS	2/28/2011

IRIS = Integrated Risk Information System

Cal EPA = California EPA

NA = Not available/not applicable

(1) For IRIS values, the date IRIS was searched.

For Cal EPA values, the date Cal EPA database was searched.

Toxicity values for hexavalent chromium used for chromium.

EPA Carcinogen Group:

A - Human carcinogen

A2 - Suspected human carcinogen

B1 - Probable human carcinogen - indicates that limited human data are available

B2 - Probable human carcinogen - indicates sufficient evidence in animals and inadequate or no evidence in humans

C - Possible human carcinogen

D - Not classifiable as a human carcinogen

E - Evidence of noncarcinogenicity

TABLE 7.1.RME

Calculation of Chemical Cancer Risks and Non-Cancer Hazards - Reasonable Maximum Exposure

Site UXO-08 Former Lejeune Cantonment Bazooka Range, Base CS Chamber, and NBC Training Trail

MCB Camp Lejeune, North Carolina

Scenario Timeframe: Current/Future
Receptor Population: Industrial Worker
Receptor Age: Adult

Medium	Exposure Medium	Exposure Point	Exposure Route	Chemical of Potential Concern	EPC		Cancer Risk Calculations					Non-Cancer Hazard Calculations				
					Value	Units	Intake/Exposure Concentration		CSF/Unit Risk		Cancer Risk	Intake/Exposure Concentration		RfD/RfC		Hazard Quotient
							Value	Units	Value	Units		Value	Units	Value	Units	
Sediment	Sediment	Sediment	Ingestion	Benzo(a)anthracene	7.6E-02	mg/kg	5.3E-10	mg/kg/day	7.3E-01	mg/kg/day	3.9E-10	1.5E-09	mg/kg/day	NA		NA
				Benzo(a)pyrene	6.2E-02	mg/kg	4.3E-10	mg/kg/day	7.3E+00	mg/kg/day	3.2E-09	1.2E-09	mg/kg/day	NA		NA
				Benzo(b)fluoranthene	1.5E-01	mg/kg	1.0E-09	mg/kg/day	7.3E-01	mg/kg/day	7.7E-10	2.9E-09	mg/kg/day	NA		NA
				Benzo(k)fluoranthene	6.6E-02	mg/kg	4.6E-10	mg/kg/day	7.3E-02	mg/kg/day	3.4E-11	1.3E-09	mg/kg/day	NA		NA
				Indeno(1,2,3-cd)pyrene	3.2E-02	mg/kg	2.2E-10	mg/kg/day	7.3E-01	mg/kg/day	1.6E-10	6.3E-10	mg/kg/day	NA		NA
				Antimony	9.6E+00	mg/kg	6.7E-08	mg/kg/day	NA		NA	1.9E-07	mg/kg/day	4.0E-04	mg/kg/day	4.7E-04
				Arsenic	2.3E+02	mg/kg	1.6E-06	mg/kg/day	1.5E+00	mg/kg/day	2.4E-06	4.5E-06	mg/kg/day	3.0E-04	mg/kg/day	1.5E-02
				Chromium	4.7E+01	mg/kg	3.2E-07	mg/kg/day	5.0E-01	mg/kg/day	1.6E-07	9.1E-07	mg/kg/day	3.0E-03	mg/kg/day	3.0E-04
			Exp. Route Total								2.6E-06					1.6E-02
			Dermal[1]	Benzo(a)anthracene	7.6E-02	mg/kg	2.7E-09	mg/kg/day	7.3E-01	mg/kg/day	2.0E-09	7.7E-09	mg/kg/day	NA		NA
				Benzo(a)pyrene	6.2E-02	mg/kg	2.2E-09	mg/kg/day	7.3E+00	mg/kg/day	1.6E-08	6.2E-09	mg/kg/day	NA		NA
				Benzo(b)fluoranthene	1.5E-01	mg/kg	5.4E-09	mg/kg/day	7.3E-01	mg/kg/day	3.9E-09	1.5E-08	mg/kg/day	NA		NA
				Benzo(k)fluoranthene	6.6E-02	mg/kg	2.4E-09	mg/kg/day	7.3E-02	mg/kg/day	1.7E-10	6.6E-09	mg/kg/day	NA		NA
				Indeno(1,2,3-cd)pyrene	3.2E-02	mg/kg	1.2E-09	mg/kg/day	7.3E-01	mg/kg/day	8.4E-10	3.2E-09	mg/kg/day	NA		NA
				Antimony	9.6E+00	mg/kg	2.7E-09	mg/kg/day	NA	mg/kg/day	NA	7.4E-09	mg/kg/day	6.0E-05	mg/kg/day	1.2E-04
				Arsenic	2.3E+02	mg/kg	1.9E-06	mg/kg/day	1.5E+00	mg/kg/day	2.9E-06	5.3E-06	mg/kg/day	3.0E-04	mg/kg/day	1.8E-02
				Chromium	4.7E+01	mg/kg	1.3E-08	mg/kg/day	2.0E+01	mg/kg/day	2.6E-07	3.6E-08	mg/kg/day	7.5E-05	mg/kg/day	4.8E-04
			Exp. Route Total								3.1E-06					1.8E-02
		Exposure Point Total									5.7E-06					3.4E-02
	Exposure Medium Total										5.7E-06					3.4E-02
Sediment Total											5.7E-06					3.4E-02
										Total of Receptor Risks Across All Media	5.7E-06			Total of Receptor Hazards Across All Media		3.4E-02

1. Dermal absorption factors (DABs) used to calculated dermal absorption intake from soil are chemical specific. DABS of 0.13 used for PAHs, 0.03 used for arsenic, and 0.001 for rest of metals.

N/A - not available.

TABLE 7.2.RME

Calculation of Chemical Cancer Risks and Non-Cancer Hazards - Reasonable Maximum Exposure

Site UXO-08 Former Lejeune Cantonment Bazooka Range, Base CS Chamber, and NBC Training Trail

MCB Camp Lejeune, North Carolina

Scenario Timeframe: Current/Future
Receptor Population: Trespasser/Visitor
Receptor Age: Adult

Medium	Exposure Medium	Exposure Point	Exposure Route	Chemical of Potential Concern	EPC		Cancer Risk Calculations					Non-Cancer Hazard Calculations				
					Value	Units	Intake/Exposure Concentration		CSF/Unit Risk		Cancer Risk	Intake/Exposure Concentration		RfD/RfC		Hazard Quotient
							Value	Units	Value	Units		Value	Units	Value	Units	
Sediment	Sediment	Sediment	Ingestion	Benzo(a)anthracene	7.6E-02	mg/kg	2.3E-09	mg/kg/day	7.3E-01	mg/kg/day	1.7E-09	6.7E-09	mg/kg/day	NA		NA
				Benzo(a)pyrene	6.2E-02	mg/kg	1.9E-09	mg/kg/day	7.3E+00	mg/kg/day	1.4E-08	5.5E-09	mg/kg/day	NA		NA
				Benzo(b)fluoranthene	1.5E-01	mg/kg	4.5E-09	mg/kg/day	7.3E-01	mg/kg/day	3.3E-09	1.3E-08	mg/kg/day	NA		NA
				Benzo(k)fluoranthene	6.6E-02	mg/kg	2.0E-09	mg/kg/day	7.3E-02	mg/kg/day	1.5E-10	5.8E-09	mg/kg/day	NA		NA
				Indeno(1,2,3-cd)pyrene	3.2E-02	mg/kg	9.7E-10	mg/kg/day	7.3E-01	mg/kg/day	7.1E-10	2.8E-09	mg/kg/day	NA		NA
				Antimony	9.6E+00	mg/kg	2.9E-07	mg/kg/day	NA		NA	8.5E-07	mg/kg/day	4.0E-04	mg/kg/day	2.1E-03
				Arsenic	2.3E+02	mg/kg	6.9E-06	mg/kg/day	1.5E+00	mg/kg/day	1.0E-05	2.0E-05	mg/kg/day	3.0E-04	mg/kg/day	6.8E-02
				Chromium	4.7E+01	mg/kg	1.4E-06	mg/kg/day	5.0E-01	mg/kg/day	7.0E-07	4.1E-06	mg/kg/day	3.0E-03	mg/kg/day	1.4E-03
			Exp. Route Total								1.1E-05					7.1E-02
			Dermal[1]	Benzo(a)anthracene	7.6E-02	mg/kg	2.0E-08	mg/kg/day	7.3E-01	mg/kg/day	1.5E-08	6.0E-08	mg/kg/day	NA		NA
				Benzo(a)pyrene	6.2E-02	mg/kg	1.7E-08	mg/kg/day	7.3E+00	mg/kg/day	1.2E-07	4.9E-08	mg/kg/day	NA		NA
				Benzo(b)fluoranthene	1.5E-01	mg/kg	4.0E-08	mg/kg/day	7.3E-01	mg/kg/day	2.9E-08	1.2E-07	mg/kg/day	NA		NA
				Benzo(k)fluoranthene	6.6E-02	mg/kg	1.8E-08	mg/kg/day	7.3E-02	mg/kg/day	1.3E-09	5.2E-08	mg/kg/day	NA		NA
				Indeno(1,2,3-cd)pyrene	3.2E-02	mg/kg	8.6E-09	mg/kg/day	7.3E-01	mg/kg/day	6.3E-09	2.5E-08	mg/kg/day	NA		NA
				Antimony	9.6E+00	mg/kg	2.0E-08	mg/kg/day	NA		NA	5.8E-08	mg/kg/day	6.0E-05	mg/kg/day	9.6E-04
				Arsenic	2.3E+02	mg/kg	1.4E-05	mg/kg/day	1.5E+00	mg/kg/day	2.1E-05	4.2E-05	mg/kg/day	3.0E-04	mg/kg/day	1.4E-01
				Chromium	4.7E+01	mg/kg	9.6E-08	mg/kg/day	2.0E+01	mg/kg/day	1.9E-06	2.8E-07	mg/kg/day	7.5E-05	mg/kg/day	3.7E-03
			Exp. Route Total								2.3E-05					1.4E-01
		Exposure Point Total									3.5E-05					2.1E-01
	Exposure Medium Total										3.5E-05					2.1E-01
Sediment Total											3.5E-05					2.1E-01
										Total of Receptor Risks Across All Media	3.5E-05				Total of Receptor Hazards Across All Media	2.1E-01

1. Dermal absorption factors (DABs) used to calculated dermal absorption intake from soil are chemical specific. DABS of 0.13 used for PAHs, 0.03 used for arsenic, and 0.001 for rest of metals.

N/A - not available.

TABLE 7.3.RME

Calculation of Chemical Cancer Risks and Non-Cancer Hazards - Reasonable Maximum Exposure

Site UXO-08 Former Lejeune Cantonment Bazooka Range, Base CS Chamber, and NBC Training Trail

MCB Camp Lejeune, North Carolina

Scenario Timeframe: Current/Future
Receptor Population: Trespasser/Visitor
Receptor Age: Youth

Medium	Exposure Medium	Exposure Point	Exposure Route	Chemical of Potential Concern	EPC		Cancer Risk Calculations					Non-Cancer Hazard Calculations				
					Value	Units	Intake/Exposure Concentration		CSF/Unit Risk		Cancer Risk	Intake/Exposure Concentration		RfD/RfC		Hazard Quotient
							Value	Units	Value	Units		Value	Units	Value	Units	
Sediment	Sediment	Sediment	Ingestion	Benzo(a)anthracene	7.6E-02	mg/kg	1.5E-09	mg/kg/day	7.3E-01	mg/kg/day	1.1E-09	1.0E-08	mg/kg/day	NA		NA
				Benzo(a)pyrene	6.2E-02	mg/kg	1.2E-09	mg/kg/day	7.3E+00	mg/kg/day	8.9E-09	8.5E-09	mg/kg/day	NA		NA
				Benzo(b)fluoranthene	1.5E-01	mg/kg	2.9E-09	mg/kg/day	7.3E-01	mg/kg/day	2.1E-09	2.1E-08	mg/kg/day	NA		NA
				Benzo(k)fluoranthene	6.6E-02	mg/kg	1.3E-09	mg/kg/day	7.3E-02	mg/kg/day	9.4E-11	9.0E-09	mg/kg/day	NA		NA
				Indeno(1,2,3-cd)pyrene	3.2E-02	mg/kg	6.3E-10	mg/kg/day	7.3E-01	mg/kg/day	4.6E-10	4.4E-09	mg/kg/day	NA		NA
				Antimony	9.6E+00	mg/kg	1.9E-07	mg/kg/day	NA		NA	1.3E-06	mg/kg/day	4.0E-04	mg/kg/day	3.3E-03
				Arsenic	2.3E+02	mg/kg	4.5E-06	mg/kg/day	1.5E+00	mg/kg/day	6.8E-06	3.2E-05	mg/kg/day	3.0E-04	mg/kg/day	1.1E-01
				Chromium	4.7E+01	mg/kg	9.1E-07	mg/kg/day	5.0E-01	mg/kg/day	4.5E-07	6.4E-06	mg/kg/day	3.0E-03	mg/kg/day	2.1E-03
			Exp. Route Total								7.2E-06					1.1E-01
			Dermal[1]	Benzo(a)anthracene	7.6E-02	mg/kg	9.7E-09	mg/kg/day	7.3E-01	mg/kg/day	7.1E-09	6.8E-08	mg/kg/day	NA		NA
				Benzo(a)pyrene	6.2E-02	mg/kg	7.9E-09	mg/kg/day	7.3E+00	mg/kg/day	5.8E-08	5.6E-08	mg/kg/day	NA		NA
				Benzo(b)fluoranthene	1.5E-01	mg/kg	1.9E-08	mg/kg/day	7.3E-01	mg/kg/day	1.4E-08	1.3E-07	mg/kg/day	NA		NA
				Benzo(k)fluoranthene	6.6E-02	mg/kg	8.5E-09	mg/kg/day	7.3E-02	mg/kg/day	6.2E-10	5.9E-08	mg/kg/day	NA		NA
				Indeno(1,2,3-cd)pyrene	3.2E-02	mg/kg	4.1E-09	mg/kg/day	7.3E-01	mg/kg/day	3.0E-09	2.9E-08	mg/kg/day	NA		NA
				Antimony	9.6E+00	mg/kg	9.5E-09	mg/kg/day	NA		NA	6.6E-08	mg/kg/day	6.0E-05	mg/kg/day	1.1E-03
				Arsenic	2.3E+02	mg/kg	6.8E-06	mg/kg/day	1.5E+00	mg/kg/day	1.0E-05	4.8E-05	mg/kg/day	3.0E-04	mg/kg/day	1.6E-01
				Chromium	4.7E+01	mg/kg	4.6E-08	mg/kg/day	2.0E+01	mg/kg/day	9.2E-07	3.2E-07	mg/kg/day	7.5E-05	mg/kg/day	4.3E-03
			Exp. Route Total								1.1E-05					1.6E-01
		Exposure Point Total									1.8E-05					2.7E-01
	Exposure Medium Total										1.8E-05					2.7E-01
Sediment Total											1.8E-05					2.7E-01
										Total of Receptor Risks Across All Media	1.8E-05			Total of Receptor Hazards Across All Media		2.7E-01

1. Dermal absorption factors (DABs) used to calculated dermal absorption intake from soil are chemical specific. DABS of 0.13 used for PAHs, 0.03 used for arsenic, and 0.001 for rest of metals.

N/A - not available.

TABLE 7.4.RME

Calculation of Chemical Cancer Risks and Non-Cancer Hazards - Reasonable Maximum Exposure

Site UXO-08 Former Lejeune Cantonment Bazooka Range, Base CS Chamber, and NBC Training Trail

MCB Camp Lejeune, North Carolina

Scenario Timeframe: Current/Future
Receptor Population: Trespasser/Visitor
Receptor Age: Child

Medium	Exposure Medium	Exposure Point	Exposure Route	Chemical of Potential Concern	EPC		Cancer Risk Calculations					Non-Cancer Hazard Calculations				
					Value	Units	Intake/Exposure Concentration		CSF/Unit Risk		Cancer Risk	Intake/Exposure Concentration		RfD/RfC		Hazard Quotient
							Value	Units	Value	Units		Value	Units	Value	Units	
Sediment	Sediment	Sediment	Ingestion	Benzo(a)anthracene	7.6E-02	mg/kg	5.4E-09	mg/kg/day	7.3E-01	mg/kg/day	3.9E-09	6.2E-08	mg/kg/day	NA		NA
				Benzo(a)pyrene	6.2E-02	mg/kg	4.4E-09	mg/kg/day	7.3E+00	mg/kg/day	3.2E-08	5.1E-08	mg/kg/day	NA		NA
				Benzo(b)fluoranthene	1.5E-01	mg/kg	1.1E-08	mg/kg/day	7.3E-01	mg/kg/day	7.7E-09	1.2E-07	mg/kg/day	NA		NA
				Benzo(k)fluoranthene	6.6E-02	mg/kg	4.6E-09	mg/kg/day	7.3E-02	mg/kg/day	3.4E-10	5.4E-08	mg/kg/day	NA		NA
				Indeno(1,2,3-cd)pyrene	3.2E-02	mg/kg	2.3E-09	mg/kg/day	7.3E-01	mg/kg/day	1.6E-09	2.6E-08	mg/kg/day	NA		NA
				Antimony	9.6E+00	mg/kg	6.8E-07	mg/kg/day	NA		NA	7.9E-06	mg/kg/day	4.0E-04	mg/kg/day	2.0E-02
				Arsenic	2.3E+02	mg/kg	1.6E-05	mg/kg/day	1.5E+00	mg/kg/day	2.4E-05	1.9E-04	mg/kg/day	3.0E-04	mg/kg/day	6.3E-01
				Chromium	4.7E+01	mg/kg	3.3E-06	mg/kg/day	5.0E-01	mg/kg/day	1.6E-06	3.8E-05	mg/kg/day	3.0E-03	mg/kg/day	1.3E-02
			Exp. Route Total								2.6E-05					6.6E-01
			Dermal[1]	Benzo(a)anthracene	7.6E-02	mg/kg	3.9E-09	mg/kg/day	7.3E-01	mg/kg/day	2.8E-09	4.5E-08	mg/kg/day	NA		NA
				Benzo(a)pyrene	6.2E-02	mg/kg	3.2E-09	mg/kg/day	7.3E+00	mg/kg/day	2.3E-08	3.7E-08	mg/kg/day	NA		NA
				Benzo(b)fluoranthene	1.5E-01	mg/kg	7.7E-09	mg/kg/day	7.3E-01	mg/kg/day	5.6E-09	9.0E-08	mg/kg/day	NA		NA
				Benzo(k)fluoranthene	6.6E-02	mg/kg	3.4E-09	mg/kg/day	7.3E-02	mg/kg/day	2.5E-10	3.9E-08	mg/kg/day	NA		NA
				Indeno(1,2,3-cd)pyrene	3.2E-02	mg/kg	1.6E-09	mg/kg/day	7.3E-01	mg/kg/day	1.2E-09	1.9E-08	mg/kg/day	NA		NA
				Antimony	9.6E+00	mg/kg	3.8E-09	mg/kg/day	NA		NA	4.4E-08	mg/kg/day	6.0E-05	mg/kg/day	7.4E-04
				Arsenic	2.3E+02	mg/kg	2.7E-06	mg/kg/day	1.5E+00	mg/kg/day	4.1E-06	3.2E-05	mg/kg/day	3.0E-04	mg/kg/day	1.1E-01
				Chromium	4.7E+01	mg/kg	1.8E-08	mg/kg/day	2.0E+01	mg/kg/day	3.7E-07	2.1E-07	mg/kg/day	7.5E-05	mg/kg/day	2.9E-03
			Exp. Route Total								4.5E-06					1.1E-01
		Exposure Point Total									3.0E-05					7.7E-01
	Exposure Medium Total										3.0E-05					7.7E-01
Sediment Total											3.0E-05					7.7E-01
										Total of Receptor Risks Across All Media	3.0E-05			Total of Receptor Hazards Across All Media		7.7E-01

1. Dermal absorption factors (DABs) used to calculated dermal absorption intake from soil are chemical specific. DABS of 0.13 used for PAHs, 0.03 used for arsenic, and 0.001 for rest of metals.

N/A - not available.

TABLE 7.5.RME

Calculation of Chemical Cancer Risks and Non-Cancer Hazards - Reasonable Maximum Exposure

Site UXO-08 Former Lejeune Cantonment Bazooka Range, Base CS Chamber, and NBC Training Trail

MCB Camp Lejeune, North Carolina

Scenario Timeframe: Future
Receptor Population: Industrial Worker
Receptor Age: Adult

Medium	Exposure Medium	Exposure Point	Exposure Route	Chemical of Potential Concern	EPC		Cancer Risk Calculations					Non-Cancer Hazard Calculations				
					Value	Units	Intake/Exposure Concentration		CSF/Unit Risk		Cancer Risk	Intake/Exposure Concentration		RfD/RfC		Hazard Quotient
							Value	Units	Value	Units		Value	Units	Value	Units	
Sediment	Sediment	Sediment	Ingestion	Benzo(a)anthracene	7.6E-02	mg/kg	5.3E-10	mg/kg/day	7.3E-01	mg/kg/day	3.9E-10	1.5E-09	mg/kg/day	NA		NA
				Benzo(a)pyrene	6.2E-02	mg/kg	4.3E-10	mg/kg/day	7.3E+00	mg/kg/day	3.2E-09	1.2E-09	mg/kg/day	NA		NA
				Benzo(b)fluoranthene	1.5E-01	mg/kg	1.0E-09	mg/kg/day	7.3E-01	mg/kg/day	7.7E-10	2.9E-09	mg/kg/day	NA		NA
				Benzo(k)fluoranthene	6.6E-02	mg/kg	4.6E-10	mg/kg/day	7.3E-02	mg/kg/day	3.4E-11	1.3E-09	mg/kg/day	NA		NA
				Indeno(1,2,3-cd)pyrene	3.2E-02	mg/kg	2.2E-10	mg/kg/day	7.3E-01	mg/kg/day	1.6E-10	6.3E-10	mg/kg/day	NA		NA
				Antimony	9.6E+00	mg/kg	6.7E-08	mg/kg/day	NA		NA	1.9E-07	mg/kg/day	4.0E-04	mg/kg/day	4.7E-04
				Arsenic	2.3E+02	mg/kg	1.6E-06	mg/kg/day	1.5E+00	mg/kg/day	2.4E-06	4.5E-06	mg/kg/day	3.0E-04	mg/kg/day	1.5E-02
				Chromium	4.7E+01	mg/kg	3.2E-07	mg/kg/day	5.0E-01	mg/kg/day	1.6E-07	9.1E-07	mg/kg/day	3.0E-03	mg/kg/day	3.0E-04
			Exp. Route Total								2.6E-06					1.6E-02
			Dermal[1]	Benzo(a)anthracene	7.6E-02	mg/kg	2.7E-09	mg/kg/day	7.3E-01	mg/kg/day	2.0E-09	7.7E-09	mg/kg/day	NA		NA
				Benzo(a)pyrene	6.2E-02	mg/kg	2.2E-09	mg/kg/day	7.3E+00	mg/kg/day	1.6E-08	6.2E-09	mg/kg/day	NA		NA
				Benzo(b)fluoranthene	1.5E-01	mg/kg	5.4E-09	mg/kg/day	7.3E-01	mg/kg/day	3.9E-09	1.5E-08	mg/kg/day	NA		NA
				Benzo(k)fluoranthene	6.6E-02	mg/kg	2.4E-09	mg/kg/day	7.3E-02	mg/kg/day	1.7E-10	6.6E-09	mg/kg/day	NA		NA
				Indeno(1,2,3-cd)pyrene	3.2E-02	mg/kg	1.2E-09	mg/kg/day	7.3E-01	mg/kg/day	8.4E-10	3.2E-09	mg/kg/day	NA		NA
				Antimony	9.6E+00	mg/kg	2.7E-09	mg/kg/day	NA	mg/kg/day	NA	7.4E-09	mg/kg/day	6.0E-05	mg/kg/day	1.2E-04
				Arsenic	2.3E+02	mg/kg	1.9E-06	mg/kg/day	1.5E+00	mg/kg/day	2.9E-06	5.3E-06	mg/kg/day	3.0E-04	mg/kg/day	1.8E-02
				Chromium	4.7E+01	mg/kg	1.3E-08	mg/kg/day	2.0E+01	mg/kg/day	2.6E-07	3.6E-08	mg/kg/day	7.5E-05	mg/kg/day	4.8E-04
			Exp. Route Total								3.1E-06					1.8E-02
		Exposure Point Total									5.7E-06					3.4E-02
	Exposure Medium Total										5.7E-06					3.4E-02
Sediment Total											5.7E-06					3.4E-02
										Total of Receptor Risks Across All Media	5.7E-06				Total of Receptor Hazards Across All Media	3.4E-02

1. Dermal absorption factors (DABs) used to calculated dermal absorption intake from soil are chemical specific. DABS of 0.13 used for PAHs, 0.03 used for arsenic, and 0.001 for rest of metals.

N/A - not available.

TABLE 7.6.RME

Calculation of Chemical Cancer Risks and Non-Cancer Hazards - Reasonable Maximum Exposure

Site UXO-08 Former Lejeune Cantonment Bazooka Range, Base CS Chamber, and NBC Training Trail

MCB Camp Lejeune, North Carolina

Scenario Timeframe: Future
Receptor Population: Construction Worker
Receptor Age: Adult

Medium	Exposure Medium	Exposure Point	Exposure Route	Chemical of Potential Concern	EPC		Cancer Risk Calculations					Non-Cancer Hazard Calculations				
					Value	Units	Intake/Exposure Concentration		CSF/Unit Risk		Cancer Risk	Intake/Exposure Concentration		RfD/RfC		Hazard Quotient
							Value	Units	Value	Units		Value	Units	Value	Units	
Sediment	Sediment	Sediment	Ingestion	Benzo(a)anthracene	7.6E-02	mg/kg	6.3E-10	mg/kg/day	7.3E-01	mg/kg/day	4.6E-10	4.4E-08	mg/kg/day	NA		NA
				Benzo(a)pyrene	6.2E-02	mg/kg	5.2E-10	mg/kg/day	7.3E+00	mg/kg/day	3.8E-09	3.6E-08	mg/kg/day	NA		NA
				Benzo(b)fluoranthene	1.5E-01	mg/kg	1.2E-09	mg/kg/day	7.3E-01	mg/kg/day	9.1E-10	8.7E-08	mg/kg/day	NA		NA
				Benzo(k)fluoranthene	6.6E-02	mg/kg	5.5E-10	mg/kg/day	7.3E-02	mg/kg/day	4.0E-11	3.8E-08	mg/kg/day	NA		NA
				Indeno(1,2,3-cd)pyrene	3.2E-02	mg/kg	2.7E-10	mg/kg/day	7.3E-01	mg/kg/day	1.9E-10	1.9E-08	mg/kg/day	NA		NA
				Antimony	9.6E+00	mg/kg	8.0E-08	mg/kg/day	NA		NA	5.6E-06	mg/kg/day	4.0E-04	mg/kg/day	1.4E-02
				Arsenic	2.3E+02	mg/kg	1.9E-06	mg/kg/day	1.5E+00	mg/kg/day	2.9E-06	1.3E-04	mg/kg/day	3.0E-04	mg/kg/day	4.5E-01
				Chromium	4.7E+01	mg/kg	3.9E-07	mg/kg/day	5.0E-01	mg/kg/day	1.9E-07	2.7E-05	mg/kg/day	2.0E-02	mg/kg/day	1.4E-03
			Exp. Route Total								3.1E-06					4.6E-01
			Dermal[1]	Benzo(a)anthracene	7.6E-02	mg/kg	6.8E-10	mg/kg/day	7.3E-01	mg/kg/day	5.0E-10	4.7E-08	mg/kg/day	NA		NA
				Benzo(a)pyrene	6.2E-02	mg/kg	5.5E-10	mg/kg/day	7.3E+00	mg/kg/day	4.0E-09	3.9E-08	mg/kg/day	NA		NA
				Benzo(b)fluoranthene	1.5E-01	mg/kg	1.3E-09	mg/kg/day	7.3E-01	mg/kg/day	9.8E-10	9.4E-08	mg/kg/day	NA		NA
				Benzo(k)fluoranthene	6.6E-02	mg/kg	5.9E-10	mg/kg/day	7.3E-02	mg/kg/day	4.3E-11	4.1E-08	mg/kg/day	NA		NA
				Indeno(1,2,3-cd)pyrene	3.2E-02	mg/kg	2.9E-10	mg/kg/day	7.3E-01	mg/kg/day	2.1E-10	2.0E-08	mg/kg/day	NA		NA
				Antimony	9.6E+00	mg/kg	6.6E-10	mg/kg/day	NA		NA	4.6E-08	mg/kg/day	6.0E-05	mg/kg/day	7.7E-04
				Arsenic	2.3E+02	mg/kg	4.7E-07	mg/kg/day	1.5E+00	mg/kg/day	7.1E-07	3.3E-05	mg/kg/day	3.0E-04	mg/kg/day	1.1E-01
				Chromium	4.7E+01	mg/kg	3.2E-09	mg/kg/day	2.0E+01	mg/kg/day	6.4E-08	2.2E-07	mg/kg/day	5.0E-04	mg/kg/day	4.5E-04
			Exp. Route Total								7.8E-07					1.1E-01
		Exposure Point Total									3.8E-06					5.7E-01
	Exposure Medium Total										3.8E-06					5.7E-01
Sediment Total											3.8E-06					5.7E-01
										Total of Receptor Risks Across All Media	3.8E-06			Total of Receptor Hazards Across All Media		5.7E-01

1. Dermal absorption factors (DABs) used to calculated dermal absorption intake from soil are chemical specific. DABS of 0.13 used for PAHs, 0.03 used for arsenic, and 0.001 for rest of metals.

N/A - not available.

TABLE 9.1.RME

Summary of Receptor Risks and Hazards for COPCs - Reasonable Maximum Exposure

Site UXO-08 Former Lejeune Cantonment Bazooka Range, Base CS Chamber, and NBC Training Trail

MCB Camp Lejeune, North Carolina

Scenario Timeframe: Current/Future
Receptor Population: Industrial Worker
Receptor Age: Adult

Medium	Exposure Medium	Exposure Point	Chemical of Potential Concern	Carcinogenic Risk				Non-Carcinogenic Hazard Quotient				
				Ingestion	Inhalation	Dermal	Exposure Routes Total	Primary Target Organ(s)	Ingestion	Inhalation	Dermal	Exposure Routes Total
Sediment	Sediment	Sediment	Benzo(a)anthracene	3.9E-10	NA	2.0E-09	2.4E-09		NA	NA	NA	0.0E+00
			Benzo(a)pyrene	3.2E-09	NA	1.6E-08	1.9E-08		NA	NA	NA	0.0E+00
			Benzo(b)fluoranthene	7.7E-10	NA	3.9E-09	4.7E-09		NA	NA	NA	0.0E+00
			Benzo(k)fluoranthene	3.4E-11	NA	1.7E-10	2.1E-10		NA	NA	NA	0.0E+00
			Indeno(1,2,3-cd)pyrene	1.6E-10	NA	8.4E-10	1.0E-09		NA	NA	NA	0.0E+00
			Antimony	NA	NA	NA	0.0E+00	Longevity, Blood	4.7E-04	NA	1.2E-04	5.9E-04
			Arsenic	2.4E-06	NA	2.9E-06	5.3E-06	Skin, Vascular	1.5E-02	NA	1.8E-02	3.3E-02
			Chromium	1.6E-07	NA	2.6E-07	4.2E-07	Not Identified	3.0E-04	NA	4.8E-04	7.8E-04
			Chemical Total	2.6E-06	0.0E+00	3.1E-06	5.7E-06		1.6E-02	0.0E+00	1.8E-02	3.4E-02
		Exposure Point Total					5.7E-06					3.4E-02
	Exposure Medium Total						5.7E-06					3.4E-02
Medium Total							5.7E-06					3.4E-02
Receptor Total							5.7E-06				Receptor HI Total	3.4E-02

Total Blood HI Across All Media =	5.9E-04
Total Longevity HI Across All Media =	5.9E-04
Total Skin HI Across All Media =	3.3E-02
Total Vascular HI Across All Media =	3.3E-02

TABLE 9.2.RME

Summary of Receptor Risks and Hazards for COPCs - Reasonable Maximum Exposure

Site UXO-08 Former Lejeune Cantonment Bazooka Range, Base CS Chamber, and NBC Training Trail

MCB Camp Lejeune, North Carolina

Scenario Timeframe: Current/Future
Receptor Population: Trespasser/Visitor
Receptor Age: Adult

Medium	Exposure Medium	Exposure Point	Chemical of Potential Concern	Carcinogenic Risk				Non-Carcinogenic Hazard Quotient				
				Ingestion	Inhalation	Dermal	Exposure Routes Total	Primary Target Organ(s)	Ingestion	Inhalation	Dermal	Exposure Routes Total
Sediment	Sediment	Sediment	Benzo(a)anthracene	1.7E-09	NA	1.5E-08	1.7E-08		NA	NA	NA	0.0E+00
			Benzo(a)pyrene	1.4E-08	NA	1.2E-07	1.4E-07		NA	NA	NA	0.0E+00
			Benzo(b)fluoranthene	3.3E-09	NA	2.9E-08	3.3E-08		NA	NA	NA	0.0E+00
			Benzo(k)fluoranthene	1.5E-10	NA	1.3E-09	1.4E-09		NA	NA	NA	0.0E+00
			Indeno(1,2,3-cd)pyrene	7.1E-10	NA	6.3E-09	7.0E-09		NA	NA	NA	0.0E+00
			Antimony	NA	NA	NA	0.0E+00	Longevity, Blood	2.1E-03	NA	9.6E-04	3.1E-03
			Arsenic	1.0E-05	NA	2.1E-05	3.2E-05	Skin, Vascular	6.8E-02	NA	1.4E-01	2.1E-01
			Chromium	7.0E-07	NA	1.9E-06	2.6E-06	Not Identified	1.4E-03	NA	3.7E-03	5.1E-03
			Chemical Total	1.1E-05	0.0E+00	2.3E-05	3.5E-05		7.1E-02	0.0E+00	1.4E-01	2.1E-01
		Exposure Point Total					3.5E-05					2.1E-01
	Exposure Medium Total						3.5E-05					2.1E-01
Medium Total							3.5E-05					2.1E-01
Receptor Total							3.5E-05				Receptor HI Total	2.1E-01

Total Blood HI Across All Media =	3.1E-03
Total Longevity HI Across All Media =	3.1E-03
Total Skin HI Across All Media =	2.1E-01
Total Vascular HI Across All Media =	2.1E-01

TABLE 9.3.RME

Summary of Receptor Risks and Hazards for COPCs - Reasonable Maximum Exposure

Site UXO-08 Former Lejeune Cantonment Bazooka Range, Base CS Chamber, and NBC Training Trail

MCB Camp Lejeune, North Carolina

Scenario Timeframe: Current/Future
Receptor Population: Trespasser/Visitor
Receptor Age: Youth

Medium	Exposure Medium	Exposure Point	Chemical of Potential Concern	Carcinogenic Risk				Non-Carcinogenic Hazard Quotient				
				Ingestion	Inhalation	Dermal	Exposure Routes Total	Primary Target Organ(s)	Ingestion	Inhalation	Dermal	Exposure Routes Total
Sediment	Sediment	Sediment	Benzo(a)anthracene	1.1E-09	NA	7.1E-09	8.2E-09		NA	NA	NA	0.0E+00
			Benzo(a)pyrene	8.9E-09	NA	5.8E-08	6.7E-08		NA	NA	NA	0.0E+00
			Benzo(b)fluoranthene	2.1E-09	NA	1.4E-08	1.6E-08		NA	NA	NA	0.0E+00
			Benzo(k)fluoranthene	9.4E-11	NA	6.2E-10	7.1E-10		NA	NA	NA	0.0E+00
			Indeno(1,2,3-cd)pyrene	4.6E-10	NA	3.0E-09	3.5E-09		NA	NA	NA	0.0E+00
			Antimony	NA	NA	NA	0.0E+00	Longevity, Blood	3.3E-03	NA	1.1E-03	4.4E-03
			Arsenic	6.8E-06	NA	1.0E-05	1.7E-05	Skin, Vascular	1.1E-01	NA	1.6E-01	2.6E-01
			Chromium	4.5E-07	NA	9.2E-07	1.4E-06	Not Identified	2.1E-03	NA	4.3E-03	6.4E-03
			Chemical Total	7.2E-06	0.0E+00	1.1E-05	1.8E-05		1.1E-01	0.0E+00	1.6E-01	2.7E-01
		Exposure Point Total					1.8E-05					2.7E-01
	Exposure Medium Total						1.8E-05					2.7E-01
Medium Total							1.8E-05					2.7E-01
Receptor Total							1.8E-05				Receptor HI Total	2.7E-01

Total Blood HI Across All Media =	4.4E-03
Total Longevity HI Across All Media =	4.4E-03
Total Skin HI Across All Media =	2.6E-01
Total Vascular HI Across All Media =	2.6E-01

TABLE 9.4.RME

SUMMARY OF RECEPTOR RISKS AND HAZARDS FOR COPCs

Site UXO-08 Former Lejeune Cantonment Bazooka Range, Base CS Chamber, and NBC Training Trail

MCB Camp Lejeune, North Carolina

Scenario Timeframe: Current/Future
Receptor Population: Trespasser/Visitor
Receptor Age: Child

Medium	Exposure Medium	Exposure Point	Chemical of Potential Concern	Carcinogenic Risk				Non-Carcinogenic Hazard Quotient				
				Ingestion	Inhalation	Dermal	Exposure Routes Total	Primary Target Organ(s)	Ingestion	Inhalation	Dermal	Exposure Routes Total
Sediment	Sediment	Sediment	Benzo(a)anthracene	3.9E-09	NA	2.8E-09	6.8E-09		NA	NA	NA	0.0E+00
			Benzo(a)pyrene	3.2E-08	NA	2.3E-08	5.5E-08		NA	NA	NA	0.0E+00
			Benzo(b)fluoranthene	7.7E-09	NA	5.6E-09	1.3E-08		NA	NA	NA	0.0E+00
			Benzo(k)fluoranthene	3.4E-10	NA	2.5E-10	5.9E-10		NA	NA	NA	0.0E+00
			Indeno(1,2,3-cd)pyrene	1.6E-09	NA	1.2E-09	2.8E-09		NA	NA	NA	0.0E+00
			Antimony	NA	NA	NA	0.0E+00	Longevity, Blood	2.0E-02	NA	7.4E-04	2.0E-02
			Arsenic	2.4E-05	NA	4.1E-06	2.8E-05	Skin, Vascular	6.3E-01	NA	1.1E-01	7.4E-01
			Chromium	1.6E-06	NA	3.7E-07	2.0E-06	Not Identified	1.3E-02	NA	2.9E-03	1.6E-02
			Chemical Total	2.6E-05	0.0E+00	4.5E-06	3.0E-05		6.6E-01	0.0E+00	1.1E-01	7.7E-01
		Exposure Point Total					3.0E-05					7.7E-01
	Exposure Medium Total						3.0E-05					7.7E-01
Medium Total							3.0E-05					7.7E-01
Receptor Total							3.0E-05				Receptor HI Total	7.7E-01

Total Blood HI Across All Media =	2.0E-02
Total Longevity HI Across All Media =	2.0E-02
Total Skin HI Across All Media =	7.4E-01
Total Vascular HI Across All Media =	7.4E-01

TABLE 9.5.RME

Summary of Receptor Risks and Hazards for COPCs - Reasonable Maximum Exposure

Site UXO-08 Former Lejeune Cantonment Bazooka Range, Base CS Chamber, and NBC Training Trail

MCB Camp Lejeune, North Carolina

Scenario Timeframe: Future
Receptor Population: Industrial Worker
Receptor Age: Adult

Medium	Exposure Medium	Exposure Point	Chemical of Potential Concern	Carcinogenic Risk				Non-Carcinogenic Hazard Quotient				
				Ingestion	Inhalation	Dermal	Exposure Routes Total	Primary Target Organ(s)	Ingestion	Inhalation	Dermal	Exposure Routes Total
Sediment	Sediment	Sediment	Benzo(a)anthracene	3.9E-10	NA	2.0E-09	2.4E-09		NA	NA	NA	0.0E+00
			Benzo(a)pyrene	3.2E-09	NA	1.6E-08	1.9E-08		NA	NA	NA	0.0E+00
			Benzo(b)fluoranthene	7.7E-10	NA	3.9E-09	4.7E-09		NA	NA	NA	0.0E+00
			Benzo(k)fluoranthene	3.4E-11	NA	1.7E-10	2.1E-10		NA	NA	NA	0.0E+00
			Indeno(1,2,3-cd)pyrene	1.6E-10	NA	8.4E-10	1.0E-09		NA	NA	NA	0.0E+00
			Antimony	NA	NA	NA	0.0E+00	Longevity, Blood	4.7E-04	NA	1.2E-04	5.9E-04
			Arsenic	2.4E-06	NA	2.9E-06	5.3E-06	Skin, Vascular	1.5E-02	NA	1.8E-02	3.3E-02
			Chromium	1.6E-07	NA	2.6E-07	4.2E-07	Not Identified	3.0E-04	NA	4.8E-04	7.8E-04
			Chemical Total	2.6E-06	0.0E+00	3.1E-06	5.7E-06		1.6E-02	0.0E+00	1.8E-02	3.4E-02
		Exposure Point Total					5.7E-06					3.4E-02
	Exposure Medium Total						5.7E-06					3.4E-02
Medium Total							5.7E-06					3.4E-02
Receptor Total							5.7E-06				Receptor HI Total	3.4E-02

Total Blood HI Across All Media =	5.9E-04
Total Longevity HI Across All Media =	5.9E-04
Total Skin HI Across All Media =	3.3E-02
Total Vascular HI Across All Media =	3.3E-02

TABLE 9.6.RME

Summary of Receptor Risks and Hazards for COPCs - Reasonable Maximum Exposure

Site UXO-08 Former Lejeune Cantonment Bazooka Range, Base CS Chamber, and NBC Training Trail

MCB Camp Lejeune, North Carolina

Scenario Timeframe: Future
Receptor Population: Construction Worker
Receptor Age: Adult

Medium	Exposure Medium	Exposure Point	Chemical of Potential Concern	Carcinogenic Risk				Non-Carcinogenic Hazard Quotient				
				Ingestion	Inhalation	Dermal	Exposure Routes Total	Primary Target Organ(s)	Ingestion	Inhalation	Dermal	Exposure Routes Total
Sediment	Sediment	Sediment	Benzo(a)anthracene	4.6E-10	NA	5.0E-10	9.6E-10		NA	NA	NA	0.0E+00
			Benzo(a)pyrene	3.8E-09	NA	4.0E-09	7.8E-09		NA	NA	NA	0.0E+00
			Benzo(b)fluoranthene	9.1E-10	NA	9.8E-10	1.9E-09		NA	NA	NA	0.0E+00
			Benzo(k)fluoranthene	4.0E-11	NA	4.3E-11	8.3E-11		NA	NA	NA	0.0E+00
			Indeno(1,2,3-cd)pyrene	1.9E-10	NA	2.1E-10	4.0E-10		NA	NA	NA	0.0E+00
			Antimony	NA	NA	NA	0.0E+00	Whole Body, Blood	1.4E-02	NA	7.7E-04	1.5E-02
			Arsenic	2.9E-06	NA	7.1E-07	3.6E-06	Skin, Vascular	4.5E-01	NA	1.1E-01	5.6E-01
			Chromium	1.9E-07	NA	6.4E-08	2.6E-07	Not Identified	1.4E-03	NA	4.5E-04	1.8E-03
			Chemical Total	3.1E-06	0.0E+00	7.8E-07	3.8E-06		4.6E-01	0.0E+00	1.1E-01	5.7E-01
		Exposure Point Total					3.8E-06					5.7E-01
	Exposure Medium Total						3.8E-06					5.7E-01
Medium Total							3.8E-06					5.7E-01
Receptor Total							3.8E-06				Receptor HI Total	5.7E-01

Total Blood HI Across All Media =	1.5E-02
Total Whole Body HI Across All Media =	1.5E-02
Total Skin HI Across All Media =	5.6E-01
Total Vascular HI Across All Media =	5.6E-01

Appendix K
Pro UCL Data

	A	B	C	D	E	F	G	H	I	J	K	L
1				General UCL Statistics for Data Sets with Non-Detects								
2			User Selected Options									
3			From File	C:\Documents and Settings\rwarren\Desktop\prouclinput.wst								
4			Full Precision	OFF								
5			Confidence Coefficient	95%								
6			Number of Bootstrap Operations	2000								
7												
8												
9	Arsenic											
10												
11				General Statistics								
12			Number of Valid Observations			12			Number of Distinct Observations			10
13												
14			Raw Statistics						Log-transformed Statistics			
15			Minimum			0.83			Minimum of Log Data			-0.186
16			Maximum			8			Maximum of Log Data			2.079
17			Mean			2.761			Mean of log Data			0.817
18			Median			2.5			SD of log Data			0.655
19			SD			1.953						
20			Coefficient of Variation			0.708						
21			Skewness			1.856						
22												
23				Relevant UCL Statistics								
24			Normal Distribution Test						Lognormal Distribution Test			
25			Shapiro Wilk Test Statistic			0.818			Shapiro Wilk Test Statistic			0.962
26			Shapiro Wilk Critical Value			0.859			Shapiro Wilk Critical Value			0.859
27			Data not Normal at 5% Significance Level						Data appear Lognormal at 5% Significance Level			
28												
29			Assuming Normal Distribution						Assuming Lognormal Distribution			
30			95% Student's-t UCL			3.774			95% H-UCL			4.461
31			95% UCLs (Adjusted for Skewness)						95% Chebyshev (MVUE) UCL			5.099
32			95% Adjusted-CLT UCL			4.011			97.5% Chebyshev (MVUE) UCL			6.116
33			95% Modified-t UCL			3.824			99% Chebyshev (MVUE) UCL			8.113
34												
35			Gamma Distribution Test						Data Distribution			
36			k star (bias corrected)			2.063			Data appear Gamma Distributed at 5% Significance Level			
37			Theta Star			1.338						
38			nu star			49.51						
39			Approximate Chi Square Value (.05)			34.36			Nonparametric Statistics			
40			Adjusted Level of Significance			0.029			95% CLT UCL			3.688
41			Adjusted Chi Square Value			32.44			95% Jackknife UCL			3.774
42									95% Standard Bootstrap UCL			3.656
43			Anderson-Darling Test Statistic			0.299			95% Bootstrap-t UCL			4.303
44			Anderson-Darling 5% Critical Value			0.74			95% Hall's Bootstrap UCL			7.973
45			Kolmogorov-Smirnov Test Statistic			0.141			95% Percentile Bootstrap UCL			3.717
46			Kolmogorov-Smirnov 5% Critical Value			0.248			95% BCA Bootstrap UCL			3.997
47			Data appear Gamma Distributed at 5% Significance Level						95% Chebyshev(Mean, Sd) UCL			5.219
48									97.5% Chebyshev(Mean, Sd) UCL			6.282
49			Assuming Gamma Distribution						99% Chebyshev(Mean, Sd) UCL			8.371
50			95% Approximate Gamma UCL			3.979						
51			95% Adjusted Gamma UCL			4.214						
52												
53			Potential UCL to Use						Use 95% Approximate Gamma UCL			3.979

	A	B	C	D	E	F	G	H	I	J	K	L
54												
55												
56	**Cobalt**											
57												
58	**General Statistics**											
59	Number of Valid Observations					12	Number of Distinct Observations					11
60												
61	**Raw Statistics**						**Log-transformed Statistics**					
62	Minimum					0.22	Minimum of Log Data					-1.514
63	Maximum					7.9	Maximum of Log Data					2.067
64	Mean					1.123	Mean of log Data					-0.714
65	Median					0.32	SD of log Data					1.069
66	SD					2.21						
67	Coefficient of Variation					1.969						
68	Skewness					3.111						
69												
70	**Relevant UCL Statistics**											
71	**Normal Distribution Test**						**Lognormal Distribution Test**					
72	Shapiro Wilk Test Statistic					0.459	Shapiro Wilk Test Statistic					0.676
73	Shapiro Wilk Critical Value					0.859	Shapiro Wilk Critical Value					0.859
74	**Data not Normal at 5% Significance Level**						**Data not Lognormal at 5% Significance Level**					
75												
76	**Assuming Normal Distribution**						**Assuming Lognormal Distribution**					
77	95% Student's-t UCL					2.268	95% H-UCL					2.308
78	**95% UCLs (Adjusted for Skewness)**						95% Chebyshev (MVUE) UCL					1.982
79	95% Adjusted-CLT UCL					2.784	97.5% Chebyshev (MVUE) UCL					2.489
80	95% Modified-t UCL					2.364	99% Chebyshev (MVUE) UCL					3.484
81												
82	**Gamma Distribution Test**						**Data Distribution**					
83	k star (bias corrected)					0.599	**Data do not follow a Discernable Distribution (0.05)**					
84	Theta Star					1.873						
85	nu star					14.38						
86	Approximate Chi Square Value (.05)					6.832	**Nonparametric Statistics**					
87	Adjusted Level of Significance					0.029	95% CLT UCL					2.172
88	Adjusted Chi Square Value					6.055	95% Jackknife UCL					2.268
89							95% Standard Bootstrap UCL					2.127
90	Anderson-Darling Test Statistic					2.338	95% Bootstrap-t UCL					23.17
91	Anderson-Darling 5% Critical Value					0.768	95% Hall's Bootstrap UCL					11.78
92	Kolmogorov-Smirnov Test Statistic					0.415	95% Percentile Bootstrap UCL					2.213
93	Kolmogorov-Smirnov 5% Critical Value					0.255	95% BCA Bootstrap UCL					2.897
94	**Data not Gamma Distributed at 5% Significance Level**						95% Chebyshev(Mean, Sd) UCL					3.903
95							97.5% Chebyshev(Mean, Sd) UCL					5.106
96	**Assuming Gamma Distribution**						99% Chebyshev(Mean, Sd) UCL					7.47
97	95% Approximate Gamma UCL					2.363						
98	95% Adjusted Gamma UCL					2.666						
99												
100	**Potential UCL to Use**						Use 99% Chebyshev (Mean, Sd) UCL					7.47
101												
102												
103	**Copper**											
104												
105	**General Statistics**											
106	Number of Valid Data					12	Number of Detected Data					10

	A	B	C	D	E	F	G	H	I	J	K	L
107					Number of Distinct Detected Data	9					Number of Non-Detect Data	2
108											Percent Non-Detects	16.67%
109												
110				**Raw Statistics**						**Log-transformed Statistics**		
111					Minimum Detected	2.1					Minimum Detected	0.742
112					Maximum Detected	5260					Maximum Detected	8.568
113					Mean of Detected	530					Mean of Detected	2.145
114					SD of Detected	1662					SD of Detected	2.287
115					Minimum Non-Detect	11					Minimum Non-Detect	2.398
116					Maximum Non-Detect	39.1					Maximum Non-Detect	3.666
117												
118	Note: Data have multiple DLs - Use of KM Method is recommended										Number treated as Non-Detect	11
119	For all methods (except KM, DL/2, and ROS Methods),										Number treated as Detected	1
120	Observations < Largest ND are treated as NDs										Single DL Non-Detect Percentage	91.67%
121												
122					**UCL Statistics**							
123				**Normal Distribution Test with Detected Values Only**						**Lognormal Distribution Test with Detected Values Only**		
124					Shapiro Wilk Test Statistic	0.367					Shapiro Wilk Test Statistic	0.516
125					5% Shapiro Wilk Critical Value	0.842					5% Shapiro Wilk Critical Value	0.842
126				**Data not Normal at 5% Significance Level**						**Data not Lognormal at 5% Significance Level**		
127												
128				**Assuming Normal Distribution**						**Assuming Lognormal Distribution**		
129					DL/2 Substitution Method						DL/2 Substitution Method	
130					Mean	443.8					Mean	2.177
131					SD	1517					SD	2.088
132					95% DL/2 (t) UCL	1230					95% H-Stat (DL/2) UCL	2728
133												
134					Maximum Likelihood Estimate(MLE) Method	N/A					Log ROS Method	
135				**MLE method failed to converge properly**							Mean in Log Scale	2.096
136											SD in Log Scale	2.072
137											Mean in Original Scale	442.7
138											SD in Original Scale	1517
139											95% Percentile Bootstrap UCL	1318
140											95% BCA Bootstrap UCL	1756
141												
142				**Gamma Distribution Test with Detected Values Only**						**Data Distribution Test with Detected Values Only**		
143					k star (bias corrected)	0.193				**Data do not follow a Discernable Distribution (0.05)**		
144					Theta Star	2741						
145					nu star	3.868						
146												
147					A-D Test Statistic	2.981				**Nonparametric Statistics**		
148					5% A-D Critical Value	0.86					Kaplan-Meier (KM) Method	
149					K-S Test Statistic	0.86					Mean	442.4
150					5% K-S Critical Value	0.295					SD	1453
151				**Data not Gamma Distributed at 5% Significance Level**							SE of Mean	442
152											95% KM (t) UCL	1236
153				**Assuming Gamma Distribution**							95% KM (z) UCL	1169
154					Gamma ROS Statistics using Extrapolated Data						95% KM (jackknife) UCL	1229
155					Minimum	2.1					95% KM (bootstrap t) UCL	568670
156					Maximum	5260					95% KM (BCA) UCL	1318
157					Mean	552.4					95% KM (Percentile Bootstrap) UCL	1318
158					Median	4.9					95% KM (Chebyshev) UCL	2369
159					SD	1504					97.5% KM (Chebyshev) UCL	3203

	A	B	C	D	E	F	G	H	I	J	K	L
160					k star	0.214				99% KM (Chebyshev) UCL		4840
161					Theta star	2576						
162					Nu star	5.146	**Potential UCLs to Use**					
163					AppChi2	1.22				99% KM (Chebyshev) UCL		4840
164				95% Gamma Approximate UCL		2330						
165				95% Adjusted Gamma UCL		2973						
166	**Note: DL/2 is not a recommended method.**											
167												
168												
169	**Manganese**											
170												
171					**General Statistics**							
172				Number of Valid Observations		12				Number of Distinct Observations		12
173												
174				**Raw Statistics**						**Log-transformed Statistics**		
175					Minimum	6.8				Minimum of Log Data		1.917
176					Maximum	351				Maximum of Log Data		5.861
177					Mean	56.08				Mean of log Data		3.243
178					Median	20.55				SD of log Data		1.089
179					SD	100.3						
180					Coefficient of Variation	1.788						
181					Skewness	2.793						
182												
183					**Relevant UCL Statistics**							
184				**Normal Distribution Test**						**Lognormal Distribution Test**		
185					Shapiro Wilk Test Statistic	0.506				Shapiro Wilk Test Statistic		0.757
186					Shapiro Wilk Critical Value	0.859				Shapiro Wilk Critical Value		0.859
187				**Data not Normal at 5% Significance Level**						**Data not Lognormal at 5% Significance Level**		
188												
189				**Assuming Normal Distribution**						**Assuming Lognormal Distribution**		
190					95% Student's-t UCL	108.1				95% H-UCL		127.3
191				**95% UCLs (Adjusted for Skewness)**						95% Chebyshev (MVUE) UCL		106.9
192					95% Adjusted-CLT UCL	128.6				97.5% Chebyshev (MVUE) UCL		134.4
193					95% Modified-t UCL	112				99% Chebyshev (MVUE) UCL		188.6
194												
195				**Gamma Distribution Test**						**Data Distribution**		
196					k star (bias corrected)	0.627				**Data do not follow a Discernable Distribution (0.05)**		
197					Theta Star	89.45						
198					nu star	15.05						
199					Approximate Chi Square Value (.05)	7.295				**Nonparametric Statistics**		
200					Adjusted Level of Significance	0.029				95% CLT UCL		103.7
201					Adjusted Chi Square Value	6.487				95% Jackknife UCL		108.1
202										95% Standard Bootstrap UCL		103.5
203					Anderson-Darling Test Statistic	2.064				95% Bootstrap-t UCL		884.4
204					Anderson-Darling 5% Critical Value	0.765				95% Hall's Bootstrap UCL		643.5
205					Kolmogorov-Smirnov Test Statistic	0.434				95% Percentile Bootstrap UCL		110.3
206					Kolmogorov-Smirnov 5% Critical Value	0.255				95% BCA Bootstrap UCL		128.4
207				**Data not Gamma Distributed at 5% Significance Level**						95% Chebyshev(Mean, Sd) UCL		182.3
208										97.5% Chebyshev(Mean, Sd) UCL		236.9
209				**Assuming Gamma Distribution**						99% Chebyshev(Mean, Sd) UCL		344.1
210					95% Approximate Gamma UCL	115.7						
211					95% Adjusted Gamma UCL	130.1						
212												

	A	B	C	D	E	F	G	H	I	J	K	L
213	Potential UCL to Use						Use 99% Chebyshev (Mean, Sd) UCL					344.1
214												
215												
216	Thallium											
217												
218	General Statistics											
219				Number of Valid Data		12				Number of Detected Data		1
220				Number of Distinct Detected Data		1				Number of Non-Detect Data		11
221										Percent Non-Detects		91.67%
222												
223	Warning: Only one distinct data value was detected! ProUCL (or any other software) should not be used on such a data set!											
224	It is suggested to use alternative site specific values determined by the Project Team to estimate environmental parameters (e.g., EPC, BTV).											
225												
226	The data set for variable Thallium was not processed!											
227												
228												
229												
230	Dieldrin											
231												
232	General Statistics											
233				Number of Valid Data		12				Number of Detected Data		7
234				Number of Distinct Detected Data		7				Number of Non-Detect Data		5
235										Percent Non-Detects		41.67%
236												
237	Raw Statistics						Log-transformed Statistics					
238				Minimum Detected		0.05				Minimum Detected		-2.996
239				Maximum Detected		49				Maximum Detected		3.892
240				Mean of Detected		7.639				Mean of Detected		-0.145
241				SD of Detected		18.25				SD of Detected		2.135
242				Minimum Non-Detect		3.7				Minimum Non-Detect		1.308
243				Maximum Non-Detect		4.8				Maximum Non-Detect		1.569
244												
245	Note: Data have multiple DLs - Use of KM Method is recommended									Number treated as Non-Detect		11
246	For all methods (except KM, DL/2, and ROS Methods),									Number treated as Detected		1
247	Observations < Largest ND are treated as NDs									Single DL Non-Detect Percentage		91.67%
248												
249	Warning: There are only 7 Detected Values in this data											
250	Note: It should be noted that even though bootstrap may be performed on this data set											
251	the resulting calculations may not be reliable enough tp draw conclusions											
252												
253	It is recommended to have 10-15 or more distinct observations for accurate and meaningful results.											
254												
255												
256	UCL Statistics											
257	Normal Distribution Test with Detected Values Only						Lognormal Distribution Test with Detected Values Only					
258				Shapiro Wilk Test Statistic		0.485				Shapiro Wilk Test Statistic		0.935
259				5% Shapiro Wilk Critical Value		0.803				5% Shapiro Wilk Critical Value		0.803
260	Data not Normal at 5% Significance Level						Data appear Lognormal at 5% Significance Level					
261												
262	Assuming Normal Distribution						Assuming Lognormal Distribution					
263				DL/2 Substitution Method						DL/2 Substitution Method		
264				Mean		5.31				Mean		0.212
265				SD		13.78				SD		1.639

	A	B	C	D	E	F	G	H	I	J	K	L
266					95% DL/2 (t) UCL	12.46				95% H-Stat (DL/2) UCL		139.3
267												
268				Maximum Likelihood Estimate(MLE) Method		N/A				Log ROS Method		
269				**MLE method failed to converge properly**						Mean in Log Scale		-0.366
270										SD in Log Scale		1.601
271										Mean in Original Scale		4.668
272										SD in Original Scale		13.97
273										95% Percentile Bootstrap UCL		12.68
274										95% BCA Bootstrap UCL		16.8
275												
276				**Gamma Distribution Test with Detected Values Only**						**Data Distribution Test with Detected Values Only**		
277				k star (bias corrected)		0.275				**Data appear Lognormal at 5% Significance Level**		
278				Theta Star		27.8						
279				nu star		3.847						
280												
281				A-D Test Statistic		0.905				**Nonparametric Statistics**		
282				5% A-D Critical Value		0.782				Kaplan-Meier (KM) Method		
283				K-S Test Statistic		0.782				Mean		4.766
284				5% K-S Critical Value		0.335				SD		13.35
285				**Data not Gamma Distributed at 5% Significance Level**						SE of Mean		4.167
286										95% KM (t) UCL		12.25
287				**Assuming Gamma Distribution**						95% KM (z) UCL		11.62
288				Gamma ROS Statistics using Extrapolated Data						95% KM (jackknife) UCL		12.01
289				Minimum		0.05				95% KM (bootstrap t) UCL		129.9
290				Maximum		49				95% KM (BCA) UCL		12.89
291				Mean		8.058				95% KM (Percentile Bootstrap) UCL		12.62
292				Median		5.323				95% KM (Chebyshev) UCL		22.93
293				SD		13.49				97.5% KM (Chebyshev) UCL		30.79
294				k star		0.43				99% KM (Chebyshev) UCL		46.23
295				Theta star		18.74						
296				Nu star		10.32				**Potential UCLs to Use**		
297				AppChi2		4.142				99% KM (Chebyshev) UCL		46.23
298				95% Gamma Approximate UCL		20.07						
299				95% Adjusted Gamma UCL		23.33						
300	**Note: DL/2 is not a recommended method.**											
301												
302												
303	**Benzo(a)anthracene**											
304												
305						**General Statistics**						
306				Number of Valid Data		12				Number of Detected Data		3
307				Number of Distinct Detected Data		3				Number of Non-Detect Data		9
308										Percent Non-Detects		75.00%
309												
310				**Raw Statistics**						**Log-transformed Statistics**		
311				Minimum Detected		71				Minimum Detected		4.263
312				Maximum Detected		150				Maximum Detected		5.011
313				Mean of Detected		106				Mean of Detected		4.616
314				SD of Detected		40.26				SD of Detected		0.376
315				Minimum Non-Detect		360				Minimum Non-Detect		5.886
316				Maximum Non-Detect		440				Maximum Non-Detect		6.087
317												
318	Note: Data have multiple DLs - Use of KM Method is recommended									Number treated as Non-Detect		12

	A	B	C	D	E	F	G	H	I	J	K	L
319	For all methods (except KM, DL/2, and ROS Methods),										Number treated as Detected	0
320	Observations < Largest ND are treated as NDs										Single DL Non-Detect Percentage	100.00%
321												
322	Warning: There are only 3 Distinct Detected Values in this data set											
323	The number of detected data may not be adequate enough to perform GOF tests, bootstrap, and ROS methods.											
324	Those methods will return a 'N/A' value on your output display!											
325												
326	It is necessary to have 4 or more Distinct Values for bootstrap methods.											
327	It is recommended to have 10 to 15 or more observations for accurate and meaningful results and estimates.											
328												
329												
330	UCL Statistics											
331	Normal Distribution Test with Detected Values Only						Lognormal Distribution Test with Detected Values Only					
332					Shapiro Wilk Test Statistic	0.963					Shapiro Wilk Test Statistic	0.991
333					5% Shapiro Wilk Critical Value	0.767					5% Shapiro Wilk Critical Value	0.767
334	Data appear Normal at 5% Significance Level						Data appear Lognormal at 5% Significance Level					
335												
336	Assuming Normal Distribution						Assuming Lognormal Distribution					
337					DL/2 Substitution Method						DL/2 Substitution Method	
338					Mean	176.5					Mean	5.126
339					SD	47.6					SD	0.352
340					95% DL/2 (t) UCL	201.2					95% H-Stat (DL/2) UCL	341.5
341												
342					Maximum Likelihood Estimate(MLE) Method	N/A					Log ROS Method	
343	MLE method failed to converge properly										Mean in Log Scale	4.616
344											SD in Log Scale	0.215
345											Mean in Original Scale	103.3
346											SD in Original Scale	22.7
347											95% Percentile Bootstrap UCL	113.6
348											95% BCA Bootstrap UCL	115.4
349												
350	Gamma Distribution Test with Detected Values Only						Data Distribution Test with Detected Values Only					
351					k star (bias corrected)	N/A	Data appear Normal at 5% Significance Level					
352					Theta Star	N/A						
353					nu star	N/A						
354												
355					A-D Test Statistic	0.269	Nonparametric Statistics					
356					5% A-D Critical Value	N/A					Kaplan-Meier (KM) Method	
357					K-S Test Statistic	N/A					Mean	106
358					5% K-S Critical Value	N/A					SD	32.87
359	Data not Gamma Distributed at 5% Significance Level										SE of Mean	23.25
360											95% KM (t) UCL	147.7
361	Assuming Gamma Distribution										95% KM (z) UCL	144.2
362					Gamma ROS Statistics using Extrapolated Data						95% KM (jackknife) UCL	155
363					Minimum	N/A					95% KM (bootstrap t) UCL	207.9
364					Maximum	N/A					95% KM (BCA) UCL	150
365					Mean	N/A					95% KM (Percentile Bootstrap) UCL	150
366					Median	N/A					95% KM (Chebyshev) UCL	207.3
367					SD	N/A					97.5% KM (Chebyshev) UCL	251.2
368					k star	N/A					99% KM (Chebyshev) UCL	337.3
369					Theta star	N/A						
370					Nu star	N/A	Potential UCLs to Use					
371					AppChi2	N/A					95% KM (t) UCL	147.7

	A	B	C	D	E	F	G	H	I	J	K	L
372					95% Gamma Approximate UCL	N/A				95% KM (Percentile Bootstrap) UCL		150
373					95% Adjusted Gamma UCL	N/A						
374	Note: DL/2 is not a recommended method.											
375												
376												
377	Benzo(a)pyrene											
378												
379					General Statistics							
380					Number of Valid Data	12				Number of Detected Data		4
381					Number of Distinct Detected Data	3				Number of Non-Detect Data		8
382										Percent Non-Detects		66.67%
383												
384					Raw Statistics					Log-transformed Statistics		
385					Minimum Detected	50				Minimum Detected		3.912
386					Maximum Detected	140				Maximum Detected		4.942
387					Mean of Detected	110				Mean of Detected		4.624
388					SD of Detected	42.43				SD of Detected		0.488
389					Minimum Non-Detect	360				Minimum Non-Detect		5.886
390					Maximum Non-Detect	440				Maximum Non-Detect		6.087
391												
392	Note: Data have multiple DLs - Use of KM Method is recommended									Number treated as Non-Detect		12
393	For all methods (except KM, DL/2, and ROS Methods),									Number treated as Detected		0
394	Observations < Largest ND are treated as NDs									Single DL Non-Detect Percentage		100.00%
395												
396					Warning: There are only 3 Distinct Detected Values in this data set							
397					The number of detected data may not be adequate enough to perform GOF tests, bootstrap, and ROS methods.							
398					Those methods will return a 'N/A' value on your output display!							
399												
400					It is necessary to have 4 or more Distinct Values for bootstrap methods.							
401					It is recommended to have 10 to 15 or more observations for accurate and meaningful results and estimates.							
402												
403												
404					UCL Statistics							
405					Normal Distribution Test with Detected Values Only					Lognormal Distribution Test with Detected Values Only		
406					Shapiro Wilk Test Statistic	0.828				Shapiro Wilk Test Statistic		0.783
407					5% Shapiro Wilk Critical Value	0.748				5% Shapiro Wilk Critical Value		0.748
408					Data appear Normal at 5% Significance Level					Data appear Lognormal at 5% Significance Level		
409												
410					Assuming Normal Distribution					Assuming Lognormal Distribution		
411					DL/2 Substitution Method					DL/2 Substitution Method		
412					Mean	170.4				Mean		5.074
413					SD	51.41				SD		0.423
414					95% DL/2 (t) UCL	197.1				95% H-Stat (DL/2) UCL		271.1
415												
416					Maximum Likelihood Estimate(MLE) Method	N/A				Log ROS Method		
417					MLE method failed to converge properly					Mean in Log Scale		4.624
418										SD in Log Scale		0.278
419										Mean in Original Scale		105.2
420										SD in Original Scale		25.19
421										95% Percentile Bootstrap UCL		116.4
422										95% BCA Bootstrap UCL		114.6
423												
424					Gamma Distribution Test with Detected Values Only					Data Distribution Test with Detected Values Only		

	A	B	C	D	E	F	G	H	I	J	K	L
425					k star (bias corrected)	1.841	Data appear Normal at 5% Significance Level					
426					Theta Star	59.77						
427					nu star	14.72						
428												
429					A-D Test Statistic	0.555	Nonparametric Statistics					
430					5% A-D Critical Value	0.658					Kaplan-Meier (KM) Method	
431					K-S Test Statistic	0.658					Mean	110
432					5% K-S Critical Value	0.396					SD	36.74
433	Data appear Gamma Distributed at 5% Significance Level										SE of Mean	21.21
434											95% KM (t) UCL	148.1
435			Assuming Gamma Distribution								95% KM (z) UCL	144.9
436				Gamma ROS Statistics using Extrapolated Data							95% KM (jackknife) UCL	152.1
437					Minimum	50					95% KM (bootstrap t) UCL	144.6
438					Maximum	140					95% KM (BCA) UCL	140
439					Mean	111.7					95% KM (Percentile Bootstrap) UCL	140
440					Median	112.9					95% KM (Chebyshev) UCL	202.5
441					SD	24.63					97.5% KM (Chebyshev) UCL	242.5
442					k star	12.72					99% KM (Chebyshev) UCL	321.1
443					Theta star	8.779						
444					Nu star	305.3	Potential UCLs to Use					
445					AppChi2	265.9					95% KM (t) UCL	148.1
446					95% Gamma Approximate UCL	128.3					95% KM (Percentile Bootstrap) UCL	140
447					95% Adjusted Gamma UCL	N/A						
448	Warning: Recommended UCL exceeds the maximum observation											
449	Note: DL/2 is not a recommended method.											
450												
451												
452	Benzo(b)fluoranthene											
453												
454					General Statistics							
455					Number of Valid Data	12					Number of Detected Data	1
456					Number of Distinct Detected Data	1					Number of Non-Detect Data	11
457											Percent Non-Detects	91.67%
458												
459	Warning: Only one distinct data value was detected! ProUCL (or any other software) should not be used on such a data set!											
460	It is suggested to use alternative site specific values determined by the Project Team to estimate environmental parameters (e.g., EPC, BTV).											
461												
462	The data set for variable Benzo(b)fluoranthene was not processed!											
463												
464												
465												
466	Benzo(k)fluoranthene											
467												
468					General Statistics							
469					Number of Valid Data	12					Number of Detected Data	2
470					Number of Distinct Detected Data	2					Number of Non-Detect Data	10
471											Percent Non-Detects	83.33%
472												
473				Raw Statistics						Log-transformed Statistics		
474					Minimum Detected	49					Minimum Detected	3.892
475					Maximum Detected	160					Maximum Detected	5.075
476					Mean of Detected	104.5					Mean of Detected	4.483
477					SD of Detected	78.49					SD of Detected	0.837

	A	B	C	D	E	F	G	H	I	J	K	L
478					Minimum Non-Detect	360					Minimum Non-Detect	5.886
479					Maximum Non-Detect	480					Maximum Non-Detect	6.174
480												
481	Note: Data have multiple DLs - Use of KM Method is recommended										Number treated as Non-Detect	12
482	For all methods (except KM, DL/2, and ROS Methods),										Number treated as Detected	0
483	Observations < Largest ND are treated as NDs										Single DL Non-Detect Percentage	100.00%
484												
485	**Warning: Data set has only 2 Distinct Detected Values.**											
486	**This may not be adequate enough to compute meaningful and reliable test statistics and estimates.**											
487	**The Project Team may decide to use alternative site specific values to estimate environmental parameters (e.g., EPC, BTV).**											
488												
489	**Unless Data Quality Objectives (DQOs) have been met, it is suggested to collect additional observations.**											
490												
491	**The number of detected data may not be adequate enough to perform GOF tests, bootstrap, and ROS methods.**											
492	**Those methods will return a 'N/A' value on your output display!**											
493												
494	**It is necessary to have 4 or more Distinct Values for bootstrap methods.**											
495	**It is recommended to have 10 to 15 or more observations for accurate and meaningful results and estimates.**											
496												
497												
498	**UCL Statistics**											
499	**Normal Distribution Test with Detected Values Only**						**Lognormal Distribution Test with Detected Values Only**					
500					Shapiro Wilk Test Statistic	1					Shapiro Wilk Test Statistic	1
501					5% Shapiro Wilk Critical Value	N/A					5% Shapiro Wilk Critical Value	N/A
502	**Data not Normal at 5% Significance Level**						**Data not Lognormal at 5% Significance Level**					
503												
504	**Assuming Normal Distribution**						**Assuming Lognormal Distribution**					
505					DL/2 Substitution Method						DL/2 Substitution Method	
506					Mean	185.3					Mean	5.166
507					SD	47.76					SD	0.415
508					95% DL/2 (t) UCL	210.1					95% H-Stat (DL/2) UCL	353.7
509												
510					Maximum Likelihood Estimate(MLE) Method	N/A					Log ROS Method	
511	**MLE method failed to converge properly**										Mean in Log Scale	N/A
512											SD in Log Scale	N/A
513											Mean in Original Scale	N/A
514											SD in Original Scale	N/A
515											95% Percentile Bootstrap UCL	N/A
516											95% BCA Bootstrap UCL	N/A
517												
518	**Gamma Distribution Test with Detected Values Only**						**Data Distribution Test with Detected Values Only**					
519					k star (bias corrected)	N/A	**Data do not follow a Discernable Distribution (0.05)**					
520					Theta Star	N/A						
521					nu star	N/A						
522												
523					A-D Test Statistic	0.359	**Nonparametric Statistics**					
524					5% A-D Critical Value	N/A					Kaplan-Meier (KM) Method	
525					K-S Test Statistic	N/A					Mean	104.5
526					5% K-S Critical Value	N/A					SD	55.5
527	**Data not Gamma Distributed at 5% Significance Level**										SE of Mean	55.5
528											95% KM (t) UCL	204.2
529	**Assuming Gamma Distribution**										95% KM (z) UCL	195.8
530					Gamma ROS Statistics using Extrapolated Data						95% KM (jackknife) UCL	239.5

	A	B	C	D	E	F	G	H	I	J	K	L
531					Minimum	N/A				95% KM (bootstrap t) UCL		243.3
532					Maximum	N/A				95% KM (BCA) UCL		160
533					Mean	N/A				95% KM (Percentile Bootstrap) UCL		N/A
534					Median	N/A				95% KM (Chebyshev) UCL		346.4
535					SD	N/A				97.5% KM (Chebyshev) UCL		451.1
536					k star	N/A				99% KM (Chebyshev) UCL		656.7
537					Theta star	N/A						
538					Nu star	N/A				**Potential UCLs to Use**		
539					AppChi2	N/A				95% KM (t) UCL		204.2
540				95% Gamma Approximate UCL		N/A				95% KM (% Bootstrap) UCL		N/A
541				95% Adjusted Gamma UCL		N/A						
542					**Warning: Recommended UCL exceeds the maximum observation**							
543	**Note: DL/2 is not a recommended method.**											
544												
545												
546	**Chrysene**											
547												
548					**General Statistics**							
549				Number of Valid Data		12				Number of Detected Data		4
550				Number of Distinct Detected Data		4				Number of Non-Detect Data		8
551										Percent Non-Detects		66.67%
552												
553				**Raw Statistics**						**Log-transformed Statistics**		
554				Minimum Detected		58				Minimum Detected		4.06
555				Maximum Detected		190				Maximum Detected		5.247
556				Mean of Detected		137				Mean of Detected		4.822
557				SD of Detected		61.07				SD of Detected		0.548
558				Minimum Non-Detect		360				Minimum Non-Detect		5.886
559				Maximum Non-Detect		440				Maximum Non-Detect		6.087
560												
561	Note: Data have multiple DLs - Use of KM Method is recommended									Number treated as Non-Detect		12
562	For all methods (except KM, DL/2, and ROS Methods),									Number treated as Detected		0
563	Observations < Largest ND are treated as NDs									Single DL Non-Detect Percentage		100.00%
564												
565					**Warning: There are only 4 Distinct Detected Values in this data**							
566					**Note: It should be noted that even though bootstrap may be performed on this data set**							
567					**the resulting calculations may not be reliable enough tp draw conclusions**							
568												
569					**It is recommended to have 10-15 or more distinct observations for accurate and meaningful results.**							
570												
571												
572					**UCL Statistics**							
573				**Normal Distribution Test with Detected Values Only**						**Lognormal Distribution Test with Detected Values Only**		
574				Shapiro Wilk Test Statistic		0.908				Shapiro Wilk Test Statistic		0.868
575				5% Shapiro Wilk Critical Value		0.748				5% Shapiro Wilk Critical Value		0.748
576				**Data appear Normal at 5% Significance Level**						**Data appear Lognormal at 5% Significance Level**		
577												
578				**Assuming Normal Distribution**						**Assuming Lognormal Distribution**		
579				DL/2 Substitution Method						DL/2 Substitution Method		
580				Mean		179.4				Mean		5.14
581				SD		46.47				SD		0.375
582				95% DL/2 (t) UCL		203.5				95% H-Stat (DL/2) UCL		264.1
583												

	A	B	C	D	E	F	G	H	I	J	K	L
584					Maximum Likelihood Estimate(MLE) Method	N/A					Log ROS Method	
585					**MLE method failed to converge properly**						Mean in Log Scale	4.822
586											SD in Log Scale	0.314
587											Mean in Original Scale	129.5
588											SD in Original Scale	36.41
589											95% Percentile Bootstrap UCL	146.2
590											95% BCA Bootstrap UCL	146.4
591												
592				**Gamma Distribution Test with Detected Values Only**						**Data Distribution Test with Detected Values Only**		
593					k star (bias corrected)	1.482				**Data appear Normal at 5% Significance Level**		
594					Theta Star	92.42						
595					nu star	11.86						
596												
597					A-D Test Statistic	0.39				**Nonparametric Statistics**		
598					5% A-D Critical Value	0.659					Kaplan-Meier (KM) Method	
599					K-S Test Statistic	0.659					Mean	137
600					5% K-S Critical Value	0.396					SD	52.89
601				**Data appear Gamma Distributed at 5% Significance Level**							SE of Mean	30.53
602											95% KM (t) UCL	191.8
603				**Assuming Gamma Distribution**							95% KM (z) UCL	187.2
604					Gamma ROS Statistics using Extrapolated Data						95% KM (jackknife) UCL	197.6
605					Minimum	58					95% KM (bootstrap t) UCL	201
606					Maximum	190					95% KM (BCA) UCL	185
607					Mean	138.7					95% KM (Percentile Bootstrap) UCL	186.7
608					Median	140					95% KM (Chebyshev) UCL	270.1
609					SD	35.75					97.5% KM (Chebyshev) UCL	327.7
610					k star	9.758					99% KM (Chebyshev) UCL	440.8
611					Theta star	14.22						
612					Nu star	234.2				**Potential UCLs to Use**		
613					AppChi2	199.8					95% KM (t) UCL	191.8
614					95% Gamma Approximate UCL	162.7					95% KM (Percentile Bootstrap) UCL	186.7
615					95% Adjusted Gamma UCL	N/A						
616					**Warning: Recommended UCL exceeds the maximum observation**							
617	**Note: DL/2 is not a recommended method.**											
618												
619												
620	**Indeno(1,2,3-cd)pyrene**											
621												
622					**General Statistics**							
623					Number of Valid Data	12					Number of Detected Data	3
624					Number of Distinct Detected Data	3					Number of Non-Detect Data	9
625											Percent Non-Detects	75.00%
626												
627				**Raw Statistics**						**Log-transformed Statistics**		
628					Minimum Detected	84					Minimum Detected	4.431
629					Maximum Detected	140					Maximum Detected	4.942
630					Mean of Detected	108					Mean of Detected	4.659
631					SD of Detected	28.84					SD of Detected	0.26
632					Minimum Non-Detect	360					Minimum Non-Detect	5.886
633					Maximum Non-Detect	440					Maximum Non-Detect	6.087
634												
635	Note: Data have multiple DLs - Use of KM Method is recommended										Number treated as Non-Detect	12
636	For all methods (except KM, DL/2, and ROS Methods),										Number treated as Detected	0

	A	B	C	D	E	F	G	H	I	J	K	L
637	Observations < Largest ND are treated as NDs										Single DL Non-Detect Percentage	100.00%
638												
639	Warning: There are only 3 Distinct Detected Values in this data set											
640	The number of detected data may not be adequate enough to perform GOF tests, bootstrap, and ROS methods.											
641	Those methods will return a 'N/A' value on your output display!											
642												
643	It is necessary to have 4 or more Distinct Values for bootstrap methods.											
644	It is recommended to have 10 to 15 or more observations for accurate and meaningful results and estimates.											
645												
646												
647	UCL Statistics											
648	Normal Distribution Test with Detected Values Only						Lognormal Distribution Test with Detected Values Only					
649					Shapiro Wilk Test Statistic	0.942					Shapiro Wilk Test Statistic	0.967
650					5% Shapiro Wilk Critical Value	0.767					5% Shapiro Wilk Critical Value	0.767
651	Data appear Normal at 5% Significance Level						Data appear Lognormal at 5% Significance Level					
652												
653	Assuming Normal Distribution						Assuming Lognormal Distribution					
654					DL/2 Substitution Method						DL/2 Substitution Method	
655					Mean	177					Mean	5.137
656					SD	45.23					SD	0.315
657					95% DL/2 (t) UCL	200.5					95% H-Stat (DL/2) UCL	329.4
658												
659					Maximum Likelihood Estimate(MLE) Method	N/A					Log ROS Method	
660	MLE method failed to converge properly										Mean in Log Scale	4.659
661											SD in Log Scale	0.148
662											Mean in Original Scale	106.6
663											SD in Original Scale	16.16
664											95% Percentile Bootstrap UCL	114.2
665											95% BCA Bootstrap UCL	115.9
666												
667	Gamma Distribution Test with Detected Values Only						Data Distribution Test with Detected Values Only					
668					k star (bias corrected)	N/A	Data appear Normal at 5% Significance Level					
669					Theta Star	N/A						
670					nu star	N/A						
671												
672					A-D Test Statistic	0.303	Nonparametric Statistics					
673					5% A-D Critical Value	N/A					Kaplan-Meier (KM) Method	
674					K-S Test Statistic	N/A					Mean	108
675					5% K-S Critical Value	N/A					SD	23.55
676	Data not Gamma Distributed at 5% Significance Level										SE of Mean	16.65
677											95% KM (t) UCL	137.9
678	Assuming Gamma Distribution										95% KM (z) UCL	135.4
679					Gamma ROS Statistics using Extrapolated Data						95% KM (jackknife) UCL	143.1
680					Minimum	N/A					95% KM (bootstrap t) UCL	182.8
681					Maximum	N/A					95% KM (BCA) UCL	140
682					Mean	N/A					95% KM (Percentile Bootstrap) UCL	140
683					Median	N/A					95% KM (Chebyshev) UCL	180.6
684					SD	N/A					97.5% KM (Chebyshev) UCL	212
685					k star	N/A					99% KM (Chebyshev) UCL	273.7
686					Theta star	N/A						
687					Nu star	N/A	Potential UCLs to Use					
688					AppChi2	N/A					95% KM (t) UCL	137.9
689					95% Gamma Approximate UCL	N/A					95% KM (Percentile Bootstrap) UCL	140

	A	B	C	D	E	F	G	H	I	J	K	L
690					95% Adjusted Gamma UCL	N/A						
691	**Note: DL/2 is not a recommended method.**											
692												

	A	B	C	D	E	F	G	H	I	J	K	L
1				General UCL Statistics for Full Data Sets								
2			User Selected Options									
3			From File	C:\Documents and Settings\rwarren\Desktop\prouclinput.wst								
4			Full Precision	OFF								
5			Confidence Coefficient	95%								
6			Number of Bootstrap Operations	2000								
7												
8												
9	Thallium											
10												
11						General Statistics						
12						Number of Valid Observations	12			Number of Distinct Observations	9	
13												
14						Raw Statistics				Log-transformed Statistics		
15						Minimum	0.9			Minimum of Log Data	-0.105	
16						Maximum	19.55			Maximum of Log Data	2.973	
17						Mean	2.625			Mean of log Data	0.318	
18						Median	1.075			SD of log Data	0.844	
19						SD	5.331					
20						Coefficient of Variation	2.031					
21						Skewness	3.461					
22												
23												
24						Relevant UCL Statistics						
25						Normal Distribution Test				Lognormal Distribution Test		
26						Shapiro Wilk Test Statistic	0.348			Shapiro Wilk Test Statistic	0.453	
27						Shapiro Wilk Critical Value	0.859			Shapiro Wilk Critical Value	0.859	
28						Data not Normal at 5% Significance Level				Data not Lognormal at 5% Significance Level		
29												
30						Assuming Normal Distribution				Assuming Lognormal Distribution		
31						95% Student's-t UCL	5.389			95% H-UCL	3.841	
32						95% UCLs (Adjusted for Skewness)				95% Chebyshev (MVUE) UCL	4.007	
33						95% Adjusted-CLT UCL	6.799			97.5% Chebyshev (MVUE) UCL	4.923	
34						95% Modified-t UCL	5.645			99% Chebyshev (MVUE) UCL	6.723	
35												
36						Gamma Distribution Test				Data Distribution		
37						k star (bias corrected)	0.733			Data do not follow a Discernable Distribution (0.05)		
38						Theta Star	3.583					
39						nu star	17.58					
40						Approximate Chi Square Value (.05)	9.091			Nonparametric Statistics		
41						Adjusted Level of Significance	0.029			95% CLT UCL	5.157	
42						Adjusted Chi Square Value	8.175			95% Jackknife UCL	5.389	
43										95% Standard Bootstrap UCL	5.083	
44						Anderson-Darling Test Statistic	3.524			95% Bootstrap-t UCL	90.02	
45						Anderson-Darling 5% Critical Value	0.76			95% Hall's Bootstrap UCL	36.05	
46						Kolmogorov-Smirnov Test Statistic	0.496			95% Percentile Bootstrap UCL	5.696	
47						Kolmogorov-Smirnov 5% Critical Value	0.253			95% BCA Bootstrap UCL	7.238	
48						Data not Gamma Distributed at 5% Significance Level				95% Chebyshev(Mean, Sd) UCL	9.334	
49										97.5% Chebyshev(Mean, Sd) UCL	12.24	
50						Assuming Gamma Distribution				99% Chebyshev(Mean, Sd) UCL	17.94	
51						95% Approximate Gamma UCL	5.077					
52						95% Adjusted Gamma UCL	5.647					
53												

	A	B	C	D	E	F	G	H	I	J	K	L
54	Potential UCL to Use						Use 95% Chebyshev (Mean, Sd) UCL					9.334
55												
56												
57	Benzo(b)fluoranthene											
58												
59	General Statistics											
60	Number of Valid Observations					12	Number of Distinct Observations					8
61												
62	Raw Statistics						Log-transformed Statistics					
63	Minimum					180	Minimum of Log Data					5.193
64	Maximum					240	Maximum of Log Data					5.481
65	Mean					200.8	Mean of log Data					5.299
66	Median					195	SD of log Data					0.0912
67	SD					18.81						
68	Coefficient of Variation					0.0937						
69	Skewness					0.853						
70												
71												
72	Relevant UCL Statistics											
73	Normal Distribution Test						Lognormal Distribution Test					
74	Shapiro Wilk Test Statistic					0.902	Shapiro Wilk Test Statistic					0.915
75	Shapiro Wilk Critical Value					0.859	Shapiro Wilk Critical Value					0.859
76	Data appear Normal at 5% Significance Level						Data appear Lognormal at 5% Significance Level					
77												
78	Assuming Normal Distribution						Assuming Lognormal Distribution					
79	95% Student's-t UCL					210.6	95% H-UCL					N/A
80	95% UCLs (Adjusted for Skewness)						95% Chebyshev (MVUE) UCL					223.9
81	95% Adjusted-CLT UCL					211.2	97.5% Chebyshev (MVUE) UCL					233.9
82	95% Modified-t UCL					210.8	99% Chebyshev (MVUE) UCL					253.5
83												
84	Gamma Distribution Test						Data Distribution					
85	k star (bias corrected)					96.87	Data appear Normal at 5% Significance Level					
86	Theta Star					2.073						
87	nu star					2325						
88	Approximate Chi Square Value (.05)					2214	Nonparametric Statistics					
89	Adjusted Level of Significance					0.029	95% CLT UCL					209.8
90	Adjusted Chi Square Value					2197	95% Jackknife UCL					210.6
91							95% Standard Bootstrap UCL					209.4
92	Anderson-Darling Test Statistic					0.49	95% Bootstrap-t UCL					212.6
93	Anderson-Darling 5% Critical Value					0.731	95% Hall's Bootstrap UCL					211.2
94	Kolmogorov-Smirnov Test Statistic					0.203	95% Percentile Bootstrap UCL					210
95	Kolmogorov-Smirnov 5% Critical Value					0.245	95% BCA Bootstrap UCL					210.4
96	Data appear Gamma Distributed at 5% Significance Level						95% Chebyshev(Mean, Sd) UCL					224.5
97							97.5% Chebyshev(Mean, Sd) UCL					234.7
98	Assuming Gamma Distribution						99% Chebyshev(Mean, Sd) UCL					254.9
99	95% Approximate Gamma UCL					210.9						
100	95% Adjusted Gamma UCL					212.5						
101												
102	Potential UCL to Use						Use 95% Student's-t UCL					210.6
103												

	A	B	C	D	E	F	G	H	I	J	K	L
1				General UCL Statistics for Data Sets with Non-Detects								
2			User Selected Options									
3			From File	C:\Documents and Settings\rwarren\Desktop\prouclinput.wst								
4			Full Precision	OFF								
5			Confidence Coefficient	95%								
6			Number of Bootstrap Operations	2000								
7												
8												
9	Aluminum											
10												
11						General Statistics						
12						Number of Valid Observations	26			Number of Distinct Observations	25	
13												
14						Raw Statistics				Log-transformed Statistics		
15						Minimum	1960			Minimum of Log Data	7.581	
16						Maximum	15000			Maximum of Log Data	9.616	
17						Mean	6004			Mean of log Data	8.555	
18						Median	4925			SD of log Data	0.547	
19						SD	3442					
20						Coefficient of Variation	0.573					
21						Skewness	1.188					
22												
23						Relevant UCL Statistics						
24						Normal Distribution Test				Lognormal Distribution Test		
25						Shapiro Wilk Test Statistic	0.87			Shapiro Wilk Test Statistic	0.96	
26						Shapiro Wilk Critical Value	0.92			Shapiro Wilk Critical Value	0.92	
27						Data not Normal at 5% Significance Level				Data appear Lognormal at 5% Significance Level		
28												
29						Assuming Normal Distribution				Assuming Lognormal Distribution		
30						95% Student's-t UCL	7157			95% H-UCL	7503	
31						95% UCLs (Adjusted for Skewness)				95% Chebyshev (MVUE) UCL	8935	
32						95% Adjusted-CLT UCL	7282			97.5% Chebyshev (MVUE) UCL	10208	
33						95% Modified-t UCL	7183			99% Chebyshev (MVUE) UCL	12709	
34												
35						Gamma Distribution Test				Data Distribution		
36						k star (bias corrected)	3.217			Data appear Gamma Distributed at 5% Significance Level		
37						Theta Star	1866					
38						nu star	167.3					
39						Approximate Chi Square Value (.05)	138.4			Nonparametric Statistics		
40						Adjusted Level of Significance	0.0398			95% CLT UCL	7114	
41						Adjusted Chi Square Value	136.6			95% Jackknife UCL	7157	
42										95% Standard Bootstrap UCL	7139	
43						Anderson-Darling Test Statistic	0.579			95% Bootstrap-t UCL	7484	
44						Anderson-Darling 5% Critical Value	0.749			95% Hall's Bootstrap UCL	7273	
45						Kolmogorov-Smirnov Test Statistic	0.163			95% Percentile Bootstrap UCL	7152	
46						Kolmogorov-Smirnov 5% Critical Value	0.172			95% BCA Bootstrap UCL	7225	
47						Data appear Gamma Distributed at 5% Significance Level				95% Chebyshev(Mean, Sd) UCL	8946	
48										97.5% Chebyshev(Mean, Sd) UCL	10219	
49						Assuming Gamma Distribution				99% Chebyshev(Mean, Sd) UCL	12720	
50						95% Approximate Gamma UCL	7258					
51						95% Adjusted Gamma UCL	7350					
52												
53						Potential UCL to Use				Use 95% Approximate Gamma UCL	7258	

	A	B	C	D	E	F	G	H	I	J	K	L
54												
55												
56	Antimony											
57												
58						General Statistics						
59					Number of Valid Data	20				Number of Detected Data		3
60					Number of Distinct Detected Data	3				Number of Non-Detect Data		17
61										Percent Non-Detects		85.00%
62												
63					Raw Statistics					Log-transformed Statistics		
64					Minimum Detected	0.25				Minimum Detected		-1.386
65					Maximum Detected	3.8				Maximum Detected		1.335
66					Mean of Detected	2.55				Mean of Detected		0.41
67					SD of Detected	1.994				SD of Detected		1.556
68					Minimum Non-Detect	4.4				Minimum Non-Detect		1.482
69					Maximum Non-Detect	6.4				Maximum Non-Detect		1.856
70												
71				Note: Data have multiple DLs - Use of KM Method is recommended						Number treated as Non-Detect		20
72				For all methods (except KM, DL/2, and ROS Methods),						Number treated as Detected		0
73				Observations < Largest ND are treated as NDs						Single DL Non-Detect Percentage		100.00%
74												
75						Warning: There are only 3 Distinct Detected Values in this data set						
76						The number of detected data may not be adequate enough to perform GOF tests, bootstrap, and ROS methods.						
77						Those methods will return a 'N/A' value on your output display!						
78												
79						It is necessary to have 4 or more Distinct Values for bootstrap methods.						
80						It is recommended to have 10 to 15 or more observations for accurate and meaningful results and estimates.						
81												
82												
83						UCL Statistics						
84					Normal Distribution Test with Detected Values Only					Lognormal Distribution Test with Detected Values Only		
85					Shapiro Wilk Test Statistic	0.792				Shapiro Wilk Test Statistic		0.765
86					5% Shapiro Wilk Critical Value	0.767				5% Shapiro Wilk Critical Value		0.767
87					Data appear Normal at 5% Significance Level					Data not Lognormal at 5% Significance Level		
88												
89					Assuming Normal Distribution					Assuming Lognormal Distribution		
90					DL/2 Substitution Method					DL/2 Substitution Method		
91					Mean	2.615				Mean		0.879
92					SD	0.689				SD		0.551
93					95% DL/2 (t) UCL	2.881				95% H-Stat (DL/2) UCL		4.906
94												
95					Maximum Likelihood Estimate(MLE) Method	N/A				Log ROS Method		
96					MLE method failed to converge properly					Mean in Log Scale		0.41
97										SD in Log Scale		1.054
98										Mean in Original Scale		2.415
99										SD in Original Scale		2.419
100										95% Percentile Bootstrap UCL		3.308
101										95% BCA Bootstrap UCL		3.555
102												
103					Gamma Distribution Test with Detected Values Only					Data Distribution Test with Detected Values Only		
104					k star (bias corrected)	N/A				Data appear Normal at 5% Significance Level		
105					Theta Star	N/A						
106					nu star	N/A						

	A	B	C	D	E	F	G	H	I	J	K	L
107												
108					A-D Test Statistic	0.595			Nonparametric Statistics			
109					5% A-D Critical Value	N/A					Kaplan-Meier (KM) Method	
110					K-S Test Statistic	N/A					Mean	2.55
111					5% K-S Critical Value	N/A					SD	1.628
112			Data not Gamma Distributed at 5% Significance Level								SE of Mean	1.151
113											95% KM (t) UCL	4.541
114			Assuming Gamma Distribution								95% KM (z) UCL	4.444
115				Gamma ROS Statistics using Extrapolated Data							95% KM (jackknife) UCL	4.927
116					Minimum	N/A					95% KM (bootstrap t) UCL	4.561
117					Maximum	N/A					95% KM (BCA) UCL	N/A
118					Mean	N/A					95% KM (Percentile Bootstrap) UCL	N/A
119					Median	N/A					95% KM (Chebyshev) UCL	7.569
120					SD	N/A					97.5% KM (Chebyshev) UCL	9.741
121					k star	N/A					99% KM (Chebyshev) UCL	14.01
122					Theta star	N/A						
123					Nu star	N/A			Potential UCLs to Use			
124					AppChi2	N/A					95% KM (t) UCL	4.541
125					95% Gamma Approximate UCL	N/A					95% KM (Percentile Bootstrap) UCL	N/A
126					95% Adjusted Gamma UCL	N/A						
127					Warning: Recommended UCL exceeds the maximum observation							
128	Note: DL/2 is not a recommended method.											
129												
130												
131	Arsenic											
132												
133					General Statistics							
134					Number of Valid Data	26					Number of Detected Data	23
135					Number of Distinct Detected Data	20					Number of Non-Detect Data	3
136											Percent Non-Detects	11.54%
137												
138					Raw Statistics						Log-transformed Statistics	
139					Minimum Detected	0.39					Minimum Detected	-0.942
140					Maximum Detected	8					Maximum Detected	2.079
141					Mean of Detected	2.103					Mean of Detected	0.476
142					SD of Detected	1.677					SD of Detected	0.76
143					Minimum Non-Detect	0.9					Minimum Non-Detect	-0.105
144					Maximum Non-Detect	1					Maximum Non-Detect	0
145												
146	Note: Data have multiple DLs - Use of KM Method is recommended										Number treated as Non-Detect	10
147	For all methods (except KM, DL/2, and ROS Methods),										Number treated as Detected	16
148	Observations < Largest ND are treated as NDs										Single DL Non-Detect Percentage	38.46%
149												
150					UCL Statistics							
151					Normal Distribution Test with Detected Values Only						Lognormal Distribution Test with Detected Values Only	
152					Shapiro Wilk Test Statistic	0.806					Shapiro Wilk Test Statistic	0.976
153					5% Shapiro Wilk Critical Value	0.914					5% Shapiro Wilk Critical Value	0.914
154					Data not Normal at 5% Significance Level						Data appear Lognormal at 5% Significance Level	
155												
156					Assuming Normal Distribution						Assuming Lognormal Distribution	
157					DL/2 Substitution Method						DL/2 Substitution Method	
158					Mean	1.915					Mean	0.335
159					SD	1.66					SD	0.816

	A	B	C	D	E	F	G	H	I	J	K	L
160					95% DL/2 (t) UCL	2.471				95% H-Stat (DL/2) UCL		2.388
161												
162				Maximum Likelihood Estimate(MLE) Method						Log ROS Method		
163					Mean	1.444				Mean in Log Scale		0.37
164					SD	2.19				SD in Log Scale		0.773
165					95% MLE (t) UCL	2.178				Mean in Original Scale		1.934
166					95% MLE (Tiku) UCL	2.259				SD in Original Scale		1.644
167										95% Percentile Bootstrap UCL		2.471
168										95% BCA Bootstrap UCL		2.654
169												
170				**Gamma Distribution Test with Detected Values Only**						**Data Distribution Test with Detected Values Only**		
171					k star (bias corrected)	1.787				**Data appear Gamma Distributed at 5% Significance Level**		
172					Theta Star	1.177						
173					nu star	82.18						
174												
175					A-D Test Statistic	0.31				**Nonparametric Statistics**		
176					5% A-D Critical Value	0.755				Kaplan-Meier (KM) Method		
177					K-S Test Statistic	0.755				Mean		1.934
178					5% K-S Critical Value	0.184				SD		1.614
179				**Data appear Gamma Distributed at 5% Significance Level**						SE of Mean		0.324
180										95% KM (t) UCL		2.487
181				**Assuming Gamma Distribution**						95% KM (z) UCL		2.467
182				Gamma ROS Statistics using Extrapolated Data						95% KM (jackknife) UCL		2.486
183					Minimum	0.39				95% KM (bootstrap t) UCL		2.697
184					Maximum	8				95% KM (BCA) UCL		2.486
185					Mean	1.936				95% KM (Percentile Bootstrap) UCL		2.49
186					Median	1.6				95% KM (Chebyshev) UCL		3.346
187					SD	1.643				97.5% KM (Chebyshev) UCL		3.957
188					k star	1.679				99% KM (Chebyshev) UCL		5.156
189					Theta star	1.153						
190					Nu star	87.32				**Potential UCLs to Use**		
191					AppChi2	66.78				95% KM (BCA) UCL		2.486
192					95% Gamma Approximate UCL	2.532						
193					95% Adjusted Gamma UCL	2.578						
194	**Note: DL/2 is not a recommended method.**											
195												
196												
197	**Cobalt**											
198												
199					**General Statistics**							
200					Number of Valid Data	26				Number of Detected Data		20
201					Number of Distinct Detected Data	18				Number of Non-Detect Data		6
202										Percent Non-Detects		23.08%
203												
204				**Raw Statistics**						**Log-transformed Statistics**		
205					Minimum Detected	0.08				Minimum Detected		-2.526
206					Maximum Detected	7.9				Maximum Detected		2.067
207					Mean of Detected	0.922				Mean of Detected		-0.829
208					SD of Detected	1.741				SD of Detected		1.08
209					Minimum Non-Detect	4.8				Minimum Non-Detect		1.569
210					Maximum Non-Detect	6.3				Maximum Non-Detect		1.841
211												
212	Note: Data have multiple DLs - Use of KM Method is recommended									Number treated as Non-Detect		25

	A	B	C	D	E	F	G	H	I	J	K	L
213	For all methods (except KM, DL/2, and ROS Methods),										Number treated as Detected	1
214	Observations < Largest ND are treated as NDs										Single DL Non-Detect Percentage	96.15%
215												
216						UCL Statistics						
217					Normal Distribution Test with Detected Values Only						Lognormal Distribution Test with Detected Values Only	
218						Shapiro Wilk Test Statistic	0.467				Shapiro Wilk Test Statistic	0.89
219						5% Shapiro Wilk Critical Value	0.905				5% Shapiro Wilk Critical Value	0.905
220						Data not Normal at 5% Significance Level					Data not Lognormal at 5% Significance Level	
221												
222						Assuming Normal Distribution					Assuming Lognormal Distribution	
223						DL/2 Substitution Method					DL/2 Substitution Method	
224						Mean	1.365				Mean	-0.398
225						SD	1.732				SD	1.239
226						95% DL/2 (t) UCL	1.945				95% H-Stat (DL/2) UCL	3.254
227												
228						Maximum Likelihood Estimate(MLE) Method	N/A				Log ROS Method	
229						MLE method failed to converge properly					Mean in Log Scale	-0.851
230											SD in Log Scale	0.951
231											Mean in Original Scale	0.804
232											SD in Original Scale	1.534
233											95% Percentile Bootstrap UCL	1.379
234											95% BCA Bootstrap UCL	1.646
235												
236					Gamma Distribution Test with Detected Values Only						Data Distribution Test with Detected Values Only	
237						k star (bias corrected)	0.708				Data do not follow a Discernable Distribution (0.05)	
238						Theta Star	1.301					
239						nu star	28.34					
240												
241						A-D Test Statistic	1.973				Nonparametric Statistics	
242						5% A-D Critical Value	0.777				Kaplan-Meier (KM) Method	
243						K-S Test Statistic	0.777				Mean	0.837
244						5% K-S Critical Value	0.201				SD	1.522
245						Data not Gamma Distributed at 5% Significance Level					SE of Mean	0.313
246											95% KM (t) UCL	1.372
247						Assuming Gamma Distribution					95% KM (z) UCL	1.352
248						Gamma ROS Statistics using Extrapolated Data					95% KM (jackknife) UCL	1.37
249						Minimum	0.08				95% KM (bootstrap t) UCL	2.264
250						Maximum	7.9				95% KM (BCA) UCL	1.454
251						Mean	0.912				95% KM (Percentile Bootstrap) UCL	1.41
252						Median	0.4				95% KM (Chebyshev) UCL	2.201
253						SD	1.52				97.5% KM (Chebyshev) UCL	2.791
254						k star	0.907				99% KM (Chebyshev) UCL	3.95
255						Theta star	1.005					
256						Nu star	47.19				Potential UCLs to Use	
257						AppChi2	32.42				97.5% KM (Chebyshev) UCL	2.791
258						95% Gamma Approximate UCL	1.327					
259						95% Adjusted Gamma UCL	1.361					
260	Note: DL/2 is not a recommended method.											
261												
262												
263	Copper											
264												
265						General Statistics						

	A	B	C	D	E	F	G	H	I	J	K	L
266					Number of Valid Data	26					Number of Detected Data	18
267					Number of Distinct Detected Data	17					Number of Non-Detect Data	8
268											Percent Non-Detects	30.77%
269												
270				Raw Statistics						Log-transformed Statistics		
271					Minimum Detected	0.57					Minimum Detected	-0.562
272					Maximum Detected	5260					Maximum Detected	8.568
273					Mean of Detected	296.4					Mean of Detected	1.481
274					SD of Detected	1239					SD of Detected	1.986
275					Minimum Non-Detect	2.2					Minimum Non-Detect	0.788
276					Maximum Non-Detect	39.1					Maximum Non-Detect	3.666
277												
278	Note: Data have multiple DLs - Use of KM Method is recommended										Number treated as Non-Detect	25
279	For all methods (except KM, DL/2, and ROS Methods),										Number treated as Detected	1
280	Observations < Largest ND are treated as NDs										Single DL Non-Detect Percentage	96.15%
281												
282					UCL Statistics							
283				Normal Distribution Test with Detected Values Only						Lognormal Distribution Test with Detected Values Only		
284					Shapiro Wilk Test Statistic	0.255					Shapiro Wilk Test Statistic	0.684
285					5% Shapiro Wilk Critical Value	0.897					5% Shapiro Wilk Critical Value	0.897
286				Data not Normal at 5% Significance Level						Data not Lognormal at 5% Significance Level		
287												
288				Assuming Normal Distribution						Assuming Lognormal Distribution		
289					DL/2 Substitution Method						DL/2 Substitution Method	
290					Mean	206.4					Mean	1.234
291					SD	1031					SD	1.775
292					95% DL/2 (t) UCL	551.7					95% H-Stat (DL/2) UCL	64.55
293												
294					Maximum Likelihood Estimate(MLE) Method	N/A					Log ROS Method	
295				MLE method failed to converge properly							Mean in Log Scale	1.076
296											SD in Log Scale	1.785
297											Mean in Original Scale	205.6
298											SD in Original Scale	1031
299											95% Percentile Bootstrap UCL	609.5
300											95% BCA Bootstrap UCL	813.4
301												
302				Gamma Distribution Test with Detected Values Only						Data Distribution Test with Detected Values Only		
303					k star (bias corrected)	0.185				Data do not follow a Discernable Distribution (0.05)		
304					Theta Star	1600						
305					nu star	6.671						
306												
307					A-D Test Statistic	4.935				Nonparametric Statistics		
308					5% A-D Critical Value	0.893					Kaplan-Meier (KM) Method	
309					K-S Test Statistic	0.893					Mean	205.8
310					5% K-S Critical Value	0.226					SD	1011
311				Data not Gamma Distributed at 5% Significance Level							SE of Mean	204
312											95% KM (t) UCL	554.2
313				Assuming Gamma Distribution							95% KM (z) UCL	541.3
314					Gamma ROS Statistics using Extrapolated Data						95% KM (jackknife) UCL	551.1
315					Minimum	1E-09					95% KM (bootstrap t) UCL	110480
316					Maximum	5260					95% KM (BCA) UCL	610.2
317					Mean	209.2					95% KM (Percentile Bootstrap) UCL	610
318					Median	2.25					95% KM (Chebyshev) UCL	1095

	A	B	C	D	E	F	G	H	I	J	K	L
319					SD	1030				97.5% KM (Chebyshev) UCL		1480
320					k star	0.108				99% KM (Chebyshev) UCL		2235
321					Theta star	1939						
322					Nu star	5.611	**Potential UCLs to Use**					
323					AppChi2	1.445				99% KM (Chebyshev) UCL		2235
324				95% Gamma Approximate UCL		812.6						
325				95% Adjusted Gamma UCL		895.5						
326	**Note: DL/2 is not a recommended method.**											
327												
328												
329	**Iron**											
330												
331					**General Statistics**							
332				Number of Valid Observations		26				Number of Distinct Observations		26
333												
334				**Raw Statistics**			**Log-transformed Statistics**					
335				Minimum		880				Minimum of Log Data		6.78
336				Maximum		9190				Maximum of Log Data		9.126
337				Mean		3238				Mean of log Data		7.895
338				Median		2925				SD of log Data		0.622
339				SD		2177						
340				Coefficient of Variation		0.672						
341				Skewness		1.618						
342												
343					**Relevant UCL Statistics**							
344				**Normal Distribution Test**			**Lognormal Distribution Test**					
345				Shapiro Wilk Test Statistic		0.811				Shapiro Wilk Test Statistic		0.958
346				Shapiro Wilk Critical Value		0.92				Shapiro Wilk Critical Value		0.92
347				**Data not Normal at 5% Significance Level**			**Data appear Lognormal at 5% Significance Level**					
348												
349				**Assuming Normal Distribution**			**Assuming Lognormal Distribution**					
350				95% Student's-t UCL		3968				95% H-UCL		4212
351				**95% UCLs (Adjusted for Skewness)**						95% Chebyshev (MVUE) UCL		5056
352				95% Adjusted-CLT UCL		4085				97.5% Chebyshev (MVUE) UCL		5846
353				95% Modified-t UCL		3990				99% Chebyshev (MVUE) UCL		7398
354												
355				**Gamma Distribution Test**			**Data Distribution**					
356				k star (bias corrected)		2.521	**Data appear Gamma Distributed at 5% Significance Level**					
357				Theta Star		1284						
358				nu star		131.1						
359				Approximate Chi Square Value (.05)		105.7	**Nonparametric Statistics**					
360				Adjusted Level of Significance		0.0398				95% CLT UCL		3941
361				Adjusted Chi Square Value		104.1				95% Jackknife UCL		3968
362										95% Standard Bootstrap UCL		3934
363				Anderson-Darling Test Statistic		0.568				95% Bootstrap-t UCL		4272
364				Anderson-Darling 5% Critical Value		0.752				95% Hall's Bootstrap UCL		4189
365				Kolmogorov-Smirnov Test Statistic		0.155				95% Percentile Bootstrap UCL		3987
366				Kolmogorov-Smirnov 5% Critical Value		0.173				95% BCA Bootstrap UCL		4106
367				**Data appear Gamma Distributed at 5% Significance Level**						95% Chebyshev(Mean, Sd) UCL		5100
368										97.5% Chebyshev(Mean, Sd) UCL		5905
369				**Assuming Gamma Distribution**						99% Chebyshev(Mean, Sd) UCL		7487
370				95% Approximate Gamma UCL		4018						
371				95% Adjusted Gamma UCL		4077						

	A	B	C	D	E	F	G	H	I	J	K	L
372												
373	**Potential UCL to Use**						Use 95% Approximate Gamma UCL					4018
374												
375												
376	**Manganese**											
377												
378	**General Statistics**											
379	Number of Valid Data					26	Number of Detected Data					25
380	Number of Distinct Detected Data					24	Number of Non-Detect Data					1
381							Percent Non-Detects					3.85%
382												
383	**Raw Statistics**						**Log-transformed Statistics**					
384	Minimum Detected					2.2	Minimum Detected					0.788
385	Maximum Detected					351	Maximum Detected					5.861
386	Mean of Detected					33.24	Mean of Detected					2.602
387	SD of Detected					72.32	SD of Detected					1.17
388	Minimum Non-Detect					3.3	Minimum Non-Detect					1.194
389	Maximum Non-Detect					3.3	Maximum Non-Detect					1.194
390												
391												
392	**UCL Statistics**											
393	**Normal Distribution Test with Detected Values Only**						**Lognormal Distribution Test with Detected Values Only**					
394	Shapiro Wilk Test Statistic					0.424	Shapiro Wilk Test Statistic					0.93
395	5% Shapiro Wilk Critical Value					0.918	5% Shapiro Wilk Critical Value					0.918
396	**Data not Normal at 5% Significance Level**						**Data appear Lognormal at 5% Significance Level**					
397												
398	**Assuming Normal Distribution**						**Assuming Lognormal Distribution**					
399	DL/2 Substitution Method						DL/2 Substitution Method					
400	Mean					32.03	Mean					2.521
401	SD					71.13	SD					1.218
402	95% DL/2 (t) UCL					55.85	95% H-Stat (DL/2) UCL					47.86
403												
404	Maximum Likelihood Estimate(MLE) Method						Log ROS Method					
405	Mean					26.07	Mean in Log Scale					2.522
406	SD					75.43	SD in Log Scale					1.215
407	95% MLE (t) UCL					51.34	Mean in Original Scale					32.03
408	95% MLE (Tiku) UCL					49.62	SD in Original Scale					71.13
409							95% Percentile Bootstrap UCL					56.37
410							95% BCA Bootstrap UCL					72.08
411												
412	**Gamma Distribution Test with Detected Values Only**						**Data Distribution Test with Detected Values Only**					
413	k star (bias corrected)					0.619	**Data appear Lognormal at 5% Significance Level**					
414	Theta Star					53.67						
415	nu star					30.97						
416												
417	A-D Test Statistic					2.112	**Nonparametric Statistics**					
418	5% A-D Critical Value					0.791	Kaplan-Meier (KM) Method					
419	K-S Test Statistic					0.791	Mean					32.06
420	5% K-S Critical Value					0.182	SD					69.74
421	**Data not Gamma Distributed at 5% Significance Level**						SE of Mean					13.96
422							95% KM (t) UCL					55.9
423	**Assuming Gamma Distribution**						95% KM (z) UCL					55.02
424	Gamma ROS Statistics using Extrapolated Data						95% KM (jackknife) UCL					55.88

	A	B	C	D	E	F	G	H	I	J	K	L
425					Minimum	1E-09				95% KM (bootstrap t) UCL		152.5
426					Maximum	351				95% KM (BCA) UCL		58.17
427					Mean	31.96				95% KM (Percentile Bootstrap) UCL		56.27
428					Median	13.35				95% KM (Chebyshev) UCL		92.9
429					SD	71.16				97.5% KM (Chebyshev) UCL		119.2
430					k star	0.359				99% KM (Chebyshev) UCL		170.9
431					Theta star	88.91						
432					Nu star	18.69				**Potential UCLs to Use**		
433					AppChi2	9.894				97.5% KM (Chebyshev) UCL		119.2
434					95% Gamma Approximate UCL	60.39						
435					95% Adjusted Gamma UCL	63.08						
436	**Note: DL/2 is not a recommended method.**											
437												
438												
439	**Thallium**											
440												
441					**General Statistics**							
442					Number of Valid Data	26				Number of Detected Data		1
443					Number of Distinct Detected Data	1				Number of Non-Detect Data		25
444										Percent Non-Detects		96.15%
445												
446	**Warning: Only one distinct data value was detected! ProUCL (or any other software) should not be used on such a data set!**											
447	**It is suggested to use alternative site specific values determined by the Project Team to estimate environmental parameters (e.g., EPC, BTV).**											
448												
449	**The data set for variable Thallium was not processed!**											
450												
451												
452												
453	**Dieldrin**											
454												
455					**General Statistics**							
456					Number of Valid Data	26				Number of Detected Data		11
457					Number of Distinct Detected Data	10				Number of Non-Detect Data		15
458										Percent Non-Detects		57.69%
459												
460					**Raw Statistics**					**Log-transformed Statistics**		
461					Minimum Detected	0.05				Minimum Detected		-2.996
462					Maximum Detected	49				Maximum Detected		3.892
463					Mean of Detected	5.621				Mean of Detected		0.0188
464					SD of Detected	14.44				SD of Detected		1.801
465					Minimum Non-Detect	3.5				Minimum Non-Detect		1.253
466					Maximum Non-Detect	4.8				Maximum Non-Detect		1.569
467												
468	Note: Data have multiple DLs - Use of KM Method is recommended									Number treated as Non-Detect		25
469	For all methods (except KM, DL/2, and ROS Methods),									Number treated as Detected		1
470	Observations < Largest ND are treated as NDs									Single DL Non-Detect Percentage		96.15%
471												
472					**UCL Statistics**							
473					**Normal Distribution Test with Detected Values Only**					**Lognormal Distribution Test with Detected Values Only**		
474					Shapiro Wilk Test Statistic	0.419				Shapiro Wilk Test Statistic		0.962
475					5% Shapiro Wilk Critical Value	0.85				5% Shapiro Wilk Critical Value		0.85
476					**Data not Normal at 5% Significance Level**					**Data appear Lognormal at 5% Significance Level**		
477												

	A	B	C	D	E	F	G	H	I	J	K	L
478	Assuming Normal Distribution						Assuming Lognormal Distribution					
479					DL/2 Substitution Method						DL/2 Substitution Method	
480					Mean	3.526					Mean	0.403
481					SD	9.317					SD	1.189
482					95% DL/2 (t) UCL	6.647					95% H-Stat (DL/2) UCL	8.537
483												
484					Maximum Likelihood Estimate(MLE) Method	N/A					Log ROS Method	
485	MLE method failed to converge properly										Mean in Log Scale	-0.283
486											SD in Log Scale	1.295
487											Mean in Original Scale	2.829
488											SD in Original Scale	9.466
489											95% Percentile Bootstrap UCL	6.517
490											95% BCA Bootstrap UCL	8.497
491												
492	Gamma Distribution Test with Detected Values Only						Data Distribution Test with Detected Values Only					
493					k star (bias corrected)	0.342	Data Follow Appr. Gamma Distribution at 5% Significance Level					
494					Theta Star	16.42						
495					nu star	7.531						
496												
497					A-D Test Statistic	1.081	Nonparametric Statistics					
498					5% A-D Critical Value	0.803					Kaplan-Meier (KM) Method	
499					K-S Test Statistic	0.803					Mean	2.968
500					5% K-S Critical Value	0.273					SD	9.27
501	Data follow Appr. Gamma Distribution at 5% Significance Level										SE of Mean	1.921
502											95% KM (t) UCL	6.249
503	Assuming Gamma Distribution										95% KM (z) UCL	6.128
504					Gamma ROS Statistics using Extrapolated Data						95% KM (jackknife) UCL	6.164
505					Minimum	0.05					95% KM (bootstrap t) UCL	20.21
506					Maximum	49					95% KM (BCA) UCL	6.771
507					Mean	5.692					95% KM (Percentile Bootstrap) UCL	6.572
508					Median	5.499					95% KM (Chebyshev) UCL	11.34
509					SD	9.149					97.5% KM (Chebyshev) UCL	14.96
510					k star	0.746					99% KM (Chebyshev) UCL	22.08
511					Theta star	7.629						
512					Nu star	38.8	Potential UCLs to Use					
513					AppChi2	25.53					95% KM (t) UCL	6.249
514					95% Gamma Approximate UCL	8.65						
515					95% Adjusted Gamma UCL	8.898						
516	Note: DL/2 is not a recommended method.											
517												
518												
519	Benzo(a)anthracene											
520												
521	General Statistics											
522					Number of Valid Data	26					Number of Detected Data	4
523					Number of Distinct Detected Data	4					Number of Non-Detect Data	22
524											Percent Non-Detects	84.62%
525												
526	Raw Statistics						Log-transformed Statistics					
527					Minimum Detected	71					Minimum Detected	4.263
528					Maximum Detected	1000					Maximum Detected	6.908
529					Mean of Detected	329.5					Mean of Detected	5.189
530					SD of Detected	448.2					SD of Detected	1.186

	A	B	C	D	E	F	G	H	I	J	K	L
531					Minimum Non-Detect	350					Minimum Non-Detect	5.858
532					Maximum Non-Detect	440					Maximum Non-Detect	6.087
533												
534	Note: Data have multiple DLs - Use of KM Method is recommended										Number treated as Non-Detect	25
535	For all methods (except KM, DL/2, and ROS Methods),										Number treated as Detected	1
536	Observations < Largest ND are treated as NDs										Single DL Non-Detect Percentage	96.15%
537												
538					Warning: There are only 4 Distinct Detected Values in this data							
539					Note: It should be noted that even though bootstrap may be performed on this data set							
540					the resulting calculations may not be reliable enough tp draw conclusions							
541												
542					It is recommended to have 10-15 or more distinct observations for accurate and meaningful results.							
543												
544												
545					UCL Statistics							
546				Normal Distribution Test with Detected Values Only						Lognormal Distribution Test with Detected Values Only		
547					Shapiro Wilk Test Statistic	0.695					Shapiro Wilk Test Statistic	0.847
548					5% Shapiro Wilk Critical Value	0.748					5% Shapiro Wilk Critical Value	0.748
549				Data not Normal at 5% Significance Level						Data appear Lognormal at 5% Significance Level		
550												
551				Assuming Normal Distribution						Assuming Lognormal Distribution		
552					DL/2 Substitution Method						DL/2 Substitution Method	
553					Mean	219.7					Mean	5.278
554					SD	163					SD	0.419
555					95% DL/2 (t) UCL	274.3					95% H-Stat (DL/2) UCL	274.9
556												
557					Maximum Likelihood Estimate(MLE) Method	N/A					Log ROS Method	
558				MLE method failed to converge properly							Mean in Log Scale	4.75
559											SD in Log Scale	0.628
560											Mean in Original Scale	151
561											SD in Original Scale	180.7
562											95% Percentile Bootstrap UCL	216.8
563											95% BCA Bootstrap UCL	254.9
564												
565				Gamma Distribution Test with Detected Values Only						Data Distribution Test with Detected Values Only		
566					k star (bias corrected)	0.405				Data appear Gamma Distributed at 5% Significance Level		
567					Theta Star	813.4						
568					nu star	3.241						
569												
570					A-D Test Statistic	0.593				Nonparametric Statistics		
571					5% A-D Critical Value	0.667					Kaplan-Meier (KM) Method	
572					K-S Test Statistic	0.667					Mean	140.4
573					5% K-S Critical Value	0.403					SD	174.9
574				Data appear Gamma Distributed at 5% Significance Level							SE of Mean	44.27
575											95% KM (t) UCL	216
576				Assuming Gamma Distribution							95% KM (z) UCL	213.2
577					Gamma ROS Statistics using Extrapolated Data						95% KM (jackknife) UCL	214.9
578					Minimum	53.83					95% KM (bootstrap t) UCL	308
579					Maximum	1000					95% KM (BCA) UCL	1000
580					Mean	310.2					95% KM (Percentile Bootstrap) UCL	248.1
581					Median	338.2					95% KM (Chebyshev) UCL	333.4
582					SD	194.3					97.5% KM (Chebyshev) UCL	416.9
583					k star	2.369					99% KM (Chebyshev) UCL	580.9

	A	B	C	D	E	F	G	H	I	J	K	L
584					Theta star	130.9						
585					Nu star	123.2	Potential UCLs to Use					
586					AppChi2	98.57					95% KM (t) UCL	216
587				95% Gamma Approximate UCL		387.7						
588				95% Adjusted Gamma UCL		N/A						
589	Note: DL/2 is not a recommended method.											
590												
591												
592	Benzo(a)pyrene											
593												
594					General Statistics							
595				Number of Valid Data		26				Number of Detected Data		5
596				Number of Distinct Detected Data		4				Number of Non-Detect Data		21
597										Percent Non-Detects		80.77%
598												
599				Raw Statistics						Log-transformed Statistics		
600				Minimum Detected		50				Minimum Detected		3.912
601				Maximum Detected		2500				Maximum Detected		7.824
602				Mean of Detected		588				Mean of Detected		5.264
603				SD of Detected		1069				SD of Detected		1.492
604				Minimum Non-Detect		350				Minimum Non-Detect		5.858
605				Maximum Non-Detect		440				Maximum Non-Detect		6.087
606												
607	Note: Data have multiple DLs - Use of KM Method is recommended									Number treated as Non-Detect		25
608	For all methods (except KM, DL/2, and ROS Methods),									Number treated as Detected		1
609	Observations < Largest ND are treated as NDs									Single DL Non-Detect Percentage		96.15%
610												
611					Warning: There are only 4 Distinct Detected Values in this data							
612					Note: It should be noted that even though bootstrap may be performed on this data set							
613					the resulting calculations may not be reliable enough tp draw conclusions							
614												
615					It is recommended to have 10-15 or more distinct observations for accurate and meaningful results.							
616												
617												
618					UCL Statistics							
619				Normal Distribution Test with Detected Values Only						Lognormal Distribution Test with Detected Values Only		
620				Shapiro Wilk Test Statistic		0.585				Shapiro Wilk Test Statistic		0.793
621				5% Shapiro Wilk Critical Value		0.762				5% Shapiro Wilk Critical Value		0.762
622				Data not Normal at 5% Significance Level						Data appear Lognormal at 5% Significance Level		
623												
624				Assuming Normal Distribution						Assuming Lognormal Distribution		
625				DL/2 Substitution Method						DL/2 Substitution Method		
626				Mean		274.6				Mean		5.289
627				SD		455.5				SD		0.601
628				95% DL/2 (t) UCL		427.2				95% H-Stat (DL/2) UCL		291.7
629												
630				Maximum Likelihood Estimate(MLE) Method		N/A				Log ROS Method		
631				MLE method failed to converge properly						Mean in Log Scale		4.835
632										SD in Log Scale		0.827
633										Mean in Original Scale		221
634										SD in Original Scale		470.2
635										95% Percentile Bootstrap UCL		397.5
636										95% BCA Bootstrap UCL		508.7

	A	B	C	D	E	F	G	H	I	J	K	L
637												
638	Gamma Distribution Test with Detected Values Only						Data Distribution Test with Detected Values Only					
639					k star (bias corrected)	0.358	Data appear Lognormal at 5% Significance Level					
640					Theta Star	1644						
641					nu star	3.577						
642												
643					A-D Test Statistic	0.906	Nonparametric Statistics					
644					5% A-D Critical Value	0.708				Kaplan-Meier (KM) Method		
645					K-S Test Statistic	0.708				Mean		201.9
646					5% K-S Critical Value	0.37				SD		461
647	Data not Gamma Distributed at 5% Significance Level									SE of Mean		102.7
648										95% KM (t) UCL		377.3
649	Assuming Gamma Distribution									95% KM (z) UCL		370.8
650				Gamma ROS Statistics using Extrapolated Data						95% KM (jackknife) UCL		363.8
651					Minimum	17.59				95% KM (bootstrap t) UCL		1153
652					Maximum	2500				95% KM (BCA) UCL		412.3
653					Mean	577.5				95% KM (Percentile Bootstrap) UCL		391.1
654					Median	649.3				95% KM (Chebyshev) UCL		649.6
655					SD	486.8				97.5% KM (Chebyshev) UCL		843.2
656					k star	1.283				99% KM (Chebyshev) UCL		1224
657					Theta star	450.3						
658					Nu star	66.69	Potential UCLs to Use					
659					AppChi2	48.9				95% KM (BCA) UCL		412.3
660					95% Gamma Approximate UCL	787.6						
661					95% Adjusted Gamma UCL	804.1						
662	Note: DL/2 is not a recommended method.											
663												
664												
665	Benzo(b)fluoranthene											
666												
667					General Statistics							
668					Number of Valid Data	26				Number of Detected Data		2
669					Number of Distinct Detected Data	2				Number of Non-Detect Data		24
670										Percent Non-Detects		92.31%
671												
672				Raw Statistics			Log-transformed Statistics					
673					Minimum Detected	180				Minimum Detected		5.193
674					Maximum Detected	3300				Maximum Detected		8.102
675					Mean of Detected	1740				Mean of Detected		6.647
676					SD of Detected	2206				SD of Detected		2.057
677					Minimum Non-Detect	350				Minimum Non-Detect		5.858
678					Maximum Non-Detect	480				Maximum Non-Detect		6.174
679												
680	Note: Data have multiple DLs - Use of KM Method is recommended									Number treated as Non-Detect		25
681	For all methods (except KM, DL/2, and ROS Methods),									Number treated as Detected		1
682	Observations < Largest ND are treated as NDs									Single DL Non-Detect Percentage		96.15%
683												
684	Warning: Data set has only 2 Distinct Detected Values.											
685	This may not be adequate enough to compute meaningful and reliable test statistics and estimates.											
686	The Project Team may decide to use alternative site specific values to estimate environmental parameters (e.g., EPC, BTV).											
687												
688	Unless Data Quality Objectives (DQOs) have been met, it is suggested to collect additional observations.											
689												

	A	B	C	D	E	F	G	H	I	J	K	L
690	The number of detected data may not be adequate enough to perform GOF tests, bootstrap, and ROS methods.											
691	Those methods will return a 'N/A' value on your output display!											
692												
693	It is necessary to have 4 or more Distinct Values for bootstrap methods.											
694	It is recommended to have 10 to 15 or more observations for accurate and meaningful results and estimates.											
695												
696												
697	UCL Statistics											
698	Normal Distribution Test with Detected Values Only						Lognormal Distribution Test with Detected Values Only					
699					Shapiro Wilk Test Statistic	1				Shapiro Wilk Test Statistic		1
700					5% Shapiro Wilk Critical Value	N/A				5% Shapiro Wilk Critical Value		N/A
701	Data not Normal at 5% Significance Level						Data not Lognormal at 5% Significance Level					
702												
703	Assuming Normal Distribution						Assuming Lognormal Distribution					
704					DL/2 Substitution Method					DL/2 Substitution Method		
705					Mean	319.4				Mean		5.404
706					SD	608.2				SD		0.557
707					95% DL/2 (t) UCL	523.2				95% H-Stat (DL/2) UCL		301.7
708												
709					Maximum Likelihood Estimate(MLE) Method	N/A				Log ROS Method		
710	MLE method failed to converge properly									Mean in Log Scale		N/A
711										SD in Log Scale		N/A
712										Mean in Original Scale		N/A
713										SD in Original Scale		N/A
714										95% Percentile Bootstrap UCL		N/A
715										95% BCA Bootstrap UCL		N/A
716												
717	Gamma Distribution Test with Detected Values Only						Data Distribution Test with Detected Values Only					
718					k star (bias corrected)	N/A	Data do not follow a Discernable Distribution (0.05)					
719					Theta Star	N/A						
720					nu star	N/A						
721												
722					A-D Test Statistic	0.356	Nonparametric Statistics					
723					5% A-D Critical Value	N/A				Kaplan-Meier (KM) Method		
724					K-S Test Statistic	N/A				Mean		300
725					5% K-S Critical Value	N/A				SD		600
726	Data not Gamma Distributed at 5% Significance Level									SE of Mean		166.4
727										95% KM (t) UCL		584.3
728	Assuming Gamma Distribution									95% KM (z) UCL		573.7
729					Gamma ROS Statistics using Extrapolated Data					95% KM (jackknife) UCL		2352
730					Minimum	N/A				95% KM (bootstrap t) UCL		300
731					Maximum	N/A				95% KM (BCA) UCL		3300
732					Mean	N/A				95% KM (Percentile Bootstrap) UCL		3300
733					Median	N/A				95% KM (Chebyshev) UCL		1025
734					SD	N/A				97.5% KM (Chebyshev) UCL		1339
735					k star	N/A				99% KM (Chebyshev) UCL		1956
736					Theta star	N/A						
737					Nu star	N/A	Potential UCLs to Use					
738					AppChi2	N/A				99% KM (Chebyshev) UCL		1956
739					95% Gamma Approximate UCL	N/A						
740					95% Adjusted Gamma UCL	N/A						
741	Note: DL/2 is not a recommended method.											
742												

	A	B	C	D	E	F	G	H	I	J	K	L
743												
744	**Benzo(k)fluoranthene**											
745												
746						**General Statistics**						
747					Number of Valid Data	26				Number of Detected Data		3
748					Number of Distinct Detected Data	3				Number of Non-Detect Data		23
749										Percent Non-Detects		88.46%
750												
751				**Raw Statistics**						**Log-transformed Statistics**		
752					Minimum Detected	49				Minimum Detected		3.892
753					Maximum Detected	1400				Maximum Detected		7.244
754					Mean of Detected	536.3				Mean of Detected		5.404
755					SD of Detected	750				SD of Detected		1.7
756					Minimum Non-Detect	350				Minimum Non-Detect		5.858
757					Maximum Non-Detect	480				Maximum Non-Detect		6.174
758												
759	Note: Data have multiple DLs - Use of KM Method is recommended									Number treated as Non-Detect		25
760	For all methods (except KM, DL/2, and ROS Methods),									Number treated as Detected		1
761	Observations < Largest ND are treated as NDs									Single DL Non-Detect Percentage		96.15%
762												
763						**Warning: There are only 3 Distinct Detected Values in this data set**						
764						**The number of detected data may not be adequate enough to perform GOF tests, bootstrap, and ROS methods.**						
765						**Those methods will return a 'N/A' value on your output display!**						
766												
767						**It is necessary to have 4 or more Distinct Values for bootstrap methods.**						
768						**It is recommended to have 10 to 15 or more observations for accurate and meaningful results and estimates.**						
769												
770												
771						**UCL Statistics**						
772				**Normal Distribution Test with Detected Values Only**						**Lognormal Distribution Test with Detected Values Only**		
773					Shapiro Wilk Test Statistic	0.811				Shapiro Wilk Test Statistic		0.972
774					5% Shapiro Wilk Critical Value	0.767				5% Shapiro Wilk Critical Value		0.767
775				**Data appear Normal at 5% Significance Level**						**Data appear Lognormal at 5% Significance Level**		
776												
777				**Assuming Normal Distribution**						**Assuming Lognormal Distribution**		
778					DL/2 Substitution Method					DL/2 Substitution Method		
779					Mean	239.2				Mean		5.309
780					SD	239.2				SD		0.489
781					95% DL/2 (t) UCL	319.3				95% H-Stat (DL/2) UCL		289
782												
783					Maximum Likelihood Estimate(MLE) Method	N/A				Log ROS Method		
784				**MLE method failed to converge properly**						Mean in Log Scale		4.58
785										SD in Log Scale		0.812
786										Mean in Original Scale		154.2
787										SD in Original Scale		261.1
788										95% Percentile Bootstrap UCL		254.3
789										95% BCA Bootstrap UCL		303.4
790												
791				**Gamma Distribution Test with Detected Values Only**						**Data Distribution Test with Detected Values Only**		
792					k star (bias corrected)	N/A				**Data appear Normal at 5% Significance Level**		
793					Theta Star	N/A						
794					nu star	N/A						
795												

	A	B	C	D	E	F	G	H	I	J	K	L
796					A-D Test Statistic	0.347	Nonparametric Statistics					
797					5% A-D Critical Value	N/A					Kaplan-Meier (KM) Method	
798					K-S Test Statistic	N/A					Mean	154.3
799					5% K-S Critical Value	N/A					SD	255
800	Data not Gamma Distributed at 5% Significance Level										SE of Mean	75.61
801											95% KM (t) UCL	283.5
802			Assuming Gamma Distribution								95% KM (z) UCL	278.7
803				Gamma ROS Statistics using Extrapolated Data							95% KM (jackknife) UCL	306.6
804					Minimum	N/A					95% KM (bootstrap t) UCL	323.8
805					Maximum	N/A					95% KM (BCA) UCL	1400
806					Mean	N/A					95% KM (Percentile Bootstrap) UCL	1400
807					Median	N/A					95% KM (Chebyshev) UCL	483.9
808					SD	N/A					97.5% KM (Chebyshev) UCL	626.5
809					k star	N/A					99% KM (Chebyshev) UCL	906.6
810					Theta star	N/A						
811					Nu star	N/A	Potential UCLs to Use					
812					AppChi2	N/A					95% KM (t) UCL	283.5
813					95% Gamma Approximate UCL	N/A					95% KM (Percentile Bootstrap) UCL	1400
814					95% Adjusted Gamma UCL	N/A						
815	Note: DL/2 is not a recommended method.											
816												
817												
818	Chrysene											
819												
820					General Statistics							
821					Number of Valid Data	26					Number of Detected Data	5
822					Number of Distinct Detected Data	5					Number of Non-Detect Data	21
823											Percent Non-Detects	80.77%
824												
825					Raw Statistics		Log-transformed Statistics					
826					Minimum Detected	58					Minimum Detected	4.06
827					Maximum Detected	1600					Maximum Detected	7.378
828					Mean of Detected	429.6					Mean of Detected	5.333
829					SD of Detected	656.4					SD of Detected	1.237
830					Minimum Non-Detect	350					Minimum Non-Detect	5.858
831					Maximum Non-Detect	440					Maximum Non-Detect	6.087
832												
833	Note: Data have multiple DLs - Use of KM Method is recommended										Number treated as Non-Detect	25
834	For all methods (except KM, DL/2, and ROS Methods),										Number treated as Detected	1
835	Observations < Largest ND are treated as NDs										Single DL Non-Detect Percentage	96.15%
836												
837					Warning: There are only 5 Detected Values in this data							
838					Note: It should be noted that even though bootstrap may be performed on this data set							
839					the resulting calculations may not be reliable enough tp draw conclusions							
840												
841					It is recommended to have 10-15 or more distinct observations for accurate and meaningful results.							
842												
843												
844					UCL Statistics							
845					Normal Distribution Test with Detected Values Only		Lognormal Distribution Test with Detected Values Only					
846					Shapiro Wilk Test Statistic	0.63					Shapiro Wilk Test Statistic	0.875
847					5% Shapiro Wilk Critical Value	0.762					5% Shapiro Wilk Critical Value	0.762
848					Data not Normal at 5% Significance Level		Data appear Lognormal at 5% Significance Level					

	A	B	C	D	E	F	G	H	I	J	K	L
849												
850				Assuming Normal Distribution						Assuming Lognormal Distribution		
851					DL/2 Substitution Method						DL/2 Substitution Method	
852					Mean	244.2					Mean	5.303
853					SD	278.7					SD	0.5
854					95% DL/2 (t) UCL	337.5					95% H-Stat (DL/2) UCL	268.3
855												
856					Maximum Likelihood Estimate(MLE) Method	N/A					Log ROS Method	
857					MLE method failed to converge properly						Mean in Log Scale	4.967
858											SD in Log Scale	0.695
859											Mean in Original Scale	202.4
860											SD in Original Scale	293.3
861											95% Percentile Bootstrap UCL	312.4
862											95% BCA Bootstrap UCL	375.7
863												
864				Gamma Distribution Test with Detected Values Only						Data Distribution Test with Detected Values Only		
865					k star (bias corrected)	0.458				Data Follow Appr. Gamma Distribution at 5% Significance Level		
866					Theta Star	937.9						
867					nu star	4.58						
868												
869					A-D Test Statistic	0.688				Nonparametric Statistics		
870					5% A-D Critical Value	0.697					Kaplan-Meier (KM) Method	
871					K-S Test Statistic	0.697					Mean	193.3
872					5% K-S Critical Value	0.366					SD	286.1
873				Data follow Appr. Gamma Distribution at 5% Significance Level							SE of Mean	67.92
874											95% KM (t) UCL	309.3
875				Assuming Gamma Distribution							95% KM (z) UCL	305
876					Gamma ROS Statistics using Extrapolated Data						95% KM (jackknife) UCL	304.9
877					Minimum	58					95% KM (bootstrap t) UCL	426.6
878					Maximum	1600					95% KM (BCA) UCL	305.8
879					Mean	419					95% KM (Percentile Bootstrap) UCL	315.5
880					Median	444.8					95% KM (Chebyshev) UCL	489.3
881					SD	291.3					97.5% KM (Chebyshev) UCL	617.5
882					k star	2.407					99% KM (Chebyshev) UCL	869.1
883					Theta star	174						
884					Nu star	125.2				Potential UCLs to Use		
885					AppChi2	100.3					95% KM (t) UCL	309.3
886					95% Gamma Approximate UCL	522.7						
887					95% Adjusted Gamma UCL	530.5						
888	Note: DL/2 is not a recommended method.											
889												
890												
891	Dibenz(a,h)anthracene											
892												
893					General Statistics							
894					Number of Valid Data	26					Number of Detected Data	1
895					Number of Distinct Detected Data	1					Number of Non-Detect Data	25
896											Percent Non-Detects	96.15%
897												
898				Warning: Only one distinct data value was detected! ProUCL (or any other software) should not be used on such a data set!								
899				It is suggested to use alternative site specific values determined by the Project Team to estimate environmental parameters (e.g., EPC, BTV).								
900												
901				The data set for variable Dibenz(a,h)anthracene was not processed!								

	A	B	C	D	E	F	G	H	I	J	K	L
902												
903												
904												
905	Indeno(1,2,3-cd)pyrene											
906												
907						General Statistics						
908						Number of Valid Data	26			Number of Detected Data		4
909						Number of Distinct Detected Data	4			Number of Non-Detect Data		22
910										Percent Non-Detects		84.62%
911												
912				Raw Statistics						Log-transformed Statistics		
913						Minimum Detected	84			Minimum Detected		4.431
914						Maximum Detected	2500			Maximum Detected		7.824
915						Mean of Detected	706			Mean of Detected		5.45
916						SD of Detected	1196			SD of Detected		1.597
917						Minimum Non-Detect	350			Minimum Non-Detect		5.858
918						Maximum Non-Detect	440			Maximum Non-Detect		6.087
919												
920	Note: Data have multiple DLs - Use of KM Method is recommended									Number treated as Non-Detect		25
921	For all methods (except KM, DL/2, and ROS Methods),									Number treated as Detected		1
922	Observations < Largest ND are treated as NDs									Single DL Non-Detect Percentage		96.15%
923												
924						Warning: There are only 4 Distinct Detected Values in this data						
925						Note: It should be noted that even though bootstrap may be performed on this data set						
926						the resulting calculations may not be reliable enough tp draw conclusions						
927												
928						It is recommended to have 10-15 or more distinct observations for accurate and meaningful results.						
929												
930												
931						UCL Statistics						
932				Normal Distribution Test with Detected Values Only						Lognormal Distribution Test with Detected Values Only		
933						Shapiro Wilk Test Statistic	0.647			Shapiro Wilk Test Statistic		0.746
934						5% Shapiro Wilk Critical Value	0.748			5% Shapiro Wilk Critical Value		0.748
935				Data not Normal at 5% Significance Level						Data not Lognormal at 5% Significance Level		
936												
937				Assuming Normal Distribution						Assuming Lognormal Distribution		
938						DL/2 Substitution Method				DL/2 Substitution Method		
939						Mean	277.7			Mean		5.318
940						SD	454.5			SD		0.561
941						95% DL/2 (t) UCL	429.9			95% H-Stat (DL/2) UCL		309.4
942												
943						Maximum Likelihood Estimate(MLE) Method	N/A			Log ROS Method		
944				MLE method failed to converge properly						Mean in Log Scale		4.88
945										SD in Log Scale		0.829
946										Mean in Original Scale		228.1
947										SD in Original Scale		469.9
948										95% Percentile Bootstrap UCL		405.5
949										95% BCA Bootstrap UCL		513.7
950												
951				Gamma Distribution Test with Detected Values Only						Data Distribution Test with Detected Values Only		
952						k star (bias corrected)	0.307			Data do not follow a Discernable Distribution (0.05)		
953						Theta Star	2298					
954						nu star	2.458					

	A	B	C	D	E	F	G	H	I	J	K	L
955												
956					A-D Test Statistic	0.773				**Nonparametric Statistics**		
957					5% A-D Critical Value	0.678					Kaplan-Meier (KM) Method	
958					K-S Test Statistic	0.678					Mean	200
959					5% K-S Critical Value	0.409					SD	460.6
960		**Data not Gamma Distributed at 5% Significance Level**									SE of Mean	105.3
961											95% KM (t) UCL	379.8
962			**Assuming Gamma Distribution**								95% KM (z) UCL	373.1
963				Gamma ROS Statistics using Extrapolated Data							95% KM (jackknife) UCL	360.5
964					Minimum	1E-09					95% KM (bootstrap t) UCL	1441
965					Maximum	2500					95% KM (BCA) UCL	2500
966					Mean	663.4					95% KM (Percentile Bootstrap) UCL	476
967					Median	781.3					95% KM (Chebyshev) UCL	658.8
968					SD	535.4					97.5% KM (Chebyshev) UCL	857.3
969					k star	0.421					99% KM (Chebyshev) UCL	1247
970					Theta star	1574						
971					Nu star	21.91				**Potential UCLs to Use**		
972					AppChi2	12.27					97.5% KM (Chebyshev) UCL	857.3
973					95% Gamma Approximate UCL	1184						
974					95% Adjusted Gamma UCL	N/A						
975	**Note: DL/2 is not a recommended method.**											
976												

	A	B	C	D	E	F	G	H	I	J	K	L
1				General UCL Statistics for Full Data Sets								
2			User Selected Options									
3			From File	C:\Documents and Settings\rwarren\Desktop\prouclinput.wst								
4			Full Precision	OFF								
5			Confidence Coefficient	95%								
6			Number of Bootstrap Operations	2000								
7												
8												
9	Thallium											
10												
11						General Statistics						
12						Number of Valid Observations	26			Number of Distinct Observations	13	
13												
14						Raw Statistics				Log-transformed Statistics		
15						Minimum	0.9			Minimum of Log Data	-0.105	
16						Maximum	19.55			Maximum of Log Data	2.973	
17						Mean	1.915			Mean of log Data	0.286	
18						Median	1.175			SD of log Data	0.569	
19						SD	3.602					
20						Coefficient of Variation	1.88					
21						Skewness	5.077					
22												
23						Relevant UCL Statistics						
24						Normal Distribution Test				Lognormal Distribution Test		
25						Shapiro Wilk Test Statistic	0.243			Shapiro Wilk Test Statistic	0.444	
26						Shapiro Wilk Critical Value	0.92			Shapiro Wilk Critical Value	0.92	
27						Data not Normal at 5% Significance Level				Data not Lognormal at 5% Significance Level		
28												
29						Assuming Normal Distribution				Assuming Lognormal Distribution		
30						95% Student's-t UCL	3.122			95% H-UCL	1.968	
31						95% UCLs (Adjusted for Skewness)				95% Chebyshev (MVUE) UCL	2.35	
32						95% Adjusted-CLT UCL	3.829			97.5% Chebyshev (MVUE) UCL	2.694	
33						95% Modified-t UCL	3.239			99% Chebyshev (MVUE) UCL	3.37	
34												
35						Gamma Distribution Test				Data Distribution		
36						k star (bias corrected)	1.371			Data do not follow a Discernable Distribution (0.05)		
37						Theta Star	1.397					
38						nu star	71.3					
39						Approximate Chi Square Value (.05)	52.86			Nonparametric Statistics		
40						Adjusted Level of Significance	0.0398			95% CLT UCL	3.077	
41						Adjusted Chi Square Value	51.81			95% Jackknife UCL	3.122	
42										95% Standard Bootstrap UCL	3.076	
43						Anderson-Darling Test Statistic	6.722			95% Bootstrap-t UCL	18.19	
44						Anderson-Darling 5% Critical Value	0.761			95% Hall's Bootstrap UCL	9.34	
45						Kolmogorov-Smirnov Test Statistic	0.452			95% Percentile Bootstrap UCL	3.323	
46						Kolmogorov-Smirnov 5% Critical Value	0.174			95% BCA Bootstrap UCL	4.052	
47						Data not Gamma Distributed at 5% Significance Level				95% Chebyshev(Mean, Sd) UCL	4.994	
48										97.5% Chebyshev(Mean, Sd) UCL	6.326	
49						Assuming Gamma Distribution				99% Chebyshev(Mean, Sd) UCL	8.943	
50						95% Approximate Gamma UCL	2.584					
51						95% Adjusted Gamma UCL	2.636					
52												
53						Potential UCL to Use				Use 95% Chebyshev (Mean, Sd) UCL	4.994	

	A	B	C	D	E	F	G	H	I	J	K	L
54												
55												
56	Dibenz(a,h)anthracene											
57												
58						General Statistics						
59					Number of Valid Observations	26				Number of Distinct Observations		13
60												
61				Raw Statistics						Log-transformed Statistics		
62					Minimum	175				Minimum of Log Data		5.165
63					Maximum	600				Maximum of Log Data		6.397
64					Mean	218.1				Mean of log Data		5.35
65					Median	202.5				SD of log Data		0.232
66					SD	80.04						
67					Coefficient of Variation	0.367						
68					Skewness	4.674						
69												
70						Relevant UCL Statistics						
71				Normal Distribution Test						Lognormal Distribution Test		
72					Shapiro Wilk Test Statistic	0.403				Shapiro Wilk Test Statistic		0.561
73					Shapiro Wilk Critical Value	0.92				Shapiro Wilk Critical Value		0.92
74				Data not Normal at 5% Significance Level						Data not Lognormal at 5% Significance Level		
75												
76				Assuming Normal Distribution						Assuming Lognormal Distribution		
77					95% Student's-t UCL	244.9				95% H-UCL		234.8
78				95% UCLs (Adjusted for Skewness)						95% Chebyshev (MVUE) UCL		259.3
79					95% Adjusted-CLT UCL	259.3				97.5% Chebyshev (MVUE) UCL		278
80					95% Modified-t UCL	247.3				99% Chebyshev (MVUE) UCL		314.7
81												
82				Gamma Distribution Test						Data Distribution		
83					k star (bias corrected)	12.88				Data do not follow a Discernable Distribution (0.05)		
84					Theta Star	16.93						
85					nu star	670						
86					Approximate Chi Square Value (.05)	610.9				Nonparametric Statistics		
87					Adjusted Level of Significance	0.0398				95% CLT UCL		243.9
88					Adjusted Chi Square Value	607.2				95% Jackknife UCL		244.9
89										95% Standard Bootstrap UCL		243
90					Anderson-Darling Test Statistic	3.932				95% Bootstrap-t UCL		310.8
91					Anderson-Darling 5% Critical Value	0.744				95% Hall's Bootstrap UCL		347.6
92					Kolmogorov-Smirnov Test Statistic	0.336				95% Percentile Bootstrap UCL		247.9
93					Kolmogorov-Smirnov 5% Critical Value	0.171				95% BCA Bootstrap UCL		262.9
94				Data not Gamma Distributed at 5% Significance Level						95% Chebyshev(Mean, Sd) UCL		286.5
95										97.5% Chebyshev(Mean, Sd) UCL		316.1
96				Assuming Gamma Distribution						99% Chebyshev(Mean, Sd) UCL		374.3
97					95% Approximate Gamma UCL	239.2						
98					95% Adjusted Gamma UCL	240.6						
99												
100				Potential UCL to Use						Use 95% Student's-t UCL		244.9
101										or 95% Modified-t UCL		247.3
102												

Appendix L
Ecological Risk Screening Tables

TABLE L-1
Surface Soil Ecological Risk Screening
Site UXO-08 Former Lejeune Cantonment Bazooka Range, Base CS Chamber, and NBC Training Trail
MCB Camp Lejeune, North Carolina

Chemical Name	Maximum Concentration[a]		Average[b]	Location of Maximum Detection	Detection Ratio	Ecological Screening Value	HQ	Camp Lejeune Background SS 2X Mean
Explosives (mg/kg)								
2,4,6-TRINITROTOLUENE	2.5E-01	U	1.7E-01		0/41	--	--	--
2,4-DINITROTOLUENE	2.5E-01	U	1.7E-01		0/41	--	--	--
2,6-DINITROTOLUENE	2.5E-01	U	1.7E-01		0/41	--	--	--
2-AMINO-4,6-DINITROTOLUENE	2.5E-01	U	1.7E-01		0/41	--	--	--
2-NITROTOLUENE	3.6E-01	J	1.9E-01	MR08-SS21	2/41	--	--	--
3-NITROTOLUENE	3.9E-01	J	1.9E-01	MR08-SS03	1/41	--	--	--
4-AMINO-2,6-DINITROTOLUENE	2.5E-01	U	1.7E-01		0/41	--	--	--
4-NITROTOLUENE	2.5E-01	U	1.9E-01		0/41	--	--	--
HMX	2.5E-01	U	1.9E-01		0/41	--	--	--
NITROBENZENE	2.5E-01	U	1.7E-01		0/41	4.0E+01	6.3E-03	
NITROGLYCERIN	1.3E+00	U	1.1E+00		0/29	--	--	--
PENTAERYTHRITOL TETRANITRATE	1.3E+00	U	1.1E+00		0/29	--	--	--
PERCHLORATE	2.6E-02		3.8E-03	MR08-SS40	3/12	--	--	--
RDX	3.2E-01	J	1.9E-01	MR08-SS15	2/41	--	--	--
TETRYL	2.5E-01	U	1.9E-01		0/41	--	--	--
Total Metals (mg/kg)								
ALUMINUM	**5.5E+03**		4.1E+03	MR08-SS34	12/12	5.0E+01	1.1E+02	5.5E+03
ANTIMONY	**3.2E+00**	U	2.6E+00		0/12	2.7E-01	1.2E+01	4.5E-01
ARSENIC	8.0E+00		3.3E+00	MR08-SS37	12/12	1.8E+01	4.4E-01	6.3E-01
BARIUM	2.3E+01		1.1E+01	MR08-SS34	3/12	3.3E+02	6.9E-02	1.5E+01
BERYLLIUM	2.5E-01	J	1.6E-01	MR08-SS37	12/12	2.1E+01	1.2E-02	1.0E-01
CADMIUM	**9.6E-01**		2.9E-01	MR08-SS37	12/12	3.6E-01	2.7E+00	3.3E-02
CALCIUM	3.0E+05		6.3E+04	MR08-SS37	11/12	--	--	6.4E+03
CHROMIUM	1.2E+01		7.1E+00	MR08-SS39	12/12	2.6E+01	4.5E-01	6.1E+00
COBALT	7.9E+00		1.8E+00	MR08-SS37	12/12	1.3E+01	6.1E-01	2.9E-01
COPPER	**3.9E+01**		8.9E+00	MR08-SS37	10/12	2.8E+01	1.4E+00	4.8E+00
IRON	**5.0E+03**		3.1E+03	MR08-SS37	12/12	2.0E+02	2.5E+01	3.2E+03
LEAD	**4.0E+01**		1.5E+01	MR08-SS31	12/12	1.1E+01	3.7E+00	1.2E+01
MAGNESIUM	3.8E+03		9.1E+02	MR08-SS36	4/12	--	--	2.4E+02
MANGANESE	**3.5E+02**		8.5E+01	MR08-SS37	12/12	2.2E+02	1.6E+00	1.4E+01
MERCURY	2.2E-02	U	1.8E-02		0/12	6.7E-01	3.3E-02	8.1E-02
NICKEL	3.4E+01		7.8E+00	MR08-SS37	12/12	3.8E+01	8.9E-01	1.2E+00
POTASSIUM	3.9E+03	U	9.1E+02		0/12	--	--	1.2E+02
SELENIUM	**7.3E-01**	J	1.2E+00	MR08-SS34	4/12	6.3E-01	1.2E+00	5.6E-01
SILVER	1.0E-01	J	4.0E-01	MR08-SS40	1/12	4.2E+00	2.4E-02	1.4E-01
SODIUM	2.7E+02	U	2.2E+02		0/12	--	--	8.1E+01
THALLIUM	**1.1E+00**	J	4.2E+00	MR08-SS39	1/12	1.0E+00	1.1E+00	3.6E-01
VANADIUM	**1.5E+01**		1.1E+01	MR08-SS35	12/12	7.8E+00	1.9E+00	8.9E+00
ZINC	**6.7E+01**	J	2.8E+01	MR08-SS39	12/12	4.6E+01	1.4E+00	1.1E+01
Pesticide/Polychlorinated Biphenyls (mg/kg)								
4,4'-DDD	8.7E-04	J	1.6E-03	MR08-SS36	3/12	2.1E-02	4.1E-02	
4,4'-DDE	4.9E-03	J	1.7E-03	MR08-SS35	11/12	2.1E-02	2.3E-01	
4,4'-DDT	2.4E-03	J	1.4E-03	MR08-SS31	10/12	2.1E-02	1.1E-01	
ALDRIN	1.3E-03	U	1.0E-03		0/12	2.5E-03	5.0E-01	
ALPHA-BHC	1.3E-03	U	1.0E-03		0/12	2.5E-03	5.0E-01	
ALPHA-CHLORDANE	7.1E-04	J	8.1E-04	MR08-SS33	5/12	--	--	
AROCLOR-1016	**2.5E-02**	U	2.1E-02		0/12	2.0E-02	1.2E+00	
AROCLOR-1221	**4.9E-02**	U	4.1E-02		0/12	2.0E-02	2.5E+00	
AROCLOR-1232	**2.5E-02**	U	2.1E-02		0/12	2.0E-02	1.2E+00	
AROCLOR-1242	**2.5E-02**	U	2.1E-02		0/12	2.0E-02	1.2E+00	
AROCLOR-1248	**2.5E-02**	U	2.1E-02		0/12	2.0E-02	1.2E+00	

TABLE L-1
Surface Soil Ecological Risk Screening
Site UXO-08 Former Lejeune Cantonment Bazooka Range, Base CS Chamber, and NBC Training Trail
MCB Camp Lejeune, North Carolina

Chemical Name	Maximum Concentration[a]		Average[b]	Location of Maximum Detection	Detection Ratio	Ecological Screening Value	HQ	Camp Lejeune Background SS 2X Mean
AROCLOR-1254	**2.5E-02**	U	2.1E-02		0/12	2.0E-02	1.2E+00	
AROCLOR-1260	**2.5E-02**	U	2.1E-02		0/12	2.0E-02	1.2E+00	
BETA-BHC	**1.3E-03**	U	1.0E-03		0/12	1.0E-03	1.3E+00	
DELTA-BHC	1.3E-03	U	1.0E-03		0/12	--	--	
DIELDRIN	**4.9E-02**	J	5.6E-03	MR08-SS35	7/12	4.9E-03	1.0E+01	
ENDOSULFAN I	1.3E-03	U	1.0E-03		0/12	1.0E-01	1.3E-02	
ENDOSULFAN II	2.0E-03	J	2.1E-03	MR08-SS30	1/12	1.0E-01	2.0E-02	
ENDOSULFAN SULFATE	2.5E-03	U	2.1E-03		0/12	1.0E-01	2.5E-02	
ENDRIN	**2.5E-03**	U	2.1E-03		0/12	1.0E-03	2.5E+00	
ENDRIN ALDEHYDE	9.5E-04	J	1.7E-03	MR08-SS32	3/12	1.0E-01	9.5E-03	
ENDRIN KETONE	2.5E-03	U	2.1E-03		0/12	--	--	
GAMMA-BHC (LINDANE)	**1.3E-03**	U	1.0E-03		0/12	5.0E-05	2.5E+01	
GAMMA-CHLORDANE	6.2E-04	J	8.9E-04	MR08-SS33	3/12	--	--	
HEPTACHLOR	1.3E-03	U	1.0E-03		0/12	1.0E-01	1.3E-02	
HEPTACHLOR EPOXIDE	1.3E-03	U	1.0E-03		0/12	1.0E-01	1.3E-02	
METHOXYCHLOR	1.3E-02	U	1.0E-02		0/12	1.0E-01	1.3E-01	
TOXAPHENE	**1.3E-01**	U	1.0E-01		0/12	1.0E-01	1.3E+00	
Semivolatile Organic Compounds (mg/kg)								
1,1-BIPHENYL	2.5E-01	U	2.1E-01		0/12	--	--	
2,2'-OXYBIS(1- CHLOROPROPANE)	2.5E-01	U	2.1E-01		0/12	--	--	
2,4,5-TRICHLOROPHENOL	6.0E-01	U	5.1E-01		0/12	4.0E+00	1.5E-01	
2,4,6-TRICHLOROPHENOL	2.5E-01	U	2.1E-01		0/12	1.0E+01	2.5E-02	
2,4-DICHLOROPHENOL	**2.5E-01**	U	2.1E-01		0/12	1.0E-02	2.5E+01	
2,4-DIMETHYLPHENOL	2.5E-01	U	2.1E-01		0/12	--	--	
2,4-DINITROPHENOL	6.0E-01	U	5.1E-01		0/12	2.0E+01	3.0E-02	
2,4-DINITROTOLUENE	2.5E-01	U	2.1E-01		0/12	--	--	
2,6-DINITROTOLUENE	2.5E-01	U	2.1E-01		0/12	--	--	
2-CHLORONAPHTHALENE	2.5E-01	U	2.1E-01		0/12	1.0E+00	2.5E-01	
2-CHLOROPHENOL	**2.5E-01**	U	2.1E-01		0/12	1.0E-02	2.5E+01	
2-METHYLNAPHTHALENE	2.5E-01	U	2.1E-01		0/12	2.9E+01	8.4E-03	
2-METHYLPHENOL	2.5E-01	U	2.1E-01		0/12	5.0E-01	4.9E-01	
2-NITROANILINE	6.0E-01	U	5.1E-01		0/12	--	--	
2-NITROPHENOL	2.5E-01	U	2.1E-01		0/12	--	--	
3,3'-DICHLOROBENZIDINE	2.5E-01	U	2.1E-01		0/12	--	--	
3-NITROANILINE	6.0E-01	U	5.1E-01		0/12	--	--	
4,6-DINITRO-2-METHYLPHENOL	6.0E-01	U	5.1E-01		0/12	--	--	
4-BROMOPHENYL-PHENYLETHER	2.5E-01	U	2.1E-01		0/12	--	--	
4-CHLORO-3-METHYLPHENOL	2.5E-01	U	2.1E-01		0/12	--	--	
4-CHLOROANILINE	2.5E-01	U	2.1E-01		0/12	2.0E+01	1.2E-02	
4-CHLOROPHENYL-PHENYLETHER	2.5E-01	U	2.1E-01		0/12	--	--	
4-METHYLPHENOL	6.9E-02	J	1.9E-01	MR08-SS33	1/12	5.0E-01	1.4E-01	
4-NITROPHENOL	6.0E-01	U	5.1E-01		0/12	7.0E+00	8.6E-02	
ACENAPHTHENE	2.5E-01	U	2.1E-01		0/12	2.0E+01	1.2E-02	
ACENAPHTHYLENE	2.5E-01	U	2.1E-01		0/12	2.9E+01	8.4E-03	
ACETOPHENONE	2.5E-01	U	2.1E-01		0/12	--	--	
ANTHRACENE	6.0E-02	J	1.8E-01	MR08-SS33	2/12	1.0E-01	6.0E-01	
ATRAZINE	**2.5E-01**	U	2.1E-01		0/12	5.0E-05	4.9E+03	
BENZO(A)ANTHRACENE	1.5E-01	J	1.8E-01	MR08-SS33	3/12	1.1E+00	1.4E-01	
BENZO(A)PYRENE	**1.4E-01**	J	1.7E-01	MR08-SS33	4/12	1.0E-01	1.4E+00	
BENZO(B)FLUORANTHENE	1.8E-01	J	2.0E-01	MR08-SS31	1/12	1.1E+00	1.6E-01	
BENZO(G,H,I)PERYLENE	1.7E-01	J	1.7E-01	MR08-SS31	4/12	1.1E+00	1.5E-01	
BENZO(K)FLUORANTHENE	1.6E-01	J	1.8E-01	MR08-SS31	2/12	1.1E+00	1.5E-01	
BIS(2-CHLOROETHOXY)METHANE	2.5E-01	U	2.1E-01		0/12	--	--	
BIS(2-CHLOROETHYL)ETHER	2.5E-01	U	2.1E-01		0/12	--	--	

TABLE L-1
Surface Soil Ecological Risk Screening
Site UXO-08 Former Lejeune Cantonment Bazooka Range, Base CS Chamber, and NBC Training Trail
MCB Camp Lejeune, North Carolina

Chemical Name	Maximum Concentration[a]		Average[b]	Location of Maximum Detection	Detection Ratio	Ecological Screening Value	HQ	Camp Lejeune Background SS 2X Mean
BIS(2-ETHYLHEXYL)PHTHALATE	5.2E-01	J	1.2E-01	MR08-SS40	9/12	--	--	
BUTYLBENZYLPHTHALATE	2.5E-01	U	2.1E-01		0/12	--	--	
CAPROLACTAM	5.2E-02	J	1.9E-01	MR08-SS30	1/12	--	--	
CARBAZOLE	2.5E-01	U	2.1E-01		0/12	--	--	
CHRYSENE	1.9E-01	J	1.8E-01	MR08-SS31	4/12	1.1E+00	1.7E-01	
DIBENZ(A,H)ANTHRACENE	2.5E-01	U	2.1E-01		0/12	1.1E+00	2.2E-01	
DIBENZOFURAN	2.5E-01	U	2.1E-01		0/12	6.0E+02	4.1E-04	
DIETHYLPHTHALATE	2.5E-01	U	2.1E-01		0/12	1.0E+02	2.5E-03	
DIMETHYL PHTHALATE	2.5E-01	U	2.1E-01		0/12	2.0E+02	1.2E-03	
DI-N-BUTYLPHTHALATE	2.8E-01	J	1.8E-01	MR08-SS30	3/12	2.0E+02	1.4E-03	
DI-N-OCTYLPHTHALATE	2.5E-01	U	2.1E-01		0/12	--	--	
FLUORANTHENE	**4.0E-01**	J	2.0E-01	MR08-SS33	5/12	1.0E-01	4.0E+00	
FLUORENE	2.5E-01	U	2.1E-01		0/12	3.0E+01	8.2E-03	
HEXACHLOROBENZENE	**2.5E-01**	U	2.1E-01		0/12	2.5E-03	9.8E+01	
HEXACHLOROBUTADIENE	2.5E-01	U	2.1E-01		0/12	--	--	
HEXACHLOROCYCLOPENTADIENE	2.5E-01	U	2.1E-01		0/12	1.0E+01	2.5E-02	
HEXACHLOROETHANE	**2.5E-01**	U	2.1E-01		0/12	1.0E-01	2.5E+00	
INDENO(1,2,3-CD)PYRENE	1.4E-01	J	1.8E-01	MR08-SS31	3/12	1.1E+00	1.3E-01	
ISOPHORONE	2.5E-01	U	2.1E-01		0/12	--	--	
NAPHTHALENE	**2.5E-01**	U	2.1E-01		0/12	1.0E-01	2.5E+00	
NITROBENZENE	2.5E-01	U	2.1E-01		0/12	4.0E+01	6.3E-03	
N-NITROSO-DI-N-PROPYLAMINE	2.5E-01	U	2.1E-01		0/12	--	--	
N-NITROSODIPHENYLAMINE	2.5E-01	U	2.1E-01		0/12	2.0E+01	1.2E-02	
PENTACHLOROPHENOL	6.0E-01	U	5.1E-01		0/12	2.1E+00	2.9E-01	
PHENANTHRENE	**3.0E-01**	J	1.8E-01	MR08-SS33	3/12	1.0E-01	3.0E+00	
PHENOL	**2.5E-01**	U	2.1E-01		0/12	5.0E-02	4.9E+00	
PYRENE	**3.2E-01**	J	2.0E-01	MR08-SS33	4/12	1.0E-01	3.2E+00	

Notes:

J - Analyte present, value may or may not be accurate or precise

NA - Not analyzed

U - The material was analyed for, but not detected

UJ - Analyte not detected, quantitation limit may be inaccurate

a - One half of the detection limit is reported if not detected

b - Average concentrations calculated using one half of the detection limits when applicable

-- Indicates not applicable

Bold - Concentration exceeded ecological screening value

TABLE L-2
Subsurface Soil Ecological Risk Screening
Site UXO-08 Former Lejeune Cantonment Bazooka Range, Base CS Chamber, and NBC Training Trail
MCB Camp Lejeune, North Carolina

Chemical Name	Maximum Concentration[a]		Average[b]	Location of Maximum Detection	Detection Ratio	Ecological Screening Value	HQ	Camp Lejeune Background SS 2X Mean
Explosives (mg/kg)								
1,3,5-TRINITROBENZENE	2.5E-01	U	2.3E-01		0/5	--	--	--
1,3-DINITROBENZENE	2.5E-01	U	2.3E-01		0/5	--	--	--
2,4,6-TRINITROTOLUENE	2.5E-01	U	2.3E-01		0/5	--	--	--
2,4-DINITROTOLUENE	2.5E-01	U	2.3E-01		0/5	--	--	--
2,6-DINITROTOLUENE	2.5E-01	U	2.3E-01		0/5	--	--	--
2-AMINO-4,6-DINITROTOLUENE	2.5E-01	U	2.3E-01		0/5	--	--	--
2-NITROTOLUENE	2.5E-01	U	2.3E-01		0/5	--	--	--
3-NITROTOLUENE	2.5E-01	U	2.3E-01		0/5	--	--	--
4-AMINO-2,6-DINITROTOLUENE	2.5E-01	U	2.3E-01		0/5	--	--	--
4-NITROTOLUENE	2.5E-01	U	2.3E-01		0/5	--	--	--
HMX	2.5E-01	U	2.3E-01		0/5	--	--	--
NITROBENZENE	2.5E-01	U	2.3E-01		0/5	4.0E+01	6.3E-03	--
NITROGLYCERIN	1.3E+00	U	1.2E+00		0/5	--	--	--
PENTAERYTHRITOL TETRANITRATE	1.3E+00	U	1.2E+00		0/5	--	--	--
RDX	2.5E-01	U	2.3E-01		0/5	--	--	--
TETRYL	2.5E-01	U	2.3E-01		0/5	--	--	--
CARBON-14	1.1E+04	J	4.8E+03	MR08-SS28	5/5	--	--	--
Total Metals (mg/kg)								
CYANIDE	1.5E-01	U	1.4E-01		0/5	--	--	--
ALUMINUM	**1.2E+04**		7.5E+03	MR08-SS24	5/5	5.0E+01	2.4E+02	1.0E+04
ANTIMONY	**3.8E+00**	J	3.7E+00	MR08-SS24	2/2	2.7E-01	1.4E+01	3.6E-01
ARSENIC	2.8E+00		1.6E+00	MR08-SS24	4/5	1.8E+01	1.6E-01	2.1E+00
BARIUM	3.9E+01		1.6E+01	MR08-SS24	5/5	3.3E+02	1.2E-01	1.7E+01
BERYLLIUM	2.9E-01	J	2.6E-01	MR08-SS24	2/5	2.1E+01	1.4E-02	1.7E-01
CADMIUM	**9.9E-01**		4.1E-01	MR08-SS24	2/5	3.6E-01	2.8E+00	2.3E-02
CALCIUM	1.0E+05	J	3.5E+04	MR08-SS24	5/5	--	--	4.4E+02
CHROMIUM	2.2E+01	J	1.1E+01	MR08-SS24	5/5	2.6E+01	8.4E-01	1.5E+01
COBALT	1.6E+00	J	1.9E+00	MR08-SS24	3/5	1.3E+01	1.2E-01	8.2E-01
COPPER	2.4E+01		6.3E+00	MR08-SS24	5/5	2.8E+01	8.5E-01	2.6E+00
IRON	**7.8E+03**	J	3.7E+03	MR08-SS24	5/5	2.0E+02	3.9E+01	5.4E+03
LEAD	**2.5E+02**		5.5E+01	MR08-SS24	5/5	1.1E+01	2.3E+01	8.5E+00
MAGNESIUM	1.9E+03		7.5E+02	MR08-SS24	5/5	--	--	3.6E+02
MANGANESE	5.3E+01	J	2.3E+01	MR08-SS26	5/5	2.2E+02	2.4E-01	9.3E+00
MERCURY	4.0E-02		2.4E-02	MR08-SS26	4/5	6.7E-01	6.0E-02	7.1E-02
MERCURY	4.0E-02		2.4E-02	MR08-SS26	4/5	6.7E-01	6.0E-02	7.1E-02
MERCURY	4.0E-02		2.4E-02	MR08-SS26	4/5	6.7E-01	6.0E-02	7.1E-02
NICKEL	7.2E+00		3.5E+00	MR08-SS24	4/5	3.8E+01	1.9E-01	2.3E+00
POTASSIUM	6.7E+02		4.0E+02	MR08-SS24	5/5	--	--	3.6E+02
SELENIUM	**9.3E-01**	J	1.8E+00	MR08-SS24	1/5	6.3E-01	1.5E+00	5.1E-01
SILVER	6.0E-01	U	5.5E-01		0/5	4.2E+00	1.4E-01	1.3E-01
SODIUM	2.5E+02	J	2.4E+02	MR08-SS24	2/5	--	--	6.8E+01
THALLIUM	**1.5E+00**	U	1.4E+00		0/5	1.0E+00	1.5E+00	3.8E-01
VANADIUM	**2.1E+01**		1.2E+01	MR08-SS24	5/5	7.8E+00	2.7E+00	1.7E+01
ZINC	**2.3E+02**		5.4E+01	MR08-SS24	3/5	4.6E+01	5.1E+00	6.6E+00
Pesticide/Polychlorinated Biphenyls (mg/kg)								
4,4'-DDD	**1.6E-01**		3.8E-02	MR08-SS25	4/5	2.1E-02	7.6E+00	--
4,4'-DDE	**2.3E-02**		7.4E-03	MR08-SS26	2/5	2.1E-02	1.1E+00	--
4,4'-DDT	**3.8E-02**		1.1E-02	MR08-SS26	2/5	2.1E-02	1.8E+00	--
ALDRIN	1.1E-03	U	9.4E-04		0/5	2.5E-03	4.2E-01	--
ALPHA-BHC	1.1E-03	U	9.4E-04		0/5	2.5E-03	4.2E-01	--
ALPHA-CHLORDANE	1.0E-03	J	9.7E-04	MR08-SS24	2/5	--	--	--
ALPHA-CHLORDANE	1.0E-03	J	9.7E-04	MR08-SS28	2/5	--	--	--

TABLE L-2
Subsurface Soil Ecological Risk Screening
Site UXO-08 Former Lejeune Cantonment Bazooka Range, Base CS Chamber, and NBC Training Trail
MCB Camp Lejeune, North Carolina

Chemical Name	Maximum Concentration[a]		Average[b]	Location of Maximum Detection	Detection Ratio	Ecological Screening Value	HQ	Camp Lejeune Background SS 2X Mean
ALPHA-CHLORDANE	1.0E-03	J	9.7E-04	MR08-SS24	2/5	--	--	--
ALPHA-CHLORDANE	1.0E-03	J	9.7E-04	MR08-SS28	2/5	--	--	--
AROCLOR-1016	**2.2E-02**	U	1.9E-02		0/5	2.0E-02	1.1E+00	--
AROCLOR-1221	**4.3E-02**	U	3.8E-02		0/5	2.0E-02	2.2E+00	--
AROCLOR-1232	**2.2E-02**	U	1.9E-02		0/5	2.0E-02	1.1E+00	--
AROCLOR-1242	**2.2E-02**	U	1.9E-02		0/5	2.0E-02	1.1E+00	--
AROCLOR-1248	**2.2E-02**	U	1.9E-02		0/5	2.0E-02	1.1E+00	--
AROCLOR-1254	**2.2E-02**	U	1.9E-02		0/5	2.0E-02	1.1E+00	--
AROCLOR-1260	**2.2E-02**	U	1.9E-02		0/5	2.0E-02	1.1E+00	--
BETA-BHC	**1.1E-03**	U	9.4E-04		0/5	1.0E-03	1.1E+00	--
CHLORDANE	1.4E-03	J	1.1E-03	MR08-SS25	3/5	--	--	--
CHLORDANE	1.4E-03	J	1.1E-03	MR08-SS28	3/5	--	--	--
DELTA-BHC	1.1E-03	U	9.4E-04		0/5	--	--	--
DIELDRIN	2.9E-03	J	2.1E-03	MR08-SS28	1/5	4.9E-03	5.9E-01	--
ENDOSULFAN I	1.2E-03	J	1.0E-03	MR08-SS26	1/5	1.0E-01	1.2E-02	--
ENDOSULFAN II	2.0E-03	J	1.9E-03	MR08-SS26	1/5	1.0E-01	2.0E-02	--
ENDOSULFAN SULFATE	2.2E-03	J	2.0E-03	MR08-SS26	1/5	1.0E-01	2.2E-02	--
ENDRIN	**7.9E-03**		3.3E-03	MR08-SS26	2/5	1.0E-03	7.9E+00	--
ENDRIN ALDEHYDE	2.2E-03	U	1.9E-03		0/5	1.0E-01	2.2E-02	--
ENDRIN KETONE	2.2E-03	U	1.9E-03		0/5	--	--	--
GAMMA-BHC (LINDANE)	**1.1E-03**	U	9.4E-04		0/5	5.0E-05	2.1E+01	--
HEPTACHLOR	1.1E-03	U	9.4E-04		0/5	1.0E-01	1.1E-02	--
HEPTACHLOR EPOXIDE	1.1E-03	U	9.4E-04		0/5	1.0E-01	1.1E-02	--
METHOXYCHLOR	1.1E-02	U	9.4E-03		0/5	1.0E-01	1.1E-01	--
TOXAPHENE	**1.1E-01**	U	9.4E-02		0/5	1.0E-01	1.1E+00	--
Semivolatile Organic Compounds (mg/kg)								
1,1-BIPHENYL	2.1E-01	U	1.9E-01		0/5	--	--	--
1,2,4-TRICHLOROBENZENE	**1.1E-02**	U	7.0E-03		0/5	1.0E-02	1.1E+00	--
1,4-DICHLOROBENZENE	**1.1E-02**	U	7.0E-03		0/5	1.0E-02	1.1E+00	--
2,2'-OXYBIS(1- CHLOROPROPANE)	2.1E-01	U	1.9E-01		0/5	--	--	--
2,4,5-TRICHLOROPHENOL	2.1E-01	U	1.9E-01		0/5	4.0E+00	5.3E-02	--
2,4,6-TRICHLOROPHENOL	2.1E-01	U	1.9E-01		0/5	1.0E+01	2.1E-02	--
2,4-DICHLOROPHENOL	**2.1E-01**	U	1.9E-01		0/5	1.0E-02	2.1E+01	--
2,4-DIMETHYLPHENOL	2.1E-01	U	1.9E-01		0/5	--	--	--
2,4-DINITROPHENOL	4.2E-01	U	3.7E-01		0/5	2.0E+01	2.1E-02	--
2,4-DINITROTOLUENE	2.1E-01	U	1.9E-01		0/5	--	--	--
2,6-DINITROTOLUENE	2.1E-01	U	1.9E-01		0/5	--	--	--
2-CHLORONAPHTHALENE	2.1E-01	U	1.9E-01		0/5	1.0E+00	2.1E-01	--
2-CHLOROPHENOL	**2.1E-01**	U	1.9E-01		0/5	1.0E-02	2.1E+01	--
2-METHYLNAPHTHALENE	2.1E-01	U	1.9E-01		0/5	2.9E+01	7.2E-03	--
2-METHYLPHENOL	2.1E-01	U	1.9E-01		0/5	5.0E-01	4.2E-01	--
2-NITROANILINE	2.1E-01	U	1.9E-01		0/5	--	--	--
2-NITROPHENOL	2.1E-01	U	1.9E-01		0/5	--	--	--
3,3'-DICHLOROBENZIDINE	2.1E-01	U	1.9E-01		0/5	--	--	--
3-NITROANILINE	2.1E-01	U	1.9E-01		0/5	--	--	--
4,6-DINITRO-2-METHYLPHENOL	4.2E-01	U	3.7E-01		0/5	--	--	--
4-BROMOPHENYL-PHENYLETHER	2.1E-01	U	1.9E-01		0/5	--	--	--
4-CHLORO-3-METHYLPHENOL	2.1E-01	U	1.9E-01		0/5	--	--	--
4-CHLOROANILINE	2.1E-01	U	1.9E-01		0/5	2.0E+01	1.1E-02	--
4-CHLOROPHENYL-PHENYLETHER	2.1E-01	U	1.9E-01		0/5	--	--	--
4-METHYLPHENOL	4.2E-01	U	3.7E-01		0/5	5.0E-01	8.4E-01	--
4-NITROANILINE	2.1E-01	U	1.9E-01		0/5	--	--	--
4-NITROPHENOL	4.2E-01	U	3.7E-01		0/5	7.0E+00	6.0E-02	--
ACENAPHTHENE	2.1E-01	U	1.9E-01		0/5	2.0E+01	1.1E-02	--
ACENAPHTHYLENE	2.1E-01	U	1.9E-01		0/5	2.9E+01	7.2E-03	--

TABLE L-2
Subsurface Soil Ecological Risk Screening
Site UXO-08 Former Lejeune Cantonment Bazooka Range, Base CS Chamber, and NBC Training Trail
MCB Camp Lejeune, North Carolina

Chemical Name	Maximum Concentration[a]		Average[b]	Location of Maximum Detection	Detection Ratio	Ecological Screening Value	HQ	Camp Lejeune Background SS 2X Mean
ACETOPHENONE	2.1E-01	U	1.9E-01		0/5	--	--	--
ANTHRACENE	**2.1E-01**	U	1.9E-01		0/5	1.0E-01	2.1E+00	--
ATRAZINE	**2.1E-01**	U	1.9E-01		0/5	5.0E-05	4.2E+03	--
BENZALDEHYDE	2.1E-01	U	1.9E-01		0/5	--	--	--
BENZO(A)ANTHRACENE	1.0E+00		3.5E-01	MR08-SS26	1/5	1.1E+00	9.1E-01	--
BENZO(A)PYRENE	**2.5E+00**	J	6.5E-01	MR08-SS26	1/5	1.0E-01	2.5E+01	--
BENZO(B)FLUORANTHENE	**3.3E+00**	J	8.1E-01	MR08-SS26	1/5	1.1E+00	3.0E+00	--
BENZO(G,H,I)PERYLENE	**2.2E+00**	J	5.9E-01	MR08-SS26	1/5	1.1E+00	2.0E+00	--
BENZO(K)FLUORANTHENE	**1.4E+00**	J	4.3E-01	MR08-SS26	1/5	1.1E+00	1.3E+00	--
BIS(2-CHLOROETHOXY)METHANE	2.1E-01	U	1.9E-01		0/5	--	--	--
BIS(2-CHLOROETHYL)ETHER	2.1E-01	U	1.9E-01		0/5	--	--	--
BIS(2-ETHYLHEXYL)PHTHALATE	2.1E-01	U	1.9E-01		0/5	--	--	--
BUTYLBENZYLPHTHALATE	2.1E-01	U	1.9E-01		0/5	--	--	--
CAPROLACTAM	2.1E-01	U	1.9E-01		0/5	--	--	--
CARBAZOLE	2.1E-01	U	1.9E-01		0/5	--	--	--
CHRYSENE	**1.6E+00**	J	4.7E-01	MR08-SS26	1/5	1.1E+00	1.5E+00	--
DIBENZ(A,H)ANTHRACENE	6.0E-01	J	2.7E-01	MR08-SS26	1/5	1.1E+00	5.5E-01	--
DIBENZOFURAN	2.1E-01	U	1.9E-01		0/5	6.0E+02	3.5E-04	--
DIETHYLPHTHALATE	2.1E-01	U	1.9E-01		0/5	1.0E+02	2.1E-03	--
DIMETHYL PHTHALATE	2.1E-01	U	1.9E-01		0/5	2.0E+02	1.1E-03	--
DI-N-BUTYLPHTHALATE	2.1E-01	U	1.9E-01		0/5	2.0E+02	1.1E-03	--
DI-N-OCTYLPHTHALATE	4.2E-01	U	3.7E-01		0/5	--	--	--
FLUORANTHENE	**1.1E+00**		3.7E-01	MR08-SS26	1/5	1.0E-01	1.1E+01	--
FLUORENE	2.1E-01	U	1.9E-01		0/5	3.0E+01	7.0E-03	--
HEXACHLOROBENZENE	**2.1E-01**	U	1.9E-01		0/5	2.5E-03	8.4E+01	--
HEXACHLOROBUTADIENE	2.1E-01	U	1.9E-01		0/5	--	--	--
HEXACHLOROCYCLOPENTADIENE	2.1E-01	U	1.9E-01		0/5	1.0E+01	2.1E-02	--
HEXACHLOROETHANE	**2.1E-01**	U	1.9E-01		0/5	1.0E-01	2.1E+00	--
INDENO(1,2,3-CD)PYRENE	**2.5E+00**	J	6.5E-01	MR08-SS26	1/5	1.1E+00	2.3E+00	--
ISOPHORONE	2.1E-01	U	1.9E-01		0/5	--	--	--
NAPHTHALENE	**2.1E-01**	U	1.9E-01		0/5	1.0E-01	2.1E+00	--
NITROBENZENE	2.1E-01	U	1.9E-01		0/5	4.0E+01	5.3E-03	--
N-NITROSO-DI-N-PROPYLAMINE	2.1E-01	U	1.9E-01		0/5	--	--	--
N-NITROSODIPHENYLAMINE	2.1E-01	U	1.9E-01		0/5	2.0E+01	1.1E-02	--
PENTACHLOROPHENOL	4.2E-01	U	3.7E-01		0/5	2.1E+00	2.0E-01	--
PHENANTHRENE	**2.1E-01**	U	1.9E-01		0/5	1.0E-01	2.1E+00	--
PHENOL	**4.2E-01**	U	3.7E-01		0/5	5.0E-02	8.4E+00	--
PYRENE	**9.4E-01**		3.4E-01	MR08-SS26	1/5	1.0E-01	9.4E+00	--
Total Petroleum Hydrocarbons (mg/kg)								
C10-C40 PETROLEUM HYDROCARBONS	1.4E+02		4.7E+01	MR08-SS26	5/5	--	--	--
TPH-GAS RANGE	3.2E+00	U	2.9E+00		0/5	--	--	--
Volatile Organic Compounds (mg/kg)								
1,1,1-TRICHLOROETHANE	1.1E-02	U	7.0E-03		0/5	1.0E-01	1.1E-01	--
1,1,2,2-TETRACHLOROETHANE	1.1E-02	U	7.0E-03		0/5	1.0E-01	1.1E-01	--
1,1,2-TRICHLORO-1,2,2-TRIFLUOROETHANE(FREON-113)	1.1E-02	U	7.0E-03		0/5	--	--	--
1,1,2-TRICHLOROETHANE	1.1E-02	U	7.0E-03		0/5	1.0E-01	1.1E-01	--
1,1-DICHLOROETHANE	1.1E-02	U	7.0E-03		0/5	1.0E-01	1.1E-01	--
1,1-DICHLOROETHENE	1.1E-02	U	7.0E-03		0/5	1.0E-01	1.1E-01	--
1,2-DIBROMO-3-CHLOROPROPANE	1.1E-02	U	7.0E-03		0/5	--	--	--
1,2-DIBROMOETHANE	1.1E-02	U	7.0E-03		0/5	--	--	--
1,2-DICHLOROBENZENE	**1.1E-02**	U	7.0E-03		0/5	1.0E-02	1.1E+00	--
1,2-DICHLOROETHANE	1.1E-02	U	7.0E-03		0/5	4.0E-01	2.8E-02	--
1,2-DICHLOROPROPANE	1.1E-02	U	7.0E-03		0/5	7.0E+02	1.6E-05	--
1,3-DICHLOROBENZENE	**1.1E-02**	U	7.0E-03		0/5	1.0E-02	1.1E+00	--
2-BUTANONE	1.1E-02	U	7.0E-03		0/5	--	--	--

TABLE L-2

Subsurface Soil Ecological Risk Screening

Site UXO-08 Former Lejeune Cantonment Bazooka Range, Base CS Chamber, and NBC Training Trail

MCB Camp Lejeune, North Carolina

Chemical Name	Maximum Concentration[a]		Average[b]	Location of Maximum Detection	Detection Ratio	Ecological Screening Value	HQ	Camp Lejeune Background SS 2X Mean
2-HEXANONE	1.1E-02	U	7.0E-03		0/5	--	--	--
4-METHYL-2-PENTANONE	1.1E-02	U	7.0E-03		0/5	--	--	--
ACETONE	2.8E-02	U	1.3E-02		0/5	--	--	--
BENZENE	1.1E-02	U	7.0E-03		0/5	5.0E-02	2.2E-01	--
BROMODICHLOROMETHANE	1.1E-02	U	7.0E-03		0/5	--	--	--
BROMOFORM	1.1E-02	U	7.0E-03		0/5	--	--	--
BROMOMETHANE	1.1E-02	U	7.0E-03		0/5	--	--	--
CARBON DISULFIDE	1.1E-02	U	6.0E-03		0/5	--	--	--
CARBON TETRACHLORIDE	1.1E-02	U	7.0E-03		0/5	1.0E+03	1.1E-05	--
CHLOROBENZENE	1.1E-02	U	7.0E-03		0/5	5.0E-02	2.2E-01	--
CHLOROETHANE	1.1E-02	U	7.0E-03		0/5	1.0E-01	1.1E-01	--
CHLOROFORM	**1.1E-02**	U	7.0E-03		0/5	1.0E-03	1.1E+01	--
CHLOROMETHANE	1.1E-02	U	7.0E-03		0/5	--	--	--
CIS-1,2-DICHLOROETHENE	1.1E-02	U	7.0E-03		0/5	1.0E-01	1.1E-01	--
CIS-1,3-DICHLOROPROPENE	1.1E-02	U	7.0E-03		0/5	--	--	--
CYCLOHEXANE	1.1E-02	U	7.0E-03		0/5	1.0E-01	1.1E-01	--
DIBROMOCHLOROMETHANE	1.1E-02	U	7.0E-03		0/5	--	--	--
DICHLORODIFLUOROMETHANE (FREON-12)	1.1E-02	U	7.0E-03		0/5	--	--	--
ETHYLBENZENE	1.1E-02	U	7.0E-03		0/5	5.0E-02	2.2E-01	--
ISOPROPYLBENZENE (CUMENE)	1.1E-02	U	7.0E-03		0/5	--	--	--
METHYL ACETATE	1.1E-02	U	7.0E-03		0/5	--	--	--
METHYLCYCLOHEXANE	1.1E-02	U	7.0E-03		0/5	--	--	--
METHYLENE CHLORIDE	1.6E-02	U	1.0E-02		0/5	2.0E+00	7.8E-03	--
STYRENE	1.1E-02	U	7.0E-03		0/5	1.0E-01	1.1E-01	--
TERT-BUTYL METHYL ETHER	1.1E-02	U	7.0E-03		0/5	--	--	--
TETRACHLOROETHENE	**1.1E-02**	U	7.0E-03		0/5	1.0E-02	1.1E+00	--
TOLUENE	1.1E-02	U	7.0E-03		0/5	5.0E-02	2.2E-01	--
TRANS-1,2-DICHLOROETHENE	1.1E-02	U	7.0E-03		0/5	1.0E-01	1.1E-01	--
TRANS-1,3-DICHLOROPROPENE	1.1E-02	U	7.0E-03		0/5	--	--	--
TRICHLOROETHENE	**1.1E-02**	U	7.0E-03		0/5	1.0E-03	1.1E+01	--
TRICHLOROFLUOROMETHANE(FREON-11)	1.1E-02	U	7.0E-03		0/5	--	--	--
VINYL CHLORIDE	**1.1E-02**	U	7.0E-03		0/5	1.0E-02	1.1E+00	--
XYLENE, TOTAL	1.1E-02	U	7.0E-03		0/5	5.0E-02	2.2E-01	--

Notes:

J - Analyte present, value may or may not be accurate or precise

NA - Not analyzed

U - The material was analyed for, but not detected

UJ - Analyte not detected, quantitation limit may be inaccurate

a - One half of the detection limit is reported if not detected

b - Average concentrations calculated using one half of the detection limits when applicable

-- Indicates not applicable

Bold - Concentration exceeded ecological screening value

TABLE L-3
Groundwater Ecological Risk Screening
Site UXO-08 Former Lejeune Cantonment Bazooka Range, Base CS Chamber, and NBC Training Trail
MCB Camp Lejeune, North Carolina

Chemical Name	Maximum Concentration[a]		Average[b]	Location of Maximum Detection	Detection Ratio	Ecological Screening Value	HQ	Camp Lejeune Background SS 2X Mean
Explosives (mg/L)								
1,3,5-TRINITROBENZENE	2.3E-04	U	1.4E-04		0/19	--	--	--
1,3-DINITROBENZENE	1.3E-04	J	1.3E-04	IR78-GW42	2/19	--	--	--
2,4,6-TRINITROTOLUENE	2.3E-04	U	1.4E-04		0/19	--	--	--
2,4-DINITROTOLUENE	3.4E-04		1.5E-04	IR78-GW04	2/19	3.1E-01	1.1E-03	--
2,6-DINITROTOLUENE	2.3E-04	U	1.4E-04		0/19	--	--	--
2-AMINO-4,6-DINITROTOLUENE	2.3E-04	U	1.4E-04		0/19	--	--	--
2-NITROTOLUENE	2.3E-04	U	2.0E-04		0/19	--	--	--
3-NITROTOLUENE	2.3E-04	U	2.0E-04		0/19	--	--	--
4-AMINO-2,6-DINITROTOLUENE	7.1E-04		1.7E-04	IR78-GW04	3/19	--	--	--
4-NITROTOLUENE	1.1E-04	J	2.0E-04	IR78-GW68	1/19	--	--	--
HMX	2.3E-04	U	2.0E-04		0/19	--	--	--
NITROBENZENE	2.3E-04	U	1.4E-04		0/19	2.7E-01	8.5E-04	--
NITROGLYCERIN	2.7E-03	NJ	1.3E-03	IR78-GW42	1/6	--	--	--
PENTAERYTHRITOL TETRANITRATE	1.2E-03	U	1.1E-03		0/6	--	--	--
PERCHLORATE	9.2E-04		1.6E-04	IR78-GW54	4/19	--	--	--
RDX	2.3E-04	U	2.0E-04		0/19	--	--	--
TETRYL	2.3E-04	U	2.0E-04		0/19	--	--	--
Total Metals (mg/L)								
CYANIDE	5.0E-03	U	5.0E-03		0/6	5.0E-03	1.0E+00	--
ALUMINUM	**3.1E+00**		5.0E-01	IR78-GW01	8/19	8.7E-02	3.6E+01	1.9E+00
ANTIMONY	7.8E-03	J	2.9E-02	IR78-GW56	1/19	1.6E-01	4.9E-02	3.3E-03
ARSENIC	1.6E-02		5.9E-03	IR78-GW01	6/19	5.0E-02	3.3E-01	5.8E-03
BARIUM	1.2E-01	J	8.4E-02	IR78-GW54	8/19	--	--	8.6E-02
BERYLLIUM	**9.4E-04**	J	2.2E-03	IR78-GW63	3/19	5.3E-04	1.8E+00	3.1E-04
CADMIUM	**2.5E-03**	U	2.5E-03		0/19	4.0E-04	6.3E+00	3.6E-04
CALCIUM	2.0E+02		9.6E+01	IR78-GW68	19/19	--	--	6.9E+01
CHROMIUM	3.7E-03	J	4.4E-03	IR78-GW01	4/19	1.1E-02	3.4E-01	3.1E-03
COBALT	1.6E-02	J	2.1E-02	IR78-GW63	4/19	--	--	3.4E-03
COPPER	6.0E-03	J	1.2E-02	IR78-GW62	1/19	7.0E-03	8.6E-01	2.8E-03
IRON	**7.1E+01**		7.9E+00	IR78-GW01	17/19	1.0E+00	7.1E+01	6.0E+00
LEAD	**5.0E-03**	U	5.0E-03		0/19	2.5E-03	2.0E+00	2.8E-03
MAGNESIUM	1.5E+01	J	5.0E+00	IR78-GW50	13/19	--	--	6.4E+00
MANGANESE	1.3E+00	J	2.0E-01	IR78-GW59	18/19	--	--	2.1E-01
MERCURY	**1.2E-04**	J	9.4E-05	IR78-GW59	7/19	1.2E-05	1.0E+01	1.0E-04
NICKEL	1.4E-02	J	1.7E-02	IR78-GW63	4/19	5.2E-02	2.7E-01	8.0E-03
POTASSIUM	6.8E+00		2.5E+00	IR78-GW54	14/19	--	--	3.3E+00
SELENIUM	**1.8E-02**	U	1.8E-02		0/19	5.0E-03	3.5E+00	3.1E-03
SILVER	**5.0E-03**	U	5.0E-03		0/19	1.2E-05	4.2E+02	7.7E-04
SODIUM	2.5E+01		1.1E+01	IR78-GW68	19/19	--	--	2.3E+01
THALLIUM	**4.8E-03**	J	1.2E-02	IR78-GW62	1/19	4.0E-03	1.2E+00	3.8E-03
VANADIUM	3.5E-02	J	2.4E-02	IR78-GW01	3/19	--	--	4.7E-03
ZINC	**1.9E-01**		3.4E-02	IR78-GW54	7/19	5.0E-02	3.9E+00	4.2E-02
Pesticide/Polychlorinated Biphenyls (mg/L)								
4,4'-DDD	**5.5E-05**	U	5.1E-05		0/6	6.4E-06	8.6E+00	--
4,4'-DDE	5.5E-05	U	5.1E-05		0/6	1.1E-02	5.2E-03	--
4,4'-DDT	**5.5E-05**	U	5.1E-05		0/6	1.0E-06	5.5E+01	--
ALDRIN	**2.7E-05**	U	2.6E-05		0/6	2.0E-06	1.4E+01	--
ALPHA-BHC	2.7E-05	U	2.6E-05		0/6	5.0E-01	5.4E-05	--
ALPHA-CHLORDANE	2.7E-05	U	2.6E-05		0/6	--	--	--
AROCLOR-1016	**5.5E-04**	U	5.1E-04		0/6	1.0E-06	5.5E+02	--
AROCLOR-1221	**1.1E-03**	U	1.0E-03		0/6	1.0E-06	1.1E+03	--
AROCLOR-1232	**5.5E-04**	U	5.1E-04		0/6	1.0E-06	5.5E+02	--

TABLE L-3
Groundwater Ecological Risk Screening
Site UXO-08 Former Lejeune Cantonment Bazooka Range, Base CS Chamber, and NBC Training Trail
MCB Camp Lejeune, North Carolina

Chemical Name	Maximum Concentration[a]		Average[b]	Location of Maximum Detection	Detection Ratio	Ecological Screening Value	HQ	Camp Lejeune Background SS 2X Mean
AROCLOR-1242	**5.5E-04**	U	5.1E-04		0/6	1.0E-06	5.5E+02	--
AROCLOR-1248	**5.5E-04**	U	5.1E-04		0/6	1.0E-06	5.5E+02	--
AROCLOR-1254	**5.5E-04**	U	5.1E-04		0/6	1.0E-06	5.5E+02	--
AROCLOR-1260	**5.5E-04**	U	5.1E-04		0/6	1.0E-06	5.5E+02	--
BETA-BHC	2.7E-05	U	2.6E-05		0/6	5.0E+00	5.4E-06	--
CHLORDANE	**2.7E-05**	U	2.6E-05		0/6	4.0E-06	6.8E+00	--
DELTA-BHC	2.7E-05	U	2.6E-05		0/6	--	--	--
DIELDRIN	**5.5E-05**	U	5.1E-05		0/6	2.0E-06	2.8E+01	--
ENDOSULFAN I	2.7E-05	U	2.6E-05		0/6	5.0E-05	5.4E-01	--
ENDOSULFAN II	**5.5E-05**	U	5.1E-05		0/6	5.0E-05	1.1E+00	--
ENDOSULFAN SULFATE	5.5E-05	U	5.1E-05		0/6	--	--	--
ENDRIN	**5.5E-05**	U	5.1E-05		0/6	2.0E-06	2.8E+01	--
ENDRIN ALDEHYDE	5.5E-05	U	5.1E-05		0/6	--	--	--
ENDRIN KETONE	5.5E-05	U	5.1E-05		0/6	--	--	--
GAMMA-BHC (LINDANE)	**2.7E-05**	U	2.6E-05		0/6	1.0E-05	2.7E+00	--
HEPTACHLOR	**2.7E-05**	U	2.6E-05		0/6	3.8E-06	7.1E+00	--
HEPTACHLOR EPOXIDE	**2.7E-05**	U	2.6E-05		0/6	3.8E-06	7.1E+00	--
METHOXYCHLOR	**2.7E-04**	U	2.6E-04		0/6	3.0E-05	9.0E+00	--
TOXAPHENE	**2.7E-03**	U	2.6E-03		0/6	2.0E-07	1.4E+04	--
Semivolatile Organic Compounds (mg/L)								
1,1-BIPHENYL	5.5E-03	U	5.4E-03		0/6	--	--	--
1,2,4-TRICHLOROBENZENE	5.0E-03	U	5.0E-03		0/6	4.5E-02	1.1E-01	--
1,4-DICHLOROBENZENE	5.0E-03	U	5.0E-03		0/6	1.1E-02	4.5E-01	--
2,2'-OXYBIS(1- CHLOROPROPANE)	5.5E-03	U	5.4E-03		0/6	--	--	--
2,4,5-TRICHLOROPHENOL	5.5E-03	U	5.4E-03		0/6	--	--	--
2,4,6-TRICHLOROPHENOL	**5.5E-03**	U	5.4E-03		0/6	3.2E-03	1.7E+00	--
2,4-DICHLOROPHENOL	5.5E-03	U	5.4E-03		0/6	3.7E-02	1.5E-01	--
2,4-DIMETHYLPHENOL	5.5E-03	U	5.4E-03		0/6	2.1E-02	2.6E-01	--
2,4-DINITROPHENOL	5.5E-03	U	5.4E-03		0/6	6.2E-03	8.9E-01	--
2,4-DINITROTOLUENE	3.4E-04	U	5.4E-03		0/6	3.1E-01	1.1E-03	--
2,6-DINITROTOLUENE	2.3E-04	U	5.4E-03		0/6	--	--	--
2-CHLORONAPHTHALENE	5.5E-03	U	5.4E-03		0/6	--	--	--
2-CHLOROPHENOL	5.5E-03	U	5.4E-03		0/6	4.4E-02	1.3E-01	--
2-METHYLNAPHTHALENE	5.5E-03	U	5.4E-03		0/6	--	--	--
2-METHYLPHENOL	5.5E-03	U	5.4E-03		0/6	--	--	--
2-NITROANILINE	5.5E-03	U	5.4E-03		0/6	--	--	--
2-NITROPHENOL	5.5E-03	U	5.4E-03		0/6	3.5E+00	1.6E-03	--
3,3'-DICHLOROBENZIDINE	5.5E-03	U	5.4E-03		0/6	--	--	--
3-NITROANILINE	5.5E-03	U	5.4E-03		0/6	--	--	--
4,6-DINITRO-2-METHYLPHENOL	**5.5E-03**	U	5.4E-03		0/6	2.3E-03	2.4E+00	--
4-BROMOPHENYL-PHENYLETHER	5.5E-03	U	5.4E-03		0/6	1.2E-02	4.5E-01	--
4-CHLORO-3-METHYLPHENOL	**5.5E-03**	U	5.4E-03		0/6	3.0E-04	1.8E+01	--
4-CHLOROANILINE	5.5E-03	U	5.4E-03		0/6	--	--	--
4-CHLOROPHENYL-PHENYLETHER	5.5E-03	U	5.4E-03		0/6	--	--	--
4-METHYLPHENOL	5.5E-03	U	5.4E-03		0/6	--	--	--
4-NITROANILINE	5.5E-03	U	5.4E-03		0/6	--	--	--
4-NITROPHENOL	5.5E-03	U	5.4E-03		0/6	8.3E-02	6.6E-02	--
ACENAPHTHENE	5.5E-03	U	5.4E-03		0/6	1.7E-02	3.2E-01	--
ACENAPHTHYLENE	5.5E-03	U	5.4E-03		0/6	--	--	--
ACETOPHENONE	5.5E-03	U	5.4E-03		0/6	--	--	--
ANTHRACENE	5.5E-03	U	5.4E-03		0/6	--	--	--
ATRAZINE	5.5E-03	U	5.4E-03		0/6	--	--	--
BENZALDEHYDE	5.5E-03	U	5.4E-03		0/6	--	--	--
BENZO(A)ANTHRACENE	5.5E-03	U	5.4E-03		0/6	--	--	--
BENZO(A)PYRENE	5.5E-03	U	5.4E-03		0/6	--	--	--

TABLE L-3
Groundwater Ecological Risk Screening
Site UXO-08 Former Lejeune Cantonment Bazooka Range, Base CS Chamber, and NBC Training Trail
MCB Camp Lejeune, North Carolina

Chemical Name	Maximum Concentration[a]		Average[b]	Location of Maximum Detection	Detection Ratio	Ecological Screening Value	HQ	Camp Lejeune Background SS 2X Mean
BENZO(B)FLUORANTHENE	5.5E-03	U	5.4E-03		0/6	--	--	--
BENZO(G,H,I)PERYLENE	5.5E-03	U	5.4E-03		0/6	--	--	--
BENZO(K)FLUORANTHENE	5.5E-03	U	5.4E-03		0/6	--	--	--
BIS(2-CHLOROETHOXY)METHANE	5.5E-03	U	5.4E-03		0/6	--	--	--
BIS(2-CHLOROETHYL)ETHER	5.5E-03	U	5.4E-03		0/6	2.4E+00	2.3E-03	--
BIS(2-ETHYLHEXYL)PHTHALATE	**5.5E-03**	U	3.4E-03		0/6	3.0E-04	1.8E+01	--
BUTYLBENZYLPHTHALATE	5.5E-03	U	5.4E-03		0/6	2.2E-02	2.5E-01	--
CAPROLACTAM	4.3E-03	J	5.0E-03	IR78-GW02	2/6	--	--	--
CARBAZOLE	5.5E-03	U	5.4E-03		0/6	--	--	--
CHRYSENE	5.5E-03	U	5.4E-03		0/6	--	--	--
DIBENZ(A,H)ANTHRACENE	5.5E-03	U	5.4E-03		0/6	--	--	--
DIBENZOFURAN	5.5E-03	U	5.4E-03		0/6	--	--	--
DIETHYLPHTHALATE	5.5E-03	U	5.4E-03		0/6	5.2E-01	1.1E-02	--
DIMETHYL PHTHALATE	5.5E-03	U	5.4E-03		0/6	3.3E-01	1.7E-02	--
DI-N-BUTYLPHTHALATE	3.0E-03	U	2.1E-03		0/6	9.4E-03	3.1E-01	--
DI-N-OCTYLPHTHALATE	**5.5E-03**	U	5.4E-03		0/6	3.0E-04	1.8E+01	--
FLUORANTHENE	5.5E-03	U	5.4E-03		0/6	4.0E-02	1.4E-01	--
FLUORENE	5.5E-03	U	5.4E-03		0/6	--	--	--
HEXACHLOROBENZENE	5.5E-03	U	5.4E-03		0/6	--	--	--
HEXACHLOROBUTADIENE	**5.5E-03**	U	5.4E-03		0/6	9.3E-04	5.9E+00	--
HEXACHLOROCYCLOPENTADIENE	**5.5E-03**	U	5.4E-03		0/6	7.0E-05	7.9E+01	--
HEXACHLOROETHANE	5.5E-03	U	5.4E-03		0/6	9.8E-03	5.6E-01	--
INDENO(1,2,3-CD)PYRENE	5.5E-03	U	5.4E-03		0/6	--	--	--
ISOPHORONE	5.5E-03	U	5.4E-03		0/6	1.2E+00	4.7E-03	--
NAPHTHALENE	5.5E-03	U	5.4E-03		0/6	6.2E-02	8.9E-02	--
NITROBENZENE	2.3E-04	U	5.4E-03		0/6	2.7E-01	8.5E-04	--
N-NITROSO-DI-N-PROPYLAMINE	5.5E-03	U	5.4E-03		0/6	--	--	--
N-NITROSODIPHENYLAMINE	5.5E-03	U	5.4E-03		0/6	5.9E-02	9.4E-02	--
PENTACHLOROPHENOL	5.5E-03	U	5.4E-03		0/6	1.5E-02	3.7E-01	--
PHENANTHRENE	5.5E-03	U	5.4E-03		0/6	--	--	--
PHENOL	5.5E-03	U	5.4E-03		0/6	2.6E-01	2.1E-02	--
PYRENE	5.5E-03	U	5.4E-03		0/6	--	--	--
Total Petroleum Hydrocarbons (mg/L)								
C10-C40 PETROLEUM HYDROCARBONS	7.7E-01		3.1E-01	IR78-GW04-1	3/6	--	--	--
TPH-GAS RANGE	2.1E-01		7.7E-02	IR78-GW42	1/6	--	--	--
Volatile Organic Compounds (mg/L)								
1,1,1-TRICHLOROETHANE	5.0E-03	U	5.0E-03		0/6	5.3E-01	9.5E-03	--
1,1,2,2-TETRACHLOROETHANE	5.0E-03	U	5.0E-03		0/6	2.4E-01	2.1E-02	--
113)	5.0E-03	U	5.0E-03		0/6	--	--	--
1,1,2-TRICHLOROETHANE	5.0E-03	U	5.0E-03		0/6	--	--	--
1,1-DICHLOROETHANE	1.1E-01		2.3E-02	IR78-GW42	1/6	--	--	--
1,1-DICHLOROETHENE	1.1E-02		6.0E-03	IR78-GW42	1/6	--	--	--
1,2-DIBROMO-3-CHLOROPROPANE	5.0E-03	U	5.0E-03		0/6	--	--	--
1,2-DIBROMOETHANE	5.0E-03	U	5.0E-03		0/6	--	--	--
1,2-DICHLOROBENZENE	5.0E-03	U	5.0E-03		0/6	--	--	--
1,2-DICHLOROETHANE	5.0E-03	U	5.0E-03		0/6	--	--	--
1,2-DICHLOROPROPANE	5.0E-03	U	5.0E-03		0/6	--	--	--
1,3-DICHLOROBENZENE	5.0E-03	U	5.0E-03		0/6	--	--	--
2-BUTANONE	5.0E-03	U	5.0E-03		0/6	--	--	--
2-HEXANONE	5.0E-03	U	5.0E-03		0/6	--	--	--
4-METHYL-2-PENTANONE	5.0E-03	U	5.0E-03		0/6	--	--	--
ACETONE	5.5E-03	U	3.9E-03		0/6	--	--	--
BENZENE	2.1E-03	J	4.5E-03	IR78-GW42	1/6	--	--	--
BROMODICHLOROMETHANE	5.0E-03	U	5.0E-03		0/6	--	--	--

TABLE L-3
Groundwater Ecological Risk Screening
Site UXO-08 Former Lejeune Cantonment Bazooka Range, Base CS Chamber, and NBC Training Trail
MCB Camp Lejeune, North Carolina

Chemical Name	Maximum Concentration[a]		Average[b]	Location of Maximum Detection	Detection Ratio	Ecological Screening Value	HQ	Camp Lejeune Background SS 2X Mean
BROMOFORM	5.0E-03	U	5.0E-03		0/6	--	--	--
BROMOMETHANE	5.0E-03	U	5.0E-03		0/6	--	--	--
CARBON DISULFIDE	5.0E-03	U	5.0E-03		0/6	--	--	--
CARBON TETRACHLORIDE	5.0E-03	U	5.0E-03		0/6	--	--	--
CHLOROBENZENE	5.0E-03	U	5.0E-03		0/6	--	--	--
CHLOROETHANE	5.0E-03	U	5.0E-03		0/6	--	--	--
CHLOROFORM	5.0E-03	U	5.0E-03		0/6	--	--	--
CHLOROMETHANE	5.0E-03	U	5.0E-03		0/6	--	--	--
CIS-1,2-DICHLOROETHENE	5.8E-01		1.0E-01	IR78-GW42	3/6	--	--	--
CIS-1,3-DICHLOROPROPENE	5.0E-03	U	5.0E-03		0/6	--	--	--
CYCLOHEXANE	5.0E-03	U	5.0E-03		0/6	--	--	--
DIBROMOCHLOROMETHANE	5.0E-03	U	5.0E-03		0/6	--	--	--
DICHLORODIFLUOROMETHANE (FREON-12)	5.0E-03	U	5.0E-03		0/6	--	--	--
ETHYLBENZENE	5.0E-03	U	5.0E-03		0/6	--	--	--
ISOPROPYLBENZENE (CUMENE)	5.0E-03	U	5.0E-03		0/6	--	--	--
METHYL ACETATE	5.0E-03	U	5.0E-03		0/6	--	--	--
METHYLCYCLOHEXANE	5.0E-03	U	5.0E-03		0/6	--	--	--
METHYLENE CHLORIDE	5.0E-03	U	4.3E-03		0/6	--	--	--
STYRENE	5.0E-03	U	5.0E-03		0/6	--	--	--
TERT-BUTYL METHYL ETHER	2.2E-03	J	4.5E-03	IR78-GW04-1	1/6	--	--	--
TETRACHLOROETHENE	5.0E-03	U	5.0E-03		0/6	--	--	--
TOLUENE	1.7E-03	J	4.5E-03	IR78-GW42	1/6	--	--	--
TRANS-1,2-DICHLOROETHENE	1.2E-03	J	4.4E-03	IR78-GW42	1/6	--	--	--
TRANS-1,3-DICHLOROPROPENE	5.0E-03	U	5.0E-03		0/6	--	--	--
TRICHLOROETHENE	1.2E-01		2.4E-02	IR78-GW42	3/6	--	--	--
TRICHLOROFLUOROMETHANE(FREON-11)	5.0E-03	U	5.0E-03		0/6	--	--	--
VINYL CHLORIDE	1.1E-01		2.3E-02	IR78-GW42	1/6	--	--	--
XYLENE, TOTAL	5.0E-03	U	5.0E-03		0/6	--	--	--

Notes:
J - Analyte present, value may or may not be accurate or precise
NA - Not analyzed
U - The material was analyed for, but not detected
UJ - Analyte not detected, quantitation limit may be inaccurate
a - One half of the detection limit is reported if not detected
b - Average concentrations calculated using one half of the detection limits when applicable
-- Indicates not applicable
Bold - Concentration exceeded ecological screening value

TABLE L-4
Surface Water Ecological Risk Screening
Site UXO-08 Former Lejeune Cantonment Bazooka Range, Base CS Chamber, and NBC Training Trail
MCB Camp Lejeune, North Carolina

Chemical	Maximum Concentration (mg/L)		Location	Average (mg/L)	Detection Ratio	Ecological Screening Value (ESV) (mg/L)	Detection Limit Range for Non Detects (mg/L)	Hazard Quotient (Max/ESV)	Hazard Quotient (Avg/ESV)
1,3,5-TRINITROBENZENE	NA		NA	0.0001302	0/3	NA	0.000255 to 0.000266	NA	NA
1,3-DINITROBENZENE	NA		NA	0.0001302	0/3	NA	0.000255 to 0.000266	NA	NA
2,4,6-TRINITROTOLUENE	NA		NA	0.0001302	0/3	NA	0.000255 to 0.000266	NA	NA
2,4-DINITROTOLUENE	NA		NA	0.0001302	0/3	0.31	0.000255 to 0.000266	0.00	0.00
2,6-DINITROTOLUENE	NA		NA	0.0001302	0/3	NA	0.000255 to 0.000266	NA	NA
2-AMINO-4,6-DINITROTOLUENE	NA		NA	0.0001302	0/3	NA	0.000255 to 0.000266	NA	NA
2-NITROTOLUENE	NA		NA	0.0001302	0/3	NA	0.000255 to 0.000266	NA	NA
3-NITROTOLUENE	NA		NA	0.0001302	0/3	NA	0.000255 to 0.000266	NA	NA
4-AMINO-2,6-DINITROTOLUENE	NA		NA	0.0001302	0/3	NA	0.000255 to 0.000266	NA	NA
4-NITROTOLUENE	NA		NA	0.0001302	0/3	NA	0.000255 to 0.000266	NA	NA
HMX	NA		NA	0.0001302	0/3	NA	0.000255 to 0.000266	NA	NA
NITROBENZENE	NA		NA	0.0001302	0/3	0.27	0.000255 to 0.000266	0.00	0.00
NITROGLYCERIN	NA		NA	0.0001302	0/3	NA	0.000255 to 0.000266	NA	NA
PENTAERYTHRITOL TETRANITRATE	NA		NA	0.0001302	0/3	NA	0.000255 to 0.000266	NA	NA
PERCHLORATE	0.0063	=	MR08-SW02	0.0057	3/3	NA	--	NA	NA
RDX	NA		NA	0.0001302	0/3	NA	0.000255 to 0.000266	NA	NA
TETRYL	NA		NA	0.0001302	0/3	NA	0.000255 to 0.000266	NA	NA
ANTIMONY	NA		NA	0.125	0/3	0.16	**0.25 to 0.25**	1.56	0.78
ARSENIC	3.28	=	MR08-SW03	1.996	3/3	0.05	--	65.60	39.92
BARIUM	39.1	=	MR08-SW03	31.83	3/3	NA	--	NA	NA
CADMIUM	1.99	=	MR08-SW03	1.703	3/3	0.00025	--	7960.00	6812.00
CHROMIUM	17.2	=	MR08-SW02	13.98	3/3	0.011	--	1563.64	1270.91
COPPER	162	=	MR08-SW02	142.3	3/3	0.007	--	23142.86	20328.57
LEAD	3.6	=	MR08-SW03	2.64	3/3	0.0025	--	1440.00	1056.00
MERCURY	NA		NA	0.05	0/3	0.000012	**0.1 to 0.1**	8333.33	4166.67
SELENIUM	6.5	=	MR08-SW02	5.517	3/3	0.005	--	1300.00	1103.40
SILVER	NA		NA	1	0/3	0.000012	**2 to 2**	166666.67	83333.33
ZINC	631	=	MR08-SW02	595.7	3/3	0.05	--	12620.00	11914.00
1,1-BIPHENYL	NA		NA	0.0055	0/3	NA	0.01 to 0.013	NA	NA

TABLE L-4
Surface Water Ecological Risk Screening
Site UXO-08 Former Lejeune Cantonment Bazooka Range, Base CS Chamber, and NBC Training Trail
MCB Camp Lejeune, North Carolina

Chemical	Maximum Concentration (mg/L)		Location	Average (mg/L)	Detection Ratio	Ecological Screening Value (ESV) (mg/L)	Detection Limit Range for Non Detects (mg/L)	Hazard Quotient (Max/ESV)	Hazard Quotient (Avg/ESV)
1,2,4-TRICHLOROBENZENE	NA		NA	0.0005	0/3	0.0449	0.001 to 0.001	0.02	0.01
1,4-DICHLOROBENZENE	NA		NA	0.0005	0/3	0.0112	0.001 to 0.001	0.09	0.04
2,2'-OXYBIS(1- CHLOROPROPANE)	NA		NA	0.0055	0/3	NA	0.01 to 0.013	NA	NA
2,4,5-TRICHLOROPHENOL	NA		NA	0.0135	0/3	NA	0.024 to 0.033	NA	NA
2,4,6-TRICHLOROPHENOL	NA		NA	0.0055	0/3	0.0032	**0.01 to 0.013**	4.06	1.72
2,4-DICHLOROPHENOL	NA		NA	0.0065	0/3	0.0365	0.011 to 0.016	0.30	0.18
2,4-DIMETHYLPHENOL	NA		NA	0.0065	0/3	0.0212	0.011 to 0.016	0.52	0.31
2,4-DINITROPHENOL	NA		NA	0.0245	0/3	0.0062	**0.043 to 0.06**	6.94	3.95
2-CHLORONAPHTHALENE	NA		NA	0.0055	0/3	NA	0.01 to 0.013	NA	NA
2-CHLOROPHENOL	NA		NA	0.0065	0/3	0.0438	0.011 to 0.016	0.25	0.15
2-METHYLNAPHTHALENE	NA		NA	0.000135	0/3	NA	0.00024 to 0.00033	NA	NA
2-METHYLPHENOL	NA		NA	0.0065	0/3	NA	0.011 to 0.016	NA	NA
2-NITROANILINE	NA		NA	0.0135	0/3	NA	0.024 to 0.033	NA	NA
2-NITROPHENOL	NA		NA	0.0055	0/3	3.5	0.01 to 0.013	0.00	0.00
3,3'-DICHLOROBENZIDINE	NA		NA	0.0055	0/3	NA	0.01 to 0.013	NA	NA
3-NITROANILINE	NA		NA	0.0135	0/3	NA	0.024 to 0.033	NA	NA
4,6-DINITRO-2-METHYLPHENOL	NA		NA	0.0135	0/3	0.0023	**0.024 to 0.033**	10.43	5.87
4-BROMOPHENYL-PHENYLETHER	NA		NA	0.0055	0/3	0.0122	**0.01 to 0.013**	1.07	0.45
4-CHLORO-3-METHYLPHENOL	NA		NA	0.0055	0/3	0.0003	**0.01 to 0.013**	43.33	18.33
4-CHLOROANILINE	NA		NA	0.0055	0/3	NA	0.01 to 0.013	NA	NA
4-CHLOROPHENYL-PHENYLETHER	NA		NA	0.0055	0/3	NA	0.01 to 0.013	NA	NA
4-NITROANILINE	NA		NA	0.0135	0/3	NA	0.024 to 0.033	NA	NA
4-NITROPHENOL	NA		NA	0.0135	0/3	0.0828	0.024 to 0.033	0.29	0.16
ACENAPHTHENE	NA		NA	0.0055	0/3	0.017	0.01 to 0.013	0.76	0.32
ACENAPHTHYLENE	NA		NA	0.0055	0/3	NA	0.01 to 0.013	NA	NA
ACETOPHENONE	NA		NA	0.0065	0/3	NA	0.011 to 0.016	NA	NA
ANTHRACENE	NA		NA	0.0055	0/3	NA	0.01 to 0.013	NA	NA
BENZO(A)ANTHRACENE	NA		NA	0.000135	0/3	NA	0.00024 to 0.00033	NA	NA
BENZO(A)PYRENE	NA		NA	0.000135	0/3	NA	0.00024 to 0.00033	NA	NA

TABLE L-4
Surface Water Ecological Risk Screening
Site UXO-08 Former Lejeune Cantonment Bazooka Range, Base CS Chamber, and NBC Training Trail
MCB Camp Lejeune, North Carolina

Chemical	Maximum Concentration (mg/L)		Location	Average (mg/L)	Detection Ratio	Ecological Screening Value (ESV) (mg/L)	Detection Limit Range for Non Detects (mg/L)	Hazard Quotient (Max/ESV)	Hazard Quotient (Avg/ESV)
BENZO(B)FLUORANTHENE	NA		NA	0.0001467	0/3	NA	0.00026 to 0.00036	NA	NA
BENZO(G,H,I)PERYLENE	NA		NA	0.000135	0/3	NA	0.00024 to 0.00033	NA	NA
BENZO(K)FLUORANTHENE	NA		NA	0.000135	0/3	NA	0.00024 to 0.00033	NA	NA
BIS(2-CHLOROETHOXY)METHANE	NA		NA	0.0055	0/3	NA	0.01 to 0.013	NA	NA
BIS(2-CHLOROETHYL)ETHER	NA		NA	0.0055	0/3	2.38	0.01 to 0.013	0.01	0.00
BIS(2-ETHYLHEXYL)PHTHALATE	0.002	J	MR08-SW03	0.004	1/3	0.0003	--	6.67	13.33
BUTYLBENZYLPHTHALATE	NA		NA	0.0055	0/3	0.022	0.01 to 0.013	0.59	0.25
CAPROLACTAM	NA		NA	0.0055	0/3	NA	0.01 to 0.013	NA	NA
CARBAZOLE	NA		NA	0.0055	0/3	NA	0.01 to 0.013	NA	NA
CHRYSENE	NA		NA	0.0055	0/3	NA	0.01 to 0.013	NA	NA
DIBENZ(A,H)ANTHRACENE	NA		NA	0.000135	0/3	NA	0.00024 to 0.00033	NA	NA
DIBENZOFURAN	NA		NA	0.0055	0/3	NA	0.01 to 0.013	NA	NA
DIETHYLPHTHALATE	NA		NA	0.0055	0/3	0.521	0.01 to 0.013	0.02	0.01
DIMETHYL PHTHALATE	NA		NA	0.0055	0/3	0.33	0.01 to 0.013	0.04	0.02
DI-N-BUTYLPHTHALATE	NA		NA	0.0055	0/3	0.0094	**0.01 to 0.013**	1.38	0.59
DI-N-OCTYLPHTHALATE	NA		NA	0.0055	0/3	0.0003	**0.01 to 0.013**	43.33	18.33
FLUORANTHENE	NA		NA	0.000135	0/3	0.0398	0.00024 to 0.00033	0.01	0.00
FLUORENE	NA		NA	0.000135	0/3	NA	0.00024 to 0.00033	NA	NA
HEXACHLOROBENZENE	NA		NA	0.000135	0/3	NA	0.00024 to 0.00033	NA	NA
HEXACHLOROBUTADIENE	NA		NA	0.0001467	0/3	0.00093	0.00026 to 0.00036	0.28	0.16
HEXACHLOROCYCLOPENTADIENE	NA		NA	0.0001467	0/3	0.00007	**0.00026 to 0.00036**	3.71	2.10
HEXACHLOROETHANE	NA		NA	0.0055	0/3	0.0098	**0.01 to 0.013**	1.33	0.56
INDENO(1,2,3-CD)PYRENE	NA		NA	0.000135	0/3	NA	0.00024 to 0.00033	NA	NA
ISOPHORONE	NA		NA	0.0055	0/3	1.17	0.01 to 0.013	0.01	0.00
NAPHTHALENE	NA		NA	0.000135	0/3	0.062	0.00024 to 0.00033	0.00	0.00
N-NITROSO-DI-N-PROPYLAMINE	NA		NA	0.0055	0/3	NA	0.01 to 0.013	NA	NA
N-NITROSODIPHENYLAMINE	NA		NA	0.0055	0/3	0.0585	0.01 to 0.013	0.22	0.09
PENTACHLOROPHENOL	NA		NA	0.0135	0/3	0.015	**0.024 to 0.033**	1.60	0.90
PHENANTHRENE	0.000072	J	MR08-SW03	0.000104	1/3	NA	--	NA	NA

TABLE L-4
Surface Water Ecological Risk Screening
Site UXO-08 Former Lejeune Cantonment Bazooka Range, Base CS Chamber, and NBC Training Trail
MCB Camp Lejeune, North Carolina

Chemical	Maximum Concentration (mg/L)		Location	Average (mg/L)	Detection Ratio	Ecological Screening Value (ESV) (mg/L)	Detection Limit Range for Non Detects (mg/L)	Hazard Quotient (Max/ESV)	Hazard Quotient (Avg/ESV)
PHENOL	NA		NA	0.0055	0/3	0.256	0.01 to 0.013	0.05	0.02
PYRENE	NA		NA	0.000135	0/3	NA	0.00024 to 0.00033	NA	NA
1,1,1-TRICHLOROETHANE	NA		NA	0.0005	0/3	0.528	0.001 to 0.001	0.00	0.00
1,1,2,2-TETRACHLOROETHANE	NA		NA	0.0005	0/3	0.24	0.001 to 0.001	0.00	0.00
1,1,2-TRICHLORO-1,2,2-TRIFLUOROETHANE (FREON-113)	NA		NA	0.0005	0/3	NA	0.001 to 0.001	NA	NA
1,1,2-TRICHLOROETHANE	NA		NA	0.0005	0/3	0.94	0.001 to 0.001	0.00	0.00
1,1-DICHLOROETHANE	NA		NA	0.0005	0/3	NA	0.001 to 0.001	NA	NA
1,1-DICHLOROETHENE	NA		NA	0.0005	0/3	0.303	0.001 to 0.001	0.00	0.00
1,2-DIBROMO-3-CHLOROPROPANE	NA		NA	0.0005	0/3	NA	0.001 to 0.001	NA	NA
1,2-DIBROMOETHANE	NA		NA	0.0005	0/3	NA	0.001 to 0.001	NA	NA
1,2-DICHLOROBENZENE	NA		NA	0.0005	0/3	0.0158	0.001 to 0.001	0.06	0.03
1,2-DICHLOROETHANE	NA		NA	0.0005	0/3	2	0.001 to 0.001	0.00	0.00
1,2-DICHLOROPROPANE	NA		NA	0.0005	0/3	0.525	0.001 to 0.001	0.00	0.00
1,3-DICHLOROBENZENE	NA		NA	0.0005	0/3	0.0502	0.001 to 0.001	0.02	0.01
2-BUTANONE	NA		NA	0.0015	0/3	NA	0.003 to 0.003	NA	NA
2-HEXANONE	NA		NA	0.001	0/3	NA	0.002 to 0.002	NA	NA
4-METHYL-2-PENTANONE	NA		NA	0.001	0/3	NA	0.002 to 0.002	NA	NA
ACETONE	0.015	=	MR08-SW03	0.0106	3/3	NA	--	NA	NA
BENZENE	NA		NA	0.0005	0/3	0.053	0.001 to 0.001	0.02	0.01
BROMODICHLOROMETHANE	NA		NA	0.0005	0/3	NA	0.001 to 0.001	NA	NA
BROMOFORM	NA		NA	0.0005	0/3	0.293	0.001 to 0.001	0.00	0.00
BROMOMETHANE	NA		NA	0.0005	0/3	0.11	0.001 to 0.001	0.01	0.00
CARBON DISULFIDE	NA		NA	0.0005	0/3	NA	0.001 to 0.001	NA	NA
CARBON TETRACHLORIDE	NA		NA	0.0005	0/3	0.0004	**0.001 to 0.001**	2.50	1.25
CHLOROBENZENE	NA		NA	0.0005	0/3	0.195	0.001 to 0.001	0.01	0.00
CHLOROETHANE	NA		NA	0.0005	0/3	NA	0.001 to 0.001	NA	NA
CHLOROFORM	NA		NA	0.0005	0/3	0.289	0.001 to 0.001	0.00	0.00
CHLOROMETHANE	NA		NA	0.0005	0/3	5.5	0.001 to 0.001	0.00	0.00
CIS-1,2-DICHLOROETHENE	NA		NA	0.0005	0/3	NA	0.001 to 0.001	NA	NA

TABLE L-4
Surface Water Ecological Risk Screening
Site UXO-08 Former Lejeune Cantonment Bazooka Range, Base CS Chamber, and NBC Training Trail
MCB Camp Lejeune, North Carolina

Chemical	Maximum Concentration (mg/L)		Location	Average (mg/L)	Detection Ratio	Ecological Screening Value (ESV) (mg/L)	Detection Limit Range for Non Detects (mg/L)	Hazard Quotient (Max/ESV)	Hazard Quotient (Avg/ESV)
CIS-1,3-DICHLOROPROPENE	NA		NA	0.0005	0/3	NA	0.001 to 0.001	NA	NA
CYCLOHEXANE	NA		NA	0.0005	0/3	NA	0.001 to 0.001	NA	NA
DIBROMOCHLOROMETHANE	NA		NA	0.0005	0/3	NA	0.001 to 0.001	NA	NA
DICHLORODIFLUOROMETHANE (FREON-12)	NA		NA	0.0005	0/3	NA	0.001 to 0.001	NA	NA
ETHYLBENZENE	NA		NA	0.0005	0/3	0.453	0.001 to 0.001	0.00	0.00
ISOPROPYLBENZENE (CUMENE)	NA		NA	0.0005	0/3	NA	0.001 to 0.001	NA	NA
METHYL ACETATE	NA		NA	0.0005	0/3	NA	0.001 to 0.001	NA	NA
METHYLCYCLOHEXANE	NA		NA	0.0005	0/3	NA	0.001 to 0.001	NA	NA
METHYLENE CHLORIDE	NA		NA	0.0005	0/3	1.93	0.001 to 0.001	0.00	0.00
STYRENE	NA		NA	0.0005	0/3	NA	0.001 to 0.001	NA	NA
TERT-BUTYL METHYL ETHER	NA		NA	0.0005	0/3	NA	0.001 to 0.001	NA	NA
TETRACHLOROETHENE	NA		NA	0.0005	0/3	0.084	0.001 to 0.001	0.01	0.01
TOLUENE	NA		NA	0.0005	0/3	0.011	0.001 to 0.001	0.09	0.05
TRANS-1,2-DICHLOROETHENE	NA		NA	0.0005	0/3	1.35	0.001 to 0.001	0.00	0.00
TRANS-1,3-DICHLOROPROPENE	NA		NA	0.0005	0/3	0.0244	0.001 to 0.001	0.04	0.02
TRICHLOROETHENE	NA		NA	0.0005	0/3	NA	0.001 to 0.001	NA	NA
TRICHLOROFLUOROMETHANE(FREON-11)	NA		NA	0.0005	0/3	NA	0.001 to 0.001	NA	NA
VINYL CHLORIDE	NA		NA	0.0005	0/3	NA	0.001 to 0.001	NA	NA
XYLENE, TOTAL	NA		NA	0.0005	0/3	NA	0.001 to 0.001	NA	NA

TABLE L-5
Sediment Ecological Risk Screening
Site UXO-08 Former Lejeune Cantonment Bazooka Range, Base CS Chamber, and NBC Training Trail
MCB Camp Lejeune, North Carolina

Chemical	Maximum Concentration (mg/kg)		Location	Average (mg/L)	Detection Ratio	Ecological Screening Value (ESV) (mg/kg)	Detection Limit Range for Non Detects (mg/kg)	Hazard Quotient (Max/ESV)	Hazard Quotient (Avg/ESV)
1,3,5-TRINITROBENZENE	NA		NA	0.0495	0/3	NA	0.0982 to 0.0996	NA	NA
1,3-DINITROBENZENE	NA		NA	0.0495	0/3	NA	0.0982 to 0.0996	NA	NA
2,4,6-TRINITROTOLUENE	NA		NA	0.0495	0/3	NA	0.0982 to 0.0996	NA	NA
2,4-DINITROTOLUENE	NA		NA	0.0495	0/3	NA	0.0982 to 0.0996	NA	NA
2,6-DINITROTOLUENE	NA		NA	0.0495	0/3	NA	0.0982 to 0.0996	NA	NA
2-AMINO-4,6-DINITROTOLUENE	NA		NA	0.0495	0/3	NA	0.0982 to 0.0996	NA	NA
2-NITROTOLUENE	NA		NA	0.0495	0/3	NA	0.0982 to 0.0996	NA	NA
3-NITROTOLUENE	NA		NA	0.0495	0/3	NA	0.0982 to 0.0996	NA	NA
4-AMINO-2,6-DINITROTOLUENE	NA		NA	0.0495	0/3	NA	0.0982 to 0.0996	NA	NA
4-NITROTOLUENE	NA		NA	0.0495	0/3	NA	0.0982 to 0.0996	NA	NA
HMX	NA		NA	0.0495	0/3	NA	0.0982 to 0.0996	NA	NA
NITROBENZENE	NA		NA	0.0495	0/3	NA	0.0982 to 0.0996	NA	NA
NITROGLYCERIN	NA		NA	0.0495	0/3	NA	0.0982 to 0.0996	NA	NA
PENTAERYTHRITOL TETRANITRATE	NA		NA	0.0495	0/3	NA	0.0982 to 0.0996	NA	NA
PERCHLORATE	0.00097	J	MR08-SD02	0.001607	1/3	NA	0.0027 to 0.005	NA	NA
RDX	NA		NA	0.0495	0/3	NA	0.0982 to 0.0996	NA	NA
TETRYL	NA		NA	0.0495	0/3	NA	0.0982 to 0.0996	NA	NA
ANTIMONY	9.56	=	MR08-SD01	4.353	3/3	2	--	4.78	2.18
ARSENIC	230	J	MR08-SD01	97.41	3/3	7.24	--	31.77	13.45
BARIUM	308	=	MR08-SD01	151.4	3/3	NA	--	NA	NA
CADMIUM	2.77	J	MR08-SD01	1.321	3/3	0.676	--	4.10	1.95
CHROMIUM	46.5	J	MR08-SD01	21.24	3/3	52.3	--	0.89	0.41
COPPER	136	J	MR08-SD01	62	3/3	18.7	--	7.27	3.32
LEAD	61.7	J	MR08-SD01	31.93	3/3	30.2	--	2.04	1.06
MERCURY	0.214	=	MR08-SD01	0.0935	2/3	0.13	0.0248 to 0.0248	1.65	0.72
SELENIUM	16.6	J	MR08-SD01	7.944	3/3	NA	--	NA	NA
SILVER	0.432	J	MR08-SD01	0.2658	2/3	0.733	0.241 to 0.241	0.59	0.36
ZINC	255	J	MR08-SD01	122.8	3/3	124	--	2.06	0.99
1,1-BIPHENYL	NA		NA	0.285	0/3	NA	0.41 to 0.85	NA	NA

TABLE L-5
Sediment Ecological Risk Screening
Site UXO-08 Former Lejeune Cantonment Bazooka Range, Base CS Chamber, and NBC Training Trail
MCB Camp Lejeune, North Carolina

Chemical	Maximum Concentration (mg/kg)		Location	Average (mg/L)	Detection Ratio	Ecological Screening Value (ESV) (mg/kg)	Detection Limit Range for Non Detects (mg/kg)	Hazard Quotient (Max/ESV)	Hazard Quotient (Avg/ESV)
1,2,4-TRICHLOROBENZENE	NA		NA	0.009833	0/3	NA	0.014 to 0.03	NA	NA
1,4-DICHLOROBENZENE	NA		NA	0.009833	0/3	NA	0.014 to 0.03	NA	NA
2,2'-OXYBIS(1- CHLOROPROPANE)	NA		NA	0.285	0/3	NA	0.41 to 0.85	NA	NA
2,4,5-TRICHLOROPHENOL	NA		NA	0.435	0/3	NA	0.62 to 1.3	NA	NA
2,4,6-TRICHLOROPHENOL	NA		NA	0.435	0/3	NA	0.62 to 1.3	NA	NA
2,4-DICHLOROPHENOL	NA		NA	0.435	0/3	NA	0.62 to 1.3	NA	NA
2,4-DIMETHYLPHENOL	NA		NA	0.435	0/3	NA	0.62 to 1.3	NA	NA
2,4-DINITROPHENOL	NA		NA	1.033	0/3	NA	1.5 to 3.1	NA	NA
2-CHLORONAPHTHALENE	NA		NA	0.285	0/3	NA	0.41 to 0.85	NA	NA
2-CHLOROPHENOL	NA		NA	0.435	0/3	NA	0.62 to 1.3	NA	NA
2-METHYLNAPHTHALENE	0.23	J	MR08-SD01	0.1151	3/3	0.02023	--	11.37	5.69
2-METHYLPHENOL	NA		NA	0.5133	0/3	NA	0.75 to 1.5	NA	NA
2-NITROANILINE	NA		NA	0.435	0/3	NA	0.62 to 1.3	NA	NA
2-NITROPHENOL	NA		NA	0.5133	0/3	NA	0.75 to 1.5	NA	NA
3,3'-DICHLOROBENZIDINE	NA		NA	0.48	0/2	NA	0.62 to 1.3	NA	NA
3-NITROANILINE	NA		NA	0.435	0/3	NA	0.62 to 1.3	NA	NA
4,6-DINITRO-2-METHYLPHENOL	NA		NA	1.033	0/3	NA	1.5 to 3.1	NA	NA
4-BROMOPHENYL-PHENYLETHER	NA		NA	0.285	0/3	NA	0.41 to 0.85	NA	NA
4-CHLORO-3-METHYLPHENOL	NA		NA	0.435	0/3	NA	0.62 to 1.3	NA	NA
4-CHLOROANILINE	NA		NA	0.48	0/2	NA	0.62 to 1.3	NA	NA
4-CHLOROPHENYL-PHENYLETHER	NA		NA	0.285	0/3	NA	0.41 to 0.85	NA	NA
4-NITROANILINE	NA		NA	0.435	0/3	NA	0.62 to 1.3	NA	NA
4-NITROPHENOL	NA		NA	1.033	0/3	NA	1.5 to 3.1	NA	NA
ACENAPHTHENE	NA		NA	0.285	0/3	0.00671	**0.41 to 0.85**	126.68	42.47
ACENAPHTHYLENE	NA		NA	0.285	0/3	0.00587	**0.41 to 0.85**	144.80	48.55
ACETOPHENONE	NA		NA	0.5133	0/3	NA	0.75 to 1.5	NA	NA
ANTHRACENE	NA		NA	0.285	0/3	0.0469	**0.41 to 0.85**	18.12	6.08
ATRAZINE	NA		NA	0.285	0/3	NA	0.41 to 0.85	NA	NA
BENZALDEHYDE	NA		NA	0.435	0/3	NA	0.62 to 1.3	NA	NA

TABLE L-5
Sediment Ecological Risk Screening
Site UXO-08 Former Lejeune Cantonment Bazooka Range, Base CS Chamber, and NBC Training Trail
MCB Camp Lejeune, North Carolina

Chemical	Maximum Concentration (mg/kg)		Location	Average (mg/L)	Detection Ratio	Ecological Screening Value (ESV) (mg/kg)	Detection Limit Range for Non Detects (mg/kg)	Hazard Quotient (Max/ESV)	Hazard Quotient (Avg/ESV)
BENZO(A)ANTHRACENE	0.076	=	MR08-SD01	0.03897	3/3	0.0748	--	1.02	0.52
BENZO(A)PYRENE	0.062	=	MR08-SD01	0.03233	2/3	0.0888	0.012 to 0.012	0.70	0.36
BENZO(B)FLUORANTHENE	0.15	=	MR08-SD01	0.071	2/3	0.655	0.012 to 0.012	0.23	0.11
BENZO(G,H,I)PERYLENE	0.041	=	MR08-SD01	0.02013	3/3	0.655	--	0.06	0.03
BENZO(K)FLUORANTHENE	0.066	J	MR08-SD01	0.032	2/3	0.655	0.012 to 0.012	0.10	0.05
BIS(2-CHLOROETHOXY)METHANE	NA		NA	0.285	0/3	NA	0.41 to 0.85	NA	NA
BIS(2-CHLOROETHYL)ETHER	NA		NA	0.285	0/3	NA	0.41 to 0.85	NA	NA
BIS(2-ETHYLHEXYL)PHTHALATE	1.2	J	MR08-SD01	0.5	3/3	0.182	--	6.59	2.75
BUTYLBENZYLPHTHALATE	NA		NA	0.285	0/3	NA	0.41 to 0.85	NA	NA
CAPROLACTAM	NA		NA	0.435	0/3	NA	0.62 to 1.3	NA	NA
CARBAZOLE	NA		NA	0.435	0/3	NA	0.62 to 1.3	NA	NA
CHRYSENE	NA		NA	0.285	0/3	0.108	**0.41 to 0.85**	7.87	2.64
DIBENZ(A,H)ANTHRACENE	NA		NA	0.008667	0/3	0.00622	**0.012 to 0.026**	4.18	1.39
DIBENZOFURAN	NA		NA	0.285	0/3	NA	0.41 to 0.85	NA	NA
DIETHYLPHTHALATE	NA		NA	0.285	0/3	NA	0.41 to 0.85	NA	NA
DIMETHYL PHTHALATE	NA		NA	0.285	0/3	NA	0.41 to 0.85	NA	NA
DI-N-BUTYLPHTHALATE	NA		NA	0.285	0/3	NA	0.41 to 0.85	NA	NA
DI-N-OCTYLPHTHALATE	NA		NA	0.285	0/3	NA	0.41 to 0.85	NA	NA
FLUORANTHENE	0.21	=	MR08-SD01	0.12	3/3	0.113	--	1.86	1.06
FLUORENE	0.033	=	MR08-SD01	0.019	2/3	0.0212	0.012 to 0.012	1.56	0.90
HEXACHLOROBENZENE	0.0092	J	MR08-SD01	0.0062	2/3	NA	0.012 to 0.012	NA	NA
HEXACHLOROBUTADIENE	NA		NA	0.008667	0/3	NA	0.012 to 0.026	NA	NA
HEXACHLOROCYCLOPENTADIENE	NA		NA	0.008667	0/3	NA	0.012 to 0.026	NA	NA
HEXACHLOROETHANE	NA		NA	0.285	0/3	NA	0.41 to 0.85	NA	NA
INDENO(1,2,3-CD)PYRENE	0.032	=	MR08-SD01	0.017	2/3	0.655	0.012 to 0.012	0.05	0.03
ISOPHORONE	NA		NA	0.285	0/3	NA	0.41 to 0.85	NA	NA
NAPHTHALENE	0.17	J	MR08-SD01	0.09533	2/3	0.0346	0.012 to 0.012	4.91	2.76
N-NITROSO-DI-N-PROPYLAMINE	NA		NA	0.285	0/3	NA	0.41 to 0.85	NA	NA
N-NITROSODIPHENYLAMINE	NA		NA	0.5717	0/3	NA	0.82 to 1.7	NA	NA

TABLE L-5
Sediment Ecological Risk Screening
Site UXO-08 Former Lejeune Cantonment Bazooka Range, Base CS Chamber, and NBC Training Trail
MCB Camp Lejeune, North Carolina

Chemical	Maximum Concentration (mg/kg)		Location	Average (mg/L)	Detection Ratio	Ecological Screening Value (ESV) (mg/kg)	Detection Limit Range for Non Detects (mg/kg)	Hazard Quotient (Max/ESV)	Hazard Quotient (Avg/ESV)
PENTACHLOROPHENOL	NA		NA	0.7	0/3	NA	1 to 2.1	NA	NA
PHENANTHRENE	0.38	=	MR08-SD01	0.182	3/3	0.0867	--	4.38	2.10
PHENOL	NA		NA	0.435	0/3	NA	0.62 to 1.3	NA	NA
PYRENE	0.14	=	MR08-SD01	0.078	3/3	0.153	--	0.92	0.51
1,1,1-TRICHLOROETHANE	NA		NA	0.009833	0/3	NA	0.014 to 0.03	NA	NA
1,1,2,2-TETRACHLOROETHANE	NA		NA	0.009833	0/3	NA	0.014 to 0.03	NA	NA
1,1,2-TRICHLORO-1,2,2-TRIFLUOROETHANE(FREON-113)	NA		NA	0.009833	0/3	NA	0.014 to 0.03	NA	NA
1,1,2-TRICHLOROETHANE	NA		NA	0.009833	0/3	NA	0.014 to 0.03	NA	NA
1,1-DICHLOROETHANE	NA		NA	0.009833	0/3	NA	0.014 to 0.03	NA	NA
1,1-DICHLOROETHENE	NA		NA	0.009833	0/3	NA	0.014 to 0.03	NA	NA
1,2-DIBROMO-3-CHLOROPROPANE	NA		NA	0.004917	0/3	NA	0.0069 to 0.015	NA	NA
1,2-DIBROMOETHANE	NA		NA	0.009833	0/3	NA	0.014 to 0.03	NA	NA
1,2-DICHLOROBENZENE	NA		NA	0.009833	0/3	NA	0.014 to 0.03	NA	NA
1,2-DICHLOROETHANE	NA		NA	0.009833	0/3	NA	0.014 to 0.03	NA	NA
1,2-DICHLOROPROPANE	NA		NA	0.009833	0/3	NA	0.014 to 0.03	NA	NA
1,3-DICHLOROBENZENE	NA		NA	0.009833	0/3	NA	0.014 to 0.03	NA	NA
2-BUTANONE	0.014	J	MR08-SD01	0.006433	3/3	NA	--	NA	NA
2-HEXANONE	NA		NA	0.009833	0/3	NA	0.014 to 0.03	NA	NA
4-METHYL-2-PENTANONE	NA		NA	0.009833	0/3	NA	0.014 to 0.03	NA	NA
ACETONE	0.14	=	MR08-SD01	0.06233	2/3	NA	0.028 to 0.028	NA	NA

Appendix M
Regulatory Concurrence Letters

UNITED STATES ENVIRONMENTAL PROTECTION AGENCY
REGION 4
SAM NUNN ATLANTA FEDERAL CENTER
61 FORSYTH STREET, S.W.
ATLANTA, GEORGIA 30303

November 28, 2011

NAVFAC Atlantic
Attn: David Cleland
NAVFAC Midlant Environmental RPM, Camp Lejeune
Marine Corps North Carolina IPT
6506 Hampton Blvd
Norfolk, VA 23508-1273

SUBJ: MCB Camp Lejeune
Draft Preliminary Assessment/Site Investigation Report
Site UXO-08 Former Lejeune Cantonment 2.36-Inch Bazooka Range
Base CS Chamber & NBC Training Trail ASR #2.182)
And D-7 Gas Chamber (ASR#2.80)

Dear Mr. Cleland:

The Environmental Protection Agency (EPA) has completed its review of the above subject document, dated September, 2011 and has no comments. EPA agrees with the documented recommendation of "no further action" for Site UXO-08 and the identified potential ecological risk will be addressed as part of the upcoming Site 78 Five Year Review. The potential ecological risk, as documented, is not a result of activities associated with Site UXO-08 munitions' activities and is more likely attributed to the industrial activities connected with Site 78. This document can be prepared as final.

If there are any questions, I can be reached at (404) 562-8538.

Sincerely,

Gena D. Townsend
Senior Project Manager

cc: Martha Morgan, NCDENR
Charity Rychak, MCB Camp Lejeune

NCDENR
North Carolina Department of Environment and Natural Resources
Division of Waste Management

Beverly Eaves Perdue
Governor

Dexter R. Matthews
Director

Dee Freeman
Secretary

November 18, 2011

NAVFAC Atlantic
Attn: Bryan Beck NAVFAC Mid-Atlantic Marine Corps
6506 Hampton Blvd
Norfolk, VA 23508

RE: Draft Final Preliminary Assessment/Site Inspection Report
MMRP Site UXO-08
Marine Corps Base Camp Lejeune
Jacksonville, North Carolina

Dear Mr. Beck:

The Superfund Section of the Division of Waste Management has completed its review of the Draft Final Preliminary Assessment/Site Inspection Report for MMRP Site UXO-08, Former Lejeune Cantonment 2.36-inch Bazooka Range, Base CS Chamber and NBC Training Trail (ASR#2.182), and D-7 Gas Chamber (ASR #2.80). Based on the results of the investigation that has been conducted, we concur with the conclusions and recommendations. Specifically, Section 7.8, states that "Based on the results from the PA/SI, no further action is recommended for Site UXO-08. No unacceptable human health or ecological risks from historical munitions activities were identified. Potential ecological risks identified in surface water and sediment resulted from historical industrial activities and will be addressed as part of the five year review for Site 78".

If you have any questions, please contact me at (919) 707-8342.

Sincerely,

Marti Morgan

Marti Morgan
Environmental Engineer
NCDENR Superfund Section

Cc: Charity Rychak, MCB Camp Lejeune
Gena Townsend, US EPA
Randy McElveen

1646 Mail Service Center, Raleigh, North Carolina 27699-1646
Phone/Fax: 919-707-8200 \ Internet: http://portal.ncdenr.org/web/wm/

An Equal Opportunity \ Affirmative Action Employer

One NorthCarolina Naturally